TITLE: FEDERAL REGISTER.

REEL NO: 4 of 7

VOLUME: 53

issues: 64-79, part 2
pages: 10,869-14,772

DATE: April 4 - April 25, 1988

PUBLICATION NO: 2575

NOTES: The paper and ink used in the original material affect the quality of the micro-edition. This reproduction is made from the best copy available.

THIS PERIODICAL MAY BE COPYRIGHTED, IN WHICH CASE THE CONTENTS REMAIN THE PROPERTY OF THE COPYRIGHT OWNER. THE MICROFORM EDITION IS REPRODUCED BY AGREEMENT WITH THE PUBLISHER. DUPLICATION OR RESALE WITHOUT PERMISSION IS PROHIBITED.

UNIVERSITY MICROFILMS INTERNATIONAL, ANN ARBOR, MICHIGAN

VOL
53

ISS
64

AP
4

1988

UMI

4-4-
Vol.

Unit
Gov
Print
SUPER
OF DO
Washin

OFFIC
Penalty

4-4-88
Vol. 53 No. 64

federal register

Monday
April 4, 1988

United States
Government
Printing Office
SUPERINTENDENT
OF DOCUMENTS
Washington, DC 20402

OFFICIAL BUSINESS
Penalty for private use, $300

**********5-DIGIT 48106

A FR SERIA300S NOV 88 R
SERIALS PROCESSING
UNIV MICROFILMS INTL
300 N ZEEB RD
ANN ARBOR MI 48106

SECOND CLASS NEWSPAPER
Postage and Fees Paid
U.S. Government Printing Office
(ISSN 0097-6326)

VOL
53

ISS
64

AP
4

1988

UMI

4-4-88
Vol. 53
Pages 1

4-4-88
Vol. 53 No. 64
Pages 10869-11030

federal register

Monday
April 4, 1988

Briefings on How To Use the Federal Register—
For information on briefings in Washington, DC, and Boston, MA, see announcement on the inside cover of this issue.

BEST COPY AVAILABLE

VOL 53 ISS 64 APR 4 1988 UMI

FEDERAL REGISTER Published daily, Monday through Friday, (not published on Saturdays, Sundays, or on official holidays), by the Office of the Federal Register, National Archives and Records Administration, Washington, DC 20408, under the Federal Register Act (49 Stat. 500, as amended; 44 U.S.C. Ch. 15) and the regulations of the Administrative Committee of the Federal Register (1 CFR Ch. I). Distribution is made only by the Superintendent of Documents, U.S. Government Printing Office, Washington, DC 20402.

The **Federal Register** provides a uniform system for making available to the public regulations and legal notices issued by Federal agencies. These include Presidential proclamations and Executive orders and Federal agency documents having general applicability and legal effect; documents required to be published by act of Congress and other Federal agency documents of public interest. Documents are on file for public inspection in the Office of the Federal Register the day before they are published, unless earlier filing is requested by the issuing agency.

The **Federal Register** will be furnished by mail to subscribers for $340.00 per year, or $170.00 for 6 months in paper form, or $188.00 per year, or $94.00 for six months in microfiche form, payable in advance. The charge for individual copies is $1.50 for each issue, or $1.50 for each group of pages as actually bound. Remit check or money order, made payable to the Superintendent of Documents, U.S. Government Printing Office, Washington, DC 20402, or charge to your GPO Deposit Account or VISA or Mastercard.

There are no restrictions on the republication of material appearing in the **Federal Register**.

How To Cite This Publication: Use the volume number and the page number. Example: 52 FR 12345.

SUBSCRIPTIONS AND COPIES

PUBLIC

Subscriptions:

Paper or fiche	202-783-3283
Magnetic tapes	275-3328
Problems with public subscriptions	275-3054

Single copies/back copies:

Paper or fiche	783-3283
Magnetic tapes	275-3328
Problems with public single copies	275-3050

FEDERAL AGENCIES

Subscriptions:

Paper or fiche	523-5240
Magnetic tapes	275-3328
Problems with Federal agency subscriptions	523-5240

For other telephone numbers, see the Reader Aids section at the end of this issue.

THE FEDERAL REGISTER
WHAT IT IS AND HOW TO USE IT

FOR: Any person who uses the Federal Register and Code of Federal Regulations.

WHO: The Office of the Federal Register.

WHAT: Free public briefings (approximately 3 hours) to present:
1. The regulatory process, with a focus on the Federal Register system and the public's role in the development of regulations.
2. The relationship between the Federal Register and Code of Federal Regulations.
3. The important elements of typical Federal Register documents.
4. An introduction to the finding aids of the FR/CFR system.

WHY: To provide the public with access to information necessary to research Federal agency regulations which directly affect them. There will be no discussion of specific agency regulations.

WASHINGTON, DC

WHEN: April 15; at 9:00 a.m.
WHERE: Office of the Federal Register, First Floor Conference Room, 1100 L Street NW., Washington, DC
RESERVATIONS: Carolyn Payne, 202-523-3187

BOSTON, MA

WHEN: April 19; at 9 a.m.
WHERE: Thomas P. O'Neill, Jr. Federal Building, Auditorium, 10 Causeway Street, Boston, MA.
RESERVATIONS: Call the Boston Federal Information Center, 617-565-8123

Contents

Federal Register
Vol. 53, No. 64
Monday, April 4, 1988

ACTION
NOTICES
Grants; availability, etc.:
Drug alliance, 10909

Agricultural Marketing Service
PROPOSED RULES
Milk marketing orders:
Chicago Regional, 10894
Potatoes grown in Texas-New Mexico High Plains, 10887

Agriculture Department
See also Agricultural Marketing Service
NOTICES
Program payments; income tax exclusion; primary purpose determination:
New Jersey farmland preservation soil and water conservation cost-share program, 10911

Army Department
NOTICES
Meetings:
Science Board, 10921

Centers for Disease Control
NOTICES
Chemical stockpile disposal program:
Agents GA, GB, VX, mustard agent (H, HD, T), and Lewisite (L), low doses; long-term exposure, potential adverse effects; health and safety recommendations; correction, 11002
Meetings:
Vital Health Statistics National Committee, 10947

Commerce Department
See National Oceanic and Atmospheric Administration

Commercial Space Transportation Office
RULES
Licensing commercial launch activities; policies and procedures, 11004

Commission of Fine Arts
NOTICES
Meetings, 10918

Committee for the Implementation of Textile Agreements
NOTICES
Cotton, wool, and man-made textiles:
Sri Lanka; correction, 10918

Conservation and Renewable Energy Office
RULES
Consumer products:
Central air conditioners, including heat pumps; test procedures; correction, 10869
NOTICES
Consumer product test procedures; waiver petitions:
Carrier Corp., 10926

Consumer Product Safety Commission
NOTICES
Meetings; Sunshine Act, 11000
Settlement agreements:
Bright Future Futon Co., Inc., 10918

Defense Department
See also Army Department
RULES
Strategic Defense Initiative Organization (SDIO); establishment, 10876
NOTICES
Agency information collection activities under OMB review, 10920
Meetings:
Military Personnel Testing Advisory Committee, 10920
Science Board, 10921
Women in Services Advisory Committee, 10921

Drug Enforcement Administration
RULES
Schedules of controlled substances:
Propylhexedrine and pyrovalerone, 10869
NOTICES
Applications, hearings, determinations, etc.:
Welch, John R., M.D., 10955

Economic Regulatory Administration
NOTICES
Consent orders:
Phillips Petroleum Co., 10928
Natural gas exportation and importation:
North Canadian Resources, Inc., 10929
Powerplant and industrial fuel use; new electic powerplant coal capability; compliance certifications:
Decker Energy International, 10929

Employment and Training Administration
NOTICES
Adjustment assistance:
Beaumont Co., 10956
G.H. Bass & Co., 10955
M & G Convoy Inc., 10956
Young Radiator Co., 10956

Energy Department
See also Conservation and Renewable Energy Office; Economic Regulatory Administration; Hearings and Appeals Office, Energy Department
NOTICES
Environmental statements; availability, etc.:
Naval Petroleum Reserve No. 1, CA, 10922
Naval Petroleum Reserves Nos. 1 and 3, CA, 10924
Grants and cooperative agreements; availability, etc.:
District cooling assessment program, 10926
International energy conferences, 10921

Environmental Protection Agency
PROPOSED RULES
Pesticides; tolerances in food, animal feeds, and raw agricultural commodities:
Paraquat, 10895

Executive Office of the President
See Trade Representative, Office of United States

Family Support Administration
NOTICES
Grants:
Low-income home energy assistance; 1989 State median income, 10947

Federal Aviation Administration
RULES
Airport radar service areas, 11020

Federal Communications Commission
RULES
Frequency allocations and radio treaty matters:
Table of frequency allocations; footnote modification, 10878
PROPOSED RULES
Television broadcasting:
Children's television commercialization guidelines, 10905
NOTICES
Agency information collection activities under OMB review, 10943
Rulemaking proceedings; petitions filed, granted, denied, etc., 10944
Applications, hearings, determinations, etc.:
Blair Broadcasting Corp. et al., 10944
Burwell, Roscoe Clifford, Jr., et al.; correction, 10944
Heartland Communications, Inc., et al., 10944
Leemay Broadcasting Services, Inc., et al., 10945
Magnuson, Larry S., et al., 10945
Three States Broadcasting Co., Inc., et al., 10945
Trunkel, Tony J., et al., 10945

Federal Deposit Insurance Corporation
NOTICES
Meetings; Sunshine Act, 11000
(2 documents)

Federal Labor Relations Authority
PROPOSED RULES
Attorney fees under Back Pay Act, 10885

Federal Maritime Commission
NOTICES
Agreements filed, etc., 10946
(3 documents)

Federal Railroad Administration
NOTICES
Exemption petitions, etc.:
Metro-North Commuter Railroad Co., 10996

Fine Arts Commission
See Commission of Fine Arts

Fish and Wildlife Service
RULES
Endangered and threatened species:
Relict trillium, 10879

Food and Drug Administration
NOTICES
Biological products:
Cell lines used to produce biologicals; points to consider for new technologies; availability, 10948
Human drugs:
Antibiotic/antifungal products; approval withdrawn; correction, 11002
Export applications—
Recombigen HIV Latex Agglutination test kits, 10948

Health and Human Services Department
See Centers for Disease Control; Family Support Administration; Food and Drug Administration; National Institutes of Health

Hearings and Appeals Office, Energy Department
NOTICES
Decisions and orders, 10930, 10931, 10935
(3 documents)
Remedial orders:
Objections filed, 10935
Special refund procedures; implementation, 10936, 10940
(2 documents)

Housing and Urban Development Department
NOTICES
Grants; availability, etc.:
Rental rehabilitation program formula allocations, etc., 11024

Interior Department
See Fish and Wildlife Service; Land Management Bureau

Internal Revenue Service
RULES
Income taxes:
Charitable contributions relating to bargain sales
Correction, 11002

International Trade Commission
NOTICES
Import investigations:
Digital readout systems and subassemblies from Japan, 10953

Interstate Commerce Commission
NOTICES
Motor carriers; control, purchase, and tariff filing exemptions, etc.:
Burlington Northern, Inc., et al., 10954

Justice Department
See also Drug Enforcement Administration
RULES
Organization, functions, and authority delegations:
Assistant Attorney General, Criminal Division, 10870
Prisons Bureau, Director, 10871
NOTICES
Agency information collection activities under OMB review, 10954

Labor Department
See Employment and Training Administration

Land Management Bureau
NOTICES
Meetings:
National Public Lands Advisory Council, 10950
Recreation management restrictions, etc.:
Yuma Resource Area, AZ; camping limit revision, 10951
Survey plat filings:
North Carolina, 10951–10953
(9 documents)

Legal Services Corporation
NOTICES
Meetings; Sunshine Act, 11000

VOL 53 ISS 64 AP 4 1988 UMI

Merit Systems Protection Board
NOTICES
Amicus brief filings:
Performance improvement periods of Chapter 43 actions, 10957

National Institute for Occupational Safety and Health
See Centers for Disease Control

National Institutes of Health
NOTICES
Meetings:
National Cancer Institute, 10949
(2 documents)
National Institute of Arthritis and Musculoskeletal and Skin Diseases, 10950
National Institute of Neurological and Communicative Disorders and Stroke, 10950

National Labor Relations Board
RULES
Freedom of Information Act; implementation:
Uniform fee schedule and administrative guidelines, 10872

National Oceanic and Atmospheric Administration
NOTICES
Grants; availability, etc.:
Fishing industry research and development projects—Marine Fisheries Initiative; Gulf of Mexico fishery resources, 10912
Meetings:
Gulf of Mexico Fishery Management Council, 10917
Gulf of Mexico, South Atlantic, and Caribbean Fishery Management Councils, 10917
North Pacific Fishery Management Council, 10917
(2 documents)
South Atlantic Fishery Management Council, 10917

National Science Foundation
PROPOSED RULES
Nondiscrimination on basis of handicap in federally conducted programs and activities, 10896

Nuclear Regulatory Commission
NOTICES
Regulatory guides:
Issuance, availability, and withdrawal, 10957
Applications, hearings, determinations, etc.:
Duke Power Co., 10957
Georgia Power Co. et al., 10959
Northeast Nuclear Energy Co., 10960

Office of United States Trade Representative
See Trade Representative, Office of United States

Postal Service
NOTICES
Meetings; Sunshine Act, 11000

Public Health Service
See Centers for Disease Control; Food and Drug Administration; National Institutes of Health

Research and Special Programs Administration
PROPOSED RULES
Pipeline safety:
Gas detection and monitoring in compressor station buildings, 10906

Securities and Exchange Commission
NOTICES
Meetings; Sunshine Act, 11001
Self-regulatory organizations; proposed rule changes:
MBS Clearing Corp., 10962
National Association of Securities Dealers, Inc., 10964, 10965
(2 documents)
Options Clearing Corp., 10960
Self-regulatory organizations; unlisted trading privileges:
Philadelphia Stock Exchange, Inc., 10967
Applications, hearings, determinations, etc.:
Piedmont Aviation, Inc., 10968
Security Benefit Life Insurance Co. et al., 10968
USAir, Inc., 10969

Small Business Administration
NOTICES
Meetings; regional advisory councils:
Connecticut, 10970

Tennessee Valley Authority
NOTICES
Privacy Act; systems of records, 10970

Textile Agreements Implementation Committee
See Committee for the Implementation of Textile Agreements

Trade Representative, Office of United States
NOTICES
Import quotas and exclusions, etc.:
Beef, high quality; Korean import restrictions, 10995

Transportation Department
See also Commercial Space Transportation Office; Federal Aviation Administration; Federal Railroad Administration; Research and Special Programs Administration; Urban Mass Transportation Administration
NOTICES
Aviation proceedings:
Certificates of public convenience and necessity and foreign air carrier permits; weekly applications, 10995
Hearings, etc.—
Japan charter authorization proceeding, 10996

Treasury Department
See also Internal Revenue Service
NOTICES
Agency information collection activities under OMB review, 10997, 10998
(2 documents)

United States Information Agency
NOTICES
Art objects, importation for exhibition:
Olga Milles Emerges, 10998

Urban Mass Transportation Administration
NOTICES
Environmental statements; availability, etc.:
Massachusetts Bay Transportation Authority, 10996

Veterans Administration
NOTICES
Meetings:
Cemeteries and Memorials Advisory Committee, 10998

Separate Parts In This Issue

Part II
Department of Transportation, Commercial Space Transportation Office, 11004

Part III
Department of Transportation, Federal Aviation Administration, 11010

Part IV
Department of Housing and Urban Development, 11024

Reader Aids
Additional information, including a list of public laws, telephone numbers, and finding aids, appears in the Reader Aids section at the end of this issue.

VOL 53 ISS 64 AP 4 1988 UMI

CFR PARTS AFFECTED IN THIS ISSUE

A cumulative list of the parts affected this month can be found in the Reader Aids section at the end of this issue.

5 CFR
Proposed Rules:
2431 10885

7 CFR
Proposed Rules:
949 10887
1030 10894

10 CFR
430 10869

14 CFR
Ch. III 11004
71 11020

21 CFR
1308 10869

26 CFR
1 11002

28 CFR
0 (2 documents) 10870, 10871

29 CFR
102 10872

32 CFR
388 10876

40 CFR
Proposed Rules:
180 10895

45 CFR
Proposed Rules:
606 10896

47 CFR
2 10878
Proposed Rules:
73 10905

49 CFR
Proposed Rules:
192 10906

50 CFR
17 10879

VOL
53

ISS
64

AP
4

1988

UMI

Rul

This se
contains
general
of which
the Cod
publishe
U.S.C. t
The Co
by the
Prices c
first FE
week.

DEPAR

Office
Renew

10 CFR

[Docket

Energy
Conser
Regard
Air Con
Pumps;

AGENCY
Renew

ACTION

SUMMA
8304), D
amendi
conditi
docume
that not
below.

EFFECTI

Issued

Donna K

Assistan
Renewa

PART 4

1. In
air cond
follows.

§ 430.2

* *

"Cent
product
air cond
single p
rated b
contain
furnace

Rules and Regulations

Federal Register
Vol. 53, No. 64
Monday, April 4, 1988

This section of the FEDERAL REGISTER contains regulatory documents having general applicability and legal effect, most of which are keyed to and codified in the Code of Federal Regulations, which is published under 50 titles pursuant to 44 U.S.C. 1510.
The Code of Federal Regulations is sold by the Superintendent of Documents. Prices of new books are listed in the first FEDERAL REGISTER issue of each week.

DEPARTMENT OF ENERGY

Office of Conservation and Renewable Energy

10 CFR Part 430

[Docket No. CAS-RM-79-102]

Energy Conservation Program for Consumer Products; Final Rulemaking Regarding Test Procedures for Central Air Conditioners, Including Heat Pumps; Correction

AGENCY: Office of Conservation and Renewable Energy, DOE.

ACTION: Fianal rule; correction.

SUMMARY: On March 14, 1988 (53 FR 8304), DOE published a final rule amending test procedures for central air conditioners, including heat pumps. This document corrects an editorial error in that notice. The correction is set out below.

EFFECTIVE DATE: September 12, 1988.

Issued in Washington, DC, March 29, 1988.

Donna R. Fitzpatrick,

Assistant Secretary, Conservation and Renewable Energy.

PART 430—[CORRECTED]

1. In § 430.2 the definition of "Central air conditioners," is correctly revised as follows.

§ 430.2 Definitions

* * * * *

"Central air conditioner" means a product, other than a packaged terminal air conditioner, which is powered by single phase electric current, air cooled, rated below 65,000 Btu per hour, not contained within the same cabinet as a furnace, the rated capacity of which is above 225,000 Btu per hour, and is a heat pump or a cooling unit only.

* * * * *

[FR Doc. 88-7242 Filed 4-1-88; 8:45 am]

BILLING CODE 6450-01-M

DEPARTMENT OF JUSTICE

Drug Enforcement Administration

21 CFR Part 1308

Schedules of Controlled Substances; Placement of Propylhexedrine and Pyrovalerone into Schedule V

AGENCY: Drug Enforcement Administration, Justice.

ACTION: Final rule.

SUMMARY: This final rule is issued by the Administrator of the Drug Enforcement Administration (DEA) in order to place propylhexedrine and pyrovalerone into Schedule V of the Controlled Substances Act (CSA). This action is being taken to enable the United States to meet its obligations under the 1971 Psychotropic Convention. As a result of this rule, some of the regulatory controls and the criminal sanctions of a Schedule V substance under the CSA will be applicable to the manufacture, distribution and possession of propylhexedrine and pyrovalerone.

EFFECTIVE DATE: The effective date for the requirements imposed by this Order is May 4, 1988, unless otherwise set forth below in the supplementary information section.

FOR FURTHER INFORMATION CONTACT: Howard McClain, Jr., Chief, Drug Control Section, Drug Enforcement Administration, Washington, DC 20537, Telephone: (202) 633-1366.

SUPPLEMENTARY INFORMATION: A notice of proposed rulemaking regarding placement of propylhexedrine and pyrovalerone into Schedule V of the CSA was published in the Federal Register on October 30, 1987 (52 FR 41737). The Administrator found that the temporary placement of propylhexedrine and pyrovalerone into Schedule V is necessary in order to satisfy United States obligations under the 1971 Convention on Psychotropic Substances.

In response to the Notice of Proposed Rulemaking, a comment was received from SmithKline Consumer Products, the manufacturer of a preparation that contains propylhexedrine. In that comment, SmithKline asserted that U.S. treaty obligations would be satisfied by provisions of the Federal Food, Drug and Cosmetic Act, and therefore, that placement of propylhexedrine into Schedule V was unnecessary. The provisions of the Psychotropic Substances Act of 1978, Pub. L. 95-633, clearly indicate that Congress intended that

> control of psychotropic substances in the United States should be accomplished within the framework of the procedures and criteria for classification of substances provided in the Comprehensive Drug Abuse Prevention and Control Act of 1970. 21 U.S.C. 801(a)(3).

The provision of the Psychotropic Substances Act, as codified into the CSA, which applies with regard to propylhexedrine and pyrovalerone is found at 21 U.S.C. 811(d)(4)(B). It clearly states that in a case such as the one at issue, a substance shall be placed in Schedule IV or V of the CSA in order to carry out the minimum United States obligations under the treaty. This paragraph further specifies that the Attorney General shall except the drug from application of any provision of the CSA which he finds is not necessary to carry out treaty obligations. Consistent with this requirement, the Administrator will except propylhexedrine and pyrovalerone from certain recordkeeping and security requirements of the CSA. The requirements necessary for compliance with the treaty include: licensing or registration of manufacturers, import and export restrictions, and penal measures for illegal activity. These requirements cannot be imposed under the Federal Food, Drug and Cosmetic Act.

It should be noted that the United States has formally requested that the Secretary-General of the United Nations exempt the propylhexedrine-containing preparations presently approved by the Food and Drug Administration, including the SmithKline product, from specified measures of international control. In conjunction with this request, DEA will accept applications from manufacturers of products containing propylhexedrine for exclusion of their products pursuant to 21 U.S.C. 811(g)(1) and 21 CFR 1308.22. Such exclusions

would permit the present propylhexedrine-containing nasal inhalers to retain their over-the-counter status. If SmithKline, or any other firm that manufactures a product containing propylhexedrine, submits such a request for exclusion, DEA will make every effort to expedite the processing of the request. In essence, the exemption of the substances propylhexedrine and pyrovalerone from certain regulations and the exclusion of products containing propylhexedrine will impose minimal regulatory burden on legitimate manufacturers, while enabling the United States to comply with the requirements of the Psychotropic Convention.

The following provisions of the regulations (and their effective dates) that will be applicable to propylhexedrine and pyrovalerone are as follows:

1. *Registration.* Any person who manufactures, distributes, engages in research, imports, exports or otherwise handles propylhexedrine and/or pyrovalerone or who proposes to engage in such activity shall obtain a registration to conduct that activity by June 3, 1988, pursuant to Parts 1301 and 1311 of Title 21 of the Code of Federal Regulations.

2. *Importation and Exportation.* All importation and exportation of propylhexedrine and/or pyrovalerone occurring after May 4, 1988, shall be in compliance with Part 1312 of Title 21, Code of Federal Regulations.

3. *Criminal Liability.* Any activity with propylhexedrine and/or pyrovalerone not authorized by the CSA or implementing regulations occurring after May 4, 1988, is unlawful.

Those properly registered to handle propylhexedrine and/or pyrovalerone will be exempted from the security requirements of 21 CFR 1301.71–1301.76; the labelling and packaging requirements of 21 CFR 1302.03–1302.05, 1302.07 and 1302.08; the inventory requirements of 21 CFR 1304.11–1304.19; and the recordkeeping requirements of 21 CFR 1304.21–1304.27.

Pursuant to Title 5, United States Code, section 605(b), the Administrator certifies that the placement of propylhexedrine and pyrovalerone into Schedule V of the CSA, as ordered herein, will not have a significant impact upon small businesses or other entities whose interests must be considered under the Regulatory Flexibility Act (Pub. L. 96–354). This action must be carried out in order to fulfill United States international treaty obligations.

In accordance with the provisions of 21 U.S.C. 811(d), this scheduling action is a formal rulemaking that is required by United States obligations under an international convention, namely, the Convention on Psychotropic Substances, 1971. Such formal proceedings are conducted pursuant to the provisions of 5 U.S.C. 556 and 557 and, as such, have been exempted from the consultation requirements of Executive Order 12291 (46 FR 13193).

List of Subjects in 21 CFR Part 1308

Administrative practice and procedure, Drug traffic control, Narcotics, Prescription drugs.

Accordingly, based upon the notification of the Secretary-General of the United Nations, the requests by the Government of the United States relative to a qualified acceptance of the scheduling decisions regarding propylhexedrine and pyrovalerone and in accordance with the recommendations of the Assistant Secretary for Health, Department of Health and Human Services, under the authority vested in the Attorney General by 21 U.S.C. 811(d)(4) (B) and (C) and delegated to the Administrator of DEA by 28 CFR 0.100, the Administrator hereby amends 21 CFR 1308 as follows:

PART 1308—SCHEDULES OF CONTROLLED SUBSTANCES

1. The authority citation for 21 CFR Part 1308 continues to read as follows:

Authority: 21 U.S.C. 811, 812, 871(b).

2. A new paragraph (d) is added to § 1308.15 to read as follows:

§ 1308.15 Schedule V.

* * * * *

(d) *Stimulants.* Unless specifically exempted or excluded or unless listed in another schedule, any material, compound, mixture, or preparation which contains any quantity of the following substances having a stimulant effect on the central nervous system, including its salts, isomers and salts of isomers:

(1) Propylhexedrine.....8161.
(2) Pyrovalerone.....1485.

John C. Lawn,
Administrator, Drug Enforcement Administration.

Dated: March 29, 1988.

[FR Doc. 88–7303 Filed 4–1–88; 8:45 am]

BILLING CODE 4410-09-M

Office of the Attorney General

28 CFR Part 0

[Order No. 1265–88]

Delegation of Power of the Attorney General Respecting Transfer of Offenders to or From Foreign Countries

AGENCY: Department of Justice.

ACTION: Final rule.

SUMMARY: Section 0.64–2 of Title 28, Code of Federal Regulations, delegates to the Assistant Attorney General in charge of the Criminal Division all of the powers conferred on the Attorney General under 18 U.S.C. 4102 which have not been delegated to the Director of the Bureau of Prisons, including the authority to find appropriate or inappropriate the transfer of offenders to or from a foreign country under a treaty as referred to in Pub. L. 95–44. This final rule amends 28 CFR 0.64–2 by authorizing the Assistant Attorney General in charge of the Criminal Division to redelegate this authority to his Deputy Assistant Attorneys General, the Senior Associate Director of the Office of Enforcement Operations and, in the absence of the Senior Associate Director, to the Director of the Office of Enforcement Operations. This rule reflects certain organizational changes that have been made in the Criminal Division with respect to which office is charged with the responsibility for handling prisoner transfers under 18 U.S.C. 4102.

EFFECTIVE DATE: March 23, 1988.

FOR FURTHER INFORMATION CONTACT: Gerald Shur, Senior Associate Director, Office of Enforcement Operations, Criminal Division, Department of Justice, Washington, DC 20530; 202–633–3684.

SUPPLEMENTARY INFORMATION: The Assistant Attorney General currently is authorized under 28 CFR 0.64–2 to redelegate to his Deputy Assistant Attorneys General and appropriate Office Directors and Section Chiefs his authority to find appropriate or inappropriate the transfer of offenders to or from a foreign country under certain treaties. This final rule authorizes the Assistant Attorney General to redelegate this authority to his Deputy Assistant Attorneys General, the Senior Associate Director, Office of Enforcement Operations and, in the absence of the Senior Associate Director, the Director of the Office of Enforcement Operations.

This regulation is not a major rule within the meaning of Executive Order 12291 because it imposes no new requirements. Therefore, a regulatory impact analysis has not been prepared.

This regulation does not have an impact on small entities and, therefore, is not subject to the Regulatory Flexibility Act (5 U.S.C. 601–612).

List of Subjects in 28 CFR Part 0

Authority delegations (Government agencies), Prisoners.

For the reasons stated in the preamble, Title 18, Part 0, Subpart K of the Code of Federal Regulations is amended as follows:

PART 0—[AMENDED]

1. The authority citation for Part 0 continues to read as follows:

Authority: 5 U.S.C. 301, 2303; 8 U.S.C. 1103, 1324A, 1427(g); 15 U.S.C. 644(k); 18 U.S.C. 2254, 4001, 4041, 4042, 4044, 4082, 4201 *et seq.*, 6003(b); 21 U.S.C. 871, 881(d), 904; 22 U.S.C. 263a, 1621–1645o, 1622 note; 28 U.S.C. 509, 510, 515, 524, 542, 543, 552a, 569; 31 U.S.C. 1108, 3801 *et seq.*; 50 U.S.C. App. 2001–2017p; Pub. L. NO. 91–513, sec. 501; EO 11919; EO 11267; EO 11300.

2. In § 0.64–2, the final sentence is deleted and the following sentence is added to read as follows:

§ 0.64–2 [Amended]

* * * * *

The Assistant Attorney General in charge of the Criminal Division is authorized to redelegate this authority to his Deputy Assistant Attorneys General, the Senior Associate Director of the Office of Enforcement Operations and, in the Senior Associate Director's absence, the Director, Office of Enforcement Operations.

Dated: March 23, 1988.

Edwin Meese III,

Attorney General.

[FR Doc. 88–7233 Filed 4–1–88; 8:45 am]

BILLING CODE 4410–01–M

---

28 CFR Part 0

[Atty. Gen. Order No. 1266–88]

Delegation of Authority

AGENCY: Department of Justice.

ACTION: Final rule.

SUMMARY: This document contains two delegations of authority from the Attorney General to the Director, Bureau of Prisons. Both delegations are a result of the implementation of the Comprehensive Crime Control Act (CCCA) of 1984. The first authorizes the Director, Bureau of Prisons to approve inmate disciplinary regulations. This delegation is prompted by the new provision, effective November 1, 1987, on credit toward service of sentence for satisfactory behavior, as set forth in 18 U.S.C. 3624. That section provides for an inmate who is serving a sentence greater than one year and less than life to receive a 54-day reduction from his sentence at the end of each year. This reduction, once made, is vested, and will occur unless "the Bureau of Prisons determines that, during the year, he has not satisfactorily complied with such institutional disciplinary regulations as have been approved by the Attorney General and issued to the prisoner." While the Bureau already has the general authority to implement disciplinary regulations, both under 18 U.S.C. 4042 and 28 CFR 0.96, the language of 18 U.S.C. 3624 warrants this specific delegation.

The second delegation pertains to the mental competency provisions of the CCCA. 28 CFR 0.96(k) currently authorizes the Director, Bureau of Prisons to remove insane prisoners to suitable institutions and retransfer to penal or correctional institutions upon recovery. This authority was based on the then-existing law set forth in 18 U.S.C. 4241, 4242. These statutory sections were revised by Chapter 313, Offenders With Mental Disease or Defect, of the CCCA. The present amendment to 28 CFR 0.96 is intended to redelegate the authority and responsibility of the Attorney General in Chapter 313 to the Director, Bureau of Prisons. These redelegations are expected to allow for a more efficient and direct handling of the matters discussed in this Chapter.

Chapter 313 amended provisions of Title 18, United States Code relating to the procedures to be followed for offenders who are or have been suffering from a mental disease or defect. In carrying out the provisions of this Chapter, the Attorney General has numerous responsibilities. Some of these include designating a suitable facility for hospitalization (18 U.S.C. 4241, 4244, 4245); attempting to arrange for the release of a person committed to his care by the court to the appropriate official of the State in which the person is domiciled or was tried (18 U.S.C. 4243, 4246); and, for designating a suitable facility for a psychiatric or psychological examination (18 U.S.C. 4247(b)).

The authority of the Attorney General is further delineated in 18 U.S.C. 4247(i), and includes such areas as contracting for the appropriate housing of persons committed under Chapter 313; and applying for civil commitment, pursuant to State law, of persons committed to the Attorney General's custody pursuant to 18 U.S.C. 4243, 4246. The Attorney General, in arranging for the hospitalization in a suitable facility of a person suffering from mental disease or defect, is to consider the suitability of the facility's rehabilitation programs in meeting the needs of the person. The Attorney General is also to consult with the Secretary of the Department of Health and Human Services in the general implementation of the provisions of Chapter 313, and in the establishment of standards for facilities used in the implementation of this Chapter.

EFFECTIVE DATE: March 23, 1988.

FOR FURTHER INFORMATION CONTACT: Hank Jacob, Office of General Counsel, Bureau of Prisons, phone 202/272–6874.

This Order pertains to agency management. It is not subject to publication for notice and comment under 5 U.S.C. 553 and is not a rule within the meaning of either the Regulatory Flexibility Act, 5 U.S.C. 601 *et seq.*, or Executive Order No. 12291 ("Federal Regulation").

List of Subjects in 28 CFR Part 0

Authority delegation (Government agencies), Organization and functions (Government agencies).

Accordingly, by virtue of the authority vested in me by 28 U.S.C. 510 and 5 U.S.C. 301, 0.96 of Title 28, Code of Federal Regulations is amended as follows:

PART 0—[AMENDED]

1. The authority citation for Part 0 is revised to read as follows:

Authority: 5 U.S.C. 301, 2303; 8 U.S.C. 1103, 1427(g); 15 U.S.C. 644(k); 18 U.S.C. 2254, 3621, 3622, 3624, 4001, 4041, 4042, 4044, 4082, 4201 et seq., 4241 et seq., 6003(b); 21 U.S.C. 871, 881(d), 904; 22 U.S.C. 263a, 1621–1645o, 1622 note; 28 U.S.C. 509, 510, 515, 524, 542, 543, 552, 552a, 569; 31 U.S.C. 1108; 50 U.S.C. App. 2001–2017p; Pub. L. No. 91–513, sec. 501; EO 11919; EO 11267; EO 11300.

2. 28 CFR 0.96 is amended by revising paragraph (k) and adding a new paragraph (v) to read as follows:

§ 0.96 [Amended]

* * * * *

(k) Performing the functions of the Attorney General under the provisions of 18 U.S.C. Chapter 313 (§§ 4241–4247).

* * * * *

(v) Approving inmate disciplinary and good time regulations (18 U.S.C. 3624).

Dated: March 23, 1988.

Edwin Meese III,

Attorney General.

[FR Doc. 88-7234 Filed 4-1-88; 8:45 am]

BILLING CODE 4410-01-M

NATIONAL LABOR RELATIONS BOARD

29 CFR Part 102

Freedom of Information Reform Act of 1986; Revision of Fee Schedule; Fee Waiver Policy

AGENCY: National Labor Relations Board.

ACTION: Final rule.

SUMMARY: The National Labor Relations Board (NLRB) amends its Freedom of Information Act (FOIA) Regulations, 29 CFR 102.117, in accordance with provisions of the Freedom of Information Reform Act of 1986 (Pub. L. 99-570) regarding fees and fee waivers. As required by the Reform Act, the Office of Management and Budget has issued a fee schedule and guidelines, 52 FR 10012 (March 27, 1987) to which the NLRB's rules conform.

EFFECTIVE DATE: May 16, 1988.

FOR FURTHER INFORMATION CONTACT: John C. Truesdale, Executive Secretary, 1717 Pennsylvania Avenue, NW., Room 701, Washington, DC 20570, Telephone: (202) 254-9430.

SUPPLEMENTARY INFORMATION: On October 27, 1986, the President signed the Freedom of Information Reform Act of 1986 (Pub. L. 99-570). This legislation amended the Freedom of Information Act (FOIA) to provide broader exemption protection for law enforcement information and modified the Act's fee and fee waiver provisions. The Reform Act specifically required the Office of Management and Budget (OMB) to develop and issue a schedule of fees and guidelines pursuant to notice and public comment. The Act also required individual agencies to "promulgate, regulations, pursuant to notice and receipt of public comment, specifying the schedule of fees" applicable to the processing of FOIA requests (5 U.S.C. 552(a)(4)(A)(i)). On July 17, 1987, the Board published in the **Federal Register** proposed changes to its rules and regulations that were necessary to implement the new fee schedule and fee waiver provisions of the FOIA (52 FR 27012-16).

The NLRB received a total of three comments to its proposed rules. Two of the comments were critical of the Board's definitions of the specified user groups. These definitions were based on the definitions promulgated by the OMB, and the Board was limited in its ability to respond to the comments because it was statutorily obligated to conform its fee schedule to that promulgated by OMB, 5 U.S.C. 552(a)(4)(A)(i). The last comment suggested that the Board should adopt more detailed substantive regulations implementing the amended fee waiver standard in the Freedom of Information Act. The Board considered revising the proposed rule but concluded that it was sufficient to incorporate in its rules the statutory language governing fee waiver. Therefore, the final rule is unchanged from its publication in proposed form.

A new paragraph (d) contains the fee-related provisions. The remaining portions of the rule contain changes in the designations of paragraphs and sections and in cross-references, and are published in their entirety.

Pursuant to section 605(b) of the Regulatory Flexibility Act (5 U.S.C. 601 *et seq.*), the NLRB certifies that this rule will not have a significant impact on a substantial number of small business.

List of Subjects in 29 CFR Part 102

Administrative practice and procedure, Labor Management relations, Freedom of Information Act.

Accordingly, 29 CFR Part 102 is amended as follows:

PART 102—RULES AND REGULATIONS, SERIES 8

1. The authority citation for 29 CFR Part 102 is revised as follows:

Authority: Section 6, National Labor Relations Act, as amended (29 U.S.C. 151, 156). Section 102.117 also issued under section 552(a)(4)(A) of the Freedom of Information Act, as amended (5 U.S.C. 552(a)(4)(A)). Sections 102.143 through 102.155 also issued under section 504(c)(1) of the Equal Access to Justice Act, as amended (5 U.S.C. 504(c)(1)).

2. Section 102.117 is amended by redesignating paragraphs (d) through (k) as (e) through (l). Section 102.117 is further amended by adding a new paragraph (d). Paragraphs (c)(1) and (c)(2) (i) and (ii) and (e) through (l) are revised, and paragraphs (c)(2) (iv) and (v) are removed.

§ 102.117 Board materials and formal documents available for public inspection and copying; requests for described records; time limit for response; appeal from denial of request; fees for document search, duplication, and review; files and records not subject to inspection.

* * * * *

(c)(1) Requests for the inspection and copying of records other than those specified in paragraphs (a) and (b) of this section must be in writing and must reasonably describe the record in a manner to permit its identification and location. The envelope and the letter should be clearly marked to indicate that it contains a request for records under the Freedom of Information Act (FOIA). The request must contain a specific statement assuming financial liability in accordance with paragraph (d)(2) of this section for the direct costs of responding to the request. If the request is for records in a Regional or subregional office of the Agency, it should be made to that Regional or subregional office; if for records in the Office of the General Counsel and located in Washington, DC, it should be made to the Freedom of Information Officer, Office of the General Counsel, Washington, DC; and if for records in the offices of the Board in Washington, DC, to the Executive Secretary of the Board, Washington, DC. Requests made to other than the appropriate office will be forwarded to that office by the receiving office, but in that event the applicable time limit for response set forth in paragraph (c)(2)(i) of this section shall be calculated from the date of receipt by the appropriate office.

(2)(i) Within 10 working days after receipt of a request by the appropriate office of the Agency a determination shall be made whether to comply with such request, and the person making the request shall be notified in writing of that determination. If the determination is to comply with the request, the records shall be promptly available to the person making the request upon payment of any charges due in accordance with the provisions of paragraph (d)(2) of this section. If the determination is to deny the request, the notification shall set forth the reasons therefor and the name and title or position of each person responsible for the denial, and shall notify the person making the request of the right to appeal the adverse determination under the provisions of paragraph (c)(2)(ii) of this section.

(ii) An appeal from an adverse determination made pursuant to paragraph (c)(2)(i) of this section must be filed within 20 working days of the receipt by the person of the notification of the adverse determination where the request is denied in its entirety; or, in the case of a partial denial, within 20 working days of the receipt of any records being made available pursuant to the request. If the adverse determination was made in a Regional Office, a subregional office, or by the Freedom of Information Officer, Office of the General Counsel, the appeal shall

be filed with the General Counsel in Washington, DC. If the adverse determination was made by the Executive Secretary of the Board, the appeal shall be filed with the Chairman of the Board in Washington, DC. Within 20 working days after the receipt of an appeal the Chairman of the Board or the General Counsel, as the case may be, shall make a determination with respect to such appeal and shall notify the person in writing. If the determination is to comply with the request, the record shall be made promptly available to the person making the request upon receipt of payment of any charges due in accordance with the provisions of paragraph (d)(2) of this section. If on appeal the denial of the request for records is upheld in whole or in part, the person making the request shall be notified of the reasons for the determination, the name and title or position of each person responsible for the denial, and the provisions for judicial review of that determination under the provisions of 5 U.S.C. 552(4)(B). Even though no appeal is filed from a denial in whole or in part of a request for records by the person making the request, the Chairman of the Board or the General Counsel may, without regard to the time limit for filing of an appeal, sua sponte initiate consideration of an adverse determination under this appeal procedure by written notification to the person making the request. In such event the time limit for making the determination shall commence with the issuance of such notification.

* * * * *

(d)(1) For purposes of this section, the following definitions apply:

(i) "Direct costs" means those expenditures which are actually incurred in searching for and duplicating and, in the case of commercial use requesters, reviewing documents to respond to a FOIA request.

(ii) "Search" includes all time spent looking for material that is responsive to a request, including page-by-page and line-by-line identification of material within documents. Searches may be done manually or by computer using existing programing.

(iii) "Duplication" refers to the process of making a copy of a document necessary to respond to a FOIA request. Such copies can take the form of paper copy, microfilm, videotape, audiotape, or machine readable documentation (e.g., magnetic tape or disk), among others. The copy provided must be in a form that is reasonably usable by requesters.

(iv) "Review" refers to the process of examining documents located in response to a request that is for commercial use to determine whether a document or any portion of any document located is permitted to be withheld. It includes processing any documents for disclosure, e.g., doing all that is necessary to excise them and otherwise prepare them for release.

(v) "Commercial use request" refers to a request from or on behalf of one who seeks information for a use or purpose that furthers the commercial trade or profit interests of the requester or the person on whose behalf the request is made.

(vi) "Educational institution" refers to a preschool, a public or private elementary or secondary school, an institution of graduate higher education, an institution of undergraduate higher education, an institution of professional education, or an institution of vocational education, which operates a program or programs of scholarly research.

(vii) "Representative of the news media" refers to any person actively gathering news for an entity that is organized and operated to publish or broadcast news to the public. The term "news" means information that is about current events or that would be of current interest to the public. In the case of "freelance" journalists, they may be regarded as working for a news organization if they can demonstrate a reasonable expectation of publication through that organization, even though not actually employed by it.

(viii) "Working days," as used in this paragraph, means calendar days excepting Saturdays, Sundays, and legal holidays.

(2) Persons requesting records from this Agency shall be subject to a charge of fees for the full allowable direct costs of document search, review, and duplicating, as appropriate, in accordance with the following schedules, procedures, and conditions:

(i) Schedule of charges:

(A) For each one-quarter hour or portion thereof of clerical time, $2.50.

(B) For each one-quarter hour or portion thereof of professional time, $8.60.

(C) For each sheet of duplication (not to exceed 8½ by 14 inches) of requested records, $0.10.

(D) All other direct costs of preparing a response to a request shall be charged to the requester in the same amount as incurred by the Agency. Such costs shall include, but not be limited to: certifying that records are true copies, and sending records to requesters or receiving records from the Federal records storage centers by special methods such as express mail.

(ii) Fees incurred in responding to information requests are to be charged in accordance with the following categories of requesters:

(A) Commercial use requesters will be assessed charges to recover the full direct costs of searching for, reviewing for release, and duplicating the records sought. Requesters must reasonably describe the records sought. Commercial use requesters are not entitled to 2 hours of free search time nor 100 free pages of reproduction of documents.

(B) Educational institution requesters will be assessed charges for the cost of reproduction alone, excluding charges for the first 100 pages. To be eligible for inclusion in this category, requesters must show that the request is being made under the auspices of a qualifying institution and that the records are not sought for commercial use, but are sought in furtherance of scholarly research. Requesters must reasonably describe the records sought.

(C) Requesters who are representatives of the news media will be assessed charges for the cost of reproduction alone, excluding charges for the first 100 pages. To be eligible for inclusion in this category, a requester must meet the criteria in paragraph (d)(1)(vii) of this section, and the request must not be made for commercial use. In reference to this class of requester, a request for records supporting the news dissemination function of the requester shall not be considered to be a request that is for commercial use. Requesters must reasonably describe the records sought.

(D) All other requesters, not elsewhere described, will be assessed charges to recover the full reasonable direct cost of searching for and reproducing records that are responsive to the request, except that the first 100 pages of reproduction and the first 2 hours of search time shall be furnished without charge. Requesters must reasonably describe the records sought.

(E) Absent a reasonably based factual showing that a requester should be placed in a particular user category, fees will be imposed as provided for in the commercial use requester category.

(iii)(A) In no event shall fees be imposed on any requester when the total charges are less than $11, which is the Agency cost of collecting and processing the fee itself.

(B) If the Agency has reason to believe that a requester or several requesters whose interests are aligned are breaking up a request into several smaller requests for the purpose of

evading the imposition of fees that otherwise would be charged, the Agency may, after notification, aggregate the requests and impose fees in accordance with the fee schedule in this section.

(iv) Documents are to be furnished without charge or at reduced levels if disclosure of the information is in the public interest because it is likely to contribute significantly to public understanding of the operations or activities of the Government and is not primarily in the commercial interest of the requester.

(v) If a requester fails to pay chargeable fees that were incurred as a result of the Agency's processing of the information request, beginning on the 31st day following the date on which the notification of charges was sent, the Agency may assess interest charges against the requester in the manner prescribed in section 3717 of Title 31 U.S.C.

(vi) Each request for records shall contain a specific statement assuming financial liability, in full or to a specified maximum amount, for charges, in accordance with paragraphs (d)(2) (i) and (ii) of this section, which may be incurred by the Agency in responding to the request. If the anticipated charges exceed the maximum limit stated by the person making the request or if the request contains no assumption of financial liability for charges, the person shall be notified and afforded an opportunity to assume financial liability. The request for records shall not be deemed received for purposes of the applicable time limit for response until a written assumption of financial liability is received. The Agency may require a requester to make an advance payment of anticipated fees under the following circumstances:

(A) If the anticipated charges are likely to exceed $250, the Agency shall notify the requester of the likely cost and obtain satisfactory assurance of full payment when the requester has a history of prompt payment of FOIA fees, or require an advance payment of an amount up to the full estimated charges in the case of requesters with no history of payment.

(B) If a requester has previously failed to pay fees that have been charged in processing a request within 30 days of the date when the notification of fees was sent, the requester will be required to pay the entire amount of fees that are owed, plus interest as provided for in paragraph (d)(2)(v) of this section, before the Agency will process a further information request. In addition, the Agency may require advance payment of fees that the Agency estimates will be incurred in processing the further request before the Agency commences processing that request. When the Agency acts under paragraph (d)(2)(vi) (A) or (B) of this section, the administrative time limits for responding to a request or an appeal from initial denials will begin to run only after the Agency has received the fee payments required above.

(vii) Charges may be imposed even though the search discloses no records responsive to the request, or none not exempt from disclosure.

(e) Subject to the provisions of §§ 102.31(c) and 102.66(c), all fines, documents, reports, memoranda, and records of the Agency falling within the exemptions specified in 5 U.S.G. 552(b) shall not be made available for inspection or copying, unless specifically permitted by the Board, its Chairman, or its General Counsel.

(f) An individual will be informed whether a system of records maintained by this Agency contains a record pertaining to such individual. An inquiry should be made in writing or in person during normal business hours to the official of this Agency designated for that purpose and at the address set forth in a notice of a system of records published by this Agency, in a Notice of Systems of Governmentwide Personnel Records published by the Office of Personnel Management, or in a Notice of Governmentwide Systems of Records published by the Department of Labor. Copies of such notices, and assistance in preparing an inquiry, may be obtained from any Regional Office of the Board or at the Board offices at 1717 Pennsylvania Avenue, NW., Washington, DC 20570. The inquiry should contain sufficient information, as defined in the notice, to identify the record. Reasonable verification of the identity of the inquirer, as described in paragraph (j) of this section, will be required to assure that information is disclosed to the proper person. The Agency shall acknowledge the inquiry in writing within 10 days (excluding Saturdays, Sundays, and legal public holidays) and, wherever practicable, the acknowledgment shall supply the information requested. If, for good cause shown, the Agency cannot supply the information within 10 days, the inquirer shall within that time period be notified in writing of the reasons therefor and when it is anticipated the information will be supplied. An acknowledgment will not be provided when the information is supplied within the 10-day period. If the Agency refuses to inform an individual whether a system of records contains a record pertaining to an individual, the inquirer shall be notified in writing of that determination and the reasons therefor, and of the right to obtain review of that determination under the provisions of paragraph (k) of this section.

(g) An individual will be permitted access to records pertaining to such individual contained in any system of records described in the notice of system of records published by this Agency, or access to the accounting of disclosures from such records. The request for access must be made in writing or in person during normal business hours to the person designated for that purpose and at the address set forth in the published notice of system of records. The request for access must be made in writing or in person during normal business hours to the person designated for that purpose and at the address set forth in the published notice of system of records. Copies of such notices, and assistance in preparing a request for access, may be obtained from any Regional Office of the Board or at the Board offices at 1717 Pennsylvania Avenue NW., Washington, DC 20570. Reasonable verification of the identity of the requester, as described in paragraph (j) of this section, shall be required to assure that records are disclosed to the proper person. A request for access to records or the accounting of disclosures from such records shall be acknowledged in writing by the Agency within 10 days of receipt (excluding Saturdays, Sundays, and legal public holidays) and, wherever practicable, the acknowledgment shall inform the requester whether access will be granted and, if so, the time and location at which the records or accounting will be made available. If access to the record or accounting is to be granted, the record or accounting will normally be provided within 30 days (excluding Saturdays, Sundays, and legal public holidays) of the request, unless for good cause shown the Agency is unable to do so, in which case the individual will be informed in writing within that 30-day period of the reasons therefor and when it is anticipated that access will be granted. An acknowledgment of a request will not be provided if the record is made available within the 10-day period. If an individual's request for access to a record or an accounting of disclosure from such a record under the provisions of this paragraph is denied, the notice informing the individual of the denial shall set forth the reasons therefor and advise the individual of the right to obtain a review of that determination under the provisions of paragraph (k) of this section.

(h) An individual granted access to records pertaining to such individual contained in a system of records may review all such records. For that purpose the individual may be accompanied by a person of the individual's choosing, or the record may be released to the individual's representative who has written consent of the individual, as described in paragraph (j) of this section. A first copy of any such record or information will ordinarily be provided without charge to the individual or representative in a form comprehensible to the individual. Fees for any other copies of requested records shall be assessed at the rate of 10 cents for each sheet of duplication.

(i) An individual may request amendment of a record pertaining to such individual in a system of records maintained by this Agency. A request for amendment of a record must be in writing and submitted during normal business hours to the person designated for that purpose and at the address set forth in the published notice of the system of records containing the record of which amendment is sought. Copies of such notices, and assistance in preparing a request for amendment, may be obtained from any Regional Office of the Board or at the Board offices at 1717 Pennsylvania Avenue NW., Washington, DC 20570. The requester must provide verification of identity as described in paragraph (j) of this section, and the request should set forth the specific amendment requested and the reason for the requested amendment. The Agency shall acknowledge in writing receipt of the request within 10 days of receipt (excluding Saturdays, Sundays, and legal public holidays) and, wherever practicable, the acknowledgment shall advise the individual of the determination of the request. If the review of the request for amendment cannot be completed and a determination made within 10 days, the review shall be completed as soon as possible, normally within 30 days (Saturdays, Sundays, and legal public holidays excluded) of receipt of the request unless unusual circumstances preclude completing the review within that time, in which event the requester will be notified in writing within that 30-day period of the reasons for the delay and when the determination of the request may be expected. If the determination is to amend the record, the requester shall be so notified in writing and the record shall be amended in accordance with that determination. If any disclosures accountable under the provisions of 5 U.S.C. 552a(c) have been made, all previous recipients of the record which was amended shall be advised of the amendment and its substance. If it is determined that the request should not be granted, the requester shall be notified in writing of that determination and of the reasons therefor, and advised of the right to obtain review of the adverse determination under the provisions of paragraph (k) of this section.

(j) Verification of the identification of individuals required under paragraphs (f), (g), (h), and (i) of this section to assure that records are disclosed to the proper person shall be required by the Agency to an extent consistent with the nature, location, and sensitivity of the records being disclosed. Disclosure of a record to an individual in person will normally be made upon the presentation of acceptable identification. Disclosure of records by mail may be made on the basis of the identifying information set forth in the request. Depending on the nature, location, and sensitivity of the requested record, a signed notarized statement verifying identity may be required by the Agency. Proof of authorization as representative to have access to a record of an individual shall be in writing, and a signed notarized statement of such authorization may be required by the Agency if the record requested is of a sensitive nature.

(k)(1) Review may be obtained with respect to:

(i) A refusal, under paragraph (f) or (l) of this section, to inform an individual if a system of records contains a record concerning that individual,

(ii) A refusal, under paragraph (g) or (l) of this section, to grant access to a record or an accounting of disclosure from such a record, or

(iii) A refusal, under paragraph (i) of this section, to amend a record.

The request for review should be made to the Chairman of the Board if the system of records is maintained in the office of a Member of the Board, the office of the Executive Secretary, the office of the Solicitor, the Division of Information, or the Division of Administrative Law Judges. Consonant with the provisions of section 3(d) of the National Labor Relations Act, and the delegation of authority from the Board to the General Counsel, the request should be made to the General Counsel if the system of records is maintained by an office of the Agency other than those enumerated above. Either the Chairman of the Board or the General Counsel may designate in writing another officer of the Agency to review the refusal of the request. Such review shall be completed within 30 days (excluding Saturdays, Sundays, and legal public holidays) from the receipt of the request for review unless the Chairman of the Board or the General Counsel, as the case may be, for good cause shown, shall extend such 30-day period.

(2) If, upon review of a refusal under paragraph (f) or (l), the reviewing officer determines that the individual should be informed of whether a system of records contains a record pertaining to that individual, such information shall be promptly provided. If the reviewing officer determines that the information was properly denied, the individual shall be so informed in writing with a brief statement of the reasons therefor.

(3) If, upon review of a refusal under paragraph (g) or (l), the reviewing officer determines that access to a record or to an accounting of disclosures should be granted, the requester shall be so notified and the record or accounting shall be promptly made available to the requester. If the reviewing officer determines that the request for access was properly denied, the individual shall be so informed in writing with a brief statement of the reasons therefor, and of the right to judicial review of that determination under the provisions of 5 U.S.C. 552a(g)(1)(B).

(4) If, upon review of a refusal under paragraph (i), the reviewing official grants a request to amend, the requester shall be so notified, the record shall be amended in accordance with the determination, and, if any disclosures accountable under the provisions of 5 U.S.C. 552a(c) have been made, all previous recipients of the record which was amended shall be advised of the amendment and its substance. If the reviewing officer determines that the denial of a request for amendment should be sustained, the Agency shall advise the requester of the determination and the reasons therefor, and that the individual may file with the Agency a concise statement of the reason for disagreeing with the determination, and may seek judicial review of the Agency's denial of the request to amend the record. In the event a statement of disagreement is filed, that statement—

(i) Will be made available to anyone to whom the record is subsequently disclosed together with, at the discretion of the Agency, a brief statement summarizing the Agency's reasons for declining to amend the record, and

(ii) Will be supplied, together with any Agency statements, to any prior recipients of the disputed record to the extent that an accounting of disclosure was made.

(l) To the extent that portions of system of records described in notices

of Governmentwide systems of records published by the Office of Personnel Management are identified by those notices as being subject to the management of an officer of this Agency, or an officer of this Agency is designated as the official to contact for information, access, or contents of those records, individual requests for access to those records, requests for their amendment, and review of denials of requests for amendment shall be in accordance with the provisions of 5 CFR Part 297, Subpart A, § 297.101, *et seq.*, as promulgated by the Office of Personnel Management. To the extent that portions of system of records described in notices of Governmentwide system of records published by the Department of Labor are identified by those notices as being subject to the management of an officer of this Agency, or an officer of this Agency is designated as the official to contact for information, access, or contents of those records, individual requests for access to those records, requests for their amendment, and review of denials of requests for amendment shall be in accordance with the provisions of this rule. Review of a refusal to inform an individual whether such a system of records contains a record pertaining to that individual and review of a refusal to grant an individual's request for access to a record in such a system may be obtained in accordance with the provisions of paragraph (k) of this section.

Dated, Washington, DC, March 29, 1988.

By direction of the Board.

National Labor Relations Board.

C. Truesdale,

Exective Secretary.

[FR Doc. 88-7209 Filed 4-1-88; 8:45 am]

BILLING CODE 7545-01-M

DEPARTMENT OF DEFENSE

Office of the Secretary

32 CFR Part 388

[DoD Directive 5141.5]

Strategic Defense Initiative Organization (SDIO)

AGENCY: Department of Defense.

ACTION: Final rule.

SUMMARY: This part establishes the Strategic Defense Initiative Organization as an agency of the Department of Defense and delineates its responsibilities, functions, relationships, and authorities.

EFFECTIVE DATE: June 4, 1987.

FOR FURTHER INFORMATION CONTACT: Mr. R. Furtner, Office of the Assistant Secretary of Defense (Comptroller), the Pentagon, Washington, DC 20301, telephone (202) 695-4281.

SUPPLEMENTARY INFORMATION:

List of Subjects in 32 CFR Part 388

Organization and function.

Accordingly, Title 32, Chapter I, is amended to add Part 388 as follows:

PART 388—STRATEGIC DEFENSE INITIATIVE ORGANIZATION

Sec.
388.1 Purpose.
388.2 Applicability.
388.3 Mission.
388.4 Organization and management.
388.5 Functions and responsibilities.
388.6 Relationships.
388.7 Authorities.
388.8 Administration.
388.9 Effective date.
Appendix—Delegations of Authority.

Authority: 10 U.S.C. 192.

§ 388.1 Purpose.

This part establishes, pursuant to the authority vested in the Secretary of Defense under 10 U.S.C. and National Security Decision Directive 119, January 6, 1984, the Strategic Defense Initiative Organization (hereafter referred to as "SDIO") as an agency of the Department of Defense with responsibilities, functions, relationships, and authorities as prescribed herein.

§ 388.2 Applicability.

This applies to the Office of the Secretary of Defense (OSD), the Military Departments, the Organization of the Joint Chiefs of Staff (OJCS), the Unified and Specified Commands, the Inspector General of the Department of Defense (IG, DoD), and the Defense Agencies (hereafter referred to as "DoD Components").

§ 388.3 Mission.

SDIO shall manage and direct the conduct of a vigorous research program, including advanced technologies, that will provide the basis for an informed decision regarding the feasibility of eliminating the threat posed by nuclear ballistic missiles of all ranges, and of increasing the contribution of defensive systems to U.S. and allied security. The program shall protect options for near-term deployment of limited ballistic missile defenses. The program shall be carried out in full consultation and, where appropriate, with participation of our allies. The program shall be conducted in compliance with all existing treaty obligations and will emphasize non-nuclear technologies.

§ 388.4 Organization and management.

(a) SDIO is established as a separate agency of the Department of Defense under the direction, authority, and control of the Secretary of Defense, and shall function under the overall supervision of the Deputy Secretary of Defense. It shall consist of a Director, appointed by the Secretary of Defense, and such subordinate organizational elements as are established by the Director within resources authorized by the Secretary of Defense.

(b) The SDI Executive Committee (EXCOM) shall provide DoD oversight and guidance for the internal management of the Strategic Defense Initiative Program (SDIP). The EXCOM shall provide formal review of the program for the Secretary of Defense. It shall be chaired by the Deputy Secretary of Defense and shall include as members: the Vice Chairman of the Joint Chiefs of Staff; the Secretaries of the Military Departments and Chiefs of the Military Services; the Under Secretaries of Defense; the Assistant Secretary of Defense (Comptroller) (ASD(C)); the Assistant Secretary of Defense (Production and Logistics) (ASD(P&L)); the Assistant Secretary of Defense (Command, Control, Communications, and Intelligence) (ASD(C3I)); the Assistant Secretary of Defense (Legislative Affairs); the Director of Operational Test and Evaluation (Director, OT&E); the Assistant to the Secretary of Defense (Atomic Energy); the Director, Program Analysis and Evaluation (DPA&E); and the Directors of the Defense Advanced Research Projects Agency and the Defense Nuclear Agency. The Director, SDIO, shall serve as Executive Secretary of the EXCOM.

§ 388.5 Functions and responsibilities.

(a) The *Director, SDIO,* is the principal advisor to the Secretary of Defense and the Deputy Secretary of Defense for SDIP programmatic policy, requirements, priorities, systems, resources and programs. The DSDIO shall, under the overall supervision of the Deputy Secretary of Defense and subject to the direction of the Secretary of Defense and Deputy Secretary of Defense, organize, direct, and manage the SDIO and exercise management oversight of all DoD SDIP programs and resources. In the performance of these responsibilities, the Director shall:

(1) Develop programmatic policies, issue program guidance, and assign project responsibility to DoD Components.

(2) Develop systems, standards, and procedures for the administration and

management of approved SDI plans and programs; establish program goals and objectives; set priorities; and evaluate DoD Componet SDI program activities.

(3) In coordination with the ASD(C) and DPA&E, review DoD Component SDI Program Objectives Memoranda (POMs) and budget submissions; make determinations regarding priorities and resources; prepare the consolidated SDI POM; provide recommendations on Program Budget Decisions to the ASD(C) and DPA&E or incorporation into the planning, programming, and budgeting system (PPBS) process; and initiate and implement Congressional reprogramming actions.

(4) Make such determinations regarding priorities and resources as may be required to achieve approved program objectives.

(5) Serve as SDI Acquisition Executive for the SDIO.

(6) In coordination with appropriate DoD officials, identify service, agency, and SDIO responsibilities for program execution, and in such cases where source-selection is not delegated to the Military Departments and Defense Agencies, retain authority within SDIO.

(7) In coordination with the Under Secretary of Defense (Acquisition) [USD(A)], develop mechanisms for coordinating SDI programs with other DoD research, development, test and evaluation efforts.

(8) Oversee the participation of U.S. allies in the SDIP. Through coordination with the appropriate executing agent, delegate international projects to the Military Departments of Defense Agencies.

(9) Present the SDI POM, the annual budget, and periodic program reviews to the SDIO EXCOM.

(10) In consideration of the Chairman, Joint Chiefs of Staff; Military Department; and Defense Agency requirements and recommendations, plan for future transition of the SDI research program into development and subsequent production and deployment.

(11) Perform research to establish supportability criteria for the integration of logistic factors with system architectures, concepts, and design activity during the early phases of the SDIP.

(12) Serve as principal DoD official responsible for presenting the SDIP budget to the Congress.

(13) Serve as principal public spokesperson for the SDIP.

(14) Promote coordination, cooperation, and mutual understanding within the Department of Defense and between the Department of Defense and other Federal Agencies, and the civilian community.

(15) Serve on boards, committees, and other groups pertaining to SDIO functions and responsibilities.

(16) Establish internal procedures for compliance with the ABM Treaty and other SAL Agreements, pursuant to DoD Directive 5100.70.[1]

(17) Perform such other duties as the Secretary of Defense or Deputy Secretary of Defense may prescribe.

(b) *DoD Components* shall provide advice and support to the DSDIO in accordance with applicable DoD Directives.

(c) The *Secretaries of the Military Departments and Directors of Defense Agencies* shall:

(1) Execute SDI programs as approved by the Secretary of Defense.

(2) Establish a streamlined management structure and procedure: to include a single office of primary responsibility to facilitate expedited communications and actions on the SDI program.

(3) Provide program recommendations to the Director, SDIO, for consideration in the development of the SDI POM. These recommendations shall be developed as an integral part of the Military Departments/Defense Agencies POM process. The participating Military Departments and Defense Agencies must review their assigned work packages and resources to ensure that supporting Military Departments/Defense Agency requirements are adequately addressed (e.g., manpower, facilities, etc.).

(4) Submit program documentation and reports required by the Director, SDIO.

(5) Establish simplified contract/procurement procedures for and creative methods of achieving program objectives consistent with applicable laws and good management practice.

(d) The *Chairman of the Joint Chiefs of Staff* (CJCS) shall provide strategic guidance and define operational concepts and requirements.

§ 388.6 Relationships.

(a) In the performance of assigned functions, the Director, SDIO, shall:

(1) Serve as a member of the Defense Resources Board when SDI matters are under consideration and Executive Secretary of the SDI Executive Committee.

(2) Consult with the CJCS and Under Secretary of Defense for Policy when addressing issues under their respective purview, to include the strategy and policy implications of defensive capabilities.

(3) Establish, in consultation with the USD(A), ASD(P&L), ASD(C) and the Director, OT&E, mechanisms for coordination of SDI programs with other DoD technical efforts.

(4) Establish procedures for streamlined communications with each Military Department and Defense Agency involved in the SDI Program.

(5) Maintain active liaison for the exchange of information and advice in the field of assigned responsibility with all DoD Components, other U.S. Government activities, and non-DoD research institutions (including private business entities and educational institutions).

(6) Keep the Secretary of Defense, the Deputy Secretary of Defense the OSD Staff, the Secretaries and Chiefs of the Military Departments, the CJCS, and other DoD and non-DoD U.S. Government Agencies informed on schedules, status, and significant new developments, breakthroughs, and technological advances within assigned projects.

(7) Make appropriate use of established facilities in the OSD, other DoD Components, and other Government Agencies rather than unnecessarily duplicating such facilities.

(8) Operate within the DoD Acquisition System, taking direction from the USD(A) on matters of acquisition policy, procedure, and execution, consistent with DoD Directive 5134.1.[2]

(9) Coordinate and exchange information with other DoD officials having collateral and related functions.

(b) Within available resources, officials of all DoD Components will provide support, in their respective fields of responsibility, to the Director, SDIO, as may be necessary to carry out the assigned responsibilities and functions of the SDIO.

(c) Other DoD officials shall coordinate with the Director, SDIO, concerning the functions and responsibilities cited in § 388.5.

§ 388.7 Authorities.

The Director, SDIO, is hereby delegated authority to:

(a) Enter into and administer contracts, directly or through a Military Department, a DoD contract administration services component, or other governmental department or agency, as appropriate, for supplies, equipment, and services required to accomplish the mission of the SDIO.

[1] Copies may be obtained, if needed, from the U.S. Naval Publications and Forms Centers, Attn: Code 1052, 5801 Tabor Avenue, Philadelphia, PA 19120.

[2] See footnote 1 to § 388.5(a)(10).

(b) Serve as the head of an Agency and Contracting Activity within the meaning of and subject to the limitations of FAR 2.1, and DoD FAR Supplement 2.1, for the SDIO.

(c) Authorize the allocation/sub-allocation of funds made available to SDIO for assigned research and development projects.

(d) Acquire or construct, through a Military Department or other Government Agency, such research, development, and test facilities and equipment required to carry out assignments that may be approved by the Secretary of Defense or Deputy Secretary of Defense in accordance with applicable statutes.

(e) Negotiate agreements, as necessary, with other U.S. agencies and organizations to ensure proper coordination and execution of the SDIP.

(f) Negotiate agreements, as necessary, with foreign governments to execute allied participation in the SDI research program. These agreements will be subject to approval by duly constituted DoD authorities.

(g) Recommend to the Secretary of Defense, Deputy Secretary of Defense, or USD(A) revisions or exceptions to Military Department/Defense Agency regulations, Directives, procedures or Instructions for, or related to, acquisition for individual or a class of SDIO requirements as determined necessary to accomplish the SDIO objectives.

(h) Communicate directly with heads of the DoD organizations, including the Secretaries and Chiefs of the Military Departments, the CJCS, the Directors of Defense Agencies, and, under special circumstances, with the Commanders of the Unified and Specified Commands.

(i) Establish special security procedures for sensitive SDI research programs.

(j) Exercise the administrative authorities contained in the Appendix of this part.

§ 388.8 Administration.

(a) SDIO shall be authorized such personnel, facilities, funds, and other administrative support as the Secretary of Defense deems necessary.

(b) The Military Departments shall assign personnel to SDIO in accordance with approved authorizations and procedures for assignment to joint duty.

(c) Administrative support required for SDIO will be provided by the Director, Washington Headquarters Services, and other DoD Components, as appropriate.

§ 388.9 Effective date.

This part is effective June 4, 1987.

Appendix—Delegations of Authority

Pursuant to the authority vested in the Secretary of Defense, and in accordance with DoD policies, Directives, and Instructions, the Director of the Strategic Defense Initiative Organization (DSDIO) or, in the absence of the Director, the person acting for him or her, is hereby delegated authority, as required in the administration and operation of the Strategic Defense Initiative Organization to:

1. Perform the following functions in accordance with the provisions of Title 5, United States Code, section 7532; Executive Order 10450, "Security Requirements for Government Employment," April 27, 1953; and DoD 5200.2-R, "DoD Personnel Security Program," December 20, 1979:

a. Designate any position in the SDIO as a "sensitive" position.

b. Authorize, in case of an emergency, the appointment of a person to a sensitive position in the SDIO, for a limited period of time, for whom a full field investigation or other appropriate investigation, including the National Agency Check, has not been completed.

c. Authorize the suspension, but not the termination, of the services of an SDIO employee in the interest of national security.

2. Authorize and approve:

a. Travel for SDIO civilian employees in accordance with Volume II, Joint Travel Regulations.

b. Temporary duty travel only for military personnel assigned or detailed to SDIO in accordance with Volume I, Joint Travel Regulations.

c. Invitational travel to persons serving without compensation whose consultative, advisory, or other specialized technical services are required in a capacity directly related to, or in connection with, SDIO activities.

3. Approve the expenditure of funds available for travel by military personnel assigned or detailed to SDIO for expenses incident to attendance at meetings of technical, scientific, professional, or other similar organizations in such instances where the approval of the Secretary of Defense or his designee is required by law (37 U.S.C. 412). This authority cannot be redelegated.

4. Develop, establish, and maintain an active and continuing Records Management Program under DoD Directive 5015.2, "Records Management Program," September 17, 1980; DoD Directive 5400.7, "DoD Freedom of Information Act Program," March 24, 1980; and DoD Directive 5400.11, "Department of Defense Privacy Program," June 9, 1982.

5. Establish and use imprest funds for making small purchases of material and services, other than personal, for the SDIO when it is determined more advantageous and consistent with the best interests of the Government, in accordance with DoD Instruction 5100.71, "Delegation of Authority and Regulations Relating to Cash Held at Personal Risk Including Imprest Funds," March 5, 1973, and the Joint Regulation of the General Services Administration/Treasury.

6. Authorize and approve overtime work for civilian personnel in SDIO in accordance with the provisions of the Federal Personnel Manual Supplement 990-1, section 550.111.

7. Establish and maintain appropriate property accounts for SDIO and appoint boards of survey, approve reports of survey, relieve personal liability, and drop accountability for SDIO property contained in the authorized property accounts that have been lost, damaged, stolen, destroyed, or otherwise rendered unserviceable, in accordance with applicable laws and regulations.

8. Establish and maintain, for the functions assigned, an appropriate publications system for the promulgation of regulations, instructions, and reference documents, and changes thereto, pursuant to the policies and procedures prescribed in DoD 5025.1-M, "Department of Defense Directives System Procedures," April 1981.

9. Issue the necessary security regulations for protection of property and places under the jurisdiction of the SDIO, under DoD Directive 5200.8, "Security of Military Installations and Resources," July 29, 1980.

10. Exercise original TOP SECRET classification authority.

11. Establish security classification guidance and review policy.

12. In coordination with the Deputy Assistant Secretary of Defense (Administration), enter into interservice support agreements with the Military Departments, other DoD components, or other Government Agencies as required, for the effective performance of responsibilities and functions assigned to the SDIO.

13. Establish advisory committees pursuant to the provisions of the Federal Advisory Committee Act of 1972 (Pub. L. 92-463) and DoD Directive 5105.18, "DoD Committee Management Program," March 20, 1984.

14. Authorize the publication of advertisements, notices or proposals in newspapers, magazines, or other public periodicals as required for the effective administration and operation of SDIO (44 U.S.C. 3702).

15. Request specific Military Departments and Defense Agencies to serve as contracting activities for the SDIO, as necessary.

Linda Bynum,

Alternative OSD Federal Register Liaison Officer, Department of Defense.

Dated: March 29, 1988.

[FR Doc. 88-7331 Filed 4-1-88; 8:45 am]

BILLING CODE 3810-01-M

FEDERAL COMMUNICATIONS COMMISSION

47 CFR Part 2

Table of Frequency Allocations

AGENCY: Federal Communications Comission.

ACTION: Final rule.

SUMMARY: The Federal Communications Commission amends Part 2 of its rules to remove footnotes NG133 and 569 from the Table of Frequency Allocations. Footnotes NG133 and 569 provide for

operation of stations, other than radio astronomy stations, in the 73.0–74.6 MHz band until December 31, 1985. Since this date has passed, footnotes NG133 and 569 are obsolete and are therefore removed.

EFFECTIVE DATE: March 22, 1988.

FOR FURTHER INFORMATION CONTACT: Mr. Joseph P. Husnay, Office of Engineering and Technology, (202) 653–8106.

SUPPLEMENTARY INFORMATION:

List of Subjects in 47 CFR Part 2

Frequency allocations.

Order

[DA 88–171]

Adopted: March 14, 1988.
Released: March 22, 1988.

By the Managing Director:

1. This item deletes two obsolete footnotes to the Table of Frequency Allocations in § 2.106 of the Rules. Nongovernment (NG) footnote NG133 states that stations authorized in the band 73.0–74.6 MHz as of December 1, 1961, may continue to operate until December 31, 1985. International footnote 569 states that in Region 2, the fixed, mobile and broadcasting services previously authorized in the band 73.0–74.6 MHz may continue to operate until December 31, 1985. Since December 31, 1985, has passed, footnotes NG133 and 569 are now obsolete and are therefore removed.

2. This action is considered to be editorial in nature. Accordingly, it is ordered that footnotes NG133 and 569 in Part 2 of the Commission's Rules are removed pursuant to the authority of 47 U.S.C. Sections 154(i), 302, and 303, and pursuant to § 0.231(d) of the Commission's Rules. Because the removal of NG133 and 569 is nonsubstantive, the notice and comment provisions as well as the effective date requirements of the Administrative Procedure Act are inapplicable. This action becomes effective immediately.

Federal Communications Commission.

Edward J. Minkel,

Managing Director.

47 CFR Part 2 is amended as follows:

PART 2—[AMENDED]

1. The authority citation for Part 2 continues to read as follows:

Authority: Secs. 4, 303, 48 Stat. 1066, 1082, as amended; 47 U.S.C. 154, 303, unless otherwise noted.

§ 2.106 [Amended]

2. Section 2.106 is amended by removing footnotes NG133 and 569 from columns 2, 4, and 5 in band 73.0–74.6 MHz.

[FR Doc. 88–7252 Filed 4–1–88; 8:45 am]

BILLING CODE 6712–01–M

DEPARTMENT OF THE INTERIOR

Fish and Wildlife Service

50 CFR Part 17

Endangered and Threatened Wildlife and Plants; Determination of Endangered Status for the Relict Trillium

AGENCY: Fish and Wildlife Service, Interior.

ACTION: Final rule.

SUMMARY: The Service determines *Trillium reliquum* Freeman (relict trillium) to be an endangered species under the authority of the Endangered Species Act of 1973 (Act), as amended. *Trillium reliquum* is known from only ten locations—Alabama (two sites), Georgia (five sites), and South Carolina (three sites). The species is endangered by timber harvesting, wildfires, and development of its habitat. This action will implement the Federal protection provided by the Act for *Trillium reliquum.*

EFFECTIVE DATE: May 4, 1988.

ADDRESSES: The complete file for this rule is available for inspection, by appointment, during normal business hours at the Asheville Field Office, U.S. Fish and Wildlife Service, 100 Otis Street, Room 224, Asheville, North Carolina 28801.

FOR FURTHER INFORMATION CONTACT: Mr. Robert R. Currie at the above address (704/259–0321 or FTS 672–0321).

SUPPLEMENTARY INFORMATION:

Background

Trillium reliquum, a herbaceous member of the lily family, was recognized as a distinct species by Freeman (1975) after his extensive study of this complex and taxonomically difficult group. During his research, Freeman examined more than 10,000 *Trillium* specimens from over 80 herbaria and extensively collected and observed members of the group in the field. This rare species is distinguished from other sessile-flowered *Trillium* by its decumbent or S-curved stems, distinctively shaped anthers, and the color and shape of its leaves. The flowers appear in early spring and are greenish to brownish purple or occasionally pure yellow in color. The fruit is an oval-shaped, berry-like capsule, which matures in early summer. *Trillium reliquum* is perennial from a tuberous rhizome; and, like other members of the genus, it dies back to this rhizome after the fruit matures (Freeman 1975, Freeman 1985).

Trillium reliquum is found primarily in moist hardwood forests that have had little or no disturbance in the recent past. The soils on which it grows vary from rocky clays to alluvial sands, but all exhibit a high organic matter content in the upper soil layer. Most sites appear to be free from the influence of fire, both in the recent and distant past. Timber harvesting at the known sites has been limited to selective cutting (Freeman 1985). Relict trillium does occur on less than optimum sites, such as power and sewer line rights-of-way, and can apparently become reestablished after intensive disturbance to its habitat, such as agricultural activity (Martin *in litt.*, Boardman *in litt.*, Barrett *in litt.*). However, Rayner (1987) notes that the best populations are found in the rich wooded areas that also support other species considered rare or endangered in South Carolina. Reestablishment within power line and sewer line rights-of-way would be expected, provided that maintenance activities did not include broad spectrum herbicides or other intensive disturbances. Reestablishment of the species after intensive agricultural activities would be anticipated provided that there is a nearby source of seeds for the plants and if the original soil, moisture, and vegetational associates are reestablished on the disturbed site.

There are currently ten known extant populations and one extirpated population of *Trillium reliquum.* Alabama has two extant populations, Georgia has five extant populations and one extirpated population, and South Carolina has three populations. The following discussion of the status of each State's populations is primarily extracted from a status report on the species prepared by Freeman (1985). Freeman's 1985 information is supplemented as appropriate by the additional information noted below.

Site 1, Henry County, Alabama. This small population (approximately 150 plants on one-third acre) is on land managed as a recreation area by the U.S. Army Corps of Engineers. Roads constructed in the area, as well as an existing power transmission line, have altered the area and may have destroyed habitat occupied by *Trillium reliquum.* At the present time, illegal trash and refuse dumping and digging for fish bait are potential threats to the species at this location.

Site 2, Lee County, Alabama. This is the second largest known population of the species. Several thousand plants are distributed over an area of 120 acres. This privately owned site is near an expanding urban population; the major threat to the site is expansion of an adjacent residential subdivision. The site is currently for sale and could, in the near future, be lost to intensive residential development or conversion to intensive pine monoculture.

Site 3, Clay County, Georgia. This moderate-sized population occurs along a small creek that is a tributary of the Chattahoochee River. The plants occur within a small (3-acre) area bounded by development on three sides and unsuitable habitat on the fourth side. The site is privately owned and is threatened by timber harvesting and/or residential development.

Site 4, Columbia County, Georgia. This moderate-sized population occurs on approximately 15 acres within a privately owned tract in the vicinity of an expanding urban area. Historically, part of this population was destroyed by a quarrying operation. Current threats to the site include residential development and timber harvesting.

Site 5, Columbia County, Georgia. This very small population (less than 50 plants) occurs on unprotected, privately owned land. Recent residential development and timber harvesting have altered many areas adjacent to the site. Potential threats to this population include development, logging, and wildfires.

Site 6, Early County, Georgia. This small population was adversely impacted by a tornado that struck the area in 1983. The only plants observed in 1985 were near the edge of the impacted area. The mature hardwood forest that formerly occurred at this site has been completely destroyed and replaced with a thick tangle of broken tree trunks and limbs intertwined with greenbrier, blackberry, and grape vines.

Site 7, Talbot County, Georgia. This small population of 20 plants was discovered in the spring of 1987. It is located on a wildlife management area controlled by the Georgia Department of Natural Resources. Recent timber management activities have drastically altered the site, and its continued existence is not assured. The management agency (Georgia Department of Natural Resources) responsible for the site will ensure that future activities there are undertaken in a manner consistent with the protection of *Trillium reliquum* (Tom Patrick, Georgia Natural Heritage Inventory, pers. comm.).

Site 8, Lee County, Georgia. This site is represented by an old collection of relict trillium made by Mrs. M. G. Henry in 1939. Thorough searches of the original collection site and adjacent, apparently suitable, habitat failed to reveal the presence of an extant population in this area. *Trillium reliquum* appears to have been extirpated from Lee County by the numerous land use changes that have occurred in the area since 1939 (John Freeman, Auburn University, pers. comm.).

Site 9, Aiken and Edgefield Counties, South Carolina. This is the largest known population of *Trillium reliquum.* The population consists of a series of about ten subpopulations (or colonies) containing from a few hundred to several thousand plants. These colonies occur along a narrow band of suitable habitat that extends for approximately 3 miles. Historically, the plants were probably nearly continuously distributed over this entire area; however, extensive habitat alteration within the population has resulted in the current pattern of irregularly distributed colonies.

A portion of this population site has been purchased as a nature preserve by the South Carolina Wildlife and Marine Resources Department. An additional small colony is within a highway right-of-way owned by the South Carolina Department of Transportation. The remainder of the area is in private ownership and is threatened by residential development resulting from the expansion of an adjacent urban area. A portion of the best habitat that occurred at this location was apparently destroyed by activities associated with highway construction. A small portion of the site is currently being adversely impacted by grazing cattle. In the spring of 1986, several hundred plants were cut (while in bloom) by vandals or uninformed wildflower enthusiasts (Roger Jones, The Nature Conservancy, pers. comm.). A small population segment located on approximately 100 acres in private ownership is apparently protected from destruction by the owners' stated goal of maintaining the area in its natural condition (Boardman *in litt.*). An additional 80 acres, a portion of which supported *Trillium reliquum,* was recently logged and planted in pines (Baggott *in litt.*). Rayner (*in litt.*) states that the best segment of this population has recently been subdivided and is currently for sale. Aiken County and the City of North Augusta are currently planning the construction of new sewer lines in the northern part of Aiken County and adjacent Edgefield County. The sewer line routes have been altered to some extent to reduce direct impacts on *Trillium reliquum* (Martin *in litt.*, Rayner *in litt.*). However, the development that will follow this expansion of the wastewater collection system may increase the threats to the population. Subsequent increases in land values will make it more difficult to protect a viable population through landowner agreements, nondevelopment easements, or acquisition of property (Rayner *in litt.*).

Site 10, Aiken County, South Carolina. This small (10-acre) population is in a rich, vegetatively diverse ravine adjacent to the Savannah River. A portion of the site is municipally owned, while the remainder is in private ownership. Threats to the privately owned portion of the site include wildfires, trampling by visitors to the area, timber harvesting, and development. The municipally owned portion is protected by the city's informal agreement to maintain the area in its natural state (Charles Martin, North Augusta City Administrator, pers. comm.).

Site 11, Aiken County, South Carolina. This healthy population occurs along the lower slope of a bluff that parallels the Savannah River. It is the third largest of the known *Trillium reliquum* sites, is privately owned, and currently receives no protection. Threats to this location include wildfires, logging, development, and livestock grazing.

Additional appropriate sites were searched for the presence of *Trillium reliquum* during the 1984 and 1985 field seasons (Freeman 1985). Habitat characteristics such as slope, soils, vegetation, and topography were used to indicate suitable habitat. Including the known sites, Freeman (1985) searched a total of 44 locations for presence and distribution of *Trillium reliquum.* Upon completion of the status survey, the Service provided copies to the appropriate State agencies for review and comment. Rayner responded (*in litt.*) that one additional area (the Oconee River drainage) may support the species and suggested that an attempt be made to determine if, in fact, the species occurs in that area. The Service searched seven areas in Baldwin County, Georgia, during the spring of 1986. The related species *Trillium maculatum* and/or *Trillium cuneatum* were found at most of these sites, but no additional populations of *Trillium reliquum* were found. The areas searched were those which, based upon soils, slope, vegetation, and topography, appeared to be most likely to support *Trillium reliquum.*

Federal government actions on this species began with the November 28, 1983, publication of a supplement to the Notice of Review for Native Plants in the **Federal Register** (48 FR 53640). *Trillium reliquum* was included in this supplement as a category-2 species. Category-2 species are those for which listing as endangered or threatened species may be warranted, but for which substantial data on biological vulnerability and threats are not currently known or on file to support proposed rules. Subsequent to this notice, the Service funded a status survey of the species. Field work for this survey was conducted during the 1984 and 1985 field seasons, and the Service accepted the final report (Freeman 1985) in late September 1985. This status report and other available information indicate that the addition of *Trillium reliquum* to the Federal list of Endangered and Threatened Plants is warranted.

All plants included in the comprehensive plant notices are treated as under petition. Section 4(b)(3)(B) of the Endangered Species Act, as amended in 1982, requires the Secretary to make certain findings on pending petitions within 12 months of their receipt. On October 12, 1984; October 11, 1985; and October 10, 1986, the Service found that listing *Trillium reliquum* may be warranted but was precluded by other higher priority listing actions.

On January 14, 1987, the Service published, in the **Federal Register** (52 FR 1497), a proposal to list *Trillium reliquum* as an endangered species. That proposal constituted the final finding as required by the 1982 amendments to the Endangered Species Act. The proposal provided information on the species' biology, status, and threats, and the potential implications of listing. The proposal also solicited comments on the status, distribution, and threats to the species.

Summary of Comments and Recommendations

In the January 14, 1987, proposed rule, the June 4, 1987, notice of a public hearing and extension of the comment period (52 FR 21088); the June 22, 1987, public hearing; and notifications associated with these activities, all interested parties were requested to submit factual reports or information that might contribute to the development of a final rule. Appropriate State agencies, county governments, Federal agencies, scientific organizations, and other interested parties were contacted and requested to comment. Newspaper notices inviting public comment were published in the following newspapers: *Abbeville Herald*, Abbeville, Alabama; *Opelika-Auburn News*, Opelika, Alabama; *Cuthbert Times and News Record*, Cuthbert, Georgia; *Early County News*, Blakely, Georgia; *Columbia News-Times*, Martinez, Georgia; *Edgefield Advertisor*, Edgefield, South Carolina; and *Aiken Standard*, Aiken, South Carolina.

In response to a formal request, a public hearing on the proposal to list *Trillium reliquum* as an endangered species was held on June 22, 1987, at the North Augusta Community Center in North Augusta, South Carolina. A notice of the hearing and reopening of the comment period to July 2, 1987, was published in the **Federal Register** on June 4, 1987 (52 FR 21088). The public hearing notice announced the purpose, time, and location of the hearing and extended the formal comment period on the proposal in order to ensure that all interested parties had ample time to provide information on the proposed rule.

All written comments and oral statements presented at the public hearing and those received during comment periods are covered in the following discussion. Comments of similar content are grouped together. These issues and the Service response to each, are discussed below.

Nineteen responses to the proposed rule were received during the initial comment period and five verbal statements and seven written responses were provided at the public hearing. Two Federal agencies and three State agencies provided comments. The remaining comments came from private organizations or individuals.

The U.S. Army Corps of Engineers (Mobile District), Tennessee Valley Authority, Alabama Forestry Commission, Georgia Department of Natural Resources, and the South Carolina Wildlife and Marine Resources Department either supported the proposal or stated their activities would have no affect on the species.

The Sierra Club (South Carolina Chapter), South Carolina Nature Conservancy, and four individuals and private organizations provided comments supporting the proposal. One individual provided information on additional South Carolina locations. Another individual who supported the listing provided additional information on threats to one of the Alabama populations, and requested that critical habitat be designated. The Service has incorporated the additional information on status and threats to the species as appropriate into this document. Also, the Service does not believe that it would be prudent to determine critical habitat for relict trillium (see Critical Habitat Section for discussion).

One landowner requested a public hearing and in a subsequent letter requested information on several aspects of the Endangered Species Act regulations developed to implement it. The Service provided the information requested by this individual.

The public hearing on the proposed rule to list relict trillium as an endangered species was held on June 22, 1987, at the North Augusta Community Center in North Augusta, South Carolina. The hearing officer was Mr. John Harrington of the Secretary of the Interior's Office of the Solicitor. The Service was represented by Messrs. Richard Biggins and Robert Currie of the Asheville Field Office. The objectives and procedures of the hearing were first reviewed by Mr. Harrington. This introduction was followed by a review of the Endangered Species Act and the status of relict trillium by Mr. Currie. Public comments on the proposed rule were then accepted. The comment session was followed by a short question and answer period. The hearing began at 7:30 p.m. and ended at 8:24 p.m. A transcript of the hearing was prepared by Culpepper Reporting Service, Inc., Augusta, Georgia. Five verbal statements were made at the public hearing and seven written comments were provided, three of which were copies of verbal statements given.

The Sierra Club, the South Carolina Wildlife and Marine Resources Department, and two private organizations restated their support of the proposal. Two individuals also supported the listing.

A landowner stated that he owned a 1.49-acre tract of land that supported relict trillium and that he had not received official notification from the Service on its proposal to add the species to the Federal list of endangered species. He further stated that there was an abundance of potential habitat for relict trillium in the vicinity of North Augusta, South Carolina, and Augusta, Georgia, and that not enough searches for the species had been conducted to determine the actual status of the species. He stated that he did not believe that the available information supported consideration of relict trillium as an endangered species. He stated he and his father, who owns 98 acres of land surronding his property, have no plans to adversely affect the portion of the relict trillium population found there. Also, he provided information on the ability of relict trillium to recover from

fire, cattle grazing, and timber harvesting.

The additional information provided on the response of relict trillium to habitat alterations such as fire, logging, or agricultural activities has been incorporated into this final rule. The Service regrets that one landowner failed to receive official notification of the rule proposing that relict trillium be added to the Federal endangered species list. The Service makes every effort to ensure that all appropriate parties are notified but occasionally fails in this endeavor. Also, the Service has made every effort to survey potential habitat and determine the status of existing populations (see Background section for a more detailed description).

An attorney for a landowner stated that he believed that because of the difficulty in identifying relict trillium and the amount of potential habitat for the species, the Service should delay adding the species to the endangered species list until more field searches have been conducted. He pointed out that the number of known populations had grown from two in 1975 to ten in 1987, and he stated that most of the threats to the species would not be alleviated by adding the species to the Federal list of endangered species.

This attorney further stated that relict trillium does not merit addition to the Federal list because this recently described species has not been adequately studied nor is there evidence that it is actually declining. He requested that final action on the proposal to list the species be delayed for 1 year. The purpose of the delay would be to conduct additional field work. This additional work would include searches for additional populations and further monitoring of the known populations. This would provide a better understanding of trends in the populations and determine if they are actually declining or not. (See Service response below).

The Service acknowledges that some members of the sessile-flowered trillium group are difficult for the inexperienced to identify. However, all individuals conducting relict trillium searches for the Service and State conservation agencies are thoroughly familiar with the group and can be confidently relied upon to correctly identify the species.

The increase in the number of known relict trillium populations from two in 1975 to ten in 1987 is the direct result of the intensive searches that have been conducted for additional populations. Most of these additional populations were found by Dr. John Freeman of Auburn University (under contract to the Service to search for additional populations) and by Dr. Doug Rayner (South Carolina Wildlife and Marine Resources Department); the latter searched for the plant as a part of his duties as botanist for the South Carolina Heritage Trust Program. Work to date on the distribution of relict trillium has been extensive and is reviewed in the "Background" section of this final rule. A few additional populations, if discovered, are not anticipated to significantly change the known distribution of relict trillium. Any new populations will also be vulnerable to many of the same threats that are facing those currently known.

The Service recognizes that the addition of a plant to the Federal list of endangered and threatened species will not protect the species from all of the actions and activities that threaten its continued existence. The species will still be susceptible to taking at most of the known populations; non-Federal construction and habitat modification activities that may adversely affect the species will continue to affect the species regardless of whether the species is listed or not. However, there are many benefits that addition to the Federal list provides. These benefits are reviewed in the "Conservation Measures" section of this final rule.

Another landowner stated that she owned land supporting relict trillium; although she was sympathetic with the goal of protecting the species, she could not afford to make her property a preserve. She requested that the appropriate agencies preserve what land is needed to protect the species or that agreements for protecting the species be worked out with the individuals who have bought or will buy her property as residential lots.

The Service acknowledges that many private landowners will not be able to or will choose not to protect the relict trillium colonies growing on their property. The Service, in cooperation with the appropriate State agencies and private groups, will endeavor to ensure that a sufficient number of colonies and populations of relict trillium are protected to ensure that the species will continue to exist. The mechanisms that will be used to accomplish this goal include purchase of habitat and habitat protection through acquisition of binding or nonbinding easements.

The city administrator, City of North Augusta, provided additional information on the nature of the habitat where relict trillium is found. He stated that with the meager amount of information available, more searches for the species need to be conducted before the species is added to the Federal list. (See Service response above).

Summary of Factors Affecting the Species

After a thorough review and consideration of all information available, the Service has determined that *Trillium reliquum* should be classified as an endangered species. Procedures found at section 4(a)(1) of the Endangered Species Act (16 U.S.C. 1531 *et seq.*) and regulations promulgated to implement the listing provisions of the Act (50 CFR Part 424) were followed. A species may be determined to be an endangered or threatened species due to one or more of the five factors described in section 4(a)(1). These factors and their application to *Trillium reliquum* Freeman (relict trillium) are as follows:

A. The Present or Threatened Destruction, Modification, or Curtailment of its Habitat or Range

All of the known *Trillium reliquum* populations are currently threatened by one or more human activities (Freeman 1985, Rayner *in litt.*). The most significant of these threats is the loss or alteration of their habitat resulting from residential development. Most populations are adjacent to rapidly expanding urban areas, and the direct impacts of construction activities associated with an expanding population are significant. In addition to these direct impacts, activities such as, power transmission line construction, gas, water, and sewer line installation, and road construction all may have indirect or direct impacts on the species if not planned in a way to protect this rare species. Logging of areas occupied by the species constitutes a significant threat, as does conversion or use of the sites for pine monoculture, pastures, or row crop agriculture. Historically, quarrying of stone has adversely affected one population; and stone, sand, and clay quarrying remains a potential threat to at least portions of the known populations. Fires, whether caused by arson, accident, or for timber management, threaten all populations. All populations have been impacted to some extent by one or more of these activities, and all populations, at least in part, remain vulnerable to them (Freeman 1985).

B. Overutilization for Commercial, Recreational, Scientific, or Educational Purposes

Trillium reliquum is not currently a significant component of the commercial trade in native plants; however, the

species has potential for horticultural use, and publicity of the species could generate an increased demand.

C. Disease or Predation

A portion of the *Trillium reliquum* population at Site 7 is currently being adversely impacted by cattle that are being permitted to graze within the wooded areas supporting the species. This activity is a potential threat to most of the known populations. No other threats related to disease or predation are currently known.

D. The Inadequacy of Existing Regulatory Mechanisms

In Alabama, *Trillium reliquum* is informally listed as an endangered species (Freeman *et al.* 1979, Freeman 1979). However, the species has no legal status or protection in the State. *Trillium reliquum* is not included in *Georgia's Protected Plants* (McCollum and Ettman 1977) and therefore does not receive any legal protection in the State. This list has only been revised once since it was originally published, and it is anticipated that relict trillium will be added to the Georgia list as an endangered plant in a future revision of the Protected Plan List (Chuck Rabolli, Georgia Department of Natural Resources, pers. comm.). South Carolina includes *Trillium reliquum* as an endangered species on its informal list of rare native vascular plants (Rayner *et al.* 1984). Although South Carolina does not have an official plant protection program, the State is pursuing protection of this rare species through its natural areas aquisition program. The only South Carolina population protected from taking is the portion of Site 7 that has been purchased by South Carolina as a natural area. Plants can only be collected from a State-owned natural area by permit from the appropriate State agency. This prohibition is difficult to effectively enforce and the plants there, as at all of the other known sites, remain vulnerable to taking by hobbyists, collectors, and vandals.

E. Other Natural or Manmade Factors Affecting its Continued Existence

Trillium reliquum is a species that currently exists in three very small clusters of populations. Whether these represent remnant populations of a species that was once much more widely distributed or a species that has always been rare is impossible to determine, based upon the information currently available. In addition to the factors A–D discussed above, the remaining populations appear to be threatened by an additional human-related factor, which is adversely affecting the native flora throughout the Southeast. The woody vine, *Lonicera japonica* (Japanese honeysuckle), is an aggressive, weedy species that was introduced into this country. This species is, in some areas, replacing the native flora. Freeman (1985) notes that this species may represent a serious threat to *Trillium reliquum*. In recognition of this threat, the South Carolina Wildlife and Marine Resources Department recently initiated a honeysuckle control program on the preserve supporting the species (Rayner 1987).

The Service has carefully assessed the best scientific and commercial information available regarding the past, present, and future threats faced by this species in determining to make this rule final. Based on this evaluation, the preferred action is to list *Trillium reliquum* as an endangered species. Endangered status seems appropriate because of the severity of the threats facing the species throughout its rather limited range. Critical habitat is not being designated for the reasons discussed below.

Critical Habitat

Section 4(a)(3) of the Act, as amended, requires that, to the maximum extent prudent and determinable, the Secretary designate critical habitat at the time the species is determined to be endangered or threatened. The Service finds that designation of critical habitat is not prudent for *Trillium reliquum* at this time. The species has potential for horticultural use. Increased publicity and the provision of specific location information associated with critical habitat designation could result in taking pressures on the species. Publication of critical habitat descriptions would make *Trillium reliquum* more vulnerable to taking, since most of the known populations are on privately owned land. Many of the populations consist of only a small number of individuals, and the loss of even a few could jeopardize the species. The landowners involved in managing the habitat of the relict trillium have been informed of the locations of this species and of the importance of protecting it. Protection of this species' habitat will be addressed through the recovery process and through the section 7 jeopardy standard. Therefore, it would not be prudent to determine critical habitat for *Trillium reliquum* at this time.

Available Conservation Measures

Conservation measures provided to species listed as endangered or threatened under the Endangered Species Act include recognition, recovery actions, requirements for Federal protection, and prohibitions against certain practices. Recognition through listing encourages and results in conservation actions by Federal, State, and private agencies, groups, and individuals. The Endangered Species Act provides for possible land acquisition and cooperation with the States and requires that recovery actions be carried out for all listed species. Such actions are initiated by the Service following listing. The protection required of Federal agencies and the prohibitions against taking are discussed, in part, below.

Section 7(a) of the Act, as amended, requires Federal agencies to evaluate their actions with respect to any species that is proposed or listed as endangered or threatened and with respect to its critical habitat, if any is being designated. Regulations implementing this interagency cooperation provision of the Act are codified at 50 CFR Part 402. Section 7(a)(4) requires Federal agencies to ensure that activities they authorize, fund, or carry out are not likely to jeopardize the continued existence of such a species or to destroy or adversely modify its critical habitat. If a Federal action may affect a listed species or its critical habitat, the responsible Federal agency must enter into formal consultation with the Service. Nine of the ten known populations of *Trillium reliquum* are on privately or State-owned lands. One small population is located on a federally owned recreation area managed by the U.S. Army Corps of Engineers. There are no currently planned programs or projects which would adversely affect this population.

The South Carolina Department of Health and Environmental Control administers the Clean Water Act's section 201 (33 U.S.C. 1281) grant program in South Carolina. This program provides partial Federal funding for wastewater treatment facilities. The City of North Augusta is currently conducting final planning studies for an expansion of this system into the area supporting the largest known population of *Trillium reliquum*. The city has been working with the South Carolina Wildlife and Marine Resources Department to ensure that the installation of the wastewater treatment facilities does not have a significant adverse effect on relict trillium. Based upon past experience with the section 7 consultation program, the Service believes that future coordination on this project will proceed in a cooperative manner and that relict trillium will be

protected from activities that would jeopardize its continued existence while the installation of a needed wastewater treatment system will be permitted. There are no other known current or planned Federal activities that may affect any other populations.

The Act and its implementing regulations found at 50 CFR 17.61, 17.62, and 17.63 set forth a series of general trade prohibitions and exceptions that apply to all endangered plants. With respect to *Trillium reliquum*, all trade prohibitions of section 9(a)(2) of the Act, implemented by 50 CFR 17.61, apply. These prohibitions, in part, make it illegal for any person subject to the jurisdiction of the United States to import or export, transport in interstate or foreign commerce in the course of a commercial activity, sell or offer for sale this species in interstate or foreign commerce, or to remove and reduce to possession the species from areas under Federal jurisdiction. Certain exceptions can apply to agents of the Service and State conservation agencies. The Act and 50 CFR 17.62 and 17.63 also provide for the issuance of permits to carry out otherwise prohibited activities involving endangered species under certain circumstances. It is anticipated that few trade permits would ever be sought or issued since *Trillium reliquum* is not common in cultivation or in the wild. Requests for copies of the regulations on plants and inquiries regarding them may be addressed to the Office of Management Authority, U.S. Fish and Wildlife Service, P.O. Box 27329, Washington, DC 20038-7329 (202/343-4955).

National Environmental Policy Act

The Fish and Wildlife Service has determined that an Environmental Assessment, as defined by the National Environmental Policy Act of 1969, need not be prepared in connection with regulations adopted pursuant to section 4(a) of the Endangered Species Act of 1973, as amended. A notice outlining the Service's reasons for this determination was published in the **Federal Register** on October 25, 1983 (48 FR 49244).

Literature Cited

Freeman, J.D. 1975. Revision of *Trillium* Subgenus *Phyllantherum* (Liliaceae). Brittonia 27:1-62.

Freeman, J.D. 1979. Endangered, threatened, and special concern plants of Alabama. Auburn Univ. Agr. Exp. Sta., Botany and Microbiology Department Ser. #3 24 pp. illus.

Freeman, J.D. 1985. Status Report on *Trillium reliquum*. Unpublished report to the U.S. Fish and Wildlife Service, Southeast Regional Office, Atlanta, Georgia. 36 pp.

Freeman, J.D., A.S. Causey, J.W. Short, and R.R. Haynes. 1979. Endangered, threatened, and special concern plants of Alabama. J. Ala. Acad. Sci. 50:1-20.

McCollum, J.L., and D.R. Ettman. 1977. Georgia's Protected Plants. Georgia Department of Natural Resources and USDA-SCS, Atlanta, Georgia, 64 pp.

Rayner, D.A., C. Aulbach-Smith, W.T. Batson, and C.L. Rogers. 1984. Native vascular plants (rare, threatened, or endangered) in South Carolina. Unpublished list.

Author

The primary author of this final rule is Mr. Robert R. Currie, Asheville Field Office, U.S. Fish and Wildlife Service, 100 Otis Street, Room 224, Asheville, North Carolina 28801 (704/259-0321 or FTS 672-0321).

List of Subjects in 50 CFR Part 17

Endangered and threatened wildlife, Fish, Marine mammals, Plants (agriculture).

Regulation Promulgation

Accordingly, Part 17, Subchapter B of Chapter I, Title 50 of the Code of Federal Regulations, is amended as set forth below:

PART 17—[AMENDED]

1. The authority citation for Part 17 continues to read as follows:

Authority: Pub. L. 93-205, 87 Stat. 884; Pub. L. 94-359, 90 Stat. 911; Pub. L. 95-632, 92 Stat. 3751; Pub. L. 96-159, 93 Stat. 1225; Pub. L. 97-304, 96 Stat. 1411 (16 U.S.C. 1531 *et seq.*); Pub. L. 99-625, 100 Stat. 3500 (1986), unless otherwise noted.

2. Amend § 17.12(h) by adding the following, in alphabetical order under the family Liliaceae, to the List of Endangered and Threatened Plants:

§ 17.12 Endangered and threatened plants.

* * * * *

(h) * * *

Species		Historic range	Status	When listed	Critical habitat	Special rules
Scientific name	Common name					
Liliaceae—Lily family:						
*	*	*		*	*	
Trillium reliquum	Relict trillium	U.S.A. (AL, GA, SC)	E	306	NA	NA
*	*	*		*	*	

Dated: March 25, 1988.

Susan Recce,

Acting Assistant Secretary for Fish and Wildlife and Parks.

[FR Doc. 88-7290 Filed 4-1-88; 8:45 am]

BILLING CODE 4310-55-M

Proposed Rules

Federal Register
Vol. 53, No. 64
Monday, April 4, 1988

This section of the FEDERAL REGISTER contains notices to the public of the proposed issuance of rules and regulations. The purpose of these notices is to give interested persons an opportunity to participate in the rule making prior to the adoption of the final rules.

FEDERAL LABOR RELATIONS AUTHORITY

5 CFR Part 2431

Attorney Fees Under the Back Pay Act

AGENCY: Federal Labor Relations Authority.

ACTION: Proposed rule; request for comments.

SUMMARY: The Authority proposes to amend its rules by adding Part 2431 concerning the processing of applications for awards of attorney fees under the Back Pay Act. The intent is to provide clear and easily applied procedures for the awarding of attorney fees under the Back Pay Act.

DATES: Written comments must be received by the Authority on or before May 4, 1988.

ADDRESSES: Comments should be addressed to Jacqueline R. Bradley, Executive Director, Federal Labor Relations Authority, 500 C Street SW., Washington, DC 20424.

FOR FURTHER INFORMATION CONTACT: Kenneth W. Goshorn, Director of External Affairs, (202) 382-0731.

SUPPLEMENTARY INFORMATION: Under the provisions of the Back Pay Act, 5 U.S.C. 5596, the Authority is an "appropriate authority" to grant an award of attorney fees when there has been a finding that an unwarranted or unjustified personnel action has resulted in a withdrawal, reduction, or denial of all or part of the pay, allowances, or differentials due one or more employees. The proceedings covered by the Back Pay Act specifically include unfair labor practice proceedings. In *United States Department of Housing and Urban Development, Region VI and United States Department of Housing and Urban Development, Region VI, San Antonio Area Office*, 24 FLRA No. 84, 24 FLRA 885 (1986), the Authority ruled that "the mere presence of an administrative prosecutor (such as the General Counsel) does not *per se* preclude an award for contributions to the proceedings made by outside counsel."

The Authority finds that it is necessary and appropriate to promulgate regulations providing procedures for the filing and adjudication of applications for awards of attorney fees in such proceedings. The Authority already has promulgated regulations concerning awards of attorney fees under the Equal Access to Justice Act, 5 U.S.C. 504. *See* 5 CFR Part 2430. These proposed regulations parallel those procedures where appropiate, and also adopt the "interest of justice" standard (as provided for in 5 U.S.C. 7701(g)) required by the Back Pay Act. The intent of the proposed regulations is to provide an easily applied procedural vehicle for the adjudication of such applications. The proposed procedures adopt, to the maximum extent feasible, the general rules of practice before the Authority in other relevant proceedings.

List of Subjects in 5 CFR Part 2431

Administrative practices and procedures, Government employees, Labor-management relations, Attorney fees.

For reasons set out in the preamble, 5 CFR is proposed to be amended by adding Part 2431 to read as follows:

PART 2431—ATTORNEY FEES UNDER THE BACK PAY ACT

Sec.

2431.1 Purpose.
2431.2 Proceedings affected; eligibility for award.
2431.3 Standards for awards.
2431.4 Allowable fees and expenses.
2431.5 When an application may be filed; referral to Administrative Law Judge; stay of proceeding.
2431.6 Contents of application; documentation of fees and expenses.
2431.7 Answer to the application; comments by the General Counsel.
2431.8 Settlement.
2431.9 Further proceedings.
2431.10 Administrative Law Judge's decision; contents; service; transfer of case to the Authority; contents of record in case.
2431.11 Exceptions to Administrative Law Judge's decision; briefs; action of the Authority.

Authority: 5 U.S.C. 7134; 5 U.S.C. 5596.

§ 2431.1 Purpose.

The Back Pay Act, 5 U.S.C. 5596, provides for the award of attorney fees to eligible employees related to an unjustified or unwarranted personnel action that resulted in the withdrawal, reduction, or denial of all or part of the pay, allowances, and differentials due the employee. When an appropriate authority corrects or directs the correction of such an unjustified or unwarranted personnel action, the payment of reasonable attorney fees shall be deemed warranted if such payment is in the interest of justice, as determined in accordance with standards established by the Merit Systems Protection Board under section 7701(g) of Title 5, United States Code; and there is a specific finding by the appropriate authority setting forth the reasons such payment is in the interest of justice. The rules in this part describe the parties eligible for awards and the Authority proceedings that are covered. They also set forth the procedures for applying for such awards and the procedures by which the Authority will rule on such applications.

§ 2431.2 Proceedings affected; eligibility for award.

(a) The provisions of this part apply to unfair labor practice proceedings pending on complaint against a Rspondent Agency.

(b) A party in an unfair labor practice proceeding who has prevailed in the proceeding, or in a significant and discrete portion of the proceeding, and who otherwise meets the eligibility requirements of this section, is eligible to apply for an award of attorney fees under the provisions of these rules.

§ 2431.3 Standards for awards.

An eligible applicant may receive an award for fees incurred in connection with a proceeding, or in a significant and discrete portion of the proceeding if such award is found to be in the interests of justice, as determined in accordance with standards established by the Merit Systems Protection Board under section 7701(g) of Title 5, United States Code.

§ 2431.4 Allowable fees and expenses.

(a) In determining the reasonableness of the fee sought, the following matters may be considered:

(1) The attorney's customary fee for similar services (or, if an employee of the applicant, the fully allocated cost of the services);

(2) The prevailing rate for similar services in the community in which the attorney ordinarily performs services;

(3) The time actually spent in the representation of the applicant;

(4) The time reasonably spent in light of the difficulty or complexity of the issues in the proceedings; and

(5) Such other factors as may bear on the value of the services provided.

(b) The extent to which the efforts of counsel on behalf of the applicant made a substantial contribution to, and were not duplicative of, the efforts of the General Counsel of the Authority in the prosecution of the case.

(c) The payment of reasonable attorney fees shall be allowed only for the services of members of the Bar and for services of law clerks, paralegals, or law students, when assisting members of the Bar. However, no payment may be allowed for the services of any employee of the Federal Government, except as provided in section 205 of Title 18, United States Code, relating to the activities of officers and employees in matters affecting the Government.

§ 2431.5 When an application may be filed; referral to Administrative Law Judge; stay of proceeding.

(a) An application may be filed after entry of the final order establishing that the applicant has prevailed in the proceeding, or in a significant and discrete portion of the proceeding, but in no case later than thirty (30) days after the entry of the Authority's final order in the proceeding. The application for an award shall be filed with the Authority in Washington, DC. Sections 2429.21 through 2429.27 of this Subchapter, as applicable, shall govern such filing. Upon filing, the application shall be referred to the Chief Administrative Law Judge for designation of an Administrative Law Judge to consider the application. To the extent practicable, the Chief Administrative Law Judge shall refer the application to the Administrative Law Judge who heard the proceeding upon which the application is based.

(b) In the event any person seeks Authority reconsideration or court review of the Authority decision that forms the basis for the application for fees and expenses, the proceedings for the award of fees and other expenses, but not the time limit of this section for filing an application for an award, shall be stayed pending final disposition of the case.

§ 2431.6 Contents of application; documentation of fees and expenses.

The application shall be accompanied by full documentation of the fees and expenses for which an award is sought. A separate itemized statement shall be submitted for each professional firm or individual whose services are covered by the application, showing the hours spent by each individual in connection with the proceeding, the rate at which each fee has been computed, any expenses for which reimbursement is sought, the total amount claimed, and the total amount paid or payable by the applicant or by any other person or entity for the services provided. The Authority or its Administrative Law Judge may require the applicant to provide vouchers, receipts, or other substantiation for any expenses claimed.

§ 2431.7 Answer to the application; comments by the General Counsel.

(a) Within 30 days after service of an application, the Respondent agency may file an answer to the application. The answer shall explain in detail any objection to the award requested, and identify the facts relied on in support of the Respondent's position. If the answer is based on alleged facts not already in the record of the proceeding, supporting affidavits shall be provided or a request made for further proceedings under § 2431.9.

(b) The General Counsel may file comments on an application within 30 days after it is served.

(c) Motions for extensions of time to file documents permitted by this section or § 2431.9 shall be filed with the Chief Administrative Law Judge not less than five (5) days before the due date of the document.

§ 2431.8 Settlement.

The applicant and the Respondent Agency may agree on a proposed settlement of the award before final action on the application. If an applicant and the Respondent Agency agree on a proposed settlement of an award, the terms of the agreement shall be entered into the record of the case.

§ 2431.9 Further proceedings.

(a) The determination of an award may be made on the basis of the documents in the record. The Administrative Law Judge, upon request of either the applicant or the Respondent Agency, or on his or her own initiative, may order further proceedings. Such further proceedings may include, but shall not be limited to, an informal conference, oral argument, additional written submissions, or an evidentiary hearing.

(b) A request that the Administrative Law Judge order further proceedings under this section shall specifically identify the disputed issues and the evidence sought to be adduced, and shall explain why the additional proceedings are necessary to resolve the issues.

(c) An order of the Administrative Law Judge scheduling oral argument, additional written submissions, or an evidentiary hearing, shall specify the issues to be considered in such argument, submissions, or hearing.

(d) Any evidentiary hearing held pursuant to this section shall be conducted not earlier than forty-five (45) days after the date on which the application is served. In all other respects, such hearing shall be conducted in accordance with §§ 2423.14, 2423.16, 2423.17, 2423.19 through 2423.21, 2423.23, and 2423.24, insofar as these sections are consistent with the provisions of this part.

§ 2431.10 Administrative Law Judge's decision; contents; service; transfer of case to the Authority; contents of record in case.

(a) Upon conclusion of proceedings under this section, the Administrative Law Judge shall prepare a recommended decision. The decision shall include written findings and conclusions on the applicant's status as a prevailing party and eligibility under the interests of justice standard, and an explanation of the reasons for any difference between the amount requested and the amount awarded if such award is recommended. The Administrative Law Judge shall cause the decision to be served promptly on all parties to the proceeding. Thereafter, the Administrative Law Judge shall transmit the case to the Authority, including the judge's decision and the record. Service of the Administrative Law Judge's decision and the order transferring the case to the Authority shall be complete upon mailing.

(b) The record in a proceeding on an application for an award of fees under this part shall consist of the application for an award of fees and any amendments or attachments thereto, the answer and any amendments or attachments thereto, any comments by the General Counsel, motions, rulings, orders, stipulations, written submissions, the stenographic transcript of oral argument, the stenographic transcript of the hearing, exhibits and depositions, together with the Administrative Law Judge's decision, and the exceptions and briefs as

provided in § 2431.11 and the record of the unfair labor practice proceeding upon which the application is based.

§ 2431.11 Exceptions to Administrative Law Judge's decision; briefs; action of the Authority.

Procedures before the Authority, including the filing of exceptions to the Administrative Law Judge's recommended decision rendered pursuant to § 2431.10, and action by the Authority, shall be in accordance with §§ 2431.26(c), 2423.27, and 2423.28 of these rules. The Authority's review of the matter shall be in accordance with § 2423.29(a).

Dated: March 30, 1988.

Jerry L. Calhoun,

Chairman.

Jean McKee,

Member.

[FR Doc. 88-7291 Filed 4-1-88; 8:45 am]

BILLING CODE 6727-01-M

DEPARTMENT OF AGRICULTURE

Agricultural Marketing Service

7 CFR Part 949

[Docket No. A.O. F&V 88-2]

Proposed Texas-New Mexico High Plains Potato Marketing Agreement and Order; Hearing

AGENCY: Agricultural Marketing Service, USDA.

ACTION: Notice of hearing on proposed marketing agreement and order.

SUMMARY: Notice is hereby given of a public hearing to be held to consider a proposed marketing agreement and order to cover potatoes grown in the High Plains area of Texas and New Mexico. The proposed program would establish minimum standards of quality and maturity by grades and sizes. The proposal was submitted by the Texas/New Mexico Potato Committee which represents a substantial portion of the potato growers and handlers of the High Plains area. The program would be financed by assessments levied on potato handlers of the designated 21 counties of Texas and 10 counties of New Mexico. The assessment rate would be established by the Secretary of Agriculture, based on the recommendation of a committee that would administer the program. The committee would be composed of six producers, four handlers, and a member of the general public.

DATES: The hearing will be held in Hereford, Texas, beginning on April 19, 1988, at 9:00 a.m. Additional sessions, if necessary, will be held on April 20, and 21, beginning at 9:00 a.m. at the same location.

ADDRESS: The hearing will be held in the Hereford Community Center, 100 Avenue C and Park Avenue, Hereford, Texas 79045.

FOR FURTHER INFORMATION CONTACT: Copies of this Notice of Hearing may be obtained from:

(1) James Wendland, Officer-in-Charge, McAllen Marketing Field Office, USDA, 320 North Main Street, Box A-103, McAllen, Texas 78501-4698; telephone (512) 682-2833; or

(2) Robert F. Matthews, Marketing Specialist, Marketing Order Administration Branch, Fruit and Vegetable Division, Room 2525-S, AMS, USDA, P.O. Box 96456, Washington, DC 20090-6456; telephone (202) 447-5331.

SUPPLEMENTARY INFORMATION: This action is governed by the provisions of sections 556 and 557 of Title 5 of the United States Code and is therefore excluded from the requirements of Executive Order 12291. The hearing is called pursuant to the provisions of the Agricultural Marketing Agreement Act of 1937 "Act", as amended (7 U.S.C. 601 *et seq.*), and the applicable rules of practice and procedure governing the formulation of marketing agreements and orders (7 CFR Part 900).

The Regulatory Flexibility Act (Pub. L. 96-354), effective January 1, 1981, applies, and seeks to ensure that, within the statutory authority of a program, the regulatory and reporting requirements of the program are tailored to the size and nature of small businesses. Interested persons are invited to present evidence at the hearing on the reporting requirements and probable economic impact of the proposal on small businesses.

Proponents of the order believe that the imposition of standards of quality and maturity within the production area will promote the marketing of potatoes of consistently high quality. The proposal would also authorize research for production as well as marketing, and projects to assist, improve or promote the marketing, distribution, consumption or efficient production of these potatoes. The industry believes that once quality standards are enforced, an effective promotional program, not including paid advertising which is not authorized for this commodity by the Act, can be implemented to raise buyer and consumer awareness and expand the market.

This proposal has been widely discussed within the High Plains potato industry but has not yet received approval by the Secretary of Agriculture.

The hearing will be held for the purposes of:

(a) Receiving evidence about the economic and marketing conditions which relate to the proposed marketing agreement and order and to any appropriate modifications thereof.

(b) Determining whether the handling of potatoes in the proposed production area is in the current of interstate or foreign commerce or directly burdens, obstructs or affects interstate or foreign commerce.

(c) Determining the need for such a marketing agreement and order that would be implemented for potatoes in the production area.

(d) Determining the economic impact of the proposed marketing agreement and order on the industry in the production area and on the public affected by such a program.

(e) Determining whether the proposal or an appropriate modification of it will tend to effectuate the declared policy of the Act.

From the time this hearing notice is issued and until the issuance of a final decision in this proceeding, Department employees involved in the decisional process are prohibited from discussing the merits of the hearing issues on an exparte basis with any person having an interest in the proceeding. The prohibition applies to employees in the following organizational units:

Office of the Secretary of Agriculture; Office of the Administrator, Agricultural Marketing Service; Office of the General Counsel; Fruit and Vegetable Division, Agricultural Marketing Service.

Procedural matters are not subject to the above prohibition and may be discussed at any time.

Provisions of the proposed marketing agreement and order follow. Those sections identified with an asterisk (*) apply only to the proposed marketing agreement and are proposed by the Agricultural Marketing Service.

List of Subjects in 7 CFR Part 949

Marketing agreements and orders, Potatoes, Texas, New Mexico.

The marketing agreement and order proposed by the Texas-New Mexico Potato Committee would add a new Part 949 to read as follows:

PART 949—IRISH POTATOES GROWN IN THE HIGH PLAINS AREA OF TEXAS AND NEW MEXICO

Definitions

Sec.
949.1 Secretary.
949.2 Act.
949.3 Person.
949.4 Production area.
949.5 Potatoes.
949.6 Seed potatoes.
949.7 Handler.
949.8 Handle or ship.
949.9 Producer.
949.10 Fiscal period.
949.11 Committee.
949.12 Grade, size and maturity.
949.13 Varieties.
949.14 Pack.
949.15 Container.
949.16 Culls.
949.17 District.
949.18 Export.

Committee

949.20 Establishment and membership.
949.21 Alternates.
949.22 Term of office.
949.23 Districts.
949.24 Redistricting and reapportionment.
949.25 Nominations.
949.26 Selection.
949.27 Failure to nominate.
949.28 Acceptance.
949.29 Vacancies.
949.30 Expenses.
949.31 Procedure.
949.32 Powers.
949.33 Duties.

Expenses and Assessments

949.40 Expenses.
949.41 Budget.
949.42 Assessments.
949.43 Accounting.

Research and Development

949.48 Research and development.

Regulation

949.50 Marketing policy.
949.51 Recommendations for regulations.
949.52 General cull regulation.
949.53 Issuance of regulations.
949.54 Modification, suspension or termination of regulations.
949.55 Handling for special purposes.

Inspection

949.60 Inspection and certification.

Reports and Recordkeeping

949.80 Reports and recordkeeping.

Compliance

949.81 Compliance.

Miscellaneous Provisions

949.82 Right of the Secretary.
949.84 Termination or suspension.
949.85 Proceedings after termination.
949.86 Effect of termination or amendment.
949.87 Duration of immunities.
949.88 Agents.
949.89 Derogation.
949.90 Personal liability.
949.91 Separability.
949.92 Amendments.

Marketing Agreement

949.97 Counterparts.
949.98 Additional parties.
949.99 Order with marketing agreement.

Authority: Sec. 1–19, 48 Stat. 31, as amended; 7 U.S.C. 601 *et seq.*

Definitions

§ 949.1 Secretary.

"Secretary" means the Secretary of Agriculture of the United States, or any officer or employee of the Department of Agriculture who has been delegated, or who may hereafter be delegated the authority to act for the Secretary.

§ 949.2 Act.

"Act" means Public Act No. 10, 73d Congress, as amended and as reenacted and amended by the Agricultural Marketing Agreement Act of 1937, as amended (Sec. 1–19, 48 Stat. 31, as amended; 7 U.S.C. 601 *et seq.*).

§ 949.3 Person.

"Person" means an individual, partnership, corporation, association, or any other business unit.

§ 949.4 Production area.

"Production area" means the counties of: Bailey, Briscoe, Castro, Cochran, Dallam, Donley, Deaf Smith, Floyd, Gaines, Hale, Hall, Hartley, Hockley, Lamb, Lubbock, Motley, Oldham, Parmer, Swisher, Terry, and Yoakum located in the State of Texas, and the counties of Chaves, Curry, De Baca, Eddy, Guadalupe, Lea, Roosevelt, Torrance, Union, and Quay located in the State of New Mexico.

§ 949.5 Potatoes.

"Potatoes" means and includes all varieties of *Selanum tuberosum*, commonly known as Irish potatoes, grown in the production area.

§ 949.6 Seed potatoes.

"Seed potatoes" or "seed" means any potatoes which have been certified by the official seed certification agency of the States of Texas or New Mexico, or other seed certification agencies recognized by the Secretary, and which bear the official tags, seals, or other appropriate identification indicating such certification.

§ 949.7 Handler.

"Handler" is synonymous with "shipper" and means any person, except a common or contract carrier of potatoes owned by another person, who handles potatoes or causes potatoes to be handled.

§ 949.8 Handle or ship.

"Handle" or "ship" means to harvest, grade or package potatoes grown in the production area other than in the capacity as a producer, and to sell, transport, or in any other way to place potatoes grown in the production are, or cause such potatoes to be placed, in the current of commerce within the production area or between the production area and any point outside thereof. Such term shall not include the transportation, sale, or delivery within the production area of field-run potatoes to storage or to a person for the purpose of having such potatoes prepared for market.

§ 949.9 Producer.

"Producer" is synonymous with "grower" and means any person engaged in a proprietary capacity in the production of potatoes for market.

§ 949.10 Fiscal period.

"Fiscal period" means the calendar year or such other 12-month period beginning and ending on the dates that may be recommended by the committee and approved by the Secretary.

§ 949.11 Committee.

"Committee" means the administrative committee known as Texas-New Mexico Potato Committee established pursuant to § 949.20.

§ 949.12 Grade, size and maturity.

"Grade" means any of the officially established grades of potatoes, "Size" means any of the officially established sizes of potatoes, and "Maturity" means any of the stages of development or condition of the outer skin (epidermis) of potatoes, as defined in the United States Standards for Potatoes issued by the United States Department of Agriculture (51.1540 to 51.1556, inclusive of this title), including amendments, modifications, or variations thereof, or, such other grades, sizes, and maturities as may be recommended by the committee and approved by the Secretary.

§ 949.13 Varieties.

"Varieties" means all classifications or subdivisions of Irish potatoes according to those definitive characteristics now or hereafter recognized by the United States Department of Agriculture.

§ 949.14 Pack.

"Pack" means a quantity of potatoes in any type of container, which falls within specific weight limits, numerical limits, grade limits, or any combination of these recommended by the committee and approved by the Secretary.

VOL 53 ISS 64 AP 4 1988 UMI

§ 949.15 Container.

"Container" means a sack, bag, crate, box, basket, barrel, or bulk load or any other receptacle used in the packaging, transportation, sale or other hanlding of potatoes.

§ 949.16 Culls.

"Culls" means potatoes which do not meet the requirements set forth in § 949.52.

§ 949.17 District.

"District" means each of the geographic divisions of the production area initially established pursuant to § 949.23 or as reestablished pursuant to § 949.24.

§ 949.18 Export.

"Export" means the shipment of potatoes to any destination which is not within the 50 States, or the District of Columbia, of the United States.

Committee

§ 949.20 Establishment and membership.

(a) There is hereby established a committee, consisting of eleven (11) members, to administer the terms and provision of this part. Six (6) members shall be producers, four (4) members shall be handlers, and one (1) shall be a public member. Each committee member shall have an alternate who shall have the same qualifications as the member.

(b) Each member, other than the public member, shall be an individual who is, prior to selection and during such term of office (1) a resident of the production area, and (2) a producer or handler, or an officer or employee of a producer or handler. An officer or employee of a producers' cooperative marketing organization may serve as a handler member.

(c) Four (4) members shall be producers from District 1 and two (2) members shall be producers from District 2. Three (3) members shall be handlers from District 1 and one (1) member shall be a handler from District 2. Any person who operates in more than one district or is engaged in both producing and handling potatoes shall elect one classification, and one district from which to be represented on the committee.

(d) The public member shall be a resident of the production area and be neither a producer nor a handler and shall have no direct financial interest in the commercial production, financing, buying, packing or marketing of potatoes, except as a consumer, nor shall such person be a director, officer or employee of any firm so engaged.

§ 949.21 Alternates.

An alternate member of the committee shall act in the place and stead of the member for whom such person is an alternate, during such member's absence or when designated to do so by such member. In the event both a member of the committee and that member's alternate are unable to attend a committee meeting, the member, the alternate, or the committee, in that order, may designate another alternate from the same district and the same classification (handler or producer) to serve in such member's stead. In the event of the death, removal, resignation, or disqualification of a member, that member's respective alternate shall serve until a successor of such member is selected and has qualified. The Committee may request the attendance of alternates at any or all meetings, notwithstanding the expected or actual presence of the respective members.

§ 949.22 Term of office.

(a) Except as otherwise provided in paragraph (b) of this section, the term of office of committee members and their respective alternates shall be for three years and shall begin as of January 1 and end the last day of December or for such other three-year period as the committee may recommend and the Secretary approve. Members and alternates shall serve in such capacity for the portion of the term of office for which they are selected and have qualified, and until their respective successors are selected and have qualified. No member or alternate may serve more than two consecutive terms on the committee unless specifically exempted from this requirement by the Secretary.

(b) The term of office of the initial members and alternates shall begin as soon as possible after the effective date of this subpart. As determined by the Secretary, approximately one-third of the initial committee members and alternates shall serve for a one-year term and approximately one-third of the initial committee members and alternates shall serve for a two-year term. The remainder of the initial committee members and alternates shall serve for a three-year term. Those members serving initial terms of one year or less may serve two additional, consecutive three-year terms.

§ 949.23 Districts.

To determine a basis for selecting committee members, the following districts of the production area are hereby initially established:

District 1: All production area counties located within the State of Texas and;

District 2: All production area counties located within the State of New Mexico.

§ 949.24 Redistricting and reapportionment.

At least every five years the committee shall review the geographic distribution of potato production in the production area and, if warranted, recommend to the Secretary the reapportionment of members among districts, and the reestablishment of districts within the production area. In recommending any such changes, the Committee shall give consideration to:

(a) Shifts in potato acreage within the districts and within the production area during recent years;

(b) The importance of new production in its relation to existing districts;

(c) The equitable relationship of committee membership and districts; and

(d) Other relevant factors. No change in districting or in apportionment of members within districts may become effective less than 30 days prior to the date on which terms of office begin each year and no recommendations for such redistricting or reapportionment may be made less than 6 months prior to such date.

§ 949.25 Nominations.

(a) Initial members. The nomination process for the initial committee shall be conducted by the Secretary. The nominations for each of the six (6) initial producer and four (4) initial handler members of the committee, together with the nominations for the initial alternate members for each position, shall be made as soon as practicable after the effective date of this subpart. The nominee for the initial public member shall be submitted to the Secretary not later than 90 days after the first meeting of the committee.

(b) Successor members. (1) The committee shall hold or cause to be held not later than October 1 of each year, or such other date as may be specified by the Secretary, a meeting or meetings of producers and handlers in each district for the purpose of designating at least one nominee for each position as member and for each position as alternate member of the committee. The committee may conduct nominations by mail in a manner recommended by the committee and approved by the Secretary.

(2) The names of nominees shall be submitted to the Secretary at such time and in such manner and form as may be prescribed;

(3) Only producers may participate in designating producer nominees and only handlers may participate in designating handler nominees to the committee;

(4) Only producers and handlers who are present at such nomination meetings, or represented at such meetings by a duly authorized employee, may participate in the nomination and election of nominees for members and their alternates.

(5) Any person who operates in more than one district or is engaged in both producing and handling potatoes shall elect the classification, and the district in which to participate in designating nominees.

BEST COPY AVAILABLE

(6) Regardless of the number of districts in which a person produces or handles potatoes, such persons are entitled to cast only one vote for each position to be filled in the district and classification in which the person is eligible and elects to vote in designating nominees for committee members and alternates. Such vote would be cast on behalf of the voter, the voter's agents, subsidiaries, affiliates, and representatives.

(c) The public member shall be nominated by the members of the committee. The committee may establish procedures for receiving names of persons to be considered for nomination as the public member. The name of the person nominated as the public member shall be submitted by the incumbent committee to the Secretary by November 1, or such other date recommended by the committee and approved by the Secretary, of the year the term expires together with information deemed pertinent by the committee or as requested by the Secretary.

§ 949.26 Selection.

Committee members and alternates shall be selected by the Secretary on the basis of representation provided for in § 949.20 or as modified pursuant to § 949.24.

§ 949.27 Failure to nominate.

If nominations are not made within the time and manner prescribed in § 949.25, the Secretary may, without regard to nominations, select the members and alternates on the basis of the representation provided for in § 949.20 or as modified pursuant to § 949.24.

§ 949.28 Acceptance.

Any person prior to selection as a member or alternate member of the committee shall qualify by filing with the Secretary a written acceptance within the time period specified by the Secretary of the person's willingness to serve.

§ 949.29 Vacancies.

To fill any vacancy occasioned by the failure of any person selected as a member or as an alternate to qualify, or in the event of the death, removal, resignation, or disqualification of a member or alternate, a successor for the unexpired term may be selected by the Secretary from nominations made pursuant to § 949.25, from previously unselected nominees on the current nominee list, or from other eligible persons

§ 949.30 Expenses.

Members and alternates, when serving as members of the committee, shall serve without compensation but shall be reimbursed for such expenses authorized by the committee and necessarily incurred by them in attending committee meetings and in the performance of their duties under this part: Provided, that the committee at its discretion may request the attendance of one or more alternates at any or all meetings notwithstanding the expected, or actual, presence of the respective members and may pay expenses as aforesaid.

§ 949.31 Procedure.

(a) A majority of all members of the committee shall be necessary to constitute a quorum or to pass any motion or approve any committee action.

(b) The committee may provide for the members thereof, including the alternate members when acting as members, to vote by mail, telegraph, telephone, or other means of communication, provided that any such vote cast orally shall be confirmed promptly in writing. If any assembled meeting is held all votes shall be cast in person.

§ 949.32 Powers.

The committee shall have the following powers:

(a) To administer the provisions of this subpart as specified herein;

(b) To make rules and regulations to effectuate the terms and provisions of this subpart;

(c) To receive, investigate, and report to the Secretary complaints of violation of the provisions of this part; and

(d) To recommend to the Secretary amendments to this part.

§ 949.33 Duties.

The committee shall have, among others, the following duties:

(a) As soon as practicable after the beginning of each term of office, to meet and organize, to select a chairman and such other officers as may be necessary, to select subcommittees, and to adopt such rules, regulations, and bylaws for the conduct of its business as it deems necessary, and to recommend nominees for the public member and alternate;

(b) To act as intermediary between the Secretary and any producer or handler;

(c) To furnish to the Secretary such available information as may be requested;

(d) To appoint such employees, agents, and representatives as it may deem necessary, to determine the compensation and define the duties of each such person, and to protect the handling of committee funds.

(e) To investigate from time to time and to assemble data on the growing, harvesting, shipping, and marketing conditions with respect to potatoes;

(f) To recommend research and development projects to the Secretary in accordance with this part;

(g) To notify handlers of each meeting of the committee to consider recommendations for regulations and of all regulatory actions taken, and to provide such notification to producers through appropriate news releases or such other means as may be available to the committee;

(h) To give the Secretary the same notice of meetings of the committee and its subcommittee(s) as is given to its members;

(i) To prepare a marketing policy;

(j) To keep minutes, books, and records which clearly reflect all of the acts and transactions of the committee. Such minutes, books, and records shall be subject to examination at any time by the Secretary or the Secretary's authorized agent or representative. Minutes of each committee meeting shall be reported promptly to the Secretary;

(k) Prior to the beginning of each fiscal period, to submit to the Secretary a budget of projected income and expenses for such fiscal period, together with a report thereon;

(l) To prepare periodic statements of the financial operations of the committee and to make copies of each such statement available to producers and handlers for examination at the office of the committee;

(m) To prepare and submit to the Secretary, an annual report, and make a copy available to each producer and grower who requests it. This annual report shall contain at least:

(1) A complete review of the regulatory operations during the fiscal period;

(2) An appraisal of the effect of such regulatory operations upon the potato industry; and

(3) Any recommendations for changes in the program.

(n) To cause the books of the committee to be audited by a certified public accountant at least once each fiscal period and at such other times as the committee may deem necessary or as the Secretary may request. The report of such audit shall show the receipt and expenditure of funds collected pursuant to this part. Two copies of such report shall be furnished to the Secretary. A copy of each such report shall be made available at the principal office of the

BEST COPY AVAILABLE

committee for inspection by producers and handlers; however, confidential information shall be removed from the report; and

(o) To consult, cooperate, and exchange information with other marketing order committees and other individuals or agencies in connection with all proper activities and objectives under this part.

Expenses and Assessments

§ 949.40 Expenses.

The committee is authorized to incur such expenses as the Secretary may find are reasonable and likely to be incurred during each fiscal period for its maintenance and functioning, and for purposes determined to be appropriate for administration of this part. Handlers shall share expenses upon the basis of a fiscal period. Each handler's share of such expenses shall be proportionate to the ratio between the total quantity of potatoes handled by such handler as the first handler thereof during a fiscal period and the total quantity of potatoes handled by all handlers as first handlers thereof during such fiscal period.

§ 949.41 Budget.

Ninety days prior to the beginning of each fiscal period, the committee shall prepare an estimated budget of income and expenditures necessary for its administration of this part. The committee may recommend a rate of assessment calculated to provide adequate funds to defray its proposed expenditures. The committee shall submit such budget to the Secretary with an accompanying report showing the basis for its calculations. An amended budget may be submitted as provided in § 949.42(c).

§ 949.42 Assessments.

(a) The funds to cover the committee's expenses shall be acquired by the levying of assessments upon handlers as provided in this subpart. Each person who first handles potatoes under this part shall pay assessments to the committee, which assessments shall be in payment of such handler's pro rata share of the committee's expenses.

(b) Assessments shall be levied upon handlers at rates established by the Secretary. Such rates may be established upon the basis of the committee's budget, recommendations, and other available information. Such rates may be applied to specified containers used in the production area.

(c) At any time during, or subsequent to, a given fiscal period the committee may recommend the approval of an amended budget and an increase in the rate of assessment. Upon the basis of such recommendations, or other available information, the Secretary may approve an amended budget and increase the established rate of assessment.

(d) The payment of assessments for the maintenance and functioning of the committee may be required under this part throughout the period it is in effect irrespective of whether particular provisions thereof are suspended or become inoperative.

(e) The committee may impose a late payment charge or an interest charge on any handler who fails to pay any assessment in a timely manner. Such time and the rates shall be recommended by the committee and approved by the Secretary.

(f) In order to provide funds to enable the committee to perform its functions under this part, handlers may make advance payment of assessments. Such advance assessments received from a handler shall be credited toward assessments levied against that handler during the fiscal year.

(g) In order to provide funds for the administration of this part before sufficient operating income is available from assessments, the committee may accept advance assessments and may also borrow money for such purpose.

§ 949.43 Accounting.

(a) If, at the end of a fiscal period, the assessments collected are in excess of expenses incurred, such excess shall be accounted for in accordance with one of the following:

(1) If such excess is not retained in a reserve, as provided in paragraph (a)(2) of this section, it shall be refunded proportionately to the persons from whom it was collected.

(2) The committee, with the approval of the Secretary, may carry over such excess into subsequent fiscal periods as a reserve: *Provided,* That the reserves are less than approximately two fiscal period's expenses. Such reserve funds may be used (i) to defray expenses, during any fiscal period, prior to the time assessment income is sufficient to cover such expenses; (ii) to cover deficits incurred during any fiscal period when assessment income is less than expenses; (iii) to defray expenses incurred during any period when any provisions of this part are suspended or are inoperative; (iv) to cover necessary expenses of liquidation in the event of termination of this part. Upon such termination, any funds not required to defray the necessary expenses of liquidation shall be disposed of in such manner as the Secretary may determine to be appropriate. To the extent practical, such funds shall be returned pro rata to the persons from whom such funds were collected.

(b) All funds received by the committee pursuant to the provisions of this part shall be used solely for the purposes specified herein. The Secretary may at any time require the committee and its members to account for all receipts and disbursements.

(c) Upon the removal or expiration of the term of office of any member of the committee, such member shall account for all receipts and disbursements and deliver all property and funds in such member's possession to the committee, and shall execute such assignments and other instruments as may be necessary or appropriate to vest in the committee full title to all of the property, funds, and claims vested in such member pursuant to this part.

(d) The committee may make recommendations to the Secretary for one or more of the members thereof, or any other person, to act as a trustee for holding records, funds, or any other committee property during periods of suspension of this subpart, or during any period or periods when regulations are not in effect and, upon determining such action is appropriate, the Secretary may direct that such person or persons shall act as trustee or trustees for such committee.

Research and Development

§ 949.48 Research and development.

The committee, with the approval of the Secretary, may establish or provide for the establishment of production research, marketing research, and development projects, not including paid advertising, designed to assist, improve, or promote the marketing, distribution, consumption, or efficient production of potatoes. The expense of such projects shall be paid from funds collected pursuant to § 949.42.

Regulation

§ 949.50 Marketing policy.

Prior to beginning of each fiscal year, the committee shall submit to the Secretary a report setting forth its marketing policy for the ensuing season. Additional reports shall be submitted if it is deemed advisable by the committee to adopt a new marketing policy because of changes in the demand or supply situation with respect to potatoes. The committee shall publicly announce the submission of each such marketing policy report and copies thereof shall be available at the committee's office for inspection by any producer or any handler. In determining each such marketing policy the

committee shall give due consideration to the following:

(a) Supply of potatoes by grade, size, quality, and maturity in the production area;

(b) Estimates of supplies of potatoes in the production area and in competing areas;

(c) Estimates of supplies of other competing commodities;

(d) Market prices by grades, sizes, containers, and packs;

(e) Anticipated marketing problems;

(f) Level and trend of consumer income; and

(g) Other relevant factors.

§ 949.51 Recommendations for regulations.

(a) Whenever the committee's marketing policy considerations deem it advisable to regulate the handling of any variety or varieties of potatoes in a manner provided in §§ 949.53, 949.54, or 949.55 it shall recommend to the Secretary grade, size, quality, maturity, or pack regulation, or any combination thereof, or amendment thereto, or modification, suspension, or termination thereof.

(b) In arriving at its recommendations for regulation pursuant to (a) of this section, the committee shall give consideration to current information with respect to the factors affecting the supply and demand for potatoes during the period or periods when it is proposed that such regulations should be effective. With each such recommendation for regulation, the committee shall submit to the Secretary the data and information on which such recommendation is predicated and such other available information as the Secretary may request.

§ 949.52 General cull regulation.

(a) A general cull regulation shall be in effect prohibiting the handling of potatoes for fresh market, except as otherwise provided in this subpart, which do not meet the requirements of the U.S. No. 2, or better, grade, 1-½ inches minimum diameter and larger.

(b) Upon recommendation of the committee, or on other available information, the general cull regulation may be suspended or modified by the Secretary during a specified period with respect to any or all varities of potatoes.

§ 949.53 Issuance of regulations.

(a) The Secretary shall issue regulations on the handling of potatoes whenever the Secretary finds from recommendations and information submitted by the committee, or from other available information, that such regulations would tend to effectuate the declared policy of the act. Such regulations may:

(1) Limit the handling of particular grades, sizes, qualities, maturities, or packs of any or all varities of potatoes, or any combination of the foregoing during any period.

(2) Limit the handling of particular grades, sizes, qualities, maturities or packs of potatoes differently, for different varieties, for different containers, for different packs, for different purposes under § 949.55, or for any combination of the foregoing, during any period.

(3) Fix the size, capacity, weight, dimensions, pack or marking of the container or containers which may be used in the packaging or handling of potatoes, or both.

(4) Establish in terms of grades, sizes, or both, minimum standards of quality and maturity.

§ 949.54 Modification, suspension, or termination of regulations.

(a) In the event the committee at any time finds that, by reason of changed conditions, any regulations issued pursuant to § 949.53 should be modified, suspended, or terminated, it shall so recommend to the Secretary.

(b) Whenever the Secretary finds, from the recommendations and information submitted by the committee or from other available information, that a regulation should be modified, suspended, or terminated with respect to any or all shipments in order to effectuate the declared policy of the act, the Secretary shall modify, suspend, or terminate such regulation. On the same basis and in like manner the Secretary may terminate any such modification or suspension. If the Secretary finds that a regulation obstructs or does not tend to effectuate the declared policy of the act, the Secretary shall suspend or terminate such regulation. On the same basis and in like manner the Secretary may terminate any such suspension.

(c) The Secretary shall notify the committee of each regulation recommended by it and issued pursuant to this section. The committee shall give reasonable notice thereof to handlers.

(d) Nothing in this subpart shall authorize any regulation eliminating shipment of potatoes in bulk.

§ 949.55 Handling for special purposes.

(a) Upon the basis of recommendations and information submitted by the committee, or other available information, the Secretary, may modify, suspend, or terminate requirements in effect pursuant to § 949.42 or §§ 949.51 to 949.53 inclusive, or § 949.60 or any combination thereof, to facilitate handling of potatoes for:

(1) Relief or charity;

(2) Livestock feed;

(3) Export;

(4) Seed;

(5) Potatoes, other than certified seed, sold to a producer exclusively for planting within specific geographic limits;

(6) Other purposes recommended by the committee and approved by the Secretary.

(b) The committee, with the approval of the Secretary, shall prescribe rules and regulations to prevent potatoes handled pursuant to this section from entering trade channels other than those authorized by regulations and by such rules as may be necessary and incidental thereto.

Inspection

§ 949.60 Inspection and certification.

(a) During any period in which the handling of potatoes is regulated pursuant to §§ 949.52 through 949.55, inclusive, no handler shall handle potatoes unless such potatoes are inspected by an authorized representative of the Federal or a Federal-State Inspection Service and are covered by a valid inspection certificate, except when relieved of such requirements by §§ 949.54, 949.55, or 949.60(b).

(b) The committee may, with the approval of the Secretary, issue rules requiring inspection on regraded, resorted or repacked lots, or providing for special inspection requirements or relief therefrom. Such rules may provide distinctions, insofar as practical, between handling at shipping point and handling in receiving markets within the production area.

(c) Upon recommendation of the committee and approval by the Secretary, any or all potatoes so inspected and certified shall be identified by appropriate seals, stamps, or tags to be affixed to the container by the handler under the direction and supervision of a Federal or Federal-State Inspector or the committee. Master containers may bear the identification instead of the individual containers within said master container.

(d) Insofar as the requirements of this section are concerned, the length of time for which an inspection certificate is valid may be established by the committee with the approval of the Secretary.

(e) When potatoes are inspected in accordance with the requirements of this section, a copy of each inspection

certificate issued shall be made available to the committee by the inspection service.

(f) The committee may recommend and the Secretary may require that no handler shall transport or cause the transportation of potatoes by motor vehicle or by other means unless such shipment is accompanied by a copy of the inspection certificate issued thereon, or other evidence of inspection acceptable to the Secretary such as a Positive Lot Identification stamp, to indicate that such inspection has been performed. Such certificate or document shall be surrendered to such authority as may be designated.

Reports and Recordkeeping

§ 949.80 Reports and recordkeeping.

Upon request of the committee, made with the approval of the Secretary, each handler shall furnish to the committee, in such manner and form and at such time as it may prescribe, such reports and other information as may be necessary for the committee to perform its duties under this part.

(a) Such reports may include, but are not necessarily limited to, the following:

(1) The quantities of potatoes received by variety by a handler during any or all periods of a season;

(2) The quantities disposed of by the handler, segregated as to quantities subject to regulation, and where necessary, segregated as to types of outlets and special or modified regulations applicable to alternative outlets, and includng quantities not subject to regulation;

(3) The date of each such disposition and the identification of the carrier transporting such potatoes;

(4) Information essential to identification of any or all specific quantities, lots, and disposition or potatoes handled under §§ 949.52 to 949.55, inclusive, which may include identification of inspection certificates, exemption certificates, certificates of privilege, or other appropriate identification, including the destination of each special shipment, where necessary.

(b) All such reports shall be held under appropriate protective classification and custody by the committee, or duly appointed employees thereof, so that the information contained therein which may adversely affect the competitive position of any handler in relation to other handlers will not be disclosed. Compilations of general reports from data submitted by handlers is authorized, subject to the prohibition of disclosure of an individual handler identity or operations.

(c) Each handler shall maintain for at least 2 succeeding years such records and documents on potatoes received by such handler as may be necessary to verify reports submitted to the committee pursuant to this section.

(d) For the purpose of assuring compliance with recordkeeping requirements and verifying reports of handlers, the Secretary and the committee, through their duly authorized employees or agents, shall have access to any premises where applicable records are located, and where potatoes are handled, and at any time during reasonable business hours shall be permitted to inspect such handler's premises and any potatoes held by such handler and examine any and all records of such persons with respect to matters within the purview of this part.

Compliance

§ 949.81 Compliance.

(a) Except as provided in this subpart, no person shall handle potatoes, the handling of which has been prohibited by the Secretary in accordance with provisions of this subpart, and no person shall handle potatoes except in conformity to the provisions of this subpart and the regulations issued thereunder.

(b) For the purpose of checking and verifying reports filed by handlers, the committee, through its duly authorized representatives, shall have access to any handler's premises during regular business hours, and shall be permitted at any such time to inspect such premises and any potatoes held by such handler.

Miscellaneous Provisions

§ 949.82 Right of the Secretary.

The members of the committee (including successors and alternates) and any agent or employee appointed or employed by the committee shall be subject to removal or suspension by the Secretary at any time. Each and every order, regulation, decision, determination or other act of the committee shall be subject to the continuing right of the Secretary to disapprove of the same at any time. Upon such disapproval, the disapproved action of the committee shall be deemed null and void, except as to acts done in reliance thereon or in compliance therewith prior to such disapproval by the Secretary.

§ 949.84 Termination or suspension.

(a) The Secretary may terminate or suspend the operation of any or all of the provisions of this part whenever the Secretary finds that such provisions do not tend to effectuate the declared policy of the Act.

(b) Producer referendum. (1) The Secretary shall terminate in accordance with Section 8(c)(16)B of the Act, the provisions of this part at the end of any fiscal period whenever the Secretary finds that such termination is favored by a majority of producers, who during a representative period, as determined by the Secretary have been engaged in the production of potatoes for market: *Provided*, That such majority has, during such representative period, produced for market more than fifty percent of the volume of such potatoes produced for market: *Provided further*, That termination shall be effective only if announced on or before the beginning of the ensuing fiscal period.

(2) The Secretary shall conduct a referendum every sixth fiscal year with the first such referendum to be conducted within 6 years from the effective date of this section, to ascertain whether continuance of this subpart is favored by producers. The Secretary may terminate the provisions of this part at the end of any fiscal year in which the Secretary has found that continuance of this subpart is not favored by producers who, during a representative period determined by the Secretary, have been engaged in the production for market of potatoes in the production area. Such termination of the part shall be effective only if announced on or before the end of the then current fiscal year.

(c) The provisions of this part shall in any event terminate whenever the provisions of the Act authorizing them cease to be in effect.

§ 949.85 Proceedings after termination

(a) Upon the termination of the provisions of this part the then functioning members of the committee shall continue as joint trustees for the purpose of liquidating the affairs of the committee of all funds and property then in the possession of or under control of the committee, including claims for any funds unpaid or property not delivered at the time of such termination. Action by said trusteeship shall require the concurrence of a majority of the said trustees.

(b) The said trustees shall continue in such capacity until discharged by the Secretary; shall from time to time account for all receipts and disbursements and deliver all property on hand, together with all books and records of said committee and of the trustees, to such person as the Secretary may direct; and shall upon the request of the Secretary, execute such assignments

or other instruments necessary or appropriate to vest in such person full title and right to all of the funds, property, and claims vested in said committee or the trustees pursuant to this part.

(c) Any person to whom funds, property, or claims have been transferred or delivered by the committee or its members pursuant to this section shall be subject to the same obligations imposed upon the members of the committees and upon the said trustees.

§ 949.86 Effect of termination or amendment.

Unless otherwise expressly provided by the Secretary, the termination of this subpart or of any regulation issued pursuant to this subpart or the issuance of any amendments to either thereof, shall not (a) affect or waive any right, duty, obligation, or liability which shall have arisen or which may thereafter arise in connection with any provision of this subpart or any regulation issued under this subpart; or (b) release or extinguish any violation of this subpart or of any regulations issued under this subpart; or (c) affect or impair any rights or remedies of the Secretary or of any other person with respect to any such violations.

§ 949.87 Duration of immunities.

The benefits, privileges and immunities conferred upon any person by virtue of this part shall cease upon the termination of this part, except with respect to acts done under and during the existence of this part.

§ 949.88 Agents.

The Secretary may, by designation in writing, name any person, including any officer or employee of the United States, or name any agency in the United States Department of Agriculture, to act as the Secretary's agent or representative in connection with any of the provisions of this part.

§ 949.89 Derogation.

Nothing contained in this part is, or shall be construed to be, in derogation or in modification of the rights of the Secretary or of the United States to exercise any powers granted by the Act or otherwise, or in accordance with such powers, to act in the premises whenever such action is deemed advisable.

§ 949.90 Personal liability.

No member or alternate of the committee or any employee or agent thereof, shall be held personally responsible, either individually or jointly with others, in any way whatsoever, to any handler or to any person for errors in judgment, mistakes, or other acts, either of commission or omission, as such member, alternate, agent, or employee, except for acts of dishonesty, willful misconduct or gross negligence.

§ 949.91 Separability.

If any provision of this part is declared invalid or the applicability thereof to any person, circumstance or thing is held invalid, the validity of the remainder of this subpart, or the applicability thereof to any other person, circumstance or thing shall not be affected thereby.

§ 949.92 Amendments.

Amendments to this subpart may be proposed from time to time by the committee or by the Secretary.

Marketing Agreement

*** § 949.97 Counterparts.**

This agreement may be executed in multiple counterparts and when one counterpart is signed by the Secretary, all such counterparts shall constitute, when taken together, one and the same instrument as if all signatures were contained in one original.

*** § 949.98 Additional parties.**

After the effective date thereof, any handler may become a party to this agreement if a counterpart is executed by such handler and delivered to the Secretary. This agreement shall take effect as to such new contracting part at the time such counterpart is delivered to the Secretary, and the benefits, privileges and immunities conferred by this agreement shall then be effective as to such new contracting party.

*** § 949.99 Order with marketing agreement.**

Each signatory hereby requests the Secretary to issue, pursuant to the act, an order providing for regulating the handling of potatoes in the same manner as is provided for in the agreement.

Dated: March 30, 1988.

J. Patrick Boyle,

Administrator.

[FR Doc. 88-7300 Filed 4-1-88; 8:45 am]

BILLING CODE 3410-02-M

---

7 CFR Part 1030

[Docket No. AO-361-A25]

Milk in the Chicago Regional Marketing Area; Extension of Time for Filing Exceptions on Proposed Amendments to Tentative Marketing Agreement and to Order

AGENCY: Agricultural Marketing Service, USDA.

ACTION: Extension of time for filing exceptions to proposed rule.

SUMMARY: This notice extends the time for filing exceptions to a recommended decision issued March 8, 1988, concerning proposed amendments to the Chicago Regional milk marketing order. The Wisconsin Cheese Makers Association requested the additional time to complete exceptions to the recommended decision.

DATE: Exceptions now are due on or before April 11, 1988.

ADDRESS: Exceptions (four copies) should be filed with the Hearing Clerk, Room 1079, South Building, United States Department of Agriculture, Washington, DC 20250.

FOR FURTHER INFORMATION CONTACT: Richard A. Glandt, Marketing Specialist, USDA/AMS/Dairy Division, Order Formulation Branch, Room 2968, South Building, P.O. Box 96456, Washington, DC 2090-6456, (202) 447-4829.

SUPPLEMENTARY INFORMATION: Prior documents in the proceeding:

Notice of Hearing: Issued May 15, 1987; published May 19, 1987 (52 FR 18894).

Extension of Time for Filing Briefs: Issued July 31, 1987; published August 6, 1987 (52 FR 29196).

Emergency Partial Decision: Issued October 8, 1987; published October 15, 1987 (52 FR 38235).

Order Amending Order: Issued October 20, 1987; published October 23, 1987 (52 FR 39611).

Recommended Decision: Issued March 8, 1988, published March 14, 1988 (53 FR 8205).

Notice is hereby given that the time for filing exceptions to the recommended decision with respect to the proposed amendments to the tentative marketing agreement and to the order regulating the handling of milk in the Chicago Regional marketing area which was issued March 8, 1988, is hereby extended to April 11, 1988.

This notice is issued pursuant to the provisions of the Agricultural Marketing Agreement Act of 1937, as amended (7 U.S.C. 601-674), and the applicable rules of practice and procedure governing the formulation of marketing agreements and marketing orders (7 CFR Part 900).

List of Subjects in 7 CFR Part 1030

Milk marketing orders, Milk, Dairy products.

The authority citation for 7 CFR Part 1030 continues to read as follows:

Authority: Secs. 1-19, 48 Stat. 31, as amended; 7 U.S.C. 601-674.

Signed at Washington, DC, on March 29, 1988.

J. Patrick Boyle,

Administrator, Agricultural Marketing Service.

[FR Doc. 88-7276 Filed 4-1-88; 8:45 am]

BILLING CODE 3410-02-M

ENVIRONMENTAL PROTECTION AGENCY

40 CFR Part 180

[PP 7F3509/P448; FRL 3360-2]

Pesticide Tolerance for Paraquat

AGENCY: Environmental Protection Agency (EPA).

ACTION: Proposed rule.

SUMMARY: This document proposes to establish tolerances for the herbicide paraquat in or on various raw agricultural commodities (RACs). ICI Americas, Inc., requested the establishment of these maximum permissible levels for residues of the herbicide.

DATE: Comments must be received on or before April 19, 1988.

ADDRESS: Submit written comments, bearing the identification number [PP 7F3509/P448], by mail to:

Information Services Branch, Program Management and Support Division (TS-767C), Office of Pesticide Programs, Environmental Protection Agency, 401 M Street SW., Washington, DC 20460

In person, deliver comments to: Room 246, CM #2, 1921 Jefferson Davis Highway, Arlington, VA 22202.

Information submitted in any comment concerning this proposed rule may be claimed confidential by marking any part or all of that information as "Confidential Business Information" (CBI). Information so marked will not be disclosed except in accordance with procedures set forth in 40 CFR Part 2. A copy of the comment that does not contain CBI must be submitted for inclusion in the public record. Information not marked confidential may be disclosed publicly by EPA without prior notice to the submitter. All written comments will be available for public inspection in Rm. 246 at the address given above from 8 a.m. to 4 p.m., Monday through Friday, excluding legal holidays.

FOR FURTHER INFORMATION CONTACT: By mail:

Robert J. Taylor, Product Manager (PM) 25, Registration Division (TS-767C), Environmental Protection Agency, 401 M Street SW., Washington, DC 20460

Office location and telephone number: Room 245, CM #2, 1921 Jefferson Davis Highway, Arlington, VA 22202, (703)-557-1800.

SUPPLEMENTARY INFORMATION:

EPA issued a notice, published in the Federal Register of May 13, 1987 (52 FR 18020), which announced that the ICI Americas, Inc., Agricultural Chemical Division, Concord Pike and New Murphy Rd., Wilmington, DE 19897, had submitted a pesticide petition (PP 7F3509), proposing to amend 40 CFR 180.205 by establishing tolerances to permit residues of the herbicide paraquat (1,1'-dimethyl-4,4'-bipyridinium-ion) in or on the RACs peanuts at 0.05 part per million (ppm), peanut hulls at 0.2 ppm peanut vines at 0.5 ppm, and peanut hay at 0.5 ppm.

There were no comments received in response to the notice of filing.

The petitioner subsequently amended the petition by submitting a revised section F petition proposing to establish tolerances for residues of paraquat in or on the RACs peanuts at 0.05 ppm; peanut hulls at 0.2 ppm; peanut vines at 0.5 ppm; peanut hay at 0.5 ppm; kidney of cattle, goats, hogs, horses, and sheep at 0.3 ppm and to increase the existing tolerances for meat, fat, and meat byproducts (except kidney) of cattle, goats, hogs, horses, and sheep from 0.01 to 0.5 ppm. Because there is a potential increase in risk to humans from the revision, the tolerance of 0.3 ppm in or on kidney of cattle, goats, hogs, horses, and sheep and the increase in tolerance for meat, fat, and meat byproducts (except kidney) of cattle, goats, hogs, horses, and sheep from 0.01 to 0.05 is being proposed for 15 days to allow for public comment.

The data submitted in the petition and other relevant material have been evaluated. The data evaluated include several acute studies; a 1-year feeding study in dogs fed dosages of 0, 0.45, 0.93, and 1.51 milligrams/kilogram (mg/kg) of body weight per day (bw/day) with a no-observed-effect level (NOEL) of 0.45 mg/kg/day; a 2-year chronic feeding/oncogenic study in mice fed dosages of 0, 1.87, 5.62, and 15/18.75 mg/kg/day (the highest dosage had to be increased from 15 to 18.75 mg/kg/day while the study was under way because no toxic signs appeared at 15 mg/kg/day) with no oncogenic effects observed under the conditions of the study at up to and including 15/18.75 mg/kg/day (the highest dose tested [HDT] and a systemic NOEL of 1.87 mg/kg/day; a 2-year chronic feeding/oncogenicity study in rats fed dosages of 0, 1.25, 3.75, and 7.5 mg/kg/day with oncogenic effects at 7.5 mg/kg/day (HDT, males) (squamous cell carcinomas in the head region) and an approximate NOEL of 1.25 mg/kg/day for systemic effect; a three-generation reproduction study with rats fed 0, 1.25, 3.75, and 7.5 mg/kg/day with no reproductive effects observed at 7.5 mg/kg/day (HDT) and a systemic NOEL of 1.25 mg/kg/day; a teratology study in mice fed dosages of 0, 1, 5, and 10 mg/kg/day with no teratogenic effects occurring at 10 mg/kg/day (HDT); a fetotoxic NOEL of 5 mg/kg/day and maternal toxicity NOEL of 1.0 mg/kg/day; a teratology study in rats fed dosages of 0, 1, 5; and 10 mg/kg/day with no teratogenic effects occurring at 10 mg/kg/day (HTD) and a fetotoxic and maternal toxicity NOEL of 1.0 mg/kg/day; and 16 acceptable mutagenicity studies, including six gene mutation assays with *S. typhimurium* (TA92, TA 98, TA100, TA1535, TA1537, TA1538, and G46 his-strains) and *A. nidulans* (strains 35 and P_2); and L5178Y mouse lymphoma cells in culture; four structural chromosome aberration assays; dominant lethal (Charles River CD-1 mice and Swiss-Webster mice); cytogenic (human lymphocytes and bone marrow of Wistar rats) and micronucleus in mice; and six DNA damage/repair assays: *S. typhimurim* (TA 1978 and TA1538 strains), *Saccharomyces cervesisiae* (D4, JDI and "other" strains), human embryo epithelial cells; rat hepatocytes in culture; and sister chromatid exchange in Chinese hamster lung fibroblasts. Paraquat was negative in eight studies (mostly in gene mutation and chromosome aberration assays); weakly positive in four studies (two gene mutation, one chromosome aberration, and one DNA damage/repair assay), and positive in four studies (all DNA damage/repair assays).

The acceptable daily intake (ADI), based on the 1-year dog feeding study (NOEL of 0.45 mg/kg/day) and using a hundredfold safety factor, is calculated to be 0.0045 mg/kg/day.

The theoretical maximum residue contribution (TMRC) from published tolerances for a 1.5-kg diet is calculated to be 0.001771 mg/kg/day. Published tolerances utilize 41.426 percent of the ADI. The current action will utilize an additional 2.069 percent of the ADI.

There are no desirable data lacking for this chemical. The chemical is classified as a class "C" oncogen and is weakly genotoxic. These tolerances are supported because there is only a 2-percent increase in percent of the ADI utilized, and there is no increase in paraquat in processed food and feed items.

The pesticide is useful for the purposes of this tolerance rule. The nature of the residues is adequately understood for the purpose of establishing the tolerances. Adequate analytical methodology (quantitation by spectrophotometry) is available for enforcement purposes. The method is listed in the Pesticide Analytical Manual (PAM), Vol. II, as method I for crops. There are currently no actions pending against the registration of this chemical. Any secondary residues occurring in meat will be covered by tolerances being concurrently proposed for meat, fat, meat byproducts (except kidney), and kidney. Any secondary residues occurring in milk, poultry, and eggs will be covered by existing tolerances on these commodities.

Based on the above information considered by the Agency, the tolerances established by amending 40 CFR Part 180 would protect the public health. It is proposed, therefore, that the tolerances be established as set forth below.

Any person who has registered or submitted an application for registration of a pesticide, under the Federal Insecticide, Fungicide, and Rodenticide Act, as amended, which contains any of the ingredients listed herein, may request within 30 days after publication of this document in the **Federal Register** that this proposal be referred to an Advisory Committee in accordance with section 408(e) of the Federal Food, Drug, and Cosmetic Act.

Interested persons are invited to submit written comments on the proposed regulation. Comments must bear a notation indicating the document control number [PP 7F3509/P448]. All written comments filed in response to this proposed rule will be available in the Product Manager's office, Registration Division, at the address given above from 8 a.m. to 4 p.m., Monday through Friday, except legal holidays.

The Office of Management and Budget has exempted this rule from the requirements of section 3 of Executive Order 12291.

Pursuant to the requirements of the Regulatory Flexibility Act (Pub. L. 96–354, 94 Stat. 1164, 5 U.S.C. 601–612), the Administrator has determined that regulations establishing exemptions from tolerance requirements do not have a significant economic impact on a substantial number of small entities. A certification statement to this effect was published in the **Federal Register** of May 4, 1981 (46 FR 24950).

(Sec. 408(e), 68 Stat. 514 (21 U.S.C. 346a(e)).)

List of Subjects in 40 CFR Part 180

Administrative practice and procedures, Agricultural commodities, Pesticides and pests.

Dated: March 30, 1988.

Susan H. Wayland,

Acting Director, Office of Pesticide Programs.

Therefore, it is proposed that 40 CFR Part 180 be amended as follows:

PART 180—[AMENDED]

1. The authority citation for Part 180 continues to read as follows:

Authority: 21 U.S.C. 346a.

2. In § 180.205(a), by adding and alphabetically inserting entries for the raw agricultural commodities peanuts, peanut hay, peanut hulls, and peanut vines and kidney of cattle, goats, hogs, horses, and sheep and by revising the entries for meat, fat, and meat byproducts (except kidney) of cattle, goats, hogs, horses, and sheep, as follows:

§ 180.205 Paraquat; tolerances for residues.

(a) * * *

Commodities	Parts per million
* * * * *	
Cattle, fat	0.05
Cattle, kidney	.3
Cattle, meat	.05
Cattle, mbyp (except kidney)	.05
* * * * *	
Goats, fat	.05
Goats, kidney	.3
Goats, meat	.05
Goats, mbyp (except kidney)	.05
* * * * *	
Hogs, fat	.05
Hogs, kidney	.3
Hogs, meat	.05
Hogs, mbyp (except kidney)	.05
* * * * *	
Horses, fat	.05
Horses, kidney	.3
Horses, meat	.05
Horses, mbyp (except kidney)	.05
* * * * *	
Peanuts	.05
Peanut, hay	.5
Peanut, hulls	.2
Peanut, vines	.5
* * * * *	
Sheep, fat	.05
Sheep, kidney	.3
Sheep, meat	.05
Sheep, mbyp (except kidney)	.05
* * * * *	

[FR Doc. 88-7382 Filed 3-31-88; 11:17 am]

BILLING CODE 6560-50-M

NATIONAL SCIENCE FOUNDATION

45 CFR Part 606

Enforcement of Nondiscrimination on the Basis of Handicap in Programs or Activities Conducted by the National Science Foundation

AGENCY: National Science Foundation.

ACTION: Notice of Proposed Rulemaking.

SUMMARY: This proposed regulation provides for the enforcement of section 504 of the Rehabilitation Act of 1973, as amended, which prohibits discrimination on the basis of handicap, as it applies to programs or activities conducted by the National Science Foundation (NSF). This proposed regulation does not apply to recipients of financial assistance from NSF or to programs or activities that receive a benefit from such assistance because those matters are covered by NSF regulations at 45 CFR Part 605. It sets forth standards for what constitutes discrimination on the basis of mental or physical handicap, provides definitions for "individual with handicaps" and "qualified individual with handicaps," and establishes a complaint mechanism for resolving allegations of discrimination.

DATE: To be assured of consideration, comments must be in writing and must be received on or before June 3, 1988. Comments should refer to specific sections in the regulation.

ADDRESS: Comments should be sent to: Dr. Brenda M. Brush, Director, Office of Equal Opportunity, National Science Foundation, Washington, DC 20550.

Comments received will be available for public inspection in the Office of Equal Opportunity, NSF, 1800 G Street NW., Washington, DC, between the hours of 8:30 a.m. and 5:00 p.m., Monday through Friday except legal holidays. Copies of this notice are available on cassette tapes for persons with impaired vision. They may be obtained from the above address.

FOR FURTHER INFORMATION CONTACT: Dr. Brenda M. Brush, Director, Office of Equal Opportunity, National Science Foundation, 1800 G Street NW., Washington, DC 20550, Telephone (202) 357–9819 (Voice), (202) 357–9867 (TDD).

SUPPLEMENTARY INFORMATION:

Background

The purpose of this proposed rule is to provide for the enforcement of section 504 of the Rehabilitation Act of 1973, as amended (29 U.S.C. 794), as it applies to programs and activities conducted by the National Science Foundation. As

amended by the Rehabilitation, Comprehensive Services, and Developmental Disabilities Amendments of 1978 (Sec. 119, Pub. L. 95-602, 92 Stat. 2982) and the Rehabilitation Act Amendments of 1986 (Pub. L. 99-506, 100 Stat. 1810), section 504 of the Rehabilitation Act of 1973 states that no otherwise qualified individual with handicaps in the United States, * * * shall, solely by reason of his handicap, be excluded from participation in, be denied the benefits of, or be subjected to discrimination under any program or activity receiving Federal financial assistance *or under any program or activity conducted by any Executive agency or by the United States Postal Service. The head of each such agency shall promulgate such regulations as may be necessary to carry out the amendments to this section made by the Rehabilitation, Comprehensive Services, and Developmental Disabilities Act of 1978. Copies of any proposed regulation shall be submitted to appropriate authorizing committees of Congress, and such regulation may take effect no earlier than the thirtieth day after the date on which such regulation is so submitted to such committees.*

(29 U.S.C. 794 (1978 amendment italicized))

The substantive nondiscrimination obligations of the Foundation, as set forth in this proposed rule, are virtually identical to those established by Federal regulations for programs or activities receiving Federal financial assistance. (*See* 28 CFR Part 41 (section 504 coordination regulations for federally assisted programs).) This general parallelism is in accord with the intent expressed by supporters of the 1978 amendment in floor debate, including its sponsor, Rep. James M. Jeffords, that the Federal Government should have the same section 504 obligations as recipients of Federal financial assistance. 124 *Cong. Rec.* 13,901 (1978) (remarks of Rep. Jeffords); 124 *Cong. Rec.* E2668, E2670 (daily ed. May 17, 1978) *id.*; 124 *Cong. Rec.* 13,897 (remarks of Rep. Brademas); *id.* at 39,552 (remarks of Rep. Sarasin).

There are, however, some language differences between this proposed rule and the Federal Government's section 504 regulations for federally assisted programs. These changes are based on the Supreme Court's decision in *Southeastern Community College v. Davis*, 442 U.S. 397 (1979), and the subsequent circuit court decisions interpreting *Davis* and section 504. *See Dopico v. Goldschmidt*, 687 F.2d 644 (2d Cir. 1982); *American Public Transit Association v. Lewis*, 655 F.2d 1272 (D.C. Cir. 1981) (*APTA*); *see also Rhode Island Handicapped Action Committee v. Rhode Island Public Transit Authority*, 718 F.2d 490 (1st Cir. 1983).

These language differences are also supported by the recent decision of the Supreme Court in *Alexander v. Choate*, 469 U.S. 287 (1985), where the Court held that the regulations for federally assisted programs did not require a recipient to modify its durational limitation on Medicaid coverage of inpatient hospital care for handicapped persons. Clarifying its *Davis* decision, the Court explained that section 504 requires only "reasonable" modifications, *id.* at 300, and explicitly noted that "[t]he regulations implementing section 504 [for federally assisted programs] are consistent with the view that *reasonable* adjustments in the nature of the benefit offered must at times be made to assure meaningful access." *Id.* at 301 n.21 (emphasis added).

Incorporation of these changes, therefore, makes this regulation implementing section 504 for federally conducted programs consistent with the Federal Government's section 504 regulations implementing section 504 for federally assisted programs as they have been interpreted by the Supreme Court. Many of these federally assisted regulations were issued prior to the interpretations of section 504 by the Supreme Court in *Davis*, by lower courts interpreting *Davis*, and by the Supreme Court in *Alexander*; therefore their language does not reflect the interpretation of section 504 provided by the Supreme Court and by the various circuit courts. Of course, these federally assisted regulations must be interpreted to reflect the holdings of the Federal judiciary. Hence the Foundation believes that there are no significant differences between this proposed rule for federally conducted programs and the Federal Government's interpretation of section 504 regulations for federally assisted programs.

This regulation has been reviewed by the Department of Justice. This regulation is an adaptation of a prototype prepared by the Department of Justice under Executive Order 12250 (45 FR 72995, 3 CFR, 1980 Comp., p. 298) and distributed to Executive agencies. This regulation has also been reviewed by the Equal Employment Opportunity Commission under Executive Order 12067 (43 FR 28967, 3 CFR, 1978 Comp., p. 206).

It is not a major rule within the meaning of Executive Order 12291 (46 FR 13193, 3 CFR, 1981 Comp., p. 127) and therefore, a regulatory impact analysis has not been prepared.

This regulation does not have an impact on small entities. It is not, therefore, subject to the Regulatory Flexibility Act (5 U.S.C. 601-612).

Section-by-Section Analysis

Section 606.1 Purpose.

Section 606.1 states the purpose of the proposed rule, which is to effectuate section 119 of the Rehabilitation, Comprehensive Services, and Developmental Disabilities Amendments of 1978, which amended section 504 of the Rehabilitation Act of 1973 to prohibit discrimination on the basis of handicap in programs or activities conducted by Executive agencies or the United States Postal Service.

Section 606.2 Application.

The proposed regulation applies to all programs or activities conducted by the Foundation but not programs or activities conducted by recipients of Federal financial assistance from the Foundation. Under this section, a federally conducted program or activity is, in simple terms, anything a Federal agency does. Aside from employment, there are two major categories of federally conducted programs or activities covered by this regulation: Those involving general public contact as part of ongoing Foundation operations and those directly administered by the Foundation for program beneficiaries and participants. Activities in the first category include communication with the public (telephone contacts, office walk-ins, or interviews) and the public's use of the Foundation's facilities. Activities in the second category include programs that provide Federal services or benefits. This regulation does not, however, apply to programs or activities conducted outside the United States that do not involve individuals with handicaps in the United States.

Section 606.3 Definitions.

"Assistant Attorney General." "Assistant Attorney General" refers to the Assistant Attorney General, Civil Rights Division, United States Department of Justice.

"Auxiliary aids." "Auxiliary aids" means services or devices that enable persons with impaired sensory, manual, or speaking skills to have an equal opportunity to participate in and enjoy the benefits of the Foundation's programs or activities. The definition provides examples of commonly used auxiliary aids. Although auxiliary aids

are required explicitly only by § 606.60(a)(1), they may also be necessary to meet other requirements of the regulation.

"Complete complaint." "Complete complaint" is defined to include all the information necessary to enable the Foundation to investigate the complaint. The definition is necessary, because the 180 day period for the Foundation's investigation (see § 606.70(f)) begins when the Foundation receives a complete complaint.

"Facility." The definition of "facility" is similar to that in the section 504 coordination regulation for federally assisted programs (28 CFR 41.3(f)) except that the term "rolling stock or other conveyances" has been added. The other exception is that the phrase, "or interest in such property," has been deleted because the term "facility," as used in this regulation, refers to structures and not to intangible property rights. It should, however, be noted that the regulation applies to all programs and activities conducted by the Foundation regardless of whether the facility in which they are conducted is owned, leased, or used on some other basis by the Foundation. The term "facility" is used in §§ 606.50, 606.51, and 606.70(e).

"Individual with handicaps." The definition of "individual with handicaps" is identical to the definition of "handicapped person" appearing in the section 504 coordination regulation for federally assisted programs (28 CFR 41.31). Although section 103(d) of the Rehabilitation Act Amendments of 1986 changed the statutory term "handicapped individual" to "individual with handicaps," the legislative history of this amendment indicates that no substantive change was intended. Thus, although the term has been changed in the regulation to be consistent with the statute as amended, the definition is unchanged. In particular, although the term as revised refers to "handicaps" in the plural, it does not exclude persons who have only one handicap.

"Qualified individual with handicaps." The definition of "qualified individual with handicaps" is a revised version of the definition of "qualified handicapped person" appearing in the section 504 coordination regulations for federally assisted programs (28 CFR 41.32).

Paragraph (1) deviates from existing regulations for federally assisted programs because of intervening court decisions. It defines "qualified individual with handicaps" with regard to any program under which a person is required to perform services or to achieve a level of accomplishment. In such programs a qualified individual with handicaps is one who can achieve the purpose of the program without modifications in the program that the Foundation can demonstrate would result in a fundamental alteration in its nature. This definition reflects the decision of the Supreme Court in *Southeastern Community College v. Davis*, 442 U.S. 397 (1979). In that case, the Court ruled that a hearing-impaired applicant to a nursing school was not a "qualified handicapped person" because her hearing impairment would prevent her from participating in the clinical training portion of the program. The Court found that, if the program were modified so as to enable the respondent to participate (by exempting her from the clinical training requirements), "she would not receive even a rough equivalent of the training a nursing program normally gives." *Id.* at 410. It also found that "the purpose of [the] program was to train persons who could serve the nursing profession in all customary ways," *id* at 413, and that the respondent would be unable, because of her hearing impairment, to perform some functions expected of a registered nurse. It therefore concluded that the school was not required by section 504 to make such modifications that would result in "a fundamental alteration in the nature of the program." *Id.* at 410.

We have incorporated the Court's language in the definition of "qualified individual with handicaps" in order to make clear that such a person must be able to participate in the program offered by the Foundation. The Foundation is required to make modifications in order to enable an applicant with handicaps to participate, but is not required to offer a program of a fundamentally different nature. The test is whether, with appropriate modifications, the applicant can achieve the purpose of the program offered; not whether the applicant could benefit or obtain results from some other program that the Foundation does not offer. Although the revised definition allows exclusion of some individuals with handicaps from some programs, it requires that an individual with handicaps who is capable of achieving the purpose of the program must be accommodated, provided that the modifications do not fundamentally alter the nature of the program.

The Foundation has the initial burden of demonstrating that a proposed modification would constitute a fundamental alteration in the nature of its program or activity. Furthermore, in demonstrating that a modification would result in such an alteration, the Foundation must follow the procedures established in § 606.51(a) and § 606.60(d), which are discussed below, for demonstrating that an action would result in undue financial and administrative burdens. That is, the decision must be made by the Foundation Director or his or her designee in writing after consideration of all resources available for the program or activity and must be accompanied by an explanation of the reasons for the decision. If the Foundation Director or his or her designee determines that an action would result in a fundamental alteration, the Foundation must consider options that would enable the individual with handicaps to achieve the purpose of the program but would not result in such an alteration.

For programs or activities that do not fall under the first paragraph, paragraph (2) adopts the existing definition of "qualified handicapped person" with respect to services (28 CFR 41.32(b)) in the coordination regulation for programs receiving Federal financial assistance. Under this definition, a qualified individual with handicaps is an individual with handicaps who meets the essential eligibility requirements for participation in the program or activity.

Paragraph (3) explains that "qualified individual with handicaps" means "qualified handicapped person" as that term is defined for purposes of employment in the Equal Employment Opportunity Commission's regulation at 29 CFR 1613.702(f), which is made applicable to this part by § 606.40. Nothing in this part changes existing regulations applicable to employment.

"Section 504." This definition makes clear that, as used in this regulation, "section 504" applies only to programs or activities conducted by the Foundation and not to programs or activities to which it provides Federal financial assistance.

Section 606.10 Self-evaluation.

The Foundation shall conduct a self-evaluation of its compliance with section 504 within one year of the effective date of this regulation. The self-evaluation requirement is present in the existing section 504 coordination regulation for programs or activities receiving Federal financial assistance (28 CFR 41.5(b)(2)). Experience has demonstrated the self-evaluation process to be a valuable means of establishing a working relationship with individuals with handicaps that promotes both effective and efficient implementation of section 504.

Section 606.11 Notice.

Section 606.11 requires the Foundation to disseminate sufficient information to employees, applicants, participants, beneficiaries, and other interested persons to apprise them of rights and protections afforded by section 504 and this regulation. Methods of providing this information include, for example, the publication of information in handbooks, manuals, and pamphlets that are distributed to the public to describe the Foundation's programs and activities; the display of informative posters in service centers and other public places; or the broadcast of information by television or radio.

Section 606.30 General prohibitions against discrimination.

Section 606.30 is an adaptation of the corresponding section of the section 504 coordination regulation for programs or activities receiving Federal financial assistance (28 CFR 41.51).

Paragraph (a) restates the nondiscrimination mandate of section 504. The remaining paragraphs in § 606.30 establish the general principles for analyzing whether any particular action of the Foundation violates this mandate. These principles serve as the analytical foundation for the remaining sections of the regulation. If the Foundation violates a provision in any of the subsequent sections, it will also violate one of the general prohibitions found in § 606.30. When there is no applicable subsequent provision, the general prohibitions stated in this section apply.

Paragraph (b) prohibits overt denials of equal treatment of individuals with handicaps. The Foundation may not refuse to provide an individual with handicaps with an equal opportunity to participate in or benefit from its program simply because the person is handicapped. Such blatantly exclusionary practices often result from the use of irrebuttable presumptions that absolutely exclude certain classes of disabled persons (*e.g.*, epileptics, hearing-impaired persons, persons with heart ailments) from participation in programs or activities without regard to an individual's actual ability to participate. Use of an irrebuttable presumption is permissible only when in all cases a physical condition by its very nature would prevent an individual from meeting the essential eligibility requirements for participation in the activity in question. It would be permissible, therefore, to exclude without an individual evaluation all persons who are blind in both eyes from eligibility for a license to operate a commercial vehicle in interstate commerce; but it may not be permissible to automatically disqualify all those who are blind in just one eye.

In addition, section 504 prohibits more than just the most obvious denials of equal treatment. It is not enough to admit persons in wheelchairs to a program if the facilities in which the program is conducted are inaccessible. Paragraph (b)(1)(iii), therefore, requires that the opportunity to participate or benefit afforded to an individual with handicaps be as effective as that afforded to others. The later sections on program accessibility (§§ 606.50–606.52) and communications (§ 606.60) are specific applications of this principle.

Despite the mandate of paragraph (d) that the Foundation administer its programs and activities in the most integrated setting appropriate to the needs of qualified individuals with handicaps, paragraph (b)(1)(iv), in conjunction with paragraph (d), permits the Foundation to develop separate or different aids, benefits, or services when necessary to provide individuals with handicaps with an equal opportunity to participate in or benefit from the Foundation's programs or activities. Paragraph (b)(1)(iv) requires that different or separate aids, benefits, or services be provided only when necessary to ensure that the aids, benefits, or services are as effective as those provided to others. Even when separate or different aids, benefits, or services would be more effective, paragraph (b)(2) provides that a qualified individual with handicaps still has the right to choose to participate in the program that is not designed to accommodate individuals with handicaps.

Paragraph (b)(1)(v) prohibits the Foundation from denying a qualified individual with handicaps the opportunity to participate as a member of a planning or advisory board.

Paragraph (b)(1)(vi) prohibits the Foundation from limiting a qualified individual with handicaps in the enjoyment of any right, privilege, advantage, or opportunity enjoyed by others receiving any aid, benefit, or service.

Paragraph (b)(3) prohibits the Foundation from utilizing criteria or methods of administration that deny individuals with handicaps access to the Foundation's programs or activities. The phrase "criteria or methods of administration" refers to official written Foundation policies and the actual practices of the Foundation. This paragraph prohibits both blatantly exclusionary policies or practices and nonessential policies and practices that are neutral on their face, but deny individuals with handicaps an effective opportunity to participate.

Paragraph (b)(4) specifically applies the prohibition enunciated in § 606.30(b)(3) to the process of selecting sites for construction of new facilities or selecting existing facilities to be used by the Foundation. Paragraph (b)(4) does not apply to construction of additional buildings at an existing site.

Paragraph (b)(5) prohibits the Foundation, in the selection of procurement contractors, from using criteria that subject qualified individuals with handicaps to discrimination on the basis of handicap.

Paragraph (c) provides that programs conducted pursuant to Federal statute or Executive order that are designed to benefit only individuals with handicaps or a given class of individuals with handicaps may be limited to those individuals with handicaps.

Paragraph (d), discussed above, provides that the Foundation must administer programs and activities in the most integrated setting appropriate to the needs of qualified individuals with handicaps, *i.e.*, in a setting that enables individuals with handicaps to interact with nonhandicapped persons to the fullest extent possible.

Section 606.40 Employment.

Section 606.40 prohibits discrimination on the basis of handicap in employment by the Foundation. Courts have held that section 504, as amended in 1978, covers the employment practices of Executive agencies. *Gardner v. Morris*, 752 F.2d 1271, 1277 (8th Cir. 1985); *Smith v. United States Postal Service*, 742 F.2d 257, 259–260 (6th Cir. 1984); *Prewitt v. United States Postal Service*, 662 F.2d 292, 302–04 (5th Cir. 1981). *Contra McGuiness v. United States Postal Service*, 744 F.2d 1316, 1320–21 (7th Cir. 1984); *Boyd v. United States Postal Service*, 752 F.2d 410, 413–14 (9th Cir. 1985).

Courts uniformly have held that in order to give effect to section 501 of the Rehabilitation Act, which covers Federal employment, the administrative procedures of section 501 must be followed in processing complaints of employment discrimination under section 504. *Smith*, 742 F.2d at 262; *Prewitt*, 662 F.2d at 304. Accordingly, section 606.40 (Employment) of this rule adopts the definitions, requirements, and procedures of section 501 as established in regulations of the Equal Employment Opportunity Commission (EEOC) at 29 CFR Part 1613.

Responsibility for coordinating enforcement of Federal laws prohibiting discrimination in employment is assigned to the EEOC by Executive Order 12067 (3 CFR 1978 Comp., p. 206). Under this authority, the EEOC establishes government-wide standards on nondiscrimination in employment on the basis of handicap. In addition to this section, § 606.70(b) specifies that the Foundation will use the existing EEOC procedures to resolve allegations of employment discrimination.

Section 606.50 Program accessibility: Discrimination prohibited.

Section 606.50 states the general nondiscrimination principle underlying the program accessibility requirements of §§ 606.51 and 606.52.

Section 606.51 Program accessibility: Existing facilities.

This regulation adopts the program accessibility concept found in the existing section 504 coordination regulation for programs or activities receiving Federal financial assistance (28 CFR 41.57), with certain modifications. Thus, § 606.51 requires that each Foundation program or activity, when viewed in its entirety, be readily accessible to and usable by individuals with handicaps. The regulation also makes clear that the Foundation is not required to make each of its existing facilities accessible (§ 606.51(a)(1)). However, § 606.51, unlike 28 CFR 41.57, places explicit limits on the Foundation's obligation to ensure program accessibility (§ 606.51(a)(2)).

Paragraph (a)(2) generally codifies case law that defines the scope of the Foundation's obligation to ensure program accessibility. This paragraph provides that in meeting the program accessibility requirement the Foundation is not required to take any action that would result in a fundamental alteration in the nature of its program or activity or in undue financial and administrative burdens. A similar limitation is provided in § 606.60(d). This provision is based on the Supreme Court's holding in *Southeastern Community College v. Davis*, 442 U.S. 397 (1979), that section 504 does not require program modifications that result in a fundamental alteration in the nature of the program, and on the Court's statement that section 504 does not require modifications that would result in "undue financial and administrative burdens." 442 U.S. at 412. Since *Davis*, circuit courts have applied this limitation on a showing that only one of the two "undue burdens" would be created as a result of the modification sought to be imposed under section 504. *See, e.g., Dopico v. Goldschmidt*, 687 F.2d 644 (2d Cir. 1982); *American Public Transit Association v. Lewis (APTA)*, 655 F.2d 1272 (D.C. Cir. 1981).

Paragraphs (a)(2) and 606.60(d) are also supported by the Supreme Court's recent decision in *Alexander v. Choate*, 469 U.S. 287 (1985). *Alexander* involved a challenge to the State of Tennessee's reduction of inpatient hospital care coverage under Medicaid from 20 to 14 days per year. Plaintiffs argued that this reduction violated section 504 because it had an adverse impact on handicapped persons. The Court assumed without deciding that section 504 reaches at least some conduct that has an unjustifiable disparate impact on handicapped people, but held that the reduction was not "the sort of disparate impact" discrimination that might be prohibited by section 504 or its implementing regulation. *Id.* at 299.

Relying on *Davis* the Court said that section 504 guarantees qualified handicapped persons "meaningful access to the benefits that the grantee offers." *id.* at 301, and that *"reasonable adjustments* in the nature of the benefit being offered must at times be made to assure meaningful access." *Id.* at n.21 (emphasis added). However, section 504 does not require " 'changes,' 'adjustments,' or 'modifications' to existing programs that would be 'substantial' * * * or that would constitute 'fundamental alteration(s) in the nature of a program.' " *Id.* at n.20 (citations omitted). *Alexander* supports the position, based on *Davis* and the earlier, lower court decisions, that in some situations, certain accommodations for a handicapped person may so alter an agency's program or activity, or entail such extensive costs and administrative burdens that the refusal to undertake the accommodations is not discriminatory. Thus, failure to include such an "undue burdens" provision could lead to judicial invalidation of the regulation or reversal of a particular enforcement action taken pursuant to the regulation.

This paragraph, however, does not establish an absolute defense; it does not relieve the Foundation of all obligations to individuals with handicaps. Although the Foundation is not required to take actions that would result in a fundamental alteration in the nature of a program or activity or in undue financial and administrative burdens, it nevertheless must take any other steps necessary to ensure that individuals with handicaps receive the benefits and services of the federally conducted program or activity.

It is our view that compliance with § 606.50(a) would in most cases not result in undue financial and administrative burdens on the Foundation. In determining whether financial and administrative burdens are undue, all Foundation resources available for use in the funding and operation of the conducted program or activity should be considered. The initial burden of establishing that compliance with § 606.51(a) would fundamentally alter the nature of a program or activity or would result in undue financial and administrative burdens rests with the Foundation. The decision that compliance would result in such alteration or burdens must be made by the Foundation Director or his or her designee and must be accompanied by a written statement of the reasons for reaching that conclusion. Any person who believes that he or she or any specific class of persons has been injured by the Foundation's decision or failure to make a decision may file a complaint under the compliance procedures established in § 606.70.

Paragraph (b) sets forth a number of means by which program accessibility may be achieved, including redesign of equipment, reassignment of services to accessible buildings, and provision of aides. In choosing among methods, the Foundation shall give priority consideration to those that will be consistent with provision of services in the most integrated setting appropriate to the needs of individuals with handicaps. Structural changes in existing facilities are required only when there is no other feasible way to make the Foundation's program accessible. (It should be noted that "structural changes" include all physical changes to a facility; the term does not refer only to changes to structural features, such as removal of or alterations to a load-bearing structural member.) The Foundation may comply with the program accessibility requirement by delivering services at alternate accessible sites or making home visits as appropriate.

Paragraphs (c) and (d) establish time periods for complying with the program accessibility requirements. As currently required for federally assisted programs by 28 CFR 41.57(b), the Foundation must make any necessary structural changes in facilities as soon as practicable, but in no event later than three years after the effective date of this regulation. Where structural modifications are required, a transition plan shall be developed within six months of the

effective date of this regulation. Aside from structural changes, all other necessary steps to achieve compliance shall be taken within 60 days.

Section 606.52 Program accessibility: New construction and alterations.

Overlapping coverage exists with respect to new construction and alterations under section 504 and the Architectural Barriers Act of 1968, as amended (42 U.S.C. 4151–4157). Section 606.51 provides that those buildings that are constructed or altered by, on behalf of, or for the use of the Foundation shall be designed, constructed, or altered to be readily accessible to and usable by individuals with handicaps in accordance with 41 CFR 101–19.600 to 101–19.607. This standard was promulgated pursuant to the Architectural Barriers Act of 1968, as amended (42 U.S.C. 4151–4157). We believe that it is appropriate to adopt the existing Architectural Barriers Act standard for section 504 compliance because new and altered buildings subject to this regulation are also subject to the Architectural Barriers Act and because adoption of the standard will avoid duplicative and possibly inconsistent standards.

Existing buildings leased by the Foundation after the effective date of this regulation are not required by the regulation to meet accessibility standards simply by virtue of being leased. They are subject, however, to the program accessibility standard for existing facilities in § 606.[illegible]. To the extent the buildings are newly constructed or altered, they must also meet the new construction and alteration requirements of § 606.52.

Federal practice under section 504 has always treated newly leased buildings as subject to the existing facility program accessibility standard. Unlike the construction of new buildings where architectural barriers can be avoided at little or no cost, the application of new construction standards to an existing building being leased raises the same prospect of retrofitting buildings as the use of an existing Federal facility, and the Foundation believes the same program accessibility standard should apply to both owned and leased existing buildings.

In *Rose v. United States Postal Service*, 774 F.2d 1355 (9th Cir. 1985), the Ninth Circuit held that the Architectural Barriers Act requires accessibility at the time of lease. The *Rose* court did not address the issue of whether section 504 likewise requires accessibility as a condition of lease, and the case was remanded to the District Court for among other things, consideration of that issue. The Foundation may provide more specific guidance on section 504 requirements for leased buildings after the litigation is completed.

Section 606.60 Communications.

Section 606.60 requires the Foundation to take appropriate steps to ensure effective communication with personnel of other Federal entities, applicants, participants, and members of the public. These steps shall include procedures for determining when auxiliary aids are necessary under § 606.60(a)(1) to afford an individual with handicaps an equal opportunity to participate in, and enjoy the benefits of, the Foundation's program or activity. They shall also include an opportunity for individuals with handicaps to request the auxiliary aids of their choice. This expressed choice shall be given special consideration by the Foundation (§ 606.60(a)(1)(i)). The Foundation shall honor the choice unless it can demonstrate that another effective means of communication exists or that use of the means chosen would not be required under § 606.60(d). That paragraph limits the obligation of the Foundation to ensure effective communication in accordance with *Davis* and the circuit court opinions interpreting it (*see supra* preamble discussion of § 606.51(a)(3)). Unless not required by § 606.60(d), the Foundation shall provide auxiliary aids at no cost to the individual with handicaps.

The discussion of § 606.51(a), Program accessibility: Existing facilities, regarding the determination of undue financial and administrative burdens also applies to this section and should be referred to for a complete understanding of the Foundation's obligation to comply with § 606.60.

In certain circumstances, such as relatively simple requests for information by persons skilled in spoken or written language, a note pad and written materials may be sufficient to permit effective communication with a hearing-impaired person. In many circumstances, however, they may not be, particularly when the information being communicated is complex or exchanged for a lengthy period of time (*e.g.*, a meeting) or where the hearing-impaired applicant or participant is not skilled in spoken or written language and the potential for misunderstanding is high. Then a sign language interpreter may be appropriate. For vision-impaired persons, effective communication might be achieved by several means, including readers and audio recordings. In general, the Foundation intends to inform the public of (1) the communications services it offers to afford individuals with handicaps an equal opportunity to participate in or benefit from its programs or activities, (2) the opportunity to request a particular mode of communication, and (3) the Foundation's preferences regarding auxiliary aids if it can demonstrate that several different modes are effective.

The Foundation shall ensure effective communication with vision-impaired and hearing-impaired persons involved in hearings conducted by the Foundation. Auxiliary aids must be afforded where necessary to ensure effective communication at the proceedings. If sign language interpreters are necessary, the Foundation may require that it be given reasonable notice prior to the proceeding of the need for an interpreter. Moreover, the Foundation need not provide individually prescribed devices, readers for personal use or study, or other devices of a personal nature (§ 606.60(a)(1)(ii)). For example, the Foundation need not provide eye glasses or hearing aids to applicants or participants in its programs. Similarly, the regulation does not require the Foundation to provide wheelchairs to persons with mobility impairments.

Paragraph (b) requires the Foundation to provide information to individuals with handicaps concerning accessible services, activities, and facilities. Paragraph (c) requires the Foundation to provide signage at inaccessible facilities that directs users to locations with information about accessible facilities.

Section 606.70 Complaint procedures.

Paragraph (a) specifies that paragraphs (c) through (h) of this section establish the procedures for processing complaints other than employment complaints. Paragraph (b) provides that the agency will process employment complaints according to procedures established in existing regulations of the EEOC (29 CFR Part 1613) pursuant to section 501 of the Rehabilitation Act of 1973 (29 U.S.C. 791).

Paragraph (c) designates the official responsible for coordinating implementation of § 606.70 and paragraph (d) provides an address to which complaints may be sent.

The Foundation is required to accept and investigate all complete complaints (§ 606.70(d)). If it determines that it does not have jurisdiction over a complaint, it shall promptly notify the complainant and make reasonable efforts to refer the complaint to the appropriate entity of the Federal Government (§ 606.70(d)).

Section 606.70(e) requires the Foundation to notify the Architectural

and Transportation Barriers Compliance Board upon receipt of a complaint alleging that a building or facility subject to the Architectural Barriers Act was designed, constructed, or altered in a manner that does not provide ready access to and use by individuals with handicaps.

Section 606.70(f) requires the Foundation to provide to the complainant, in writing, findings of fact and conclusions of law, the relief granted if noncompliance is found, and notice of the right to appeal. One appeal within the Foundation shall be provided (§ 606.70(g)). The appeal will not be heard by the same person who made the initial determination of compliance or noncompliance (§ 606.70(g)).

List of Subjects in 45 CFR Part 606

Blind, Buildings, Civil rights, Employment, Equal employment opportunity, Federal buildings and facilities, Government employees, Handicapped.

Erich Bloch,

Director, National Science Foundation.

For the reasons set forth in the preamble, Title 45, Public Welfare, of the Code of Federal Regulations is proposed to be amended by adding Part 606 as follows:

PART 606—ENFORCEMENT OF NONDISCRIMINATION ON THE BASIS OF HANDICAP IN PROGRAMS OR ACTIVITIES CONDUCTED BY THE NATIONAL SCIENCE FOUNDATION

Sec.
606.1 Purpose.
606.2 Application.
606.3 Definitions.
606.4–606.9 [Reserved].
606.10 Self-evaluation.
606.11 Notice.
606.12–606.29 [Reserved].
606.30 General prohibitions against discrimination.
606.31–606.39 [Reserved].
606.40 Employment.
606.41–606.49 [Reserved].
606.50 Program accessibility: Discrimination prohibited.
606.51 Program accessibility: Existing facilities.
606.52 Program accessibility: New construction and alterations.
606.53–606.59 [Reserved].
606.60 Communications.
606.61–606.69 [Reserved].
606.70 Complaint procedures—general.
606.71–606.99 [Reserved].

Authority: 29 U.S.C. 794

§ 606.1 Purpose.

The purpose of this part is to effectuate section 119 of the Rehabilitation, Comprehensive Services, and Developmental Disabilities Amendments of 1978, which amended section 504 of the Rehabilitation Act of 1973 to prohibit discrimination on the basis of handicap in programs or activities conducted by Executive agencies or the United States Postal Service.

§ 606.2 Application.

This part applies to all programs or activities conducted by the Foundation, except for programs or activities conducted outside the United States that do not involve individuals with handicaps in the United States. Programs and activities receiving Federal financial assistance from the Foundation are covered by 45 CFR Part 605.

§ 606.3 Definitions.

For purposes of this part, the term—

"Assistant Attorney General" means the Assistant Attorney General, Civil Rights Division, Department of Justice.

"Auxiliary aids" means services or devices that enable persons with impaired sensory, manual, or speaking skills to have an equal opportunity to participate in, and enjoy the benefits of, programs or activities conducted by the Foundation. For example, auxiliary aids useful for persons with impaired vision include readers, Brailled materials, audio recordings, and other similar services and devices. Auxiliary aids useful for persons with impaired hearing include telephone handset amplifiers, telephones compatible with hearing aids, telecommunication devices for deaf persons (TDD's), interpreters, note takers, written materials, and other similar services and devices.

"Complete complaint" means a written statement that contains the complainant's name and address and describes the Foundation's alleged discriminatory action in sufficient detail to inform the Foundation of the nature and date of the alleged violation of section 504. It shall be signed by the complainant or by someone authorized to do so on his or her behalf. Complaints filed on behalf of classes or third parties shall describe or identify (by name, if possible) the alleged victims of discrimination.

"Facility" means all or any portion of buildings, structures, equipment, roads, walks, parking lots, rolling stock or other conveyances, or other real or personal property.

"Foundation" means the National Science Foundation.

"Individual with handicaps" means any person in the United States who has a physical or mental impairment that substantially limits one or more major life activities, has a record of such an impairment, or is regarded as having such an impairment. As used in this definition, the phrase:

(1) "Physical or mental impairment" includes—

(i) Any physiological disorder or condition, cosmetic disfigurement, or anatomical loss affecting one or more of the following body systems: Neurological; musculoskeletal; special sense organs; respiratory, including speech organs; cardiovascular; reproductive; digestive; genitourinary; hemic and lymphatic; skin; and endocrine; or

(ii) Any mental or psychological disorder, such as mental retardation, organic brain syndrome, emotional or mental illness, and specific learning disabilities.

The term "physical or mental impairment" includes, but is not limited to, such diseases and conditions as orthopedic, visual, speech, and hearing impairments, cerebral palsy, epilepsy, muscular dystrophy, multiple sclerosis, cancer, heart disease, diabetes, mental retardation, emotional illness, and drug addiction and alcoholism.

(2) "Major life activities" includes functions such as caring for one's self, performing manual tasks, walking, seeing, hearing, speaking, breathing, learning, and working.

(3) "Has a record of such an impairment" means has a history of, or has been misclassified as having, a mental or physical impairment that substantially limits one or more major life activities.

(4) "Is regarded as having an impairment" means—

(i) Has a physical or mental impairment that does not substantially limit major life activities but is treated by the Foundation as constituting such a limitation;

(ii) Has a physical or mental impairment that substantially limits major life activities only as a result of the attitudes of others toward such impairment; or

(iii) Has none of the impairments defined in paragraph (1) of this definition but is treated by the Foundation as having such an impairment.

"Qualified individual with handicaps" means—

(1) With respect to any Foundation program or activity under which a person is required to perform services or to achieve a level of accomplishment, an individual with handicaps who meets the essential eligibility requirements and who can achieve the purpose of the program or activity without modifications in the program or activity

that the Foundation can demonstrate would result in a fundamental alteration in its nature;

(2) With respect to any other program or activity, an individual with handicaps who meets the essential eligibility requirements for participation in, or receipt of benefits from, that program or activity; and

(3) "Qualified handicapped person" as that term is defined for purposes of employment in 29 CFR 1613.702(f), which is made applicable to this part by § 606.40.

"Section 504" means section 504 of the Rehabilitation Act of 1973 (Pub. L. 93-112, 87 Stat. 394 (29 U.S.C. 794)), as amended by the Rehabilitation Act Amendments of 1974 (Pub. L. 93-516, 88 Stat. 1617); and the Rehabilitation, Comprehensive Services, and Developmental Disabilities Amendments of 1978 (Pub. L. 95-602, 92 Stat. 2955); and the Rehabilitation Act Amendments of 1986 (Pub. L. 99-506, 100 Stat. 1810). As used in this part, section 504 applies only to programs or activities conducted by Executive agencies and not to federally assisted programs.

§§ 606.4-606.9 [Reserved]

§ 606.10 Self-evaluation.

(a) The Foundation shall, within one year of the effective date of this part, evaluate its current policies and practices, and the effects thereof, that do not or may not meet the requirements of this part, and, to the extent modification of any such policies and practices is required, the Foundation shall proceed to make the necessary modifications.

(b) The Foundation shall provide an opportunity to interested persons, including individuals with handicaps or organizations representing individuals with handicaps, to participate in the self-evaluation process by submitting comments (both oral and written).

(c) The Foundation shall, for at least three years following completion of the evaluation required under paragraph (a) of this section, maintain on file and make available for public inspection:

(1) A description of areas examined and any problems identified; and

(2) A description of any modifications made.

§ 606.11 Notice.

The Foundation shall make available to employees, applicants, participants, beneficiaries, and other interested persons such information regarding the provisions of this part and its applicability to the programs or activities conducted by the Foundation and make such information available to them in such manner as the Director of the Foundation finds necessary to apprise such persons of the protections against discrimination assured them by section 504 and this regulation.

§ 606.12-606.29 [Reserved].

§ 606.30 General prohibitions against discrimination.

(a) No qualified individual with handicaps shall, on the basis of handicap, be excluded from participation in, be denied the benefits of, or otherwise be subjected to discrimination under any program or activity conducted by the Foundation.

(b)(1) The Foundation, in providing any aid, benefit, or service, may not, directly or through contractual, licensing, or other arrangements, on the basis of handicap—

(i) Deny a qualified individual with handicaps the opportunity to participate in or benefit from the aid, benefit, or service;

(ii) Afford a qualified individual with handicaps an opportunity to participate in or benefit from the aid, benefit, or service that is not equal to that afforded others;

(iii) Provide a qualified individual with handicaps with an aid, benefit, or service that is not as effective in affording equal opportunity to obtain the same result, to gain the same benefit, or to reach the same level of achievement as that provided to others;

(iv) Provide different or separate aid, benefits, or services to individuals with handicaps or to any class of individuals with handicaps than is provided to others unless such action is necessary to provide qualified individuals with handicaps with aid, benefits, or services that are as effective as those provided to others;

(v) Deny a qualified individual with handicaps the opportunity to participate as a member of planning or advisory boards; or

(vi) Otherwise limit a qualified individual with handicaps in the enjoyment of any right, privilege, advantage, or opportunity enjoyed by others receiving the aid, benefit, or service.

(2) The Foundation may not deny a qualified individual with handicaps the opportunity to participate in programs or activities that are not separate or different, despite the existence of permissibly separate or different programs or activities.

(3) The Foundation may not, directly or through contractual or other arrangements, utilize criteria or methods of administration the purpose or effect of which would—

(i) Subject qualified individuals with handicaps to discrimination on the basis of handicap; or

(ii) Defeat or substantially impair accomplishment of the objectives of a program or activity with respect to individuals with handicaps.

(4) The Foundation may not, in determining the site or location of a facility, make selections the purpose or effect of which would—

(i) Exclude qualified individuals with handicaps from, deny them the benefits of, or otherwise subject them to discrimination under any program or activity conducted by the Foundation; or

(ii) Defeat or substantially impair the accomplishment of the objectives of a program or activity with respect to individuals with handicaps.

(5) The Foundation, in the selection of procurement contractors, may not use criteria that subject qualified individuals with handicaps to discrimination on the basis of handicap.

(c) The exclusion of nonhandicapped persons from the benefits of a program limited by Federal statute or Executive order to individuals with handicaps or the exclusion of a specific class of individuals with handicaps from a program limited by Federal statute or Executive order to a different class of individuals with handicaps is not prohibited by this part.

(d) The Foundation shall administer programs and activities in the most integrated setting appropriate to the needs of qualified individuals with handicaps.

§§ 606.31-606.39 [Reserved]

§ 606.40 Employment.

No qualified individual with handicaps shall, on the basis of handicap, be subjected to discrimination in employment under any program or activity conducted by the Foundation. The definitions, requirements, and procedures of section 501 of the Rehabilitation Act of 1973 (29 U.S.C. 791), as established by the Equal Employment Opportunity Commission in 29 CFR Part 1613, shall apply to employment in federally conducted programs or activities.

§§ 606.41-606.49 [Reserved]

§ 606.50 Program accessibility: Discrimination prohibited.

Except as otherwise provided in § 606.51, no qualified individual with handicaps shall, because the Foundation's facilities are inaccessible to or unusable by individuals with

handicaps, be denied the benefits of, be excluded from participation in, or otherwise be subjected to discrimination under any program or activity conducted by the Foundation.

§ 606.51 Program accessibility: Existing facilities.

(a) *General.* The Foundation shall operate each program or activity so that the program or activity, when viewed in its entirety, is readily accessible to and usable by individuals with handicaps. This paragraph does not—

(1) Necessarily require the Foundation to make each of its existing facilities accessible to and usable by individuals with handicaps; or

(2) Require the Foundation to take any action that it can demonstrate would result in a fundamental alteration in the nature of a program or activity or in undue financial and administrative burdens. In those circumstances where Foundation personnel believe that the proposed action would fundamentally alter the program or activity or would result in undue financial and administrative burdens, the Foundation has the initial burden of establishing that compliance with § 606.51(a) would result in such alteration or burdens. The decision that compliance would result in such alteration or burdens must be made by the Foundation Director or his or her designee after considering all Foundation resources available for use in the funding and operation of the conducted program or activity, and must be accompanied by a written statement of the reasons for reaching that conclusion. If an action would result in such an alteration or burdens, the Foundation shall take any other action that would not result in such an alteration or such burdens but would nevertheless ensure that individuals with handicaps receive the benefits and services of the program or activity.

(b) *Methods.* The Foundation may comply with the requirements of this section through such means as redesign of equipment, reassignment of services to accessible buildings, assignment of aides to beneficiaries, home visits, delivery of services at alternate accessible sites, alteration of existing facilities and construction of new facilities, use of accessible rolling stock, or any other methods that result in making its programs or activities readily accessible to and usable by individuals with handicaps. The Foundation is not required to make structural changes in existing facilities where other methods are effective in achieving compliance with this section. The Foundation, in making alterations to existing buildings, shall meet accessibility requirements to the extent compelled by the Architectural Barriers Act of 1968, as amended (42 U.S.C. 4151–4157), and any regulations implementing it. In choosing among available methods for meeting the requirements of this section, the Foundation shall give priority to those methods that offer programs and activities to qualified individuals with handicaps in the most integrated setting appropriate.

(c) *Time period for compliance.* The Foundation shall comply with the obligations established under this section within 60 days of the effective date of this part except that where structural changes in facilities are undertaken, such changes shall be made within three years of the effective date of this part, but in any event as expeditiously as possible.

(d) *Transition plan.* In the event that structural changes to facilities will be undertaken to achieve program accessibility, the Foundation shall develop, within six months of the effective date of this part, a transition plan setting forth the steps necessary to complete such changes. The Foundation shall provide an opportunity to interested persons, including individuals with handicaps or organizations representing individuals with handicaps, to participate in the development of the transition plan by submitting comments (both oral and written). A copy of the transition plan shall be made available for public inspection. The plan shall, at a minimum—

(1) Identify physical obstacles in the Foundation's facilities that limit the accessibility of its programs or activities to individuals with handicaps;

(2) Describe in detail the methods that will be used to make the facilities accessible;

(3) Specify the schedule for taking the steps necessary to achieve compliance with this section and, if the time period of transition plan is longer than one year, identify steps that will be taken during each year of the transition period; and

(4) Indicate the official responsible for implementation of the plan.

§ 606.52 Program accessibility: New construction and alterations.

Each building or part of a building that is constructed or altered by, on behalf of, or for the use of the Foundation shall be designed, constructed, or altered so as to be readily accessible to and usable by individuals with handicaps. The definitions, requirements, and standards of the Architectural Barriers Act (42 U.S.C. 4151–4157), as established in 41 CFR 101–19.600 to 101–19.607, apply to buildings covered by this section.

§§ 606.53–606.59 [Reserved]

§ 606.60 Communications.

(a) The Foundation shall take appropriate steps to ensure effective communication with applicants, participants, personnel of other Federal entities, and members of the public.

(1) The Foundation shall furnish appropriate auxiliary aids where necessary to afford an individual with handicaps an equal opportunity to participate in, and enjoy the benefits of, a program or activity conducted by the Foundation.

(i) In determining what type of auxiliary aid is necessary, the Foundation shall give primary consideration to the requests of the individual with handicaps.

(ii) The Foundation need not provide individually prescribed devices, readers for personal use or study, or other devices of a personal nature.

(2) Where the Foundation communicates with applicants and beneficiaries by telephone, telecommunications devices for deaf persons (TDD's) or equally effective telecommunication systems shall be used to communicate with persons with impaired hearing.

(b) The Foundation shall ensure that interested persons, including persons with impaired vision or hearing, can obtain information as to the existence and location of accessible services, activities, and facilities.

(c) The Foundation shall provide signage at a primary entrance to each of its inaccessible facilities, directing users to a location at which they can obtain information about accessible facilities. The international symbol for accessibility shall be used at each primary entrance of an accessible facility.

(d) This section does not require the Foundation to take any action that it can demonstrate would result in a fundamental alteration in the nature of a program or activity or in undue financial and administrative burdens. In those circumstances where Foundation personnel believe that the proposed action would fundamentally alter the program or activity or would result in undue financial and administrative burdens, the Foundation has the initial burden of establishing that compliance with § 606.60 would result in such alteration or burdens. The decision that compliance would result in such alteration or burdens must be made by the Foundation Director or his or her

designee after considering all Foundation resources available for use in the funding and operation of the conducted program or activity and must be accompanied by a written statement of the reasons for reaching that conclusion. If an action required to comply with this section would result in such an alteration or such burdens, the Foundation shall take any other action that would not result in such an alteration or such burdens but would nevertheless ensure that, to the maximum extent possible, individuals with handicaps receive the benefits and services of the program or activity.

§§ 606.61–606.69 [Reserved]

§ 606.70 Complaint procedures—general.

(a) Except as provided in paragraph (b) of this section, this section applies to all allegations of discrimination on the basis of handicap in programs or activities conducted by the Foundation.

(b) The Foundation shall process complaints alleging violations of section 504 with respect to employment according to the procedures established by the Equal Employment Opportunity Commission in 29 CFR Part 1613 pursuant to section 501 of the Rehabilitation Act of 1973 (29 U.S.C. 791).

(c) The Director, Office of Equal Opportunity (OEO), shall coordinate implementation of this section.

(d) Persons wishing to submit complaints should submit complete complaints (see § 606.3) to the Office of Equal Opportunity, National Science Foundation, 1800 G Street NW., Washington, DC 20550. In accordance with the procedures outlined below, the Foundation will accept all complete complaints and will either undertake to investigate them if they are within the jurisdiction of the Foundation and submitted within 180 days of the alleged acts of discrimination or in the case of complaints not within the jurisdiction of the Foundation, it shall promptly notify the complainant and shall make reasonable efforts to refer the complaint to the appropriate government entity. Complete complaints submitted after the 180 day time limit may also be acted upon at the discretion of the Foundation if good cause for the delay in submission is found.

(e) The Foundation shall notify the Architectural and Transportation Barriers Compliance Board upon receipt of any complaint alleging that a building or a facility that is subject to the Architectural Barriers Act of 1968, as amended (42 U.S.C. 4151–4157), is not readily accessible to and usable by individuals with handicaps.

(f) Within 180 days of the receipt of a complete complaint, the Director, Office of Equal Opportunity (OEO), or his or her designee or delegate, will investigate the complaint and shall notify the complainant of the results of the investigation in a letter containing—

(1) Findings of fact and conclusions of law;

(2) A description of a remedy for each violation found; and

(3) A notice of a right to appeal to the Director of the Foundation.

(g)(1) A complainant may appeal findings of fact, conclusions of law, or remedies to the Director of the Foundation. Such appeals must be in writing and must state fully the basis for the appeal, proposed alternative findings of fact, conclusions of law, or remedies. They must be sent (as evidenced by an appropriate postmark or other satisfactory evidence) within 90 days after the date of receipt from the Foundation of the letter described in paragraph (f) of this section. The Foundation may extend this time for good cause.

(2) The Director shall notify the complainant of the results of the appeal within 30 days of the receipt of the appeal. If the Director determines that additional information is needed from the complainant, the Director shall have 30 days from the date such additional information is received from the complainant to make a determination on the appeal.

(h) The time limits for sending a letter to the complainant in paragraph (f) of this section and for deciding an appeal in paragraph (g)(2) of this section may be extended with the permission of the Assistant Attorney General.

§§ 606.71–606.99 [Reserved]

[FR Doc. 88–7235 Filed 4–1–88; 8:45 am]

BILLING CODE 7555-01-M

FEDERAL COMMUNICATIONS COMMISSION

47 CFR Part 73

[MM Docket No. 83–670]

Television Commercialization Guidelines for Children

AGENCY: Federal Communications Commission.

ACTION: Order accepting late-filed comments.

SUMMARY: Action taken herein accepts comments filed out-of-time in response to the Further Notice of Proposed Rule Making/Notice of Inquiry in MM Docket No. 83–670. This Further Notice requests comments regarding the issue of commercialization guidelines for children's television. Comments were filed out-of-time by the United States Catholic Conference, the Office of Communication of the United Church of Christ, Telecommunications Research and Action Center and CBS, Inc.

ADDRESS: Federal Communications Commission, Washington, DC 20554.

FOR FURTHER INFORMATION CONTACT: Eugenia R. Hull, Mass Media Bureau, (202) 632–6302.

SUPPLEMENTARY INFORMATION:

List of Subjects in 47 CFR Part 73

Television broadcasting.

Order Accepting Late-Filed Comments

In the Matter of revision of programming and commercialization policies, ascertainment requirements, and program log requirements for commercial television stations; MM Docket No. 83–670.

Adopted: March 11, 1988.

Released: March 23, 1988.

By the Chief, Mass Media Bureau:

1. On October 20, 1987, the Commission adopted a *Further Notice of Proposed Rule Making/Notice of Inquiry* in the above-captioned proceeding, FCC 87–338, summarized at 52 FR 44616 (November 20, 1987), requesting comments regarding children's television commercialization guidelines and other closely related issues. Therein, the Commission established January 4, 1988 and February 19, 1988 a the dates by which comments and reply comments, respectively, could be filed. On December 4, 1987, the Commission extended the dates for filing comments and reply comments to February 19, 1988 and April 4, 1988, respectively.

2. On March 4, 1988, the Commission received late-filed comments in the above-captioned matter from the Office of Communication of the United Church of Christ (UCC) and the United States Catholic Conference (USCC). Simultaneous with submission of their comments, the UCC petitioned the Commission to accept their comments out of time. Also, on February 22, 1988 late-filed comments were received from CBS, Inc. (CBS) and Telecommunications Research and Action Center (TRAC). CBS and TRAC also petitioned the Commission to accept their comments out of time.

3. In the interest of establishing a thorough and comprehensive record in this proceeding, we are accepting all of these comments and have incorporated them into the public record of this proceeding. In view of the lengthy period provided for the filing of replies

in this proceeding and because more than three weeks remain in that period, we are not extending the date for the filing of replies in response to the above-referenced late-filed comments.

5. Accordingly, *it is ordered* that the motions of CBS, Inc., Telecommunications Research and Action Center and the Office of Communication of the United Church of Christ for acceptance of late-filed comments in this proceeding *are granted*. In addition, *it is ordered*, that the late-filed comments of the United States Catholic Conference in this *proceeding are accepted*. This action is taken pursuant to authority provided in section 4(i) of the Communications Act of 1934, as amended, and § 0.283 of the Commission's rules.

6. For further information concerning this proceeding, contact Eugenia R. Hull, (202) 632-6302.

Federal Communications Commission

Alex D. Felker,

Chief, Mass Media Bureau

[FR Doc. 88-7253 Filed 4-1-88; 8:45 am]

BILLING CODE 6712-01-M

DEPARTMENT OF TRANSPORTATION

Research and Special Programs Administration

49 CFR Part 192

[Docket PS-100 Notice 1]

Gas Detection and Monitoring in Compressor Station Buildings

AGENCY: Research and Special Programs Administration, DOT.

ACTION: Advance Notice of Proposed Rulemaking (ANPRM).

SUMMARY: This ANPRM requests specific information to determine the need for additional regulations to require gas monitoring and alarm systems and automatically-controlled ventilation systems in compressor buildings or for more specific Operations and Maintenance (O&M) procedures for such buildings.

DATES: Interested parties are invited to submit comments by June 3, 1988. Late filed comments will be considered so far as is practicable.

ADDRESSES: Send comments in duplicate to the Dockets Unit, Room 8417, Office of Pipeline Safety, Research and Special Programs Administration, U.S. Department of Transportation, 400 Seventh Street SW., Washington, DC 20590. Identify the docket and notice numbers stated in the heading of this notice. All comments and docketed material will be available for inspection and copying in Room 8426 between 8:30 a.m. and 5:00 p.m. each business day.

FOR FURTHER INFORMATION CONTACT: Bernard Liebler, (202) 366-2392, regarding the subject matter of this document, or the Dockets Unit, (202) 366-5046, for copies of this document or other material in the docket.

SUPPLEMENTARY INFORMATION:

Background

On December 8, 1982, an explosion occurred in The Trunkline Gas Company's (Trunkline) Compressor Building B at their Bonicord, Tennessee facility. Three Trunkline employees were killed, two others were seriously injured, and the compressor building was severely damaged. An investigation by the National Transportation Safety Board (NTSB) found eight gas leaks in the gasketed valve covers of the compressor prime mover, a 10,000-hp Cooper-Bessemer engine.

The explosion occurred after the five Trunkline employees tightened the gasketed valve covers on the engine and then successfully started the engine after several attempts. The engine was operating for a brief period several days before the accident and showed no signs of leakage at the valve cover. However, according to maintenance records, valve cover leaks had been detected on two occasions.

The building in which the accident occurred was equipped with roof louvers as a means of ventilation. The louvers were designed to fail closed if the manual adjustment cable broke. The NTSB investigation concluded that the louvers had been set in a position that would permit leaking gas in the building to accumulate. The building was not equipped with a gas detector. Installation of a gas detection system had been planned but not accomplished.

The NTSB concluded that the explosion was caused by the ignition of the gas leaking from the valve-cover gaskets by an undetermined ignition source. As a result they presented the following Safety Recommendation to RSPA:

> Amend 49 CFR § 192.173, regarding compressor station building ventilation systems equipped with restrictive devices, to require the installation of gas detection equipment that will alert employees to hazardous gas accumulations and automatically open fully all restrictive devices when accumulations of gas are detected. (P-83-20)

OPS has examined leak reports pertaining to incidents at compressor stations between 1982 and 1986, inclusive. The examination revealed 42 reports of incidents of gas leakage that either definitely or probably occurred inside compressor buildings. Of those 42, 17 resulted in fires with 9 of those being accompanied by explosions. Of these 17, 3 resulted in injuries (8) and one in fatalities (2). (The Bonicord incident resulted in the 2 fatalities and 3 of the 8 injuries. The numbers listed above, 3 fatalities and 2 injuries, differ because one person initially listed as injured on the leak report filed with OPS later succumbed.) None of the circumstances described in the other reports were sufficiently similar to the events at Bonicord such that the measures recommended by NTSB would likely have been effective in preventing those events. However, the frequency of incidents involving compressor buildings is significant and forms the basis for this rulemaking.

Discussion

Section 192.173 currently requires ventilation of each compressor station building readied for service after the effective date of the regulation. Section 192.173 provides that the ventilation must "ensure that employees are not endangered by the accumulation of gas in rooms, sumps, attics, pits, or other enclosed places." Under these rules, a properly designed, adjusted, and maintained ventilation system at Bonicord would likely have been adequate to prevent the hazardous gas accumulation. However, the gas standards do not require backup protection if the ventilation system fails to prevent the accumulation of gas. The deaths and injuries at Bonicord might have been avoided if there had been an indicator to warn the Trunkline workers of the existence of the hazardous gas. Either gas odorization or a gas monitoring and alarm system could potentially have provided that warning.

Since § 192.173 applies to the design of compressor buildings, the NTSB recommendation would apply only to buildings placed in service in the future. Since compressor buildings are not frequently constructed, OPS believes that limiting this rulemaking to future construction would have minimal benefit in solving any problem that now exists. Therefore, this ANPRM addresses several alternatives that would apply to all compressor buildings including those currently in service.

OPS is also concerned that automatic opening of restrictive ventilation devices might, by rapid ventilation, mitigate or nullify the effectiveness of a Halon or foam fire suppression system. However, OPS is similarly concerned that a ventilation system designed to fail

closed could result in the accumulation of a hazardous gas concentration were it to do so while gas is leaking in the building. In the context of this proceeding, OPS is interpreting the term "restrictive device" as used in the NTSB recommendation to mean a passive ventilation system for which the effective ventilation area can be adjusted mechanically.

Most of the gas in transmission pipelines is not odorized. In these cases, employees entering a compressor building containing a hazardous gas concentration cannot smell the leaking gas. Thus, the safety of a compressor building's atmosphere cannot be verified without additional external means, such as a portable gas detector or a permanent gas detector with an alarm. The Department's safety standards for hazardous liquid pipelines require that pump station buildings (which present risks similar to those presented by gas compressor station buildings) be constructed to include both ventilation and devices warning occupants of the presence of hazardous vapors (49 CFR 195.262 (a)).

To ensure the effectiveness of portable gas detectors, it would be necessary to include in the operator's operating and maintenance (O&M) plan procedures requiring their use verifying the absence of a combustible gas mixture before entering a compressor building. Permanently installed and alarmed detectors would not require such additions to the O&M plan. OPS has several available alternatives that could be applied individually or in combination:

1. Require operators to equip new and existing compressor buildings handling unodorized gas with continuously operating gas monitoring systems that will activate an alarm whenever a gas-in-air mixture above an established threshold is detected. The alarm would be capable of warning personnel of the presence of a flammable mixture prior to entering the building.

2. Require operators to equip new and existing compressor buildings handling unodorized gas with restrictive ventilation devices that open automatically upon detection of a hazardous gas accumulation and fail safe.

3. Revise § 192.605, Essentials of operating and maintenance plan, to include specific procedures for checking the atmosphere inside compressor buildings handling unodorized gas before entering such buildings.

4. Revise § 192.605, Essentials of operating and maintenance plan, to include requirements to maintain compressor building restrictive ventilation devices.

5. Do not revise the regulations.

Alternatives 1 and 2 appear initially to be the most effective, because they require the least action on the part of the employee. A properly designed alarm should be obvious to an employe who intends to enter a compressor building. Of course, the employe could then ignore the alarm, but such action is not in the employe's self-interest and is probably contrary to the operator's standard procedures. This alternative, however, could be expensive if a large number of compressor stations would require the installation of gas monitoring and alarm systems. OPS does not have sufficient information about the prevalence of gas monitoring and alarm systems in compressor buildings or the cost of installing such systems to conclude whether Alternative 1 would be expensive to implement.

Alternative 2 is similar to Alternative 1, since it would require a continuous gas monitoring system to initiate automatic venting of unanticipated gas accumulations. OPS is concerned about several aspects of this alternative, including the effect of its operation on fire protection/suppression systems (e.g., Halon), the benefits, if any, of the fail-safe feature, and the costs of implementation.

The third and fourth alternatives would not require investment in hardware to the same degree as the first two. They would rely on the creation of effective procedures for safe entry into compressor buildings or for maintenance of restrictive ventilation devices. Furthermore, each would depend on adherence to those procedures for full effectiveness. However, there would still be costs associated with these options in terms of procedure revision and distribution and employe education.

The final alternative would not impose further restrictions or requirements on operators. The effectiveness of this approach would depend on several factors. The primary factor being how widespread is the existence in the industry of monitored compressor buildings, standard operating procedures requiring that employees check the atmosphere of a compressor building before entry, and standard operating procedures requiring regular maintenance of compressor building restrictive ventilation devices.

Request for Information

To assist OPS in deciding which of the alternatives to implement, interested parties are invited to participate in this rulemaking by providing answers to the following questions and submitting relevant information:

1. (a) Are gas monitoring systems commonly installed in compressor buildings? Why, or why not?

(b) Are they used for automatic control of restrictive ventilation devices, e.g., louvers?

(c) Are such ventilation devices designed to fail safe?

(d) At what gas accumulation level are such alarms and controls set to operate?

2. (a) Where gas monitoring and alarm systems are not now installed in compressor buildings, what would be the cost of installing such systems, both unit and aggregate?

(b) What would be the added cost of including automatic control of restrictive ventilation devices designed for fail-safe operation?

(c) Are there any technical or operational difficulties that would prevent or make excessively difficult the installation of gas monitoring and alarm systems or automatic ventilation control systems in all compressor buildings?

3. (a) Do operator procedures require personnel normally to check for hazardous gas accumulations before entering compressor buildings?

(b) What follow-up action do they require when hazardous gas accumulations are detected?

4. (a) What procedures are followed in maintaining ventilation systems in compressor station buildings?

(b) How frequently is maintenance performed?

5. (a) Which of the first four alternatives or combination thereof would provide the most cost-effective means for preventing loss of life from incidents in compressor station buildings?

(b) Should the application of the selected alternative be limited, as suggested, to compressor stations handling unodorized gas?

Commenters are not limited to filing comments only on the questions presented above and may submit any facts and views consistent with the intent of this notice. In addition, commenters are encouraged to provide comments on (1) "major rule" considerations under the terms of Executive Order 12291; (2) "significant rule considerations under the terms of

DOT regulatory procedures (44 FR 11034); (3) potential environmental impacts subject to the National Environmental Policy Act; (4) information collection burdens that must be reviewed under the Paperwork Reduction Act; (5) the economic impact on small entities under the Regulatory Flexibility Act; and (6) impacts on Federalism under Executive Order 12612.

Authority: 49 App. U.S.C. 1672 and 1804; 49b CFR 1.53; Appendix A of Part 1 and App. A of Part 106.

Issued in Washington, DC, March 30, 1988.

Richard L. Beam,

Director, Office of Pipeline Safety.

[FR Doc. 88-7314 Filed 4-1-88; 8:45 am]

BILLING CODE 4910-60-M

VOL 53 ISS 64 AP 4 1988 UMI

Not

This se
contains
propose
public.
investiga
decision
authority
applicati
organiza
of docu

ACTIO

Drug A
Demon

ACTION
Drug A

The
Develo
annour
during
grants
Progra
Volunt
amend
42 U.S.
A. C
innova
work w
targete
youth,
substa
parent
of the
preven
by the
1. Pr
24 to i
activiti
to the
life ski
preven
2. Pr
24 to i
alterna
preven
other c
opport
to expe
3. Pr
except
ages 1
4. Pr
except
ages 1
App
only o
Applic
more t
submit
ACTIO

Notices

Federal Register
Vol. 53, No. 64
Monday, April 4, 1988

This section of the FEDERAL REGISTER contains documents other than rules or proposed rules that are applicable to the public. Notices of hearings and investigations, committee meetings, agency decisions and rulings, delegations of authority, filing of petitions and applications and agency statements of organization and functions are examples of documents appearing in this section.

ACTION

Drug Alliance; Funds Availability; Demonstration Grants

ACTION: Notice of availability of funds, Drug Alliance grants.

The Program Demonstration and Development Division of ACTION announces the availability of funds during fiscal year 1988 for Drug Alliance grants under the Special Volunteer Programs authorized by the Domestic Volunteer Service Act of 1973, as amended (Pub. L. 93–113, Title 1, Part C; 42 U.S.C. 4992).

A. Consideration will be limited to innovative proposals using volunteers to work with one or more of the following targeted at-risk youths: Low-income youth, public housing youth, children of substance abusers and youth from single parent families. Proposals must use one of the following four strategies for preventing the use of illicit substances by these youth:

1. Programs which use youth ages 18–24 to involve youth ages 9–14 in activities which would formally convey to the youth the development of critical life skills (including "just say no") to prevent illicit substance use,

2. Programs which use youth ages 18–24 to involve youth ages 9–14 in positive alternative activities which seek to prevent illicit substance use by offering other options and thereby, reducing the opportunities and motivation for youth to experiment with illicit substances,

3. Programs similar to #1, above, except that they would involve youth ages 14–17 with youth ages 9–14, and

4. Programs similar to #2, above, except that they would involve youth ages 14–17 with youth ages 9–14.

Applicants' proposal should focus on only one of the four strategies. Applicants have the option of submitting more than one proposal, but can only submit one proposal for each strategy. ACTION anticipates funding an equal number of proposals for each of the four strategies to facilitate an impact evaluation of this initiative.

Applications which advocate the responsible use of illicit substances will not be considered for funding.

B. Eligible Applicants: Only applications for private non-profit, incorporated organizations and public agencies will be considered. Such organizations may include, but are not limited to, school districts, colleges, religious organizations, local governments, fraternities, sororities, community service groups, youth service organizations, vocational schools, and schools of performing and visual arts.

C. Available Funds and Scope of the Grant: Applicants may submit proposals for ACTION funding up to $35,000.

D. General Criteria for Grant Selection: Grant applications will be reviewed and evaluated in comparison with the criteria outlined below, as appropriate, as well as conformance to the instructions included in the application. Grant applicants with a demonstrated competence in using volunteers to prevent the use of illicit substances by youth will be given preference.

1. Plans to recruit, train and retain non-stipended volunteers in areas of priority.

2. Promise of developing innovations or knowledge in mobilizing and sustaining State and local volunteer efforts to prevent illicit substance use by youth.

3. Potential for replication of the project model including: plans for implementation and dissemination of results of the project including any products such as reports and manuals for use by others.

4. Plans for continuation of the activities and self-sufficiency of the program following the completion of the project supported by ACTION funds.

5. Carefully formulated measurable time phased objectives, including self-sufficiency, and feasibility of methods of meeting those objectives.

6. Capability of proposed staff.

7. Likelihood of completion of project within proposed timetable.

8. Feasibility of proposed budget.

9. Adequacy of plans for data gathering and evaluation.

10. Efforts to create public awareness of the illicit substance use problem and to address the community denial of and apathy for the problem.

11. Letters of support from collaborating agencies and organizations where such could be expected to contribute to the value or success of the project.

12. While specific levels of matching funds are not a requirement for grants, evidence of local public and private sector support (financial and in-kind) is strongly encouraged and will be considered in the decision making process. Applicants capable of such contributions should specify the sources and nature of in-kind and other non-federal contributions. These contributions must be deemed allowable costs in accordance with ACTION requirements.

E. The Associate Director of Domestic and Anti-Poverty Operations may use additional factors in choosing among applicants who meet the minimum criteria specified above, such as:

1. Geographic distribution;

2. Availability of project activities to all segments of society;

3. Applicants accessibility to alternate resources, both technical and financial;

4. Allocation of Program Demonstration/Drug Alliance resources in relation to other ACTION funds;

5. The overall quality of the project as determined by the Agency review process (Part D); and

6. The significance of the project in terms of increasing knowledge of successful strategies to the volunteer illicit substance use prevention and education projects.

F. Application Review Process: Applications submitted under this announcement will be reviewed and evaluated by their respective ACTION State and Regional Offices and ACTION's Program Demonstration and Development Division. ACTION's Associate Director for Domestic and Anti-Poverty Operations will make the final selection. ACTION reserves the right to ask for evidence of any claims of past performance or future capability.

G. Application Submission and Deadline: One signed original and two copies of all completed applications must be submitted to the appropriate ACTION State Office no later than 5:00 p.m. local standard time on May 13, 1988. Only those applications that are

BEST COPY AVAILABLE

received at the appropriate ACTION State Office by 5:00 p.m. local standard time on this date will be eligible.

All grant applications must consist of:

a. Application for Federal Assistance (ACTION Form A-1036) with narrative budget justification and a narrative of project goals and objectives, and assurances.

b. CPA certification of accounting capability.

c. Articles of incorporation.

d. Proof of non-profit status or an application for non-profit status, which should be made through documentation.

e. Resume of candidates for the position of project director, if available, or the resume of the director of the applicant agency or project.

f. Organization chart of the applicant organization showing how the project is related to the organization.

g. A written statement indicating a willingness to participate in an evaluation conducted by ACTION.

h. A written statement acknowledging that ACTION's funding is limited to a maximum one-year non-renewable grant.

To receive an application kit, please contact your ACTION State Office. Following is an address list of ACTION Regional Offices, along with the addresses of ACTION State Offices under their jurisdiction:

Region I

ACTION Regional Office, 10 Causeway Street, Room 473, Boston, MA 02222-1039

ACTION State Office, Abraham Ribicoff Federal Building, 450 Main Street, Room 524, Hartford, CT 06103-3002

ACTION State Office, Federal Building, Room 305, 76 Pearl Street, Portland, ME 04101-4188

ACTION State Office, 10 Causeway Street, Room 467, Boston, MA 02222-1038

ACTION State Office, Federal Post Office & Courthouse, 55 Pleasant Street, Room 316, Concord, NH 03301-3939, (New Hampshire/Vermont)

ACTION State Office, John E. Fogarty Building, Room 200, 24 Weybosset Street, Providence, RI 02903-2882

Region II

ACTION State Office, 6 World Trade Center, Room 758, New York, NY 10048-0206

ACTION State Office, 402 East State St., Room 426, Trenton, NJ 08608-1507

ACTION State Office, 6 World Trade Center, Room 758, New York, NY 10048-0206

ACTION State Branch Office, U.S. Courthouse & Federal Building, 445 Broadway, Room 103, Albany, NY 12207-2923

ACTION State Office, Frederico DeGetau Federal Office Building, Carlos Chardon Avenue, Suite 662, Hato Rey, PR 00918-2241, (Puerto Rico/Virgin Islands)

Region III

ACTION State Office, U.S. Customs House, 2nd & Chestnut Street, Room 108, Philadelphia, PA 19106-2912

ACTION State Office, Federal Building, Room 372-D, 600 Federal Place, Louisville, KY 40202-2230

ACTION State Office, Federal Building, 31 Hopkins Plaza, Room 1125, Baltimore, MD 21201-2814, (Delaware/Maryland)

ACTION State Office, Federal Building, Room 500, 85 Marconi Boulevard, Columbus, OH 43215-2888

ACTION State Office, U.S. Custom House, Room 108, 2nd & Chestnut Streets, Philadelphia, PA 19106-2998

ACTION State Office, 400 North 8th Street, P.O. Box 10066, Richmond, VA 23240-1832, (Virginia/District of Columbia)

ACTION State Office, 603 Morris Street, 2nd Floor, Charleston, WV 25301-1409

Region IV

ACTION State Office, 101 Marietta Street NW., Suite 1003, Atlanta, GA 30323-2301

ACTION State Office, 2121 8th Avenue North, Room 722, Birmingham, AL 35203-2307

ACTION State Office, 930 Woodcock Road, Suite 221, Orlando, FL 32803-3750

ACTION State Office, 75 Piedmont Avenue NE, Suite 412, Atlanta, GA 30303-2587

ACTION State Office, Federal Building, Room 1005-A, 100 West Capital Street, Jackson, MS 39269-1092

ACTION State Office, Federal Building, P.O. Century Station, 300 Fayetteville Street Mall, Room 131, Raleigh, NC 27601-1739

ACTION State Office, Federal Building, Room 872, 1835 Assembly Street, Columbia, SC 29201-2430

ACTION State Office, Federal Building/US Courthouse, 801 Broadway, Room 246, Nashville, TN 37203-3889

Region V

ACTION State Office, 10 West Jackson Boulevard, 6th Floor, Chicago, IL 60604-3964

ACTION State Office, 10 West Jackson Boulevard, 6th Floor, Chicago, IL 60604-3964

ACTION State Office, 46 East Ohio Street, Room 457, Indianapolis, IN 46204-1922

ACTION State Office, Federal Building, Room 339, 210 Walnut, Des Moines, IA 50309-2199

ACTION State Office, Federal Bldg., Room 852, 231 West Lafayette Blvd., Detroit, MI 48226-2799

ACTION State Office, Old Federal Bldg., Room 126, 212 Third Avenue South, Minneapolis, MN 55401-2596

ACTION State Office, 517 East Wisconsin Ave., Room 601, Milwaukee, WI 53202-4507

Region VI

ACTION Regional Office, 1100 Commerce, Room 6B11, Dallas, TX 75242-0696

ACTION State Office, Federal Building, Room 2506, 700 West Capitol Street, Little Rock, AR 72201

ACTION State Office, Federal building, Room 248, 444 SE. Quincy, Topeka, KS 66603-3501

ACTION State Office, 626 Main Street, Suit 102, Baton Rouge, LA 70801-1910

ACTION State Office, Federal Office Building, 911 Walnut, Room 1701, Kansas City, MO 64106-2009

ACTION State Office, Federal Building, Cathedral Place, Room 129, Santa Fe, NM 87501-2026

ACTION State Office, 200 NW 5th, Suite 912, Oklahoma City, OK 73102-6093

ACTION State Office, 611 East Sixth Street, Suite 107, Austin, TX 78701-3747

Region VIII (No Region VII)

ACTION Regional Office, Executive Tower Building, 1405 Curtis Street, Denver, CO 80202-2349

ACTION State Office, Columbine Bldg., Room 301, 1845 Sherman Street, Denver, CO 80203-1167

ACTION State Office, Federal Building, Room 8036, 2120 Capitol Avenue, Cheyenne, WY 82001-3649

ACTION State Office, Federal Office Bldg., Drawer 10051, 301 South Park, Room 192, Helena, MT 59626-0101

ACTION State Office, Federal Bldg., Room 293, 100 Centennial Mall North, Lincoln, NE 68508-3896

ACTION State Office, Federal Building, Room 213, 225 S. Pierre Street, Pierre, SD 57501-2452 (North & South Dakota)

Region IX

ACTION Regional Office, 211 Main Street, Room 530, San Francisco, CA 94105-1914

ACTION State Office, U.S. Post Office & Courthouse, 350 South Main St., Room 484, Salt Lake City, UT 84101-2198

ACTION State Office, 522 North Central, Room 205-A, Phoenix, AZ 85004-2190

ACTION State Branch Office, 211 Main Street, Room 534, San Francisco, CA 94105-1974

ACTION State Office, Federal Bldg., Room 14218, 11000 Wilshire Blvd., Los Angeles, CA 90024–3671
ACTION State Office, Federal Building, P.O. Box 50024, Honolulu, HI 96850 (Hawaii/Guam/American Samoa)

Region X

ACTION Regional Office, Federal Office Building, 909 First Avenue, Ste. 3039, Seattle, WA 98174–1103
ACTION State Office, 4600 Kietzke Lane, Suite E–141, Reno, NV 89502–1308
ACTION State Office, The Alaska Center, Suite 340, 1020 Main Street, Boise, ID 83702–5745
ACTION State Office, Suite 3039, Federal Office Bldg., 909 First Avenue, Seattle, WA 98174–1103 (Alaska)
ACTION State Office, Federal Bldg., Room 647, 511 NW Broadway, Portland, OR 97209–3418

Signed at Washington, DC, this 28th day of March.

Donna M. Alvarado,

Director.

[FR Doc. 88–7262 Filed 4–1–88; 8:45 am]

BILLING CODE 6335-23-M

DEPARTMENT OF AGRICULTURE

Office of the Secretary

State of New Jersey Farmland Preservation Soil and Water Conservation Cost-Share Program; Determination of Primary Purpose of Program Payments for Consideration as Excludable From Income Under Section 126 of the Internal Revenue Code of 1954, as Amended

AGENCY: Office of the Secretary, USDA.

ACTION: Notice of determination.

SUMMARY: The Secretary of Agriculture has determined that cost-share payments made under the New Jersey Farmland Preservation Soil and Water Conservation Cost-Share Program are made primarily for the purpose of conserving soil and water resources and protecting or restoring the environment. This determination, which is made in accordance with section 126(b) of the Internal Revenue Code of 1954, as amended, and the provisions of 7 CFR Part 14, permits recipients of these payments to exclude them from gross income for Federal income tax purposes if certain other conditions are met.

FOR FURTHER INFORMATION CONTACT: Director, Conservation and Environmental Protection Division, Agricultural Stabilization and Conservation Services, USDA, P.O. Box 2415, Washington, DC 20013, (202) 447–6221.

SUPPLEMENTARY INFORMATION: Section 126 of the Internal Revenue Code of 1954, as added by the Revenue Act of 1978 and amended by the Technical Corrections Act of 1979, provides that certain payments made under State programs may be eligible for exclusion from gross income if certain determinations are made. The Secretary of Agriculture must determine whether payments made under a State program, as described in section 126(a)(10), are "made primarily for the purpose of conserving soil and water resources, protecting or restoring the environment, improving forests, or providing a habitat for wildlife." In making this determination, the Secretary of Agriculture must evaluate each program according to criteria set forth in 7 CFR Part 14.

The Farmland Preservation Bond Act of 1981, Ch. 276, 1981 N.J. Laws 988 (the "Bond Act"), established the policy of the State to assist, through cost-sharing programs, the long term development and management of farmland and the State's natural resources through soil and water conservation projects and programs. The Bond Act authorizes the administration of a cost-share program with agricultural producers who qualify for assistance.

The Bond Act further authorized the issuance of bonds of the State in the sum of $50,000,000.00 for the purchase of development easements on farmland and to provide State matching funds for soil and water conservation projects. The proceeds from the sale of these bonds were deposited in a special fund designated as the "Farmland Preservation Fund".

One of the State conservation programs is a soil and water conservation cost-share program that is authorized by the Agriculture Retention and Development Act (N.J.S.A. 4:1C–11 *et seq.*) (the "Act"). The Act, which was effective January 25, 1983, authorizes the State Agriculture Development Committee (SADC) and the State Soil Conservation Committee (SSCC) to administer a cost-share program with agricultural producers who qualify for assistance.

Section 4:1C–12 of the act provides that certain financial, administrative and regulatory benefits will be made available to landowners who choose to participate in the preservation of farmland. In accordance with the provisions of this Act, the New Jersey Farmland Preservation Soil and Water Conservation Cost-Share Program was established for the control and prevention of soil erosion and sediment damages, the control of pollution on agricultural lands, or the impoundment, storage and management of water for agricultural purposes.

The Act authorizes the appropriation of funds by the legislature for grants to counties and municipalities for up to 50 percent of the cost of the acquisition of development easements on farmland and for grants to landowners or farm operators for up to 50 percent of the cost of soil and water conservation projects. The Act provides that the SSCC is the agency designated for the approval of soil and water conservation projects eligible for State cost-sharing assistance. (See N.J.S.A. 4:1C–24.) The SSCC has approved eligible projects for participants in the New Jersey Preservation Soil and Water Conservation Soil and Water Conservation Program (N.J.A.C. 2:90–2) and developed procedural rules for program implementation (N.J.A.C. 2:90–3).

The State Agricultural Development Committee and the SSCC are responsible for State level review and approval of project applications for funding assistance and for verification that such applications are in comformance with program guidelines.

In order to be eligible for cost-share assistance a landowner must be enrolled in a county and State approved New Jersey Farmland Preservation Soil and Water Cost-Sharing Program and agree to retain the land in agricultural production for a minimum period of 8 years and also maintain the practice for the eight year duration.

Technical assistance is provided by the local soil conservation districts who also must approve farm conservation plans and cost-share applications for submission to the SSCC for review and approval.

Eligible Cost-Share Practices are as follows:

N.J.A.C. 2:90–2.5	Terrace systems
N.J.A.C. 2:90–2.6	Diversions
N.J.A.C. 2:90–2.7	Contour farming
N.J.A.C. 2:90–2.8	Stripcropping systems
N.J.A.C. 2:90–2.9	Sod waterways
N.J.A.C. 2:90–2.10	Windbreak restoration or establishment
N.J.A.C. 2:90–2.11	Stream protection

N.J.A.C. 2:90–2.12 Permanent vegetative cover on critical areas
N.J.A.C. 2:90–2.13 Land shaping or grading
N.J.A.C. 2:90–2.14 Water impoundment reservoirs
N.J.A.C. 2:90–2.15 Irrigation systems
N.J.A.C. 2:90–2.16 Sediment retention, erosion, or water control structures
N.J.A.C. 2:90–2.17 Permanent open drainage systems
N.J.A.C. 2:90–2.18 Underground drainage systems
N.J.A.C. 2:90–2.19 Developing facilities for livestock water
N.J.A.C. 2:90–2.20 Forest tree stand improvement
N.J.A.C. 2:90–2.21 Forest tree plantations
N.J.A.C. 2:90–2.22 Site preparation for natural regeneration
N.J.A.C. 2:90–2.23 Animal waste control facilities

The authorizing legislation, rules and regulations, and operating procedures for the New Jersey Farmland Preservation Soil and Water Conservation Cost-Share Program have been carefuly examined by the agencies of the U.S. Department of Agriculture using the criteria set forth in 7 CFR Part 14. The Department has concluded that the payments made under this cost-share program are made to financially assist eligible persons in carrying out soil and water conservation measures or protecting or restoring the environment. A "New Jersey Farmland Preservation Soil and Water Conservation Cost-Share Program Record of Decision Primary Purpose Determination for Federal Tax Purposes" has been prepared and is available upon request from the Conservation and Environmental Protection Division, ASCS. Requests may be sent to the address listed above.

Determination

It is hereby determined in accordance with section 126(b) of the Internal Revenue Code of 1954, as amended, and 7 CFR Part 14 that all cost-share payments made under the New Jersey Farmland Preservation Soil and Water Conservation Cost-Share Program are made primarily for the purpose of conserving soil and water resources and protecting or restoring the environment.

Signed at Washington, DC on March 28, 1988.

Richard E. Lyng,

Secretary of Agriculture.

[FR Doc. 88–7275 Filed 4–1–88; 8:45 am]

BILLING CODE 3410–05–M

DEPARTMENT OF COMMERCE

National Oceanic and Atmospheric Administration

[Docket No. 71275-7275]

Financial Assistance for Research and Development Projects To Provide Information for the Full and Wise Use of Enhancement of Fishery Resources in the Gulf of Mexico

AGENCY: National Marine Fisheries Service (NMFS), NOAA, Commerce.

ACTION: Notice of availability of financial assistance.

SUMMARY: For fiscal year 1988, Marine Fisheries Initiative (MARFIN) funds are available to assist persons in carrying out research and development projects which optimize the use of U.S. Gulf of Mexico fishery involving the U.S. fishing industry (recreational or commercial) including but not limited to harvesting methods, economic analyses, processing, fish stock assessment, and fish stock enhancement. NMFS issues this notice describing the conditions under which applications will be accepted and how NMFS will determine which applications will be funded.

DATE: Applications must arrive in the NMFS Office given below by May 19, 1988.

FOR FURTHER INFORMATION CONTACT: Dr. Donald R. Ekberg, Southeast Regional Office, 9450 Koger Blvd., National Marine Fisheries Service, St. Petersburg, Florida 33702, Telephone: 813–893–3720.

SUPPLEMENTARY INFORMATION:

Classification

NMFS reviewed this solicitation in accordance with Executive Order 12291 and the Department of Commerce guidelines implementing that Order. This solicitation is not "major" because it is not likely to result in (1) an annual effect on the economy of $100 million or more; (2) a major increase in costs or prices for consumers, individual industries, Federal, State, or local government agencies, or geographic regions; or (3) significant adverse effects on competition, employment investment, productivity, innovation, or on the ability of United States-based enterprises to compete with foreign-based enterprises in domestic or export markets. This notice does not contain policies with sufficient Federalism implications to warrant preparation of a Federalism assessment under E.O. 12612. Prior notice and an opportunity for public comments are not required by the Administrative Procedure Act or any other law for this notice concerning grants, benefits and contracts. Therefore, a regulatory flexibility analysis is not required for purposes of the Regulatory Flexibility Act. Information collection requirements contained in this notice have been approved by the Office of Management and Budget (OMB clearance No. 0648–0175) under the provisions of the Paperwork Reduction Act. This program is subject to the provisions of Executive Order 12372.

I. Introduction

Section 304(e) of the Magnuson Fishery Conservation and Management Act (16 U.S.C. 1854(e)) authorizes the Secretary to conduct research to enhance U.S. fisheries. The Departments of Commerce, Justice, and State, the Judiciary, and related Agencies Appropriation Act of 1988 makes funds available to the Secretary of Commerce for fiscal year 1988. This solicitation makes available approximately $2.5 million (including $686 thousand for continuing projects) for financial assistance under the MARFIN program to enhance the use of fishery resources in the Gulf of Mexico. There is no guarantee that sufficient funds will be available to make awards for all approved projects. U.S. fisheries [1] include any fishery that is or may be engaged in by U.S. citizens. The phrase "fishing industry" includes both the commercial and recreational sectors of U.S. fisheries.

II. Funding Priorities

Fisheries research and development proposals should be related to one or more of the priority areas listed below (in no rank order):

1. *Shrimp.* (1) Development of improved gear efficiency, on-board handling, grading, sorting and preservation methods, (2) determination of social and economic impacts of turtle excluder devices (TEDs), (3) economic evaluation of alternative harvesting (other than otter trawls), handling and processing systems, (4) identification of numbers and types of fishing vessels and gear now in use, trends in capital inputs into the fleet, and assessment of multiple uses of shrimp trawlers in other fisheries, (5) characterization (catch, effort, size, etc.) and determination of economic impacts of the bait shrimping industry, (6) characterization (catch, effort, size, etc.) and determination of

[1] For purposes of this notice, a fishery is defined as one or more stocks of fish, including tuna, and shellfish which are identified as a unit based on geographic, scientific, technical, recreational and economic characteristics, and any and all phases of fishing for such stocks. Examples of a fishery are Gulf of Mexico shrimp, groundfish, menhaden, etc.

economic impacts of recreational shrimping, and (7) assessment of impact of imported shrimp on domestic price structure, economics of the domestic industry and relationship to fisheries management actions which influence the size of shrimp being landed.

2. *Menhaden.* (1) Economic ehancement of products (surimi, oil, and food additives) for human consumption, and (2) prey-predator relationships.

3. *Coastal Pelagics.* (1) Determination of recruitment indices for king and Spanish mackerel, (2) identification of king and Spanish mackerel management units, (3) development of methods to solve problems of competition between recreational and commercial fishermen, and (4) economic analysis of fishing strategies to harvest blue runners, little tunny, related species.

4. *Reef Fish.* (1) Determination of recreational fishing participation, (2) determination of recruitment processes for shallow and deep-water reef fish, (3) development of a limited entry system for reef fish, (4) identification of reef fish management units, (5) development of methods to solve problems of competition between recreational and commercial fishermen, and (6) determination of trends in fishing effort for in-shore off-shore fisheries, and (7) evaluation of artificial reef site location as affecting reef-to-reef recruitment.

5. *Coastal Herrings.* (1) Handling and processing, shoreside methods, and product development, (2) resource surveys and gear development, (3) economic analysis of harvesting, handling, and processing systems, and (4) assessment of predator-prey relationships, particularly with respect to recreational and commercial impacts.

6. *Ocean Pelagics.* (1) Development of selective fishing gear, including longline methods, (2) determination of social and economic impacts of alternative fishing methods, and (3) development of methods to determine recreational fishing participation.

7. *Marine Mollusks.* (1) Development of methods for on-shore and off-shore oyster depuration systems, (2) development of guidelines for oyster reef expansion, rehabilitation, and management, and (3) development of improved oyster varieties, culture methods, and technology transfer.

8. *Crabs and Lobsters.* (1) Determination of safe harvest potential for deepwater crabs, and (2) study of a limited entry system for stone crab fishery, and (3) development of methods to quantify the recreational blue crab fishery.

9. *Bottomfish.* (1) Assessment of impact of shrimp trawling on bottomfish stocks, (2) determination of yield potentials, stock estimates, and life history of Gulf butterfish, (3) development of methods to reduce incidential catch of bottomfish, (4) assessment of biological, social, and economic impact of incidental catch reduction.

10. *Marine Mammals and Endangered Species.* (1) Assessment of non-shrimping mortality of sea turtles, using available data, and (2) development of methods to survey endangered sea turtles using platforms of opportunity, such as aircraft or vessels in use for other projects.

11. *Estuarine Fish.* (1) Stock assessment and identification (occurrence of separate stocks) of red drum, (2) improved estimate of age structures and catch of red and black drums, (3) measurement of escapement rate of inshore red drum juveniles to offshore stock, (4) enhanced knowledge of red drum life history and offshore recruitment, (5) social and economic analyses in support of fisheries management, (6) evaluation of socioeconoimic implications of alternative fishing strategies, such as purse seines versus gill nets, (7) determination of potential to develop an eel fishery, and (8) enhanced knowledge of black drum and spotted seatrout and coastal-estruarine recruitment.

12. *General.* Conduct social and economic research applicable to each Gulf of Mexico fishery: (1) Costs and returns including production function analysis, (2) demand analyses on recreational and commercial fisheries, (3) economic implication levels of capitalization and effort, and (4) economics of recreational or commercial multi-species fisheries, (5) economics of foreign trade barriers affecting Gulf of Mexico fisheries.

MARFIN financial assistance for projects started in fiscal years 1986 and 1987 totaled ($3,787 million). Funding by fisheries was as follows:

	$ thousand	Percent of total
1. Shrimp (includes TED technology transfer)	889.2	23.5
2. Menhaden	0	0
3. Coastal pelagics	451.4	11.9
4. Reef fish	201.6	5.3
5. Coastal herrings	239.3	6.3
6. Ocean pelagics	45.2	1.2
7. Marine mollusks	0	0
8. Crabs and lobsters	321.0	8.5
9. Bottomfish	0	0
10. Marine mammals and endangered species	70.0	1.8
11. Estuarine fish	1,514.8	40.0
12. General	54.7	1.4

Priority in program emphasis will be placed upon funding projects which have the greatest probability of maintenance and improvement of existing fisheries, improving our understanding of factors affecting recruitment success, generating increased yields from fisheries, and generating increased recreational opportunity and harvest potential. Projects will be evaluated as to the likelihood of achieving these benefits through both short-term and long-term research projects with consideration of the magnitude of the eventual benefit that may be realized. Both short-term projects that may yield more immediate benefits and long-term projects yielding greater benefits will receive equal emphasis. Planning emphasis will be placed upon attaining each discrete target benefit either through a single project or series of projects necessary to attain that goal.

Further information on current programs may be obtained from the NOAA National Marine Fisheries Service Southeast Regional Office.

III. How To Apply

A. Eligible Applicants

Applications for grants or cooperative agreements for MARFIN projects may be made, in accordance with the procedures set forth in this notice, by:

1. Any individual who is a citizen or national of the United States;

2. Any corporation, partnership, or other entity, non-profit or otherwise, if such entity is a citizen of the United States within the meaning of section 2 of the Shipping Act, 1916 as amended (46 U.S.C. 802).[2]

[2] To qualify as a citizen of the United States within the meaning of this statute, citizens or nationals of the United States or citizens of the Northern Mariana Islands (NMI) must own not less then 75 percent of the interest in the entity or, in the case of non-profit entity, exercise control of the entity that is determined by the Secretary to be equivalent to such ownership; and in the case of a corporation, the president or other chief executive officer and the chairman of the board of directors must be citizens of the United States, no more of its board of directors than a minority of the number necessary to constitute a quorum may be non-citizens; and the corporation itself must be organized under the laws of the United States, or of a State, including the District of Columbia, Commonwealth of Puerto Rico, American Samoa, the Virgin Islands of the United States, Guam, the NMI or any other Commonwealth, territory, or possession of the United States. Seventy-five percent of the interest in a corporation shall not be deemed to be owned by citizens of the NMI, if: (1) The title to 75 percent of its stock is not vested in such citizens or nationals of the United States or citizens of the NMI free from any trust or fiduciary obligation in favor of any person not a citizen or national of the United States or citizens of the NMI; (2) 75 percent of the voting power in such corporation is not vested in citizens or nationals of the United States or citizens of the NMI; (3) Through

Continued

No individual or organization that is in arrears on any outstanding debt to the U.S. Department of Commerce will be considered for funding. Any first time applicant for Federal grant funds is subject to a preaward accounting survey prior to execution of the award. Women and minority individuals and groups are encouraged to submit applications. NOAA employees including full, part-time, and intermittent personnel, (or their immediate families) and NOAA offices or centers are not eligible to submit an application under this solicitation, or aid in the preparation of an application, except to provide information about the MARFIN program and the priorities and procedures included in this solicitation.

B. Amount and Duration of Funds

Under this solicitation for fiscal year 1988 an estimated $2.5 million is available to fund fishery research and development projects ($1.81 million for new projects and $686 thousand for continuing projects). Although grants or cooperative agreements will generally be awarded for a period of one year, two or three year projects may be approved. Once approved, multi-year projects will not compete for funding in subsequent years. For multi-year projects, funding beyond the first year is contingent on the availability of new fiscal year program funds and the extent to which project objectives are met during the prior year. Publication of this announcement does not obligate NMFS to award any specific grant or to obligate any part or the entire amount of funds. Selection of successful applications generally will be provided by July 5, 1988. Awards will be generally made no later than 60 days after the funding selection is determined and negotiations completed.

C. Cost-Sharing Requirements

Applications must reflect the total amount of money necessary to accomplish the project. Cost sharing is not required for the MARFIN program. However, cost sharing is encouraged, and in case of a tie in considering proposals for funding, cost-sharing may affect the final decision.

---

any contract or understanding it is arranged that more than 25 percent of the voting power in such corporation may be exercised, directly or indirectly, in behalf of any person who is not a citizen or national of the United States or a citizen of the NMI; or (4) by any means whatsoever, control of any interest in the corporation is conferred upon or permitted to be exercised by any person who is not a citizen or national of the United States.

D. Format

Applications for project funding must be complete. They must identify the principal participants and include copies of any agreements between the applicant and the participants describing the specific tasks to be performed. Project applications should give a clear presentation of the proposed work, the methods for carrying out the project, its relevance to enhancing the use of Gulf of Mexico fishery resources and cost estimates as they relate to specific aspects of the project. Budgets will include a detailed breakdown by category of expenditure with appropriate justification. Applicants may submit two or more related projects under one proposal but must identify project costs including administrative costs, separately for each individual project. Applicants should not assume prior knowledge on the part of the NMFS as to the relative merits of the project described in the application. Applications must be submitted in the following format:

1. *Cover Sheet.* An applicant must use OMB Standard Form 424 as the cover sheet for each project or group of consolidated projects. Applicants may obtain copies of the form from the NMFS Regional Office, or Department of Commerce's Central Administrative Support Center (CASC); addresses are set forth at Section E., Application Submission.

2. *Project Summary.* Each project must contain a summary of not more than one page which provides the following information:

a. Project title.

b. Project status: (new or continuing).

c. Project duration: (beginning and ending dates).

d. Name, address, and telephone number of applicant.

e. Principal Investigator(s).

f. Project objeive.

g. Summary of work to be performed. For continuing projects the applicant is to briefly describe progress to date in addition to changes to the statement work previously submitted.

h. Total Federal funds requested (for multi-year projects, identify each year's requested funding).

i. Project costs to be provided from NOAA sources (for multi-year projects, identify each year's requested funding). Specify whether cash or in-kind contributions.

j. Total project cost.

3. *Project Description.* Each project must be completely and accurately described. Each project description may be up to 15 pages in length. The NMFS will make all portions of the project description available to the public and members of the fishing industry for review and comment; therefore, NMFS cannot guarantee the confidentiality of any information submitted as part of any project nor will NMFS accept for consideration any project requesting confidentiality of any part of the project.

Each project must be described as follows:

a. *Identification of Problem(s).* For new projects, describe how existing conditions prevent the full use of Gulf of Mexico fishery resources. In this description, identify (1) the fisheries involved, (2) the specific problem(s) that the fishing industry has encountered, (3) the sectors of the fishing industry that are affected, and (4) how the problem(s) prevent the fishing industry from using the fishery resources.

b. *Project Goals and Objectives.* State what the proposed project will accomplish and describe now this will eliminate or reduce the problem(s) described above. For multi-year projects, describe the ultimate objective of the projects and how the individual tasks contribute to reaching the objective. Describe the time frame in which tasks would be conducted.

c. *Need for Government Financial Assistance.* Explain why members of the fishing industry cannot fund all the proposed work. List all other sources of funding which are or have been sought for the project.

d. *Participation by Persons or Groups Other Than the Applicant.* Describe the level of participation required in the project(s) by NOAA or other Government and non-Government entities.

e. *Federal, State, and local government activities.* List any programs (Federal, state, or local government or activities, including State Coastal Zone Management Plans, Sea Grant, SEAMAP, 99–659 and Cooperative Statistics), this project would affect and describe the relationship between the project and those plans or activities. List names and addresses of persons providing the information.

f. *Project Outline.* Describe the work to be performed during the project starting with the first month's work and continuing to the last month. Identify specific milestones that can be used to track project progress. For multi-year projects, major project tasks and milestones for future years must also be identified. If the work described in this section does not contain sufficient detail to allow for proper technical evaluation, the NMFS will not consider the

applications for funding and will return it to the applicant.

g. *Project Management.* Describe how the project will be organized and managed. List all persons directly employed by the applicant who will be involved in the project, their qualifications, and their level of involvement in the project.

h. *Monitoring of Project Performance.* Indentify who will participate in monitoring the project.

i. *Project Impacts.* Describe the impact of the project in terms of anticipated increased landings, production, sales, exports, product quality safety, or any other measurable factors. Describe the specific products or services that will be produced by this product. Describe how these products or services will be made available to the fishing industry.

j. *Evaluation of Project.* The applicant is required to provide an evaluation of project accomplishments in the final report. The application must describe the methodology or procedures to be followed to determine technical or economic feasibility, to evaluate consumer acceptability, or to quantify the results of the project in promoting increased landings, prodution, sales, exports, product quality, safety, or other measurable factors.

k. *Project Costs.* Costs must be provided in a detailed budget. No cost sharing can come from another Federal source. Costs must be allocated to the Federal share and non-NOAA share provided by the applicant. Applicant's non-NOAA costs are to be divided into cash and in-kind contributions. A standard budget form (ED–357 NG; Rev. 3–80) is available from the offices listed in section E. A separate budget must be submitted for each project. An applicant submitting a multi-year project must submit two budgets—one covering total project costs (including individual outyear costs) and one covering the initial funding request for the project. The initial funding request should cover funds required during the first 12-month period. NMFS will not consider fees or profits as allowable costs for grantees. To support its budget the applicant must describe briefly the basis for estimating the value of the non-NOAA funds derived from in-kind contributions. Costs for the following categories must be detailed in the budget.

(1) *Personnel.* (a) Identify salaries by position and percentage of time of each individual dedicated to the project.

(b) Fringe Benefits. Indicate benefits associated with personnel working on the project.

(2) *Consultants and contract services.* Identify all consultant and/or contractual service costs by specific task in relation to the project.

(3) *Travel and transportation.* (a) Identify major travel and transportation costs, number of people traveling and purpose of travel.

(b) Itemize costs, including approximate air fare, per diem rates, and/or any additional fees associated with the trip, such as conference fees, registration fees, etc.

(4) *Equipment, space or rental costs.* (a) Identify equipment purchases or rental costs with the intended use.

(b) Identify space rental costs with specific uses.

(5) *Other costs*—(a) *Consumable office supplies.* Include cost for pens, paper, typewriter ribbons, etc.

(b) *Postage and shipping.* Include postage for correspondence, material produced under grant as well as air freight, truck or rail shipping of bulk materials to be used in conferences and workshops.

(c) *Printing costs.* Include costs associated with producing materials in conjunction with the project.

(d) *Final audit.* Include costs of having a special audit of the project performed. This cost should not be included if an organizational audit will be used in place of a special audit for the project.

(e) *Telephone and telegraph.* Identify estimated calls and monthly bills.

(f) *Utilities.* Identify costs of utilities and percentage of use in conjunction with performance of project.

(g) *Additional costs.* Indicate any additional costs associated with the project which are allowable under OMB circulars A–21, A–87, and A–122.

4. *Supporting documentation.* This section should include any required documents and any additional information necessary or useful to the description of the project. The amount of information given in this section will depend on the type of project proposed. The applicant should present any information which would emphasize the value of the project in terms of the significance of the problems addressed. Without such information, the merits of the project may not be fully understood, or the value of the project to fisheries used may be underestimated. The absence of adequate supporting documentation may cause reviewers to question assertions made in describing the project and may result in a lower ranking of the project. Reviewers will not necessarily examine all material provided as supporting documentation except where sufficient detail is lacking in the project description to properly evaluate the project. Therefore, information presented in this section should be clearly referenced in the project description.

E. Application Submission and Deadline

1. *Deadline.* The NMPS will accept applications for funding under this program between April 4, 1988 and May 19, 1988. An application will be accepted if the application is received by the office listed below on or before May 19, 1988 (6 PM EST).

2. *Submission of Applications to the NMFS.* Applications are not to be bound in any manner. Any applications not fully including all information called for herein, will be returned to the applicant. Applicants must submit one signed original and two (2) copies of the complete application to the address set forth below: Regional Director, Attn: D. Ekberg, National Marine Fisheries Service, Duval Bldg., 9450 Koger Blvd., St. Petersburg, Florida 33702, Telephone No.: (813) 893–3142.

Questions of an administrative nature should be referred to: NOAA RAS/CC31, Attn: Jean West, Central Administration Support Center, Federal Bldg., Room 1758, 601 East 12th Street, Kansas City, Missouri 64106, Telephone No.: (816) 374–7287.

IV. Review Process and Criteria

A. Evaluation and Ranking of Proposed Projects

For applications meeting the requirements of this solicitation, the NMFS will conduct a technical evaluation of each project prior to any other review. If an application contains two or more projects, the NMFS will evaluate the projects separately. All comments submitted to the NMFS will be taken into consideration in the technical evaluation of projects. The NMFS will provide point scores on proposals based on the following evaluation criteria:

a. Adequacy of research/development/demonstration for managing or enhancing Gulf of Mexico marine fisheries resources, addressing especially the possibilities of securing productive results (30 points).

b. Soundness of design/technical approach for enhancing or managing the use of Gulf of Mexico marine fisheries resources (25 points).

c. Organization and management of the project, including qualifications and previous related experience of the applicant's management team and other project personnel involved (20 points).

d. Effectiveness of proposed methods for monitoring and evaluating the project (15 points).

e. Justification and allocation of the budget in terms of the work to be performed (10 points).

The average technical scores will be ranked by NMFS into three groups: (1) Highly recommended (2) recommended and (3) not recommended, for presentation to the MARFIN Board. The Board will consider the significance of the problem addressed in the project along with the technical evaluation and need for funding. This evaluation and ranking will enable NMFS to determine the appropriate level of funding for each project.

B. Consultation With Others

NMFS will make project descriptions available for review as follows:

1. *Public review and comment.* Applications may be inspected at the National Marine Fisheries Service Regional Office in St. Petersburg, FL from May 19, 1988 to May 26, 1988.

2. *Consultation with members of the fishing industry.* The NMFS shall, at its discretion, request comments from members of the fishing and associated industries who have knowledge in the subject matter of a project or who would be affected by a project.

3. *Consultation with Government agencies.* Applications will be reviewed in consultation with the NMFS Southeast Fisheries Center and its Laboratories, CASC Grant Officer and, as appropriate, Department of Commerce Bureaus and other Federal agencies for elimination of duplicate funding. The Regional Fishery Management Councils may be asked to review projects and advise of any real or potential conflicts with Council activities.

C. Funding Decision

After projects have been evaluated, the MARFIN Board will develop and submit funding recommendations to the Director of the NMFS Southeast Regional Office. The Director of the NMFS Southeast Regional Office will (1) ascertain that the projects do not substantially duplicate other projects that are currently funded by or are approved for funding by the U.S. Government, (2) determine the projects to be funded, and (3) determine the amount of funds available for the program. The exact amount of funds awarded to each project will be determined in preaward negotiations between the applicant, NMFS, and the Grants Office. The Department of Commerce will review all recommended projects and funding before an award is executed by the Grants Officer. The funding instrument will be determined by the Grants Officer. Projects may not be initiated by a recipient until a notice of award is received from the Grants Officer. For multi-year projects, funds will be provided as specified tasks are completed.

V. Administrative Requirements

A. Obligations of the Applicant

An Applicant must—

1. Meet all application requirements and provide all information necessary for the evaluation of the project.

2. Be available, upon request, in person or by designated representative, to respond to questions during the review and evaluation of the project(s).

3. If a project is awarded, manage the day-to-day operations of the project, be responsible for the performance of all activities for which funds are awarded, and be responsible for the satisfaction of all administrative and managerial conditions imposed by the award. This includes adherence to procurement standards set forth in the award and referenced OMB circulars.

If a project is awarded, keep records sufficient to document any costs incurred under the award, and allow assess to records for audit and examination by the Secretary, the Comptroller of the United States, or their authorized representatives. NMFS may provide a proportionate share of funds as part of the financial award to pay for an audit.

5. If a project is awarded, submit quarterly project status reports on the use of funds and progress of the project to NMFS within thirty days after the end of each calendar quarter to the individual specified as the program officer in the funding agreement. The content of these reports will include, at a minimum:

a. A summary of work conducted which includes a description of specific accomplishments and milestones achieved. A summary format is available from NMFS to track milestone achievements and budget plans;

b. The degree to which goals or objectives were achieveed as originally protected;

c. Where necessary, the reasons why goals or objectives are not being met; and

d. Any proposed changes in plans or redirection of resources or activities and the reason therefore.

6. If a project is funded, submit an original and two copies of a final report within 90 days after completion of each project. The report must describe the accomplishments of the project and include an evaluation of the work performed and the results and benefits of the work in sufficient detail to enable NMFS to assess the success of the completed project. Results must be described in relation to the project objectives of resolving specific impediments to managing or enhancing fisheries, and be quantified to the extent possible. Potential use of project results by private industry or fishery management agencies should be specified. Any conditions or requirements necessary to make productive use of project results should be identified.

7. Each recipient of MARFIN funding must comply with applicable Office of Management and Budget (OMB) Circulars, and Department of Commerce and NOAA policies. Each award contains standard terms and conditions and any special conditions which must be met by the recipient.

8. For each project funded three copies of all publications of reports printed with grant funds must be submitted to the Program Officer. Any publication printed with grant funds must identify NOAA as the funding source along with the grant award number.

B. Obligations of the National Marine Fisheries Service

The NMFS Southwest Region will—

1. Provide programmatic information necessary for the proper submission of applications.

2. Provide advice to inform applicants of NMFS fisheries management and development policies and goals.

3. Monitor all projects after award to ascertain their effectiveness in achieving project objectives and in producing measurable results. Actual accomplishments of a project will be compared with stated objectives.

4. Refer questions of an administrative nature from applicants/recipients to the Grants Office.

C. CASC Grants Officer Responsibility

The CASC Grants Officer is responsible for the administrative processing of NOAA Federal Assistance Awards and will provide all forms needed by an applicant. Processing includes review of applications to determine that they are in conformance with Federal requirements, determination of the funding instrument, clearance through administrative review once program funding has been determined, execution of awards, reports and administrative monitoring, and close out of awards. The official grant file will be maintained by the grants Officer.

D. Legal Requirements

The applicant will be required to satisfy the requirements of applicable local, state and Federal laws.

This program is not included in the Catalogue of Federal Domestic Assistance.

Authority: 16 U.S.C. 1854(e).

Dated: March 30, 1988.

James E. Douglas, Jr.,

Deputy Assistant Administrator for Fisheries.

[FR Doc. 88-7330 Filed 4-1-88; 8:45 am]

BILLING CODE 3510-22-M

Gulf of Mexico Fishery Management Council; Public Meeting

AGENCY: National Marine Fisheries Service, NOAA, Commerce.

The Gulf of Mexico Fishery Management Council will convene a public meeting of its Coastal Migratory Pelagic (Mackerel) Advisory Panel, April 19, 1988, at the Holiday Inn Hotel, 4500 West Cypress Street, Tampa, FL, to review the report of the Council's Stock Assessment Panel to recommend levels of recreational and commercial harvest of king and Spanish mackerel within or below the range of acceptable biological catch.

For further information contact Wayne E. Swingle, Executive Director, Gulf of Mexico Fishery Management Council, 5401 West Kennedy Boulevard, Suite 881, Tampa, FL 33609; telephone: (813) 228-2815.

Date: March 29, 1988.

Ann D. Terbush,

Acting Director, Office of Fisheries Conservation and Management, National Marine Fisheries Service.

[FR Doc. 88-7292 Filed 4-1-88; 8:45 am]

BILLING CODE 3510-22-M

Gulf of Mexico Fishery Management Council; Public Meetings

AGENCY: National Marine Fisheries Service, NOAA, Commerce.

The Gulf of Mexico, South Atlantic and Caribbean Fishery Management Councils will convene public meetings of their Scientific and Statistical Committees (SSC), at the Sheraton Brickell Point, 495 Brickell Avenue, Miami, FL.

The Gulf of Mexico SSC will review the reef fish stock assessment, aerial surveys of the offshore population, and tag/recovery data for red drum. *The Gulf of Mexico and South Atlantic SSCs* will review the status of the swordfish stock; discuss a regulatory amendment of drift gillnets for king and Spanish mackerel, along with review of stock assessment, stock assessments groups report, and the stock identification report for king and Spanish mackerel. *The Caribbean, Gulf of Mexico and South Atlantic SSCs* will review the conservation standard and threshold concept.

The Gulf of Mexico SSC public meeting will convene April 12, 1988, at 8 a.m., and recess at 5 p.m.; the Gulf of Mexico and South Atlantic public meeting will convene April 13 at 8 a.m., and adjourn at 5 p.m., and the Caribbean, Gulf of Mexico and South Atlantic SSCs will convene April 14 at 8 a.m., and adjourn at 3 p.m.

For further information contact Wayne E. Swingle, Gulf of Mexico Fishery Management Council, 5401 West Kennedy Boulevard, Suite 881, Tampa, FL 33609; telephone: (813) 228-2815.

Date: March 29, 1988.

Ann D. Terbush,

Acting Director, Office of Fisheries Conservation and Management, National Marine Fisheries Service.

[FR Doc. 88-7293 Filed 4-1-88; 8:45 am]

BILLING CODE 3510-22-M

North Pacific Fishery Management Council; Public Meetings

AGENCY: National Marine Fisheries Service, NOAA, Commerce.

The North Pacific Fishery Management Council has scheduled two separate public meetings of its Future of Groundfish Fisheries Committee to continue its work on development of a recommendation for the North Pacific Council for long-term management of the groundfish fisheries off Alaska. On April 7-9, 1988, and April 22-23 the Committee will convene at 10 a.m., at the National Marine Fisheries Service, Northeast and Alaska Fisheries Center, Montlake Auditorium, 2725 Montlake Boulevard, N.E., Seattle, WA.

For further information about the above meetings contact the North Pacific Fishery Management Council, P.O. Box 103136, Anchorage, AK 99510; telephone: (907) 271-2809.

Date: March 29, 1988.

Ann D. Terbush,

Acting Director, Office of Fisheries Conservation and Management, National Marine Fisheries Service.

FR Doc. 88-7294 Filed 4-1-88; 8:45 am]

BILLING CODE 3510-22-M

North Pacific Fishery Management Council; Amended Meeting Notice

AGENCY: National Marine Fisheries Service, NOAA, Commerce.

The agenda for the public meeting of the North Pacific Fishery Management Council as previously published in the **Federal Register** (53 FR 9349, March 22, 1988), has been amended as follows:

Also included on the agenda for the North Pacific Council's April 13-15, 1988, meeting at the Sheraton Hotel, Anchorage, AK, will be an April 13 working session with the Council's Advisory Panel to receive a summary of the sablefish management workshops held in Kodiak, Sitka, Petersburg, and Homer, AK, Seattle, WA, and discussion of development of management strategies.

The Council will also review a regulatory amendment reducing the percentage of sablefish allowed as incidental longline catch in the Gulf of Alaska; reports on the Senate Commerce Committee hearings in Bering Sea enforcement, and progress in initiating management controls for the international waters of the Bering Sea.

All other information in the original meeting agenda remains unchanged.

For further information contact the North Pacific Fishery Management Council, P.O. Box 103136, Anchorage, AK 99510; telephone: (907) 271-2809.

Date: March 29, 1988.

Ann D. Terbush,

Acting Director, Office of Fisheries Conservation and Management, National Marine Fisheries Service.

FR Doc. 88-7295 Filed 4-1-88; 8:45 am]

BILLING CODE 3510-22-M

South Atlantic Fishery Management Council; Public Meetings

AGENCY: National Marine Fisheries Service, NOAA, Commerce.

The South Atlantic Fishery Management Council and its Committees will participate in a joint public meeting with the Gulf of Mexico Fishery Management Council, April 24-28, 1988, at the Holiday Inn Crown Plaza, New Orleans, LA, to discuss king and Spanish mackerel, spiny lobster, and habitat issues.

In a separate session, the South Atlantic Council will also meet to discuss snapper/grouper, king and Spanish mackerel, habitat issues, and other fishery management business. Also, the Council's Finance Committee will convene, and the Council's Personnel Committee will hold a closed session (not open to the public), to discuss personnel matters. A detailed agenda will be available to the public on or about April 11, 1988.

For further information contact Robert K. Mahood, Executive Director, South

Atlantic Fishery Management Council, One Southpark Circle, Suite 306, Charleston, SC 29407; telephone: (803) 571–4366.

Date: March 29, 1988.

Ann D. Terbush,

Acting Director, Office of Fisheries Conservation and Management, National Marine Fisheries Service.

[FR Doc. 88–7296 Filed 4–1–88; 8:45 am]

BILLING CODE 3510-22-M

COMMISSION OF FINE ARTS

Meeting

The Commission of Fine Arts' next scheduled meeting is Thursday, April 21, 1988 at 10:00 a.m. in the Commission's offices at 708 Jackson Place, NW., Washington, DC 20006 to discuss various projects affecting the appearance of Washington, DC, including buildings, memorials, parks, etc.; also matters of design referred by other agencies of the government. Handicapped persons should call the offices (566–1066) for details concerning access to meetings.

Inquiries regarding the agenda and requests to submit written or oral statements should be addressed to Mr. Charles Atherton, Secretary, Commission of Fine Arts, at the above address or call the above number.

Dated in Washington, DC March 23, 1988.

Charles H. Atherton,

Secretary.

[FR Doc. 88–7222 Filed 4–1–88; 8:45 am]

BILLING CODE 6336-01-M

COMMITTEE FOR THE IMPLEMENTATION OF TEXTILE AGREEMENTS

Adjustment of Import Limits for Certain Cotton and Man-Made Fiber Textile Products Produced or Manufactured in Sri Lanka; Correction

March 30, 1988.

In the table in the letter to the Commissioner of Customs published in the **Federal Register** on March 17, 1988 (53 FR 8797), correct the limit for Category 648 from 73,811 dozen to 95,822 dozen. The heading of the table should be corrected to read "Five-Month Adjusted Limit."

James H. Babb,

Chairman, Committee for the Implementation of Textile Agreements.

[FR Doc. 88–7298 Filed 4–1–88; 8:45 am]

BILLING CODE 3510-DR-M

CONSUMER PRODUCT SAFETY COMMISSION

[CPSC Docket 88-C0002]

Bright Future Futon Co., Inc., a Domestic Corporation, and Lois S. Hamamoto, Individually and as an Officer of the Corporation; Provisional Acceptance of a Settlement Agreement

AGENCY: Consumer Product Safety Commission.

ACTION: Provisional acceptance of a Settlement Agreement under the Flammable Fabrics Act.

SUMMARY: Under requirements of 16 CFR 1605.13, the Commission must publish in the **Federal Register** consent agreements which it provisionally accepts under the Flammable Fabrics Act. Published below is a provisionally-accepted Settlement Agreement with Bright Future Futon Co., Inc., a domestic corporation, and Lois S. Hamamoto, individually and as an officer of the corporation.

DATE: Any interested person may ask the Commission not to accept this agreement by filing a written request with the Office of the Secretary April 19, 1988.

ADDRESS: Persons wishing to comment on this Settlement Agreement should send written comments to the Office of the Secretary, Consumer Product Safety Commission, Washington, DC 20207.

FOR FURTHER INFORMATION CONTACT: Earl A. Gershenow, Directorate for Compliance and Administrative Litigation, Consumer Product Safety Commission, Washington, DC 20207; telephone (301) 492–6626.

SUPPLEMENTARY INFORMATION: (attached).

Date: March 29, 1988.

Sheldon D. Butts,

Deputy Secretary.

Complaint

Nature of Proceedings

The staff of the Consumer Product Safety Commission believes that Bright Future Futon Co., Inc., and Lois A. Hamamoto, the principal officer of that corporation (hereinafter "Respondents"), 3110 Central Avenue, S.E., Albuquerque, New Mexico 87106, are subject to the provisions of the Flammable Fabrics Act, as amended (15 U.S.C. 1191 *et seq.;* hereinafter, the "FFA"); the Federal Trade Commission Act, as amended (15 U.S.C. 41 *et seq.;* hereinafter, the "FTCA"); and the Standard for the Flammability of Mattresses and Mattress Pads (FF 4–72, amended), 16 CFR Part 1632 (hereinafter, the "Mattress Standard"). The staff further believes that Lois A. Hamamoto, while doing business as a sole proprietorship under the name of Bright Future Futon Company prior the incorporation of that business as Bright Future Futon Co., Inc., has violated the aformentioned Acts and the Mattress Standard.

It appears to the Commission from the information available to its staff that it is in the public interest to issue this complaint. Therefore, by virtue of the authority vested in the Commission by section 30(b) of the Consumer Product Safety Act, as amended (15 U.S.C. 2079(b); hereinafter, the "CPSA") the Commission pursuant to sections 3 and 5 of the FFA, 15 U.S.C. 1192 and 1194, and section 5 of the FTCA, 15 U.S.C. 45, and in accordance with the Commission's Rules of Practice for Adjudicative Proceedings, 16 CFR Part 1025, hereby issues this complaint and states the staff's charges as follows:

1. Respondent Bright Future Futon Co., Inc. is a corporation organized and existing under the laws of the State of New Mexico, with its principal place of business located at 3110 Central Avenue, S.E., Albuquerque, New Mexico 87106.

2. Respondent Lois S. Hamamoto is the principal officer of Respondent Bright Future Futon Co., Inc.; and in that capacity, is responsible for the acts, practices, and policies of the respondent corporation.

3. Respondents are now and have been engaged in the manufacturing for sale, sale, and offering for sale, in commerce, and has introduced, delivered for introduction, transported and caused to be transported in commerce, and have sold or delivered after sale of shipment in commerce, as the term "commerce" is defined in section 2(b) of the FFA, 15 U.S.C. 1191(b), futon mattresses.

4. Each futon mattress identified in paragraph 3 of the complaint is comprised of "ticking" that is made with 100 percent cotton, and a "batting" that is made with 100 percent cotton; and is intended or promoted for sleeping upon.

5. Each futon mattress identified in paragraph 3 of the complaint is, therefore:

(a) A "mattress" within the meaning of § 1632.1(a) of the Standard for the Flammability of Mattresses and Mattress Pads (FF 4–72, amended), 16 CFR 1632.1(a); and

(b) An "interior furnishing" and a "product" as these terms are defined in sections 2 (e) and (h) of the Flammable

Fabrics Act, as amended, 15 U.S.C. 1191 (e) and (h).

6. Respondents are subject to, but Respondent Hamamoto has failed to comply with, the Mattress Standard in that:

a. Respondent failed to do the prototype testing required by § 1632.3 of the Mattress Standard, 16 CFR 1632.3.

b. Respondent failed to label the mattresses as required by § 1632.31(b) of the Mattress Standard, 16 CFR 1632.31(b).

c. Respondent failed to maintain the manufacturing or test specification or test records required by § 1632.31(c) of the Mattress Standard, 16 CFR 1632.31(c).

7. The acts by Respondent Hamamoto set forth in paragraph 6 of the complaint are unlawful and constitute an unfair method of competition and an unfair and deceptive practice in commerce under the FTCA, in violation of section 3(a) of the FFA, 15 U.S.C. 1192(a), for which a cease and desist order may be issued against Respondents pursuant to section 5(b) of the FFA, 15 U.S.C. 1194(b), and section 45 of the FTCA, 15 U.S.C. 45.

Relief Sought

Wherefore, the premises considered, the Commission hereby issues this Complaint on the 29th day of March 1988.

By direction of the Commission.

David Schmeltzer,

Associate Executive Director, Directorate for Compliance and Administrative Litigation.

Consent Order Agreement

Bright Future Futon Co., Inc., and Lois S. Hamamoto, the principal officer of that corporation (hereinafter "Respondents"), enter into this Consent Order Agreement (hereinafter, "Agreement") with the staff (hereinafter, the "staff") of the Consumer Product Safety Commission (Commission) pursuant to the procedure for Consent Order Agreements contained in § 1605.13 of the Commission's Procedures for Investigations, Inspections, and Inquiries under the Flammable Fabrics Act (FFA), 16 CFR Part 1605.

This Agreement and Order are for the sole purpose of settling allegations of the staff that Respondents sold futon mattresses that are subject to the Flammable Fabrics Act and the Standard for the Flammability of Mattresses and Mattress Pads (FF 4–72), amended) (hereinafter, the "Mattress Standard"); and that those futon mattresses sold by respondent Lois S. Hamamoto, while doing business as a sole proprietorship under the name of Bright Future Futon Company prior to the incorporation of that business as Bright Future Futon Co., Inc., failed to comply with those Acts and the Mattress Standard issued thereunder, as more fully set forth in the complaint accompanying this Agreement.

Respondent and the Staff Agree:

1. The Consumer Product Safety Commission has jurisdiction in this matter under the following acts: Consumer Product Safety Act (15 U.S.C. 2051 *et seq.*), Flammable Fabrics Act (15 U.S.C. 1191 *et seq.*), and Federal Trade Commission Act (15 U.S.C. 41 *et seq.*).

2. Respondent Bright Future Futon Co., Inc. is a corporation organized and existing under the laws of the State of New Mexico, with its principal place of business located at 3110 Central Avenue, S.E., Albuquerque, New Mexico 87106.

3. Respondent Lois S. Hamamoto is the principal officer of Respondent Bright Future Futon Co., Inc.; and in that capacity, is responsible for the acts, practices, and policies of the respondent corporation.

4. Respondents are now and have been engaged in one or more of the following: the manufacture for sale, the sale, or the offering for sale, in commerce, or the importation, delivery for introduction, transportation in commerce, or the sale or delivery after sale or shipment in commerce, of a product, fabric, or related material which is subject to the requirements of the Flammable Fabrics Act, 15 U.S.C. 1191 *et seq.*, and the Standard for the Flammability of Mattresses and Mattress Pads (FF4–72), amended), 16 CFR Part 1632.

5. This Agreement is for settlement purposes only, does not constitute an admission by Respondents that either of them have violated the law, and becomes effective only upon its final acceptance by the Commission and service of the incorporated Order upon Respondents.

6. Respondents waive (a) all requirements for findings of fact and conclusions of law in the disposition of this matter, and (b) administrative and judicial review of the facts and proceedings.

7. The requirements of this Order are in addition to, and not to the exclusion of, other remedies such as criminal penalties which may be pursued under section 7 of the FFA, 15 U.S.C. 1196.

8. Violation of the provisions of the Order may subject Respondents to a civil penalty for each such violation, as prescribed by law.

9. The Commission may disclose the terms of this Consent Order Agreement.

10. This Agreement and the Complaint accompanying the Agreement may be used in interpreting the Order.

11. No agreement, understanding, representation or interpretation not contained in this Agreement or Order may be used to vary or contradict the terms of the Order.

Upon acceptance of this Agreement, the Commission shall issue the following Order:

Order

I.

It is hereby ordered that Respondents, and their successors and assigns, agents, representatives, and employees of the Respondents, directly or through any corporation, subsidiary, division, or other business entity, or through any agency, device or instrumentality, do forthwith cease and desist from selling or offering for sale, in commerce, or manufacturing for sale, in commerce, or importing into the United States or introducing, delivering for introduction, transporting or causing to be transported, in commerce, or selling or delivering after sale or shipment in commerce, any product, fabric or related material which fails to conform to the Standard for the Flammability of Mattresses and Mattress Pads (FF 4–72, amended), 16 CFR Part 1632.

II.

It is further ordered that Respondents conduct prototype testing for each futon mattress design, prior to production, in accordance with applicable provisions of the Standard for the Flammability of Mattresses and Mattress Pads (FF 4–72, amended), 16 CFR Part 1632.

III.

It is further ordered that Respondents prepare and maintain written records of the prototype testing specified in paragraph II of this Order for each futon mattress design, including photographs of the tested futon mattresses, in accordance with applicable provisions of the Standard for the Flammability of Mattresses and Mattress Pads (FF 4–72, amended) 16 CFR Part 1632.

IV.

It is further ordered that Respondents prepare and maintain a written record of the manufacturing specifications of each futon mattress prototype in accordance with applicable provisions of the Standard for the Flammability of Mattresses and Mattress Pads (FF 4–72, amended), 16 CFR Part 1632.

V.

It is further ordered that Respondents conduct prototype testing or, if appropriate, obtain supplier certification to support any substitution of materials after prototype testing, in accordance with all applicable provisions of the Standard for the Flammability of Mattresses and Mattress Pads (FF 4–72, amended), 16 CFR Part 1632.

VI.

It is further ordered that Respondents prepare and maintain a written record of the manufacturing specifications of any new ticking or tape edge material substituted for those used in the original prototype testing, in accordance with applicable provisions of the Standard for the Flammability of Mattresses and Mattress Pads (FF 4–72, amended), 16 CFR Part 1632.

VII.

It is further ordered that Respondents prepare and maintain all other records required by the Standard for the Flammability of Mattresses and Mattress Pads (FF 4-72, amended), 16 CFR Part 1632, including:

(a) Records to support any determination that a particular material other than ticking or tape edge material did not influence ignition resistance;

(b) Ticking classification test results or a certification from the ticking supplier;

(c) Tape edge substitution test results;

(d) Photographs of any futon mattress tested for purposes of making a tape edge substitution; and

(e) Records describing the disposition of all failing or rejected prototype futon mattresses.

VII.

It is further ordered that Respondents shall forthwith distribute a copy of this Order to each of its operating divisions.

IX.

It is further ordered that Respondents shall within sixty (60) days after service upon them of this Order, file with the Commission a report, in writing, setting forth in detail the manner and form in which it has complied with this Order.

X.

It is further ordered that for a period of ten (10) years from the date this Order becomes final within the meaning of the Federal Trade Commission Act, Respondents notify the Commission at least thirty (30) days prior to any proposed change in the way Respondents do business which may affect their compliance obligations arising out of this Order.

XI.

It is further ordered that the Consent Order Agreement is provisionally accepted pursuant to 16 CFR 1605.13, and shall be placed on the public record, and the Commission shall announce provisional acceptance of the Consent Order Agreement in the Commission's Public Calendar and in the **Federal Register**.

Any agreement, understanding representation, or interpretation that is not contained in this Agreement and in the incorporated Order may not be used to vary or contradict the terms of the Order subsequently issued by the Commission.

Signed this 10th day of Febraury, 1988.

Lois S. Hamamoto,

President, Bright Future Futon Co., Inc., 3110 Central Avenue, S.E., Albuquerque, New Mexico 87106.

Lois S. Hamamoto,

Individually, 3110 Central Avenue, S.E., Albuquerque, New Mexico 87106.

David Schmeltzer,

Associate Executive Director, Directorate for Compliance and Administrative Litigation.

Alan H. Schoem,

Acting Director, Division of Administrative Litigation.

Earl A. Gershenow,

Trial Attorney Division of Administrative Litigation, Counsel for the Commission Staff, Consumer Product Safety Commission, Washington, DC 20207.

By direction of the Commission, this Consent Order Agreement is provisionally accepted pursuant to 16 CFR 1605.13, and shall be placed on the public record, and the Commission shall announce provisional acceptance of the Consent Order Agreement in the Commission's Public Calendar and in the **Federal Register**.

So ordered by the Commission, this 29th day of March, 1988.

Sadye E. Dunn,

Secretary, Consumer Product Safety Commission.

[FR Doc. 88-7274 Filed 4-1-88; 8:45 am]

BILLING CODE 6355-01-M

DEPARTMENT OF DEFENSE

Office of the Secretary

Public Information Collection Requirement Submitted to OMB for Review

ACTION: Notice.

The Department of Defense has submitted to OMB for clearance the following proposal for collection of information under the provisions of the Paperwork Reduction Act (44 U.S.C. Chapter 35).

Title, Applicable Form, and Applicable OMB Control Number: DoD FAR Supplements part 15, Related Clauses in Part 52.215 and Related Forms; No Forms; and OMB Control Number 0704–0232.

Type of Request: Revision.

Annual Burden Hours: 932,900.

Annual Responses: 199,540.

Needs and Uses: The information collection concerns three areas: (1) Certain data required to enable evaluation of contractors' offers under the negotiated method of contracting; (2) information necessary to develop proposals to participate in the Industrial Modernization Incentives Program (IMIP); and (3) information necessary to develop and maintain an adequate estimating system.

Affected Public: Businesses or other for profit small businesses or organizations.

Frequency: Recordkeeping—On Occasion.

Respondent's Obligation: Mandatory.

OMB Desk Officer: Mr. Edward Springer.

Written comments and recommendations on the proposed information collection should be sent to Mr. Edward Springer at Office of Management and Budget, Desk Officer, Room 3235, New Executive Office Building, Washington, DC 20503.

DOD Clearance Officer: Ms. Pearl Rascoe-Harrison.

A copy of the information collection proposal may be obtained from, Ms. Rascoe-Harrison WHS/DIOR, 1215 Jefferson Davis Highway, Suite 1204, Arlington, Virginia 22202–4302, telephone (202) 746–0933.

L.M. Bynum,

Alternate OSD Federal Register Liaison Officer, Department of Defense.

March 30, 1988.

[FR Doc. 88–7332 Filed 4–1–88; 8:45 am]

BILLING CODE 3810-01-M

Defense Advisory Committee on Military Personnel Testing

Pursuant to Pub. L. 92–463, notice is hereby given that a meeting of the Defense Advisory Committee on Military Personnel Testing is scheduled to be held from 8:30 a.m. to 5:00 p.m. on April 29–30, 1988. The meeting will be held at the Radisson Annapolis Hotel, 126 West Street in Annapolis, Maryland 21401. The purpose of the meeting is to review the Department of Defense's research and development of enlistment selection/classification tests. Persons

desiring to make oral presentations or submit written statements for consideration at the Committee meeting must contact Dr. Anita R. Lancaster, Executive Secretary, Defense Advisory Committee on Military Personnel Testing, Office of the Assistant Secretary of Defense (Force Management and Personnel), Room 2B271, the Pentagon, Washington, DC 20301-4000, telephone (202) 697-9271, no later than April 15, 1988.

L.M. Bynum,

Alternate OSD Federal Register Liaison Officer, Department of Defense.

March 29, 1988.

[FR Doc. 88-7333 Filed 4-1-88; 8:45 am]

BILLING CODE 3810-01-M

Defense Science Board 1988 Summer Study on Defense Industrial and Technology Base

ACTION: Notice of Advisory Committee Meetings.

SUMMARY: The Defense Science Board 1988 Summer Study on Defense Industrial and Technology Base will meet in closed session on June 23, 1988 at the Lockheed Corporation, Calabasas, California.

The mission of the Defense Science Board is to advise the Secretary of Defense and the Under Secretary of Defense for Acquisition on scientific and technical matters as they affect the perceived needs of the Department of Defense. At this meeting the Task Force will review trends of the US industry's ability to respond (or surge) in time of crisis or war, recommend improvements, and suggest enhancements to acquisition policy.

In accordance with section 10(d) of the Federal Advisory Committee Act, Pub. L. No. 92-463, as amended (5 U.S.C. App. II, (1982)), it has been determined that this DSB Task Force meeting, concerns matters listed in 5 U.S.C. 552b(c)(1) (1982), and that accordingly this meeting will be closed to the public.

Linda M. Bynum,

Alternate OSD Federal Register Liaision Officer, Department of Defense.

March 29, 1988.

[FR Doc. 88-7334 Filed 4-1-88; 8:45 am]

BILLING CODE 3810-01-M

Advisory Committee on Women in the Services; Meeting

AGENCY: Defense Advisory Committee on Women in the Services (DACOWITS), DOD.

ACTION: Notice of meeting.

SUMMARY: Pursuant to Pub. L. 92-463, notice is hereby given of a forthcoming meeting of the Defense Advisory Committee on Women in the Services (DACOWITS). The purpose of the meeting is to review the recommendations, requests for information, and continuing concerns made by the Committee at the 1988 spring conference; review the subcommittee issue agenda; discuss current issues relevant to women in the Services; and draft the program for the next semiannual meeting scheduled for November 13-17, 1988. All meeting sessions will be open to the public.

DATE: June 27, 1988, 9:30 a.m.—5:00 p.m.

ADDRESS: SecDef Conference Room 3E869, The Pentagon, Washington, DC.

FOR FURTHER INFORMATION CONTACT: Major Ilona E. Prewitt, Director, DACOWITS and Military Women Matters, OASD (Force Management and Personnel), The Pentagon, Room 3D769, Washington, DC 20301-4000; telephone (202) 697-2122.

L.M. Bynum,

Alternate OSD Federal Register Liaison Officer, Department of Defense.

Dated: March 30, 1988.

[FR Doc. 88-7335 Filed 4-1-88; 8:45 am]

BILLING CODE 3810-01-M

Department of the Army

Army Science Board; Open Meeting

In accordance with section 10a(a)(2) of the Federal Advisory Committee Act (Pub. L. 92-463), announcement is made of the following Committee Meeting:

Name of the Committee: Army Science Board (ASB).

Dates of Meeting: 19 and 20 April 1988.

Time: 0800-1600 hours, 19 April; 0800-1200 hours, 20 April.

Place: Fort Leavenworth, Kansas.

Agenda: The Army Science Board Ad Hoc Subgroup on Close Combat Training Strategy for the 1990's will meet for the purpose of familiarizing panel members with the functions and responsibilities of the Combined Arms Center, Fort Leavenworth, Kansas, in conjunction with the development of Close Combat (Heavy) strategies for the future. This meeting is open to the public. Any interested person may attend, appear before, or file statements with the committee at the time and in the manner permitted by the committee. The ASB Administrative Officer, Sally Warner, may be contacted for further information at (202) 695-3039/7046.

Richard E. Entlich,

Colonel, GS, Executive Secretary, Army Science Board.

[FR Doc. 88-7223 Filed 4-1-88; 8:45 am]

BILLING CODE 3710-08-M

DEPARTMENT OF ENERGY

Procurement and Assistance Management Directorate; ICEED Energy Conferences

AGENCY: Department of Energy (DOE).

ACTION: Notice of solicitation for a grant application.

SUMMARY: DOE announces that it is conducting negotations with the International Research Center for Energy Economic Development (ICEED) to support two international energy conferences. These negotiations are expected to result in the renewal of Grant No. DE-FGO1-86IE10538 in which DOE will provide $30,000 of the total estimated cost of $133,650 for the performance period of fourteen months estimated to begin April 5, 1988.

Scope of Study: The grant will provide assistance for two international conferences. The first conference, "The Other Gulf: Output, Downstream Operations and Marketing of Red Sea Oil and Gas," will discuss such topics as; exploration and development policies of the Red Sea, impact of Red Sea output and exports on world crude oil product and petrochemical supply, geopolitical significance of the region, geological evaluation of the Red Sea area, U.S. energy policy toward the region and Arabian peninsula. The second conference, "Energy Supply and Trade Policies: Balancing National and Global Imperatives" will examine the mid-versus long-term supply outlook and changes, rising U.S. and consumer-nation protectionism, evaluation of the Canadian-U.S. trade pact for energy trade, exploration and development approach through round tables on Europe, Middle East, Pacific Basin and Latin America, oil pricing as related to other energy sources, particularly gas and electric utilities and the status of the superconductor.

Thomas S. Keefe,

Director, Contract Operations "B", Office of Procurement Operations.

[FR Doc. 88-7429 Filed 4-1-88; 8:45 am]

BILLING CODE 6450-01-M

Operation of Naval Petroleum Reserve No. 1; Intent To Prepare a Supplemental Environmental Impact Statement and Conduct Public Scoping Meetings

AGENCY: Office of Naval Petroleum and Oil Shale Reserves, U.S. Department of Energy.

ACTION: Notice of intent to prepare a Supplemental Environmental Impact Statement, and to hold public scoping meetings, to assess the environmental effects of the expansion of steamflood activities at Naval Petroleum Reserve Number 1.

SUMMARY: In 1979, the Department of Energy (DOE) published an Environmental Impact Statement (EIS) which analyzed the impact of oil and gas production at Naval Petroleum Reserve No. 1 (NPR-1, or Elk Hills) using conventional primary and secondary production methods. In 1985, an Environmental Assessment (EA) was prepared for a pilot project involving steamflood oil recovery, a tertiary production method. DOE is now planning an expanded steamflood project, and anticipates the possibility of implementing other primary, secondary and tertiary oil recovery activities at NPR-1. DOE has determined that the expansion of the pilot steamflood project and other proposed future development activities at NPR-1 constitute a major Federal action with significant impacts upon the environment within the meaning of the National Environmental Policy Act (NEPA). For this reason, DOE intends to prepare a supplement to the 1979 EIS to cover foreseeable future operations at the site.

DOE invites interested agencies, organizations, and members of the public to submit comments or suggestions to assist in identifying significant environmental issues and determining the appropriate scope of the Supplemental EIS. Comments may be submitted by mail or presented at scoping meetings to be held at Bakersfield, Taft, and Sacramento, California, on the dates and at the times indicated below.

ADDRESSES: Written comments or suggestions on the scope of the supplemental EIS, and requests to speak at the scoping meetings, may be submitted to: Director, Naval Petroleum Reserves in California, U.S. Department of Energy, P.O. Box 11, Tupman, CA 93276, Phone: 805-763-6000. Envelopes should be labeled "Scoping for NPR EIS".

For further information on the NEPA compliance process, contact: Carol M. Borgstrom, Acting Director, Office of NEPA Project Assistance (EH-25), U.S. Department of Energy, 1000 Independence Avenue SW., Washington, DC 20585, Phone: 202-586-4600.

DATES:

Tuesday, April 19, 1988, at 7:00 p.m., Franklin School Cafeteria, 2400 Truxtun Avenue, Bakersfield, California

Wednesday, April 20, 1988, at 7:00 p.m., The Fort Auditorium, 915 North 10th Street, Taft, California

Thursday, April 21, 1988, at 1:30 p.m., California Energy Commission Building, 1st Floor, Hearing Room A, 1516 Ninth Street, Sacramento, California

Written comments postmarked by April 29, 1988, will be considered in the preparation of the Draft Supplemental EIS. Those postmarked after that date will be considered to the maximum extent practicable. Requests to speak at any of the meetings should be received by the Director, Naval Petroleum Reserves in California, at the above address on or before April 13, 1988. Requests to speak may also be made at the time of registration for the meeting. However, persons who submitted written requests to speak by April 13, 1988 will be given priority if time should become limited during the meeting.

Background Information

NPR-1 comprises 47,985 acres and is located about 35 miles west of Bakersfield in Kern County, California. It was created by an Executive Order issued by President Taft in 1912 to provide an emergency source of liquid fuels for the armed forces. Except for brief periods of production in the 1920's and during World War II, Elk Hills was maintained in an essentially undeveloped status until the 1973-74 Arab oil embargo demonstrated the Nation's vulnerability to oil supply interruptions. As a result of the embargo, the Congress in 1974 authorized and directed that the Reserve be explored and developed to its full economic and productive potential. Congress subsequently passed the Naval Petroleum Reserves Production Act of 1976 (Public Law No. 94-258), which required that Elk Hills be produced at the maximum efficient rate (MER) consistent with sound engineering practices for six years. The law also provided the President discretionary authority to extend production subsequently, in increments of up to three years each, if continued production is found to be in the national interest. Such findings have been made and production is presently authorized through April 5, 1991.

Elk Hills reached its peak rate of production, 181,000 barrels of oil per day (BOPD), in July 1981, and is currently producing approximately 110,000 BOPD, 345 million cubic feet per day (mmcf/d) of natural gas, and 600 thousand gallons per day (GPD) of natural gas liquids. All production is sold on the open market via competitive bids. NPR-1 ranks eighth among domestic producing oil fields based on daily oil production, and sixth domestically based on recoverable reserves of approximately 671 million barrels. Since its establishment, NPR-1 has produced over 856 million barrels of oil and revenues in excess of $12 billion.

The EIS published in 1979 by DOE described the development activities which were anticipated at that time to be necessary to achieve MER production at NPR-1. These activities included: basic production work, such as drilling new wells and oil and gas withdrawal using conventional primary (natural flowing wells and artificial lift) and secondary (injection of natural gas and water into the oil bearing formations) production methods; oil and gas gathering and processing systems, such as pipelines, tank settings, gas processing plants, other product handling and distribution systems, and facilities for injection of gas and water into existing and new wells; and support systems, such as water supply, waste disposal, power requirements, and upgrading of transport facilities, security, and fire protection. The EIS did not anticipate the use of tertiary oil production techniques such as steamflooding, and hence did not analyze any impacts from these activities.

In 1985, DOE initiated a pilot tertiary oil recovery project using steamflooding in the Shallow Oil Zone (SOZ) to evaluate the technical and economic aspects of this technique at Elk Hills. The environmental impacts of this project were analyzed in an Environmental Assessment published in April 1985 (DOE/EA-0261). Based on the information in the EA, DOE determined that the pilot steamflood project did not constitute a major Federal action with significant impacts upon the environment, and that an EIS was not necessary. In order to continue the routine development of NPR-1, DOE is proposing to expand the use of steamflooding beyond the limited scope of the pilot project. It is also likely that other development activities, such as new in-fill drilling, expanded water and gas injection, and new support facilities (compressor stations, roads, waste

disposal facilities, cogeneration plants, etc.), will be initiated during the next 3 to 10 years. DOE has determined that the potential impacts from the expansion of the steamflood project and the other development activities listed above have the potential to exceed the scope of the 1979 EIS and the 1985 EA.

Preliminary Identification of Alternatives

One of the major purposes of an EIS is to define and analyze the reasonable alternatives to the proposed action, and the environmental impacts to be expected from each alternative. As background for public comments and suggestions concerning reasonable alternatives to be considered, DOE has tentatively identified three alternatives for the future development of NPR-1 which will be analyzed in the Supplemental EIS:

1. No Future Development ("No Action")

Under this alternative, no future development would occur at NPR-1. Oil and gas production would thus significantly decline. Some site restoration would likely be undertaken.

2. Continued Development Without Expansion of Tertiary Recovery

This scenario would continue current operations with the planned implementation over the next 1 to 10 years of additional conventional and secodary production activities, such as in-fill drilling and increased gas and water injection into oil-bearing formations. These activities are projected to require about 500 acres of surface land distrubance for new wells and facilities and will generate large amounts of criteria air pollutant emissions and produced wastewater. No expansion of the steamflood pilot project or other tertiary recovery activities would occur.

3. Continued Development With Expansion of Tertiary Recovery ("Proposed Action")

Through analysis of data obtained from the pilot steamflood project and the monitoring of other development activities, DOE believes that it may be necessary to expand steamflooding activities at NPR-1 over the next 3 to 10 years beyond the limited extent of the pilot steamflood project in order to meet the statutory requirement to produce the Reserve at the MER. This potential expansion would create an additional 200 acres of surface disturbance beyond that caused by continuing conventional development (Alternative 2, above), and would generate significant additional amounts of criteria air pollutants and produced wastewater.

The Administration has submitted legislation to the Congress requesting authorization to sell the government's ownership interests in NPR-1 (and also Naval Petroleum Reserve No. 3 in Wyoming). This divestitute initiative creates two "ownership" cases within each of the three alternatives described above: the development specified in the alternative under Federal ownership, which would occur if the legislation was withdrawn or was not enacted; and the development specified in the alternative under private sector ownership, which would occur if the government's share of Elk Hills was sold. DOE would no longer have authority or responsibility for the management of Elk Hills, and and all development and production decisions would be vested solely with the private sector owner(s).

DOE has prepared an Environmental Assessment (EA), DOE/EA-0334, which analyzed the differences in the environmental and socioeconomic impacts of the development and operation of NPR-1 which would be caused by changing its ownership from the public to the private sector. No significant environmental impacts are predicted for the proposal to sell NPR-1.

Preliminary Identification of Environmental Issues

The purpose of this notice is to solicit comments and suggestions for consideration in preparation of the EIS Supplement. As background for public comment, it is useful to list those environmental issues which have been tentatively identified for analysis in this document. This is not intended to be all inclusive or to imply any predetermination of impacts. Following is a preliminary list of major issues that may require analysis in the NPR-1 Supplemental EIS:

1. *Air Quality:* A significant reduction in release of air pollutants from the Reserve would probably occur under Alternative 1. Implementation of either Alternative 2 or Alternative 3 would result in the continued and possibly increased release of gaseous and particulate residuals from the Reserve.

2. *Impacts to Wildlife:* Alternative 1 could result in improvement of on-site wildlife habitat, but operation under the other alternatives would continue to produce some potentially adverse impacts to some wildlife inhabiting the Reserve. Of particular concern would be the continued and expanded disturbance of habitat, and other related interactions, involving the three Federal- and state-listed endangered animal species known to exist on the NPR-1 site (the San Joaquin kit fox, giant kangaroo rat, and blunt-nosed leopard lizard).

3. *Socioeconomic Effects:* Adoption of Alternative 1 by DOE could potentially have adverse impacts in a number of Kern County communities, due to direct loss of jobs by NPR-1 workers, indirect economic impacts on businesses supported in whole or in part by operation of the Reserve, and by community loss of other revenues. Implementation of either Alternative 2 or 3 with continued Federal ownership could maintain socioeconomic benefits for the area through the interaction of the substantial employment, subcontracting, and supply requirements of the Reserve with the local economy and residents. Either Alternative 2 or 3 under private sector ownership could result in a combination of positive and negative impacts in the local area, depending on possible changes in state and local taxation of the new privately-owned Reserve lands and revenues, and in the alteration of existing Federal purchasing and contracting practices by a private sector owner.

4. *Geological Impacts:* Alternative 2 or 3 could create accelerated erosion, due to increased land disturbance. Increased erosion could in turn produce a significant biological impacts.

5. *Water Resources:* Some concern exists regarding the potential for additional impacts to groundwater resources near the Reserve as a result of continued and possibly expanded reinjection of wastewater and disposal of other production wastes onsite. This concern is associated with Alternatives 2 and 3.

6. *Cumulative Impacts:* NEPA requires that the EIS evaluate the potential cumulative effects of the various alternatives in relation to the impacts of past, present, and foreseeable future development (of any kind), both on- and offsite. Cumulative impacts will be evaluated within the Supplemental EIS for all important issues, e.g., air quality, wildlife species, and socioeconomic conditions in nearby areas.

Scoping

The above preliminary lists of major environmental issues and reasonable alternatives are not meant to be exhaustive or final. For instance, even though some potential environmental impact areas, such as cultural resources, land use, and recreation, are not specified above as major issues, they will be evaluated as part of the NEPA analysis and will be discussed in the Supplemental EIS. DOE identifed the reasonable alternatives and

environmental issues listed above based on its experience with major issues that have been raised relative to other DOE proposals of this nature. DOE considers the scoping process to be open and dynamic in the sense that alternatives other than those given above may warrant examination, and new issues may be identifed and evaluated. Interested parties are invited to participate in the scoping process to both refine the preliminary alternatives and environmental issues to arrive at the significant issues to be analyzed in depth, and to eliminate from detailed study those alternatives and environmental issues that are not significant or pertinent.

The scoping process will involve all interested agencies (Federal, state, county, and local), groups, and members of the public. Comments are invited on both the alternatives and the issues to be considered in the Supplemental EIS. Public scoping meetings will be held at the locations on the dates and at the times indicated above. These scoping meetings will be informal, with a DOE presiding officer who will establish procedures governing the conduct of the meetings. The meetings will not be conducted as evidentiary hearings, and those who choose to make statements may not be cross-examined by other speakers. To ensure that everyone who wishes to speak has a chance to do so, five minutes will be allotted to each speaker. Depending on the number of persons requesting to be heard, DOE may allow longer times for representatives of organizations. Persons wishing to speak on behalf of an organization should identify that organization in their request to speak. Persons who have not submitted a request to speak in advance may register to speak at the scoping meeting. They will be called on to present their comments if time permits. Both oral and written comments will be considered and will be given equal weight by DOE.

The scoping meeting held at the California Energy Commission Building in Sacramento is intended to primarily receive scoping information from state and Federal agencies. This scoping meeting will also be open to the public, but priority in presentation of oral comments will be given to state and Federal agencies. Others will be accorded the opportunity to speak as time allows.

A complete transcript of all public scoping meetings will be retained by DOE and made available for inspection during business hours, Monday through Friday, at the Department of Energy Freedom of Information Reading Room, Forrestal Building, 1000 Independence Avenue SW, Washington, DC 20585, and at the Department of Energy San Francisco Operations Office, 1333 Broadway, Oakland, CA 94612. Additional copies of the public scoping meeting transcripts will also be made available during normal business hours at the following locations:

Beale Memorial Library—Main Branch, 1315 Truxtun Avenue, Bakersfield, California

Taft Branch—Kern County Library, 27 Emmons Park Drive, Taft, California

A notice of locations where documents will be available will be published in the **Federal Register** at the time of announcement of the availability of the Draft Supplemental EIS. In addition, copies of the public scoping meeting transcripts will be made available for purchase. Those interested parties who do not wish to submit comments or suggestions at this time, but who would like to receive a copy of the Draft Supplemental EIS, should notify the Director, Naval Petroleum Reserves in California, at the address given in the address section of this notice.

Dated at Washington, DC, this 30th day of March, 1988, for the United States Department of Energy.

Garry W. Gibbs,

Acting Assistant Secretary Environment, Safety and Health.

[FR Doc. 88-7323 Filed 4-1-88; 8:45am]

BILLING CODE 6450-01-M

Divestiture of Naval Petroleum Reserves Nos. 1 and 3; Finding of No Significant Impact

AGENCY: Office of Naval Petroleum and Oil Shale Reserves.

ACTION: Finding of No Significant Impact (FONSI) for the Divestiture of Naval Petroleum Reserves Nos. 1 and 3.

SUMMARY: On December 10, 1987, as part of its effort to increase revenues to the Federal government, the Administration submitted a legislative proposal to sell the government's ownership interests in Naval Petroleum Reserve No. 1 (NPR-1, or Elk Hills) in California and Naval Petroleum Reserve No. 3 (NPR-3, or Teapot Dome) in Wyoming, two oil fields presently operated by the Department of Energy (DOE). Proceeds from the sale will be used to complete the filling of the Strategic Petroleum Reserve (SPR), and to establish a 10-million barrel Defense Petroleum Inventory (DPI) of petroleum products to be stored in the SPR.

DOE has prepared an Environmental Assessment (EA), DOE/EA-0334, for this proposal. The EA analyzed the differences in the environmental and socioeconomic impacts of the development and operation of these Reserves which would be caused by changing their ownership from the public to the private sector. In addition, the EA addressed the impacts of not selling the Reserves ("no action"), and of establishing the DPI at the SPR.

No significant environmental or socioeconomic impacts are predicted for the proposal to sell NPR-1. Based on petroleum engineering and economic factors, it is anticipated that a private owner would substantially follow DOE's existing Long Range Plan for the continued development and operation of these Reserves over the next 7 to 10 years. If so, no change to impacts on geological resources, acoustic conditions, cultural resources and land use at NPR-1 would be caused by its sale to a private owner. There may be some change in the impacts on biological resources, air quality, water quality and waste management practices caused by the change in ownership. However, a variety of regulatory factors make it likely that these changes will be minimal. A number of socioeconomic impacts are anticipated. A beneficial impact from the sale of NPR-1 will be an increase in state and local tax receipts.

Only minor differences in impacts on geologic, biological, water resources and air quality are projected if a private owner temporarily increases oil production at NPR-1 by 5 percent over the production projected in DOE's Long Range Plan. No other impact areas will be affected adversely. State and local tax revenues will increase somewhat, a beneficial impact.

Virtually no differences in projected impacts from the developent of NPR-3 are anticipated if its ownership changes to the private sector. Establishing the DPI at the SPR would have no significant effect on the risks and impacts previously assessed for the SPR.

It is the determination of DOE that the legislative proposal is not a major Federal action signficantly affecting the quality of the human environment within the meaning of the National Environmental Policy Act (NEPA). Therefore, an environmental impact statement (EIS) will not be prepared.

Public Availability

The Environmental Assessment and Finding of No Significant Impact are being made available to the public. Anyone wishing to receive copies of

either document, or further information on the proposal, should contact: Captain William W. Rumbold, Director, Office of Naval Petroleum and Oil Shale Reserves (FE-44), U.S. Department of Energy, 1000 Independence Avenue SW., Washington, DC 20585, Phone: 202-586-4685.

For further information on the NEPA compliance process, contact: Carol M. Borgstrom, Acting Director, Office of NEPA Project Assistance (EH-25), U.S. Department of Energy, 1000 Independence Avenue SW., Washington, DC 20585, Phone: 202-586-4600.

SUPPLEMENTARY INFORMATION: Naval Petroleum Reserve No. 1 (NPR-1, or Elk Hills) comprises 47,985 acres and is located about 35 miles west of Bakersfield in Kern County, California. NPR-1 is presently the seventh largest oil field in the United States, with production of about 115,000 barrels of oil per day. The Federal government owns about 78 percent of NPR-1, with the remaining 22 percent owned by Chevron U.S.A. Inc.

Elk Hills' climate is very dry, with an average annual rainfall of less than 6 inches. One third of the year's daily mean maximum temperatures are at or above 100 degrees F. Due to natural erosion and the low rainfall, much of the surface soil at NPT-1 has elevated salt concentrations, which tends to inhibit plant growth. Sand, gravel and petroleum are the only known mineral resources present on the Reserve. Elk Hills' biological resources exhibit some characteristics of a "biological island," with a greater abundance and diversity of plants and animals than is found on much of the surrounding area. Three endangered animal species currently are found on the Reserve.

Air quality date for Bakersfield show exceedances of the ambient air standards for ozone, particulate matter and sulfate. Water resources in the immediate area are not substantial, and both surface and groundwaters are of poor quality. At NPR-1, surface flow consists entirely of intermittent streams after periods of heavy precipitation.

The grater Bakersfield metropolitan region had a population of about 454,000 as of early 1984. The unemployment rate has decreased from 13.4 percent in 1983 to 10.4 percent in 1986. Elk Hills presently employs 753 persons. The local economy is based upon a solid foundation of agriculture and petroleum production.

Naval Petroleum Reserve No. 3, or Teapot Dome, comprises 9,481 acres and is located 35 miles north of Casper, Wyoming, in Natrona County. It is a mature, stripper field with a current average production of about 3,000 barrels of oil per day and is owned in its entirety by the Federal government.

The climate at NPR-3 is semi-arid, with between 10 to 15 inches of precipitation per year. NPR-3 supports an abundant biological resource base. No endangered species are known to be present on the Reserve. Natrona County has a population of about 75,000, 75 percent of which live in Casper. NPR-3 employs about 120 persons.

As part of an effort to increase revenues to the Federal government, the Administration is proposing to sell the government's ownership interests in Naval Petroleum Reserves 1 and 3. Proceeds from the sale will be used to complete the filling of the Strategic Petroleum Reserve (SPR), and to establish a Defense Petroleum Inventory (DPI) of 10 million barrels of petroleum products to be stored at the SPR. DOE has prepared an Environmental Assessment (EA), DOE/EA-0334, which analyzes the differences in environmental and socioeconomic impacts associated with the operation of these Reserves which may be caused by changing their ownership from the public to private sectors. The EA also addresses the impacts of establishing the DPI at the SPR.

Based on standard petroleum engineering and economic factors, it is anticipated that a private owner would substantially follow DOE's present Long Range Plan for the operation of NPR-1 over the next 7 to 10 years. If so, sale of the Reserve would not cause any changes in impacts on the geological resources, acoustic conditions, cultural resources and land use at NPR-1. There may be some adverse changes to the impacts on biological resources, air quality, water quality and waste management practices caused by the change in ownership of the Reserve. However, a variety of regulatory factors make it likely that a private owner will be constrained to continue the existing endangered species impact mitigation and air and water pollution control programs. For this reason, any changes in impacts between Federal and private operation of the Reserve should be minimal.

A number of socioeconomic impacts are projected if Elk Hills is sold to a private owner. These include the potential loss of employment for the present Federal and some portion of the private work force on site; loss of employment opportunities for minority and other disadvantaged workers; loss of income for local small and disadvantaged businesses; and the loss of a competitive supply of crude oil for several small, independent refineries. Mitigating measures exist to ameliorate these impacts. A beneficial impact from the transfer of ownership would be an increase in tax receipts to the State of California and to Kern County, which would likely result in either a decrease in revenue requirements from the existing state and local taxpayers, or an increase in the ability of state and local governments to provide services to residents. Overall, these tax effects are expected to be 2 to 3 times the amount of any cost reductions associated with the private ownership and operation of NPR-1.

There is a possibility that a private owner might increase oil production from Elk Hills by about 5 percent over the production projected in DOE's Long Range Plan over the next 3 to 4 years through various facility improvements and modifications. The additional environmental impacts of this temporary increase in production would be minimal.

NPR-3 is a mature stripper field whose operating strategy is mainly driven by economic considerations, and it is anticipated that a private owner would substantially follow DOE's existing Long Range Plan for the continued operation of this field over the next 7 to 10 years. For this reason, virtually no differences in any of the environmetal or socioeconomic impacts associated with the operation of NPR-3 would be caused by the transfer of ownership from the public to the private sector.

The accommodation of the DPI within existing SPR storage facilities would be well within the envelope of the 1-billion barrel SPR program assessed in a number of programmatic and site-specific environmental impact statements. At any of the four SPR sites, the DPI would be a relatively minor increment that would have no significant effect on the risks and impacts previously assessed for the respective sites.

Determination

Based on the findings of the EA, DOE has determined that the legislative proposal does not constitute a major Federal action significantly affecting the quality of the human environment within the meaning of the National Environmental Policy Act of 1969, 42 U.S.C. 4321 *et seq.* Therefore, an environmental impact statement (EIS) is not required.

Issued in Washington, DC, January 11, 1988.

Garry W. Gibbs,

Acting Assistant Secretary Environment, Safety and Health.

[FR Doc. 88-7324 Filed 4-1-88; 8:45 am]

BILLING CODE 6450-01-M

[Solicitation Number DE-PS01-88CE26540]

Announcement of Competitive Grant Program; District Cooling Assessment Program

Purpose: The United States Department of Energy, Office of Conservation and Renewable Energy, Office of Buildings and Community Systems is entering into a competitive grant program to encourage the development of technically advanced and innovative District Cooling (DC) systems. The forthcoming solicitation will be solely for DC and does not include District Heating.

Background: The U.S. Department of Energy (DOE) is interested in promoting the use of technically advanced and innovative district cooling systems where they could substantially increase the efficiency of building air conditioning supply, substitute renewable energy resources for the use of premium fuels, or both. Locations in which such opportunities exist will generally be characterized by high levels of demand, high costs for building air conditioning due to climate and building density, or both.

For purposes of the forthcoming solicitation, a district cooling system is defined as "an energy system that generates thermal energy from one or more central sources to supply a multiple number of buildings and customers with building cooling, air conditioning or industrial process refrigeration services through a common piping distribution network and, where necessary, a storage facility". The piping system may extend through part of a built area, or may be limited to a relatively small group of buildings.

The purpose of the solicitation will be to assess and develop advanced district cooling technologies. Assessment includes the capacity to (1) identify and characterize potential district cooling service areas, cooling supply options and distribution networks; (2) specify potential district cooling configuration and assess their technical, economic, market, institutional and financial feasibility; and (3) develop and undertake implementation plans for those district cooling projects that are feasible.

District cooling system development is a multi-step process requring feasibility assessment, system concept development, detailed development, financing and construction. The solicitation will be directed at any single stage of the system development process. Research is to be completed in 12 months.

Multiple awards for assessment projects are expected to be made under this 1988 program. At least $500,000 will be allocated for this program.

Eligibility: Any public or private entity may respond to this solicitation.

It is anticipated that a formal solicitation will be issued April 12, 1988. Written requests for copies of this solicitation should be sent to: U.S. Department of Energy, Office of Procurement Operations, Forrestal Building, Room 1J-005, 1000 Independence Avenue, SW., Washington, DC 20585, ATTN: Document Control Specialist, MA-451.1

Issued in Washington, DC on March 29, 1988.

Thomas S. Keefe,

Director, Contract Operations Division "B", Office of Procurement Operations.

[FR Doc. 88-7246 Filed 4-1-88; 8:45 am]

BILLING CODE 6450-01-M

Office of Conservation and Renewable Energy

Energy Conservation Program for Consumer Products; Denial of Waiver of Furnace Test Procedures From The Carrier Corporation (F-015)

AGENCY: Conservation and Renewable Energy Office, DOE.

ACTION: Denial of waiver.

SUMMARY: Today's notice publishes a denial of a waiver to Carrier Corporation (Carrier). Carrier in its petition for waiver asks for variance from the existing DOE test procedures for furnaces when testing its gas-fueled forced-air condensing furnace identified as model series 58SXB (Carrier brand) and model series 398B (Bryant, Day and Night, and Payne brands). The denial is based on DOE's determination that Carrier is able to test its units in accordance with the exising test procedures and that the existing test procedures fo not provide materially inaccurate comparative data.

FOR FURTHER INFORMATION CONTACT:

Esher R. Kweller, U.S. Department of Energy, Office of Conservation and Renewable Energy, Mail Station CE-132, Forrestal Building, 1000 Independence Avenue SW, Washington, DC 20585, (202) 586-9127

Eugene Margolis, Esq., U.S. Department of Energy, Office of General Counsel, Mail Station GC-12, Forrestal Building, 1000 Independence Avenue, SW, Washington, DC 20585, (202) 586-9507.

SUPPLEMENTARY INFORMATION: In accordance with 10 CFR 430.27(l), notice is hereby given of the issuance of the Decision and Order as set out below. The Carrier Corporation has been denied a waiver for its gas-fueled forced-air condensing furnances identified as model series 58SXB (Carrier brand) and model series 398B (Bryant, Day and Night, and Payne brands).

Issued in Washington, DC, March 28, 1988.

Donna R. Fitzpatrick,

Assistant Secretary, Conservation and Renewable Energy.

Decision and Order of the Department of Energy Office of Conservation and Renewable Energy

In the Matter of The Carrier Corporation [Case No. F-015]

The Energy Conservation Program for Consumer Products was established pursuant to the Energy Policy and Conservation Act, Pub. L. 94-163, as amended by the National Energy Conservation Policy Act, Pub. L. 95-619, and the National Appliance Energy Conservation Act of 1987 (NAECA), Pub. L. 100-12, which requires the Department of Energy (DOE) to prescribe standardized test procedures to measure the energy consumption of certain consumer products, including furnaces. The intent of the test procedures is to provide a comparable measure of energy consumption that will assist consumers in making purchase decisions. These test procedures appear at 10 CFR Part 430, Subpart B.

The Department of Energy amended the test procedure regulations by adding § 430.27 on September 26, 1980, creating the waiver process. 45 FR 64108. DOE further amended the Department's appliance test procedure waiver process to allow the Assistant Secretary for Conservation and Renewable Energy to grant an interim waiver from test procedure requirements to manufacturers that have petitioned DOE for a waiver of such prescribed product test procedures. 51 FR 42823, November 26, 1986. The waiver process allows the Assistant Secretary for Conservation and Renewable Energy to waive temporarily test procedures for a particular basic model when a petitioner shows that the basic model contains one or more design characteristics which

prevent testing of the basic model according to the prescribed test procedures or when the prescribed test procedures may evaluate the basic model in a manner so unrepresentative of its true energy consumption characteristics as to provide materially inaccurate comparative data.

The Carrier Corporation (Carrier) filed a "Petition for Waiver" dated August 3, 1987, in accordance with § 430.27 of 10 CFR Part 430. DOE published in the **Federal Register** Carrier's petition and solicited comments, data, and information respecting the petition. 52 FR 45233, November 25, 1987. Carrier subsequently, filed an "Application for Interim Waiver" under § 430.27(g) and DOE denied the request on November 12, 1987. 52 FR 45233, November 25, 1987. Subsequent to the denial of interim waiver, Carrier reapplied for interim waiver on December 4, 1987. In its reapplication, Carrier provided additional information on the economic hardship Carrier would experience absent a favorable determination on the application, where the economic hardship information was not show in the original application. In addition, Carrier stated that it would need to develop software to override its control in order to force the furnace blower to operate as prescribed in furnace test procedures. DOE granted the second application on December 23, 1987. 53 FR 68, January 4, 1988.

Four comments were received concerning the "Petition for Waiver." DOE notified Carrier by letter dated January 12, 1988 that a rebuttal of comments may be submitted within 10 working days of receipt of comments. Carrier rebutted the four comments by letter dated January 22, 1988. DOE consulted with the Federal Trade Commission on January 29, 1988, concerning the Carrier petition.

Assertions and Determinations

Carrier's petition requests a waiver from the maximum air temperature rise specification in the existing test procedure for furnaces, and to be allowed to test at the nominal air temperature rise. Generally, the lower the temperature rise, the better the measured efficiency.

Nominal temperature rise is the manufacturer's recommended operating condition when installed in a home and maximum temperature rise is the manufacturer's recommended upper limit of operating conditions. Both nominal and maximum temperature rise are specified on the manufacturer's rating plate. Carrier contends that since its patented control package incorporated in the above-mentioned furnace allows operation only at nominal temperature rise, testing at nominal temperature rise is appropriate.

In developing the test procedures for condensing furnaces, DOE found that the temperature rise specification was very important to the performance evaluation of condensing furnaces, i.e., not only is the sensible flue loss reduced by lower temperature rise but the rate of condensate production is enhanced by a lower temperature rise. For non-condensing furnaces, the temperature rise specification is less of an issue, i.e., less measured efficiency difference. Consequently, the testing specification of temperature rise for non-condensing furnaces is not as rigorous as the specification for condensing furnaces. For non-condensing furnaces, the existing test procedures allow testing at a nominal temperature rise. If during laboratory testing, the nominal temperature rise is not readily attainable, the test procedures provide for testing at a higher temperature rise thereby resulting in lower efficiency. DOE determined that in order to improve repeatability, a single temperature rise for condensing furnaces was specified. To avoid overestimating the efficiency of condensing furnaces, the test specification established was the maximum temperature rise. Although nominal temperature rise is the manufacturer's preferred field condition, maximum and near maximum temperature rise is often encountered in the field. Therefore, the maximum temperature rise test specification was specified for the test procedure to provide a conservative rating. However, DOE believes most furnaces are installed in a manner that results in less than the maximum temperature rise; this would result in more efficient operation than measured by the DOE test procedure.

Carrier's design of condensing furnaces which are the subject of the petition, differ from other condensing furnace designs by virtue of a control system which only allows operation at a single, pre-set temperature rise regardless of field conditions. Because of this difference, Carrier seeks allowance to test said furnaces at the pre-set temperature rise in lieu of the conservative testing specification for condensing furnaces.

All comments were opposed to the requested allowance, citing their belief that an unfair advantage would result if the requested allowance was granted and that a uniform test specification should apply to all manufacturers of condensing furnaces. Further, the commenters stated that the conservative test specification for condensing furnaces should be eliminated for all condensing furnaces at the same time. The commenters believe that the maximum temperature rise specification represents a nearly equal underestimation of performance for all designs of condensing furnances. York in its comments pointed out that competitive furnaces, without pre-set controls, could operate at a higher efficiency in the field than the Carrier design. This possibility exists when a furnace operates in the field below a nominal temperature rise. This possibility cannot exist in the Carrier design.

Carrier's contention that special software would need to be developed to test its furnace at maximum temperature rise is true; however, York in its comments stated: "This may be true, but it should not be any more of a burden than is imposed on the rest of the furnace manufacturers having to change blower speed taps, and/or varying supply voltage to achieve maximum temperature rise. In both cases, adjustments are made for test purposes only."

In addition, Trane stated: "existing furnaces also operate at the nominal air temperature rise when installed and maintained properly * * *. [W]e strongly oppose selectively changing the test procedures for one manufacturer if he is allowed to perform the test in such a manner that it gives him an unfair competitive advantage."

York stated: "The basis for Carrier's petition is that their furnaces would never operate above the midpoint of the rise range; hence, it would be more efficient than competitive furnaces that *could* operate above the midpoint of the rise range. However, Carrier ignores installations where competitive furnaces could operate *below* the midpoint of the rise range. Since the Carrier furnace would never operate below the midpoint of the rise range, the Carrier furnace would be less efficient than a competitive furnace. There is no basis to believe that, *on the average* an installed Carrier furnace would be more efficient than an equivalent competitive product with a multispeed blower."

Lennox stated: "our furnaces and all others certified under the ANSI Central Furnace Standard are capable of delivering a sufficient air throughput to maintain the midpoint, or lower temperature rise in normal applications. Therefore, there is no probability that the Carrier furnace will produce a higher operating efficiency (due to its blower control) in actual installations."

Amana stated, "The Carrier furnaces can be tested and rated at the maximum temperature rise by simply increasing the external static pressure * * *. The primary virtue of the Carrier's device is the prevention of an increase in air flow at static pressure below the rating point. However, most furnaces have multi-speed motors or other means by which air flow can be kept relatively constant at lower static pressures."

Carrier rebutted Amana's comments by stating that its control prevents furnace operation if excessive static pressure is encountered. Furthermore, Carrier rebutted these comments, stating that installers and homeowners often select a slower blower speed tap in order to obtain benefits of reduction in circulating air noise and the improved warmer feel due to the increased air temperature rise.

DOE has reviewed these comments and Carrier's rebuttal and the Department agrees with the comments that forced warm air furnaces are not operated at any one specific air temperature rise and that the maximum temperature rise specified in the test procedure is a conservative rating for condensing furnaces. DOE intends to review the appropriateness of the existing test method now applicable to all condensing furnaces. If a revision of the procedure is appropriate, it will be proposed to be applicable for all condensing furnaces in a future rulemaking.

In consideration of all of the above, DOE believes that although the Carrier design has many consumer perceived virtues, it does not constitute an inherently more efficient design when compared to other designs of condensing furnaces. Notwithstanding the argument that testing at the nominal temperature rise is more appropriate than testing at maximum temperature rise for the Carrier design, granting this allowance to Carrier alone would claim an inherent efficiency improvement due to the pre-set control design. Granting of the request to Carrier alone would provide materially inaccurate comparative data to consumers. Consequently, the Carrier petition for waiver (Case No. F-015) is hereby denied.

It is, therefore, ordered that:

(1) The "Petition for Waiver" filed by the Carrier Corporation (F-015) is hereby denied subject to the provision of paragraph (2).

(2) Effective April 4, 1988, this waiver supersedes the Interim Waiver granted Carrier on December 23, 1987, 53 FR 68, January 4, 1988. (Case No. F-015).

[FR Doc. 88-7243 Filed 4-1-88; 8:45 am]

BILLING CODE 6450-01-M

Economic Regulatory Administration

Final Consent Order With Phillips Petroleum Co.

AGENCY: Economic Regulatory Administration, DOE.

ACTION: Final action on proposed consent order.

SUMMARY: The Economic Regulatory Administration (ERA) has determined that a proposed Consent Order between the Department of Energy (DOE) and Phillips Petroleum Company shall be made final as proposed. This Consent Order resolves matters relating to Phillips' compliance with the Federal petroleum price and allocation regulations administered and enforced by DOE during the period November 1, 1979 through December 18, 1987. The Consent Order requires Phillips to pay the sum of $30 million within (30) days of the effective date of the Consent Order. Persons claiming to have been harmed by Phillips' alleged overcharges will be able to present their claims for refunds in an administrative claims proceeding before the Office of Hearings and Appeals (OHA). The decision to make the Phillips Consent Order final was made after a full review of written comments from the public.

FOR FURTHER INFORMATION CONTACT: Dorothy Hamid, Economic Regulatory Administration, 1000 Independence Avenue, SW., Washington, DC 20585. (202) 586-8900.

SUPPLEMENTARY INFORMATION:

I. Introduction
II. Comments Received
III. Analysis of Comment
IV. Decision

I. Introduction

On January 11, 1988, ERA issued a Notice announcing a proposed Consent Order between DOE and Phillips Petroleum Company which would resolve matters relating to Phillips' compliance with the Federal petroleum price and allocation regulations during the period November 1, 1979 through December 18, 1987. The proposed Consent Order, which requires Phillips to pay DOE $30,000,000 is for the settlement of Phillips' potential liability for $50,849,950 in alleged overcharges excluding interest. The January 11 Notice described the bases for ERA's preliminary view that the settlement was favorable to the government and in the public interest. The **Federal Register** notice solicited written comments from the public relating to the adequacy of the terms and conditions of the settlement and whether the settlement should be made final.

II. Comments Received

One written comment was received after the 30 day written comment period had expired. The comment, which was on behalf of certain utilities, transporters, and manufacturers was considered in determining whether to make the proposed Consent Order with Phillips final.

III. Analysis of Comment

The January 11 Notice solicited written comments to enable the ERA to receive information from the public relevant to the decision as to whether the proposed Consent Order should be finalized as proposed, modified or rejected. To ensure public understanding of the bases for the proposed settlement, the January 11 Notice provided information regarding Phillips' possible liability, and the considerations that went into the government's preliminary agreement to the proposed terms.

ERA received one written comment that arrived after the written comment period had closed, which was, nevertheless, considered in making the decision as to whether the proposed Consent Order should be made final. The one comment received stated the commenter's objection to the proposed settlement because the amount of the settlement was inadequate. As well, the commenter urged that a distribution of settlement proceeds should be the subject of a proceeding pursuant to 10 CFR Subpart V (Subpart V). Inasmuch as the distribution of settlement proceeds will be made pursuant to the final Stripper Well Settlement Agreement in *In re: The Dept. of Energy Stripper Well Exemption Litigation*, M.D.L. 378 (D. Kan.), and the DOE Modified Restitutionary Policy (51 FR 27899, Aug. 4, 1986), which calls for the implementation of the Subpart V procedures, comments in that regard will not be further addressed herein. The following, therefore, addresses the commenter's objection to the settlement amount.

The comments objecting to the settlement's adequacy appear to be based on a premise which reflects a misunderstanding of the Department's claims against Phillips. Specifically, the commenter argues throughout that because Phillips deliberately defrauded the Entitlements Program, no "forgiveness" is warranted. The

Department, however, did not allege, and has not ever alleged, that Phillips deliberately defrauded the Entitlements Program. Moreover, the Department has no evidence of fraud and, in any event, Phillips' intent was not an element of the Department's legal claim.

The commenter also failed to address the litigation risks specific to this case, which were described in the January 11, 1988 **Federal Register** (53 FR 635, Jan. 11, 1988). In that Notice, the Department explained, *inter alia*, that the scope of the 1979 Consent Order with Phillips presented significant litigation risks for the Department. With regard to litigation risks, the commenter simply argued that the 1979 Consent Order was for a period ending October 31, 1979, whereas the PRO alleged violations in the period beginning November 1, 1979, and that Phillips' fraudulent concealment or misrepresentation of evidence permitted ERA to prosecute pursuant to the terms of the 1979 Consent Order. As discussed above, the Department has no evidence that Phillips willfuly and fraudulently concealed or misrepresented evidence.

The respective time periods covered by the 1979 Consent Order and the PRO were not the most significant issues; the most difficult issue involved paragraph 449 of the 1979 Consent Order which arguably resolved differences between Phillips and the Department about the property of Phillips' future compliance practices to the extent Phillips had engaged in those practices during the time period covered by the Consent Order. The type of conduct which was the subject of the PRO had occurred during such period. Given this argument on this issue, coupled with the fact that Phillips might have obtained enforcement of the 1979 Consent Order and the adjudication of this threshold issue in a federal district court, the Department considered its risk as significant. The commenter's arguments do not address these concerns.

The commenter also dismisses the litigation risks associated with the merits of the PRO as not significant claiming, *inter alia*, there is no factual dispute. The Department agrees that it would have a good chance of succeeding on the merits of the PRO in litigation. However, if the 1979 Consent Order issue were lost, there would be no opportunity to succeed on the underlying merits of the PRO. Accordingly, the overall likelihood of success was considered lower than that of either the PRO merits or the 1979 Consent Order issues considered separately. In any event, the case is at its earliest litigation phase, and until the matters are actually litigated, there are always factors, unknown presently, which can adversely affect the likely outcome.

The commenter further takes issue with the reasonableness of the settlement amount on the basis that ERA considered only that portion of the benefit actually received by Phillips. The commenter's concern is misplaced. While Phillips' net benefit was significantly less than the amount of violation asserted in the PRO, and ERA considered in its risk analysis the possibility of such an alternative outcome, the PRO overcharge quantification of $15 million was not reduced for that consideration. Consideration of the benefit actually received, however, is especially appropriate to consider in the context of settlement, along with the litigation probabilities.

Upon consideration of the comment received and addressed herein, and inasmuch as there were no other bases proferred for rejecting or modifying the settlement as proposed, the Department has determined that it is in the best interest of the public to make the proposed Consent Order final without change.

IV. Decision

By this notice, and pursuant to 10 CFR 205.199J, the proposed Consent Order between Phillips and DOE is made a final order of the Department of Energy, effective the date of publication of this Notice in the **Federal Register**.

Issued in Washington, DC on March 28, 1988.

Chandler L. van Orman,

Deputy Administrator, Economic Regulatory Administration.

[FR Doc. 88-7244 Filed 4-1-88; 8:45 am]

BILLING CODE 6450-01-M

[ERA Docket No. 87-74-NG]

North Canadian Resources, Inc., Order Granting Blanket Authorization To Import Natural Gas

AGENCY: Economic Regulatory Administration, DOE.

ACTION: Notice of order granting blanket authorization to import natural gas.

SUMMARY: The Economic Regulatory Administration (ERA) of the Department of Energy (DOE) gives notice that it has issued an order granting North Canadian Resources, Inc., (North Canadian) authorization to import natural gas. The order issued in ERA Docket No. 87-74-NG authorizes North Canadian to import up to 146 Bcf of natural gas over a two-year period beginning on the date of first delivery.

A copy of this order is available for inspection and copying in the Natural Gas Division Docket Room, GA-076, Forrestal Building, 1000 Independence Avenue SW., Washington, DC, 20585, (202) 586-9478. The docket room is open between the hours of 8:00 a.m. and 4:30 p.m., Monday through Friday, except Federal holidays.

Issued in Washington, DC, March 28, 1988.

Robert L. Davies,

Director, Office of Fuels Programs, Economic Regulatory Administration.

[FR Doc. 88-7325 Filed 4-1-88; 8:45 am]

BILLING CODE 6450-01-M

[Docket No. ERA C&E 88-08; Certification Notice—13]

Filing of Certification of Compliance; Coal Capability of New Electric Powerplants

AGENCY: Economic Regulatory Administration, DOE.

ACTION: Notice of filing.

SUMMARY: Title II of the Powerplant and Industrial Fuel Use Act of 1978, as amended ("FUA" or "the Act") (42 U.S.C. 8301 *et seq.*) provides that no new electric powerplant may be constructed or operated as a base load powerplant without the capability to use coal or another alternate fuel as a primary energy source (section 201(a)). In order to meet the requirement of coal capability, the owner or operator of any new electric powerplant to be operated as a base load powerplant proposing to use natural gas or petroleum as its primary energy source may certify, pursuant to section 201(d) to the Secretary of Energy prior to construction, or prior to operation as a base loan powerplant, that such powerplant has capability to use coal or another alternate fuel. Such certification establishes compliance with section 201(a) as of the date it is filed with the Secretary. The Secretary is required to publish in the **Federal Register** a notice reciting that the certification has been filed. One owner and operator of a proposed new electric base load powerplant has filed a self certification in accordance with section 201(d). Further information is provided in the **SUPPLEMENTARY INFORMATION** section below.

SUPPLEMENTARY INFORMATION:

The following company filed a self certification:

BEST COPY AVAILABLE

Name	Date received	Type facility	Megawatt capacity	Location
Decker Energy International, Winter Park, Fla.	5-19-87	Cogeneration Combined Cycle	28	Bakerfield, CA.

Amendments to FUA on May 22, 1987 (Pub. L. 100-42) altered the general prohibitions to include only new electric baseload powerplants and to provide for the self certification procedure.

Issued in Washington, DC on March 28, 1988.

Robert L. Davies,

Director, Office of Fuels Programs, Economic Regulatory Administration.

[FR Doc. 88-7245 Filed 4-1-88; 8:45 am]

BILLING CODE 6450-01-M

Office of Hearings and Appeals

Issuance of Decisions and Orders; Week of February 8 Through February 12, 1988

During the week of February 8 through February 12, 1988, the decisions and orders summarized below were issued with respect to appeals and applications for exception or other relief filed with the Office of Hearings and Appeals of the Department of Energy. The following summary also contains a list of submissions that were dismissed by the Office of Hearings and Appeals.

Request for Modification and/or Rescission

Arkansas, 2/11/88, KER-0037

The DOE issued a Decision and Order regarding a Motion for Reconsideration filed by the State of Arkansas. The State's Motion sought reconsideration of a DOE denial of a Petition for Special Redress that the State filed on May 28, 1987. *Arkansas*, 16 DOE ¶ 82,503 (1987) (*Arkansas*). In *Arkansas*, the DOE concluded that the State's proposal to use $400,000 to fund a Natural Gas Line Extension Project was not consistent with the terms of the Stripper Well Settlement Agreement. In denying the State's Motion for Reconsideration of *Arkansas*, the DOE found that the project was not an "energy assistance" project as defined in the 1981 Chevron consent order. Furthermore, the DOE found that additional information submitted by Arkansas supported the DOE's previous determination that the program did not further the policy objectives of timely restitution, balance or energy conservation. Accordingly, the Motion for Reconsideration was denied.

Request for Stay

Little America Refining Company, The True Companies/Little America Refining Company, 2/10/88, KES-0008, KET-0008, RR195-0001

Little America Refining Company (Larco) filed Applications for Stay and Temporary Stay with the DOE. Larco requested that the DOE stay consideration of all refund applications from a consent order fund provided by the True Companies, pending a determination on the merits of Larco's appeal of a denial of its own refund application from the True fund. The DOE determined that Larco had failed to meet any of the criteria necessary for granting a stay. In particular, the DOE found that there would be sufficient funds to satisfy Larco's refund request as well as all other pending requests. The DOE also considered new facts raised by Larco in its stay application and determined that the firm had failed to demonstrate that the denial of its refund request should be modified. Accordingly, Larco's Applications for Stay and Temporary Stay were denied.

Refund Applications

Cranston Oil Service Company, Inc./Neptune-Benson, Inc., Et Al., 2/11/88, RF276-2, et al.

The DOE issued a Decision and Order concerning 12 Applications for Refund filed by end-users of No. 2 heating oil covered by a consent order that the agency entered into with Cranston Oil Service Company, Inc., and its successor-in-interest, Galego Oil Company. The Applications were evaluated in accordance with procedures set forth in *Cranston Oil Service Co.*, 14 DOE ¶ 85,499 (1986). The sum of the refunds approved in this Decision is $2,327, representing $2,010 in principal and $317 in interest.

Getty Oil Company/Gagnon's Market, Et Al., 2/8/88, RF265-53, Et Al.

The DOE issued a Decision and Order concerning 36 Applications for Refund filed by resellers or retailers of products covered by a consent order that the DOE entered into with Getty Oil Company. Each applicant submitted information indicating the volume of Getty refined petroleum products that were indirectly purchased from Getty jobbers/distributors during the consent period. In 35 of these cases, the applicants were eligible for a claim below the $5,000 threshold. In the remaining case, the applicant elected to limit its claim to $5,000. The sum of the refunds approved in this Decision is $102,492, representing $50,649 in principal and $51,843 in accrued interest.

Getty Oil Company/Roger's Getty, Et Al., 2/8/88, RF265-2, Et Al.

The DOE issued a Decision and Order concerning 40 Applications for Refund filed by resellers or retailers of products covered by a consent order that the DOE entered into with Getty Oil Company. Each applicant submitted information indicating the volume of Getty refined petroleum products that were indirectly purchased from Getty jobbers/distributors during the consent order period. In 32 of these cases, the applicants were eligible for a claim below the $5,000 threshold. In the remaining eight cases, the applicants elected to limit their claim to $5,000. The sum of the refunds approved in this Decision is $182,098, representing $89,988 in principal and $92,110 in accrued interest.

Joseph H. Nesmith, Sr., 2/11/88, RF272-950

The DOE issued a Decision and Order granting an Application for Refund from crude oil overcharge funds based on the Applicant's purchases of refined petroleum products during the period August 19, 1973 through January 27, 1981. The Applicant used the products for various agricultural activities, and based his claim on the number of acres he farmed. To estimate his fuel consumption in the cultivation of flue-cured tobacco, the Applicant used the USDA estimate for annual petroleum product consumption per acre among the nation's farmers for flue-cured tobacco. To estimate its fuel consumption in the cultivation of all its other crops, the Applicant used the USDA estimate for average annual petroleum product consumption per acre among the nation's farmers. As an end-user, the Applicant was entitled to receive a refund of its full volumetric share. The refund granted in this Decision is $38.

Marathon Petroleum Company/High Point Oil Company, 2/11/88, RF250-2623, RF250-2624

The DOE issued a Decision and Order concerning Applications for Refund filed by High Point Oil Company in the Marathon Petroleum Company special refund proceeding. The Applicant demonstrated the volume of its Marathon purchases, and declined to

submit a demonstration that it was injured by the alleged overcharges. Therefore, the Applicant was granted a refund under the 35 percent presumption of injury. The total refund granted to High Point Oil company is $17,390, representing $15,216 in principal and $2,174 in interest.

Mobil Oil Corporation/Bergen Fuel Oil Co. John Budek's Service, 2/10/88, RF225-3766, Et Al.

The DOE issued a Decision and Order regarding Applications for Refund from the Mobil Oil Corporation escrow account filed by Bergen Fuel Oil Co. (Bergen) and John Budek's Service (Budek), two retailers of Mobil refined petroleum products. Bergen and Budek elected to apply for refunds based upon the presumptions set forth in the *Mobil* decision. *Mobil Oil Corp.*, 13 DOE ¶ 85,339 (1985). However, each firm included in its application purchases from Mobil made outside the period of price controls. The DOE disapproved these portions of the firms' claims and adjusted the firms' volumes accordingly. Bergen was therefore granted a refund of $1,731 ($1,394 in principal plus $337 in interest) and Budek was granted a refund of $142 ($114 in principal plus $28 in interest).

Mobil Oil Corporation/Dirkse Oil Company, 2/11/88, RF225-9263, RF225-9264

The DOE issued a Decision and Order granting an Application for Refund from the Mobil Oil Corporation escrow account, filed by Dirkse Oil Company, a reseller of Mobil refined petroleum products. In its Application, Dirkse elected to submit documentation that it was injured by Mobil's pricing practices rather than rely on the presumptions set forth in the *Mobil* decision. *Mobil Oil Corp.*, 13 DOE ¶ 85,339 (1985). Dirkse submitted information demonstrating that in April 1980, the firm had approximated banks of unrecouped increased product costs totalling $1,005. Therefore, although a competitive disadvantage analysis demonstrated that Dirkse suffered a competitive disadvantage due to its purchases of Mobil motor gasoline, the DOE determined Dirkse's refund for motor gasoline should be limited to the level of its banks, or $1,005. Because this amount is less than the $5,000 small claims level and because the firm had not attempted to demonstrate an additional injury, the DOE also granted Dirkse a refund based on its purchases of middle distillates. The total refund granted to Dirkse was $2,327, representing $1,874 in principal plus $453 in interest.

Mobil Oil Corporation/Ed Niemi Oil Company, 2/11/88, RF225-9381, RF225-9382, RF225-9383

The DOE issued a Decision and Order granting an Application for Refund from the Mobil Oil Corporation escrow account, filed by Ed Niemi Oil Company, a reseller of Mobil refined petroleum products. In its Application, Niemi elected to submit documentation that it was injured by Mobil's pricing practices rather than rely on the presumptions set forth in the *Mobil* decision. *Mobil Oil Corp.*, 13 DOE ¶ 85,339 (1985). With regard to the first part of a showing of injury, the DOE was unable to accept the approximated banks of unrecouped increased product costs submitted by Niemi. The DOE found that the annual data submitted by the firm as a basis for these calculations was inadequate for a showing of injury. In *Mobil*, however, applicants who attempt to rebut the level-of-distribution presumption and fail are nonetheless eligible for a refund under these presumptions. The DOE reviewed the application made by Niemi to insure that all necessary information has been provided for a refund under these presumptions. Accordingly, Niemi's Application for Refund was granted. The total refund granted to Niemi was $4,721, representing $3,803 in principal and $918 in interest.

Quarles Petroleum, Inc./Dulles Shell Service Center, 2/11/88, RF287-1

The DOE issued a Decision and Order concerning the Application for Refund filed by Dulles Shell Service Center (Dulles) in the Quarles Petroleum, Inc. (Quarles) special refund proceeding. Dulles applied for a refund based on the procedures outlined in *Quarles Petroleum, Inc.*, 14 DOE ¶ 85,271 (1986), governing the disbursement of settlement funds received from Quarles pursuant to an October 1981 consent order. Because Dulles sought a refund less than $5,000, Dulles was presumed to have been injured by Quarles' alleged overcharges. After examining the application and supporting documentation submitted by Dulles, the DOE granted the firm a refund of $3,155, representing $1,855 in principal and $1,300 in accrued interest.

Robert J. Heffner, Et Al., 2/9/88, RF272-04495, Et Al.

The DOE issued a Decision and Order granting refunds from crude oil overcharge funds to 40 applicants based on their respective purchases of refined petroleum products during the period August 19, 1973, through January 27, 1981. Each applicant used the products for various agricultural activities, and each determined its claim by estimating its consumption based on the acres it farmed. Each applicant was an end-user of the products it claimed and was therefore presumed injured by the DOE. The sum of the refunds granted in this Decision is $934.

Dismissals

The following submissions were dismissed:

Name	Case No.
C.G. Maichle Oil Co.	RF225-9615
C.T. Weidenfeller	RF225-4341
H.G. Chala	RF225-6400
Hartung Oil Company	RF225-10863
Joseph W. Doyle	RF225-4716
Osterloh Oil Co	RF225-9704
Queen City Oil Co., Inc	RF225-648
	RF225-649
	RF225-650
	RF225-651
Spruce Oil Corporation	RF83-163
Texaco, Inc	KRR-0036

Copies of the full text of these decisions and orders are available in the Public Reference Room of the Office of Hearings and Appeals, Room 1E-234, Forrestal Building, 1000 Independence Avenue SW., Washington, DC 20585, Monday through Friday, between the hours of 1:00 p.m. and 5:00 p.m., except federal holidays. They are also available in *Energy Management: Federal Energy Guidelines*, a commercially published loose leaf reporter system.

George B. Breznay,

Director, Office of Hearings and Appeals.

March 29, 1988.

[FR Doc. 88-7328 Filed 4-1-88; 8:45 am]

BILLING CODE 6450-01-M

Issuance of Decisions and Orders; Week of February 15 Through February 19, 1988

During the week of February 15 through February 19, 1988, the decisions and orders summarized below were issued with respect to applications for relief filed with the Office of Hearings and Appeals of the Department of Energy. The following summary also contains a list of submissions that were dismissed by the Office of Hearings and Appeals.

Remedial Order

Apex Oil Company, 2/28/88; HRO-0241

Apex Oil Company objected to a Proposed Remedial Order that was issued to it by the Economic Regulatory Administration on July 5, 1984. The PRO alleged that the firm violated the price and certification regulations that were

applicable to its resales of crude oil during the April 1978 through December 1979 audit period.

The crude oil involved in some of the Apex transactions was sold to a refiner which asserted that it was to be used in a non-refining use. The DOE rejected Apex's contention that the price and certification regulations did not apply to such resales of crude oil. The DOE found that the obligations of a crude oil reseller did not depend upon the ultimate use of the crude oil by the purchaser.

The PRO also involved Apex's sales of crude oil blended with other substances as residual fuel oil, a product that was uncontrolled during the audit period. The DOE found that the crude oil content of these blends remained subject to the price and certification regulations notwithstanding the fact that the blends met the physical specifications for residual fuel oil. In doing so, the DOE rejected Apex's contentions that the crude oil lost its identity for purposes of the regulations in the blending process and that the blending process made Apex a refiner rather than a reseller. Accordingly, the DOE found that Apex should have provided certifications with respect to the crude oil content in its fuel oil blends. Because Apex had failed to provide complete information concerning its pricing of blends as requested by the ERA, the DOE upheld the ERA's use of estimates and assumptions in its calculation of the violation amount. The DOE found, however, that the overcharge amount should be reduced by the amount of overcharges attributable to the crude oil contained in the blending tanks at the end of the audit period.

The PRO contained a reporting requirement concerning the firm's pricing practices for periods both before and after the audit period. The DOE agreed with Apex that inclusion of such a reporting requirement in a Remdial Order would be inappropriate, and therefore deleted the requirement from the PRO. The DOE found, however that the information sought by the ERA was reasonable, and stated its intention to issue a separate Special Report Order. Issuance of the SRO would be delayed for 30 days in order to allow the ERA to request a modification of its reporting request. As so modified, PRO was issued as a final order.

Interlocutory Order

Go-Tane Service Stations, Inc., 2/16/88; KRZ-0076, KRZ-0077, KRZ-0078, KRZ-0079

Go-Tane Service Stations, Inc. filed a Request to Participate in each of four enforcement proceedings involving Proposed Remedial Orders (PROs) issued to Clark Oil and Refining Corporation, Apex Oil Company, Novelly Oil Company, Goldstein Oil Company and Apex Holding Company. In two of the PRO proceedings, the DOE denied Go-Tane's Requests because the firm failed to show that it had sufficient interest in those proceedings, and failed to show that its participation would contribute to a complete resolution of the issues to be considered. The DOE granted Go-Tane a limited right to participate in the other two PRO proceedings. The DOE based this determination in part on Go-Tane's claim that it had obtained information about Clark in prior litigation with the firm which would be of assistance to the DOE in resolving the issues presented in those PRO's. Therefore, the DOE granted Go-Tane the right to file responses to any Statements of Objections which Clark files in those two proceedings, and to participate in any evidentiary hearings or oral arguments which may be held.

Refund Applications

Albany International Et Al., 2/16/88; RF 272-4868 Et Al.

The DOE issued a Decision and Order granting refunds from crude oil overcharge funds to six applicants based on their respective purchases of refined petroleum products during the period August 19, 1973 through January 27, 1981. Each applicant was an end-user of petroleum products, and established its claim either by consulting actual purchase records or by estimating its consumption based on annual usage or partial records. As end-users, each applicant was presumed by the DOE to have been injured. The sum of the refunds granted in this Decision is $1,870. All of the claimants will be eligible for additional refunds as additional crude oil overcharge funds become available.

Aminoil U.S.A. Inc./Mobil Oil Corporation, 2/19/88; RF139-29

The DOE Issued a Decision and Order concerning an Application for Refund filed by Mobil Oil Corporation (Mobil). Mobil applied for a refund based on the procedures outlined in *Aminoil U.S.A., Inc.* 12 DOE ¶ 85,217 (1985), governing the disbursement of settlement funds received from Aminoil pursuant to a Consent Order between that firm and the DOE. Mobil submitted cost banks well in excess of the refund it claimed and price comparison material in support of a refund of more than $5,000. After examining Mobil's application and supporting documentation, the DOE concluded that the firm should receive a refund of $312,428, representing $183,112 in principal and $129,316 in accrued interest.

Apco Oil Corp./Johnsons Apco Oil Co. Inc., 2/18/88; RF83-58

The DOE issued a Decision and Order concerning an Application for Refund filed by Johnsons Apco Oil Company, Inc. Johnsons, a motor gasoline and distillate fuel oil reseller, sought a portion of the settlement fund obtained by the DOE through a consent order entered into with Apco Oil Corporation. The DOE determined that Johnsons met the criteria for a refund, but had not made an adequate showing of injury to merit a refund in excess of the $5,000 small claims threshold. Accordingly, Johnsons was awarded a small claims refund of $5,000 plus $2,761 in accrued interest based upon its motor gasoline purchases. Johnsons' request for an additional refund based upon its purchase of Apco distillate fuel oil was denied.

Arkla Chemical Corp./Clark Equipment Co., Wilkerson Diesel, Inc., Arkla Louisiana Gas Company/Clark Equipment Co., Wilkerson Diesel, Inc., 2/18/88; RF153-37, RF153-38, RF154-36, RF154-35

The DOE issued a Decision and Order concerning Applications for Refund filed by customers of Arkla Chemical Company (Arkla I) and Arkansas Louisiana Gas Company (Arkla II). The applicants certified that they purchased covered products from Arkla I during the Arkla I consent order period and they were therefore granted refunds for the full amount allocated to them in the Arkla I proceeding. In addition, the applicants were granted refunds from the Arkla II funds. In support of their applications, the applicants submitted schedules of monthly purchases during the Arkla II consent order period; however, they were not required to prove injury because they were resellers whose refunds did not exceed $5,000. The total amount of refunds approved in this Decision and Order is $5,522, consisting of $369 from Arkla I and $5,153 from Arkla II.

Charles Rhoads, 2/19/88; RF272-4038 Et Al.

The DOE issued a Decision and Order granting refunds from crude oil overcharge funds to 50 applicants based on their respective purchases of refined petroleum products during the period August 19, 1973 through January 27, 1981. Forth-eight of the applicants used

the products for various agricultural activities, and each established its claim either by consulting actual purchase records or by estimating its consumption based on the acres it farmed. The remaining two applicants are businesses which used the products to operate trucks and machinery. Each applicant was an end-user of the products it claimed and was therefore presumed by the DOE to have been injured. The sum of the refunds granted in this Decision is $2,368. All of the claimants will be eligible for additional refunds as additional crude oil overcharge funds become available.

Clyde v. Small Et Al., 2/16/88; RE272-4149 Et Al.

The DOE issued a Decision and Order granting refunds to 19 claimants that filed Applications for Refund in OHA's Subpart V crude oil overcharge refund proceedings. Each applicant provided evidence of the volume of refined petroleum products that it purchased during the period August 19, 1973 through January 27, 1981. As an end-user of petroleum products, each claimant was found to have been injured as a result of the crude oil overcharges. The refunds granted totalled $4,307.

Cranston Oil Service Company, Inc./ Joseph L. Pilosa Et Al., 2/16/88; RF278-17 Et Al.

The DOE issued a Decision and Order concerning 15 Applications for Refund filed by end-users of No. 2 heating oil covered by a consent order that the agency entered into with Cranston Oil Service Company, Inc., and its successor-in-interest, Galego Oil Company. The Applications were evaluated in accordance with procedures set forth in *Cranston Oil Service Co.*, 14 DOE ¶ 85,499 (1986). The sum of the refunds approved in this Decision is $870, representing $750 in principal and $120 in interest.

Cranston Oil Service Company, Inc./ Martelli Jewelry Co. Et Al., 2/18/88; RF276-41 Et Al.

The DOE issued a Decision and Order concerning five Applications for Refund filed by end-users of No. 2 heating oil covered by a consent order that the agency entered into with Cranston Oil Service Company, Inc., and its successor-in-interest, Galego Oil Company. The Applications were evaluated in accordance with procedures set forth in *Cranston Oil Service Co.*, 14 DOE ¶ 85,499 (1986). The sum of the refunds approved in this Decision is $638, representing $552 in principal and $86 in interest.

David H. Bork, Et Al., 2/19/88; RF272-3224, Et Al.

The DOE issued a Decision and Order granting refunds from crude oil overcharge funds to five claimants based on their respective purchases of refined petroleum products during the period August 19, 1973 through January 27, 1981. Each of the claimants used the products for various agricultural activities and determined its eligible fuel consumption by consulting actual purchase records. Because each applicant calculated its amount of grease in pounds rather than gallons, the DOE converted its total pounds of grease into gallons. As an end-user, each applicant was entitled to receive a refund of its full volumetric share of the currently available crude oil monies. The sum of the refunds granted in this Decision is $93.

Frank D. Helm Et Al., 2/16/88; RF272-4857 Et Al.

The DOE issued a Decision and Order granting refunds from crude oil overcharge funds to 46 applicants based on their respective purchases of refined petroleum products during the period August 19, 1973 through January 27, 1981. Each applicant used the products for various agricultural activities, and each established its claim either by consulting actual purchase records or by estimating its consumption based on the acres it farmed. Each applicant was an end-user of the products it claimed and was therefore presumed by the DOE to have been injured. The sum of the refunds granted in this Decision is $788. All of the claimants will be eligible for additional refunds as additional crude oil overcharge funds become available.

Getty Oil Company/Hudson Foods, Inc., Et Al., 2/18/88; RF265-1570 Et Al.

The DOE issued a Decision and Order concerning three Applications for Refund filed by two end-users and one retailer of products covered by a Consent Order that the DOE entered into with Getty Oil Company. Each applicant submitted information indicating the volume of Getty refined petroleum products that was indirectly purchased from Getty during the consent order period. The end-user applicants were eligible for the full amount claimed. In the remaining case, the reseller applicant elected to limit its claim to $5,000. The sum of the refunds approved in this Decision is $18,601, representing $9,192 in principal and $9,409 in accrued interest.

Getty Oil Company/Larry's Skelly, Inc. Et Al., 2/16/88; RF265-446 Et Al.

The DOE issued a Decision and Order concerning 60 Applications for Refund filed by resellers, retailers and an end-user of products covered by a Consent Order that the DOE entered into with Getty Oil Company. Each applicant submitted information indicating the volume of Getty refined petroleum products that was indirectly purchased from Getty during the consent order period. In 53 of these cases, the applicants were eligible for a refund below the $5,000 threshold. In the remaining seven cases, the applicants elected to limit their claims to $5,000. The sum of the refunds approved in this Decision is $165,077, representing $81,573 in principal and $83,504 in accrued interest.

Getty Oil Company/Leitch's Skelly Service, Et Al., 2/17/88; RF265-2363 Et Al.

The DOE issued a Decision and Order concerning seven Applications for Refund filed by retailers of products covered by a Consent Order that the DOE entered into with Getty Oil Company. Each applicant submitted information indicating the volume of Getty motor gasoline that was indirectly purchased from Getty during the consent order period. In all of these cases, the applicants were eligible for a refund below the $5,000 threshold. The sum of the refunds approved in this Decision is $12,411, representing $6,134 in principal and $6,277 in accrued interest.

Gibbs Industries, Inc./William Bourassa Et Al., 2/18/88; RF262-2 Et Al.

The Department of Energy (DOE) issued a Decision and Order approving applications submitted by five customers of Gibbs Industries, Inc. (Gibbs). Each of the applicants submitted a written statement indicating that it had a supplier-purchaser relationshp with Gibbs and did not receive products from alternative suppliers during the Gibbs consent order period. The applicants were named in the ERA audit file as firms that did not receive their adjusted base period allocations from Gibbs and all chose to rely on the compilation of misallocated volumes contained in that audit file. Based on the procedures established for this proceeding, each applicant was granted a refund equal to the volumetric refund amount ($0.096437) multiplied by the number of gallons to which the firm was entitled but did not receive from Gibbs during the consent order period. Each applicant was granted an additional $0.094301 per gallon as a pro rata share of interest which has accrued on the consent order fund since its remittance to the DOE on January 7, 1981. The total amount of refunds

approved in this Decision is $5,500 ($2,780 principal and $2,720 interest).

ICI Americas, Inc. 2/16/88; RF272–3163

The DOE issued a Decision and Order concerning an Application for Refund filed by ICI Americas, Inc. (ICI) in connection with the Subpart V crude oil refund proceedings. The DOE determined that ICI was reimbursed on a dollar-for-dollar basis for the full cost of its purchases during the crude oil price control period. Therefore, the DOE concluded that ICI was not injured by any crude oil overcharges associated with the gallons purchased. Accordingly, ICI's Application for Refund was denied.

Johnson's Dairy, Inc., Et Al., 2/16/88; RF272–891 Et Al.

The DOE issued a Decision and Order granting five Applications for Refund filed in connection with the Subpart V crude oil refund proceedings. Each applicant purchased refined petroleum products during the period August 19, 1973 through January 27, 1981. Each applicant determined the volume of its fuel purchases by consulting actual purchase records. As an end-user, each applicant was entitled to receive a refund of its full volumetric share of the currently available crude oil monies. The sum of the refunds granted in this Decision is $1,578.

Marathon Petroleum Co./C.A. Murphy Oil Co., 2/19/88; RE250–2486, RF250–2487

The DOE issued a Decision and Order concerning Applications for Refund filed by C.A. Murphy Oil Company in the Marathon Petroleum Company refund proceeding. C.A. Murphy claimed that it purchased 34,078,516 gallons of refined products from Marathon during the Marathon consent order period. The applicant provided a market price survey to demonstrate that it was competitively injured as a result of Marathon's alleged overcharges. Since the prices that Murphy paid Marathon generally exceeded average market prices, the DOE granted Murphy a refund equal to its allocable refund share. The amount of the refund was $9,137 in principal plus accured interest of $1,305.

Marathon Petroleum Co./Hauck Oil Company, 2/17/88; RF250-2394, RF250–2395

The DOE issued a Decision and Order concerning Applications for Refund filed by Hauck Oil Company in the Marathon Petroleum Company refund proceeding. Hauck Oil claimed that it purchased 147,481,135 gallons of refined products from Marathon during the Marathon consent order period. The applicant, however, did not provide a conclusive showing that it was injured as a result of Marathon's alleged overcharges. The DOE granted Hauck Oil a refund equal to 35 percent of its allocable refund share. The amount of the refund was $21,218 in principal plus accured interest of $3,031.

Marathon Petroleum Co./Peerless Distributing Co., 2/16/88; RF250–2390, RF250–2391, RF250–2392

The DOE issued a Decision and Order concerning Applications for Refund filed by Peerless Distributing Co. in the Marathon Petroleum Company refund proceeding. Peerless claimed that it purchased 122,213,775 gallons of refined products from Marathon during the Marathon consent order period. Since the applicant did not claim a refund in excess of 35 percent of its allocable refund share, the DOE granted its request without requiring a showing of injury. The refunds granted in this Decision were $17,965 in principal plus $2,566 in accrued interest.

Mobil Oil Corp./Auburn Car Et Al., 2/18/88; RF225–969 Et Al.

The DOE issued a Decision and Order granting applications filed by 65 purchasers of Mobil refined petroleum products requesting refunds from the Mobil Oil Corp. consent order fund. According to the procedures set forth in *Mobil Oil Corp.*, 13 DOE ¶ 85,339 (1985), each applicant was found to be eligible for a refund based on the volume of products it purchased from Mobil. The total amount of refunds approved in this Decision was $75,655, representing $60,958 in principal plus $14,697 in accrued interest.

Mobil Oil Corporation/Brucker's Mobil, 2/17/88; RF225–10855

The DOE issued a Decision and Order regarding applications for refund from the Mobil Oil Corporation escrow account filed by Brucker's Mobil, a retailer of Mobil refined petroleum products. In the Decision, the DOE determined that Brucker's Mobil had been granted duplicate refunds and that the firm should remit the smaller of the two refunds granted to it. The DOE therefore ordered that Brucker's Mobil remit $399.

Mobil Oil Corp./Crowley Maritime Corp., U&R Express, Caterpillar, Inc., 2/16/88; RF225–6185, RF225–6187, RF225–10546, RF225–10849

The DOE issued a Decision and Order granting Applications for Refund from the Mobil Oil Corporation consent order fund filed by Crowley Maritime Corporation, U&R Express, and Caterpillar, Inc., end-users of Mobil refined petroleum products. Each applicant presented evidence that it purchased refined petroleum products directly from Mobil during the Mobil consent order period. According to the methodology set forth in *Mobil Oil Corp.*, 13 DOE ¶ 85,339 (1985), each applicant was found to be eligible for a refund from the Mobil consent order fund based on the volume of its purchases times 100 percent of the volumetric refund amount. The refunds granted in this Decision totalled $3,311 ($2,668 principal plus $643 interest).

Mobil Oil Corporation/Gray's Automotive, 2/16/88; RF225–10919

The DOE issued a Supplemental Order regarding an Application for Refund from the Mobil Oil Corporation escrow account filed by Gray's Automotive (Gray's), a retailer of Mobil refined petroleum products. In the Supplemental Order, the DOE determined that because the refund check issued to Gray's in *Mobil Oil Corp./Alfred Community Enterprises*, 15 DOE ¶ 85,428 (1987), had been returned as undeliverable, it should be redeposited in the Mobil deposit fund escrow account. Accordingly, the DOE ordered that the $42 granted to Gray's be redeposited in the Mobil escrow account.

Moore Regional Hospital, 2/18/88; RF272–2253

The Department of Energy issued a Decision and Order approving an Application for Refund in the Crude Oil Subpart V refund proceedings. The Claimant was a hospital which used diesel fuel to heat and to cool its facilities during the period of crude oil price controls. The Applicant estimated its fuel consumption during this period based on the gallons of diesel fuel it consumed per square foot. This figure was derived from actual purchase figures for the years 1978 through 1981 and from the square footage of the hospital from 1973 through 1981. Because the claimant relied on the end-user presumption it was not required to demonstrate injury. A total of $531 was approved in this Decision and Order.

Roland H. Roth, Kenneth W. Johnson, 2/18/88; RF272–2102, RF272–2208

The DOE issued a Decision and Order approving two Applications for Refund from crude oil overcharge funds. The two claimants were farmers who used tax records, local fuel supplier records or sales receipts to calculate the number of gallons of petroleum products they used during the period August 19, 1973 through January 27, 1981. When calculating the amount of grease used

during this period, however, each Applicant used pounds rather than gallons as the standard measure. Accordingly, the DOE converted the pounds of grease to gallons and added this converted figure to each Applicant's gallonage. Because the claimants relied on the end-user presumption, they were not required to demonstrate injury. A total of $21 was approved in this Decision and Order.

State Escrow Distribution, 2/17/88; RF302-2

The Office of Hearings and Appeals ordered the DOE's Office of the Controller to distribute $41,737,000.00 to the State Governments. Those funds had been set aside for distribution to the States in two previously issued decisions: *Atlantic Richfield Co.*, 17 DOE ¶ 85,069 (1988), and *Ernest A. Allerkamp*, 17 DOE ¶ 85,079 (1988). The use of the funds by the States is governed by the Stripper Well Settlement Agreement.

Suburban Propane Gas Corporation/ Carter Bell Manufacturing Co. Et Al., 2/17/88; RF299-60 Et Al.

The DOE issued a Decision and Order granting applications filed by eight end-users of propane requesting refunds from the Suburban Propane Gas Corporation consent order fund. According to the procedures set forth in *Suburban Propane Gas Corp.*, 16 DOE ¶ 85,382 (1987), each applicant was found to be eligible for a refund based on the volume of propane it purchased from Suburban. The total amount of refunds approved in this Decision is $1,491, representing $1,338 in principal plus $153 in accrued interest.

Verne Skjefte, Et Al., 2/17/88; RF272-2158, Et Al.

The DOE issued a Decision and Order approving twenty-seven Applications for Refund from crude oil overcharge funds. The twenty-seven claimants were farmers who used U.S. Department of Agriculture data on fuel usage per acre to derive the number of gallons of petroleum products they used during the period August 19, 1973 through January 27, 1981. Because the claimants relied on the end-user presumption, they were not required to demonstrate injury. A total of $1,400 was approved in this Decision and Order.

White Rose, Inc., 2/16/88; RF272-896

The DOE issued a Decision and Order granting an Application for Refund from crude oil overcharge funds based on the Applicant's purchases of refined petroleum products during the period August 19, 1973 through January 27, 1981. To estimate its fuel purchase volume, the Applicant divided its annual dollar expense for fuel products by $0.80, its estimated average per gallon price for its fuel purchases during the period of price controls. The refund granted in this Decision is $334.

Zook, Inc., 2/19/88; RF272-3822

The DOE issued a Decision and Order granting an Application for Refund from crude oil overcharge funds based on the Applicant's purchases of refined petroleum products from August 19, 1973 through January 27, 1981. To estimate its fuel purchase volume, the Applicant divided the actual number of miles its trucks drove during the claim period by an average fuel efficiency of 4.5 miles per gallon. The DOE determined that the Applicant should be presumed injured because it was an end-user of the gallons claimed. The refund granted in this Decision is $1,016.

Dismissal

The following submission was dismissed:

Name and Case

The National Treasury Employees Union; KFA-0160

Copies of the full text of these decisions and orders are available in the Public Reference Room of the Office of Hearings and Appeals, Room 1E-234, Forrestal Building, 1000 Independence Avenue, SW., Washington, DC 20585, Monday through Friday, between the hours of 1:00 p.m. and 5:00 p.m., except federal holidays. They are also available in *Energy Management: Federal Energy Guidelines*, a commercially published loose leaf reporter system.

George B. Breznay,

Director, Office of Hearings and Appeals.

March 29, 1988

[FR Doc. 88-7327 Filed 4-1-88; 8:45 am]

BILLING CODE 6450-01-M

Issuance of Proposed Decisions and Orders; Period of February 22 through March 11, 1988

During the period of February 22, 1988, through March 11, 1988, the proposed decision and order summarized below was issued by the Office of Hearings and Appeals of the Department of Energy with regard to an Application for Exception.

Under the procedural regulations that apply to exception proceedings (10 CFR Part 205, Subpart D), any person who will be aggrieved by the issuance of a proposed decison and order in final form may file a written notice of objection within ten days of service. For purposes of the procedural regulations, the date of service of notice is deemed to be the date of publication of this Notice or the date an aggrieved person receives actual notice, whichever occurs first.

The procedural regulations provide that an aggrieved party who fails to file a Notice of Objection within the time period specified in the regulations will be deemed to consent to the issuance of the proposed decison and order in final form. An aggrieved party who wishes to contest a determination made in a proposed decision and order must also file a detailed statement of objections within 30 days of the date of service of the proposed decision and order. In the statement of objections, the aggrieved party must specify each issue of fact or law that it intends to contest in any further proceeding involving the exception matter.

Copies of the full text of this proposed decision and order are available in the Public Reference Room of the Office of Hearings and Appeals, Room 1E-234, Forrestal Building, 1000 Independence Avenue SW., Washington, DC 20585, Monday through Friday, between the hours of 1:00 p.m. and 5:00 p.m., except federal holidays.

George B. Breznay,

Director, Office of Hearings and Appeals.

March 29, 1988.

Proposed Decison and Order

Arizona Trails, Incorporated, Flagstaff, Arizona, KEE-0159 Motor Gasoline

Arizona Trails, Inc. filed an Application for Exception on January 27, 1988. The firm sought relief from the requirement that it file Form EIA-782B, the "Retailer/Resellers Monthly Petroleum Product Sales Report." On March 10, 1988, the Department of Energy issued a proposed decison and order which determined that the exception request be denied.

[FR Doc. 88-7328 Filed 4-1-88; 8:45 am]

BILLING CODE 6450-01-M

Objection to Proposed Remedial Order Filed; Period of March 7 through March 18, 1988

During the period of March 7 through March 18, 1988, the notice of objection to proposed remedial order listed in the Appendix to this Notice was filed with the Office of Hearings and Appeals of the Department of Energy.

Any person who wishes to participate in the proceeding the Department of Energy will conduct concerning the proposed remedial orders described in the Appendix to this Notice must file a request to participate pursuant to 10

CFR 205.194 within 20 days after publication of this Notice. The Office of Hearings and Appeals will then determine those persons who may participate on an active basis in the proceeding and will prepare an official service list, which it will mail to all persons who filed requests to participate. Persons may also be placed on the official service list as non-participants for good cause shown.

All requests to participate in this proceeding should be filed with the Office of Hearings and Appeals, Department of Energy, Washington, DC 20585.

March 25, 1988.

Thomas O. Mann,

Acting Director, Office of Hearings and Appeals.

Oasis Petroleum Corp., Culver City, CA, KRO-0650 Crude Oil

On March 18, 1988, Oasis Petroleum Corporation (Oasis), 5901 Green Valley Circle, Culver City, California 90230, filed a Notice of Objection to a Proposed Remedial Order (PRO) which the Economic Regulatory Administration (ERA) issued to the firm on February 24, 1988. In the PRO, the ERA alleges that during the period January 1978 through December 1980, Oasis committed pricing violations of 10 CFR 212.183, the crude oil reseller price rule. According to the PRO, the violations resulted in overcharges amounting to $1,915,564.39.

[FR Doc. 88-7329 Filed 4-1-88; 8:45 am]

BILLING CODE 6450-01-M

Implementation of Special Refund Procedures

AGENCY: Office of Hearings and Appeals, DOE.

ACTION: Notice of implementation of special refund procedures.

SUMMARY: The Office of Hearings and Appeals of the Department of Energy announces the procedures for disbursement of $200,000 obtained as a result of a Consent Order which the DOE entered into with Martinoil Company (Martinoil), a reseller-retailer of petroleum products located in Fresno, California. The money is being held in escrow following the settlement of enforcement proceedings brought by the DOE's Economic Regulatory Administration.

DATE AND ADDRESS: Applications for refund from the Martinoil consent order funds must be filed in duplicate and must be received within 90 days of publication of this notice in the **Federal Register**. All applications should refer to Case Number HEF-0124 and should be addressed to the Office of Hearings and Appeals, Department of Energy, 1000 Independence Avenue SW., Washington, DC 20585.

FOR FURTHER INFORMATION CONTACT: Jon F. Leyens, Office of Hearings and Appeals, Department of Energy, 1000 Independence Avenue SW., Washington, DC 20585, (202) 586-6602.

SUPPLEMENTARY INFORMATION: In accordance with the procedural regulations of the Department of Energy (DOE), 10 CFR 205.282(c), notice is hereby given of the issuance of the Decision and Order set out below. The Decision relates to a Consent and Order entered into by the DOE and Martinoil Company (Martinoil) that settled all claims and disputes between the firm and the DOE regarding the firm's compliance with the Federal Petroleum Price and Allocation Regulations in its sales of covered products during the period August 20, 1973, through January 27, 1981 (consent order period). A Proposed Decision and Order tentatively establishing refund procedures and soliciting comments from the public concerning the distribution of the Martinoil consent order funds was issued on December 7, 1987. 52 FR 47632 (December 15, 1987).

The Decision set forth procedures and standards which the Office of Hearing and Appeals (OHA) of the DOE has formulated to distribute the contents of an escrow account funded by Martinoil prusuant to the Consent Order. OHA has determined that a portion of the consent order funds should be distributed to firms and individuals that purchased covered products from Martinoil during the consent order period. In order to obtain a refund, each claimant will be required to submit a schedule of its monthly purchases of covered products from Martinoil and to demonstrate that it was injured by Martinoil's alleged regulatory violations. The specific requirements for proving injury are set forth in the following Decision and Order. Applications for Refund will now be accepted provided they are filed in duplicate and received no later than 90 days after publication of this Decision and Order in the **Federal Register**.

Residual funds in the Martinoil escrow account will be distributed in accordance with the provisions of the Petroleum Overcharge Distribution and Restitution Act of 1986, Pub. L. No. 99-509, Title III.

Dated: March 25, 1988.

Thomas O. Mann,

Acting Director, Office of Hearings and Appeals.

March 25, 1988.

Decision and Order of the Department of Energy

Implementation of Special Refund Procedures

Name of Firm: Martinoil Company.

Date of Filing: October 13, 1983.

Case Number: HEF-0124

Under the procedural regulations of the Department of Energy (DOE), the Economic Regulatory Administration (ERA) may request that the Office of Hearings and Appeals (OHA) formulate and implement special procedures to distribute funds received as a result of an enforcement proceeding in order to remedy the effects of actual or alleged violations of the DOE regulations. *See* 10 CFR Part 205, Subpart V. On October 13, 1983, ERA filed a Petition for the Implementation of Special Refund Procedures in connection with a Consent Order entered into with the Martinoil Company (Martinoil).[1]

I. Background

Martinoil is a "reseller-retailer" of refined petroleum products as that term is defined in 10 CFR 212.31, and is located in Fresno, California. A DOE audit of Martinoil's records found that between November 1, 1973, and April 30, 1977, Martinoil may have violated the Mandatory Petroleum Price Regulations with respect to its sales of covered petroleum products. *See* 10 CFR Part 212, Subpart F.

In order to settle all claims and disputes between Martinoil and the DOE regarding the firm's compliance with the Mandatory Petroleum Price and Allocation Regulations during the period August 20, 1973, through January 27, 1981, Martinoil and the DOE entered into a Consent Order on August 8, 1983. The Consent Order refers to ERA's allegations of regulatory violations, but states that Martinoil does not admit committing any such infractions. Under the terms of the Consent Order, Martinoil was required to deposit $200,000 into an interest-bearing escrow account, for ultimate distribution by the DOE. These consent order monies were paid in full on October 6, 1983.

On December 7, 1987, we issued a Proposed Decision and Order (PD&O) setting forth a tentative plan for the

[1] Martinoil also owned and controlled three related firms, El Monte Liquid Gas Co., El Monte Gas Co., Inc. and Marco Tank Lines. References in this Decision to Martinoil include Martinoil and its three subsidiaries.

distribution of the Martinoil consent order funds. In order to notify all interested parties, the PD&O was published in the **Federal Register**, 52 FR 47632 (December 15, 1987), and mailed to various petroleum dealers' associations and others who had expressed interest in the proceedings. We allowed 30 days for interested parties to comment on the proposed refund procedures. The only comments received were submitted by Energy Refunds, Inc. of Hardin, Kentucky. These comments concerned the injury presumptions for resellers and retailers of Martinoil petroleum products set forth in the PD&O. In this Decision and Order, we will address those comments and adopt final procedures for the distribution of the funds in the Martinoil escrow account.

II. Final Refund Procedures

The procedural regulations of the DOE set forth general guidelines to be used by OHA in formulating and implementing a plan of distribution for funds received as a result of an enforcement proceeding. *See*, 10 CFR Part 205, Subpart V. The Subpart V process may be used in situations where the DOE is unable to identify readily those persons who may have been injured by the alleged regulatory violations or to determine the amount of such injuries. A more detailed discussion of Subpart V and the authority of OHA to fashion procedures to distribute refunds is set forth in the cases of *Office of Enforcement*, 9 DOE ¶ 82,508 (1981); and *Office of Enforcment*, 8 DOE ¶ 82,597 (1981) (*Vickers*).

Pursuant to the goals of the Subpart V regulations, we will attempt to provide refunds to claimants who demonstrate that they were injured by Martinoil's alleged regulatory violations during the August 20, 1973 through January 27, 1981 consent order period.[2] Any funds remaining in the Martinoil escrow account after all direct refunds are made will be distributed in accordance with the provisions of the Petroleum Overcharge Distribution and Restitution Act of 1986 (PODRA), Pub. L. No. 99-509, Title III. *See* Fed. Energy Guidelines (Petroleum Regulations 1974-1981) ¶ 11,702 et seq.

A. *Calculations of Refund Amounts.* In order to determine the potential refund amounts for applicants in this proceeding, we adopt the presumption that the alleged overcharges were spread evenly over all the gallons of covered products that Martinoil sold during the consent order period. Under this volumetric presumption, a claimant's maximum potential refund generally will be computed by multiplying $0.000726 per gallon, the per-gallon refund amount, by the number of gallons of covered products that it purchased from Martinoil during the consent order period.[3] The resulting figure is referred to as the claimant's "full volumetric share" of the Martinoil consent order funds.[4] Successful applicants will also receive proportionate shares of the interest that has accrued on the Martinoil escrow account.

The volumetric refund presumption is rebuttable. Because we realize that the impact on an individual claimant may have been greater than its full volumetric share, a claimant may submit evidence detailing the specific overcharge that it allegedly incurred in order to be eligible for a larger refund. *See Standard Oil Co. (Indiana) Army and Air Force Exchange Service*, 12 DOE ¶ 85,015 (1984).

B. *Determination of Injury.* The assignment of potential refund amounts is only the first step in the distribution process. We must also determine whether claimants were injured by the alleged overcharges. That is, whether they were forced to absorb the alleged overcharges. Our experience in Subpart V refund proceedings has led us to adopt a number of presumptions concerning injury. The presumptions we will adopt in this case are designed to allow claimants to participate in the refund process without incurring inordinate expenses, and to enable OHA to consider refund applications in the most efficient way possible. The use of presumptions in refund cases is specifically authorized by DOE procedural regulations. 10 CFR 205.282(e). An applicant that is not covered by one of the presumptions set forth below must demonstrate injury in accordance with the non-presumption procedures outlined in the latter part of this Decision.

1. *Injury Presumptions.* In the PD&O, we proposed adopting the presumption that resellers and retailers of Martinoil covered products claiming refunds of $5,000 or less, excluding accrued interest, were injured by Martinoil's alleged overcharges. In its comments to the PD&O, Energy Refunds suggests that we also adopt an injury presumption for resellers and retailers with "mid-level" claims. Previously used only in large refund proceedings, this mid-level presumption allows resellers and retailers to receive 40 percent of their full volumetric shares up to $50,000, without making detailed demonstrations of injury. *See Gulf Oil Corporation*, 16 DOE ¶ 85,381 (1987) (*Gulf II*).[5] By lowering the costs incurred by claimants participating in the refund process and easing the administrative burden placed on OHA, the mid-level presumption has served to further OHA's restitutionary duty in Subpart V proceedings. We see no reason why it should not also be applied prospectively in smaller refund proceedings. Accordingly, resellers and retailers of Martinoil covered products

[2] The Appendix to this Decision and Order contains the names of some customers that may have purchased petroleum products from Martinoil during the consent order period.

In its audit of Martinoil, ERA did not allege that the firm committed any allocation violations. Because the Consent Order covers Martinoil's compliance with all aspects of the Federal Petroleum Price and Allocation Regulations, howver, the escrow funds may be used to provide restitution to firms that show that they were injured by Martinoil's allocation practices. For these claimants, we will follow the same procedures that have been used in prior Subpart V proceedings involving alleged allocation violations. *See, e.g.*, Power Pak Co., Inc., 14 DOE ¶ 85,001 (1986). The remainder of this Decision concerns only the filing of claims involving Martinoil's alleged pricing violations.

[3] The volumetric factor of $0.000726 per gallon was computed by dividing the $200,000 received from Martinoil by the 275,590,149 gallons of covered products sold by the firm during the consent order period. Purchases of deregulated products, *i.e.*, products that were no longer covered by the Mandatory Petroleum Price and Allocation Regulations, cannot be used in the calculation of an applicant's potential refund amount. Below is a list of products sold by Martinoil and the dates on which they were deregulated:

Product	Deregulation date
Diesel Fuel, Kerosene	7/1/76
Napthas, Lubricants	9/1/76
Motor Gasoline, L.P. Gas	1/28/81

[4] Only claims for at least $15 in principal will be processed. This minimum has been adopted because the cost of processing claims for refunds of less than $15 outweighs the benefits of restitution in those situations. *See, e.g.*, *Urban Oil Co.*, 9 DOE at 85,225. *See also* 10 CFR 205.286(b).

[5] Based on national average profit margin data for resellers and retailers and our experience in past proceedings, we presumed that resellers and retailers were injured by 40 percent of the alleged overcharges incurred in their purchases. Gulf II at 88,737.

will be allowed to apply to refunds using a mid-level presumption of injury.[6]

In the PD&O we also proposed adopting presumptions that spot purchasers of Martinoil covered products and those selling Martinoil covered products on consignment were not injured by the alleged overcharges. Citing *Tresler Oil Company/Swifty Oil Company*, 16 DOE ¶ 85,659 (1987) (*Tresler*), Energy Refunds suggests that we allow spot purchasers to receive 20% of their full volumetric shares without demonstrating injury. There is nothing in *Tresler*, however, to support such a suggestion,[7] and Energy Refunds has not provided any other reasoning that would support its suggestion regarding spot purchasers. Consequently, we will adopt the presumption of non-injury for spot purchasers outlined in the PD&O.

Similarly, citing *Gulf II*, Energy Refunds suggests that we allow Martinoil consignees to receive 10 percent of their full volumetric shares without demonstrating injury. We explicitly stated in *Gulf II*, however, that the decision to adopt a 10 percent injury level presumption for consignees was based solely on our previous experience in Gulf refund proceedings. *Gulf II* at 88,739. There is no basis for assuming that the factual body underlying the consignee presumption in *Gulf II* is applicable to this case. Consequently, we will not adopt Energy Refunds' suggestion with regard to consignees. Each injury presumption that we will adopt in this proceeding is outlined below, along with the rationale underlying its use.

a. *End Users.* In accordance with prior Subpart V proceedings, we will presume that end-users, *i.e.*, ultimate consumers, of Martinoil covered petroleum products whose businesses are unrelated to the petroleum industry were injured by Martinoil's alleged overcharges. Unlike regulated firms in the petroleum industry, members of this group generally were not subject to price controls during the consent order period, and were not required to keep records which justified selling price increases by reference to cost increases. Consequently, analysis of the impact of the alleged overcharges on the final prices of goods and services produced by members of this group would be beyond the scope of a special refund proceeding. *See Marion Corporation*, 12 DOE ¶ 85,014 (1984) and cases cited therein. Therefore, end users need only document their purchase volumes of Martinoil covered products to show that they were injured by the alleged overcharges.

b. *Regulated Firms and Cooperatives.* Public utilities, agricultural cooperatives, and other firms whose prices are regulated by government agencies or cooperative agreements do not have to submit detailed proof of injury. Such firms would have routinely passed through price increases to their customers. Likewise, their customers would share the benefits of cost decreases resulting from refunds. *See e.g. Office of Special Counsel*, 9 DOE ¶ 82,538 (1982) (*Tenneco*); *Office of Special Counsel, 9 DOE ¶ 82,545 at 85,244 (1982) (Pennzoil)*. Such firms applying for refunds should certify that they will pass through any refund received to their customers and should explain how they will alert the appropriate regulatory body or membership group to monies received. Purchases by cooperatives that were subsequently resold to nonmembers will not be covered by this presumption.

c. *Reseller and Retailer Small Claims.* Resellers and retailers of Martinoil covered products claiming refunds of $5,000 or less, excluding accrued interest, are presumed to have been injured by Martinoil's alleged overcharges. Without this presumption, such an applicant would have to gather and analyze records dating as far back as 1973 to gather proof that it absorbed the alleged overcharges. The cost to the applicant of gathering this information, and to OHA of analyzing it, could exceed the actual refund amount. Under this presumption, a small claimant must only document the volume of Martinoil covered products that it purchased in order to demonstrate injury. *See Texas Oil & Gas Corp.*, 12 DOE ¶ 85,069 at 88,210 (1984). Resellers and retailers of Martinoil's covered products that are seeking full volumetric refunds in excess of $5,000 must follow the non-presumption procedures outlined below in Section 2.

d. *Reseller and Retailer Mid-Level Claims.* Resellers and retailers whose full volumetric shares of the Martinoil consent order funds exceed $12,501 may elect to receive 40 percent of their full volumetric shares up to $50,000, without providing detailed demonstrations of injury.[8] As we indicated above, *see supra* note 5, this option is based on the presumption that resellers and retailers absorbed 40 percent of Martinoil's alleged overcharges. Resellers and retailers that wish to receive refunds in excess of $50,000 must follow the non-presumption procedures outlined below in Section 2.

e. *Spot Purchasers.* Resellers and retailers that were spot purchasers of covered products from Martinoil, *i.e.*, made only sporadic, discretionary purchases, are presumed not to have been injured by Martinoil's pricing practices, and therefore generally will not be eligible for refunds. The basis for this presumption is that spot purchasers tended to have considerable discretion as to where and when to make purchases and therefore would not have made purchases unless they were able to pass through the full amount of their purchase price to their customers. *See Vickers* at 85,396–97. The spot purchaser presumption, however, is rebuttable. In past refund proceedings, we have waived the presumption of non-injury for spot purchasers that demonstrated that (i) they did not have discretion in making the spot purchasers; and (ii) they were forced by market conditions to resell the product at a loss that was not subsequently recouped. If a spot purchaser is able to rebut the non-injury presumption, its application will be evaluated according to the standards applicable to the refund claims of all other resellers and retailers. *See, e.g., Saber Energy, Inc./Mobil Oil Corp.*, 14 DOE ¶ 85,170 (1986).

f. *Consignees.* Finally, as in previous cases, we will presume that consignees of Martinoil covered products were not injured by Martinoil's alleged pricing violations. *See, e.g., Jay Oil Company*, 16 DOE ¶ 85,147 (1987). A consignee agent is an entity that sold products pursuant to an agreement wherby its supplier established the prices to be charged by the consignee and compensated the consignee with a fixed commission based upon the volume of products sold.

---

[6] Citing Getty Oil Company, 15 DOE ¶ 85,064 (1986) (Getty). Energy Refunds also suggests that when calculating refund amounts under the mid-level presumption, we adopt a variety of absorption fractions for the different products sold by Martinoil, *i.e.*, 40% for motor gasoline, 50% for middle distillates, and 60% for L.P. gas. The different absorption fractions that we adopted in Getty, however, were based strictly on Getty's pricing data. Getty at 88,117. They are not relevant to the present proceeding. In addition, the use of a single average absorption fraction simplifies the refund procedures for the benefit of both the claimants and the DOE. Therefore, we will not adopt Energy Refunds' suggestion in this regard.

[7] In Tresler, the applicant was granted a refund on its purchases that were made under a long-term contract with the consent order firm, but was denied a refund on its spot purchases.

[8] A reseller or retailer whose full volumetric share is $12,501 or less could receive a larger refund under the small claims presumption than under the 40-cent mid-level injury presumption.

Large resellers and retailers, *i.e.*, those whose full volumetric shares exceed $125,001 may elect to limit their claims to $50,000 and thereby qualify for a refund under the mid-level injury presumption.

A consignee may rebut this presumption of non-injury by showing that its sales volumes and corresponding commission revenues declined due to the alleged uncompetitiveness of Martinoil's pricing practices. *See Gulf Oil Corporation/C.F. Canter Oil Co.*, 13 DOE ¶85,388 at 88,962 (1986).

2. *Non-Presumption Demonstration of Injury.* A reseller or retailer with a full volumetric share in excess of $5,000 that does not elect to receive a refund under either the small claims presumption or the 40-percent mid-level presumption will be required to document its injury. There are two aspects to such a demonstration. First, a firm is generally required to provide a monthly schedule of its banks of unrecouped increased product costs for each covered product that it purchased from Martinoil during the consent order period. Cost banks for a product should cover the period November 1, 1973, through the product's price decontrol date.[9] If a firm no longer has records of contemporaneously calculated cost banks for a particular product, it may approximate those banks by submitting the following information regarding its purchases of that product from all of its suppliers:

(1) The weighted average gross profit margin that the firm received for the product on May 15, 1973;

(2) a monthly schedule of the weighted average gross profit margins that it received for the product during the period, November 1, 1973, through the products' price decontrol date; and

(3) a monthly schedule of the firm's sales of the product during the period November 1, 1973, through the product's price decontrol date.[10]

Demonstrating the existence of banks of unrecouped increased product costs that exceed an applicant's potential refund amount is only the first part of a demonstration of injury. A firm must also show that market conditions forced it to absorb the alleged overcharges. Generally, we will infer this to be true if the prices the applicant paid Martinoil were higher than average market prices for the same level of distribution.[11]

Accordingly, a claimant attempting to demonstrate injury should submit a monthly schedule of the weighted average prices that it paid Martinoil for each covered product that it purchased between August 20, 1973, and the product's price decontrol date. *See supra* note 3.

If a firm provides the above-mentioned cost bank and price data and subsequent analysis by this office shows that the firm is entitled to a smaller refund than it would have received under the small or mid-level claims presumptions, the firm cannot elect to received a refund using either of those injury presumptions. If our analysis shows that the firm was not injured by any of its purchase, the firm will not be eligible to receive any refund.

III. Applications for Refund

We will now accept Applications for Refund from purchasers of covered products sold by Martinoil during the period August 20, 1973, through January 27, 981. All Applications for Refund must contain the following information:

(1) A conspicuous reference to the "Martinoil Refund Proceeding—Case No. HEF-0124", the applicant's present name and address, and the name and address of the applicant during the consent order period;

(2) The name, title, and telephone number of a person who may be contacted for additional information concerning the application;

(3) An explanation of how the claimant used the Martinoil products, *i.e.*, whether the applicant was a reseller, retailer, consignee, end user, public ulility, cooperative, etc.;

(4) For each covered product, a monthly schedule of the number of gallons that it purchased from Martinoil during the August 20, 1973 through January 27, 1981 consent order period.[12] If a claimant was an indirect purchaser of Martinoil covered products, it must also submit the name of its immediate supplier and indicate why it believes the products were originally sold by Martinoil;

(5) All relevant material necessary to support its claim in accordance with the injury presumptions and requirements outlined above in Section II, Part B;

(6) If the applicant was or is in any way affiliated with Martinoil, an explanation of the nature of that affiliation;

(7) A statement as to whether there was a change in ownership of the applicant's firm during or since the consent order period. If there was such a change, the applicant must submit a detailed explanation of the transaction, as well as provide the names and addresses of the previous or subsequent owners;

(8) A statement as to whether the claimant is or has been involved in any DOE enforcement proceedings or private actions filed under section 210 of the Economic Stabilization Act. If these actions have been concluded, the applicant should furnish a copy of any final order issued in the matter. If the action is still in progress, the applicant should briefly describe the action and its current status. The applicant must inform OHA of any change in status while its Application for Refund is pending. *See* 10 CFR 205.9(d);

(9) A statement as to whether the applicant has received a refund, from any source, for the alleged overcharges identified in the ERA audits underlying this proceeding;

(10) A statement as to whether the applicant or a related firm has filed any other Application for Refunds in this proceeding;

(11) A statement as to whether the claimant or a related firm has authorized any other firm or individual(s) to file an Application for Refund on the claimant's behalf in the Martinoil proceeding; and

(12) The following statement signed by the applicant or a responsible official of the business or organization claiming the refund: "I swear [or affirm] that the information submitted is true and accurate to the best of my knowledge and belief." *See* 10 CFR 205.283(c).

All Applications for Refund should be sent to: Martinoil Refund Proceeding, Case No. HEF-0124, Office of Hearings and Appeals, Department of Energy, 1000 Independence Avenue SW., Washington, DC 20585.

Each claimant must file *two copies* of its Application for Refund within 90 days of the date this Decision and Order is published in the **Federal Register**. A copy of each application will be available for public inspection in the Public Reference Room of the Office of Hearings and Appeals. Any claimant that believes that its Application for Refund contains confidential information must submit two additional copies of the application from which the confidential information has been deleted, together with a statement

---

[9] Retailers and resellers of motor gasoline were required to maintain cost banks only until July 15, 1979 and April 30, 1980, respectively. Therefore, in showing injury with respect to their purchases of motor gasoline, such claimants will not be required to submit cost bank materials up to the January 28, 1981 decontrol date of motor gasoline.

[10] For motor gasoline, retailers and resellers have to submit the information detailed in Parts (2) and (3) only through July 15, 1979 and April 30, 1980, respectively. *See supra* note 9.

[11] We generally obtain average market price information from Platt's Oil Price Handbook and Oilmanac (Platt's). If price data for a particular product is not available in Platt's, the burden of supplying alternative information will be on the claimant.

[12] Because we will not process claims for less than $15 in principal, *see supra* note 4, an applicant must have purchased at least 19,973 gallons of covered products from Martinoil during the consent order period in order for us to consider its application.

If an applicant submits estimated purchase volume figures, it must provide a detailed explanation of how it derived the estimates.

specifying why the information is confidential.

It Is Therefore Ordered That:

(1) Applications for Refund from the funds remitted to the Department of Energy by Martinoil Company pursuant to the Consent Order executed on August 8, 1983, may now be filed.

(2) All applications must be filed no later than 90 days after publication of this Decision and Order in the **Federal Register**.

Thomas O. Mann, for George B. Breznay
Director, Office of Hearings and Appeals.

Date: March 25, 1988.

Appendix

Martinoil Company, Case No.: HEF-0124

First Purchasers

A.C. Petroleum
Ace Service
Ahwahnee Hill School
Alles Brothers
Allstate Charter
American Bridge
Anderson, Chester
Armor Transport
B & C Ranches
Bennett Tank
Bervan Rug
Bill's ARCO
Blands ARCO
Broadview Co-op
Broth, Vera
Brown, Clayton
Cal Gas
California Fresno Oil
Cardwell, Bob
Cardwell, Herk
Cardwell, Jack
Carnation Company
Castro, Dave
Central Union School
Cerini Truck
Cleveland & D ARCO
Clovis ARCO
Collins, Joe
Consolidated Freight
Davis & Hughey
Eastman, H.B.
El Camino Construction
Ellis, Wilbur
Elm & Church ARCO
Elm & Manning ARCO
F & B Heinrick
Finch, Jim
Fleming Transportation
Frank's ARCO
Fresno Community Hospital
Fresno Meat Pack
Furr Caruther ARCO
Gentry Farms
Georgeson, Arlan
Georgeson, C.E.
Geogeson, Marvin
Georgia Pacific
Goodman Tractor
Gordon Brothers
Grange Company
Guisti Farms
Hardy, Bob
Hardy, Leroy
Horn, Fred
J & D Trucking
Jan Win Farms
J.E. O'Neill Ranch
Jensen Pilegard
Joe's ARCO Chowchilla
Kerman Co-op
Kings Canyon ARCO
Kromberg Brothers
Lamona Service
Lawson, Bill
Lawson, John
Madron & Son
Mailovich, Mark
Manchini Brothers
Modern Welding
Montecito Turkey Farms
Newhall Land & Cattle Co.
Newhall Land and Farming
Noble Land
Norlake Turkey Farms
O'Neill Truck Stop
Pellet, Morse
Perry's ARCO
Peterson Travers ARCO
Porras, Pete
Rathman, Robert
Rau Dairy
Red Triangle
River Farms
S & J Ranch
St. Agnes Hospital
San Joaquin Bakery
Schaad, Steve
Shaver Lake Garage
Smith Tank Service
Stake, Carley
Swift & Co.
Tutunjian, Harry
United Vintgers
Valley Kenworth
Von Flue Brothers
Walts Truck Stop
Weldon, F.M.
Western Grain and Milling
Westside Farmers
Whirlwind Car Wash
W.N. Trucking Zachy Farms

[FR Doc. 88-7321 Filed 4-1-88; 8:45 am]

BILLING CODE 6450-01-M

Implementation of Special Refund Procedures

AGENCY: Office of Hearings and Appeals, DOE.

ACTION: Notice of implementation of special refund procedures.

SUMMARY: The Office of Hearings and Appeals of the Department of Energy solicits comments concerning the appropriate procedures to be followed in refunding to adversely affected parties $925,000, plus accrued interest, obtained through a Consent Order between DOE and Empire Gas Corporation, a reseller/retailer of refined petroleum products located in Lebanon, MO. The money is being held in escrow following the settlement of enforcement proceedings brought by the DOE's Economic Regulatory Administration.

DATE AND ADDRESS: Comments must be filed within 30 days of publication of this notice in the **Federal Register** and should be addressed to the Office of Hearings and Appeals, Department of Energy, 1000 Independence Avenue SW., Washington, DC 20585. All comments should conspicuously display a reference to case number KEF-0048.

FOR FURTHER INFORMATION CONTACT: Matthew Paul, Office of Hearings and Appeals, Department of Energy, 1000 Independence Avenue SW., Washington, DC 20585, (202) 586-6602.

SUPPLEMENTARY INFORMATION: In accordance with § 205.282(b) of the procedural regulations of the Department of Energy (DOE), notice is hereby given of the issuance of the Proposed Decision and Order set out below. The Proposed Decision sets forth procedures and standards that the DOE has tentatively formulated to distribute to adversely affected parties $925,000, plus accrued interest, obtained by the DOE through a Consent Order with Empire Gas Corporation (Empire). The funds were provided to the DOE by Empire in order to settle all claims and disputes between the firm and the DOE regarding the firm's adherence to Federal price regulations for refined petroleum products during the period August 19, 1973, through January 31, 1981 (the consent order period).

The Office of Hearings and Appeals proposes that the funds should be distributed to purchasers of the Empire's refined products during the consent order period. In order to obtain a portion of the funds, a claimant must submit a schedule of its monthly purchases from Empire and demonstrate that it was injured by the alleged violations. The specific requirements for demonstrating injury are set forth in the following Proposed Decision and Order. Any residual funds will be distributed in accordance with the provisions of the Petroleum Overcharge Distribution and Restitution Act of 1986, Pub. L. No. 99-509, Title III. *See* 51 FR 43964 (December 5, 1986). Applications for Refund should not be filed at this time. Appropriate public notice will be given when the submission of claims is authorized.

Any member of the public may submit written comments regarding the

proposed refund procedures. Such parties are requested to submit two copies of their comments. Comments should be submitted within 30 days of publication of this notice. All comments received in this proceeding will be available for public inspection between 1:00 and 5:00 p.m., Monday through Friday, except federal holidays, in the Public Reference Room of the Office of Hearings and Appeals, located in Room 1E-234, 1000 Independence Avenue SW., Washington, DC 20585.

Dated: March 25, 1988.

Thomas O. Mann,

Acting Director, Office of Hearings and Appeals.

March 25, 1988.

Proposed Decision and Order of the Department of Energy

Implementation of Special Refund Procedures

Name of Firm: Empire Gas Corporation.

Date of Filing: August 5, 1986.

Case Number: KEF-0048.

Under the procedural regulations of the Department of Energy (DOE), the Economic Regulatory Administration (ERA) may request the Office of Hearings and Appeals (OHA) to formulate and implement procedures for the distribution of funds obtained by the DOE as a result of the agency's enforcement of the Mandatory Petroleum Price and Allocation Regulations. *See* 10 C.F.R. Part 205, Subpart V. Pursuant to the provisions of Subpart V, on June 10, 1987, the ERA filed a Petition for the Implementation of Special Refund Procedures to distribute funds received from Empire Gas Corporation (Empire) under the terms of a January 6, 1986 Consent Order with Empire. In its Petition, the ERA requests that the OHA establish special procedures to make refunds in order to remedy the effects of the alleged regulatory violations that were settled in the Empire Consent Order.

I. Background

Empire purchased and resold refined petroleum products during the period of federal price controls. The firm was therefore subject to the Mandatory Petroleum Price and Allocation Regulations set forth at 6 CFR Part 150 and 10 CFR Parts 210, 211, and 212. During the period of price controls, the ERA conducted an extensive audit of Empire's operations and, as a result of the audit, alleged that Empire had violated certain of the DOE's price and allocation regulations in its sales of refined petroleum products. Settlement discussions were held, and on January 6, 1986, the ERA and Empire finalized a Consent Order (Consent Order No. 720T000521) that resolved issues pertaining to Empire's refined petroleum product operations during the period August 19, 1973 through January 27, 1981 (the consent order period). Pursuant to the terms of the Consent Order, Empire remitted a total of $943,238.60 (the consent order fund [1] to the DOE for distribution through Subpart V. These funds are being held in an interest-bearing escrow account maintained at the Department of the Treasury, pending a determination regarding their proper distribution. As of January 31, 1988, the amount in the Empire consent order escrow account, with interest, had grown to $1,055,162.64.

II. Jurisdiction and Authority

The Subpart V regulations set forth general guidelines which may be used by the OHA in formulating and implementing a plan of distribution of funds received as a result of enforcement proceedings. The DOE policy is to use the Subpart V process to distribute such funds. For a more detailed discussion of Subpart V and the authority of the OHA to fashion procedures to distribute refunds, *see Office of Enforcement*, 9 DOE ¶ 82,508 (1981), and *Office of Enforcement*, 8 DOE ¶ 82,597 (1981).

We have considered the ERA's petition that we implement a Subpart V proceeding with respect to the Empire consent order fund and have determined that such a proceeding is appropriate. This Proposed Decision and Order sets forth the OHA's tentative plan to distribute these funds. Comments are solicited.

III. Proposed Refund Procedures

We propose to implement a two-stage refund process by which firms and individuals who purchased Empire refined petroleum products during the consent order period may submit Applications for Refund in the initial stage. From our experience with Subpart V proceedings, we expect that potential applicants will fall into the following categories of Empire refined product purchasers: (i) end-users, i.e. ultimate consumers; (ii) regulated entities, such as public utilities or cooperatives; and (iii) retailers, resellers, and refiners that resold Empire products.

In order to receive a refund, each claimant will be required to submit a schedule of its montly purchases of Empire refined petroleum products during the consent order period. If the product was not purchased directlly from Empire, the claimant must provide a statement setting forth its reasons for maintaining that the product originated with Empire.

In addition, a refiner, reseller, or retailer claimant, except one who chooses to utilize the injury presumptions set forth below, will be required to make a detailed showing that it was injured by the alleged overcharges. This showing will generally consist of two distinct elements. First, a claimant will be required to show that it maintained "banks" of unrecouped increased product costs (banked costs) in excess of the refund claimed.[2] Second, because a showing of banked costs alone is not sufficient to establish injury, a claimant must provide evidence that market conditions precluded it from increasing its prices to pass through the additional costs associated with the alleged overcharges. *See National Helium Corp./Atlantic Richfield Co.*, 11 DOE ¶ 85,257 (1984), *aff'd sub nom Atlantic Richfield Co. v. DOE*, 618 F. Supp. 1199 (D. Del. 1985). Such a showing could consist of a demonstration that the firm suffered a competitive disadvantage as a result of its purchases from Empire. *Id.; see also Sid Richardson Carbon and Gasoline Company and Richardson Products Company/Shupbach and Streitmatter Gas Company*, 14 DOE ¶ 85,186 (1986).

1. *Presumptions For Refund Claims.* Our experience also indicates that the use of certain presumptions permits claimants to participate in the refund process without incurring inordinate expense, and ensures that refund claims are evaluated in the most efficient manner possibile. *See, e.g., Marathon Petroleum Company*, 14 DOE ¶ 85,269 (1986) (*Marathon*). Presumptions in refund cases are specifically authorized by the applicable DOE procedureal regulations at 10 CFR 205.282(e). Accordingly, we propose to adopt the presumptions set forth below.

First, we will adopt a presumption that the alleged overcharges were dispersed equally in all of Empire's sales of refined petroleum products during the

[1] This figure consists of the principal consent order amount of $925,000 plus interest which accrued prior to Empire's payment to the DOE. For accounting purposes, the interest remitted by Empire shall be considered as additional principal. Upon completion of payment, the consent order fund equalled $943,238.60.

[2] Claimants who have previously relied upon their banked costs in order to be eligible to receive refunds in other special refund proceedings should subtract those refunds from the cumulative banked costs submitted in this proceeding. *See* Husky Oil Co./Metro Oil Products, Inc., 16 DOE ¶ 85,090 at 88,179 (1987).

consent order period. In accordance with this presumption, refunds are to be made on a pro-rata or volumetric basis. In the absence of better information, a volumetric refund approach is appropriate because the DOE price regulations generally required a regulated firm to account for increased costs on a firm-wide basis in determining its prices.

Under the volumetric approach, a claimant's allocable share of the consent order fund is equal to the number of gallons purchased times the per gallon refund amount (plus an appropriate share of the interest which has accrued on the Empire consent order fund).[3] In the present case, the per gallon refund amount is $0.00134. We derived this figure by dividing the consent order funds ($943,238.60) by the approximate number of gallons of refined products subject to price and allocation controls sold by Empire during the consent order period (703,917,847 gallons). As in previous cases, we will establish a minimum refund amount of $15.00. The administrative costs of processing claims for amounts less than $15.00 outweigh the benefits of restitution in those instances. *See, e.g., Mobil Oil Corp.*, 13 DOE ¶ 85,339 (1985).[4]

a. *End-users.* In accordance with prior Subpart V proceedings, we propose to adopt the presumption that an end-user or ultimate consumer of Empire regulated products whose business is unrelated to the petroleum industry was injured by the alleged overcharges settled by the Consent Order. *See, e.g., Texas Oil and Gas Corp.*, 12 DOE ¶ 85,069 at 88,209 (1984) (*TOGCO*). Unlike regulated firms in the petroleum industry, members of this group generally were not subject to price controls during the consent order period, and were not required to keep records which justified selling price increases by reference to cost increases. Consequently, analysis of the impact of the alleged overcharges on the final prices of goods and services produced by members of this group would be beyond the scope of a special refund proceeding. *Id.* We therefore propose that end-users of Empire refined products need only document their purchase volumes from Empire during the consent order period in order to make the requisite showing that they were injured by the alleged overcharges.

b. *Regulated Firms and Cooperatives.* We further propose that, in order to receive a full volumetric refund, a claimant whose prices for goods and services are regulated by a governmental agency, e.g., a public utility, or by the terms of a cooperative agreement, need only submit documentation of purchase volumes used by itself or, in the case of a cooperative, sold to its members.[5] A regulated firm or cooperative, however, will also be required to certify that it will: (i) pass through any refund received to its customers or member-customers; (ii) provide us with a full explanation of how it plans to accomplish the restitution; and (iii) certify that it will notify the appropriate regulatory body or membership group of its receipt of the refund. *See Marathon*, 14 DOE at 88,515; *Office of Special Counsel*, (DOE ¶ 82,538 at 85,203 (1982). The latter requirement assumes that a regulated firm or cooperative would have passed on any overcharges to its customers or member-customers through automatic rate adjustment mechnanisms or the terms of a cooperative agreement. Thus, any refunds received by a regulated firm or cooperative should also be passed through to its customers or customer-members. Because we require these firms to pass refunds through to their customers or customer-members on a dollar-for-dollar basis, we do not require them to make a detailed demonstration of injury.

c. *Refiners, Resellers, and Retailers Seeking Refunds of $5,000 or Less.* We propose to adopt a small claims presumption under which a refiner, reseller, or retailer seeking a refund of $5,000 or less, exclusive of interest, will not be required to submit evidence of injury.[6] These applicants would only be required to document the volume of Empire covered products they purchased during the consent order period. *See TOGCO*, at 88,207. As we have noted in numerous prior proceedings, considerable expense may be involved in gathering the types of data necessary to support a detailed claim of injury. In some cases, that expense might exceed a refund of $5,000 or less. Consequently, without simplified application procedures for small claims, many injured parties would effectively be denied an opportunity to obtain a refund. Furthermore, use of the small claims presumption allows the OHA to process a large number of routine refund claims in an efficient manner.[7]

d. *Reseller and Retailer Mid-Level Presumption.* We also propose to adopt the mid-level presumption which allows resellers and retailers of Empire refined products to receive 40 percent of their full volumetric shares up to $50,000, without making detailed demonstrations of injury.[8] *See Gulf Oil Corporation*, 16 DOE ¶ 85,381 (1987) (*Gulf II*). As we stated in *Gulf II*, this option is based on the presumption that resellers and retailers absorbed 40 percent of Empire's alleged overcharges.[9] By reducing the costs incurred by claimants participating in the refund process and easing administrative burdens, the mid-level presumption has advanced OHA's restitutionary duty in prior Subpart V proceedings. Accordingly, we plan to adopt this presumption in the Empire refund proceeding as well. Resellers and retailers that wish to receive refund in excess of $50,000 must follow the non-presumption procedures outlined above in Section III.

e. *Spot Purchasers.* We proposes to adopt a rebuttable presumption that a refiner, reseller or retailer that made

[3] Because we realize that the impact on an individual claimant may have been greater than the volumetric amount, we will allow any purchaser to file a refund application based upon a claim that an allocation on the basis of a specifically alleged overcharge amount should be used in considering its refund application. *See, e.g.*, Standard Oil Co. (Indiana)/Army and Air Force Exchange Service, 12 DOE § 85,015 (1984).

[4] Applicants claiming volumetric refunds must have purchased at least 10,829 gallons of refined products from Empire during the consent order period to be eligible for a refund.

[5] A cooperative's sales to non-members will be treated in the same manner as sales by other resellers. *See* Marathon, 14 DOE at 88,515.

[6] In order to qualify for a refund under the small claims presumption, a refiner, reseller or retailer must have purchased less than 3,731,343 gallons of Empire refined petroleum products during the consent order period.

[7] Under these proposed procedures, claimants who attempt to make a detailed showing of injury in order to support a refund claim but, instead, provide evidence that leads us to conclude that they passed through all of the alleged overcharges or are eligible for a refund of less than $5,000, will not be entitled to a $5,000 small claims presumption refund. Such claimant, however, will be eligible to receive a refund for the amount of injury that they demonstrate. *See* Union Texas Petroleum Corp./Arrow Enterprises, Inc., 15 DOE ¶ 85,067 (1986); Quaker State Oil Refining Corp./Campbell Oil Col., 15 DOE ¶ 85,069 (1986).

[8] A reseller or retailer whose full volumetric share is $12,501, or less could receive a larger refund under the small claims presumption than under the 40-percent mid-level injury presumption. Large resellers and retailers, *i.e.*, those whose full volumetric shares exceed $125,001 may elect to limit their claims to $50,000 and thereby qualify for a refund under the mid-level injury presumption. Resellers or retailers who elect to demonstrate injury will not be eligible for a mid-level presumption refund in the event that their demonstration of injury indicates that they were not injured or were injured by an amount less than 40 percent of their volumetric share. *See, supra*, note 6.

[9] National average profit margin data for resellers and retailers and our experience in past proceedings indicates that resellers and retailers were injured by 40 percent of the alleged overcharges incurred in their purchases. *Gulf II* at 88,737.

only spot purchasers from Empire did not suffer injury as a result of those purchases. Spot purchasers generally had considerable discretion as to the timing and market in which they made their purchases, and therefore would not have made spot market purchases from a firm at increased prices unless they were able to pass through the full amount of the film's selling price to their own customers. *See Office of Enforcement*, 8 DOE ¶ 82,597 at 85,396–97 (1981). Accordingly, a spot purchaser claimant must submit specific and detailed evidence to rebut the spot purchaser presumption and to establish the extent to which it was injured as a result of its spot purchases from Empire.[10]

f. *Consignees.* A consignee agent is a firm that distributed covered products pursuant to a contractual agreement with a refiner, under which the refiner retained title to the products, specified the price to be paid by the purchaser and paid the consignee a commission based upon the volume of covered products it distributed. 10 CFR 212.31 (definition of "consignee agent"). As in previous decisions, we propose to adopt the rebuttable presumption that consignees of Empire refined petroleum products were not injured as a result of their arrangement with their refiner/supplier. *See, e.g., Jay Oil Company*, 16 DOE ¶ 85,147 (1987). A consignee, however, may rebut this presumption of non-injury by establishing that "[its] sales volumes, and [its] corresponding commission revenues, declined due to the alleged uncompetitiveness of [the consent order firm's] practices. *See Gulf Oil Corp./C.F. Canter Oil Co.*, 13 DOE ¶ 85,388 at 88,962 (1986).

2. *Allocation Claims.* We may also receive claims based upon Empire's alleged failure to furnish petroleum products that it was obliged to supply under the DOE allocation regulations. *See* 10 CFR Part 211. Any such applications will be evaluated with reference to the standards set forth in cases such as *Amoco*, 10 DOE at 88,220, and *OKC Corp./Town & Country Markets, Inc.*, 12 DOE ¶ 85,094 (1984). These standards generally require an allocation claimant to demonstrate the existence of a supplier/purchaser relationship with the consent order firm and the likelihood that the consent order firm failed to furnish petroleum products that it was obliged to supply to the claimant under 10 CFR Part 211. In addition, the claimant should provide evidence that it has contemporaneously notified the DOE or otherwise sought redress from the alleged allocation violation. Finally, the claimant must establish that it was injured and document the extent of the injury.

3. *Distribution of Product Funds Remaining after First Stage.* We propose that any refined product funds that remain after all first stage claims have been decided be distributed in accordance with the provisions of the Petroleum Overcharge Distribution and Restitution Act of 1986 (PODRA), Pub. L. 99–509, Title III. *See* Fed. Energy Guidelines ¶ 11,702 et seq. PODRA requires that the Secretary of Energy determine annually the amount of oil overcharge funds that will not be required to refund monies to injured parties in Subpart V proceedings and make those funds available to state governments for use in four energy conservation programs. PODRA, Sections 3003(c) and (d). PODRA delegated these responsibilities to the OHA, and any refined product pool funds in the Empire consent order escrow account that the OHA determines will not be needed to effect direct restitution to injured Empire customers will be distributed in accordance with the provisions of PODRA.

IV. Applications for Refund

Applications or Refund should not be filed at this time. Detailed procedures for filing Applications will be provided in a final Decision and Order. Before disposing of any of the funds received as a result of the Empire consent order, we intend to publicize the distribution process in order to solicit comments on all aspects of the foregoing Proposed Decision and Order from interested parties. All comments must be filed within 30 days of the publication of this Proposed Decision in the **Federal Register**.

It Is Therefore Ordered That:

The refund amount remitted to the Department of Energy by Empire Gas Company pursuant to Consent Order No. 720T00521, finalized on January 6, 1986, will be distributed in accordance with the foregoing Decision.

[FR Doc. 88–7322 Filed 4–1–88; 8:45 am]

BILLING CODE 6450–01–M

[10] In prior proceedings we have stated that refunds will be approved for spot purchasers who demonstrate that (i) they made the spot purchases for the purpose of ensuring a supply for their base period customers rather than in anticipation of financial advantage as a result of those purchases, and (ii) they were forced by market conditions to resell the product at a loss that was not subsequently recouped. *See* Quaker State Oil Refining Corp./Certified Gasoline Co., 14 DOE ¶ 85,465 (1986).

FEDERAL COMMUNICATIONS COMMISSION

Public Information Collection Requirements Submitted to the Office of Management and Budget for Review

March 23, 1988.

The Federal Communications Commission has submitted the following information collection requirements to OMB for review and clearance under the Paperwork Reduction Act of 1980, 44 U.S.C. 3507.

Copies of these submissions may be purchased from the Commission's duplicating contractor, International Transcription Service, 2100 M Street, NW., Suite 140, Washington, DC 20037, or telephone (202) 857–3815. Persons wishing to comment on an information collection should contact J. Timothy Sprehe, Office of Management and Budget, Room 3235 NEOB, Washington, DC 20503, telephone (202) 395–4814. Copies of these comments should also be sent to the Commission. For further information contact Doris Benz, Federal Communications Commission, telephone (202) 632–7513.

OMB No.: 3060–0066
Title: Application for Renewal of Instructional Television Fixed Station and/or Response Station(s) and Low Power Relay Station(s) License
Form No.: FCC 330–R
Action: Extension
Respondents: State or local governments, Non-profit institutions
Frequency of Response: Every 10 years
Estimated Annual Burden: 40 Responses; 100 Hours
Needs and Uses: Used by licensees to file for renewal of their licenses. The Data are used to ensure that the licensee continues to meet basic statutory requirements, and compliance with Commission policies and rules.

OMB No.: 3060–0110
Title: Application for Renewal of License for Commercial and Noncommercial AM, FM or TV Broadcast Station
Form No.: FCC 303–S
Action: Revision
Respondents: Business (including small business)
Frequency of Response: Every 5 years for TV; every 7 years for radio
Estimated Annual Burden: 1,732 Responses; 866 Hours
Needs and Uses: Filing is required by licensees for renewal of license. The data are used to ensure that all documents required for renewal have been filed, and that the licensee

continues to meet basic statutory requirements.

Federal Communications Commission.

H. Walker Feaster III,

Acting Secretary.

[FR Doc. 88-7250 Filed 4-1-88; 8:45 am]

BILLING CODE 6712-01-M

[Report No. 1717]

Petitions for Reconsideration and Clarification of Actions in Rulemaking Proceedings

March 16, 1988.

Petitions for reconsideration and clarification have been filed in the Commission rule making proceeding listed in this Public Notice and published pursuant to 47 CFR 1.429(e). The full text of these documents are available for viewing and copying in Room 239, 1919 M Street, NW., Washington, DC, or may be purchased from the Commission's copy contractor, International Transcription Service (202-857-3800). Oppositions to these petitions must be filed on or before April 20, 1988. § 1.4(b)(1) of the Commission's rules (47 CFR 1.4(b)(1)). Replies to an opposition must be filed within 10 days after the time for filing oppositions has expired.

Subject: Inquiry into Policies to be Followed in the Authorization of Common Carrier Facilities to Meet Caribbean Region Telecommunications Needs During the 1985-1995 Period. (CC Docket No. 83-525)

Number of petitions received: 1.

Subject: Basic Exchange Telecommunications Radio Service. (CC Docket No. 86-495, RM-5442)

Number of petitions received: 2.

Federal Communications Commission.

H. Walker Feaster II,

Acting Secretary.

[FR Doc. 88-7249 Filed 4-1-88; 8:45 am]

BILLING CODE 6712-01-M

Application for Consolidated Hearing; Blair Broadcasting Corp. and Grinnell Broadcasting Co., Inc.

1. The Commission has before it the following mutually exclusive applications for a new FM station:

Applicants, city and State	File No.	MM Docket No.
A. Blair Broadcasting Corporation; Grinnell, IA.	BPH-861114MA	88-102
B. Grinnell Broadcasting Co., Inc.; Grinnell, IA.	BPH-861126MO	

2. Pursuant to section 309(e) of the Communications Act of 1934, as amended, the above applications have been designated for hearing in a consolidated proceeding upon the issues whose headings are set forth below. The text of each of these issues has been standardized and is set forth in its entirety under the corresponding headings at 51 FR 19347, May 29, 1986. The letter shown before each applicant's name, above, is used below to signify whether the issue in question applies to that particular applicant.

Issue Heading and Applicant(s)

1. Comparative, all
2. Ultimate, all

3. If there is any nonstandardized issue(s) in this proceeding, the full text of the issue and the applicant(s) to which it applies are set forth in an Appendix to this Notice. A copy of the complete HDO in this proceeding is available for inspection and copying during normal business hours in the FCC Dockets Branch (Room 230), 1919 M Street, NW., Washington DC. The complete text may also be purchased from the Commission's duplicating contractor, International Transcription Service, Inc., 2100 M Street, NW., Washington, DC, 20037. (Telephone (202) 857-3800).

W. Jan Gay,

Assistant Chief, Audio Services Division, Mass Media Bureau.

[FR Doc. 88-7254 Filed 4-1-88; 8:45 am]

BILLING CODE 6712-01-M

Hearing Designation Order Concerning Roscoe Clifford Burwell Jr. et al for a New FM Station in Fort Polk, LA, Correction

On February 29, 1988, the Commission published a Hearing Designation Order in this proceeding concerning mutually exclusive applications for a new FM Station in Fort Polk, LA (53 FR 6032). The docket number (appearing in column one) is corrected to read: MM docket No. 88-53.

Federal Communications Commission.

H. Walker Feaster III,

Acting Secretary.

[FR Doc. 88-7251 Filed 4-1-88; 8:45 am]

BILLING CODE 6712-01-M

Applications for Consolidated Proceeding; Heartland Communications, Inc., et al.

Applicant City, and State	File No.	MM Docket No.
A. Heartland Communications, Inc.; Springfield, Ky.	BPH-870306KB	88-112
B. Jamie Whitlock; Springfield, Ky.	BPH-870312MK	
C. Ronald H. Livengood; Springfield, Ky.	BPH-870313MB	
D. Washington-Marion Sound Corp.; Springfield, Ky.	BPH-870313MG	
E. Cunningham Communications; Springfield, Ky.	BPH-870313NC	

2. Pursuant to section 309(e) of the Communications Act of 1934, as amended, the above applications have been designated for hearing in a consolidated proceeding upon the issues whose headings are set forth below. The text of each of these issues has been standardized and is set forth in its entirety under the corresponding headings at 51 FR 19347, May 29, 1986. The letter shown before each applicant's name, above, is used below to signify whether the issue in question applies to that particular applicant.

Issue Heading and Applicant(s)

1. Air Hazard; B
2. Comparative, All
3. Ultimate, All

3. If there is any non-standardized issue(s) in this proceeding, the full text of the issue and the applicant(s) to which it applies are set forth in an Appendix to this Notice. A copy of the complete HDO in this proceeding is available for inspection and copying during normal business hours in the FCC Dockets Branch (Room 230), 1919 M Street, NW., Washington, DC. The complete text may also be purchased from the Commission's duplicating contractor, International Transcription Services, Inc., 2100 M Street, NW., Washington, DC 20037 (Telephone No. (202) 857-3800).

W. Jan Gay,

Assistant Chief Audio Services Division, Mass Media Bureau.

[FR Doc. 88-7255 Filed 4-1-88; 8:45 am]

BILLING CODE 6712-01-M

Applications for Consolidated Hearing; Leemay Broadcasting Services, Inc., et al.

1. The Commission has before it the following mutually exclusive application for a new FM station:

Applicant, City and State	File No.	MM Docket No.
A. Leemay Broadcasting Services, Inc.; Ketchum, OK.	BPH-870304MB	88-106
B. Gary Scott Lanier; Ketchum, OK.	BPH-870309MH	
C. Quinton D. Burge, Jr.; Ketchum, OK.	BPH-870309MJ	

2. Pursuant to section 309(e) of the Communications Act of 1934, as amended, the above applications have been designated for hearing in a consolidated proceeding upon the issues whose headings are set forth below. The text of each of these issues has been standardized and is set forth in its entirety under the corresponding headings at 51 FR 19347 (May 29, 1986). The letter shown before each applicant's name, above, is used below to signify whether the issue in question applies to that particular applicant.

Issue Heading and Applicants

1. Air Hazard, C
2. Comparative, A, B, C
3. Ultimate, A, B, C

3. A copy of the complete HDO in this proceeding is available for inspection and copying during normal business hours in the FCC Dockets Branch (Room 230), 1919 M Street, NW., Washington, DC. The complete text may also be purchased from the Commission's duplicating contractor, International Transcription Services, Inc., 2100 M Street, NW., Washington, DC 20037. (Telephone No. (202) 857-3800).

W. Jan Gay,

Assistant Chief, Audio Services Division, Mass Media Bureau.

[FR Doc. 88-7256 Filed 4-1-88; 8:45 am]

BILLING CODE 6712-01-M

Applications for Consolidated Hearing; Larry S. Magnuson, et al.

1. The Commission has before it the following mutually exclusive applications for a new FM station:

Applicant, City, and State	File No.	MM Docket No.
A. Larry S. Magnuson; South Sioux City, NE.	BPH-861112MM	88-103
B. Fornia Communications; South Sioux City, NE.	BPH-861113MH	.....
C. Rudy Leroy Spirk; South Sioux City, NE.	BPH-861112ML (Previously dismissed)	.....

2. Pursuant to section 309(e) of the Communications Act of 1934, as amended, the above applications have been designated for hearing in a consolidated proceeding upon the issues whose headings are set forth below. The text of each of these issues has been standardized and is set forth in its entirety under the corresponding headings at 51 FR 19347, May 29, 1986. The letter shown before each applicant's name, above, is used to signify whether the issue in question applies to the particular applicant.

Issue Heading and Applicants

1. Comparative, A, B
2. Ultimate, A, B

3. If there is any non-standardized issue(s) in this proceeding, the full text of the issue and the applicant(s) to which it applies are set forth in an Appendix to this Notice. A copy of the complete HDO in this proceeding is available for inspection and copying during normal business hours in the FCC Dockets branch (Room 230), 1919 M Street, NW., Washington, DC. The complete text may also be purchased from the Commission's duplicating contractor, International Transcription Services, Inc., 2100 M Street, NW., Washington, DC 20037 (Telephone No. (202) 857-3800).

W. Jan Gay,

Assistant Chief, Audio Services Division, Mass Media Bureau.

[FR Doc. 88-7257 Filed 4-1-88; 8:45 am]

BILLING CODE 6712-01-M

Applications for Consolidated Hearing; Three States Broadcasting, Co., Inc., and Hometown Broadcasting of Matewan

1. The Commission has before it the following mutually exclusive applications for a new FM station:

Applicant, City, and State	File No.	MM Docket No.
A. Three States Broadcasting, Co., Inc.; Matewan, WV.	BPH-861112MK	88-101
B. Hometown Broadcasting of Matewan; Matewan, WV.	BPH-861125MD	

2. Pursuant to section 309(e) of the Communications Act of 1934, as amended, the above applications have been designated for hearing in a consolidated proceeding upon the issues whose headings are set forth below. The text of each of these issues has been standardized and is set forth in its entirety under the corresponding headings at 51 FR 19347, May 29, 1986. The letter shown before each applicant's name, above, is used to signify whether the issue in question applies to the particular applicant.

Issue Heading and Applicants

1. Comparative, A, B
2. Ultimate, A, B

3. If there is any non-standardized issue(s) in this proceeding, the full text of the issue and the applicant(s) to which it applies are set forth in an Appendix to this Notice. A copy of the complete HDO in this proceeding is available for inspection and copying during normal business hours in the FCC Dockets branch (Room 230), 1919 M Street, NW., Washington, DC. The complete text may also be purchased from the Commission's duplicating contractor, International Transcription Services, Inc., 2100 M Street, NW., Washington, DC 20037 (Telephone No. (202) 857-3800).

W. Jan Gay,

Assistant Chief, Audio Services Division, Mass Media Bureau.

[FR Doc. 88-7258 Filed 4-1-88; 8:45 am]

BILLING CODE 6712-01-M

Applications for Consolidated Hearing; Tony J. Trunkel and Phyllis Rice

1. The Commission has before it the following mutually exclusive applications for a new FM station:

Applicant, City, and State	File No.	MM Docket No.
A. Tony J. Trunkel; Tomah, WI.	BPH-861203MD	88-104
B. Phyllis Rice; Tomah, WI.	BPH-861203MG	.....

2. Pursuant to section 309(e) of the Communications Act of 1934, as amended, the above applications have been designated for hearing in a consolidated proceeding upon the issues whose headings are set forth below. The text of each of these issues has been standardized and is set forth in its entirety under the corresponding headings at 51 FR 19347, (May 29, 1986). The letter shown before each applicant's name, above, is used below to signify whether the issue in question applies to the particular applicant.

Issue Heading and Applicants

1. Comparative, A, B
2. Ultimate, A, B

3. A copy of the complete HDO in this proceeding is available for inspection and copying during normal business hours in the FCC Dockets Branch (Room 230), 1919 M Street, NW., Washington, DC. The complete text may also be purchased from the Commission's duplicating contractor, International Transcription Services, Inc., 2100 M Street, NW., Washington, DC 20037 (Telephone No. (202) 857-3800).

W. Jan Gay,

Assistant Chief, Audio Services Division, Mass Media Bureau.

[FR Doc. 88-7259 Filed 4-1-88; 8:45 am]

BILLING CODE 6712-01-M

FEDERAL MARITIME COMMISSION

Agreement(s) Filed

The Federal Maritime Commission hereby gives notice of the filing of the following agreement(s) pursuant to section 5 of the Shipping Act of 1984.

Interested parties may inspect and obtain a copy of each agreement at the Washington, DC Office of the Federal Maritime Commission, 1100 L Street, NW., Room 10325. Interested parties may submit comments on each agreement to the Secretary, Federal Maritime Commission, Washington, DC 20573, within 10 days after the date of the **Federal Register** in which this notice appears. The requirements for comments are found in § 572.603 of Title 46 of the Code of Federal Regulations. Interested persons should consult this section before communicating with the Commission regarding a pending agreement.

Agreement No.: 224-200104.

Title: Port of Vancouver Terminal Agreement.

Parties:

Port of Vancouver (POV)
ELMA S.A. (ELMA)

Synopsis: The proposed agreement provides for a sharing by POV and ELMA of terminal revenue consisting of dockage, wharfage, and service and facility charges.

By Order of the Federal Maritime Commission.

Dated: March 30, 1988.

Joseph C. Polking,

Secretary.

[FR Doc. 88-7238 Filed 4-1-88; 8:45 am]

BILLING CODE 6730-01-M

Agreement(s) Filed

The Federal Maritime Commission hereby gives notice of the filing of the following agreement(s) pursuant to section 5 of the Shipping Act of 1984.

Interested parties may inspect and obtain a copy of each agreement at the Washington, DC Office of the Federal Maritime Commission, 1100 L Street, NW., Room 10325. Interested parties may submit comments on each agreement to the Secretary, Federal Maritime Commission, Washington, DC 20573, within 10 days after the date of the **Federal Register** in which this notice appears. The requirements for comments are found in § 572.603 of Title 46 of the Code of Federal Regulations. Interested persons should consult this section before communicating with the Commission regarding a pending agreement.

Agreement No.: 202-010982-005.

Title: Bahamas Shipowners and Operators Association Agreement.

Parties:

Tropical Shipping & Construction Co., Ltd.
Universal Alco Ltd.
Pioneer Shipping Line

Synopsis: The proposed amendment would permit any two members to meet and agree pursuant to the agreement. Under the terms of the agreement, adherence is voluntary.

Agreement No.: 202-010982-006.

Title: Bahamas Shipowners and Operators Association Agreement.

Parties:

Tropical Shipping & Construction Co., Ltd.
Universal Alco Ltd.
Pioneer Shipping Line

Synopsis: The proposed amendment would establish procedures to permit the parties to charter space from one another in the agreement trade.

Agreement No.: 202-011182.

Title: The U.S./Red Sea & South Asia Rate Agreement.

Parties:

American President Lines, Ltd.
Waterman Steamship Corporation

Synopsis: The proposed agreement would permit the parties to meet, discuss and agree upon rates, charges and practices in the trade from United States ports and points to ports and points in India, the Red Sea, Pakistan, Bangladesh, Sri Lanka and Burma. No agreement reached shall require any party to act in conflict with any of its obligations under any other agreement which is effective under the Commission's regulations.

By Order of the Federal Maritime Commission.

Dated: March 30, 1988.

Joseph C. Polking,

Secretary.

[FR Doc. 88-7239 Filed 4-1-88; 8:45 am]

BILLING CODE 6730-01-M

Agreement(s) Filed

The Federal Maritime Commission hereby gives notice that the following agreement(s) has been filed with the Commission for approval pursuant to section 15 of the Shipping Act, 1916, as amended (39 Stat. 733, 75 Stat. 763, 46 U.S.C. 814).

Interested parties may inspect and may request a copy of each agreement and the supporting statement at the Washington, DC, Office of the Federal Maritime Commission, 1100 L Street NW., Room 10325. Interested parties may submit protests or comments on each agreement to the Secretrary, Federal Maritime Commission, Washington, DC 20573, within 10 days after the date of the **Federal Register** in which this notice appears. The requirements for comments and protests are found in § 560.7 of Title 46 of the Code of Federal Regulations. Interested persons should consult this section before communicating with the Commission regarding a pending agreement.

Any person filing a comment or protest with the Commission shall, the same time, deliver a copy of that document ~~to the~~ person filing the agreement at the address shown below.

AGREEMENT NO: 224-010749-001

Title: Georgia Ports Authority Terminal, Lease Agreement.

Parties: Georgia Ports Authority, Yangming Marine Transport Corp.

Synopsis: The proposed agreement modifies the basic lease agreement to (1) extend the term of the lease for an additional three years; (2) provide for a consolidated rate based upon an agreed upon rate per container; and (3) stipulate that this agreement and any subsequent amendment shall not become effective

until filed with this Commission for its determination of an effective date.

By Order of the Federal Maritime Commission.

Joseph C. Polking,

Secretary.

Dated: March 30, 1988.

[FR Doc. 88-7311 Filed 4-1-88; 8:45 am]

BILLING CODE 6730-01-M

DEPARTMENT OF HEALTH AND HUMAN SERVICES

Centers for Disease Control

National Committee on Vital and Health Statistics; Open Meeting

ACTION: Notice of Meeting.

In accordance with the Federal Advisory Committee Act (Pub. L. 92-463), notice is hereby given that the National Committee on Vital and Health Statistics (NCVHS) Subcommittee on Ambulatory Care Statistics established pursuant to 42 U.S.C. 242k, section 306(k)(2) of the Public Health Service Act, as amended, announces the following meeting (working session).

Name: National Committee on Vital and Health Statistics Subcommittee on Ambulatory Care Statistics.

Time and Date: 9:00 am—5:00 pm—April 26, 1988; 9:00 am—5:00 pm—April 27, 1988.

Place: Hubert H. Humphrey Building, Room 337A, 200 Independence Avenue SW., Washington, DC 20201.

Status: Open.

Purpose: The purpose of this meeting is for the Subcommittee to develop a first draft of a revised Uniform Ambulatory Medical Care Minimum Data Set.

Contact Person for More Information: Substantive program information as well as summaries of the meeting and roster of Committee members may be obtained from Gail F. Fisher, Ph.D., Executive Secretary, National Committee on Vital and Health Statistics, Room 2-12, Center Building, 3700 East West Highway, Hyattsville, Maryland 20782, telephone (301) 436-7050.

Dated: March 29, 1988.

Elvin Hilyer,

Associate Director for Policy Coordination Centers for Disease Control.

[FR Doc. 88-7260 Filed 4-1-88; 8:45 am]

BILLING CODE 4160-18-M

Family Support Administration

Low Income Home Energy Assistance; Announcement of the Fiscal Year 1989 State Median Income

AGENCY: Family Support Administration, HHS.

ACTION: Announcement of estimated median income.

SUMMARY: This notice announces the estimated median income for four-person families in each state and the District of Columbia for Fiscal Year (FY) 1989. This listing of state median incomes concerns maximum income levels for households to which the states may make payments under the Low Income Home Energy Assistance Program (LIHEAP).

FOR FURTHER INFORMATION CONTACT: Leon Litow, (202) 245-2951.

SUPPLEMENTARY INFORMATION: Under the provisions of section 2603(7) of Title XXVI of the Omnibus Budget Reconciliation Act of 1981 (Pub. L. 97-35), we are announcing the median income of a four-person family for each state, the District of Columbia, and the United States for the period of October 1, 1988 through September 30, 1989. Section 2605(b)(2)(B)(ii) of Pub. L. 97-35 provides that 60 percent of the median income for each state, as annually established by the Secretary of Health and Human Services, is one of the income criteria that states can use in determining a household's eligibility for LIHEAP. The purpose of this announcement is to provide estimates of state median income for use in FY 1989.

LIHEAP is currently authorized through the end of FY 1990 by provisions of title V of The Human Services Reauthorization Act of 1986, Pub. L. 99-425, enacted on September 30, 1986. Under this Act, the current income eligibility provisions relating to state median income remain unchanged.

Estimates of the median income of four-person families for each state and the District of Columbia for fiscal year 1989 were developed by the Bureau of the Census. In developing the median income estimates, the Bureau of the Census used the following three sources of data: (1) The March 1987 Current Population Survey; (2) the 1980 Census of Population; and (3) 1986 per capita personal income estimates from the Bureau of Economic Analysis.

The estimating method for FY 1989 is similar to that used in previous years. Beginning with the estimating method for FY 1987, Current Population Survey sample estimates for three- and five-person families and their statistical relationships to four-person family medians are now used in addition to the Current Population Survey sample estimates of four-person family medians already in use. For further information, contact John Coder, Chief of Income Statistics Branch, at the Bureau of the Census (301-763-8240).

A state-by-state listing of median income, and 60 percent of median income, for a four-person family for fiscal year 1989 follows. The listing describes the method for adjusting median income for families of different sizes as specified in 45 CFR 96.85(b), which was published in the **Federal Register** on March 3, 1988 at 53 FR 6827.

Dated: March 28, 1988.

Wayne A. Stanton,

Administrator, Family Support Administration.

ESTIMATED STATE MEDIAN INCOME FOR 4-PERSON FAMILIES, FISCAL YEAR 1989 [1] [2]

State	Estimated State median income, 4-person families	60 percent of estimated State median income, 4-person families
Alabama	$29,799	$17,879
Alaska	41,292	24,775
Arizona	33,477	20,086
Arkansas	27,157	16,294
California	37,655	22,593
Colorado	36,026	21,616
Connecticut	44,330	26,598
Delaware	35,766	21,460
District of Columbia	35,424	21,254
Florida	33,368	20,021
Georgia	34,602	20,761
Hawaii	36,618	21,971
Idaho	27,075	16,245
Illinois	36,163	21,698
Indiana	32,026	19,216
Iowa	30,556	18,334
Kansas	32,512	19,507
Kentucky	28,464	17,078
Louisiana	29,614	17,768
Maine	31,297	18,778
Maryland	42,250	25,350
Massachusetts	42,295	25,377
Michigan	36,088	21,653
Minnesota	36,748	22,048
Mississippi	26,763	16,058
Missouri	33,149	19,889
Montana	29,190	17,514
Nebraska	31,484	18,890
Nevada	33,604	20,162
New Hampshire	39,503	23,702
New Jersey	44,591	26,755
New Mexico	27,474	16,484
New York	36,796	22,078
North Carolina	31,787	19,072
North Dakota	29,424	17,654
Ohio	34,038	20,423
Oklahoma	29,071	17,443
Oregon	31,392	18,835
Pennsylvania	32,700	19,620
Rhode Island	35,837	21,502
South Carolina	31,025	18,615
South Dakota	27,008	16,205
Tennessee	29,568	17,741
Texas	32,442	19,465

ESTIMATED STATE MEDIAN INCOME FOR 4-PERSON FAMILIES, FISCAL YEAR 1989 [1] [2]—Continued

State	Estimated State median income, 4-person families	60 percent of estimated State median income, 4-person families
Utah	30,635	18,381
Vermont	32,490	19,494
Virginia	37,885	22,731
Washington	35,071	21,043
West Virginia	27,094	16,256
Wisconsin	33,739	20,243
Wyoming	28,742	17,245

Note.—The estimated median income for 4-person families living in the United States is $34,716 for the period of October 1, 1988 through September 30, 1989.

[1] In accordance with 45 CFR 96.85, each state's estimated median income for a 4-person family is multiplied by the following percentages to adjust for family size: 52% for one person, 68% for two persons, 84% for three persons, 100% for four persons, 116% for five persons, and 132% for six persons. For family sizes greater than six persons, add 3% to 132% for each additional family member and multiply the new percentage by the state's dollar amount for 4-person families.

[2] Prepared by the Bureau of the Census from the March 1987 Current Population Survey, 1980 Census of Population and Housing, and 1986 per capita personal income estimates from the Bureau of Economic Analysis.

Food and Drug Administration

[Docket No. 84N-0154]

Biological Products; Cell Lines Used To Produce Biologicals; Availability of Points To Consider for New Technologies; Request for Comments

AGENCY: Food and Drug Administration.

ACTION: Notice.

SUMMARY: The Food and Drug Administration (FDA) is announcing the availability of a revised document entitled "Points to Consider in the Characterization of Cell Lines Used to Produce Biologicals (1987)." The revised "points to consider" replaces a similar document originally offered in June 1984 and is intended to assist manufacturers in characterizing cell lines used to produce biological products for which a manufacturer intends to apply to FDA for approval for investigation or marketing. FDA is also requesting comments on the document to assist the agency in the continuing development of the points to consider.

ADDRESSES: Requests for single copies of the document to Biologics Freedom of Information Staff (HFN-20), Food and Drug Administration, 8800 Rockville Pike, Bethesda, MD 20892. Written comments to the Dockets Management Branch (HFA-305), Food and Drug Administration, Rm. 4-62, 5600 Fishers Lane, Rockville, MD 20857. A copy of the document is also on display at the Dockets Management Branch (address above).

FOR FURTHER INFORMATION CONTACT:

Regarding this notice:

Steven Falter, Center for Biologics Evalaution and Research (HFN-322), Food and Drug Administration, 8800 Rockville Pike, Bethesda, MD 20892, 301-295-8046.

Regarding the draft criteria:

Martha Wells, Center for Biologics Evaluation and Research (HFB-840), Food and Drug Administration, 8800 Rockville Pike, Bethesda, MD 20892, 301-496-0389.

SUPPLEMENTARY INFORMATION: Continuous nondiploid (abnormal) cell lines are being used increasingly in the production of new biological products, such as monoclonal antibody or recombinant deoxyribonucleic acid (DNA) products. When such products are being developed for clinical testing or marketing, the use of abnormal cell lines present unique quality control and safety issues. As announced in the **Federal Register** of June 6, 1984 (49 FR 23456), FDA offered a "points to consider" document containing advice to assist manufacturers in the development and evaluation of biological products produced using cell lines and in submitting to FDA applications for approval of the products for investigation and marketing. FDA also invited public comment on the document and announced a public workshop, held in July 1984, to discuss the use of abnormal mammalian cells in the production of biological products. In response to the comments from the public and with added research and experience with products derived from cell lines, FDA's Center for Biologics Evaluation and Research has revised the "points to consider" document. The revised document places emphasis on the identification and characterization of the cell substrate and testing of the bulk and final product. FDA is offering the revised document to the public and inviting public comment. FDA will again consider the received comments when revising the document.

For the convenience of the reader, below is a list of "points to consider" documents, including the document described in this notice, currently being offered by the Center for Biologics Evaluation and Research and the date that each document was last revised.

1. "Points to Consider in the Characterization of Cell Lines Used to Produce Biologicals (1987)," November 18, 1987.

2. "Points to Consider in the Manufacture and Testing of Monoclonal Antibody Products for Human Use (1987)," June 1, 1987.

3. "Points to Consider in the Manufacture of In Vitro Monoclonal Antibody Products Subject to Licensure," June 20, 1983.

4. "Points to Consider in the Production and Testing of New Drugs and Biologicals Produced by Recombinant DNA Technology," April 10, 1985.

5. "Interferon Test Procedures, Points to be Considered in the Production and Testing of Interferon Intended for Investigational Use in Humans," July 28, 1983.

Each "points to consider" document is available from the Biologics Freedom of Information Staff (address above).

Interested persons may submit written comments on the document to the Dockets Management Branch (address above). These comments will be considered in determining whether further revisions to the "points to consider" document are warranted. Two copies of any comments are to be submitted, except that individuals may submit one copy. Comments are to be identified with the docket number found in brackets in the heading of this document. Received comments may be seen in the office above between 9 a.m. and 4 p.m., Monday through Friday.

Dated: March 29, 1988.

John M. Taylor,

Associate Commissioner for Regulatory Affairs.

[FR Doc. 88-7301 Filed 4-1-88; 8:45 am]

BILLING CODE 4160-01-M

[Docket No. 88N-0130]

Drug Export; Recombigen ™ HIV Latex Agglutination Test Kits

AGENCY: Food and Drug Administration.

ACTION: Notice.

SUMMARY: The Food and Drug Administration (FDA) is announcing that Cambridge BioScience has filed an application requesting approval for the export of the biological product Recombigen ™ HIV Latex Agglutination Test Kits to Canada, West Germany, Italy, Sweden, The Netherlands, Norway, Finland, Austria, Japan, United Kingdom, Switzerland, Spain, Belgium, Denmark, and Ireland.

ADDRESS: Relevant information on this application may be directed to the Dockets Management Branch (HFA-

305), Food and Drug Administration, Rm. 4-62, 5600 Fishers Lane, Rockville, MD 20857, and to the contact person identified below. Any future inquiries concerning the export of biological products under the Drug Export Amendments Act of 1986 should also be directed to the contact person.

FOR FURTHER INFORMATION CONTACT: Boyd Fogle, Jr., Center for Biologics Evaluation and Research (HFN-322), Food and Drug Administration, 5600 Fishers Lane, Rockville, MD 20857, 301-295-8095.

SUPPLEMENTARY INFORMATION: The Drug Export Amendments Act of 1986 (Pub. L. 99-660) (section 802 of the Federal Food, Drug, and Cosmetic Act (the act) (21 U.S.C. 382)) provides that FDA may approve applications for the export of drugs that are not currently approved in the United States. The approval process is governed by section 802(b) of the act. Section 802(b)(3)(B) of the act sets forth the requirements that must be met in an application for approval. Section 802(b)(3)(C) of the act requires that the agency review the application within 30 days of its filing to determine whether the requirements of section 802(b)(3)(B) have been satisfied. Section 802(b)(3)(A) of the act requires that the agency publish a notice in the **Federal Register** within 10 days of the filing of an application for export to facilitate public participation in its review of the application. To meet this requirement, the agency is providing notice that Cambridge BioScience, 365 Plantation St., Biotechnology Research Park, Worcester, MA 01605, has filed an application requestig approval for the export of the biological product Recombigen ™ HIV Latex Agglutination Test Kits to Canada, West Germany, Italy, Sweden, The Netherlands, Norway, Finland, Austria, Japan, United Kingdom, Switzerland, Spain, Belgium, Denmark, and Ireland. The product is intended for use as an invitro qualitative assay for the detection of antibody to Human Immunodeficiency Virus (HIV), which is also known as Lymphadenopathy Virus (LAVI) or Human T-lymphotropic Virus Type III (HTLV III). The application was received and filed in the Center for Biologics Evaluation and Research on March 14, 1988, which shall be considered the filing date for purposes of the act.

Interested persons may submit relevant information on the application to the Dockets Management Branch (address above) in two copies (except that individuals may submit single copies) and identified with the docket number found in brackets in the heading of this document. These submissions may be seen in the Dockets Management Branch between 9 a.m. and 4 p.m., Monday through Friday.

The agency encourages any person who submits relevant information on the application to do so by April 14, 1988, and to provide an additional copy of the submission directly to the contact person identified above, to facilitate consideration of the information during the 30-day review period.

This notice is issued under the Federal Food, Drug, and Cosmetic Act (sec. 802, Pub. L. 99-660 (21 U.S.C. 382)) and under authority delegated to the Commissioner of Food and Drugs (21 CFR 5.10) and redelegated under 21 CFR 5.44.

Dated: March 18, 1988.

Thomas S. Bozzo,

Director, Office of Compliance Center for Biologics Evaluation and Research.

[FR Doc. 88-7302 Filed 4-1-88; 8:45 am]

BILLING CODE 4160-01-M

National Institutes of Health

Cancer Center Support Review Committee; Meeting

Pursuant to Pub. L. 92-463, notice is hereby given of the meeting of the Cancer Center Support Review Committee, National Cancer Institute, National Institutes of Health, April 11-12, 1988, Holiday Inn Crowne Plaza, 1750 Rockville Pike, Rockville, Maryland 20852.

This meeting will be open to the public on April 11, from 8:30 a.m. to 9:30 a.m. to review administrative details. Attendance by the public will be limited to space available.

In accordance with provisions set forth in section 552b(c)(4) and 552b(c)(6), Title 5, U.S.C. and section 10(d) of Pub. L. 92-463, the meeting will be closed to the public on April 11, from approximately 9:30 a.m. to 6:00 p.m. and April 12, from 8:30 a.m. until adjournment for the review, discussion and evaluation of individual grant applications. These applications and the discussions could reveal confidential trade secrets or commercial property such as patentable material and personal information concerning individuals associated with the applications, disclosure of which would constitute a clearly unwarranted invasion of personal privacy.

Mrs. Winifred Lumsden, the Committee Management Officer, National Cancer Institute, Building 31, Room 10A06, National Institutes of Health, Bethesda, Maryland 20892 (301-496-5708) will provide summaries of the meeting and rosters of committee members, upon request.

Dr. John Abnell, Executive Secretary, Cancer Center Support Review Committee, National Cancer Institute, Westwood Building, Room 834, National Institutes of Health, Bethesda, Maryland 20892 (301-496-9767) will furnish substantive program information.

Dated: March 28, 1988.

Betty J. Beveridge,

Committee Management Officer, NIH.

[FR Doc. 88-7279 Filed 4-1-88; 8:45 am]

BILLING CODE 4140-01-M

Biometry and Epidemiology Contract Review Committee; Meeting

Pursuant to Pub. L. 92-463, notice is hereby given of the meeting of the Biometry and Epidemiology Contract Review Committee, National Cancer Institute, National Institutes of Health, May 10, 1988, Building 31C, Conference Room 9, 9000 Rockville Pike, Bethesda, Maryland 20892.

This meeting will be open to the public on May 10, 1988, from 9 a.m. to 10 a.m. to discuss administrative matters. Attendance by the public will be limited to space available.

In accordance with the provisions set forth in sections 552b(c)(4) and 552b(c)(6), Title 5, U.S.C. and section 10(d) of Pub. L. 92-463, the meeting will be closed to the public on May 10 from 10 a.m. to adjournment for the review, discussion and evaluation of individual contract proposals. The proposals and the discussions could reveal confidential trade secrets or commercial property such as patentable material, and personal information concerning individuals associated with the proposals, the disclosure of which would constitute a clearly unwarranted invasion of personal privacy.

Mrs. Winifred Lumsden, Committee Management Officer, National Cancer Institute, Building 31, Room 10A06, National Institutes of Health, Bethesda, Maryland 20892 (301/496-5708) will provide a summary of the meeting and a roster of committee members upon request.

Dr. Harvey P. Stein, Executive Secretary, Biometry and Epidemiology Contract Review Committee, National Cancer Institute, Westwood Building, Room 804, National Institutes of Health, Bethesda, Maryland 20892 (301/496-7030) will furnish substantive program information.

BEST COPY AVAILABLE

Dated: March 28, 1988.

Betty J. Beveridge,

Committee Management Officer, NIH.

[FR Doc. 88-7280 Filed 4-1-88; 8:45 am]

BILLING CODE 4140-01-M

National Arthritis Advisory Board; Meeting

Pursuant to Pub. L. 92-463, notice is hereby given of the meeting of the National Arthritis Advisory Board on April 17 and 18, 1988. The subcommittee will meet April 17, 6 p.m. to approximately 10 p.m., and the full board will meet April 18, 8 a.m. to approximately 5 p.m., at the University City Sheraton, 36th and Chestnut Streets, Philadelphia, Pennsylvania 19104. The meeting, which will be open to the public, is being held to review the immunology programs of the Veterans Administration as they relate to rheumatic and skin diseases and to conduct a site visit at the Philadelphia Veterans Administration Medical Center. The Board will also continue its evaluation of the implementation of the long-range plan to combat arthritis. Attendance by the public will be limited to space available. Notice of the meeting room will be posted in the hotel lobby.

Mr. John R. Abbott, Executive Secretary, National Arthritis Advisory Board, 1801 Rockville Pike, Suite 500, Rockville, Maryland 20852, (301) 496-0801, will provide on request an agenda and roster of the members. Summaries of the meeting may also be obtained by contacting his office.

Dated: March 14, 1988.

Betty J. Beveridge,

NIH Committee Management Office.

[FR Doc. 88-7281 Filed 4-1-88; 8:45 am]

BILLING CODE 4140-01-M

National Institute of Neurological and Communicative Disorders and Stroke; Meetings

Pursuant to Pub. L. 92-463, notice is hereby given of the meetings of the committees of the National Institute of Neurological and Communicative Disorders and Stroke.

These meetings will be open to the public to discuss administrative details or other issues relating to committee business as indicated in the notice. Attendance by the public will be limited to space available.

These meetings will be closed to the public as indicated below in accordance with the provisions set forth in sections 552b(c)(4) and 552b(c)(6), Title 5, U.S.C. and section 10(d) of Pub. L. 92-463, for the review, discussion and evaluation of individual grant applications. These applications and the discussions could reveal confidential trade secrets or commercial property such as patentable material, and personal information concerning individuals associated with the applications, the disclosure of which would constitute a clearly unwarranted invasion of personal privacy.

Summaries of meetings, rosters of committee members, and other information pertaining to the meetings can be obtained from the Executive Secretary indicated.

Name of Committee: National Advisory Neurological and Communicative Disorders and Stroke Council and Its Planning Subcommittee.

Date: June 1, 1988 (Planning Subcommittee).

Place: National Institutes of Health, Building 31, Conference Room 8A23, 9000 Rockville Pike, Bethesda, Maryland 20892.

Open: 1 p.m.-3 p.m.

Agenda: To discuss program planning, program accomplishments and special reports.

Closed: 3 p.m.-5 p.m.

Closure Reason: For review of grant applications.

Dates: June 2-3, 1988 (Council).

Place: National Institutes of Health, Building 31C, Conference Room 10, 9000 Rockville Pike, Bethesda, Maryland 20892.

Open: June 2, 9 a.m.-1 p.m.

Agenda: To discuss program planning, program accomplishments and special reports.

Closed: June 2, 1 p.m.-recess; June 3, 8:30 a.m.-adjournment.

Closure Reason: For review of grant applications.

Executive Secretary: John C. Dalton, Ph.D., Associate Director for Extramural Activities, NINCDS, National Institutes of Health, Bethesda, Maryland 20892, Telephone: 301/496-9248.

Name of Committee: Neurological Disorders Program Project Review B Committee.

Dates: June 8-10, 1988.

Place: Holiday Inn, 550 C Street, SW., Washington, DC 20024.

Open: June 8, 8:30 a.m.-9 a.m.

Agenda: To discuss program planning, program accomplishments and special reports.

Closed: June 8, 9 a.m.-recess; June 9, 8 a.m.-recess; June 10, 8 a.m-adjournment.

Closure Reason: To review grant applications.

Executive Secretary: Dr. A. Beau White, Federal Building, Room 9C-14, National Institutes of Health, Bethesda, Maryland 20892, Telephone: 301/496-9223.

Name of Committee: Communicative Disorders Review Committee.

Dates: June 9-10, 1988.

Place: Holiday Inn, Chevy Chase, 5520 Wisconsin Avenue, Chevy Chase, Maryland 20815.

Open: June 9, 8:30 a.m.-9 a.m.

Agenda: To discuss program planning, program accomplishments and special reports.

Closed: June 9, 9 a.m.-recess; June 10, 8 a.m.-adjurnment.

Closure Reason: To review grant applications.

Executive Secretary: Dr. Marilyn Semmes, Federal Building, Room 9C-14, National Institutes of Health, Bethesda, Maryland 20892, Telephone: 301/496-9223.

Name of Committee: Neurological Disorders Program Project Review A Committee.

Dates: June 16-18, 1988.

Place: Hyatt Regency, Bethesda, One Metro Center, Bethesda, Maryland 20814.

Open: June 16, 8:00 p.m.-8:30 p.m.

Agenda: To discuss program planning, program accomplishments and special reports.

Closed: June 16, 8:30 p.m.-recess; June 17, 8 a.m.-recess; June 18, 7:30 a.m.-adjournment.

Closure Reason: To review grant applications.

Executive Secretary: Dr. Herbert Yellin, Federal Building, Room 9C-14, National Institutes of Health, Bethesda, Maryland 20892, Telephone: 301/496-9223.

(Catalog of Federal Domestic Assistance Program No. 13.853, Clinical Basis Research; No. 13.854, Biological Basis Research)

Dated: March 28, 1988.

Betty J. Beveridge,

Committee Management Officer, NIH.

[FR Doc. 88-7282 Filed 4-1-88; 8:45 am]

BILLING CODE 4140-01-M

DEPARTMENT OF THE INTERIOR

Bureau of Land Management

[WO-150-08-4830-11]

National Public Lands Advisory Council; Meeting

AGENCY: Bureau of Land Management, Interior.

ACTION: Notice of meeting of the National Public Lands Advisory Council.

SUMMARY: Notice is hereby given that the National Public Lands Advisory Council will meet May 4 and 7, 1988. The May 4 meeting will be held from

8:00 a.m. to 12:00 p.m. at the Holiday Inn, 1400 W. 200 N., Cedar City, Utah. The May 7 meeting will be held from 8:00 a.m. to 12:00 p.m. at the Ramada Inn, 1825 South Main, Moab, Utah. The Council will also participate in a field tour of BLM-managed lands in southern Utah. The proposed agenda for the meeting is:

Wednesday, May 4: Election of Council officers for 1988; Presentation on Recreation 2000—A Strategic Plan; Panel discussion on the local economic benefits of recreation; Council old and new business, to include Department responses to previous Council resolutions; Public statement period.

Saturday, May 7: Discussion of agendas for future Council meetings; Presentation on the national economic benefits of recreation; Meeting of Council Subcommittees (Energy and Minerals, Lands, and Renewable Resources); Reports from Subcommittees to full Council and consideration of Council resolutions.

All meetings of the Council are open to the public. Opportunity will be given for members of the public to make oral statements to the Council, beginning at 10:45 a.m. on Wednesday, May 4. Speakers should address specific national public lands issues on the meeting agenda and are encouraged to submit a copy of their written comments by April 27 to the Bureau of Land Management's Utah State Office at the address listed below. Depending on the number of people who wish to address the Council, it may be necessary to limit the length of oral presentations.

DATES: May 4 and 7—Council Meeting. May 4—Public Statements.

ADDRESS: Copies of public statements should be mailed by April 27 to: Director, Utah State Office (912), Bureau of Land Management, 324 South State Street, Salt Lake City, Utah 84111-2303.

FOR FURTHER INFORMATION CONTACT: Karen Slater, Washington, DC, Office, BLM, telephone (202) 343-5101; or Jerry Meredith, Utah State Office, BLM, telephone (801) 524-3146.

SUPPLEMENTARY INFORMATION: The Council advises the Secretary of the Interior through the Director, Bureau of Land Management, regarding policies and programs of a national scope related to public lands and resources under the jurisdiction of BLM.

Robert F. Burford,

Director.

March 29, 1988.

[FR Doc. 88-7304 Filed 4-1-88; 8:45 am]

BILLING CODE 4301-84-M

[AZ-050-4333-12]

Arizona; Revision of Camp Limit

AGENCY: Bureau of Land Management, Interior.

ACTION: Revision of camping limit on the public lands around the Mittry Lake area in the Yuma Resource Area.

SUMMARY: The following area is designated as having a camping limit of 10 days in a calendar year:

Area and Activity

Mittry Lake, Camping.

Location—G&SRM

T. 6 S., R. 21 W.,
Sec. 30 SW¼, 31.
T. 7 S., R. 21 W.,
Sec. 5, 6, 7, 8, 18;
Sec. 19, N½.
T. 7 S., R. 22 W.,
Sec. 13, 14;
Sec. 23, 24, N½.

DATES: Effective April 4, 1988.

FOR FURTHER INFORMATION CONTACT: Sue E. Richardson, Area Manager, Yuma Resource Area, 3150 Winsor Avenue, Yuma, Arizona 85365, 602-726-6300.

SUPPLEMENTARY INFORMATION: Authority for this camping limit is found in 43 CFR 8364.1 and 8365.1-2(a). This camping limit is being established to protect wildlife and wildlife habitat in the Mittry Lake area. This camping limit will provide more consistent wildlife and recreation management in the area. Currently there are two camping limits in the area. BLM regulations allow camping for 14 days in a 28-day period. Arizona Game and Fish Department has a camping limit of 10 days in a calendar year. The BLM change to 10 days will result in less confusion to the visitors since the same camping limit will now be enforced by both BLM and Arizona Game and Fish Department. Some locations around the Mittry Lake area are closed to camping under existing regulations. This revision does not affect those areas. Maps are availabile in the Yuma BLM Office.

Sondra L. Berger,

Acting District Manager.

Date: March 23, 1988.

[FR Doc. 88-6998 Filed 4-1-88; 8:45 am]

BILLING CODE 4310-32-M

[ES-940-08-4520-13; ES-038340, Group 11]

North Carolina; Filing of Plat of Dependent Resurvey

March 28, 1988.

1. The plat of the dependent resurvey of a portion of the Cherokee Indian Land within Tract No. 374 and the Upper Cornsilk Tract, District No. 9, Graham County, North Carolina, will be officially filed in the Eastern States Office, Alexandria, Virginia, at 7:30 a.m., on May 12, 1988.

2. The dependent resurvey was made at the request of the Bureau of Indian Affairs.

3. All inquiries or protests concerning the technical aspects of the dependent resurvey must be sent to the Deputy State Director for Cadastral Survey, Eastern States Office, Bureau of Land Management, 350 South Pickett Street, Alexandria, Virginia 22304, prior to 7:30 a.m., May 12, 1988.

4. Copies of the plat will be made available upon request and prepayment of the reproduction fee of $4.00 per copy.

Lane J. Bouman,

Deputy State Director for Cadastral Survey and Support Services.

[FR Doc. 88-7224 Filed 4-1-88; 8:45 am]

BILLING CODE 4310-GJ-M

[ES-940-08-4520-13; ES-038341, Group 11]

North Carolina; Filing of Plat of Dependent Resurvey

March 28, 1988.

1. The plat of the dependent resurvey of the boundary between the Nantahala National Forest, Tract Nos. 1047r and 1073Ah and the Cherokee Indian Land, Tract Nos. 17 and 93, District No. 9, Graham County, North Carolina, will be officially filed in the Eastern States Office, Alexandria, Virginia at 7:30 a.m., on May 12, 1988.

2. The dependent resurvey was made at the request of the Bureau of Indian Affairs.

3. All inquiries or protests concerning the technical aspects of the dependent resurvey must be sent to the Deputy State Director for Cadastral Survey, Eastern States Office, Bureau of Land Management, 350 South Pickett Street, Alexandria, Virginia 22304, prior to 7:30 a.m., May 12, 1988.

4. Copies of the plat will be made available upon request and prepayment of the reproduction fee of $4.00 per copy.

Lane J. Bouman,

Deputy State Director for Cadastral Survey and Support Services.

[FR Doc. 88-7225 Filed 4-1-88; 8:45 am]

BILLING CODE 4310-GJ-M

[ES-940-08-4520-13; ES-038342, Group 11]

North Carolina; Filing of Plat of Dependent Resurvey

March 28, 1988.

1. The plat of the dependent resurvey of the boundary between the Nantahala National Forest, Tract Nos. 252K and 1047 and the Cherokee Indian Land, Tract No. 364, District No. 10, Graham County, North Carolina, will be officially filed in the Eastern States Office, Alexandria, Virginia at 7:30 a.m., on May 12, 1988.

2. The dependent resurvey was made at the request of the Bureau of Indian Affairs.

3. All inquiries or protests concerning the technical aspects of the dependent resurvey must be sent to the Deputy State Director for Cadastral Survey, Eastern States Office, Bureau of Land Management, 350 South Pickett Street, Alexandria, Virginia 22304, prior to 7:30 a.m., May 12, 1988.

4. Copies of the plat will be made available upon request and prepayment of the reproduction fee of $4.00 per copy.

Lane J. Bouman,

Deputy State Director for Cadastral Survey and Support Services.

[FR Doc. 88-7228 Filed 4-1-88; 8:45 am]

BILLING CODE 4310-GJ-M

[ES-940-08-4520-13; ES-038343, Group 10]

North Carolina; Filing of Plat of Dependent Resurvey

March 28, 1988.

1. The plat of the dependent resurvey of a portion of the Qualla Indian Boundary and the remonumentation of the 60½ mile corner plus 15.90 chain point in Jackson and Swain Counties, North Carolina, will be officially filed in the Eastern States Office, Alexandria, Virginia, at 7:30 a.m., on May 12, 1988.

2. The dependent resurvey was made at the request of the Bureau of Indian Affairs.

3. All inquiries or protests concerning the technical aspects of the dependent resurvey must be sent to the Deputy State Director for Cadastral Survey, Eastern States Office, Bureau of Land Management, 350 South Pickett Street, Alexandria, Virginia 22304, prior to 7:30 a.m., May 12, 1988.

4. Copies of the plat will be made available upon request and prepayment of the reproduction fee of $4.00 per copy.

Lane J. Bouman,

Deputy State Director for Cadastral Survey and Support Services.

[FR Doc. 88-7227 Filed 4-1-88; 8:45 am]

BILLING CODE 4310-GJ-M

[ES-940-08-4520-13; ES-038343, Group 10]

North Carolina; Filing of Plat of Dependent Resurvey

March 28, 1988.

1. The plat of the dependent resurvey of a portion of the Cherokee Indian Land and perpetuation of AP54 and AP59, within the 3200 Acre Tract, Swain County, North Carolina, will be officially filed in the Eastern States Office, Alexandria, Virginia at 7:30 a.m., on May 12, 1988.

2. The dependent resurvey was made at the request of the Bureau of Indian Affairs.

3. All inquiries or protests concerning the technical aspects of the dependent resurvey must be sent to the Deputy State Director for Cadastral Survey, Eastern States Office, Bureau of Land Management, 350 South Pickett Street, Alexandria, Virginia 22304, prior to 7:30 a.m., May 12, 1988.

4. Copies of the plat will be made available upon request and prepayment of the reproduction fee of $4.00 per copy.

Lane J. Bouman,

Deputy State Director for Cadastral Survey and Support Services.

[FR Doc. 88-7228 Filed 4-1-88; 8:45 am]

BILLING CODE 4310-GJ-M

[ES-940-08-4520-13; ES-038345, Group 11]

North Carolina; Filing of Plat of Dependent Resurvey

March 28, 1988.

1. The plat of the dependent resurvey of the boundary between the Nantahala National Forest, Tract Nos. 216 and 1047 and the Cherokee Indian Land, Tract No. 477, District No. 9, Graham County, North Carolina, will be officially filed in the Eastern States Office, Alexandria, Virginia at 7:30 a.m., on May 12, 1988.

2. The dependent resurvey was made by the request of the Bureau of Indian Affairs.

3. All inquiries or protests concerning the technical aspects of the dependent resurvey must be sent to the Deputy State Director for Cadastral Survey, Eastern States Office, Bureau of Land Management, 350 South Pickett Street, Alexandria, Virginia 22304, prior to 7:30 a.m., May 12, 1988.

4. Copies of the plat will be made available upon request and prepayment of the reproduction fee of $4.00 per copy.

Lane J. Bouman,

Deputy State Director for Cadastral Survey and Support Services.

[FR Doc. 88-7229 Filed 4-1-88; 8:45 am]

BILLING CODE 4310-GJ-M

[ES-940-08-4520-13; ES-038346, Group 11]

North Carolina; Filing of Plat of Dependent Resurvey

March 28, 1988.

1. The plat of the dependent resurvey of a portion of the west boundary of Tract No. 87, and the boundary between the Nantahala National Forest, Tract No. 1355, and the Cherokee Indian Land, Tract No. 87, District No. 9, Graham County, North Carolina, will be officially filed in the Eastern States Office, Alexandria, Virginia at 7:30 a.m., on May 12, 1988.

2. The dependent resurvey was made by the request of the Bureau of Indian Affairs.

3. All inquiries or protests concerning the technical aspects of the dependent resurvey must be sent to the Deputy State Director for Cadastral Survey, Eastern States Office, Bureau of Land Management, 350 South Pickett Street, Alexandria, Virginia 22304, prior to 7:30 a.m., May 12, 1988.

4. Copies of the plat will be made available upon request and prepayment of the reproduction fee of $4.00 per copy.

Lane J. Bouman,

Deputy State Director for Cadastral Survey and Support Services.

[FR Doc. 88-7230 Filed 4-1-88; 8:45 am]

BILLING CODE 4310-GJ-M

[ES-940-08-4520-13; ES-038347, Group 10]

North Carolina; Filing of Plat of Dependent Resurvey

March 28, 1988.

1. The plat of the dependent resurvey of a portion of the Cherokee Indian Land within Tract Nos. 99 and 100, and the perpetuation of the SE cor. of Tract No. 7, SE cor. of Tract No. 57, and NE cor. of Tract No. 58, all in District No. 1, and the perpetuation of the NE cor. of Tract No. 57, District No. 6, in Cherokee County, North Carolina, will be officially filed in the Eastern States Office, Alexandria, Virginia at 7:30 a.m., on May 12, 1988.

2. The dependent resurvey was made by the request of the Bureau of Indian Affairs.

3. All inquiries or protests concerning the technical aspects of the dependent resurvey must be sent to the Deputy State Director for Cadastral Survey, Eastern States Office, Bureau of Land Management, 350 South Pickett Street, Alexandria, Virginia 22304, prior to 7:30 a.m., May 12, 1988.

4. Copies of the plat will be made available upon request and prepayment of the reproduction fee of $4.00 per copy.

Lane J. Bouman,

Deputy State Director for Cadastral Survey and Support Services.

[FR Doc. 88-7231 Filed 4-1-88; 8:45 am]

BILLING CODE 4310-GJ-M

[ES-940-08-4520-13; ES-038348, Group 10]

North Carolina; Filing of Plat of Dependent Resurvey

March 28, 1988.

1. The plat of the dependent resurvey of a portion of the Cherokee Indian Land and perpetuation of AP Nos. 21, 25, 33 and 75 within the Henson Donation Tract, District No. 5, in Cherokee County, North Carolina, will be officially filed in the Eastern States Office, Alexandria, Virginia at 7:30 a.m., on May 12, 1988.

2. The dependent resurvey was made at the request of the Bureau of Indian Affairs.

3. All inquiries or protests concerning the technical aspects of the dependent resurvey must be sent to the Deputy State Director for Cadastral Survey, Eastern States Office, Bureau of Land Management, 350 South Pickett Street, Alexandria, Virginia 22304, prior to 7:30 a.m., May 12, 1988.

4. Copies of the plat will be made available upon request and prepayment of the reproduction fee of $4.00 per copy.

Lane J. Bouman,

Deputy State Director for Cadastral Survey and Support Services.

[FR Doc. 88-7232 Filed 4-1-88; 8:45 am]

BILLING CODE 4310-GJ-M

INTERNATIONAL TRADE COMMISSION

[Investigation No. 731-TA-390 (Preliminary)]

Digital Readout Systems and Subassemblies Thereof From Japan

AGENCY: International Trade Commission.

ACTION: Institution of a preliminary antidumping investigation and scheduling of a conference to be held in connection with the investigation.

SUMMARY: The Commission hereby gives notice of the institution of preliminary antidumping investigation No. 731-TA-390 (Preliminary) under section 733(a) of the Tariff Act of 1930 (19 U.S.C. 1673b(a)) to determine whether there is a reasonable indication that an industry in the United States is materially injured, or is threatened with material injury, or the establishment of an industry in the United States is materially retarded, by reason of imports from Japan of digital readout systems and subassemblies thereof,[1] provided for in item 710.80 of the Tariff Schedules of the United States (TSUS) or however provided for in Parts 4 or 5 Schedule 6 or Part 2 of Schedule 7 of the TSUS, that are alleged to be sold in the United States at less than fair value. As provided in section 733(a), the Commission must complete preliminary antidumping investigations in 45 days, or in this case by May 12, 1988.

For further information concerning the conduct of this investigation and rules of general application, consult the Commission's Rules of Practice and Procedure, Part 207, Subparts A and B (19 CFR Part 207), and Part 201, Subparts A through E (19 CFR Part 201).

EFFECTIVE DATE: March 28, 1988.

FOR FURTHER INFORMATION CONTACT: George L. Deyman (202-252-1193), Office of Investigations, U.S. International Trade Commission, 500 E Street SW., Washington, DC 20436. Hearing-impaired individuals are advised that information on this matter can be obtained by contacting the Commission's TDD terminal on 202-252-1810. Persons with mobility impairments who will need special assistance in gaining access to the Commission should contact the Office of the Secretary at 202-252-1000.

SUPPLEMENTARY INFORMATION:

Background

This investigation is being instituted in response to a petition filed on March 28, 1988, by Anilam Electronics Corp., Miami, FL.

Participation in the Investigation

Persons wishing to participate in this investigation as parties must file an entry of appearance with the Secretary to the Commission, as provided in § 201.11 of the Commission's rules (19 CFR 201.11), not later than seven (7) days after publication of this notice in the **Federal Register**. Any entry of appearance filed after this date will be referred to the Chairman, who will determine whether to accept the late entry for good cause shown by the person desiring to file the entry.

Service List

Pursuant to § 201.11(d) of the Commission's rules (19 CFR 201.11(d)), the Secretary will prepare a service list containing the names and addresses of all persons, or their representatives, who are parties to this investigation upon the expiration of the period for filing entries of appearance. In accordance with §§ 201.16(c) and 207.3 of the rules (19 CFR 201.16(c) and 207.3), each document filed by a party to the investigation must be served on all other parties to the investigation (as identified by the service list), and a certificate of service must accompany the document. The Secretary will not accept a document for filing without a certificate of service.

Conference

The Director of Operations of the Commission has scheduled a conference in connection with this investigation for 9:30 a.m. on April 20, 1988, at the U.S. International Trade Commission Building, 500 E Street SW., Washington, DC. Parties wishing to participate in the conference should contact George L. Deyman (202-252-1193) not later than April 18, 1988, to arrange for their appearance. Parties in support of the imposition of antidumping duties in this investigation and parties in opposition to the imposition of such duties will each be collectively allocated one hour within which to make an oral presentation at the conference.

Written Submissions

Any person may submit to the Commission on or before April 22, 1988, a written statement of information pertinent to the subject of the investigation, as provided in § 207.15 of the Commission's rules (19 CFR 207.15). A signed original and fourteen (14) copies of each submission must be filed with the Secretary to the Commission in accordance with § 201.8 of the rules (19 CFR 201.8). All written submissions except for confidential business data will be available for public inspection during regular business hours (8:45 a.m. to 5:15 p.m.) in the Office of the Secretary to the Commission.

Any business information for which confidential treatment is desired must be submitted separately. The envelope

---

[1] Digital readout systems subject to this investigation provide linear or rotational displacement information for high precision industrial equipment such as metalworking machine tools and coordinate inspection machines. The systems generally consist of an electronic console and one measurement transducer for each axis of linear or rotational displacement to be measured. Subassemblies of digital readout systems consist of consoles or transducers sold separately, and include the major component of consoles, namely printed circuit boards, and the two major components of transducers, namely glass strips with chrome grating, and reading heads. (The article subject to this investigation are also provded for in subheadings 9031.80.00 or 9031.90.80 of the proposed Harmonized Tariff Schedules of the United States (USITC Pub. 2030).)

and all pages of such submissions must be clearly labeled "Confidential Business Information." Confidential submissions and requests for confidential treatment must conform with the requirements of § 201.6 of the Commission's rules (19 CFR 201.6).

Authority: This investigation is being conducted under authority of the Tariff Act of 1930, title VII. This notice is published pursuant to § 207.12 of the Commission's rules (19 CFR 207.12).

By order of the Commission.

Kenneth R. Mason,

Secretary.

Issued: March 30, 1988.

[FR Doc. 88-7248 Filed 4-1-88; 8:45 am]

BILLING CODE 7020-02-M

INTERSTATE COMMERCE COMMISSION

[No. MC-F-19724 [1]]

Burlington Northern, Inc., et al.; Amended Notice of Intent

On September 25, 1987, pursuant to 49 CFR 1180.4(b), Burlington Northern, Inc. (BNI), a non-carrier holding company which also owns Burlington Northern Railroad Company (BNRR), and its wholly-owned non-carrier subsidiary Burlington Northern Motor Carriers, Inc. (BNMC), notified the Commission of their intent to file a formal application under 49 U.S.C. 11344 seeking Commission approval for acquisition of control by BNI, through BNMC, of the following Class I motor carriers: Victory Freightway System, Inc., Monkem Company, Inc., Monroe Trucking, Inc., Stoops Express, Inc., Wingate Trucking Company, Inc. (Wingate), and Taylor-Maid Transportation, Inc. (Taylor-Maid).[2] By decision served October 23, 1987, the Commission dismissed several exemption petitions that BNI and BNMC had previously filed under Section 11343(e) in connection with BNI's proposed acquisition of control of the motor carriers. The Commission also instituted an application proceeding under this docket number, and concluded that BNI's common control of BNRR (a Class I railroad) and BNMC's motor carrier subsidiaries constitutes a "minor" transaction under Commission regulations. A notice of BNI/BNMC intent to file a formal application was published in the **Federal Register** on October 23, 1987 at 52 FR 39,714.

However, in a pleading filed February 17, 1988, applicants sought to amend the notice of intent pursuant to 49 CFR 1180.4(b)(3) on the basis that BNI no longer planned to acquire the subject motor carriers, but rather planned to divest them. Accordingly, they requested a 9-month extension of time pursuant to 49 CFR 1163.2(a) for filing an application under 49 U.S.C. 11344, during which time they believed the divestiture process could be completed. By decision served April 1, 1988, the Commission has granted applicants' request to amend their notice of intent, authorized divestiture, and afforded applicants until December 27, 1988, in which to complete divestiture or, in the alternative, file a formal approval application under 49 U.S.C. 11344.[3]

Dated: March 25, 1988.

By the Commission, Chairman Gradison, Vice Chairman Andre, Commissioners Sterrett, Simmons, and Lamboley.

Noreta R. McGee,

Secretary.

[FR Doc. 88-7278 Filed 4-1-88; 8:45 am]

BILLING CODE 7035-01-M

[1] This matter was previously docketed under Nos. MC-F-16248, *Burlington Northern, Inc.—Control Exemption—Victory Freightway System, Inc.*; MC-F-16372, *Burlington Northern, Inc.—Control Exemption—Monkem Company, Inc.*; MC-F-16452, *Burlington Northern, Inc.—Control Exemption—Monroe Trucking, Inc.*; and MC-F-17030, *Burlington Northern, Inc. and Burlington Northern Motor Carriers, Inc.—Control Exemption—Stoops Express, Inc., Wingate Trucking Company, Inc., and Taylor-Maid Transportation, Inc.*

[2] By decision served November 21, 1986, in No. MC-152180, *Taylor-Maid Transportation, Inc.—Reentitled—Wingate/Taylor Maid Transportation Inc.*, the Commission amended its records to reflect the merger of Wingate and Taylor-Maid which it had exempted in a decision served July 28, 1986, and re-entitled the authority in the name of Wingate/Taylor Maid Transportation Inc.

[3] The Commission did not extend an October 8, 1987 temporary authority authorization of BNI's continuing control of BNMC and its motor carriers on grounds that the Commission's temporary authority rules did not apply to this situation, but concluded that even without such authorization BNI could lawfully continue to control and operate the motor carriers during the divestiture period.

DEPARTMENT OF JUSTICE

Information Collection(s) Under Review

Date: March 28, 1988.

The Office of Management and Budget (OMB) has been sent for review the following proposals for the collection of information under the provisions of the Paperwork Reduction Act (44 U.S.C. Chapter 35) and the Paperwork Reduction Reauthorization Act since the last list was published. Entries are grouped into submission categories. Each entry contains the following information: (1) The name and telephone number of the Department's Clearance Officer from whom a copy of the form (if any) and/or supporting documentation is available; (2) the office, board, division or bureau of the Department of Justice issuing the form or administering the collection; (3) the title of the form or collection; (4) the agency form number, if any; (5) how often the form must be filled out or the information is collected; (6) who will be asked or required to respond, as well as a brief abstract; (7) an estimated of the total number of respondents and the amount of estimated time it takes each respondent to respond; (8) an estimate of the total public burden hours associated with the collection; (9) an indication as to whether section 3504(h) of Public Law 96-511 applies; and (10) the name and telephone number of the person or office responsible for the OMB review. Comments and/or questions regarding the item(s) contained in this notice should be directed to the OMB reviewer listed at the end of each entry AND to the Department of Justice's Clearance Officer. If you anticipate commenting on a form/collection, but find that time to prepare such comments will prevent you from prompt submission, you should so notify the OMB reviewer AND the Department of Justice's Clearance Officer of your intent as soon as possible.

The Department of Justice's Clearance Officer is Larry E. Miesse and can be reached on (202) 633-4312.

Existing Collection in Use Without an OMB Control Number

(1) Larry E. Miesse, (202) 633-4312

(2) National Institute of Justice, Department of Justice

(3) DRUG USE FORECASTING PROGRAM

(4) No form number

(5) On occasion

(6) State and local governments. The Drug Use Forecast program monitors the extent and types of drug use by arrestees in 25 cities. Data is collected every three months in each city from new samples of arrestees. Participation is voluntary and anonymous; data collection includes interviews and urine specimens.

(7) 35,000 annual responses, .166 hours per response.

(8) 5,833 estimated public burden hours.

(9) Not applicable under 3504(h).

(10) Robert Fishman, (202) 395-7340.

New Collection

(1) Larry E. Miesse, (202) 633-4312

(2) Office of Juvenile Justice and Delinquincy Prevention, Department of Justice

(3) THE NATIONAL STUDY OF THE INCIDENCE OF MISSING CHILDREN

(4) No form number

(5) One time study

(6) Individuals or households. This collection will develop valid and reliable national estimates of the numbers of children reported or known to be missing; establish profiles of missing children and events through a national telephone survey.

(7) 40,000 annual responses, .2 hours per response.

(8) 7,979 estimated public burden hours.

(9) Not applicable under 3504(h).

(10) Robert Fishman, (202) 395-7340.

Larry E. Miesse,

Department Clearance Officer, U.S. Department of Justice.

[FR Doc. 88-7283 Filed 4-1-88; 8:45 am]

BILLING CODE 4410-18-M

Drug Enforcement Administration

John R. Welch, M.D.; Revocation of Registration

On April 23, 1987, the Deputy Assistant Administrator, Office of Diversion Control, Drug Enforcement Adminstration (DEA), issued an Order to Show Cause to John R. Welch, M.D., 505 N. Mollison Avenue, El Cajon, California 92021. The Order to Show Cause was returned unclaimed. Amended Orders to Show Cause were sent to Dr. Welch on May 5, 1987, and November 17, 1987. These Orders to Show Cause sought to revoke Dr. Welch's DEA Certificate of Registration AW1051173, because such registration was inconsistent with the public interest as that term is defined in 21 U.S.C. 823(f).

The Order to Show Cause was received by Dr. Welch on November 24, 1987, at Camp Barrett, Apline, California. More than 30 days have passed since the Order to Show Cause was received, and there has been no response. The Administrator finds that Dr. Welch has waived his right to a hearing and issues this final order based upon the findings of fact and conclusions of law as hereinafter set forth. 21 CFR 1301.54(d) and 1301.54(e).

The Administrator finds that Dr. Welch's license to practice medicine was revoked by the California Board of Medical Quality Assurance effective December 23, 1985. The revocation was stayed, and Dr. Welch was placed on probation for five years. The terms of the probation included that he could prescribe, administer, dispense and order Schedule II and III controlled substances only for hospital in-patients. The decision was based upon a finding that Dr. Welch prescribed various controlled substances to individuals without a good faith prior examination and medical indication.

On August 22, 1986, the California Board of Medical Quality Assurance filed a Petition for Temporary Restraining Order against John R. Welch, M.D. This petition was based upon Dr. Welch's violation of the terms of his probation, including that he continued to prescribe controlled substances for other than legitimate medical purposes. Dr. Welch created false and ficitious prescriptions for controlled substances and false medical records for individuals posing as patients. Effective November 25, 1986, a Stipulation relative to the Temporary Restraining Order was entered into between Dr. Welch and the Medical Board in which Dr. Welch was restrained and prohibited from practicing or attempting to practice medicine in the State of California; and from possessing, prescribing, dispensing, furnishing, administering or otherwise distributing controlled substances in California.

On March 6, 1987, a 22 count information was filed against Dr. Welch in the Municipal Court, El Cajon Judicial District, County of San Diego charging that he practiced medicine with a suspended license, that he issued false and fraudulent prescriptions, and that he prescribed controlled substances for other than a legitimate medical purpose. On June 12, 1987, Dr. Welch pled guilty to providing an addict with controlled substances, a felony violation of the California Health and Safety Code, Section 11153. On September 21, 1987, the court sentenced Dr. Welch to five years probation and ordered hime to serve 240 days in custody.

The Administrator finds that Dr. Welch is not authorized to practice medicine or to handle controlled substances in any manner in the State of California. Since the Drug Enforcement Administration does not have authority to maintain the registration of a practitioner who is not authorized to handle controlled substances in the state in which he conducts his business, Dr. Welch's DEA Certificate of Registration must be revoked. See: *Emerson Emery, M.D.*, Docket No. 85-46, 51 FR 9543 (1986); *Avner Kauffman, M.D.*, Docket No. 85-8, 50 FR 34208; *Agostino Carlucci, M.D.*, Docket No. 82-20, 49 FR 33184 (1984). The Administrator concludes that there is a lawful basis for the revocation of Dr. Welch's DEA Certificate of Registration.

Accordingly, the Administrator of the Drug Enforcement Administration, pursuant to the authority vested in him by 21 U.S.C. 823 and 824 and 28 CFR 0.100(b), hereby orders that DEA Certificate of Registration AW1051173 be, and it hereby is revoked. The Administrator further orders that any outstanding applications for registration submitted by John R. Welch, be denied. This order is effective May 4, 1988.

Dated: March 29, 1988.

John C. Lawn,

Administrator.

[FR Doc. 88-7237 Filed 4-1-88; 8:45 am]

BILLING CODE 4410-09-M

DEPARTMENT OF LABOR

Employment and Training Administration

[TA-W-20,446]

G.H. Bass and Co.; Rumford Distribution Center, Rumford, ME; Negative Determination Regarding Application for Reconsideration

By an application dated March 17, 1988, counsel for the former workers requested administrative reconsideration of the Department's notice of negative determination on the subject petition for trade adjustment assistance for workers at the Rumford Distribution Center of G.H. Bass Company, Rumford, Maine. The denial notice was signed on February 18, 1988 and published in the **Federal Register** on February 26, 1988 (53 FR 5842).

Pursuant to CFR 90.18(c) reconsideration may be granted under the following circumstances:

(1) If it appears on the basis of facts not previously considered that the determination complained of was erroneous;

(2) If it appears that the determination complained of was based on a mistake in the determination of facts not previously considered; or

(3) If, in the opinion of the Certifying Officer, a misinterpretation of facts or of the law justified reconsideration of the decision.

Counsel states that several of G.H. Bass' plants have been certified eligible to apply for adjustment assistance and claims that Bass consolidated its shoe operations because of the adverse impact imported shoes had on the company.

Findings in the investigative case file show that the Rumford distribution center did not produce an article within the meaning of section 222(3) of the Trade Act. The Department has consistently determined that the

performance of services (warehousing) does not constitute production of an article and this determination has been upheld in the U.S. Court of Appeals.

Workers of a firm providing services may be certified only if their separations were caused importantly by a reduced demand for their services from a firm related by ownership or control and whose workers are independently certified for adjustment assistance. Findings in the investigative case file show that these conditions were not met. All certifications for workers at G.H. Bass Company expired prior to the period applicable to the petition save the one at Berlin, New Hampshire (TA-W-19,827). However, the Berlin plant was mainly a shoe component plant which was integrated into the production of other Bass plants producing finished shoes. All of the production at Berlin was transferred to the Wilton plant in 1987.

The closure of the Rumford Distribution Center was due to a corporate decision to consolidate its warehouse operations with another domestic company facility. This domestic transfer of services would not form a basis for certification.

Conclusion

After review of the application and investigative findings, I conclude that there has been no error or misinterpretation of the law or of the facts which would justify reconsideration of the Department of Labor's prior decision. Accordingly, the application is denied.

Signed at Washington, DC, this 24th day of March 1988.

Harold A. Bratt,

Deputy Director, Office of Program Management, UIS.

[FR Doc. 88-7218 Filed 4-1-88; 8:45 am]

BILLING CODE 4510-30-M

[TA-W-20,372]

M and G Convoy, Inc., New Stanton, PA; Negative Determination Regarding Application for Reconsideration

By an application dated March 18, 1988, Local #30 of the Teamsters Union requested administrative reconsideration of the Department's notice of negative determination on the subject petition for trade adjustment assistance for workers at M & G Convoy, Inc., New Stanton, Pennsylvania. The denial notice was signed on February 24, 1988 and published in the **Federal Register** on March 8, 1988 (53 FR 7432).

Pursuant to CFR 90.18(c) reconsideration may be granted under the following circumstances:

(1) If it appears on the basis of facts not previously considered that the determination complained of was erroneous;

(2) If it appears that the determination complained of was based on a mistake in the determination of facts not previously considered; or

(3) If, in the opinion of the Certifying Officer, a misinterpretation of facts or of the law justified reconsideration of the decision.

The union claims that the M & G Convoy employees are controlled by Volswagen of America.

Findings in the investigative case file show that M & G Convoy, Inc., in New Stanton, Pennsylvania, is an independent firm providing transportation services for Volswagen of America. The Department of Labor does not consider the performance of services as constituting the production of an article as required by Section 222 of the Trade Act of 1974. This point was addressed in the Department's initial notice of negative determination.

Workers of a firm providing a service may be certified only if their separations were caused importantly be a reduced demand for their services from a firm related by ownership or control and whose workers are independently certified for adjustment assistance. Findings in the investigative case file show that there is no corporate affiliation between M & G Convoy, Inc., and Volkswagen of America. Further, M & G Convoy, Inc., exclusively controls all its payroll transactions and personnel actions.

Conclusion

After reveiw of the application and investigative findings, I conclude that there has been no error or misinterpretation of the law or of the facts which would justify reconsideration of the Department of Labor's prior decision. Accordingly, the application is denied.

Signed at Washington, DC, this 22nd day of March 1988.

Stephen A. Wandner,

Deputy Director, Office of Legislation and Actuarial Services, UIS.

[FR Doc. 88-7219 Filed 4-1-88; 8:45 am]

BILLING CODE 4510-30-M

[TA-W-20,339]

Beaumont Co., Morgantown, WV; Affirmed Determination Regarding Application for Reconsideration

By an application dated March 11, 1988, the company requested administrative reconsideration of the Department of Labor's Notice of Negative Determination Regarding Eligibility to Apply for Worker Adjustment Assistance on behalf of workers and former workers of the Beaumont Company, Morgantown, West Virginia. The determination will soon be published in the **Federal Register.**

The company claims that the Department's survey was inadequate. The company submitted an additional list of customers and stated that sales declined in constant dollars was incurred in 1987 compared to 1986. Also, according to the company, some customers were reluctant to provide import information because of the phrasing of particular parts of the Department's survey.

Conclusion

After careful review of the application, I conclude that the claims are of sufficient weight to justify reconsideration of the Department of Labor's prior decision. The application is, therefore, granted.

Signed at Washington, DC, this 21st day of March 1988.

Robert O. Deslongchamps,

Director, Office of Legislation and Actuarial Service, UIS.

[FR Doc. 88-7220 Filed 4-1-88; 8:45 am]

BILLING CODE 4510-30-M

[TA-W-20, 274]

Young Radiator Co., Racine, WI; Negative Determination Regarding Application for Reconsideration

By an application dated February 29, 1988, Region 10 of the United Auto Workers (UAW) requested administrative reconsideration of the Department's negative determination on the subject petition for trade adjustment assistance for workers at Young Radiator Company, Racine, Wisconsin. The denial notice was signed on January 14, 1988 and published in the **Federal Register** on February 3, 1988 (53 FR 3067).

Pursuant to CFR 90.18(c) reconsideration may be granted under the following circumstances:

(1) If it appears on the basis of facts not previously considered that the

determination complained of was erroneous;

(2) If it appears that the determination complained of was based on a mistake in the determination of facts not previously considered; or

(3) If, in the opinion of the Certifying Officer, a misinterpretation of facts or of the law justified reconsideration of the decision.

The union claims that U.S. imports of heat exchangers whether imported separately or assembled on heavy duty equipment has led to declines in employment at the subject firm.

The Racine plant producers heat transfer products (heat exchangers, air coolers, etc.) used as components on vehicles and equipment. Findings in the investigation did not substantiate that increased imports contributed importantly to worker separations. Sales and employment increased at the Racine plant of Young Radiator in 1986 compared to 1985. The Department surveyed the firm's customers for 1987. Respondents to the survey which accounted for over 100 percent of the January to October 1987 sales decline showed that none of the respondents imported heat transfer products.

Further, imports of heavy duty equipment are not like or directly competitive with heat transfer products. The courts addressed the issue of component parts in *United Shoe Workers of America, AFL-CIO* v. *Bedell*, 506 F2d 174 (D.C. Cir. 1974). In that case the court held that imported finished women's shoes were not like or directly competitive with shoe components—shoe counters. Similarly, heat transfer products which are incorporated into finished articles (heavy duty equipment) cannot be considered like or directly competitive heavy duty equipment.

Conclusion

After review of the application and investigation findings, I conclude that there has been no error or misinterpretation of the law or of the facts which would justify reconsideration of the Department of Labor's prior decision. Accordingly, the application is denied.

Signed at Washington, DC, this 21st day of March 1988.

Stephen A. Wandner,

Deputy Director, Office of Legislation and Actuarial Services, UIS.

[FR Doc. 88-7221 Filed 4-1-88; 8:45 am]

BILLING CODE 4510-30-M

MERIT SYSTEMS PROTECTION BOARD

Amicus Briefs Concerning Performance Improvement Periods in Chapter 43 Actions

AGENCY: Merit Systems Protection Board.

ACTION: Notice of postponement of due date for amicus briefs.

SUMMARY: The Merit Systems Protection Board postpones the due date for amicus briefs solicited by **Federal Register** notice published March 2, 1988 (53 FR 6712).

FOR FURTHER INFORMATION CONTACT: Matthew D. Shannon, Counsel to the Clerk, Merit Systems Protection Board, (202) 653-7200.

SUPPLEMENTARY INFORMATION: The Merit Systems Protection Board has before it a number of cases which raise related issues concerning the proper interpretation and application of 5 U.S.C. 4302(b)(6), 5 U.S.C. 4303(c)(2)(A), and 5 CFR 432.203(b). In the **Federal Register** notice published March 2, 1988 (53 FR 6712), the Board posed a number of questions concerning the application of these statutory and regulatory provisions, and solicited amicus briefs from interested parties. The notice established a due date of April 4, 1988 for the filing of amicus briefs. All interested parties are hereby notified that the Board is postponing the filing date for these amicus briefs. Interested parties are also informed that in the event the Board establishes a new date for the filing of such briefs, it may amend the questions posed in the March 2 **Federal Register** notice.

Date: March 30, 1988.

Robert E. Taylor,

Clerk of the Board.

[FR Doc. 88-7241 Filed 4-1-88; 8:45 am]

BILLING CODE 7400-01-M

NUCLEAR REGULATORY COMMISSION

Regulatory Guide; Issuance, Availability

The Nuclear Regulatory Commission has issued a new guide in its Regulatory Guide Series. This series has been developed to describe and make available to the public such information as methods acceptable to the NRC staff for implementing specific parts of the Commission's regulations, techniques used by the staff in evaluating specific problems or postulated accidents, and data needed by the staff in its review of applications for permits and licenses.

The new guide is Regulatory Guide 3.63, "Onsite Meteorological Measurement Program for Uranium Recovery Facilities—Data Acquisition and Reporting." It provides guidance acceptable to the NRC staff on the meteorological parameters that should be measured, the siting of meteorological instruments, system accuracies, instrument maintenance and servicing schedules, and the recovery, reduction, and compilation of data for uranium recovery facilities.

Comments and suggestions in connection with (1) items for inclusion in guides currently being developed or (2) improvements in all published guides are encouraged at any time. Written comments may be submitted to the Rules and Procedures Branch, Division of Rules and Records, Office of Administration and Resources Management, U.S. Nuclear Regulatory Commission, Washington, DC 20555.

Regulatory guides are available for inspection at the Commission's Public Document Room, 1717 H Street NW., Washington, DC. Copies of issued guides may be purchased from the Government Printing Office at the current GPO price. Information on current GPO prices may be obtained by contacting the Superintendent of Documents, U.S. Government Printing Office, Post Office Box 37082, Washington, DC 20013-7082, telephone (202) 275-2060 or (202) 275-2171. Issued guides may also be purchased from the National Technical Information Service on a standing order basis. Details on this service may be obtained by writing NTIS, 5285 Port Royal Road, Springfield, VA 22161.

(5 U.S.C. 552(a))

Dated at Rockville, Maryland, this 28th day of March 1988.

For the Nuclear Regulatory Commission.

Eric S. Beckjord,

Director, Office of Nuclear Regulatory Research.

[FR Doc. 88-7285 Filed 4-1-88; 8:45 am]

BILLING CODE 7590-01-M

NUCLEAR REGUALTORY COMMISSION

[Docket Nos. 50-369 and 50-370]

Duke Power Co.; Consideration of Issuance of Amendments to Facility Operating Licenses and Opportunity for Hearing

The United States Nuclear Regulatory Commission (the Commission) is considering issuance of amendments to Facility Operating Licenses Nos. NPF-9

and NPF-17 issued to Duke Power Company (the licensee), for operation of the McGuire Nuclear Station, Units 1 and 2, located in Mecklenburg County, North Carolina.

The amendments would change Technical Specification (TS) 3/4.7.7 "Auxiliary Building Filtered Ventilation Exhaust System" (VA system) and its associated Bases to reflect that the VA system consists of two shared safety-grade systems serving the common Auxiliary Building, rather than one safety-grade system for each of the two McGuire units. The VA system functions after a loss-of-coolant accident to ensure that the radioactive materials which may leak from the ECCS equipment within the ECCS pump rooms of the Auxiliary Building would be filtered by a filter package including a charcoal filter bed prior to reaching the environment.

The changes would relax the present action time (24 hours) to restore an inoperable VA system. Specifically, the change would provide a 7-day action time if one system of VA were inoperable because of an inoperable filter package or because it is unable to maintain a pressure of 0.25 inches (water gauge) at the ECCS pump room relative to outside atmosphere. A 72-hour action time would be provided if one VA system were inoperable because of an inoperable flowpath or because it was unable to maintain a negative pressure at the ECCS pump room relative to outside atmosphere. The present 24-hour action time would be applied only if both VA systems were inoperable, and would apply to both McGuire units until at least one system was restored.

The amendments would double the time period of charcoal absorber operation (from 720 hours to 1440 hours) after which laboratory analysis is required to verify that a carbon sample meets specified methyl iodide penetration criteria. The carbon sample test temperature (presently specified by referenced Regulatory Guide 1.52, Revision 2) would be changed from 80°C to a more conservative 30°C while the associated penetration acceptance criteria would be relaxed from 99% to 90% removal.

The amendments would also substitute the 1980 version for the 1975 version of ANSI N510 (referenced in TSs 4.7.7.e and 4.7.7f) for use as a procedural guide for surveillance testing, and would substitute the term "carbon whenever the term "charcoal" is used in TS 3/4.7.7.

By May 4, 1988, the licensee may file a request for a hearing with respect to issuance of the amendments to the subject facility operating licenses and any person whose intersts may be affected by this proceeding and who wishes to participate as a party in the proceeding must file a written request for hearing and a petition for leave to intervene. Requests for a hearing and petitions for leave to intervene shall be filed in accordance with the Commission's "Rules of Practice for Domestic Licensing Proceedings" in 10 CFR Part 2. If a request for a hearing or petition for leave to intervene is filed by the above date, the Commission or an Atomic Safety and Licensing Board, designated by Commission or by the Chairman of the Atomic Safety and Licensing Board Panel, will rule on the request and/or petition, and the Secretary or the designated Atomic Safety and Licensing Board will issue a notice of hearing or an appropriate order.

As required by 10 CFR 2.714, a petition for leave to intervene shall set forth with particularity the interest of the petitioner in the proceeding, and how that interest may be affected by the results of the proceeding. The petition should specifically explain the reasons why intervention should be permitted with particular reference to the following factors: (1) The nature of the petitioner's right under the Act to be made a party to the proceeding; (2) the nature and extent of the petitioner's property, financial, or other interest in the proceeding; and (3) the possible effect of any order which may be entered in the proceeding on the petitioner's interest. The petition should also identify the specific aspect(s) of the subject matter of the proceeding as to which petitioner wishes to intervene. Any person who has filed a petition for leave to intervene or who has been admitted as a party may amend the petition without requesting leave of the Board up to fifteen (15) days prior to the first prehearing conference scheduled in the proceeding, but such an amended petition must satisfy the specificity requirements described above.

Not later than fifteen (15) days prior to the first prehearing conference scheduled in the proceeding, a petitioner shall file a supplement to the petition to intervene which must include a list of the contentions which are sought to be litigated in the matter, and the bases for each contention set forth with reasonable specificity. Contentions shall be limited to matters within the scope of the amendment under consideration. A petitioner who fails to file such a supplement which satisfies these requirements with respect to at least one contention will not be permitted to participate as a party.

Those permitted to intervene become parties to the proceeding, subject to any limitations in the order granting leave to intervene, and have the opportunity to participate fully in the conduct of the hearing, including the opportunity to present evidence and cross-examine witnesses.

A request for a hearing or a petition for leave to intervene shall be filed with the Secretary of the Commission, United States Nuclear Regulatory Commission, Washington, DC 20555, Attention: Docketing and Service Branch, or may be delivered to the Commission's Public Document Room, 1717 H Street NW., Washington, DC, by the above date. Where petitions are filed during the last ten (10) days of the notice period, it is required that the petitioner or representative for the petitioner promptly so inform the Commission by a toll-free telephone call to Western Union at 1-800-325-6000 (in Missouri 1-800-342-6700). The Western Union operator should be given Datagram Identification Number 3737 and the following message addressed to Lawrence P. Crocker, Acting Director, Project Directorate II-3; (petitioner's name and telephone number); (date Petition was mailed); (plant name); and (publication date and page number of this **Federal Register** notice). A copy of the petition should also be sent to the Office of the General Counsel, U.S. Nuclear Regulatory Commission, Washington, DC 20555, and to Mr. Albert Carr, Duke Power Company, 422 South Church Street, Charlotte, North Carolina 28242.

Nontimely filings of petitions for leave to intervene, amended petitions, supplemental petitions and/or requests for hearing will not be entertained absent a determination by the Commission, the presiding officer or the presiding Atomic Safety and Licensing Board, that the petition and/or request should be granted based upon a balancing of the factors specified in 10 CFR 2.714(a)(1)(i)-(v) and 2.714(d).

If a request for hearing is received, the Commission's staff may issue the amendments after it completes its technical review and prior to the completion of any required hearing if it publishes a further notice for public comment of its proposed finding of no significant hazards consideration in accordance with 10 CFR 50.91 and 50.92.

For further details with respect to this action, see the application for amendment dated October 15, 1987, and corrected October 22, 1987, which is available for public inspection at the Commission's Public Document Room, 1717 H Street NW., Washington, DC,

and at the Atkins Library, University of North Carolina, Charlotte (UNCC Station), North Carolina 28223.

Dated at Rockville, Maryland, this 29th day of March 1988.

For the Nuclear Regulatory Commission.

Darl S. Hood,

Acting Project Director Project Directorate II-3 Division of Reactor Projects—I/II.

[FR Doc. 88-7286 Filed 4-1-88; 8:45 am]

BILLING CODE 7590-01-M

Georgia Power Co. et al.; Consideration of Issuance of Amendment to Facility Operating License and Opportunity for Hearing

The United States Nuclear Regulatory Commission (the Commission) is considering issuance of an amendment to Facility Operating License No. NPF-68, issued to Georgia Power Company, Oglethorpe Power Corporation, Municipal Electric Authority of Georgia, and City of Dalton, Georgia, (the licensees) for operation of the Vogtle Electric Generating Plant, Unit 1, located in Burke County, Georgia.

The proposed amendment would change Technical Specification 3.6.2.2, "Spray Additive System," and its bases. The proposed change revises the upper and lower volume limits for the sodium hydroxide solution in the spray additive tank. The proposed change to the bases is to explain that the specified volume limits represent the required solution to be delivered rather than a contained volume.

Prior to issuance of the proposed license amendment, the Commission will have made findings required by the Atomic Energy Act of 1954, as amended (the Act) and the Commission's regulation.

By May 4, 1988, the licensees may file a request for a hearing with respect to issuance of the amendment to the subject facility operating license and any person whose interest may be affected by this proceeding and who wishes to participate as a party in the proceeding must file a written request for hearing and a petition for leave to intervene. Requests for a hearing and petitions for leave to intervene shall be filed in accordance with the Commission's "Rules of Practice for Domestic Licensing Proceedings" in 10 CFR Part 2. If a request for a hearing or petition for leave to intervene is filed by the above date, the Commission or an Atomic Safety and Licensing Board, designated by the Commission or by the Chairman of the Atomic Safety and Licensing Board Panel, will rule on the request and/or petition, and the Secretary or the designated Atomic Safety and Licensing Board will issue a notice of hearing or an appropriate order.

As required by 10 CFR 2.714, a petition for leave to intervene shall set forth with particularity the interest of the petitioner in the proceeding, and how that interest may be affected by the results of the proceeding. The petition should specifically explain the reasons why intervention should be permitted with particular reference to the following factors: (1) The nature of the petitioner's right under the Act to be made a party to the proceeding; (2) the nature and extent of the petitioner's property, financial, or other interest in the proceeding; and (3) the possible effect of any order which may be entered in the proceeding on the petitioner's interest. The petition should also identify the specific aspect(s) of the subject matter of the proceeding as to which petitioner wishes to intervene. Any person who has filed a petition for leave to intervene or who has been admitted as a party may amend the petition without requesting leave of the Board up to fifteen (15) days prior to the first prehearing scheduled in the proceeding, but such an amended petition must satisfy the specificity requirements described above.

Not later than fifteen (15) days prior to the first prehearing conference scheduled in the proceeding, a petitioner shall file a supplement to the petition to intervene which must include a list of the contentions which are sought to be litigated in the matter, and the bases for each contention set forth with reasonable specificity. Contentions shall be limited to matters within the scope of the amendment under consideration. A petitioner who fails to file such a supplement which satisfies these requirements with respect to at least one contention will not be permitted to participate as a party.

These permitted to intervene become parties to the proceeding, subject to any limitations in the order granting leave to intervene, and have the opportunity to participate fully in the conduct of the hearing, including the opportunity to present evidence and cross-examine witnesses.

A request for a hearing or a petition for leave to intervene shall be filed with the Secretary of the Commission, United States Nuclear Regulatory Commission, Washington, DC 20555, Attention: Docketing and Service Branch, or may be delivered to the Commission's Public Document Room, 1717 H Street NW., Washington, DC by the above date. Where petitions are filed during the last ten (10) days of the notice period, it is requested that the petitioner or representative for the petitioner promptly so inform the Commission by a toll-free telephone call to Western Union at (800) 325-6000 (in Missouri (800) 342-6700). The Western Union operator should be given Datagram Identification Number 3737 and the following message addressed to Kahtan Jabbour, Acting Director, Project Directorate II-3: (petitioner's name and telephone number; (date Petition was mailed); (plant name); and publication date and page number of this **Federal Register** notice). A copy of the petition should also be sent to the Office of the General Counsel, U.S. Nuclear Regulatory Commission, Washington, DC 20555, and to Mr. Arthur H. Domby, Troutman, Sanders, Lockerman and Ashmore, Chandler Building, Suite 1400, 127 Peachtree Street NE., Atlanta, Georgia 30043, attorney for the licensee.

Nontimely filings of petitions for leave to intervene, amended petitions, supplemental petitions and/or requests for hearing will not be entertained absent a determination by the Commission, the presiding officer or the presiding Atomic Safety and Licensing Board, that the petition and/or request should be granted based upon a balancing of the factors specified in 10 CFR 2.714(a)(1)(i)-(v) and 2.714(d).

If a request for hearing is received, the Commission's staff may issue the amendment after it completes its technical review and prior to the completion of any required hearing if it publishes a further notice for public comment of its proposed finding of no significant hazards consideration in accordance with 10 CFR 50.91 and 50.92.

For further details with respect to this action, see the application for amendment dated February 4, 1988, which is available for public inspection at the Commission's Public Document Room, 1717 H Street NW., Washington, DC, and at the Burke County Library, 412 Fourth Street, Waynesboro, Georgia 30830.

Dated at Rockville, Maryland, this 29th day of March 1988.

For the Nuclear Regulatory Commission.

Darl S. Hood,

Acting Project Director, Project Directorate II-3, Division of Reactor Projects-I/II.

[FR Doc. 88-7287 Filed 4-1-88; 8:45 am]

BILLING CODE 7590-01-M

[Docket No. 50-245]

Northeast Nuclear Energy Co.; Consideration of Issuance of Amendment to Facility Operating License and Opportunity for Hearing

The U.S. Nuclear Regulatory Commission (the Commission) is considering issuance of an amendment to Facility Operating License No. DPR-21, issued to Northeast Nuclear Energy Company (the licensee), for operation of the Millstone Nuclear Power Station, Unit No. 1, located in New London County, Connecticut.

The amendment would change the Technical Specifications to provide for operational flexibility by allowing single loop operation at reduced power in the event maintenance of a recirculation pump or other component renders one loop inoperative.

Prior to issuance of the proposed license amendment, the Commission will have made findings required by the Atomic Energy Act of 1954, as amended (the Act) and the Commission's regulations.

By May 4, 1988, the licensee may file a request for a hearing with respect to issuance of the amendment to the subject facility operating license and any person whose interest may be affected by this proceeding and who wishes to participate as a party in the proceeding must file a written request for a hearing and a petition for leave to intervene. Requests for a hearing and petitions for leave to intervene shall be filed in accordance with the Commission's "Rules of Practice for Domestic Licensing Proceedings" in 10 CFR Part 2. If a request for a hearing or petition for leave to intervene is filed by the above date, the Commission or an Atomic Safety and Licensing Board, designated by the Commission or by the Chairman of the Atomic Safety and Licensing Board Panel, will rule on the request and/or petition; and the Secretary or the designated Atomic Safety and Licensing Board will issue a notice of hearing or an appropriate order.

As required by 10 CFR 2.714, a petition for leave to intervene shall set forth with particularity the interest of the petitioner in the proceeding, and how that interest may be affected by the results of the proceeding. The petition should specifically explain the reasons why intervention should be permitted with particular reference to the following factors: (1) The nature of the petitioner's right under the Act to be made a party to the proceeding; (2) the nature and extent of the petitioner's property, financial, or other interest in the proceeding; and (3) the possible effect of any order which may be entered in the proceeding on the petitioner's interest. The petition should also identify the specific aspect(s) of the subject matter of the proceeding as to which petitioner wishes to intervene. Any person who has filed a petition for leave to intervene or who has been admitted as a party may amend the petition without requesting leave of the Board up to fifteen (15) days prior to the first prehearing conference scheduled in the proceeding, but such an amended petition must satisfy the specificity requirements described above.

Not later than fifteen (15) days prior to the first prehearing conference scheduled in the proceeding, a petitioner shall file a supplement to the petition to intervene, which must include a list of the contentions that are sought to be litigated in the matter, and the bases for each contention set forth with reasonable specificity. Contentions shall be limited to matters within the scope of the amendment under consideration. A petitioner who fails to file such a supplement which satisfies these requirements with respect to at least one contention will not be permitted to participate as a party.

Those permitted to intervene become parties to the proceeding, subject to any limitations in the order granting leave to intervene, and have the opportunity to participate fully in the conduct of the hearing, including the opportunity to present evidence and cross-examine witnesses.

A request for a hearing or a petition for leave to intervene must be filed with the Secretary of the Commission, U.S. Nuclear Regulatory Commission, Washington, DC 20555, Attention: Docketing and Service Branch, or may be delivered to the Commission's Public Document Room, 1717 H Street NW. Washington, DC, by the above date. Where petitions are filed during the last ten (10) days of the notice period, it is requested that the petitioner promptly so inform the Commission by a toll-free telephone call to Western Union at (800) 325-6000 (in Missouri (800) 342-6700). The Western Union operator should be given Datagram Identification Number 3737 and the following message addressed to John F. Stolz: petitioner's name and telephone number; date petition was mailed; plant name; and publication date and page number of this **Federal Register** notice. A copy of the petition should also be sent to the Office of the General Counsel, U.S. Nuclear Regulatory Commission, Washington, DC 20555, and to Mr. Gerald R. Garfield, Esq., Day, Berry & Howard, Counselors at Law, City Place, Hartford, Connecticut 06103-3499.

Nontimely filings of petitions for leave to intervene, amended petitions, supplemental petitions and/or requests for hearing will not be entertained absent a determination by the Commission, the presiding officer or the presiding Atomic Safety and Licensing Board, that the petition and/or request should be granted based upon a balancing of the factors specified in 10 CFR 2.714(a)(1)(i)-(v) and 2.714(d).

If a request for hearing is received, the Commission's staff may issue the amendments after it completes its technical review and prior to the completion of any required hearing if it publishes a further notice for public comment of its intent to make a no significant hazards consideration finding in accordance with 10 CFR 50.91 and 50.92.

For further details with respect to this action, see the application for amendment dated August 17, 1987, which is available for public inspection at the Commission's Public Document Room, 1717 H Street NW., Washington, DC and at the Waterford Public Library, 49 Rope Ferry Road, Waterford Connecticut 06385.

Dated at Rockville, Maryland, this 28th day of March 1988.

For the Nuclear Regulatory Commission.

John F. Stolz,

Director, Project Directorate I-4, Division of Reactor Projects I/II, Office of Nuclear Reactor Regulation.

[FR Doc. 88-7288 Filed 4-1-88; 8:45 am]

BILLING CODE 7590-01-M

SECURITIES AND EXCHANGE COMMISSION

[Release No. 34-25529; File No. SR-OCC-88-2]

Self-Regulatory Organization; Proposed Rule Change by the Options Clearing Corp. Relating to Cash Index Participations

Pursuant to section 19(b)(1) of the Securities Exchange Act of 1934, 15 U.S.C. 78s(b)(1) (the "Act"), notice is hereby given that on March 3, 1988, The Options Clearing Corporation ("OCC") filed with the Securities and Exchange Commission the proposed rule change as described in Items I, II and III below, which Items have been prepared by the self-regulatory organization.[1] The

[1] The proposed rule change is being filed subject to the approval of the Board of Directors of OCC, which is expected to be obtained at a meeting to be held on April 21, 1988.

Commission is publishing this notice to solicit comments on the proposed rule change from interested persons.

I. Self-Regulatory Organization's Statement of the Terms of Substance of the Proposed Rule Change

OCC proposes to amend its By-Laws and Rules to provide for the issuance, clearance and settlement of Cash Index Participations, or "CIPs." The Philadelphia Stock Exchange ("PHLX") has proposed in SR-PHLX-88-7 to trade CIPs based on two stock market indexes.

II. Self-Regulatory Organization's Statement of the Purpose of, and Statutory Basis for, the Proposed Rule Change

In its filing with the Commission, the self-regulatory organization included statements concerning the purpose of and basis for the proposed rule change and discussed any comments it received on the proposed rule change. The text of these statments may be examined at the places specified in Item IV below. The self-regulatory organization has prepared summaries, set forth in sections (A), (B), AND (C) below, of the most significant aspects of such statements.

A. Self-Regulatory Organization's Statement of the Purpose of, and Statutory Basis for, the Proposed Rule Change

General Description of CIPs

A CIP is a security whose value is determined by reference to the value of an underlying stock index.[2] A CIP is intended to place its holder in the economic position of a purchaser of a portfolio or "basket" of stocks comprising the underlying index, with each stock represented in the basket as the same percentage of the total value of the basket that it represents in the underlying index. Ownership of a CIP is therefore the functional equivalent of ownership of the underlying basket of stocks, except that the CIP holder is able to avoid the transaction costs and other practical difficulties inevitably associated with maintaining a position in a basket of stocks proportionate to the composition of an index. In furtherance of this economic purpose, and unlike an option, a CIP will have a potentially perpetual existence, unless and until the holder extinguishes the CIP by entering into an offsetting writing transaction or exercises the "cash-out privilege" of the CIP as described below.[3]

In addition to being able to extinguish a CIP position by entering into an offsetting transaction, a holder of CIPs will be entitled to exercise a "cash-out privilege" once each quarter. The cash-out privilege will be available on the third Friday of March, June, September and December, or on such other day as the Exchange on which the CIP is traded specifies pursuant to its Rules, to holders who submit exercise notices to OCC on the preceding business day. Exercise notices will be assigned to writing clearing members of CIPs in the same class using OCC's random assignment system.

A holder of a CIP will be entitled to receive, and a writer of a CIP will be obligated to pay, a quarterly "dividend equivalent." The dividend equivalent will closely approximate the dividends which the owner of the basket of stocks described above would be entitled to receive. A reporting authority designated by the Exchange will calculate the dividend equivalent and provide the data to OCC. The dividend equivalent will be credited to long positions and debited to short positions held at the close of business on the business day before the third Friday of March, June, September and December, or on such other day as the Exchange designates pursuant to its Rules. OCC will debit short positions and credit long positions with the dividend equivalent on the following morning.

Like an option, a CIP will not be certificated, and a holder's ownership right will be evidenced as a long position in the name of a clearing member on OCC's books.

Particular Changes to OCC's By-Laws

In Article I of OCC's By-Laws, many of the definitions are amended to incorporate references to CIPs. A definition of the term "CIP" is added, and the term "cleared security" is defined to mean an option contract or a CIP. The terms "exercise" and "Exercising Clearing Member" are defined to make clear that these terms can refer to the exercise of the cash-out privilege of a CIP as well as the exercise of an option.

Articles V, VI and VII are amended to incorporate references to CIPs. Section 7 of Article VI is amended to describe the information as to which a Purchasing Clearing Member and a Writing clearing Member must agree in a CIP transaction. Subsection 10(b) of Article VI is amended so that it conforms to current practice, which is that it is the Exchange, not OCC, which designates the unit of trading for each new series of options. A new Subsection 10(c) is added to Article VI to describe the conditions under which a new class of CIPs may be opened for trading; the subsection parallels existing subsection 10(b) for options.

Article VIII is amended to reflect that OCC's Non-Equity Securities Clearing Fund will cover losses suffered by OCC if a Clearing Member should default on any obligation to OCC with respect to CIPs.

A new Article XVIII is added to the By-Laws. Section 1 contains definitions applicable to CIPs. Most of the definitions parallel those used with respect to index options in existing Article XVII. The term "trade price" is defined as the price agreed upon by a purchaser and seller in an Exchange transaction; the term is the counterpart for CIPs of the term "premium" for options. The terms "current index value" and "aggregate current index value" are defined, as they are with respect to index options, to refer to the value of the index underlying a class of CIPs at the close of business on any business day. The terms "cash-out value" and "aggregate cash-out value" are defined because a CIP will be valued, for purposes of the cash-out privilege, at the opening of business, or at such other time as is specified by the Exchange, rather than at the close of business.

Section 2 states the general rights and obligations of holders and writers of CIPs. Subsections (a) and (b) parallel subsections 9 (a) and (b) of Article VI, which state the general rights and obligations of holders and writers of options. Subsection (c) gives OCC the right in extraordinary circumstances (primarily, when there is no active trading in CIPs) to close out the market. PHLX Rule 1008B gives the Exchange similar authority. A CIP by its terms never expires, and in the absence of this authority it could be very difficult to close out all outstanding positions in the event that active trading in CIPs ceased.

Sections 3 and 4 of proposed Article XVIII describe the effect of transactions on long and short positions in CIPs, and section 5 describes the agreements of a Writing Clearing Member in an opening writing transaction in CIPs. The three

[2] As noted above, PHLX intends to establish CIPs based on two underlying indexes. The indexes are described in SR-PHLX-88-7. For purposes of OCC's Rules, CIPs based on each underlying index will constitute a separate "class" of CIPs.

[3] Pursuant to the authority contained in proposed PHLX Rule 1008B and proposed Article XVIII, section 2(c) of OCC's By-Laws, however, in the event that an active market in a class of CIPs does not develop or under other exceptional circumstances, PHLX and OCC may exercise the CIP cash-out privilege on behalf of all holders of CIPs in a particular class, and thereby close out the market in that class.

sections parallel the provisions applicable to options in existing sections 12, 13 and 14 of Article VI. Section 6 addresses the unavailability or inaccuracy of the cash-out value; the section parallels section 4 of Article XVII, which addresses the unavilability or inaccuracy of the current index value for index options. OCC is evaluating whether circumstances could arise in which it would require authority to make adjustments in the terms of CIPs. If OCC concludes that such circumstances could arise, it will amend this filing to provide the necessary authority. Such authority would be similar to that described in section 3 of Article XVII will respect to index options.

Particular Changes to OCC's Rules

Conforming amendments are made in Rule 207, 401, and 402. OCC is reviewing the margin methodology for CIPs and will at a later date file, by amendment to this filing, proposed amendments to Chapter VI of the Rules.

Rule 1001 is amended to state that each Clearing Member's contribution to th Non-Equity Securities Clearing Fund will be calculated on the basis of its margin requirement for CIPs as well as non-equity securities options.

Chapter XI is amended to incorporate references to CIPs. Chapter XI may require additional amendments to conform its provisions to the CIPs margin methodology.

Chapter XIX sets out the Rules applicable only to CIPs. Rule 1902 describes the procedure for each effecting settlement of dividend equivalents. Rule 1903 describes the procedure for exercise of the cash-out privilege of a CIP. The procedure is similar to the general procedure for options described in Rule 801, except that exercise is limited to one day each quarter. OCC anticipates that late filing of an exercise notice for a CIP will be permitted, upon the payment of a late filing fee. OCC will amend Rule 1903(d) to provide the schedule of late filing fees when it determines what these fees should be.

Rule 1904 parallels Rule 802, and states that properly tendered exercise notices shall be accepted by the Corporation on the date of tender. The description in Rule 1905 of the assignment and allocation of CIP exercise notices parallels that in Rule 1803 for index options, and supplements Rules 803 and 804 just as Rule 1803 does. Rules 1906 and 1907 describe the settlement of CIP exercises, and parallel Rules 1805 and 1806, respectively, for index options. Rule 1908 describes the treatment of exercised CIPs to which a suspended Clearing Member is a party, and parallels Rule 1807 for index options.

The proposed changes to OCC's Rules are consistent with the purposes and requirements of Section 17A of the Act because they provide for the prompt and accurate clearance and settlement of transactions in CIPs. They do so by applying to CIPs substantially similar rules and procedures to those that have been used successfully in the clearance and settlement of transactions in index options. The proposed rule change is consistent with the safeguarding of funds and securities in OCC's custody or control or for which OCC is responsible in that it would apply to CIPs a system of safeguards which is substantially the same as OCC currently uses for options.

B. Self-Regulatory Organization's Statement on Burden on Competition

OCC does not believe that the proposed rule change would impose any burden on competition.

C. Self-Regulatory Organization's Statement on Comments on the Proposed Rule Change Received from Members, Participants or Others

Written comments were not and are not intended to be solicited with respect to the proposed rule change and none have been received.

III. Date of Effectiveness of the Proposed Rule Change and Timing for Commission Action

Within 35 days of the date of publication of this notice in the **Federal Register** or within such longer period (i) as the Commission may designate up to 90 days of such date if it finds such longer period to be appropriate and publishes its reasons for so finding, or (ii) as to which the self-regulatory organization consents, the Commission will:

(A) By order approve such proposed rule change, or,

(B) Institute proceedings to determine whether the proposed rule change should be disapproved.

IV. Solicitation of Comments

Interested persons are invited to submit written data, views and arguments concerning the foregoing. Persons making written submissions should file six copies thereof with the Secretary, Securities and Exchange Commission, 450 Fifth Street NW., Washington, DC 20549. Copies of the submission, all subsequent amendments, all written statements with respect to the proposed rule change that are filed with the Commission, and all written communications relating to the proposed rule change between the Commission and any person, other than those that may be withheld from the public in accordance with the provisions of 5 U.S.C. 552, will be available for inspection and copying in the Commission's Public Reference Section, 450 Fifth Street NW., Washington DC 20549. Copies of such filing will also be available for inspection and copying at the principal office of the above-mentioned self-regulatory organization. All submissions should refer to the file number in the caption above and should be submitted by April 25, 1988.

For the Commission by the Division of Market Regulation, pursuant to delegated authority.

Dated: March 29, 1988.

Jonathan G. Katz,

Secretary.

[FR Doc. 88-7318 Filed 4-1-88; 8:45 am]

BILLING CODE 8010-01-M

[Release No. 34-25513; File No. SR-MBS-87-6]

Self-Regulatory Organizations; MBS Clearing Corp.; Order Approving a Proposed Rule Change, on a Temporary Basis

On June 25, 1987, the MBS Clearing Corporation ("MBSCC") filed a proposed rule change (File No. SR-MBS-87-6), described below, pursuant to section 19(b)(1) of the Securities Exchange Act of 1934 ("the Act") [1] to institute a recording, comparison, and margin collection service for government securities options contracts. MBSCC filed amendments to the proposed rule change on July 13, 1987, September 24, 1987, November 24, 1987, and March 8, 1988. On July 21, 1987, the Commission published notice of this proposed rule change in the **Federal Register** to solicit comments from interested persons.[2] No comments were received. As discussed below, this order approves the proposal on a temporary basis until July 1, 1988.

I. Description

MBSCC proposes to offer recording, comparison, and margin collection services for non-standardized options contracts [3] on U.S. Treasury notes and

[1] 15 U.S.C. 78s(b)(1).

[2] Securities Exchange Act Release No. 24706 (July 15, 1987), 52 FR 27485.

[3] Non-standardized options differ from options commonly traded on the stock and commodities exchanges in that features selected by an exchange can not be varied by the parties. In contrast, parties to non-standardized options contracts may establish their own terms (*e.g.*, quantity, price, and expiration date) to meet their needs. Generally,

Continued

bonds.[4] MBSCC will not offer settlement services for exercised options. Options exercise and related delivery and payment obligations will not be eligible for processing through either the Settlement Balance Order ("SBJ") or the Trade-for-Trade Systems.

The new government securities options recording service provides trade comparison and reporting services as well as collection of a good faith deposit (the Market Margin Differential) for each recorded options contract.[5] MBSCC will not guarantee any government securities trades and does not stand between participants as a party to trades in these options or securities.

Under the proposed recording service, participants on both sides of the trade will report information to MBSCC on T+1. Participants report information such as: The quantity of options traded, the price, the type of underlying issue (T-bond, or note), the interest rate, and the date the option contract expires. MBSCC will this information to prepare a Purchase and Sales Report, which MBSCC will distribute to each participant daily.

On T+2 MBSCC will collect the Market Margin Differential ("MMD") from the appropriate participant.[6] The collection of MMD protects participants from the exposure risk posed by adverse market movements between the time the government options contract is made and the time it expires, and provides participants with a greater assurance that the *contra party* will complete its obligation under the terms of the trade.

MBSCC will compute MMD only for "in the money" trades. Trades are "in the money" when the contract (strike) price is greater than the current market value [7] for puts and less than the current market value for calls.

MBSCC will calculate the MMD as follows: MBSCC will prepare a list of each participant's trades in each government security options contract (participants often make several trades in the same underlying security). For each class of government security options contracts, MBSCC will net the puts and calls to develop the participant's net buy or sell position. The net buy or sell position in each class will be multiplied by the current market value. If the participant is a net buyer, a credit position will be created. If the participant is a net seller, a debit position will be created. MBSCC then classifies the positions according to the month the option is to expire.

MBSCC will prepare a two-part report consisting of each participants' exceptional and basic requirements. The exceptional requirement displays all the participants' debits and credits which are to expire during the next month.[8] The basic requirement will display the participants' debits and credits which are to expire during the following months. MBSCC prepares a net position for the exceptional requirement and prepares a net position for the basic requirement. If the net figure for either the exceptional requirement or for the basic requirement is a credit, it is disregarded from further calculations. Debits from the exceptional requirement and from the basic requirement are added together. This total is multipled by 130%, and the resulting dollar figure is the participant's required MMD. Participants are notified of their MMD each day by telephone and by the Market Margin Differential Report.

After a government securities options trade is exercised or expires worthless, both sides of the trade report this fact to MBSCC and the trade is removed from the system. Then, upon request, MBSCC will refund the margin deposit to the appropriate participant.

MBSCC has proposed among others, the following changes to its rules: (a) The term "eligible securities" would be revised to include both mortgage backed securities and government securities; (b) only contracts for the purchase or sale of eligible mortgage backed securities would be eligible for clearance through the Trade-for-Trade or SBO system; (c) the provisions specifying the time for submitting trade input would be expanded to cover option contracts; (d) required trade data concerning participant's options trades in mortgage backed securities and in government securities would be specified; and (e) government securities would be eligible only for recording services and the computation and collection of market margin differential, not full clearing and settlement services. MBSCC also has made other minor changes to its rules.

II. MBSCC's Rationale

MBSCC states in its filing that the purpose of the proposal is to provide MBSCC with the authority to offer clearing and recording services for options contracts where the underlying contracts concern the purchase or sale of government securities. MBSCC believes there is a need for this service for two reasons: automated recording will provide processing efficiencies and cost savings similar to those achieved when MBSCC began providing similar services for mortgage-backed securities; [9] and several MBSCC participants have asked for such a service. Although settlement will be accomplished outside the system, MBSCC believes its recording and margin collection system will help to reduce the number of failed trades.

MBSCC believes that its facilities can provide the new service within its current operating systems. MBSCC expects to handle about 320 trades per month for options contracts on underlying securities valued at $3.2 billion. During two recent months, December 1987 and January 1988, MBSCC cleared approximately 366 and 461 mortgage-backed securities trades, evidencing contracts on approximately $3.7 and $4.6 billion in underlying mortgage-backed securities (respectively). MBSCC expects this new service to result in only about 16–24 additional trades per day, well within the capacity limits of its existing facilities.

III. Discussion

The Commission preliminarily believes that the proposal is consistent with the Act because it will facilitate the prompt and accurate clearing and recording of transactions in options contracts involving government securities. Accordingly, the Commission is approving MBSCC's proposal to provide this service to twelve firms on a temporary basis until July 1, 1988.

Although participants trade in non-standardized government options contracts because they like the flexibility such contracts offer to select

options traded on securities exchanges have standard strike prices, quantities, and expiration dates; those terms are fixed to permit one option to be fungible with other options traded on the exchange.

[4] MBSCC Rule 1 defines government securities as "any securities other than Mortgage Backed Securities defined as government securities in section 3(a)(42) of the Securities Exchange Act of 1934, as heretofore or hereafter amended."

[5] MBSCC has informed the Commission that its government options recording service will use the same facilities and be provided in the same fashion as its mortgage backed securities recording service.

[6] The MMD formula MBSCC plans to use for these options is the same formula MBSCC uses to collect MMD from participants trading in Government National Mortgage Association (GNMA) options. *See* MBSCC Clearing Division Rules, Article IV, Rule 2, Section 2. *See also*, MBSCC's Clearing Division's Procedural Manual Exhibit B. II.

[7] Current market value is determined by polling 3–8 primary dealer participants at the end of each day.

[8] MBSCC also includes in the exceptional requirement government securities options trades with expiration dates which have passed until the participants submit cancellation reports requesting that these trades be removed from the system.

[9] Unlike the government options security service, mortgage-backed securities receive clearance and settlement services.

precise terms to meet their needs; such trading settlement preparation, and settlement is difficult. Trading in non-standardized government securities options contracts can be complicated because these contracts are not listed on the exchanges, so participants can not use exchanges to find *contra parties*. Instead they must negotiate the terms of each trade separately, and because the terms are non-standardized, the market for these options is more limited. They also must record and settle each trade manually. Preparation for settlement is difficult because there are no centralized recording, comparison, and margin collection services for non-standardized options contracts on government securities. MBSCC's proposed government securities options service may facilitate this type of trading by providing a centralized location to record information concerning each trade, allowing each side to review the records of each trade to resolve differences before settlement, decreasing the costs associated with resolving questioned trades, and providing for centralized collection of good faith deposits (*i.e.*, margin).

The proposal may provide several benefits to members that, taken together, potentially could promote the prompt and accurate clearance and settlement of government securities options contracts. Currently, each party to such a transaction keeps its own records of each transaction. Transmitting trade information to MBSCC may improve participants' recordkeeping by providing them with additional inventive to keep accurate information because their margin requirements will be based on this information. The proposed system also may decrease the number of failed trades by providing participants with a daily Purchase and Sales Report which lists attempted trades. Participants may use these reports to resolve differences before settlement and complete these trades.

The Commission believes that MBSCC has designed the proposal to be consistent with MBSCC's obligation to safeguard funds and securities directly within its control. MBSCC will use the same formula and facilities to calculate and collect MMD on government securities as it currently uses to calculate and collect MMD on mortgage-backed securities. Those facilities were reviewed in connection with MBSCC's registration as a clearing agency.[10]

[10] Securities Exchange Act Release No. 24046 (February 10, 1986), 52 FR 4218.

During the past five years, MBSCC has successfully handled numerous trades and safeguarded the association funds and securities.[11]

As noted above, the Commission has determined to approve the proposal on a temporary basis until July 1, 1988. The Commission believes that temporary approval is necessary to enable MBSCC, participants, and the Commission to gain experience with the government options contracts service and to identify any problems with or necessary changes to that service. During the temporary approval period, the Commission expects MBSCC to file under section 19(b) of the Act any changes to the proposal, including any expansion in the number of participants eligible to use this service. The Commission also directs MBSCC to report to the Commission, by June 15, 1988, statistics concerning the number of government options contracts which were cleared using this service. The Commission will consider permenant approval at the expiration of the temporary approval period.

IV. Conclusion

The the reasons discussed above, the Commission finds that the proposed rule change is consistent with the Act and, in particular, section 17A.

It is therefore ordered, pursuant to section 19(b)(2) of the Act, that the proposed rule change (File No. SR-MBS-87-6) be, and hereby is, approved on a temporary basis until July 1, 1988.

For the Commission, by the Division of Market Regulation, pursuant to delegated authority.

Jonathan G. Katz,

Secretary.

Dated: March 25, 1988.

[FR Doc. 88-7268 Filed 4-1-88; 8:45 am]

BILLING CODE 8010-01-M

[Release No. 34-25520; File No. SR-NASD-87-43]

Self-Regulatory Organizations; Proposed Rule Change by National Association of Securities Dealers, Inc. Relating to Publication of Suspensions, Expulsions, Revocations and Monetary Sanctions

Pursuant to section 19(b)(1) of the Securities Exchange Act of 1934 ("Act"), 15 U.S.C. 78s(b)(1), notice is hereby given that the National Association of Securities Dealers, Inc. ("NASD") filed with the Securities and Exchange Commission ("Commission") on October 23, 1987, and amended on March 11, 1988, the proposed rule change described in Items I, II, and III below, which Items have been prepared by the NASD. The Commission is publishing this notice to solicit comments on the proposed rule change from interested persons.

[11] From 1982 to 1986, the number of MBSCC's participants has doubled from 33 to 69, and the number of transactions successfully handled has increased at a greater rate. MBSCC's monthly settlement volume has increased from $3.5 billion to $55.6 billion, and its monthly trade volume has increased from 2,700 to 15,600. *See* MBSCC Clearing Corporation, Annual Report, at 1 (1986).

I. Self-Regulatory Organization's Statement of the Terms of Substance of the Proposed Rule Change

The NASD is filing herewith as a stated policy, practice or interpretation, amendments to the Resolution of the Board of Governors concerning Notice to Membership and Press of Suspensions, Expulsions, Revocations and Monetary Sanctions (the "Resolution") at Article V, section 1 of the NASD Rules of Fair Practice. The text of that part of the Resolution that is amended is set forth below. New text is italicized.

Notice to Membership and Press of Suspensions, Expulsions, Revocations, and Monetary Sanctions

The Association shall report to the membership and to the press pursuant to the procedures and at the times outlined herein any order of suspension, cancellation or expulsion of a member; or suspension or revocation of the registration of a person associated with a member; or suspension or barring of a member or person associated with a member form association with all members; or imposition of monetary sanctions of $10,000 or more upon a member or person associated with a member. *The Board of Governors may, in its discretion, determine to waive the notice provisons set forth herein as to an order of imposition of monetary sanctions of $10,000 or more upon a member or person associated with a member, under those extraordinary circumstances where notice would violate fundamental notions of fairness or work an injustice.*

* * * * *

(No change)

II. Self-Regulatory Organization's Statement of the Purpose of, and Statutory Basis for, the Proposed Rule Change

In its filing with the Commission, the NASD included statements concerning the purpose of, and basis for, the proposed rule change and discussed any comments it received on the proposed

rule change. The text of these statements may be examined at the places specified in Item IV below. The NASD has prepared summaries, set forth in Sections (A), (B), and (C) below, of the most significant aspects of such statements.

A. Self-Regulatory Organization's Statement of the Purpose of, and Statutory Basis for, the Proposed Rule Change

The NASD recently amended the Resolution to provide for the publication of disciplinary actions resulting in monetary sanctions of $10,000 or more upon a member or person associated with a member. *See* SR-NASD-87-6. The NASD is proposing to amend the Resolution to permit the NASD to waive the publication of those disciplinary actions that would ordinarily be published by reason of the imposition of monetary sacntions of $10,000 or more in those cases where it is determined by the Board of Governors that publication would violate fundamental notions of fairness or work an injustice. The NASD believes that such discretionary authority will permit it to both effectuate its policy of publishing significant disciplinary actions in the public interest and for the guidance of its members and of refraining from publication when it would be manifestly unfair or unjust.

The statutory basis for the amendment to the Resolution can be found in section 15A(b)(6) of the Act, which provides, *inter alia*, that the rules of a national securities association shall be designed to promote just and equitable principles of trade and to protect investors and the public interest. Neither the promotion of just and equitable principles of trade nor the public interest will be compromised, because any decision to withhold publication will be premised upon a determination that publication is not necessary to serve these objectives.

B. Self-Regulatory Organization's Statement on Burden on Competition

The NASD believes that the amendments to the Resolution will create no burden on competition not necessary or appropriate in furtherance of the purposes of the Act.

C. Self-Regulatory Organization's Statement on Comments on the Proposed Rule Change Received From Members, Participants, or Others

Comments were neither solicited nor received.

III. Date of Effectiveness of the Proposed Rule Change and Timing for Commission Action

Within 35 days of the date of publication of this notice in the **Federal Register** or within such longer period (i) as the Commission may designate up to 90 days of such date if it finds such longer period to be appropriate and publishes its reasons for so finding or (ii) as to which the NASD consents, the Commission will:

A. By order approve such proposed rule change, or

B. Institute proceedings to determine whether the proposed rule change should be disapproved.

IV. Solicitation of Comments

Interested persons are invited to submit written data, views, and arguments concerning the foregoing. Persons making written submissions should file six copies thereof with the Secretary, Securities and Exchange Commission, 450 Fifth Street NW., Washington, DC 20549. Copies of the submissions, all subsequent amendments, all written statements with respect to the proposed rule change that are filed with the Commission, and all written communications relating to the proposed rule change between the Commission and any person, other than those that may be withheld from the public in accordance with the provisions of 5 U.S.C. 552, will be available for inspection and copying in the Commission's Public Reference Room. Copies of such filing will also be available for inspection and copying at the principal office of the NASD. All submissions should refer to file number SR-NASD-87-43 and should be submitted by April 25, 1988.

For the Commission, by the Division of Market Regulation, pursuant to delegated authority, 17 CFR 200.30-3(a)(12).

Jonathan G. Katz,

Secretary.

Dated: March 25, 1988.

[FR Doc. 88-7269 Filed 4-1-88; 8:45 am]

BILLING CODE 8010-01-M

[Release No. 34-25523; File No. SR-NASD-88-10]

Self-Regulatory Organizations; National Association of Securities Dealers, Inc.; Order Extending Temporary Approval, on an Accelerated Basis, of the Proposal To Continue Operation of the Order Confirmation Transaction Service Enhancement to the NASDAQ System

Pursuant to section 19(b)(1) of the Securities Exchange Act of 1934 ("Act"), 15 U.S.C. 78s(b)(1), notice is hereby given that on March 17, 1988, the National Association of Securities Dealers, Inc. ("NASD") filed with the Securities and Exchange Commission ("Commission") the proposed rule change as described in Items I, II, and III below, which Items have been prepared by the self-regulatory organization. The Commission is publishing this ORDER to solicit comments on the proposed rule change from interested persons. For the reasons described below, the Commission is approving the proposal on an accelerated basis.

I. Self-Regulatory Organization's Statement of the Terms of Substance of the Proposed Rule Change

The NASD hereby files a proposed rule change, pursuant to section 19(b)(1) of the Act and Rule 19b-4 thereunder, to obtain a one-month extension of the Commission's temporary approval of the Order Confirmation Transaction ("OCT") service. The OCT service is a NASDAQ System enhancement that provides an auxiliary medium for NASD firms to communicate with one another and confirm the execution of orders. The operational parameters of this communications interface were described fully in the NASD's earlier rule filing, File No. SR-NASD-87-54, which the Commission approved on an interim basis for a ninety day period.[1] The instant filing proposes no change other than a brief extension of the Commission's temporary approval to May 11, 1988.

II. Self-Regulatory Organization's Statement of the Purpose of, and Statutory Basis for, the Proposed Rule Change

In its filing with the Commission, the self-regulatory organization included statements concerning the purpose of, and statutory basis for, the proposed rule change and discussed any comments it received on the proposed rule change. The text of these statements may be examined at the places specified in Item V below. The self-regulatory organization has prepared summaries, set forth in sections (A), (B), and (C) below, the most significant aspects of such statements.

A. Self-Regulatory Organization's Statement of the Purpose of, and Statutory Basis for, the Proposed Rule Change

The purpose of this filing is to extend

[1] *See* Securities Exchange Act Release No. 25283 (January 11, 1988) approving File No. SR-NASD-87-54.

the Commission's temporary approval of the OCT service for a term of one month. This extension will allow the NASD to finalize a related filing that will see permanent approval of the OCT service. Additionally, the extension will permit continued availability of the OCT service while the Commission deliberates permanent approval of this NASDAQ System enhancement.

Commission approval of the instant filing is justified for the reasons set forth in the NASD's original filing (*i.e.*, File No. SR–NASD–87–54). Specifically, the OCT enhancement was designed to expand the communications facilities available to support the continuous, orderly operation of the NASDAQ marketplace during difficult or unusual market conditions like those experienced during October, 1987. The OCT service can facilitate processing orders during market extremes by supplementing the telephonic capacity of market makers to interact with one another. It is recognized that the OCT enhancement does not permit the same degree of information exchange and personal interactions normally attendant to the negotiation of transactions by telephone. However, from a functional standpoint, the OCT service permits members to continue to conduct business with one another by communicating the same basic elements of information that are needed to negotiate and confirm executions via telephone; the major difference is that electronic messages are substituted for verbal messages. Further, the OCT enhancement enables NASD members to realize certain efficiencies that are most desirable in periods of extreme market conditions, but unavailable when transactions are affected via telephone. For example, consummation of a transaction through the OCT service yields a printed confirmation to both parties to the transaction and obviates the separate entry of a trade report for round-lot executions in NASDAQ/NMS issues. Further, because orders executed through the OCT service yield locked-in trades, this feature can reduce the volume of uncompared trades (and the attendant allocation of resources needed to resolve them) during periods in which overall market volume surges dramatically. In sum, the OCT enhancement supplements both the communications and order processing capabilities of NASD members. Consequently, continuation of the OCT service buttresses the capacity of the NASDAQ marketplace to function efficiently during periods of extreme volume and/or price volatility.

The NASD believes that Sections 11A and 15A of the Act provide the statutory bases for an extension of the Commission's temporary approval of the OCT service. Specifically, subsections (A)–(D) of section 11A(a)(1) articulate the broad findings and policy goals which the Congress intended to guide the operational enhancement of the nation's securities markets. In this context, the Congress underscored the importance of applying new data processing and communications techniques to assure: (1) More efficient and effective market operations; (2) economically efficient execution of securities transactions; (3) broad availability of information with respect to quotations and transactions in securities; and (4) the optimal execution of investors' orders. The NASD posits that the design and operational features of the OCT enhancement comport fully with these Congressional directives.

The instant proposal is also supported by subsection (b)(6) of section 15A under the Act. Among other things, that provision requires that the NASD's rulemaking initiatives be designed to: (1) Promote just and equitable principles of trade: (2) foster cooperation and coordination with persons engaged in regulating, clearing, settling, processing information with respect to and facilitating transactions in securities; (3) perfect the mechanism of a free and open market and a national market system; and (4) protect investors and the public interest. As described in File No. SR–NASD–87–54, the OCT service augments the communications and order handling capacities of NASDAQ market makers. Although usage of the OCT enhancement is voluntary, the NASD views it as a vital, auxiliary communications system that will enable market makers to conduct business with one another when telephonic communications are unavailable or infeasible due to unusual conditions. Continuing to provide such a back-up capability promotes continuity in market operations in order to service all classes of investors. This result is fully consistent with the above-cited portions of section 15A(b)(6) of the Act.

B. Self-Regulatory Organization's Statement on Burden on Competition

Continuation of the OCT Service does not involve the imposition of any competitive burden. This conclusion is supported by several factors. First, the OCT service is an enhancement of the facilities that support market making in NASDAQ securities by member firms. This type of enhancement does not alter the established terms of access respecting vendors' receipt of NASDAQ market information for redistribution to diverse groups of end-users. Second, the OCT enhancement does not pose a competitive burden upon NASDAQ market makers and other eligible members. By design, the OCT service is an auxiliary medium of communication that eligible firms may employ to conduct business when telephonic communication is not feasible. Accordingly, the OCT service has been structured to accommodate conveyance of the same basic elements of information which firms communicate in negotiating and executing transactions via the telephone. Third, the OCT enhancement does not impose more stringent market making obligations on participating firms. Rather, it provides an alternative, voluntary mechanism which market makers can use to conduct their routine business. Fourth, firms voluntarily electing to utilize the OCT service must have clearing arrangements through a registered national clearing entity. The NASD believes that this requirement does not constitute an undue limitation on voluntary use of the service. Moreover, the potential benefits to the industry and public investors from voluntary participation in the OCT service materially outweigh the clearing requirement's minimal impact upon ineligible firms during periods of extreme or unusual market activity.

It is believed, therefore, that no competitive burden will result from the Commission's approval of this filing.

C. Self-Regulatory Organization's Statement on Comments on the Proposed Rule Change Received From Members, Participants, or Others

Comments were neither solicited nor received.

III. Date of Effectiveness of the Proposed Rule Change and Timing For Commission Action

The NASD requests the Commission to find good cause for approving the proposed rule change prior to the 30th day after its publication in the **Federal Register**, and, in any event, by April 11, 1988, the date the Commission's original

temporary approval of the OCT service will expire.[2] Absent accelerated approval, the NASD will be obliged to terminate the OCT service and thereby deprive the NASDAQ marketplace of a critical back-up capability which might be needed to cope with unusual market conditions. On the other hand, public investors and NASD member firms would benefit from maintenance of the technological safeguard embodied in the OCT enhancement. As a pure marketplace enhancement, the OCT service has no impact whatsoever on the ability of securities information vendors to service their customers. Additionally, continuation of the OCT service does not entail new or more stringent market making obligations on the affected market makers. Finally, retail firms that are eligible to use the OCT service do not incur any additional obligations beyond those already incurred in consummation of transactions via the telephone. In light of these factors, the NASD requests that the Commission approve the proposed rule change on an accelerated basis.[3]

IV. Commission Approval of the Proposed Rule Change

The Commission finds that the proposed rule change, which provides for the continued operation of the OCT service, is consistent with the statutory goals set forth in subsections (A)–(D) of section 11A(a)(1) of the Act. Those provisions stress the importance of implementing communications enhancements that advance the efficiency and effectiveness of a securities market in servicing the needs of all investors. The Commission also recognizes that the goal of the OCT enhancement is to provide an auxiliary communications medium that should assure continuous operation of the NASDAQ marketplace under extreme conditions like those that occured in October, 1987. Absent accelerated approval, the NASD would be obliged to terminate the OCT service on April 11, 1988 and thereby eliminate the technological safeguard that the OCT service was designed to provide. That result would impair the capacity of the NASDAQ marketplace to accommodate a surge in trading volume and/or price volatility. Because the OCT enhancement supplements the operational capabilities of NASD member firms in order that they may service investors under extreme or unusual market conditions, continuance of this service conforms with the Congressional goals expressed in subsections (A)(D) of section 11A(a)(1) of the Act.

Additionally, continuation of the OCT service is consistent with various policy goals contemplated by section 15A(b)(6) of the Act. In this regard, the Commission notes that the design and operational features of the OCT service should serve to: (1) Promote just and equitable principles of trade; (2) foster cooperation and coordination among persons engaged in regulating, clearing, and processing transactions in NASDAQ and NASDAQ/NMS securities; (3) perfect the mechanisms that support the continuous and orderly operation of the NASDAQ marketplace; and (4) foster protection of investors and of the public interest generally. Furthermore, the NASD must submit another proposed rule change seeking permanent approval for the OCT system. When notice of that proposed rule change is given, commentators will have an additional opportunity to comment on OCT.

Based on the foregoing factors, the Commission finds good cause for granting accelerated approval of the proposed rule change, prior to the thirtieth day after the date of publication of notice of filing thereof, pursuant to section 19(b)(2)(B) of the Act. This action effects a one-month extension of the Commission's temporary approval of the OCT service until May 11, 1988.

V. Solicitation of Comments

Interested persons are invited to submit written data, views and arguments concerning the foregoing. Persons making written submissions should file six copies thereof with the Secretary, Securities and Exchange Commission, 450 Fifth Street NW., Washington, DC 20549. Copies of the submissions, all subsequent amendments, all written statements with respect to the proposed rule change that are filed with the Commission, and all written communications relating to the proposed rule change between the Commission and any person, other than those that may be withheld from the public in accordance with the provisions of 5 U.S.C. 552, will be available for inspection and copying in the Commission's Public Reference Room. Copies of the filing also will be available for inspection and copying at the principal office of the NASD. All submissions should refer to file number SR–NASD–88–10 and should be submitted by April 25, 1988.

VI. Conclusion

For the reasons discussed above, the Commission finds that the proposal is consistent with the requirements of the Act and the rules and regulations thereunder applicable to the NASD, and in particular sections 15A(b)(6) and 11(A)(a)(1) of the Act.

It is therefore ordered, pursuant to section 19(b)(2) of the Act, that the above-mentioned proposed rule change be, and hereby is, approved for a period terminating on May 11, 1988.

For the Commission, by the Division of Market Regulation, pursuant to delegated authority, 17 CFR 200.30–3(a)(12).

Jonathan G. Katz,

Secretary.

Dated: March 28, 1988.

[FR Doc. 88–7263 Filed 4–1–88; 8:45 am]

BILLING CODE 8010-01-M

[2] *See* footnote 1.

[3] During the term of the extension, the NASD will submit another filing, pursuant to Rule 19b–4 under the Act, to gain permanent approval for the OCT enhancement.

Self-Regulatory Organizations; Applications for Unlisted Trading Privileges and of Opportunity for Hearing; Philadelphia Stock Exchange, Inc.

March 29, 1988

The above named national securities exchange has filed applications with the Securities and Exchange Commission pursuant to section 12(f)(1)(B) of the Securities Exchange Act of 1934 and Rule 12f–1 thereunder, for unlisted trading privileges in the following securities:

Birmingham Steel Corporation
Common Stock, $0.01 Par Value (File No. 7–3165)
Meredith Corporation
Common Stock, $1.00 Par Value (File No. 7–3166)
Russ Berrie and Company, Inc.
Common Stock, $0.10 Par Value (File No. 7–3167)
Southdown, Inc.
Common Stock, $2.50 Par Value (File No. 7–3168)
Allegheny Ludlum Corporation
Common Stock, $.10 Par Value (File No. 7–3169)
Ball Corporation
Common Stock, No Par Value (File No. 7–3170)
Dover Corporation
Common Stock, $1.00 Par Value (File No. 7–3171)
Kellwood Company
Common Stock, No Par Value (File No. 7–3172)
Media General, Inc.
Class A Common Stock, $5.00 Par Value (File No. 7–3173)
Sunstrand Corporation
Common Stock, $1.00 Par Value (File

No. 7-3174)

These securities are listed and registered on one or more other national securities exchange and are reported in the consolidated transaction reporting system.

Interested persons are invited to submit on or before April 18, 1988, written data, views and arguments concerning the above-referenced application. Persons desiring to make written comments should file three copies thereof with the Secretary of the Securities and Exchange Commission, Washington, DC 20549. Following this opportunity for hearing, the Commission will approve the application if it finds, based upon all the information available to it, that the extensions of unlisted trading privileges pursuant to such applications are consistent with the maintenance of fair and orderly markets and the protection of investors.

For the Commission, by the Division of Market Regulation, pursuant to delegated authority.

Jonathan G. Katz,

Secretary.

[FR Doc. 88-7267 Filed 4-1-88; 8:45 am]

BILLING CODE 8010-01-M

[File No. 22-18096]

Application and Opportunity for Hearing; Piedmont Aviation, Inc.

March 29, 1988.

Notice is hereby given that Piedmont Aviation, Inc. (the "Company") has filed an application under clause (ii) of section 310(b)(1) of the Trust Indenture Act of 1939 (the "Act") for a finding by the Securities and Exchange Commission (the "Commission") that the trusteeship of Meridian Trust Company (the "Bank") under three indentures dated as of March 1, 1988 (the "Indentures") between Company and Bank each of which were heretofore qualified under the Act, is not so likely to involve a material conflict of interest as to make it necessary in the public interest or for the protection of investors to disqualify the Bank from acting as trustee under any of these indentures.

Section 310(b) of the Act provides in part that if a trustee under an indenture qualified under the Act has or shall acquire any conflicting interest (as defined in the section), it shall within ninety days after ascertaining that it has such conflicting interest, either eliminate such conflicting interest or resign. Subsection (1) of that section provides, with certain exceptions stated therein, that a trustee under a qualified indenture shall be deemed to have a conflicting interest if such trustee is trustee under another indenture of the same obligor.

The Company alleges:

(1) Pursuant to the Indentures, the Company will issue $58,851,000 aggregate principal amount of its Equipment Trust Certificates, (the "Certificates"), Series A-C ("Series"), respectively. A Series will be issued under each Indenture in the principal amount of $19,617,000. The Certificates were registered under the Securities Act of 1933 (the "1933 Act") and the Indentures were qualified under the Act.

(2) There is no default under any of the Indentures.

(3) The Company's obligations with respect to each series of Certificates are and will be secured under separate indentures by separate security interests in separate and distinct property.

(4) Such differences as exist among the Indentures referred to herein and the respective obligations of the Company as obligor are not so likely to involve a material conflict of interest as to make it necessary in the public interest or for the protection of investors to disqualify the Bank from acting as Trustee under any of the Indentures.

The Company has waived notice of hearing, hearing and any and all rights to specify procedures under the Rules of Practice of the Commission in connection with this matter.

For a more detailed statement of the matters of fact and law asserted, all persons are referred to the application which is on file in the Offices of the Commission's Public Reference Section, File Number 22-18096, 450 Fifth Street, NW., Washington, DC 20549.

Notice is further given that any interested persons may, not later than April 22, 1988, request in writing that a hearing be held on such matter stating the nature of his interest, the reasons for such request and the issues of law or fact raised by such application which he desires to controvert, or he may request that he be notified if the Commission orders a hearing thereon. Any such request should be addressed: Secretary, Securities and Exchange Commission, 450 Fifth Street, NW., Washington, DC 20549. At any time after said date, the Commission may issue an order granting the application upon such terms and conditions as the Commission may deem necessary or appropriate in the public interest and for the protection of investors, unless a hearing is ordered by the Commission.

For the Commission, by the Division of Corporation Finance, pursuant to delegated authority.

Jonathan G. Katz,

Secretary.

[FR Doc. 88-7284 Filed 4-1-88; 8:45 am]

BILLING CODE 8010-01-M

[Release No. IC-16344; File No. 812-6984]

Security Benefit Life Insurance Co. et al.; Application for Exemption

AGENCY: Securities and Exchange Commission ("SEC").

ACTION: Notice of application for exemption under the Investment Company Act of 1940, as amended, (the "1940 Act").

Applicants: Security Benefit Life Insurance Company ("Security Benefit") and VARILIFE, a Separate Account of Security Benefit Life Insurance Company ("VARILIFE Separate Account" or the "Separate Account").

Relevant 1940 Act Sections: Exemption requested under section 6(c) from the provisions of sections 2(a)(32), 22(c), 27(c)(1), and 27(d) and Rule 22c-1 and Paragraphs (b)(12) and (b)(13) of Rule 6e-3(T) under the 1940 Act.

Summary of Application: Applicants seek an order granting exemptive relief to the extent necessary to permit state and local premium taxes to be collected on a deferred basis over ten years from the Policy Date and, where not fully recovered, upon lapse or surrender of a policy.

Filing Date: The application was filed on February 3, 1988.

Hearing or Notification of Hearing: If no hearing is ordered, the application will be granted. Any interested person may request a hearing on this application, or ask to be notified if a hearing is ordered. Any request must be received by the SEC by 5:30 p.m., on April 23, 1988. Request a hearing in writing, giving the nature of your interest, the reason for the request, and the issues you contest. Serve the Applicants with the request, either personally or by mail, and also send it to the Secretary of the SEC, along with proof of service by affidavit, or, for lawyers, by certificate. Request notification of the date of a hearing by writing to the Secretary of the SEC.

ADDRESSES: Secretary, SEC, 450 Fifth Street, NW., Washington, DC 20549. Applicants, c/o Allan S. Mostoff, Esq., 1730 Pennsylvania Avenue, NW., Washington, DC 20006.

FOR FURTHER INFORMATION CONTACT: Wendell M. Faria, Staff Attorney, at (202) 272-3450, or Lewis B. Reich, Special Counsel, at (202) 272-2061 (Division of Investment Management, Office of Insurance Products and Legal Compliance).

SUPPLEMENTARY INFORMATION: Following is a summary of the application; the complete application is available for a fee from either the SEC's Public Reference Branch in person, or

the SEC's commercial copier (800) 231-3282 (in Maryland (301) 258-4300).

Applicants' Representations

1. Security Benefit is a mutual life insurance company organized under the laws of the State of Kansas and authorized to conduct its business on January 2, 1950.

VARILIFE Separate Account is a separate investment account of Security Benefit established under Kansas law on June 19, 1984, and is used as a funding vehicle for flexible premium variable life insurance policies ("Policy" or "Policies") Security Benefit issues. The Separate Account is divided into five sub-accounts. Net amounts allocated by Policyowners to these sub-accounts are invested at net asset value in shares of a corresponding Series of the SBL Fund (the "Fund").

The Fund is a diversified, open-end management investment company of the series type. It currently has five separate portfolios ("Series"), each of which pursues different investment objectives and policies. The Series of the Fund are Series A (Equity Series), Series B (Equity Income Series), Series C (Cash Series), Series D (High Income Series), and Series E (High Quality Income Series).

All dividends and capital gains distributions received from a Fund Series are automatically reinvested in such Series at net asset value. Fund shares will be redeemed by Security Benefit at their net asset value to the extent necessary to make payments under the Policies. Security Management Company ("Security Management") serves as Investment Adviser to each Series of the Fund.

2. The Separate Account serves as a funding vehicle for Security Benefit's flexible premium variable life insurance Policies, which are designed to provide lifetime insurance protection on an insured while offering Policyowners flexibility in the payment of premiums and selection of benefits. VARILIFE Policies generally require large initial premium payments—normally at least $10,000—though Security Benefit may allow lower initial premiums under certain circumstances.

3. The initial premium is allocated at first to the Guaranteed Account, which is part of Security Benefit's general account. Ten days after a Policy is issued, the invested amount is allocated in accordance with a Policyowner's instructions among the VARILIFE Series comprised by the Separate Account and the Guaranteed Account. Any portion of the premium payments allocated to the VARILIFE Series is invested in one or more of the corresponding Series of the SBL Fund. The "Policy Value" under the Policy will vary based upon the investment performance of the Series to which it is allocated and charges and deductions under the Policy, among other things. No minimum amount of Policy Value is guaranteed.

4. Upon receipt of due proof of the Insured's death, Security Benefit will pay a death benefit to the named beneficiary. The death benefit is the greater of the Specified Amount under the Policy or a specified percentage of the Policy Value on the date of death, or, if the date of death is not a business day, on the next business day on which policy unit values are determined.

5. A Policyowner may fully surrender a Policy for the Policy's Cash Surrender Value. The Cash Surrender Value of the Policy equals the Policy Value net of any indebtedness less any applicable surrender charges. The Cash Surrender Value is computed as of the end of the valuation period during which the surrender request is received at Security Benefit's Home Office. No partial surrenders are allowed.

6. Security Benefit assesses various types of charges and deductions in connection with a VARILIFE Policy. A deduction of 2.5% of each premium represents the average amount of that Security Benefit considers necessary to pay all premium taxes imposed. Security Benefit reserves the right to increase the amount deducted for premium taxes if state taxes increase. A "Monthly Deduction" from Policy Value is made on a Policy's "Monthly Date" to cover the cost of insurance and administrative charges.

Security Benefit makes a daily charge against the net assets of the Separate Account to compensate Security Benefit for mortality and expense risks assumed. Investment advisory fees and operating expenses of the Fund are paid by the Fund.

Security Benefit imposes, upon full surrender of a Policy, a Surrender Charge (contingent deferred sales charge) computed by multiplying the total amount of premiums paid times the applicable surrender percent on the surrender date. The percentage of premiums paid declines with the number of years that the Policy has been in force.

7. Applicants propose to defer the collection of premium taxes and deduct the charge from a Policyowner's Policy Value in equal monthly installments over a ten-year period, starting with the first Monthly Date following payment of a premium. During the ten-year period, the charge for premium taxes will be deducted as part of the Monthly Deduction. Under the proposal, in the event of a full surrender of the Policy prior to the tenth anniversary of the Monthly Date following payment of a premium, a Policyowner would receive his or her Cash Surrender Value less any unrecovered premium tax. In the event that a Policy lapses before the tenth anniversary of the Monthly Date following payment of a premium, Security Benefit would retain any unrecovered premium tax under a Policy.

8. Applicants believe that imposition of the charge for premium taxes in this manner is more favorable to Policyowners than a charge that is deducted entirely from premiums at the time of payment.

9. Applicants represent that the deferred contingent premium tax charge is "cost-based" in accordance with its understanding of the Commission's interpretation of sections 26 and 27 and certain exemptions from these provisions in paragraph (b)(13) of Rule 6e-3(T). Applicants, therefore, do not anticipate making a profit from deducting such charge.

10. Applicants further represent that the total amount charged to any Policyowner is no greater than it would have been if it were designed as a front-end charge. The charge does not take into account the time value of money and the consequential cost to Security Benefit of deferring it.

For the Commission, by the Division of Investment Management, under delegated authority.

Jonathan G. Katz,

Secretary.

Dated: March 29, 1988.

[FR Doc. 88-7265 Filed 4-1-88; 8:45 am]

BILLING CODE 8010-01-M

[File No. 22-18095]

Application and Opportunity for Hearing: USAir, Inc.

March 29, 1988.

Notice is hereby given that USAir, Inc. (the "Company") has filed an application under clause (ii) of section 310(b)(1) of the Trust Indenture Act of 1939 (the "Act") for a finding by the Securities and Exchange Commission (the "Commission") that the trusteeship of Meridian Trust Company (the "Bank") under ten indentures between the Company and the Bank, four dated as of March 1, 1988 (the "March Indentures") and six dated as of November 30, 1987 (the "November Indentures"), each of which were heretofore qualified under the Act (collectively, the "Indentures"), is not so likely to involve a material conflict of

BEST COPY AVAILABLE

interest as to make it necessary in the public interest or for the protection of investors to disqualify the Bank from acting as trustee under any one of the Indentures.

Section 310(b) of the Act provides in part that if a trustee under an indenture qualified under the Act has or shall acquire any conflicting interest (as defined in the section), it shall within ninety days after ascertaining that it has such conflicting interest, either eliminate such conflicting interest or resign. Subsection (1) of that section provides, with certain exceptions stated therein, that a trustee under a qualified indenture shall be deemed to have a conflicting interest if such trustee is trustee under another indenture of the same obligor.

The Company alleges:

(1) Pursuant to the March Indentures, the Company will issue $78,498,000 aggregate principal amount of its Equipment Trust Certificates (the "March Certificates"), Series A–D (the "March Series"), respectively. Series A and B will be issued, each under a March Indenture, in the principal amount of $19,828,000. Series C and D will be issued, each under a March Indenture, in the principal amount of $19,421,000. The March Certificates were registered under the Securities Act of 1933 (the "1933 Act") and the March Indentures were qualified under the Act.

(2) Pursuant to the November Indentures, the Company has issued $124,800,000 aggregate principal amount of its Equipment Trust Certificates (the "November Certificates"), Series A–F (the "November Series"). A Series has been issued under each November Indenture in the principal amount of $20,800,000. The November Certificates were registered under the 1933 Act and the November Indentures were qualified under the Act. (Collectively, the March Certificates and November Certificates are referred to herein as the "Certificates" and the March Series and November Series are referred to herein as the "Series.")

(3) There is no default under any of the Indentures.

(4) The Company's obligations with respect to each Series of Certificates are and will be secured under separate Indentures by separate security interests in separate and distinct property.

(5) Such differences as exist among the Indentures referred to herein and the respective obligations of the Company as obligor are not so likely to involve a material conflict of interest as to make it necessary in the public interest or for the protection of investors to disqualify the Bank from acting as Trustee under any of the Indentures.

The Company has waived notice of hearing, hearing and any and all rights to specify procedures under the Rules of Practice of the Commission in connection with this matter.

For a more detailed statement of the matters of fact and law asserted, all persons are referred to the application which is on file in the Offices of the Commission's Public Reference Section, File Number 22–18095, 450 Fifth Street NW., Washington, DC 20549.

Notice is further given that any interested persons may not later than April 22, 1988, request in writing that a hearing be held on such matter stating the nature of his interest, the reasons for such request and the issues of law or fact raised by such application which he desires to controvert, or he may request that he be notified if the Commission orders a hearing thereon. Any such request should be addressed: Secretary, Securities and Exchange Commission, 450 Fifth Street NW., Washington, DC 20549. At any time after said date, the Commission may issue an order granting the application, upon such terms and conditions as the Commission may deem necessary or appropriate in the public interest and for the protection of investors, unless a hearing is ordered by the Commission.

For the Commission, by the Division of Corporation Finance, pursuant to delegated authority.

Jonathan G. Katz,

Secretary.

[FR Doc. 88–7266 Filed 4–1–88; 8:45 am]

BILLING CODE 8010–01–M

SMALL BUSINESS ADMINISTRATION

Region I Advisory Council; Public Meeting

The U.S. Small Business Administration, Region I Advisory Council, located in the geographical area of Hartford, Connecticut, will hold a public meeting at 8:00 a.m., on Monday, May 2, 1988, at the Yale Inn, 900 East Main Street, Meriden, Connecticut 06450, to discuss such matters as may be presented by members, staff of the U.S. Small Business Administration, or others present.

For further information, write or call Henry A. Povinelli, District Director, U.S. Small Business Administration, 330 Main Street, Hartford, Connecticut—(203) 240–4670.

Jean M. Nowak,

Director, Office of Advisory Councils.

March 29, 1988.

[FR Doc. 88–7307 Filed 4–1–88; 8:45 am]

BILLING CODE 8025–01–M

TENNESSEE VALLEY AUTHORITY

Privacy Act of 1974; Systems of Records

AGENCY: Tennessee Valley Authority (TVA).

ACTION: Notices of systems of records.

SUMMARY: In accordance with 5 U.S.C. 552a(e)(4), TVA is publishing a notice of the existence and character of each TVA system of records. TVA–2, "Personnel Files—TVA," contains three new routine uses; TVA–13, "Employment Applicant Files—TVA," contains one new routine use; and TVA–1, TVA–2, TVA–3, TVA–5, TVA–6, TVA–7, TVA–8, TVA–9, TVA–11, TVA–12, TVA–13, TVA–14, TVA–15, TVA–16, TVA–18, TVA–19, TVA–21, TVA–22, TVA–23, TVA–26, and TVA–31 each contain a revision to the routine use for litigation. TVA revised one routine use related to administrative proceedings contained in TVA–31, "OIG Investigative Records—TVA," and consolidated and made uniform the routine uses related to administrative proceedings in TVA–1, TVA–2, TVA–5, TVA–6, TVA–9, TVA–11, TVA–13, TVA–14, TVA–16, TVA–19, TVA–21, and TVA–23. TVA has deleted the notices covering systems of records entitled TVA–17, "Management Appraisal Records—TVA," and TVA–25, "Handicap Services and Planning Records—TVA," which records have been incorporated into other systems. TVA is also publishing notices covering three new systems of records: TVA–32, "Call Detail Records—TVA"; TVA–33, "Office of Nuclear Power Call Detail Records–TVA"; and TVA–34, "Project/Tract Files—TVA." TVA has also corrected minor typographical and stylistic errors in previously existing notices and has updated those notices to reflect TVA organizational changes.

FOR FURTHER INFORMATION CONTACT: Ronald E. Brewer at (615) 751–2520.

SUPPLEMENTARY INFORMATION: On October 23, 1987 (52 FR 39738), TVA published notices of systems of records; proposed new systems of records; deleted systems of records; and proposed new and revised routine uses for existing systems of records. TVA also made corrections to minor typographical and stylistic errors which appeared in TVA's publication of its notices of systems of records dated August 26, 1983 (48 FR 38922) and made changes to reflect TVA's current organizational structure. Reports were submitted to Congress and the Office of Management and Budget (OMB) on October 16, 1987 pursuant to the Privacy

Act and OMB Circular No. A-130. No comments were received in response to the reports. In addition, no public comments were received on the new and revised routine uses. Accordingly, TVA is today publishing notices of its systems of records in order to make available in one place in the **Federal Register** the most up-to-date information about those systems.

Further description of changes made in TVA's notices of systems of records can be found in the Supplementary Information section of TVA's October 23, 1987 notice (52 FR 39738). This document gives notice that the following TVA systems of records are in effect:

Table of Contents

TVA-1 Apprentice Training Record System.
TVA-2 Personnel Files.
TVA-3 Cooperative Training Program for Construction Craftsmen.
TVA-4 Demonstration Farm Records.
TVA-5 Discrimination Complaint Files.
TVA-6 Employee Accident Information System.
TVA-7 Employee Accounts Receivable.
TVA-8 Employee Alleged Misconduct Investigatory Files.
TVA-9 Medical Record System.
TVA-10 Employee Statement of Employment and Financial Interests.
TVA-11 Payroll Records.
TVA-12 Employee Travel Advance Records.
TVA-13 Employment Applicant Files.
TVA-14 Grievance Records.
TVA-15 Land Between The Lakes Hunter Records.
TVA-16 Land Between The Lakes Register of Law Violations.
TVA-18 Employee Supplementary Vacancy Announcement Records.
TVA-19 Consultant and Personal Service Contractor Records.
TVA-21 Nuclear Quality Assurance Personnel Records.
TVA-22 Questionnaire—Farms in Vicinity of Proposed Nuclear Power Plant.
TVA-23 Radiation Dosimetry Personnel Monitoring Records.
TVA-24 Reforestation, Erosion Control, and Plantation Case History Records.
TVA-26 Retirement System Records.
TVA-27 Test Demonstration Farm Records.
TVA-28 Woodland Resource Analysis Program Input Data.
TVA-29 Electricity Use, Rate, and Service Study Records.
TVA-30 Land Between The Lakes Mailing Lists.
TVA-31 OIG Investigative Records.
TVA-32 Call Detail Records.
TVA-33 Office of Nuclear Power Call Detail Records.
TVA-34 Project/Tract Files.

TVA-1

SYSTEM NAME:

Apprentice Training Record System—TVA.

SYSTEM LOCATION:

Labor Relations Staff, Tennessee Valley Authority, Knoxville, Tennessee 37902; Division of Personnel, Information Management Systems Branch, Tennessee Valley Authority, Knoxville, Tennessee 37902; Computing Operations Branch, Tennessee Valley Authority, Chattanooga, Tennessee 37401; all TVA locations where apprentices are employed.

CATEGORIES OF INDIVIDUALS COVERED BY THE SYSTEM:

Current and former TVA apprentices.

CATEGORIES OF RECORDS IN THE SYSTEM:

Employment, qualifications, and evaluation information.

AUTHORITY FOR MAINTENANCE OF THE SYSTEM:

National Apprenticeship Act of 1937, 50 Stat. 664; TVA Act of 1933, 16 U.S.C. 831-831dd.

ROUTINE USES OF RECORDS MAINTAINED IN THE SYSTEM, INCLUDING CATEGORIES OF USERS AND THE PURPOSES OF SUCH USES:

To the Bureau of Apprenticeship and Training, the Veterans' Administration, Tennessee Valley Trades and Labor Council, and the State and local government agencies for reporting and evaluation purposes.

To respond to a request from a Member of Congress regarding the status of an apprentice.

To provide information to a Federal agency, in response to its request, in connection with the hiring or retention of an employee, the letting of a contract, or issuance of a license, grant, or other benefit by the requesting agency to the extent that the information is relevant and necessary to the requesting agency's decision on that matter.

To provide the following information to a prospective employer of a TVA or former TVA employee: job description, dates of employment, reason for separation.

To the parties or complainants, their representatives, and impartial referees, examiners, administrative judges, or other decisionmakers in proceedings under the TVA grievance adjustment procedures, Equal Employment Opportunity procedures, Merit Systems Protection Board, or similar procedures.

To request information from a Federal, State, or local agency maintaining civil, criminal, or other relevant enforcement information or other pertinent information and to request information from private individuals, if necessary, to obtain information relevant to a TVA decision concerning the hiring, retention, or promotion of an employee, the issuance of a security clearance, or other decision within the purposes of this system of records.

In litigation to which TVA is a party or in which TVA provides legal representation for a party by TVA attorneys or otherwise, for use for any purpose including the presentation of evidence and disclosure in the course of discovery. In all other litigation, to respond to process issued under color of authority of a court of competent jurisdiction.

POLICIES AND PRACTICES FOR STORING, RETRIEVING, ACCESSING, RETAINING, AND DISPOSING OF RECORDS IN THE SYSTEM:

STORAGE:

Records are maintained on automated data storage devices, microfiche, and in file folders.

RETRIEVABILITY:

Records are indexed by name, craft, job code, union code, and social security number.

SAFEGUARDS:

Access to and use of these records are limited to persons whose official duties require such access. Files are kept in secured facilities.

RETENTION AND DISPOSAL:

Records are maintained from two to five years in accordance with established TVA record retention schedules and are then transferred to the Federal Records Center.

SYSTEM MANAGER(S) AND ADDRESS:

Director of Labor Relations, Tennessee Valley Authority, Knoxville, Tennessee 37902.

NOTIFICATION PROCEDURE:

Individuals seeking to learn if information on them is maintained in this system of records should address inquiries to the system manager named above. Requests should include the individual's full name, craft, and location of employment.

RECORD ACCESS PROCEDURES:

Individuals seeking access to information about them in this system of records should contact the system manager named above. Access will not be granted to investigatory material compiled solely for the purpose of determining suitability, eligibility, or qualifications for Federal civilian employment, Federal contracts, or access to classified information to the extent that the disclosure of such material would reveal the identity of a source who furnished information to the Government under an express promise

that the identity of the source would be held in confidence or, prior to September 27, 1975, under an implied promise that the identity of the source would be held in confidence. Access will not be granted to testing or examination material used solely to determine individual qualification for appointment or promotion in the Federal service, the disclosure of which would compromise the objectivity or fairness of the testing or examination process.

CONTESTING RECORD PROCEDURES:

Individuals desiring to contest or amend information about them maintained in this system should direct their request to the system manager named above.

RECORD SOURCE CATEGORIES:

Individual to whom the record pertains; General Aptitude Test Battery scores from State employment security office; references from employers and military and educational institutions; and evaluations from joint committee on apprenticeship.

SYSTEMS EXEMPTED FROM CERTAIN PROVISIONS OF THE ACT:

This system is exempt from subsections (d); (e)(4)(H); and (f) (2), (3), and (4) of 5 U.S.C. 552a (section 3 of the Privacy Act of 1974) to the extent that disclosure of material would reveal the identity of a source who furnished information to the Government under an express promise that the identity of the source would be held in confidence or, prior to September 27, 1975, under an implied promise that the identity of the source would be held in confidence, and to the extent that disclosure of testing and examination material would compromise the objectivity of the testing or examination process. This exemption is pursuant to 5 U.S.C. 552a(k) (5) and (6) and TVA regulations at 18 CFR 1301.24.

TVA-2

SYSTEM NAME:

Personnel Files—TVA.

SYSTEM LOCATION:

Division of Personnel, Tennessee Valley Authority, Knoxville Tennessee 37902; Division of Personnel, Information Management Systems Branch, Tennessee Valley Authority, Knoxville, Tennessee 37902; area employment offices in Knoxville, Chattanooga, Muscle Shoals, and Nashville; construction project employment offices; Computing Operations Branch, Tennessee Valley Authority, Chattanooga, Tennessee 37401; National Personnel Records Center, St. Louis, Missouri 63118.

Security/suitability investigatory files are located separately from other records in this system. Information on education, career counseling, or job performance may be maintained by the TVA organization that provides the training or career counseling or that employs the individual and by Equal Opportunity Staff. Duplicate or certain specifically temporary information may be maintained by division personnel officers, supervisors, and administrative officers.

CATEGORIES OF INDIVIDUALS COVERED BY THE SYSTEM:

Current and former TVA employees and applicants for employment.

CATEGORIES OF RECORDS IN THE SYSTEM:

Information related to education; qualifications; work history; interests and skills; test results; performance evaluation; career counseling; personnel actions; job description; salary and benefit information; service dates, including other Federal and military service; replies to congressional inquiries; medical data; and security investigation data.

AUTHORITY FOR MAINTENANCE OF THE SYSTEM:

Tennessee Valley Authority Act of 1933, 16 U.S.C. 831–831dd; Executive Order 10577; Executive Order 10450; Executive Order 11478; Executive Order 11222; Veterans' Preference Act of 1944, 58 Stat. 387, as amended; Equal Employment Opportunity Act of 1972, Pub. L. 92–261, 86 Stat. 103; various sections of Title 5 of the United States Code related to employment by TVA.

ROUTINE USES OF RECORDS MAINTAINED IN THE SYSTEM, INCLUDING CATEGORIES OF USERS AND THE PURPOSES OF SUCH USES:

To disclose test results to State employment services.

To a State employment security office in response to a request relating to a former employee's claim for unemployment compensation.

To respond to a request from a Member of Congress regarding the status of an employee, former employee, or applicant.

To refer, where there is an indication of a violation of law, whether criminal, civil, or regulatory in nature, to the appropriate agency, whether Federal, State, or local charged with the responsibility of investigating and prosecuting such violation or charged with enforcing or implementing the statute, rule, regulation, or order issued pursuant thereto.

To request from any pertinent source, directly or through a TVA contractor engaged at TVA's direction, information relevant to a TVA decision concerning the hiring, retention, or promotion of an employee, the issuance of a security clearance, or other decision within the purposes of this system of records.

To provide information or disclose to a Federal agency, in response to its request, in connection with the hiring or retention of an employee, the letting of a contract or issuance of a license, grant, or other benefit by the requesting agency to the extent that the information is relevant and necessary to the requesting agency's decision on that matter.

To provide the following information, as requested, to a prospective employer of a TVA or former TVA employee: job descriptions, dates of employment, and reasons for separation.

To provide information as requested to the Office of Personnel Management pursuant to Executive Orders 10450 and 10577 and other laws.

To any agency of the Federal Government having oversight or review authority with regard to TVA activities.

In litigation to which TVA is a party or in which TVA provides legal representation for a party by TVA attorneys or otherwise, for use for any purpose including the presentation of evidence and disclosure in the course of discovery. In all other litigation, to respond to process issued under color of authority of a court of competent jurisdiction.

To transfer information necessary to support a claim for life insurance benefits under Federal Employees' Group Life Insurance to Office of Federal Employees' Group Life Insurance.

To transfer information regarding claims for health insurance benefits to health insurance carrier.

To union representatives in exercising their responsibilities under TVA collective-bargaining agreements.

To the parties or complainants, their representatives, and impartial referees, examiners, administrative judges, or other decisionmakers in proceedings under the TVA grievance adjustment procedures, Equal Employment Opportunity procedures, Merit Systems Protection Board, or similar procedures.

To TVA contractors and subcontractors engaged at TVA's direction in studies and evaluation of TVA personnel management and benefits or the investigation of nuclear safety, reprisal, or other matters involving TVA personnel practices or policies.

To provide pertinent information to local school districts and other government agencies in order to study

TVA project impacts and to aid school districts in qualifying for assistance under Pub. L. 81–874 and other laws.

To the appropriate agency, whether Federal, State, or local, in connection with its oversight review responsibilities or authorized law enforcement activities.

To commemorate the month and day of employee birthday anniversaries.

POLICIES AND PRACTICES FOR STORING, RETRIEVING, ACCESSING, RETAINING, AND DISPOSING OF RECORDS IN THE SYSTEM:

STORAGE:

Records are maintained in file folders and on automated data storage devices and microfiche.

RETRIEVABILITY:

Records are indexed by name and social security number.

SAFEGUARDS:

Access to and use of these records are limited to those persons whose official duties require such access. All filing systems are locked when unattended. Remote access facilities are secured through physical and system-based safeguards.

RETENTION AND DISPOSAL:

Personal History Records:

Nonmicrofilmed records stored at National Personnel Records Center and microfilmed records stored at TVA are destroyed 75 years after birth date of employee or 60 years after date of earliest document in the record if the date of birth cannot be ascertained. Reference copies are destroyed when no longer needed.

Congressional inquiries are retained indefinitely; test records are retained 10 years; occupational register cards are retained 1 year, with the exception of apprentices which are retained for 5 years; some information maintained on magnetic tape is erased after 1 year, records are disposed of in accordance with established TVA records retention schedules.

SYSTEM MANAGER(S) AND ADDRESS:

Director of Personnel, Tennessee Valley Authority, Knoxville, Tennessee 37902.

NOTIFICATION PROCEDURE:

Individuals wishing to learn if information on them is maintained in this system of records should address inquiries to the Chief, Employment Branch, Tennessee Valley Authority, Knoxville, Tennessee 37902. Requests should include the individual's full name, employing division, job title, and date of birth. A social security number is not required but may expedite TVA's response.

In addition, current employees should address inquiries also to their supervisors or personnel officers.

RECORD ACCESS PROCEDURES:

Individuals seeking to gain access to information about them in this system of records should contact the Chief, Employment Branch, Tennessee Valley Authority, Knoxville, Tennessee 37902. In addition, current employees may present requests for access to their supervisors or the personnel officer of the employing division. Requests should include the individual's full name, employing division, job title, and date of birth. A social security number is not required but may expedite TVA's response. Access will not be granted to investigatory material compiled solely for the purpose of determining suitability, eligibility, or qualifications for Federal civilian employment or access to classified information to the extent that the disclosure of such material would reveal the identity of a source who furnished information to the Government under an express promise that the identity of the source would be held in confidence, or prior to September 27, 1975, under an implied promise that the identity of the source would be held in confidence. Access will not be granted to testing or examination material used solely to determine individual qualifications for appointment or promotion in the Federal Service the disclosure of which would compromise the objectivity or fairness of the testing or examination process.

CONTESTING RECORD PROCEDURES:

Individuals desiring to contest or amend information about them maintained in this system should direct their request to the Chief, Employment Branch, Tennessee Valley Authority, Knoxville, Tennessee 37902.

RECORD SOURCE CATEGORIES:

Individual to whom the record pertains; educational institutions; former employers; and other reference sources; State employment services; supervisors and other TVA personnel or personnel records; medical officers; other Federal agencies.

In addition to the above sources, security/suitability investigatory files contain information from law enforcement agencies.

SYSTEMS EXEMPTED FROM CERTAIN PROVISIONS OF THE ACT:

This system is exempt from subsections (d); (e)(4)(H); and (f) (2), (3), and (4) of 5 U.S.C. 552a (section 3 of the Privacy Act of 1974) to the extent that disclosure of material would reveal the identity of a source who furnished information to the Government under an express promise that the identity of the source would be held in confidence, or prior to September 27, 1975, under an implied promise that the identity of the source would be held in confidence, and to the extent that disclosure of testing or examination material would compromise the objectivity or fairness of the testing or examination process. This exemption is pursuant to 5 U.S.C. 552a(k) (5) and (6) and TVA regulations at 18 CFR 1301.24.

TVA–3

SYSTEM NAME:

Cooperative Training Program for Construction Craftsmen—TVA.

SYSTEM LOCATION:

Office of Natural Resources and Economic Development, Tennessee Valley Authority, Knoxville, Tennessee 37902; construction project offices.

CATEGORIES OF INDIVIDUALS COVERED BY THE SYSTEM:

Participants in the Cooperative Training Program for Construction Craftsmen.

CATEGORIES OF RECORDS IN THE SYSTEM:

Personal identifying information; evaluations.

AUTHORITY FOR MAINTENANCE OF THE SYSTEM:

Tennessee Valley Authority Act of 1933, 16 U.S.C. 831–831dd.

ROUTINE USES OF RECORDS MAINTAINED IN THE SYSTEM, INCLUDING CATEGORIES OF USERS AND THE PURPOSES OF SUCH USES:

To State employment services and prospective employers for use in placement of the student.

To request information from a Federal, State, or local agency or from private individuals, if necessary, to obtain information relevant to a TVA decision within the purposes of this system of records.

In litigation to which TVA is a party or in which TVA provides legal representation for a party by TVA attorneys or otherwise, for use for any purpose including the presentation of evidence and disclosure in the course of discovery. In all other litigation, to respond to process issued under color of authority of a court of competent jurisdiction.

To refer, where there is an indication of a violation or potential violation of law, whether criminal, civil, or regulatory in nature, to the appropriate agency, whether Federal, State, or local

charged with the responsibility of investigating and prosecuting such violation or charged with enforcing or implementing the statute, rule, regulation, or order issued pursuant thereto.

To the appropriate agency, whether Federal, State, or local in connection with its oversight review responsibilities or authorized law enforcement activities.

POLICIES AND PRACTICES FOR STORING, RETRIEVING, ACCESSING, RETAINING, AND DISPOSING OF RECORDS IN THE SYSTEM:

STORAGE:

Records are maintained in file folders.

RETRIEVABILITY:

Records are indexed by name and social security number.

SAFEGUARDS:

Access to and use of these records are limited to those persons whose official duties require such access. Filing systems are locked when unattended.

RETENTION AND DISPOSAL:

Records will be retained indefinitely.

SYSTEM MANAGER(S) AND ADDRESS:

Manager of Natural Resources and Economic Development, Tennessee Valley Authority, Knoxville, Tennessee 37902.

NOTIFICATION PROCEDURE:

Individuals wishing to determine if information on them is maintained in this system of records should address inquiries to the system manager named above.

RECORD ACCESS PROCEDURES:

Requests for access should be addressed to the system manager named above.

Access will not be granted to investigatory material compiled solely for the purpose of determining suitability, eligibility, or qualifications for Federal civilian employment, Federal contracts, or access to classified information, to the extent that the disclosure of such material would reveal the identity of a source who furnished information to the Government under an express promise that the identity of the source would be held in confidence, or prior to September 27, 1975, under an implied promise that the identity of the source would be held in confidence. Access will not be granted to testing or examination material used solely to determine individual qualification for appointment or promotion in the Federal Service, the disclosure of which would compromise the objectivity or fairness of the testing or examination process.

CONTESTING RECORD PROCEDURES:

Individuals seeking to contest or amend information about them in this system of records should direct their request to the system manager named above.

RECORD SOURCE CATEGORIES:

Individuals to whom the record pertains; instructors.

SYSTEMS EXEMPTED FROM CERTAIN PROVISIONS OF THE ACT:

This system is exempt from subsections (d); (e)(4)(H); and (f) (2), (3), and (4) of 5 U.S.C. 552a (section 3 of the Privacy Act of 1974) to the extent that disclosure of material would reveal the identity of a source who furnished information to the Government under an express promise that the identity of the source would be held in confidence, or prior to September 27, 1975, under an implied promise that the identity of the source would be held in confidence, and to the extent that disclosure of testing or examination material would compromise the objectivity or fairness of the testing or examination process. This exemption is pursuant to 5 U.S.C. 552a(k) (5) and (6) and TVA regulations at 18 CFR 1301.24.

TVA-4

SYSTEM NAME:

Demonstration Farm Records—TVA.

SYSTEM LOCATION:

Agricultural Institute, Tennessee Valley Authority, Muscle Shoals, Alabama 35660.

CATEGORIES OF INDIVIDUALS COVERED BY THE SYSTEM:

Tennessee Valley farmers participating in TVA farm demonstration programs.

CATEGORIES OF RECORDS IN THE SYSTEM:

Agricultural, investment, income, and labor information. The information in this system is not used in any determination about the rights, benefits, or privileges of an individual.

AUTHORITY FOR MAINTENANCE OF THE SYSTEM:

Tennessee Valley Authority Act of 1933, 16 U.S.C. 831–831dd.

ROUTINE USES OF RECORDS MAINTAINED IN THE SYSTEM, INCLUDING CATEGORIES OF USERS AND THE PURPOSES OF SUCH USES:

Information in this system of records may be disclosed to State extension services and the U.S. Department of Agriculture for use in program evaluation and in assistance to program participants.

To request information from a government agency or private individual where such information may be relevant to providing additional assistance under this program.

POLICIES AND PRACTICES FOR STORING, RETRIEVING, ACCESSING, RETAINING, AND DISPOSING OF RECORDS IN THE SYSTEM:

STORAGE:

Records are maintained in file folders and on automated data storage devices, punched cards, microfilm and microfiche.

RETRIEVABILITY:

Records are indexed by an assigned code.

SAFEGUARDS:

Access to and use of these records are limited to persons whose official duties require such access. All records are kept in secured facilities and locked when unattended.

RETENTION AND DISPOSAL:

Records are retained for an indefinite period.

SYSTEM MANAGER(S) AND ADDRESS:

Director of Agricultural Institute, Tennessee Valley Authority, Muscle Shoals, Alabama 35660.

NOTIFICATION PROCEDURE:

Individuals upon whom information is maintained in this system of records are aware of the fact through participation in the program. However, inquiries may be addressed to the system manager named above. Requests should include the individual's full name and State and county of the farm.

RECORD ACCESS PROCEDURES:

All information maintained in this system of records has been supplied by the subject individual. However, requests for access may be directed to the system manager named above.

CONTESTING RECORD PROCEDURES:

Individuals desiring to contest or amend information about them maintained in this system should direct their request to the system manager named above.

RECORD SOURCE CATEGORIES:

The information in this system is solicited from the individual to whom the record pertains by State extension services and universities.

TVA-5

SYSTEM NAME:

Discrimination Complaint Files—TVA.

SYSTEM LOCATION:

The following locations of the TVA Equal Opportunity Staff: Tennessee Valley Authority, Knoxville, Tennessee 37902; Chattanooga, Tennessee 37401; Muscle Shoals, Alabama 35660.

Duplicate copies may be maintained in the files of the TVA division where the complaint originated.

CATEGORIES OF INDIVIDUALS COVERED BY THE SYSTEM:

Employees or applicants who have received counseling or filed complaints of discrimination based on race, color, religion, sex, national origin, age, or handicap.

CATEGORIES OF RECORDS IN THE SYSTEM:

This system of records contains information or documents relating to a decision or determination made by TVA or the Equal Employment Opportunity Commission affecting an individual. The records consist of the initial appeal or complaint, letters or notices to the individual, record of hearings when conducted, materials placed into the record to support the decision or determination, affidavits or statements, testimonies of witnesses, investigative reports, and related correspondence, opinions, and recommendations.

AUTHORITY FOR MAINTENANCE OF THE SYSTEM:

Tennessee Valley Authority Act of 1933, 16 U.S.C. 831–831dd; Executive Order 11478; 42 U.S.C. 2000e–16; 29 U.S.C. 633a.

ROUTINE USES OF RECORDS MAINTAINED IN THE SYSTEM, INCLUDING CATEGORIES OF USERS AND THE PURPOSES OF SUCH USES:

A report of each complaint is made to the Equal Employment Opportunity Commission. If an administrative appeal is filed, the entire file is disclosed to the Equal Employment Opportunity Commission.

To the employee's representative.

To respond to a request from a Member of Congress regarding the status of a complaint.

To the parties or complainants, their representatives, and impartial referees, examiners, administrative judges, or other decisionmakers in proceedings under the TVA grievance adjustment procedures, Equal Employment Opportunity procedures, Merit Systems Protection Board, or similar procedures.

To refer, where there is an indication of a violation or potential violation of law, whether criminal, civil, or regulatory in nature, to the appropriate agency, whether Federal, State, or local, charged with the responsibility of investigating and prosecuting such violation or charged with enforcing or implementing the statute, rule, regulations, or order issued pursuant thereto.

In litigation to which TVA is a party or in which TVA provides legal representation for a party by TVA attorneys or otherwise, for use for any purpose including the presentation of evidence and disclosure in the course of discovery. In all other litigation, to respond to process issued under color of authority of a court of competent jurisdiction.

To TVA consultants, contractors, and subcontractors who are engaged in studies and evaluation of TVA's administration of its equal employment opportunity program or who are providing support services to the program.

To the appropriate agency, whether Federal, State, or local, in connection with its oversight review responsibilities or authorized law enforcement activities.

POLICIES AND PRACTICES FOR STORING, RETRIEVING, ACCESSING, RETAINING, AND DISPOSING OF RECORDS IN THE SYSTEM:

STORAGE:

Records in this system are kept in file folders.

RETRIEVABILITY:

Records in this system are indexed by name.

SAFEGUARDS:

Access to and use of these records are limited to those personnel whose official duties require such access.

RETENTION AND DISPOSAL:

These records are retained in accordance with established TVA records retention schedules.

SYSTEM MANAGER(S) AND ADDRESS:

Director of Equal Opportunity, Tennessee Valley Authority, Knoxville, Tennessee 37902.

NOTIFICATION PROCEDURE:

Individuals who have filed discrimination complaints are aware of that fact. However, inquiries may be addressed to the system manager named above. Individuals should provide their full name, the approximate date of their complaint, and their employing organization, if employed.

RECORD ACCESS PROCEDURES:

Individuals who have filed a discrimination complaint have been provided a copy of the record. However, an individual may gain access to the official copy of the complaint record by writing the system manager named above.

CONTESTING RECORD PROCEDURES:

Individuals who have filed a discrimination complaint have had an opportunity during the complaint procedure to amend their record. However, request for amendment or correction of items not involving the complaint procedure may be addressed to the system manager named above.

RECORD SOURCE CATEGORIES:

The individual to whom the record pertains; TVA personnel and other records; witnesses.

TVA–6

SYSTEM NAME:

Employee Accident Information System—TVA.

SYSTEM LOCATION:

Division of Occupational Health and Safety, Muscle Shoals, Alabama 35660.

Accident reports may also be maintained in the file of the employing organization.

CATEGORIES OF INDIVIDUALS COVERED BY THE SYSTEM:

Employees who have sustained a work-related injury or illness or have been involved, as the operator of a TVA vehicle, in a vehicular accident.

CATEGORIES OF RECORDS IN THE SYSTEM:

Personal identifying information and information related to the accident, injury, or illness.

AUTHORITY FOR MAINTENANCE OF THE SYSTEM:

Tennessee Valley Authority Act of 1933, 16 U.S.C. 831–831dd; Occupational Safety and Health Act of 1970, Pub. L. 93–237, 87 Stat. 1024; Executive Order 12196.

ROUTINE USES OF RECORDS MAINTAINED IN THE SYSTEM, INCLUDING CATEGORIES OF USERS AND THE PURPOSES OF SUCH USES:

To the Department of Labor as required by the Occupational Safety and Health Act.

To the Office of Workers' Compensation Programs in relation to an individual's claim for compensation.

To respond to a request from a Member of Congress regarding the status of an employee.

To provide information to a Federal agency, in response to its request in connection with the hiring or retention of an employee, the letting of a contract, or issuance of a license, grant, or other benefit by the requesting agency to the extent that the information is relevant and necessary to the requesting agency's decision on that matter.

To request information from a Federal, State, or local agency maintaining civil, criminal, or other relevant enforcement information or other pertinent information and to request information from private individuals, if necessary, to obtain information relevant to a TVA decision concerning the hiring, retention, or promotion of an employee, the issuance of a security clearance, or other decision within the purposes of this system of records.

In litigation to which TVA is a party or in which TVA provides legal representation for a party by TVA attorneys or otherwise, for use for any purpose including the presentation of evidence and disclosure in the course of discovery. In all other litigation, to respond to process issued under color of authority of a court of competent jurisdiction.

To refer, where there is an indication of a violation or potential violation of law, whether criminal, civil, or regulatory in nature to the appropriate agency, whether Federal, State, or local, charged with the responsibility of investigating and prosecuting such violation or charged with enforcing or implementing the statute, rule, regulation, or order issued pursuant thereto.

To the appropriate agency, whether Federal, State, or local, in connection with its oversight review responsibilities or authorized law enforcement activities.

POLICIES AND PRACTICES FOR STORING, RETRIEVING, ACCESSING, RETAINING, AND DISPOSING OF RECORDS IN THE SYSTEM:

STORAGE:

Information in this system is maintained on automated data storage devices and in file folders.

RETRIEVABILITY:

Records are indexed by name, date of birth, and social security number.

SAFEGUARDS:

Access to and use of these records are limited to those persons whose official duties require such access. All filing systems are locked when unattended. Remote access facilities are secured through physical and system-based safeguards.

RETENTION AND DISPOSAL:

Records are retained for five years, and after that period are retained in accordance with established TVA records retention schedules.

SYSTEM MANAGER(S) AND ADDRESS:

Tennessee Valley Authority, Director of Occupational Health and Safety, Muscle Shoals, Alabama 35660.

NOTIFICATION PROCEDURE:

Individuals wishing to know whether information about them is maintained in this system of records should address inquiries to the system manager named above. Requests should include the individual's full name, date of birth, and approximate date of injury.

RECORD ACCESS PROCEDURES:

Individuals who desire access to information about them in this system of records should contact the system manager named above.

CONTESTING RECORD PROCEDURES:

Individuals desiring to contest or amend information about them maintained in this system should direct their request to the system manager named above.

RECORD SOURCE CATEGORIES:

The individual to whom the record pertains; TVA medical records; witnesses of accidents and injuries, including appraisers of property damage.

TVA-7

SYSTEM NAME:

Employee Accounts Receivable—TVA.

SYSTEM LOCATION:

Division of the Comptroller, Tennessee Valley Authority, Knoxville, Tennessee 37902; Office of the General Counsel, Tennessee Valley Authority, Knoxville, Tennessee 37902.

CATEGORIES OF INDIVIDUALS COVERED BY THE SYSTEM:

Employees or former employees who:

Authorize a payment for specified purposes in their behalf; receive overpayment of earnings; receive duplicate payments; are otherwise indebted to TVA.

CATEGORIES OF RECORDS IN THE SYSTEM:

Personal identifying information and information concerning indebtedness and repayment.

AUTHORITY FOR MAINTENANCE OF THE SYSTEM:

5 U.S.C. Chapter 55; Tennessee Valley Authority Act of 1933, 16 U.S.C. 831–831dd.

ROUTINE USES OF RECORDS MAINTAINED IN THE SYSTEM, INCLUDING CATEGORIES OF USERS AND THE PURPOSES OF SUCH USES:

To refer, where there is an indication of a violation or potential violation of law, whether criminal, civil, or regulatory in nature, to the appropriate agency, whether Federal, State, or local, charged with the responsibility of investigating and prosecuting such violation or charged with enforcing or implementing the statute, rule, regulation, or order issued pursuant thereto.

In litigation to which TVA is a party or in which TVA provides legal representation for a party by TVA attorneys or otherwise, for use for any purpose including the presentation of evidence and disclosure in the course of discovery. In all other litigation, to respond to process issued under color of authority of a court of competent jurisdiction.

To the appropriate agency, whether Federal, State, or local, in connection with its oversight review responsibilities or authorized law enforcement activities.

DISCLOSURE TO CONSUMER REPORTING AGENCIES:

Disclosures pursuant to 5 U.S.C. 552a(b)(12): Disclosures may be made from this system to "consumer reporting agencies" as defined in the Fair Credit Reporting Act (15 U.S.C. 1681a(f)) or the Debt Collection Act of 1982 (31 U.S.C. 3711(d)(4)).

POLICIES AND PRACTICES FOR STORING, RETRIEVING, ACCESSING, RETAINING, AND DISPOSING OF RECORDS IN THE SYSTEM:

STORAGE:

Records are maintained on punch cards, printouts, invoices, and posting documents.

RETRIEVABILITY:

Records are indexed by payroll number, social security number, badge number, name, or invoice number.

SAFEGUARDS:

Access to and use of these records are limited to persons whose official duties require such access. Files are kept in secured facilities.

RETENTION AND DISPOSAL:

Punch cards disposed of in 3 months, printouts in 3 years, invoices in 7 years and posting documents in 50 years.

SYSTEM MANAGER(S) AND ADDRESS:

Comptroller, Tennessee Valley Authority, Knoxville, Tennessee 37902.

NOTIFICATION PROCEDURE:

Individuals wishing to know whether information about them is maintained in this system of records should address inquiries to the system manager named above. Requests should include the individual's full name and employing organization. Provision of the social security number is not required, but may expedite TVA's response.

RECORD ACCESS PROCEDURES:

Individuals who seek access to information about them in this system of records should contact the system manager named above.

CONTESTING RECORD PROCEDURES:

Individuals desiring to contest or amend information about them maintained in the system should direct their request to the system manager named above.

RECORD SOURCE CATEGORIES:

Individual to whom the record pertains; TVA payroll records; TVA disbursement voucher records.

TVA-8

SYSTEM NAME:

Employee Alleged Misconduct Investigatory Files—TVA.

SYSTEM LOCATION:

Office of the General Counsel, Tennessee Valley Authority, Knoxville, Tennessee 37902.

CATEGORIES OF INDIVIDUALS COVERED BY THE SYSTEM:

Employees or former employees about whom a complaint of misconduct during employment has been made.

CATEGORIES OF RECORDS IN THE SYSTEM:

Information regarding conduct during employment with TVA which may be in violation of law or regulations.

AUTHORITY FOR MAINTENANCE OF THE SYSTEM:

TVA Act, 16 U.S.C. 831–831dd; Executive Order 10450; Executive Order 11222; Hatch Political Activity Act, 5 U.S.C. 7324–7327; 28 U.S.C. 535.

ROUTINE USES OF RECORDS MAINTAINED IN THE SYSTEM, INCLUDING CATEGORIES OF USERS AND THE PURPOSES OF SUCH USES:

To refer, where there is an indication of a violation or potential violation of law, whether criminal, civil, or regulatory in nature, to the appropriate agency, whether Federal, State, or local, charged with the responsibility of investigating and prosecuting such violation or charged with enforcing or implementing the statute, rule, regulation, or order issued pursuant thereto.

To provide information to a Federal agency, in response to its request, in connection with the hiring or retention of an employee, the letting of a contract, or issuance of a license, grant, or other benefit by the requesting agency to the extent that the information is relevant and necessary to the requesting agency's decision on that matter.

To the parties or complainants, their representatives, and impartial referees, examiners, administrative judges, or other decisionmakers in proceedings under the TVA grievance adjustment procedures, Equal Employment Opportunity procedures, Merit Systems Protection Board, or similar procedures.

In litigation to which TVA is a party or in which TVA provides legal representation for a party by TVA attorneys or otherwise, for use for any purpose including the presentation of evidence and disclosure in the course of discovery. In all other litigation, to respond to process issued under color of authority of a court of competent jurisdiction.

To request information from a Federal, State, or local agency maintaining civil, criminal, or other relevant enforcement information or other pertinent information and to request information from private individuals, if necessary, to obtain information relevant to a TVA decision concerning the hiring, retention, or promotion of an employee, the issuance of a security clearance, or other decision within the purposes of this system of records.

To provide information as requested to the Office of Personnel Management pursuant to Executive Orders 10450 and 10577 and other laws.

To the appropriate agency, whether Federal, State, or local, in connection with its oversight review responsibilities or authorized law enforcement activities.

POLICIES AND PRACTICES FOR STORING, RETRIEVING, ACCESSING, RETAINING, AND DISPOSING OF RECORDS IN THE SYSTEM:

STORAGE:

Records are maintained in file folders.

RETRIEVABILITY:

Records are indexed and retrieved by individual name or investigation number.

SAFEGUARDS:

These records are stored in a locked GSA-approved security container. Access to the records is limited to TVA attorneys and their administrative assistants who have a need for them in the course of TVA business and to other TVA employees whose need is approved by Office of the General Counsel management.

RETENTION AND DISPOSAL:

Records are disposed of in accordance with established TVA records retention schedules.

SYSTEM MANAGER(S) AND ADDRESS:

General Counsel, Tennessee Valley Authority, Knoxville, Tennessee 37902.

NOTIFICATION PROCEDURE:

This system of records is exempt from the requirement pursuant to 5 U.S.C. 552a(k)(2) and TVA regulations at 18 CFR 1301.24.

RECORD ACCESS PROCEDURES:

This system of records is exempt from this requirement pursuant to 5 U.S.C. 552a(k)(2) and TVA regulations at 18 CFR 1301.24.

CONTESTING RECORD PROCEDURES:

This system of records is exempt from this requirement pursuant to 5 U.S.C. 552a(k)(2) and TVA regulations at 18 CFR 1301.24.

RECORD SOURCE CATEGORIES:

This system of records is exempt from this requirement pursuant to 5 U.S.C. 552a(k)(2) and TVA regulations at 18 CFR 1301.24.

SYSTEMS EXEMPTED FROM CERTAIN PROVISIONS OF THE ACT:

This system is exempted from subsections (c)(3); (d); (e)(1); (4)(G), (4)(H), (4)(I); and (f) of 5 U.S.C. 552a (Section 3 of the Privacy Act of 1974) pursuant to 5 U.S.C. 552a(k)(2) and TVA regulations at 18 CFR 1301.24.

TVA-9

SYSTEM NAME:

Medical Record System—TVA.

SYSTEM LOCATION:

Division of Medical Services, Tennessee Valley Authority, Chattanooga, Tennessee 37401; all TVA medical facilities; Computing Operations Branch, Chattanooga, Tennessee 37401; National Records Center, St. Louis, Missouri 63118; District Offices, Office of Workers' Compensation Programs.

CATEGORIES OF INDIVIDUALS COVERED BY THE SYSTEM:

Applicants for TVA employment, employees, former employees, official visitors, contractual assignees to TVA, interns, externs, employees of TVA

contractors, and other Federal agencies who are examined under contract.

CATEGORIES OF RECORDS IN THE SYSTEM:

Medical information pertinent to an individual's employment, official visit, or contractual work with TVA or other Federal agencies, including medical and psychological history, examination, testing, counseling, treatment, and related information; workers compensation claim records; rehabilitation records; and information related to employee participation in the alcohol-drug abuse program.

Medical and psychological information relative to nuclear plant security.

AUTHORITY FOR MAINTENANCE OF THE SYSTEM:

Tennessee Valley Authority Act of 1933, 16 U.S.C. 831–831dd; 5 U.S.C. 7902; Federal Employees' Compensation Act, 5 U.S.C. Chapter 81, 5 U.S.C. Chapter 87 (Medical information relating to life insurance program); 5 U.S.C. 3301; Occupational Safety and Health Act of 1970, Pub. L. 93–237, 87 Stat. 1024, Pub. L. 91–616, Federal Civilian Employee Alcoholism Program and Pub. L. 92–255, Drug Abuse Among Federal Civilian Employees, which are amended in regard to confidentiality of records by Pub. L. 93–282; Public health laws (State and Federal) related to the reporting of health hazards, communicable diseases or other epidemiological information; Energy Reorganization Act of 1974, Pub. L. 93–438, 88 Stat. 1233.

ROUTINE USES OF RECORDS MAINTAINED IN THE SYSTEM, INCLUDING CATEGORIES OF USERS AND THE PURPOSES OF SUCH USES:

Compensation claim records are used for adjudicating claims and providing therapy. Appropriate information is exchanged with physicians, hospitals, and rehabilitation agencies approved by the Office of Workers' Compensation Programs for service to injured employees.

Medical records are used for employee population health monitoring which includes routine clinical and epidemiological investigations. Such studies may require the transfer of selected items of medical data to health-related agencies, organizations, or professionals for the purpose of obtaining specialized clinical consultation, compiling vital and health statistics, or conducting biomedical investigations.

Alcohol-drug program records may be exchanged with a physician or treatment center working with an employee, or in accordance with the provisions of Pub. L. 93–282.

Information in the Medical Record System provided to officials of other Federal agencies responsible for other Federal benefit programs administered by Office of Workers' Compensation Programs, Retired Military Pay Centers, Veterans' Administration, Social Security Administration, and private contractors engaged in providing benefits under Federal contracts.

To refer, where there is an indication of a violation or potential violation of law, whether criminal, civil, or regulatory in nature, to the appropriate agency, whether Federal, State, or local, charged with the responsibility of investigating and prosecuting such violation or charged with enforcing or implementing the statute, rule, regulation, or order issued pursuant thereto.

To provide information to a Federal agency, in response to its request, in connection with the hiring or retention of an employee, the letting of a contract, the issuance of a security clearance, the reporting of an investigation of an employee, or the issuance of a license, grant, or other benefit by the requesting agency, to the extent that the information is relevant and necessary to the requesting agency's decision on the matter.

To respond to a request from a Member of Congress regarding an employee.

In litigation to which TVA is a party or in which TVA provides legal representation for a party by TVA attorneys or otherwise, for use for any purpose including the presentation of evidence and disclosure in the course of discovery. In all other litigation, to respond to process issued under color of authority of a court of competent jurisdiction.

To transfer information regarding claims for health insurance or disability benefits to the health insurance carrier or plan participant.

To request information from a Government agency or private individual, if necessary, to obtain information relevant to a TVA decision within the purposes of this system of records.

To the parties or complainants, their representatives, and impartial referees, examiners, administrative judges, or other decisionmakers in proceedings under the TVA grievance adjustment procedures, Equal Employment Opportunity procedures, Merit Systems Protection Board, or similar procedures.

To TVA consultants, contractors, and subcontractors who are engaged in studies and evaluation of TVA's administration of its medical program or who are providing support sources to the program.

To the appropriate agency, whether Federal, State, or local, in connection with its oversight review responsibilities or authorized law enforcement activities.

To provide information to private physicians and other health care professionals or facilities designated by an employee.

POLICIES AND PRACTICES FOR STORING, RETRIEVING, ACCESSING, RETAINING, AND DISPOSING OF RECORDS IN THE SYSTEM:

STORAGE:

Records are maintained on automated data storage devices, microfilm, and in file folders.

RETRIEVABILITY:

Records are indexed by name, social security number, date of birth, and employee compensation case number.

SAFEGUARDS:

Access to and use of these records are limited to those persons whose official duties require such access. All filing systems are locked when unattended. Remote access facilities are secured through physical and system-based safeguards. Special instructions issued to medical staff employees assure the confidentiality of medical records.

RETENTION AND DISPOSAL:

Records are maintained in accordance with TVA rules and regulations approved by the National Archivist. Retention schedules specify the length of time various records are kept. Active medical records are kept indefinitely. Inactive files are kept in the Division of Medical Services, TVA, for 6 years following the date of last medical record entry. They are then purged and essential record material is microfilmed. The paper records are destroyed by recycling. Microfilm records are destroyed 34 years from date of filming.

X-rays of employees are microfilmed 20 years after termination of employee and the original destroyed. The microfilm records are destroyed in TVA 20 years from date of filming. X-rays of nonemployees and all dependents are destroyed in TVA 6 years from date of film.

SYSTEM MANAGER(S) AND ADDRESS:

Medical Director, Tennessee Valley Authority, Chattanooga, Tennessee 37401.

NOTIFICATION PROCEDURE:

Individuals should address inquiries to the system manager named above or

to the medical office at the TVA facility where employed, if a current employee.

Individuals should provide their full name, date of birth, employing organization, and date of last employment, and employee compensation case number, if any. Provision of social security number is not required but may expedite TVA's response.

RECORD ACCESS PROCEDURES:

Individuals who desire access to information about them in this system of records should contact or address their inquiries to the system manager named above or the medical office at the TVA facility where currently employed.

CONTESTING RECORDS PROCEDURES:

Individuals desiring to contest or amend information about them maintained in this system should direct their request to the system manager named above.

RECORD SOURCE CATEGORIES:

The individual to whom the record pertains; TVA medical staff; private physicians and medical institutions; Office of Workers' Compensation Programs; TVA personnel records; other health agencies and departments.

TVA-10

SYSTEM NAME:

Employee Statement of Employment and Financial Interests—TVA.

SYSTEM LOCATION:

Office of the General Counsel, Tennessee Valley Authority, Knoxville, Tennessee 37902. Original copies may be kept in division directors' offices.

CATEGORIES OF INDIVIDUALS COVERED BY THE SYSTEM:

All TVA employees at TVA grade M-8 and above who submitted a report prior to the enactment of the Ethics in Government Act of 1978; employees at TVA grades M-5, M-6, M-7 in positions designated by the General Manager or a division director as requiring submission of a statement; every TVA consultant who is a "special Government employee"; every TVA personal service contractor who is a "special Government employee" and who is determined to be an "expert" or who is otherwise required to submit a statement.

CATEGORIES OF RECORDS IN THE SYSTEM:

Statement of employment and financial interests.

AUTHORITY FOR MAINTENANCE OF THE SYSTEM:

Executive Order 11222; 18 U.S.C. 208; Tennessee Valley Authority Act of 1933, 16 U.S.C. 831-831dd.

ROUTINE USES OF RECORDS MAINTAINED IN THE SYSTEM, INCLUDING CATEGORIES OF USERS AND THE PURPOSES OF SUCH USES:

To refer, where there is an indication of a violation or potential violation of law, whether criminal, civil, or regulatory in nature, to the appropriate agency, whether Federal, State, or local, charged with the responsibility of investigating and prosecuting such violation or charged with enforcing or implementing the statute, rule, regulation, or order issued pursuant thereto.

To report as requested to the Office of Personnel Management pursuant to Executive Order 10577 and other laws.

To the appropriate agency, whether Federal, State, or local, in connection with its oversight review responsibilities or authorized law enforcement activities.

POLICIES AND PRACTICES FOR STORING, RETRIEVING, ACCESSING, RETAINING, AND DISPOSING OF RECORDS IN THE SYSTEM:

STORAGE:

Records are maintained in the file folders.

RETRIEVABILITY:

Records are indexed by name.

SAFEGUARDS:

Access to and use of these records are limited to those persons designated by the General Manager or the Board of Directors to review statements of financial interest.

RETENTION AND DISPOSAL:

Records are retained in accordance with established records retention schedules.

SYSTEM MANAGER(S) AND ADDRESS:

General Manager, Tennessee Valley Authority, Knoxville, Tennessee 37902.

NOTIFICATION PROCEDURE:

Individuals upon whom records are maintained in this system of records are aware of that fact by having filed a statement. However, inquiries may be addressed to the Office of the General Counsel, Tennessee Valley Authority, Knoxville, Tennessee 37902. Requests should include the individual's full name and employing division.

RECORD ACCESS PROCEDURES:

Individuals wishing to gain access to information about them in this system of records should contact the Office of the General Counsel, Tennessee Valley Authority, Knoxville, Tennessee 37902.

CONTESTING RECORD PROCEDURES:

Individuals desiring to contest or amend information about them maintained in this system should direct their request to the Office of the General Counsel, Tennessee Valley Authority, Knoxville, Tennessee 37902.

RECORD SOURCE CATEGORIES:

The individual to whom the record pertains.

TVA-11

SYSTEM NAME:

Payroll Records—TVA.

SYSTEM LOCATION:

TVA Division of the Comptroller, Knoxville, Tennessee 37902; garnishment files are located at the Office of the General Counsel, Knoxville, Tennessee 37902; duplicate copies of some records may also be maintained in the files of the employing division; National Personnel Records Center, St. Louis, Missouri 63118.

CATEGORIES OF INDIVIDUALS COVERED BY THE SYSTEM:

All employees and personal service contractors selected for certain training programs.

CATEGORIES OF RECORDS IN THE SYSTEM:

Personal identifying information, pay, leave, and debt claim information.

AUTHORITY FOR MAINTENANCE OF THE SYSTEM:

Tennessee Valley Authority Act of 1933, 16 U.S.C. 831-831dd; Internal Revenue Code; Fair Labor Standards Act, 29 U.S.C. Chapter 8; 5 U.S.C. Chapter 63.

ROUTINE USES OF RECORDS MAINTAINED IN THE SYSTEM, INCLUDING CATEGORIES OF USERS AND THE PURPOSES OF SUCH USES:

To report earnings and other required information to Federal, State, and local taxing authorities as required by law.

To report earnings to the Civil Service Retirement System for members of that system.

To transmit payroll deduction information to financial institutions and employee organizations.

To report earnings to courts when garnishments are served or in bankruptcy or wage earner proceedings.

To report earnings to unions for those crafts on which TVA contributions to union welfare or pension funds are based on earnings. Reports of hours worked are made to unions for those

crafts on which such TVA contributions are based on hours worked.

To report earnings to the Department of Housing and Urban Development, State welfare agencies, and State employment security offices where an individual has made a claim for benefit with such agency.

To the parties or complainants, their representatives, and impartial referees, examiners, administrative judges, or other decisionmakers in proceedings under the TVA grievance adjustment procedures, Equal Employment Opportunity procedures, Merit Systems Protection Board, or similar procedures.

To refer, where there is an indication of a violation or potential violation of law, whether criminal, civil, or regulatory in nature, to the appropriate agency, whether Federal, State, or local, charged with the responsibility of investigating and prosecuting such violation or charged with enforcing or implementing the statute, rule, regulation, or order issued pursuant thereto.

To provide information or disclose to a Federal agency, in response to its request, in connection with the hiring or retention of an employee, the letting of a contract, or issuance of a license, grant, or other benefit by the requesting agency to the extent that the information is relevant and necessary to the requesting agency's decision on that matter.

To disclose to any agency of the Federal Government having oversight or review authority with regard to TVA activities.

In litigation to which TVA is a party or in which TVA provides legal representation for a party by TVA attorneys or otherwise, for use for any purpose including the presentation of evidence and disclosure in the course of discovery. In all other litigation, to respond to process issued under color of authority of a court of competent jurisdiction.

To transfer information necessary to support a claim for life insurance benefits under Federal Employees' Group Life Insurance to Office of Federal Employees' Group Life Insurance.

To request information from a Federal, State, or local agency maintaining civil, criminal, or other relevant enforcement information or other pertinent information and to request information from private individuals, if necessary, to obtain information relevant to a TVA decision concerning the hiring, retention, or promotion of an employee, the issuance of a security clearance, or other decision within the purposes of this system of records.

To transfer information regarding claims for health insurance benefits to health insurance carriers.

To TVA contractors and subcontractors engaged in studies and evaluations of TVA payroll and personnel management.

To union representatives exercising their responsibilities under TVA collective bargaining agreements.

To report earnings to the Department of Housing and Urban Development, and State welfare agencies where an individual makes a claim for benefits and to report earnings to State employment security offices in both manual and automated form for use by these offices in determining unemployment benefits.

To the appropriate agency, whether Federal, State, or local, in connection with its oversight review responsibilities or authorized law enforcement activities.

DISCLOSURE TO CONSUMER REPORTING AGENCIES:

Disclosures pursuant to 5 U.S.C. 552a(b)(12): Disclosures may be made from this system to "consumer reporting agencies" as defined in the Fair Credit Reporting Act (15 U.S.C. 1681a(f)) or the Debt Collection Act of 1982 (31 U.S.C. 3711(d)(4)).

POLICIES AND PRACTICES FOR STORING, RETRIEVING, ACCESSING, RETAINING, AND DISPOSING OF RECORDS IN THE SYSTEM:

STORAGE:

Records are maintained on automated data storage devices, hard-copy printouts, and in file folders.

RETRIEVABILITY:

Records are primarily indexed by name. They may also be retrieved by reference to employing organization, date of end of pay period, social security or badge number, date of birth, sex, job title.

SAFEGUARDS:

Access to and use of these records are limited to persons whose official duties require such access. Filing systems are locked when unattended. Remote access facilities are secured through physical and system-based safeguards.

RETENTION AND DISPOSAL:

File folders are retained for 3 years after termination. Timesheets are retained for 7 years. Payroll registers are retained in active status for 1 year, transferred to TVA record storage for 5 years, and to National Personnel Records Center for an additional 50 years. Magnetic tapes are retained for 1 year after termination.

SYSTEM MANAGER(S) AND ADDRESS:

Comptroller, Tennessee Valley Authority, Knoxville, Tennessee 37902.

NOTIFICATION PROCEDURE:

Individuals wishing to learn if information on them is maintained in this system of records should address inquiries to the system manager named above. Requests should include the individual's full name, employing organization, and date of last employment. The social security number is not required but may expedite TVA's response.

RECORD ACCESS PROCEDURES:

Individuals seeking access to information on them in this system of records should contact the system manager named above.

CONTESTING RECORD PROCEDURES:

Individuals seeking to amend or correct information on them in this system of records should contact the system manager named above.

RECORD SOURCE CATEGORIES:

Individual to whom the record pertains; TVA personnel records; employee's supervisor for report of hours worked.

TVA-12

SYSTEM NAME:

Employee Travel Advance Records—TVA.

SYSTEM LOCATION:

Division of the Comptroller, Tennessee Valley Authority, Knoxville, Tennessee 37902.

Duplicate copies of these records may also be maintained in the files of the employee's division.

CATEGORIES OF INDIVIDUALS COVERED BY THE SYSTEM:

TVA employees requesting travel advances.

CATEGORIES OF RECORDS IN THE SYSTEM:

Name, address, employing organization, date and amount of travel advance, and repayment information.

AUTHORITY FOR MAINTENANCE OF THE SYSTEM:

5 U.S.C. 5701–5709, and related Federal travel regulations; Tennessee Valley Authority Act of 1933, 16 U.S.C. 831–831dd.

ROUTINE USES OF RECORDS MAINTAINED IN THE SYSTEM, INCLUDING CATEGORIES OF USERS AND THE PURPOSES OF SUCH USES:

To refer, where there is an indication of a violation or potential violation of law, whether criminal, civil or regulatory in nature, to the appropriate agency whether Federal, State, or local, charged with the responsibility of investigating and prosecuting such violation or charged with enforcing or implementing the statute, rule, regulation, or order issued pursuant thereto.

In litigation to which TVA is a party or in which TVA provides legal representation for a party by TVA attorneys or otherwise, for use for any purpose including the presentation of evidence and disclosure in the course of discovery. In all other litigation, to respond to process issued under color of authority of a court of competent jurisdiction.

To the appropriate agency, whether Federal, State, or local, in connection with its oversight review responsibilities or authorized law enforcement activities.

DISCLOSURE TO CONSUMER REPORTING AGENCIES:

Disclosures pursuant to 5 U.S.C. 552a(b)(12). Disclosures may be made from this system to "consumer reporting agencies" as defined in the Fair Credit Reporting Act (15 U.S.C. 1681a(f)) or the Debt Collection Act of 1982 (31 U.S.C. 3711(d)(4)).

POLICIES AND PRACTICES FOR STORING, RETRIEVING, ACCESSING, RETAINING, AND DISPOSING OF RECORDS IN THE SYSTEM:

STORAGE:

Records are maintained on computer printouts and microfiche.

RETRIEVABILITY:

Records are indexed by name and social security number.

SAFEGUARDS:

Access to and use of these records are limited to persons whose official duties require such access. Files are kept in secured facilities.

RETENTION AND DISPOSAL:

These records are retained permanently.

SYSTEM MANAGER(S) AND ADDRESS:

Comptroller, Tennessee Valley Authority, Knoxville, Tennessee 37902.

NOTIFICATION PROCEDURE:

Individuals wishing to know whether information about them is maintained in this system of records should address inquiries to the system manager named above. Requests should include the individual's full name and employing organization.

RECORD ACCESS PROCEDURES:

Individuals who seek access to information about them in this system of records should contact the system manager named above.

CONTESTING RECORD PROCEDURES:

Individuals desiring to contest or amend information about them maintained in this system should direct their request to the system manager named above.

RECORD SOURCE CATEGORIES:

Individual to whom the record pertains; TVA disbursement voucher records; TVA application for travel advance.

TVA-13

SYSTEM NAME:

Employment Applicant Files—TVA.

SYSTEM LOCATION:

Division of Personnel, Employment Branch and Information Management Systems Branch, Tennessee Valley Authority, Knoxville, Tennessee 37902; area and project employment offices; Computing Operations Branch, TVA, Chattanooga, Tennessee 37401.

CATEGORIES OF INDIVIDUALS COVERED BY THE SYSTEM:

Applicants for employment including former employees seeking reemployment.

CATEGORIES OF RECORDS IN THE SYSTEM:

Application forms and related correspondence.

AUTHORITY FOR MAINTENANCE OF THE SYSTEM:

Tennessee Valley Authority Act of 1933, 16 U.S.C. 831–831dd; 5 U.S.C. 3101.

ROUTINE USES OF RECORDS MAINTAINED IN THE SYSTEM, INCLUDING CATEGORIES OF USERS AND THE PURPOSES OF SUCH USES:

To respond to a request from a Member of Congress regarding the status of an individual's application.

To refer, where there is an indication of a violation or potential violation of law, whether criminal, civil, or regulatory in nature, to the appropriate agency, whether Federal, State, or local, charged with the responsibility of investigating and prosecuting such violation or charged with enforcing or implementing the statute, rule, regulation, or order issued pursuant thereto.

To request from any pertinent source, directly or through a TVA contractor engaged at TVA's direction, information relevant to a TVA decision concerning the hiring of an employee, the issuance of a security clearance, or other decision within the purposes of this system of records.

To disclose test results to State employment services.

To provide information as requested to the Office of Personnel Management pursuant to Executive Orders 10450 and 10577 and other laws.

To provide information to a Federal agency in response to its request in connection with the hiring or retention of an employee, the letting of a contract, or issuance of a license, grant, or other benefit by the requesting agency to the extent that the information is relevant and necessary to the requesting agency's decision on that matter.

In litigation to which TVA is a party or in which TVA provides legal representation for a party by TVA attorneys or otherwise, for use for any purpose including the presentation of evidence and disclosure in the course of discovery. In all other litigation, to respond to process issued under color of authority of a court of competent jurisdiction.

To the parties or complainants, their representatives, and impartial referees, examiners, administrative judges, or other decisionmakers in proceedings under the TVA grievance adjustment procedures, Equal Employment Opportunity procedures, Merit Systems Protection Board, or similar procedures.

To the appropriate agency whether Federal, State, or local, in connection with its oversight review responsibilities or authorized law enforcement activities.

POLICIES AND PRACTICES FOR STORING, RETRIEVING, ACCESSING, RETAINING, AND DISPOSING OF RECORDS IN THE SYSTEM:

STORAGE:

Records are maintained in file folders and on automated data storage devices and printouts.

RETRIEVABILITY:

Records are indexed by name and social security number.

SAFEGUARDS:

Access to and use of these records are limited to those persons whose official duties require such access. All filing systems are locked when unattended. Remote access facilities are secured through physical and system-based safeguards.

RETENTION AND DISPOSAL:

Applications are kept for one year from last indication of interest, with the exception of apprenticeship applications, which are kept for five years.

SYSTEM MANAGER(S) AND ADDRESS:

Director of Personnel, Tennessee Valley Authority, Knoxville, Tennessee 37902.

NOTIFICATION PROCEDURE:

Individual wishing to learn if information on them is maintained in this system of records should address inquiries to Chief, Employment Branch, Tennessee Valley Authority, Knoxville, Tennessee 37902, or to the area or project employment office to which application was sent. Requests should include the individual's full name, social security number, date of birth, and approximate date of application.

RECORD ACCESS PROCEDURES:

Individuals wishing to gain access to information on them in this system of records should contact the Chief, Employment Branch, Tennessee Valley Authority, Knoxville, Tennessee 37902, or the area or project employment office to which the application was sent. Access will not be granted to investigatory material compiled solely for the purpose of determining suitability, eligibility, or qualifications for Federal civilian employment, Federal contracts, or access to classified information, to the extent that the disclosure of such material would reveal the identity of a source who furnished information to the Government under an express promise that the identity of the source would be held in confidence, or prior to September 27, 1975, under an implied promise that the identity of the source would be held in confidence.

Access will not be granted to testing or examination material used solely to determine individual qualifications for appointment or promotion in the Federal Service the disclosure of which would compromise the objectivity or fairness of the testing or examination process.

CONTESTING RECORD PROCEDURES:

Individuals desiring to contest or amend information about them maintained in this system should direct their request to Chief, Employment Branch, Tennessee Valley Authority, Knoxville, Tennessee 37902.

RECORD SOURCE CATEGORIES:

The individual on whom the record is maintained; educational institutions, employers, and other references; state employment services.

SYSTEMS EXEMPTED FROM CERTAIN PROVISIONS OF THE ACT:

This system is exempt from subsections (d); (e)(4)(H); and (f) (2), (3), and (4) of 5 U.S.C. 552a (section 3 of the Privacy Act of 1974) to the extent that disclosure of material would reveal the identity of a source who furnished information to the Government under an express promise that the identity of the source would be held in confidence, or prior to September 27, 1975, under an implied promise that the identity of the source would be held in confidence and to the extent that disclosure of testing or examination material would compromise the objectivity or fairness of the testing or examination process. This exemption is pursuant to 5 U.S.C. 552a(k) (5) and (6) and TVA regulations at 18 CFR 1301.24.

TVA-14

SYSTEM NAME:

Grievance Records—TVA.

SYSTEM LOCATION:

Labor Relations Staff, Tennessee Valley Authority, Knoxville, Tennessee 37902.

Duplicate copies are also maintained in the files of the division concerned with the grievance.

CATEGORIES OF INDIVIDUALS COVERED BY THE SYSTEM:

TVA employees and former employees who have formally appealed to TVA for adjustment of their grievances.

CATEGORIES OF RECORDS IN THE SYSTEM:

Evidence and arguments relevant to the matter giving rise to the grievance and related correspondence.

AUTHORITY FOR MAINTENANCE OF THE SYSTEM:

Tennessee Valley Authority Act of 1933, 16 U.S.C. 831–831dd.

ROUTINE USES OF RECORDS MAINTAINED IN THE SYSTEM, INCLUDING CATEGORIES OF USERS AND THE PURPOSES OF SUCH USES:

To respond to a request from a Member of Congress regarding the status of an employee's grievance.

In litigation to which TVA is a party or in which TVA provides legal representation for a party by TVA attorneys or otherwise, for use for any purpose including the presentation of evidence and disclosure in the course of discovery. In all other litigation, to respond to process issued under color of authority of a court of competent jurisdiction.

To the parties or complainants, their representatives, and impartial referees, examiners, administrative judges, or other decisionmakers in proceedings under the TVA grievance adjustment procedures, Equal Employment Opportunity Procedures, Merit Systems Protection Board, or similar procedures.

To request information from a Federal, State, or local agency, or private individual if necessary to obtain information relevant to a TVA decision within the purposes of this system of records.

To refer, where there is an indication of a violation of law, whether criminal, civil, or regulatory in nature, to the appropriate agency, whether Federal, State, or local, charged with the responsibility of investigating and prosecuting such violation or charged with enforcing or implementing the statute, rule, regulations, or order issued pursuant thereto.

To the appropriate agency, whether Federal, State, or local, in connection with its oversight review responsibilities or authorized law enforcement activities.

POLICIES AND PRACTICES FOR STORING, RETRIEVING, ACCESSING, RETAINING, AND DISPOSING OF RECORDS IN THE SYSTEM:

STORAGE:

Records are maintained in file folders.

RETRIEVABILITY:

Records are indexed by name.

SAFEGUARDS:

Access to and use of these records are limited to those persons whose official duties require such access.

RETENTION AND DISPOSAL:

Records are retained indefinitely.

SYSTEM MANAGER(S) AND ADDRESS:

Director of Labor Relations, Tennessee Valley Authority, Knoxville, Tennessee 37902.

NOTIFICATION PROCEDURE:

Individuals who have filed grievances are aware of that fact. Inquiries may, however, be addressed to the system manager named above. Requests should include the individual's full name and employing division.

RECORD ACCESS PROCEDURES:

Individuals who have filed a grievance may gain access to the official copy of the grievance record by contacting the system manager named above.

CONTESTING RECORD PROCEDURES:

The contest, amendment, or correction of a grievance record is permitted during the prosecution of that grievance. However, an individual may address

requests for amendment or correction of items not involved in prosecution of the grievance to the system manager named above.

RECORD SOURCE CATEGORIES:

Individual to whom the record pertains; TVA personnel records; statements and testimony of witnesses and related correspondence.

TVA-15

SYSTEM NAME:

Land Between The Lakes Hunter Records—TVA.

SYSTEM LOCATION:

Land Between The Lakes, Tennessee Valley Authority, Golden Pond, Kentucky 42231; Computing Operations Branch, Tennessee Valley Authority, Chattanooga, Tennessee 37401.

CATEGORIES OF INDIVIDUALS COVERED BY THE SYSTEM:

Individuals to whom hunter use permits are issued and those who apply for participation in managed hunts at Land Between The Lakes.

CATEGORIES OF RECORDS IN THE SYSTEM:

Personal identifying information, State hunting license(s) number(s), and information related to the hunts.

AUTHORITY FOR MAINTENANCE OF THE SYSTEM:

Tennessee Valley Authority Act of 1933, 16 U.S.C. 831–831dd; Executive Order 6161.

ROUTINE USES OF RECORDS MAINTAINED IN THE SYSTEM, INCLUDING CATEGORIES OF USERS AND THE PURPOSES OF SUCH USES:

To respond to a request from a Member of Congress regarding the status of an applicant.

To request information from a Federal, State, or local agency maintaining civil, criminal, or other relevant enforcement information or other pertinent information, such as licenses, or to request information from a private individual to the extent necessary to obtain information relevant to a TVA decision concerning the issuance of a permit to hunt or any other privilege.

To provide hunt information to State agencies concerned with wildlife management practices.

To refer, where there is an indication of a violation or potential violation of law, whether criminal, civil, or regulatory in nature, to the appropriate agency whether Federal, State, or local, charged with the responsibility of investigating and prosecuting such violation or charged with enforcing or implementing the statute, rule, regulation, or order issued pursuant thereto.

In litigation to which TVA is a party or in which TVA provides legal representation for a party by TVA attorneys or otherwise, for use for any purpose including the presentation of evidence and disclosure in the course of discovery. In all other litigation, to respond to process issued under color of authority of a court of competent jurisdiction.

To the appropriate agency, whether Federal, State, or local, in connection with its oversight review responsibilities or authorized law enforcement activities.

To provide mailing lists to organizations or contractors cooperating with Land Between The Lakes in activities or events for the purpose of publicizing those activities or events.

To provide mailing lists to an independent Land Between The Lakes support organization for the purpose of soliciting members for the organization.

POLICIES AND PRACTICES FOR STORING, RETRIEVING, ACCESSING, RETAINING, AND DISPOSING OF RECORDS IN THE SYSTEM:

STORAGE:

Records are maintained on automated data storage devices, card files, and computer printouts.

RETRIEVABILITY:

Records are indexed by name; automated files may be retrieved by any key data element.

SAFEGUARDS:

Access to and use of these records are limited to those persons whose official duties require such access. Files are kept in secured facilities.

RETENTION AND DISPOSAL:

Applications for managed hunts are maintained for one year; carbon copies of hunter use permits are maintained two years; and automated records on those permits are maintained five years. Other information may be retained indefinitely.

SYSTEM MANAGER(S) AND ADDRESS:

Director of Land Between The Lakes, Tennessee Valley Authority, Golden Pond, Kentucky 42231.

NOTIFICATION PROCEDURE:

Individuals wishing to know whether information about them is maintained in this system of records should address their inquiries to the Director of Land Between The Lakes, Tennessee Valley Authority, Golden Pond, Kentucky 42231. Requests should include the name as listed on the application or hunter use permit or the hunter use permit number.

RECORD ACCESS PROCEDURES:

All information maintained in this system of records has normally been supplied by the subject individual. However, requests for access may be directed to the Director of Land Between The Lakes, Tennessee Valley Authority, Golden Pond, Kentucky 42231.

CONTESTING RECORD PROCEDURES:

Individuals desiring to contest or amend information about them maintained in this system should direct their request to the Director of Land Between The Lakes, Tennessee Valley Authority, Golden Pond, Kentucky 42231.

RECORD SOURCE CATEGORIES:

Individual on whom the record is maintained.

TVA-16

SYSTEM NAME:

Land Between The Lakes Register of Law Violations—TVA.

SYSTEM LOCATION:

Land Between The Lakes, Tennessee Valley Authority, Patrol Office, Golden Pond, Kentucky 42231.

CATEGORIES OF INDIVIDUALS COVERED BY THE SYSTEM:

Persons cited or arrested for violation of State or Federal law at Land Between The Lakes.

CATEGORIES OF RECORDS IN THE SYSTEM:

Personal identifying information and information related to the investigation and disposition of the violation.

AUTHORITY FOR MAINTENANCE OF THE SYSTEM:

Tennessee Valley Authority Act of 1933, 16 U.S.C. 831–831dd; 18 U.S.C. 7, 13; Kentucky Revised Statutes 150, Chapter 43, Kentucky Act 1974; Tennessee Public Acts 1972, Chapter 552.

ROUTINE USES OF RECORDS MAINTAINED IN THE SYSTEM, INCLUDING CATEGORIES OF USERS AND THE PURPOSES OF SUCH USES:

To refer, where there is an indication of a violation or potential violation of law, whether criminal, civil, or regulatory in nature, to the appropriate agency, whether Federal, State, or local, charged with the responsibility of investigating and prosecuting such violation or charged with enforcing or implementing the statute, rule, regulation, or order issued pursuant thereto.

In litigation to which TVA is a party or in which TVA provides legal representation for a party by TVA

attorneys or otherwise, for use for any purpose including the presentation of evidence and disclosure in the course of discovery. In all other litigation, to respond to process issued under color of authority of a court of competent jurisdiction.

To the appropriate agency, whether Federal, State, or local, in connection with its oversight review responsibilities or authorized law enforcement activities.

POLICIES AND PRACTICES FOR STORING, RETRIEVING, ACCESSING, RETAINING, AND DISPOSING OF RECORDS IN THE SYSTEM:

STORAGE:

Records are maintained on cards.

RETRIEVABILITY:

Records are indexed by name.

SAFEGUARDS:

Access to and use of these records are limited to those persons whose official duties require such access. All filing systems are locked when unattended.

RETENTION AND DISPOSAL:

Records are kept indefinitely.

SYSTEM MANAGER(S) AND ADDRESS:

Director of Land Between The Lakes, Tennessee Valley Authority, Golden Pond, Kentucky 42231.

NOTIFICATION PROCEDURE:

This system of records had been exempted from this provision pursuant to 5 U.S.C. 552a(j)(2) and TVA regulations at 18 CFR 1301.23.

RECORD ACCESS PROCEDURES:

This system of records had been exempted from this provision pursuant to 5 U.S.C. 552a(j)(2) and TVA regulations at 18 CFR 1301.23.

CONTESTING RECORD PROCEDURES:

This system of records has been exempted from this provision pursuant to 5 U.S.C. 552a(j)(2) and TVA regulations at 18 CFR 1301.23.

RECORD SOURCE CATEGORIES:

This system of records has been exempted from this provision pursuant to 5 U.S.C. 552a(j)(2) and TVA regulations at 18 CFR 1301.23.

SYSTEMS EXEMPTED FROM CERTAIN PROVISIONS OF THE ACT:

This system is exempt from subsections (c)(3), (4); (d); (e) (1), (2), (3), (4)(G), (4)(H), (4)(I), (5); (f); (g); and (h) of 5 U.S.C. 552a (Section 3 of the Privacy Act of 1974) pursuant to 5 U.S.C. 552a(j)(2) and TVA regulations at 18 CFR 1301.23.

TVA-18

SYSTEM NAME:

Employee Supplementary Vacancy Announcement Records—TVA.

SYSTEM LOCATION:

Office and division personnel offices in Knoxville and Chattanooga, Tennessee, and Muscle Shoals, Alabama; may also be maintained in other offices that issue or receive responses to supplementary vacancy announcements.

CATEGORIES OF INDIVIDUALS COVERED BY THE SYSTEM:

Employees applying for placement in positions covered by the supplementary vacancy announcement procedure.

CATEGORIES OF RECORDS IN THE SYSTEM:

Applications and supporting material submitted by employee.

AUTHORITY FOR MAINTENANCE OF THE SYSTEM:

Executive Order 11478; Equal Employment Opportunity Act of 1972, Pub. L. 92-261, 86 Stat. 103; 5 U.S.C. 3101; Tennessee Valley Authority Act of 1933, 16 U.S.C. 831-831dd.

ROUTINE USES OF RECORDS MAINTAINED IN THE SYSTEM, INCLUDING CATEGORIES OF USERS AND THE PURPOSES OF SUCH USES:

To the parties or complainants, their representatives, and impartial referees, examiners, administrative judges, or other decisionmakers in proceedings under the TVA grievance adjustment procedures, Equal Employment Opportunity procedures, Merit Systems Protection Board, or similar procedures.

In litigation to which TVA is a party or in which TVA provides legal representation for a party by TVA attorneys or otherwise, for use for any purpose including the presentation of evidence and disclosure in the course of discovery. In all other litigation, to respond to process issued under color of authority of a court of competent jurisdiction.

POLICIES AND PRACTICES FOR STORING, RETRIEVING, ACCESSING, RETAINING, AND DISPOSING OF RECORDS IN THE SYSTEM:

STORAGE:

Records are maintained in file folders.

RETRIEVABILITY:

Records are indexed by name.

SAFEGUARDS:

Access to and use of these records are limited to persons whose official duties require such access. Records are maintained in secured facilities.

RETENTION AND DISPOSAL:

Records are disposed of in accordance with established TVA records retention schedules.

SYSTEM MANAGER(S) AND ADDRESS:

Director of Personnel, Tennessee Valley Authority, Knoxville, Tennessee 37902.

NOTIFICATION PROCEDURE:

Individuals upon whom records are maintained in this system are aware of that fact through filing an application. However, inquiries may be addressed to the name and address to which application was submitted. Requests should include the individual's full name, position applied for, and location of job.

RECORD ACCESS PROCEDURES:

Individuals upon whom records are maintained in this system have supplied all information in this system. However, requests for access may be addressed to the name and address to which application was submitted.

CONTESTING RECORD PROCEDURES:

Individuals desiring to contest or amend information about them maintained in this system should direct their request to the name and address to which application was submitted.

RECORD SOURCE CATEGORIES:

The individual upon whom the record is maintained.

TVA-19

SYSTEM NAME:

Consultant and Personal Service Contractor Records—TVA.

SYSTEM LOCATION:

Division of Personnel, Employment Branch and Information Management Systems Branch, Tennessee Valley Authority, Knoxville, Tennessee 37902; Computing Operations Branch, Tennessee Valley Authority, Chattanooga, Tennessee 37401.

Payment records are located at these TVA Division of the Comptroller offices: Knoxville, Tennessee 37902; Chattanooga, Tennessee 37401; Muscle Shoals, Alabama 35660.

Records related to personal service contractors employed under the Comprehensive Employment and Training Act of 1973, Pub. L. 93-203, are located at TVA, Office of Natural Resources and Economic Development, Knoxville, Tennessee 37902, and Land Between The Lakes, Golden Pond, Kentucky 42231.

Records on individuals who provide services under a TVA contract with an organization may be kept in the files of the office or division that receives the services.

Duplicate copies of some records may be kept in the files of the employing division.

CATEGORIES OF INDIVIDUALS COVERED BY THE SYSTEM:

Individuals who provide services to TVA; participants in TVA-State employment programs; individuals who provide services under a TVA contract with an organization; and participants in other special employment programs.

CATEGORIES OF RECORDS IN THE SYSTEM:

The Division of Personnel maintains contracts, records of the qualifications, performance, and evaluation of the contractor, and related correspondence. For public service employment program participants, the Division of Personnel maintains information related to job placement such as test scores, interest inventories, and supervisor's evaluations. Payment information is maintained by the Division of the Comptroller.

AUTHORITY FOR MAINTENANCE OF THE SYSTEM:

Tennessee Valley Authority Act of 1933, 16 U.S.C. 831–831dd; Comprehensive Employment and Training Act, Pub. L. 93–203, 87 Stat. 839; Executive Order 11222; Executive Order 10450; Executive Order 10577; provisions of 5 U.S.C. applicable to employment with TVA; Internal Revenue Code.

ROUTINE USES OF RECORDS MAINTAINED IN THE SYSTEM, INCLUDING CATEGORIES OF USERS AND THE PURPOSES OF SUCH USES:

To transmit reports as requested to the Office of Personnel Management, pursuant to 5 U.S.C. 3323, Executive Orders 10577 and 10450, and other laws.

To report earnings information to the Internal Revenue Service and the Social Security Administration.

To respond to a request from a Member of Congress regarding the status of a contractor or consultant.

To refer, where there is an indication of a violation or potential violation of law, whether criminal, civil, or regulatory in nature, to the appropriate agency, whether Federal, State, or local, charged with the responsibility of investigating and prosecuting such violation or charged with enforcing or implementing the statute, rule, regulations, or order issued pursuant thereto.

To request information from a Federal, State, or local agency, maintaining civil, criminal, or other relevant enforcement information or other pertinent information and to request information from private individuals if necessary to obtain information relevant to a TVA decision concerning the hiring, retention, or promotion of an employee, the issuance of a security clearance, or other decision within the purposes of this system of records.

To transmit to the appropriate State contracting agency reports of hours worked by participants in the public service employment program, and to request reimbursement.

To provide information to a Federal agency, in response to its request, in connection with the hiring or retention of an employee, the letting of a contract, or issuance of a license, grant, or other benefit by the requesting agency to the extent that the information is relevant and necessary to the requesting agency's decision on that matter.

To provide the following information to a prospective employer of a TVA or former TVA consultant or personal service contractor: Job descriptions, dates of employment, and reason for separation.

To the parties or complainants, their representatives, and impartial referees, examiners, administrative judges, or other decisionmakers in proceedings under the TVA grievance adjustment procedures, Equal Employment Opportunity procedures, Merit Systems Protection Board, or similar procedures.

In litigation to which TVA is a party or in which TVA provides legal representation for a party by TVA attorneys or otherwise, for use for any purpose including the presentation of evidence and disclosure in the course of discovery. In all other litigation, to respond to process issued under color of authority of a court of competent jurisdiction.

To the appropriate agency, whether Federal, State, or local, in connection with its oversight review responsibilities or authorized law enforcement activities.

POLICIES AND PRACTICES FOR STORING, RETRIEVING, ACCESSING, RETAINING, AND DISPOSING OF RECORDS IN THE SYSTEM:

STORAGE:

Records are maintained in file folders and on automated data storage devices.

RETRIEVABILITY:

Records are indexed by name, social security number, or voucher number.

SAFEGUARDS:

Access to and use of these records are limited to persons whose official duties require such access. All filing systems are locked when unattended.

RETENTION AND DISPOSAL:

Records are disposed of periodically as appropriate.

SYSTEM MANAGER(S) AND ADDRESS:

Director of Personnel, Tennessee Valley Authority, Knoxville, Tennessee 37902.

NOTIFICATION PROCEDURE:

Individuals wishing to know if records on them are maintained in the system should address inquiries to the system manager named above. Requests shall include the individual's full name, employing or contracting division, and whether the individual was a participant in the public service employment program. Social security numbers are not required but may expedite TVA's response.

RECORD ACCESS PROCEDURES:

Individuals wishing to gain access to information on them in this system of records should contact the system manager named above. Access will not be granted to investigatory material compiled solely for the purpose of determining suitability, eligibility, or qualifications for Federal civilian employment, Federal contracts, or access to classified information, to the extent that the disclosure of such material would reveal the identity of a source who furnished information to the Government under an express promise that the identity of the source would be held in confidence, or prior to September 27, 1975, under an implied promise that the identity of the source would be held in confidence. Access will not be granted to testing or examination material used solely to determine individual qualifications for appointment or promotion in the Federal Service, the disclosure of which would compromise the objectivity or fairness of the testing or examination process.

CONTESTING RECORD PROCEDURES:

Individuals desiring to contest or amend information about them maintained in this system should direct their request to the system manager named above.

RECORD SOURCE CATEGORIES:

Individual to whom the record pertains; educational institutions, former employers, and other reference sources; State employment services; supervisors and other TVA personnel or personnel records; medical officers; other Federal agencies.

In addition to the above sources, security/suitability investigatory files contain information from law enforcement agencies.

SYSTEMS EXEMPTED FROM CERTAIN PROVISIONS OF THE ACT:

This system is exempt from subsections (d); (e)(4)(H); (f) (2), (3), and (4) of 5 U.S.C. 552a (section 3 of the Privacy Act of 1974) to the extent that disclosure of material would reveal the identity of a source who furnished information to the Government under an express promise that the identity of the source would be held in confidence, or prior to September 27, 1975, under an implied promise that the identity of the source would be held in confidence, and to the extent that disclosure of testing or examination material would compromise the objectivity or fairness of the testing or examination process. This exemption is pursuant to 5 U.S.C. 552a(k)(5) and (6) and TVA regulations at 18 CFR 1301.24.

TVA-21

SYSTEM NAME:

Nuclear Quality Assurance Personnel Records—TVA.

SYSTEM LOCATION:

Division of Nuclear Quality Assurance, Tennessee Valley Authority, Chattanooga, Tennessee 37402.

Copies of records for Quality Assurance Evaluators are maintained in the office of the Director of Nuclear Quality Assurance in Chattanooga.

CATEGORIES OF INDIVIDUALS COVERED BY THE SYSTEM:

Employees or former employees involved in quality assurance work.

CATEGORIES OF RECORDS IN THE SYSTEM:

Information related to the qualifications of employees.

AUTHORITY FOR MAINTENANCE OF THE SYSTEM:

Energy Reorganization Act of 1974, Pub. L. 93–438, 88 Stat. 1233 as implemented at Nuclear Regulatory Commission Regulatory Guide 1.58.

Tennessee Valley Authority Act of 1933, 16 U.S.C. 831–831dd.

ROUTINE USES OF RECORDS MAINTAINED IN THE SYSTEM, INCLUDING CATEGORIES OF USERS AND THE PURPOSES OF SUCH USES:

To the Nuclear Regulatory Commission or its authorized representatives for inspection or evaluation of TVA Quality Assurance procedures.

To respond to a request from a Member of Congress regarding the status of an employee.

To refer, where there is an indication of a violation or potential violation of law, whether criminal, civil, or regulatory in nature, to the appropriate agency, whether Federal, State, or local, charged with the responsibility of investigation and prosecuting such violation or charged with enforcing or implementing the statute, rule, regulation, or order issued pursuant thereto.

To request information from a Federal, State, or local agency maintaining civil, criminal, or other relevant enforcement information or other pertinent information and to request information from private individuals if necessary to obtain information relevant to a TVA decision concerning the hiring, retention, or promotion of an employee, the issuance of a security clearance, or other decision within the purposes of this system of records.

To provide information to a Federal agency, in response to its request, in connection with the hiring or retention of an employee, the letting of a contract, or issuance of a license, grant, or other benefit by the requesting agency to the extent that the information is relevant and necessary to the requesting agency's decision on that matter.

In litigation to which TVA is a party or in which TVA provides legal representation for a party by TVA attorneys or otherwise, for use for any purpose including the presentation of evidence and disclosure in the course of discovery. In all other litigation, to respond to process issued under color of authority of a court of competent jurisdiction.

To the parties or complainants, their representatives, and impartial referees, examiners, administrative judges, or other decisionmakers in proceedings under the TVA grievance adjustment procedures, Equal Employment Opportunity procedures, Merit Systems Protection Board, or similar procedures.

To the appropriate agency, whether Federal, State, or local, in connection with its oversight review responsibilities or authorized law enforcement activities.

POLICIES AND PRACTICES FOR STORING, RETRIEVING, ACCESSING, RETAINING, AND DISPOSING OF RECORDS IN THE SYSTEM:

STORAGE:

Records are maintained in file folders.

RETRIEVABILITY:

Records are indexed by name.

SAFEGUARDS:

Access to and use of these records are limited to those persons whose official duties require such access. All filing systems are locked when unattended.

RETENTION AND DISPOSAL:

These records are retained indefinitely.

SYSTEM MANAGER(S) AND ADDRESS:

Director of Nuclear Quality Assurance, Tennessee Valley Authority, Chattanooga, Tennessee 37402.

NOTIFICATION PROCEDURE:

Individuals wishing to know whether information about them is maintained in this system of records should address inquiries to the system manager named above. Inquiries should include the individual's full name and employing organization.

RECORD ACCESS PROCEDURES:

Individuals who desire access to information about them in this system of records should contact the system manager named above.

CONTESTING RECORD PROCEDURES:

Individuals desiring to contest or amend information about them maintained in this system should direct their request to the system manager named above.

RECORD SOURCE CATEGORIES:

The individual on whom the record is maintained; TVA personnel records.

SYSTEMS EXEMPTED FROM CERTAIN PROVISIONS OF THE ACT:

This system of records is exempt from subsection (d); (e)(4)(H); (f) (2), (3), and (4) of 5 U.S.C. 552a (section 3 of the Privacy Act of 1974) to the extent that disclosure of material would reveal the identity of a source who furnished information to the Government under an express promise that the identity of the source would be held in confidence, or prior to September 27, 1975, under an implied promise that the identity of the source would be held in confidence. The exemption is pursuant to 5 U.S.C. 552a(k)(5) and TVA regulations at 18 CFR 1301.24.

TVA-22

SYSTEM NAME:

Questionnaire—Farms in Vicinity of Proposed Nuclear Power Plant—TVA.

SYSTEM LOCATION:

Agricultural Institute, Tennessee Valley Authority, Muscle Shoals, Alabama 35660.

CATEGORIES OF INDIVIDUALS COVERED BY THE SYSTEM:

Individuals from whom TVA purchases land for proposed nuclear plant, individuals having vegetable gardens, irrigated land, dairy cows, and milk goats within two-mile radius of proposed plant site.

CATEGORIES OF RECORDS IN THE SYSTEM:

Personal identifying information and information related to agriculture, milk consumption, water resources, and farm product value.

This information is not used for making determinations about the rights, benefits, or privileges of any individual.

AUTHORITY FOR MAINTENANCE OF THE SYSTEM:

Tennessee Valley Authority Act of 1933, 16 U.S.C. 831–831dd; National Environmental Policy Act, Pub. L. 91–190, 83 Stat. 852; Energy Reorganization Act of 1974, Pub. L. 93–438, 88 Stat. 1233.

ROUTINE USES OF RECORDS MAINTAINED IN THE SYSTEM, INCLUDING CATEGORIES OF USERS AND THE PURPOSES OF SUCH USES:

Information in this systems of records is used in developing environmental evaluations and impact statements. Certain relevant but nonsensitive information may be disclosed in these statements. Information may also be used:

In administrative and licensing proceedings including the presentation of evidence and disclosure to opposing counsel in the course of discovery.

To disclose to any agency of the Federal Government having oversight or review authority with regard to TVA activities.

In litigation to which TVA is a party or in which TVA provides legal representation for a party by TVA attorneys or otherwise, for use for any purpose including the presentation of evidence and disclosure in the course of discovery. In all other litigation, to respond to process issued under color of authority of a court of competent jurisdiction.

POLICIES AND PRACTICES FOR STORING, RETRIEVING, ACCESSING, RETAINING, AND DISPOSING OF RECORDS IN THE SYSTEM:

STORAGE:

Records are maintained in file folders.

RETRIEVABILITY:

Records are indexed by assigned number and aerial photo number.

SAFEGUARDS:

Access to and use of these records are limited to persons whose official duties require such access. Files are kept in secured facilities.

RETENTION AND DISPOSAL:

Records are maintained indefinitely or for the life of the plant.

SYSTEM MANAGER(S) AND ADDRESS:

Director of Agricultural Institute, Tennessee Valley Authority, Muscle Shoals, Alabama 35660.

NOTIFICATION PROCEDURE:

Individuals on whom information is maintained in this system are aware of that fact through response to the questionnaire. However, inquiries may be addressed to the system manager named above. Requests should include the individual's full name, farm address, and approximate date of survey.

RECORD ACCESS PROCEDURES:

Individuals on whom information is maintained in this system have supplied all such information. However, requests for access may be directed to the system manager named above.

CONTESTING RECORD PROCEDURES:

Individuals desiring to amend information about them maintained in this system should direct their request to the system manager named above.

RECORD SOURCE CATEGORIES:

Individual about whom the record is maintained.

TVA-23

SYSTEM NAME:

Radiation Dosimetry Personnel Monitoring Records—TVA.

SYSTEM LOCATION:

Division of Nuclear Services, Radiological Health Branch, Tennessee Valley Authority, Chattanooga, Tennessee 37401.

CATEGORIES OF INDIVIDUALS COVERED BY THE SYSTEM:

Employees, former employees, and visitors who might be exposed or are exposed to radiation while in TVA installations.

CATEGORIES OF RECORDS IN THE SYSTEM:

Information on the magnitude of exposure at TVA installations, exposure prior to employment.

AUTHORITY FOR MAINTENANCE OF THE SYSTEM:

Energy Reorganization Act of 1974, Pub. L. 93–438, 88 Stat. 1233; 10 CFR Parts 19, 20; Tennessee Valley Authority Act of 1933, 16 U.S.C. 831–831dd.

ROUTINE USES OF RECORDS MAINTAINED IN THE SYSTEM, INCLUDING CATEGORIES OF USERS AND THE PURPOSES OF SUCH USES:

To the Nuclear Regulatory Commission for its use in evaluating TVA hazard control measures.

In litigation to which TVA is a party or in which TVA provides legal representation for a party by TVA attorneys or otherwise, for use for any purpose including the presentation of evidence and disclosure in the course of discovery. In all other litigation, to respond to process issued under color of authority of a court of competent jurisdiction.

To the parties or complainants, their representatives, and impartial referees, examiners, administrative judges, or other decisionmakers in proceedings under the TVA grievance adjustment procedures, Equal Employment Opportunity procedures, Merit Systems Protection Board, or similar procedures.

To the appropriate agency, whether Federal, State, or local, in connection with its oversight review responsibilities or authorized law enforcement activities.

POLICIES AND PRACTICES FOR STORING, RETRIEVING, ACCESSING, RETAINING, AND DISPOSING OF RECORDS IN THE SYSTEM:

STORAGE:

Records are maintained in file folders and on automated data storage devices.

RETRIEVABILITY:

Records are indexed by name.

SAFEGUARDS:

Access to and use of these records are limited to persons whose official duties require such access. Files are kept in secured facilities.

RETENTION AND DISPOSAL:

These records are retained permanently.

SYSTEM MANAGER(S) AND ADDRESS:

Chief of Radiological Health Branch, Tennessee Valley Authority, Chattanooga, Tennessee 37401.

NOTIFICATION PROCEDURE:

Individuals wishing to know whether information about them is maintained in this system of records should address inquiries to the system manager named above. Requests should include the individual's full name and whether or not a TVA employee.

RECORD ACCESS PROCEDURES:

Individuals who desire access to information about them in this system of records should contact the system manager named above.

CONTESTING RECORD PROCEDURES:

Individuals desiring to contest or amend information about them maintained in this system should direct their request to the system manager named above.

RECORD SOURCE CATEGORIES:

Individuals to whom the record pertains; TVA personnel conducting radiation monitoring programs.

TVA-24

SYSTEM NAME:

Reforestation, Erosion Control, and Plantation Case History Records—TVA.

SYSTEM LOCATION:

Record Staging Area, Tennessee Valley Authority, Muscle Shoals, Alabama 35660, pending official transfer to Federal Archives, East Point, Georgia.

CATEGORIES OF INDIVIDUALS COVERED BY THE SYSTEM:

Private landowners involved in early TVA-Civilian Conservation Corps tree planting programs.

CATEGORIES OF RECORDS IN THE SYSTEM:

Forest acreage, performance, and yield information.

AUTHORITY FOR MAINTENANCE OF THE SYSTEM:

Tennessee Valley Authority Act of 1933, 16 U.S.C. 831–831dd; Executive Order 6161.

ROUTINE USES OF RECORDS MAINTAINED IN THE SYSTEM, INCLUDING CATEGORIES OF USERS AND THE PURPOSES OF SUCH USES:

To the appropriate agency, whether Federal, State, or local in connection with its oversight review responsibilities or authorized law enforcement activities.

POLICIES AND PRACTICES FOR STORING, RETRIEVING, ACCESSING, RETAINING, AND DISPOSING OF RECORDS IN THE SYSTEM:

STORAGE:

Records are maintained on file cards.

RETRIEVABILITY:

Records are indexed by State, county, and name.

SAFEGUARDS:

Access to and use of these records are limited to those persons whose official duties require such access. Building is locked when unattended.

RETENTION AND DISPOSAL:

This information is kept permanently for archival purposes.

SYSTEM MANAGER(S) AND ADDRESS:

Manager of Natural Resources and Economic Development, Tennessee Valley Authority, Knoxville, Tennessee 37902.

NOTIFICATION PROCEDURE:

Individuals on whom records are maintained are aware of that fact through participation in the program. However, inquiries may be addressed to the system manager named above. Individuals should provide their full name, State, and county of residence.

RECORD ACCESS PROCEDURES:

Individuals who desire access to information about them in this system of records should address their inquiries to the system manager named above.

CONTESTING RECORD PROCEDURES:

Individuals desiring to contest or amend information about them maintained in this system should direct their request to the system manager named above.

RECORD SOURCE CATEGORIES:

The individual to whom the record pertains; State forestry personnel; TVA surveys.

TVA-26

SYSTEM NAME:

Retirement System Records—TVA.

SYSTEM LOCATION:

Retirement Services Branch, Tennessee Valley Authority, Knoxville, Tennessee 37902.

CATEGORIES OF INDIVIDUALS COVERED BY THE SYSTEM:

Active, retired, and former members of the TVA Retirement System; TVA employees and former employees who are members of the Civil Service Retirement System; designated beneficiaries.

CATEGORIES OF RECORDS IN THE SYSTEM:

Personal identifying information; retirement, benefit, and investment information; related correspondence; and legal documents.

AUTHORITY FOR MAINTENANCE OF THE SYSTEM:

Tennessee Valley Authority Act of 1933, 16 U.S.C. 831–831dd; Internal Revenue Code.

ROUTINE USES OF RECORDS MAINTAINED IN THE SYSTEM, INCLUDING CATEGORIES OF USERS AND THE PURPOSES OF SUCH USES:

To report earnings to the Internal Revenue Service.

To supply information on coverage to Blue Cross-Blue Shield of Tennessee, Provident Life Insurance Company, and other insurance carriers.

To disclose information to actuarial firms for valuation and projecting benefits.

To disclose information to the Medical Board of the TVA Retirement System for determinations related to disability retirement.

To certify insurance status to the Office of Personnel Management and the Office of Federal Employees' Group Life Insurance.

To respond to a request from a Member of Congress regarding the status of a system member.

To request information from a Federal, State, or local agency, maintaining civil, criminal, or other relevant enforcement information or other pertinent information and to request information from private individuals if necessary to obtain information relevant to a TVA decision within the purpose of this system of records.

To refer, where there is an indication of a violation or potential violation of law, whether criminal, civil, or regulatory in nature, to the appropriate agency, whether Federal, State, or local, charged with the responsibility of investigating and prosecuting such violation or charged with enforcing or implementing the statute, rule, regulation, or order issued pursuant thereto.

To provide information to a Federal agency, in response to its request, in connection with the issuance of any benefit by the requesting agency to the extent that the information is relevant and necessary to the requesting agency's decision on that matter.

In litigation to which TVA is a party or in which TVA provides legal representation for a party by TVA attorneys or otherwise, for use for any purpose including the presentation of evidence and disclosure in the course of discovery. In all other litigation, to respond to process issued under color of authority of a court of competent jurisdiction.

To provide the TVA Retirees Association, retired members of the TVA Retirement System, and retired former TVA employees who are covered by the Civil Service Retirement System, with names and mailing addresses of other retired members and retired employees.

To the appropriate agency, whether Federal, State, or local, in connection with its oversight review responsibilities or authorized law enforcement activities.

POLICIES AND PRACTICES FOR STORING, RETRIEVING, ACCESSING, RETAINING, AND DISPOSING OF RECORDS IN THE SYSTEM:

STORAGE:

Records are maintained on automated data storage devices, ledgers, and in file folders.

RETRIEVABILITY:

Records are indexed by name, sex, date of birth, address, social security number, active member number, retirement number, or salary.

SAFEGUARDS:

Records in this system are maintained in locked files or safes, in secure facilities. Access to and use of these records are limited to those persons whose official duties require such access.

RETENTION AND DISPOSAL:

Retention periods vary from two years to permanent depending on the nature of the information and the medium in which they are stored.

SYSTEM MANAGER(S) AND ADDRESS:

Chief, Retirement Services Branch, Division of the Comptroller, Tennessee Valley Authority, Knoxville, Tennessee 37902.

NOTIFICATION PROCEDURE:

Individuals wishing to know whether information about them is maintained in this system of records should address inquiries to the system manager named above. Inquiries should include the individual's full name and date of birth. The social security number is not required but will expedite TVA's response.

RECORD ACCESS PROCEDURES:

Individuals who desire access to information about them in this system of records should contact the system manager named above.

CONTESTING RECORD PROCEDURES:

Individuals wishing to correct or amend information maintained on them in this system should address inquiries to the system manager named above.

RECORD SOURCE CATEGORIES:

The individual on whom the record is maintained; TVA personnel and payroll records.

TVA-27

SYSTEM NAME:

Test Demonstration Farm Records—TVA.

SYSTEM LOCATION:

Division of Technology Development, National Programs Branch, Tennessee Valley Authority, Muscle Shoals, Alabama 35660.

CATEGORIES OF INDIVIDUALS COVERED BY THE SYSTEM:

Farmers located outside the Tennessee Valley participating in TVA demonstration farm programs.

CATEGORIES OF RECORDS IN THE SYSTEM:

Agricultural, income, investment, labor, and food data.

AUTHORITY FOR MAINTENANCE OF THE SYSTEM:

Tennessee Valley Authority Act of 1933, 16 U.S.C. 831–831dd.

ROUTINE USES OF RECORDS MAINTAINED IN THE SYSTEM, INCLUDING CATEGORIES OF USERS AND THE PURPOSES OF SUCH USES:

To request information from a Government agency or private individual where such information may be relevant to providing additional assistance under this program.

To disclose to State extension services and the U.S. Department of Agriculture for use in program evaluation and in assistance to program participants.

To the appropriate agency, whether Federal, State, or local, in connection with its oversight review responsibilities or authorized law enforcement activities.

POLICIES AND PRACTICES FOR STORING, RETRIEVING, ACCESSING, RETAINING, AND DISPOSING OF RECORDS IN THE SYSTEM:

STORAGE:

Records are maintained in file folders and on automated data storage devices, cards, and printouts.

RETRIEVABILITY:

Records are indexed by an assigned number.

SAFEGUARDS:

Access to and use of these records are limited to persons whose official duties require such access. Files are kept in secured facilities and locked when unattended.

RETENTION AND DISPOSAL:

Records are retained indefinitely.

SYSTEM MANAGER(S) AND ADDRESS:

Director of Technology Development, Tennessee Valley Authority, Muscle Shoals, Alabama 35660.

NOTIFICATION PROCEDURE:

Individuals on whom information is maintained are aware of that fact through participation in the program. However, inquiries may be addressed to the system manager. Individuals should provide their full name, county, and State in which individual participated in a TVA farm demonstration program.

RECORD ACCESS PROCEDURES:

Individuals seeking access to information about them in this system of records should contact the system manager named above.

CONTESTING RECORD PROCEDURES:

Individuals desiring to contest or amend information about them maintained in this system should direct their request to the system manager named above.

RECORD SOURCE CATEGORIES:

Information in this system is solicited from the individual to whom the record pertains by State extension services and universities.

TVA-28

SYSTEM NAME:

Woodland Resource Analysis Program Input Data—TVA.

SYSTEM LOCATION:

Office of Natural Resources and Economic Development, Tennessee Valley Authority, Knoxville, Tennessee 37902; Computing Services Branch, Tennessee Valley Authority, Chattanooga, Tennessee 37401.

CATEGORIES OF INDIVIDUALS COVERED BY THE SYSTEM:

Private landowners, agencies, and corporations owning woodlands in Valley region and participating in TVA woodland resource management demonstration program.

CATEGORIES OF RECORDS IN THE SYSTEM:

Personal, financial, and land resource information pertinent to woodland resource planning. The information in this system is not used by TVA in the determination about the rights, benefits, or privileges of the individual.

AUTHORITY FOR MAINTENANCE OF THE SYSTEM:

Tennessee Valley Authority Act of 1933, 16 U.S.C. 831–831dd; Executive Order 6161.

ROUTINE USES OF RECORDS MAINTAINED IN THE SYSTEM, INCLUDING CATEGORIES OF USERS AND THE PURPOSES OF SUCH USES:

Evaluated information is supplied to State forestry personnel for use in assisting the landowner.

To the appropriate agency, whether Federal, State, or local, in connection with its oversight review responsibilities or authorized law enforcement activities.

BEST COPY AVAILABLE

POLICIES AND PRACTICES FOR STORING, RETRIEVING, ACCESSING, RETAINING, AND DISPOSING OF RECORDS IN THE SYSTEM:

STORAGE:

Records are maintained on automated data storage devices, hard-copy printouts, and in file folders.

RETRIEVABILITY:

Records are indexed by computer run number by State.

SAFEGUARDS:

Access to and use of these records are limited to those persons whose official duties require such access. Files are kept in secured facilities.

RETENTION AND DISPOSAL:

Records are retained for 25 years.

SYSTEM MANAGER(S) AND ADDRESS:

Manager of the Office of Natural Resources and Economic Development, Tennessee Valley Authority, Knoxville, Tennessee 37902.

NOTIFICATION PROCEDURE:

Individuals on whom information is maintained are aware of that fact through participation in the program. However, inquiries may be addressed to the system manager. Individuals should provide their full name, State of residence, and the calendar year(s) of participation in the program.

RECORD ACCESS PROCEDURES:

Individuals on whom records are maintained have been provided copies of all information in that record. However, requests for access may be directed to the system manager named above.

CONTESTING RECORD PROCEDURES:

Individuals desiring to contest or amend information about them maintained in this system should direct their request to the system manager named above.

RECORD SOURCE CATEGORIES:

The individual to whom the record pertains provides the information to State forestry personnel. The information is evaluated by TVA and returned to the State forestry personnel who utilize the information in evaluated form to assist the landowner.

TVA-29

SYSTEM NAME:

Electricity Use, Rate, and Service Study Records—TVA.

SYSTEM LOCATION:

Division of Conservation and Energy Management, Tennessee Valley Authority, Chattanooga, Tennessee 37402.

CATEGORIES OF INDIVIDUALS COVERED BY THE SYSTEM:

Individuals residing in households which are participating in electricity use, rate, and service studies including those receiving electricity conservation assistance.

CATEGORIES OF RECORDS IN THE SYSTEM:

Information about an individual's income, employment, family size, characteristics of his dwelling including type of heating and cooling systems and number and kind of appliances, and other characteristics of study participants relevant to patterns of residential electrical use.

AUTHORITY FOR MAINTENANCE OF THE SYSTEM:

Tennessee Valley Authority Act of 1933, 16 U.S.C. 831–831dd.

ROUTINE USES OF RECORDS MAINTAINED IN THE SYSTEM, INCLUDING CATEGORIES OF USERS AND THE PURPOSES OF SUCH USES:

To distributors and contractors assisting TVA in the study.

To the appropriate agency, whether Federal, State, or local, in connection with its oversight review responsibilities or authorized law enforcement activities.

POLICIES AND PRACTICES FOR STORING, RETRIEVING, ACCESSING, RETAINING, AND DISPOSING OF RECORDS IN THE SYSTEM:

STORAGE:

Records are maintained in file folders and on automated data storage devices.

RETRIEVABILITY:

Records are indexed by an identification number assigned to each household.

SAFEGUARDS:

Access to and use of these records are limited to those persons whose official duties require such access. All filing systems are locked when unattended.

RETENTION AND DISPOSAL:

Survey information will be retained until completion of the program and for two years thereafter.

SYSTEM MANAGER(S) AND ADDRESS:

Director of Conservation and Energy Management, Tennessee Valley Authority, Chattanooga, Tennessee 37401.

NOTIFICATION PROCEDURE:

Individuals about whom information is maintained in this system of records are aware of that fact through participation in the program. However, inquiries may be addressed to the system manager named above. Request should include the individual's full name and address.

RECORD ACCESS PROCEDURES:

Requests for access may be directed to the system manager named above.

CONTESTING RECORD PROCEDURES:

Individuals desiring to contest or amend information about them maintained in this system should direct their request to the system manager named above.

RECORD SOURCE CATEGORIES:

The information in this system is solicited from the individual to whom the record pertains.

TVA-30

SYSTEM NAME:

Land Between The Lakes Mailing Lists—TVA.

SYSTEM LOCATION:

Land Between The Lakes, Tennessee Valley Authority, Golden Pond, Kentucky 42231.

CATEGORIES OF INDIVIDUALS COVERED BY THE SYSTEM:

Persons using, visiting, or having an interest in the activities, programs, or facilities of Land Between The Lakes.

CATEGORIES OF RECORDS IN THE SYSTEM:

Personal identifying information, address, and information about their Land Between The Lakes associated interests, activities, or program participation.

AUTHORITY FOR MAINTENANCE OF THE SYSTEM:

Tennessee Valley Authority Act of 1933, 16 U.S.C. 831–831dd; Executive Order No. 6161.

ROUTINE USES OF RECORDS MAINTAINED IN THE SYSTEM, INCLUDING CATEGORIES OF USERS AND THE PURPOSES OF SUCH USES:

To provide mailing lists to organizations or TVA contractors cooperating with Land Between The Lakes in activities or events for the purpose of publicizing those activities or events.

To provide mailing lists to an independent Land Between The Lakes support organization for the purposes of soliciting members for the organization.

POLICIES AND PRACTICES FOR STORING, RETRIEVING, ACCESSING, RETAINING, AND DISPOSING OF RECORDS IN THE SYSTEM:

STORAGE:

Records are maintained on card files, automated data storage devices, and computer printouts.

RETRIEVABILITY:

Records are primarily indexed by name and identification code. They may also be retrieved by reference to interests, organization, or address elements.

SAFEGUARDS:

Access to and use of these records are limited to persons whose official duties require such access. Files are kept in secured facilities. Access facilities are secured through physical, administrative, and system-based safeguards.

RETENTION AND DISPOSAL:

Records are kept for the period of time the individual is to receive mailings.

SYSTEM MANAGER(S) AND ADDRESS:

Director of Land Between The Lakes, Tennessee Valley Authority, Golden Pond, Kentucky 42231.

NOTIFICATION PROCEDURE:

Individuals wishing to know whether information about them is maintained in this system of records should address their inquiries to the Director of Land Between The Lakes, Tennessee Valley Authority, Golden Pond, Kentucky 42231. Request should include the individual's full name and address.

RECORD ACCESS PROCEDURES:

Individuals seeking to gain access to information about them in this system of records should contact the Director of Land Between The Lakes, Tennessee Valley Authority, Golden Pond, Kentucky 42231.

CONTESTING RECORD PROCEDURES:

Individuals desiring to contest or amend information about them maintained in this system should direct their requests to the Director of Land Between The Lakes, Tennessee Valley Authority, Golden Pond, Kentucky 42231.

RECORD SOURCE CATEGORIES:

Individuals on whom records are maintained, organization representatives, and TVA employees.

TVA-31

SYSTEM NAME:

OIG Investigative Records—TVA

SYSTEM LOCATION:

Office of the Inspector General, Tennessee Valley Authority, 400 West Summit Hill Drive, Knoxville, Tennessee 37902. Duplicate copies of certain documents may also be located in the files of other offices and divisions.

CATEGORIES OF INDIVIDUALS COVERED BY THE SYSTEM:

Individuals and entities who are or have been the subjects of investigations by the Office of the Inspector General (OIG) or who provide information in connection with such investigations, including but not limited to: Employees, former employees, current or former contractors and subcontractors and their employees, consultants, and other individuals and entities which have or are seeking to obtain business or other relations with TVA.

CATEGORIES OF RECORDS IN THE SYSTEM:

Information relating to investigations, including information provided by known or anonymous complainants; information provided by the subjects of investigations; information provided by individuals or entities with whom the subjects are associated (e.g., coworkers, business associates, relatives); information provided by Federal, State, or local investigatory, law enforcement, or other Government or non-Government agencies; information provided by witnesses and confidential sources; information from public source materials; information from commercial data bases or information resources; investigative notes; summaries of telephone calls; correspondence; investigative reports or prosecutive referrals; and information about referrals for criminal prosecutions, civil proceedings, and administrative actions taken with respect to the subjects.

AUTHORITY FOR MAINTENANCE OF THE SYSTEM:

Tennessee Valley Authority Act of 1933, 16 U.S.C. 831–831dd; Executive Order 10450; Executive Order 11222; Hatch Act, 5 U.S.C. 7324–7327; 28 U.S.C. 535; Proposed Plan for the Creation, Structure, Authority, and Function of the Office of Inspector General, Tennessee Valley Authority, approved by the TVA Board of Directors on October 18, 1985; and TVA Code XIII INSPECTOR GENERAL, approved by the TVA Board of Directors on February 19, 1987.

ROUTINE USES OF RECORDS MAINTAINED IN THE SYSTEM, INCLUDING CATEGORIES OF USERS AND THE PURPOSES OF SUCH USES:

To refer, where there is an indication of a violation of statute, regulation, order, or similar requirement, whether criminal, civil, or regulatory in nature, to the appropriate entity, including Federal, State, or local agencies or other entities charged with enforcement, investigative, or oversight responsibility.

To provide information to a Federal, State, or local entity (1) in connection with the hiring or retention of an individual, the letting of a contract, or issuance of a license, grant, or other benefit by the requesting entity to the extent that the information is relevant to a decision on such matters or (2) in connection with any other matter properly within the jurisdiction of such other entity and related to its prosecutive, investigatory, regulatory, administrative, or other responsibilities.

To the appropriate entity, whether Federal, State, or local, in connection with its oversight or review responsibilities or authorized law enforcement activities.

To respond to a request from a Member of Congress regarding an individual, or to report to a Member on the results of investigations, audits, or other activities of OIG.

To the parties or complainants, their representatives, and impartial referees, examiners, administrative judges, or other decisionmakers in proceedings under the TVA grievance adjustment procedures, Equal Employment Opportunity procedures, Merit Systems Protection Board, or similar procedures.

To the subjects of an investigation and their representatives in the course of a TVA investigation of misconduct; to any other person or entity that has or may have information relevant to the investigation to the extent necessary to assist in the conduct of the investigation, such as to request information.

In litigation to which TVA is a party or in which TVA provides legal representation for a party by TVA attorneys or otherwise, for use for any purpose including the presentation of evidence and disclosure in the course of discovery. In all other litigation, to respond to process issued under color of authority of a court of competent jurisdiction.

To a consultant, private firm, or individual who contracts or subcontracts with TVA, to the extent necessary to the performance of the contract.

To request information from a Federal, State, or local agency maintaining civil, criminal, or other relevant or potentially relevant information and to request information from private individuals or entities, if necessary, to acquire information pertinent to the hiring, retention, or promotion of an employee, the issuance

of a security clearance, the conduct of a background or other investigation, or other matter within the purposes of this system of records.

POLICIES AND PRACTICES FOR STORING, RETRIEVING, ACCESSING, RETAINING, AND DISPOSING OF RECORDS IN THE SYSTEM:

STORAGE:

Records are maintained on automated data storage devices, hard-copy printouts, and in file folders.

RETRIEVABILITY:

Records are indexed and retrieved by individual name or case file number.

SAFEGUARDS:

Access to and use of records is limited to authorized staff in OIG and to other authorized officials and employees of TVA on a need-to-know basis as determined by OIG management. Security will be provided by physical, administrative, and computer system safeguards. Files will be kept in secured facilities not accessible to unauthorized individuals.

RETENTION AND DISPOSAL:

These records are retained in accordance with TVA records retention schedules.

SYSTEM MANAGER(S) AND ADDRESS:

Inspector General, Tennessee Valley Authority, Knoxville, Tennessee 37902.

NOTIFICATION PROCEDURE:

This system of records is exempt from this requirement pursuant to 5 U.S.C. 552a(k)(2) and TVA regulations at 18 CFR 1301.24.

RECORD ACCESS PROCEDURES:

This system of records is exempt from this requirement pursuant to 5 U.S.C. 552a(k)(2) and TVA regulations at 18 CFR 1301.24.

CONTESTING RECORD PROCEDURES:

This system of records is exempt from this requirement pursuant to 5 U.S.C. 552a(k)(2) and TVA regulations at 18 CFR 1301.24.

RECORD SOURCE CATEGORIES:

This system of records is exempt from this requirement pursuant to 5 U.S.C. 552a(k)(2) and TVA regulations at 18 CFR 1301.24.

SYSTEMS EXEMPTED FROM CERTAIN PROVISIONS OF THE ACT:

This system is exempt from subsections (c)(3), (d), (e)(1), (4)(G), (4)(H) and (4)(I), and (f) of 5 U.S.C. 552a (section 3 of the Privacy Act of 1974) pursuant to 5 U.S.C. 552a(k)(2) and TVA regulations at 18 CFR 1301.24.

TVA-32

SYSTEM NAME:

Call Detail Records—TVA.

SYSTEM LOCATION:

Data Center, Tennessee Valley Authority, Chattanooga, Tennessee 37401.

CATEGORIES OF INDIVIDUALS COVERED BY THE SYSTEM:

TVA employees, contractor personnel, and other individuals who make telephone calls from or charge telephone calls to TVA telephones.

CATEGORIES OF RECORDS IN THE SYSTEM:

Records relating to use of TVA telephones; records relating to long distance telephone calls charged to TVA; records indicating assignment of telephone numbers and authorization numbers; records relating to locations of TVA telephones.

AUTHORITY FOR MAINTENANCE OF THE SYSTEM:

TVA Act of 1933, 16 U.S.C. 831–831dd.

ROUTINE USES OF RECORDS MAINTAINED IN THE SYSTEM, INCLUDING CATEGORIES OF USES AND THE PURPOSES OF SUCH USES:

To respond to a request from a Member of Congress regarding an individual.

To provide to the appropriate entity, whether Federal, State, or local, in connection with its oversight review responsibilities or authorized law enforcement activities.

In litigation to which TVA is a party or in which TVA provides legal representation for a party by TVA attorneys or otherwise, for use for any purpose including the presentation of evidence and disclosure in the course of discovery. In all other litigation, to respond to process issued under color of authority of a court of competent jurisdiction.

To refer, where there is an indication of a violation of statute, regulation, order, or similar requirement, whether criminal, civil, or regulatory in nature, to the appropriate entity, including Federal, State, or local agencies, or other entities charged with enforcement, investigative, or oversight responsibility.

To provide information to a Federal agency, in response to its request, in connection with the hiring or retention of an individual, the letting of a contract, or issuance of a license, grant, or other benefit by the requesting agency to the extent that the information is relevant to the requesting agency's decision on that matter.

To the parties or complainants, their representatives, and impartial referees, examiners, administrative judges, or other decision makers in proceedings under the TVA grievance adjustment procedures, Equal Employment Opportunity procedures, Merit Systems Protection Board, or similar procedures.

To a telecommunications company as well as to other TVA contractors providing telecommunications support to permit servicing the account.

To TVA contractors engaged at TVA's direction in investigations of abuse of TVA telephone service or other related issues.

To TVA contractors and contractor personnel to determine individual responsibility for telephone calls.

To TVA contractors in connection with amounts due TVA for telecommunications services provided to them.

POLICIES AND PRACTICES FOR STORING, RETRIEVING, ACCESSING, RETAINING, AND DISPOSING OF RECORDS IN THE SYSTEM:

STORAGE:

Records are maintained in file folders and on automated data storage devices.

RETRIEVABILITY:

Records are retrieved by name, authorization number, or telephone number.

SAFEGUARDS:

Access to and use of these records are limited to persons whose official duties require such access. Files are kept in secured facilities. Automated data is secured through physical and system-based safeguards.

RETENTION AND DISPOSAL:

These records are retained in accordance with established TVA records retention schedules.

SYSTEM MANAGER(S) AND ADDRESS:

Chief, Telecommunications Staff, Tennessee Valley Authority, Chattanooga, Tennessee 37401.

NOTIFICATION PROCEDURE:

Individuals wishing to learn if information on them is maintained in this system of records should address inquiries to Chief, Telecommunications Staff, Tennessee Valley Authority, Chattanooga, Tennessee 37401. Requests should include the individual's full name, employing division, job title, and official TVA telephone number and authorization number.

RECORD ACCESS PROCEDURES:

Individuals seeking to gain access to information about them in this system of records should contact the Chief, Telecommunications Staff, Tennessee

Valley Authority, Chattanooga, Tennessee 37401. Requests should include the individual's full name, employing division, job title, and official TVA telephone number and authorization number.

CONTESTING RECORD PROCEDURES:

Individuals desiring to contest or amend information about them maintained in this system should direct their request to Chief, Telecommunications Staff, Chattanooga, Tennessee 37401.

RECORD SOURCE CATEGORIES:

TVA Telecommunication Control System; telecommunications companies with which TVA contracts for telephone service; telephone and authorization number assignment records; results of administrative inquiries relating to assignment of responsibility for placement of specific long distance calls.

TVA-33

SYSTEM NAME:

Office of Nuclear Power Call Detail Records—TVA.

SYSTEM LOCATION:

Emergency Operations Center, Computer Room, 1101 Market Street, Chattanooga, Tennessee 37401.

CATEGORIES OF INDIVIDUALS COVERED BY THE SYSTEM:

TVA employees, contractor personnel, and other individuals who make telephone calls from or charge telephone calls to TVA telephones located at TVA nuclear plant sites.

CATEGORIES OF RECORDS IN THE SYSTEM:

Records relating to use of TVA telephones at TVA nuclear plant sites; records relating to long distance telephone calls charged to TVA telephones at TVA nuclear plant sites; records indicating assignment of telephone numbers and authorization numbers at TVA nuclear plant sites; records relating to locations of TVA telephones at TVA nuclear plant sites.

AUTHORITY FOR MAINTENANCE OF THE SYSTEM:

TVA Act of 1933, 16 U.S.C. 831–831dd.

ROUTINE USES OF RECORDS MAINTAINED IN THE SYSTEM; INCLUDING CATEGORIES OF USERS AND THE PURPOSES OF SUCH USES:

To respond to a request from a Member of Congress regarding an individual.

To provide to the appropriate entity, whether Federal, State, or local, in connection with its oversight review responsibilities or authorized law enforcement activities.

In litigation to which TVA is a party or in which TVA provides legal representation for a party by TVA attorneys or otherwise, for use for any purpose including the presentation of evidence and disclosure in the course of discovery. In all other litigation, to respond to process issued under color of authority of a court of competent jurisdiction.

To refer, where there is an indication of a violation of statute, regulation, order, or similar requirement, whether criminal, civil, or regulatory in nature, to the appropriate entity, including Federal, State, or local agencies, or other entities charged with enforcement, investigative, or oversight responsibility.

To provide information to a Federal agency, in response to its request, in connection with the hiring or retention of an individual, the letting of a contract, or issuance of a license, grant, or other benefit by the requesting agency to the extent that the information is relevant to the requesting agency's decision on that matter.

To the parties or complainants, their representatives, and impartial referees, examiners, administrative judges, or other decision makers in proceedings under the TVA grievance adjustment procedures, Equal Employment Opportunity procedures, Merit Systems Protection Board, or similar procedures.

To a telecommunications company as well as to other TVA contractors providing telecommunications support to permit servicing the account.

To TVA contractors engaged at TVA's direction in investigations of abuse of TVA telephone service or other related issues.

To TVA contractors and contractor personnel to determine individual responsibility for telephone calls.

To TVA contractors in connection with amounts due TVA for telecommunications services provided to them.

POLICIES AND PRACTICES FOR STORING, RETRIEVING, ACCESSING, RETAINING, AND DISPOSING OF RECORDS IN THE SYSTEM:

STORAGE:

Records are maintained in file folders and on automated data storage devices.

RETRIEVABILITY:

Records are retrieved by name, authorization number, or telephone number.

SAFEGUARDS:

Access to and use of these records are limited to persons whose official duties require such access. Files are kept in secured facilities. Automated data is secured through physical and system-based safeguards.

RETENTION AND DISPOSAL:

These records are retained in accordance with established TVA records retention schedules.

SYSTEM MANAGER(S) AND ADDRESS:

Director of Nuclear Services, 1101 Market Street, Chattanooga, Tennessee 37401.

NOTIFICATION PROCEDURE:

Individuals wishing to learn if information on them is maintained in this system of records should address inquiries to the site director of the TVA nuclear plant from which the telephone calls were placed or to which the telephone calls were charged. Requests should include the individual's full name, employing division, job title, and official TVA telephone number and authorization number.

RECORD ACCESS PROCEDURES:

Individuals seeking to gain access to information about them in this system of records should contact the site director of the TVA nuclear plant from which the telephone calls were placed or to which the telephone calls were charged. Requests should include the individual's full name, employing division, job title, and official TVA telephone number and authorization number.

CONTESTING RECORD PROCEDURES:

Individuals desiring to contest or amend information about them maintained in this system should direct their request to the site director of the TVA nuclear plant from which the telephone calls were placed or to which the telephone calls were charged. Requests should include the individual's full name, employing division, job title, and official TVA telephone number and authorization number.

RECORD SOURCE CATEGORIES:

Station message detail recording systems associated with telecommunications equipment at TVA nuclear plant sites; telecommunications companies with which TVA contracts for telephone service; telephone and authorization number assignment records; results of administrative inquiries relating to assignment of responsibility for placement of specific long distance calls.

TVA-34

SYSTEM NAME:

Project/Tract Files—TVA.

SYSTEM LOCATION:

Land Management Branch Files, Office Services Support Branch Records Center, and Chattanooga Data Center, Tennessee Valley Authority, Chattanooga, Tennessee 37401.

CATEGORIES OF INDIVIDUALS COVERED BY THE SYSTEM:

Individuals or business entities from/to whom TVA is in the process of or has (1) acquired, transferred, or sold land or landrights, (2) made payment for construction, maintenance, or other damage to real property, or (3) made payment for relocation assistance. A project/tract file may name more than one individual and/or business entity involved in a transaction. (The system records that pertain to individuals and reflect personal information are subject to the Privacy Act. The system also contains records that are not subject to the Privacy Act. Noncovered records include public information and records on corporations and other business entities.)

CATEGORIES OF RECORDS IN THE SYSTEM:

Maps, property descriptions, appraisal reports, and title documents on real property; reports on contracts and transaction progress; contracts and options; records of investigations, claims, and/or payments related to land transactions, damage restitution, and relocation assistance; related correspondence and reports.

AUTHORITY FOR MAINTENANCE OF THE SYSTEM:

Tennessee Valley Authority Act of 1933, 16 U.S.C. 831–831dd; Pub. L. 87–852, 76 Stat. 1129; Uniform Relocation Assistance and Real Property Acquisition Policies Act of 1970, as amended.

ROUTINE USES OF RECORDS MAINTAINED IN THE SYSTEM, INCLUDING CATEGORIES OF USERS AND THE PURPOSES OF SUCH USES:

To respond to a request from a Member of Congress regarding an individual.

To lienholders as necessary to secure subordinations or releases of liens or to protect lienholder rights.

To county clerk and register of deeds offices to document and put of record the title acquired by TVA.

To landowners, prospective landowners, claimants, or trespassers to establish or cure titles, to resolve encroachments, to resolve boundary disputes, or to resolve questions about easement rights or the application of Section 26a of the TVA Act, 16 U.S.C. 831y–1.

To contractors to secure appraisals and title abstracts.

To request information from a Federal, State, or local agency or from private individuals as necessary to obtain information relevant to a TVA decision to acquire or dispose of property or to pay claims or make payments related to land transactions, damage restitution, and relocation assistance.

To refer, where there is an indication of a violation of statute, regulation, order, or similar requirement, whether criminal, civil, or regulatory in nature, to the appropriate entity, including Federal, State, or local agencies, or other entities charged with enforcement, investigative, or oversight responsibility.

To provide information to a Federal agency, in response to its request, in connection with the hiring or retention of an individual, the letting of a contract, or issuance of a license, grant, or other benefit by the requesting agency to the extent that the information is relevant to the requesting agency's decision on that matter.

In litigation to which TVA is a party or in which TVA provides legal representation for a party by TVA attorneys or otherwise, for use for any purpose including the presentation of evidence and disclosure in the course of discovery. In all other litigation, to respond to process issued under color of authority of a court of competent jurisdiction.

To provide to the appropriate entity whether Federal, State, or local, in connection with its oversight review responsibilities or authorized law enforcement activities.

To report any required information to Federal, State, and local taxing authorities as required by law.

To genealogical researchers, relevant portions of maps, descriptions, appraisals, and title documents on real property, after 20 years to establish historical records.

To archaeological researchers, relevant portions of maps, descriptions, appraisals, and title documents on real property, after 20 years to reconstruct historical settings.

To respond to a request from a Member of Congress regarding the status of a matter relating to a specific project or tract.

POLICIES AND PRACTICES FOR STORING, RETRIEVING, ACCESSING, RETAINING, AND DISPOSING OF RECORDS IN THE SYSTEM:

STORAGE:

Records are maintained on registers, index and aperture cards, microfilm, in file folders, and/or on automated data storage devices.

RETRIEVABILITY:

Records are primarily indexed by tract number and project symbol. Records may also be retrieved by cross-index reference to individual and business entity names.

SAFEGUARDS:

Access to and use of these records are limited to persons whose official duties require such access. Files are kept in secured facilities. Remote access facilities are secured through physical and system-based safeguards.

RETENTION AND DISPOSAL:

Records are retained and disposed of in accordance with established TVA record retention schedules.

SYSTEM MANAGER(S) AND ADDRESS:

Director of Land and Economic Resources, Tennessee Valley Authority, Knoxville, Tennessee 37902.

NOTIFICATION PROCEDURE:

Individuals wishing to know whether information about them is maintained in this system of records should address inquiries to the Chief, Land Management Branch, Tennessee Valley Authority, Norris, Tennessee 37828. Requests should include the individual's full name and, to the extent known, any project/tract identifying information such as the project name, tract number, address, or related data.

RECORD ACCESS PROCEDURES:

Individuals seeking to gain access to information about them in this system of records should contact the Chief, Land Management Branch, Tennessee Valley Authority, Norris, Tennessee 37828. Requests should include the individual's full name, and to the extent known, any project/tract identifying information such as project name, tract number, address, or related data. Access will be granted only to individually segregable personal information about the requester and to segregable nonpersonal information in accordance with TVA regulations on release of records relating to negotiations in progress involving contracts or agreements for the acquisition or disposal of real or personal property by TVA prior to the conclusion of such negotiations.

CONTESTING RECORD PROCEDURES:

Individuals desiring to contest or amend information about them maintained in this system should direct their requests to the Chief, Land Management Branch, Tennessee Valley Authority, Norris, Tennessee 37828.

RECORD SOURCE CATEGORIES:

Public records and directories; landowners, tenants, and other individuals and business entities (including financial institutions) having an interest in or knowledge related to land ownership, appraisal, or title history; TVA personnel and contractors including independent appraisers and commercial title companies.

W.F. Willis,

General Manager.

[FR Doc. 88-7236 Filed 4-1-88; 8:45 am]

BILLING CODE 8120-01-M

OFFICE OF THE UNITED STATES TRADE REPRESENTATIVE

Korea's Restrictions on Imports of High Quality Beef; Notice of Investigation

[Docket No. 301-65]

AGENCY: Office of the United States Trade Representative.

ACTION: Notice of initiation of an investigation under section 302.

SUMMARY: Pursuant to 19 U.S.C. 2412, the U.S. Trade Representative has initiated an investigation of the Republic of Korea's policies and practices with respect to the importation of high quality beef.

EFFECTIVE DATE: March 28, 1988.

FOR FURTHER INFORMATION CONTACT: Sandra Kristoff, Deputy Assistant U.S. Trade Representative of Asia and the Pacific, (202) 395-4755; Les Glad, Advisor to the Assistant U.S. Trade Representative for Agricultural Trade, (202) 395-3077; or Amelia Porges, Associate General Counsel, (202) 395-7305, Office of the U.S. Trade Representative, 600 17th Street NW., Washington, DC 20506.

SUPPLEMENTARY INFORMATION: On Feb. 16, 1988, the American Meat Institute (AMI) filed a petition under section 302(a) of the Trade Act of 1974, as amended ("Act"), 19 U.S.C. 2412(a), alleging that the Government of the Republic of Korea engages in acts, policies and practices that violate obligations of Korea under the General Agreement on Tariffs and Trade ("GATT") and tariff concessions made by Korea in the Tokyo Round of Multilateral Trade Negotiations. The petition also alleges that these practices are unjustifiable, unreasonable and burden or restrict U.S commerce.

Specifically, the petition states that Korea maintains a restrictive import licensing system covering all bovine meat including high-quality beef. Since May 21, 1985, Korean government approval has been required for each shipment of beef imported. All import approvals have been denied since that date, except for a single shipment of 49 tons imported for the annual meeting of the International Monetary Fund in Seoul. Thus, except for this one shipment, Korea has prohibited all imports of beef for domestic consumption (including high-quality beef) since May 21, 1985.

AMI believes that this prohibition nullifies and impairs Korea's tariff concession on beef, and violates Article XI of the GATT. AMI also asserts that any restrictive licensing of beef imports would violate Article XI.

AMI states that before May 1985, Korea was the fourth largest market for United States beef exports; imports were $7 million in 1984 and were rapidly increasing in early 1985. AMI also states that Korea's import prohibition has resulted in complete denial of market opportunities to the United States meat packing and processing industry.

Effective March 28, 1988, the U.S. Trade Representative initiated an investigation of the Korean government's policies and practices restricting imports of high-quality beef into Korea. The United States Government has already begun proceedings under the dispute settlement procedures of Article XXIII of the General Agreement on Tariffs and Trade concerning Korea's prohibition of beef imports. We have held two rounds of consultations with Korea under Article XXIII:1; on Feb. 19-20 and March 21, 1988. These consultations are deemed to have fulfilled the requirement in section 303(a) of the Act (19 U.S.C. 2413(a)) that the USTR, on behalf of the United States, request consultations with the government concerned regarding issues raised in the petition. Furthermore, extensive consultations on the issues raised in the AMI petition have taken place between the United States and Korea since May 1985.

USTR will seek information and advice from the petitioner and the appropriate representatives provided for under section 135 of the Act (19 U.S.C. 2155) in preparing United States presentations for consultations and dispute settlement proceedings. Any interested person is invited to submit comments on the issues raised in the petition. Comments should be filed in accordance with the regulations at 15 CFR 2006.6 and are due no later than April 24, 1988. Comments must be in English and provided in 20 copies to: Chairman, Section 301 Committee, Room 222, USTR, 600 17th Street NW., Washington, DC 20506

Judith Hippler Bello,

Chairman, Section 301 Committee Acting General Counsel.

[FR Doc. 88-7261 Filed 4-1-88; 8:45 am]

BILLING CODE 3190-01-M

DEPARTMENT OF TRANSPORTATION

Applications for Certificates of Public Convenience and Necessity and Foreign Air Carrier Permits Filed During the Week Ending March 25, 1988

The following applications for certificates of public convenience and necessity and foreign air carrier permits were filed under Subpart Q of the Department of Transportation's Procedural Regulations (See 14 CFR 302.1701 *et. seq.*). The due date for answers, conforming application, or motion to modify scope are set forth below for each application. Following the answer period DOT may process the application by expedited procedures. Such procedures may consist of the adoption of a show-cause order, a tentative order, or in appropriate cases a final order without further proceedings.

Docket No. 45544

Date Filed: March 23, 1988.

Due Date for Answers, Conforming Applications, or Motion to Modify Scope: April 20, 1988.

Description: Application of Delta Air Lines, Inc. pursuant to section 401 of the Act and Subpart Q of the Regulations applies for a new or amended certificate of public convenience and necessity to provide scheduled foreign air transportation of persons, property and mail between Portland, Oregon and Taipei, Taiwan via Seoul, Korea.

Docket No. 45547

Date Filed: March 24, 1988.

Due Date for Answers, Conforming Applications, or Motions to Modify Scope: April 21, 1988.

Description: Application of Trans World Airlines, Inc. pursuant to section 401 of the Act and Subpart Q of the Regulations applies for a certificate of public convenience and necessity to permit TWA to provide air transportation services over U.S.-Mexico Routes B.15 and D.17.

Phyllis T. Kaylor,

Chief, Documentary Services Division.

[FR Doc. 88-7315 Filed 4-1-88; 8:45 am]

BILLING CODE 4910-62-M

[Order 88-3-66; Docket 43446]

Order Proposing To Institute Reallocation Phase, Japan Charter Authorization Proceeding

ACTION: Issuance of a show-cause order tentatively establishing procedures and guidelines for reallocating unused charter authorizations for U.S.-Japan flights to be operated by September 30, 1988

SUMMARY: U.S. air carriers can operate only 300 one-way charter flights per year between the United States and Japan under the terms of the bilateral Interim Aviation Agreement. The Department awarded these allocations to thirteen carriers for the year ending September 30, 1988. These allocations are subject to forfeiture after seven months depending on flight usage. The Department is tentatively establishing the procedural framework and decisional guidelines for reallocating the forfeited flights for the last few months of this allocation year. We tentatively propose to announce the flights available in May 1988 and to invite carriers to apply for those flights. In the proposed show-cause proceeding, we would reallocate the available flights to interested U.S. carriers, based on criteria similar to those set forth in Order 87-8-5, with additional emphasis on avoiding waste by recognizing carrier performance during the first seven months of the allocation year. (Note: This proceeding will not consider 1988-1989 Japan charter allocations. A separate proceeding is being instituted for that purpose.)

DATES: Objections and comments regarding this reallocation, together with supporting information, are due not later than April 11, 1988. Answers are due not later than April 18, 1988.

ADDRESS: Objections, comments and supporting information should be filed in Docket 43446, addressed to the Documentary Services Division, U.S. Department of Transportation, 400 Seventh Street SW., Room 4107, Washington, DC 20590, and should be served on all parties in Docket 43446.

Dated: March 29, 1988.

Matthew V. Scocozza,

Assistant Secretary for Policy and International Affairs.

[FR Doc. 88-7316 Filed 4-1-88; 8:45 am]

BILLING CODE 4910-62-M

Federal Railroad Administration

[FRA General Docket No. H-88-2]

Petition for Exemption or Waiver for Test Program; Metro-North Commuter Railroad Co.

In accordance with 49 CFR 211.9 and 211.41, notice is hereby given that the Metro-North Commuter Railroad Company (Metro-North) has submitted a petition, dated February 29, 1988, for a temporary waiver of compliance with the provisions of 49 CFR 213.57(b). This section specifies the mathematical formula by which curving speeds of trains, as functions of superelevation and curvature, are to be determined. The formula incorporates a term permitting train operation over curved track at up to, but not more than three inches of cant deficiency.

Note: The concept of cant deficiency or unbalanced superelation curve negotiation was discussed in an earlier FRA Notice appearing on pages 38035 and following of the Federal Register, Volume 52, Number 197, October 13, 1987.]

The subject petition requests relief from the requirements of § 213.57(b) in order to join with the National Railroad Passenger Corporation (Amtrak) in the performance evaluation of certain types of passenger rolling stock designed to safely and comfortably operate over curved track at speeds producing cant deficiencies exceeding three inches.

The test program supporting this evaluation is essentially an Amtrak endeavor; the role of the petitioner, as controller of all train movements between New Haven, Connecticut and New Rochelle, New York, is to serve as a bridge between the discontinuous segments of Amtrak-owned test track, Boston to New Haven and New Rochelle to Market (N.Y.).

The proposed Amtrak test program was comprehensively described in the **Federal Register,** Volume 53, Number 46, March 9, 1988, pages 7627/7628, under the heading: FRA General Docket No. H-87-2. All of the constraints specified in this discussion as applicable to the Amtrak program on its own tracks will also apply to test operations over tracks controlled by the petitioner.

In the March 9, 1988, notice it was stated that Metro-North "* * * may petition FRA for a waiver of 49 CFR 213.57(b)." The purpose of this notice is to resolve any uncertainty related to Metro-North's participation in the program.

Issued in Washington, DC, on March 28, 1988.

J.W. Walsh,

Associate Administrator for Safety.

[FR Doc. 88-7313 Filed 4-1-88; 8:45 am]

BILLING CODE 4910-06-M

Urban Mass Transportation Administration

Intent to Prepare an Environment Impact Statement for Proposed Transit Improvements to the South and Southeast of Boston, MA

AGENCY: Urban Mass Transportation Administration, DOT.

ACTION: Notice to prepare an Environmental Impact Statement.

SUMMARY: The Urban Mass Transportation Administration (UMTA) and the Massachusetts Bay Transportation Authority (MBTA) are undertaking the preparation of an Environmental Impact Statement (EIS) for proposed transit improvements to the area south of Boston bounded on the west by Route 24, to the east by Massachusetts Bay, and to the south by the Cape Code Canal. This EIS is being prepared in conformance with 40 CFR Part 1500, Council on Environmental Quality, Regulations for Implementing the Procedural Requirements of the National Environmental Policy Act of 1969, as amended; and 49 CFR Part 622, Federal Highway Administration and Urban Mass Transportation Administration, Environmental Impact and Related Procedures.

FOR FURTHER INFORMATION CONTACT: Mr. Donald Sullivan,UMTA Region I, 55 Broadway, Cambridge, MA 02142, telephone (617) 494-2729.

Mr. Charles B. Steward, Assistant Director of Construction of Development, MBTA, 10 Park Plaza, 6th Floor, Boston, MA 02116, telephone (617) 722-3122.

SUPPLEMENTARY INFORMATION:

Scoping Process

The Commonwealth of Massachusetts Executive Office of Environmental Affairs (EOEA) held two non-Federal scoping meetings for the *Old Colony Railroad Rehabilitation Project.* The first was held on January 29, 1986 at 3:00 p.m. in the Transportation Building, Boston, and was designed to attract attendance from state, county, municipal, and regional agencies and organizations. The second meeting was held January 30, 1986 at 7:00 p.m. in Braintree Town Hall and was scheduled to be convenient for interested citizens.

municipal officials, and officials from other agencies unable to attend the scoping meeting held the previous day.

Notice of the meetings was given in the *Environmental Monitor* of January 24, 1986, was advertised in the *Boston Globe, Boston Herald,* Quincy *Patriot-Ledger,* and Brockton *Enterprise;* the two major statewide newspapers and the two major regional newspapers serving the entire Old Colony area. Conservation commissions, planning boards, boards of selectment, mayors and city councillors of the cities and towns affected by the project were contacted and notified of the two meetings. The meeting announcement was given to many regional environmental/conservation groups by mail or telephone. Comments on the proposed Scope of Work, alternatives to be assessed, impacts to be analyzed, and evaluation criteria to be used in decision-making were requested.

Subsequently, the MBTA, however, has conducted and will continue to conduct numerous public meetings throughout the study area in order to gain additional public input to the study process. On November 23, 1987, project staff conducted a briefing for Federal agencies with an interest in the study. In view of the MBTA's substantial public involvement program, an additional Federal scoping meeting is not planned.

The MBTA and UMTA invite written comments for a period of 30 days after the publication of this notice. Comments should focus on the appropriateness of the proposed alternatives, rather than individual preferences for a particular alternative as most desirable for implementation. Comments are also invited regarding the impacts being studied and the proposed evaluation criteria. Other impacts or criteria judged relevant to local decision-making should be identified. In addition, UMTA and the MBTA invite comments on the need for an additional public scoping meeting.

Written comments should be sent to: Mr. Richard Doyle, Regional Administrator, Urban Mass Transportation Administration, 55 Broadway, Cambridge, MA 02142, or Mr. James F. O'Leary, General Manager, Massachusetts Bay Transportation Authority, 10 Park Plaza, Boston, MA 02116.

Corridor Description

The Old Colony study area includes some 34 communities extending generally from Braintree south to the Cape Cod Canal, and from Massachusetts Bay west to Route 24. These communities, along with Quincy and Boston, represent the area which is likely to be affected by the set of transportation alternatives being examined. In total, the region encompasses approximately 450 square miles, including heavily urbanized areas (Brockton and Quincy), some large suburban towns (such as Weymouth and Braintree), and many areas with a rural character. In 1980 the total population of the study area as defined above was approximately 600,000 persons; by the year 2000 study area population is projected to increase by between fifteen and twenty percent. This growth rate exceeds that expected for the Boston Metropolitan area as a whole by approximately five to ten percent.

The study area has a strong orientation to Boston: in 1980 more than 40,000 study area residents worked in Boston or Cambridge, an estimated 15 percent of the Boston area workforce. The number of commuters to Boston and Cambridge is expected to grow by 10 to 20 percent by the year 2000. Other important commercial centers which attract commuting and other trips are the urban centers of Quincy, Brockton, Fall River and New Bedford, and the new industrial and shopping centers along the major highways, particularly Route 3 and Route 128 (I95/I93).

Alternatives

Alternatives being studied by the MBTA in the corridor include:

(1) *No Build.* No further transportation improvements are made beyond those now funded.

(2) *Transportation Systems Management* consisting of improvements to express bus service to Boston, to feeder bus service to the Red Line and to feeder bus service to the communter boat service. Improvements to Red Line service and to commuter boat service may also be included.

(3) *Busway from Quincy-Adams Station to Southhampton Street.* In addition to improvements in express bus service listed in (2), the railroad right-of-way between Quincy-Adams Station in Quincy and Southhampton Street in Boston will be adapted to become a one-way peak period reversible exclusive busway.

(4a) *Commuter Rail Through Service to End Terminals* with locomotive-powered, push-pull commuter rail trains operating from South Station to a terminal in Middleborough only.

(4b) *Commuter Rail Through Service to End Terminals* with locomotive-powered, push-pull commuter rail trains operating from South Station to terminals in Middleborough and Plymouth.

(4c) *Commuter Rail Through Service to End Terminals* with locomotive-powered, push-pull commuter rail trains operating from South Station to terminals in Middleborough and Greenbush.

(4d) *Commuter Rail Through Service to End Terminals* with locomotive-powered, push-pull commuter rail trains operating from South Station to terminals in Middleborough, Plymouth and Greenbush.

Probable Effects

Impacts being analyzed include changes in the natural environment (air quality, noise, water quality, aesthetics), changes in the social environment (land use, development, communities), impacts on parklands and historic sites, changes in transit service and patronage, associated changes in highway congestion, capital costs, operating costs, and financial implications. Impacts will be identified both for the construction period and for the long term operation of the alternatives.

The proposed evaluation criteria include transportation, environmental, social, economic, and financial measures as required by current Federal (NEPA) and Massachusetts (MEPA) environmental laws and current CEQ and UMTA guidelines. Mitigating measures will be explored for any adverse impacts that are identified.

Issued on: February 29, 1988.

Richard H. Doyle,

Regional Manager.

[FR Doc. 88-7277 Filed 4-1-88; 8:45 am]

BILLING CODE 4910-57-M

DEPARTMENT OF THE TREASURY

Public Information Collection Requirements Submitted to OMB for Review

Date: March 29, 1988.

The Department of Treasury has submitted the following public information collection requirement(s) to OMB for review and clearance under the Paperwork Reduction Act of 1980, Pub. L. 96-511. Copies of the submission(s) may be obtained by calling the Treasury Bureau Clearance Officer listed. Comments to the OMB reviewer listed and to the Treasury Department Clearance Officer, Department of the Treasury, Room 2224, 15th and Pennsylvania Avenue, NW., Washington, DC 20220.

Internal Revenue Service

OMB Number: 1545-0029.

Form Number: 941, 941E, 941PR, 941SS, Schedule A (Form 941).

Type of Review: Extension.

Title: Employer's Quarterly Federal Tax Return; Quarterly Return of Withheld Income Tax and Hospital Insurance (Medicare) Tax; and Record of Federal Backup Withholding Tax Liability.

Description: Form 941 is used by employers to report payments made to employees subject to income and FICA taxes and the amounts of these taxes. Form 941E is used primarily by State and local government to report withheld income and hospital insurance taxes only. Form 941PR is used by employers in Puerto Rico to report FICA taxes only and Form 941SS is used by employers in the possessions to report FICA tax only. Schedule A is used by payers subject to the backup withholding provisions who elected to report the liability as a separate tax.

Respondents: Individuals or households, Businesses or other for-profit.

Estimated Burden: 12,490 hours.

Clearance Officer: Garrick Shear (202) 535-4297, Internal Revenue Service, Room 5571, 1111 Constitution Avenue, NW., Washington, DC 20224.

OMB Reviewer: Milo Sunderhauf (202) 395-6880, Office of Management and Budget, Room 3208, New Executive Office Building, Washington, DC 20503.

Lois K. Holland,

Departmental Reports Management Officer.

[FR Doc. 88-7309 Filed 4-1-88; 8:45 am]

BILLING CODE 4810-25-M

Public Information Collection Requirements Submitted to OMB for Review

Date: March 29, 1988.

The Department of Treasury has submitted the following public information collection requirement(s) to OMB for review and clearnance under the Paperwork Reduction Act of 1980, Pub. L. 96-511. Copies of the submission(s) may be obtained by calling the Treasury Bureau Clearance Officer listed. Comments to the OMB reviewer listed and to the Treasury Department Clearance Officer, Department of the Treasury, Room 2224, 15th and Pennsylvania Avenue, NW., Washington, DC 20220.

Bureau of Alcohol, Tobacco and Firearms

OMB Number: 1512-0171.

Form Number: ATF F 5220.3(3373).

Type of Review: Extension.

Title: Inventory-Export Warehouse Proprietor.

Description: AFT F 5220.3(3373) is used by export warehouse proprietors to record inventories that are required by statutes and regulations. The inventories are taken at the commencement of business and at any other time as prescribed by regulations and available for inspection by ATF officers.

Respondents: Businesses or other-for profit, Small businesses or organizations.

Estimated Burden: 50 hours.

OMB Number: 1512-0469.

Form Number: None.

Type of Review: Extension.

Title: Labeling of Sulfites in Alcoholic Beverages.

Description: In a final rule published in the **Federal Register** on July 9, 1986 (51 FR 34706), the Food and Drug Administration established 10 parts per million as the threshold for declaration of sulfites in food and wine products. The Bureau of Alcohol, Tobacco and Firearms on September 30, 1986, published a final rule (ATF-236) (51 FR 34706) establishing the same threshold for declaration of sulfites in alcoholic beverages.

Respondents: Businesses or other for-profit, Small businesses or organizations.

Estimated Burden: 3,159 hours.

Clearance Officer: Robert Masarsky (202) 566-7077, Bureau of Alcohol, Tobacco and Firearms, Room 7011, 1200 Pennsylvania Avenue, NW., Washington, DC 20226.

OMB Reviewer: Milo Sunderhauf (202) 395-6880, Office of Management and Budget, Room 3208, New Executive Office Building, Washington, DC 20503.

Lois K. Holland,

Departmental Reports Management Officer.

[FR Doc. 88-7310 Filed 4-1-88; 8:45 am]

BILLING CODE 4810-25-M

UNITED STATES INFORMATION AGENCY

Culturally Significant Objects Imported for Exhibition; Determination

Notice is hereby given of the following determination: Pursuant to the authority vested in me by the act of October 19, 1965 (79 Stat. 985, 22 U.S.C. 2459), Executive Order 12047 of March 27, 1978 (43 FR 13359, March 29, 1978), and Delegation Order No. 85-5 of June 27, 1985 (50 FR 27393, July 2, 1985), I hereby determine that the objects to be included in the exhibit "Olga Milles Emerges" (see list [1]), imported from abroad for the temporary exhibition without profit within the United States, are of cultural significance. I also determine that the temporary exhibition or display of the listed exhibit objects at the Cranbrook Academy of Art Museum, beginning on or about April 18, 1988 to on or about June 19, 1988, is in the national interest.

Public notice of this determination is ordered to be published in the **Federal Register.**

Dated: March 31, 1988.

C. Normand Poirier,

Acting General Counsel.

[FR Doc. 88-7430 Filed 4-1-88; 8:45 am]

BILLING CODE 8230-01-M

VETERANS ADMINISTRATION

Advisory Committee on Cemeteries and Memorials; Meeting

The Veterans Administration gives notice that a meeting of the Administrator of Veterans Affairs' Advisory Committee on Cemeteries and Memorials, authorized by 38 U.S.C. 1001, will be held at the Hyatt Regency Westshore Hotel, 6200 Courtney Campbell Causeway, Tampa, Florida 33607, on May 28, 1988.

The session will begin at 9:00 a.m. to conduct routine business. The meeting will be open to the public up to the seating capacity which is about twenty persons. Those wishing to attend should contact Mrs. Ann Stone, Staff Assistant to the Deputy Chief Memorial Affairs Director (phone 202-233-2396) not later than 12 noon, EST May 13, 1988.

Any interested person may attend, appear before, or file a statement with the Committee. Individuals wishing to appear before the Committee should indicate this in a letter to the Chief Memorial Affairs Director (40) at 810 Vermont Avenue NW., Washington, DC 20420. In any such letters, the writers must fully identify themselves and state the organization or association or person they represent. Also, to the extent practicable, letters should indicate the subject matter they want to discuss. Oral presentations should be limited to 10 minutes in duration. Those wishing to file written statements to be submitted to the Committee must also

[1] A copy of this list may be obtained by contacting Ms. Lorie Nierenberg of the Office of the General Counsel, USIA. The telephone number is (202) 485-8827, and the address is Room 700, U.S. Information Agency, 301-4th Street SW., Washington, DC 20547.

mail, or otherwise, deliver them to the Chief Memorial Affairs Director.

Letters and written statements as discussed above must be mailed or delivered in time to reach the Chief Memorial Affairs Director by 12 noon EST May 13, 1988. Oral statements will be heard only between 9 and 10 a.m.

Dated: March 28, 1988.

By direction of the Administrator.

Rosa Maria Fontanez,

Committee Management Officer.

[FR Doc. 88-7305 Filed 4-1-88; 8:45 am]

BILLING CODE 8320-01-M

Sunshine Act Meetings

Federal Register
Vol. 53, No. 64
Monday, April 4, 1988

This section of the FEDERAL REGISTER contains notices of meetings published under the "Government in the Sunshine Act" (Pub. L. 94-409) 5 U.S.C. 552b(e)(3).

CONSUMER PRODUCT SAFETY COMMISSION

TIME AND DATE: 10:00 a.m., Tuesday, April 5, 1988.

LOCATION: Room 556, Westwood Towers, 5401 Westbard Avenue, Bethesda, Maryland.

STATUS: Open to the Public.

MATTERS TO BE CONSIDERED:

FY 89 Budget Adjustment.

The staff will brief the Commission on options for making adjustments to the budget for Fiscal Year 1989.

For a recorded message containing the latest agenda information, call: 301-492-5709.

CONTACT PERSON FOR ADDITIONAL INFORMATION: Sheldon D. Butts, Office of the Secretary, 5401 Westbard Ave., Bethesda, Md. 20207, 301-492-6800.

Sheldon D. Butts,
Deputy Secretary.
March 30, 1988.

[FR Doc. 88-7336 Filed 3-30-88; 4:52 p.m.]

BILLING CODE 6355-01-M

FEDERAL DEPOSIT INSURANCE CORPORATION

Pursuant to the provisions of subsection (e)(2) of the "Government in the Sunshine Act" (5 U.S.C. 552(e)(2)), notice is hereby given that at its open meeting held at 2:00 p.m. on Tuesday, March 29, 1988, the Corporation's Board of Directors determined, on motion of Chairman L. William Seidman, seconded by Director C. C. Hope, Jr. (Appointive), concurred in by Director Robert L. Clarke (Comptroller of the Currency), that Corporation business required the addition to the agenda for consideration at the meeting, on less than seven days' notice to the public, of the following matter:

Recommendation regarding the liquidation of a bank's assets acquired by the Corporation in its capacity as receiver, liquidator, or liquidating agent of those assets:

Case No. 47,190—Des Moines Consolidated Office, Des Moines, Iowa

By the same majority vote, the Board further determined that no earlier notice of the change in the subject matter of the meeting was practicable.

Dated: March 30, 1988.

Federal Deposit Insurance Corporation.

Robert E. Feldman,
Assistant Executive Secretary.

[FR Doc. 88-7345 Filed 3-31-88; 9:17 am]

BILLING CODE 6714-01-M

FEDERAL DEPOSIT INSURANCE CORPORATION

Pursuant to the provisions of subsection (e)(2) of the "Government in the Sunshine Act" (5 U.S.C. 552b(e)(2)), notice is hereby give that at its closed meeting held at 2:30 p.m. on Tuesday, March 29, 1988, the Corporation's Board of Directors determined, on motion of Chairman L. William Seidman, seconded by Director C.C. Hope, Jr. (Appointive), concurred in by Director Robert L. Clarke (Comptroller of the Currency), that Corporation business required the addition to the agenda for consideration at the meeting, on less than seven days' notice to the public, of the following matters:

Application of Merchants National Bank & Trust Company of Indianapolis, Indianapolis, Indiana, for consent to purchase certain assets of and to assume certain liabilities of the military banking facilities located in The Netherlands, West Germany, and Greece currently operated by American Express Bank, Ltd., New York City, New York, a noninsured institution.

Requests for financial assistance pursuant to section 13(c) of the Federal Deposit Insurance Act.

Matters relating to an assistance agreement pursuant to section 13(c) of the Federal Deposit Insurance Act.

The Board further determined, by the same majority vote, that no earlier notice of these changes in the subject matter of the meeting was practicable; that the public interest did not require consideration of the matter added to the agenda in a meeting open to public observation; and that the matters added to the agenda could be considered in a closed meeting by authority of subsections (c)(2), (c)(4), (c)(6), (c)(8), (c)(9)(A)(ii), and (c)(9)(B) of the "Government in the Sunshine Act" (5 U.S.C. 552b(c)(2), (c)(4), (c)(6), (c)(8), (c)(9)(A)(ii), and (c)(9)(B)).

Dated: March 30, 1988.

Federal Deposit Insurance Corporation.

Robert E. Feldman,
Assistant Executive Secretary.

[FR Doc. 88-7346 Filed 3-31-88; 9:17 am]

BILLING CODE 6714-01-M

LEGAL SERVICES CORPORATION

Voucher Subcommittee to the Provision for the Delivery of Legal Services Committee

TIME AND DATE: The meeting will commence at 9:00 a.m. on Friday April 9, 1988, and continue until the close of business.

PLACE: The International Hotel, BWI, Scott Room, Elm Road, Baltimore, Maryland 21240.

STATUS OF MEETING: Open.

MATTERS TO BE CONSIDERED:

1. Approval of Agenda
2. Approval of Minutes
   —March 24, 1988
3. Report on the History of the LSC Voucher Program
4. Report on the Current Status of Voucher Studies

Discussion and Public Comment follow each item.

CONTACT PERSON FOR MORE INFORMATION: Maureen R. Bozell, Executive Office, (202) 863-1839.

Date Issued: March 31, 1988.

Maureen R. Bozell,
Secretary.

[FR Doc. 88-7418 Filed 3-31-88; 3:40 pm]

BILLING CODE 7050-01-M

POSTAL SERVICE

Board of Governors

"FEDERAL REGISTER" CITATION OF PREVIOUS ANNOUNCEMENT: 53 FR 10035, March 28, 1988.

PREVIOUSLY ANNOUNCED DATE OF MEETING: April 5, 1988.

CHANGE: Addition of the following item to the open meeting agenda:

"Personnel Matters"

CONTACT PERSON FOR MORE INFORMATION: David F. Harris, (202) 268-4800.

David F. Harris,
Secretary.

Paul J. Kemp,
Alternate Liaison Officer for the U.S. Postal Service.

[FR Doc. 88-7361 Filed 3-31-88; 10:28 am]

BILLING CODE 7710-12-M

SECURITIES AND EXCHANGE COMMISSION

Notice is hereby given, pursuant to the provisions of the Government in the Sunshine Act, Pub. L. 94–409, that the Securities and Exchange Commission will hold the following meetings during the week of April 4, 1988:

A closed meeting will be held on Tuesday, April 5, 1988, at 2:30 p.m. An open meeting will be held on Thursday, April 7, 1988, at 10:00 a.m.

The Commissions, Counsel of the Commissioners, the Secretary of the Commission, and recording secretaries will attend the closed meeting. Certain staff members may also be present.

The General Counsel of the Commission, or his designee, has certified that, in his opinion, one or more of the exemptions set forth in 5 U.S.C. 552b(c)(4), (8), (9)(A) and (10) and 17 CFR 200.402(a)(4), (8), (9)(i) and (10), permit consideration of the scheduled matters at a closed meeting.

Commissioner Cox, as duty officer, voted to consider the items listed for the closed meeting in closed session.

The subject matter of the closed meeting scheduled for Tuesday, April 5, 1988, at 2:30 p.m., will be:

Institution of administrative proceedings of an enforcement nature.

Settlement of administrative proceeding of an enforcement nature.

Institution of injunctive action.

Formal orders of investigation.

The subject matter of the open meeting scheduled for Thursday, April 7, 1988, at 10:00 a.m., will be:

1. Consideration of whether to adopt Rules 701, 702 and 703 and Form 701 to provide an exemption from the registration requirements of the Securities Act of 1933 for offers and sales of securities pursuant to certain compensation arrangements and amend Rule 144(a)(3) to add Rule 701 securities to the definition of "restricted securities." For further information, please contact John D. Reynolds at (202) 272–2644.

2. Consideration of whether to issue a release announcing adoption of amendments to Rule 81 of the Commission's regulations on Information and Requests, which would permit immediate publication of interpretative, no-action and certain exemption letters written by the Commission's staff at the time such letters are sent or given to the requesting party, unless confidential treatment is granted. For further information, please contact Michael Hyatte at (202) 272–2573.

3. Consideration of whether to authorize for publication (1) a release adopting certain amendments to Regulation S–K, Form 8–K and Schedule 14A regarding disclosure of registrants' changes in certifying accountants, and (2) a release publishing for comment proposals to increase the timeliness of disclosures on Form 8–K, including registrants' changes in certifying accountants. For further information, please contact Robert Burns or John Riley at (202) 272–2130.

At times changes in Commission priorities require alternations in the scheduling of meeting items. For further information and to ascertain what, if any, matters have been added, deleted or postponed, please contact: Nancy Morris at (202) 272–2468.

Jonathan G. Katz,

Secretary.

March 30, 1988.

[FR Doc. 88–7319 Filed 3–30–88; 4:21 pm]

BILLING CODE 8010–01–M

Corrections

Federal Register
Vol. 53, No. 64
Monday, April 4, 1988

This section of the FEDERAL REGISTER contains editorial corrections of previously published Presidential, Rule, Proposed Rule, and Notice documents and volumes of the Code of Federal Regulations. These corrections are prepared by the Office of the Federal Register. Agency prepared corrections are issued as signed documents and appear in the appropriate document categories elsewhere in the issue.

DEPARTMENT OF HEALTH AND HUMAN SERVICES

Centers for Disease Control

Final Recommendations for Protecting the Health and Safety Against Potential Adverse Effects of Long-Term Exposure to Low Doses of Agents: GA, GB, VX, Mustard Agent (H, HD, T), and Lewisite (L)

Correction

In notice document 88-5573 beginning on page 8504 in the issue of Tuesday, March 15, 1988, make the following corrections:

1. On page 8504, in the second column, under **SUPPLEMENTARY INFORMATION**, in the second paragraph, in the seventh line, the last "the" should read "to".

2. On page 8506, in the second column, in the first complete paragraph, in the 29th line, "ambient" was misspelled.

3. On page 8507, in Table 2, in the second column, in the second and fourth lines, "[illegible]" should read "[illegible]".

BILLING CODE 1505-01-D

DEPARTMENT OF HEALTH AND HUMAN SERVICES

Food and Drug Administration

[Docket No. 82N-0153]

Certain Fixed-Combination Antibiotic/Antifungal Products; Withdrawal of Approval of New Drug Applications; Availability of the Commissioner's Decision

Correction

In notice document 88-3624 appearing on page 5044 in the issue of Friday, February 19, 1988, make the following correction:

In the second column, in the first complete paragraph, the seventh line should read as follows: "Commissioner's Order withdraws provisions for certification of Mysteclin-V Capsules (NDA 50-".

BILLING CODE 1505-01-D

DEPARTMENT OF THE TREASURY

Internal Revenue Service

26 CFR Part 1

[T.D. 8176]

Income Tax; Treatment of Certain Charitable Contributions Relating to Bargain Sales

Correction

In rule document 88-4037 beginning on page 5568 in the issue of Thursday, February 25, 1988, make the following correction:

§ 1.1011-2 [Corrected]

On page 5570, in the second column, in § 1.1011-2(c), Example (3), in the 13th line, "170(b)(F)" should read "170(b)(1)(F)".

BILLING CODE 1505-01-D

federal register

Monday
April 4, 1988

Part II

Department of Transportation

Office of Commercial Space Transportation

14 CFR Ch. III

Commercial Space Transportation; Licensing Regulations; Final Rule

DEPARTMENT OF TRANSPORTATION

Office of Commercial Space Transportation

14 CFR Ch. III

[Docket No. 43810]

Commercial Space Transportation; Licensing Regulations

AGENCY: Office of Commercial Space Transportation, DOT.

ACTION: Final rule.

SUMMARY: The Office of Commercial Space Transportation is publishing final licensing regulations for commercial launch activities. These regulations constitute the procedural framework for reviewing and authorizing all proposals to conduct non-Federal launch activities, including the launching of vehicles, operation of launch sites, and payload activities that are not licensed by other Federal agencies. The Office also is publishing its general administrative procedures and a revised compilation of its information requirements. This final rule replaces all previous guidance, specifically the interim final rule, published February 26, 1986, and the Licensing Policy Statement, published February 25, 1985.

DATE: This rule becomes effective April 4, 1988.

FOR FURTHER INFORMATION CONTACT: Gerald Musarra, Office of the General Counsel, U.S. Department of Transportation, 400 Seventh Street SW., Room 10424, Washington, DC 20590, (202) 366-9305.

SUPPLEMENTARY INFORMATION:

Background

The Commercial Space Launch Act of 1984, Pub. L. 98-575, authorizes the Secretary of Transportation to oversee and coordinate United States commercial launch activities. The Secretary's mandate embraces the authority to license and otherwise regulate such activities, as well as the responsibility to encourage, facilitate and promote establishment of a competitive United States commercial space transportation industry.

The Department of Transportation is currently implementing its authority in this area through interim regulations published by the Office of Commercial Space Transportation on February 26, 1986. The interim regulations built upon the Office's Licensing Policy Statement, published February 25, 1985, which was the Office's initial exposition of the licensing process it had devised as the means for guiding both the planning and conduct of the private launch activities subject to its authority. In particular, the Office's approach to licensing was intended to ensure that certain national interests received appropriate attention when applications are reviewed. These interests are stated explicitly in the Act: Public health and safety, the safety of property, national security interests and foreign policy interests of the United States. The licensing process described in the policy statement involved two reviews designed specifically to address these interests. One focused on the safety operations that would be used to support launch activities, while the other focused on the proposed mission itself. In addition, the policy statement emphasized the need to streamline procedures for consulting with other Federal agencies on specific commercial launch proposals.

The Office received numerous comments on its licensing policy. These comments, as well as its own greater practical experience with the launch industry, were fully considered in the course of drafting proposed licensing regulations. Because the Office concluded that the launch industry required guidance upon which it could immediately rely, these regulations were published on an interim final basis. Although they went into effect immediately upon publication, the Office requested further comment on its licensing regulations in order to identify revisions or clarifications that might be needed to achieve maximum responsiveness to the wide range of launch activities American firms can be expected to propose.

In addition, much progress has been made since the interim regulations were published in developing the contractual arrangements covering access of commercial launch firms to government-developed launch technology and government-provided safety services. The greater definition that now exists in this area has, in turn, made it both necessary and possible to ensure that government range safety functions and launch firm licensing procedures are efficiently integrated.

The regulations published today constitute the administrative framework for according each proposal to conduct a commercial launch activity a prompt, well-defined, and thorough review. They also reflect the Office's on-going efforts to design a licensing program that will provide unqualified assurance to the public that private firms will operate safely and responsibly. This assurance is indispensable to the success of the American commercial launch industry.

The Office will continue to evaluate and, when necessary, re-shape its program in response to growth, innovation, and diversity in this critically important industry.

National Space Policy

The interim regulations were published within a month of the Space Shuttle Challenger accident, an event which resulted in the temporary grounding of the nation's primary means to space. This situation, combined with the rapidly growing backlog of government and commercial payloads, caused the government to reevaluate its reliance on a single space transportation system as well as its own role as provider of launch services for all the nation's space needs. Instead, the United States private sector would have to assume a new and significant role, alongside the government, in assuring the nation's access to space.

In August 1986, President Reagan announced a new launch policy, set forth in his United States Space Launch Strategy, which limits the Shuttle's role to certain missions and directs the Department of Defense to develop payloads compatible with both expendable vehicles and the Shuttle. Further, the President directed that virtually all routine commercial payloads be launched by commercial launch firms.

On February 11, 1988, the President issued a directive on National Space Policy, which consolidated and updated previous Presidential guidance on space activities. The National Space Policy identifies, for the first time, a separate and distinct commercial space sector. The policy is especially significant because of its emphasis on commercial launch services as an integral element of the robust transportation capability essential for maintaining United States space leadership. Further, the policy reaffirms the role of the Department of Transportation as lead agency for Federal policy and regulatory guidance pertaining to United States commercial launch activities.

National Space Launch Infrastructure

The National Space Policy is the culmination of a series of Presidential policies aimed at a fundamental redefinition of the traditional role of the Federal Government in space activities. In the past, the nation's space programs were conducted entirely by the Federal Government. Launch firms participated in these programs only as government contractors, operating in complete conformance to government program requirements and launch practices.

Now, however, launch firms will be operating on a commercial basis, in

direct response to the needs of their customers. In doing so, they will rely on the nation's existing launch infrastructure for the support they need to undertake missions vital to the technological and economic well-being of the United States.

The facilities that comprise this infrastructure are resources in which the nation has invested over the course of three decades to ensure United States preeminence in all activities. At present, demand for program support at these facilities is great and the supply, as with all resources, limited. This potential capacity problem highlights the need for management strategies that will maximize access to the national ranges for all sectors of the U.S. space program: Military, civil government, and private commercial. The Department of Defense, the National Aeronautics and Space Administration, and the Department of Transportation are working in concert to develop the means whereby Federal launch property and services can be made available to the commercial launch industry in a manner that enables it to compete effectively in the world market for launch services.

Pursuant to its authority under section 15 of the Commercial Space Launch Act and consistent with the President's directives in the National Space Policy, the Department of Transportation is working to ensure that government launch property and services requested by launch firms are priced in a manner that provides maximum encouragement to the United States commercial launch industry. The Department is also working, in consultation with other Federal agencies, to establish allocation of risk principles and insurance requirements that are appropriate for commercial launch activities conducted at national ranges.

Safety Roles and Responsibilities

The Federal Government plays two distinct roles related to safety in the context of commercial launch activities. The Department of Transportation bears responsibility for ensuring, through its licensing process, that proposed launch activities are not hazardous to public health and safety or the safety of property. The Department's exclusive and continuing safety authority extends to such activities regardless of whether they are staged at private or government launch facilities.

Before the Department's Office of Commercial Space Transportation can issue a launch license, it must review an applicant's proposed safety operations. In order to secure approval for its safety operations, an applicant must demonstrate that it can marshall the resources needed to prepare and launch a launch vehicle safely. These resources can be assembled in a number of ways: A company can choose to conduct all safety operations itself; it may rely on government-provided property and services to support its safety operations; or it may choose to perform safety operations through some arrangement whereby private and government resources are combined. In any case, the company must demonstrate that all aspects of its proposed launch activities will be conducted safely.

In addition, the Federal Government also operates, through the Air Force and NASA, a number of launch ranges and related launch facilities. Numerous safety-related operations are conducted at these ranges. Some of these operations, such as those pertaining to flight safety, can be provided under contract as a service to commercial launch firms. Range operators also conduct safety-related operations that derive from their responsibility to protect government property and personnel. These include safety inspections and monitoring, as well as certain other safety functions performed on a mandatory basis for all range users. Most commercial firms have indicated that they plan to contract with national range operators for flight safety support as the means for obtaining safety approval from the Department of Transportation.

Comments on the Interim Regulations

The Office received 13 comments on its interim licensing regulations. Of this total, two were submitted by private individuals, seven from launch firms and other aerospace companies, one from a coalition of media associations, one from a law firm that represents telecommunications clients, and one from a Federal agency. In addition, the Office also received comments from the House Committee on Science and Technology.

Most of the comments received by the Office expressed general support for the licensing policies and procedures articulated in the interim rule. Several commenters, however, raised questions concerning the standard for granting "mission approval", that is, the standard for determining that a proposed launch activity is not objectionable from the standpoint of safety, United States national security or foreign policy interests, or United States international obligations. Specifically, commenters expressed concern that the terms "national security" and "foreign policy" are not defined in the regulations and could be interpreted too broadly.

The Office wishes to emphasize again the guiding principle established by the Commercial Space Launch Act in this area: the "provision of launch services by the private sector is consistent with the national security interests and foreign policy interests of the United States and would be facilitated by stable, minimal and appropriate guidelines that are fairly and expeditiously applied." As the agency charged with implementing the Act, the Department of Transportation views this passage as forming the basis for a presumption that proposed commercial launch activities are consistent with national interests. Thus, the purpose of the licensing process, is so far as national security and foreign policy issues are concerned, is to identify and, whenever possible, ameliorate specific problems with a proposal, not to determine that each and every proposal is generally consistent with those interests.

However, the Office also wishes to emphasize again the consideration of national security and foreign policy factors is required in the first instance by the Commercial Space Launch Act, not commercial launch regulations: the Act requires the Office to consult with the Departments of Defense and State on all matters affecting United States national security or foreign policy interests.

The Office also received comments that focused on the treatment accorded payloads in the course of Mission Review. These comments were filed by a coalition of organizations representing entities engaged in news gathering and dissemination ("the Media Parties"), as well as by a law firm specializing in telecommunications matters. Specifically, the commenters expressed some concern that, as drafted, the regulations seemed to suggest the possibility of redundant regulation for payloads that are already subject to payload regulation by other Federal agencies, notably the Federal Communications Commission (FCC) and the National Oceanic and Atmospheric Administration of the Department of Commerce (NOAA). The Office recognizes that some clarification of its policies and procedures concerning approval of proposed missions may be helpful in order to eliminate any confusion concerning the Office's role relative to Federal agencies with exclusive responsibility for regulating satellites or satellite services. This matter is discussed in greater detail in the Section-by-Section Analysis.

The Media Parties also proposed modifications to Mission Review that

are intended to provide procedural safeguards to applicants whose commercial space proposals may involve activities protected by the First Amendment to the Constitution. In the view of the Media Parties, without these modifications, the regulations may impinge on the First Amendment rights of news organizations.

The Office has not adopted these proposed modifications because they would have the effect of distorting the licensing process. To the extent that a proposal to launch a communications or remote sensing satellite raises First Amendment issues, those issues will be addressed by the agencies with exclusive authority for regulating these satellites or the services provided by them: the FCC or NOAA. Such issues do not fall within the scope of the Office's authority for commercial launch activities and, thus, are not addressed in the course of its licensing process. The Office's sole non-safety concern regarding FCC or NOAA regulated payloads is that such satellites not be launched until they are licensed by those agencies.

Another commenter suggested that Mission Review should examine the impact of proposed new payloads on future, as well as current, uses of space. The Office does expect that its review of such a payload would focus on safety, national security or foreign policy implications associated with the payload. In addition, reviews would also focus on those impacts associated with a new payload that may occur in the reasonably foreseeable future. However, the Office does not consider open-ended speculation regarding possible future uses of space by public and private entities, both domestic and foreign, to be consistent with the well-defined and expeditious processing of applications required by the Act.

The Office received comments from the House Committee on Science and Technology that touched on a number of subjects in the regulations. First, the Committee directed the Office's attention to the fact that since "payloads" are defined as "objects", not people, by the Act, there could be a problem with the Office seeking to offer guidance to private entities who may be planning manned launch activities. Indeed, several such entities have consulted with the Office on a number of occasions and a representative of one start-up firm sits on the Department's Commercial Space Transportation Advisory Committee.

With regard to "payloads" as defined by the Act, the Office does not see this term, however defined, as an impediment to exercising its role as the point of contact within the Federal Government for private entities planning manned launch activities. Neither the Act nor the Report that accompanied the Act at passage indicates that "launch of a launch vehicle" should be read exclusively as launch of an *unmanned* launch vehicle. While it is clear that the Act was drafted primarily for the launch activities most likely to occur in the near term, commercial launches of unmanned rockets, the Report clearly states that "[t]he Act currently provides adequate supervision for all *non-Governmental* (commercial or noncommercial) space launches * * *." Regardless of the type of launch activity contemplated by a private entity, manned or unmanned, the Federal Government must be prepared to provide effective guidance. Only in this manner can the Government avoid the unsatisfactory administrative response that firms proposing commercial ELV launches experienced prior to issuance of Executive Order 12465 and passage of the Act.

The Committee also asked several questions concerning the Office's research and analysis program, which is intended to enhance the technical resources the Office needs for effective implementation of the Act. This program consists of studies to be conducted over the course of two years. The Committee asked how the Office can handle private launch site proposals on a case-by-case base, as provided in the regulations, within the statutorily prescribed 180 days or how a meaningful rulemaking proceeding on private launch sites can begin if the Office's safety research and analysis will not be completed for two years.

The Office will review proposed private launch site operations on an *ad hoc* basis relying, as an interim measure, on existing government launch expertise, experience, and safety practices as references. In this way reviews will be conducted thoroughly and within the statutory time limits even though there are not now published standards to guide firms planning to conduct private launch site operations. Indeed, such standards cannot be promulgated until adequate data and analysis has been assembled to support a rulemaking.

Any rulemaking initiated in the near-term on private launch site operations will focus on regulatory *policy* issues; that is, the appropriate approach the Office should take in developing policies and procedures for licensing commercial launch site operations. Thus, both review of private launch site operation proposals and pre-rulemaking notice and comment activity focused on licensing issues can be conducted concurrently with ongoing safety research. Further, although the entire safety research effort may take two years to complete, individual studies will be completed throughout that period, some within the next six months to a year. The results of these studies will form the basis for the Office's basic technical capability, including safety evaluation criteria and a data base for future safety standards. It should be noted that safety research is a continuing and critical component of every safety regulatory program, as demonstrated by the extensive on-going research and analysis conducted by other constituent agencies of the Department of Transportation, such as the Federal Aviation Administration or the National Highway Traffic Safety Administration.

In the area of worker safety, the Committee suggested that there is no need to duplicate the requirements of the Department of Labor's Occupational Safety and Health Administration (OSHA) which would apply to worker safety in the context of licensed launch activities. The Office has no intention of doing so. The Act gives the Office comprehensive safety authority for commercial launch operations, thus raising an issue concerning concurrent authority in this area. As in other areas where there is concurrent safety authority, such as aviation, there is a question concerning the more appropriate approach to safety, OSHA's or that of the agency with primary authority for the activity involved. At this time, the Office will not develop safety requirements for the specific purpose of protecting workers involved in commercial launch operations. OSHA requirements will apply to these activities until the Office and OSHA determine that it is appropriate to do otherwise.

The Committee also suggested that the Office prescribe a format for required information and use forms where appropriate. Although the Office has not ruled out adoption of a required format at some future time, it continues to believe that, for the time being, applicants should organize required information in a manner that reflects the organization of their safety operations. In order to encourage innovation, the Office has tried to accord applicants maximum flexibility and to emphasize content, rather than form. The information requested was identified and organized in close cooperation with NASA and the approach was discussed informally with launch companies before rulemaking was initiated. They all supported our approach then and, in

their formal comments on the rule, have continued to do so.

With regard to license fees, the Committee favors incorporating such fees in the regulations to cover the costs associated with processing applications. The Department strongly supports user fees in all transportation modes. The Office intends to consider establishing reasonable fees for licensing processing, balancing the desirability of reasonable fees with its responsibility to encourage and promote a private launch industry.

The committee also alerted the Office to the need for further clarification of some of the definitions contained in the regulations. The Office has made appropriate revisions to its definitions and these, along with other revisions, are discussed in the section-by-section analysis that follows.

Section-by-Section Analysis

Part 400—Basis and Scope

Section 400.1 indicates that the commercial space transportation regulations derive from both the Federal Government's domestic responsibilities for commercial launch activities as well as the obligations it has assumed under international agreements, particularly the obligation under Article VI of the 1967 Outer Space Treaty to provide authorization and continuing supervision for such activities.

Section 400.2 specifies the launch activities for which the regulations provide guidance: all United States launch activities except amateur rocket activities and the launch activities of the United States Government. As the Office stated in its initial policy statement on licensing, its licensing policies and procedures have been developed primarily for the private commercial launch activities that are currently being proposed: commercial expendable launch vehicle (ELV) launches. However, consistent with the legislative history of the Act, the Office's regulatory guidance also provides adequate supervision for any other non-Federal launch activity. Thus, launch activities falling within the scope of the Office's authority may include activities conducted for experimental, developmental, or research purposes as well as those conducted without any apparent profit motive.

At the same time, neither the Act nor its legislative history evinces an intention to require licenses for small scale rocket launches conducted for recreational or educational purposes at private sites. These launches, which number annually in the millions, are currently subject to state and local regulation, self-regulation by the organizations sponsoring these activities, and Federal airspace requirements. These existing guidelines and requirements have been effective for purposes of protecting public safety and any other national interest that may be associated with these activities.

Part 401—Organization and Definitions

Section 401.1 identifies the operating unit within the Department of Transportation with primary responsibility for implementing the Department's authority under the Act, the Office of Commercial Space Transportation. Section 401.3 identifies the Director of Commercial Space Transportation as the official within the Department to whom the Secretary's authority for commercial space transportation has been delegated.

Section 401.5 contains definitions of the major terms used in the regulations. The definitions of "launch" and "operation of a launch site" are intended to convey the complementary, but nevertheless distinct, nature of these two activities. A launch centers on the placement, or attempted placement, of a specified launch vehicle and/or its payload in a suborbital trajectory or in space. A launch license authorizes a launch to be conducted in order to achieve certain mission objectives. The license holder is legally responsible for the proper conduct of such a launch. Although a launch license would seem to be oriented toward singular events, one license could cover a specified series of launches where the same safety resources will support several identical or similar missions.

In contrast, the operation of a launch site involves continuing operations at a permanent location. A license covering such operations authorizes a person to operate a launch range facility and to offer approved services to launch companies.

The Office has determined that the inclusion of a definition for "commercial launch activities" in the Interim Final Rule was unnecessary and has deleted it.

Part 404—Regulations and Licensing Requirements

The Commercial Space Launch Act establishes the licensing standards for commercial launch activities. Section 9(b) of the Act directs the Office to issue a license once it has determined that an applicant meets the requirements for a license identified in section 8(a)(1) of the Act. These include current requirements of Federal agencies which apply specifically to the launch of a launch vehicle or operation of a launch site. If, however, the Office determines, in consultation with the appropriate agencies, that any such Federal requirement is not needed to protect public safety, the safety of property or the national security and foreign policy interests of the United States, then section 8(a)(2) permits the Office to eliminate that particular requirement as a requirement for a license. Moreover, section 8(b) authorizes the Office to prescribe new requirements for commercial launch activities. Together these provisions confer broad authority upon the Office to craft efficient regulatory guidance with specific applicability to private launch activities.

If the Office wishes either to eliminate an existing Federal requirement or to prescribe new ones in order to implement the provisions of the Act, a proceeding must be conducted that would involve notice to and comment by the public. Part 404 of the regulations sets out the procedures the Office will follow when conducting rulemaking proceedings and explains how interested parties may participate.

Section 8(c) of the Act gives the Office discretionary authority to waive a licensing requirement for a license applicant if that waiver would be in the public interest and would not jeopardize public health and safety, safety of property, or any national security or foreign policy interest of the United States. Part 404 also establishes procedures for waiver requests by individual applicants.

With regard to existing Federal requirements, the Office has determined that the only provisions with direct applicability to private launches are those of Part 101, Subpart C, of the Federal Aviation Regulations, 14 CFR 101.21–25, regulating all unmanned rocket activities. The Office of Commercial Space Transportation and the Federal Aviation Administration have agreed that, henceforth, requirements pertaining to the use of domestic United States airspace for commercial launch purposes will be handled by the Office as an intradepartmental matter on behalf of licensees.

It should be noted that the Office's safety authority extends to protecting workers at commercial launch sites. For the present, however, the Office will not prescribe any standards or requirements for worker safety in the context of licensed launch activities. Instead, the appropriate requirements of the Department of Labor's Occupational Safety and Health Administration will apply to privately conducted launch activities.

Part 405—Investigations and Enforcement

The Office will rely on the provisions of Part 405 to ensure compliance with the terms and conditions of licenses. Section 405.1 requires licensees to cooperate with anyone acting on behalf of the Office to monitor licensed activities, including payload-related activities covered by section 6(b)(2) of the Act. Monitoring will be conducted in the least intrusive manner possible and only for the purpose of determining whether such activities conform to applicable requirements.

Section 405.3 deals with modification, suspension or revocation of licenses. The Office may modify a license either on its own initiative or pursuant to a request by the licensee. All modifications must conform to the same standards, identified in the Act, that apply to initial licenses.

Paragraph (b) of § 405.3 indicates that noncompliance with any requirement applicable to a licensed activity is grounds for suspension or revocation of a license. Moreover, § 405.5 provides for emergency orders to halt any launch activity detrimental to national interests, while § 405.7 provides that acts of noncompliance may be punishable by civil penalties.

With regard to the Director's emergency order authority, which is explicitly mandated by section 11 of the Act, the Office is aware of the concern, expressed through the Commercial Space Transportation Advisory Committee, associated with the exercise of this authority. One of the Office's major goals has been to encourage and promote the industry through carefully considered policies and procedures designed to eliminate, wherever possible, regulatory uncertainties. Thus, the Office wishes to emphasize that it views the exercise of this authority as an extraordinary measure to be relied upon in truly emergency circumstances.

Part 406—Administrative Review

Part 406 describes the Office's procedures for implementing the Act's administrative review provisions. Section 12 of the Act requires that an opportunity for a hearing be accorded persons seeking reconsideration of certain decisions made by the Office. Specifically, persons who have applied for a license may challenge a decision not to issue a license or challenge the conditions attached to a license that has been granted. In addition, a person holding a license may dispute a decision to modify, suspend or revoke that license or to issue an emergency order. Similarly, a payload operator or owner may request a review of the facts or issues pertaining to a payload whose launch the Office has decided to prevent, as may a person against whom the Office has assessed a civil penalty. In these circumstances the Office will, if so requested, provide an opportunity for an impartial hearing on the matter at issue. Part 406 sets out the procedures governing initiation and conduct of such proceedings.

Part 411—Policy

Part 411 establishes the policies of the Office of Commercial Space Transportation for licensing commercial launch activities, including launches, launch site operations, or some combination of the two activities. These policies augment the general application procedures set out in Part 413 of the regulations and the launch license review procedures contained in Part 415 of the regulations.

Section 411.3 identifies the two reviews, Safety Review and Mission Review, through which the Office will evaluate proposed ELV launches. Although the Office will be responsive to proposals involving manned launches, such proposals may involve issues that require reviews different from or in addition to these two reviews.

In order to accord the industry both flexibility and certainty in the course of developing commercial launch proposals, the Office may conduct Safety Review and Mission Review independent of each other and in the order, sequential or concurrent, appropriate to the applicant's needs. For example, an applicant may secure approval for a proposed mission early in the planning stages of a launch activity and apply later for approval of the safety operations proposed to support an actual launch. The record upon which to base licensing decisions thereby can be developed in a manner that responds to the planning needs of applicants.

Section 411.3 also discusses requests for licenses authorizing the operation of commercial launch sites. Editorial revisions have been made to this section to make it clear that this activity is comparable to the operation of a commercial airport. Although a separate license covering the operation of a launch site is contemplated by the Act, the regulations were not developed specifically for implementing the Office's authority in that area. Devising an appropriate regulatory framework for commercial launch site operations involves careful consideration of a wide range of complex issues, particularly those relating to requirements or standards for implementing the Office's safety authority. The Office has begun investigating these issues as part of its comprehensive research and analysis program.

At the same time, the Office has received a number of inquiries expressing interest in establishing permanent commercial launch sites and wishes to be responsive to any proposal that may be submitted in the near future. In order to do so, the Office will rely on its Safety Review process, discussed below, as an appropriate general framework for initiating an assessment of commercial launch site proposals.

Section 411.5 addresses safety approval, one of two approvals an applicant must secure in order to be granted a license. At present, there are no safety standards or requirements that have been developed specifically for commercial launch activities. Therefore, pending completion of efforts to develop these standards and requirements, the Office will make case-by-case determinations regarding safety operations that commercial firms propose to conduct themselves. The Office will supplement the resources available to it, when necessary or appropriate, by relying on the experience and expertise of other Federal agencies. Minor editorial changes have been made to this section in the final rule.

Section 411.7 discusses mission approval. This is the other approval which must be secured in order for an applicant to be granted a launch license. The Office must assess proposed missions from the standpoint of both the national interests and international obligations of the United States. The review will encompass such factors as the nature and purpose of the proposed payload, the impact of the payload on existing uses of space, and the proposed flight plan.

With specific regard to national security and foreign policy interests, the Office is required to consult with the Departments of Defense and State, the Executive Branch agencies with primary responsibility for safeguarding U.S. national security and foreign policy interests, respectively. The Office must ensure that these agencies are apprised of potential commercial launch activities in order for their views to be taken into account. The Office wishes to emphasize again that, as a general matter, Congress has declared privately conducted commercial launches to be consistent with the national security and foreign policy interests of the United States. The Office fully recognizes that the commercial viability of providing such services on a routine basis requires

that review of proposed missions not be encumbered by unnecessary process. Therefore, the Office will seek to identify specific problems associated with a proposed mission, not seek to determine *de novo* that each launch proposal is consistent with United States interests.

However, the Office has revised § 411.7 of the regulations to correct any impression created in the Interim Rule that the Office was establishing an evidentiary standard for adverse licensing decisions that is higher than or different from that set forth in the Act.

The mission of most proposed orbital launches will be to place a payload in space. Thus, the most significant part of the Office's review of proposed missions will pertain to the payload to be launched. The Office wishes to clarify the nature and scope of its authority with regard to payloads launched by commercial launch firms. A launch license issued by the Office authorizes the licensee to launch a launch vehicle and any payload to be carried by the launch vehicle. In order to authorize a launch involving a payload, the Office must first identify the nature of the payload to be launched. This identification is necessary in order for the Office to determine how to proceed, in practical terms, with a review of a proposed mission. There are two general options: (1) The payload the applicant proposes to launch is identified as one which is subject to existing payload regulation. At present, this category includes only telecommunications satellites licensed by the Federal Communications Commission (FCC) and remote-sensing satellites licensed by the National Oceanic and Atmospheric Administration of the Department of Commerce (NOAA). (2) The payload the applicant proposes to launch is identified as one which is not subject to existing payload regulation. Only for this latter category will the Office initiate a review, pursuant to its authority under section 6(b)(2) of the Act, in order to determine that the proposed launch of the payload will not jeopardize public health and safety, safety of property or any national security or foreign policy interest of the United States. The Office does not conduct such a review for any payload that requries either an FCC or NOAA license to launch or operate. Rather, pursuant to section 6(b)(1) of the Act, the Office simply requires that the appropriate license be secured before the payload can be launched. The Office will not examine any issues pertaining to payloads licensed by the FCC or NOAA before license application is made to either of those agencies or during the pendency of any review of a license application at either agency. Nor will the Office re-examine any matter associated with a payload that was or could have been subject to FCC or NOAA review during their respective licensing processes. In order to eliminate any lingering ambiguities in this area, the policies and procedures in the regulations pertaining to proposed missions have been revised or clarified, as appropriate. It should be noted, however, that in the course of Safety Review the Office will seek to ascertain whether all applicants possess the requisite resources and expertise to conduct safely any planned payload-related operations as part of the process whereby a launch vehicle is prepared and launched.

Payloads that are subject to review by the Office under section 6(b)(2) of the Act include all domestic payloads not presently regulated by the FCC or NOAA and all foreign payloads. The Office is authorized to determine whether the launch of any such payload would jeopardize public safety, safety of property, or any national security or foreign policy interest of the United States. If necessary, the Office may act to prevent the launch of the payload in question. As it has done in other areas, the Office has molded its policies and procedures carefully in this area so that legitimate Federal interests associated with proposed launches of these payloads are not served at the unnecessary expense of commercial space enterprise. Thus, the Office will exercise its authority under section 6(b)(2) in a manner that minimizes regulatory uncertainties for those planning or sponsoring new space applications and missions involving foreign payloads.

Section 411.9 discusses the information the Office will require applicants to submit in order to initiate review of applications. The Office's approach to this information corresponds to its goal of fostering reliable, low-cost commercial space transportation services. The Office's information requirements have been organized intentionally into general categories that identify the basic information needed to initiate an appropriate review. However, although all the requested data must be provided for an application to be considered complete, the Office has not prescribed any particular format for submitting it. Because commercial firms may develop new approaches to the design of launch vehicles, the delivery of launch services, or the location and organization of launch operations, information, submissions may reflect the unique structure or organization of their launch operations.

The Office has made a number of changes to the information requirements identified in the Interim Rule. The Office expects to continue refining these requirements based on the products of its research program and consultations with other agencies, as well as formal and informal interaction with the commercial space industry. Therefore, the Office has concluded that this information should not be included in its published regulations. So that prospective applicants are assured of having ready access to the most current and accurate version of the Office's information requirements, they will be set out in a separate document that will be available upon request. The first such version of the Office's information requirements is published as an appendix to this preamble.

Part 413—Applications

Part 413 sets out general license application procedures. These procedures apply to all commercial launch activities, regardless of whether an applicant seeks a license to launch a vehicle, operate a launch site, or for a combination of the two. The application procedures in Part 413 are supplemented by the provisions of Part 415, which contains a detailed description of the review procedures for launch license applications. A separate part has been reserved for future regulations addressing applications for licenses authorizing launch site operations.

Since the nature of a proposed launch activity affects the timing and scope of the Office's review, as well as the degree to which other Federal agencies will be involved, § 413.3 encourages prospective applicants to initiate preapplication consultations with the Office of Commercial Space Transporation.

Section 413.7 contains revised procedures for handling confidential information. These revisions have been made to bring this section into conformity with section 9(c) of the Act, which directs that certain information provided to the office by applicants not be disclosed unless the Secretary determines that withholding such information is contrary to the public or national interest.

Section 413.9 outlines the process for reviewing all applications. Section 413.9(a) has been amended to indicate that information required to initiate a review of an application is available upon request.

BEST COPY AVAILABLE

Section 413.9(b) states that an application is accepted for review by the Director if it is substantially complete; that is, if it contains sufficient information for a meaningful review. Once an application is accepted for review, § 413.9(d) indicates that the Director will initiate an appropriate interagency review. The Office, not the applicant, will assume the burden of shepherding the application through the review process. Additionally, the reference in § 413.9(d) to an "appropriate" review is intended to make clear that the administrative response to an application may not be standard or uniform in all circumstances; the Office has taken great care to insure that each review is tailored to the application's particular characteristics. In this fashion, the Office intends to avoid any unnecessary regulatory stumbling blocks to proposed launch activities.

Section 413.9(e) indicates that a determination on a license application will be made within 180 days of receipt. As a matter of policy, however, the Office intends to conduct all application reviews on an expedited basis and anticipates that most determinations will be made well before this statutory deadline.

All licenses issued will contain terms defining the activity authorized by the license and the person responsible for conducting that activity. In addition, conditions will be incorporated into all licenses to ensure compliance with statutory and regulatory requirements. Section 413.15 addresses certain standard conditions, including the need for an on-site mechanism to verify that the licensed activity conforms to information that was submitted to and reviewed by the Office during the application review process.

Section 413.17 indicates that a license authorizing a launch activity is separate from the license required for any satellite to be launched. The Act preserves the existing authority of Federal agencies with primary responsibility for payload regulation. At present, this includes only the FCC and NOAA, which are responsible for licensing telecommunications and remote sensing satellites, respectively. Thus, issuance of a launch license has no effect on the exclusive authority of the FCC or NOAA to license such satellites or the services provided by them.

Section 413.19 establishes the applicant's responsibility for the continuing accuracy of information submitted as part of an application review.

Part 415—Launch Licenses

Part 415 establishes procedures for reviewing launch license applications and the general standards for approving such applications. The provisions of this part apply only to prospective launch license applications and should be read together with the general application procedures in Part 413. A future regulatory proposal addressing commercial launch site operations will establish procedures and standards specifically for license applicants seeking authorization for that activity in a separate part.

Section 415.3 identifies the proposed launch activities that will require a launch license. Any person proposing to launch from U.S. territory must obtain a license authorizing the launch. A U.S. citizen proposing to launch from U.S. territory or from international territory must also obtain such a license, unless (in the case of launches from international territory) another nation has agreed to exercise jurisdiction over the launch. Foreign corporations, partnerships, joint ventures, associations or other entities controlled by U.S. citizens do not need licenses to conduct a launch from foreign territory, unless the foreign nation involved has agreed that the U.S. shall exercise jurisdiction over the launch.

Section 415.5 identifies the two approvals that must be secured in order for a launch license to be issued: safety approval and mission approval. Safety Review and Mission Review are conducted to determine whether these approvals can, in fact, be given. Once secured, no other approval is required from the Office in order for an applicant to be granted a license for an ELV launch.

The Office will accept applications for Safety Review, Mission Review, or for a determination that the launch of a payload covered by section 6(b)(2) of the Act will not be prevented, independent of one another and before submission of an application for a license. Section 415.7 makes clear that any approval or determination made on such applications will be made part of a licensing record. Thus, when an applicant does apply for a launch license, any approval or determination previously made that relates to the activity for which a license is sought remains valid. The Office will not duplicate a relevant review as long as no material changes have been made in matters previously reviewed and approved.

Section 415.9 identifies standard conditions for launch licenses. One of these is securing third-party liability insurance coverage. In exercising its authority in this area, the Office will be looking to set required insurance amounts that accurately reflect the potential losses associated with launch failures. The Office has begun several studies to determine what these amounts should be. For the time being, the Office will prescribe insurance requirements for each licensed activity on a case-by-case basis.

The final regulations include a new provision, § 415.10, which sets out requirements pertaining to the registration of objects launched into space.

Subpart B of Part 415 focuses on Safety Review. Section 415.13 identifies the major elements of Safety Review: the proposed launch site, procedures, personnel and equipment. Section 415.15 notifies applicants that Safety Review can be requested either as part of the license request or before a license request is submitted. This provision responds to the need some prospective licensees may have for explicit approval of their safety operations at an early planning stage.

Section 415.17 of the interim regulations set out the information requirements for Safety Review applicants. This section has been deleted. The information currently required for a Safety Review is contained in the appendix to this preamble. It should be noted that launches from sites with pre-approved safety operations will be treated differently from those occuring at other sites. At present, the only sites with pre-approved safety operations are Federal launch ranges. In the future, this category would also include commercial launch sites operated under the authority of a license issued by the Office.

Subpart C of Part 415 focuses on Mission Review. Section 415.23 states that for Mission Review, as for Safety Review, applicants may request approval either as part of a license request or before such a request is made. Sections 415.25 and 415.27 of the interim regulations set out the information requirements for applicants seeking mission review or a determinations on a payload not regulated by FCC or NOAA. These sections have been deleted. Information required for Mission Review, including information pertaining to payloads that are not regulated by the FCC or NOAA, is set forth in the appendix of this preamble. The nature of the proposed mission will affect both the nature and the quantity of information needed by the Office to conduct its review. For

proposals which involve licensed payloads, the payload requirements of Mission Review will be satisfied by the issuance of a license by the responsible Federal agency. Proposals involving other kinds of domestic payloads or foreign payloads must be accompanied by more extensive information, reflecting the more extensive review such proposals must receive from the Office.

Subpart D of Part 415 identifies circumstances wherein applicants may be required to submit information to the Office as part of Safety Review, Mission Review, or both, in order to satisfy the requirements of the National Environmental Policy Act. This information will be needed when some element of a proposal is not covered or addressed by existing environmental documentation on the effects of launch activities.

Executive Order 12291, Regulatory Flexibility Act, and Paperwork Reduction Act

The interim regulations were evaluated under Executive Order 12291, "Federal Regulation," dated February 17, 1981, and the Department of Transportation's Regulatory Policies and Procedures, dated February 26, 1979. The regulations were not considered to be "major," as defined by E.O. 12291, because they will not have an annual cost impact exceeding $100 million; they will not cause a major increase in costs or prices for consumers, individual industries, government agencies, or regions; and they will not have a significant adverse impact on competition, employment, investment, productivity, innovation or on the ability of United States-based enterprises to compete with foreign-based enterprises in domestic or export markets. The regulations were considered to be "significant" as defined by the Department's Regulatory Policies and Procedures because of the novelty of space transportation as a private sector activity, the interest of the public and other Federal agencies, and the effect of the regulations on the competitive position of United States launch firms. The Office prepared a Regulatory Evaluation to accompany the interim regulations, which was made available for public review and comment in the rulemaking docket. Since the final regulations are not materially different from the interim ones, the Office considers all regulatory analysis prepared for the interim regulations to be applicable to the final ones. The regulations are largely procedural in nature and are intended to eliminate regulatory obstacles to private launch firms, large or small. Small entities are likely to be involved in launch activities and, as a consequence, affected by the regulations.

The regulations do not impose significant economic costs on them. Therefore, it is certified that the regulations will not have a significant economic impact on a substantial number of small entities.

National Environmental Policy Act

The Office completed an environmental assessment of the commercial space transportation program and made the assessment available for public inspection and comment. The programmatic assessment did not identify any significant impacts that the conduct of commercial launch activities would have on the human environment. However, certain factors associated with individual launch proposals were not addressed in the assessment and may require further review during the licensing process.These include use of new propellants, new site development, or environmental effects associated with some payloads in the event of a launch accident. Copies of the assessment may be requested from: Office of Commercial Space Transportation, S–50, Washington, DC 20590. Based on the assessment and comments received on it, the Office published a finding of No Significant Impact in the **Federal Register** on November 19, 1986.

List of Subjects in 14 CFR Parts 400, 401, 404, 405, 406, 411, 413, 415

Administrative practice and procedure, Space transportation and exploration.

(Commercial Space Launch Act of 1984, Pub. L. 98–575, October 30, 1984)

Issued in Washington, DC, on March 24, 1988.

Courtney A. Stadd,

Director, Office of Commercial Space Transportation.

Appendix—Commercial Space Launches: Information Required for Applications

(**References**: 14 U.S.C. Parts 411–415)

I. General Requirements

(A) Applications must be in writing and filed in duplicate with the Office of Commercial Space Transportation, S–50, 400 Seventh Street, SW., Washington, DC 20590. Attention: Applications Review Staff.

(B) The original of the application must be signed in accordance with § 413.5 of the regulations, 14 CFR 413.5.

(C) Applications should identify the name and address of the applicant, and the name, address, and telephone number of person(s), including counsel, to whom inquiries and correspondence should be directed.

II. Safety Review

(A) Launches from Federal or Licensed Launch Sites

Applicants proposing to launch from Federal launch ranges or commercial sites operated under the authority of a license issued by the Office must provide:

(1) Documentation verifying that the applicant has been accepted by the operator of a launch range or site appropriate for the proposed mission; and

(2) A statement identifying the party (operator or applicant) responsible for conducting or providing, whether in whole or in part, any element of safety operations discussed in §§ 415.11 and 415.13 of the regulations, 14 CFR 415.11 and 415.13. In instances where the applicant will assume primary responsibility for one of these elements, detailed information must be provided describing how responsibility and accountability for safety will be assigned between the operator and applicant; and

(3) An analysis of any hazardous activity that will be solely under the control of the commercial applicant, such as orbital transfer stage operations. The analysis must describe the specific hazards associated with the activity and procedures planned to minimize public exposure to such hazards.

(B) Other Launches

All applicants not covered by paragraph (A) of this section must provide a Safety Analysis of their proposed operations in sufficient detail for the Office to conduct an indepth review of safety operations, as discussed in §§ 411.3, 411.5 and 415.11–415.17 of the regulations, 14 CFR 411.3, 411.5, 415.11–415.17. The applicant's Safety Analysis must identify and evaluate all hazards to public health and safety or to off-site property that may occur during prelaunch, launch or on-orbit operations; procedures to be employed to control the hazards identified; qualifications of range safety personnel and other critical personnel responsible for assuring hazard controls; design characteristics of range safety systems (flight and ground) and their effectiveness in assuring a safe launch operation; and any residual risks to public health and safety or to off-site property that may be associated with the applicants proposed launch

operations. The following information typifies the data that should be addressed and included in the application:

(1) An identification and description of the launch site from which the proposed launch will take place, specifically describing:

(i) The location, size, shape and geographic characteristics of the site;

(ii) The proximity to populated areas;

(iii) Any local activities that may be affected by the launch such as air traffic, shipping, and offshore fishing; and

(iv) Proposed launch corridors from the site and predicted impact areas.

(2) A description of the role and responsibilities of personnel performing safety or safety related functions for the proposed launch operation. Details should include:

(i) A description of the planned organization, key personnel, and lines of authority and responsibility for accomplishing pre-launch and launch safety functions.

(ii) The methodology proposed for selection, training and testing of the Launch Safety Office and other key personnel critical to assuring Launch Safety System readiness for launch, as well as prior experience, training, etc. of such personnel.

(iii) Description and explanation of how the methodology proposed relates to assuring the successful control of the proposed launch.

(3) A description of tracking and/or data acquisition equipment to be used for safety purposes. This description should include:

(i) An identification of the types of tracking equipment to be used and their performance capabilities;

(ii) The location and placement of equipment; and

(iii) The types, performance capabilities and specifications of other aids to be used including computational equipment, display systems, and recording systems.

(4) A description of proposed flight safety systems including:

(i) The type, design and performance specifications of the flight termination system including transmitters, receivers, ordinance, etc.;

(ii) Schematics and wiring diagrams; and

(iii) Certification and verification procedures for the proposed flight safety system.

(5) Documents outlining the proposed process and procedures to be followed for prelaunch ground safety, flight safety analysis, and flight safety operations, including copies of safety analyses performed to determine potential impacts, establish destruct criteria, unique hazards identified, etc. Examples of documents to be included are set forth below:

(i) Description of ground safety measures taken to protect public safety;

(ii) Flight safety analysis performed, analytical models used, etc. In order to demonstrate efficacy of the proposed process, the applicant is requested to provide examples of safety analyses it has performed to determine potential impacts, establish flight termination criteria, identify/control unique hazards, etc.;

(iii) Flight safety operation to be conducted, criteria proposed for flight termination, practice and testing exercises to be performed, emergency procedures, etc.;

(iv) Quality control and testing procedures for critical safety equipment components including tracking and flight termination; and

(v) Recovery procedures if applicable.

(6) Flight plan data as a function of time for launch vehicle and spacecraft including trajectory, azimuth, flight profile, and orbital elements. Examples of data to be included are set forth below:

(i) Profile plot of the planned flight trajectory, showing altitude versus range and trajectory for each expended stage;

(ii) A plan view of the flight trajectory, showing launch and trajectory azimuth, impact points for each stage, jettisoned component, or other impacting body;

(iii) Launch vehicle ground and IIP ground tracks with respect to all significant land masses shown in true geographical location; and

(iv) Description and definition of orbit.

(7) Description of the launch vehicle and its performance characteristics, as well as a description of any payload with a particular emphasis on hazardous systems. Examples of descriptions to be included are set forth below:

(i) Description of the launch vehicle configuration; major sections and components; weights and dimensions of each; rocket motors and propulsion systems, guidance system for each stage; and destruct system(s);

(ii) Description of payload design sufficient to determine unique flight safety hazards, hazardous materials involved, etc.; and

(iii) Thrust time history of each stage, maximum turn rates, plot of estimated vehicle weight versus time, analysis of vehicle integrity to meet flight environment.

(8) Other categories of data as determined by the applicant to demonstrate unique capabilities.

(C) Accidents and Mission Failures

All applicants must submit a plan which identifies:

(1) The procedures and criteria proposed for reporting accidents, incidents and mission failures to the Office.

(2) The applicant's investigation process and criteria for impounding data, establishing investigation boards, committees or officials.

(3) Individuals responsible for establishing an investigative process and for reporting accidents, incidents, and mission failures to the Office.

III. Mission Review

(A) The applicant must describe the launch vehicle and the location of the launch site.

(B) The applicant must submit a flight plan and staging data sufficient for evaluating such factors as the potential for land overflight, impacts of spent stages, and debris issues.

(C) The applicant must identify any unique hazards that may be posed by the launch derived from the nature of materials to be launched or potential abort or re-entry hazards.

(D) The applicant must identify the nature and ownership of any payload to be launched.

(E) The applicant must—

(1) Provide proof of application for or issuance of any license, authorization or other permit required by either the Federal Communications Commission (FCC) or the National Oceanic and Atmospheric Administration (NOAA) for the payload which is to be launched; or

(2) If no FCC or NOAA license, authorization or permit is required for the payload which is to be launched, indicate whether the Office has made a determination on the payload, as provided in §§ 411.7, 415.21, and 415.23 of the regulations, 14 CFR 411.7, 415.21 and 415.23.

IV. Payload Determinations

(A) An applicant proposing to launch a payload not subject to FCC or NOAA regulation must provide:

(1) An assessment of safety issues anticipated by the applicant;

(2) A statement of the number of missions planned for payloads of the same or similar design;

(3) A description of the design and construction plans of the payload; and

(4) A description and definition of the proposed orbit, including altitude and inclination.

(B) The Office may require an applicant to submit other information, as appropriate.

Accordingly, Title 14, Code of Federal Regulations is amended by revising Chapter III to read as follows:

CHAPTER III—OFFICE OF COMMERCIAL SPACE TRANSPORTATION DEPARTMENT OF TRANSPORTATION (Parts 400–499)

SUBCHAPTER A—GENERAL

Part 400—Basis and scope.
Part 401—Organization and definitions.

SUBCHAPTER B—PROCEDURE

Part 404—Regulations and licensing requirements.
Part 405—Investigations and enforcement.
Part 406—Administrative review.

SUBCHAPTER C—LICENSING

Part 411—Policy.
Part 413—Applications.
Part 415—Launch licenses.

SUBCHAPTER A—GENERAL

PART 400—BASIS AND SCOPE

Sec.
400.1 Basis.
400.2 Scope.

Authority: Secs. 3, 6, 13, and 21, Pub. L. 98–575 (49 U.S.C. App. 2601 note).

§ 400.1 Basis.

The basis for the regulations in this chapter is the Commercial Space Launch Act of 1984, and applicable treaties and international agreements to which the United States is party.

§ 400.2 Scope.

These regulations set forth the procedures and requirements applicable to the authorization and supervision of all space launch activities conducted from United States territory or by United States citizens. The regulations in this chapter do not apply to amateur rocket activities or to space activities carried out by the United States Government on behalf of the United States Government.

PART 401—ORGANIZATION AND DEFINITIONS

Sec.
401.1 The Office of Commercial Space Transportation.
401.3 The Director of Commercial Space Transportation.
401.5 Definitions.

Authority: Sec. 4, Pub. L. 98–575 (49 U.S.C. App. 2601 note); 49 CFR 1.68.

§ 401.1 The Office of Commercial Space Transportation.

The Office of Commercial Space Transportation, referred to in these regulations as the "Office," is a unit within the Office of the Secretary of Transportation and is located in the Department of Transportation Headquarters, 400 Seventh Street, SW., Washington, DC 20590.

§ 401.3 The Director of Commercial Space Transportation.

The Office is headed by a Director appointed by the Secretary of Transportation to exercise the Secretary's authority to license and otherwise regulate commercial space launch activities and to discharge the Secretary's responsibility to encourage, facilitate and promote commercial space launches by the United States private sector.

§ 401.5 Definitions.

As used in this chapter—

"Act" means the Commercial Space Launch Act of 1984, Pub. L. 98–575.

"Amateur rocket activities" means launch activities conducted at private sites involving rockets powered by a motor or motors having a total impulse of 200,000 pound-seconds or less and a total burning or operating time of less than 15 seconds, and a rocket having a ballistic coefficient—i.e., gross weight in pounds divided by frontal area of rocket vehicle—less than 12 pounds per square inch.

"Director" means the Director of the Office of Commercial Space Transportation, or any person designated by the Director to exercise the authority or discharge the responsibilities of the Director.

"Launch" means to place, or attempt to place, a launch vehicle and/or payload in a suborbital trajectory, in Earth orbit in outer space, or otherwise in outer space.

"Launch activity" means the launch of a launch vehicle and any payload, the operation of a launch site, or both.

"Launch vehicle" means any vehicle constructed for the purpose of operating in, or placing a payload in, outer space, and any suborbital rocket.

"Licensee" means the person authorized by a license to conduct specified commercial launch activities and responsible for conducting such activities in conformance with applicable requirements.

"Mission" means the objective to be accomplished by a proposed launch and includes the general plan for achieving that objective.

"Operation of a launch site" means the conduct of approved safety operations at a permanent site to support the launching of vehicles and payloads.

"Payload" means an object which a person undertakes to place in outer space by means of a launch vehicle, and includes subcomponents of a launch vehicle specifically designed or adapted for that object.

"Person" means any individual and any corporation, partnership, joint venture, association, or other entity organized or existing under the laws of any State or Nation.

"Safety operations" means the personnel, equipment, facilities, documented plans and procedures, and any other resource needed for safe preparation and launch of a launch vehicle and its payload.

"State" and "United States" when used in a geographical sense, mean the several States, the District of Columbia, the Commonwealth of Puerto Rico, American Samoa, The United States Virgin Islands, Guam, and any other commonwealth, territory, or possession of the United States; and

"United States citizen" means:

(a) Any individual who is a citizen of the United States;

(b) Any corporation, partnership, joint venture, association, or other entity organized or existing under the laws of the United States or any State; and

(c) Any corporation, partnership, joint venture, association, or other entity which is organized or exists under the laws of a foreign nation, if the controlling interest in such entity is held by an individual or entity described in paragraph (a) or (b) of this definition. "Controlling interest" means ownership of an amount of equity in such entity sufficient to direct management of the entity or to void transactions entered into by management. Ownership of at least fifty-one percent of the equity in an entity by persons described in paragraph (a) or (b) of this definition creates a rebuttable presumption that such interest is controlling.

SUBCHAPTER B—PROCEDURE

PART 404—REGULATIONS AND LICENSING REQUIREMENTS

Subpart A—General

Sec.
404.1 Scope.
404.3 Filing of petitions to the director.
404.5 Action of petitions.

Subpart B—Rulemaking

404.11 General.
404.13 Petitions for extension of time to comment.
404.15 Consideration of comments received.
404.17 Additional rulemaking proceedings.
404.19 Hearings.

Authority: Secs. 6 and 13, Pub. L. 98–575 (49 U.S.C. App. 2601 note).

Subpart A—General

§ 404.1 Scope.

Pursuant to sections 8 and 13 of the Act, this part sets forth the procedures for issuing regulations to implement the Act and for eliminating or waiving requirements of Federal law otherwise applicable to the licensing of commercial space launch activities.

§ 404.3 Filing of petitions to the director.

(a) Any interested person may petition the Director to issue, amend or repeal a regulation, to eliminate as a requirement for a license any requirement of Federal law applicable to commercial launch activities, or to waive any such requirement in the context of a specific application for a license.

(b) Each petition filed under this section shall:

(1) Be submitted in duplicate to the Documentary Services Division, Attention Docket Section, Room 4107, U.S. Department of Transportation, 400 Seventh Street, SW., Washington, DC 20590;

(2) Set forth the text or substance of the regulation or amendment proposed, the regulation to be repealed, or the licensing requirement to be eliminated or waived;

(3) In the case of a petition for a waiver, explain the nature and extent of the relief sought;

(4) Contain any facts, views, and data available to the petitioner to support the action requested; and

(5) In the case of a petition for a waiver, be submitted at least 60 days before the proposed effective date of the waiver unless good cause for later submission is shown in the petition.

(c) A petition for rulemaking filed under this section shall contain a summary, which the Director may cause to be published in the **Federal Register**, which includes:

(1) A brief description of the general nature of the action requested; and

(2) A brief description of the pertinent reasons presented in the petition for instituting the rulemaking.

§ 404.5 Action on petitions.

(a) *General.* No public hearing, argument or other proceeding is held on a petition before its disposition under this section.

(b) *Grants.* In the case of a petition for a waiver, the Director may grant the waiver if the Director determines that the waiver is in the public interest and will not jeopardize public health and safety, the safety or property, or any national security or foreign policy interest of the United States. In all other cases, if the Director determines that the petition contains adequate justification, the Director initiates a rulemaking action under Subpart B of this part.

(c) *Denials.* If the Director determines that the petition does not justify initiating rulemaking action or granting the waiver, the petition is denied.

(d) *Notification.* Whenever the Director determines that a petition should be granted or denied, the petitioner is notified of the Director's action and the reasons supporting it.

Subpart B—Rulemaking

§ 404.11 General.

(a) Unless the Director finds, for good cause, that notice is impractical, unnecessary, or contrary to the public interest, a notice of proposed rulemaking is issued and interested persons are invited to participate in proceedings related to each substantive rule proposed.

(b) Unless the Director determines that notice and comment is necessary or desirable, interpretive rules, general statements of policy, and rules relating to organization, procedure, or practice are issued as final rules without notice or other proceedings.

(c) In the Director's discretion, interested persons may be invited to participate in the rulemaking proceedings described in § 404.19 of this Supbpart.

§ 404.13 Petitions for extension of time to comment.

(a) Any person may petition the Director for an extension of time to submit comments in response to a notice of proposed rulemaking. The petition shall be submitted in duplicate not less than three days before expiration of the time stated in the notice. The filing of the petition does not automatically extend the time for petitioner's comments.

(b) The Director grants the petition only if the petitioner shows a substantive interest in the proposed rule and good cause for the extension, and if the extension is in the public interest. If an extension is granted, it is granted as to all persons and is published in the **Federal Register**.

§ 404.15 Consideration of comments received.

All timely comments are considered before final action is taken on a rulemaking proposal. Late filed comments may be considered to the extent possible, provided they do not cause undue additional expense or delay.

§ 404.17 Additional rulemaking proceedings.

The Director may initiate any additional rulemaking proceedings, if necessary or desirable. For example, the Director may invite interested persons to present oral arguments, participate in conferences, appear at informal hearings, or participate in any other proceedings.

§ 404.19 Hearings.

(a) Sections 556 and 557 of Title 5, United States Code, do not apply to hearings held under this part. As a fact-finding forum, each hearing held under this part is nonadversarial and there are no formal pleadings or adverse parties. Any rule issued in a proceeding in which a hearing is held is not based exclusively on the record of the hearing, but on the entire record of the rulemaking proceeding.

(b) The Director designates a representative to conduct any hearing held under this part. The General Counsel designates a legal officer for the hearing.

PART 405—INVESTIGATIONS AND ENFORCEMENT

Sec.
405.1 Monitoring of licensed and other activities.
405.3 Authority to modify, suspend or revoke.
405.5 Emergency orders.
405.7 Civil penalties.

Authority: Secs. 14, 17 and 19, Pub. L. 98–575 (49 U.S.C. App. 2601 note).

§ 405.1 Monitoring of licensed and other activities.

Each licensee shall allow and cooperate with Federal officers or employees or other individuals authorized by the Director to observe licensed activities, including launch sites, production facilities or assembly sites used by any contractor or a licensee in the production or assembly of a launch vehicle and in the integration of a payload with its launch vehicle. Such observations are conducted in order to monitor the activities of the licensee or contractor at such time and to such extent as the Director considers reasonable and necessary to determine compliance with the license or to carry out the Director's responsibilities pertaining to payloads for which no Federal license, authorization, or permit is required.

§ 405.3 Authority to modify, suspend or revoke.

(a) Upon application by the licensee or upon the Office's own initiative, the Office may modify a license issued

under this chapter if the Office finds that the modification is consistent with the requirements of the Act.

(b) If the Office finds that a licensee has substantially failed to comply with any requirement of the Act, any regulation issued under the Act, the terms and conditions of a license, or any other applicable requirement, or that public health and safety, the safety of property or any national security or foreign policy interest of the United States so require, the Office may suspend or revoke any license issued to such licensee under this chapter.

(c) Unless otherwise specified by the Office, any modification, suspension or revocation made by the Office under this section:

(1) Takes effect immediately; and

(2) Continues in effect during any review of such action under Part 406 of this chapter.

(d) Whenever the Office takes any action under this section, the Office immediately notifies the licensee in writing of the Office's finding and the action which the Office has taken or proposes to take regarding such finding.

§ 405.5 Emergency orders.

The Office may immediately terminate, prohibit or suspend a licensed launch or launch site operation if the Office determines that—

(a) Such launch or operation is detrimental to public health and safety, safety of property, or any national security or foreign policy interest of the United States; and

(b) The detriment cannot be eliminated effectively through the exercise of other authority of the Office.

§ 405.7 Civil penalties.

(a) Pursuant to section 19 of the Act, any person found by the Office, after notice and opportunity to be heard on the record in accordance with section 554 of Title 5, United States Code, to have violated a requirement of the Act, a regulation issued under the Act, or any term, condition or restriction of any license issued or transferred by the Office, shall be liable to the United States for a civil penalty. Each day of a continuing violation shall constitute a separate violation. The amount of such civil penalty shall be assessed by the Office by written notice. The Office may compromise, modify, or remit with or without conditions, any civil penalty which is subject to imposition or which has been imposed under this section.

(b) If any person fails to pay a civil penalty assessed against such person after the penalty has become final or if such person appeals an order of the Office, and the appropriate court has entered final judgment in favor of the Office, the Office shall recover the civil penalty assessed in any appropriate district court of the United States.

(c) For purposes of conducting any hearing under this section, the Office may:

(1) Issue subpoenas for the attendance and testimony of witnesses and the production of relevant papers, books, documents, and other records;

(2) Seek enforcement of such subpoenas in the appropriate district court of the United States; and

(3) Administer oaths and affirmations.

PART 406—ADMINISTRATIVE REVIEW

Sec.
406.1 Hearings.
406.3 Submissions; oral presentation.
406.5 Administrative law judge's recommended decision.

Authority: Sec. 12, Pub. L. 98–575 (49 U.S.C. App. 2601 note).

§ 406.1 Hearings.

(a) Pursuant to section 12 of the Commercial Space Launch Act, the following are entitled to a determination on the record after an opportunity for a hearing in accordance with section 554 of Title 5, United States Code:

(1) An applicant for a license and a proposed transferee of a license regarding any decision to issue or transfer a license with conditions or to deny the issuance or transfer of such license;

(2) An owner or operator of a payload regarding any decision to prevent the launch of such payload;

(3) A licensee regarding any decision to suspend, modify, or revoke a license, or to terminate, prohibit, or suspend any licensed launch activity; and

(4) A person found by the Office to have violated a requirement of the Act, a regulation issued under the Act, or any term, condition or restriction of any license issued or transferred by the Office if the Office seeks civil penalties.

(b) An administrative law judge will be designated to preside over any hearing held under this part.

§ 406.3 Submissions; oral presentation.

(a) Determinations under this part will be made on the basis of written submissions unless the administrative law judge, on petition or on his or her own initiative, determines that an oral presentation is required.

(b) Submissions shall include a detailed exposition of the evidence or arguments supporting the petition.

(c) Petitions shall be filed as soon as practicable, but in no event more than 30 days after issuance of the Office's decision or finding under § 406.1.

§ 406.5 Administrative law judge's recommended decision.

(a) The recommended decision of the administrative law judge shall be reviewed by the Director, who shall make the final decision on the matter at issue. The Director shall make such final decision within thirty days of issuance of the recommended decision.

(b) The authority and responsibility to review and decide rests solely with the Director and may not be delegated.

SUBCHAPTER C—LICENSING

PART 411—POLICY

Sec.
411.1 General.
411.3 Review procedures.
411.5 Safety approval.
411.7 Mission approval.
411.9 Information requirements.

Authority: Secs. 3, 5 and 6, Pub. L. 98–575 (49 U.S.C. App. 2601 note).

§ 411.1 General.

The Office of Commercial Space Transportation may issue and transfer licenses authorizing launches, the operation of launch sites, or both.

§ 411.3 Review procedures.

(a) The evaluation of license requests for unmanned launches involves two reviews, Safety Review and Mission Review, designed to address in the most effective and least burdensome manner the two general areas of Federal concern: (1) the efficacy of the proposed safety operations to support safe preparation and launch of a launch vehicle and any payload; and (2) significant issues affecting United States national security interests, foreign policy interests, or international obligations which might be associated with the proposed launch. These reviews may be conducted independently of each other and in whichever order, sequential or concurrent, is more appropriate to the needs of the applicant.

(b) Requests for licenses authorizing the operation of a launch site are reviewed on the basis of the applicant's capability to operate a facility where safety operations are conducted on a continuing basis as support for the launching of a specified class of launch vehicles.

§ 411.5 Safety approval.

(a) Applicants proposing to conduct all of their own safety operations at a private launch site must demonstrate that they possess the resources needed for safe preparation and launch of a launch vehicle and any payload to be carried by such vehicle. In these

circumstances, a comprehensive review of the applicant's proposed safety operations must be performed in order to determine whether safety approval can be granted.

(b) If an applicant proposes to launch from a Federal range, as the Act encourages, it is the Office's view that reliance on safety-related launch property and services found at these ranges is an appropriate means of assuring that the applicant's launch activities can be conducted safely. As a general matter, a commercial launch site operated under the authority of a license issued by the Office should also be capable of providing such an assurance of safety. If an applicant proposes to contract for the services of a Federal range or a private launch site operated under the authority of a license issued by the Office, safety approval will ordinarily be given once the applicant has been accepted by a range or site capable of handling the launch activity proposed. All launch licenses issued under these circumstances shall be conditioned by the requirements that the applicant:

(1) Comply with all specified safety requirements and procedures of the range or launch site in question and

(2) Inform the Office of and obtain approval for any planned or proposed deviations from or alternatives to such requirements or procedures.

§ 411.7 Mission approval.

(a) *General.* Mission approval is granted unless some element of the proposed launch poses a threat to U.S. national security or foreign policy interests, constitutes a hazard to public health and safety or safety of property, or is inconsistent with international obligations of the United States. The Office shall work with applicants to correct or eliminate any defect in a proposal which impedes granting mission approval.

(b) *Payloads.* A proposal to launch any foreign payload or a payload not covered by existing FCC or NOAA regulation must be reviewed in consultation with other appropriate Federal agencies in order to determine that the launch of such payload will not jeopardize public health and safety, safety or property, or any national security or foreign policy interest of the United States. The Office, when requested to do so, shall provide payload operators or owners with this determination in advance of a launch license request or request for mission approval. Subsequent reviews of payloads within the same category shall be considered on a routine basis and shall focus on new or distinctive elements of the specific payload to be launched.

§ 411.9 Information requirements.

The Office shall make available current compilations of the basic information an applicant is required to submit in order to initiate an appropriate review of any proposed commercial launch activity subject to the Office's authority. These information requirements are not intended to be all-inclusive and the submission of the required information does not, in itself, demonstrate the qualifications of an applicant. The nature of individual proposals may require the submission of additional information.

PART 143—APPLICATIONS

Sec.
413.1 Scope.
413.3 Pre-application consultation.
413.5 Application.
413.7 Confidentiality.
413.9 Review of applications.
413.11 Modifications.
413.13 Issuance of License.
413.15 Terms and conditions of license.
413.17 Certain Rights Not Conferred by License.
413.19 Substantial and significant changes in information furnished to the office.

Authority: Secs. 9, 10, 11 and 20 Pub. L. 98-575 (49 U.S.C. App. 2601 note).

§ 413.1 Scope.

The regulations in this part prescribe the application procedures common to licensing all commercial space launch activities. The regulations applying exclusively to launch licenses are contained in Part 415 of this subchapter.

§ 413.3 Pre-application consultation.

Applicants are encouraged to consult with the Office of Commercial Space Transportation at the earliest possible planning stages.

Such consultation may reveal potential problems with a proposal and allow changes to be made when they are less likely to result in significant delay or costs to the applicant.

§ 413.5 Application.

(a) *Form.* Applications shall be in writing and filed in duplicate with the Office of Commercial Space Transportation, S-50, 400 Seventh Street, SW., Washington, DC 20590. Attention: Applications Review Branch.

(b) *Types.* Applications to the Office may request issuance or transfer of a license authorizing a launch or the operation of a launch site. Applications may also be made, separately and in advance of a license application, requesting an approval or determination that must be secured before a license can be issued or transferred.

(c) *Signature.* Applications shall be signed as follows:

(1) *For a corporation:* By an officer authorized to act for the corporation in licensing matters.

(2) *For a partnership or a sole proprietorship:* By a general partner or proprietor, respectively; or

(3) *For an association or other entity:* By a principal executive officer.

§ 413.7 Confidentiality.

(a) Information or data submitted to the Office may be designated as confidential by the person or agency furnishing such data or information.

(b) A request that information or data be treated confidentially should be made in writing at the time the information is submitted and should state the period of time for which confidential treatment is desired.

(c) A request for confidential treatment will be associated with previously submitted information to the extent that it is practicable in light of prior distribution of such information.

(d) Information requested to be treated confidentially must be clearly marked with an identifying legend such as "Proprietary Information" or "Confidential Treatment Requested." Where this marking proves impracticable, a cover sheet containing the identifying legend must be securely attached to the compilation of information for which confidential treatment is requested.

(e) Pursuant to section 9(c) of the Act, information for which confidential treatment has been requested, as provided above, or information that qualifies for exemption under section 552(b)(4) of Title 5, United States Code, will not be disclosed unless the Director determines that the withholding of such data or information is contrary to the public or national interest.

§ 413.9 Review of applications.

(a) Each application shall contain the information prescribed by the Office in order to initiate an appropriate review of the proposed launch activity. This information can be obtained by writing to the Office of Commercial Space Transportation, S-50, 400 Seventh Street SW., Washington, DC 20590, or by calling (202) 366-5770.

(b) The Office determines whether an application is substantially complete and, if so, accepts the application for review.

(c) Applications found by the Office to be incomplete or so speculative as to

make review inappropriate will be returned to the applicant with a statement of the reasons therefor.

(d) Once an application is accepted, the Office initiates an appropriate review in light of the specific action requested in the application. Pursuant to section 20 of the Act, the Office shall consult with the Department of Defense on all matters affecting national security and with the Department of State on all matters affecting foreign policy, including the issuance or transfer of each license.

(e) The Office makes a determination on an application as expeditiously as possible but, in the case of a license application, not later than 180 days after receipt of such application. If the Office has not made a determination within 120 days after receipt of such application, the Office informs the applicant of any pending issues and of actions required to resolve such issues.

§ 413.11 Modifications.

Applications may be modified, supplemented, or corrected by the applicant at any time prior to issuance of the Office's decision.

§ 413.13 Issuance of license.

The Office issues or transfers a license authorizing the conduct of commercial space launch activities by the applicant if the Office determines, after review, that the applicant has, and will continue to have, the abiltiy to comply with all requirements for a license, including the ability to conduct safe launch or launch site operations.

§ 413.15 Terms and conditions of license.

(a) Each license issued or transferred under this section shall specify the activities authorized by the license, the name of each person responsible under the license for the conduct of such activities, the period of time for which the license is valid, and such other terms and conditions as may be required to protect public safety, the safety of property, and national security and foreign policy interests of the United States.

(b) All licenses shall specify, as a condition of such license, that the licensee maintain an effective on-site means for verifying that the licensed launch activity conforms to representations made in the license application.

§ 413.17 Certain rights not conferred by license.

No license shall confer any proprietary, property, or exclusive right in the use of any airspace, Federal launch facility, or Federal launch support facility Issuance of a license does not affect the authority of the Federal Communications Commission under the Communications Act of 1934 (47 U.S.C. 151 *et seq.*) or the authority of the Secretary of Commerce under the Land Remote-Sensing Commercialization Act of 1984 (15 U.S.C. 4201 *et seq*).

§ 413.19 Substantial and significant changes in information furnished to the Office.

(a) Each applicant is responsible for the continuing accuracy and completeness of information furnished to the Office to support a pending application or which formed the basis for any approval, determination or licensing action by the Office. Whenever such information is no longer substantially accurate and complete in all significant respects, or whenever there has been a substantial change as to any matter of decisional significance to the Office, the applicant shall, as promptly as possible, submit a statement furnishing such additional or corrected information as may be appropriate.

(b) Willful false statements made in applications and documents relating to applications or licenses are punishable by fine and imprisonment, U.S. Code, Title 18, Section 1001, and by appropriate administrative sanctions, including license revocation and civil penalties.

PART 415—LAUNCH LICENSES

Subpart A—General

415.1 Scope.
415.3 When a launch license is required.
415.5 Approvals required for a license.
415.7 Incorporation of approvals.
415.9 Standard conditions.
415.10 Registration of space objects.

Subpart B—Safety Review

415.11 Scope.
415.13 General standards for reviewing safety operations.
415.15 When to request safety approval.
415.17 Incorporation of safety approval.

Subpart C—Mission Review

415.21 Scope.
415.23 When to request mission approval.
415.25 Incorportion of mission approval.

Subpart D—Environmental Impacts of Launch Activities

415.31 General.
415.33 Environmental information.

Authority: Secs. 6, 7, 8 and 9, Pub. L. 98–575 (49 U.S.C. App. 2601 note).

Subpart A—General

§ 415.1 Scope.

This part contains the procedures and information requirements which apply exclusively to launch license applications and supplements the general application procedures in Part 413.

§ 415.3 When a launch license is required.

(a) The launch of a launch vehicle from U.S. territory by any person, or from outside U.S. territory by any individual or any corporation, partnership, joint venture, association of other entity organized or existing under the laws of the United States or any state, must be authorized by a license issued under this part.

(b) The launch of a launch vehicle by a foreign corporation or other entity controlled by a United States citizen, as defined in section 401.5 of this Chapter, at any place which is both outside the United States and outside of the territory of any foreign nation when there is no agreement in force between the United States and a foreign nation which provides that such foreign nation shall exercise jurisdiction over such launch, must be authorized by a license issued under this part.

(c) The launch of a launch vehicle by any foreign corporation or other entity described in paragraph (b) of this section from the territory of a foreign nation, when there is in force an agreement between the United States and such foreign nation concerning the exercise of jurisdiction by the United States over such launch, must be authorized by a license issued under this part.

§ 415.5 Approvals required for a license.

A license authorizing an unmanned launch is issued or transferred after the Office grants an applicant both mission and safety approvals. These approvals may be requested separately and in advance of a license request, as provided in §§ 415.15 and 415.23 of this subpart.

§ 415.7 Incorporation of approvals.

(a) Any approval or determination made by the Office before a license has been requested, as provided in § 413.5 of this subpart, is made part of the record upon which the Office makes a decision to issue a launch license with conditions or to deny a launch license.

(b) An approval or determination remains valid, and the Office does not reopen any part of a review which formed the basis for an approval or determination, as long as the information submitted as part of the review and other matters of decisional significance to the Office remain accurate and valid.

VOL 53 ISS 64 AP 4 1988 UMI

§ 415.9 Standard conditions.

All launch licenses shall contain those conditions which the Office determines to be necessary and appropriate to protect public health and safety, the safety of property, and national security and foreign policy interests of the United States. Failure to comply with any license condition may be cause for revocation of the license or the initiation of other enforcement actions by the Office. Standard conditions in licenses include requirements for the licensee to do the following:

(a) Secure at least the minimum amount of third-party liability insurance specified by the Department;

(b) Adhere strictly to specified range safety regulations and procedures;

(c) Comply with requirements concerning pre-launch record keeping and notifications, including those pertaining to Federal airspace restrictions and military tracking operations; and

(d) Comply with Federal inspection, verification and enforcement requirements.

§ 415.10 Registration of space objects.

(a) In accordance with Article IV of the 1975 Convention on Registration of Objects Launched Into Outer Space, each licensee is responsible for registering all objects placed in space in the course of conducting activities authorized by its license, except for objects owned by a foreign entity. Registration of objects owned by a foreign entity is the responsibility of that foreign entity.

(b) Each licensee shall, within 30 days after launch, submit to the Office the following information concerning any vehicle or other object it has launched into outer space:

(1) The international designator of the space object(s);

(2) Date and location of launch;

(3) Basic programmed orbital parameters, including:

(i) Nodal period,

(ii) Inclination,

(iii) Apogee;

(4) General function of the space object.

Subpart B—Safety Review

§ 415.11 Scope.

Safety Review is the procedure for determining whether an applicant can safely conduct the preparation and launch of the proposed launch vehicle and any payload. This review focuses on the elements of an applicant's safety operations, including the proposed launch site, procedure, personnel, and equipment. A safety approval granted by the Office does not confer any approval or authorization an applicant or licensee must obtain from the operator of a Federal or licensed range, or create any presumption or inference that such approval or authorization will be granted.

§ 415.13 General standards for reviewing safety operations.

(a) *Launch Site.* The location, size and design configuration of the proposed site shall ensure that off-site persons and property are not exposed to an unreasonable risk of harm.

(b) *Procedures.* User and range operator procedures must be appropriate for assuring pre-launch check-out and validation of all launch safety systems (ground or flight); control of pre-launch and launch hazards to the public; trajectory flight safety analysis; and safe flight operations from ignition through impact for suborbital launches and through orbital injection or escape velocity for orbital launches.

(c) *Personnel.* Range safety personnel shall be qualified and possess appropriate training and experience.

(d) *Equipment.* Range safety equipment and instrumentation and vehicle safety systems shall be adequate and appropriate to support safe operations.

§ 415.15 When to request safety approval.

An application for safety approval may be made as a part of a launch license request or, in the alternative, in advance of a launch license request.

§ 415.17 Incorporation of safety approval.

A safety approval made by the Office under this part may be made part of a licensing record pursuant to § 415.7 of this Subpart.

Subpart C—Mission Review

§ 415.21 Scope.

Mission Review is the procedure for identifying significant issues affecting United States national interests and international obligations that may be associated with a proposed launch. Except for safety operations covered by §§ 415.11–415.17 of this part, Mission Review covers all aspects of a proposed launch, including any payload to be launched. For a payload not subject to FCC or NOAA regulation, the Office must determine whether to prevent launch of the payload because to launch it would jeopardize public health and safety, the safety of property, or any national security or foreign policy interest of the United States.

§ 415.23 When to request mission approval.

An application for mission approval, may be made as part of a launch license request or, in the alternative, in advance of a launch license request. Application for a determination on a payload not regulated by the FCC or NOAA may be made as part of or in advance of any other request.

§ 415.25 Incorporation of mission approval.

A mission approval or payload determination made by the Office under this part is made part of a licensing record pursuant to § 415.7 of this subpart.

Subpart D—Environmental Impacts of Launch Activities

§ 415.31 General.

In accordance with the requirements of the National Environmental Policy Act, 42 U.S.C. 4321, *et seq.*, (NEPA), the Council on Environmental Quality Regulations for Implementing the Procedural Provisions of NEPA, 40 CFR Parts 1500–1508, and the Department of Transportation's Procedures for Considering Environmental Impacts, DOT Order 5610.1C [1], the environmental impacts of licensing commercial launch activities are required to be considered by the Office. The effects of most projected commercial launch activities are already addressed in the Office's programmatic environmental assessment or in environmental impact statements for existing launch sites. The Office will determine whether a proposed launch activity is adequately addressed in these documents. Applicants may be required to provide additional information concerning the environmental effects of a proposed launch activity.

§ 415.33 Environmental information.

Applicants will be required to submit environmental information concerning:

(a) Proposed new launch sites not covered by existing environmental documentation;

(b) A proposed new launch vehicle with characteristics falling measurably outside the parameters of existing environmental documentation;

(c) Proposed launches from established sites involving vehicles with characteristics falling measurably outside the parameters of the existing environmental impact statement covering those sites;

(d) A proposed payload that may have significant environmental impacts in the event of a launch accident; and

(e) Other factors as determined by the Office.

[FR Doc. 88-6910 Filed 4-1-88; 8:45 am]

BILLING CODE 4910-63-M

[1] This order is available from the Office of Commercial Space Transportation, Department of Transportation, S-50, 400 7th Street SW., Washington, DC 20590.

federal register

Monday
April 4, 1988

Part III

Department of Transportation

Federal Aviation Administration

14 CFR Part 71

Establishment of Airport Radar Service Areas; Final Rule

VOL 53 ISS 64 APR 4 1988 UMI

DEPARTMENT OF TRANSPORTATION

Federal Aviation Administration

14 CFR Part 71

[Airspace Docket No. 87-AWA-27]

Establishment of Airport Radar Service Areas

AGENCY: Federal Aviation Administration (FAA), DOT.

ACTION: Final rule.

SUMMARY: This action designates Airport Radar Service Areas (ARSA) at five locations: Cedar Rapids Municipal Airport, IA; Champaign University of Illinois-Willard Airport, IL; Chicago Midway Airport, IL; Columbus Air Force Base (AFB), MS, and Jackson Allen C. Thompson Field, MS. Each location, with the exception of Midway Airport, is an airport at which a nonregulatory Terminal Radar Service Area (TRSA) is currently in effect. Establishment of these ARSA's will require that pilots maintain two-way radio communication with air traffic control (ATC) while in the ARSA. Implementation of ARSA procedures at these locations will reduce the risk of midair collision in terminal areas and promote the efficient control of air traffic.

EFFECTIVE DATE: 0901 UTC, May 5, 1988.

FOR FURTHER INFORMATION CONTACT: Mr. Joe Gill, Airspace Branch (ATO-240), Airspace-Rules and Aeronautical Information Division, Air Traffic Operations Service, Federal Aviation Administration, 800 Independence Avenue SW., Washington, DC 20591; telephone: (202) 267-9252.

SUPPLEMENTARY INFORMATION:

History

On April 22, 1982, the National Airspace Review (NAR) plan was published in the **Federal Register** (47 FR 17448). The plan encompassed a review of airspace use and the procedural aspects of the air traffic control (ATC) system. The FAA published NAR Recommendation 1-2.2.1, "Replace Terminal Radar Service Areas (TRSA) with Model B Airspace and Service (Airport Radar Service Areas)," in Notice 83-9 (48 FR 34286, July 28, 1983) proposing the establishment of ARSA's at Columbus, OH, and Austin, TX. Those locations were designated ARSA's by SFAR No. 45 (48 FR 50036, October 28, 1983) in order to provide an operational confirmation of the ARSA concept for potential application on a national basis. The original expiration dates for SFAR 45, December 22, 1984, for Austin and January 19, 1985, for Columbus were extended to June 20, 1985 (49 FR 47176, November 30, 1984).

On March 6, 1985, the FAA adopted the NAR recommendation and amended Parts 71, 91, 103 and 105 of the Federal Aviation Regulations (14 CFR Parts 71, 91, 103 and 105) to establish the general definition and operating rules for an ARSA (50 FR 9252), and designated Austin and Columbus airports as ARSA's as well as the Baltimore/Washington International Airport, Baltimore, MD (50 FR 9250). Thus far the FAA has designated 102 ARSA's as published in the **Federal Register** in the implementation of this NAR recommendation.

On October 8, 1987, the FAA proposed to designate ARSA's at Cedar Rapids Municipal Airport, IA; Champaign University of Illinois-Willard Airport, IL; Chicago Midway Airport, IL; Columbus AFB, MS; and Jackson Allen C. Thompson Field, MS (52 FR 37718). This rule designates ARSA's at these airports. Interested parties were invited to participate in this rulemaking proceeding by submitting comments on the proposal to the FAA. Additionally, the FAA has held informal airspace meetings for each of these proposed airports. Section 71.501 of Part 71 of the Federal Aviation Regulations was republished in FAA Handbook 7400.6D dated January 4, 1988.

Discussion of Comments

Two comments were received that addressed comments to all five locations. One of those supported all but Midway, recommending a TCA expansion in lieu of the ARSA, which will be addressed later. The other comment, from the Aircraft Owner's and Pilots Association (AOPA), objected to all of the proposed locations based on their objection to the ARSA program.

All comments objecting to the ARSA program were considered during the rulemaking for the ARSA rule which was published in the **Federal Register** on March 6, 1985 (50 FR 9252).

Champaign, IL

The majority of the objections to the Champaign ARSA focused on five items.

1. That Champaign qualified for an ARSA only due to the total airport operations, which includes touch and go landings. 2. That the ARSA will create a hazard by compressing traffic underneath the five- to ten-mile area. 3. That the ARSA will encumber the airport operations. 4. That the ARSA will overtax the already overburdened controllers. 5. That the ARSA will severely restrict the flight training program of the University of Illinois.

The FAA does not agree with the stated objections. First, Champaign qualifies for an ARSA based not only on the NAR criteria (Level Three Facility with a TRSA) but also the follow-on criteria, which is 75,000 annual instrument operations at the primary airport or 100,000 annual instrument operations at the primary and secondary airports. The airport operations count, while being indicative of a busy facility, does not qualify or disqualify a location for an ARSA. Second, due to the configuration of the ARSA, no pilot is forced to fly underneath the ARSA. It is anticipated that the only pilots who will choose to operate underneath the floor of the five- to ten-mile area will be those desiring to operate at airports that underlie this area. Pilots transiting the area who do not desire to participate may either choose to circumnavigate or fly over the top of the ARSA, since the ceiling of the ARSA is only 4,000 feet above airport elevation. Moreover, the concerns about compression beneath the five- to ten-mile area have not been substantiated at other ARSA's currently in place. Third, this group stated the ARSA would have a devastating impact on airport operations. The establishment of an ARSA will not change any methods that the tower may choose to sequence and separate pattern traffic. The ARSA will simply ensure that the air traffic facility has knowledge of all traffic operating at these critical altitudes in the vicinity of the airport. Fourth, these commenters stated that the ARSA was a threefold expansion of existing airspace, and that it would overload the already overtaxed controllers. This statement is factually incorrect. The ARSA is a reduction in size over the existing TRSA. The only expansion would be over the existing Airport Traffic Area, which is not a radar service area. As stated by these same commenters, 98 percent of the traffic already utilizes the TRSA services; therefore, the objection based on the controller workload is unfounded. Finally, the commenters objected because of their perception of the severe impact the ARSA would have on the University of Illinois training program. However, the FAA has historically shown that concerns of this nature are unfounded. The ARSA program has provisions for Letters of Agreement with organizations like the University of Illinois to minimize or eliminate any impact the ARSA may impose.

Several commenters objected to the proposed ARSA, but recommended that if it was instituted the floor of the five- to ten-mile area should be raised throughout or at least in the northeast

quadrant of the area. The altitudes recommended by the commenters were 3,000 feet MSL, 2,300 feet MSL, 2,600 feet MSL, and 2,500 feet MSL. The FAA finds that these recommendations have merit. The agency determined that it would not enhance safety to raise the floor in the entire five- to ten-mile area; however, in balancing the needs of the users and our needs for safety, we determined that raising the floor in the northeast quadrant to 2,400 feet MSL would be in the best interest of all concerned. We believe this will alleviate the concerns voiced by these commenters. The rule reflects that change.

Several commenters were critical of the comment period and recommended that we extend the comment period to May 1, 1988. The FAA believes the period for notice and comment was sufficient to permit full public comment on the proposed rule.

Several commenters stated that the proposal should not go forward because an impact study had not been completed. Under existing environmental regulations, the establishment of the Champaign ARSA as proposed and adopted does not require an environmental assessment.

Chicago Midway, IL

Several commenters objected to the Chicago Midway ARSA proposal because they believed it would be detrimental to their safety. The FAA does not agree. The ARSA program came about as a recommendation of the user groups to enhance safety. The program has been proven historically to be a safe method of operation.

Several commenters objected to the ARSA due to insufficient consideration of safety issues, inaccessibility to general aviation, and the inability of ATC to consistently handle the operations. The FAA finds that all safety issues were either addressed in the initial ARSA rulemaking or are discussed and studied during the open comment period. Regarding accessibility, the ARSA does not preclude any class or type of aircraft from operating in the ARSA; it simply requires that the pilot must first establish two-way radio communication prior to entry. The FAA finds it necessary to have knowledge of aircraft operating within close proximity to an airport when the airport reaches a certain level of activity.

Two commenters wrote in recommending that the FAA expand the O'Hare TCA in lieu of the ARSA proposal. The FAA considered this possibility initially, but based on existing criteria, Midway is not qualified for a TCA. Therefore, it decided to proceed with the ARSA for Midway.

One commenter submitted a comment stating that he tended to agree with those opposed but felt that the major problem with aviation today was poor pilot training/education. The FAA supports all efforts to train and educate pilots. However, this rule addresses comments received to the proposed ARSA. The comments concerning pilot education and training, therefore, are outside the scope of this rule.

A few commenters objected to the ARSA stating that it would be unsafe to fly underneath the floor and around the antennas. The FAA does not agree. First, it is not uncommon for pilots to fly around tall antennas rather than over. Second, the ARSA does not force anyone to fly underneath the ARSA floor in the 5–10 mile area. Pilots may choose to fly around a relatively small area or simply establish two-way radio to fly through.

Other commenters objected to the ARSA based on their perception that the ARSA would cause confusion due to overlap with the TCA; too many radio frequencies; no designated outer area; and no radio frequency for the ARSA printed on the chart. The FAA finds that it is important to have knowledge of all aircraft operating in a close proximity to the airport at these critical altitudes. There are already several locations at which there is an ARSA and a TCA that to date have not been problems. Additionally, there should be no confusion as to the frequency for communication in the ARSA because FAA is adding no new frequencies and the ARSA frequency will be charted as all others are.

Several commenters stated that the controllers at Midway were already understaffed and overworked and that the ARSA would just complicate this problem. The FAA does not agree. The staffing at Midway is adjusted to meet the changing demands of the work situation. The staff at Midway has been growing with the increasing demands placed on them by the users, and we anticipate that this will not overburden the existing staff. We do expect that as traffic continues to grow at Midway we will add staff accordingly to be able to meet the everchanging traffic demands.

One commenter suggested that we should place a TRSA rather than an ARSA at Midway. The FAA finds that the ARSA program, as recommended by the National Airspace Review (NAR), was established to replace the TRSA program because of many identified deficiencies. Therefore, most TRSA's will be replaced by ARSA's and the remainder would be abolished.

There were no site specific comments received for the remainder of the sites.

Regulatory Evaluation

Those comments that addressed information presented in the Regulatory Evaluation of the notice have been discussed above. The Regulatory Evaluation of the notice, as clarified by the "Discussion of Comments" contained in the preamble to the final rule, constitutes the Regulatory Evaluation of the final rule. Both documents have been placed in the regulatory docket.

Briefly, the FAA finds that a direct comparison of the costs and benefits of this rule is difficult for a number of reasons. Many of the benefits of the rule are nonquantifiable, especially those associated with simplification and standardization of terminal airspace procedures. Further, the benefits of standardization result collectively from the overall ARSA program, and as discussed previously, estimates of potential reductions in absolute accident rates resulting from the ARSA program cannot realistically be disaggregated below the national level. Therefore, it is difficult to specifically attribute these benefits to individual ARSA sites. Finally, until more experience has been gained with ARSA operations, estimates of *both* the efficiency improvements resulting in time savings to aircraft operators, and the potential delays resulting from mandatory participation, will be quite preliminary.

ATC personnel at some facilities anticipate that the process will go very smoothly, that delays will be minimal, and that efficiency gains will be realized from the start. Other sites anticipate that delay problems will dominate the initial adjustment period.

FAA believes these adjustment problems will only be temporary, and that once established, the ARSA program will result in an overall improvement in efficiency in terminal area operations at those airports where ARSA's are established. These overall gains which FAA expects for the ARSA sites established by this rule typify the benefits which FAA expects to achieve nationally from the ARSA program. These benefits are expected to be achieved without additional controller staffing or radar equipment costs to the FAA.

In addition to these operational efficiency improvements, establishment of these ARSA sites will contribute to a reduction in midair collisions. The quantifiable benefits of this safety improvement could range from less than

$100 thousand, to as much as $300 million, for each accident prevented.

For these reasons, FAA expects that the ARSA sites established in this rule will produce long term, ongoing benefits which will exceed their costs, which are essentially transitional in nature.

Regulatory Flexibility Determination

Under the terms of the Regulatory Flexibility Act, the FAA has reviewed this rulemaking action to determine what impact it may have on small entities. FAA's Regulatory Flexibility Determination was published in the NPRM. Some of the small entities which could be potentially affected by implementation of the ARSA program include the fixed-base operators, flight schools, agricultural operations and other small aviation businesses located at satellite airports located within 5 miles of the ARSA center. If the mandatory participation requirement were to extend down to the surface at these airports, where under current regulations participation in the radar services and radio communication with ATC is voluntary, operations at airports inside the core might be altered, and some business could be lost to airports outside fo the ARSA core. Because FAA is excluding some satellite airports located within the 5-mile ring to avoid adversely impacting their operations, and in other cases will achieve the same purposes through Letters of Agreement between ATC and the affected airports establishing special procedures for operating to and from these airports, FAA expects to eliminate virtually any adverse impact on the operations of small satellite airports which potentially could result from the ARSA program. Similarly, FAA expects to eliminate potential adverse impacts on existing flight training practice areas, as well as soaring, ballooning, parachuting, ultralight, and banner towing activities, by developing special procedures which will accommodate these activities through local agreements between ATC facilities and the affected organizations. For these reasons, the FAA has determined that this rulemaking action is not expected to affect a substantial number of small entities. Therefore, the FAA certifies that this regulatory action will not result in a significant economic impact on a substantial number of small entities.

The Rule

This action designates Airport Radar Service Areas (ARSA) at Cedar Rapids Municipal Airport, IA; Champaign University of Illinois-Willard Airport, IL; Chicago Midway Airport, IL; Columbus Air Force Base (AFB), MS, and Jackson Allen C. Thompson Field, MS. Each location designated, with the exception of Midway Airport, is a public airport at which a nonregulatory Terminal Radar Service Area (TRSA) is currently in effect. Establishment of these ARSA's will require that pilots maintain two-way radio communication with air traffic control (ATC) while in the ARSA. Implementation of ARSA procedures at these locations will reduce the risk of midair collision in terminal areas and promote the efficient control of air traffic.

For the reasons discussed above, the FAA has determined that this regulation (1) is not a "major rule" under Executive Order 12291; and (2) is not a "significant rule" under DOT Regulatory Policies and Procedures (44 FR 11034; February 26, 1979).

List of Subjects in 14 CFR Part 71

Aviation safety, Airport radar service areas.

Adoption of the Amendment

Accordingly, pursuant to the authority delegated to me, Part 71 of the Federal Aviation Regulations (14 CFR Part 71) is amended, as follows:

PART 71—DESIGNATION OF FEDERAL AIRWAYS, AREA LOW ROUTES, CONTROLLED AIRSPACE, AND REPORTING POINTS

1. The authority citation for Part 71 continues to read as follows:

Authority: 49 U.S.C. 1348(a), 1354(a), 1510; Executive Order 10854; 49 U.S.C. 106(g) (Revised, Pub. L. 97–449, January 12, 1983); 14 CFR 11.69.

§ 71.501 [Amended]

2. Section 71.501 is amended as follows:

Cedar Rapids Municipal Airport, IA [New]

That airspace within a 5-mile radius of the Cedar Rapids Municipal Airport (lat. 41°53'04" N., long. 91°42'31" W.) extending upward from the surface to and including 4,900 feet MSL; and that airspace within a 10-mile radius of the airport extending upward from 2,100 feet MSL to and including 4,900 feet MSL.

Champaign University of Illinois-Willard Airport, IL [New]

That airspace within a 5-mile radius of the University of Illinois-Willard Airport (lat. 40°02'23" N., long. 88°16'40" W.) extending upward from the surface to and including 4,800 feet MSL; and that airspace within a 10-mile radius of the airport beginning at the 340° bearing from the airport clockwise to the 060° bearing from the airport extending upward from 2,400 feet MSL to and including 4,800 feet MSL; and that airspace within a 10-mile radius of the airport from the 060° bearing from the airport clockwise to the 340° bearing from the airport extending upward from 2,000 feet MSL to and including 4,800 feet MSL.

Chicago Midway Airport, IL [New]

That airspace within a 5-mile radius of the Midway Airport (lat. 41°47'10" N., long. 87°45'08" W.) extending upward from the surface to 4,000 feet MSL; and that airspace within a 10-mile radius of the airport beginning at a line 2 miles northeast of and parallel to the Chicago Midway localizer course to Runway 31L clockwise to where the 10.5-mile arc of the O'Hare VOR intersects the 10-mile radius of the airport, thence via the O'Hare 10.5-mile arc, extending upward from 1,900 feet MSL to 4,000 feet MSL. This ARSA excludes any airspace contained in the Chicago O'Hare TCA.

Columbus AFB, MS [New]

That airspace within a 5-mile radius of Columbus AFB (lat. 33°38'36" N., long. 88°26'36" W.) extending upward from the surface to and including 4,200 feet MSL; and that airspace within a 10-mile radius of Columbus AFB extending upward from 1,500 feet MSL to and including 4,200 feet MSL.

Jackson Allen C. Thompson Field, MS [New]

That airspace within a 5-mile radius of the Allen C. Thompson Field (lat. 32°18'36" N., long. 90°04'28" W.) extending upward from the surface to and including 4,400 feet MSL; and that airspace within a 10-mile radius of the airport extending upward from 1,700 feet MSL to and including 4,400 feet MSL.

Issued in Washington, DC, on March 30, 1988.

Shelomo Wugalter,

Acting Manager, Airspace-Rules and Aeronautical Information Division.

[FR Doc. 88–7312 Filed 4–1–88; 8:45 am]

BILLING CODE 4910-13-M

VOL 53 ISS 64 APR 4 1988 UMI

federal register

Monday
April 4, 1988

Part IV

Department of Housing and Urban Development

Office of the Assistant Secretary for Community Planning and Development

Formula Allocations for the Rental Rehabilitation Program for Fiscal Year 1988 and Deadlines for Submission of Program Descriptions; Notice

DEPARTMENT OF HOUSING AND URBAN DEVELOPMENT

Office of the Assistant Secretary for Community Planning and Development

[Docket No. N-88-1784; FR-2499]

Formula Allocations for the Rental Rehabilitation Program for Fiscal Year 1988 and Deadlines for Submission of Program Descriptions

AGENCY: Office of the Assistant Secretary for Community Planning and Development, HUD.

SUMMARY: This Notice announces the allocations of Rental Rehabilitation Program grant funds for cities with populations of 50,000 or more, urban counties, consortia of units of general local government, and States for Fiscal Year 1988. It also sets the dates by which Program Descriptions must be submitted to HUD for these potential grantees to be considered for actual grants based on these allocations. Finally, it describes an amendment to the Rental Rehabilitation Program made by the Housing and Community Development Act of 1987 that is effective immediately.

FOR FURTHER INFORMATION CONTACT: Mary Kolesar, Director, Rehabilitation Management Division, Room 7162, Department of Housing and Urban Development, 451 Seventh Street SW., Washington, DC, telephone (202) 755-5970. (This is not a toll-free number.)

SUPPLEMENTARY INFORMATION:

Formula Allocations

The Rental Rehabilitation Program is authorized by section 17 of the United States Housing Act of 1937 (42 U.S. 1437o), hereafter referred to as section 17. The Program's interim regulations are published at 24 CFR Part 511. Section 511.30 contains the formula for allocating Rental Rehabilitation Program funds. Cities having a population of 50,000 or more, urban counties, consortia of units of general local government having a combined population of 50,000 or more, and States are eligible to receive formula allocations. The amount of rental rehabilitation grant funds available for allocation in Fiscal Year 1988 is $198,500,000. The total amount of funds available for Fiscal Year 1988 is $200 million, but $1.5 million of the $200 million is for technical assistance.

Appendix A to this Notice contains the formula allocations for cities, urban counties, and consortia that receive an allocation of $50,000 or more. Appendix B to this Notice contains the allocations for States. All allocation amounts have been rounded to the nearest thousand. Before these formula allocations are actually available to the city, urban county, consortium or State as grant funds, the prospective grantee must submit a program description to HUD for approval in accordance with §§ 511.20 and 511.21 of the interim regulations.

The eligibility of cities with populations of 50,000 or more and urban counties for formula allocations is determined by whether they were so classified for purposes of the Community Development Block Grant Entitlement Program (24 CFR Part 570) for Federal Fiscal Year 1987. The formula factors for allocating the Fiscal Year 1988 funds are the same as those used in prior fiscal years. Section 511.32 was suspended effective May 19, 1987 (52 FR 11466, April 9, 1987) and remains suspended. Thus, adjustments to potential grantees' formula allocations will not be made this year.

Legislative Changes

Sections 150 and 311 of the Housing and Community Development Act of 1987 (the 1987 Act) make several changes in the Rental Rehabilitation Program. Most of these changes require regulatory implementation, and HUD plans to publish an interim rule implementing those changes for effect, if possible, prior to final approval of program descriptions and making of Fiscal Year 1988 grants based upon the formula allocations published in this Notice. The process of submission and approval takes from 2½ to 4½ months after allocations are published, depending upon the type of grantee and whether the program description may be approved as received or requires amendment. Until the interim rule is effective, grantees must follow existing rules in expending Fiscal Year 1988 and prior year funds, except as stated below.

The one amendment to the Rental Rehabilitation Program that is deemed self-executing and was effective when the 1987 Act became law (on February 5, 1988) is section 150(c) of the 1987 Act. Section 150(c) amends section 17(c)(2)(E) of the United States Housing Act of 1937 to increase the maximum Rental Rehabilitation subsidy amount that grantees are permitted to approve for any project. Formerly, section 17(c)(2)(E) provided that the maximum subsidy amount per project was $5,000 per unit, except as otherwise determined by the Secretary in high cost areas. As amended by section 150(c) of the 1987 Act, section 17 provides that the maximum subsidy amount per project is the sum of: (i) $5,000 per unit for units with no bedrooms, (ii) $6,500 per unit for units with one bedroom, (iii) $7,500 per unit for units with two bedrooms, and (iv) $8,500 per unit for units with three or more bedrooms. The authority for increases in the maximum subsidy amount per project for high cost areas is not amended by the 1987 Act, and existing regulations (at 24 CFR 511.10(e)(2) (i) and (ii)) remain in effect for high cost area exception projects. In the interim rule with respect to the 1987 Act amendments, HUD will amend § 511.10(e)(2) to incorporate the new maximum subsidy per unit amounts as provided in the 1987 Act, but the 1987 Act gives grantees the discretionary authority to approve project subsidies up to the new maximum as of its effective date, February 5, 1988. This amendment is effective for all uncommitted funds that grantees currently have on hand from prior year grants as well as any grants they may subsequently receive, including Fiscal Year 1988 grants.

Two and Three Bedroom Requirements

Concerning the 1984 legislative amendments that the Secretary assure that an equitable share of funds be used to provide units for families with children, particularly large families requiring three or more bedroom units, the Department has determined for Fiscal Year 1988 that the three or more bedroom priority can be satisfied if at least 15 percent of the Rental Rehabilitation Program grant amounts expended nationwide are expended for rehabilitation of units of three or more bedrooms. The existing requirement in § 511.10(k) that grantees use at least 70 percent of their grant funds to provide two or more bedroom units, unless otherwise approved by HUD under the criteria in that section, remains in effect.

The Department reserves the right prospectively to establish a mandatory standard for each grantee for achievement of three-bedroom or larger units should the data (which will be continually available) indicate any substantial prospect that the Secretary will not achieve the mandated minimum within any 2-year period.

Deadline for Submitting Program Descriptions

Section 511.20(a) of the program regulations states that cities, urban counties and consortia eligible to receive a grant based on a formula allocation must submit a program description to the appropriate HUD Field Office within 45 days of written notification of their Rental Rehabilitation fund allocation, and that

States have 75 days from the date of written notification of their allocations to submit their program descriptions. HUD regards the date of written notification to all grantees to be the date of this Notice.

Thus, all cities, urban counties and consortia receiving a formula allocation must deliver their program descriptions to the appropriate HUD Field Office or have them postmarked no later than May 19, 1988 to be considered for a grant.

If a State elects to administer the Rental Rehabilitation Program in Fiscal Year 1988, it must notifiy HUD in writing of its intent to participate in the program by May 4, 1988 and must deliver its program description or have it postmarked by June 20, 1988 to be considered for a grant.

If a State chooses not to participate in the Rental Rehabilitation Program, eligible units of general local government located in the State that wish to participate in the HUD-Administered State Program must submit a program description to the responsible HUD Field Office within 45 days of the date stated in a written notification from HUD to such potential grantees of fund availability under the program for the fiscal year. These notifications will be directly issued by HUD Field Offices when it is known which States, if any, are not participating in Fiscal Year 1988.

Other Matters

A Finding of No Significant Impact with respect to the environment has been made in accordance with HUD regulations in 24 CFR Part 50, which implement section 102(2)(C) of the National Environmental Policy Act of 1969, 42 U.S.C. 4332. The Finding of No Significant Impact is available for public inspection and copying during regular business hours in the Office of the Rules Docket Clerk, Room 10276, 451 Seventh Street SW., Washington, DC 20410–0500.

The Catalog of Federal Domestic Assistance program number is 14.230, Rental Housing Rehabilitation.

The collection of information requirements contained in this Notice have been approved by the Office of Management and Budget (OMB) under the provisions of the Paperwork Reduction Act of 1980 (44 U.S.C. 3501–3520) and have been assigned OMB Control No. 2560–0080.

Authority: Section 17, United States Housing Act of 1937, 42 U.S.C. 1437, section 7(d). Department of Housing and Urban Development Act, 42 U.S.C. 3535(d).

Dated: March 29, 1988.

Jack R. Stokvis,

General Deputy Assistant Secretary for Community Planning and Development.

BILLING CODE 4210-29-M

Appendix A

RENTAL REHABILITATION PROGRAM
FORMULA ALLOCATIONS
FOR
CITIES, URBAN COUNTIES AND CONSORTIA

FISCAL YEAR 1988

STATE / LOCALITY	$ IN THOUSANDS
ALABAMA	
BIRMINGHAM	465
DOTHAN	53
HUNTSVILLE	114
MOBILE	224
MONTGOMERY	205
TUSCALOOSA	136
JEFFERSON COUNTY	173
ALASKA	
ANCHORAGE	129
ARIZONA	
GLENDALE	71
MESA	109
PHOENIX	715
SCOTTSDALE	54
TEMPE	103
TUCSON	414
MARICOPA COUNTY	128
PIMA COUNTY	86
ARKANSAS	
FORT SMITH	79
LITTLE ROCK	185
NORTH LITTLE ROCK	60
PINE BLUFF	74
CALIFORNIA	
ALAMEDA	85
ALHAMBRA	93
ANAHEIM	226
BAKERSFIELD	115
BELLFLOWER	71
BERKELEY	263
BURBANK	104
CHULA VISTA	107
COMPTON	102
CONCORD	70
COSTA MESA	107
DALY	61
DOWNEY	74
EL CAJON	102
EL MONTE	123
ESCONDIDO CITY	76
FREMONT	65
FRESNO	314
FULLERTON	101
GARDEN GROVE	99
GLENDALE	226
HAWTHORNE	79
HAYWARD	80
HUNTINGTON BEACH	139
INGLEWOOD	107
LA MESA CITY	62
LONG BEACH	870
LOS ANGELES	5694
LYNWOOD	60
MODESTO	101
MONTEBELLO	57
MONTEREY PARK	51
MOUNTAIN VIEW	79
NAPA CITY	52
NATIONAL CITY	73
NEWPORT BEACH	72
NORWALK	55
OAKLAND	722
OCEANSIDE	88
ONTARIO	72
ORANGE	72
OXNARD	112
PALO ALTO	54
PASADENA	200
POMONA	103
REDONDO BEACH	76
REDWOOD CITY	56
RICHMOND	88
RIVERSIDE	171
SACRAMENTO	388
SALINAS	92
SAN BERNADINO	151
SAN DIEGO	1179
SAN FRANCISCO	1680
SAN JOSE	498
SAN MATEO	81
SANTA ANA	238
SANTA BARBARA	143
CALIFORNIA	
SANTA CLARA	53
SANTA MONICA	196
SANTA ROSA	90
SOUTH GATE	86
STOCKTON	222
SUNNYVALE	87
TORRANCE	106
VALLEJO	70
VENTURA	84
WHITTIER	66
ALAMEDA COUNTY	157
CONTRA COSTA	212
FRESNO COUNTY	208
KERN COUNTY	236
LOS ANGELES COUNTY	2008
MARIN COUNTY	200
ORANGE COUNTY	389
RIVERSIDE COUNTY	333
SACRAMENTO COUNTY	396
SAN BERNARDINO COUNTY	441
SAN DIEGO COUNTY	374
SAN JOAQUIN COUNTY	150
SAN MATEO COUNTY	223
SANTA CLARA COUNTY	303
SONOMA COUNTY	182
VENTURA COUNTY	132
COLORADO	
AURORA	54
BOULDER	125
COLORADO SPRINGS	218
DENVER	825
FORT COLLINS	95
GREELEY	79
LAKEWOOD	85
PUEBLO	116
ADAMS COUNTY	100
CONNECTICUT	
BRIDGEPORT	338
DANBURY	57
HARTFORD	402
MERIDEN	56
NEW BRITAIN	117
NEW HAVEN	353
NORWALK	77
STAMFORD	109
WATERBURY	182
WEST HAVEN	87
DELAWARE	
WILMINGTON	137
NEW CASTLE COUNTY	186
DISTRICT OF COLUMBIA	
WASHINGTON	1224
FLORIDA	
CLEARWATER	84
DAYTONA BEACH	113
FT LAUDERDALE	209
GAINESVILLE	144
HIALEAH	181
HOLLYWOOD	108
JACKSONVILLE	574
LAKELAND	82
MIAMI	918
MIAMI BEACH	438
ORLANDO	183
PENSACOLA	76
POMPANO BEACH	63
ST PETERSBURG	299
SARASOTA	64
TALLAHASSEE	174
TAMPA	355
WEST PALM BEACH	109
BREVARD COUNTY	90
BROWARD COUNTY	361
DADE COUNTY	833
HILLSBOROUGH COUNTY	231
ORANGE COUNTY	248
PALM BEACH COUNTY	252
PASCO COUNTY	81
PINELLAS COUNTY	179
POLK COUNTY	154

STATE / LOCALITY	$ IN THOUSANDS
FLORIDA	
SEMINOLE COUNTY	102
VOLUSIA COUNTY	128
GEORGIA	
ALBANY	126
ATLANTA	858
COLUMBUS	219
MACON	196
SAVANNAH	240
COBB COUNTY	126
DE KALB COUNTY	294
FULTON COUNTY	170
GWINNETT COUNTY	60
HAWAII	
HONOLULU	747
IDAHO	
BOISE	95
ILLINOIS	
AURORA	68
CHAMPAIGN	102
CHICAGO	7079
CICERO	87
DECATUR	103
EAST ST LOUIS	136
ELGIN	53
EVANSTON	99
JOLIET	80
OAK PARK	62
PEORIA	146
ROCKFORD	142
SPRINGFIELD	121
WAUKEGAN	51
COOK COUNTY	663
DU PAGE COUNTY	201
LAKE COUNTY	121
MADISON COUNTY	182
ST CLAIR COUNTY	157
WILL COUNTY	82
INDIANA	
ANDERSON	86
BLOOMINGTON	104
EVANSVILLE	162
FORT WAYNE	177
GARY	190
HAMMOND	91
INDIANAPOLIS	747
MUNCIE	116
SOUTH BEND	107
TERRE HAUTE	77
LAKE COUNTY	75
IOWA	
CEDAR RAPIDS	88
COUNCIL BLUFFS	52
DAVENPORT	117
DES MOINES	221
DUBUQUE	63
IOWA CITY	93
SIOUX CITY	89
WATERLOO	74
KANSAS	
KANSAS CITY	168
LAWRENCE	103
TOPEKA	117
WICHITA	279
JOHNSON COUNTY	73
KENTUCKY	
LEXINGTON-FAYETTE	268
LOUISVILLE	524
OWENSBORO	58
JEFFERSON COUNTY	153
LOUISIANA	
ALEXANDRIA	80
BATON ROUGE	338
HOUMA	51
LAFAYETTE	87
LAKE CHARLES	71

STATE / LOCALITY	$ IN THOUSANDS
LOUISIANA	
MONROE	92
NEW ORLEANS	1388
SHREVEPORT	231
JEFFERSON PARISH	268
MAINE	
PORTLAND	164
MARYLAND	
BALTIMORE	1712
ANNE ARUNDEL COUNTY	124
BALTIMORE COUNTY	348
MONTGOMERY COUNTY	306
PRINCE GEORGES COUNTY	431
MASSACHUSETTS	
BOSTON	1564
BROCKTON	154
BROOKLINE	101
CAMBRIDGE	240
CHICOPEE	59
FALL RIVER	200
FRAMINGHAM	61
LAWRENCE	162
LOWELL	159
LYNN	167
MALDEN	81
MEDFORD	62
NEW BEDFORD	219
NEWTON	51
PITTSFIELD	70
QUINCY	105
SOMERVILLE	177
SPRINGFIELD	299
WALTHAM	77
WORCESTER	288
MICHIGAN	
ANN ARBOR	176
BATTLE CREEK	79
DETROIT	3435
FLINT	305
GRAND RAPIDS	245
KALAMAZOO	153
LANSING	173
PONTIAC	102
SAGINAW	122
GENESEE COUNTY	117
KENT COUNTY	58
MACOMB COUNTY	82
OAKLAND COUNTY	185
WAYNE COUNTY	220
MINNESOTA	
DULUTH	143
MINNEAPOLIS	704
ROCHESTER	51
ST PAUL	341
ANOKA COUNTY	56
DAKOTA COUNTY	84
HENNEPIN COUNTY	214
RAMSEY COUNTY	74
MISSISSIPPI	
JACKSON	232
MISSOURI	
COLUMBIA	96
INDEPENDENCE	85
KANSAS CITY	806
ST JOSEPH	93
ST LOUIS	1189
SPRINGFIELD	164
ST LOUIS COUNTY	360
MONTANA	
BILLINGS	84
GREAT FALLS	85
NEBRASKA	
LINCOLN	181

STATE / LOCALITY	$ IN THOUSANDS
NEBRASKA	
OMAHA	364
NEVADA	
LAS VEGAS	191
RENO	146
CLARK COUNTY	261
NEW HAMPSHIRE	
MANCHESTER	160
NASHUA	76
NEW JERSEY	
BAYONNE	104
CAMDEN	192
CLIFTON	62
EAST ORANGE	184
ELIZABETH	214
IRVINGTON	135
JERSEY CITY	605
NEWARK	1080
PASSAIC	171
PATERSON	279
TRENTON	196
UNION CITY	174
BERGEN COUNTY	540
BURLINGTON COUNTY	143
CAMDEN COUNTY	158
ESSEX COUNTY	259
GLOUCESTER COUNTY	118
HUDSON COUNTY	481
MIDDLESEX COUNTY	138
MONMOUTH COUNTY	239
MORRIS COUNTY	126
OCEAN COUNTY	122
SOMERSET COUNTY	89
UNION COUNTY	219
NEW MEXICO	
ALBUQUERQUE	338
LAS CRUCES	54
SANTA FE	55
NEW YORK	
ALBANY	260
AMHERST TOWN	52
BABYLON TOWN	96
BINGHAMTON	130
BUFFALO	996
HUNTINGTON TOWN	[illegible]
ISLIP TOWN	130
MOUNT VERNON	157
NEW ROCHELLE	102
NEW YORK	[illegible]
NIAGARA FALLS	122
ROCHESTER	[illegible]
SCHENECTADY	[illegible]
SYRACUSE	[illegible]
TROY	126
UNION TOWN	[illegible]
UTICA	170
YONKERS	320
DUTCHESS COUNTY	[illegible]
ERIE COUNTY	128
MONROE COUNTY	134
NASSAU COUNTY	565
ONONDAGA COUNTY	92
ORANGE COUNTY	140
ROCKLAND COUNTY	140
SUFFOLK COUNTY	[illegible]
WESTCHESTER COUNTY	297
NORTH CAROLINA	
ASHEVILLE	84
CHARLOTTE	[illegible]
DURHAM	[illegible]
FAYETTEVILLE	[illegible]
GREENSBORO	174
HIGH POINT	84
RALEIGH	183
WINSTON SALEM	[illegible]
NORTH DAKOTA	
FARGO	81

STATE / LOCALITY	$ IN THOUSANDS
OHIO	
AKRON	321
CANTON	132
CINCINNATI	560
CLEVELAND	1356
CLEVELAND HEIGHTS	60
COLUMBUS	912
DAYTON	381
HAMILTON CITY	90
LAKEWOOD	78
LORAIN	68
MANSFIELD	73
SPRINGFIELD	131
TOLEDO	478
WARREN	63
YOUNGSTOWN	181
CUYAHOGA COUNTY	304
FRANKLIN COUNTY	125
HAMILTON COUNTY	212
LAKE COUNTY	77
MONTGOMERY COUNTY	147
STARK COUNTY	65
SUMMIT COUNTY	74
OKLAHOMA	
LAWTON	87
NORMAN	83
OKLAHOMA CITY	829
TULSA	959
OREGON	
EUGENE	180
PORTLAND	720
SALEM	112
CLACKAMAS COUNTY	114
MULTNOMAH COUNTY	134
WASHINGTON COUNTY	162
PENNSYLVANIA	
ALLENTOWN	153
ALTOONA	72
BETHLEHEM	74
ERIE	186
HARRISBURG	110
LANCASTER	109
PHILADELPHIA	3120
PITTSBURGH	921
READING	163
SCRANTON	141
UPPER DARBY	70
ALLEGHENY COUNTY	651
BEAVER COUNTY	138
BERKS COUNTY	97
BUCKS COUNTY	164
CHESTER COUNTY	169
DELAWARE COUNTY	211
LANCASTER COUNTY	158
LUZERNE COUNTY	167
MONTGOMERY COUNTY	231
WASHINGTON COUNTY	174
WESTMORELAND COUNTY	170
YORK COUNTY	118
RHODE ISLAND	
CRANSTON	86
PAWTUCKET	134
PROVIDENCE	459
WARWICK	52
SOUTH CAROLINA	
CHARLESTON	153
COLUMBIA	148
GREENVILLE	100
NORTH CHARLESTON	79
GREENVILLE COUNTY	148
SOUTH DAKOTA	
SIOUX FALLS	[illegible]
TENNESSEE	
CHATTANOOGA	240
CLARKSVILLE	[illegible]
JACKSON	65
KNOXVILLE	[illegible]

STATE / LOCALITY	$ IN THOUSANDS
TENNESSEE	
MEMPHIS	864
NASHVILLE-DAVIDSON	492
TEXAS	
ABILENE	82
AMARILLO	112
ARLINGTON	125
AUSTIN	561
BAYTOWN CITY	52
BEAUMONT	127
BROWNSVILLE	107
BRYAN	57
CORPUS CHRISTI	230
DALLAS	1134
DENTON	73
EL PASO	495
FORT WORTH	387
GALVESTON	97
GARLAND	80
HOUSTON	1832
IRVING	86
KILLEEN	87
LAREDO	117
LONGVIEW	58
LUBBOCK	184
MC ALLEN	67
ODESSA	74
PASADENA	80
PORT ARTHUR	63
SAN ANGELO	70
SAN ANTONIO	863
TYLER	79
WACO	152
WICHITA FALLS	88
BEXAR COUNTY	72
HARRIS COUNTY	307
TARRANT COUNTY	117
UTAH	
OGDEN	85
PROVO	104
SALT LAKE CITY	295
SALT LAKE COUNTY	127
VERMONT	
VIRGINIA	
ALEXANDRIA	131
CHESAPEAKE	75
HAMPTON	103
LYNCHBURG	75
NEWPORT NEWS	168
NORFOLK	432
PORTSMOUTH	138
RICHMOND	415
ROANOKE	142
VIRGINIA BEACH	164
ARLINGTON COUNTY	191
FAIRFAX COUNTY	264
WASHINGTON	
BELLEVUE	52
EVERETT	81
SEATTLE	846
SPOKANE	299
TACOMA	243
CLARK COUNTY	139
KING COUNTY	326
PIERCE COUNTY	213
SNOHOMISH COUNTY	130
WEST VIRGINIA	
CHARLESTON	83
HUNTINGTON	109
WISCONSIN	
EAU CLAIRE	74
GREEN BAY	98
KENOSHA	62
MADISON	300
MILWAUKEE	1018
OSHKOSH	57
RACINE	85
MILWAUKEE COUNTY	97

STATE / LOCALITY	$ IN THOUSANDS
WYOMING	
PUERTO RICO	
AGUADILLA	74
ARECIBO	83
BAYAMON MUNICIPIO	135
CAGUAS MUNICIPIO	107
CAROLINA MUNICIPIO	128
GUAYNABO MUNICIPIO	84
MAYAGUEZ MUNICIPIO	168
PONCE MUNICIPIO	233
SAN JUAN MUNICIPIO	878

Appendix B

RENTAL REHAB ALLOCATION
STATE SUMMARY REPORT

RENTAL REHAB-$198 5M (• DOLLARS IN THOUSANDS)

	METRO CITY #	METRO CITY AMOUNT•	URBAN COUNTY #	URBAN COUNTY AMOUNT•	CITY/COUNTY AMOUNT•	STATE AMOUNT•	CITY/COUNTY/STATE TOTAL AMOUNT•
ALABAMA	6	1,211	1	173	1,384	1,188	2,572
ALASKA	1	129			129	81	210
ARIZONA	6	1,466	2	213	1,679	315	1,994
ARKANSAS	4	398			[illegible]	935	1,333
CALIFORNIA	[illegible]	17,470	16	5,842	23,312	2,854	26,166
COLORADO	8	1,616	1	100	1,716	601	2,317
CONNECTICUT	10	1,748			1,748	957	2,705
DELAWARE	1	137	1	186	323	53	376
DISTRICT OF COLUMBIA	1	1,224			1,224		1,224
FLORIDA	18	4,154	11	2,659	6,813	1,553	[illegible]
GEORGIA	5	1,639	4	650	2,289	1,750	4,039
HAWAII	1	747			747	106	[illegible]
IDAHO	1	95			95	[illegible]	[illegible]
ILLINOIS	14	8,339	6	1,387	9,726	1,867	11,593
INDIANA	10	1,837	1	75	1,912	1,348	3,260
IOWA	8	797			797	816	1,613
KANSAS	4	667	1	73	740	709	1,449
KENTUCKY	3	[illegible]	1	153	1,004	1,073	2,077
LOUISIANA	8	2,337	1	268	2,605	940	3,545
MAINE	1	184			184	646	830
MARYLAND	1	1,712	4	1,209	2,921	494	3,415
MASSACHUSETTS	20	4,326			4,326	2,258	6,584
MICHIGAN	9	3,890	5	[illegible]	4,353	2,100	6,453
MINNESOTA	4	1,239	4	428	1,667	723	2,390
MISSISSIPPI	1	232			232	1,114	1,346
MISSOURI	6	2,083	1	360	2,443	1,010	3,453
MONTANA	2	149			149	356	505
NEBRASKA	2	545			545	349	894
NEVADA	2	337	1	261	598	109	707
NEW HAMPSHIRE	2	236			236	381	617
NEW JERSEY	12	3,499	12	2,612	6,111	1,296	7,407
NEW MEXICO	3	447			447	402	[illegible]
NEW YORK	18	24,661	9	1,832	26,493	2,440	[illegible]
NORTH CAROLINA	8	1,339			1,339	1,772	3,111
NORTH DAKOTA	1	81			81	222	[illegible]
OHIO	16	5,284	7	1,004	6,288	2,373	8,661
OKLAHOMA	4	953			953	1,019	1,972
OREGON	3	1,012	3	410	1,422	768	2,190
PENNSYLVANIA	11	5,119	12	2,448	7,567	2,484	10,051
RHODE ISLAND	4	703			703	489	1,192
SOUTH CAROLINA	4	490	1	148	638	1,116	1,744
SOUTH DAKOTA	1	85			85	275	360
TENNESSEE	6	1,995			1,995	1,000	2,995
TEXAS	[illegible]	7,593	3	396	7,989	2,785	10,774
UTAH	3	484	1	127	611	270	881
VERMONT						303	303
VIRGINIA	10	1,843	2	455	2,298	1,075	3,373
WASHINGTON	5	1,521	4	808	2,329	1,010	3,339
WEST VIRGINIA	2	192			192	654	846
WISCONSIN	7	1,692	1	97	1,789	1,192	2,981
WYOMING						229	229
GUAM							
PUERTO RICO	9	1,857			1,857	782	2,639
VIRGIN ISLANDS							
US TOTALS	383	122,415	116	25,037	147,452	51,048	198,500

[FR Doc. 88-7308 Filed 4-1-88; 8:45 am]

BILLING CODE 4210-29-C

Reader Aids

Federal Register
Vol. 53, No. 64
Monday, April 4, 1988

INFORMATION AND ASSISTANCE

Federal Register

Index, finding aids & general information	523-5227
Public inspection desk	523-5215
Corrections to published documents	523-5237
Document drafting information	523-5237
Machine readable documents	523-5237

Code of Federal Regulations

Index, finding aids & general information	523-5227
Printing schedules	523-3419

Laws

Public Laws Update Service (numbers, dates, etc.)	523-6641
Additional information	523-5230

Presidential Documents

Executive orders and proclamations	523-5230
Public Papers of the Presidents	523-5230
Weekly Compilation of Presidential Documents	523-5230

The United States Government Manual

General information	523-5230

Other Services

Data base and machine readable specifications	523-3408
Guide to Record Retention Requirements	523-3187
Legal staff	523-4534
Library	523-5240
Privacy Act Compilation	523-3187
Public Laws Update Service (PLUS)	523-6641
TDD for the deaf	523-5229

FEDERAL REGISTER PAGES AND DATES, APRIL

10519-10868.....1
10869-11030.....4

CFR PARTS AFFECTED DURING APRIL

At the end of each month, the Office of the Federal Register publishes separately a List of CFR Sections Affected (LSA), which lists parts and sections affected by documents published since the revision date of each title.

3 CFR
Proclamations:
5784.....10519
5785.....10521
5786.....10523

5 CFR
Proposed Rules:
2431.....10885

7 CFR
300.....10525
400.....10526
910.....10527
Proposed Rules:
53.....10545
54.....10545
949.....10887
1030.....10894
1701.....10545

10 CFR
430.....10869

14 CFR
Ch. III.....11004
71.....10528, 11020
Proposed Rules:
27.....10826
29.....10826
71.....10546

21 CFR
1308.....10834, 10861, 10869

22 CFR
514.....10528
602.....10529

24 CFR
203.....10529

26 CFR
1.....11002

28 CFR
0.....10870, 10871

29 CFR
102.....10872
2610.....10530
2622.....10530
2644.....10531

30 CFR
250.....10596
256.....10596

32 CFR
388.....10876

33 CFR
84.....10532
117.....10533, 10534

34 CFR
657.....10820
Proposed Rules:
105.....10808

40 CFR
Proposed Rules:
180.....10895
763.....10546

43 CFR
Public Land Order:
6670.....10535

44 CFR
Proposed Rules:
61.....10547

45 CFR
Proposed Rules:
606.....10896

47 CFR
2.....10878
Proposed Rules:
Ch. I.....10549, 10550
73.....10905

48 CFR
15.....10828
31.....10828
52.....10828
227.....10780
252.....10780

49 CFR
1160.....10536
Proposed Rules:
192.....10906

50 CFR
17.....10879
301.....10536

LIST OF PUBLIC LAWS

Last List April 1, 1988

This is a continuing list of public bills from the current session of Congress which have become Federal laws. It may be used in conjunction with "P L U S" (Public Laws Update Service) on 523-6641. The text of laws is not published in the **Federal**

Register but may be ordered in individual pamphlet form (referred to as "slip laws") from the Superintendent of Documents, U.S. Government Printing Office, Washington, DC 20402 (phone 202-275-3030).

S.J. Res. 185/Pub. L. 100-272

To designate the period commencing on May 2, 1988, and ending on May 8, 1988, as "National Drinking Water Week." (Mar. 30, 1988; 102 Stat. 46; 1 page) Price: $1.00

S.J. Res. 255/Pub. L. 100-273

To authorize and request the President to issue a proclamation designating April 24 through April 30, 1988, as "National Organ and Tissue Donor Awareness Week." (Mar. 30, 1988; 102 Stat. 47; 1 page) Price: $1.00

VOL 53 ISS 64 AP 4 1988 UMI

CFR CHE

This checkl
published w
revision dat
An asterisk
week and w
Office.
New units is
the daily Fe
A checklist
also appear
Affected), w
The annual
domestic, $
Order from
Washington
or GPO Dep
at (202) 783
Friday (exce

Title

1, 2 (2 Reser
3 (1986 Com
4
5 Parts:
1-1199.....
700-1199.....
*1200-End, 6
7 Parts:
0-45.....
27-45.....
*46-51.....
52.....
53-209.....
210-299.....
300-399.....
400-699.....
700-899.....
900-999.....
*1000-1059
1060-1119...
1120-1199...
1200-1499...
1500-1899...
1900-1944...
1945-End.....
*8
9 Parts:
1-199.....
200-End.....
10 Parts:
0-199.....
200-399.....
400-499.....
500-End.....
*11
12 Parts:
1-199.....
*200-219.....
200-299.....
300-499.....
500-End.....
13
14 Parts:
1-59.....
60-139.....
140-199.....
200-1199.....
1200-End.....

CFR CHECKLIST

This checklist, prepared by the Office of the Federal Register, is published weekly. It is arranged in the order of CFR titles, prices, and revision dates.

An asterisk (*) precedes each entry that has been issued since last week and which is now available for sale at the Government Printing Office.

New units issued during the week are announced on the back cover of the daily **Federal Register** as they become available.

A checklist of current CFR volumes comprising a complete CFR set, also appears in the latest issue of the LSA (List of CFR Sections Affected), which is revised monthly.

The annual rate for subscription to all revised volumes is $595.00 domestic, $148.75 additional for foreign mailing.

Order from Superintendent of Documents, Government Printing Office, Washington, DC 20402. Charge orders (VISA, MasterCard, CHOICE, or GPO Deposit Account) may be telephoned to the GPO order desk at **(202) 783-3238** from 8:00 a.m. to 4:00 p.m. eastern time, Monday—Friday (except holidays).

Title	Price	Revision Date
1, 2 (2 Reserved)	$10.00	Jan. 1, 1988
3 (1986 Compilation and Parts 100 and 101)	11.00	[1] Jan. 1, 1987
4	14.00	Jan. 1, 1988
5 Parts:		
1-1199	25.00	Jan. 1, 1987
700-1199	15.00	Jan. 1, 1988
*1200-End, 6 (6 Reserved)	11.00	Jan. 1, 1988
7 Parts:		
0-45	25.00	Jan. 1, 1987
27-45	11.00	Jan. 1, 1988
*46-51	16.00	Jan. 1, 1988
52	23.00	Jan. 1, 1988
53-209	18.00	Jan. 1, 1987
210-299	22.00	Jan. 1, 1987
300-399	10.00	Jan. 1, 1987
400-699	15.00	Jan. 1, 1987
700-899	22.00	Jan. 1, 1987
900-999	26.00	Jan. 1, 1987
*1000-1059	15.00	Jan. 1, 1988
1060-1119	12.00	Jan. 1, 1988
1120-1199	11.00	Jan. 1, 1988
1200-1499	18.00	Jan. 1, 1987
1500-1899	9.50	Jan. 1, 1988
1900-1944	25.00	Jan. 1, 1987
1945-End	26.00	Jan. 1, 1987
*8	11.00	Jan. 1, 1988
9 Parts:		
1-199	18.00	Jan. 1, 1987
200-End	16.00	Jan. 1, 1987
10 Parts:		
0-199	29.00	Jan. 1, 1987
200-399	13.00	[2] Jan. 1, 1987
400-499	14.00	Jan. 1, 1987
500-End	24.00	Jan. 1, 1987
*11	10.00	July 1, 1988
12 Parts:		
1-199	11.00	Jan. 1, 1988
*200-219	10.00	Jan. 1, 1988
200-299	27.00	Jan. 1, 1987
300-499	13.00	Jan. 1, 1987
500-End	27.00	Jan. 1, 1987
13	19.00	Jan. 1, 1987
14 Parts:		
1-59	21.00	Jan. 1, 1987
60-139	19.00	Jan. 1, 1987
140-199	9.50	Jan. 1, 1988
200-1199	20.00	Jan. 1, 1988
1200-End	11.00	Jan. 1, 1987
15 Parts:		
0-299	10.00	Jan. 1, 1988
300-399	20.00	Jan. 1, 1987
400-End	14.00	Jan. 1, 1988
16 Parts:		
*0-149	12.00	Jan. 1, 1988
150-999	13.00	Jan. 1, 1987
1000-End	19.00	Jan. 1, 1987
17 Parts:		
1-199	14.00	Apr. 1, 1987
200-239	14.00	Apr. 1, 1987
240-End	19.00	Apr. 1, 1987
18 Parts:		
1-149	15.00	Apr. 1, 1987
150-279	14.00	Apr. 1, 1987
280-399	13.00	Apr. 1, 1987
400-End	8.50	Apr. 1, 1987
19 Parts:		
1-199	27.00	Apr. 1, 1987
200-End	5.50	Apr. 1, 1987
20 Parts:		
1-399	12.00	Apr. 1, 1987
400-499	23.00	Apr. 1, 1987
500-End	24.00	Apr. 1, 1987
21 Parts:		
1-99	12.00	Apr. 1, 1987
100-169	14.00	Apr. 1, 1987
170-199	16.00	Apr. 1, 1987
200-299	5.50	Apr. 1, 1987
300-499	26.00	Apr. 1, 1987
500-599	21.00	Apr. 1, 1987
600-799	7.00	Apr. 1, 1987
800-1299	13.00	Apr. 1, 1987
1300-End	6.00	Apr. 1, 1987
22 Parts:		
1-299	19.00	Apr. 1, 1987
300-End	12.00	Apr. 1, 1987
23	16.00	Apr. 1, 1987
24 Parts:		
0-199	14.00	Apr. 1, 1987
200-499	26.00	Apr. 1, 1987
500-699	9.00	Apr. 1, 1987
700-1699	18.00	Apr. 1, 1987
1700-End	12.00	Apr. 1, 1987
25	24.00	Apr. 1, 1987
26 Parts:		
§§ 1.0-1.60	12.00	Apr. 1, 1987
§§ 1.61-1.169	22.00	Apr. 1, 1987
§§ 1.170-1.300	17.00	Apr. 1, 1987
§§ 1.301-1.400	14.00	Apr. 1, 1987
§§ 1.401-1.500	21.00	Apr. 1, 1987
§§ 1.501-1.640	15.00	Apr. 1, 1987
§§ 1.641-1.850	17.00	Apr. 1, 1987
§§ 1.851-1.1000	27.00	Apr. 1, 1987
§§ 1.1001-1.1400	16.00	Apr. 1, 1987
§§ 1.1401-End	20.00	Apr. 1, 1987
2-29	20.00	Apr. 1, 1987
30-39	13.00	Apr. 1, 1987
40-49	12.00	Apr. 1, 1987
50-299	14.00	Apr. 1, 1987
300-499	15.00	Apr. 1, 1987
500-599	8.00	[3] Apr. 1, 1980
600-End	6.00	Apr. 1, 1987
27 Parts:		
1-199	21.00	Apr. 1, 1987
200-End	13.00	Apr. 1, 1987
28	23.00	July 1, 1987
29 Parts:		
0-99	16.00	July 1, 1987
100-499	7.00	July 1, 1987

Title	Price	Revision Date
500–899	24.00	July 1, 1987
900–1899	10.00	July 1, 1987
1900–1910	28.00	July 1, 1987
1911–1925	6.50	July 1, 1987
1926	10.00	July 1, 1987
1927–End	23.00	July 1, 1987
30 Parts:		
0–199	20.00	July 1, 1987
200–699	8.50	July 1, 1987
700–End	18.00	July 1, 1987
31 Parts:		
0–199	12.00	July 1, 1987
200–End	16.00	July 1, 1987
32 Parts:		
1–39, Vol. I	15.00	[4] July 1, 1984
1–39, Vol. II	19.00	[4] July 1, 1984
1–39, Vol. III	18.00	[4] July 1, 1984
1–189	20.00	July 1, 1987
190–399	23.00	July 1, 1987
400–629	21.00	July 1, 1987
630–699	13.00	[5] July 1, 1986
700–799	15.00	July 1, 1987
800–End	16.00	July 1, 1987
33 Parts:		
1–199	27.00	July 1, 1987
200–End	19.00	July 1, 1987
34 Parts:		
1–299	20.00	July 1, 1987
300–399	11.00	July 1, 1987
400–End	23.00	July 1, 1987
35	9.00	July 1, 1987
36 Parts:		
1–199	12.00	July 1, 1987
200–End	19.00	July 1, 1987
37	13.00	July 1, 1987
38 Parts:		
0–17	21.00	July 1, 1987
18–End	16.00	July 1, 1987
39	13.00	July 1, 1987
40 Parts:		
1–51	21.00	July 1, 1987
52	26.00	July 1, 1987
53–60	24.00	July 1, 1987
61–80	12.00	July 1, 1987
81–99	25.00	July 1, 1987
100–149	23.00	July 1, 1987
150–189	18.00	July 1, 1987
190–399	29.00	July 1, 1987
400–424	22.00	July 1, 1987
425–699	21.00	July 1, 1987
700–End	27.00	July 1, 1987
41 Chapters:		
1, 1–1 to 1–10	13.00	[6] July 1, 1984
1, 1–11 to Appendix, 2 (2 Reserved)	13.00	[6] July 1, 1984
3–6	14.00	[6] July 1, 1984
7	6.00	[6] July 1, 1984
8	4.50	[6] July 1, 1984
9	13.00	[6] July 1, 1984
10–17	9.50	[6] July 1, 1984
18, Vol. I, Parts 1–5	13.00	[6] July 1, 1984
18, Vol. II, Parts 6–19	13.00	[6] July 1, 1984
18, Vol. III, Parts 20–52	13.00	[6] July 1, 1984
19–100	13.00	[6] July 1, 1984
1–100	10.00	July 1, 1987
101	23.00	July 1, 1987
102–200	11.00	July 1, 1987
201–End	8.50	July 1, 1987
42 Parts:		
1–60	15.00	Oct. 1, 1987
61–399	5.50	Oct. 1, 1987
400–429	21.00	Oct. 1, 1987
430–End	14.00	Oct. 1, 1987
43 Parts:		
1–999	15.00	Oct. 1, 1987
1000–3999	24.00	Oct. 1, 1987
4000–End	11.00	Oct. 1, 1987
44	18.00	Oct. 1, 1987
45 Parts:		
1–199	14.00	Oct. 1, 1987
200–499	9.00	Oct. 1, 1987
500–1199	18.00	Oct. 1, 1987
1200–End	14.00	Oct. 1, 1987
46 Parts:		
1–40	13.00	Oct. 1, 1987
41–69	13.00	Oct. 1, 1987
70–89	7.00	Oct. 1, 1987
90–139	12.00	Oct. 1, 1987
140–155	12.00	Oct. 1, 1987
156–165	14.00	Oct. 1, 1987
166–199	13.00	Oct. 1, 1987
200–499	19.00	Oct. 1, 1987
500–End	10.00	Oct. 1, 1987
47 Parts:		
0–19	17.00	Oct. 1, 1987
20–39	21.00	Oct. 1, 1987
40–69	10.00	Oct. 1, 1987
70–79	17.00	Oct. 1, 1987
80–End	20.00	Oct. 1, 1987
48 Chapters:		
1 (Parts 1–51)	26.00	Oct. 1, 1987
1 (Parts 52–99)	16.00	Oct. 1, 1987
2 (Parts 201–251)	17.00	Oct. 1, 1987
2 (Parts 252–299)	15.00	Oct. 1, 1987
3–6	17.00	Oct. 1, 1987
7–14	24.00	Oct. 1, 1987
15–End	23.00	Oct. 1, 1987
49 Parts:		
1–99	10.00	Oct. 1, 1987
100–177	25.00	Oct. 1, 1987
178–199	19.00	Oct. 1, 1987
200–399	17.00	Oct. 1, 1987
400–999	22.00	Oct. 1, 1987
1000–1199	17.00	Oct. 1, 1987
1200–End	18.00	Oct. 1, 1987
50 Parts:		
1–199	16.00	Oct. 1, 1987
200–599	12.00	Oct. 1, 1987
600–End	14.00	Oct. 1, 1987
CFR Index and Findings Aids	27.00	Jan. 1, 1987
Complete 1988 CFR set	595.00	1988
Microfiche CFR Edition:		
Complete set (one-time mailing)	155.00	1983
Complete set (one-time mailing)	125.00	1984
Complete set (one-time mailing)	115.00	1985
Subscription (mailed as issued)	185.00	1987
Subscription (mailed as issued)	185.00	1988
Individual copies	3.75	1988

[1] Because Title 3 is an annual compilation, this volume and all previous volumes should be retained as a permanent reference source.

[2] No amendments to this volume were promulgated during the period Jan. 1, 1987 to Dec. 31, 1987. The CFR volume issued January 1, 1987, should be retained.

[3] No amendments to this volume were promulgated during the period Apr. 1, 1980 to March 31, 1987. The CFR volume issued as of Apr. 1, 1980, should be retained.

[4] The July 1, 1985 edition of 32 CFR Parts 1–189 contains a note only for Parts 1–39 inclusive. For the full text of the Defense Acquisition Regulations in Parts 1–39, consult the three CFR volumes issued as of July 1, 1984, containing those parts.

[5] No amendments to this volume were promulgated during the period July 1, 1986 to June 30, 1987. The CFR volume issued as of July 1, 1986, should be retained.

[6] The July 1, 1985 edition of 41 CFR Chapters 1–100 contains a note only for Chapters 1 to 49 inclusive. For the full text of procurement regulations in Chapters 1 to 49, consult the eleven CFR volumes issued as of July 1, 1984 containing those chapters.

VOL 53 ISS 64 AP 4 1988 UMI

ion Date
. 1, 1987
. 1, 1987

. 1, 1987
. 1, 1987
. 1, 1987
. 1, 1987

. 1, 1987
. 1, 1987
. 1, 1987
. 1, 1987

. 1, 1987
. 1, 1987
. 1, 1987
. 1, 1987
. 1, 1987
. 1, 1987
. 1, 1987
. 1, 1987
. 1, 1987

. 1, 1987
. 1, 1987
. 1, 1987
. 1, 1987
. 1, 1987

. 1, 1987
. 1, 1987
. 1, 1987
. 1, 1987
. 1, 1987
. 1, 1987
. 1, 1987
. 1, 1987

. 1, 1987
. 1, 1987
. 1, 1987
. 1, 1987
. 1, 1987
. 1, 1987
. 1, 1987

. 1, 1987
. 1, 1987
. 1, 1987

. 1, 1987

1988

1983
1984
1985
1987
1988
1988

s should be

987 to Dec.

0 to March

Parts 1–39
consult the

986 to June

hapters 1 to
t the eleven

VOL 53 ISS 64 AP 4 1988 UMI

Just Released

Code of Federal Regulations

Revised as of January 1, 1988

Quantity	Volume	Price	Amount
_____	Title 5—Administrative Personnel Parts 700–1199 (Stock No. 869-004-00005-7)	$15.00	$_____
_____	Part 1200–End and 6 (Reserved) (Stock No. 869-004-00006-5)	11.00	_____
_____	Title 8—Aliens and Nationality (Stock No. 869-004-00026-0)	11.00	_____
_____	Title 14—Aeronautics and Space Parts 200–1199 (Stock No. 869-004-00045-6)	20.00	_____
		Total Order	$_____

A cumulative checklist of CFR issuances appears every Monday in the Federal Register in the Reader Aids section. In addition, a checklist of current CFR volumes, comprising a complete CFR set, appears each month in the LSA (List of CFR Sections Affected).

Please do not detach

Order Form

Mail to: Superintendent of Documents, U.S. Government Printing Office, Washington, D.C. 20402

Enclosed find $_____. Make check or money order payable to Superintendent of Documents. (Please do not send cash or stamps). Include an additional 25% for foreign mailing.

Charge to my Deposit Account No.

☐☐☐☐☐☐☐–☐

Order No._____

VISA

MasterCard

Credit Card Orders Only

Total charges $_____ Fill in the boxes below.

Credit Card No. ☐☐☐☐☐☐☐☐☐☐☐☐☐☐☐☐☐☐☐

Expiration Date Month/Year ☐☐☐☐

Please send me the **Code of Federal Regulations** publications I have selected above.

Name—First, Last

Street address

Company name or additional address line

City State ZIP Code

(or Country)

PLEASE PRINT OR TYPE

For Office Use Only.

	Quantity	Charges
Enclosed		
To be mailed		
Subscriptions		
Postage		
Foreign handling		
MMOB		
OPNR		
UPNS		
Discount		
Refund		

ount

tach

.C. 20402

ow.

y	Charges

VOL
53

ISS
64

AP
4

1988

UMI

VOL
53

ISS
65

AP
5

1988

UMI

4-5-8
Vol. 5

Unite
Gove
Print
SUPER
OF DO
Washin

OFFICI
Penalty

4-5-88
Vol. 53 No. 65

federal register

Tuesday
April 5, 1988

United States
Government
Printing Office
SUPERINTENDENT
OF DOCUMENTS
Washington, DC 20402

OFFICIAL BUSINESS
Penalty for private use, $300

SECOND CLASS NEWSPAPER
Postage and Fees Paid
U.S. Government Printing Office
(ISSN 0097-6326)

**********5-DIGIT 48106

A FR SERIA300S NOV 88 R
SERIALS PROCESSING
UNIV MICROFILMS INTL
300 N ZEEB RD
ANN ARBOR MI 48106

VOL
53

ISS
65

AP
5

1988

UMI

4-5-88
Vol. 53
Pages

4-5-88
Vol. 53 No. 65
Pages 11031-11238

federal register

Tuesday
April 5, 1988

Briefings on How To Use the Federal Register—
For information on briefings in Washington, DC, and Boston, MA, see announcement on the inside cover of this issue.

BEST COPY AVAILABLE

FEDERAL REGISTER Published daily, Monday through Friday, (not published on Saturdays, Sundays, or on official holidays), by the Office of the Federal Register, National Archives and Records Administration, Washington, DC 20408, under the Federal Register Act (49 Stat. 500, as amended; 44 U.S.C. Ch. 15) and the regulations of the Administrative Committee of the Federal Register (1 CFR Ch. I). Distribution is made only by the Superintendent of Documents, U.S. Government Printing Office, Washington, DC 20402.

The **Federal Register** provides a uniform system for making available to the public regulations and legal notices issued by Federal agencies. These include Presidential proclamations and Executive orders and Federal agency documents having general applicability and legal effect, documents required to be published by act of Congress and other Federal agency documents of public interest. Documents are on file for public inspection in the Office of the Federal Register the day before they are published, unless earlier filing is requested by the issuing agency.

The **Federal Register** will be furnished by mail to subscribers for $340.00 per year, or $170.00 for 6 months in paper form, or $188.00 per year, or $94.00 for six months in microfiche form, payable in advance. The charge for individual copies is $1.50 for each issue, or $1.50 for each group of pages as actually bound. Remit check or money order, made payable to the Superintendent of Documents, U.S. Government Printing Office, Washington, DC 20402, or charge to your GPO Deposit Account or VISA or Mastercard.

There are no restrictions on the republication of material appearing in the **Federal Register**.

How To Cite This Publication: Use the volume number and the page number. Example: 52 FR 12345.

SUBSCRIPTIONS AND COPIES

PUBLIC

Subscriptions:

Paper or fiche	202-783-3238
Magnetic tapes	275-3328
Problems with public subscriptions	275-3054

Single copies/back copies:

Paper or fiche	783-3238
Magnetic tapes	275-3328
Problems with public single copies	275-3050

FEDERAL AGENCIES

Subscriptions:

Paper or fiche	523-5240
Magnetic tapes	275-3328
Problems with Federal agency subscriptions	523-5240

For other telephone numbers, see the Reader Aids section at the end of this issue.

THE FEDERAL REGISTER

WHAT IT IS AND HOW TO USE IT

FOR: Any person who uses the Federal Register and Code of Federal Regulations.

WHO: The Office of the Federal Register.

WHAT: Free public briefings (approximately 3 hours) to present:
1. The regulatory process, with a focus on the Federal Register system and the public's role in the development of regulations.
2. The relationship between the Federal Register and Code of Federal Regulations.
3. The important elements of typical Federal Register documents.
4. An introduction to the finding aids of the FR/CFR system.

WHY: To provide the public with access to information necessary to research Federal agency regulations which directly affect them. There will be no discussion of specific agency regulations.

WASHINGTON, DC

WHEN: April 15; at 9:00 a.m.
WHERE: Office of the Federal Register, First Floor Conference Room, 1100 L Street NW., Washington, DC
RESERVATIONS: Carolyn Payne, 202-523-3187

BOSTON, MA

WHEN: April 19; at 9 a.m.
WHERE: Thomas P. O'Neill, Jr. Federal Building, Auditorium, 10 Causeway Street, Boston, MA.
RESERVATIONS: Call the Boston Federal Information Center, 617-565-8123

Contents

Federal Register
Vol. 53, No. 65
Tuesday, April 5, 1988

Advisory Council on Historic Preservation
See Historic Preservation, Advisory Council

Agricultural Marketing Service
RULES
Potatoes (Irish) grown in Washington, 11043
PROPOSED RULES
Milk marketings orders:
Southwest Plains, 11092

Agriculture Department
See also Agricultural Marketing Service; Animal and Plant Health Inspection Service; Foreign Agricultural Service
PROPOSED RULES
Import and quota fees:
Sugar, free from quota; reexport in refined form, 11091

Air Force Department
NOTICES
Meetings:
Scientific Advisory Board, 11113

Animal and Plant Health Inspection Service
RULES
Exportation and importation of animals and animal products:
Horses from countries affected with CEM-Approved States, 11043

Arms Control and Disarmament Agency
NOTICES
Meetings:
General Advisory Committee, 11109

Commerce Department
See International Trade Administration; National Oceanic and Atmospheric Administration

Commodity Futures Trading Commission
NOTICES
Contract market proposals:
Commodity Exchange, Inc.—
Aluminum, 11111
Meetings; Sunshine Act, 11160
(3 documents)

Community Services Office
NOTICES
Grants; availability, etc.:
Demonstration partnership program, 11186

Consumer Product Safety Commission
NOTICES
Meetings:
Commission priorities for 1990 FY, 11112

Defense Department
See also Air Force Department
RULES
Acquisition regulations:
Production special tooling and special test equipment, 11073
Federal Acquisition Regulation (FAR):
Estimating systems; correction, 11073
NOTICES
Meetings:
Defense Acquisition Regulatory Council, 11113

Education Department
RULES
Postsecondary education:
Institutional eligibility under Higher Education Act, 11208
NOTICES
Grants; availability, etc.:
Star schools program, 11176

Employment and Training Administration
NOTICES
Adjustment assistance:
Allegheny Drop Forge, Co. et al., 11145
Clarksburg Electro-Plating, Inc., 11146
Elliot Co., 11146
New Castle Piano et al., 11147

Energy Department
See also Federal Energy Regulatory Commission
NOTICES
Meetings:
International Energy Agency Industry Advisory Board, 11113

Environmental Protection Agency
RULES
Air quality implementation plans; approval and promulgation; various States:
North Carolina, 11068
Pesticides; tolerances in food, animal feeds, and raw agricultural commodities:
Ultramarine blue, 11071
PROPOSED RULES
Toxic substances:
Polychlorinated biphenyls (PCBs) and chemical fate testing guidelines; incorporations by reference, 11104
NOTICES
Grants; debarments, suspensions, and voluntary exclusions under EPA assisted programs, 11117
Pesticide registration, cancellation, etc.:
Diazinon (Ciba-Geigy Corp. et al.), 11119

Equal Employment Opportunity Commission
NOTICES
Meetings; Sunshine Act, 11160

Executive Office of the President
See Presidential Documents

Export Administration
See International Trade Administration

Family Support Administration
See Community Services Office

Federal Aviation Administration
RULES
Control zones, 11060

Standard instrument approach procedures, 11062
Transition areas, 11061
PROPOSED RULES
Airworthiness standards, etc.:
Rotorcraft; normal and transport category; certification requirements; and external load operators
Correction, 11162
Restricted areas, 11102
Transition areas, 11100, 11101
(2 documents)

Federal Deposit Insurance Corporation
NOTICES
Agency information collection activities under OMB review, 11131

Federal Energy Regulatory Commission
NOTICES
Electric rate, small power production, and interlocking directorate filings, etc.:
Duquesne Light Co. et al., 11114
Florida Power & Light Co. et al., 11115
Meetings; Sunshine Act, 11160
Applications, hearings, determinations, etc.:
Algonquin Gas Transmission Co., 11116
Colorado Interstate Gas Co., 11116
Columbia Gas Transmission Corp., 11116
High Island Offshore System, 11117

Federal Highway Administration
RULES
Right-of-way and environment:
Environmental impact and related procedures, etc.; correction, 11065
NOTICES
Environmental statements; notice of intent:
Oakland County, MI, 11159

Federal Maritime Commission
RULES
Maritime carriers and related activities in domestic offshore commerce:
Agreements between or among wholly-owned subsidiaries and/or their parent, 11072
NOTICES
Freight forwarder licenses:
Ark International Forwarding, Inc., et al., 11131
Delta Shipping & Marketing Corp. et al., 11131
Investigations, hearings, petitions, etc.:
Benel International Co., Inc., 11132

Federal Reserve System
RULES
Electronic fund transfers (Regulation E):
Official staff commentary update, 11046
Equal credit opportunity (Regulation B):
Official staff commentary update, 11044
Truth in lending (Regulation Z):
Official staff commentary update, 11047, 11055
(2 documents)
NOTICES
Meetings; Sunshine Act, 11160
Applications, hearings, determinations, etc.:
Barnett Banks, Inc., 11132
First Illinois Corp. et al., 11132
McNeil, Don C., 11133

Food and Drug Administration
RULES
Animal drugs, feeds, and related products:
Halofuginone and bacitracin methylene disalicylate, 11065
Ivermectin injection, 11064
Neomycin sulfate-sulfacetamide sodium ophthalmic ointment, 11064
Trimethoprim and sulfadiazine oral paste, 11063
NOTICES
Animal drugs, feeds, and related products:
Altana, Inc.; neomycin sulfate-sulfacetamide sodium ophthalmic ointment; approval withdrawn, 11133

Foreign Agricultural Service
PROPOSED RULES
Import and quota fees:
Sugar. See entry under Agriculture Department.
Sugar import licensing:
Special export enhancement program, 11098

General Services Administration
NOTICES
Property management:
San Joaquin California Project, Tulare County, CA; property transfer; correction, 11133

Health and Human Services Department
See Community Services Office; Food and Drug Administration; Health Care Financing Administration; Public Health Service

Health Care Financing Administration
NOTICES
Medicare
Inpatient hospital prospective payment system; FY 1988 changes, 11134

Health Resources and Services Administration
See Public Health Service

Historic Preservation, Advisory Council
NOTICES
Meetings, 11109

Housing and Urban Development Department
RULES
Mortgage and loan insurance programs:
Low income housing mortgages; prepayment, 11224
PROPOSED RULES
Lead-based paint hazard elimination, 11164

Interior Department
See Land Management Bureau; National Park Service

Internal Revenue Service
RULES
Income taxes:
Partnership returns of income and trust income tax returns; automatic extension of time to file, 11066
Qualified progress expenditures; investment credit
Correction, 11162
PROPOSED RULES
Income taxes:
Partnership returns of income and trust income tax returns; automatic extension of time to file; cross reference, 11103

VOL 53 ISS 65 APR 5 1988 UMI

International Trade Administration
NOTICES
Antidumping:
Steel wire strand for prestressed from Japan; correction, 11162
Meetings:
Semiconductor Technical Advisory Committee, 11109

Justice Department
NOTICES
Pollution control; consent judgments:
Carlisle, IN, 11144
Gloversville-Johnstown Joint Sewer Board, NY, et al., 11144

Labor Department
See also Employment and Training Administration
NOTICES
Agency information collection activities under OMB review, 11144

Land Management Bureau
NOTICES
Environmental statements; availability, etc.:
Cody Resource Area, WY, 11140
Meetings:
Albuquerque District Advisory Council, 11141
Realty actions; sales, leases, etc.:
Arizona, 11142
Withdrawal and reservation of lands:
Nevada, 11141

National Archives and Records Administration
NOTICES
Agency records schedules; availability, 11148

National Highway Traffic Safety Administration
RULES
Fuel economic standards:
Light trucks, 11074
PROPOSED RULES
Motor vehicle safety standards:
Theft protection; inadvertent gear shifting and steering column lock-up, 11105

National Oceanic and Atmospheric Administration
NOTICES
Meetings:
South Atlantic Fishery Management Council, 11110
Permits:
Experimental fishing, 11110
Marine mammals, 11110
Rulemaking petitions:
GreenWorld; commercial whale watching permit regulations, 11111

National Park Service
NOTICES
Meetings:
Aniakchak National Monument Subsistence Resource Commission, 11143
National Register of Historic Places:
Pending nominations—
Alabama et al., 11143

National Science Foundation
NOTICES
Committees; establishment, renewal, termination, etc.:
Biological, behavioral, and social sciences committees et al., 11149

Nuclear Regulatory Commission
NOTICES
Environmental statements; availability, etc.:
Wisconsin Public Service Corp. et al., 11155
Meetings; Sunshine Act, 11160
Petitions; Director's decisions:
Sacramento Municipal Utility District, 11156
Applications, hearings, determinations, etc.:
Consumers Power Co., 11150
Dairyland Power Cooperative, 11150
Detroit Edison Co. et al., 11151
Virginia Electric & Power Co., 11152
Washington Public Power Supply System, 11154

Presidential Documents
PROCLAMATIONS
Generalized Systems of Preferences; amendments (Proc. 5787), 11031
EXECUTIVE ORDERS
Central American peace assistance; authority delegation (EO 12634), 11041
ADMINISTRATIVE ORDERS
Generalized System of Preferences:
Worker rights (Memorandum of March 31, 1988), 11039

Prospective Payment Assessment Commission
NOTICES
Meetings, 11156

Public Health Service
See also Food and Drug Administration
NOTICES
National toxicology program:
Toxicology and carcinogenesis studies—
Boric acid, 11140

Securities and Exchange Commission
NOTICES
Self-regulatory organizations; proposed rule changes:
National Association of Securities Dealers, Inc., 11156, 11157
(2 documents)
New York Stock Exchange, Inc., 11157

Transportation Department
See Federal Aviation Administration; Federal Highway Administration; National Highway Traffic Safety Administration

Treasury Department
See Internal Revenue Service

Separate Parts In This Issue

Part II
Department of Housing and Urban Development, 11164

Part III
Department of Energy, 11176

Part IV
Department of Health and Human Services, Office of Community Services, 11186

Part V
Department of Energy, 11208

Part VI
Department of Housing and Urban Development, 11224

Reader Aids
Additional information, including a list of public laws, telephone numbers, and finding aids, appears in the Reader Aids section at the end of this issue.

CFR PARTS AFFECTED IN THIS ISSUE

A cumulative list of the parts affected this month can be found in the Reader Aids section at the end of this issue.

3 CFR
Executive Orders:
12634 11041
Administrative Orders:
Memorandums:
Mar. 31, 1988 11039
Proclamations:
5787 11031

7 CFR
946 11043

Proposed Rules:
6 11091
1106 11092
1530 11098

9 CFR
92 11043

12 CFR
202 11044
205 11046
226 (2 documents) 11047, 11055

14 CFR
71 (2 documents) 11060, 11061
97 11062

Proposed Rules:
27 11162
29 11162
71 (2 documents) 11100, 11101
73 11102

21 CFR
520 11063
522 11064
524 11064
558 11065

23 CFR
650 11065
771 11065

24 CFR
50 11224
221 11224
236 11224
241 11224
248 11224

Proposed Rules:
35 11164
200 11164
510 11164
511 11164
570 11164
882 11164
886 11164
941 11164
965 11164
968 11164

26 CFR
1 (2 documents) 11066, 11162
602 (2 documents) 11066, 11162

Proposed Rules:
1 11103

34 CFR
600 11208
668 11208

40 CFR
52 11068
180 11071

Proposed Rules:
761 11104
796 11104

46 CFR
572 11072

48 CFR
215 (2 documents) 11073
242 11073
252 11073

49 CFR
533 11074

Proposed Rules:
571 11105

VOL 53 ISS 65 APR 5 1988 UMI

Federal Register
Vol. 53, No. 65
Tuesday, April 5, 1988

Presidential Documents

Title 3—

The President

Proclamation 5787 of March 31, 1988

Amending the Generalized System of Preferences

By the President of the United States of America

A Proclamation

1. Pursuant to Title V of the Trade Act of 1974, as amended (the Trade Act) (19 U.S.C. 2461 *et seq.*), in Proclamation 5365 of August 30, 1985 (50 FR 36220), I designated specified articles provided for in the Tariff Schedules of the United States (TSUS) (19 U.S.C. 1202) as eligible for preferential tariff treatment under the Generalized System of Preferences (GSP) when imported from designated beneficiary developing countries.

2. Pursuant to section 504(c) of the Trade Act, as amended (19 U.S.C. 2464(c)), those beneficiary developing countries not designated as least-developed beneficiary developing countries are subject to limitations on the preferential treatment afforded under the GSP. Pursuant to section 504(c)(5) of the Trade Act, as amended, a country that has not been treated as a beneficiary developing country with respect to an eligible article may be redesignated with respect to such article if imports of such article from such country did not exceed the limitations in section 504(c)(1) (after application of paragraph (c)(2)) during the preceding calendar year. Further, pursuant to section 504(d)(1) of the Trade Act, as amended (19 U.S.C. 2464(d)(1)), the limitation provided in section 504(c)(1)(B) shall not apply with respect to an eligible article if a like or directly competitive article was not produced in the United States on January 3, 1985.

3. Pursuant to sections 503(a) and 504(a) of the Trade Act, as amended (19 U.S.C. 2463(a) and 2464(a)), in order to subdivide and amend the nomenclature of existing items for the purposes of the GSP, I have determined, after taking into account information and advice received under section 503(a), that the TSUS should be modified to adjust the original designation of eligible articles. In addition, pursuant to Title V of the Trade Act, as amended, I have determined that it is appropriate to designate specified articles provided for in the TSUS as eligible for preferential tariff treatment under the GSP when imported from designated beneficiary developing countries, and that such treatment for other articles should be terminated. I have also determined, pursuant to section 504(a) and (c)(1) of the Trade Act, that certain beneficiary countries should no longer receive preferential tariff treatment under the GSP with respect to certain eligible articles. Further, I have determined, pursuant to section 504(c)(5) of the Trade Act, that certain countries should be redesignated as beneficiary developing countries with respect to specified previously designated eligible articles. These countries have been excluded from benefits of the GSP with respect to such eligible articles pursuant to section 504(c)(1) of the Trade Act. Last, I have determined that section 504(c)(1)(B) of the Trade Act should not apply with respect to certain eligible articles because no like or directly competitive article was produced in the United States on January 3, 1985.

4. In Proclamation 5758 of December 24, 1987 (52 FR 49129), I suspended the preferential treatment afforded under the GSP to articles imported from Chile and removed Chile from the enumeration in TSUS general headnote 3(e)(v)(A) of independent countries whose products are eligible for benefits under the GSP. In order to take such suspension into account, I have determined that the

TSUS should be modified to remove references to particular articles imported from Chile which had been ineligible for preferential treatment under the GSP.

5. Section 604 of the Trade Act (19 U.S.C. 2483) confers authority upon the President to embody in the TSUS the substance of the relevant provisions of that Act, of other acts affecting import treatment, and of actions taken thereunder.

NOW, THEREFORE, I, RONALD REAGAN, President of the United States of America, acting under the authority vested in me by the Constitution and laws of the United States, including but not limited to Title V and section 604 of the Trade Act of 1974, do proclaim that:

(1) In order to provide preferential tariff treatment under the GSP to certain designated eligible articles, and to provide that one or more countries should no longer be treated as beneficiary developing countries with respect to certain eligible articles for purposes of the GSP, the TSUS are modified as provided in Annex I to this Proclamation.

(2)(a) In order to provide preferential tariff treatment under the GSP to certain countries which have been excluded from the benefits of the GSP for certain eligible articles imported from such countries, following my determination that a country not previously receiving such benefits should again be treated as a beneficiary developing country with respect to such article, the Rates of Duty Special column for each of the TSUS items enumerated in Annex II(a) to this Proclamation is modified: (I) by deleting from such column for such TSUS items the symbol "A*" in parentheses, and (II) by inserting in such column the symbol "A" in lieu thereof.

(b) In order to provide that one or more countries should no longer be treated as beneficiary developing countries with respect to an eligible article for purposes of the GSP, the Rates of Duty Special column for each of the TSUS items enumerated in Annex II(b) to this Proclamation is modified: (I) by deleting from such column for such TSUS items the symbol "A" in parentheses, and (II) by inserting in such column the symbol "A*" in lieu thereof.

(3) General headnote 3(e)(v)(D) to the TSUS, listing those articles that are eligible for benefits of the GSP except when imported from the beneficiary countries listed opposite the enumerated TSUS items for those articles, is modified as provided in Annex III to this Proclamation.

(4)(a) In order to provide benefits under the GSP to specified designated eligible articles when imported from any designated beneficiary developing country—

(I) the Rates of Duty Special column for TSUS items 112.01, 131.27, 141.15, 141.83, and 755.15 is modified by inserting in the parentheses the symbol "A," immediately before "E" in each such item; and

(II) the Rates of Duty Special column for TSUS items 309.20 and 309.21 is modified by inserting the rate of "Free (A)" for each such item.

(b) In order to terminate preferential tariff treatment under the GSP for articles imported from all designated beneficiary developing countries, the Rates of Duty Special column for TSUS item 610.74 is modified by deleting the symbol "A*," in parentheses.

(5) The eligible articles imported from designated beneficiary developing countries and provided for in TSUS items 534.96 and 737.22 shall not be subject to the limitations of section 504(c)(1)(B) of the Trade Act, as amended.

(6) Effective with respect to articles the product of Israel that are entered, or withdrawn from warehouse for consumption, on or after the dates specified in Annex IV to this Proclamation, the rate of duty set forth in the Rates of Duty Special column followed by the symbol "I" in parentheses for each of the TSUS items enumerated in such Annex shall be deleted and the rate of duty provided in such Annex inserted in lieu thereof.

VOL 53 ISS 65 AP 5 1988 UMI

(7) The modifications made by this Proclamation shall be effective with respect to articles both: (a) imported on or after January 1, 1976, and (b) entered, or withdrawn from warehouse for consumption, on or after July 1, 1988.

IN WITNESS WHEREOF, I have hereunto set my hand this 31st day of March, in the year of our Lord nineteen hundred and eighty-eight, and of the Independence of the United States of America the two hundred and twelfth.

Ronald Reagan

Billing Code 3195-01-M

ANNEX I

Notes:

1. Bracketed matter is included to assist in the understanding of order modifications.
2. The following supersedes matter now in the Tariff Schedules of the United States (TSUS). The items and superior descriptions are set forth in columnar form, and material in such columns is inserted in the columns of the TSUS designated "Items", "Articles", "Rates of Duty 1", "Rates of Duty Special", and "Rates of Duty 2", respectively.

Effective as to articles entered, or withdrawn from warehouse for consumption, on or after July 1, 1988.

1. Item 370.84 is superseded by:

	[Other handkerchiefs,...:]			
	"Of silk:			
370.82	Containing 70 percent or more by weight of silk.....	7.5% ad val.	Free (A,E) 3.8% ad val. (I)	60% ad val.
370.86	Other.....	7.5% ad val.	Free (E*) 3.8% ad val. (I)	60% ad val."

2. Item 372.50 is superseded by:

	[Mufflers,...:]			
	[Other articles,...:]			
	[Of silk:]			
	"Knit:			
372.47	Containing 70 percent or more by weight of silk...	5.8% ad val.	Free (A,E) 2.9% ad val. (I)	60% ad val.
372.49	Other.....	5.8% ad val.	Free (E*) 2.9% ad val. (I)	60% ad val."

3. Item 372.55 is superseded by:

	[Mufflers,...:]			
	[Other articles,...:]			
	[Of silk:]			
	[Not knit:]			
	[Weighing...:]			
	"Valued not over $5 per dozen:			
372.53	Containing 70 percent or more by weight of silk...	8% ad val.	Free (A,E) 4% ad val. (I)	60% ad val.
372.57	Other.....	8% ad val.	Free (E*) 4% ad val. (I)	60% ad val."

4. Item 389.40 is superseded by:

	[Articles...:]			
	[Other articles,...:]			
	[Of man-made...:]			
	"Knit (except pile or tufted construction):			
389.44	Kitchenware scouring pads.....	12.5% ad val.	Free (A) 6.3% ad val. (I)	72% ad val.
389.48	Other.....	12.5% ad val.	6.3% ad val. (I)	72% ad val."

ANNEX I (con.)

5. Item 423.00 is superseded by:

	[Other inorganic...:]			
"423.10	Niobium oxide.....	3.7% ad val.	Free (A*,E,I)	25% ad val.
423.50	Other.....	3.7% ad val.	Free (A,E,I)	25% ad val."

6. Item 534.97 is superseded by:

	[Smokers'...:]			
	"Other:			
534.96	Kitchenware of glass-ceramics, non-glazed, greater than 75 percent by volume crystalline, containing lithium alumino-silicate, having a linear coefficient of expansion not exceeding 10 x 10^{-7} per Kelvin within a temperature range of 0°C to 300°C transparent, haze-free, exhibiting transmittances of infrared radiations in excess of 75 percent at a wavelength of 2.5 microns when measured on a sample 3 mm in thickness, and containing beta-quartz solid solution as the predominant crystal phase.....	6.9% ad val.	Free (A,E,I)	40% ad val.
534.99	Other.....	6.9% ad val.	Free (A,E,I)	40% ad val."

7. Items 642.20, 642.21, and 642.22 are superseded by:

	[Strands,...:]			
	"Fitted with fittings, or made up into articles:			
642.19	Ropes, cables or cordage fitted with fittings.....	5.7% ad val.	Free (A*,E,I)	45% ad val.
642.23	Other.....	5.7% ad val.	Free (A,E,I)	45% ad val.
642.24	If Canadian article and original motor-vehicle equipment (see headnote 2, part 6B, schedule 6).....	Free		
642.26	If certified for use in civil aircraft (see headnote 3, part 6C, schedule 6).....	Free		45% ad val."

Conforming change: Items 642.25 and 642.27 are redesignated as 642.28 and 642.29, respectively.

8. Item 682.41 is superseded by:

	[Generators,...:]			
	[Motors:]			
	"Of 1 horsepower or more, but not over 20 horsepower:			
682.37	AC, polyphase.....	3.7% ad val.	Free (A*,E,I)	35% ad val.
682.38	Other.....	3.7% ad val.	Free (A,E,I)	35% ad val."

ANNEX I (con.)

9. Item 737.24 is superseded by:

[Dolls,...:]
[Other:]
[Dolls...:]
"Other:

737.19	Not over 13 inches in height.....	12% ad val.	Free (E,I)	70% ad val.
	Other:			
737.22	Capable of electromechanical movement of body parts activated by, and synchronized with, an integral or accompanying cassette tape player or micro-processor.....	12% ad val.	Free (A,E,I)	70% ad val.
737.25	Other.....	12% ad val.	Free (E,I)	70% ad val."

Conforming change: Items 737.21 and 737.23 are redesignated as 737.17 and 737.18, respectively.

10. Item 745.71 is superseded by:

[Slide...:]
"Fasteners:

745.70	Valued not over 4 cents each.....	15% ad val.	Free (A*,E,I)	66% ad val.
745.72	Valued over 4 cents each.....	15% ad val.	Free (E,I)	66% ad val."

ANNEX II

Modification in the TSUS of an Article's Preferential Tariff Treatment Designation under the GSP

(a) For the following TSUS items in the Rates of Duty Special column delete the symbol "A*" and insert an "A" in lieu thereof:

534.81
688.30
756.15

(b) For the following TSUS items in the Rates of Duty Special column delete the symbol "A" and insert an "A*" in lieu thereof:

141.98	652.72	660.97	727.47
240.21	653.52	680.62	734.10
416.45	653.99	682.55	735.11
603.50	654.65	685.28	745.32
646.72	656.15	688.34	750.22
652.24	660.35	705.83	

VOL 53 ISS 65 APR 5 1988 UMI

ANNEX III

Modifications to General Headnote 3(e)(v)(D) of the TSUS

General headnote 3(e)(v)(D) is modified--

(a) by deleting the following TSUS items numbers and the countries set opposite these numbers:

534.81	Taiwan
610.74	Republic of Korea Taiwan
688.30	Republic of Korea
756.15	Hong Kong

(b) by adding in numerical sequence, the following TSUS item numbers and countries set opposite them:

141.98	Mexico	660.97	Singapore
240.21	Indonesia	680.62	Singapore
416.45	Taiwan	682.37	Taiwan
423.10	Brazil	682.55	Singapore
603.50	Mexico	685.28	Hong Kong Republic of Korea Taiwan
642.19	Republic of Korea		
646.72	Taiwan		
652.24	Taiwan	688.34	Hong Kong
652.72	Republic of Korea	705.83	Taiwan
653.52	Taiwan	727.47	Taiwan
653.99	Taiwan	734.10	Taiwan
654.65	Taiwan	735.11	Taiwan
656.15	Mexico	745.32	Taiwan
660.35	Israel	750.22	Taiwan

(c) by deleting the following countries opposite the following TSUS items:

155.20	Dominican Republic
612.03	Chile
612.06	Chile
685.18	Taiwan
737.96	Mexico
737.98	Mexico

(d) by adding, in alphabetical order, the following countries opposite the following TSUS items:

408.72	Republic of Korea
648.80	Taiwan
676.15	Mexico
678.50	Singapore
734.77	Taiwan
735.09	Republic of Korea
740.15	Thailand
774.58	Republic of Korea
791.28	Argentina

ANNEX IV

Effective with respect to articles the product of Israel which are entered, or withdrawn from warehouse for consumption, on or after the dates set forth in the following tabulation.

For each of the following items created by Annex I of this Proclamation the rate of duty in the Rates of Duty Special column that is followed by the symbol "I" in parentheses is deleted and the following rate of duty is inserted on the date specified in lieu thereof followed by the symbol "I" in parentheses.

TSUS ITEM	January 1, 1989	January 1, 1990	January 1, 1992	January 1, 1995
370.82	3%	2.3%	0.8%	Free
370.86	3%	2.3%	0.8%	Free
372.47	2.3%	1.7%	0.6%	Free
372.49	2.3%	1.7%	0.6%	Free
372.53	3.2%	2.4%	0.8%	Free
372.57	3.2%	2.4%	0.8%	Free
389.44	5%	3.8%	1.3%	Free
389.48	5%	3.8%	1.3%	Free

[FR Doc. 88-7589
Filed 4-1-88; 4:48 pm]
Billing Code 3195-01-C

VOL 53 ISS 65 APR 5 1988 UMI

Presidential Documents

Memorandum of March 31, 1988

Actions Concerning the Generalized System of Preferences

Memorandum for the United States Trade Representative

After considering various private sector requests for review concerning worker rights in certain beneficiary developing countries, and in accordance with section 502(b)(7) of the Trade Act of 1974, as amended (the Act) (19 U.S.C. 2462(b)(7)), I have determined that the following beneficiary developing countries have taken or are taking steps to afford internationally recognized worker rights (as defined in section 502(a)(4) of the Act): Thailand, Indonesia, the Republic of Korea, Taiwan, and Turkey. I am continuing to review the status of such worker rights in another beneficiary developing country, the Central African Republic.

These determinations shall be published in the **Federal Register**.

Ronald Reagan

THE WHITE HOUSE,
Washington, March 31, 1988.

[FR Doc. 88-7570
Filed 4-1-88; 4:49 pm]
Billing code 3195-01-M

VOL
53

ISS
65

AP
5

1988

UMI

(FR Doc.
Filed 4-1-
Billing co

Presidential Documents

Executive Order 12634 of April 1, 1988

Delegating Authority To Provide Assistance and Support for Peace, Democracy, and Reconciliation in Central America

By virtue of the authority vested in me as President by the Constitution and laws of the United States of America, including H.J. Res. 523, as enacted on April 1, 1988 ("the Act"), the Foreign Assistance Act of 1961, as amended (22 U.S.C. 2151 *et seq.*), and section 301 of title 3 of the United States Code, and in order to delegate certain functions concerning the designation of amounts to be transferred from specified accounts, the transfer of funds, and related personnel matters, it is hereby ordered as follows:

Section 1. The Secretary of Defense, in consultation with the Administrator of the Agency for International Development, is authorized to perform the functions, vested in the President by Sections 3 (b) and (e), 4(a) (2), 8, and 9 of the Act, of transferring unobligated funds from the accounts specified in Section 6 of the Act.

Sec. 2. The Director of the Office of Management and Budget is authorized to perform the function, vested in the President by Section 4(d) of the Act, of approving the detailing of personnel to the Agency for International Development.

Sec. 3. The Secretary of Defense is authorized to perform the function of designating the amounts of unobligated funds, made available by the Department of Defense Appropriations Act, 1986, as contained in section 101(b) of the further continuing appropriations resolution for the fiscal year 1986 (Public Law 99-190), which are to be transferred from each of the accounts specified in Section 6.

Ronald Reagan

THE WHITE HOUSE,
April 1, 1988.

[FR Doc. 88-7571
Filed 4-1-88; 4:50 pm]
Billing code 3195-01-M

VOL
53
ISS
65
AP
5
1988
UMI

Rules

This sectio
contains r
general ap
of which a
the Code
published
U.S.C. 15
The Code
by the Su
Prices of
first FEDE
week.

DEPARTI

Agricultu

7 CFR Pa

Washing
Assessm

AGENCY:
USDA.

ACTION:

SUMMAR
expendit
assessme
946 for th
to admin
from ass

EFFECTIV
June 30,

FOR FURT
Todd A.
Adminis
Vegetabl
Box 9645
DC 2009

SUPPLEM
final rule
Order N
regulatin
grown in
order is
Marketin
amended
referred
been rev
12291 an
1512–1 a
"non-ma
containe

Pursua
the Regu
Adminis
Marketin

Rules and Regulations

Federal Register
Vol. 53, No. 65
Tuesday, April 5, 1988

This section of the FEDERAL REGISTER contains regulatory documents having general applicability and legal effect, most of which are keyed to and codified in the Code of Federal Regulations, which is published under 50 titles pursuant to 44 U.S.C. 1510.
The Code of Federal Regulations is sold by the Superintendent of Documents. Prices of new books are listed in the first FEDERAL REGISTER issue of each week.

DEPARTMENT OF AGRICULTURE

Agricultural Marketing Service

7 CFR Part 946

Washington Potatoes; Expenses and Assessment Rate

AGENCY: Agricultural Marketing Service, USDA.

ACTION: Final rule.

SUMMARY: This final rule authorizes expenditures and establishes an assessment rate under Marketing Order 946 for the 1988–89 fiscal period. Funds to administer this program are derived from assessments on handlers.

EFFECTIVE DATE: July 1, 1988 through June 30, 1989.

FOR FURTHER INFORMATION CONTACT: Todd A. Delello, Marketing Order Administration Branch, Fruit and Vegetable Division, AMS, USDA, P.O. Box 96456, Room 2525–S, Washington, DC 20090–6456, telephone 202–475–5610.

SUPPLEMENTARY INFORMATION: This final rule is issued under Marketing Order No. 946 [7 CFR Part 946] regulating the handling of potatoes grown in the State of Washington. This order is effective under the Agricultural Marketing Agreement Act of 1937, as amended [7 U.S.C. 601–674], hereinafter referred to as the Act. This final rule has been reviewed under Executive Order 12291 and Departmental Regulation 1512–1 and has been determined to be a "non-major" rule under criteria contained therein.

Pursuant to requirements set forth in the Regulatory Flexibility Act (RFA), the Administrator of the Agricultural Marketing Service (AMS) has considered the economic impact of this final rule on small entities.

A proposed rule was issued on March 3, 1988, and published in the **Federal Register** [53 FR 7370, March 8, 1988]. That document contained a proposal to add § 946.241 to establish expenses and an assessment rate for the State of Washington Potato Committee. That rule provided that interested persons could file comments through March 18, 1988. No comments were received.

It is found that the specified expenses are reasonable and likely to be incurred, and that such expenses and the specified assessment rate to cover such expenses will tend to effectuate the declared policy of the Act.

List of Subjects in 7 CFR Part 946

Marketing agreements and orders, potatoes (Washington).

For the reasons set forth in the preamble, § 946.241 is added (the following section prescribes annual expenses and assessment rate and will not be published in the Code of Federal Regulations):

PART 946—[AMENDED]

1. The authority citation for 7 CFR Part 946 continues to read as follows:

Authority: Secs. 1–19, 48 Stat. 31, as amended; 7 U.S.C. 601–674.

2. A new § 946.241 is added to read as follows:

§ 946.241 Expenses and assessment rate.

Expenses of $33,000 by the State of Washington Potato Committee are authorized, and an assessment rate of $.004 per hundredweight of assessable potatoes is established for the fiscal period ending June 30, 1989. Unexpended funds may be carried over as a reserve.

Dated: March 30, 1988.

Robert C. Keeney,

Deputy Director, Fruit and Vegetable Division, Agricultural Marketing Service.

[FR Doc. 88–7368 Filed 4–4–88; 8:45 am]

BILLING CODE 3410–02–M

Animal and Plant Health Inspection Service

9 CFR Part 92

[Docket No. 87–180]

Specifically Approved States Authorized To Receive Mares and Stallions Imported From CEM-Affected Countries

AGENCY: Animal and Plant Health Inspection Service, USDA.

ACTION: Final rule.

SUMMARY: We are amending the regulations by adding Montana to the list of states approved to receive certain mares and stallions imported into the United States from countries where contagious equine metritis (CEM) exists. This action relieves restrictions on importers of mares and stallions from countries affected with CEM.

EFFECTIVE DATE: May 5, 1988.

FOR FURTHER INFORMATION CONTACT: Dr. Harvey A. Kryder, Senior Staff Veterinarian, Import-Export and Emergency Planning Staff, VS, APHIS, USDA, Room 810, Federal Building, 6505 Belcrest Road, Hyattsville, MD 20782, 301–436–8695.

SUPPLEMENTARY INFORMATION:

Background

The regulations in 9 CFR Part 92, §§ 92.2(i)(2), 92.4(a)(5) and 92.4(a)(8), allow certain horses (mares and stallions over 731 days old) to be imported into the United States from certain countries where contagious equine metritis (CEM) exists, if specific requirements to prevent their introducing CEM into the United States are met and the horses are consigned to approved states for further inspection, treatment, and testing.

We published in the **Federal Register** on October 6, 1987 (52 FR 37320–37321, Docket Number 87–086), a proposal to add Montana to the list of approved states authorized to receive mares and stallions that are over 731 days old and are imported from countries where CEM exists. Our proposal invited the submission of written comments, which were required to be postmarked or

received on or before December 7, 1987. We did not receive any comments. Based on the rationale set forth in the proposal, we are adopting the proposed rule as a final rule.

Executive Order 12291 and Regulatory Flexibility Act

We are issuing this rule in conformance with Executive Order 12291, and we have determined that it is not a "major rule." Based on information compiled by the Department, we have determined that this rule will have an effect on the economy of less than $100 million; will not cause a major increase in costs or prices for consumers, individual industries, Federal, state, or local government agencies, or geographic regions; will not cause a significant adverse effect on competition, employment, investment, productivity, innovation, or on the ability of United States-based enterprises to compete with foreign-based enterprises in domestic or export markets.

For this action, the Office of Management and Budget has waived the review process required by Executive Order 12291.

We anticipate that fewer than 25 mares and stallions over 731 days old will be imported into the state of Montana annually from countries where CEM exists. Approximately 2,400 mares and stallions over 731 days old and from countries where CEM exists were imported into the entire United States in Fiscal Year 1986. During the same period, approximately 26,000 horses of all classes were imported into the United States.

Under these circumstances, the Acting Administrator of the Animal and Plant Health Inspection Service has determined that this action will not have a significant economic impact on a substantial number of small entities.

Executive Order 12372

This program/activity is listed in the catalog of Federal Domestic Assistance under No. 10.025 and is subject to the provisions of Executive Order 12372, which requires intergovernmental consultation with state and local officials. (See 7 CFR Part 3015, Subpart V.)

List of Subjects in 9 CFR Part 92

Animal diseases, Canada, Imports, Livestock and livestock products, Mexico, Poultry and poultry products, Quarantine, Transportation, Wildlife.

Accordingly, 9 CFR Part 92 is amended as follows:

PART 92—IMPORTATION OF CERTAIN ANIMALS AND POULTRY AND CERTAIN ANIMAL AND POULTRY PRODUCTS; INSPECTION AND OTHER REQUIREMENTS FOR CERTAIN MEANS OF CONVEYANCE AND SHIPPING CONTAINERS THEREON

1. The authority citation for Part 92 is revised to read as follows:

Authority: U.S.C. 1622; 19 U.S.C. 1306; 21 U.S.C. 102–105, 111, 134a, 134b, 134c, 134d, 134f, and 135; 31 U.S.C. 9701; 7 CFR 2.17, 2.51, and 371.2(d).

§ 92.4 [Amended]

2. In § 92.4, paragraphs (a)(5)(ii) and (a)(8)(ii) are amended by adding "The State of Montana" in alphabetical order.

Done in Washington, DC, this 31st day of March, 1988.

Larry B. Slagle,

Acting Administrator, Animal and Plant Health Inspection Service.

[FR Doc. 88-7435 Filed 4-4-88; 8:45 am]

BILLING CODE 3410-34-M

FEDERAL RESERVE SYSTEM

12 CFR Part 202

[Reg. B; EC-1]

Equal Credit Opportunity; Update to Official Staff Commentary

AGENCY: Board of Governors of the Federal Reserve System.

ACTION: Final official staff interpretation.

SUMMARY: The Board is publishing in final form revisions to the official staff commentary to Regulation B (Equal Credit Opportunity). The commentary applies and interprets the requirements of Regulation B and is a substitute for individual staff interpretations of the regulation. The revisions address issues concerning consideration of age in evaluating creditworthiness, signature requirements, record retention and collection of monitoring information.

EFFECTIVE DATE: April 1, 1988.

FOR FURTHER INFORMATION CONTACT: Kathleen S. Brueger or Leonard N. Chanin, Staff Attorneys, or Adrienne D. Hurt, Senior Attorney, Division of Consumer and Community Affairs, at (202) 452–2412 or 452–3667; for the hearing impaired *only*, contact Earnestine Hill or Dorothea Thompson, Telecommunication Device for the Deaf, at (202) 452–3544, Board of Governors of the Federal Reserve System, Washington, DC 20551.

SUPPLEMENTARY INFORMATION:

(1) General

The Equal Credit Opportunity Act (ECOA) (15 U.S.C. 1691 *et seq.*) makes it unlawful for creditors to discriminate in any aspect of a credit transaction on the basis of race, color, religion, national origin, sex, marital status, age, receipt of public assistance, or the exercise of rights under the Consumer Credit Protection Act. This statute is implemented by the Board's Regulation B (12 CFR Part 202).

On November 20, 1985, an official staff commentary (EC–1, Supp. I to 12 CFR Part 202) was published to interpret the regulation (50 FR 48018). The commentary is designed to provide guidance to creditors in applying the regulation to specific transactions. The commentary is updated periodically to address significant questions that arise. The previous update was published in April 1987 (52 FR 10732). This notice contains the second update, which was proposed for comment on December 10, 1987 (52 FR 47589). The revisions are effective April 1, 1988.

(2) Revisions

The following is a brief description of the revisions to the commentary:

Section 202.6 Rules concerning evaluation of applications.

6(b) Specific Rules Concerning Use of Information.

Paragraph 6(b)(2)

Comment 6(b)(2)–1 is amended to clarify that while § 202.6(b)(2)(iv) permits favoring persons age 62 and older both in evaluating creditworthiness and in the credit terms offered, that paragraph does not permit offering more favorable credit terms to an age group that includes persons under age 62 (such as persons age 55 and older). To offer a program favoring a larger age group, the creditor must rely on the special purpose credit provisions of § 202.8. The additional language does not, of course, affect consideration of age in evaluating creditworthiness in a credit scoring system, as described in comment 6(b)(2)–2.

Comment 6(b)(2)–3 is amended to clarify that, in a judgmental system, age or age-related information about an applicant may be considered only in connection with other relevant information about the particular applicant or transaction.

Section 202.7 Rules concerning extensions of credit.

7(d) Signature of Spouse or Other Person.

Paragraph 7(d)(5)

Comment 7(d)(5)–2 is revised in light of *United States v. ITT Consumer Financial Corp.*, 816 F.2d 487 (9th Cir. 1987) to clarify the rules about when a creditor may require additional signatures on a credit obligation in a community property state. In the *ITT* case, the U.S. Court of Appeals for the Ninth Circuit held that the future earnings of a spouse cannot be characterized as community property until they are earned. Therefore, when an applicant relies on the spouse's future earnings to establish creditworthiness, a creditor may condition the extension of credit on the nonapplicant spouse's signing the credit obligation.

Whether an applicant is relying on the future earnings of a nonapplicant spouse is for the creditor to determine. Because § 202.5(c)(2)(iv) permits a creditor routinely to request information about a nonapplicant spouse, the mere fact that the nonapplicant spouse's income is listed on an application form is insufficient to show that the applicant is relying on the spouse's income.

In addition to revisions to the first and second sentence of comment 7(d)(5)–2, a third sentence has been added to incorporate the holding of *ITT* and to address questions raised by creditors. Some creditors have asked whether, given the *ITT* ruling, they are required to obtain the signature of the applicant's spouse whose future earnings are relied on for an extension of credit. Creditors also have asked whether they may take marital status into consideration when future earnings are relied on—that is, whether a creditor may follow the practice of not requiring the signature of an applicant's *spouse* if it is the creditor's practice to require a signature when it is a *person not married to the applicant* whose future earnings are relied on. They explain that, in the case of a spouse, the creditor is assuming the spouse's future earnings—unlike the future earnings of a nonspouse—will become community property once earned, under state property law. The third sentence of the comment addresses both of these points. A reference to § 202.6(c), which allows the consideration of state property laws, has also been added.

Section 202.12 Record retention.

12(b) Preservation of Records.

Comment 12(b)–1 is revised to clarify the rules for record retention of documents (for example, notifications of action taken) in computerized systems.

Section 202.13 Information for monitoring purposes.

13(a) Information to Be Requested.

Comment 13(a)–5 is revised to clarify the monitoring information rules regarding open-end lines of credit.

List of Subjects in 12 CFR Part 202

Banks, Banking, Civil rights, Consumer protection, Credit, Federal Reserve System, Marital status discrimination, Minority groups, Penalties, Religious discrimination, Sex discrimination, Women.

(3) Text of Revisions

Pursuant to authority granted in section 703 of the Equal Credit Opportunity Act (15 U.S.C. 1691b), the Board amends the official staff commentary to Regulation B (12 CFR Part 202 Supp. I) as follows:

PART 202—[AMENDED]

1. The authority citation for Part 202 continues to read:

Authority: 15 U.S.C. 1691 *et seq.*

2. The revisions amend the commentary (12 CFR Part 202, Supp. I) by revising comments 6(b)(2)–1, 6(b)(2)–3, 7(d)(5)–2, 12(b)–1 and 13(a)–5 to read as follows:

Supplement I—Official Staff Commentary

* * * * *

Section 202.6—Rules Concerning Evaluation of Applications

* * * * *

6(b) Specific rules concerning use of information.

* * * * *

Paragraph 6(b)(2)

1. *Favoring the elderly.* Any system of evaluating creditworthiness may favor a credit applicant who is age 62 or older. A credit program that offers more favorable credit terms to applicants age 62 or older is also permissible; a program that offers more favorable credit terms to applicants at an age lower than 62 is permissible only if it meets the special-purpose credit requirements of § 202.8.

* * * * *

3. *Consideration of age in a judgmental system.* In a judgmental system, defined in § 202.2(t), a creditor may not take age directly into account in any aspect of the credit transaction. For example, the creditor may not reject an application or terminate an account because the applicant is 60 years old. But a creditor that uses a judgmental system may relate the applicant's age to other information about the applicant that the creditor considers in evaluating creditworthiness. For example:

- A creditor may consider the applicant's occupation and length of time to retirement to ascertain whether the applicant's income (including retirement income) will support the extension of credit to its maturity.
- A creditor may consider the adequacy of any security offered when the term of the credit extension exceeds the life expectancy of the applicant and the cost of realizing on the collateral could exceed the applicant's equity. (An elderly applicant might not qualify for a 5 percent down, 30-year mortgage loan but might qualify with a larger downpayment or a shorter loan maturity.)
- A creditor may consider the applicant's age to assess the significance of the length of the applicant's employment (a young applicant may have just entered the job market) or length of time at an address (an elderly applicant may recently have retired and moved from a long-term residence).

As the examples above illustrate, the evaluation must be made in an individualized, case-by-case manner; and it is impermissible for a creditor, in deciding whether to extend credit or in setting the terms and conditions, to base its decision on age or information related exclusively to age. Age or age-related information may be considered only in evaluating other "pertinent elements of creditworthiness" that are drawn from the particular facts and circumstances concerning the applicant.

* * * * *

Section 202.7—Rules Concerning Extensions of Credit

* * * * *

7(d) *Signature of spouse or other person.*

* * * * *

Paragraph 7(d)(5)

* * * * *

2. *Reliance on income of another person—individual credit.* An applicant who requests individual credit relying on the income of another person (including a spouse in a noncommunity property state) may be required to provide the signature of the other person to make the income available to pay the debt. In community property states, the signature of a spouse may be required if the applicant relies on the spouse's separate income. If the applicant relies on the spouse's future earnings that as a matter of state law cannot be characterized as community property until earned, the creditor may require the spouse's signature, but need not do so—even if it is the creditor's practice to require the signature when an applicant relies on the future earnings of a person other than a spouse. (See § 202.6(c) on consideration of state property laws.)

* * * * *

Section 202.12—Record Retention.

* * * * *

12(b) *Preservation of records.*

1. *Copies.* A copy of the original record includes carbon copies, photocopies, microfilm or microfiche copies, or copies produced by any other accurate retrieval system, such as documents stored and reproduced by computer. A creditor that uses a computerized or mechanized system need not keep a written copy of a document (for example, an adverse action notice) if it can regenerate all pertinent information in a

BEST COPY AVAILABLE

timely manner for examination or other purposes.

* * * * *

Section 202.13—Information for Monitoring Purposes

13(a) *Information to be requested.*

* * * * *

5. *Transactions not covered.* The information-collection requirements of this section apply to applications for credit primarily for the purchase or refinancing of a dwelling that is or will become the applicant's principal residence. Therefore, applications for credit secured by the applicant's principal residence but made primarily for a purpose other than the purchase or refinancing of the principal residence (such as loans for home improvement and debt consolidation) are not subject to information-collection requirements. An application for an open-end home equity line of credit is not subject to this section unless it is readily apparent to the creditor when the application is taken that the primary purpose of the line is for the purchase or refinancing of a principal dwelling.

Board of Governors of the Federal Reserve System, March 30, 1988.

William W. Wiles,

Secretary of the Board.

[FR Doc. 88-7348 Filed 4-4-88; 8:45 am]

BILLING CODE 6210-01-M

---

12 CFR Part 205

[Reg. E; EFT-2]

Electronic Fund Transfers; Update to Official Staff Commentary

AGENCY: Board of Governors of the Federal Reserve System.

ACTION: Final official staff interpretation.

SUMMARY: The Board is publishing in final form revisions to the official staff commentary to Regulation E (Electronic Fund Transfers). The commentary applies and interprets the requirements of Regulation E and is a substitute for individual staff interpretations of the regulation. The revisions address questions that have arisen about the regulation, including amendments adopted by the Board in August 1987 dealing with POS/ACH services. The revisions deal with, for example, the responsibilities of a service-providing institution concerning periodic statements, card issuance, and error resolution.

EFFECTIVE DATE: April 1, 1988.

FOR FURTHER INFORMATION CONTACT: Thomas J. Noto, Staff Attorney, or John C. Wood, Senior Attorney, Division of Consumer and Community Affairs, at (202) 452-2412; for the hearing-impaired *only*, contact Earnestine Hill or Dorothea Thompson, Telecommunication Device for the Deaf, at (202) 452-3544, Board of Governors of the Federal Reserve System, Washington, DC 20551.

SUPPLEMENTARY INFORMATION: (1) *General.* The Electronic Fund Transfer Act (15 U.S.C. 1693 *et seq.*) governs any transfer of funds that is electronically initiated and that debits or credits a consumer's account. This statute is implemented by the Board's Regulation E (12 CFR Part 205).

Effective September 24, 1981, an official staff commentary (EFT-2, Supp. II to 12 CFR Part 205) was published to interpret the regulation. The commentary is designed to provide guidance to financial institutions in applying the regulation to specific situations. The commentary is updated periodically to address significant questions that arise. The previous updates were published on April 6, 1983 (48 FR 14880), October 18, 1984 (49 FR 40794), April 3, 1985 (50 FR 13180), April 21, 1986 (51 FR 13484), and April 3, 1987 (52 FR 10734). This notice contains the sixth update, which was proposed for comment on December 10, 1987 (52 FR 47591). The revisions are effective April 1, 1988.

(2) *Description of revisions.* The following is a brief description of the revisions to the commentary:

Section 205.3 Exemptions.

Question 3-6

Question 3-6 is revised to make clear that section 913 of the EFT Act does not require an employer to give its employees the option of receiving their salary by check or cash as an alternative to direct deposit; an employer also complies with section 913 by allowing employees to choose the institutions to receive their direct deposits.

Section 205.14 Services Offered by Financial Institutions Not Holding Consumer's Account.

Question 14-4

Question 14-4 is revised to make clear that a service provider need not furnish a periodic statement if it complies with the conditions set forth in the August 1987 amendments to the regulation (52 FR 30904).

Question 14-5

This question is added to clarify that, in a POS/ACH program, if the service provider does not issue the debit card that is actually used to initiate transfers, or does not issue a debit card at all, the service provider must send periodic statements to consumers.

Question 14-6

This question is also new. It deals with the responsibility of a service provider for error resolution. It clarifies that the service provider must reimburse the consumer for any fees or charges incurred as a result of the error, including those imposed by the account-holding institution.

Question 14-7

This question is added to address an issue concerning the periodic statement provided by the account-holding institution. Specifically, the question makes clear that the statement need not show, with respect to POS/ACH transactions, information other than the transaction description set forth in § 205.9(b)(1).

List of Subjects in 12 CFR Part 205

Banks, banking; Consumer protection; Electronic fund transfers; Federal Reserve System; Penalties.

(3) *Text of revisions.* Pursuant to authority granted in section 904 of the Electronic Fund Transfer Act, 15 U.S.C. 1693b, the Board amends the official staff commentary to Regulation E (12 CFR Part 205, Supp. II) as follows:

1. The authority citation for Part 205 continues to read:

Authority. Pub. L. 95-630, 92 Stat. 3730 (15 U.S.C. 1693b).

2. The revisions amend the official staff commentary on Regulation E (EFT-2, Supp. II to 12 CFR Part 205) by revising questions 3-6 and 14-4 and by adding questions 14-5, 14-6, and 14-7, and read as follows:

Supplement II—Official Staff Interpretations

Section 205.3—Exemptions.

Q 3-6: *Compulsory use—salary payments.* Preauthorized transfers from a financial institution to a consumer's account at the same institution are exempt from the act and regulation generally but are subject to the statutory prohibition against requiring an employee (as a condition of employment) to receive payroll deposits by electronic means at a particular institution. Does this prohibition apply to a financial institution as an employer?

A: Yes. The prohibition applies to all employers, including financial institutions. To comply with the law, an employer could, for example, give its employees a choice of the method of receiving payment—letting the employee choose between having pay deposited at a particular institution, or receiving payment by check or cash. Or, an employer could mandate payment by electronic means, but allow the employee to

choose the institution to receive direct deposits.

As in the case of preauthorized loan payments, the compulsory-use prohibition does not require an employer to offer alternative means of payment to employees who agreed to electronic deposits at a particular financial institution before May 10, 1980. However, if an employee asks to terminate this arrangement, the employer should honor the request. (§ 205.3(d)(2), § 913)

* * * * *

Section 205.14—Services Offered by Financial Institutions Not Holding Consumer's Account.

Q 14–4: *Periodic statement—service-providing institution.* Does the service-providing institution have to provide to the consumer a periodic statement showing transfers other than electronic fund transfers made with the service provider's access device?

A: No. Moreover, if the service provider complies with the conditions set forth in the regulation, it need not provide any periodic statement. (§ 205.14(a)(2)(i)–(v))

Q 14–5: *Periodic statement—issuance of card.* If a service provider issues its own card but then allows the consumer to use another card (such as a bank-issued debit or credit card) to initiate transfers through the POS/ACH system, must it send periodic statements?

A: Yes. To qualify for the periodic statement exception, the service provider must issue the debit card that will actually be used to initiate transfers. Similarly, a service provider that does not issue any debit card remains subject to the requirement to send periodic statements. (§ 205.14(a)(2)(i))

Q 14–6: *Error resolution—responsibility of service-providing institution.* In a POS/ACH transaction, the consumer properly notifies the service-providing institution of an alleged error. What is the service provider's responsibility?

A: The service provider must investigate and resolve the error as set forth in the regulation. If an error in fact occurred, any fees or charges imposed as a result of the error, either by the service provider or by the account-holding institution (for example, overdraft or dishonor fees) must be reimbursed to the consumer by the service provider. (§§ 205.11 and 205.14(a)(3)–(a)(6))

Q 14–7: *Content of periodic statement—account-holding institution.* For POS/ACH transactions initiated by the service provider, is the account-holding institution required to disclose all the items specified in section 205.9(b) on its periodic statement?

A: No. Its periodic statement need contain only the information as specified in § 205.9(b)(1). (§ 205.14(b)(1))

* * * * *

Board of Governors of the Federal Reserve System, March 30, 1988.

William W. Wiles,

Secretary of the Board.

[FR Doc. 88–7349 Filed 4–4–88; 8:45 am]

BILLING CODE 6210–01–M

12 CFR Part 226

[Reg. Z; Docket No. R–0545A]

Update to Official Staff Commentary

AGENCY: Board of Governors of the Federal Reserve System.

ACTION: Official staff interpretation.

SUMMARY: The Board is publishing in final form changes to the official staff commentary to Regulation Z (Truth in Lending). The commentary provides guidance to creditors in complying with an amendment to Regulation Z that was adopted by the Board in December of 1987 (52 FR 48665). The regulatory amendment requires creditors to provide more information to consumers about certain closed-end variable-rate loans than was previously required under Regulation Z. The commentary revisions include new material and technical changes in existing material. The Board is also publishing changes to the official staff commentary on other provisions of Regulation Z elsewhere in this issue of the **Federal Register.**

EFFECTIVE DATE: April 1, 1988, but compliance optional until October 1, 1988.

FOR FURTHER INFORMATION CONTACT: Sharon T. Bowman or Thomas J. Noto, Staff Attorneys, or Michael S. Bylsma, Senior Attorney, Division of Consumer and Community Affairs, Board of Governors of the Federal Reserve System, Washington, DC, 20551, (202) 452–3667. For the hearing impaired *only,* Telecommunication Device for the Deaf (TDD), contact Earnestine Hill or Dorothea Thompson at (202) 452–3544.

SUPPLEMENTARY INFORMATION:

(1) Background

This official staff interpretation applies and interprets a final amendment to Regulation Z that is designed to provide more information to consumers about closed-end variable-rate transactions secured by a consumer's principal dwelling with a term greater than one year. The amendment to the regulation was published on December 24, 1987 (52 FR 48665) with a mandatory compliance date of October 1, 1988. Proposed revisions to the commentary were first published for public comment on November 24, 1986 (51 FR 42248). Upon adoption of the regulatory amendment, the Board published the commentary for additional comment on December 24, 1987 (52 FR 48707). The Board is now adopting the commentary revisions in final form with compliance optional until October 1, 1988. The major revisions to the commentary begin with comment 18(f)(2)–1. Portions of existing commentary that have undergone only minor changes have been reprinted to clarify the revisions. With the exception of the provisions interpreting the new disclosure rules, many of the changes reflect either renumbering of existing paragraphs or shifting of existing general commentary regarding variable-rate disclosures from the commentary to § 226.18(f) to the commentary to section 226.17(c).

(2) Explanation of Revisions

The following is a brief description of the revisions to the commentary:

Subpart C—Closed-end Credit

Section 226.17—General disclosure requirements

17(a) Form of Disclosures

Paragraph 17(a)(1)

Comment 17(a)(1)–2 is amended to clarify that the general segregation requirement in § 226.17(a)(1) does not apply to the disclosures required under new §§ 226.19(b) and 226.20(c). The information contained in the fifth bulleted paragraph under comment 17(a)(1)–5, which discusses disclosure of a variable-rate feature on other documents, has been deleted since similar information will be required under new paragraph (f)(2) of § 226.18. In addition, the ninth bulleted paragraph under comment 17(a)(1)–5, discussing negative amortization, has been revised to change the reference from § 226.18(f)(3) to new § 226.18(f)(1)(iii).

17(b) Time of Disclosures

Comment 17(b)–1 has been expanded by adding a reference to the timing requirements in new § 226.19(b) for variable-rate transactions secured by the consumer's principal dwelling with a term greater than one year. Comment 17(b)–2 has been amended by adding a reference to the timing rules for additional disclosures required upon the conversion of open-end transactions to certain closed-end variable-rate transactions.

17(c) Basis of Disclosures and Use of Estimates

Paragraph 17(c)(1)

The first bulleted paragraph in comment 17(c)(1)–2 has been revised to clarify that preferred-rate loans are variable-rate transactions (while retaining the employee's loan as an example) and to change the reference from § 226.18(f) to § 226.19(b).

Material generally relating to the basis of disclosures for variable-rate

transactions currently in the commentary to § 226.18(f) has been moved to the commentary to § 226.17(c)(1) and the material currently in the commentary to § 226.17(c)(1) has been reordered to accommodate this change. Comments 17(c)(1)–8, –9 and –10, discussing graduated payment mortgages, Morris Plans and number of transactions have been redesignated, respectively, as comments 17(c)(1)–12 –14 and –15. Material currently contained in comments 18(f)–2 and –3, discussing the basis of disclosures and use of estimates for variable-rate transactions, has been added as comments 17(c)(1)–8 and –9.

Comment 17(c)(1)–10 incorporates material on discounted variable-rate transactions currently contained in comment 18(f)–8, and the heading of the comment has been changed to clarify that it applies to transactions in which the initial rate is either lower or higher than the fully indexed rate. In addition, an error in the figures in the example of a transaction with a 7½ percent payment cap has been corrected.

Most of the material currently in comment 18(f)–6 relating to the basis of disclosure for certain variable-rate transactions has been incorporated in comment 17(c)(1)–11. Revisions have been made to clarify that preferred-rate transactions can include transactions other than employee preferred-rate loans. For example, variable-rate rules apply where a preferential rate is offered so long as the consumer permits loan payments to be debited from a deposit account. Two parts of existing comment 18(f)–6 that do not relate to the basis of disclosure, namely the reference in the second bullet to the conditions for imposition of a shared-appreciation feature and the reference to the hypothetical example in the third bullet, have been deleted in the new comment 17(c)(1)–11.

The material currently in comment 18(f)–7, discussing growth-equity mortgages, has been incorporated in new comment 17(c)(1)–13, although detailed discussion of the option of disclosing by analogy to variable-rate disclosures has been deleted in favor of a more general reference in the new comment 17(c)(1)–13.

17(d) Multiple Creditors; Multiple Consumers

Comment 17(d)–2 has been amended to clarify that the disclosures required under § 226.19(b) need only be provided to the consumer who expresses an interest in a variable-rate loan program, and not to every consumer who may be entitled to rescind the transaction.

17(f) Early Disclosures

As a result of the revisions to § 226.19 of the regulation, the reference in comment 17(f)–3 to § 226.19(b) has been revised to reference § 226.19(a)(2).

Section 226.18—Content of disclosures.

18(f) Variable Rate

Comment 18(f)–1 has been expanded to explain whether paragraph (f)(1) or (f)(2) of § 226.18 applies to a particular variable-rate transaction. Comment 18(f)–1 indicates that variable-rate loans that are for a term greater than one year and are secured by the consumer's principal dwelling are subject to the special early disclosure requirements of new § 226.19(b). The comment states that "shared-equity" or "shared-appreciation" mortgages are subject to the disclosure requirements of § 226.18(f)(1) regardless of the general coverage of §§ 226.18(f)(1) and 226.19(b). The comment also explains that, under new footnote 43, creditors may substitute the new disclosures under §§ 226.19(b) and 226.18(f)(2) for any closed-end variable-rate transaction.

With minor changes, material relating to the basis of disclosures for variable-rate transactions has been moved to the commentary to § 226.17(c)(1). Consequently, comments 18(f)–2 and –3 and comments 18(f)–5 through –8 have been deleted. Present comment 18(f)–4 has been redesignated as comment 18(f)(1)–1. The material currently in comments 18(f)–2 and –3 has been incorporated, respectively, in comments 17(c)(1)–8 and –9, and the material currently in comments 18(f)–6 and –7 has been incorporated in comments 17(c)(1)–11 and –13. The material currently in comment 18(f)–8, discussing discounted transactions, has been incorporated in comment 17(c)(1)–10 and the heading has been changed to clarify that the comment also applies to transactions where the initial rate is higher than the fully indexed rate. The material currently in comment 18(f)–5 has been incorporated in the commentary to new § 226.19(b). Some of the material currently in comment 18(f)–6 has been incorporated in new comment 19(b)–4 to clarify that the designated transactions are subject to the general disclosure requirements of new § 226.19(b). The material currently in comment 18(f)–6 relating to the basis for disclosures has not been transferred to new comment 19(b)–4, since such information has been incorporated in comment 17(c)(1)–11.

The current headings referring to paragraphs 18(f) (1) through (4) have been changed to reference paragraphs 18(f)(1) (i) through (iv) to reflect the fact that current § 226.18(f) of the regulation has become § 226.18(f)(1).

Comment 18(f)(2)–1 has been added to clarify that where a variable-rate transaction is secured by the consumer's principal dwelling and has a term greater than one year, the later disclosures required under § 226.18 must state that the variable-rate feature exists and refer to the variable-rate disclosures provided earlier to the consumer under new § 226.19(b).

Section 226.19 Certain residential mortgage transactions.

The title of this section of the commentary has been revised to read "Certain Residential Mortgage and Variable-Rate Transactions" to reflect the fact that § 226.19 of the regulation now incorporates disclosure provisions for variable-rate loans secured by the consumer's principal dwelling that have a term greater than one year.

19(a) Time of Disclosure

The current heading referring to 19(a) has been redesignated as 19(a)(1). Existing comments 19(a)–1 through 19(a)–5 therefore have become comments 19(a)(1)–1 through –5.

19(b) Redisclosure Required

The current heading referring to 19(b) has been redesignated as 19(a)(2). Existing comments 19(b)–1 through 19(b)–4 have therefore become comments 19(a)(2)–1 through –4.

Comment 19(b)–1 has been added to clarify that the new requirements of § 226.19(b) apply to variable-rate transactions secured by the consumer's principal dwelling with a term greater than one year. The comment states that "shared-equity" or "shared-appreciation" mortgages are subject to the disclosure requirements of § 226.18(f)(1) regardless of the general coverage of §§ 226.18(f)(1) and 226.19(b). The comment also explains that the term of a demand loan is to be determined in accordance with the rules set forth in the commentary to § 226.17(c)(5).

Comment 19(b)–2 explains the special timing rules under § 226.19(b) for cases where applications are received through an agent or broker or by telephone. The comment also explains that where open-end accounts convert, pursuant to a written agreement, to transactions subject to § 226.19(b), the required disclosures may be given at the time of conversion.

Comment 19(b)–3 incorporates material previously contained in comment 18(f)–5 to clarify that creditors may substitute information provided in

accordance with the variable-rate regulations of other federal agencies for the disclosures required by § 226.29(b). The references to footnote 43 and § 226.18(f) in old comment 18(f)–5 have been revised to reference footnote 45a and § 226.29(b), respectively, in the new comment 19(b)–3.

Comment 19(b)–4 incorporates, with changes, some of the material previously contained in comment 18(f)–6 to clarify that the designated transactions are subject to certain or all of the general disclosure requirements of § 226.19(b). The last sentence in the first bullet under old comment 18(f)–6 referring to the disclosures that must be given for renegotiable rate mortgages has been deleted in the new comment 19(b)–4. The language in the third bullet under old comment 18(f)–6 has been revised in the new comment 19(b)–4 to clarify that preferred-rate loans where the rate can increase upon some occurrence are variable-rate transactions even where the initial underlying rate is fixed, and the reference to the hypothetical example in the last sentence has been deleted.

Paragraph 19(b)(1)

Comment 19(b)(1)–1 clarifies what constitutes a suitable substitute for the *Consumer Handbook on Adjustable Rate Mortgages*. New comment 19(b)(1)–2 explains that the *Consumer Handbook* requirement is not applicable to loan programs where the underlying interest rate is fixed. Thus the *Consumer Handbook* need not be provided, for example, in certain preferred-rate transactions or when variable-rate mortgage insurance or required credit life insurance is offered in connection with an otherwise fixed-rate transaction.

Paragraph 19(b)(2)

Comment 19(b)(2)–1 explains that a creditor must provide disclosures for each of its variable-rate programs in which the consumer expresses an interest. The final comment has been expanded from the proposal to also indicate that a creditor need only provide disclosures for programs that are available to the consumer. Thus if an application is denied within the three-day period following receipt through a broker, disclosures need not be provided under footnote 45b of the regulation. In addition, if a program is made available only to certain customers of an institution, the creditor need not provide disclosures for that program to other consumers who express a general interest in the creditor's ARM programs. The final comment also indicates that a creditor should provide additional loan program disclosures in response to subsequent expressions of interest by the consumer. Finally, material has been included to clarify that program disclosures may consist of more than one page.

Comment 19(b)(2)–2 has been added to clarify what constitutes a separate loan program that would require separate program disclosures. The final comment also clarifies that loans with a different term constitute distinct programs.

Comment 19(b)(2)–3 has been added to clarify that the disclosures required under § 226.19(b)(2) need only be made as applicable. The final comment has been expanded to clarify that disclosures relating to payments are only applicable to payments based on the interest rate, loan balance and loan term.

Comment 19(b)(2)–4 has been added to explain the circumstances under which a creditor must revise its loan program disclosures.

Comments to new § 226.19(b)(2) (i) through (xiii) have been added to clarify the requirements imposed by these paragraphs and to illustrate how a creditor may comply with the new provisions. Additional commentary has been added to explain, for example, how to select index values to be used in the historical index table and how to illustrate discounted and premium rates.

Section 226.20 Subsequent disclosure requirements.

20(a) Refinancings

Comment 20(a)–3 has been amended to clarify that the addition of a variable-rate feature to an obligation or an increase in the rate based on a previously undisclosed variable-rate feature are events requiring disclosures under new § 226.19(b) if the variable-rate transaction is secured by the consumer's principal dwelling and has a term greater than one year. The comment explains that, in such cases, disclosures must be given at the time of the addition or increase.

20(b) Assumptions

Comment 20(b)–6 has been amended to provide that assumptions of variable-rate transactions secured by the consumer's principal dwelling with a term greater than one year may be disclosed solely in accordance with § 226.18(f)(1) and that disclosures under §§ 226.18(f)(2)(ii) and 226.19(b) need not be provided.

20(c) Variable-Rate Adjustments

Comment 20(c)–1 has been added to explain what subsequent disclosures are required to be made by a creditor or a subsequent holder in cases where an interest rate adjustment is made in a variable-rate transaction subject to new § 226.19(b). Comment 20(c)–2 has been added to clarify that shared-equity or shared-appreciation mortgages are exempt from the subsequent disclosure requirements of § 226.20(c). Comment 20(c)(1)–1 and comment 20(c)(2)–1 have been added to clarify the requirements that current and prior interest rates and index values be disclosed on adjustment notices. Comment 20(c)(3)–1 has been added to clarify that § 226.20(c)(3) is applicable only when interest rate carryover occurs at an adjustment. Comment 20(c)(4)–1 has been added to clarify the disclosure of contractual effects of an adjustment, and comment 20(c)(5)–1 has been added to clarify when the disclosure of fully amortizing payments is required.

Appendix H—Closed-End Model Forms and Clauses

Comment app. H–4 has been revised to clarify that the model clauses set forth in Appendix H–4(A) of the regulation apply to transaction subject to § 226.18(f)(1). In addition, commentary has been provided to interpret the new model clauses H–4(B) through H–4(D) in Appendix H. These additions are numbered as comments app. H–5 through –7. Commentary describing new Sample H–14 has been added as comment app. H–18. Consequently, existing comments app. H–5 through –14 have been renumbered as comments app. H–8 through –17 and existing comments app. H–16 through –20 have been renumbered as comments app. H–19 through –23.

List of Subjects in 12 CFR Part 226

Advertising, Banks, Banking, Consumer protection, Credit, Federal Reserve System, Finance, Penalties, Rate limitations, Truth in lending.

Pursuant to authority granted in section 105 of the Truth in Lending Act (15 U.S.C. 1604 as amended), the Board amends the official staff commentary to Regulation Z (12 CFR Part 226 Supp. I) as follows:

PART 226—[AMENDED]

(1) The authority citation for Part 226 continues to read:

Authority: Sec. 105, Truth in Lending Act, as amended by sec. 605, Pub. L. 96–221, 94 Stat. 170 (15 U.S.C. 1604 *et seq.*); sec. 1204(c), Competitive Equality Banking Act, Pub. L. 100–86, 101 Stat. 552.

(2) *Text of revisions.* The commentary (12 CFR Part 226 Supp. I) is amended by

revising comment 17(a)(1)–2; removing the information contained in the fifth bullet under comment 17(a)(1)–5 and changing the reference in the ninth bullet under this comment from § 226.18(f)(3) to § 226.18(f)(1)(iii); revising comments 17(b)–1 and 17(b)–2; revising the information contained in the first bullet under comment 17(c)(1)–2; redesignating comment 17(c)(1)–8 as comment 17(c)(1)–12; redesignating comments 17(c)(1)–9 and 17(c)(1)–10 as comments 17(c)(1)–14 and 17(c)(1)–15, respectively; adding comments 17(c)(1)–8 through 17(c)(1)-11 and 17(c)(1)-13; revising comment 17(d)-2; changing the reference in comment 17(f)-3 from § 226.19(b) to § 226.19(a)(2); revising comment 18(f)-1; removing comments 18-(f)-2 and 18-(f)-3; removing comments 18(f)-5 through 18(f)-8; adding a heading *"Paragraph 18 (f)(1)(i)"* under the heading *"Paragraph 18(f)(1)"* and redesignating comment 18(f)(1)-1 as comment 18(f)(1)(i)-1; redesignating comment 18(f)-4 as comment 18(f)(1)-1; revising the heading *"Paragraph 18(f)(2)"* to read *"Paragraph 18 (f)(1)(ii)"* and redesignating comment 18(f)(2)-1 as comment 18(f)(1)(ii)-1; revising the heading *"Paragraph 18(f)(3)"* to read *"Paragraph 18(f)(1)(iii)"* and redesignating comment 18(f)(3)-1 as comment 18(f)(1)(iii)-1; revising the heading *"Paragraph 18(f)(4)"* to read *"Paragraph 18(f)(1)(iv)"* and redesignating comments 18(f)(4)-1 and 18(f)(4)-2 as comments 18(f)(1)(iv)-1 and 18(f)(1)(iv)-2, respectively; adding a heading to read *"Paragraph 18(f)(2)"*; adding comment 18(f)(2)-1; revising the title to the commentary to § 226.19; revising the heading "19(a) Time of Disclosure" to read *"19(a)(1) Time of Disclosure"* and redesignating comments 19(a)-1 through 19(a)-5 as comments 19(a)(1)-1 through 19(a)(1)-5, respectively; revising the heading "19(b) Redisclosure Required" to read *"19(a)(2) Redisclosure Required"* and redesignating comments 19(b)-1 through 19(b)-4 as comments 19(a)(2)-1 through 19(a)(2)-4, respectively; adding a heading "19(b) Certain Variable-Rate Transactions"; adding comments 19(b)-1 through 19(b)(2) (xiii)-1; revising comment 20(a)-3; revising comment 20(b)-6; adding a heading to read "20(c) Variable-Rate Adjustments" and adding comments 20(c)-1, 20(c)-2, 20(c)(1)-1, 20(c)(2)-1, 20(c)(3)-1, 20(c)(4)-1 and 20(c)(5)-1; revising the heading and the first sentence of comment app. H–4; redesignating comments app. H–5 through app. H–20 as comments app. H–8 through app. H–23, respectively; adding comments app. H–5 through app. H–7; and revising newly redesignated comment app. H–18 as follows:

Supplement I—Official Staff Interpretations

* * * * *

Section 226.17—General Disclosure Requirements.

17(a) Form of disclosures.

Paragraph 17(a)(1).

* * * * *

2. *Segregation of disclosures.* The disclosures may be grouped together and segregated from other information in a variety of ways. For example, the disclosures may appear on a separate sheet of paper or may be set off from other information on the contract or other documents:

- By outlining them in a box
- By bold print dividing lines
- By a different color background
- By a different type style

(The general segregation requirement described in this subparagraph does not apply to the disclosures required under §§ 226.19(b) and 226.20(c) although the disclosures must be clear and conspicuous.)

* * * * *

17(b) Time of disclosures.

1. *Consummation.* As a general rule, disclosures must be made before "consummation" of the transaction. The disclosures need not be given by any particular time before consummation, except in certain mortgage transactions and variable-rate transactions secured by the consumer's principal dwelling with a term greater than one year under § 226.19. (See the commentary to § 226.2(a)(13) regarding the definition of consummation.)

2. *Converting open-end to closed-end credit.* If an open-end credit account is converted to a closed-end transaction under a written agreement with the consumer, the creditor must provide a set of closed-end credit disclosures before consummation of the closed-end transaction. (See the commentary to § 226.19(b) for the timing rules for additional disclosures required upon the conversion to a variable-rate transaction secured by a consumer's principal dwelling with a term greater than one year.) If consummation of the closed-end transaction occurs at the same time as the consumer enters into the open-end agreement, the closed-end credit disclosures may be given at the time of conversion. If disclosures are delayed until conversion and the closed-end transaction has a variable-rate feature, disclosures should be based on the rate in effect at the time of conversion. (See the commentary to § 226.5 regarding conversion of closed-end to open-end credit.)

17(c) Basis of disclosures and use of estimates.

Paragraph 17(c)(1).

* * * * *

2. *Modification of obligation.* * * *

- If the creditor offers a preferential rate, such as an employee preferred rate, the disclosures should reflect the terms of the legal obligation. (See the commentary to § 226.19(b) for an example of a preferred-rate transaction that is a variable-rate transaction.)

* * * * *

8. *Basis of disclosures in variable-rate transactions.* The disclosures for a variable-rate transaction must be given for the full term of the transaction and must be based on the terms in effect at the time of consummation. However, in a variable-rate transaction with either a seller buydown that is reflected in the credit contract or a consumer buydown, disclosures should not be based solely on the initial terms. In those transactions, the disclosed annual percentage rate should be a composite rate based on the lower rate for the buydown period and the rate that is the basis of the variable-rate feature for the remainder of the term. (See the commentary to § 226.17(c) for a discussion of buydown transactions and the commentary to § 226.19(a)(2) for a discussion of the redisclosure in certain residential mortgage transactions with a variable-rate feature).

9. *Use of estimates in variable-rate transactions.* The variable-rate feature does not, by itself, make the disclosures estimates.

10. *Discounted and premium variable-rate transactions.* In some variable-rate transactions, creditors may set an initial interest rate that is not determined by the index or formula used to make later interest rate adjustments. Typically, this initial rate charged to consumers is lower than the rate would be if it were calculated using the index or formula. However, in some cases the initial rate may be higher. In a discounted transaction, for example, a creditor may calculate interest rates according to a formula using the six-month Treasury bill rate plus a 2 percent margin. If the Treasury bill rate at consummation is 10 percent, the creditor may forgo the 2 percent spread and charge only 10 percent for a limited time, instead of setting an initial rate of 12 percent.

- When creditors use an initial interest rate that is not calculated using the index or formula for later rate adjustments, the disclosures should reflect a composite annual percentage rate based on the initial rate for as long as it is charged and, for the remainder of the term, the rate that would have been applied using the index or formula at the time of consummation. The rate at consummation need not be used if a contract provides for a delay in the implementation of changes in an index value. For example, if the contract specifies that rate changes are based on the index value in effect 45 days before the change date, creditors may use the index value in effect not more than 45 days before consummation in calculating a composite annual percentage rate.
- The effect of the multiple rates must also be reflected in the calculation and disclosure of the finance charge, total of payments, and payment schedule.
- If a loan contains a rate or payment cap that would prevent the initial rate or payment, at the time of the first adjustment, from changing to the rate determined by the index or formula at consummation, the effect of that rate or payment cap should be reflected in the disclosures.

• Because these transactions involve irregular payment amounts, an annual percentage rate tolerance of ¼ of 1 percent applies, in accordance with § 226.22(a)(3) of the regulation.

• Examples of discounted variable-rate transactions include—

—A 30-year loan for $100,000 with no prepaid finance charges and rates determined by the Treasury bill rate plus 2 percent. Rate and payment adjustments are made annually. Although the Treasury bill rate at the time of consummation is 10 percent, the creditor sets the interest rate for one year at 9 percent, instead of 12 percent according to the formula. The disclosures should reflect a composite annual percentage rate of 11.63 percent based on 9 percent for one year and 12 percent for 29 years. Reflecting those two rate levels, the payment schedule should show 12 payments of $804.62 and 348 payments of $1,025.31. The finance charge should be $266,463.32 and the total of payments $366,463.32.

—Same loan as above, except with a 2 percent rate cap on periodic adjustments. The disclosures should reflect a composite annual percentage rate of 11.53 percent based on 9 percent for the first year, 11 percent for the second year, and 12 percent for the remaining 28 years. Reflecting those three rate levels, the payment schedule should show 12 payments of $804.62, 12 payments of $959.09, and 336 payments of $1,024.34. The finance charge should be $265,234.76, and the total of payments $365,234.76.

—Same loan as above, except with a 7½ percent cap on payment adjustments. The disclosures should reflect a composite annual percentage rate of 11.64 percent, based on 9 percent for one year and 12 percent for 29 years. Because of the payment cap, five levels of payments should be reflected. The payment schedule should show 12 payments of $804.62, 12 payments of $864.97, 12 payments of $929.84, 12 payments of $999.58, and 312 payments of $1,070.04. The finance charge should be $277,040.60, and the total of payments $377,040.60.

This paragraph does not apply to variable-rate loans in which the initial interest rate is set according to the index or formula used for later adjustments but is not set at the value of the index or formula at consummation. For example, if a creditor commits to an initial rate based on the formula on a date prior to consummation, but the index has moved during the period between that time and consummation, a creditor should base its disclosures on the initial rate.

11. *Other variable-rate transactions.* Examples of variable-rate transactions include:

• Renegotiable rate mortgage instruments that involve a series of short-term loans secured by a long-term obligation, where the lender is obligated to renew the short-term loans at the consumer's option. At the time of renewal, the lender has the option of increasing the interest rate. Disclosures must be given for the longer term of the obligation, with all disclosures calculated on the basis of the rate in effect at the time of consummation of the transaction.

• "Shared-equity" or "shared-appreciation" mortgages that have a fixed rate of interest and an appreciation share based on the consumer's equity in the mortgaged property. The appreciation share is payable in a lump sum at the specified time. Disclosures must be based on the fixed interest rate. (As discussed in the commentary to section 226.2, other types of shared-equity arrangements are not considered "credit" and are not subject to Regulation Z.)

• Preferred-rate loans where the terms of the legal obligation provide that the initial underlying rate is fixed but will increase upon the occurrence of some event, such as an employee leaving the employ of the creditor, and the note reflects the preferred rate. The disclosures are to be based on the preferred rate.

Graduated-payment mortgages and step-rate transactions without a variable-rate feature are not considered variable-rate transactions.

* * * * *

13. *Growth-equity mortgages.* Also referred to as payment-escalated mortgages, these mortgage plans involve scheduled payment increases to prematurely amortize the loan. The initial payment amount is determined as for a long-term loan with a fixed interest rate. Payment increases are scheduled periodically, based on changes in an index. The larger payments result in accelerated amortization of the loan. In disclosing these mortgage plans, creditors may either:

• Estimate the amount of payment increases, based on the best information reasonably available; or

• Disclose by analogy to the variable-rate disclosures in 226.18(f)(1).

(This discussion does not apply to growth-equity mortgages in which the amount of payment increases can be accurately determined at the time of disclosure. For these mortgages, as for graduated-payment mortgages, disclosures should reflect the scheduled increases in payments.)

* * * * *

17(d) Multiple creditors; multiple consumers.

* * * * *

2. *Multiple consumers.* When two consumers are joint obligors with primary liability on an obligation, the disclosures may be given to either one of them. If one consumer is merely a surety or guarantor, the disclosures must be given to the principal debtor. In rescindable transactions, however, separate disclosures must be given to each consumer who has the right to rescind under § 226.23, although the disclosures required under § 226.19(b) need only be provided to the consumer who expresses an interest in a variable-rate loan program.

* * * * *

Section 226.18—Content of Disclosures.

* * * * *

18(f) Variable rate.

1. *Coverage.* The requirements of § 226.18(f) apply to all transactions in which the terms of the legal obligation allow the creditor to increase the rate originally disclosed to the consumer. It includes not only increases in the interest rate but also increases in other components, such as the rate of required credit life insurance. The provisions, however, do not apply to increases resulting from delinquency (including late payment), default, assumption, acceleration or transfer of the collateral. Section 226.18(f)(1) applies to variable-rate transactions that are not secured by the consumer's principal dwelling and to those that are secured by the principal dwelling but have a term of one year or less. Section 226.18(f)(2) applies to variable-rate transactions that are secured by the consumer's principal dwelling and have a term greater than one year. Moreover, transactions subject to § 226.18(f)(2) are subject to the special early disclosure requirements of § 226.19(b). (However, "shared-equity" or "shared-appreciation" mortgages are subject to the disclosure requirements of § 226.(f)(1) and not to the requirements of §§ 226.18(f)(2) and 226.19(b) regardless of the general coverage of those sections.) Creditors are permitted under footnote 43 to substitute in any variable-rate transaction the disclosures required under § 226.19(b) for those disclosures ordinarily required under 226.18(f)(1). Creditors who provide variable-rate disclosures under § 226.19(b) must comply with all of the requirements of that section, including the timing of disclosures, and must also provide the disclosures required under § 226.18(f)(2). Creditors utilizing footnote 43 may, but need not, also provide disclosures pursuant to § 226.20(c). (Substitution of disclosures under § 226.18(f)(1) in transactions subject to §226.19(b) is not permitted under the footnote.)

* * * * *

Paragraph 18(f)(2).

1. *Disclosure required.* In variable-rate transactions that have a term greater than one year and are secured by the consumer's principal dwelling, the creditor must give special early disclosures under § 226.19(b) in addition to the later disclosures required under § 226.18(f)(2). The disclosures under § 226.18(f)(2) must state that the transaction has a variable-rate feature and that variable-rate disclosures have been provided earlier.

* * * * *

Section 226.19—Certain Residential Mortgage and Variable-Rate Transactions.

* * * * *

19(B) Certain variable-rate transactions.

1. *Coverage.* Section 226.19(b) applies to all closed-end variable-rate transactions that are secured by the consumer's principal dwelling and have a term greater than one year. The requirements of this section apply not only to transactions financing the initial acquisition of the consumer's principal dwelling, but also to any other closed-end variable-rate transaction secured by the principal dwelling. Closed-end variable-rate transactions that are not secured by the principal dwelling, or are secured by the principal dwelling but have a term of one year or less, are subject to the disclosure requirements of § 226.18(f)(1) rather than those of § 226.19(b). (Furthermore,

"shared-equity" or "shared-appreciation" mortgages are subject to the disclosure requirements of § 226.18(f)(1) rather than those of § 226.19(b) regardless of the general coverage of those sections.) For purposes of this section, the term of a variable-rate demand loan is determined in accordance with the commentary to § 226.17(c)(5).

2. *Timing.* A creditor must give the disclosures required under this section at the time an application form is provided or before the consumer pays a non-refundable fee, whichever is earlier. In cases where a creditor receives a written application through an intermediary agent or broker, however, footnote 45b provides a substitute timing rule requiring the creditor to deliver the disclosures or place them in the mail not later than three business days after the creditor receives the consumer's written application. This three-day rule also applies where the creditor takes an application over the telephone. If, however, the consumer merely requests an application over the telephone, the creditor must include the early disclosures required under this section with the application that is sent to the consumer. In cases where the creditor solicits applications through the mail, the creditor must also send the disclosures required under this section if an application form is included with the solicitation. In cases where an open-end credit account will convert to a closed-end transaction subject to this section under a written agreement with the consumer, disclosures under this section may be given at the time of conversion. (See the commentary to § 226.20(a) for information on the timing requirements for § 226.19(b)(2) disclosures when a variable-rate feature is later added to a transaction.)

3. *Other variable-rate regulations.* Transactions in which the creditor is required to comply with and has complied with the disclosure requirements of the variable-rate regulations of other Federal agencies are exempt from the requirements of § 226.19(b), by virtue of footnote 45a, and are exempt from the requirements of § 226.20(c), by virtue of footnote 45c. Those variable-rate regulations include the regulations issued by the Federal Home Loan Bank Board and those issued by the Department of Housing and Urban Development. The exception in footnotes 45a and 45c is also available to creditors that are required by state law to comply with the federal variable-rate regulations noted above and to creditors that are authorized by title VIII of the Depository Institutions Act of 1982 (12 U.S.C. 3801 *et seq.*) to make loans in accordance with those regulations. Creditors using this exception should comply with the timing requirements of those regulations rather than the timing requirements of Regulation Z in making the variable-rate disclosures.

4. *Examples of variable-rate transactions.* The following transactions, if they have a term greater than one year and are secured by the consumer's principal dwelling, constitute variable-rate transactions subject to the disclosure requirements of § 226.19(b).

- Renegotiable rate mortgage instruments that involve a series of short-term loans secured by a long-term obligation, when the lender is obligated to renew the short-term loans at the consumer's option. At the time of renewal, the lender has the option of increasing the interest rate.
- Preferred-rate loans where the terms of the legal obligation provide that the initial underlying rate is fixed but will increase upon the occurrence of some event, such as an employee leaving the employ of the creditor, and the note reflects the preferred rate. The disclosures under §§ 226.19(b)(1) and 226.19(b)(2)(v), (viii), (ix), (x) and (xiii) are not applicable to such loans.

Graduated-payment mortgages and step-rate transactions without a variable-rate feature are not considered variable-rate transactions.

Paragraph 19(b)(1).

1. *Substitutes.* Creditors who wish to use publications other than the *Consumer Handbook on Adjustable Rate Mortgages* must make a good faith determination that their brochures are suitable substitutes to the *Consumer Handbook.* A substitute is suitable if it is, at a minimum, comparable to the *Consumer Handbook* in substance and comprehensiveness. Creditors are permitted to provide more detailed information than is contained in the *Consumer Handbook.*

2. *Applicability.* The *Consumer Handbook* need not be given for variable-rate transactions subject to this section in which the underlying interest rate is fixed. (See comment 19(b)–4 for an example of a variable-rate transaction where the underlying interest rate is fixed.)

Paragraph 19(b)(2).

1. *Disclosure for each variable-rate program.* A creditor must provide disclosures to the consumer that fully and separately describe each of the creditor's variable-rate loan programs in which the consumer expresses an interest. If a program is made available only to certain customers of an institution, a creditor need not provide disclosures for that program to other consumers who express a general interest in a creditor's ARM programs. These disclosures must be given at the time an application form is provided or before the consumer pays a non-refundable fee, whichever is earlier. If the consumer subsequently expresses an interest in other available variable-rate loan programs subject to § 226.19(b)(2), the creditor must provide disclosures for such additional programs. The creditor, of course, is permitted to give the consumer information about additional programs subject to § 226.19(b) initially. An individual program disclosure may consist of more than one page. For example, a creditor may attach a separate page containing the historical payment example for the particular program. In addition, these disclosures may be inserted or printed in the *Consumer Handbook* (or a suitable substitute) as long as they are identified as the creditor's loan program disclosures.

2. *Variable-rate loan program defined.* If the identification, the presence or absence, or the exact value of a loan feature must be disclosed under this section, variable-rate loans that differ as to such features constitute separate loan programs.

For example, separate loan program disclosures would be required based on differences in any of the following loan features:

- The index or other formula used to calculate interest rate adjustments.
- The rules relating to changes in the index value, interest rate, payments, and loan balance.
- The presence or absence of, and the amount of, rate or payment caps.
- The presence of a demand feature.
- The possibility of negative amortization.
- The possibility of interest rate carryover.
- The frequency of interest rate and payment adjustments.
- The presence of a discount feature.

In addition, if a loan feature such as the term of the loan must be taken into account in preparing the disclosures required by § 226.19(b)(2) (viii) and (x), variable-rate loans that differ as to that feature constitute separate programs and require separate loan program disclosures under § 226.19(b)(2). If, however, a representative value may be given for a loan feature or the feature need not be disclosed under § 226.19(b)(2), variable-rate loans that differ as to such features do not constitute separate loan programs. For example, separate program disclosures would not be required based on differences in the following loan features:

- The amount of a discount.
- The amount of a margin.

3. *As applicable.* The disclosures required by this section need only be made as applicable. Any disclosure not relevant to a particular transaction may be eliminated. For example, if the transaction does not contain a demand feature, the disclosure required under §226.19(b)(2)(xi) need not be given. As used in this section, "payment" refers only to a payment based on the interest rate, loan balance and loan term, and does not refer to payment of other elements such as mortgage insurance premiums.

4. *Revisions.* A creditor must revise the disclosures required under this section once a year as soon as reasonably possible after the new index value becomes available. Revisions to the disclosures also are required when the loan program changes.

Paragraph 19(b)(2)(i).

1. *Change in interest rate, payment, or term.* A creditor must disclose the fact that the terms of the legal obligation permit the creditor, after consummation of the transaction, to increase (or decrease) the interest rate, payment, or term of the loan initially disclosed to the consumer. For example, the disclosures for a variable-rate program in which the interest rate and payment (but not loan term) can change might read, "Your interest rate and payment can change yearly." In transactions where the term of the loan may change due to rate fluctuations, the creditor must state that fact.

Paragraph 19(b)(2)(ii).

1. *Indentification of index or formula.* If a creditor ties interest rate changes to a particular index, this fact must be disclosed, along with a source of information about the index. For example, if a creditor uses the weekly average yield on U.S. Treasury Securities adjusted to a constant maturity as its index, the disclosure might read, "Your

index is the weekly average yield on U.S. Treasury Securities adjusted to a constant maturity of one year published weekly in the *Wall Street Journal.*" If no particular index is used, the creditor must briefly describe the formula used to calculate interest rate changes.

2. *Changes at creditor's discretion.* If interest rate changes are at the creditor's discretion, this fact must be disclosed. If an index is internally defined, such as by a creditor's prime rate, the creditor should either briefly describe that index or state that interest rate changes are at the creditor's discretion.

Paragraph 19(b)(2)(iii).

1. *Determination of interest rate and payment.* This provision requires an explanation of how the creditor will determine the consumer's interest rate and payment. In cases where a creditor bases its interest rate on a specific index and adjusts the index through the addition of a margin, for example, the disclosure might read, "Your interest rate is based on the index plus a margin, and your payment will be based on the interest rate, loan balance, and remaining loan term." If applicable, the creditor should also disclose that the rate and payment will be rounded.

Paragraph 19(b)(2)(iv).

1. *Current margin value and interest rate.* Because the disclosures can be prepared in advance, the interest rate and margin may be several months old when the disclosures are delivered. A statement, therefore, is required alerting consumers to the fact that they should inquire about the current margin value applied to the index and the current interest rate. For example, the disclosure might state, "Ask us for our current interest rate and margin."

Paragraph 19(b)(2)(v).

1. *Discounted and premium interest rate.* In some variable-rate transactions, creditors may set an initial interest rate that is not determined by the index or formula used to make later interest rate adjustments. Typically, this initial rate charged to consumers is lower than the rate would be if it were calculated using the index or formula. However, in some cases the initial rate may be higher. If the initial interest rate will be a discount or a premium rate, creditors must alert the consumer to this fact. For example, if a creditor discounted a consumer's initial rate, the disclosure might state, "Your initial interest rate is not based on the index used to make later adjustments." (See the commentary to § 226.17(c)(1) for a further discussion of discounted and premium variable-rate transactions.) In addition, the disclosure must suggest that consumers inquire about the amount that the program is currently discounted. For example, the disclosure might state, "Ask us for the amount our adjustable rate mortgages are currently discounted." (See the commentary to § 226.19(b)(2)(viii) for a discussion of how to reflect the discount or premium in the historical example.)

Paragraph 19(b)(2)(vi).

1. *Frequency.* The frequency of interest rate and payment adjustments must be disclosed. If interest rate changes will be imposed more frequently or at different intervals than payment changes, a creditor must disclose the frequency and timing of both types of changes. For example, in a variable-rate transaction where interest rate changes are made monthly, but payment changes occur on an annual basis, this fact must be disclosed.

Paragraph 19(b)(2)(vii).

1. *Rate and payment caps.* The creditor must disclose limits on changes (increases or decreases) in the interest rate or payment. If an initial discount is not taken into account in applying overall or periodic rate limitations, that fact must be disclosed. If separate overall or periodic limitations apply to interest rate increases resulting from other events, such as the exercise of a fixed-rate conversion option or leaving the creditor's employ, those limitations must also be stated. Limitations do not include legal limits in the nature of usury or rate ceilings under state of Federal statutes or regulations. (See § 226.30 for the rule requiring that a maximum interest rate be included in certain variable-rate transactions.)

2. *Negative amortization and interest rate carryover.* A creditor must disclose, where applicable, the possibility of negative amortization. For example, the disclosure might state, "If any of your payments are not sufficient to cover the interest due, the difference will be added to your loan amount." In addition, the creditor must disclose the existence of any interest rate carryover provisions. Interest rate carryover exists when a change in the index rate that is not imposed at the time of an adjustment because, for example, it exceeds an adjustment limitation, is carried over and incorporated into the calculation of future rate adjustments. For example, if the index rises 3 percentage points during the year and the loan contains a 2 percentage point cap on annual changes (increases or decreases) in the interest rate, interest rate carryover exists if the creditor may impose the additional percentage point the following year as an addition to the rate derived by using the index or formula. In such cases, the creditor must disclose the fact that changes in the index will be carried over to subsequent interest rate adjustment dates. The disclosure might state, "Changes in the index not passed on as changes in the interest rate will be carried over and applied to subsequent interest rate adjustments."

3. *Conversion option.* If a loan program permits consumers to convert their variable-rate loans to fixed-rate loans, the creditor must disclose that the interest rate may increase if the consumer converts the loan to a fixed-rate loan. The creditor must also disclose the rules relating to the conversion feature, such as the period during which the loan may be converted, that fees may be charged at conversion, and how the fixed rate will be determined. The creditor should identify any index or other measure or formula used to determine the fixed rate and state any margin to be added. In disclosing the period during which the loan may be converted and the margin, the creditor may use information applicable to the conversion feature during the six months preceding preparation of the disclosures and state that the information is representative of conversion features recently offered by the creditor. The information may be used until the program disclosures are otherwise revised. Although the rules relating to the conversion option must be disclosed, the effect of exercising the option should not be reflected elsewhere in the disclosures, such as in the historical example or in the calculation of the initial and maximum interest rate and payments.

4. *Preferred-rate loans.* Section 226.19(b) applied to preferred-rate loans, where the rate will increase upon the occurrence of some event, such as an employee leaving the creditor's employ, whether or not the underlying rate is fixed or variable. In these transactions, the creditor must disclose the event that would allow the creditor to increase the rate such as that the rate may increase if the employee leaves the creditor's employ. The creditor must also disclose the rules relating to termination of the preferred rate, such as that fees may be charged when the rate is changed and how the new rate will be determined.

Paragraph 19(b)(2)(viii).

1. *Index movement.* This section requires a creditor to provide an historical example, based on a $10,000 loan amount originating in 1977, showing how interest rate changes implemented according to the terms of the loan program would have affected payments and the loan balance at the end of each year during a 15-year period. (In all cases, the creditor need only calculate the payments and loan balance for the term of the loan. For example, in a five-year loan, a creditor would show the payments and loan balance for the five-year term, from 1977 to 1981, with a zero loan balance reflected for 1981. For the remaining ten years, 1982–1991, the creditor need only show the remaining index values, margin and interest rate.) Pursuant to this section, the creditor must provide a history of index values for the preceding 15 years. Initially, the disclosures would give the index values from 1977 to the present. Each year thereafter, the revised program disclosures should include an additional year's index value until 15 years of values are shown. If the values for an index have not been available for 15 years, a creditor need only go back as far as the values are available in giving a history and payment example. In all cases, only one index value per year need be shown. Thus, in transactions where interest rate adjustments are implemented more frequently than once per year, a creditor may assume that the interest rate and payment resulting from the index value chosen will stay in effect for the entire year for purposes of calculating the loan balance as of the end of the year and for reflecting other loan program terms. In cases where interest rate changes are at the creditor's discretion (see the commentary to § 226.19(b)(2)(ii)), the creditor must provide a history of the rates imposed for the preceding 15 years, beginning with the rates in 1977. In giving this history,

the creditor need only go back as far as the creditor's rates can reasonably be determined.

2. *Selection of index values.* The historical example must reflect the method by which index values are determined under the program. If a creditor uses an average of index values or any other index formula, the history given should reflect those values. The creditor should select one date or, when an average of single values is used as an index, one period and should base the example on index values measured as of that same date or period for each year shown in the history. A date or period at any time during the year may be selected, but the same date or period must be used for each year in the historical example. For example, a creditor could use values for the first business day in July or for the first week ending in July for each of the 15 years shown in the example.

3. *Selection of margin.* For purposes of the disclosure required under § 226.19(b)(2)(viii), a creditor may select a representative margin that has been used during the six months preceding preparation of the disclosures, and should disclose that the margin is one that the creditor has used recently. The margin selected may be used until a creditor revises the disclosure form.

4. *Amount of discount or premium.* For purposes of the disclosure required under § 226.19(b)(2)(viii), a creditor may select a discount or premium (amount and term) that has been used during the six months preceding preparation of the disclosures, and should disclose that the discount or premium is one that the creditor has used recently. The discount or premium should be reflected in the historical example for as long as the discount or premium is in effect. A creditor may assume that a discount that would have been in effect for any part of a year was in effect for the full year for purposes of reflecting it in the historical example. For example, a 3-month discount may be treated as being in effect for the entire first year of the example; a 15-month discount may be treated as being in effect for the first two years of the example. In illustrating the effect of the discount or premium, creditors should adjust the value of the interest rate in the historical example, and should not adjust the margin or index values. For example, if during the six months preceding preparation of the disclosures the fully indexed rate would have been 10% but the first year's rate under the program was 8%, the creditor would discount the first interest rate in the historical example by 2 percentage points.

Paragraph 19(b)(2)(ix).

1. *Calculation of payments.* A creditor is required to include a statement on the disclosure form that explains how a consumer may calculate his or her actual monthly payments for a loan amount other than $10,000. The example should be based upon the most recent payment shown in the historical example. The creditor, however, is not required to calculate the consumer's payment. (See the model clauses in Appendix H-4(C).)

Paragraph 19(b)(2)(x).

1. *Initial and maximum interest rate and payment.* The disclosure form must state the initial and maximum interest rates and payments for a $10,000 loan at the most recent interest rate (index value plus margin) shown in the historical example. In calculating the maximum payments under this paragraph, a creditor should assume that the interest rate increases as rapidly as possible under the loan program, and the maximum payment disclosed should reflect the amortization of the loan during this period. Thus, in a loan with 2 percentage point annual (and 5 percentage point overall) interest rate limitations or "caps," the maximum interest rate would be 5 percentage points higher than the most recent rate shown in the historical example. Moreover, the loan would not reach the maximum interest rate until limitations, and the maximum payment disclosed would reflect the amortization of the loan during this period. If the loan program includes a discounted or premium initial interest rate, adjusted by the amount of the discount or premium reflected elsewhere in the disclosure for purposes of the requirements of this paragraph. Furthermore, this disclosure should state the amount by which the most recent rate has been adjusted. (See the commentary to § 226.19(b)(2)(viii) regarding disclosure of the amount of a discount or premium.) The creditor may use an interest rate applicable to the program that is more recent than the latest rate shown in the historical example.

Paragraph 19(b)(2)(xi).

1. *Demand feature.* If a variable-rate loan subject to § 226.19(b) requirements contains a demand feature, this fact must be disclosed. (Pursuant to § 226.18(i), creditors would also disclose the demand feature in the standard disclosures given later.)

Paragraph 19(b)(2)(xii).

1. *Adjustment notices.* A creditor must disclose to the consumer the type of information that will be contained in subsequent notices of adjustments and when such notices will be provided. (See the commentary to § 226.20(c) regarding notices of adjustments.) For example, the disclosure might state, "You will be notified at least 25, but no more than 120, days before the due date of a payment at a new level. This notice will contain information about the index and interest rates, payment amount, and loan balance." In transactions where there may be interest rate adjustments without accompanying payment adjustments in a year, the disclosure might read, "You will be notified once each year during which interest rate adjustments, but no payment adjustments, have been made to your loan. This notice will contain information about the index and interest rates, payment amount, and loan balance."

Paragraph 19(b)(2)(xiii).

1. Multiple loan programs. A creditor that offers multiple variable-rate loan programs is required to have disclosures for each variable-rate loan program subject to § 226.19(b)(2). Unless disclosures for all of its variable-rate programs are provided initially, the creditor must inform the consumer that other closed-end variable-rate programs exists, and that disclosure forms are available for these additional loan programs. For example, the disclosure form might state, "Information on other adjustable rate mortgage programs is available upon request."

Section 226.20—Subsequent Disclosure Requirements.

20(a) Refinancings.

* * * * *

3. *Variable-rate.* If a variable-rate feature was properly disclosed under the regulation, a rate change in accord with those disclosures is not a refinancing. For example, a renegotiable rate mortgage that was disclosed as a variable-rate transaction is not subject to new disclosure requirements when the variable-rate feature is invoked. However, even if it is not accomplished by the cancellation of the old obligation and substitution of a new one, a new transaction subject to new disclosure results if the creditor either:

- Increases the rate based on a variable-rate feature that was not previously disclosed, or
- Adds a variable-rate feature to the obligation.

If either of these two events occurs in a transaction secured by a principal dwelling with a term longer than one year, the disclosures required under § 226.19(b) also must be given at that time.

* * * * *

20(b) Assumptions.

* * * * *

6. *Disclosures.* For transactions that are assumptions within this provision, the creditor must make disclosures based on the "remaining obligation." For example:

- The amount financed is the remaining principal balance plus any arrearages or other accrued charges from the original transaction.
- If the finance charge is computed from time to time by application of a percentage rate to an unpaid balance, in determining the amount of the finance charge and the annual percentage rate to be disclosed, the creditor should disregard any prepaid finance charges paid by the original obligor, but must include in the finance charge any prepaid finance charge imposed in connection with the assumption.
- If the creditor requires the assuming consumer to pay any charges as a condition of the assumption, those sums are prepaid finance charges as to that consumer, unless exempt from the finance charge under § 226.4.

If a transaction involves add-on or discount finance charges, the creditor may make abbreviated disclosures, as outlined in § 226.20(b) (1) through (5). Creditors providing disclosures pursuant to this section for assumptions of variable-rate transactions secured by the consumer's principal dwelling with a term longer than one year need not provide new disclosures under § 226.18(f)(2)(ii) or § 226.19(b). In such transactions, a creditor may disclose the variable-rate feature solely in accordance with § 226.18(f)(1).

* * * * *

20(c) Variable-rate adjustments.

1. *Timing of adjustment notices.* This section requires a creditor (or a subsequent holder) to provide certain disclosures in cases where an adjustment to the interest rate is made in a variable-rate transaction subject to § 226.19(b). There are two timing rules, depending on whether payment changes accompany interest rate changes. A creditor is required to provide at least one notice each year during which interest rate adjustments have occurred without accompanying payment adjustments. For payment adjustments, a creditor must deliver or place in the mail notices to borrowers at least 25, but not more than 120, calendar days before a payment at a new level is due. The timing rules also apply to the notice required to be given in connection with the adjustment to the rate and payment that follows conversion of a transaction subject to § 226.19(b) to a fixed-rate transaction. (In cases where an open-end account is converted to a closed-end transaction subject to § 226.19(b), the requirements of this section do not apply until adjustments are made following conversion.)

2. *Exceptions.* Section 226.20(c) does not apply to "shared-equity" or "shared-appreciation" mortgages.

Paragraph 20(c)(1).

1. *Current and prior interest rates.* The requirements under this paragraph are satisfied by disclosing the interest rate used to compute the new adjusted payment amount ("current rate") and the adjusted interest rate that was disclosed in the last adjustment notice, as well as all other interest rates applied to the transaction in the period since the last notice ("prior rates"). (If there has been no prior adjustment notice, the prior rates are the interest rate applicable to the transaction at consummation, as well as all other interest rates applied to the transaction in the period since consummation.) If no payment adjustment has been made in a year, the current rate is the new adjusted interest rate for the transaction, and the prior rates are the adjusted interest rate applicable to the loan at the time of the last adjustment notice, and all other rates applied to the transaction in the period between the current and last adjustment notices. In disclosing all other rates applied to the transaction during the period between notices, a creditor may disclose a range of the highest and lowest rates applied during that period.

Paragraph 20(c)(2).

1. *Current and prior index values.* This section requires disclosure of the index or formula values used to compute the current and prior interest rates disclosed in § 226.20(c)(1). The creditor need not disclose the margin used in computing the rates. If the prior interest rate was not based on an index or formula value, the creditor also need not disclose the value of the index that would otherwise have been used to compute the prior interest rate.

Paragraph 20(c)(3).

1. *Unapplied index increases.* The requirement that the consumer receive information about the extent to which the creditor has foregone any increase in the interest rate is applicable only to those transactions permitting interest rate carryover. The amount of increase that is foregone at an adjustment is the amount that, subject to rate caps, can be applied to future adjustments independently to increase, or offset decreases in, the rate that is determined according to the index or formula.

Paragraph 20(c)(4).

1. *Contractual effects of the adjustment.* The contractual effects of an interest rate adjustment must be disclosed including the payment due after the adjustment is made whether or not the payment has been adjusted. A contractual effect of a rate adjustment would include, for example, disclosure of any change in the term or maturity of the loan if the change resulted from the rate adjustment. A statement of the loan balance also is required. The balance required to be disclosed is the balance on which the new adjusted payment is based. If no payment adjustment is disclosed in the notice, the balance disclosed should be the loan balance on which the payment disclosed under § 226.20(c)(5) is based, if applicable, or the balance at the time the disclosure is prepared.

Paragraph 20(c)(5).

1. *Fully-amortizing payment.* A disclosure is required if the payment disclosed in § 226.20(c)(4) is not sufficient to pay off the loan balance (including capitalized interest) in the remaining term of the loan at the adjusted interest rate. In such cases, the adjustment notice must state the payment required to fully amortize the loan over the remainder of the term. (This paragraph does not apply if the new payment disclosed in § 226.20(c)(4) is fully amortizing but the final payment will be a different amount due to rounding.)

* * * * *

Appendix H—Closed-End Model Forms and Clauses

* * * * *

4. *Model H-4(A).* This model contains the variable rate model clauses applicable to transactions subject to § 226.18(f)(1) and is intended to give creditors considerable flexibility in structuring variable rate disclosures to fit individual plans. * * *

5. *Model H-4(B).* This model clause illustrates the variable-rate disclosure required under § 226.18(f)(2), which would alert consumers to the fact that the transaction contains a variable-rate feature and that disclosures were provided earlier.

6. *Model H-4(C).* This model clause illustrates the early disclosures required generally under § 226.19(b). It includes information on how the consumer's interest rate is determined and how it can change over the term of the loan, and explains changes that may occur in the borrower's monthly payment. The model clause also contains an example of how to disclose historical changes in the index or formula values used to compute interest rates for the preceding 15 years. In addition, the model clause illustrates the disclosure of the initial and maximum interest rates and payments for a loan originated at the most recent rate shown in the historical example.

7. *Model H-4(D).* This model clause illustrates the adjustment notice required under § 226.20(c), and provides examples of payment change notices and annual notices of interest rate changes.

* * * * *

18. *Model H-14.* This sample disclosure form illustrates the disclosures under § 226.19(b) for a variable-rate transaction secured by the consumer's principal dwelling with a term greater than one year. The sample form shows a creditor how to adapt the model clauses in Appendix H-4(C) to the creditor's own particular variable-rate program. The sample disclosure form describes the features of a specific variable-rate mortgage program and alerts the consumer to the fact that information on the creditor's other closed-end variable-rate programs is available upon request. It includes information on how the interest rate is determined and how it can change over time, and explains how the monthly payment can change based on a $10,000 loan amount, payable in 360 monthly installments, based on historical changes in the values for the weekly average yield on U.S. Treasury Securities adjusted to a constant maturity of one year. Index values are measured as of the first week ending in July for the years 1977 through 1987. This reflects the requirement that the index history be based on values for the same date or period each year beginning with index values for 1977. The sample disclosure also illustrates the requirement under § 226.19(b)(2)(x) that the initial and the maximum interest rates and payments be shown for a $10,000 loan originated at the most recent rate shown in the historical example. In the sample, the loan is assumed to have an initial interest rate of 9.71% (which was the interest rate in 1987 for the example shown) and to have 2 percentage point annual (and 5 percentage point overall) interest rate limitations or caps. Thus, the maximum amount that the interest rate could rise under this program is 5 percentage points higher than the 9.71% initial rate to 14.71%, and the monthly payment could rise from $85.62 to a maximum of $123.31. The loan would not reach the maximum interest rate until its fourth year because of the 2 percentage point annual rate limitations, and the maximum payment disclosed reflects the amortization of the loan during that period. The sample form also illustrates how to provide consumers with a method for calculating their actual monthly payment for a loan amount other than $10,000.

* * * * *

Board of Governors of the Federal Reserve System, March 30, 1988.

William W. Wiles,

Secretary of the Board.

[FR Doc. 88-7347 Filed 4-4-88; 8:45 am]

BILLING CODE 6210-01-M

---

12 CFR Part 226

[Reg. Z; TIL-1]

Truth in Lending; Update to Official Staff Commentary

AGENCY: Board of Governors of the Federal Reserve System.

ACTION: Official staff interpretation.

SUMMARY: The Board is publishing revisions to the official staff commentary to Regulation Z (Truth in Lending). The commentary applies and interprets the requirements of Regulation Z and is a substitute for individual staff interpretations of the regulation. The revisions address a variety of questions that have arisen about the regulation, and include new material and changes in existing material. The changes address, for example, disclosure questions raised by the emergence of conversion features in adjustable-rate mortgages, as well as the imposition of fees that are considered finance charges at the time an open-end credit account is renewed or continued. Commentary also is included which interprets the Board's recent rule implementing the requirement of the Competitive Equality Banking Act that adjustable-rate mortgages contain a maximum interest rate. (The Board is also publishing in this issue of the **Federal Register** official staff interpretations on the recent amendments to Regulation Z requiring special disclosures for adjustable-rate mortgages secured by a consumer's principal dwelling and having a term greater than one year.)

DATES: Effective April 1, 1988, but compliance optional until October 1, 1988.

FOR FURTHER INFORMATION CONTACT: The following attorneys in the Division of Consumer and Community Affairs, at (202) 452-3667 or (202) 452-2412:

Subparts A and B—Kathleen S. Brueger, Gerald P. Hurst, John C. Wood

Subpart C—Michael S. Bylsma, Leonard N. Chanin, Thomas J. Noto

Subpart D—Adrienne D. Hurt, Sharon T. Bowman

For the hearing impaired *only*, Telecommunication Device for the Deaf (TDD), Earnestine Hill or Dorothea Thompson, at (202) 452-3544, Board of Governors of the Federal Reserve System, Washington, DC 20551.

SUPPLEMENTARY INFORMATION:

(1) General

The Truth in Lending Act (15 U.S.C. 1601 *et seq.*) governs consumer credit transactions and is implemented by the Board's Regulation Z (12 CFR Part 226). Effective October 13, 1981, an official staff commentary (TIL-1, Supp. I to 12 CFR Part 226) was published to interpret the regulation. The commentary is designed to provide guidance to creditors in applying the regulation to specific transactions and is updated periodically to address significant questions that arise. There have been six general updates: the first in September 1982 (47 FR 41338), the second in April 1983 (48 FR 14882), the third in April 1984 (49 FR13482), the fourth in April 1985 (50 FR 13181), the fifth in April 1986 (51 FR 11422), and the sixth in April 1987 (52 FR 10875). There was also a limited update concerning fees for the use of automated teller machines, which was adopted in October 1984 (49 FR 40560). This notice contains the seventh general update. Creditors are free to rely on the revised provisions as of April 1, 1988, although they need not follow the revisions until October 1, 1988.

(2) Revisions

The following is a brief description of the revisions to the commentary:

Subpart A—General

Section 226.4—Finance Charge

4(c) Charges Excluded from the Finance Charge; Paragraph 4(c)(4). A cross-reference is added to comment 4(c)(4)-2 addressing participation fees. The cross-reference is to the commentary to § 226.14(c), concerning computation of the annual percentage rate on periodic statements. Comment 14(c)-7, which currently discusses the exclusion of fees related to the opening of the account from the computation of the annual percentage rate for periodic statements, is being revised to also exclude certain account renewal fees from the computation of the annual percentage rate on periodic statements.

Subpart B—Open End Credit

Section 226.6—Initial Disclosure Statement

6(a) Finance Charge; Paragraph 6(a)(2). Comment 6(a)(2)-7 is revised to include a reference to § 226.30 and the commentary to that section. Section 226.30 requires creditors to include a provision setting a maximum interest rate in their dwelling-secured credit contracts that provide for changes in the interest rate.

Section 226.7—Periodic Statement

7(h) Other Charges. Comment 7(h)-1 is revised to clarify the treatment of taxes and filing or notary fees that are excluded from the finance charge under § 226.14(e). Even though the § 226.4(e) items are not required to be disclosed as "other charges" under § 226.6(b), creditors may include such charges in a disclosure of "other charges" on the initial disclosures. Similarly, these charges may be included in the amount shown as "closing costs" or "settlement costs" on the periodic statement, if the charges were itemized and disclosed as part of the closing or settlement costs on the initial disclosure statement.

Section 226.14—Determination of Annual Percentage Rate

14(c) Annual Percentage Rate for Periodic Statements. Comment 14(c)-7 discusses the exclusion of finance charges related to opening an account from inclusion in the annual percentage rate computation. This comment is revised to also exclude fees that are imposed for renewal of an account or continued participation in an open-end credit plan, provided the fees are not imposed as a result of specific transactions or specific account activity. For example, charges that are imposed only on consumers that do not charge a certain amount on their credit card annually, or annual fees that are a percentage of the consumer's credit limit, need not be included in the computation of the annual percentage rate. This change recognizes that such charges, when they are not related to specific transactions or specific activity, result in the same problems already identified in this comment with respect to fees related to the opening of an account. Including such fees in the computation of the annual percentage rate would result, in many cases, in significant distortions of the annual percentage rate and the delivery of potentially misleading information to consumers.

Subpart C—Closed-End Credit

Section 226.17—General Disclosure Requirements

17(a) Form of Disclosures; Paragraph 17(a)(1). Comment 17(a)(1)-5 is revised to explain that in variable-rate transactions subject to § 226.18(f)(1) with more than one variable-rate feature, more than one hypothetical example is information that is directly related to the disclosure required under § 226.18(f)(1)(iv).

Section 226.18—Content of Disclosures

18(b) Amount Financed; Paragraph 18(b)(3). Comment 18(b)(3)-1, addressing the treatment of prepaid finance charges in calculations of the amount financed, is deleted and a new comment 18(b)(3)-1 substituted in its place. The new comment clarifies and more fully explains the treatment of prepaid finance charges, which has been the source of considerable confusion. Several changes have been made to the version originally proposed. First, additional examples have been added to illustrate a transaction where the creditor withholds the amount of a finance charge from the amount

advanced to the consumer but does not increase the amount of the note by the amount of the charge. The additional examples clarify that the same rules are applicable in both situations. Second, additional material has been included to clarify that while a finance charge need not, in some circumstances, be subtracted as a prepaid finance charge, the charge nevertheless remains a finance charge.

The new comment is not intended to change the existing rules under § 226.18(b), but merely to clarify when creditors have an option to treat certain fees as prepaid finance charges and what the implications of that choice are under § 226.18(b).

18(c) Itemization of Amount Financed; Paragraph 18(c)(1)(iv). Comment 18(c)(1)(iv)–1, addressing the itemization of prepaid finance charges, is supplemented by a new sentence at the beginning which clarifies that only those finance charges deducted from the principal loan amount under section 226.18(b)(3) should be itemized as prepaid finance charges under section 226.18(c)(1)(iv). The revision is made in conjunction with the clarification to comment 18(b)(3)–1 and is not intended to change the substance of existing rules.

18(f) Variable Rate; Paragraph 18(f)(1). Comment 18(f)(1)–2 is added to discuss the disclosure requirements under this section for variable-rate transactions containing an option permitting consumers to convert to a fixed rate. The conversion option is a variable-rate feature that must be disclosed. The comment explains how the disclosures should be given. It explains that only those limitations on, and effects of, an increase that differ from other variable-rate features need to be stated. Consistent with the revision being made to comment 18(f)(1)(iv)–1, described below, it also clarifies that only one hypothetical example need be disclosed, such as an example of payment terms resulting from changes in the index. The comment applies only to variable-rate transactions that are not secured by a consumer's dwelling, or that are secured by a principal dwelling but have a term of one year or less. The comment number reflects the redesignation of the regulatory section applicable to such variable-rate transactions from § 226.18(f) to § 226.18(f)(1). All other closed-end variable-rate transactions are subject to §§ 226.18(f)(2) and 226.19(b), rather than § 226.18(f)(1).

Paragraph 18(f)(1)(ii). Comment 18(f)(1)(ii)–1 is revised by adding a cross-reference to the requirement in new § 226.30 that a maximum interest rate limitation be included in certain variable-rate transactions.

Paragraph 18(f)(1)(iv). Comment 18(f)(1)(iv)–1 is revised to clarify that § 226.18(f)(1)(iv) requires only one example of the effects of a rate increase on payment terms. The comment states that in transactions with more than one variable-rate feature, only one hypothetical example need be included in the disclosures. It also adds a cross-reference to the commentary to § 226.17(a)(1), which permits inclusion of more than one example as "directly related" information.

Subpart D—Miscellaneous

Section 226.28—Effect on State Laws

28(a) Inconsistent Disclosure Requirements. Comments 28(a)–13 and –14 are added to reflect the Board's 1985 and 1988 determinations of the effect of the Truth in Lending Act on provisions on the consumer credit laws of Arizona and Indiana, respectively. The comment on Arizona law has been revised to indicate that the preempted provision has since been repealed.

Section 226.30—Limitations on Rates

On November 9, 1987, the Board published a final rule amending Regulation Z to incorporate the substance of section 1204 of the Competitive Equality Banking Act (CEBA) into the regulation (52 FR 43178; technical corrections to original notice at 52 FR 45611 (1987)). The rule requires creditors who offer dwelling-secured loans with an adjustable interest rate to include a maximum rate in their credit obligations entered into on or after December 9, 1987. The following comments are included in the commentary to § 226.30.

Comments 30–1 through 30–5 explain the scope of the rule's coverage, including examples of what types of obligations are covered and not covered. Generally stated, the rule is that any post-effective date credit obligation is subject to the interest rate ceiling requirement if it: (1) Is secured by a dwelling, (2) contractually allows for interest rate increases, and (3) requires initial Truth in Lending Act (TILA) disclosures. A credit obligation subject to the TILA may also become subject to § 226.30 in two other instances: (1) If a security interest in a dwelling is added to an obligation that allows for interest rate increases, or (2) a variable rate feature is added to a dwelling-secured credit obligation.

The scope of the substantive requirement of section 1204 of CEBA is limited to obligations subject to the TILA and Regulation Z. Comment 30–6 generally explains that the other provisions of the regulation relating to TILA disclosures and their corresponding commentaries apply to § 226.30 where appropriate (such as definitions and exemptions), unless otherwise specified in the commentary to § 226.30. For example, for purposes of *coverage*, the refinancing and assumption rules of § 226.20 (a) and (b) apply. On the other hand, for purposes of *increasing a maximum interest rate* originally imposed under § 226.30 only the refinancing and assumption rules in comments 11 and 12 to this section apply.

Comments 30–7 through 30–9 explain the requirements to specify the maximum interest rate in credit contracts, including how the rate may be stated and that multiple rates may be set.

Comment 30–10 explains that a maximum rate must be applicable to increases after default. This comment applies only in situations in which a post-default agreement is considered part of the original obligation subject to Regulation Z.

Comments 30–11 and 30–12 explain when the maximum rate originally set on an obligation may be increased. Comment 30–13 further explains the relief provided in footnote 50 to § 226.30.

The final commentary provisions differ from the proposal in that editorial revisions have been made to eliminate unnecessary language and to provide further clarification. For example, a cross reference to the definition of a dwelling has been added to the first sentence in comment 30–1, while other cross references have been deleted as unnecessary. In that comment's second example of transactions not subject to § 226.30, the word "contractual" before the words "legal obligation" has been deleted. There is no intent to modify the term "legal obligation," as discussed in the commentary to § 226.17(c)(1), or § 226.5(c), when used in § 226.30. A fixed rate, closed-end multiple advance transaction secured by a dwelling, in which each advance is disclosed as a separate transaction, has been added to that comment as a third example of transactions not covered by § 226.30. This example was contained in the supplemental information to the final rule, § 226.30, published in November 1987; some commenters asked that it be included in the commentary.

A substantive revision from the proposal has been made to comment 30–7. The requirement that the maximum rate set forth in the credit contract meet the Regulation Z "clear and

conspicuous" standard has been eliminated as unnecessary.

List of Subjects in 12 CFR Part 226

Advertising, Banks, Banking, Consumer protection, Credit, Federal Reserve System, Finance, Penalties, Rate limitations, Truth in Lending.

Text of revisions. Pursuant to authority granted to section 105 of the Truth in Lending Act (15 U.S.C. 1604 as amended) and section 1204 of the Competitive Equality Banking Act, Pub. L. 100–86, 101 Stat. 552, the Board amends the official staff commentary on Regulation Z (12 CFR Part 226 Supp. I) as follows:

PART 226—[AMENDED]

1. The authority citation for Part 226 continues to read:

Authority: Sec. 105, Truth in Lending Act, as amended by sec. 605, Pub. L. 96–221, 94 Stat. 170 (15 U.S.C. 1604 *et seq.*); sec. 1204(c), Competitive Equality Banking Act, Pub. L. 100–86, 101 Stat. 552.

2. The revisions amend the commentary (12 CFR Part 226 Supp. I) by revising the parenthetical at the end of comment 4(c) (4)–2; republishing the first two sentences of comment 6(a) (2)–7 and adding a parenthetical after them; revising comments 7(h)–1 and 14(c)–7; adding a new bulleted paragraph at the end of comment 17(a)(1)–5; revising comment 18 (b)(3)–1; adding a sentence at the beginning of comment 18(c)(1)(iv)–1; adding comment 18 (f)(1)–2; revising comments 18(f)(1)(ii)–1 and 18(f)(1) (iv)–1; and adding comments 28(a)–13, 28(a)–14, and 30–1 through 30–13 to read as follows:

Subpart A—General

* * * * *

Section 226.4—Finance Charge.

* * * * *

4(c) Charges Excluded from the Finance Charge

* * * * *

Paragraph 4(c)(4)

* * * * *

2. *Participation fees—exclusions.* * * *(See the commentary to § 226.4(b)(2). Also, see comment 14(c)–7 for treatment of certain types of fees excluded in determining the annual percentage rate for the periodic statement.)

* * * * *

Subpart B—Open-End Credit

* * * * *

Section 226.6—Initial Disclosure Statement

* * * * *

6(a) Finance Charge

* * * * *

Paragraph 6(a)(2)

* * * * *

7. *Variable-rate plan—limitations on increase.* In disclosing any limitations on rate increases, limitations such as the maximum increase per year or the maximum increase over the duration of the plan must be disclosed. When there are no limitations, the creditor may, but need not, disclose that fact. (A maximum interest rate must be included in dwelling-secured open-end credit plans under which the interest rate may be changed. See § 226.30 and the commentary to that section.) * * *

* * * * *

Section 226.7—Periodic Statement.

* * * * *

7(h) Other Charges

1. *Identification.* In identifying any "other charges" actually imposed during the billing cycle, the type is adequately described as "late charge" or "membership fee," for example. Similarly, "closing costs" or "settlement costs," for example, may be used to describe charges imposed in connection with real estate transactions that are excluded from the finance charge under § 226.4(c)(7), if the same term (such as "closing costs") was used in the initial disclosures and if the creditor chose to itemize and individually disclose the costs included in that term. Even though the taxes and filing or notary fees excluded from the finance charge under § 226.4(e) are not required to be disclosed as "other charges" under § 226.6(b), these charges may be included in the amount shown as "closing costs" or "settlement costs" on the periodic statement, if the charges were itemized and disclosed as part of the "closing costs" or "settlement costs" on the initial disclosure statement. (See comment 6(b)–1 for examples of "other charges.")

* * * * *

Section 226.14—Determination of Annual Percentage Rate.

* * * * *

14(c) Annual Percentage Rate for Periodic Statements

* * * * *

7. *Charges related to opening, renewing, or continuing an account.* Footnote 33 is applicable to § 226.14 (c)(2) and (c)(3). The charges involved here do not relate to a specific transaction or to specific activity on the account, but relate solely to the opening, renewing, or continuing of the account. For example, an annual fee to renew an open-end credit account that is a percentage of the credit limit on the account, or that is charged only to consumers that have not used their credit card for a certain dollar amount in transactions during the preceding year, would not be included in the calculation of the annual percentage rate, even though the fee may not be excluded from the finance charge under § 226.4(c)(4). (See comment 4(c)(4)–2.) Inclusion of these charges in the annual percentage rate calculation results in significant distortions of the annual percentage rate and delivery of a possibly misleading disclosure to consumers. The rule in footnote 33 applies even if the loan fee, points, or similar charges are billed on a subsequent periodic statement or withheld from the proceeds of the first advance on the account.

* * * * *

Subpart C—Closed-End Credit.

Section 226.17—General Disclosure Requirements

17(a) Form of Disclosures

Paragraph 17(a)(1)

5. *Directly related.* * * *

• More than one hypothetical example under § 226.18(f)(1)(iv) in transactions with more than one variable-rate feature. For example, in a variable-rate transaction with an option permitting consumers to convert to a fixed-rate transaction, the disclosures may include an example illustrating the effects on the payment terms of an increase resulting from conversion in addition to the example illustrating an increase resulting from changes in the index.

* * * * *

Section 226.18—Content of Disclosures.

* * * * *

18(b) Amount Financed

* * * * *

Paragraph 18(b)(3)

1. *Prepaid finance charges.* Prepaid finance charges that are paid separately in cash or by check should be deducted under § 226.18(b)(3) in calculating the amount financed. To illustrate:

• A consumer applies for a loan of $2,500 with a $40 loan fee. The face amount of the note is $2,500 and the consumer pays the loan fee separately by cash or check at closing. The principal loan amount for purposes of § 226.18(b)(1) is $2,500 and $40 should be deducted under § 226.18(b(3), thereby yielding an amount financed of $2,460.

In some instances, as when loan fees are financed by the creditor, finance charges are incorporated in the face amount of the note. Creditors have the option, when the charges are not add-on or discount charges, of determining a principal loan amount under § 226.18(b)(1) that either includes or does not include the amount of the finance charges. (Thus the principal loan amount may, but need not, be determined to equal the face amount of the note.) When the finance charges are included in the principal loan amount, they should be deducted as prepaid finance charges under § 226.18(b)(3). When the finance charges are not included in the principal loan amount, they should not be deducted under § 226.18(b)(3). The following examples illustrate the application of § 226.18(b) to this type of transaction. Each example assumes a loan request of $2,500 with a loan fee of $40; the creditor assesses the loan fee by increasing the face amount of the note to $2,540.

• If the creditor determines the principal loan amount under § 226.18(b)(1) to be $2,540, it has included the loan fee in the principal loan amount and should deduct $40 as a prepaid finance charge under § 226.18(b)(3),

thereby obtaining an amount financed of $2,500.

• If the creditor determines the principal loan amount under § 226.18(b)(1) to be $2,500, it has not included the loan fee in the principal loan amount and should not deduct any amount under § 226.18(b)(3), thereby obtaining an amount financed of $2,500. The same rules apply when the creditor does not increase the face amount of the note by the amount of the charge but collects the charge by withholding it from the amount advanced to the consumer. To illustrate, the following examples assume a loan request of $2,500 with a loan fee of $40; the creditor prepares a note for $2,500 and advances $2,460 to the consumer.

• If the creditor determines the principal loan amount under § 226.18(b)(1) to be $2,500, it has included the loan fee in the principal loan amount and should deduct $40 as a prepaid finance charge under § 226.18(b)(3), thereby obtaining an amount financed of $2,460.

• If the creditor determines the principal loan amount under § 226.18(b)(1) to be $2,460, it has not included the loan fee in the principal loan amount and should not deduct any amount under § 226.18(b)(3), thereby obtaining an amount financed of $2,460. Thus in the examples where the creditor derives the net amount of credit by determining a principal loan amount that does not include the amount of the finance charge, no subtraction is appropriate. Creditors should note, however, that although the charges are not subtracted as *prepaid* finance charges in those examples, they are nonetheless finance charges and must be treated as such.

* * * * *

18(c) Itemization of Amount Financed

* * * * *

Paragraph 18(c)(1)(iv)

1. *Prepaid finance charge.* Prepaid finance charges that are deducted under § 226.18(b)(3) must be disclosed under this section. * * *

* * * * *

18(f) Variable Rate

* * * * *

Paragraph 18(f)(1)

* * * * *

2. *Conversion feature.* In variable-rate transactions with an option permitting consumers to convert to a fixed-rate transaction, the conversion option is a variable-rate feature that must be disclosed. In making disclosures under § 226.18(f)(1), creditors should disclose the fact that the rate may increase upon conversion; identify the index or formula used to set the fixed rate; and state any limitations on and effects of an increase resulting from conversion that differ from other variable-rate features. Because § 226.18(f)(1)(iv) requires only one hypothetical example (such as an example of the effect on payments resulting from changes in the index), a second hypothetical example need not be given.

* * * * *

Paragraph 18(f)(1)(ii)

1. *Limitations.* This includes any maximum imposed on the amount of an increase in the rate at any time, as well as any maximum on the total increase over the life of the transaction. When there are no limitations, the creditor may, but need not, disclose that fact. Limitations do not include legal limits in the nature of usury or rate ceilings under state or federal statutes or regulations. (See § 226.30 for the rule requiring that a maximum interest rate be included in certain variable-rate transactions.)

* * * * *

Paragraph 18(f)(1)(iv)

1. *Hypothetical example.* The example may, at the creditor's option appear apart from the other disclosures. The creditor may provide either a standard example that illustrates the terms and conditions of that type of credit offered by that creditor or an example that directly reflects the terms and conditions of the particular transaction. In transactions with more than one variable-rate feature, only one hypothetical example need be provided. (See the commentary to section 226.17(a)(1) regarding disclosure of more than one hypothetical example as directly related information.)

* * * * *

Subpart D—Miscellaneous

* * * * *

Section 226.28—Effect on State Laws

28(a) Inconsistent Disclosure Requirements

* * * * *

13. *Preemption determination—Arizona.* Effective October 1, 1988, the Board has determined that the following provision in the State law of Arizona is preempted by the Federal law:

• Section 6–621A.2—Use of the term "the total sum of $_____" in certain notices provided to borrowers. This term describes the same item that is disclosed under Federal law as the "total of payments." Since the State law requires the use of a different term than Federal law to describe the same item, the State-required term is preempted. The notice itself is not preempted.

(**NOTE:** The State disclosure notice that incorporated the above preempted term was amended on May 4, 1987, to provide that disclosures must now be made pursuant to the Federal disclosure provisions.)

14. *Preemption determination—Indiana.* Effective October 1, 1988, the Board has determined that the following provision in the State law of Indiana is preempted by the Federal law:

• Section 23–2–5–6—Inclusion of the loan broker's fees and charges in the calculation of, among other items, the finance charge and annual percentage rate disclosed to potential borrowers. This disclosure is inconsistent with sections 106(a) and § 226.4(a) of the Federal statute and regulation, respectively, and is preempted in those instances where the use of the same term would disclose a different amount than that required to be disclosed under Federal law.

* * * * *

Section 226.30—Limitation on Rates

1. *Scope of coverage.* The requirement of this section applies to consumer credit obligations secured by a dwelling (as dwelling is defined in § 226.2(a)(19)) in which the annual percentage rate may increase after consummation (or during the term of the plan, in the case of open-end credit) as a result of an increase in the interest rate component of the finance charge—whether those increases are tied to an index or formula or are within a creditor's discretion. The section applies to credit sales as well as loans. Examples of credit obligations subject to this section include:

• Dwelling-secured credit obligations that require variable-rate disclosures under the regulation because the interest rate may increase during the term of the obligation.

• Dwelling-secured open-end credit plans that are not considered variable-rate obligations for purposes of disclosure under the regulation but where the creditor reserves the contractual right to increase the interest rate—periodic rate and corresponding annual percentage rate—during the term of the plan.

In contrast, credit obligations in which there is no contractual right to increase the interest rate during the term of the obligation are not subject to this section. Examples include:

• "Shared-equity" or "shared-appreciation" mortgage loans that have a fixed rate of interest and a shared-appreciation feature based on the consumer's equity in the mortgaged property. (The appreciation share is payable in a lump sum at a specified time.)

• Dwelling-secured fixed rate closed-end balloon payment mortgage loans and dwelling-secured fixed rate open-end plans with a stated term that the creditor may, but does not have a legal obligation to, renew at maturity. (Contrast with the renegotiable rate mortgage instrument described in comment 17(c)(1)–11.)

• Dwelling-secured fixed rate closed-end multiple advance transactions in which each advance is disclosed as a separate transaction.

The requirement of this section does not apply to credit obligations entered into prior to December 9, 1987. Consequently, new advances under open-end credit plans existing prior to December 9, 1987, are not subject to this section.

2. *Refinanced obligations.* On or after December 9, 1987, when a credit obligation is refinanced, as defined in § 226.20(a), the new obligation is subject to this section if it is dwelling-secured and allows for increases in the interest rate.

3. *Assumptions.* On or after December 9, 1987, when a credit obligation is assumed, as defined in § 226.20(b), the obligation becomes subject to this section if it is dwelling-secured and allows for increases in the interest rate.

4. *Modifications of obligations.* The modification of an obligation, regardless of when the obligation was entered into, is generally not covered by this section. For example, increasingly the credit limit on a dwelling-secured, open-end plan with a variable interest rate entered into before the effective date of the rule does not make the

obligation subject to this section. If, however, a security interest in a dwelling is added on or after December 9, 1987, to a credit obligation that allows for interest rate increases, the obligation becomes subject to this section. Similarly, if a variable interest rate feature is added to a dwelling-secured credit obligation, the obligation becomes subject to this section.

5. *Land trusts.* In some states, a land trust is used in residential real estate transactions. (See discussion in comment 3(a)–8).) If a consumer-purpose loan that allows for interest rate increases is secured by an assignment of a beneficial interest in a land trust that holds title to a consumer's dwelling, that loan is subject to this section.

6. *Relationship to other sections.* Unless otherwise provided for in the commentary to this section, other provisions of the regulation such as definitions, exemptions, rules and interpretations also apply to this section where appropriate. To illustrate:

• An adjustable interest rate business-purpose loan is not subject to this section even if the loan is secured by a dwelling because such credit extensions are not subject to the regulation. (See generally § 226.3(a).)

• Creditors subject to this section are only those that fall within the definition of a creditor in § 226.2(a)(17).

7. *Consumer credit contract.* Creditors are required to specify a lifetime maximum interest rate in their credit contracts—the instrument that creates personal liability and generally contains the terms and conditions of the agreement (for example, a promissory note or home-equity line of credit agreement). In some states, the signing of a commitment letter may create a binding obligation, for example, constituting "consummation" as defined in § 226.2(a)(13). The maximum interest rate must be included in the credit contract, but a creditor may include the rate ceiling in the commitment instrument as well.

8. *Manner of stating the maximum interest rate.* The maximum interest rate must be stated either as a specific amount or in any other manner that would allow the consumer to easily ascertain, at the time of entering into the obligation, what the rate ceiling will be over the term of the obligation. For example, the following statements would be sufficiently specific:

• The maximum interest rate will not exceed X%.

• The interest rate will never be higher than X percentage points above the initial rate of Y%.

• The interest rate will not exceed X%, or X percentage points about [a rate to be determined at some future point in time], whichever is less.

• The maximum interest rate will not exceed X%, or the state usury ceiling, whichever is less.

The following statements would not comply with this section:

• The interest rate will never be higher than X percentage points over the prevailing market rate.

• The interest rate will never be higher than X percentage points above [a rate to be determined at some future point in time].

• The interest rate will not exceed the state usury ceiling which is currently X%.

A creditor may state the maximum rate in terms of a maximum annual percentage rate that may be imposed. Under an open-end credit plan, this normally would be the corresponding annual percentage rate. (See generally § 226.6(a)(2).)

9. *Multiple interest rate ceilings.* Creditors are not prohibited from setting multiple interest rate ceilings. For example, on loans with multiple variable-rate features, creditors may establish a maximum interest rate for each feature. To illustrate, in a variable-rate loan that has an option to convert to a fixed rate, a creditor may set one maximum interest rate for the initially imposed index-based variable-rate feature and another for the conversion option. Of course, a creditor may establish one maximum interest rate applicable to all features.

10. *Interest rate charged after default.* State law may allow an interest rate after default higher than the contract rate in effect at the time of default; however, the interest rate after default is subject to a maximum interest rate set forth in a credit obligation that is otherwise subject to this section. This rule applies only in situations in which a post-default agreement is still considered part of the original obligation.

11. *Increasing the maximum interest rate—general rule.* Generally, a creditor may not increase the maximum interest rate originally set on a credit obligation subject to this section unless the consumer and the creditor enter into a new obligation. Therefore, under an open-end plan, a creditor may not increase the rate ceiling imposed merely because there is an increase in the credit limit. If an open-end plan is closed and another opened, a new rate ceiling may be imposed. Furthermore, where an open-end plan has a fixed maturity and a creditor renews the plan at maturity, or converts the plan to closed-end credit, without having a legal obligation to renew or convert, a new maximum interest rate may be set at that time. If, under the initial agreement, the creditor is obligated to renew or convert the plan, the maximum interest rate originally imposed cannot be increased upon renewal or conversion (unless, of course, a new obligation is entered into). For a closed-end credit transaction, a new maximum interest rate may be set only if the transaction is satisfied and replaced by a new obligation. (The exceptions in § 226.20(a)(1)–(5) which limit what transactions are considered refinancings for purposes of disclosure do not apply with respect to increasing a rate ceiling that has been imposed; if a transaction is satisfied and replaced, the rate ceiling may be increased.)

12. *Increasing the maximum interest rate—assumption of an obligation.* If an obligation subject to this section is assumed by a new obligor and the original obligor is released from liability, the maximum interest rate set on the obligation may be increased as part of the assumption agreement. (This rule applies whether or not the transaction constitutes an assumption as defined in § 226.20(b).)

13. *Transition rules.* Under footnote 50, if creditors properly include the maximum rate in their credit contracts, creditors need not revise their Truth in Lending disclosure statement forms to add the disclosures about limitations on rate increases as part of the variable-rate disclosures, until October 1, 1988. On or after that date, creditors must have the maximum rate set forth in their credit contracts and, where applicable, as part of their Truth in Lending disclosures.

References

Statute: Competitive Equality Banking Act of 1987, Pub. L. No. 100–86, 101 Stat. 552

Other sections: Sections 226.6, 226.18, and 226.19

Previous regulation: None

1987 changes: This section implements section 1204 of the Competitive Equality Banking Act of 1987, Pub. L. No. 100–86, 101 Stat. 552 which provides that, effective December 9, 1987, adjustable-rate mortgages must include a limitation on the interest rate that may apply during the term of the mortgage loan. An adjustable-rate mortgage loan is defined in section 1204 as "any loan secured by a lien on a one-to-four family dwelling unit, including a condominium unit, cooperative housing unit, or mobile home, where the loan is made pursuant to an agreement under which the creditor may, from time to time, adjust the rate of interest." The rule in this section incorporates section 1204 into Regulation Z and limits the scope of section 1204 to dwelling-secured consumer credit subject to the Truth in Lending Act, in which a creditor has the contractual right to increase the interest rate during the term of the credit obligation.

Board of Governors of the Federal Reserve System, March 30, 1988.

William W. Wiles,

Secretary of the Board.

[FR Doc. 88–7350 Filed 4–4–88; 8:45 am]

BILLING CODE 6210-01-M

DEPARTMENT OF TRANSPORTATION

Federal Aviation Administration

14 CFR Part 71

[Airspace Docket No. 87-ANM-23]

Control Zone; Hayden, CO

AGENCY: Federal Aviation Administration (FAA), DOT.

ACTION: Final rule.

SUMMARY: This amends the Hayden, Colorado Control Zone. The action provides additional controlled airspace to encompass a new instrument approach procedure. It would ensure segregation of aircraft operating in instrument flight rules conditions and other aircraft operating in visual flight rules conditions.

EFFECTIVE DATE: 0901 UTC, May 5, 1988.

FOR FURTHER INFORMATION CONTACT: Ted Melland, ANM–536, Federal Aviation Administration, Docket No. 87–ANM–23, 17900 Pacific Highway South,

C-68966, Seattle, Washington 98168, Telephone: (206) 431-2536.

SUPPLEMENTARY INFORMATION:

History

On January 28, 1988, the FAA proposed to amend Part 71 of the Federal Aviation Regulations (14 CFR Part 71) to amend the Hayden, Colorado Control Zone (53 FR 2504).

Interested parties were invited to participate in this rulemaking proceeding by submitting written comments on the proposal to the FAA. No comments objecting to the proposal were received. Except for editorial changes, this amendment is the same as that proposed in the notice. Section 71.171 of Part 71 of the Federal Aviation Regulations was republished in Handbook 7400.6D dated January 4, 1988.

The Rule

This amendment to Part 71 of the Federal Aviation Regulations provides controlled airspace to encompass the new VOR/DME-B instrument approach procedure. The area will be depicted in aeronautical charts allowing pilots in visual flight rules conditions to circumnavigate the area or otherwise comply with instrument flight rules.

The FAA has determined that this proposed regulation only involves an established body of technical regulations for which frequent and routine amendments are necessary to keep them operationally current. It, therefore—(1) Is not a "major rule" under Executive Order 12291; (2) is not a "significant rule" under DOT Regulatory Policies and Procedures (44 FR 11034; February 26, 1979); and (3) does not warrant preparation of a regulatory evaluation as the anticipated impact is so minimal. Since this is a routine matter that will only affect air traffic procedures and air navigation, it is certified that this rule, when promulgated, will not have a significant economic impact on a substantial number of small entities under the criteria of the Regulatory Flexibility Act.

List of Subjects in 14 CFR Part 71

Aviation safety, Control zones.

Adoption of the Amendment

Accordingly, pursuant to the authority delegated to me, Part 71 of the Federal Aviation Regulations (14 CFR Part 71) is amended as follows:

PART 71—[AMENDED]

1. The authority citation for Part 71 continues to read as follows:

Authority: 49 U.S.C. 1348(a), 1354(a), 1510; Executive Order 10854; 49 U.S.C. 106(g) (Revised Pub. L. 97-449, January 12, 1983); 14 CFR 11.69.

§ 71.171 [Amended]

2. Section 71.171 is amended as follows:

Hayden, Colorado [Amended]

Change the period to a semicolon at the end of the first sentence and add, "* * * and within 3.5 miles each side of the Hayden VOR 118° redial extending from the 5 mile radius zone to 18.5 miles southeast of the VOR."

Issued in Seattle, Washington, on March 24, 1988.

Francis E. Davis,

Acting Manager, Air Traffic Division, Northwest Mountain Region.

[FR Doc. 88-7343 Filed 4-4-88; 8:45 am]

BILLING CODE 4910-13-M

---

14 CFR Part 71

[Airspace Docket No. 87-AGL-20]

Alteration to Transition Area; West Bend, WI

AGENCY: Federal Aviation Administration (FAA), DOT.

ACTION: Final rule.

SUMMARY: The nature of this action is to alter the West Bend, WI, transition area to accommodate a new LOC RWY 31 Standard Instrument Approach Procedure (SIAP) to West Bend Municipal Airport, West Bend, WI.

The intended effect of this action is to ensure segregation of the aircraft using approach procedures in instrument conditions from other aircraft operating under visual weather conditions in controlled airspace.

EFFECTIVE DATE: 0901 UTC, June 30, 1988.

FOR FURTHER INFORMATION CONTACT: Harold G. Hale, Air Traffic Division, Airspace Branch, AGL-520, Federal Aviation Administration, 2300 East Devon Avenue, Des Plaines, Illinois 60018, telephone (312) 694-7360.

SUPPLEMENTARY INFORMATION:

History

On Monday, November 30, 1987, the Federal Aviation Administration (FAA) proposed to amend Part 71 of the Federal Aviation Regulations (14 CFR Part 71) to alter the West Bend, WI, transition area (52 FR 45465).

Interested parties were invited to participate in this rulemaking proceeding by submitting written comments on the proposal to the FAA. No comments objecting to the proposal were received.

Except for editorial changes, this amendment is the same as that proposed in the notice. Section 71.181 of Part 71 of the Federal Aviation Regulations was republished in Handbook 7400.6C dated January 2, 1987.

The Rule

This amendment to Part 71 of the Federal Aviation Regulations alters the West Bend, WI, transition area to accommodate a new LOC RWY 31 SIAP to West Bend Municipal Airport, West Bend, WI.

The FAA has determined that this proposed regulation only involves an established body of technical regulations for which frequent and routine amendments are necessary to keep them operationally current. It, therefore—(1) Is not a "major rule" under Executive Order 12291; (2) is not a "significant rule" under DOT Regulatory Policies and Procedures (44 FR 11034; February 26, 1979); and (3) does not warrant preparation of a regulatory evaluation as the anticipated impact is so minimal. Since this is a routine matter that will only affect air traffic procedures and air navigation, it is certified that this rule, when promulgated, will not have a significant economic impact on a substantial number of small entities under the criteria of the Regulatory Flexibility Act.

List of Subjects in 14 CFR Part 71

Aviation safety, Transition areas.

Adoption of the Amendment

Accordingly, pursuant to the authority delegated to me, Part 71 of the Federal Aviation Regulations (14 CFR Part 71) is amended as follows:

PART 71—[AMENDED]

1. The authority citation for Part 71 continues to read as follows:

Authority: 49 U.S.C. 1348(a), 1354(a), 1510; Executive Order 10854; 49 U.S.C. 106(g) (Revised Pub. L. 97-449, January 12, 1983); 14 CFR 11.69.

§ 71.181 [Amended]

2. Section 71.181 is amended as follows:

West Bend, WI [Revised]

That airspace extending upward from 700 feet above the surface within an eight and one-half (8.5) mile radius of the West Bend Municipal Airport (Lat. 43°25'17"N., Long. 88°07'41"W.); and within 4.5 miles each side of the West Bend VOR 127 radial, extending from the eight and one-half (8.5) mile radius to 11.5 miles southeast of the West Bend

VOR, excluding the portion that overlies the Hartford, Wisconsin, transition area.

Issued in Des Plaines, Illinois, on March 11, 1988.

Teddy W. Burcham,

Manager, Air Traffic Division.

[FR Doc. 88-7344 Filed 4-4-88; 8:45 am]

BILLING CODE 4910-13-M

---

14 CFR Part 97

[Docket No. 25574; Amdt. No. 1370]

Standard Instrument Approach Procedures; Miscellaneous Amendments

AGENCY: Federal Aviation Administration (FAA), DOT.

ACTION: Final rule.

SUMMARY: This amendment establishes, amends, suspends, or revokes Standard Instrument Approach Procedures (SIAPs) for operations at certain airports. These regulatory actions are needed because of the adoption of new or revised criteria, or because of changes occurring in the National Airspace System, such as the commissioning of new navigational facilities, addition of new obstacles, or changes in air traffic requirements. These changes are designed to provide safe and efficient use of the navigable airspace and to promote safe flight operations under instrument flight rules at the affected airports.

DATES: *Effective:* An effective date for each SIAP is specified in the amendatory provisions.

Incorporation by reference—approved by the Director of the Federal Register on December 31, 1980, and reapproved as of January 1, 1982.

ADDRESSES: Availability of matters incorporated by reference in the amendment is as follows:

For examination—

1. FAA Rules Docket, FAA Headquarters Building, 800 Independence Avenue SW., Washington, DC 20591;
2. The FAA Regional Office of the region in which the affected airport is located; or
3. The Flight Inspection Field Office which originated the SIAP.

For Purchase—

Individual SIAP copies may be obtained from:

1. FAA Public Inquiry Center (APA-200), FAA Headquarters Building, 800 Independence Avenue SW., Washington, DC 20591; or
2. The FAA Regional Office of the region in which the affected airport is located.

By Subscription—

Copies of all SIAPs, mailed once every 2 weeks, are for sale by the Superintendent of Documents, U.S. Government Printing Office, Washington, DC 20402.

FOR FURTHER INFORMATION CONTACT: Donald K. Funai, Flight Procedures Standards Branch (AFS-230), Air Transportation Division, Office of Flight Standards, Federal Aviation Administration, 800 Independence Avenue SW., Washington, DC 20591; telephone (202) 267-8277.

SUPPLEMENTARY INFORMATION: This amendment to Part 97 of the Federal Aviation Regulations (14 CFR Part 97) prescribes new, amended, suspended, or revoked Standard Instrument Approach Procedures (SIAPs). The complete regulatory description of each SIAP is contained in official FAA form documents which are incorporated by reference in this amendment under 5 U.S.C. 552(a), 1 CFR Part 51, and § 97.20 of the Federal Aviation Regulations (FARs). The applicable FAA Forms are identified as FAA Forms 8260-3, 8260-4, and 8260-5. Materials incorporated by reference are available for examination or purchase as stated above.

The large number of SIAPs, their complex nature, and the need for a special format make their verbatim publication in the **Federal Register** expensive and impractical. Further, airmen do not use the regulatory text of the SIAPs, but refer to their graphic depiction on charts printed by publishers of aeronautical materials. Thus, the advantages of incorporation by reference are realized and publication of the complete description of each SIAP contained in FAA form document is unnecessary. The provisions of this amendment state the affected CFR (and FAR) sections, with the types and effective dates of the SIAPs. This amendment also identifies the airport, its location, the procedure identification and the amendment number.

This amendment to Part 97 is effective on the date of publication and contains separate SIAPs which have compliance dates stated as effective dates based on related changes in the National Airspace System or the application of new or revised criteria. Some SIAP amendments may have been previously issued by the FAA in a National Flight Data Center (FDC) Notice to Airmen (NOTAM) as an emergency action of immediate flight safety relating directly to published aeronautical charts. The circumstances which created the need for some SIAP amendments may require making them effective in less than 30 days. For the remaining SIAPs, an effective date at least 30 days after publication is provided.

Further, the SIAPs contained in this amendment are based on the criteria contained in the U.S. Standard for Terminal Instrument Approach Procedures (TERPs). In developing these SIAPs, the TERPS criteria were applied to the conditions existing or anticipated at the affected airports. Because of the close and immediate relationship between these SIAPs and safety in air commerce, I find that notice and public procedure before adopting these SIAPs is unnecessary, impracticable, and contrary to the public interest and, where applicable, that good cause exists for making some SIAPs effective in less than 30 days.

The FAA has determined that this regulation only involves an established body of technical regulations for which frequent and routine amendments are necessary to keep them operationally current. It, therefore—(1) Is not a "major rule" under Executive Order 12291; (2) is not a "significant rule" under DOT Regulatory Policies and Procedures (44 FR 11034; February 26, 1979); and (3) does not warrant preparation of a regulatory evaluation as the anticipated impact is so minimal. For the same reason, the FAA certifies that this amendment will not have a significant economic impact on a substantial number of small entities under the criteria of the Regulatory Flexibility Act.

List of Subjects in 14 CFR Part 97

Approaches, Standard instrument, Incorporation by reference.

Issued in Washington, DC, on March 18, 1988.

Robert L. Goodrich,

Director of Flight Standards.

Adoption of the Amendment

Accordingly, pursuant to the authority delegated to me, Part 97 of the Federal Aviation Regulations (14 CFR Part 97) is amended by establishing, amending, suspending, or revoking Standard Instrument Approach Procedures, effective at 0901 G.M.T. on the dates specified, as follows:

PART 97—[AMENDED]

1. The authority citation for Part 97 continues to read as follows:

Authority: 49 U.S.C. 1348, 1354(a), 1421, and 1510; 49 U.S.C. 106(g) (revised, Pub. L. 97-449, January 12, 1983; and 14 CFR 11.49(b)(2)).

§§ 97.23, 97.25, 97.27, 97.29, 97.31, 97.33, 97.35 [Amended]

2. By amending: § 97.23 VOR, VOR/DME, VOR or TACAN, and VOR/DME or TACAN; § 97.25 LOC, LOC/DME, LDA, LDA/DME, SDF, SDF/DME; § 97.27 NDB, NDB/DME; § 97.29 ILS, ILS/DME, ISMLS, MLS, MLS/DME, MLS/RNAV; § 97.31 RADAR SIAPs; § 97.33 RNAV SIAPs; and § 97.35 COPTER SIAPs, identified as follows:

Effective June 30, 1988

Kotzebue, AK—Ralph Wien Memorial, VOR RWY 8, Amdt. 2
Kotzebue, AK—Ralph Wien Memorial, VOR RWY 26, Amdt. 1
Kotzebue, AK—Ralph Wien Memorial, VOR/DME RWY 26, Orig.
Kotzebue, AK—Ralph Wien Memorial, NDB-A, Amdt. 12
Williston, FL—Williston Muni, VOR/DME RWY 22, Orig.
Lincoln, NE—Lincoln Muni, VOR RWY 17L, Amdt. 5
Lincoln, NE—Lincoln Muni, VOR RWY 17R, Amdt. 10
Lincoln, NE—Lincoln Muni, NDB RWY 35L, Amdt. 8
Lincoln, NE—Lincoln Muni, ILS RWY 17R, Amdt. 5
Lincoln, NE—Lincoln Muni, ILS RWY 35L, Amdt. 10
Lincoln, NE—Lincoln Muni, RNAV RWY 14, Amdt. 4
Sweetwater, TX—Sweetwater Muni, NDB RWY 16, Amdt. 1

Effective May 5, 1988

Aniak, AK—Aniak, NDB RWY 28, Amdt. 8, CANCELLED
St. Paul Island, AK—St. Paul Island, LOC/DME BC RWY 18, Orig.
St. Paul Island, AK—St. Paul Island, ILS/DME RWY 36, Orig.
Soldotna, AK—Soldotna, RNAV RWY 7, Amdt. 2
Soldotna, AK—Soldotna, RNAV RWY 25, Amdt. 2
Unalakleet, AK—Unalakleet, VOR-C, Amdt. 4, CANCELLED
Unalakleet, AK—Unalakleet, VOR/DME-A, Amdt. 6, CANCELLED
Fresno, CA—Fresno Air Terminal, ILS RWY 29R, Amdt. 29
South Lake Tahoe, CA—Lake Tahoe, VOR/DME-A, Amdt. 3
South Lake Tahoe, CA—Lake Tahoe, LDA/DME-1 RWY 18, Amdt. 6
Truckee, CA—Truckee-Tahoe, RNAV-A, Amdt. 4
Truckee, CA—Truckee-Tahoe, RNAV-B, Amdt. 1
Jacksonville, FL—Craig Muni, VOR RWY 13, Amdt. 1
Jacksonville, FL—Craig Muni, VOR RWY 31, Amdt. 1
Harlan, IA—Harlan Muni, NDB RWY 33, Amdt. 1
Leeville, LA—Caillou Island, VOR/DME-A, Orig., CANCELLED
Syracuse, NY—Syracuse-Hancock Intl, ILS RWY 10, Amdt. 6
Dallas, TX—Dallas Love Field, VOR/DME RWY 13R, Amdt. 6
Dallas, TX—Dallas Love Field, ILS RWY 13L, Amdt. 27
Dallas, TX—Dallas Love Field, ILS RWY 13R, Amdt. 1
Dallas, TX—Dallas Love Field, ILS RWY 31L, Amdt. 16
Dallas, TX—Dallas Love Field, ILS RWY 31R, Amdt. 1
Dallas, TX—Dallas Love Field, RADAR-1, Amdt. 25

Effective March 10, 1988

Providence, RI—Theodore Francis Green State, ILS RWY 5R, Amdt. 14
Houston, TX—Houston Intercontinental, ILS RWY 8, Amdt. 16

[FR Doc. 88-7342 Filed 4-4-88; 8:45 am]

BILLING CODE 4910-13-M

DEPARTMENT OF HEALTH AND HUMAN SERVICES

Food and Drug Administration

21 CFR Part 520

Oral Dosage Form New Animal Drugs not Subject to Certification; Trimethoprim and Sulfadiazine Oral Paste

AGENCY: Food and Drug Administration.

ACTION: Final rule.

SUMMARY: The Food and Drug Administration (FDA) is amending the animal drug regulations to reflect approval of a supplemental new animal drug application (NADA) filed by Coopers Animal Health, Inc. The supplement provides for technical changes in the regulation for trimethoprim and sulfadiazine oral paste (21 CFR 520.2611).

EFFECTIVE DATE: April 5, 1988.

FOR FURTHER INFORMATION CONTACT: John R. Markus, Center for Veterinary Medicine (HFV-142), Food and Drug Administration, 5600 Fishers Lane, Rockville, MD 20857, 301-443-3442.

SUPPLEMENTARY INFORMATION: Coopers Animal Health, Inc., Kansas City, KS 66103-1438, is sponsor of approved NADA 131-918 which provides for use in horses of Tribrissen® (trimethoprim/sulfadiazine) 400 Oral Paste to treat acute strangles, respiratory infections, acute urogenital infections, and wound infections and abscesses. The net contents of the currently approved syringe are 30 grams. Each increment mark on the syringe barrel represents 5 grams of paste which will dose 150 pounds of body weight. This amount of net contents limits dosing to a 900-pound horse. The sponsor has submitted a supplemental NADA requesting that the existing syringe's net contents be increased to 37.5 grams. Additionally, the syringe's increment markings are to be changed from 5 to 3.75 grams of paste. Each 3.75-gram increment will dose 110 pounds. These two technical changes will accommodate treatment of a 1,100-pound horse. The currently approved dose of 30 milligrams (mg) per kilogram of body weight (5 mg of trimethoprim and 25 mg of sulfadiazine) is unchanged. There are no changes in the finished paste, its indications, or uses. The supplemental NADA contains information supporting the requested changes. Accordingly, the supplement is approved and the regulations in 21 CFR 520.2611(b) and (c)(1) are revised to reflect the approval.

In accordance with the freedom of information provisions of Part 20 (21 CFR Part 20) and § 514.11(e)(2)(ii) (21 CFR 514.11(e)(2)(ii)), a summary of safety and effectiveness data and information submitted to support approval of this application may be seen in the Dockets Management Branch (HFA-305), Food and Drug Administration, Rm. 4-62, 5600 Fishers Lane, Rockville, MD 20857, from 9 a.m. to 4 p.m., Monday through Friday.

The agency has determined under 21 CFR 25.24(a)(9) that this action is of a type that does not individually or cumulatively have a significant effect on the human environment. Therefore, neither an environmental assessment nor an environmental impact statement is required.

List of Subjects in 21 CFR Part 520

Animal drugs.

Therefore, under the Federal Food, Drug, and Cosmetic Act and under authority delegated to the Commissioner of Food and Drugs and redelegated to the Center for Veterinary Medicine, Part 520 is amended as follows:

PART 520—ORAL DOSAGE FORM NEW ANIMAL DRUGS NOT SUBJECT TO CERTIFICATION

1. The authority citation for 21 CFR Part 520 continues to read as follows:

Authority: Sec. 512(i), 82 Stat. 347 (21 U.S.C. 360b(i)); 21 CFR 5.10 and 5.83.

2. Section 520.2611 is amended by revising paragraphs (b) and (c)(1) to read as follows:

§ 520.2611 Trimethoprim and sulfadiazine oral paste.

* * * * *

(b) *Sponsor.* See No. 000033 in § 510.600(c) of this chapter for product to be dosed at 5 grams per 150 pounds of body weight per day. See No. 017220 in § 510.600(c) of this chapter for product to

be dosed at 3.75 grams per 110 pounds of body weight per day.

(c) *Conditions of use*—(1) *Dosage.* (i) 5 grams (335 milligrams of trimethoprim and 1,665 milligrams of sulfadiazine) per 150 pounds (68 kilograms) of body weight per day. (ii) 3.75 grams (250 milligrams of trimethoprim and 1,250 milligrams of sulfadiazine) per 110 pounds (50 kilograms) of body weight per day.

* * * * *

Dated: March 24, 1988.

Suzanne Fitzpatrick,

Acting Director, Division of Drug Manufacturing and Residue Chemistry, Office of New Animal Drug Evaluation, Center for Veterinary Medicine.

[FR Doc. 88-7369 Filed 4-4-88; 8:45 am]

BILLING CODE 4160-01-M

---

21 CFR Part 522

Implantation or Injectable Dosage Form New Animal Drugs Not Subject to Certification; Ivermectin Injection

AGENCY: Food and Drug Administration.

ACTION: Final rule.

SUMMARY: The Food and Drug Administration (FDA) is amending the animal drug regulations to reflect approval of a supplemental new animal drug application (NADA) filed by Merck Sharp & Dohme Research Laboratories providing for safe and effective use of a lower concentration of IVOMEC® (ivermectin) injection in piglets weighing 70 pounds or less for treating and controlling infections caused by certain species of gastrointestinal roundworms, lungworms, lice, and mites.

EFFECTIVE DATE: April 5, 1988.

FOR FURTHER INFORMATION CONTACT: Adriano R. Gabuten, Center for Veterinary Medicine (HFV-135), Food and Drug Administration, 5600 Fishers Lane, Rockville, MD 20857, 301-443-4913.

SUPPLEMENTARY INFORMATION: Merck Sharp & Dohme Research Laboratories, Division of Merck & Co., Inc., P.O. Box 2000, Rahway, NJ 07065, filed a supplement to NADA 135-008 providing for subcutaneous use of 0.27 percent IVOMEC® (ivermectin) injection in piglets weighing 70 pounds or less in addition to the currently approved 1 percent injection in swine over 70 pounds for treating and controlling infections caused by certain species of gastrointestinal roundworms, lungworms, lice, and mites.

The supplemental NADA is approved and the regulations in 21 CFR 522.1192 are amended by adding new paragraph (a)(3) and by revising paragraph (d)(4)(i) to reflect the approval. The basis for approval is discussed in the freedom of information summary.

In accordance with the freedom of information provisions of Part 20 (21 CFR Part 20) and § 514.11(e)(2)(ii) (21 CFR 514.11(e)(2)(ii)), a summary of safety and effectiveness data and information submitted to support approval of this application may be seen in the Dockets Management Branch (HFA-305), Food and Drug Administration, Rm. 4-62, 5600 Fishers Lane, Rockville, MD 20857, from 9 a.m. to 4 p.m., Monday through Friday.

The agency has determined under 21 CFR (25.24(d)(1)(iii) that this action is of a type that does not individually or cumulatively have a significant effect on the human environment. Therefore, neither an environmental assessment nor an environmental impact statement is required.

List of Subjects in 21 CFR Part 522

Animal drugs.

Therefore, under the Federal Food, Drug, and Cosmetic Act and under authority delegated to the Commissioner of Food and Drugs and redelegated to the Center for Veterinary Medicine, Part 522 is amended as follows:

PART 522—IMPLANTATION OR INJECTABLE DOSAGE FORM NEW ANIMAL DRUGS NOT SUBJECT TO CERTIFICATION

1. The authority citation for 21 CFR Part 522 continues to read as follows:

Authority: Sec 512(i), 82 Stat. 347 (21 U.S.C. 360b(i)); 21 CFR 5.10 and 5.83.

2. Section 522.1192 is amended by adding new paragraph (a)(3) and by revising paragraph (d)(4)(i) to read as follows:

§ 522.1192 Ivermectin injection.

(a) * * *

(3) *Piglets 70 pounds or less.* Each milliliter of sterile aqueous solution contains 2.7 milligrams of ivermectin (0.27 percent).

* * * * *

(d) * * *

(4) * * *

(i) *Amount.* 10 milligrams per 75 pounds of body weight.

* * * * *

Dated: March 15, 1988.

Richard A. Carnevale,

Deputy Associate Director, Office of New Animal Drug Evaluation, Center for Veterinary Medicine.

[FR Doc. 88-7367 Filed 4-4-88; 8:45 am]

BILLING CODE 4160-01-M

---

21 CFR Part 524

Ophthalmic and Topical Dosage Form New Animal Drugs Not Subject to Certification; Neomycin Sulfate-Sulfacetamide Sodium Ophthalmic Ointment

AGENCY: Food and Drug Administration.

ACTION: Final rule.

SUMMARY: The Food and Drug Administration (FDA) is amending the animal drug regulations by removing the regulation reflecting approval of a new animal drug application (NADA) sponsored by Altana, Inc. The NADA provides for the use of neomycin sulfate-sulfacetamide sodium ophthalmic ointment in the prophylaxis and local treatment of dogs and cats for superficial eye infections. In a notice published elsewhere in this issue of the **Federal Register**, the agency is withdrawing approval of NADA 47-091 at the sponsor's request.

EFFECTIVE DATE: April 15, 1988.

FOR FURTHER INFORMATION CONTACT: Mohammad I. Sharar, Center for Veterinary Medicine (HFV-216), Food and Drug Administration, 5600 Fishers Lane, Rockville, MD 20857, 301-443-4093.

SUPPLEMENTARY INFORMATION: In a notice published elsewhere in this issue of the **Federal Register**, the agency is withdrawing approval of NADA 47-091 sponsored by Altana, Inc. (formerly Byk-Gulden, Inc.), 60 Baylis Rd., Melville, NY 11747. The firm's NADA provides for the use of neomycin sulfate-sulfacetamide sodium ophthalmic ointment in the prophylaxis and local treatment of dogs and cats for superficial eye infections caused by commonly occurring gram-negative and gram-positive bacteria such as staphylococci, streptococci, and moraxella. This document removes 21 CFR 524.1484j, which reflects approval of the NADA.

List of Subjects in 21 CFR Part 524

Animal drugs.

Therefore, under the Federal Food, Drug, and Cosmetic Act and under authority delegated to the Commissioner of Food and Drugs and redelegated to the Director of the Center for Veterinary Medicine, Part 524 is amended as follows:

PART 524—OPHTHALMIC AND TOPICAL DOSAGE FORM NEW ANIMAL DRUGS NOT SUBJECT TO CERTIFICATION

1. The authority citation for 21 CFR Part 524 continues to read as follows:

Authority: Sec 512(i), 82 Stat. 347 (21 U.S.C. 360(i)); 21 CFR 5.10 and 5.83.

§ 524.1484j [Removed]

2. Section 524.148j *Neomycin sulfate-sulfacetamide sodium ophthalmic ointment* is removed.

Dated: March 23, 1988.

Gerald B. Guest,

Director, Center for Veterinary Medicine.

[FR Doc. 88-7363 Filed 4-4-88; 8:45 am]

BILLING CODE 4160-01-M

---

21 CFR Part 558

New Animal Drugs for Use in Animal Feeds; Halofuginone and Bacitracin Methylene Disalicylate

AGENCY: Food and Drug Administration.

ACTION: Final rule.

SUMMARY: The Food and Drug Administration (FDA) is amending the animal drug regulations to reflect approval of a new animal drug application (NADA) filed by Hoechst-Roussel Agri-Vet Co. The NADA provides for the use of halofuginone hydrobromide in combination with bacitracin methylene disalicylate in Type C broiler feeds for the prevention of coccidiosis, and improved feed efficiency.

EFFECTIVE DATE: April 5, 1988.

FOR FURTHER INFORMATION CONTACT: Lonnie W. Luther, Center for Veterinary Medicine (HFV-128), Food and Drug Administration, 5600 Fishers Lane, Rockville, MD 20857, 301-443-4317.

SUPPLEMENTARY INFORMATION: Hoechst-Roussel Agri-Vet Co., Route 202-206 North, Somerville, NJ 08876, has filed NADA 140-584 providing for the combination of separately approved halofuginone hydrobromide, and bacitracin methylene disalicylate Type A medicated articles to make Type C medicated feeds for broilers containing 2.72 grams halofuginone hydrobromide per ton, 10 to 50 grams bacitracin methylene disalicylate per ton. The Type C medicated feeds are for the prevention of coccidiosis caused by *Eimeria tenella, E. necatrix, E. acervulina, E. brunetti, E. mivati,* and *E. maxima,* and for improved feed efficiency.

The application is approved and the regulations in 21 CFR 558.76 are amended by adding a new paragraph (d)(3)(xii) and in 21 CFR 558.265 by adding a new paragraph (c)(6) to reflect the approval. The basis for approval is discussed in the freedom of information summary.

In accordance with the freedom of information provisions of Part 20 (21 CFR Part 20) and § 514.11(e)(2)(ii) (21 CFR 514.11(e)(2)(ii)), a summary of safety and effectiveness data and information submitted to support approval of this application may be seen in the Dockets Management Branch (HFA-305), Food and Drug Administration, Rm. 4-62, 5600 Fishers Lane, Rockville, MD 20857, from 9 a.m. to 4 p.m., Monday through Friday.

The agency has determined under 21 CFR 25.24(d)(1)(ii) that this action is a type that does not individually or cumulatively have a significant effect on the human environment. Therefore, neither an environmental assessment nor an environmental impact statement is required.

List of Subjects in 21 CFR Part 558

Animal drugs, Animal feeds.

Therefore, under the Federal Food, Drug, and Cosmetic Act and under authority delegated to the Commissioner of Food and Drugs and redelegated to the Director of the Center for Veterinary Medicine, Part 558 is amended as follows:

PART 558—NEW ANIMAL DRUGS FOR USE IN ANIMAL FEEDS

1. The authority citation for 21 CFR Part 558 continues to read as follows:

Authority: Sec. 512, 82 Stat. 343-351 (21 U.S.C. 360b); 21 CFR 5.10 and 5.83.

2. In § 558.76 by adding a new paragraph (d)(3)(xii) to read as follows:

§ 558.76 Bacitracin methylene disalicylate.

* * * * *

(d) * * *

(3) * * *

(xii) Halofuginone in accordance with § 558.265.

3. In § 558.265 by adding a new paragraph (c)(6) to read as follows:

§ 558.265 Halofuginone hydrobromide.

* * * * *

(c) * * *

(6) *Amount per ton.* Halofuginone 2.72 grams (0.0003 percent) plus bacitracin methylene disalicylate 10 to 50 grams.

(i) *Indications for use.* For the prevention of coccidiosis caused by *Eimeria tenella, E. necatrix, E. acervulina, E. brunetti, E. mivati,* and *E. maxima* and improved feed efficiency.

(ii) *Limitations.* Feed continuously as sole ration; withdraw 5 days before slaughter; do not feed to layers; avoid contact with skin, eyes, or clothing; keep out of lakes, ponds, or streams.

Dated: March 16, 1988.

Gerald B. Guest,

Director, Center for Veterinary Medicine.

[FR Doc. 88-7368 Filed 4-4-88; 8:45 am]

BILLING CODE 4160-01-M

DEPARTMENT OF TRANSPORTATION

Federal Highway Administration

23 CFR Parts 650 and 771

Environmental Impact and Related Procedures; Technical Corrections

AGENCY: Federal Highway Administration (FHWA), DOT.

ACTION: Final rule; technical corrections.

SUMMARY: This document contains technical corrections to the final rule on environmental impact and related procedures that appeared at pages 32661 through 32669 in the **Federal Register** of August 28, 1987, (52 FR 32646) FR Doc. 87-19530. These technical amendments are necessary to correct: (1) Certain references, (2) inadvertent omission of words, (3) paragraph designations, and (4) misspelled words of the final rule text.

EFFECTIVE DATE: April 5, 1988.

FOR FURTHER INFORMATION CONTACT: Mr. Frederick Skaer, Office of Environmental Policy (HEV-10), (202) 366-0106, Federal Highway Administration.

In FR Doc. 87-19530, in the issue of Friday, August 28, 1987, on pages 32661 through 32669, in 23 CFR Parts 650 and 771, the following corrections to the text are as set forth below.

PART 650—[CORRECTED]

1. Section 650.109 was inadvertently removed in its entirety when only paragraphs (b) and (c) should have been removed. The FHWA is now returning revised § 650.109(a) to Part 650 and it reads as follows:

§ 650.109 Public involvement.

Procedures which have been established to meet the public involvement requirements of 23 CFR Part 771 shall be used to provide opportunity for early public review and comment on alternatives which contain encroachments.

PART 771—[CORRECTED]

§ 771.105 [Corrected]

2. In § 771.105, paragraph (e) is amended by adding the word "by" after the words "costs incurred."

BEST COPY AVAILABLE

§ 771.113 [Amended]

3. In § 771.113, paragraph (b) is amended in the last sentence by substituting the word "to" in place of the word "of" after the words "future grant request."

§ 771.117 [Amended]

4. In § 771.117, align paragraph (d) to stand alone. At the present time, the text of paragraph (d) follows paragraph (c)(20) in such a manner as to appear part of the previous paragraph.

5. In § 771.117, amend the first sentence of footnote number three of paragraph (d)(12) by substituting the word "others" in place of the letters "thers" after the words "in contrast to."

6. In § 771.117, paragraph (e) is amended by removing the misspelled word "lsit" and replacing it with the word "list."

§ 771.129 [Amended]

7. In § 771.129, the second sentence of paragraph (a) is amended by adding the words "or not" after the words "determine whether."

§ 771.135 [Amended]

8. In § 771.135, paragraph (f)(2) is amended by correcting the reference in the latter part of the sentence to read "finding in paragraph (f)(1) of this section."

9. In § 771.135, paragraph (g) is amended by correcting the first paragraph designation to read as "(g)(1)."

10. In § 771.135, paragraph (m) is amended by correcting the designation of the first paragraph division under (m) to read as "(1)" and by substituting the word "or" in place of the word "of" after the words "draft EIS."

This document is issued under the authority of 23 U.S.C. 315; 49 CFR 1.48.

Issued on: March 30, 1988.

Anthony J. McMahon,

Chief Counsel, Federal Highway Administration.

[FR Doc. 88-7394 Filed 4-4-88; 8:45 am]

BILLING CODE 4910-22-M

DEPARTMENT OF THE TREASURY

Internal Revenue Service

26 CFR Parts 1 and 602

[T.D. 8190]

Income Taxes; Automatic Extension of Time to File Partnership Return of Income and Trust Income Tax Return; OMB Control Numbers Under the Paperwork Reduction Act

AGENCY: Internal Revenue Service, Treasury.

ACTION: Temporary regulations.

SUMMARY: This document contains temporary regulations relating to the automatic extension of time to file partnership returns of income and trust income tax returns. The temporary regulations affect persons filing partnership and trust returns and provide those persons with the guidance necessary to comply with the law. The text of the temporary regulations also serves as the text of the proposed regulations for the notice of proposed rulemaking on this subject in the Proposed Rules section of this issue of the **Federal Register.**

EFFECTIVE DATE: The regulations apply to partnership and trust returns required to be filed for taxable years beginning after December 31, 1986.

FOR FURTHER INFORMATION CONTACT: Katherine Lee Wambsgans, Legislation and Regulations Division, Office of the Chief Counsel, Internal Revenue Service, 1111 Constitution Avenue, NW., Washington, DC 20224, Attention: CC:LR:T (202-566-3288, not a toll-free call).

SUPPLEMENTARY INFORMATION:

Background

Section 6081(a) of the Internal Revenue Code of 1986 authorizes the Secretary to grant a reasonable extension of time to file returns. Currently, if a partnership or trust needs an extension of time to file a return, the partnership or trust must request an extension on Form 2758 and include a detailed explanation of the reasons an extension is necessary. The Internal Revenue Service's administrative practice has been to routinely approve these requests. In order to formalize current adminstrative practice, these temporary regulations provide rules for obtaining an automatic extension of time to file partnership returns of income and trust income tax returns.

In the case of a partnership, an automatic three-month extension may be obtained for a taxable year beginning after December 31, 1986, and before January 1, 1988, by filing a properly prepared Form 2758 with the words "AUTOMATIC EXTENSION UNDER § 1.6081-2T" typed or legibly printed on line 4 of Form 2758. For taxable years beginning after December 31, 1987, Form 8736 must be used. Form 2758 or 8736 must be filed by the due date for filing the partnership return with the Internal Revenue Service Center where the partnership return is required to be filed.

In the case of a trust, an automatic three-month extension may be obtained for a taxable year beginning after December 31, 1986, and before January 1, 1988, by filing a properly prepared Form 2758 with the words "AUTOMATIC EXTENSION UNDER § 1.6081-3T" typed or legibly printed on line 4 of Form 2758. For taxable years beginning after December 31, 1987, Form 8736 must be used. Form 2758 or 8736 must be filed by the due date for filing the trust return with the Internal Revenue Service Center where the trust return is required to be filed and must be accompanied by remittance of the full amount of the estimated unpaid tax liability.

An automatic extension of time to file a partnership or trust return does not extend the time for filing a partner's or beneficiary's income tax return. Because the time for filing the income tax return of partners and beneficiaries is not extended when a partnership or trust obtains an extension of time to file its return, the Internal Revenue Service will monitor the new automatic extension procedure to ascertain whether the lack of notice to partners and beneficiaries that the extension has been requested is engendering substantial filing difficulties for the partners and beneficiaries. If it becomes apparent that most partnerships and trusts are routinely requesting an automatic extension and that these requests are unduly delaying the filing of partner and beneficiary returns or causing substantial inconvenience to partners and beneficiaries, the Internal Revenue Service will reconsider the appropriateness of allowing automatic extensions of time to file partnership and trust returns.

Special Analyses

The Commissioner of Internal Revenue has determined that this temporary rule is not a major rule as defined in Executive Order 12291. Therefore, a regulatory impact analysis is not required. A general notice of proposed rulemaking is not required by 5 U.S.C. 553 for temporary regulations. Accordingly, the temporary regulations do not constitute regulations subject to the Regulatory Flexibility Act (5 U.S.C. Chapter 6).

Paperwork Reduction Act

The collection of information requirements contained in these regulations have been submitted to the Office of Management and Budget (OMB) in accordance with the requirements of the Paperwork Reduction Act of 1980. These requirements have been approved by OMB.

Drafting Information

The principal author of these temporary regulations is Katherine Lee Wambsgans, Legislation and Regulations Division, Office of Chief Counsel, Internal Revenue Service. However, personnel from other offices of the Internal Revenue Service and Treasury Department participated in developing these regulations on matters of both substance and style.

List of Subjects

26 CFR 1.6001–1—1.6109–2.

Income taxes, Administration and procedure, Filing requirements.

26 CFR Part 602

Reporting and recordkeeping requirements.

Adoption of Amendments to the Regulations

For the reasons set forth in the preamble, Title 26, Chapter 1, Subchapter A, Part 1, and Subchapter H, Part 602, of the Code of Federal Regulations is amended as set forth below:

PART 1—[AMENDED]

Paragraph 1. The authority for Part 1 continues to read as follows:

Authority: 26 U.S.C. 7805. * * *

Par. 2. The following new §§ 1.6081–2T and 1.6081–3T shall be added in the appropriate place.

§ 1.6081–2T Automatic extension of time to file partnership return of income (temporary).

(a) *In general.* A partnership required to file a return of income on Form 1065 for any taxable year beginning after December 31, 1986, shall be allowed an automatic extension of time to file such return to the fifteenth day of the third month following the month in which falls the date prescribed for filing such return if and only if an application under this section is filed in accordance with paragraph (b) of this section. In the case of a partnership described in § 1.6081–2(a)(1), the automatic extension allowed under this section shall run concurrently with an extension of time to file granted pursuant to § 1.6081–2(a).

(b) *Requirements.* In order to satisfy this paragraph (b), an application for an automatic extension under this section must satisfy the following requirements:

(1) The application must be prepared (i) on Form 2758, "Application for Extension of Time to File U.S. Partnership, Fiduciary, and Certain Other Returns," for a taxable year beginning after December 31, 1986, and before January 1, 1988, by typing or legibly printing on line 4 "AUTOMATIC EXTENSION UNDER § 1.6081–2T," and (ii) on Form 8736 for taxable years beginning after December 31, 1987;

(2) The application must be signed by a general partner authorized to file the partnership's Form 1065 or other person authorized by such general partner to file the application, but only if such other person is (i) an attorney who is a member in good standing of the bar of the highest court of a state, possession, territory, commonwealth, or the District of Columbia, (ii) a certified public accountant duly qualified to practice in a state, possession, territory, commonwealth, or the District of Columbia, or (iii) a person currently enrolled to practice before the Treasury Department; and

(3) The application must be filed on or before the later of (i) the date prescribed for filing the partnership return with the Internal Revenue Service Center where the partnership return is required to be filed (without regard to any extensions of the time for filing such return), and (ii) the expiration of any extension of time to file granted such partnership pursuant to § 1.6081–2(a).

(c) *Payment of section 7519 amount.* An automatic extension of time for filing a partnership return under this section does not extend the time for payment of any amount due under section 7519, relating to required payments for entities electing not to have a required taxable year.

(d) *Section 444 election.* An automatic extension of time for filing a partnership return shall run concurrently with any extension of time for filing a return allowed because of section 444, relating to the election of a taxable year other than a required taxable year.

(e) *Effect of extension of partner.* An automatic extension of time for filing a partnership return under this section shall not operate to extend the time for filing a partner's income tax return or the time for the payment of any tax due on such return.

(f) *Termination of automatic extension.* The district director, including the Director of Foreign Programs, or the director of a service center may, in his or her discretion, terminate at any time an automatic extension by mailing to the partnership, or to the person who requested such extension for the partnership, a notice of termination. The notice shall be mailed at least 10 days prior to the termination date designated in such notice. The notice of termination shall be sufficient for all purposes when mailed to the partnership at its address shown on Form 1065 or to the person who requested such extension for the partnership at his or her last known address or last known place of business, even if such person is deceased or is under a legal disability.

(g) *Coordination with § 1.6081–1.* Except in undue hardship cases, no extension of time for filing a partnership return of income shall be granted under § 1.6081–1 until an automatic extension has been granted pursuant to the provisions of this section.

(h) *Effective date.* This section is effective for taxable years beginning after December 31, 1986.

§ 1.6081–3T Automatic extension of time to file trust income tax return (temporary).

(a) *In general.* A trust required to file a return of income tax on Form 1041 or on Form 1041S for any taxable year beginning after December 31, 1986, shall be allowed an automatic extension of time to file such return to the fifteenth day of the third month following the month in which falls the date prescribed for filing such return if and only if an application under this section is filed in accordance with paragraph (b) of this section.

(b) *Requirements.* In order to satisfy this paragraph (b), an application for an automatic extension under this section must satisfy the following requirements:

(1) The application must be prepared (i) on Form 2758, "Application for Extension of Time to File U.S. Partnership, Fiduciary, and Certain Other Returns," for a taxable year beginning after December 31, 1986, and before January 1, 1988, by typing or legibly printing on line 4 "AUTOMATIC EXTENSION UNDER § 1.6081–3T," and (ii) on Form 8736 for taxable years beginning after December 31, 1987;

(2) The application must be signed by a fiduciary authorized to file the trust's Form 1041 or Forms 1041S or other person duly authorized to file the trust's Form 1041 or Form 1041S. Such other person must be (i) an attorney who is a member in good standing of the bar of the highest court of a state, possession, territory, commonwealth, or the District of Columbia, (ii) a certified public accountant duly qualified to practice in a state, possession, territory, commonwealth, or the District of Columbia, (iii) a person currently enrolled to practice before the Treasury Department, or (iv) a duly authorized agent holding a power of attorney with respect to the filing of a trust return of income tax;

(3) The application must be filed on or before the date prescribed for filing the trust return of income tax with the Internal Revenue Service Center where

the trust return of income tax is required to be filed; and

(4) The application for extension must show the full amount properly estimated as tax for the trust for the taxable year and must be accompanied by the full remittance of the amount properly estimated as tax which is unpaid as of the date prescribed for filing the return.

(c) *Effect of extension on beneficiary.* An automatic extension of time to file a trust return of income under this section shall not operate to extend the time for filing the income tax return of a beneficiary of the trust or the time for the payment of any tax due on such return.

(d) *Termination of automatic extension.* The district director, including the Director of Foreign Programs, or the director of a service center may, in his or her discretion, terminate at any time an automatic extension by mailing to the fiduciary authorized to file the trust's Form 1041 or 1041S or to the person who requested such extension for the trust, a notice of termination. The notice shall be mailed at least 10 days prior to the termination date designated in such notice. The notice of termination shall be sufficient for all purposes when mailed to the fiduciary authorized to file the trust's Form 1041 or 1041S at his or her address shown on Form 1041 on 1041S or to the person who requested such extension for the trust at his or her last known address or last known place of business, even if such person is deceased or is under a legal disability.

(e) *Coordination with § 1.6081-1.* Except in undue hardship cases, no extension of time for filing a trust return of income tax shall be granted under § 1.6081-1 until an automatic extension has been granted pursuant to the provisions of this section.

(f) *Effective date.* This section is effective for taxable years beginning after December 31, 1986.

PART 602—[AMENDED]

Par. 3. The authority for Part 602 continues to read as follows:

Authority: 26 U.S.C. 7805.

§ 602.101 [Amended]

Par. 4. Section 602.101(c) is amended by inserting in the appropriate places in the table:

"§ 1.6081-2T	1545-0000
§ 1.6081-3T	1545-0000"

Lawrence B. Gibbs,
Commissioner of Internal Revenue.

Approved: March 24, 1988.

O. Donaldson Chapoton,
Assistant Secretary of the Treasury.

[FR Doc. 88-7392 Filed 3-31-88; 2:08 pm]

BILLING CODE 4830-01-M

ENVIRONMENTAL PROTECTION AGENCY

40 CFR Part 52

[FRL-3357-7; NC-018]

Approval and Promulgation of Implementation Plans, North Carolina; 2D.0536, Emissions From Electric Utility Boilers

AGENCY: Environmental Protection Agency (EPA).

ACTION: Final rule.

SUMMARY: Today, EPA approves portions of, and disapproves other portions of regulation 15 NCAC 2D.0536 (Particulate Emissions from Electric Utility Boilers), which North Carolina submitted to EPA as a State Implementation Plan (SIP) revision on January 24, 1983, and February 21, 1983, and as it was subsequently revised in submittals to EPA on December 17, 1985 and June 19, 1987. The regulation and its revisions prescribe relaxed particulate emission limits for twelve electric utility power plants in the State belonging to Duke Power Company (Duke) and Carolina Power and Light (CP&L). The portions of the regulation being approved set new short-term emission limits for eight of the twelve plants, retaining, although recodifying, the emission limit for a thirteenth plant. Also being approved are stack testing requirements, and requirements for submittal of malfunction abatement plans. EPA is disapproving other portions of the regulation, which set annual opacity limits for those nine plants. For the remaining four plants, all belonging to CP&L, the State has not submitted the required air quality analyses which demonstrate protection of the NAAQS and PSD increments.

EPA has taken action in a separate **Federal Register** notice to propose disapproval of both the short-term limits and annual limits for those four plants.

The plants for which approval of the emission limits in the new regulation is being given are the Duke Allen, Belews Creek, Buck, Cliffside, Dan River, Marshall and Riverbend Plants, and the CP&L Cape Fear and Roxboro Plants.

DATE: This rule will become effective May 5, 1988.

ADDRESSES: Copies of the materials submitted by North Carolina may be examined during normal business hours at the following locations:

Air Quality Section, Division of Environmental Management, North Carolina Department of Natural Resources and Community Development, Archdale Building, 512 North Salisbury Street, Raleigh, North Carolina 27611

Air Programs Branch, U.S. Environmental Protection Agency, Region IV, 345 Courtland Street NE., Atlanta, Georgia 30365

FOR FURTHER INFORMATION CONTACT: Roger O. Pfaff at the abvove EPA Region IV address, and telephone (404) 347-2864 or FTS 257-2864.

SUPPLEMENTARY INFORMATION: On January 24, 1983, and February 21, 1983, North Carolina submitted a new regulation (15 NCAC 2D.0536—Particulate Emissions from Electric Utility Boilers) to EPA for approval as part of the federally-approved State Implementation Plan (SIP). The purpose of this new regulation was to prescribe new particulate emission limits for each of the Duke and CP&L electric utility boilers in the State. These boilers were previously regulated under 15 NCAC 2D.0503—Control of Particulates from Fuel Burning Sources. The new regulation (2D.0536) relaxed the allowable particulate emission limits that applied to boilers at twelve power plants by a minimum of 0.01 pounds per million Btu (lb/mmBtu) of heat input and a maximum of 0.15 lb/mmBtu. For one Duke plant (Riverbend) the new limit was the same as the old. Seven of those plants (28 boilers units) are operated by Duke, and six of the plants (16 boiler units) are operated by CP&L.

On December 21, 1983 (48 FR 56412), EPA proposed to approve the short-term mass emission limits contained in new regulation 2D.0536. At that time, EPA also proposed to take no action on the annual particulate emission limits contained in 2D.0536 because they did not protect the short-term NAAQS and PSD increments. In that notice, EPA stated that final approval of the new mass emission limits would not be granted until the State submitted documentation to show that the relaxation would cause no exceedance of the allowable PSD increments for particulate matter. This PSD demonstration is required by EPA regulations at 40 CFR 51.166(a)(2). Several comments were received on that proposal.

On December 17, 1985, North Carolina submitted a major revision to 2D.0536 to

EPA for approval. This submittal contained essentially the same short term emission limits as the original version of 2D.0536. A few limits were lowered. However, new annual limits and annual opacity limits were prescribed for the boilers at each of the thirteen power plants. One part of the revision, including the annual emission limits, became effective in the State on August 1, 1986. The second part, which replaces the annual emission limits with annual opacity limits, became effective on August 1, 1987. Since no PSD increment analysis accompanied this December 17, 1985, submittal, the revised 2D.0536 contained the same deficiency as the original submittal of the rule. In addition to this shortcoming, EPA also determined that the State must provide an up-to-date modeling demonstration which shows that the new mass emission limits (in both the original and the revised version of 2D.0536) will not violate the NAAQS for particulate matter. Since modeling techniques have improved greatly since the time the original NAAQS demonstration was prepared (in approximately 1979), the original analysis is no longer valid. This analysis is required before EPA can approve any SIP revision pursuant to section 110(a)(3)(A) of the Clean Air Act.

Table 1 below summarized North Carolina's subsequent submittals and EPA's action on them.

In July and October of 1986, EPA received the required NAAQS and PSD modeling analysis for six Duke power plants and two CP&L plants. For the Duke Riverbend plant, no analysis was required, since the emission limits do not increase. The State did not submit NAAQS analyses for the other four CP&L plants; therefore, no action is being taken regarding those four plants in this notice.

TABLE 1

	Adequate NAAQS analysis submitted	PSD analysis submitted before or after EPA proposed approval or not at all	New limit approved in this notice
CP&L			
Cape Fear	Yes	Before	Yes.
Roxboro	Yes	After	Yes.
Asheville [1]	No	No	No.
Lee [1]	No	No	No.
Sutton [1]	No	No	No.
Weatherspoon [1]	No	No	No.

TABLE 1—Continued

	Adequate NAAQS analysis submitted	PSD analysis submitted before or after EPA proposed approval or not at all	New limit approved in this notice
Duke Power			
Allen	Yes	After	Yes.
Dan River	Yes	After	Yes.
Belews Creek	Yes	Before	Yes.
Buck	Yes	Before	Yes.
Cliffside	Yes	Before	Yes.
Marshall	Yes	Before	Yes.
Riverbend [2]	N/A	N/A	Yes.

[1] Final action being taken in another notice.
[2] No increase in emission limit.

Although no increment analysis was submitted by the State for the CP&L Roxboro Plant and the Duke Allen and Dan River Plants (because they are located in counties where the baseline is not triggered), EPA discovered during its review of the modeling that an analysis should have been submitted for the effects of these three plants in neighboring counties where the baseline had already been triggered.

On May 26, 1987 (52 FR 19541), EPA proposed to approve the new emission limits for the CP&L Cape Fear and Roxboro Plants and the Duke Allen, Belews Creek, Buck, Cliffside, Dan River, Marshall and Riverbend Plants. Final approval was made contingent upon submittal of increment analyses for Roxboro, Allen, and Dan River. EPA also proposed to approve related portions of 2D.0536, which include stack testing requirements and requirements for submittal of malfunction abatement plans. EPA proposed to disapprove the annual opacity limits in 2D.0536, primarily because EPA considers those limits to be unenforceable. On March 26, 1987 (52 FR 9676), EPA proposed disapproval of all portions of 2D.0536 as applied to the CP&L Asheville, Lee, Sutton, and Weatherspoon Plants. Final action on that proposal is being taken in another notice.

On August 10, 1987 and September 29, 1987, North Carolina submitted the required additional PSD modelling for the Duke plants and the CP&L plant, respectively. EPA has reviewed this additional modelling and agrees that the modelling demonstrates compliance with PSD increments in neighboring counties where the PSD baseline has been triggered. For technical details of EPA's review, the reader may consult EPA's Technical Support Document, available at EPA's Region IV office, whose address is listed above.

On June 19, 1987, North Carolina submitted a minor technical change to 2D.0536. In subparagraph 2D.0536(f), which requires the affected utility to retest any unit within 45 days when a stack test indicates a violation of an emission limit, the violation was formerly referred to as an "exceedance," and now as an "excess." EPA has no objection to the change, and will continue to treat any such occurrence as a violation of the SIP.

On July 1, 1987, EPA promulgated an important change to the NAAQS for particulate matter. Among other changes, the indicator of the standard was changed from TSP to particles less than or equal to a nominal 10 micrometers aerodynamic diameter (PM_{10}), and the level of the standard was set at 150 micrograms per cubic meter ($\mu g/m^3$) (24-hour) and 50 $\mu g/m^3$ (annual). Since the new annual standard is numerically lower than the former TSP standard, EPA conducted an analysis to determine whether the relaxed particulate limits of .0536 would violate the new PM_{10} standard. By comparing the background concentrations for each of the plants to a conservative PM_{10} to TSP ratio EPA calculated new background concentrations of PM_{10} for each plant. The ratio of PM_{10} to TSP EPA used was 0.63. Based upon national monitoring comparisons there is a 95 percent probability that the PM_{10} fraction of monitored TPS levels is less than 0.63. The TSP modelled concentration for each plant was then added to the new calculated PM_{10} background concentration. The modelled concentration was not subjected to the PM_{10}/TSP ratio since it was obvious after factoring the backgorund concentrations that the new total concentration would be less than the PM_{10} standard. For complete details on EPA's procedure and results of the analysis the reader may consult the Technical Support Document.

Response to Comments

Since the May 26, 1987, proposal is in part a reproposal of similar emission limits to those proposed in December 1983, EPA will respond to comments received on both the 1983 proposal and the 1987 proposal, to the extent the comments on the 1983 proposal are not superceded by comments from the same commentor on the 1987 proposal. Comments on the 1983 proposal were received from Duke, CP&L, the Conservation Council of North Carolina, and two citizens. Comments on the 1987

proposal were received from Duke and CP&L. EPA, therefore, will respond to the 1983 comments from The Conservation Council and the two citizens, and the 1987 comments from Duke and CP&L. It should also be noted that some comments received from the North Carolina Division of Environmental Management (DEM) concerning EPA's proposed disapproval of the annual opacity standards for four CP&L plants (52 FR 9676) would apply in general to the disapproval of annual opacity limits for the remaining plants affected by 2D.0536. EPA is taking action on the proosed disapproval of annual opacity limits for these four plants in another notice, and the reader may consult that notice for a response to DEM's comments on disapproval of annual opacity limits.

Duke Power

Comments: Duke Power concurs with approval of the mass emission limits, but asserts that EPA should have given final approval rather than proposed approval in the May 26, 1987, **Federal Register** notice. This is because EPA earlier gave final approval to a 3-year variance from existing limits, and the variance limits were at least as high as the limits in 2D.0536. Alternately, EPA should have approved the limits for all plants located in areas where the baseline is not triggered.

Response: EPA agrees that the criteria for approval of the variance should have been no less restrictive than for approval of 2D.0536. The inconsistency arises from the fact that EPA should have required an increment analysis for the variance, but erred in not doing so. The reason EPA did not require the analysis was because of the temporary life of the variance. As to the plants located in untriggered areas, Duke has now been made aware that EPA's previous guidance on this point was in error. Even for a plant located in an area where the baseline is not triggered, an analysis is necessary for any neighboring area, impacted by the relaxation, where the baseline is triggered. In addition, it must be pointed out that 2D.0536 is a single regulation. In order to approve parts of it, EPA must receive a request from the State to do so. No such request was received in 1983.

Comment: The new emission limits are approvable without any PSD increment consumption analysis because the new limits will not result in any increase in emissions.

Response: EPA cannot judge whether an increase in emissions will actually occur when an emission limit is relaxed. The purpose of a SIP is to prevent such increases from violating NAAQS and increments, so that such judgments do not have to be made. Since the relaxed limits would allow an increase in emissions to occur, the State must show that the allowed increase in actual emissions would not violate the PSD increments.

Comment: EPA stated in the notice that EPA allowed the analysis for Duke and CP&L to be based primarily on 1978 modelling guidance, rather than 1986 guidance, because the analysis was begun prior to the promulgation of the 1986 guidance. In fact, the parts of the 1986 guidance not used are relatively minor, and for the most part the 1986 guidance was used.

Response: EPA agrees, and so notes for the record.

Comment: Duke concurs with disapproval of the annual opacity limits but notes that the limits do encourage better day-to-day operation.

Response: EPA agrees.

CP&L

Comment: CP&L supports the approval of the mass limits, but states they should have been approved in 1983, because EPA accepted the PSD modelling performed in 1979 to support the 3-year variance. Alternately the limits for plants located in counties where the baseline was not triggered could be approved.

Response: See the response to a similar comment from Duke Power (above).

Comment: The modelling analysis submitted in 1986 is consistent with 1986 EPA guidelines except for minor areas. EPA stated in the notice that the analysis was generally based on 1978 guidance.

Response: This is the same comment as one of the comments from Duke Power (above). EPA agrees, and so notes for the record.

Comment: A triggered baseline in a neighboring county should not require a PSD analysis in an untriggered county.

Response: CP&L uses as a basis for this comment a statement in a February 19, 1985, letter from EPA to the State. EPA has acknowledged in the proposal (52 FR 19542) that our previous guidance was in error. That is why EPA proposed approval in spite of the missing increment analyses. In any case, the analysis for CP&L's Roxboro Plant is now complete, and approval of the revised emission limits is being finalized today.

Conservation Council

Comment: DEM has not rationalized the limits for each plant, in relation to how well the plants can function. The new limits would result in increased emissions.

Response: EPA did not analyze how well the emission limits correlate to actual performance but agrees that the new limits will allow increased emissions. That is why a PSD increment analysis and NAAQS analysis were required. So long as emission limits protect standards and increments, and are enforceable, EPA is obliged under the Clean Air Act to approve them.

Comment: Malfunctions should not be excluded from the annual limits.

Response: EPA is disapproving the annual limits, so the exclusion has no effect on the EPA-approved regulations.

Citizen Comments

Comment: The annual limits could result in increased emissions because of the indirect nature of the relationship among the variables in the formula to calculate compliance.

Response: EPA agrees that the annual limits are too difficult to enforce, and is therefore disapproving them.

Comment: EPA proposes to approve the regulation even though sufficient data regarding PSD has not been submitted. The regulation should not be approved until all data are submitted.

Response: EPA agrees, and did not approve the regulation until all required information was submitted.

Comment: Since some of the units can achieve lower emissions than the new limits require, EPA should require a higher standard of performance for them.

Response: This comment is similar to the Conservation Council's first comment. See EPA's response above.

Comment: The State should address the current monitoring data around all affected power plant sites and the actual limits allowed by its current regulations on short-term particulate emissions.

Response: Current monitoring data shows no exceedances of either the TSP or PM_{10} NAAQS.

Final Action

Today, EPA approves North Carolina's regulation 15 NCAC 2D.0536 as it became effective on August 1, 1987, and as modified by the State's submittal of June 19, 1987, with the exception of the emission limits for CP&L plants Asheville, Lee, Sutton, and Weatherspoon, and with the exception of the average annual opacity limits applicable to all plants. EPA disapproves the annual opacity limits for all seven Duke plants and CP&L plants Roxboro and Cape Fear. The emission and opacity limits for CP&L plants Asheville, Lee, Sutton, and

Weatherspoon are being acted upon in another notice.

Under Executive Order 12291, this action is not "Major." It has been submitted to the Office of Management and Budget for review.

Under section 307(b)(1) of the Act, petitions for judicial review of this action must be filed in the United States Court of Appeals for the appropriate circuit by June 6, 1988. This action may not be challenged later in proceedings to enforce its requirements. (See section 307(b)(2).)

List of Subjects in 40 CFR Part 52

Air pollution control, Incorporation by reference, Intergovernmental relations, Particulate matter.

Note.—Incorporation by reference of the State Implementation Plan for the State of North Carolina was approved by the Director of the Federal Register on July 1, 1982.

Dated: March 14, 1988.

Lee M. Thomas,

Administrator.

Part 52 of Chapter I, Title 40, Code of Federal Regulations, is amended as follows:

PART 52—[AMENDED]

Subpart II—North Carolina

1. The authority citation for Part 52 continues to read as follows:

Authority: 42 U.S.C. 7401–7642.

2. Section 52.1770 is amended by adding paragraph (c)(55) to read as follows:

§ 52.1770 Identification of plan.

* * * * *

(c) * * *

(55) A revised regulation limiting emissions from electric utility boilers was submitted on January 24, 1983, and February 21, 1983, and amended by submittals dated December 17, 1985, and June 19, 1987, by the North Carolina Department of Natural Resources and Community Development. Only the following portions of this regulation are approved:

(i) Incorporation by reference.

(A) Only those portions of a new regulation, 15 NCAC 2D.0536, entitled "Emissions from Electric Utility Boilers," which were approved by the Environmental Protection Agency on April 5, 1988.

(ii) Other material—none.

3. Section 52.1781 is amended by designating the existing text as paragraph (a) and by adding paragraph (b) to read as follows:

§ 52.1781 Control strategy: Sulfur oxides and particulate matter.

* * * * *

(b) The plan's control strategy for particulate matter as contained in regulation 15 NCAC 2D.0536, which was submitted on January 24 and February 21, 1983, and on December 17, 1985, and became effective on August 1, 1987, is disapproved insofar as it provides annual opacity limits for the seven plants of Duke Power Company and for Plants Roxboro and Cape Fear of Carolina Power and Light Company.

[FR Doc. 88-6188 Filed 4-4-88; 8:45 am]

BILLING CODE 6560-50-M

---

40 CFR Part 180

[OPP-300183A; FRL-3360-4]

Ultramarine Blue; Tolerance Exemption

AGENCY: Environmental Protection Agency (EPA).

ACTION: Final rule.

SUMMARY: This rule exempts ultramarine blue (CAS Reg. No. 57455-37-5) from the requirement of a tolerance when used as an inert ingredient (pigment/colorant) in pesticide formulations applied to animals. This regulation was requested by the Y-Tex Corp.

EFFECTIVE DATE: Effective on April 5, 1988.

ADDRESS: Written objections may be submitted to the: Hearing Clerk (A-110), Environmental Protection Agency, 401 M Street SW., Washington, DC 20460.

FOR FURTHER INFORMATION CONTACT:

By mail: Rosalind Gross, Registration Support and Emergency Response Branch, Environmental Protection Agency, 401 M Street SW., Washington, DC 20460.

Office location and telephone number: Room 716, CM #2, 1921 Jefferson Davis Highway, Arlington, VA 22202, 703-557-7700.

SUPPLEMENTARY INFORMATION: EPA issued a proposed rule, published in the **Federal Register** of March 9, 1988 (53 FR 7541), which announced that the Y-Tex Corp., P.O. Box 1450, 1825 Big Horn Ave., Cody, WY 82414, had requested that 40 CFR 180.1001 be amended by establishing an exemption from the requirement of a tolerance for ultramarine blue when used as a component (pigment/colorant) of plastic animal ear tags in pesticide formulations applied to animals.

Inert ingredients are ingredients that are not active ingredients as defined in 40 CFR 162.3(c), and include, but are not limited to, the following types of ingredients (except when they have a pesticidal efficacy of their own): Solvents such as alcohols and hydrocarbons; surfactants such as polyoxyethylene polymers and fatty acids; carriers such as clay and diatomaceous earth; thickeners such as carageenan and modified cellulose; wetting and spreading agents; propellants in aerosol dispensers; and emulsifiers. The term "inert" is not intended to imply nontoxicity; the ingredient may or may not be chemically active.

EPA has initiated new review procedures for tolerance exemptions for inert ingredients. Under those procedures the Agency conducts a review of the data base supporting any prior clearances, the data available in the scientific literature, and any other relevant data. Based on a review of such data, the Agency has determined that no additional test data will be required to support this regulation.

Based on the above information and review of its use, it has been found that when used in accordance with good agricultural practices this ingredient is useful and does not pose hazard to humans or the environment. In conclusion, the Agency has determined that the amendment to 40 CFR Part 180 will protect the public health. Therefore, the regulation is being established as set forth below.

There were no comments or requests for referral to an advisory committee received in response to the proposed rule.

Any person adversely affected by this regulation may, within 30 days after publication of this notice in the **Federal Register**, file written objections with the Hearing Clerk, at the address given above. Such objections should specify the grounds for the objections. A hearing will be granted if the provisions of the regulation deemed objectionable and the objections are supported by grounds legally sufficient to justify the relief sought.

The Office of Management and Budget has exempted this rule from the requirements of section 3 of Executive Order 12291.

List of Subjects in 40 CFR Part 180

Administrative practice and procedure, Agricultural commodities, Pesticides and pests.

Dated: March 28, 1988.

Douglas D. Campt,

Director, Office of Pesticide Programs.

Therefore, 40 CFR Part 180 is amended as follows:

PART 180—[AMENDED]

1. The authority citation for Part 180 continues to read as follows:

Authority: 21 U.S.C. 346a.

2. Section 180.1001(e) is amended by adding and alphabetically inserting the inert ingredient as follows:

§ 180.1001 Exemptions from the requirement of a tolerance.

* * * * *

(e) * * *

Inert ingredients	Limits	Uses
* * *	* * *	* * *
Ultramarine blue (CAS Reg. No. 57455-37-5).	Not more than 1.5% of pesticide formulation.	Pigment/colorant in animal tag.
* * *	* * *	* * *

[FR Doc. 88-7376 Filed 4-4-88; 8:45 am]

BILLING CODE 6560-50-M

FEDERAL MARITIME COMMISSION

46 CFR Part 572

[Docket No. 88-8]

Agreements Between or Among Wholly-Owned Subsidiaries and/or Their Parent; Exemption

AGENCY: Federal Maritime Commission.

ACTION: Final rule.

SUMMARY: This exempts agreements between or among wholly-owned subsidiaries and/or their parent from the filing and information form requirements of the Shipping Act of 1984 and the Commission's regulations. This also exempts such agreements from the proscription against concerted activities set forth at section 10(c) of the Shipping Act of 1984 and from the agreement retention requirement of 46 CFR 572.301(f).

EFFECTIVE DATE: The amendments to Part 572 are effective April 5, 1988.

FOR FURTHER INFORMATION CONTACT: Robert D. Bourgoin, General Counsel, Federal Maritime Commission, 100 L Street NW., Washington, DC 20573, (202) 523-5740.

SUPPLEMENTARY INFORMATION: Crowley Maritime Corporation ("Crowley") filed on December 15, 1987 an application pursuant to section 16 of the Shipping Act of 1984, 46 U.S.C. app. 1715 ("1984 Act"), requesting certain exemptions from statutory and regulatory provisions for itself and its present and future wholly-owned subsidiaries. Specifically, the Crowley application requested exemptions from sections 5, 10(a)(2), 10(a)(3), and 10(c) of the 1984 Act to the extent these statutory provisions applied to agreements between or among Crowley and/or its subsidiaries. Crowley also sought an exemption from the Commission's implementing regulations, 46 CFR 572.301.

By Notice published in the **Federal Register** on December 28, 1987 (52 FR 48879), the Commission announced the Crowley application and requested comments thereon from interested persons. Subsequently, on January 28, 1988 (53 FR 2537), the Commission served Notice of Enlargement of Scope, inviting comment on whether the exemption requested by Crowley should apply on an industry-wide basis to all other ocean common carriers and marine terminal operators under the same terms and conditions as those proposed by Crowley. No comments on either Notice were received by the Commission.

After careful consideration of the Crowley application and of the issues raised in the Enlargement of Scope, the Commission has determined to grant the essential exemptions sought by Crowley, with some modifications. The Final Rule has been structured first to define the scope of the agreements on an industry-wide basis, followed by an enumeration of the exemptions themselves.

The amendments set forth herein incorporate the exemptions from the filing and Information Form requirements of section 5 of the 1984 Act and the Commission's implementing regulations at 46 CFR 572.301, as sought by Crowley. The Commission also determined to relieve agreements within the scope of the exemption from the agreement retention requirement of 46 CFR 572.301(f).

The exemption from section 10(c) (prohibiting certain concerted activities) has been narrowed from that proposed by Crowley to apply only to the extent that the concerted actions proscribed by section 10(c) result solely from agreements between and among affiliated entities. Crowley's proposal could have been read to confer an exemption on those companies even if other non-affiliated companies were also part of the concerted action. The exemption issued herein is confined only to purely inter-subsidiary and/or parent agreements.

Finally, the Commission has determined that it is not necessary to issue an exemption from the provisions of sections 10(a)(2) and 10(a)(3) of the 1984 Act. Each of those provisions applies to operations "under an agreement required to be filed under section 5 of this [the 1984] Act * * *." Because agreements between or among wholly-owned subsidiaries and/or their parent are exempted herein from section 5, the prohibitions of sections 10(a)(2) and 10(a)(3) are implicitly inapplicable. It is therefore unnecessary to issue an explicit exemption to that effect.

In accordance with section 16 of the Shipping Act of 1984, the Commission finds that the exemption granted herein will not substantially impair effective regulation by the Commission, be unjustly discriminatory, result in a substantial reduction in competition, or be detrimental to commerce.

The Federal Maritime Commission has determined that this Final Rule is not a "major rule" as defined in Executive Order 12291 dated February 17, 1981, because it will not result in:

(1) An annual effect on the economy of $100 million or more;

(2) A major increase in costs or prices for consumers, individual industries, Federal, State, or local government agencies, or geographic regions; or

(3) Significant adverse effect on competition, employment, investment, productivity, innovations, or on the ability of United States-based enterprises to compete with foreign-based enterprises in domestic or export markets.

The Acting Chairman of the Federal Maritime Commission certifies pursuant to section 605(b) of the Regulatory Flexibility Act, 5 U.S.C. 601, *et seq.*, that this rule will not have a significant economic impact on a substantial number of small entities, including small businesses, small organizational units or small governmental jurisdictions. The primary economic impact of this rule would be on marine terminal operators and common carriers which generally are not small entities. A secondary impact may fall on shippers, some of whom may be small entities but that impact is not considered to be significant.

The Federal Maritime Commission has determined that this action does not constitute a major Federal action significantly affecting the quality of the human environment. Therefore, no environmental assessment or environmental impact statement was prepared.

List of Subjects in 46 CFR Part 572

Antitrust, Contracts, Maritime carriers, Administrative practice and procedure, Rates and fares, Reporting and record-keeping requirements.

Therefore, pursuant to 5 U.S.C. 553, and sections 5, 16 and 17 of the Shipping Act of 1984, 46 U.S.C. 1704, 1715, 1716, in

order to exempt certain marine terminal operator and common carrier agreements from certain requirements of the 1984 Act, and the Commission's implementing regulations thereof, Part 572 of Title 46 of the Code of Federal Regulations is amended as follows:

PART 572—[AMENDED]

1. The authority citation to Part 572 continues to read:

Authority: 5 U.S.C. 553; 46 U.S.C. app. 1701–1707, 1709–1710, 1712 and 1714–1717.

§ 572.308 [Redesignated as 572.309]

2. Section 572.308 is redesignated § 572.309.

3. A new § 572.308 is added to read as follows:

§ 572.308 Agreements between or among wholly-owned subsidiaries and/or their parent—exemption.

(a) An agreement between or among wholly-owned subsidiaries and/or their parent means an agreement under section 4 of the 1984 Act between or among an ocean common carrier or marine terminal operator subject to the 1984 Act and any one or more ocean common carriers or marine terminal operators which are ultimately owned 100 percent by that ocean common carrier or marine terminal operator, or an agreement between or among such wholly-owned carriers or terminal operators.

(b) All agreements between or among wholly-owned subsidiaries and/or their parent are exempt from the filing and information form requirements of the 1984 Act and of this part.

(c) Common carriers are exempt from section 10 (c) of the 1984 Act to the extent that the concerted activities proscribed by that section result solely from agreements between or among wholly-owned subsidiaries and/or their parent.

(d) All agreements between or among wholly-owned subsidiaries and/or their parent are exempt from the requirements of § 572.301(f) of this part.

By the Commission.

Joseph C. Polking,

Secretary.

[FR Doc. 88–7413 Filed 4–4–88; 8:45 am]

BILLING CODE 6730-01-M

DEPARTMENT OF DEFENSE

48 CFR Parts 215, 242, and 252

Department of Defense Federal Acquisition Regulation Supplement; Estimating Systems

AGENCY: Department of Defense (DOD).

ACTION: Final rule; correction.

SUMMARY: This document corrects a final rule on Estimating Systems which was published in the **Federal Register** on Friday, March 18, 1988 (53 FR 8906 *et seq.*). The action is necessary to make an editorial correction to the rule.

FOR FURTHER INFORMATION CONTACT: Mr. Charles W. Lloyd, Executive Secretary, DAR Council, (202) 697–7266.

Charles W. Lloyd,

Executive Secretary, Defense Acquisition Regulatory Council.

Accordingly, the Department of Defense is correcting 48 CFR Part 252 as follows:

PART 252—[AMENDED]

§ 252.215–7003 [Amended]

1. On page 8910, in section 252.215–7003, in the title of the clause, the date is corrected to read "(MAR 1988)" in lieu of "(MAY 1988)".

[FR Doc. 88–7415 Filed 4–4–88; 8:45 am]

BILLING CODE 3810-01-M

---

48 CFR Part 215

[DAR Case 87–305]

Department of Defense Federal Acquisition Regulation Supplement; Special Tooling and Special Test Equipment

AGENCY: Department of Defense (DoD)

ACTION: Interim rule and request for comment.

SUMMARY: The Defense Acquisition Regulatory Council has approved an interim change to DFARS 215.873 to implement Section 810 of Pub. L. 100–106, the FY 88 Defense Authorization Act.

DATES: *Effective Date:* April 6, 1988.

Comment Date: Comments must be received by the DAR Council at the address shown below on or before May 5, 1988, to be considered in developing a final rule.

ADDRESS: Interested parties should submit written comments to: Defense Acquisition Regulatory Council, ATTN: Mr. Charles W. Lloyd, Executive Secretary, DAR Council, ODASD (P)/DARS, c/o OASD (A&L) (MRS), Room 3D139, The Pentagon, Washington, DC 20301–3062. Please cite DAR Case 87–305 in all correspondence related to this subject.

FOR FURTHER INFORMATION CONTACT: Mr. Charles W. Lloyd, Executive Secretary, DAR Council, 202/697–7267.

SUPPLEMENTARY INFORMATION:

A. Background

A portion of section 9105, Pub. L. 99–500, the FY 87 Defense Appropriations Act, contained restrictions on reimbursement of defense contractors for the costs of production special tooling (PST) and production special test equipment (PSTE). These restrictions were implemented, on an interim basis, at 52 FR. 1914 *et seq.*, effective January 16, 1987. Section 810, Pub. L. 100–180, the FY 88 Defense Authorization Act, amended Title 10, United States Code, by adding Section 2329, which directs the issuance of regulations containing new restrictions on reimbursing defense contractors for the cost of PST and PSTE. A proposed rule was issued on February 29, 1988 at 53 FR 6015 in an effort to implement the recent legislation. A determination has been made under the authority of the Secretary of Defense that this regulation must be issued as temporary regulation in order to comply with the above-cited statute. Accordingly, new coverage at DFARS 215.873, Production Special Tooling and Production Special Test Equipment, is hereby promulgated. Comments are invited. This new coverage applies to contracts awarded on or after April 6, 1988.

B. Regulatory Flexibility Act

The new coverage at DFARS 215.873 is not expected to have a significant economic impact on a substantial number of small entities under the Regulatory Flexibility Act (5 U.S.C. 601 *et seq.*) because small entities are not usually involved with Government prime contracts which require PST or PSTE with a cost in excess of $1,000,000.

C. Paperwork Reduction Act

The rule does not contain information collection requirements which require the approval of OMB under 44 U.S.C. 3501 et seq.

List of Subjects in 48 CFR Part 215

Government procurement.

Charles W. Lloyd,

Executive Secretary, Defense Acquisition Regulatory Council.

Therefore, 48 CFR Part 215 is amended as follows:

PART 215—CONTRACTING BY NEGOTIATION

1. The authority citation for 48 CFR Part 215 continues to read as follows:

Authority: 5 U.S.C. 301, 10 U.S.C. 2202, DoD Directive 5000.35, and DoD FAR Supplement 201.301.

2. Section 215.873 is revised to read as follows:

215.873 Production special tooling and production special test equipment (PST and PSTE).

(a) *General.* When a contractor, to perform a production contract, is required to acquire or fabricate production special tooling (PST) and production special test equipment (PSTE), at a total cost to the contractor of $1 million or more, the contracting officer shall comply with the procedures in paragraph (c) below unless one of the exceptions in paragraph (d) below, apply.

(b) *Definitions.* "Production special tooling" and "production special test equipment" are those subsets of "special tooling" and "special test equipment" (as defined in FAR 45.101) that support production rates and quantitites.

(c) *Procedures.* (1) When the criteria specified in paragraph (a) above apply, the contract shall, as a minimum, include a special provision which specifies the following:

(i) A listing of, or reference to a listing of, the PST and PSTE which the contractor will acquire or fabricate to perform the contract;

(ii) The total dollar amount to be paid to the contractor on the instant contract for the PST and PSTE being acquired or fabricated;

(iii) The maximum amount the contractor may be paid on the instant and future contracts for the PST and PSTE (which can be a specific dollar amount or dollar ceiling);

(iv) An amortization schedule for the payment, subject to availability of funds, of the balance of the maximum amount specified in paragraph (c)(1)(iii) above (see also paragraph (c)(3) below);

(v) That, in the event the contract or program is terminated before the maximum amount specified for the PST and PSTE has been paid, for reasons other than the contractor's failure to perform, the contractor shall be paid the balance of the maximum amount or the actual amount incurred, whichever is less, subject to availability of appropriated funds;

(vi) That costs incurred by the contractor for the acquisition and fabrication of the PST and PSTE shall be direct charges to the instant contract. If the instant contract does not provide for payment of the maximum amount specified for the PST and PSTE, the balance of these costs shall not be shifted, assigned to other programs, or charged to indirect cost pools.

(2) The Government's right to title to PST and PSTE shall be determined in accordance with FAR Subpart 45.3.

(3) Where it is anticipated that future contracts will be awarded to the same contractor for the same or similar items for which the contractor will be able to use the PST and PSTE, the instant contract will provide for payment of at least 50 percent of the maximum amount specified for the PST and PSTE, except when the Service Secretary determines, in advance of contract award, that the use of a lower percentage is in the best interests of the Government and the use of a lower percentage will not cause an undue financial burden on the contractor. The authority to make the determination may be delegated to a level not lower than the Head of the Contracting Activity.

(4) When it is anticipated that no future contracts will be awarded as provided in (c)(3) above, the instant contract will provide for full payment of the maximum amount specified for the PST and PSTE.

(5) When a contract does not provide for payment of the maximum amount specified for the PST and PSTE under the instant contract, and an amortization schedule is established in accordance with paragraph (c)(1)(iv), the contracting officer shall make the following adjustments for calculating profit objectives and facilities capital cost of money:

(i) Since cost of money for PST and PSTE will be reimbursed directly on the instant contract, the contracting officer shall calculate a separate facilities capital cost of money amount for the unamortized portion of the PST and PSTE costs. This amount shall be calculated by multiplying the average annual unamortized portion of the PST and PSTE costs by the current cost of money rate. This separate cost of money for PST and PSTE shall not be included on the DD Form 1861. However, this amount is to be added to the cost of money on company-wide facilities capital. When the weighted guidelines method is used, this amount will be added to Line 32 of DD Form 1547. Cost of money for PST and PSTE shall not be included in the cost base for establishing a profit objective.

(ii) When establishing a profit objective using DFARS Subpart 215.9, only those PST and PSTE costs being charged directly under the instant contract action will be profit-bearing. These costs shall be included as part of the cost base for performance risk and contract type risk (including working capital adjustment). The unamortized balance of the PST and PSTE costs shall not be profit-bearing on the instant contract, nor shall they be included in the facilities capital employed base.

(iii) For future contract actions on which the unamortized balance of the PST and PSTE costs (or portions thereof) will be charged directly, the procedures in (c)(5) (i) and (ii) above will apply.

(d) *Exceptions.* The procedures set forth above do not apply to contracts:

(1) Where the PST and PSTE will be used by the contractor solely for final production acceptance testing;

(2) Awarded as a result of sealed bidding procedures contained in FAR Part 14;

(3) Where prices are, or are based on, established catalog or established market prices of commercial items sold in substantial quantities to the general public;

(4) Where price is set by law or regulation.

(e) *Subcontracts.* The procedures specified in paragraph (c) above are only required at the prime contract level. However, the contracting officer may apply these procedures at the subcontract level, if doing so would be in the best interests of the Government.

[FR Doc. 88-7412 Filed 4-4-88; 8:45 am]

BILLING CODE 3810-01-M

DEPARTMENT OF TRANSPORTATION

National Highway Traffic Safety Administration

49 CFR Part 533

[Docket No. FE-87-01; Notice 2]

Light Truck Average Fuel Economy Standards; Model Years 1990-91

AGENCY: National Highway Traffic Safety Administration (NHTSA), Department of Transportation.

ACTION: Final rule.

SUMMARY: This rule establishes average fuel economy standards for light trucks manufactured in Model Years 1990 and 1991. The issuance of the standards is required by Title V of the Motor Vehicle Information and Cost Savings Act. As in past years, the agency is establishing a combined standard for all light trucks, as well as alternate standards for two-wheel drive (2WD) and four-wheel drive (4WD) vehicles. Manufacturers may comply with either the combined standard or the alternate standards. For Model Year 1990, the combined standard is 20.0 mpg, and the alternate standards are 20.5 mpg for 2WD, and 19.0 mpg for 4WD. For Model Year 1991, the combined standard is 20.2 mpg, and the alternate standards are 20.7 mpg for 2WD, and 19.1 mpg for 4WD.

DATES: The amendments are effective May 5, 1988. The standards apply to the 1990 and 1991 model years. Petitions for reconsideration must be submitted by May 5, 1988.

ADDRESS: Petitions for reconsideration should be submitted to: Administrator, National Highway Traffic Safety Administration, 400 Seventh St., SW., Washington, DC 20590.

FOR FURTHER INFORMATION CONTACT: Mr. Orron Kee, Office of Market Incentives, National Highway Traffic Safety Administration, 400 Seventh Street, SW., Washington, DC 20590 (202-366-0846).

SUPPLEMENTARY INFORMATION:

Table of Contents

I. Background
II. NHTSA Questionnaire and Proposed Rule
III. Summary of Decision for Model Years 1990 and 1991
IV. Elements of Maximum Feasible Average Fuel Economy
A. The Need of the Nation to Conserve Energy
B. Effect of other Federal Standards
C. Industry Capability: Technological Feasibility and Economic Practicability
V. Agency Determination of the Maximum Feasible Fuel Economy Level
VI. Impact Analyses

I. Background

In December 1975, during the aftermath of the energy crisis created by the oil embargo of 1973-74, Congress enacted the Energy Policy and Conservation Act. Congress included a provision in that Act establishing the automotive fuel economy regulatory program. That provision added a new title, Title V, "Improving Automotive Efficiency," to the Motor Vehicle Information and Cost Saving Act. Title V provides for the establishment of average fuel economy standards for cars and light trucks.

Section 502(b) of the Act requires the Secretary of Transportation to issue light truck fuel economy standards for each model year. The Act provides that the fuel economy standards are to be set at the maximum feasible average fuel economy level. In determining the maximum feasible average fuel economy level, the Secretary is required under section 502(e) of the Act to consider four factors: Technological feasibility, economic practicability, the effect of other Federal motor vehicle standards on fuel economy, and the need of the nation to conserve energy. (Responsibility for the automotive fuel economy program was delegated by the Secretary of Transportation to the Administrator of NHTSA (41 FR 25015, June 22, 1976)).

Light truck average fuel economy standards have been established previously for model years through MY 1989. Recent rulemaking proceedings for light truck standards have reflected the fact that while manufacturers have implemented a number of technological changes to improve their light truck fuel economy, the manufacturers' fuel economy improvement capabilities have been limited by strong consumer demand for larger light trucks and larger displacement engines. The consumer demand for these vehicles is attributable largely to low gasoline prices and the vehicles' superior work-performing capabilities.

In light of higher consumer demand for larger trucks and engines, NHTSA found it necessary to reduce the MY 1985 light truck fuel economy standard from 21.0 mpg to 19.5 mpg (with corresponding changes in the alternative two- and four-wheel drive standards). (49 FR 41250, October 22, 1984) In that same final rule, the agency established a MY 1986 standard of 20.0 mpg. NHTSA subsequently set the MY 1987-89 standards at 20.5 mpg. (50 FR 40398, October 3, 1985; 51 FR 15335, April 23, 1986; 52 FR 6564, March 4, 1987) This series of level standards reflects the effects of consumer demand.

On August 5, 1987, the Secretary of Transportation submitted to Congress draft legislation that would: (1) Repeal the corporate average fuel economy standards for new model years, (2) retain and update the Environmental Protection Agency's (EPA) fuel economy labeling requirements, and (3) revise EPA's automotive fuel economy testing procedures to require that results simulate conditions of actual use. The legislation was proposed in light of a number of considerations, including the fact that the energy conservation goals that Congress sought to achieve by the CAFE program largely have been realized. Another is that a considerable body of economic opinion holds, however, that it was primarily the decontrol of the price of oil and changes in gasoline prices, not the fuel economy standards, that led to the increase in fuel efficiency over the past decade. The nation might well have achieved similar results simply through the natural operation of the market. Moreover, it is clear that CAFE standards cause serious economic distortions in the marketplace. For example, while the standards exert pressure on manufacturers to sell a mix of vehicles to meet the required CAFE level, they do nothing to ensure that consumers will want to buy the mix the manufacturers offer. Indeed, if standards are set at too high a level, the manufacturers may only be able to meet the standards by restricting the sale of their larger vehicles and engines, resulting in the loss of American jobs and less choice for consumers. Also, CAFE standards place U.S. companies at a competitive disadvantage. The Secretary noted that there is strong evidence that the market will continue to provide the proper balancing of fuel efficient vehicles versus other vehicle characteristics such as size, safety, and performance, and concluded that the most sensible public policy is to repeal the CAFE standards program.

Until the draft legislation becomes law, NHTSA will continue to administer the existing law. Thus, this notice adopts CAFE standards for light trucks for Model Years (MY) 1990 and 1991.

II. NHTSA Questionnaire and Proposed Rule

On September 16, 1986, NHTSA published in the **Federal Register** a questionnaire requesting data on manufacturers' light truck fuel economy capabilities for MY 1990-1991. The agency requested specific information concerning manufacturers' product plans for MY 1990 and 1991. All of the American manufacturers responded to the questionnaire. One foreign manufacturer, Volkswagen, submitted a comment, indicating that there were no current forecasted changes to its 1987 product plan.

After analyzing the responses to the agency's questionnaire and reviewing other available data, NHTSA published a notice of proposed rulemaking (NPRM) on the establishment of light truck average fuel economy standards for MY 1990 and 1991. (See the November 12, 1987 issue of the **Federal Register**, 52 FR 43366.) The agency's November 1987 NPRM proposed ranges of possible standards for light trucks, with the combined standard for all light trucks within a range of 20.0 mpg to 21.0 mpg. As a compliance alternative to the combined standard, the agency also proposed separate standards for two-wheel (2WD) and four-wheel (4WD) drive vehicles. For 2WD vehicles, the agency proposed a range of 20.5 mpg to 21.5 mpg, and for 4WD vehicles a range of 19.0 mpg to 20.0 mpg. The agency stated that in view of factual uncertainties, the setting of standards outside the proposed ranges was possible, depending on the comments that might be submitted.

The agency received comments from General Motors, Ford, Chrysler (which now includes AMC), Volkswagen, the Department of Energy, and the National Automobile Dealers Association. These comments, and the agency's response to

the comments will be discussed in subsequent sections on manufacturer projections and manufacturer capabilities.

III. Summary of Decision for Model Years 1990 ad 1991

Based on its analysis, the agency is establishing a combined average fuel economy standard for 1990 at 20.0 mpg, and a standard for 1991 of 20.2 mpg. Alternative separate standards of 20.5 mpg for 2WD light trucks and 19.0 mpg for 4WD are established for MY 1990, and standards of 20.7 mpg for 2WD and 19.1 mpg for 4WD are established for MY 1991.

IV. Elements of Maximum Feasible Average Fuel Economy

A. The Need of the Nation to Conserve Energy.

Since 1975, when the Energy Policy and Conservation Act was passed, this nation's energy situation has changed significantly. Oil markets were deregulated in 1981, permitting consumers to make choices in response to market signals and allowing the market to adjust quickly to changing conditions. The U.S. Strategic Petroleum Reserve (SPR) was built to ensure a supply of oil during any major supply disruption. In December 1987, the SPR contained 541 million barrels of oil, stored principally in underground caverns, that could be pumped back to the surface if needed.

1. Petroleum Imports and Prices

Since the period of 1975–1980, significant progress has been made in the area of energy imports. In 1977, net oil imports were 46 percent of total supply, compared to 35 percent in 1986. The value of imported oil was $99 million in 1980, compared to a value of $38 million in 1986 (1986 dollars). (Note: these figures, and all later referenced figures in this document represent the most current data available to the agency.)

Gasoline prices declined dramatically until December 1986, when prices began to increase somewhat. While substantially lower oil prices in 1986 were welcomed by consumers, the lower prices increase concerns about the U.S. dependence on imported petroleum, particularly from the Middle East. Since the U.S. is a high cost producer of oil, relative to the rest of the world, lower prices make operation of some domestic wells unprofitable and reduce the incentives for future exploration. Also, lower prices increase consumer demand for oil. Since practically all of the world's excess production capacity is in OPEC countries, these factors contribute to increased levels of OPEC imports. In December 1986 and June 1987, OPEC, through agreement for production control, achieved a price of $18 a barrel. This price continued through most of 1987, when prices slipped slightly due to some members exceeding production. It is expected that oil prices will remain near $18 a barrel during 1988.

Imports from OPEC were 36 percent of total imports in 1985 and 46 percent of total imports in 1986, as compared to 60 percent in 1975. In addition, even though the nation's volume of net imports increased 0.3 MMB/D during the first eleven months of 1987 (from the 1986 level of 4.29 MMB/D of 1986), OPEC's share of imports has remained at 46 percent. On balance, these factors indicate progress is being made. The current supply of oil appears more secure while the percent of imports attributable to OPEC oil has remained steady. Much of this progress is attributable to successful energy conservation efforts, both within and outside the transportation sectors of the economy.

2. Continued Need for Progress

Despite the progress which has been made, the current energy situation and emerging trends point to the continued importance of oil conservation. Oil continues to account for well over 40 percent of U.S. energy use, and 97 percent of the energy consumed in the transportation sector. While the U.S. is the second-largest oil producer, it contains only four percent of the world's proved oil reserves. Moreover, proved reserves have declined from a peak of 39.0 billion barrels in 1970 to 28.4 billion barrels in 1985.

According to 1986 Energy Information Administration (EIA) projections, domestic production is expected to decline from 10.3 MMB/D in 1986 to between 8.0 and 9.1 MMB/D in 1995 and between 6.9 and 9.1 MMB/D in 2000, depending on the price of oil. (Data available for the first eleven months of 1987 indicate domestic production at 10.0 MMB/D.) Net imports are projected to increase from 5.3 MMB/D in 1986 to between 6.4 and 9.6 MMB/D in 1995 and between 7.3 and 11.9 MMB/D in 2000. Thus, as a percentage of total U.S. petroleum use, EIA expects imports to rise from a 1986 level of 35 percent to between 41 and 55 percent of total supply in 1995 and between 45 and 63 percent in 2000. NHTSA notes, however, that future projections about petroleum imports are subject to great uncertainty. For example, the EIA's 1977 Annual Report to Congress projected that net oil imports by the U.S. would, in the "reference case", reach 11 MMB/D by 1985. Net imports in 1986 actually were 5.4 MMB/D, less than half the level predicted in 1977. (Data available for the first eleven months of 1987 indicate net imports at 5.8 MMB/D.) The level of oil imports remains an issue for the nation as a whole. In 1986, the U.S. imported $368.7 billion worth of goods and exported $224.4 billion, resulting in a deficit of $144.3 billion. To the extent the level of oil imports remains steady or decreases there is a positive effect on the nation's balance of trade problem.

In March 1987, the Department of Energy submitted a report to the President entitled "Energy Security". NHTSA believes that the following quotation from that report represents a useful summary of the current energy situation and national security:

> Although dependence on insecure oil supplies is * * * projected to grow, energy security depends in part on the ability of importing nations to respond to oil supply disruptions; and this is improving. The decontrol of oil prices in the United States, as well as similar moves in other countries, has made economies more adaptable to changing situations. Furthermore, the large strategic oil reserves that have been established in the United States (and to a lesser extent, in other major oil-importing nations) will make it possible to respond far more effectively to any future disruptions than has been the case in the past.
>
> The current world energy situation and the outlook for the future include both opportunities and risks. The oil price drop of 1986 showed how consumers can be helped by a more competitive oil market. If adequate supplies of oil and other energy resources continue to be available at reasonable prices, this will provide a boost to the world economy. At the same time, the projected increase in reliance on relatively few oil suppliers implies certain risks for the United States and the free world. These risks can be summarized as follows: If a small group of leading oil producers can dominate the world's energy markets, this could result in artificially high prices (or just sharp upward and downward price swings), which would necessitate difficult economic adjustments and cause hardships to all consumers.
>
> Revolutions, regional wars, or aggression from outside powers could disrupt a large volume of oil supplies from the Persian Gulf, inflicting severe damage on the economies of the United States and allied nations. Oil price increases precipitated by the 1978–79 Iranian revolution contributed to the largest economic recession since the 1930's. Similar or larger events in the future could have far-reaching economic, geopolitical, or even military implications.

3. The Role of Light Trucks in Energy Conservation

Total energy consumed by commercial, industrial, and transportation use sectors of the

economy peaked in 1979, at 78.9 quadrillion Btu's, fell to a low of 70.5 quadrillion Btu's in 1983 and rose to 74.3 quadrillion Btu's in 1986. In 1986, petroleum accounted for 43 percent of all energy consumed by these three sectors. In the first eleven months of 1987, the transportation sector accounted for 63 percent of all petroleum consumed, with light trucks playing a growing role in this consumption.

Light truck registrations nearly doubled between 1973 and 1986 and light truck sales are projected to increase 21 percent over the 1987–2000 period, compared to 14 percent for passenger cars. The light truck fleet's share of total oil consumption increased steadily from 6.4 percent in 1973 to 9.0 percent in 1980 and 12.1 percent in 1986. This increase in the light truck fleet's share of fuel consumption took place even as the average fuel economy of the on-road fleet of light trucks increased from an estimated 10.5 mpg in 1973 to 12.9 mpg in 1986. Clearly, light truck fuel economy will be an increasingly important determinant of the nation's level of petroleum consumption.

In its comments on the agency's NPRM, the Department of Energy (DOE) indicated that light trucks are driven farther annually (11,016 miles versus 9,560 miles) and last longer (14.9 years versus 10.9 years) than passenger cars. From this information, NHTSA has derived that the MY 1987 light truck fleet will consume 91 percent as much fuel as the MY 1987 passenger car fleet, even though light truck sales were 44 percent of the passenger car total.

All of these factors result in the conclusion that improved light truck fuel economy contributes to the nation's efforts at conserving fuel. Light trucks meeting the standards established by this rulemaking will continue to exceed the average fuel economy of the current light truck fleet in service, and will make a positive contribution to petroleum conservation.

B. Effect of Other Federal Standards

In determining the maximum feasible fuel economy level, the agency must take into consideration the potential effects of other Federal standards. The following section discusses other government regulations—both in process and recently completed—that may have an impact on fuel economy capability.

1. Safety Standards

The agency has evaluated the potential impact on fuel economy of its safety standard rulemakings in the following areas: Federal Motor Vehicle Safety Standard (FMVSS) 208, Occupant Crash Protection; FMVSS 204, Steering Control Rearward Displacement; and FMVSS 108, Lamps, Reflective Devices and Other Associated Equipment.

FMVSS 208. As noted in the CAFE NPRM, the agency published a proposed rule on April 12, 1985, which would extend to light trucks FMVSS 208's dynamic testing requirements for manual lap/shoulder belts installed at the front outboard seating positions. As proposed, the standard would require dynamic testing using test dummies in 30 mile per hour barrier crashes to measure the level of protection offered by the vehicle's manual lap/shoulder belts. The proposed effective date was September 1, 1989, which would include MY 1990 and later vehicles.

The FRIA to this CAFE rulemaking discusses the fact that the proposed regulatory impact analysis of the FMVSS 208 proposed rule notes that structural changes to a vehicle may be necessary to meet the standard, and that these changes could result in possible weight increases. However, the FMVSS 208 PRIA also contains a performance comparison of three different vehicles with weight differences of nearly 1,000 pounds, with all of the vehicles meeting the standard. The PRIA goes on to state that there is no apparent relationship between the FMVSS 208 performance requirement and the weight of the vehicles, and that vehicles in the examined weight range could meet the standard. Thus, although the agency acknowledges that weight may have a potential negative effect on fuel economy levels, no commenter on the CAFE NPRM provided any data for the agency to review which would indicate that the its analysis concerning weight effects should be reconsidered.

The agency published a final rule adopting the dynamic testing requirements for multipurpose passenger vehicles and trucks with a gross vehicle weight rating of 8,500 pounds or less and an unloaded vehicle weight of 5,500 pounds or less, with an effective date of September 1, 1991. While the agency concluded that it was practicable for these vehicles to comply with the standard, it also noted that there are a large number of vehicles that must be modified to meet the requirements. The first full model year covered by the FMVSS final rule will be MY 1992. However, Ford stated in its comments to this fuel economy rulemaking that compliance with FMVSS 208 will "undoubtedly result in higher weights and lower fuel economy, and many of these changes will begin to be phased-in during the 1990 and 1991 model years."

As indicated above, neither Ford, nor any other commenter on this fuel economy rulemaking provided any data to support this statement, and the agency has no data indicating specific weight increases or actual effect on fuel economy levels. To the extent that manufacturers' CAFE projections factor in structural changes to comply with FMVSS 208, the agency has not discounted this estimate. However, the agency has not made any specific adjustment to CAFE capabilities in consideration of the FMVSS 208 dynamic testing requirements.

FMVSS 204. The CAFE NPRM noted that the agency had published a proposed rule (see 50 FR 13402, April 4, 1985) which would extend the applicability of FMVSS 204 to light trucks with an unloaded vehicle weight of 4,000 pounds to 5,500 pounds. (The standard already applies to light trucks under 4,000 pounds unloaded vehicle weight.) In the PRIA to the FMVSS 204 proposal, the agency concluded that the proposed extension of the standard would not have a significant impact on weight. The agency published a final rule adopting the provisions of the proposed rule on November 23, 1987 (see 52 FR 44893), with an effective date of September 1, 1991. As with FMVSS 208, the first full model year covered by FMVSS 204 is MY 1992.

In extending FMVSS 204, the agency concluded that steering system modifications necessary to comply with the standard generally would entail an additional intermediate steering shaft with a co-axial slip joint for most light trucks, and that some vehicles might need additional structure to assure compliance, but that significant additional structure would not be necessary. While there may be some necessary changes which may be phased in before MY 1992, neither Ford nor GM commented on this standard in their CAFE comments. Chrysler indicated that the possible weight increase could decrease its CAFE estimates by 0.1 mpg, but provided no data to substantiate their views. To the extent that the manufacturers' projections take into account structural changes to comply with FMVSS 204, the agency has not discounted these. However, the agency made no specific adjustments in manufacturers' MY 1990–1991 fuel economy capabilities to reflect the extension of FMVSS 204.

FMVSS 108. Changes to the agency's lighting standard permit the use of smaller sealed beam headlamps, replaceable light source headlamps and lower mounting height. All of these changes should give a manufacturer

greater design freedom to achieve lower aerodynamic drag and some weight reduction. While the agency believes that this opportunity could result in a positive effect on CAFE levels, it does not have specific data indicating possible drag reduction for light trucks. These positive effects may be counterbalanced by possible slow consumer acceptance of light truck styling for certain models which have been influenced by aerodynamic considerations. In the MY 1988–1989 CAFE rulemaking, GM stated that its 1988 pickup designs which have included aerodynamic features were not well received by the public in design clinics.

2. Noise Standards

NHTSA is not aware of any plans on the part of EPA to promulgate noise regulations during the MY 1990–1991 time period, and therefore, does not anticipate any attendant fuel economy impacts.

3. Emissions Regulations

In the NPRM, the agency discussed several actions by the Environmental Protection Agency (EPA) in the area of emissions, including: Diesel particulate matter; control of oxides of nitrogen (NOx); HC exhaust emission requirements; and on-board vapor recovery.

Diesel Particulate Matter. On June 4, 1987, EPA proposed to amend the exhaust emission control requirements for particulate matter for 1987 and later model years. The proposal would apply to light-duty diesel trucks of 3,751 pounds or greater loaded vehicle weight, with standards becoming progressively more stringent in later model years. The particulate standard for light-duty diesel trucks with a loaded vehicle weight of 3,750 pounds or less would remain unchanged. The proposal was in response to a GM petition, which outlined a plan to develop control technology to substantially reduce particulate emissions from current control levels. In its comments on this CAFE rulemaking, GM indicated that it did not know what effect on fuel economy would result from the EPA rulemaking, but stated that "* * * any required technology such as a particulate trap may adversely impact fuel economy." VW stated in its response to the agency's CAFE questionnaire that "* * * Federal exhaust emission standards have prevented Volkswagen from continuing to provide the consumer with the previously-offered Vanagon Diesel, the most fuel efficient version of the Vanagon." However, neither GM nor VW submitted any data for the agency to review. Ford data show no diesel engines in its 0–8,500 pound fleet, so there would be no impact for Ford. Since EPA has not issued a final rule, and NHTSA has received no data on which to base any adjustment in manufacturer CAFE capabilities, the agency has not made any adjustments in manufacturer CAFE capabilities for MY 1990–1991.

Oxides of Nitrogen. EPA established more stringent NOx standards for model year 1988, which typically require the use of a 3-way catalyst technology for spark ignition engines to avoid a fuel economy penalty. Essentially all spark ignition engines for MY 1988 have incorporated this technology.

On December 16, 1987, EPA published a final rule deferring the MY 1988 NOx standard to MY 1990 for some light trucks. (52 FR 47858). In its comments on the MY 1990–1991 CAFE rulemaking, Ford claims a reduction in fuel economy based on compliance with this more stringent NOx standard.

Since Ford already uses 3-way catalyst technology on all of its spark ignition light truck engines, the agency agrees that there may be some reduction in current fuel economy levels for the heavier light trucks when the NOx standard becomes more stringent in MY 1990. In determining Ford's capability, NHTSA has accepted the very slight fuel economy loss projected by Ford in its MY 1990 projections. However, the agency concludes that by MY 1991, as the company gains experience with calibrating engines to the more stringent NOx standard, Ford should be able to eliminate or substantially reduce the projected penalty. Accordingly, the agency has eliminated this claimed penalty in assessing Ford's MY 1991 fuel economy capability.

California NOx. In a related rulemaking, on April 25, 1986, the California Air Resources Board (CARB) adopted more stringent NOx standards for compact trucks sold in the state. The regulation phases in compliance, with 50 percent of light trucks weighing from 0 to 4000 pounds inertia weight subject to the standard in 1989, and 85 percent of vehicles in this class required to meet the standard for Model Years 1990 through 1993. Both Ford and GM have claimed that his standard will have a small negative effect on their fuel economy capability.

As in the case of the MY 1990 Federal NOx standard, NHTSA has concluded that there may be some initial fuel economy loss as the companies gain experience with calibrations for the more stringent standard. Therefore, in determining manufacturer capabilities, NHTSA has accepted the slight fuel economy loss projected for that model year. However, the agency has concluded that by MY 1991 companies should be able to eliminate or substantially reduce the projected penalty. Therefore, the agency has eliminated this claimed penalty in assessing MY 1991 fuel economy capabilities.

Hydrocarbon emissions. On September 8, 1986, EPA published an Advance Notice of Proposed Rulemaking concerning more stringent HC exhaust emissions for light-duty trucks. In their December 1986 responses to NHTSA's CAFE questionnaire, both GM and Ford commented that more stringent HC standards may have a negative effect on fuel economy capabilities. While GM did not quantify its concern, Ford estimated a risk of up to 1.0 mpg loss in CAFE. Ford iterated its comment in response to the current CAFE rulemaking.

It is unclear whether the HC rulemaking would have any effect on CAFE capabilities, and it also is not clear that EPA will issue its final regulations in time to affect MY 1990 and 1991 vehicles. In its ANPRM, EPA requested comment on its statutory authority to privide less than four years' leadtime for any change in standards for heavier light duty trucks. NHTSA will consider any potential impact on light truck fuel economy if and when EPA issues a final rule.

On-board refueling vapor control. On July 22, 1987, EPA proposed requirements for on-board refueling vapor control. In its NPRM, EPA estimated that on-board controls could result in a net weight gain of 4–5 pounds per vehicle. NHTSA estimates that this weight increase could reduce average measured fuel ecomony for the MY 1990–1991 GM or Ford light truck fleets by about 0.01 mpg, if there were no secondary weight effects (such as weight increases for springs or vehicle structure to compensate for the added component weight) or changes made in the vehicle to offset the small performance loss due to the on-board weight addition. In its comments on the agency's NPRM, GM stated that it estimated a probable weight increase of 10 pounds.

NHTSA has concluded that there will be no effect on MY 1990 or 1991 light trucks. The principal reasons for this are first, EPA has not issued a final rule, and its NPRM indicated that the effective date for such a rule would be two or more years after the issuance of the final rule, and second, there is not enough information to assess what, if

any, possible changes may occur should this rule become final.

4. EPA Test Procedures

Adjustment credits. On July 1, 1985, EPA published a proposed rule to adjust the CAFE of light truck manufacturers to offset changes that had been made in fuel economy test procedures. (50 FR 27188). In the agency's CAFE proposed rule, we stated that "the rulemaking is not likely to have any significant effect on the manufacturers' projections". On November 24, 1987, EPA withdrew its proposed rule, stating that its original assumptions regarding baseline model years were "overly simplistic" and that "the potential CAFE adjustments are relatively small and tend to sum to zero when considered over the model years involved." (52 FR 44996) The CAFE projections provided by the manufacturers in response to the agency's CAFE NPRM did not include any potential EPA test procedure adjustments. No changes have been made in NHTSA's fuel economy capability analysis to reflect such adjustments.

Gear shift indicator lights. By letter to vehicle manufacturers, EPA has proposed to eliminate one of the two methods currently authorized to determine the fuel economy benefits of gear shift indicator lights. These dashboard lights are designed to inform drivers about the optimal speed, from a fuel economy standpoint, for shifting gears. EPA proposes to eliminate the driver usage rate survey, the method preferred by GM as a "more representative credit for actual shift indicator lights usage than the on-road survey." Whether EPA will eliminate one method is still an open question. In addition, although GM stated in its comments on the fuel economy NPRM that limiting the shift indicator lights usage verification to the on-road survey method "could further reduce fuel economy", they did not provide any data on which the agency could base a determination of effect on CAFE capability.

5. Other Standards

On January 29, 1986, EPA proposed prohibiting "the manufacture, importation, and processing of asbestos in certain products," and the phasing out of asbestos in all other products. The implication of this rulemaking for motor vehicles is eliminating the use of asbestos in brake linings. The agency has no information to date which would indicate any fuel economy effects from replacing asbestos with another substance, although GM claimed in its comments on the agency's CAFE NPRM that this rule could add five pounds to a vehicle's weight. The agency has not made any determination concerning the effects of this rulemaking on CAFE, since EPA has not published a final rule, and it appears that there will be no significant impact on brake designs for the MY 1990–1991 vehicles.

C. Industry Capability: Technological Feasibility and Economic Practicability

As part of its consideration of technological feasibility and economic practicability, the agency has evaluated both domestic and foreign manufacturers' fuel economy capabilities for MY 1990 and 1991.

In making this evaluation, the agency has analyzed the manufacturers' current projections and underlying product plans submitted to it in response to the NPRM, and has considered what, if any, additional actions the manufacturers could take to improve their fuel economy.

1. Manufacturer CAFE Projections

Ford

As discussed in the NPRM, Ford projected in December 1986 that it could achieve the following CAFE levels for MY 1990:

A combined range of 19.2 mpg to 20.5 mpg;

A 2WD range of 19.7 mpg to 21.0 mpg; and

A 4WD range of 18.4 mpg to 19.5 mpg.

For MY 1991, Ford's December 1986 projections were:

A combined range of 19.8 mpg to 20.5 mpg;

For 2WD, a range of 20.3 mpg to 21.1 mpg; and

For 4WD, a range of 18.7 mpg to 19.5 mpg.

In its December 1987 response to the agency's NPRM, Ford submitted the following estimates of its MY 1990 capabilities:

For its combined CAFE, a range of 19.9 mpg to 20.4 mpg;

For 2WD, a range of 20.3 mpg to 20.7 mpg; and

For 4WD, a range of 19.0 mpg to 19.9 mpg.

In this same submission, Ford estimated its MY 1991 capabilities as follows:

For its combined CAFE, a range of 19.9 mpg to 20.5 mpg;

For 2WD, a range of 20.3 mpg to 20.7 mpg;

And for 4WD a range of 19.0 mpg to 20.1 mpg.

By comparison, Ford's PMY 1988 report projects a combined CAFE of 20.3 mpg. 0.1 mpg lower than the high range of its December 1987 NPRM comment.

The NPRM noted that the December 1986 submission indicated that Ford considered the high ends of its projected ranges to be its most likely CAFE levels. The lower ends represent certain risks which were not taken into account in its primary estimates. While the total risk for both model years is the same—1.3 mpg—Ford also identified possible technical opportunities for MY 1991 which could be used to offset some of the risk for that model year.

In its response to the NPRM, Ford indicated that its lower figures may more accurately represent achievable CAFE levels for both MY's 1990 and 1991. Ford's December 1987 estimates for its nominal combined MY 1990 and 1991 CAFE levels are lower than those it projected in December 1986. Ford attributes the lower estimate of December 1987 to a number of small adjustments, both positive and negative. Ford's concern is that the lower end of its estimates (19.9 mpg for both MY 1990–91) is based on estimated risks which will impede achieving the estimated capability.

In its NPRM comments, Ford discussed its product plans to achieve its maximum CAFE level. Such plans include the use of electronic fuel injection across all trucks, improved new transmissions, reduced friction/parasitics in every truck model and the introduction of improved combustion features in many engines. Affecting the possible benefits of these plans, however, include the relatively low fuel prices projected through the 1990's, attendant mix shifts, strong competition within the compact classes, competitive product actions, potential effects of proposed Federal emissions standards and lower than projected benefits from new technology.

Model Year 1990. For MY 1990, the combined estimate includes refinements such as adjustments for actual MY 1988 fuel economy figures, technological changes, the impact of emissions standards, and vehicle design and mix changes.

Model Year 1991. For MY 1991, the changes in Ford's combined estimates relative to a year ago are the result of very similar adjustments to those made for MY 1990, with a 0.1 mpg possible increase in the combined estimate. For MY 1991, Ford's December 1987 submission indicates a slightly lower projection than its December 1986 projection for 2WD, but a small increase in capability level for its 4WD CAFE. These estimates can be ascribed to increased sales of new models.

(The details of Ford's and all other manufacturers' changes are subject to

claims of confidentiality for confidential business information whose release could cause competitive harm. This requires the agency's discussion of Ford's projections, as well as the other manufacturers' projections, to be of a general nature.)

In discussing its current projections, Ford ascribes its lower CAFE capabilities to a number of risks, which, in Ford's view, make the lower estimated figure that which it will be likely to achieve for both MY's 1990 and 1991. In its comment on the proposed rule, Ford stated that:

> Incorporation of all containable technology has yielded a combined CAFE nominal forecast of 20.4 mpg for 1990 and 20.5 mpg for 1991.
>
> However, we believe that future CAFE levels reflecting "high probability" risks will keep our 1990–1991 CAFE status at 20.0 mpg * * *. Additional market mix risks, which were an extrapolation of market trends, have been included in the potential CAFE levels * * * thus identifying the full range of CAFE possibilities that could be as low as 19.9 mpg.

The risks projected by Ford fall into the following categories: The effect of other Federal standards; two levels of market risk, including mix shifts; technological risks; and other risks. The largest risk, estimated at about 0.3 mpg for MY 1990 and 0.3 mpg for MY 1991, is ascribed to volume shifts following current market trends. [This "risk mix" scenario reflects the mix projected in Ford's Pre-model Year Report for MY 1988. Ford also discusses a risk mix scenario, which estimates a risk 0.2 mpg for MY 1990 and 0.2 mpg for MY 1991.] Ford notes that this risk is due primarily to higher than planned market demand for full-size trucks, as well as customer demand for higher option content and higher performance vehicles. These trends have resulted in increased vehicle weight, engine size and axle ratios.

General Motors

As discussed in the NPRM, GM projected in December 1986 that it could achieve the following CAFE levels for MY 1990:

A combined CAFE of 20.5 mpg;

A 2WD CAFE level of 20.9 mpg; and

A 4WD CAFE level of 19.2 mpg.

For MY 1991, GM's December 1986 projections were:

A combined CAFE of 20.6 mpg;

For 2WD, a CAFE level of 21.0 mpg; and

For 4WD, a CAFE level of 19.3 mpd.

By way of comparison, GM's 1988 Pre-model Year report projects a combined CAFE level of 20.2 mpg for that year.

In its December 1987 response to the agency's NPRM, GM submitted the following MY 1990 CAFE levels:

For its combined CAFE, a range of 20.0 mpg to 20.4 mpg;

For 2WD, a CAFE level of 21.0 mpg; and

For 4WD, a CAFE level of 19.0 mpg.

In this same submission, GM estimated its MY 1991 CAFE levels as follows:

For its combined CAFE, a range of 20.0 mpg to 20.4 mpg;

For 2WD, a CAFE level of 21.0 mpg; and

For 4WD, a CAFE level of 19.1 mpg.

GM also noted in its comments to the NPRM that the combined CAFE for both years could be 0.4 mpg lower, due to possible increased consumer demand for performance.

Model Year 1990. The December 1987 estimates are slightly lower than the December 1986 estimates for the combined CAFE and the alternate 4WD CAFE, but its 1987 estimate indicates a slight increase of 0.1 mpg for its CAFE for 2WD vehicles. The change in the estimated combined CAFE level reflects the interaction of several fairly large changes. The principal reason, according to GM's submission, is due to product program changes such as engine changes, vehicle design and drive train changes. Other changes in the estimate reflect consideration of such things as more recent CAFE test results and anticipated model mix shifts.

Model Year 1991. The December 1987 estimates are slightly lower than the December 1986 estimates for the combined CAFE and the alternate 4WD, but also reflect a slight increase of 0.1 mpg for its CAFE for 2WD vehicles. These revised estimates reflect similar reasons for changes in the 1990 projections—that is, changes in product plans, CAFE test procedures, drive train changes, and anticipated model mix shifts.

In its December 1987 submission, GM shows no change in its estimates between MY 1990 and 1991 for the combined or 2WD standards, but does indicate an increase of 0.1 mpg between MY's 1990 and 1991 for its 4WD vehicles. GM's submission indicates that several changes will occur between these two model years, but that the CAFE levels will remain relatively stable. The changes can be described generally as technological improvements and possible countervailing model mix shifts.

In its December 1987 submission, GM notes that substantial uncertainties "* * * make CAFE forecasting tenuous at best," and that although it projects its combined CAFE to be in the range of 20.0 mpg to 20.4 for both MY's 1990 and 1991, even a standard of 20.0 mpg may be too stringent for these model years. As an example, GM states that these uncertainties, and in particular strong consumer demand for larger light trucks and larger displacement engines, have resulted in current projections for MY 1988 and 1989 that place GM below the combined CAFE standards. In its MY 1989 light truck rulemakings the agency noted that it thought it unlikely that GM could meet its projected CAFE level of 20.9 mpg.

GM's comment discussed at length what it considers to be these "substantial uncertainties", which include uncertainty over the price of gasoline, changing consumer purchasing patterns, the level of import truck sales, and the realization of product plans. GM goes on to state that:

> One of the most difficult uncertainties to forecast in the 1990–1991 time frame is the level of consumer demand for vehicle performance. With decreasing fuel prices, customers have been demanding more performance in the light-duty truck fleet * * * * This shows a marked increase in the sales weighted ratio of engine horsepower to vehicle weight (a commonly used performance indicator) between 1983 and 1987. Appendix B–II indicates this trend toward higher performance is forecasted to continue through 1990 and 1991 MY.
>
> Although our current CAFE forecast of 20.4 mpg for both 1990 and 1991 MY incorporates some of this continued market demand for increased performance, we anticipate that to remain competitive in the area of performance, additional product programs may have to be developed for those model years. Analysis indicates this could result in an estimated decrease in CAFE of 0.4 mpg for each year and represents the lower CAFE value in our forecasted range of 20.0 mpg to 20.4 mpg for 1990–1991 MY.

GM emphasizes in its comments that its projections for MY's 1990 and 1991 try to capture the possible increase in consumer demand for performance, but the projections themselves do not include adjustments for such unanticipated uncertainties as fuel prices, model mix shifts, realization of product programs and increases in import truck sales. GM states that these uncertainties could decrease its current CAFE forecasts, and its current estimates of the potential impact on employment, sales and consumer choice. GM presents three separate scenarios, based on three different CAFE standards, to indicate the possible impact on employment, sales, and consumer choice. While much of GM's submission is subject to a claim of confidentiality, the three scenarios can be described generally as follows.

Scenario 1 assumes that the MY 1987–1989 combined CAFE standard of 20.5 mpg will be the standard for MY's 1990 and 1991. If GM realizes the upper end of its estimated CAFE level (20.4 mpg), it states that actions needed to stay in compliance could mean the loss of 4,000 GM and suppliers' jobs. If GM only realizes the lower end of its estimated CAFE level (20.0 mpg), actions taken to remain in compliance would mean job losses totaling 10,000. GM also provided estimated volumes of vehicles most susceptible to restrictions (as well as specific models affected), to indicate the impact on consumer choice.

Scenario 2 assumes that 21.0 mpg will be the standard for MY's 1990 and 1991. If GM realizes the upper end of its estimated CAFE level (20.4 mpg), it states that actions needed to stay in compliance could have "dire effects" on GM, as well as the loss of 25,000 GM and suppliers' jobs. If GM only realizes the lower end of its estimated CAFE level (20.0 mpg), actions taken to remain in compliance would mean job losses totaling 42,000.

Scenario 3 assumes a CAFE standard of 20.0 mpg for MY's 1990 and 1991. While this coincides with GM's lower end forecast, GM states continuing concern that this CAFE level itself may be too high, given the number of substantial uncertainties outside of the manufacturers' control.

Chrysler

[Note: Since the time that responses to the agency's questionnaire were received in December 1986, Chrysler has purchased American Motors Corporation (AMC) and continues to produce many of its light truck product lines. Responses to the agency's 1986 questionnaire were submitted by both Chrysler and AMC. Comments on the agency's 1987 proposed rule were submitted by Chrysler, which includes data on its AMC vehicles. To facilitate the comparison of estimates submitted in December 1986 and December 1987, the agency has combined the separate submissions received from Chrysler and AMC in 1986. In consolidating the numbers, the agency did not make any adjustments for possible changes in the fleet since the two companies have become one. For example, AMC's full-size 4WD pickup and 4WD passenger-car based Eagle have been dropped during MY 1988. Since changes such as this represent a very small portion of Chrysler's fleet, the failure to make adjustments such as this should have negligible, if any, impact on the accuracy of the 1986 estimates. All future discussion will refer only to Chrysler.]

As discussed in the NPRM, Chrysler projected in December 1986 that it could achieve the following CAFE levels for MY 1990:

A combined CAFE of 23.1 mpg;

A 2WD CAFE level of 23.9 mpg; and

A 4WD CAFE level of 21.2 mpg.

For MY 1991, Chrysler's December 1986 projections were:

A combined CAFE of 23.1 mpg;

For 2WD, a CAFE level of 23.7 mpg; and

For 4WD, a CAFE level of 21.6 mpg.

By way of comparison, Chrysler's 1988 Pre-model Year report projects a combined CAFE level of 21.6 mpg for that year.

In its December 1987 response to the agency's NPRM, Chrysler submitted the following MY 1990 CAFE levels:

For its combined CAFE, 21.4 mpg;

For 2WD, a CAFE level of 22.0 mpg; and

For 4WD, a CAFE level of 20.0 mpg.

In this same submission, Chrysler estimated its MY 1991 CAFE levels as follows:

For its combined CAFE, 21.5 mpg;

For 2WD, a CAFE level of 22.0 mpg; and

For 4WD a CAFE level of 20.2 mpg.

Model Year 1990. The December 1987 estimates are consistently lower than the December 1986 estimates for all three categories of CAFE standards: the combined CAFE, the alternate 4WD and alternate 2WD vehicle CAFE. Chrysler ascribes these drops to basing fuel economy levels for certain vehicles on more complete fuel economy data, as well as some reduction in the combined level due to engine changes and volume mix shifts.

Model Year 1991. The December 1987 estimates also are lower than the December 1986 estimates for all three categories of CAFE standards. Chrysler ascribes these lower estimates for MY 1991 to similar circumstances as those affecting its MY 1990 fleet. There may, however, be some increase in fuel economy due to technological improvements.

In its December 1987 submission, Chrysler shows some improvement in its CAFE between MY 1990 and MY 1991 for the combined and 4WD standards. It indicates no increase between MY 1990 and 1991 for its 2WD vehicles. Chrysler's submission indicates that several changes will occur between these two model years, but that the CAFE levels will remain relatively stable. The changes can be described generally as technological improvements and possible countervailing model mix shifts.

Chrysler did not provide detailed descriptions of its fleets for analysis, but the agency used its 1988 Pre-model Year (PMY) report as a baseline to analyze its MY 1990 and 1991 fleet fuel economy performance. The 1988 PMY report indicates a higher CAFE than Chrysler now forecasts for MY 1990–91. The agency believes that the changes between 1988 and 1990–1991 can be attributed to small mix shifts to large vehicles and engines and to changes in certain engine families. In addition, Chrysler has identified some technological improvements for MY 1990 and 1991 that have a countervailing positive effect on its fuel economy.

Chrysler did not identify risks in its comments, but it did note that its projections are based on three assumptions: (1) That the projected model mix accurately reflects future market demands; (2) that the variability of actual certification fuel economy test values is no greater than anticipated; and (3) that running changes in the products do not have an adverse cumulative effect. Chrysler requests the agency to establish the combined CAFE standard for both MY 1990 and 1991 at 20.5 mpg. While this is lower than its current projected capabilities, Chrysler argues that it is faced with many factual uncertainties, uncertainties acknowledged by the agency in its NPRM as possibly affecting CAFE levels. Chrysler states that "[i]n evaluating our product plans for the early 1990's, it is possible that certain programs could be delayed or canceled due to economic uncertainties, potentially affecting our current CAFE projections for that time period. Additionally, as we continue the process of refining Chrysler and AMC's product plans into one, our CAFE projections could be affected." Finally it states that market shifts to larger trucks or the effect of other Federal standards may have a greater than expected impact on CAFE capabilities.

Volkswagen

In its December 1986 response to the agency questionnaire concerning product plans, Volkswagen (VW) did not provide specific data, noting rather that its product plans for 1990 would not differ substantially from those of MY 1987. It did not include any information concerning its MY 1991 fleet. In response to the NPRM, VW did not provide any additional information on its future product plans. Rather, VW iterated its concern as a "single line" manufacturer, requesting that the agency consider this type of manufacturer's "unique situation" in establishing CAFE standards.

In assessing the data available to the agency, we note that VW's 1987 Mid-model Year report indicates a combined CAFE of 18.9 mpg, but its 1988 Pre-model Year Report projects a combined CAFE of 20.5 mpg. This increase appears to be

due to engine improvements and sales mix shifts.

Other manufacturers

Foreign manufacturers compete primarily in the small vehicle portion of the light truck market. While no comments were received from these manufacturers, the agency expects these companies in general to achieve CAFE levels well above GM, Ford, and Chrysler, which offer full ranges of light truck models. Based on 1988 Pre-model Year reports, the expected average fuel economy of the import fleet for the current model year is 24.2 mpg. (The agency notes, however, that the import fleet CAFE levels for light trucks have declined steadily from a high of 27.4 mpg in My 1981, to its MY 1988 projected level of 24.2 mpg.) Except for Range Rover, with an expected CAFE level of 16.7 mpg for its single line of 4WD vehicles, all import manufacturers are projecting MY 1988 CAFE levels higher than GM, Ford, and Chrysler. The projection closest to the American manufacturers is Isuzu's 4WD fleet, with a projected level of 20.0 mpg. In contrast, Toyota projects a 2WD CAFE of 26.1 mpg, a 4WD CAFE of 23.0 mpg and Mazda projected a combined CAFE level of 24.8 mpg.

2. Possible Additional Actions to Improve MY 1990–91 CAFE

There are additional actions which, given sufficient time and resources, manufacturers may be able to take to improve their CAFE above the levels which are currently projected for MY 1990 and 1991. These actions may be divided into three categories: Further technological changes to their product plans, increased marketing efforts, and product restrictions.

(a) *Further Technological Changes.* The ability to improve CAFE by further technological changes to product plans is dependent on the availability of fuel-efficiency enhancing technologies which manufacturers are able to apply within available time.

The agency's FRIA discusses the panoply of fuel-enhancing technologies that may be available to improve CAFE performance. Some of these technologies have been incorporated already into all manufacturers' product lines, so no further CAFE improvement can be expected. Some of the technological improvements apply to diesel engines, which have limited potential since the use of diesel engines has dropped dramatically since the drop in gasoline prices in the early 1980's.

In considering which technologies to pursue as feasible, the agency considered the real constraint of adequate leadtime. Most commenters argued that inadequate leadtime is an impediment to technological changes. Ford, in its comment on the NPRM, stated that: "Additional actions to raise the 1990 and 1991 CAFE above the projected levels are limited by the lack of identifiable technologies or product actions which could be employed. Even if such actions could be identified, there exists insufficient leadtime, engineering workload limitations and insufficient additional production capacity to effectuate reasonable changes."

The agency agrees that leadtime constraints limit the ability of manufacturers to achieve major technological improvements in their projected CAFE levels. For example, technological actions which would result in weight reduction of a vehicle are most likely infeasible except in the context of the retooling of a model or in the application of materials substitution. Materials substitution, however, which is feasible in the timeframe of this rulemaking would have limited fuel economy benefit. Once such a new design is established and tested as feasible for production, the leadtime necessary to design, tool, and produce components such as new body sheet-metal subsystems for mass production could be 22 to 29 months. Other potential major changes take even longer. Leadtimes for new vehicles are typically at least three years.

However, manufacturers may be able to achieve some additional CAFE improvements by increasing the penetration of technologies already in production for MY 1991. There are some opportunities to reduce engine friction, such as with roller cam followers or with reduced piston ring friction. Roller cam followers and piston ring friction reduction have the potential of increasing CAFE levels by up to 0.1 to 0.3 mpg, depending on manufacturer and scope of additional application. Another area of improvement for MY 1991 is the extension of some type of electronic control for automatic transmissions. The value of this technology to CAFE levels would depend on the extent to which these transmissions are in use and could be extended to further applications, or could be incorporated into the manufacturer's product plans.

In its comments on the NPRM, the Department of Energy provided a draft report on light truck fuel economy projections for MY 1990 and MY 1995, which was prepared by Energy and Environmental Analysis, Inc. (EEA). This draft report includes estimates of fuel economy benefits and costs for various technological improvements, similar to those described in Chapter III of the agency's FRIA. EEA's analysis of CAFE improvements for MY 1990 for different technologies were in the same range as the agency's, except in three areas: Individual port fuel injection, diesel engines, and reduced viscosity lubricants. EEA's cost estimates were similar or lower than the agency's, except in two areas: tires and aerodynamic improvements.

In estimating fuel economy improvements, EEA uses a baseline of MY 1986, while the agency used a baseline of MY 1988. In many cases, EEA's estimates prove inaccurate because of changes which have occurred since 1986, such as low gasoline prices. This situation has resulted in consumer demand for larger engines within each truck line, as well as larger versions of smaller trucks. While the agency's baseline figures reflect these trends, EEA's do not.

In addition, some of the improvements anticipated by EEA already have been incorporated into the MY 1988 fleets, thus negating the value of these as potential increases to fuel economy levels. For example, EEA ascribes fuel economy improvements to such things as low tension rings, port fuel injection, serpentine belts, throttle body injection, and roller cam followers. Some of the improvements introduced between 1986 and 1988 were used to offset the effects of complying with new emissions regulations. Further, EEA does not recognize changes in market conditions which have added to the effect of most fuel economy measures being negated. For example, in MY 1988 the manufacturers' fleets consist of bigger engines and bigger versions of smaller trucks.

We agree with EEA on the possible improvements due to roller cam followers and low tension rings, because manufacturers have either not implemented these changes, or have implemented them only partially. With regard to the other projected improvements, most were included in the manufacturers' December 1987 CAFE projections for MY 1990 and 1991.

In particular, EEA's report projects a two percentage point higher gain for individual port fuel injection than the agency's estimate. However, EEA also states that this technological improvement is not clearly cost-effective for CAFE improvement. For direct fuel injection diesel and indirect injection diesel engines, EEA estimates a five to ten percent greater improvement in CAFE than the agency. However, the agency notes that these estimates reflect replacing a gasoline engine with a diesel engine. However, if there were an actual

substitution in comparable engine size, there would be degradation in performance. For equivalent performance levels, the improvement with diesel engines would be similar to the agency's estimate.

Finally, EEA projects higher improvements than the agency in the area of lubricants. Its report predicts a one percentage point higher upper range improvement for reduced viscosity lubricants and three percentage points for friction modified lubricants. The agency cannot assess these figures without more specific information about the baseline figures used by EEA in making its estimates. For example, projections based on older data can make assessment of the baseline unclear. In the area of lubricants this is especially important, since the kind of lubricant used before changing to a reduced viscosity lubricant can affect significantly the observed "improvement" in CAFE performance. (For example, if the lubricant used in a baseline engine was of a very high viscosity, the use of a low viscosity lubricant will improve significantly the fuel economy of the engine. The engine often must be redesigned, however, to operate satisfactorily with the lower viscosity lubricant.)

EEA's cost estimates were higher than the agency's for tires and aerodynamic improvements. The agency believes that there is no specific unit cost for aerodynamic improvements, since these changes are incorporated during the basic design phase of the vehicle and result from changing sheet metal contours. While the agency differs on the cost of tires, there does not appear to be practical room for improvement in this area, since most manufacturers already equip vehicles with tires of low rolling resistance.

(b) *Increased Marketing Efforts.*—As discussed in the NPRM, NHTSA believes that the ability to improve light truck CAFE by marketing efforts is relatively small. Light trucks are often purchased for their work-performing capabilities. This is particularly true for the larger, less fuel-efficient light trucks. Since the smaller light trucks cannot meet the needs of all light truck users, the manufacturers' ability to use marketing efforts to encourage consumers to purchase smaller light trucks instead of larger light trucks is limited.

As a practical matter, marketing efforts to improve CAFE are largely limited to techniques which either make fuel-efficient vehicles less expensive or less fuel-efficient vehicles more expensive. Moreover, the ability of a manufacturer to increase sales of fuel-efficient light trucks depends in part on increasing its market share at the expense of competitors or pulling ahead its own sales from the future. The ability of domestic manufacturers to make such sales increases is also affected by the strong competition in that market from Japanese manufacturers. While the Japanese manufacturers currently have an overall combined market share of about 21 percent of light trucks, their share for the smaller, more fuel-efficient light trucks is about 45 percent.

In addition, the improved fuel efficiency of all sizes of modern light trucks makes it more difficult to sell the small light trucks. The reason for this is that there are diminishing returns for consumers in terms of fuel economy from purchasing smaller light trucks as the fuel efficiency of larger light trucks increases. Also, as gasoline prices have declined, there are diminishing returns in terms of fuel cost savings from purchasing more fuel-efficient vehicles. Hence, an economically rational consumer will not be as concerned with improving fuel efficiency when gasoline prices are low, making it more difficult for a manufacturer to market its most fuel-efficient vehicles.

A problem with pulling ahead sales is that the manufacturers' CAFE levels for subsequent years are reduced. For example, if a manufacturer improves its MY 1990 CAFE by pulling ahead sales of fuel-efficient light trucks from MY 1991, its MY 1991 CAFE will decrease, compared with the level it would have been in the absence of any pull-ahead sales.

GM's comments on the NPRM noted particularly the difficulty in predicting any gains in CAFE through marketing incentives based on present and future projections of consumer purchasing preferences. What makes estimating these types of gains so difficult includes such factors as the uncertain future of world oil prices, the number of competitive entries in the compact segment, potential market countering actions by each competitor, and the price/post advantage of imported models.

Given all of these factors, NHTSA concludes that the domestic manufacturers cannot significantly improve their MY 1990–91 CAFE's by increased marketing efforts.

(c) *Product Restrictions.* As the agency discussed in its proposed rule, manufacturers could improve their CAFE by restricting their product offerings, e.g., limiting or deleting production of particular larger light truck models and larger displacement engines. However, such product restrictions could have significant adverse economic impacts on the industry and the economy as a whole. For example, the FRIA presents a scenario in which GM and Ford are assumed to restrict production of sufficient numbers of their least fuel-efficient light truck models to obtain a 0.5 mpg improvement in CAFE for MY 1990–1991. Under this scenario, for MY 1990 GM could suffer a sales loss of more than 157,000 light trucks, while Ford could experience a sales loss of more than 122,000 light trucks. For MY 1991, the FRIA indicates that GM could suffer a sales loss of up to 156,000 units of its projected MY 1991 light truck production, while Ford could suffer a sales loss of up to 126,000 units of its projected MY 1991 light truck production.

Because of the uncertainty regarding actual sales losses and the nature of personnel adjustments that would have to be made by manufacturers, no precise estimate of net employment effects can be made under this scenario. However, a rough estimate based on estimated lost sales indicates and potential loss of 18,600—56,000 jobs in the manufacturing and supplier industries. The gross estimates are the same for MY 1991. NADA, in its comments on the NPRM, asked the agency to consider the impact on motor vehicle dealers, as well as the effects on manufacturers and suppliers. NADA estimates that in 1987 there were 880,000 employees of franchised new-car dealers, of which approximately 200,600 were new and used vehicle salespersons. Assuming sales-personnel are those most likely to be affected by a short-term decrease in sales volume, and using a similar "worst-case" scenario as above, the agency estimates a possible job loss of 2,300 for each model year.

In addition to the adverse sales and jobs impacts on the automotive industry, a wide range of businesses could be seriously affected to the extent that they could not obtain the light trucks they need for business use. Also, such product restrictions could run counter to the congressional intent that the CAFE program not unduly limit consumer choice. See H.R. Rep. No. 93–340, 94th Cong., 1st Sess. 87 (1975).

Given these considerations, NHTSA believes that significant product restrictions should not be considered as part of a manufacturer's capabilities to improve MY 1990–91 CAFE levels.

3. Manufacturer-Specific CAFE Capabilities

As discussed later in this notice, NHTSA is directed to take "industrywide considerations" into

account in setting fuel economy standards. In carrying out this direction, the agency focuses on the least capable manufacturers with substantial shares of light truck sales.

For MY 1990–91, Ford is the "least capable manufacturer" with a substantial share of the combined and 2WD light truck sales, while GM is the "least capable manufacturer" with a substantial share of the market for 4WD light truck sales. (From calendar year 1987 sales figures, the agency estimates that Ford's share of the entire light truck market is 30 percent, while GM's is 32 percent. Chrysler's anticipated share is 17 percent.) Chrysler's CAFE projections for MY 1990–91 are higher than both GM's and Ford's, primarily because the Chrysler fleet is biased toward smaller trucks and does not cover as wide a range of models. While VW's achievable level may or may not be below that of GM and Ford, it does not have a substantial share of industry sales. (As reflected in its 1988 PMY report, VW estimates that its CAFE level for MY 1988 will be 20.5 mpg. Based on calendar year 1987 sales data, the agency estimates that VW will have less than 0.2 percent of light truck sales.)

Ford

Ford's MY 1990–91 CAFE projections are subject to a number of uncertainties, which Ford describes as risks.

Model Year 1990. While Ford projects a possible CAFE level of 20.0 mpg to 20.4 mpg, its comments argue that its actual CAFE could be as low as 19.9 mpg. The agency has analyzed the current projections by Ford and has made specific determinations concerning the validity of each of the risks detailed by Ford, as well as possible opportunities for Ford to increase its fuel economy. As stated previously, much of the data used to analyze manufacturer capabilities is subject to a claim of confidentiality. The agency summarizes its determinations as follows:

In its December 1987 comments on the NPRM, Ford stated that its nominal combined MY 1990 CAFE projection of 20.4 mpg could drop as low as 19.9 mpg, if all potential risks are realized. In its comments, Ford attributes a drop of 0.4 mpg in CAFE to technical risks, other risks (powertrain mix, capacity, etc.), and volume risk scenarios. Ford's baseline projections for MY 1990 included some increase in the compact truck share (relative to MY 1988 projections) of Ford's total volume. The company provided two potential volume risk scenarios for MY 1990: one in which the compact truck share grows at a slower rate than the baseline projection and one in which the compact truck share does not grow at all. Both scenarios result in a reduction of the company's MY 1990 projection, but the one in which the compact truck share does not grow at all results in an additional reduction over the scenario in which compact sales grow at a slower rate. Ford ascribes the additional drop in CAFE to the potential effects of the MY 1988 mix. Ford states:

> * * * recent market shifts have caused additional reductions in Ford's 1988 and 1989 CAFE projections, and will necessitate difficult and costly actions in an effort to shift mix back toward smaller trucks. This current difficulty is the result of higher than planned full-size market demand, as well as customer demand for higher option content and higher performance vehicles. These trends have increased vehicle weight, engine size and axle ratios.

The agency acknowledges that customer preference limits the ability of the manufacturer to change vehicle mix. Given the dynamic and interactive nature of an individual manufacturer's product plan, the product plans of the manufacturer's competitors, and consumer demand, analyzing mix assumptions is a highly complex matter. The agency notes that since many factors affect mix, sales mix changes between model years for a particular manufacturer may relate to several factors and may or may not indicate a trend with respect to overall industry consumer demand. For example, if a manufacturer introduces a new model, the high level of sales ordinarily associated with a new model may result in increased sales of whatever size class the vehicle happens to be, thereby altering the mix. Similarly, the removal from the market of a particular model, or the gradual aging and resultant reduction in popularity of a particular model also may result in mix effects. Thus, mix effects between model years for a particular manufacturer, which can have substantial effects on the manufacturer's CAFE level, need not result from a change in overall consumer demand.

Given these considerations, the agency has concluded that it is very unlikely that Ford will experience no growth in the compact truck share of the company's volume by MY 1990. First, it should be noted that Ford's projected MY 1988 mix has a smaller compact truck share than the company's most recent data for MY 1987. While the agency considers the 1988 Pre-model Year report to be reliable, to the extent that it contains data reflecting the three most recent sales months, it does not reflect the introduction by Ford of some new and smaller products by MY 1990. The introduction of new models almost certainly will result in some increase in small truck share and thus, CAFE performance.

In addition, while Ford is one of three manufacturers offering a full range of vehicles, which can bias sales toward larger vehicles, there has been a strong trend in the industry toward compact trucks. In MY 1987, compact pickups accounted for 35 percent of light truck production, compact vans and buses accounted for 18 percent of production and compact utility vehicles accounted for 12 percent of production. In consideration of all of the preceding, the agency accepts Ford's "1990" scenario projecting a risk of a slower rate in compact truck sales growth to changing market demands, but does not consider the additional "MY 1988" model shift risk of a decrease in mpg to be one which will affect Ford's MY 1990-1991 capability.

A related risk, raised by Ford as well as GM, is the concern that these manufacturers will lose market shares to imports in the compact area. The agency notes that there has not been a significant increase in the imported vehicles' market share in recent years. Much of this can be ascribed to the current strong value of the yen as opposed to the dollar, as well as the 25 percent tariff imposed on imported light trucks, which has reduced the previous price advantage of imported vehicles. However, in acepting Ford's "1990" risk scenario, the agency implicitly accepts the possibility that import truck sales may increase if the dollar begins to strengthen in relation to the yen.

Ford ascribes a further negative effect on CAFE levels to technological risks associated with introducing engine and transmission changes on certain models, the unavailability of certain parts to complete planned drive train changes, as well as issues related to CAFE testing. NHTSA consistently has recognized that there is a certain risk outside of the manufacturer's control which may result in lower than anticipated CAFE benefits from introducing new technologies. The introduction of a new technology may yield lower than expected benefits, which has nothing to do with the efforts of the manufacturer to introduce successfully such a change. Further, the agency accepts Ford's statements that it may need to make adjustments to its CAFE testing. And, finally, the agency acknowledges that Ford may plan the introduction of certain improvements, but that the amount of these improvements may be limited by actual personnel, supplies or plant restrictions. For example, while market demand may

seem to create the opportunity for CAFE benefit through the introduction of planned technological improvements, actual physical constraints such as the availability of parts may restrict the realization of the entire benefit of the planned improvement, within the time between now and production of MY 1990 vehicles.

Finally, Ford ascribes risk in achieving its MY 1990 CAFE level due to changes in the California NOx regulations. As described in detail in the FEDERAL STANDARDS section of this preamble, there will be stricter Federal NOx standards for the heavier light trucks beginning in MY 1990. In determining Ford's capabilities, the agency included the very slight fuel economy loss projected by Ford for this model year.

On April 24 and 25, 1986, the California Air Resources Board adopted more stringent NOx standards for compact trucks. For model years 1990 through 1993, 85 percent of compact light trucks (weighing under 4,000 pounds inertia weight) must certify to a 0.4 grams per mile NOx standard. Ford ascribes a 0.05 mpg negative CAFE impact for both MY 1990 and 1991 due to this requirement. The agency acknowledges, as it does with the Federal NOx standard, that there may be a slight fuel economy loss for MY 1990 as Ford gains experience with calibrations for the more stringent standard.

In conclusion, the agency agrees with Ford that if faces certain risks, beyond the ability of the company to control or offset, that may result in its fuel economy level only reaching the lower end of its projected range of 20.0 mpg. The agency does not agree with the further reduction of 0.1 mpg based on Ford's PMY 1988 model mix projections. Further, the agency also believes that some, but not all risks actually will occur, or have fuel economy reducing results. In addition, although the agency has identified some specific technological improvements that may be implemented by manufacturers, it has determined that there is not adequate lead time for Ford to implement these changes for its MY 1990 fleet. Accordingly, the agency has determined that Ford's maximum feasible fuel economy capability for MY 1990 is 20.0 mpg.

MY 1991. Ford's projected range for MY 1991 reflects a possible 0.1 mpg increase, although it asserts that the risks present for the MY 1990 fleet continue to be risks for MY 1991. While the agency acknowledges the validity of the risks to the extent discussed above, we also have determined that additional leadtime for the MY 1991 fleet lessen the effect of certain risks. In addition, the agency believes that certain of the technological improvements discussed in B.1. of this preamble are possible to implement for MY 1991. Among the more promising of these technical opportunities for Ford are engine friction reduction programs such as low friction piston rings, roller cam followers and further application of certain transmission improvements. The agency also believes that, while gasoline prices have declined substantially since the early 1980's, these prices should remain stable through the early 1990's. Other risks anticipated for MY 1990 and 1991 may also be overcome by 1991, to the extent they are within the range of actions possible for Ford to make. For example, if the planned implementation of a certain technological improvement has been delayed because of plant capacity, this type of problem should be able to be worked out by MY 1991.

Regarding the Federal and California NO_x standards, the agency has concluded that by MY 1991, as the company gains experience with calibrating engines to the more stringent NO_x standard, Ford should be able to eliminate or substantially reduce the projected penalty. Therefore, the agency has eliminated this claimed penalty in assessing Ford's MY 1991 fuel economy capability.

Accordingly, the agency believes that with the added leadtime afforded Ford for MY 1991, several of the risks ascribed to MY 1990 can be overcome. Technological improvements identified as feasible earlier in this preamble should, to some degree, be able to be implemented by MY 1991. Consumer demand remains a continuing concern for Ford's fleet, but the introduction of new models should attract consumers to more fuel efficient vehicles. Further, the additional time to calibrate engines should dissipate the risk identified in connection with compliance with NO_x requirements for all of the above stated reasons, the agency has concluded that Ford's maximum feasible CAFE capability for MY 1991 is 20.2 mpg.

General Motors

GM attributes the 0.4 mpg risk in its MY 1990 and 1991 CAFE projections entirely to the possibility that continued market demand for performance will force a shift to higher horsepower engines in its truck fleet with the corresponding loss in fuel economy. As already discussed in the Manufacturer Estimates section of this preamble, GM also identified several other circumstances which it believes will affect its CAFE capability. These include GM product plans related to engine changes, model modification and drive train changes, as well as modification to previous estimates due to CAFE testing and other unplanned for model mix shifts. Although not quantified, GM also lists in its comments the potential risk possible in other Federal safety standards, emission standards, import fleet competition, and low gasoline prices.

In support of its position that demand for higher performance creates a real risk to its fuel economy performance, GM submitted a letter to the agency on January 15, 1988, describing the results of a consumer satisfaction survey of GM's light trucks. The data were acquired during each of the quarters of MY 1987 from buyers of GM and three competitive makes of trucks. The survey results indicated levels of consumer satisfaction with acceleration performance among a number of light truck manufacturers. While few details of the survey were provided (and those are subject to a claim of confidentiality), the agency notes from its own data, that GM's buyer satisfaction data do not correlate with the fleet average horsepower-to-weight ratio of the MY 1987 light trucks of the surveyed manufacturers.

In NHTSA's final rule on MY 1989 light truck CAFE standards (see 52 FR 6584), the agency concluded that GM's decision to increase horsepower in certain cases was an appropriate market-related action for the purpose of competing with certain vehicles produced by Ford, Chrysler, AMC, Nissan and Toyota. While the agency maintains this position, GM did not provide adequate information for the agency to assess the market demand for such plans for MY 1990 and 1991. Furthermore, GM's projections for MY 1990 and 1991 include a higher rate of increase in performance than in previous years. From the available data, the agency concludes that GM would have to affirmatively change its plans to lower its CAFE levels by 0.4 mpg. The agency has determined that GM's maximum feasible fuel economy fuel for MY 1990 is in a range from 20.0 mpg to 20.4 mpg. For MY 1991, GM's maximum feasible fuel economy level is in a range from 20.2 mpg to 20.4 mpg.

Other manufacturers

Chrysler requested that CAFE standards be set within the range of the NPRM (20.0 mpg to 21.0 mpg), even though it projects combined CAFE levels of 21.4 mpg for MY 1990 and 21.5 mpg for MY 1991. Chrysler's 1988 PMY report estimates a CAFE level of 21.6 mpg.

BEST COPY AVAILABLE

Chrysler's request that the agency establish a standard below its current projections appears to reflect its uncertainty concerning product plans since its acquisition of AMC. Chrysler does not constitute a least capable manufacturer with a substantial share of the market and, as in the past, the agency has not considered it appropriate to set the CAFE level based on Chrysler's capabilities. The agency also notes, however, that Chrysler should exceed the established CAFE standards for both MY 1990 and 1991.

The import manufacturers, except for VW, did not respond to the NPRM. In the past, the light truck fuel economy standards have not been difficult for most importers to achieve, because their fleets have been composed almost exclusively of small pickups, vans, and utility vehicles. VW's CAFE levels have not been as high as the CAFE standard in some of the preceding years, but VW currently is projecting a CAFE level of 20.5 mpg for MY 1988. This is above the standard established for MY 1990 and 1991 in this rulemaking.

The only other light truck import manufacturer that has not met the CAFE standards in recent years is Range Rover, which projects a 4WD CAFE of 16.7 mpg for MY 1988. Range Rover offers only one model for sale in the United States, a relatively heavy (4750 pound equivalent test weight), 4WD utility vehicle that is imported in small quantities (3,600 units projected for MY 1988).

Several importers have 4WD fleets that will be close to the 4WD alternate standard of 19.5 mpg for MY 1988, including Nissan, Isuzu at 20.0 mpg, and Chrysler Imports. All of these importers also have 2WD vehicles, so they have the option of meeting the combined standard, which the agency believes they can do easily. Further, all of these importers' MY 1988 projections exceed the alternate 4WD CAFE standards for MY 1990 and 1991 established by this rule.

DOE's comment (in a draft report on light truck fuel economy prepared by EEA) on the NPRM contained projections for MY 1990 of 21.8 mpg for Ford, 22.0 mpg for GM, and 22.9 mpg for Chrysler. (The agency combined DOE's projections for Chrysler and AMC to achieve this latter number.) The EEA projection for Ford differs from the agency's projection of 20.0 mpg, and exceeds Ford's actual and projected truckline fuel economies by one to two mpg. EEA's analysis does not recognize market trends toward heavier average weights within each truckline due to consumer demand for higher option content and larger versions within each truckline ("king cabs", etc). For example, between MY 1986 and 1988, the average weights for types of light trucks (i.e., standard pickups, compact bus, etc.) within Ford's product line typically have risen by 100–200 pounds. This trend is projected to continue between MY 1988 and 1990, and is not captured in EEA's analysis. Thus, the new or expanded applications of fuel economy improving technologies tend to be offset by these market trends. Ford's model specific fuel economies have not, on average, improved between MY 1986 and its MY 1990 projection. Therefore, the agency has concluded that EEA's projections overstate the maximum feasible fuel economy levels.

EEA's projected average fuel economies for MY 1990, by truckline, are close to GM's, but typically are higher by several tenths of an mpg. These differences can be ascribed to different assumptions concerning sales mix of various truck types, and the application of certain technologies that are not consistent with GM's product line. For example, EEA's projections include the application of throttle body fuel injection on some engines on certain models that were already equipped with this feature in MY 1986. In addition, EEA ascribed value to the introduction of roller cam followers to more engines than is feasible to them by MY 1990. While we agree with EEA that the introduction or expansion of roller cam followers is a technology possible to receive be introduced in the time available for MY 1991, EEA's use of MY 1986 as a baseline skews the value of many of its projected possible improvements. EEA also ascribes a possible CAFE improvement for LT metric tires. The agency does not consider LT metric tires to be of any CAFE value, since it is the agency's understanding that these tires are merely the metrification of tire sizes, and provide no actual reduction in rolling resistance. In addition, as in the case of Ford, GM has experienced increased consumer demand for heavier versions within each truckline between MY 1986 and 1988, resulting in typical average weight increases of 125 to over 400 pounds. Furthermore, GM's average engine size within trucklines has risen between MY 1986 and 1988. These market trends are not captured in EEA's analysis. Thus, as in the case of Ford, NHTSA has concluded that EEA's projections overstate GM's maximum feasible fuel economy level.

2WD and 4WD CAFE levels. For alternate CAFE standards for 2WD and 4WD, the agency again looks to the least capable manufacturer with a substantial share of the market. For 4WD, this is GM with projected nominal CAFE levels of 19.0 mpg in MY 1990 and 19.1 mpg for MY 1991. The agency believes that these numbers represent fairly the capabilities of GM as a manufacturer of a 4WD fleet with the least fuel economy capability and that GM faces no unusual risk in meeting these levels. For 2WD, Ford appears to be the least capable manufacturer with the 2WD CAFE range of 20.3 mpg to 20.7 mpg for both model years. The agency believes that all risk factors included in the lower value of this range will not occur, and, accordingly, Ford's 2WD CAFE capability for MY 1990 is 20.5 mpg. For MY 1991, as in the case of the combined standard, the agency believes that there is sufficient leadtime for Ford to apply some, if not all, of the technological improvements previously discussed, and to eliminate the negative CAFE effects of complying with the new California NO_x standards. Accordingly, the agency concludes that Ford's 2WD CAFE capability for MY 1991 is 20.7 mpg.

V. Agency Determination of the Maximum Feasible Fuel Economy Level

As discussed above, section 502(b) requires that light truck fuel economy standards be set at the maximum feasible average fuel economy level. In making this determination, the agency must consider the four factors of section 502(e): Technology feasibility, economic practicability, the effect of other Federal motor vehicle standards on fuel economy, and the need of the nation to conserve energy.

A. Interpretation of "Feasible"

Based on dictionary definitions and judicial interpretations of similar language in other statutes, the agency has in the past interpreted "feasible" to refer to whether something is capable of being done. The agency has thus concluded in the past that a standard set at the maximum feasible average fuel economy level must: (1) Be capable of being done and (2) be at the highest level that is capable of being done, taking account of what manufacturers are able to do in light of available technology, economic practicability, how other Federal motor vehicle standards affect average fuel economy, and the need of the nation to conserve energy.

B. Industrywide Considerations

The statute does not expressly state whether the concept of feasibility is to be determined on a manufacturer-by-manufacturer basis or on an industrywide basis. Legislative history may be used as an indication of

congressional intent in resolving ambiguities in statutory language. The agency believes that the below-quoted language provides guidance on the meaning of "maximum feasible average fuel economy level."

The Conference Report to the 1975 Act (S. Rep. No. 94–516, 94th Cong., 1st Sess. 154–5 (1975)) states:

> Such determination [of maximum feasible average fuel economy level] should take industrywide considerations into account. For example, a determination of maximum feasible average fuel economy should not be keyed to the single manufacturer which might have the most difficulty achieving a given level of average fuel economy. Rather, the Secretary must weigh the benefits to the nation of a higher average fuel economy standard against the difficulties of individual manufacturers. Such difficulties, however, should be given appropriate weight in setting the standard in light of the small number of domestic manufacturers that currently exist, and the possible implications for the national economy and for reduced competition association (sic) with a severe strain on any manufacturer * * *.

It is clear from the Conference Report that Congress did not intend that standards simply be set at the level of the least capable manufacturer. Rather, NHTSA must take industrywide considerations into account in determining the maximum feasible average fuel economy level.

NHTSA has consistently taken the position that it has a responsibility to set light truck standards at a level that can be achieved by a manufacturer or manufacturers whose vehicles constitute a substantial share of the market. See 49 FR 41251, October 22, 1984. The agency did set the MY 1982 light truck fuel economy standards at a level which it recognized might be above the maximum feasible fuel economy capability of Chrysler, based on the conclusion that the energy benefits associated with the higher standard would outweigh the harm to Chrysler. (45 FR 20671, 20676; March 31, 1980) However, as the agency noted in deciding not to set the MY 1983–85 light truck standards above Ford's level of capability, Chrysler had only 10–15 percent of the light truck domestic sales, while Ford had about 35 percent. (45 FR 81593, 81599; December 11, 1980) More recently, both the MY 1988 and 1989 CAFE rulemakings acknowledged that the standards established would most likely be at levels higher than those achievable by VW. (51 FR 15335, 15345, April 23, 1986 and 52 FR 6564, 6575, March 4, 1987.)

C. Petroleum Consumption

The precise magnitude of energy savings associated with alternative light truck fuel economy standards is uncertain. The FRIA provides calculations for the hypothetical lifetime fuel consumption of the MY 1990–1991 domestic light truck fleets assuming those same fleets could and would achieve alternative CAFE levels. In estimating the effect of the proposed range of mpg values being considered on lifetime fuel consumption of the MY 1990 and 1991 fleets, the agency considered only the GM and Ford light truck fleets, since the product plans of other light truck manufacturers are unlikely to be affected by this rule.

Based on the average projected sales for GM and Ford during the 1990 and 1991 model years, a CAFE level of 21.0 mpg could hypothetically result in the use of 433 million fewer gallons over the fleet's lifetime compared to the MY 1989 standard of 20.5 mpg. A fuel economy level of 20.5 mpg would save 455 million gallons relative to a fuel economy level of 20.0 mpg. Relative to a CAFE of 20.0 mpg, a CAFE level of 20.2 mpg would save 185 million gallons. Corresponding estimates for 1991 are a savings of 448 million gallons for 21.0 mpg over 20.5 mpg, a savings of 471 million gallons for 20.5 mpg over 20.0 mpg, and a savings of 191 million gallons for 20.2 mpg over 20.0 mpg.

However, it is possible that manufacturers may be able to achieve higher CAFE levels only by restricting the sales of their large light trucks or more powerful engines. If this occurred, consumers might tend to keep their older, less-fuel efficient light trucks in service longer. Also, to the extent that a particular manufacturer might find it necessary to restrict sales of particular engines or vehicles, consumers may be able to transfer their purchases to another manufacturer which may have less difficulty meeting the CAFE standard, but can offer comparable engines or vehicles. Thus, the agency believes that the actual impacts, if any, on energy consumption of alternative higher fuel economy standards, could be much less than the theoretical calculations comparing different levels of industrywide CAFE.

D. Setting the 1990 and 1991 Standards

Based on the analysis described above and on manufacturer projections, the agency concludes that the manufacturers can achieve the combined fuel economy levels in the following table:

Manufacturer	1990 Combined CAFE (mpg)	1991 Combined CAFE (mpg)	Approximate market share [1] (percent)
Chrysler	21.4	21.5	17
Ford	20.0	20.2	30
GM	20.0–20.4	20.2–20.4	32
Volkswagen	[2] 20.5	[2] 20.5	less than 0.2

[1] Based on Calendar Year 1987 Sales Figures.
[2] VW submitted no CAFE projections in its comments on the NPRM. The values shown are from its 1988 PMY Report.

As noted previously, foreign manufacturers other than VW only compete in the small vehicle portion of the light truck market and are therefore expected to achieve CAFE levels well above Ford, GM and Chrysler, which offer full ranges of light truck models.

NHTSA has concluded that among the manufacturers with a substantial share of combined light truck sales, Ford is the least capable manufacturer, with a MY 1990 combined fuel economy capability of 20.0 mpg.

The setting of maximum feasible fuel economy standards, based on consideration of the four required factors, is not a mere mathematical exercise, but requires agency judgment. In determining the maximum feasible CAFE standard, NHTSA must weigh the benefits to the nation of a higher average fuel economy standard against the difficulty of individual manufacturers facing potentially higher fuel economy standards and industry-wide considerations, as indicated in the legislative history of the fuel economy act. (See the langage of the Conference Report quoted above.)

NHTSA has concluded that 20.0 mpg is the maximum feasible combined standard for MY 1990, and 20.2 mpg is the maximum feasible combined standard for MY 1991.

Ford projects a CAFE range of 19.9 mpg to 20.4 mpg for MY 1990, and a CAFE range of 19.9 mpg to 20.5 mpg for MY 1991. As discussed at length previously, the agency believes that several of the risks identified by Ford must be anticipated as happening, which limits their ability to achieve the higher end of their CAFE estimates. The principal factor offsetting these risks for MY 1991 is additional leadtime, which provides Ford the opportunity to implement alternative methods of improving its CAFE. Setting the MY 1990 standard at 20.0 mpg and the MY 1991 standard at 1991 at 20.2 is well within the range of Ford's projections, without causing significant economic distortion. Further, it should act as an incentive for that company to achieve its maximum fuel economy capability. Since Ford represents nearly a third of all light trucks subject to fuel economy standards, a standard set at Ford's maximum feasible level can make a substantial contribution to petroleum conservation.

NHTSA does not believe that a standard set at a level above Ford's capability would be consistent with the requirement that standards be set taking industrywide considerations into account, given that company's market share and given the questionable effects of a higher standard on petroleum consumption. Even if the MY 1990 and 1991 standards could be set at a level above Ford's capability, however, the agency believes that it could not be set above both Ford's and GM's capabilities, since those companies' combined market share exceeds 60 percent. As noted previously, the agency's estimate of GM's maximum capability for MY 1990 is 20.0 mpg–20.4 mpg and for MY 1991 is 20.2 mpg–20.4 mpg, similar to the standards being adopted for the two model years in this rulemaking.

The precise effects on petroleum conservation of a standard set higher than Ford's projected capability are uncertain. Since most other manufacturers in the industry project MY 1990 and 1991 CAFE levels above that of Ford's capability, a standard set at 20.5 mpg would not be expected to affect the petroleum consumption of trucks manufactured by that part of the industry. The agency believes that any actual gasoline savings associated with a standard set higher than Ford's capabilities would be minimal, given the comparative capabilities of other light truck manufacturers.

Restricting sales of its larger light trucks by either GM or Ford could result in purchasers of these vehicles and engines looking elsewhere for the same product. To a certain extent, sales of many light trucks are relatively inelastic; that is, purchasers buy light trucks with certain specifications based on actual work or recreational needs. To the extent that purchasers do transfer their sales to other manufacturers, there is little or no effect on petroleum consumption.

A higher standard than 20.0 mpg for MY 1990 or 20.2 mpg for MY 1991 could result in serious economic difficulties for Ford. While the agency concluded that Ford's capability for MY 1989 was 21.0 mpg, it is also stated in the MY 1989 final rule that Ford's maximum achievable CAFE could be as low as 20.2 mpg. This conclusion was based primarily on the agency's analysis that virtually all of the decline in Ford's CAFE was due to reasons beyond the company's control. NHTSA believes that the first potential fuel-efficiency enhancing actions that Ford or any other manufacturer would consider in response to a higher standard with a short leadtime would consist primarily of marketing actions. For the reasons discussed earlier in this notice, however, the agency does not believe that marketing actions can be relied upon to significantly improve fuel economy. Assuming that such marketing actions were unsuccessful in whole or in part, Ford would likely have to engage in product restrictions, including limiting the sales of larger engines and/or vehicles to improve its fuel economy. Such product restrictions could result in adverse economic consequences for Ford, its employees, and the economy as a whole and unduly limit consumer choice, especially with regard to the load carrying needs of light truck purchasers.

The agency believes that the current situation of low, stable gasoline prices can create significant difficulties for individual manufacturers facing higher CAFE standards. Steady, low prices for gasoline have resulted in many consumers choosing larger vehicles and more powerful engines. While the magnitude of such shifts is limited to some extent by the fact that trucks are purchased largely with respect to work-performing or specific recreational capabilities, low gasoline prices can nonetheless result in mix shifts which lower manufacturers' CAFE. The magnitude of the recent drop in gasoline prices makes it particularly difficult for manufacturers such as Ford to attempt to use marketing efforts to overcome such shifts in consumer demand.

NHTSA is particularly concerned about the impact of CAFE standards on American jobs. In assessing this issue, NHTSA estimated the sales and job effects associated with the product restrictions that would be required for Ford to raise its CAFE by 0.5 mpg. As discussed previously, such product restrictions could result in a sales loss to Ford of as many as 122,000 light trucks for MY 1990 and 126,000 for MY 1991. This would translate into significant lost jobs at Ford and supplier companies.

Given Ford's thirty percent share of the light truck market, its capability has a significant effect on the level of the industry's capability and, therefore, on the level of the standards. The agency believes that for Ford, the MY 1990 CAFE standard of 20.0 mpg and the MY 1991 CAFE standard of 20.2 mpg balance the potentially serious adverse economic consequences associated with market and technological risks against the company's capabilities as the least capable manufacturer with a substantial share of sales. The agency concludes, in view of the statutory requirement to consider several factors, that the relatively small and uncertain energy savings associated with setting a standard above Ford's capability would not justify the economic harm to that company, American workers, and the economy as a whole.

All of the comments submitted on this rulemaking recommended that the agency adopt a combined CAFE standard within the range of 20.0 mpg–20.5 mpg. Different manufacturers requested different specific levels, based on their specific capabilities assessment. Ford requested that the standard be set "at levels no higher than 20.0 mpg" for both model years. Ford stated that * * * "the very real uncertainties with respect to forecasts of future market conditions, technology and the effects of other Federal standards warrant establishment of the standards at a level no higher than the lower end of the range proposed by NHTSA." GM argued that the MY 1990 and 1991 combined CAFE standards need to be established "no higher than the lower proposed limit of 20.0 mpg. GM cited as uncertainties facing manufacturers factors such as "future fuel prices, market share of small truck sales achieved by foreign manufacturers, and changes in consumer purchasing patterns." GM went on to say that "These uncertainties combine to place a full-line manufacturer, such as GM, at risk of failing to achieve CAFE forecasts. Therefore, light-duty truck standards established at the bottom of the range proposed by NHTSA (20.0 mpg) may prove to be too stringent for these model years."

Chrysler, while projecting fuel economy levels of 21.4 mpg for MY 1990 and 21.5 mpg for MY 1991, also requested that the combined CAFE standards for MY 1990 and 1991 be set within the proposed range. Chrysler faces somewhat different uncertainties than those faced by Ford and GM, since it is involved in reviewing product plans for the company in light of its recent purchase of AMC. Given this, Chrysler's comment indicated that it "would be supportive of NHTSA carrying over the present 1989 light truck combined CAFE standard of 20.5 mpg for the 1990–1991 model years."

In response to the NPRM, VW submitted only general comments, iterating its concern about its compliance efforts in light of the fact that it is a "single line" manufacturer, and renewing its earlier request that the agency establish separate standards for manufacturers in this situation. In its MY 1989 rulemaking, the agency explained that it had established a separate standard for MY 1980–81 for International Harvester (IH). In doing so, the agency acknowledged circumstances unique to IH, including not just its restricted product line, but also its limited sales volume, engines derived from medium duty truck (above 10,000 pounds Gross Vehicle Weight Rating) engines, and that IH had no experience with state-of-the-art emission control technology which other manufacturers had gained in the passenger automobile market. The agency emphasized in this rulemaking that the alternate standard was being established only for two years, concluding that IH should be able to achieve levels of fuel efficiency in line with other manufacturers within that time period—either through purchasing engines from outside sources or by making improvements to current engines. In its MY 1989 rulemaking, NHTSA noted that VW's circumstances are not analogous to those of IH, for the above reasons, but also because most of IH's difficulty resulted from its newness at having to comply with fuel economy standards. Since VW has extensive experience in complying with the passenger car SAFE standards, this is not the case for them.

In the MY 1990–1991 NPRM, the agency again stated that it did not consider VW's request appropriate, noting that it tentatively declined to propose a separate standard to accommodate VW's limited line product status. VW's comments on the NPRM included the position that specific CAFE standards were difficult for a single line manufacturer, since they were denied the benefits of averaging. Finally, VW requested that "Should NHTSA be compelled to propose a specific standard for 1990–1991 model years, [we suggest] NHTSA establish CAFE standards no more stringent than the current standards and preferably set the new CAFE standards at or below the low end of the proposed range." VW provided no specific data with its comments. However, in its 1988 PMY Report, VW projects a CAFE level of 20.5 mpg, which is higher than the standards being established in this rulemaking for both MY 1990 and 1991. Accordingly, the agency does not believe that VW has further need to request special consideration for being a single line manufacturer, since its estimates exceed the new standard.

The only other comment submitted on this rulemaking was from the National Automobile Dealers Association (NADA). NADA supports the lower figure of each of the proposed standards, recommending that NHTSA establish 1990–1991 CAFE standards of 20.0 mpg for the combined standard, 20.5 mpg for the 2WD standard, and 19.0 mpg for the 4WD standard. NADA bases its recomendation on the current low fuel prices. In addition, however, NADA states that such actions as product restrictions to meet CAFE standards, by definition, make the standard economically impracticable, because consumer decisions to purchase specific types of light truck vehicles cannot be shifted by market incentives. NADA states what the agency has acknowledged in previous rulemakings, as well as elsewhere in this document: Light trucks are most often purchased for their utility and performance characteristics. NADA states:

> Potential purchasers focus on vehicle utility and durability. Four-wheel drive options are essential for off-road commercial and recreational use and increasingly are purchased as an on-road safety feature. Four-wheel drive options add weight and lower vehicle fuel economy. Towing configurations or "packages" also add weight through larger engines and equipment. Towing characteristics are essential to meet the requirements of a booming recreation market as well as the needs of the farmer or construction contractor. Large vans have replaced oversized buses for moving smaller groups of people such as sports teams or workers. At the same time, small vans have replaced station wagons as the family vehicle and are increasingly equipped with four-wheel drive.

As in previous rulemakings, the agency has decided to continue 2WD and 4WD standards as an alternative to the combined standard. Separate 2WD/4WD standards allow manufacturers greater flexibility in planning to meet CAFE standards and do not discriminate against firms with truck fleets heavily weighted toward the generally less fuel efficient 4WD models.

NHTSA has concluded that GM is the least capable manufacturer with the substantial share of 4WD light truck sales, and has focused on its capability in establishing the separate 4WD standard. As discussed earlier in the notice, the agency concluded that 19.0 mpg is that company's maximum 4WD fuel economy capability for MY 1990, and 19.1 mpg for MY 1991. Both Ford and Chrysler appear likely to meet the 4WD standard. VW did not submit current data in response to the NPRM, and said in its December 1986 response to the agency's questionnaire that its product plans were not different from those of MY 1987. These projections included a 4WD CAFE level of 18.4 mpg. VW's 1988 PMY report projects a 4WD level of 18.6 mpg. The 18.4 mpg figure is below GM's estimated 19.0 mpg figure for 1990, although it is the same as Ford's broad estimate submitted for MY 1990. (Ford projects a MY 1990 4WD CAFE level in the range of 18.4 mpg to 19.5 mpg.) There is no other manufacturer close to this situation except Range Rover, a limited line manufacturer of a 4,750 pound 4WD utility vehicle. While Range Rover has no other models against which to balance its low 4WD CAFE level, VW projects a combined CAFE level of 20.5 mpg for My 1988. If this trend continues VW will meet both the MY 1990 and 1991 CAFE combined standard. Since VW can meet the combined standard, it is unnecessary for it to be able to meet the separate standards.

NHTSA has concluded that Ford is the least capable manufacturer with a substantial share of 2WD light truck sales, and has focused on Ford in establishing the separate 2WD standard. Ford's projected 2WD capability for MY 1990 is a range of 20.4 mpg to 20.7 mpg, and for MY 1991 20.3 mpg to 20.7 mpg. GM is projecting a 2WD CAFE level of 21.0 mpg for both model years and Chrysler is projecting 22.0 mpg for both years. Volkswagen did not submit current data, but indicated a MY 1988 2WD capability of 20.5 mpg in its Pre-model Year Report. As discussed earlier in the notice, the agency concludes that Ford's maximum 2WD fuel economy capability is 20.5 mpg for MY 1990 and 20.7 mpg for MY 1991. Accordingly, these are the 2WD CAFE levels adopted by the agency.

VI. Impact Analyses

A. Economic Impacts

The agency considered the economic implications of the fuel economy standard established by this rule and determined that the rule is major within the meaning of Executive Order 12291 and significant within the meaning of the Department's regulatory procedures. The agency believes that the standards established by this notice can be met without significant economic distortion. Previous portions of the preamble to this document discuss the factors considered by the agency, and the agency's detailed analysis of the economic effects is set forth in a Final Regulatory Impact Analysis (FRIA), copies of which are available from the Docket Section of the agency, filed under the docket to this rulemaking, FE-87-01-NO2. The contents of that analysis are described generally in previous sections of the preamble to this rule.

B. Environmental Impacts

The agency has analyzed the environmental impacts of the MY 1990-91 light truck average fuel economy standards in accordance with the National Environmental Policy Act, 42 U.S.C. 4321 *et seq*, and has concluded that this rulemaking action will not have a significant effect upon the environment. The agency therefore is making a finding of no significant impact. Copies of the Environmental Assessment are available from the Docket Section, filed under the docket to this rulemaking, FE-87-01-NO2.

C. Impacts on Small Entities

Consistent with the Regulatory Flexibility Act, the agency has considered the impact this rulemaking would have on small entities. I certify that this action will not have a significant economic impact on a substantial number of small entities. Therefore, a regulatory flexibility analysis is not required for this action. No light truck manufacturer subject to this rule would be classified as a "small business" under the Regulatory Flexibility Act. Small businesses, small organizations, and small governmental units which purchase light trucks will not be affected significantly, since the adoption of this rule will not affect the availability of fuel efficient light trucks or have a significant effect on the overall cost of purchasing and operating light trucks.

D. Impact on Federalism

This action has been analyzed in accordance with the principles and criteria contained in Executive Order 12612, and it has been determined that the rule does not have sufficient Federalism implications to warrant the preparation of a Federalism Assessment.

E. Department of Energy Review

In accordance with section 502(i) of the Cost Savings Act, the agency submitted this proposal to the Department of Energy for review. There were no unaccommodated comments.

List of Subjects in 49 CFR Part 533

Energy conservation, Gasoline, Imports, Motor vehicles.

In consideration of the foregoing, 49 CFR Part 533 is amended as follows:

PART 533—LIGHT TRUCK FUEL ECONOMY STANDARDS

1. The authority citation for Part 533 continues to read as follows:

Authority: 49 U.S.C. 1657; 15 U.S.C. 2002; delegation of authority at 49 CFR 1.50.

2. In § 533.5, paragraph (d) and Table II of paragraph (a) are to read as follows:

§ 533.5 Requirements.

(a) * * *

TABLE II

Model year	Combined standard		2-wheel drive light trucks		4-wheel drive light trucks	
	Captive imports	Others	Captive imports	Others	Captive imports	Others
1982	17.5	17.5	18.0	18.0	16.0	16.0
1983	19.0	19.0	19.5	19.5	17.5	17.5
1984	20.0	20.0	20.3	20.3	18.5	18.5
1985	19.5	19.5	19.7	19.7	18.9	18.9
1986	20.0	20.0	20.5	20.5	19.5	19.5
1987	20.5	20.5	21.0	21.0	19.5	19.5
1988	20.5	20.5	21.0	21.0	19.5	19.5
1989	20.5	20.5	21.5	21.5	19.0	19.0
1990	20.0	20.0	20.5	20.5	19.0	19.0
1991	20.2	20.2	20.7	20.7	19.1	19.1

* * * * *

(d) For model years 1982-91, each manufacture may:

(1) Combine its 2- and 4-wheel drive light trucks (segregating captive import and other light trucks) and comply with the combined average fuel economy standard specified in paragraph (a) of this section; or

(2) Comply separately with the 2-wheel drive standards and the 4-wheel drive standards (segregating captive import and other light trucks) specified in paragraph (a) of this section.

Issued on March 31, 1988.

Diane K. Steed,

Administrator.

[FR Doc. 88-7410 Filed 3-31-88; 4:35 pm]

BILLING CODE 4910-59-M

Proposed Rules

Federal Register
Vol. 53, No. 65
Tuesday, April 5, 1988

This section of the FEDERAL REGISTER contains notices to the public of the proposed issuance of rules and regulations. The purpose of these notices is to give interested persons an opportunity to participate in the rule making prior to the adoption of the final rules.

DEPARTMENT OF AGRICULTURE

Office of the Secretary

7 CFR Part 6

Licenses for Importation of Sugar Free From Quota To Be Re-Exported in Refined Form

AGENCY: Office of the Secretary, USDA.

ACTION: Proposed rule.

SUMMARY: This proposed rule would amend the regulations which govern the importation of sugar, to be re-exported in refined form, exempt from import quota to require that license holders export within 60 days rather than within 3 months a quantity of refined sugar corresponding to a quantity of raw sugar imported under the license and to amend the appeal procedures under those regulations. This proposal will enable more efficient administration of the program with the special export enhancement program for sugar being proposed by the Department of Agriculture.

DATE: Comments received prior to May 5, 1988, will be considered.

ADDRESS: Mail comments to Chief, Sugar Group, Foreign Agricultural Service, U.S. Department of Agriculture, Room 6095-South, 14th Street and Independence Avenue SW., Washington, DC 20250.

FOR FURTHER INFORMATION CONTACT: John Nuttall, Foreign Agricultural Service, Room 6095-South, 14th Street and Independence Avenue SW., Washington, DC 20250. Telephone: (202) 447-2916.

SUPPLEMENTARY INFORMATION: This proposed rule has been reviewed under U.S. Department of Agriculture procedures required by Executive Order 12291 and Departmental Regulation 1512-1 and has been classified as "not major" since the proposed rule, if made final, would not have any of the effects specified in those documents.

The Administrator, Foreign Agricultural Service (FAS), certifies that this proposed rule will not, if promulgated, have a significant economic impact on a substantial number of small entities. Consequently, no regulatory flexibility analysis is required under the provisions of the Regulatory Flexibility Act (5 U.S.C. 601 *et seq.*). The public is invited to comment on the impact of this proposed rule on small entities, and the Administrator, FAS, will review this determination in light of those comments.

The Administrator, Foreign Agricultural Service, has determined that a comment period of less than 60 days is appropriate for this proposed rule in order to facilitate promulgation of the regulations for the special export enhancement program for sugar required for fiscal year 1988 under section 583 of the Foreign Operations, Export Financing, and Related Programs Appropriations Act, 1988, as contained in section 101(e) of Pub. L. 100-202.

Section 583 of the Foreign Operations, Export Financing, and Related Programs Appropriations Act, 1988, as contained in Pub. L. 100-202, directs the Secretary of Agriculture to issue regulations for fiscal year 1988 that set forth the terms and conditions of a special sugar export enhancement program. Under that program, certain refined sugar must be exported within 60 days of the importation of certain raw sugar. The Department of Agriculture believes that the same requirement should apply to sugar imported under the Program "Sugar to be Re-Exported in Refined Form" (7 CFR 6.100-6.113). This will facilitate the administration of the program established pursuant to section 583. The proposed rule also would amend the appeal procedures of 7 CFR 6.110(c) to reflect the fact that the Licensing Authority no longer reports to the Director, Horticultural and Tropical Products Division, Foreign Agricultural Service.

List of Subjects in 7 CFR Part 6

Documentation, Exports, Foreign trade, Imports, Licenses, Quotas, Sugar.

Proposed Rule

For the reasons set out in the preamble, Title 7, Part 6 of the Code of Federal Regulations is proposed to be amended as follows:

Subpart—Importation of Sugar Free From Quota

1. The authority citation for Part 6, Subpart §§ 6.100-6.302, continues to read as follows:

Authority: Presidential Proclamation No. 5002, 47 FR 54269.

2. Section 6.101 is amended by revising paragraph (b) to read as follows:

§ 6.101 Issuance of a license.

* * * * *

(b) A quantity of refined sugar equivalent to the quantity of sugar, raw value, imported under the license, adjusted in accordance with § 6.108(c) of this subpart, must be re-exported within 60 days of the date of entry of such sugar. The licenses may contain such other conditions, limitations or restrictions as the Secretary, in his or her discretion, deems necessary.

* * * * *

3. Section 6.107 is amended by revising paragraph (e) to read as follows:

§ 6.107 Bond requirements.

* * * * *

(e) If the license holder fails to export, within 60 days of the date of entry of the corresponding sugar, an amount of sugar equivalent to the corresponding sugar, payment shall be made to the United States under the bond of the monetary amount corresponding to the amount of the charge to the license for the corresponding sugar not offset by timely exportation.

4. Section 6.110 is amended by revising paragraphs (a) and (c) to read as follows:

§ 6.110 Enforcement.

(a) If at any time after receiving the proof of export described in § 6.106 of this subpart, the Licensing Authority determines that an export of refined sugar corresponding to the amount of sugar entered under the license did not occur, and if the bond has been released under § 6.107, the Licensing Authority may assess liquidated damages against the license holder or, where the license holder has designated an agent to export such sugar under the program, against the license holder and/or such agent. The liquidated damages may be up to three times the difference between the Market Stabilization Price announced

by the Secretary for that fiscal year under §§ 6.300–6.302 of this title and the daily "spot" price of the Number 11 contract of the New York Coffee, Sugar and Cocoa Exchange times the amount of sugar, raw value, that should have been, but was not, exported. For the purposes of determining that daily "spot" Number 11 contract price, the Licensing Authority may select either the last market day before the entry of the corresponding sugar or the last market day before the end of the 60 day period, whichever results in the greatest differential between the two prices. If no "spot" Number 11 contract price is reported by the New York Coffee, Sugar and Cocoa Exchange for the relevant market day, then the Licensing Authority may use such price as he or she deems appropriate.

* * * * *

(c) The determination of the Licensing Authority under paragraphs (a) and (b) may be appealed to the Administrator, Foreign Agricultural Service (FAS), U.S. Department of Agriculture, Washington, DC 20250 within 30 days from the date of notification. The appeal shall be presented in writing specifically stating any reason as to why such dtermination should not stand. The Administrator, FAS, will provide such person with an opportunity for an informal hearing on such matter. The Licensing Authority may take action under subsection (b) during the pendency of any appeal.

4. Section 6.111 is revised to read as follows:

§ 6.111 Waiver.

Under unusual, unforeseen or extraordinary circumstances, the Secretary may extend the 60 day period for the re-export of sugar or may temporarily increase the maximum amount of the license.

Signed at Washington, DC, on March 28, 1988.

Thomas O. Kay,

Administrator, Foreign Agricultural Service.

[FR Doc. 88–7386 Filed 4–4–88; 8:45 am]

BILLING CODE 3410–10–M

Agricultural Marketing Service

7 CFR Part 1106

[Docket No. AO–210–A47]

Milk in the Southwest Plains Marketing Area; Emergency Decision on Proposed Amendments to Marketing Agreement and to Order

AGENCY: Agricultural Marketing Service, USDA.

ACTION: Proposed rule.

SUMMARY: This emergency decision adopts, on an expedited basis, changes in the pool plant provisions of the Southwest Plains milk order. The changes provide that a distributing plant, which is located in the Southwest Plains marketing area and packages and distributes primarily aseptically processed fluid milk products, would be a fully regulated plant under the order regardless of where such products are sold. The changes are based on a proprietary handler's proposal that was considered at a public hearing held on February 17, 1988, in Tulsa, Oklahoma. These changes are needed to reflect current marketing conditions and to stabilize the regulatory and pricing situation for a UHT plant that is located in the marketing area and thereby insure orderly marketing under the order. Marketing conditions are such that prompt amendatory action is required. For this reason, a recommended decision and the opportunity to file exceptions thereto is omitted. Cooperative associations will be polled to determine whether producers supplying the market favor the issuance of the order as it is proposed to be amended.

FOR FURTHER INFORMATION CONTACT: John F. Borovies, Marketing Specialist, USDA/AMS/Dairy Division, Order Formulation Branch, Room 2968, South Building, P.O. Box 96456, Washington, DC 20090–6456, (202) 447–2089.

SUPPLEMENTARY INFORMATION: This administrative action is governed by the provisions of Sections 556 and 557 of Title 5 of the United States Code and, therefore, is excluded from the requirements of Executive Order 12291.

The Regulatory Flexibility Act (5 U.S.C. 601–612) requires the Agency to examine the impact of a proposed rule on small entities. Pursuant to 5 U.S.C. 605(b), the Administrator of the Agricultural Marketing Service has certified that this action will not have a significant economic impact on a substantial number of small entities. The amendments will promote a continuation of orderly marketing of milk in the regulated area by producers and handlers.

Prior documents in this proceeding:

Notice of Hearing: Issued January 13, 1988; published January 19, 1988 (53 FR 1370).

Preliminary Statement

A public hearing was held on proposed amendments to the marketing agreement and the order regulating the handling of milk in the Southwest Plains marketing area. The hearing was held, pursuant to the provisions of the Agricultural Marketing Agreement Act of 1937, as amended (7 U.S.C. 601–674), and the applicable rules of practice (7 CFR Part 900), at Tulsa, Oklahoma on February 17, 1988. Notice of such hearing was issued on January 13, 1988 and published January 19, 1988 (53 FR 1370).

Interested parties were given until February 26, 1988, to file post-hearing briefs on proposal No. 1 as published in the hearing notice and on whether the proposal should be considered on an expedited basis.

The hearing notice specifically invited interested persons to present evidence concerning the probable regulatory and informational impact of the proposal on small businesses. However, no hearing participant testified about any potentially adverse impacts of the proposal on small businesses.

The material issues on the hearing record relate to:

1. Performance standards for a pool plant that packages and distributes aseptically processed fluid milk products.

2. Whether emergency marketing conditions exist to such an extent that omission of a recommended decision and the opportunity to file written exceptions thereto with respect to issue No. 1 is warranted.

Findings and Conclusions

The following findings and conclusions on the material issues are based on evidence presented at the hearing and the record thereof:

1. *Performance standards for a pool plant that packages and distributes aseptically processed fluid milk products.* The provisions of the Southwest Plains order that specify the basis for pooling a distributing plant should be expanded to include a fluid milk plant that is located in the marketing area if the principal activity of the plant is the packaging and distribution of aseptically processed fluid milk products. The pool status for such a plant should not be dependent upon the amount of route disposition in the Southwest Plains marketing area.

The current order provides that to qualify as a pool plant a distributing plant must dispose of at least 50 percent of its receipts of fluid milk products as Class I route disposition during the month. Also, such plant must dispose of at least 10 percent of such receipts on routes in the marketing area.

Kansas Food Packers, Inc., a family owned and operated dairy business, proposed that the order be amended to accommodate the operations of its fluid milk processing plant at Arkansas City,

Kansas. Proponent's witness stated that the intent of the proposal is to assure that its plant be pooled under the Southwest Plains order even though it has greater route disposition in marketing areas covered by other Federal orders. The hearing notice proposal would have provided a lower 35-percent seasonal route disposition standard for a UHT plant in the months of April-August because the handler's ice cream business is greater in such spring and summer months. At the hearing, however, Kansas Food Packers, Inc., modified its proposal to provide that a UHT plant be subject to the monthly 50 percent route disposition standard that applies for other distributing plants because the handler recently has used a majority of its milk receipts for Class I purposes. The UHT plant would have to be located in the marketing area but would not have to dispose of a minimum percentage of its receipts on routes in the marketing area, under the handler's proposal.

Since 1969 Kansas Food Packers, Inc., has operated a milk processing plant at Arkansas City, which is in Cowley County and is included in Zone IV of the Southwest Plains marketing area, where a minus 47-cent location adjustment ($2.30 Class I differential) applies. Until recently the plant was involved in processing Class II products, primarily ice cream mixes. Since the plant was engaged solely in manufacturing dairy products, it was not subject to regulation under the order.

The Chief Executive officer for Kansas Food Packers, Inc., testified that in December 1986, the Arkansas City plant began processing Class I "UHT" fluid milk products.[1] He stated that with the initiation of Class I processing, the regulatory status of such plant changed dramatically. For instance, UHT fluid milk products processed at the Arkansas City plant have been distributed in 12 different marketing areas covered by Federal orders. The orders involved are as follows: Georgia, Order No. 7; Southeastern Florida, Order No. 13; Chicago Regional, Order No. 30; Louisville-Lexington-Evansville, Order No. 46; Indiana, Order No. 49; Greater Kansas City, Order No. 64; Iowa, Order No. 79; New Orleans-Mississippi, Order No. 94; Greater Louisiana, Order No. 96; Southwest Plains, Order No. 106; Texas, Order No. 126; and Rio Grande Valley, Order No. 138. In addition, the witness indicated that the handler has bid on sales in other marketing areas and/or expects to sell UHT fluid milk products in territory regulated under other Federal orders.

The witness further testified about the plant's unstable regulatory status since December 1986. He indicated that the Arkansas City plant was a fully regulated distributing plant under the New Orleans-Mississippi order during the months of April–June and October–December 1987 and January and February 1988. In the other months, (January–March and July–September 1987) the plant was a partially regulated distributing plant under any Federal order covering the marketing area in which UHT fluid milk products were distributed during the month. For the months the plant was partially regulated under several orders, the handler was required to report separately the UHT plant's sales in each market. Proponent contends that these situations presented an unduly burdensome task for the plant operator as well as for the market administrators involved.

Proponent's witness indicated that UHT fluid milk products differ significantly from fluid milk products that are not aseptically processed and packaged. Since these products are processed at ultra-high temperatures and aseptically packaged in hermetically-sealed containers, they may be held at room temperature for long periods of time like other grocery items. In view of this, the distribution of such products involves fewer but larger shipments primarily through food service and institutional distributors. He also stated that none of the plant's UHT fluid milk products are sold directly to consumers. Conversely, fluid milk products that are not aseptically processed and packaged are distributed regularly by the plant operators on routes to numerous sales outlets several times each week. Because of the unique characteristics of UHT milk products, which do not require refrigeration and have a shelf-life of up to seven months, it is possible to transport the products long distance in non-refrigerated trucks. For this reason, the UHT plant's area of distribution would extend beyond the geographic limitations of a typical fluid milk plant.

Proponent's witness also stated that the differing pooling standards for distributing plants under Federal orders, which were drafted prior to UHT processing and therefore were designed to accommodate the operations of traditional fluid milk plants, also affect the plant's regulatory status. For example, the Arkansas City plant has been fully regulated under the New Orleans-Mississippi order because the minimum in-area route disposition standard under that order is the lesser of 10 percent of the plant's receipts or 1,500 pounds of milk per day. The daily limit translates into 45,000 pounds of route disposition for a 30-day month. To meet the 10 percent in-area standard, based on monthly receipts of 1.6 million pounds, the UHT plant would have to distribute 160,000 pounds of milk into the New Orleans-Mississippi or Southwest Plains marketing area to be considered a pool plant. However, since a lower minimum daily standard is provided under the New Orleans-Mississippi order, the UHT plant qualifies as a pool plant on the basis of 46,000 pounds of route disposition in the New Orleans-Mississippi market during the month and would not qualify as a pool plant on the basis of 159,000 pounds of route disposition in the Southwest Plains market for such month.

Because of the foregoing differences, proponent contends it is impossible to determine whether its UHT plant will qualify for pooling in any month and also under which order the plant will be eligible for pool status. The handler claims that this uncertainty about the plant's regulatory status makes it difficult to develop long-range marketing plans or to bid on milk contracts.

Proponent claims that the changing regulatory status of the UHT plant makes it difficult to arrange for a dependable supply of milk for its plant. Milk suppliers contend that the many various regulatory possibilities for the UHT plant must be taken into account because they affect the economic viability of supplying milk to such plant. In the past, milk was moved uneconomically through shipping plants prior to its shipment to the UHT plant solely to insure the regulatory status of the milk under the Southwest Plains order. The milk was received at the Meadow Gold pool plant in Tulsa and then transferred to the UHT plant at Arkansas City. This method of handling the milk resulted in unnecessary milk movements. In addition, the expenses associated with the extra hauling and plant handling of the milk were passed on to Kansas Food Packers, Inc.

There was a consensus among the hearing participants that the handler's modified proposal should be adopted. A spokesman for three cooperative

[1] "UHT" fluid milk products refer to the pasteurization process that is used in producing an aseptically processed milk product. For this reason, it is more appropriate for purposes of the order provisions to refer to the products involved as aseptically processed fluid milk products rather than as UHT milk products. However, to simplify the discussion about the handler's plant and the products processed thereat in view of the common usage and acceptance within the dairy industry of the term "UHT," reference will be made to UHT milk or milk products and UHT plant throughout this decision.

associations (Associated Milk Producers, Inc., Mid-America Dairymen, Inc. and Southern Milk Sales, Inc.) which represent 85 percent of the milk supply for this market and furnish all of the milk for the Arkansas City plant, supported the proposal. There was no opposition to the proposal at the hearing or in briefs.

The record evidence indicates that proponent's UHT plant has been processing UHT fluid milk products since December 1986. It indicates that the plant is using an aseptic processing system that will include ultra-high temperature pasteurization. Also, the finished UHT milk products, which are defined as fluid milk products under the terms and provisions of the Southwest Plains order, can be transported and stored without refrigeration for several months.

The evidence in the record shows that the UHT plant is supplied with milk from farms of producers who are located in the marketing area. A significant portion of the supply for such plant comes from dairy farms located within 75 miles northwest of Arkansas City, generally within a 20-mile radius of Wichita in Sedgwick County, Kansas. The record also indicates that most if not all of the milk produced in southern and central Kansas, which includes the primary procurement area of the Arkansas City plant, is pooled under the Southwest Plains order. More than 13 percent of the Kansas milk pooled under such order was produced on farms located in Sedgwick County. The record further indicates that the UHT plant receives about 10 loads of milk per week from 20 to 30 dairy farmers. In January 1988, the handler received 1.6 million pounds of milk and used about one million pounds of such receipts to process UHT fluid milk products. These data reflect a Class I use of 63 percent for the UHT plant.

The record evidence also clearly shows that the procedures used by the handler to distribute UHT fluid milk products that do not require refrigeration differ substantially from those employed by other handlers in distributing fluid milk products that must be refrigerated. Refrigerated fluid milk products are delivered on regular delivery routes that generally are operated by the plant operators who distribute such products directly from the processing plant to numerous retail and wholesale outlets several times each week.

Conversely, UHT fluid milk products are handled like dry goods grocery items. They are moved through intermediaries such as brokers and distributors. Also, UHT fluid milk products normally are not sold on regular delivery routes and usually they are not sold to customers every-other-day. Because of the extended shelf life for UHT milk, the time span between the processing of UHT milk and when it is purchased by consumers may be much longer. These differences have resulted in the UHT plant not having sufficient sales in the Southwest Plains market or in any other marketing area to qualify the plant for pooling under any particular order in certain months.

Usually a distributing plant that qualifies for pooling under more than one Federal order in the same month is regulated under the order in which the plant has the greatest route disposition. This is provided to assure that all handlers who have the largest proportion of their business in a particular market are subject to the same pricing and other regulatory provisions. Because of the unique marketing characteristics associated with the processing and distribution of UHT fluid milk products and the plant's regulatory experience since December 1986, it is evident that proponent's UHT plant would not be fully regulated under any particular order on a regular basis. The marketing porblems that occur from such pooling uncertainties are sufficient to demonstrate that the traditional basis for pooling a distributing plant should be modified.

This shifting regulatory status of proponent's UHT milk plant under various milk orders creates price uncertainties involing the handler's cost for milk and the payments to producers supplying milk for the plant. These uncertainties are not conducive to maintaining orderly marketing under the Southwest Plains order. Similarly, it could result in marketing instability among handlers and producers supplying other Federal orders.

For example, the UHT plant operator could not be certain about the level of Federal order Class I prices that would apply at the Arkansas City location. An exhibit introduced by proponent at the hearing indicates that the Class I price differential at Arkansas City, which is $2.30 under the Southwest Plains order, is $1.875 or 42.5 cents lower under the New Orleans-Mississippi order. Also, information that was officially noticed at the hearing shows that the Class I differential at the Arkansas City location, which is $2.30 under the Southwest Plains and Texas orders, would be lower under each of the other 10 Federal order markets where the Arkansas City plant has sold UHT fluid milk products. Such differentials vary from $2.29 under the Greater Louisiana order to $.585 under the Louisville-Lexington-Evansville order, a range of $1.705 per hundredweight. Neither the plant nor the plant's competitors would desire any frequent shifting of the plant's regulatory status with such a varying pattern of Class I prices. Moreover, price changes of this magnitude would present serious marketing problems for Kansas Food Packers in determining what price to palce on the various UHT produces it offers for sale.

Producers supplying the UHT plant also would face uncertainty about the level and the basis of returns they would receive if the plant's regulatory status is unstable. Prices that dairy farmers receive under a Federal milk marketing order are influenced by the amount of the Class I differential, the market utilization of milk, the applicable location adjustments and the method of paying producers. Since the regulatory provisions vary from order-to-order depending on marketing conditions, producer prices at the Arkansas City plant could vary considerably if such plant were to shift regulation from one order to another on the basis of a change in where the plant's fluid milk products are sold.

Proponent entered a hearing exhibit to show how the marketwide utilization affects producer blend prices. The exhibit compared blend prices at Arkansas City in each month of 1987 under the New Orleans-Mississippi (order 94) and Southwest Plains (Order 106) orders. As indicated earlier, the Class I differential at Arkansas City under Order 106 is 42.5 cents higher than under Order 94. However, for all of 1987, blend prices at that location under Order 106 would have averaged only 15 cents higher than such prices under Order 94. Because of the higher Class I utilization for the Order 94 market, in the months of July–November 1987, blend prices under Order 94 would have exceeded such prices under Order 106. The price differences in these five months ranged from 3.5 cents in November to 19.5 cents in October. For the months of January–June and December of 1987 when the Order 94 Class I utilization was lower, Order 106 blend prices were higher than such prices under Order 94. The price differences for these seven months ranged from 8.5 cents in June to 56.5 cents in April.

The exhibit indicates that Order 106 blend prices were considerably above the Order 94 blend prices in the spring months of 1987. If a similar pattern of prices results in 1988, it will place the Arkansas City handler at a pricing disadvantage again this spring if the

UHT plant is fully regulated under Order 94 and the handler must pay the higher Order 106 Class I prices to the cooperatives furnishing milk for such plant. In view of this, Kansas Food Packers, Inc., asked that its modified proposal become effective on April 1, if at all possible.

Producer prices also are affected by the method in which dairy farmers are paid. It is noteworthy that two of the distant Federal order markets (Georgia and Louisville-Lexington-Evansville) where the UHT plant has sold fluid milk products provide base-excess plans to pay producers. Certainly regulation of the UHT plant under an order that includes a base plan would be disruptive for the handler and the dairy farmers supplying milk for such plant.

Because large minus location adjustments would result in low Class I and blend prices at the Arkansas City location under several of the orders covering distant marketing areas where the UHT plant has sold its fluid milk products, it is questionable whether such plant would be able to procure an adequate milk supply if it were to become fully regulated under any such order. In view of these marketing conditions, consideration must be given to regulating the UHT plant under the order covering the market where there is reasonable assurance that the plant will have an adequate supply of producer milk available. The record indicates that the Arkansas City UHT plant can be reasonably assured of an adequate supply of milk if it is regulated under the Southwest Plains order.

The record evidence shows that in the months the UHT plant was not fully regulated under the New Orleans-Mississippi order (Order 94), cooperatives supplying the UHT plant charged Kansas Food Packers the classified prices established under the Southwest Plains order. It also indicates that during the months when such plant was regulated under Order 94 the cooperatives continued to use the Southwest Plains order as the basis of pricing the milk they supplied to the UHT plant, even though the Class I price at Arkansas City under Order 94 was considerably lower than such price at that location under the Southwest Plains order. Hence, during the months the plant was fully regulated under Order 94, the handlers was sharing its Class I sales with Order 94 producers and buying Class I milk from suppliers at higher Southwest Plains Class I prices. Thus, adoption of this proposal, would not change the prices that suppliers are charging the UHT plant for milk.

It is concluded that overall market stability will tend to be maintained and the regulatory stability of the handler's UHT plant (or any other such plant) will tend to be assured if the order is revised generally in accordance with the modified proposal of Kansas Food Packers, Inc. Also, adoption of the handler's proposal will lessen certain administrative obligations of the UHT handler and the audit verification duties required of the market administrators.

In connection with establishing the pooling standards for a UHT plant, it is necessary to make certain other conforming changes. First of all, the Southwest Plains order defines a distributing plant as a plant from which there is route disposition in the marketing area during the month. Because of this provision, if during any particular month the UHT plant met the 50 percent route disposition standard but had no distribution of fluid milk products in the Southwest Plains marketing area, the plant would not be eligible for pool plant status. This is contrary to proponent's intent. Accordingly, the distributing plant definition is modified to accomplish proponent's intentions of assuring the UHT plant's regulation under the Southwest Plains order even in the unlikely event that the plant sells no fluid milk products in the marketing area in a particular month.

It also is necessary to revise the pool supply plant and pool balancing plant provisions to specify that shipments to a pool distributing plant processing UHT fluid milk products will count as qualifying movements for purposes of establishing the pool status of the shipping plants. Since UHT distributing plants will be required to meet the same minimum Class I route disposition standard that other distributing plants must meet each month, it is appropriate that deliveries of milk from market suppliers count toward qualifying plants operated by such shipping handlers.

In connection with the implementation of these conforming changes, the entire pool plant section has been redrafted for the sake of convenience. Because of that, some obsolete language that refers to the individual orders that were merged to form the Southwest Plains order in § 1106.7(b)(1) is being deleted at this time. It is also noted that the 20-percent shipping standard for supply plants set forth in § 1106.7(b)(1) has been suspended for the months of March-August 1988 (53 FR 9853).

Proponent's intent was that adoption of its proposal would assure the continuous regulation of the UHT plant under the Southwest Plains order. However, proponent's intent in regard to such a pooling arrangement cannot be effectuated by amending only the Southwest Plains order. It is possible that administrative problems could arise if the plant qualifies under this order on the basis of the plant's location in the marketing area and also meets the pooling standards under one or more other Fedeal orders on the basis of the plant's sales in other markets. It is possible that any such other order may not include a complementary provision which recognizes the lock-in provision of the Southwest Plains order and allows the plant to continue regulation under such order. Thus, whenever such a pooling conflict arises, an administrative decision as to the order under which the plant shall be pooled may be necessary, depending on the specific provisions of such order.

2. *Emergency action.* The omission of a recommended decision was requested at the hearing by Kansas Food Packers, Inc., the proponent of the lock-in proposal for its UHT milk plant that was discussed in the foregoing findings and conclusions under issue No. 1. That request was supported at the hearing by the three aforementioned cooperatives that represent 85 percent of the market's producer milk and furnish all of the milk for the UHT plant. There was no opposition presented at the hearing or in briefs about dealing with this issue on an expedited basis.

The data, testimony and evidence in the record of this proceeding strongly indicate the need for prompt amendatory action. Hence, it would be desirable to make the amended order effective as soon as possible. It is imperative to stabilize the handler's regulatory and pricing situation at the earliest practicable date. For the foregoing reasons, it is found that the due and timely execution of the Secretary's obligation in this proceeding requires the omission of a recommended decision and opportunity to file exceptions thereto.

Rulings on Proposed Findings and Conclusions

A brief and proposed findings and conclusions were filed on behalf of the proponent, Kansas Food Packers, Inc. Such brief, proposed findings and conclusions and the evidence in the record were considered in making the findings and conclusions set forth above. To the extent that the suggested findings and conclusions filed by such handler are inconsistent with the findings and conclusions set forth herein, the request to make such findings or reach such conclusions is denied for the reasons previously stated in this decision.

General Findings

The findings and determinations hereinafter set forth supplement those that were made when the Southwest Plains order was first issued and when it was amended. The previous findings and determinations are hereby ratified and confirmed, except where they may conflict with those set forth herein.

(a) The tentative marketing agreement and the order, as hereby proposed to be amended, and all of the terms and conditions thereof, will tend to effectuate the declared policy of the Act

(b) The parity prices of milk as determined pursuant to section 2 of the Act are not reasonable in view of the price of feeds, available supplies of feeds, and other economic conditions which affect market supply and demand for milk in the marketing area, and the minimum prices specified in the tentative marketing agreement and the order, as hereby proposed to be amended, are such prices as will reflect the aforesaid factors, insure a sufficient quantity of pure and wholesome milk, and be in the public interest; and

(c) The tentative marketing agreement and the order, as hereby proposed to be amended, will regulate the handling of milk in the same manner as, and will be applicable only to persons in the respective classes of industrial and commercial activity specified in, a marketing agreement upon which a hearing has been held.

Marketing Agreement and Order

Annexed hereto and made a part hereof are two documents, a Marketing Agreement regulating the handling of milk, and an Order amending the order regulating the handling of milk in the Southwest Plains marketing area, which have been decided upon as the detailed and appropriate means of effectuating the foregoing conclusions.

It is hereby ordered, That this entire decision and the two documents annexed hereto be published in the **Federal Register.**

Determination of Producer Approval and Representative Period

January 1988 is hereby determined to be the representative period for the purpose of ascertaining whether the issuance of the order, as amended and as hereby proposed to be amended, regulating the handling of milk in the Southwest Plains marketing area is approved or favored by producers, as defined under the terms of the order (as amended and as hereby proposed to be amended), who during such representative period were engaged in the production of milk for sale within the aforesaid marketing area.

List of Subjects in 7 CFR Part 1106

Milk marketing orders, Milk, Dairy products.

Signed at Washington, DC, on March 29, 1988.

Kenneth A. Gilles,

Assistant Secretary for Marketing and Inspection Services.

Order amending the order, regulating the handling of milk in the Southwest Plains marketing area.

(This order shall not become effective unless and until the requirements of § 900.14 of the rules of practice and procedure governing proceedings to formulate marketing agreements and marketing orders have been met.)

Findings and Determinations

The findings and determinations hereinafter set forth supplement those that were made when the order was first issued and when it was amended. The previous findings and determinations are hereby ratified and confirmed, except where they may conflict with those set forth herein.

(a) Findings. A public hearing was held upon certain proposed amendments to the tenative marketing agreement and to the order regulating the handling of milk in the Southwest Plains marketing area. The hearing was held pursuant to the provisions of the Agriculural Marketing Agreement Act of 1937, as amended (7 U.S.C. 601–674), and the applicable rules of practice and procedure (7 CFR Part 900).

Upon the basis of the evidence introduced at such hearing and the record thereof, it is found that:

(1) The said order as hereby amended, and all of the terms and conditions thereof, will tend to effectuate the declared policy of the Act;

(2) The parity prices of milk, as determined pursuant to section 2 of the Act, are not reasonable in view of the price of feeds, available supplies of feeds, and other economic conditions which affect market supply and demand for milk in the said marketing areas; and the minimum prices specified in the order as hereby amended are such prices as will reflect the aforesaid factors, insure a sufficient quantity of pure and wholesome milk, and be in the public interest; and

(3) The said order as hereby amended regulates the handling of milk in the same manner as, and is applicable only to persons in the respective classes of industrial or commercial activity specified in, a marketing agreement upon which a hearing has been held.

Order Relative to Handling

It is therefore ordered, That on and after the effective date hereof, the handling of milk in the Southwest Plains marketing area shall be in conformity to and in compliance with the terms and conditions of the order, as amended, and as hereby amended, as follows:

PART 1106—MILK IN THE SOUTHWEST PLAINS MARKETING AREA

1. The authority citation for CFR Part 1106 continues to read as follows:

Authority: Secs 1–19, 48 Stat. 31, as amended; 7 U.S.C. 601–674.

2. In § 1106.5, paragraph (c) is revised to read as follows:

§ 1106.5 Distributing plant.

* * * * *

(c) From which there is route disposition in the marketing area during the month, except that this requirement shall not apply to a distributing plant described in § 1106.7(e).

3. Section 1106.7 is revised to read as follows:

§ 1106.7 Pool plant.

Except as provided in paragraph (f) of this section, "pool plant" means:

(a) A distributing plant (other than one described in paragraph (e) of this section), from which during the month there is:

(1) Total route disposition (except filled milk) in an amount not less than 50 percent of the total quantity of fluid milk products (except filled milk) received at such plant, including producer milk diverted from the plant; and

(2) Route disposition (except filled milk) in the marketing area in an amount not less than 10 percent of such receipts.

(b) A supply plant from which during the month not less than 50 percent of the total quantity of milk that is received from dairy farmers (including producer milk diverted from the plant pursuant to § 1106.13, but excluding milk diverted to such plant) and handlers described in § 1106.9(c) is transferred or diverted pursuant to paragraph (b)(2) of this section to plants described in paragraphs (a) or (e) of this section, subject to the following:

(1) A supply plant that has qualified as a pool plant during each of the immediately preceding months of September through January shall continue to so qualify in each of the following months of February through August until any month of such period in which less than 20 percent of the milk received or diverted as previously specified, is shipped to plants described

in paragraph (a) or (e) of this section. A plant not meeting such 20 percent requirement in any month of such February–August period shall be qualified in any remaining month of such period only if transfers and diversions pursuant to paragraph (b)(2) of this section to plants described in paragraph (a) or (e) of this section are not less than 50 percent of receipts or diversions, as previously specified.

(2) The operator of a supply plant that is located in the marketing area or in a county adjacent to the marketing area may include milk diverted pursuant to § 1106.13(c) from such plant to plants described in paragraph (a) or (e) of this section as qualifying shipments in meeting the supply plant's monthly shipping percentages. The diverted milk used in meeting such qualifying shipment shall be limited to the milk of dairy farmers from whom at least one day's production is physically received during the month at such supply plant. Diversions in excess of three-fifths of the shiping requirement shall not be included as qualifying shipments.

(c) Any plant located in the marketing area or in a county adjacent to the marketing area that is operated by a cooperative association if pool plant status under ths paragraph is requested by the cooperative association and during the month, or the 12-month period ending with the immediately preceding month, 45 percent or more of the producer milk of members of the cooperative association (and any producer milk of nonmembers and members of another cooperative association which may be marketed by the cooperative association) is physically received in the form of bulk fluid milk products at plants specified in paragraph (a) or (e) of this section either directly from farms or by transfer from supply plants operated by the cooperative association and from plants of the cooperative association for which pool plant status has been requested under this paragraph subject to the following conditions:

(1) The plant does not qualify as pool plant under paragraph (a), (b) or (e) of this section or under comparable provisions of another Federal order; and

(2) The plant is approved by a duly constituted regulatory agency for the handling of milk approved for fluid consumption in the marketing area.

(d) The shipping standards in paragraphs (b) and (c) of this section may be increased or decreased temporarily up to 10 percentage points by the Director of the Dairy Division if the Director finds such revision is necessary to obtain needed shipments or to prevent uneconomic shipments. Before making such a finding the Director shall investigate the need for revision, either at the Director's initiative or at the request of interested persons. If the investigation shows that a revision might be appropriate, the Director shall issue a notice stating that revision is being considered and inviting data, views, and arguments. If a plant which would not otherwise qualify as a pool plant during the month qualifies as a pool plant because of a reduction is shipping standards pursuant to this paragraph, such plant shall be a nonpool plant for such month if the operator files a written request for nonpool plant status with the market administrator at the time the report is filed for such plant pursuant to § 1106.30.

(e) A distributing plant that meets the following conditions:

(1) The plant is located in the marketing area;

(2) The plant has route disposition (except filled milk) during the month in an amount not less than 50 percent of the total quantity of fluid milk products (except filled milk) received at such plant, including producer milk diverted from such plant; and

(3) The principal activity of such plant is the processing and distribution of aseptically processed fluid milk products.

(f) The term "pool plant" shall not apply to the following plants:

(1) A producer-handler plant or governmental agency plant;

(2) A distributing plant qualified pursuant to paragraph (a) of this section which also meets the pooling requirements of another Federal order and from which there is a greater quantity of route disposition, except filled milk, during the month in such other Federal order marketing area than in this marketing area, except that if such plant was subject to all the provisions of this part in the immediately preceding month, it shall continue to be subject to all the provisions of this part until the third consecutive month in which a greater proportion of its route disposition, except filled milk, is made in such other marketing area unless, notwithstanding the provisions of this paragraph, it is regulated under such other order. On the basis of a written application made by the plant operator at least 15 days prior to the date for which a determination of the Secretary is to be effective, the Secretary may determine that the route disposition in the respective marketing areas to be used for purposes of this paragraph shall exclude (for a specified period of time) route disposition made under limited term contracts to governmental bases and institutions;

(3) A distributing plant qualified pursuant to paragraph (a) of this section which also meets the pooling requirements of another Federal order and from which there is a greater quantity of route disposition, except filled milk, during the month in this marketing area than in such other Federal order marketing area but which plant is, nevertheless, fully regulated under such other Federal order;

(4) A supply plant qualified pursuant to paragraph (b) of this section which also meets the pooling requirements of another Federal order and from which greater qualifying shipments are made during the month to plants regulated under such other order than are made to plants regulated under this part;

(5) A plant qualified pursuant to paragraph (b) of this section which has automatic pooling status under another Federal order; or

(6) That portion of a plant that is not approved by a duly constituted regulatory agency for the receiving, processing or packaging of any fluid milk product for fluid disposition and is physically separated from the portion of the plant having such approval.

Marketing Agreement Regulating the Handling of Milk in the Southwest Plains Marketing Area

The parties hereto, in order to effectuate the declared policy of the Act, and in accordance with the rules of practice and procedure effective thereunder (7 CFR Part 900), desire to enter into this marketing agreement and do hereby agree that the provisions referred to in paragraph I hereof as augmented by the provisions specified in paragraph II hereof, shall be and are the provisions of this marketing agreement as if set out in full herein.

I. The findings and determinations, order relative to handling, and the provisions of §§ 1106.1 to 1106.86, all inclusive, of the order regulating the handling of milk in the Southwest Plains marketing area (7 CFR Part 1106) which is annexed hereto; and

II. The following provisions:

Section1106.87 Record of milk handled and authorization to correct typographical errors.

(a) Record of milk handled. The undersigned certifies that he handled during the month of January 1988, hundredweight of milk covered by this marketing agreement.

(b) Authorization to correct typographical errors. The undersigned hereby authorizes the Director, or Acting Director, Dairy Division, Agricultural Marketing Service, to correct any typographical errors which may have been made in this marketing agreement.

Section 1106.88 Effective date. This marketing agreement shall become effective upon the execution of a counterpart hereof by the Secretary in accordance with Section 900.14(a) of the aforesaid rules of practice and procedure.

In Witness Whereof, The contracting handlers, acting under the provisions of the Act, for the purposes and subject to the limitations herein contained and not otherwise, have hereunto set their respective hands and seals.

(Signature)
BY
(Name) (Title)

(Address)

(Seal)
Attest
Date

[FR Doc. 88-7387 Filed 4-4-88; 8:45 am]

BILLING CODE 3410-02-M

Foreign Agricultural Service

7 CFR Part 1530

Special Export Enhancement Program for Sugar (SEEPS)

AGENCY: Foreign Agricultural Service, USDA.

ACTION: Proposed rule.

SUMMARY: This proposed rule would establish a special export enhancement program for sugar (SEEPS) which would enable U.S. refiners to import, exempt from quota, raw sugar from certain Caribbean countries and the Republic of the Philippines at U.S. domestic prices, and to export an equivalent amount of U.S. produced refined sugar to world markets.

DATES: In order to assure consideration, comments must be received on or before May 5, 1988.

ADDRESS: Mail or deliver comments to the General Sales Manager, Foreign Agricultural Service, Department of Agriculture, Washington, DC 20250.

FOR FURTHER INFORMATION CONTACT: Mr. John Nuttall, Assistant to the Assistant Administrator, International Trade Policy, Foreign Agricultural Service (FAS), USDA, Washington, DC 20250, (Phone (202) 447-2916) for information on compliance with the existing regulations, 7 CFR 6.100-6.113; L. T. McElvain, Director, CCC Operations Division, Export Credits, FAS (Phone (202) 447-6225), or Donald W. Street, Direct Sales Staff, CCC Operations Division, Export Credits, FAS (Phone (202) 382-9240) for information concerning this proposed rule.

SUPPLEMENTARY INFORMATION:

Discussion of Rule

Section 583 of the Foreign Operations, Export Financing and Related Programs Appropriations Act, 1988, as contained in section 101(e) of Pub. L. 100-202, directs the Secretary of Agriculture to issue regulations for a special export enhancement program for sugar for fiscal year 1988.

Under that program raw sugar from the Republic of the Philippines and Caribbean countries designated as beneficiary countries pursuant to the Caribbean Basin Economic Recovery Act (19 U.S.C. 2701 *et seq.*) would be imported into the United States under the benefit of a subsidy, and an equivalent quantity of refined sugar produced in the United States would be exported within 60 days.

This proposed rule sets forth the terms and conditions for the program which will be administered by the General Sales Manager, Foreign Agricultural Service. Under the proposed rule, only those refiners holding a license issued in accordance with the provisions of 7 CFR 6.100-6.113 would be eligible to participate in the program. In order to apply for a bonus under the program, the refiner must have entered into firm contracts for the purchase of sugar from a designated country and the export sale of an equivalent quantity of sugar refined in the United States.

More detailed terms and conditions of the program would be supplied in announcements issued in accordance with the regulations for the program.

In general, it is expected that the special export enhancement program for sugar would operate as follows. The General Sales Manager will issue an announcement containing detailed terms and conditions for the program and will invite offers under that announcement. The invitation for offers will specify the eligible supplying country or countries and may specify eligible destination countries. A qualified refiner who holds a license pursuant to 7 CFR 6.100-6.113 may then enter into a private commercial contract to pruchase raw sugar from a specified supplying country. The refiner must also enter into the contract with a buyer to export an equivalent amount of sugar refined in the United States. The contracts to purchase raw sugar and to sell refined sugar may be conditioned upon the General Sales Manager's approval of the refiner's bonus. After these arrangements, the refiner would then submit its offer to the General Sales Manager. These offers will be adjusted by the General Sales Manager to reflect differing transportation costs, and will then be reviewed. Refiners will be notified of acceptance of their offers in writing. Payment of the bonus will be made to the refiner after performance of the underlying contracts and upon the presentation and approval of certain documents, including a certificate issued by the certifying authority of the supplying country stating the price and quantity of the raw sugar purchased.

The operation of the program is subject to review and change at any time after comments are received and in light of experience gained in operating the program.

A number of issues will need to be addressed in drafting the detailed terms and conditions to be provided in the announcements to be issued for the program, including:

(1) How to adjust the offers submitted to reflect differing costs of transportation. Section 583(b) provides in part: "In order to maximize the number of competing bidders, the Secretary shall, in determining the low bidders in the special export enhancement program established under this section, make appropriate adjustments in bids received from sugar refiners and processors to reflect differing transportation costs based on refinery and factory location." It is not clear how USDA can best implement this provision, particularly in the case of a refiner with more than one refinery location. If the refinery location is specified in the agreement between USDA and the refiner, this could interfere with the refiner's most efficient use of resources, since a refinery's operating status could change prior to actual entry of the sugar. Similarly, since substitution of sugar is expressly permitted by section 583, it would normally not be known at the time of entering into the agreement the location from which the refined sugar will be exported:

(2) How to provide sufficient assurance of full performance, and how this assurance will affect or be affected by the requirements of 7 CFR 6.100-6.113; and

(3) How the program should take account of any duty drawback claimed by the refiner for sugar exported under this program.

Section 583(c) provides that the total cost of the proposed program cannot exceed the outlay costs of the commodities that would otherwise have been made available to compensate the designated countries for the 1988 sugar quota year pursuant to section 416 of the Agricultural Act of 1949, less $12 million. The Secretary of Agriculture has determined that no commodities would otherwise have been made available for that purpose to these countries. Accordingly, under the provisions of section 583(c), no bonuses would be available under the proposed program.

However, even if the permissible total cost for the program were a positive

dollar amount under the provisions of section 583, operation of the proposed program would require legislation making available the resources to pay the bonus for the import of the sugar.

Rulemaking Requirements

This rule has been reviewed under USDA procedures required by Executive Order 12291 and Departmental Regulation 1512-1 and has been classified as "not major", since the rule would not have any of the effects specified in those documents.

Melvin E. Sims, General Sales Manager, Foreign Agricultural Service, has determined that a comment period of less than 60 days is appropriate for this proposed rule in order to comply with section 583 of the Foreign Operations, Export Financing and Related Programs Appropriations Act, 1988, as contained in section 101(e) of Pub. L. 100-202, which directs the Secretary to issue regulations for fiscal year 1988.

To the extent that the provisions of the Regulatory Flexibility Act may apply, the General Sales Manager, Foreign Agricultural Service (FAS), certifies that this rule, if promulgated, would not have a significant economic impact on a substantial number of small entities since there would not be a substantial number of such entities affected. Consequently, no regulatory flexibility analysis is required under the provisions of the Regulatory Flexibility Act (5 U.S.C. 601 *et seq.*). The public is invited to comment on the impact of this rule on small entities, and the General Sales Manager will review this determination in light of those comments.

The public is invited to submit written comments regarding the proposed rule and the structure, terms and conditions of the proposed program, including the issues highlighted above. Each person submitting comments regarding the proposed rule must include his or her name and address and give reasons for any suggested changes in the proposed rule. Copies of all written communications received will be available for examination by interested persons in Room 4525, South Building, during regular business hours.

The paperwork requirements imposed by this rule will not become effective until they have been approved by the Office of Management and Budget under the Paperwork Reduction Act of 1980.

List of Subjects in 7 CFR Part 1530

Caribbean Basin Initiative countries, Exports, Imports, Philippines, Sugar.

Proposed Rule

For the reasons set out in the Preamble, it is proposed to amend Part 1530 of Chapter 15 of Title 7 of the CFR by adding a new subpart as follows:

PART 1530—[AMENDED]

Subpart D—Special Export Enhancement Program for Sugar (SEEPS)

Sec.
1530.401 General statement.
1530.402 Definitions.
1530.403 General conditions of eligibility.
1530.404 Application for a bonus.
1530.405 Evaluation of bonus applications.
1530.406 Delay or failure in performance.
1530.407 Import requirements.
1530.408 Export requirements.
1530.409 Payment of bonus.
1530.410 Audit of records and access to the premises.
1530.411 Officials not to benefit.
1530.412 Covenant against contingent fees.

Subpart D—Special Export Enhancement Program for Sugar (SEEPS)

Authority: Sec. 583, Foreign Operations, Export Financing and Related Programs Appropriations Act, 1988, as contained in section 101(e) of Pub. L. 100-202, 101 Stat. 1329 (Dec. 22, 1987).

§ 1530.401 General statement.

(a) These regulations provide for a special export enhancement program for sugar (SEEPS), as required by section 583 of the Foreign Operations, Export Financing and Related Programs Appropriations Act, 1988 (the "Act"), as contained in section 101(e) of Pub. L. 100-202.

(b) A dollar amount shall be computed by the Secretary of Agriculture, according to the formula set forth in section 583 of the Act, for the total amount of bonuses to be paid under this program. This amount shall be allocated among each country designated as a beneficiary country under the Caribbean Basin Economic Recovery Act (19 U.S.C. 2701 *et seq.*), and the Republic of the Philippines.

(c) The General Sales Manager of the Foreign Agricultural Service may limit the foreign countries which are eligible destinations for refined sugar exported by refiners as part of this program.

(d) In addition to the provisions of this subpart, the importation of sugar under this program shall be subject to the terms and conditions of 7 CFR 6.100 through 6.113, "Subpart—Importation of Sugar Free From Quota."

(e) This program will be administered by the General Sales Manager.

§ 1530.402 Definitions.

For purposes of this subpart:

(a) "Firm contract" means a contract in which a price for purchase or sale of sugar has been established, and which legally binds the parties to the purchase or sale of sugar, except that the contract may be conditioned upon the acceptance to the refiner's offer by the General Sales Manager.

(b) "General Sales Manager" means the General Sales Manager and Associate Administrator, Foreign Agricultural Service, United States Department of Agriculture, or his or her designee.

§ 1530.403 General conditions of eligibility.

(a) Under this subpart, only a refiner which, at the time of application, holds a license issued pursuant to 7 CFR 6.100 through 6.113 that is in full force and effect may apply for a bonus. The General Sales Manager may require additional conditions for eligibility in the announcement.

(b) Before entering into an agreement with a refiner, the General Sales Manager may require a performance security to be posted in an amount sufficient to protect the integrity of the program. This security may be in addition to that required by 7 CFR 6.100 through 6.113.

§ 1530.404 Application for a bonus.

Before applying for a bonus, a refiner must have a firm contract to purchase raw sugar from one of the countries designated by the General Sales Manager and a firm contract to sell an equivalent amount of refined sugar to be exported to an eligible country. Both contracts must be entered into after the date of the announcement and applicable invitation.

§ 1530.405 Evaluation of bonus applications.

The General Sales Manager will make appropriate adjustments to the bonus applications to reflect differing transportation costs based on refinery location. In evaluating applications for a bonus, the General Sales Manager may consider the price paid for the raw sugar, price received for the refined sugar and any other factors that the General Sales Manager deems necessary. No applications will be accepted subsequent to September 30, 1988.

§ 1530.406 Delay or failure in performance.

If a refiner which has entered into an agreement under this Subpart determines that it will be unable to import the raw sugar or export the refined sugar as required in the

agreement, the refiner shall promptly notify the General Sales Manager. The General Sales Manager will then determine an appropriate remedy, considering all of the circumstances. This remedy may include a reduction in the bonus, termination of the agreement, forfeiture of the refiner's performance security, or any other remedy determined to be appropriate and equitable under the circumstances. The determination of the General Sales Manager may be appealed to the Administrator, Foreign Agricultural Service, following the procedures set forth in 7 CFR 6.110(c).

§ 1530.407 Import requirements.

No application for a bonus will be accepted by the General Sales Manager if the raw sugar to which the application relates has entered the United States prior to the date the General Sales Manager received the application.

§ 1530.408 Export requirements.

(a) A quantity of sugar refined in the United States equivalent to the quantity of raw sugar imported into the United States under the purchase contract must be exported within 60 calendar days from the date of entry of the raw sugar. Under unusual, unforeseen or extraordinary circumstances, the General Sales Manager may extend the 60 calendar day period to export the refined sugar.

(b) Exports of sugar made prior to the date the General Sales Manager received the application for a bonus relating to that sugar will not be eligible for the purpose of receiving a bonus under this subpart.

(c) Exports of refined sugar under an agreement may be made prior to date of entry of the raw sugar under the agreement.

§ 1530.409 Payment of bonus.

Payment of the bonus to the refiner under an agreement will not be made until it is shown that the eligible raw sugar under the agreement has entered the United States and the equivalent quantity of refined sugar has been exported under the agreement to an eligible country.

§ 1530.410 Audit of records and access to the premises.

The refiner shall maintain accurate records regarding all aspects of each agreement entered into by the refiner under this subpart. The Secretary of Agriculture and Comptroller General of the United States through their authorized representatives shall, until the expiration of three years after the bonus has been paid under an agreement, have access to books, records and accounts pertaining to sales, purchases, inventory, inventory processing, administrative costs and incidental costs both normal and unforeseen of the parties involving transactions relating to an agreement, or any other transactions which may bear on the General Sales Manager's determination of the appropriate bonus and shall have access to the premises of the parties involved during regular business hours to inspect, examine, audit and make copies of such books, records and accounts.

§ 1530.411 Officials not to benefit.

No member of or Delegate to Congress or Resident Commissioner shall be admitted to any share or part of an agreement entered into under this subpart or to any benefit that may arise therefrom, but this provision shall not be construed to extend to an agreement made with a corporation for its general benefit.

§ 1530.412 Covenant against contingent fees.

No person or selling agency may be employed or retained to solicit or secure an agreement. There must be no agreement or understanding for commission, percentage, brokerage, or contingent fee, except in the case of bona fide employees or bona fide established commercial or selling agencies maintained by the refiner for the purpose of securing business, to solicit or secure an agreement. For breach or violation of this or other obligations or warranties undertaken by the refiner in regard to an agreement under this subpart, the General Sales Manager shall have the right, notwithstanding other rights provided under these regulations, to terminate the agreement in whole or in part.

Signed at Washington, DC on March 28, 1988.

George J. Pope,

Acting General Sales Manager and Associate Administrator, FAS.

[FR Doc. 88-7385 Filed 4-4-88; 8:45 am]

BILLING CODE 3410-10-M

DEPARTMENT OF TRANSPORTATION

Federal Aviation Administration

14 CFR Part 71

[Airspace Docket No. 87-ASW-68]

Proposed Establishment of Transition Area; Oakwood, TX

AGENCY: Federal Aviation Administration (FAA), DOT.

ACTION: Notice of proposed rulemaking.

SUMMARY: This notice proposes to establish a transition area at Oakwood, TX. The development of a special instrument approach procedure (SIAP) to the Carter Ranch Airport, Oakwood, TX, utilizing the Leona Very High Frequency Omnidirectional Radio Range/Tactical Air Naviation (VORTAC), has made this proposal necessary. The intended effect of this proposal is to provide adequate controlled airspace for aircraft executing the new SIAP. Coincident with this proposal would be the changing of the status of the Clark Ranch Airport from visual flight rules (VFR) to instrument flight rules (IFR).

DATES: Comments must be received on or before May 9, 1988.

ADDRESSES: Send comments on the proposal in triplicate to: Manager, Airspace and Procedures Branch, Air Traffic Division, Southwest Region, Docket No. 87-ASW-68, Department of Transportation, Federal Aviation Administration, Fort Worth, TX 76193-0530.

The official docket may be examined in the Office of the Regional Counsel, Southwest Region, Federal Aviation Administration, 4400 Blue Mound Road, Fort Worth, TX.

FOR FURTHER INFORMATION CONTACT: Bruce C. Beard, Airspace and Procedures Branch, Department of Transportation, Federal Aviation Administration, Fort Worth, TX 76193-0530; telephone (817) 624-5561.

SUPPLEMENTARY INFORMATION:

Comments Invited

Interested parties are invited to participate in this proposed rulemaking by submitting such written data, views, or arguments as they may desire. Comments that provide the factual basis supporting the views and suggestions presented are particularly helpful in developing reasoned regulatory decisions on the proposal. Comments are specifically invited on the overall regulatory, economic, environmental, and energy aspects of the proposal. Communications should identify the airspace docket and be submitted in triplicate to the address listed above. Commenters wishing the FAA to acknowledge receipt of their comments on this notice must submit with those comments a self-addressed, stamped postcard on which the following statement is made: "Comments to Airspace Docket No. 87-ASW-68." The postcard will be date/time stamped and returned to the commenter. All

communications received before the specified closing date for comments will be considered before taking action on the proposed rule. The proposal contained in this notice may be changed in the light of comments received. All comments submitted will be available for examination in the Office of the Regional Counsel, 4400 Blue Mound Road, Fort Worth, TX, both before and after the closing date for comments. A report summarizing each substantive public contact with the FAA personnel concerned with this rulemaking will be filed in the docket.

Availability of NPRM's

Any person may obtain a copy of this notice of proposed rulemaking (NPRM) by submitting a request to the Manager, Airspace and Procedures Branch, Department of Transportation, Federal Aviation Administration, Fort Worth, TX 76193–0530. Communications must identify the notice number of this NPRM. Persons interested in being placed on a mailing list for future NPRM's should also request a copy of Advisory Circular No. 11–2 which describes the application procedure.

The Proposal

The FAA is considering an amendment to § 71.181 of the Federal Aviation Regulations (14 CFR Part 71) by establishing a transition area at Oakwood, TX. The development of a new SIAP to the Carter Ranch Airport, utilizing the Leona VORTAC, has necessitated this proposal. The intended effect of this proposal is to provide adequate controlled airspace for aircraft executing this new SIAP. Coincident with this proposal would be the changing of the status of the Clark Ranch Airport from VFR to IFR. Section 71.181 of Part 71 of the Federal Aviation Regulations was republished in Handbook 7400.6D dated January 1, 1988.

The FAA has determined that this regulation only involves an established body of technical regulations for which frequent and routine amendments are necessary to keep them operationally current. It, therefore—(1) is not a "major rule" under Executive Order 12291; (2) is not a "significant rule" under DOT Regulatory Policies and Procedures (44 FR 11034; February 26, 1979); and (3) does not warrant preparation of a regulatory evaluation as the anticipated impact is so minimal. Since this is a routine matter that will only affect air traffic procedures and air navigation, it is certified that this rule, when promulgated, will not have a significant impact on a substantial number of small entities under the criteria of the Regulatory Flexibility Act.

List of Subjects in 14 CFR Part 71

Aviation safety, Transition areas

The Proposed Amendment

PART 71—[AMENDED]

Accordingly, pursuant to the authority delegated to me, the FAA proposes to amend Part 71 of the Federal Aviation Regulations (14 CFR Part 71) as follows:

1. The authority citation for Part 71 continues to read as follows:

Authority: 49 U.S.C. 1348(a), 1354(a), 1510; Executive Order 10854; 49 U.S.C. 106(g) (Revised Pub. L. 97–449, January 12, 1983); 14 CFR 11.69.

§ 71.181 [Amended]

2. Section 71.181 is amended as follows:

Oakwood, TX [New]

That airspace extending upward from 700 feet above the surface within a 6.5-mile radius of the Clark Ranch Airport (latitude 31°34'00" N., longitude 95°45'59" W.), and within 4.5 miles each side of the 022° radial of the Leona VORTAC (latitude 31°07'26" N., longitude 95°58'04" W.), extending from the 6.5-mile radius area to 9 miles south of the airport, excluding that portion that overlies the Palestine, TX, Transition Area.

Issued in Fort Worth, TX, on March 24, 1988.

Larry L. Craig,

Manager, Air Traffic Division, Southwest Region.

[FR Doc. 88–7340 Filed 4–4–88; 8:45 am]

BILLING CODE 4910-13-M

---

14 CFR Part 71

[Airspace Docket No. 87-ASW-58]

Proposed Amendment of Transition Area: Cherokee Village, AR

AGENCY: Federal Aviation Administration (FAA), DOT.

ACTION: Notice of proposed rulemaking.

SUMMARY: This notice proposes to amend the transition area located at Cherokee Village, AR. The relocation of the Cherokee Village Nondirectional Radio Beacon (NDB) from on the airport to approximately 5 miles south of the airport has made this proposed amendment necessary. The intended effect of this proposed amendment is to provide adequate controlled airspace for aircraft executing a new standard instrument approach procedure (SIAP) being development for the airport. Coincident with this action, the status of the Cherokee Village Airport will change from visual flight rules (VFR) to instrument flight rules (IFR).

DATE: Comments must be received on or before May 6, 1988.

ADDRESSES: Send comments on the proposal in triplicate to: Manager, Airspace and Procedures Branch, Air Traffic Division, Southwest Region, Docket 87–ASW–58, Department of Transportation, Federal Aviation Administration, Fort Worth, TX 76193–0530.

The official docket may be examined in the Office of the Regional Counsel, Southwest Region, Federal Aviation Administration, 4400 Blue Mound Road, Forth Worth, TX.

FOR FURTHER INFORMATION CONTACT: Bruce C. Beard, Airspace and Procedures Branch, Department of Transportation, Federal Aviation Administration, Forth Worth, TX 76193–0530; telephone (817) 624–5561.

SUPPLEMENTARY INFORMATION:

Comments Invited

Interested parties are invited to participate in this proposed rulemaking by submitting such written data, views, or arguments as they may desire. Comments that provide the factual basis supporting the views and suggestions presented are particularly helpful in developing reasoned regulatory decisions on the proposal. Comments are specifically invited on the overall regulatory, economic, environmental, and energy aspects of the proposal. Communications should identify the airspace docket and be submitted in triplicate to the address listed above. Commenters wishing the FAA to acknowledge receipt of their comments on this notice must submit with those comments a self-addressed, stamped postcard on which the following statement is made: "Comments to Airspace Docket No. 87–ASW–58." The postcard will be date/time stamped and returned to the commenter. All communications received before the specified closing date for comments will be considered before taking action on the proposed rule. The proposal contained in this notice may be changed in the light of comments received. All comments submitted will be available for examination in the Office of the Regional Counsel, 4400 Blue Mound Road, Forth Worth, TX, both before and after the closing date for comments. A report summarizing each substantive public contact with FAA personnel concerned with this rulemaking will be filed in the docket.

Availability of NPRM's

Any person may obtain a copy of this notice of proposed rulemaking (NPRM) by submitting a request to the Manager, Airspace and Procedures Branch, Department of Transportation, Federal Aviation Administration, Forth Worth, TX 76193–0530. Communications must identify the notice number of this NPRM. Persons interested in being placed on a mailing list for future NPRM's should also request a copy of Advisory Circular No. 11–2 which describes the application procedure.

The Proposal

The FAA is considering an amendment to § 71.181 of the Federal Aviation Regulations (14 CFR Part 71) by amending the transition area located at Cherokee Village, AR. The Cherokee Village NDB is being relocated from on the airport to approximately 5 miles south of the airport. The relocation of the NDB is requiring the development of a new SIAP to the airport, thus necessitating this proposed amendment. The intended effect of this proposed amendment is to provide adequate controlled airspace for aircraft executing the new SIAP. Coincident with this action, the status of the airport will change from VFR to IFR. Section 71.181 of Part 71 of the Federal Aviation Regulations was republished in Handbook 7400.6c, dated January 2, 1987.

The FAA has determined that this regulation only involves an established body of technical regulations for which frequent and routine amendments are necessary to keep them operationally current. It, therefore—(1) is not a "major rule" under Executive Order 12291; (2) is not a "significant rule" under DOT Regulatory Policies and Procedures (44 FR 11034; February 26, 1979); and (3) does not warrant preparation of a regulatory evaluation as the anticipated impact is so minimal. Since this is a routine matter that will only affect air traffic procedures and air navigation, it is certified that this rule, when promulgated, will not have a significant impact on a substantial number of small entities under the criteria of the Regulatory Flexibility Act.

List of Subjects in 14 CFR Part 71

Aviation safety, transition areas

The Proposed Amendment

PART 71—[AMENDED]

Accordingly, pursuant to the authority delegated to me, the FAA proposes to amend Part 71 of the Federal Aviation Regulations (14 CFR Part 71) as follows:

1. The authority citation for Part 71 continues to read as follows:

Authority: 49 U.S.C. 1348(a), 1354(a), 1510; Executive Order 10854; 49 U.S.C. 106(g) (Revised Pub. L. 97–449, January 12, 1983); 14 CFR 11.69.

§ 71.181 [Amended]

2. Section 71.181 is amended as follows:

Cherokee Village, AR [Revised]

That airspace extending upward from 700 feet above the surface within a 6.5-mile radius of the Cherokee Village Airport (latitude 36°15'55" N., longitude 91°33'45" W.).

Issued in Forth Worth, TX, on March 22, 1988.

Larry L. Craig,

Manager, Air Traffic Division, Southwest Region.

[FR Doc. 88–7341 Filed 4–4–88; 8:45 am]

BILLING CODE 4910-13-M

---

14 CFR Part 73

[Airspace Docket No. 87-ANM-20]

Proposed Establishment of Restricted Area R-2602; Colorado Springs, CO

AGENCY: Federal Aviation Administration (FAA), DOT.

ACTION: Notice of proposed rulemaking.

SUMMARY: This notice proposes to establish Restricted Area R–2602 located near Colorado Springs, CO. After reviewing their operational requirements the United States Air Force (USAF) has requested additional airspace to accommodate an automated remote tracking system satellite communications antenna. This antenna will pose a radiation hazard to aircraft in flight carrying electroexplosive devices. Therefore, it will be necessary to establish restricted airspace from the surface up to 1,000 feet above ground level (AGL) within one square mile of Falcon Air Force Station, Co.

DATES: Comments must be received on or before May, 23, 1988.

ADDRESSES: Send comments on the proposal in triplicate to: Director, FAA, Northwest Mountain Region, Attention: Manager, Air Traffic Division, Docket No. 87–ANM–20, Federal Aviation Administration, 17900 Pacific Highway South, C–68966, Seattle, WA 98168.

The official docket may be examined in the Rules Docket, weekdays, except Federal holidays, between 8:30 a.m. and 5:00 p.m. The FAA Rules Docket is located in the Office of the Chief Counsel, Room 916, 600 Independence Avenue, SW., Washington, D.C.

An informal docket may also be examined during normal business hours at the office of the Regional Air Traffic Division.

FOR FURTHER INFORMATION CONTACT: Andrew B. Oltmanns, Airspace Branch (ATO–240), Airspace-Rules and Aeronautical Information Division, Air Traffic Operations Service, Federal Aviation Administration, 800 Independence Avenue, SW., Washington, DC 20591; telephone: (202) 267–9254.

SUPPLEMENTARY INFORMATION:

Comments Invited

Interested parties are invited to participate in this proposed rulemaking by submitting such written data, views, or arguments as they may desire. Comments that provide the factual basis supporting the views and suggestions presented are particularly helpful in developing reasoned regulatory decisions on the proposal. Comments are specifically invited on the overall regulatory, aeronautical, economic and energy aspects of the proposal. Send comments on environmental and land use aspects to: Mr. Vince Castronovo, HQ AFSPACECOM/DEPV, Peterson AFB, CO 80914, (303) 554–5187 or Autovon 692–5187. Communications should identify the airspace docket and be submitted in triplicate to the address listed above. Commenters wishing the FAA to acknowledge recipt of their comments on this notice must submit with those comments a self-addressed, stamped postcard on which the following statement is made: "Comments to Airspace Docket No. 87–ANM–20." The postcard will be date/time stamped and returned to the commenter. All communications received before the specified closing date for comments will be considered before taking action on the proposed rule. The proposal contained in this notice may be changed in the light of comments received. All comments submitted will be available for examination in the Rules Docket both before and after the closing date for comments. A report summarizing each substantive public contact with FAA personnel concerned with this rulemaking will be filed in the docket.

Availability of NPRM's

Any person may obtain a copy of this Notice of Proposed Rulemaking (NPRM) by submitting a request to the Federal Aviation Administration, Office of Public Affairs, Attention: Public Inquiry Center, APA–230, 800 Independence Avenue, SW., Washington, DC 20591, or by calling (202) 267–3484. Communications must identify the notice number of this NPRM. Persons

interested in being placed on a mailing list for future NPRM's should also request a copy of Advisory Circular No. 11-2 which describes the application procedure.

The Proposal

The FAA is considering an amendment to Part 73 of the Federal Aviation Regulations (14 CFR Part 73) to establish a new Restricted Area R-2602 located near Colorado Springs, CO. After reviewing their operational requirements the USAF has requested additional airspace to accommodate an automated remote tracking system satellite communications antenna. This antenna will pose a radiation hazard to aircraft in flight carrying electroexplosive devices. Therefore, it will be necessary to establish restricted airspace from the surface up to 1,000 feet AGL within one square mile of Falcon Air Force Station, CO. Section 73.26 of Part 73 of the Federal Aviation Regulations was republished in Handbook 7400.6D dated January 4, 1988.

The FAA has determined that this proposed regulation only involves an established body of technical regulations for which frequent and routine amendments are necessary to keep them operationally current. It, therefore (1) is not a "major rule" under Executive Order 12291; (2) is not a "significant rule" under DOT Regulatory Policies and Procedures (44 FR 11034; February 26, 1979); and (3) does not warrant preparation of a regulatory evaluation as the anticipated impact is so minimal. Since this is a routine matter that will only affect air traffic procedures and air navigation, it is certified that this rule, when promulgated, will not have a significant economic impact on a substantial number of small entities under the criteria of the Regulatory Flexibility Act.

List of Subjects in 14 CFR Part 73

Aviation Safety, Restricted Areas.

The Proposed Amendment

Accordingly, pursuant to the authority delegated to me, the Federal Aviation Administration proposes to amend Part 73 of the Federal Aviation Regulations (14 CFR Part 73) as follows:

PART 73—SPECIAL USE AIRSPACE

1. The authority citation for Part 73 continues to read as follows:

Authority: 49 U.S.C. 1348(a) 1354(a), 1510, 1522; Executive Order 10854; 49 U.S.C. 106(g) (Revised Pub. L. 97-449, January 12, 1983); 14 CFR 11.69.

§ 73.2 [Amended]

2. § 73.26 is amended as follows:

R-2602 Colorado Springs, CO [New]

Boundaries. Beginning at lat. 38°48'35" N., long. 104°32'03" W.; to lat. 38°48'35" N., long. 104°30'57" W.; to lat. 38°47'43" N., long. 104°32'02" W.; to lat. 38°47'43" N., long. 104°30'56" W.

Designated altitudes. Surface to 1,000 feet AGL.

Time of designation. Continuous.

Controlling agency. FAA, Denver ARTCC.

Using agency. USAF, Air Force Space Command, 2nd Space Wing, Falcon Air Force Station, CO.

Issued in Washington, DC, on March 29, 1988.

Shelomo Wugalter,

Acting Manager, Airspace-Rules and Aeronautical Information.

[FR Doc. 88-7339 Filed 4-4-88; 8:45 am]

BILLING CODE 4910-13-M

DEPARTMENT OF THE TREASURY

Internal Revenue Service

26 CFR Part 1

[LR-29-88]

Automatic Extension of Time To File Partnership Return of Income and Trust Income Tax Return

AGENCY: Internal Revenue Service, Treasury.

ACTION: Notice of proposed rulemaking by cross-reference to temporary regulations.

SUMMARY: In the Rules and Regulations portion of this issue of the **Federal Register**, the Internal Revenue Service is issuing temporary regulations relating to the automatic extension of time to file partnership returns of income and trust income tax returns. The text of those temporary regulations also serves as the comment document for this proposed rulemaking.

DATES: The regulations contained in this document are proposed to be effective for partnership and trust returns required to be filed for taxable years beginning after December 31, 1986. Written comments and requests for a public hearing must be delivered or mailed by June 6, 1988.

ADDRESS: Send comments and requests for a public hearing to: Commissioner of Internal Revenue, Attention: CC:LR:T (LR-29-88), Washington, DC 20224.

FOR FURTHER INFORMATION CONTACT: Katherine Lee Wambsgans, Legislation and Regulations Division, Office of Chief Counsel, Internal Revenue Service, 1111 Constitution Avenue NW., Washington, DC 20224 (Attention: CC:LR:T) (202-556-3288, not a toll-free call).

SUPPLEMENTARY INFORMATION:

Background

The temporary regulations (designated by a "T" following the section citation) in the Rules and Regulations portion of this issue of the **Federal Register** amend Part 1 of Title 26 of the Code of Federal Regulations. These amendments reflect the provisions of section 6081(a) of the Internal Revenue Code of 1986. For the text of the temporary regulations, see FR Doc. (T.D. 8190) published in the Rules and Regulations portion of this issue of the **Federal Register**. The preamble of the temporary regulations contains a discussion of the regulations. The final regulations, which this document proposes to base on the temporary regulations, would amend Part 1 of Title 26 of the Code of Federal Regulations.

Special Analyses

The Commissioner of Internal Revenue has determined that this proposed rule is not a major rule as defined in Executive Order 12291. Accordingly, a Regulatory Impact Analysis is not required. Although this document is a notice of proposed rulemaking that solicits public comments, the Internal Revenue Service has concluded that the proposed regulations are interpretative and that the notice and public procedure requirements of 5 U.S.C. 553 do not apply. Accordingly, a regulatory flexibility analysis is not required under the Regulatory Flexibility Act (5 U.S.C. Chapter 6).

The collection of information requirements contained in this notice of proposed rulemaking have been submitted to the Office of Management and Budget (OMB) for review under section 3504(h) of the Paperwork Reduction Act. Comments on the requirements should be sent to the Office of Information and Regulatory Affairs of OMB, Attention: Desk Officer for Internal Revenue Service, New Executive Office Building, Washington, DC 20503. The Internal Revenue Service requests that persons submitting comments on these requirements to OMB also send copies of those comments to the Service.

Comments and Requests for a Public Hearing

Before these proposed regulations are adopted, consideration will be given to any written comments that are submitted (preferably eight copies) to the Commissioner of Internal Revenue.

All comments will be available for public inspection and copying. A public hearing will be held upon written request to the Commissioner by any person who submitted comments. If a public hearing is held, notice of the time and place will be published in the **Federal Register**.

Drafting Information

The principal author of these proposed regulations is Katherine Lee Wambsgans, Legislation and Regulations Division, Office of Chief Counsel, Internal Revenue Service. However, personnel from other offices of the Internal Revenue Service and Treasury Department participated in developing the regulations on matters of both substance and style.

List of Subjects in 26 CFR 1.6001-1—1.6109-2

Income taxes, Administration and procedure, Filing requirements.

Lawrence B. Gibbs,

Commissioner of Internal Revenue.

[FR Doc. 88-7393 Filed 3-31-88; 2:08 pm]

BILLING CODE 4830-01-M

ENVIRONMENTAL PROTECTION AGENCY

40 CFR Parts 761 and 796

[OPTS 2900; FRL-3360-5]

Polychlorinated Biphenyls and Chemical Fate Testing Guidelines; Proposed Revisions of Incorporations by Reference

AGENCY: Environmantal Protection Agency (EPA).

ACTION: Proposed rule.

SUMMARY: The Environmental Protection Agency (EPA) has incorporated by reference certain American Society for Testing and Materials (ASTM) test methods in the Polychlorinated Biphenyls (PCB) regulations, 40 CFR Part 761, and in the Chemical Fate Testing Guidelines, 40 CFR Part 796. Several of the incorporated test methods have been revised by ASTM. Those test methods are listed below in **SUPPLEMENTARY INFORMATION.** EPA is proposing that the revised test methods be used to meet the testing requirements found in 40 CFR Parts 761 and 796.

DATE: Comments on the proposed revised incorporations by reference must be submitted by May 5, 1988.

ADDRESS: Send comments, preferably in triplicate, to: TSCA Document Processing Center (TS-790), Rm. L-100, Office of Toxic Substances, Environmental Protection Agency, 401 M Street., SW., Washington, DC 20460.

Comments should include the docket control number "OPTS *29000*". Comments on this proposed rule will be available for review and copying from 8 a.m. to 4 p.m., Monday through Friday, except legal holidays, in Rm. NE-G004, at the address above.

FOR FURTHER INFORMATION CONTACT: Michael M. Stahl, Acting Director, TSCA Assistance Office (TS-799), Office of Toxic Substances, Environmental Protection Agency, Rm. E-543, 401 M Street., SW., Washington, DC 20460, Telephone: 202-554-1404.

SUPPLEMENTARY INFORMATION: Several ASTM test methods which are incorporated by reference in 40 CFR Parts 761 and 796 have been revised by ASTM. EPA invites comments on the revised test methods. The designations of the old test methods, and the designations of the new, revised test methods are set forth below. Copies of the revised test methods may be obtained from the OPTS Reading Room, in Room NE-G004, at the address given above.

The new designation of the revised test methods and the equivalent old designations are as follows:

New designation	Old designation
ASTM D 93-85	ASTM D 93-80.
ASTM D 240-87	ASTM D 240-76 (Reapproved 1980).
ASTM D 923-86	ASTM D 923-81.
ASTM D 2158-85	ASTM D 2185-80.
ASTM D 2879-86	ASTM D 2879-75 (Reapproved 1980).
ASTM D 3178-86	ASTM D 3178-73 (Reapproved 1979).

A. Executive Order 12291

Under E.O. 12291, issued February 17, 1981, EPA must judge whether a rule is a major rule and, therefore, subject to the requirement that a Regulatory Impact Analysis be prepared. EPA has determined that this proposed rule is not a major rule, as that term is defined in section 1(b) of E.O. 12291. Therefore, EPA has not prepared been submitted to OMB for review.

B. Regulatory Flexibility Act

Under section 605(b) of the Regulatory Flexibility Act the Administrator may certify that a rule will not, if promulgated, have a significant impact on a substantial number of small entities, and therefore, does not require a regulatory flexibility analysis. This document proposes only to update certain American Society for Testing and Materials (ASTM) test methods, which are incorporated by reference in the PCB regulations and in the Chemical Fate Test Guidelines, to the current ASTM test methods. Since no negative economic impact would be expected upon any business entity from the promulgation of this proposed rule, EPA certifies that this proposed rule will not have a significant economic impact on small entities.

C. Paperwork Reduction Act

EPA has determined that the Paperwork Reduction Act of 1980, 44 U.S.C. 3501 *et seq.*, does not apply to this proposed rule since no information collection and recordkeeping are involved.

List of Subjects in 40 CFR Parts 761 and 796

Environmental protection, Chemicals, Hazardous substances, Health, Labeling, Laboratories, Polychlorinated biphenlys, Reporting and recordkeeping requirements, Incorporation by reference.

Dated March 16, 1988.

Charles L. Elkins,

Director, Office of Toxic Substances.

Therefore, it is proposed to amend 40 CFR, Chapter I as follows:

PART 761—[AMENDED]

1. In Part 761:

a. The authority citation for Part 761 continues to read as follows:

Authority: 15 U.S.C. 2605, 2607, and 2611; Subpart G also issued under 15 U.S.C. 2614 and 2616.

§ 761.19 [Amended]

b. In § 761.19, paragraph (b), the entries "ASTM D 93-80", "ASTM D 240-76 (Reapproved 1980)", "ASTM D 923-81", "ASTM D 2158-80", and "ASTM D 3178-73 (Reapproved 1979)", are revised to read "ASTM D 93-85", "ASTM D 240-87", ASTM D 923-86", "ASTM D 2158-85", and "ASTM 3178-84", respectively.

§ 761.60 [Amended]

c. In § 761.60 the following changes are made:

i. In paragraph (a)(3)(iii)(B)(*6*), the references "ASTM D 93-80", "ASTM D 240-76 (reapproved 1980)", "ASTM D 2158-80" and "ASTM D 3178-73 (reapproved 1979)", are revised to read "ASTM D 93-85", "ASTM 240-87", "ASTM D 2158-85", and "ASTM D 3178-84", respectively.

ii. In paragraph (g)(1)(ii), the phrase "American Society of Testing and Materials method D-923" is revised to read "ASTM D 923-86".

iii. In paragraph (g)(2)(ii), the phrase "American Society of Testing and Materials method D 923–81", is revised to read "ASTM D 923–86".

§ 761.75 [Amended]

d. In § 761.75, paragraph (b)(8)(iii), the entry "ASTM Standard D 93–80", is revised to read "ASTM D 93–85".

PART 796—[AMENDED]

2. In Part 976:

a. The authority citation for Part 796 continues to read as follows:

Authority: 15 U.S.C. 2603.

§ 796.1950 [Amended]

b. In § 796.1950, paragraph (b)(2)(i), the entry "ASTM Method D 2879–75 (Reapproved 1980)", and the entry "ASTM D 2879–75 (Reapproved 1980)" are revised to read "ASTM D 2879–86", each time it appears.

[FR Doc. 88–7374 Filed 4–4–88; 8:45 am]

BILLING CODE 6560-50-M

DEPARTMENT OF TRANSPORTATION

National Highway Traffic Safety Administration

49 CFR Part 571

[Docket No. 1-21; Notice 7]

FMVSS 114, Theft Protection

AGENCY: National Highway Traffic Safety Administration (NHTSA), DOT.

ACTION: Notice of proposed rulemaking.

SUMMARY: NHTSA continues to receive complaints of accidents, property damage, personal injury, and fatalities that apparently result from drivers of manual and automatic transmission vehicles inadvertently locking their steering columns while driving. The agency has also received complaints and petitions for rulemaking in response to accidents and injuries resulting from the rolling away of automatic transmission vehicles whose gear shift lever is inadvertently moved while the vehicles are parked on slanted surfaces with the engine off.

The inadvertent locking problem seems to arise from the design of the steering column locks that some manufacturers use to comply with Standard No. 114. Standard No. 114, *Theft Protection*, currently requires that each vehicle subject to the Standard have a key-locking system that prevents steering (e.g., a steering column lock) and/or forward self-mobility of the vehicle (e.g., a transmission gear shift lever lock) whenever the key is removed. In response to this problem, NHTSA proposes to establish a locking sequence for automatic transmission vehicles that would require a vehicle's engine be off and the transmission in park before the driver can lock the steering column. For manual transmission vehicles, the steering column lock could be engaged only after the ignition key has deactivated the engine, and the operator has performed an additional manual action other than using the ignition key.

The Standard does not currently address the kind of problem that gives rise to inadvertent gear shifting in automatic transmission vehicles. To address this problem, the agency proposes to require gear shift locks on those vehicles.

DATE: Comments must be received on or before May 20, 1988. If adopted, the agency intends to make this amendment effective two years after the date on which the final rule is published in the **Federal Register**.

ADDRESS: Comments should refer to Docket No. 1–21; Notice 7, and be submitted to Docket Section, Room 5109, NHTSA, 400 Seventh Street SW., Washington, DC 20590. The Docket Section is open on weekdays from 8 a.m. to 4 p.m.

FOR FURTHER INFORMATION CONTACT: Kenneth Rutland, Office of Vehicle Safety Standards, NRM–11, NHTSA, 400 Seventh Street SW., Washington, DC 20590 (202–366–5267).

SUPPLEMENTARY INFORMATION:

Background

1. *Inadvertent steering column lock-up.* Section S4.2(b) of Standard 114 requires that each vehicle subject to the Standard have a key-locking system preventing steering and/or forward self-mobility of the vehicle whenever the key is removed. In 1968, when FMVSS 114 was adopted, the stated purpose was to "reduce the incidence of accidents resulting from unauthorized (motor vehicle) use." 33 FR 6471, April 27, 1968. NHTSA based this goal on evidence showing that: "Cars operated by unauthorized persons are far more likely to cause unreasonable risk of accident, personal injury and death than those which are driven by authorized individuals." Neither the Standard nor the language in the preamble to it states any other goal.

In 1980, the agency issued a final rule amending FMVSS 114 to prevent a driver from inadvertently locking the steering column of a moving vehicle by removing the ignition key or shutting off the engine. 45 FR 85450, December 29, 1980. The agency later rescinded this amendment after studying the question further in response to petitions for reconsideration. NHTSA decided that while this kind of inadvertent activation was a safety problem in certain vehicles, the problem did not then warrant requiring additional steps to reduce the possibility of inadvertent lock-up. The agency stated that it would continue to monitor complaints on the subject, and initiate rulemaking should new data warrant it. At the same time, the agency encouraged manufacturers voluntarily to install ignition key locking systems that provide improved protection against inadvertent lock-up on their vehicles. 46 FR 32251, 32253, June 22, 1981.

Since that time, NHTSA has received several complaints of accidents, fatalities, personal injury, and property damage resulting from inadvertent steering column lock-up. The cause of the lock-ups most frequently is an occupant's removing the key from the vehicle ignition while the vehicle is moving. Such key removal may be the result of "horseplay" within the vehicle, inadvertent removal by the driver (e.g., under "panic" conditions), or through the action of unrestrained children in the front seat. Regardless of the cause, removal of the key can have disastrous effects, and should be guarded against with certainty.

The problem applies both to automatic and manual transmission vehicles. Some ignition locking switches are so configured that removing the key—with no further action—locks the steering column, (and consequently the wheels), in the direction the driver last turned. Thus, the driver can lose control of vehicle steering.

To obtain further information about the incidence of inadvertent steering column lock-up, the agency examined its consumer complaint files. Through the Auto Safety Hotline maintained by NHTSA's Office of Defects Investigation (ODI), the agency collects consumer complaints connected with alleged motor vehicle defects or with failure to observe a safety standard. NHTSA searched this complaint file to determine the universe of accidents, injury, damage, and fatalities where the component and fault apparently matched those involved in inadvertent steering column lock-up. In searching the ODI complaint file for such incidents, NHTSA used "steering column locking device" as the component value. NHTSA found a relatively low level, but continuing series of complaints of accident and injury arising from inadvertent steering lock-up.

BEST COPY AVAILABLE

The inadvertent locking problem seems to arise from the design of the steering column locks that some manufacturers have used and continue to use in complying with the first option in paragraph S4.2(b) of FMVSS 114. That paragraph currently requires that each vehicle subject to the Standard have a key-locking system that prevents steering and/or forward self-mobility of the vehicle whenever the key is removed. Steering column lock designs used by the vehicle manufacturers vary. To remove the ignition key and lock the column, some designs make it necessary for a person first to perform two different actions which are difficult or impossible to perform simultaneously. This process reduces the prospect that the driver or other vehicle occupant will remove the ignition key inadvertently. With other designs, removing the ignition key requires a single operation and increases the possibility that someone could remove the key and accidentally lock-up the steering column while the vehicle is moving.

2. *Inadvertent Gear Shifting.* NHTSA has also received letters complaining of serious injuries and fatalities regarding a second problem: the inadvertent shifting of gears in a vehicle parked on a slanted surface. This problem involves automatic transmission vehicles and often results from children inadvertently moving the gear shift level from "park" to "neutral" in a stationary vehicle with the ignition turned off. The vehicle then rolls away. Most of the inadvertent gear shift accidents involve property damage only. However, there have been several reports of recent cases resulting in serious or fatal injuries. In these cases, a child inside the vehicle inadvertently moved the gear shift level, and the vehicle rolled out of control injuring or killing a child inside or outside the vehicle.

To determine the extent of accidents related to inadvertent gear shift movement, the agency searched its ODI complaint file using "transmission" as the component in its search, and "jump-out-of-gear" as the fault value. NHTSA decided that a retrieved case was relevant if the complaint write-up indicated that the vehicle was in "park" with either the ignition off, the key removed, or both. Using these criteria, the agency found a number of complaints that appeared to be relevant. The relevant cases involved automatic transmission vehicles of a variety of makes and models, where an accident resulted in property damage or injury.

Although Standard 114 does not address the problem of inadvertent gear shifting, some manufacturers have overcome this potential problem by using a type of gear shift lever lock. Typically, these gear shift lock designs have two critical elements. First, for automatic transmission vehicles, they require that the gear shift level be in "park" before a person can remove the ignition key, and prevent moving the gear lever from "park" to another position once the key is removed. For manual transmissions, these designs require that the gear shift lever be in "reverse" before a person can remove the ignition key. These transmission locking system designs can decrease inadvertent gear shifting accidents.

Proposals

In response to these problems, NHTSA is proposing to amend Standard 114. The proposal would require a gear shift lever lock on automatic transmission vehicles. (The current Standard allows a steering column lock, a gear shift lever lock, or both.) The proposal would also require a locking sequence that the agency tentatively believes would make inadvertent locking of a steering column less likely in both automatic and manual transmission vehicles. Neither amendment is intended to affect the theft deterrent purposes of Standard 114.

A proposed new paragraph S4.2 would continue to require that all vehicles, regardless of transmission type, have an ignition key-locking system that would prevent normal activation of the vehicle's engine or other main source of motive power whenever the key is removed. That paragraph would also require that vehicles with an automatic transmission have a key-locking system with a locking sequence that would prevent (1) shifting the transmission after the key has been removed; and (2) locking the gear shift or steering column while the vehicle is in motion.

If a vehicle is equipped with an automatic transmission, a manufacturer would have to meet the proposed new requirements by installing a locking system which does not permit removing the ignition key until the gear shift level is in "park." Before the ignition key could be removed, it would have to engage a gear shift lever lock, but only after the transmission has been placed in "park," and the vehicle's engine has been deactivated. However, if a manufacturer were to install a steering column lock along with the gear shift lever lock in a vehicle with an automatic transmission, the revised Standard would address the problem of inadvertent steering column lock-up by further requiring the steering column lock to engage only after the driver places the transmission in "park" and deactivates the engine.

A manual transmission vehicle equipped with a steering column lock would be subject to the requirement under amended paragraph S4.2 which states that the steering column lock could not be engaged until both the ignition key has deactivated the engine, *and* the operator has performed an additional manual action (such as operating a button release or other manually activated device) which does not rely on use of the ignition key. The agency believes that this requirement would reduce the possibility of inadvertently activating the steering column locking mechanism.

It is well-established that the proposed steering column locks for automatic transmission vhicles are practicable because several manufacturers currently install such locks. Gear shift locking systems for manual and automatic transmission vehicles are also practicable since they are currently installed on such vehicles. Each of the three largest domestic motor vehicle manufacturers has at least one automatic transmission configuration with a gear shift lock. General Motors provides, as standard equipment, a gear shift lever that locks in "park" on both column and console mounted gear levers. Chrysler and Ford also provide such locks on all column mounted gear shift levers. The agency has not surveyed gear shift mounting configurations on foreign-made motor vehicles, but notes that a recent model of the Saab 900 provided, as standard equipment, a console-mounted gear shift lever with a lock mechanism.

The agency notes that a few manufacturers (e.g., Saab and General Motors) have installed gear shift lever locks on manual transmission vehicles, and seeks comment on whether these vehicles, like automatic transmission vehicles, should be subject to the proposed revisions to Standard 114 requiring a gear shift lever lock. More specifically, the agency solicits comment and data regarding the safety need for subjecting manual transmission vehicles to the kind of revisions NHTSA proposes in this notice, and what the costs of reconfiguring these vehicles would be.

Issues for Comment

The agency is interested in receiving comments that focus on a number of issues. The first is whether inadvertent gear shift poses a significant safety problem for vehicles equipped with a manual transmission. It the comments and other available information indicate

such a problem does exist, NHTSA may modify the Standard further to address that in any final rule resulting from this notice. The agency's approach would be similar to the one reflected in this notice for automatic transmissions. NHTSA also welcomes further information on the incidence of inadvertent gear shift in automatic transmission vehicles.

Second and similarly, the agency requests comment on the incidence of inadvertent steering column lock-up as a safety problem. NHTSA's review of accident data in its ODI file reveals that inadvertent steering column lock-up has been a causal element in some "loss of control" accidents. The agency believes that the amendment it proposes today would reduce the incidence of a driver's losing control due to inadvertent steering column lock-up.

Third, the agency seeks additional information on the likely costs of the proposed revision. Based on 1986 sales volumes, for vehicles equipped with an automatic transmission, NHTSA estimates that the proposed changes would affect 3.3 million cars and light trucks, and that the consumer cost would be about $6.25 per vehicle, attributable primarily to adding a gear shift lever locking mechanism to vehicles with a console-mounted automatic transmission. However, manufacturers may realize cost savings of about $2.50 per vehicle if they elect to delete the steering column locks from all 11.2 million vehicles with an automatic transmission. Thus, if the annual cost of providing gear shift lever locks would be $20.6 million, and an annual cost savings of $28 million could be realized by eliminating steering locks on automatic transmission vehicles, then the net impact of this proposal for vehicles with an automatic transmission would be savings of $7.4 million annually.

For vehicles equipped with a manual transmission, NHTSA estimates that the proposed changes would affect 1.5 million cars and light trucks, and that the consumer cost would be about $2.50 per vehicle, or a total annual cost of $3.75 million.

Additional data that would help the agency develop more particularized cost estimates would be especially useful. Therefore, the agency requests that vehicle manufacturers submit the following kinds of information:

1. By make and model, the number of 1987 model year vehicles that were produced with:

(a) Column-mounted automatic transmission shift levers,

(b) Console and other non-column-mounted automatic transmission shift levers,

(c) Column-mounted manual transmission shift levers, and

(d) Console and other non-column-mounted manual transmission shift levers.

2. The types of column and gear shift lever locking systems manufacturers currently use on each of the above four systems; the degree to which these locking systems meet the proposed requirements); and the technology, cost, and lead-time necessary to bring each non-complying system into compliance with the proposed requirements.

Fourth and finally, these proposed revisions reflect the agency's current belief that it is appropriate to address both the problems of inadvertent gear shifting and steering column lock-up in this manner. On the other hand, industry and the public may have ideas on alternate approaches that focus on the concerns raised in this NPRM, and still maintain the Standard's current purpose. For example, NHTSA considered an option that would require a parking brake lock, but rejected that option because of possible malfunction in icy conditions. Therefore, the agency requests comments on whether there are any types of technology that may be available to address the problems of inadvertent gear shifting and steering column lock-up at lesser costs than this proposed solution, without derogating the theft deterrent aspect of the Standard. The agency is interested in receiving whatever general observations commenters may have concerning the interaction of various technologies incorporated to address the inadvertent gear shift and lock-up problems, with those technologies intended to maintain theft deterrence. The agency also solicits comments on whether the proposed standard provides sufficient design flexibility to permit the installation of any technology that would achieve the same safety purposes.

Interested persons are invited to submit comments on the proposal. The agency requests (but does not require) that each commenter submit 10 copies of its comments. Under Department regulations, a comment must not exceed 15 pages. (49 CFR 553.21). This limitation is intended to encourage commenters to detail their primary arguments in a concise fashion. Necessary attachments may be appended to these submissions without regard to the 15-page limit.

If a commenter wishes to submit certain information under a claim of confidentiality, three copies of the complete submission, including purportedly confidential business information, should be submitted to the Chief Counsel, NHTSA, at the street address given above, and seven copies from which the purportedly confidential information has been deleted should be submitted to the Docket Section. A request for confidentiality should be accompanied by a cover letter setting forth the information specified in the agency's confidential business information regulation 49 CFR Part 512.

All comments received before the close of business on the comment closing date indicated above for the proposal will be considered, and will be avaialable for examination in the docket at the above address both before and after that date. To the extent possible, comments filed after the closing date will also be considered. Comments received too late for consideration in regard to any final rule will be considered as suggestions for further rulemaking action. Comments on the proposal will be available for inspection in the docket. NHTSA will continue to file relevant information as it becomes available in the docket after the closing date, and recommends that interested persons continue to examine the docket for new material.

Those persons desiring to be notified upon receipt of their comments in the rules docket should enclose a self-addressed, stamped postcard in the envelope with their comments. Upon receiving the comments, the docket supervisor will return the postcard by mail.

Impact Assessments

A. Cost Impacts

The agency has considered the costs and other impacts of this proposal and determined that the proposal is neither major within the meaning of Executive Order 12291 nor significant within the meaning of the Department of Transportation's regulatory policies and procedures. The agency has placed in the public docket a Preliminary Regulatory Evaluation assessing the costs and benefits of this proposed rule.

B. Small Business Impacts

NHTSA has considered the effects of this action under the Regulatory Flexibility Act. If adopted, this regulation would affect only motor vehicle manufacturers and their suppliers. The agency believes that few, if any, of those manufacturers would qualify as small entities. Further, any shift away from the use of a particular locking device (e.g., steering column locks) will be offset by the need for a replacement locking device (e.g., gear shift lever locks.) Thus, a supplier of locking devices would experience a

continuing demand for these products. Other small businesses, small organizations, and small governmental units would be affected only as purchasers of motor vehicles. As explained above, this proposal is not anticipated to result in any significant price increases for motor vehicles. Given the preceding facts, I certify that this rule would not have a significant economic impact on a substantial number of small entities. Therefore, the agency has not prepared an initial regulatory flexibility analysis.

C. Environmental Impacts

As the National Environmental Policy Act of 1969 requires, NHTSA has considered the environmental impact of this proposal, and determined that this proposal would not be a major Federal action significantly affecting the quality of the human environment.

List of Subjects in 49 CFR Part 571

Imports, Motor vehicle safety, Motor vehicles, Rubber and rubber products, Tires.

In consideration of the foregoing, it is proposed that 49 CFR § 571.114 be amended as follows:

1. The authority citation for Part 571 would continue to read as follows:

Authority: 15 U.S.C. 1392, 1401, 1403, 1407; delegation of authority at 49 CFR 1.50.

2. The title of § 571.114 would be revised to read as follows:

§ 571.114 Standard No. 114; Protection from theft and from inadvertent operation of vehicle power train systems.

3. S1 would be revised to read as follows:

S1. *Purpose of Scope.* To reduce the risk of accidents resulting from unauthorized operation of a vehicle or from the inadvertent operation of certain vehicle systems, this standard sets forth requirements to decrease the prospect of motor vehicle theft, inadvertent gear shifting, and inadvertent steering column lock-up.

4. S4.2 would be revised to read as follows:

S4.2(a) Each vehicle subject to this standard shall have an ignition key-locking system. Whenever the key is removed, the system shall prevent normal activation of the vehicle's engine or other main source of motive power.

(b) In the case of a vehicle with an automatic transmission—

(1) The ignition key-locking system shall also prevent shifting the transmission whenever the key is removed.

(2) The ignition key-locking system shall not permit removal of the key except when the transmission is locked in "park."

(3) If the vehicle has a steering column lock that lock shall be engageable only when the transmission is in "park," and the ignition key has deactivated the vehicle's engine or other main source of motive power.

(c) In the case of a vehicle with a manual transmission—

(1) The ignition key-locking system shall also prevent steering, or forward self-mobility, or both.

(2) If the vehicle has a steering column lock, that lock shall be engageable only when:

(A) The ignition key has deactivated the vehicle's engine or other main source of motive power; and

(B) The operator has performed an additional manual action involving a device other than the ignition key.

5. S4.3 would be revised to read as follows:

S4.3 The prime means for deactivating the vehicle's engine or other main source of motive power shall not activate the deterrent required by S4.2 (b)(1) or (c)(1) or specified by S4.2(b)(3).

Issued on: March 30, 1988.

Barry Felrice,

Associate Administrator for Rulemaking.

[FR Doc. 88-7396 Filed 4-4-88; 8:45 am]

BILLING CODE 4910-59-M

Notices

Federal Register
Vol. 53, No. 65
Tuesday, April 5, 1988

This section of the FEDERAL REGISTER contains documents other than rules or proposed rules that are applicable to the public. Notices of hearings and investigations, committee meetings, agency decisions and rulings, delegations of authority, filing of petitions and applications and agency statements of organization and functions are examples of documents appearing in this section.

ADVISORY COUNCIL ON HISTORIC PRESERVATION

Meeting

AGENCY: Advisory Council on Historic Preservation.

ACTION: Notice of meeting.

SUMMARY: Notice is hereby given that the Advisory Council on Historic Preservation will meet on Monday, April 18, 1988. The meeting will be held in Room M09 at the Old Post Office, 1100 Pennsylvania Ave., NW., Washington, DC, beginning at 9:00 a.m.

The Council was established by the National Historic Preservation Act of 1966 (16 U.S.C. 470) to advise the President and the Congress on matters relating to historic preservation and to comment upon Federal, federally assisted, and federally licensed undertakings having an effect upon properties listed in or eligible for inclusion in the National Register of Historic Places. The Council's members are the Architect of the Capitol; the Secretaries of the Interior, Agriculture, Housing and Urban Development, Treasury, and Transportation; the Director, Office of Administration; the Chairman of the National Trust for Historic Preservation; the Chairman of the National Conference of State Historic Preservation Officers; a Governor, a Mayor; and eight non-Federal members appointed by the President.

The agenda for the meeting includes the following:

I. Chairman's Report
II. Executive Director's Report
III. Task Force Reports
IV. Section 106 Cases
V. Legislation
VI. New Business
VII. Adjourn

Note: The meetings of the Council are open to the public. If you need special accommodations due to a disability, please contact the Advisory Council on Historic Preservation, 1100 Pennsylvania Ave., NW., Room 809, Washington, DC, 202-786-0503 at least seven (7) days prior to the meeting.

FOR FURTHER INFORMATION CONTACT: Additional information concerning the meeting is available from the Executive Director, Advisory Council on Historic Preservation, 1100 Pennsylvania Ave. NW., #809, Washington, DC 20004.

Robert D. Bush,
Executive Director.

Date: March 30, 1988.

[FR Doc. 88-7355 Filed 4-4-88; 8:45 am]

BILLING CODE 4310-10-M

ARMS CONTROL AND DISARMAMENT AGENCY

The President's General Advisory Committee on Arms Control and Disarmament; Closed Meeting

In accordance with the Federal Advisory Committee Act, as amended, the U.S. Arms Control and Disarmament Agency announces the following Presidential Committee meeting:

Name: General Advisory Committee on Arms Control and Disarmament.

Date: April 20, 1988.

Time: 8:30 am.

Place: State Department Building, Washington, DC.

Type of Meeting: Closed.

Contact: Colonel William C. Golbitz, General Advisory Committee on Arms Control and Disarmament, Room 5927, Washington, DC 20451, (202)-647-5178.

Purpose of Advisory U.S. Committee: To advise the Director of the Arms Control and Disarmament Agency on arms control and disarmament policy and activities, and from time to time to advise the President and the Secretary of State respecting matters affecting arms control, disarmament, and world peace.

Agenda: The Committee will review specific arms control and related treaty issues; an Executive session will be held.

Reason for Closing: The GAC members will be reviewing and discussing matters specifically required by Executive Order to be kept secret in the interest of national defense and foreign policy.

Authority to Close Meeting: The closing of this meeting is in accordance with a determination by the Director of the Arms Control and Disarmament Agency dated March 28, 1988, made pursuant to the provisions of section 10(d) of the Federal Advisory Committee Act as amended.

William J. Montgomery,
Committee Management Officer.

[FR Doc. 88-7317 Filed 4-4-88; 8:45 am]

BILLING CODE 6820-32-M

DEPARTMENT OF COMMERCE

International Trade Administration

Semiconductor Technical Advisory Committee; Partially Closed Meeting

A meeting of the Semiconductor Technical Advisory Committee will be held April 20, 1988, at 9:30 a.m., in the Herbert C. Hoover Building, Room B-841, 14th Street & Constitution Avenue NW., Washington, DC. The Committee advises the Office of Technology & Policy Analysis with respect to technical questions which affect the level of export controls applicable to semiconductors and related equipment or technology.

AGENDA

General Session

1. Opening Remarks by the Chairman.
2. Introduction of Members and Visitors.
3. Presentation of Papers or Comments by the Public.
4. Presentation on Automatic Test Equipment by Semiconductor Equipment Manufacturing Industries (SEMI).

Executive Session

5. Discussion of matters properly classified under Executive Order 12356, dealing with the U.S. and COCOM control program and strategic criteria related thereto.

The General Session of the meeting will be open to the public and a limited number of seats will be available. To the extent time permits, members of the public may present oral statements to the Committee. Written statements may be submitted at any time before or after the meeting.

The Assistant Secretary for Administration, with the concurrence of the delegate of the General Counsel, formally determined on January 10, 1988, pursuant to section 10(d) of the Federal Advisory Committee Act, as amended, that the series of meetings or portions of meetings of the Committee and of any Subcommittees thereof, dealing with the

classified materials listed in 5 U.S.C. 552b(c)(1) shall be exempt from the provisions relating to public meetings found in section 10 (a)(1) and (a)(3), of the Federal Advisory Committee Act. The remaining series of meetings or portions thereof will be open to the public.

A copy of the Notice of Determination to close meetings or portions of meetings of the Committee is available for public inspection and copying in the Central Reference and Records Inspection Facility, Room 6628, U.S. Department of Commerce, Washington, DC. For further information or copies of the minutes, contact Ruth D. Fitts, 202–377–4959.

Date: March 31, 1988.

Betty A. Ferrell,

Acting Director, Technical Support Staff, Office of Technology & Policy Analysis.

[FR Doc. 88–7428 Filed 4–4–88; 8:45 am]

BILLING CODE 3510-CT-M

National Oceanic and Atmospheric Administration

South Atlantic Fishery Management Council; Public Meeting

AGENCY: National Marine Fisheries Service, NOAA, Commerce.

The South Atlantic Fishery Management Council will convene a public meeting of its Bluefish Committee, April 12, 1988, from 9 a.m. to noon, at the Radison Hotel in Hampton, VA, to review the status of the bluefish stock assessment, and to discuss proposed management strategies for a coastwide Bluefish Fishery Management Plan. A detailed agenda will be available to the public on or about April 4, 1988.

For further information contact Robert K. Mahood, Executive Director, South Atlantic Fishery Management Council, One Southpark Circle, Suite 306, Charleston, SC 29407; telephone: 803–571–4366.

Date: March 30, 1988.

Ann D. Terbush,

Acting Director, Office of Fisheries Conservation and Management, National Marine Fisheries Service.

[FR Doc. 88–7380 Filed 4–4–88; 8:45 am]

BILLING CODE 3510-22-M

Permit; Pacific Coast Groundfish Fishery

AGENCY: National Marine Fisheries Service (NMFS), NOAA, Commerce.

ACTION: Notice of receipt of an experimental fishing permit application and request for comments.

SUMMARY: This notice acknowledges receipt of an application for an experimental fishing permit to experimentally harvest groundfish on domestic trawl vessels using detachable codends of various mesh sizes in the exclusive economic zone off the coasts of Washington, Oregon, and California. If granted, this permit would allow fishing practices which otherwise would be prohibited by Federal regulations. Issuance of experimental fishing permits is authorized by the Pacific Coast Groundfish Fishery Management Plan and implementing regulations.

DATE: Comments on this application must be received by April 15, 1988.

ADDRESS: Send comments to Rolland A. Schmitten, Director, Northwest Region, National Marine Fisheries Service, 7600 Sand Point Way NE, BIN C15700, Bldg. 1, Seattle, WA 98115; or E. Charles Fullerton, Director, Southwest Region, National Marine Fisheries Service, 300 S. Ferry Street, Terminal Island, CA 90731.

FOR FURTHER INFORMATION CONTACT: William L. Robinson, 206–526–6140; or Rodney R. McInnis, 213–514–6199.

SUPPLEMENTARY INFORMATION: The Pacific Coast Groundfish Fishery Management Plan (FMP) and implementing regulations at 50 CFR Part 663 specify that experimental fishing permits (EFPs) may be issued to authorize fishing that would otherwise be prohibited by the FMP and regulations. The procedures for application and issuance of EFPs are contained in the regulations at § 663.10.

An EFP application to harvest groundfish with bottom trawl gear using detachable codends of various mesh sizes in the exclusive economic zone off the coasts of Washington, Oregon, and California was submitted by Dr. Pikitch, University of Washington, and was received on March 11, 1988. The major goal of the experimental fishery is to compare the effectiveness of different mesh sizes with the current trip limit regime set forth in the FMP. Current groundfish regulations at § 663.26 prohibit the use of a mesh size smaller than four and one-half inches in bottom trawls and the use of detachable codends if the vessel is carrying a net with smaller than four and one-half inch mesh. In addition, in order to obtain meaningful results in comparing gear regulations with trip limits, the applicant is requesting that the current trip limits and groundfish quota restrictions be waived for the duration of the experiment. An EFP, if granted, would authorize the use of detachable codends of various mesh sizes and would waive current trip limits and groundfish quota restrictions for the time, area, and vessels specified.

The application proposes to have sixty-six experimental fishing trips conducted using up to sixty-six different domestic vessels operating out of various ports in Washington, Oregon, and California from June 1, 1988 to December 31, 1988. However, no more than six vessels will be involved in the experimental fishing at any one time and each vessel will have an observer employed by the University of Washington aboard. The proposed experimental fishing will utilize otter trawls with up to five detachable codends of different mesh sizes ranging from three inches up to six inches or more. Two general types of groundfish fishing strategies are proposed in the experiment (1) Use of bottom trawls with roller gear targeting on a mixture of rockfish species (primarily *Sebastes* complex) and (2) use of bottom trawls targeting on the slope assemblage of groundfish consisting primarily of dover sole, sablefish, and *Sebastolobus* sp.

The application indicates that the majority of the experimental harvest will be within current groundfish trip limits. However, some harvest in excess of the trip limits for sablefish, yellowtail rockfish, and the *Sebastes* complex are expected by the applicant in order to obtain sufficient information on the catch performances of different mesh sizes to contrast with the effects of trip limits.

The application will be discussed at the April 5–8, 1988 public meeting of the Pacific Fishery Management Council in San Francisco, California. The decision to approve or deny issuance of an EFP will be based on a number of considerations including recommendations made by the Council and comments received from the public. A copy of the application is available for review at the NMFS, Northwest Regional Office, address above.

(16 U.S.C. 1801 *et seq.*)

Dated: March 30, 1988.

Ann D. Terbush,

Acting Director, Office of Fishery Conservation and Management.

[FR Doc. 88–7381 Filed 4–4–88; 8:45 am]

BILLING CODE 3510-22-M

Marine Mammals; Application for Permit, Cetacean Research Unit (P418)

Notice is hereby given that an Applicant has applied in due form for a Permit to take marine mammals as authorized by the Marine Mammal Protection Act of 1972 (16 U.S.C. 1361–1407), the Regulations Governing the

Taking and Importing of Marine Mammals (50 CFR Part 216), the Endangered Species Act of 1973 (16 U.S.C. 1531–1544), and the National Marine Fisheries Service regulations governing endangered fish and wildlife permits (50 CFR 217–222).

1. *Applicant:* Cetacean Research Unit, P.O. Box 159, Gloucester, Massachusetts 01930.

2. *Type of Permit:* Scientific Research.

3. *Name and Number of Marine Mammals:* Humpback whale (*Megaptera novaeangliae*), 300 per year; Fin whale (*Balaenoptera physalus*), 150 per year; Right whale (*Eubalaena glacialis*), 40 per year; Sei whale (*Balaenoptera borealis*), 40 per year.

4. *Type of Take:* The applicant seeks a permit to harass by approaching and photographing the above whales. A whale will be approached no more than five times per year.

5. *Location of Activity:* New England waters.

6. *Period of Activity:* 5 years.

Concurrent with the publication of this notice in the **Federal Register**, the Secretary of Commerce is forwarding copies of this application to the Marine Mammal Commission and the Committee of Scientific Advisors.

Written data or views, or requests for a public hearing on this application should be submitted to the Assistant Administrator for Fisheries, National Marine Fisheries Service, U.S. Department of Commerce, Washington, , DC 20235, within 30 days of the publication of this notice. Those individuals requesting a hearing should set forth the specific reasons why a hearing on this particular application would be appropriate. The holding of such hearing is at the discretion of the Assistant Administrator for Fisheries.

All statements and opinions contained in this application are summaries of those of the Applicant and do not necessarily reflect the views of the National Marine Fisheries Service.

Documents submitted in connection with the above application are available for review by interested persons in the following offices:

Office of Protected Resources and Habitat Programs, National Marine Fisheries Service, 1825 Connecticut Avenue NW., Rm. 805, Washington, DC; and

Director, Northeast Region, National Marine Fisheries Service, 14 Elm Street, Federal Building, Gloucester, Massachusetts 01930.

Nancy Foster,

Director, Office of Protected Resources and Habitat Programs.

Dated: March 25, 1988.

[FR Doc. 88–7437 Filed 4–4–88; 8:45 am]

BILLING CODE 3510-22-M

Listing of Endangered and Threatened Species and Designating Critical Habitat; Petitions for the Adoption of Rules and Regulations for the Granting of Permits for Whale Watching

AGENCY: National Marine Fisheries Service (NMFS), NOAA, Commerce.

ACTION: Notice of determination.

SUMMARY: On December 1 and 9, 1987, NMFS received petitions from GreenWorld to adopt rules and regulations for the granting of permits for whale watching (52 FR 49059). Based on a review of the available information concerning whale watching and because the Endangered Species Act does not provide for permits for whale watching, NMFS has determined that the petitioned actions are not warranted at this time.

FOR FURTHER INFORMATION CONTACT: Robert C. Ziobro, Protected Species Management Division, Office of Protected Resources and Habitat Programs, National Marine Fisheries Service, U.S. Department of Commerce, Washington, DC 20235 (202/673–5348).

Dated: March 25, 1988.

William E. Evans,

Assistant Administrator for Fisheries.

[FR Doc. 88–7436 Filed 4–4–88; 8:45 am]

BILLING CODE 3510-22-M

COMMODITY FUTURES TRADING COMMISSION

Commodity Exchange, Inc.; Proposed Amendments Relating to the Aluminum Futures Contract

AGENCY: Commodity Futures Trading Commission.

ACTION: Notice of proposed contract market rule changes.

SUMMARY: The Commodity Exchange, Inc. ("Comex" or "Exchange") has submitted for the aluminum futures contract proposed changes in the contract size and deliverable grades. In accordance with section 5a(12) of the Commodity Exchange Act and acting pursuant to the authority delegated by Commission Regulation 140.96, the Deputy Director of the Division of Economic Analysis ("Division") of the Commodity Futures Trading Commission ("Commission") has determined, on behalf of the Commission, that this proposal is of major economic significance. On behalf of the Commission, the Division is requesting comment on this proposal.

DATE: Comments must be received on or before May 5, 1988.

ADDRESS: Interested persons should submit their views and comments to Jean A. Webb, Secretary, Commodity Futures Trading Commission, 2033 K Street, NW., Washington, DC 20581. Reference should be made to the amendments to the Comex aluminum futures contract.

FOR FURTHER INFORMATION CONTACT: Contact Richard Shilts, Division of Economic Analysis, Commodity Futures Trading Commission, 2033 K Street, NW., Washington, DC 20581 (202) 254–7303.

SUPPLEMENTARY INFORMATION: The Exchange submitted proposed amendments to the aluminum futures contract to change the contract size to 44,000 lbs from 40,000 lbs. With regard to deliverable grades, currently American National Standards Institute (ANSI) grade P1020A is deliverable at par and ANSI grade P1535A is deliverable at a discount. The Exchange is proposing to delete aluminum grade P1535A aluminum from deliverable status and allow delivery of aluminum with a minimum purity of 99.70% with no more than .20% iron and .10% silicon. Under the proposal, both grade P1020A aluminum and aluminum meeting the above standard would be deliverable at par.

In support of the proposals, the Exchange stated:

> The Exchange has determined to modify the aluminum contract to replicate, to as great an extent as possible, the high-grade aluminum contract proposed by the London Metals Exchange. These modifications call for the elimination of grade P1535A aluminum as tenderable aluminum and permit delivery of either P1020A or primary aluminum of minimum 99.70% purity with maximum iron content of 0.20% and maximum silicon content of 0.10%.
>
> * * * The proposed modifications eliminate delivery of all shapes of P1535A aluminum. The deletion of this grade takes into account the reduced levels of production and marketing of this grade. As older vintage smelters are upgraded or replaced with modern facilities, the production of P1535A metal will decline further. Nearly all major U.S. aluminum producers are vertically integrated entities. As a result, if any P1535A metal is produced, the bulk is not marketed but utilized internally, i.e., fed back into the

firm's sheet production facilities where its high iron content is not such a liability.

* * * The shifts in production to a higher grade of primary aluminum effected by the upgrading of aluminum smelter facilities and the accompanying redistribution in market share by grade is reflected by the elimination of P1435A in the COMEX aluminum futures contract. In addition, to accommodate 99.7 percent purity aluminum not designated as P1020A, the addition of all aluminum of 99.7 percent purity with maximum iron content of 20 percent and maximum silicon content of 10 percent can only strengthen the viability of the COMEX aluminum contract.

The Comex proposes that the changes to contract size and deliverable grades will become effective for existing and newly listed contracts upon Commission approval.

The Division requests comments on the acceptability of the Comex's proposal considering the relationship of the proposed contract size and deliverable grades to customary cash market practices. In particular, the Division requests comments on the cash market pricing of grade P1020A aluminum relative to the cash market pricing of the new deliverable quality—aluminum assaying not less than 99.7% purity with a maximum iron content of .20% and a maximum silicon content of .10%. Specifically, at a given point in time, do these two qualities of aluminum typically command the same price in the cash market? Finally, the Division requests comments on the Comex's proposed to apply the subject amendments to existing contracts.

Copies of the proposed amendments will be available for inspection at the Office of the Secretariat, Commodity Futures Trading Commission, 2033 K Street, NW., Washington, DC 20581. Copies of the amended terms and conditions can be obtained through the Office of the Secretariat by mail at the above address or by phone at (202) 254-6314.

The materials submitted by the Exchange in support of the proposed amendments may be available upon request pursuant to the Freedom of Information Act (5 U.S.C. 552) and the Commission's regulations thereunder (17 CFR Part 145 (1987)). Requests for copies of such materials should be made to the FOI, Privacy and Sunshine Acts Compliance Staff of the Office of the Secretariat at the Commission's headquarters in accordance with 17 CFR 145.7 and 145.8.

Any person interested in submitting written data, views or arguments on the proposed amendments should send such comments to Jean A. Webb, Secretary, Commodity Futures Trading Commission, 2033 K Street, NW., Washington, DC, by the specified date.

Issued in Washington, DC on March 30, 1988.

Blake Imel,

Deputy Director, Division of Economic Analysis.

[FR Doc. 88-7370 Filed 4-4-88; 8:45 am]

BILLING CODE 6351-01-M

CONSUMER PRODUCT SAFETY COMMISSION

Commission Priorities; Public Meeting

AGENCY: Consumer Product Safety Commission.

ACTION: Notice of public meeting.

SUMMARY: The Commission will conduct a public meeting to obtain views from all interested parties about priorities for Commission attention during fiscal year 1990. Participation by members of the public is invited. Written comments and oral presentations concerning Commission priorities will become part of the public record of this proceeding.

DATES: The meeting will begin at 10:00 a.m. on May 11, 1988. Requests from members of the public who desire to make oral presentations must be received by the Office of the Secretary not later than April 27, 1988. Persons desiring to make presentations at this meeting must submit a written text or summary of their presentations not later than April 27, 1988. Written comments submitted in lieu of oral presentations will be accepted until May 4, 1988.

ADDRESS: The meeting will be in room 556, 5401 Westbard Avenue, Bethesda, Maryland. Written comments should be mailed to the Office of the Secretary, Consumer Product Safety Commission, Washington, DC 20207.

FOR FURTHER INFORMATION CONTACT: For information about the meeting or to request opportunity to make a presentation at the meeting, call or write Sheldon Butts, Deputy Secretary, Consumer Product Safety Commission, Washington, DC 20207; telephone (301) 492-6800.

SUPPLEMENTARY INFORMATION: The purpose of the meeting on May 11, 1988, is to obtain views concerning projects and activities which should be given priority attention during fiscal year 1990, which begins October 1, 1989. The Commission desires to obtain views from a wide range of interested parties including consumers; manufacturers, importers, distributors, and retailers consumer products; members of the academic community; and health and safety officers of state and local governments.

The Commission is charged by Congress with protection of the public from unreasonable risks of injury associated with consumer products. The Commission enforces and administers the Consumer Product Safety Act (15 U.S.C. 2051 *et seq.*); the Federal Hazardous Substances Act (15 U.S.C. 1261 *et seq.*); Flammable Fabrics Act (15 U.S.C. 1191 *et seq.*); the Poison Prevention Packaging Act (15 U.S.C. 1471 *et seq.*); and the Refrigerator Safety Act (15 U.S.C. 1211 *et seq.*). Standards and regulations issued under provisions of those statutes are codified in the Code of Federal Regulations, Title 16, Chapter II.

While the Commission has broad jurisdiction over products used by consumers in or around their homes, in schools, in recreation, and other settings, its staff and budget are limited. For this reason, the Commission must concentrate its resources on the most serious hazards associated with consumer products within its jurisdiction in order to discharge its Congressional mandate effectively. Commission priorities are selected in accordance with the Commission policy governing establishment of priorities codified at 16 CFR 1009.8.

Persons who desire to make presentations at the meeting on May 11, 1988, should call or write Sheldon Butts, Deputy Secretary, Consumer Product Safety Commission, Washington, DC 20207; telephone (301) 492-6800, not later than April 27, 1988.

Presentations should be limited to approximately ten minutes. Persons desiring to make presentations must submit the written text or a summary of their presentations to the Office of the Secretary not later than April 27, 1988. The Commission reserves the right to impose further time limitations on all presentations and further restrictions to avoid duplication of presentations. The public meeting will begin at 10:00 a.m. on May 11, 1988, and will conclude the same day.

Written comments submitted in lieu of oral presentations should be received in the Office of the Secretary not later than May 4, 1988.

Dated: March 31, 1988.

Sadye E. Dunn,

Secretary, Consumer Product Safety Commission.

[FR Doc. 88-7390 Filed 4-4-88; 8:45 am]

BILLING CODE 6355-01-M

DEPARTMENT OF DEFENSE

Defense Acquisition Regulatory Council; Meetings

AGENCIES: Department of Defense (DoD), National Aeronautics and Space Administration (NASA).

ACTION: Notice of meetings.

SUMMARY: The Defense Acquisition Regulatory (DAR) Council will travel to Dayton, Ohio, and Seattle, Washington, during the week of May 9, 1988. The Council will conduct joint Government/Industry meetings at both locations and will discuss acquisition topics of mutual interest. The Council tentatively plans presentations on the following topics: Small Disadvantaged Business; Finance/Pricing; Technical Data Rights; Ethics; Government Property; and Regulatory Reform. The Council will be available for questions on these and any other DAR cases or issues.

DATES: May 10, 1988 and May 12, 1988.

FOR FURTHER INFORMATION CONTACT: Mr. Charles W. Lloyd, Executive Secretary, DAR Council (202) 697-7266.

SUPPLEMENTARY INFORMATION: The Air Force Institute of Technology, School of System and Logistics, (AFIT/LSP) Wright-Patterson Air Force Base, Ohio, 45433-6583, will host the Council's meeting on Tuesday, May 10, 1988, from 8 a.m. to 4:30 p.m. at the Holiday Inn, Dayton Mall, (513-434-8030) 7999 Prestige Plaza Drive, Miamisburg, Ohio. Registration fee is $10.00. Registration deadline is May 3, 1988, and must be made with Ms. Rita Wells or LCDR Bill Davenport, AFIT/LSP, (513) 255-8546 (AV 785-8546).

The Naval Supply Center, Puget Sound, Bremerton, Washington, 98314, will host the Council's meeting on Thursday, May 12, 1988, from 8 a.m. until 4:30 p.m. at the Red Lion Inn, Seattle, Washington (206-246-8800). The point of contact is Mr. Jim Barber (Code 200A) (206) 476-2801.

Charles W. Lloyd,

Executive Secretary, Defense Acquisition Regulatory Council.

[FR Doc. 88-7416 Filed 4-4-88; 8:45 am]

BILLING CODE 3810-01-M

Department of the Air Force

USAF Scientific Advisory Board; Meeting

March 25, 1988.

The USAF Scientific Advisory Board will hold its Spring General Board Meeting on 20-21 April 1988, from 8:00 a.m. to 5:00 p.m., at Nellis, AFB, NV.

The purpose of this meeting is to enable participants, Board members, and key military leaders to grasp the important issues of Tactical Air Warfare.

This meeting will involve discussions of classified defense matters listed in section 552(b)(c) of Title 5, United States Code, specifically subparagraph (1) thereof, and accordingly will be closed to the public.

For further information, contact the Scientific Advisory Board Secretariat at (202) 697-4648.

Patsy J. Conner,

Air Force Federal Register Liaison Officer.

[FR Doc. 88-7466 Filed 4-4-88; 8:45 am]

BILLING CODE 3910-01-M

DEPARTMENT OF ENERGY

Voluntary Agreement and Plan of Action To Implement the International Energy Program; Meetings

In accordance with section 252(c)(1)(A)(i) of the Energy Policy and Conservation Act (42 U.S.C. 6272(c)(1)(A)(i)), the following meeting notices are provided:

I. A meeting of the Industry Advisory Board (IAB) to the International Energy Agency (IEA) will be held on April 12, 1988, and possibly continuing on April 13, at the offices of Ente Nazionale Idrocarburi (ENI), ENI Building, 19th floor, Piazzale Enrico Mattei 1, E.U.R., Rome, Italy, beginning at 9:30 p.m. The agenda for the meeting is as follows:

1. Opening Remarks.
2. Approval of Record Note of IAB Meeting of October 1, 1987.
3. Correspondence and Communications with IEA and Reporting Companies.
4. IEA Test Issues:
   - —CERM Test Appraisal Report
   - —CERM Draft Appraisal for the Governing Board
   - —AST-6 Draft Test Guide and Status of Preparation for AST-6
   - —U.S. Plan of Action Issues—Potential Recording of Telephone Conversations
5. Emergency Stocks:
   - —Emergency Minimum Operating Requirements Study (EMOR)
   - —Questionnaire on "Compensation" for Early Coordinated Emergency Response Measures
   - —Minimum Operating Requirements (MOR) 1987 Update
6. Other Emergency Preparedness Issues:
   - —Draft SEQ Report to the Governing Board—Recommendations on Further Improvements to Member Countries' Early Response Capabilities
   - —New Forms of Oil Trading—The Futures Market—Possible Implications for the IEA Oil Emergency Sharing System
7. IAB Organization, Leadership, and Succession.
8. Date and Time of Next Meeting.

II. A meeting of the IAB will be held on April 14, 1988, at the offices of the IEA, 2 rue Andre Pascal, Paris, France, beginning at 9:30 a.m. This meeting is being held in order to permit attendance by representatives of U.S. company members of the IAB at a meeting of the IEA's Standing Group on Emergency Questions (SEQ) which is scheduled to be held at the aforesaid location on that date. The agenda for the meeting is under the control of the SEQ. It is expected that the following draft agenda will be followed:

1. Adoption of the Agenda.
2. Summary Record of the 58th Meeting.
3. IEA Test Issues:
   - —CERM Test Appraisal Report
   - —Emergency Organization CERM Test Appraisal Reports
   - —Draft Cover Note on CERM Test Appraisal for the Governing Board
   - —AST-6 Preparations
   - —AST-6 Draft Test Guide
   - —Data Test—Preliminary Results
4. Emergency Stocks:
   - —Emergency Minimum Operating Requirements (EMOR)—Progress Report
   - —Questionnaire on "Compensation" for Early Coordinated Emergency Response Measures
   - —Minimum Operating Requirements (MOR) 1987 Update
5. Other Emergency Preparedness Issues:
   - —Draft SEQ Report to the Governing Board on Further Improvements to Member Countries' Early Response Capacity
   - —New Forms of Oil Trading—the Futures and Forward Markets—Possible Implications for the IEA Oil Emergency Sharing System
   - —Member Countries' Emergency Response Program Reviews—Second Cycle

Australia
Canada
Denmark
Germany
Italy
Japan
Netherlands
New Zealand
Portugal

Spain
Sweden
Switzerland
United Kingdom
United States

—Summary of Emergency Response Issues in SLT Country Reviews

6. Other Topics:

—End-March Oil Market Report
—BPFC (1Q87—4Q87)

7. Any Other Business.

8. Date of Next Meeting.

As provided in section 252(c)(1)(A)(ii) of the Energy Policy and Conservation Act, the IAB meeting is open only to representatives of members of the IAB, their counsel, representatives of the Departments of Energy, Justice, State, the Federal Trade Commission, and the General Accounting Office, representatives of Committees of Congress, representatives of the IEA, representatives of the Commission of the European Communities, and invites of the IAB or the IEA. The SEQ meeting is open only to the aforesaid persons, representatives of members of the SEQ, and invitees of the SEQ.

Issued in Washington, DC, March 30, 1988.

Eric J. Fygi,
Acting General Counsel.

[FR Doc. 88-7434 Filed 4-4-88; 8:45 am]

BILLING CODE 6450-01-M

Federal Energy Regulatory Commission

[Docket Nos. ER88-15-000, et al.]

Duquesne Light company, et al.; Electric Rate, Small Power Production, and Interlocking Directorate Filings

Take notice that the following filings have been made with the Commission:

1. Duquesne Light Company

[Docket No. ER88-15-000]

March 29, 1988.

Take notice that on March 23, 1988, Duquesne Light Company tendered for filing a revised Supplement No. 10 to Rate Schedule FPC No. 11. The total annual reduction would become $14,733.44 per year versus the $12,434.33 reduction originally filed.

Comment date: April 12, 1985, in accordance with Standard Paragraph E at the end of this notice.

2. Toledo Edison Company

[Docket No. ER88-298-000]

March 29, 1988.

Take notice that on March 22, 1988, Toledo Edison Company (Toledo Edison) tendered for filing a Supplemental Resale Service Rate Agreement dated as of December 1, 1987 between Toledo Edison and American-Municipal Power—Ohio, Inc. (AMP—Ohio).

Toledo Edison states that the Supplemental Resale Service Rate Agreement provided for sales at negotiated rates of power and energy in excess of the minimum amounts supplied by Toledo Edison to AMP—Ohio pursuant to a Municipal Resale Service Rate Agreement (Toledo Edison Rates Schedule FERC No. 31). Toledo Edison requested waiver of § 35.3 of the Commission's regulations and any other applicable regulations to the extent necessary to permit the Supplemental Resale Service Rate Agreement to become effective on December 1, 1987 concurrent with the commencement of service thereunder.

Comment date: April 12, 1985, in accordance with Standard Paragraph E at the end of this notice.

3. Kansas Gas and Electric Company

[Docket No. ER88-120-001 and ER85-461-009]

March 29, 1988.

Take notice that on March 21, 1988, Kansas Gas and Electric Company (KG&E) tendered for filing a compliance report and unexecuted agreements reflecting a five-year term between the cities of Arma, Blue Mound, Bronson, Elsmore, Haven, and Moran, Kansas and KG&E.

Copies of this filing have been served upon all parties affected by this proceeding.

Comment date: April 12, 1986, in accordance with Standard Paragraph E at the end of this notice.

4. Boston Edison Company v. Town of Boylston Municipal Light Department, et al.

[Docket No. EL86-18-000]

March 30, 1988.

Take notice that on March 23, 1988, Boston Edison Company (Boston Edison) tendered for filing, pursuant to sections 205 and 307(a) of the Federal Power Act (16 U.S.C. 824d and 825f(a)) and Rule 206 of the Commission's Rules of Practice and Procedure, a Complaint against Town of Boylston Municipal Light Department, Town of Hudson Light and Power Department, Town of Littleton Municipal Light and Water Department, Middleborough Municipal Gas and Electric Department, North Attleboro Electric Department, Peabody Municipal Light Plant, Shrewsbury Electric Light Plant, Town of Wakefield Municipal Light Department, and City of Westfield Gas and Electric Light Department (Municipals).

Boston Edison states that the Municipals have violated section 205 of the Federal Power Act and their contracts with Boston Edison, which are rate schedules, by their refusal to pay the monthly charges for their entitlements in the electric output of the Pilgrim Nuclear Power Station (Pilgrim) and have refused to pay to Boston Edison charges for Pilgrim-related transmission facilities.

Comment date: April 29, 1986, in accordance with Standard Paragraph E at the end of this notice.

5. Ralph M. Baruch

[Docket No. ID-2334-000]

March 29, 1988.

Take notice that on March 23, 1988, Ralph M. Baruch filed an application pursuant to section 305(b) of the Federal Power Act 16 U.S.C. 825(b), and Part 45 of the Commission's Rules and Regulations for authorization to hold concurrently the following positions:

Position	Name of corporation	Classification
Director	Orange and Rockland Utilities, Inc	Public utility.
Do	Irving Bank Corp	Parent of authorized foreign underwriter.
Do	Irving Trust Co	Do.

Comment date: April 12, 1986, in accordance with Standard Paragraph E at the end of this notice.

6. Kamine LCP Cogen Co. Inc.

[Docket No. QF88-289-000]

March 29, 1988.

On February 24, 1988, Kamine LCP Cogen Co. Inc. (Applicant), of 1620 Route 22 East, Union, New Jersey, 07083 submitted for filing an application for certification of a facility as a qualifying cogeneration facility pursuant to § 292.207 of the Commission's

regulations. No determination has been made that the submittal constitutes a complete filing.

The topping cycle cogeneration facility will be located in Solvay, New York. The major equipment will include two combustion turbine-generators, a waste heat boiler generator, and a single extraction steam turbine-generator. The facility will provide useful thermal energy to an industrial process. The net electric power production capacity will be approximately 79.9 megawatts. The primary energy source will be natural gas.

Comment date: Thirty days from publication in the **Federal Register**, in accordance with Standard Paragraph E at the end of this notice.

Standard Paragraph

E. Any person desiring to be heard or to protest said filing should file a motion to intervene or protest with the Federal Energy Regulatory Commission, 825 North Capitol Street NE., Washington, DC 20426, in accordance with Rules 211 and 214 of the Commission's Rules of Practice and Procedure (18 CFR 385.211 and 385.214). All such motions or protests should be filed on or before the comment date. Protests will be considered by the Commission in determining the appropriate action to be taken, but will not serve to make protestants parties to the proceeding. Any person wishing to become a party must file a motion to intervene. Copies of this filing are on file with the Commission and are available for public inspection.

Lois D. Cashell,

Acting Secretary.

[FR Doc. 88-7427 Filed 4-4-88; 8:45 am]

BILLING CODE 6717-01-M

[Docket Nos. ER88-295-000, et al.]

Florida Power & Light Company, et al.; Electric Rate, Small Power Production, and Interlocking Directorate Filings

March 25, 1988.

Take notice that the following filings have been made with the Commission:

1. Florida Power & Light Company

[Docket No. ER88-295-000]

Take notice that on March 21, 1988, Florida Power & Light Company (FPL) tendered for filing a document entitled Amendment Number Fourteen to Revised Agreement to Provide Specified Transmission Service Between Florida Power & Light Company and City of Vero Beach, Florida (Vero Beach) (Rate Schedule FERC No. 58).

FPL states that under Amendment Number Fourteen, FPL will transmit power and energy for Vero Beach as is required in the implementation of its interchange agreement with the Utility Board of the City of Key West, Florida.

FPL requests that waiver of § 35.3 of the Commission's Regulations be granted and that the proposed Amendment be made effective immediately. FPL states that copies of the filing were served upon Vero Beach.

Comment date: April 11, 1988, in accordance with Standard Paragraph E at the end of this notice.

2. Southern California Edison Company

[Docket No. ER88-296-000]

Take notice that on March 21, 1988, Southern California Edison Company (Edison) tendered for filing the following Amendments to the Edison-Anaheim Interruptible Transmission Service Agreement, designated Rate Schedule FERC No. 130, and the Intermountain Power Project Firm Transmission Service Agreement, designated Rate Schedule FERC No. 193, which has been executed by Edison and the City of Anaheim, California (Anaheim):

Amendment No. 3 to the Edison-Anaheim Interruptible Transmission Service Agreement

Amendment No. 1 to the Intermountain Power Project Firm Transmission Service Agreement

These Amendments provide for a revision in transmission losses due to the construction of the 230 kV and 500 kV transmission facilities between the Mira Loma, Serrano, and Villa Park Substations.

These Amendments are proposed to become effective when executed by the Parties and on the first day of the month following acceptance for filing by the Commission.

Copies of this filing were served upon the Public Utilities Commission of the State of California and Anaheim.

Comment date: April 11, 1988, in accordance with Standard Paragraph E at the end of this document.

3. Southern California Edison Company

[Docket No. ER88-297-000]

Take notice that on March 21, 1988, Southern California Edison Company (Edison) tendered for filing a letter agreement which amends the Edison-Vernon CDWR Firm Transmission Service Agreement designated Rate Schedule FERC No. 195, which has been executed by Edison and the City of Vernon, California (Vernon).

The letter agreement provides for the continuation of firm transmission service for Vernon's purchases of up to 27 MW of capacity and associated energy from the California Department of Water Resources (CDWR) up to December 31, 1988, or until Vernon's gas turbines are operational, whichever is earlier.

Edison requests and Vernon supports waiver of prior notice requirements as contained in § 35.3 of the Commission's regulations and respectfully requests an effective date of March 1, 1988.

Copies of this filing were served upon the Public Utilities Commission of the State of California and the City of Vernon, California.

Comment date: April 11, 1988, in accordance with Standard Paragraph E at the end of this notice.

4. G.A.S. Orange Development, Inc.

[Docket No. QF88-296-000]

On March 14, 1988, G.A.S. Orange Development, Inc. (Applicant) of 630 First Avenue, Suite 30C, New York, NY 10016, submitted for filing an application for certification of a facility as a qualifying cogeneration facility pursuant to § 292.207 of the Commission's regulations. No determination has been made that the submittal constitutes a complete filing.

The topping-cycle cogeneration facility will be located at the existing steam station of the Syracuse University, 500 E. Taylor Street, Syracuse, NY 13244. The facility will consist of one combustion turbine generator, one waste heat recovery boiler with supplementary firing capability, and one extraction steam turbine generator. The thermal energy output is to be steam used for district heating. The maximum net electric power production capacity of the facility will be 80 MW. Construction of the facility will begin in July 1988.

Comment date: Thirty days from publication in the **Federal Register**, in accordance with Standard Paragraph E at the end of this notice.

Standard Paragraph

E. Any person desiring to be heard or to protest said filing should file a motion to intervene or protest with the Federal Energy Regulatory Commission, 825 North Capitol Street NE., Washington, DC 20426, in accordance with Rules 211 and 214 of the Commission's Rules of Practice and Procedure (18 CFR 385.211 and 385.214). All such motions or protests should be filed on or before the comment date. Protests will be considered by the Commission in determining the appropriate action to be taken, but will not serve to make protestants parties to the proceeding. Any person wishing to become a party

must file a motion to intervene. Copies of this filing are on file with the Commission and are available for public inspection.

Lois D. Cashell,

Acting Secretary.

[FR Doc. 88-7428 Filed 4-4-88; 8:45 am]

BILLING CODE 6717-01-M

Algonquin Gas Transmission Co.; Proposed Changes in FERC Gas Tariff

[Docket No. TA88-3-20-002]

March 30, 1988.

Take Notice that Algonquin Gas Transmission Company ("Algonquin") on March 25, 1988, tendered for filing to its FERC Gas Tariff, Second Revised Volume No. 1 the following tariff sheets:

Proposed to be effective February 1, 1988

Alternate Twenty-fifth Revised Sheet No. 203
Substitute Seventeenth Revised Sheet No. 204
Substitute Seventeenth Revised Sheet No. 205
Fifteenth Revised Sheet No. 211
Substitute Eighth Revised Sheet No. 214

Proposed to be effective March 1, 1988

Substitute Twenty-fourth Revised Sheet No. 201
Twenty-sixth Revised Sheet No. 203

Algonquin states that such tariff sheets are being filed pursuant to Section 7 of Rate Shedules F-2, F-3, and F-4, Section 10 of Rate Schedule STB, Section 9 of Rate Schedule SS-III and Section 17 of its FERC Gas Tariff to reflect changes in the underlying rates by its pipeline suppliers, Texas Eastern Transmission Corporation ("Texas Eastern") and National Fuel Gas Supply Corporation ("National").

Algonquin states that on Feb. 19, 1988, Texas Eastern made a compliance filing in Docket No. RP85-177, *et al.*, to revise its rates pursuant to the Commission Letter Orders dated January 28, 1988 and February 8, 1988. Texas Eastern's compliance filing was accepted by Commission Letter Order dated March 9, 1988. Algonquin is filing Substitute Twenty-fourth Revised Sheet No. 201, Alternate Twenty-fifth Revised Sheet No. 203 and Twenty-sixth Revised Sheet No. 203, Substitute Seventeenth Revised Sheet No. 205, Fifteenth Revised Sheet No. 211, and Substitute Eighth Revised Sheet No. 214 to reflect those changes made by Texas Eastern.

Algonquin states that on March 1, 1988, in Docket No. TA88-2-16-001, National filed revised rates for the service underlying Algonquin's Rate Schedule F-3. Algonquin is filing Substitute Seventeenth Revised Sheet No. 204 to reflect those changes made by National.

Algonquin notes that a copy of this filing is being served upon each affected party and interested state commission.

Any person desiring to be heard or to protest said filing should file a motion to intervene or protest with the Federal Energy Regulatory Commission, 825 North Capitol Street, NE., Washington, DC 20426, in accordance with Rules 211 and 214 of the Commission's Rules of Practice and Procedure (18 CFR 385.211, 385.214). All such motions or protests should be filed on or before April 6, 1988. Protests will be considered by the Commission in determining the appropriate action to be taken but will not serve to make protestants parties to the proceeding. Any person wishing to become a party must file a motion to intervene. Copies of this filing are on file with the Commission and are available for public inspection.

Lois Cashell,

Acting Secretary.

[FR Doc. 88-7420 Filed 4-4-88; 8:45 am]

BILLING CODE 6717-01-M

Colorado Interstate Gas Co.; Petition for Waiver and Clarification of Regulations Under Order No. 483

[Docket No. RP88-84-000]

March 30, 1988.

Take notice that on March 2, 1988, Colorado Interstate Gas Company (CIG) tendered for filing a petition for waiver and clarification of certain regulations promulgated under Order No. 483 which was issued on November 10, 1987.

CIG states that it must make four PGA filings between May 1 and December 1, 1988, pursuant to the Commission's Order No. 483. CIG states that it will file the new terms on conditions of its FERC Gas Tariff necessary to implement Order No. 483 as required on May 1, 1988. However, CIG requests a waiver of the two PGA filings which would otherwise have to be made on May 1 (CIG's initial, one-month transition PGA filing) and June 1, 1988 (CIG's first quarterly filing). CIG states that if this waiver were granted, CIG would make its first annual filing under the new regulations on August 1, 1988, and would make all required subsequent quarterly and annual filings.

CIG also seeks a permanent waiver of the 60-day deadline for the "true-up" of gas costs to allow for 90 days and requests clarification with regard to the disbursement of refunds. CIG states that in Order No. 483 the Commission provides that disbursement of refunds shall be made using the pipeline's latest 12-month sales, while in § 154.305(i)(2), the Commission requires that disbursement be made using the sales for the 12-month period ending 3 months prior to the month in which the trigger is activated. CIG states that for administrative convenience, it requests clarification that the latest 12-month sales be used as the basis for making refunds.

Any person desiring to be heard or to protest said filing should file a motion to intervene or a protest with the Federal Energy Regulatory Commission, 825 North Capitol Street NE., Washington, DC 20426, in accordance with Rules 214 and 211 of the Commission's Rules of Practice and Procedure (18 CFR 385.214, 385.211 (1987)). All such motions or protests should be filed on or before April 6, 1988. Protests will be considered by the Commission in determining the appropriate action to be taken, but will not serve to make protestants parties to the proceeding.

Any person wishing to become a party must file a motion to intervene. Copies of this filing are on file with the Commission and are available for public inspection.

Lois D. Cashell,

Acting Secretary.

[FR Doc. 88-7419 Filed 4-4-88; 8:45 am]

BILLING CODE 6717-01-M

Columbia Gas Transmission Corp.; Proposed Changes in FERC Gas Tariff

[Docket No. RP86-15-037]

March 30, 1988.

Take notice that Columbia Gas Transmission Corporation (Columbia), on March 25, 1988, tendered for filing proposed changes to its FERC Gas Tariff, Original Volume No. 1, to be effective April 1, 1987:

Third Revised Sheet No. 22I
Third Revised Sheet No. 22T

Columbia states that these changes are being filed in accordance with Ordering Paragraph (B) of the Federal Energy Regulatory Commission's (Commission) June 18, 1987 and December 9, 1987 Orders in this proceeding, and replace the tariff sheets rejected by the February 24, 1988 Letter Order issued by the Director, OPPR. Columbia further states that the changes relate to section 9(e) of the transportation rate schedules implementing open access transportation on its system, and specifically to availability of system

storage facilities to provide transportation service.

Any person desiring to be heard or to protest said filing should file a motion to intervene or protest with the Federal Energy Regulatory Commission, 825 North Capitol Street NE., Washington, DC 20426, in accordance with Rules 211 and 214 of the Commission's Rules of Practice and Procedures. All such motions or protests should be filed on or before April 6, 1988. Protests will be considered by the Commission in determining the appropriate action to be taken, but will not serve to make protestants parties to the proceeding. Any person wishing to become a party must file a motion to intervene. Copies of Columbia's filing are on file with the Commission and are available for public inspection.

Lois D. Cashell,

Acting Secretary.

[FR Doc. 88-7421 Filed 4-4-88; 8:45 am]

BILLING CODE 6717-01-M

High Island Offshore System; Proposed Changes

[Docket No. RP87-22-002]

March 30, 1988.

Take notice that on March 28, 1988, High Island Offshore System ("HIOS") tendered for filing, pursuant to section 4 of the Natural Gas Act, the following tariff sheets to its FERC Gas Tariff, Original Volume No. 1:

Second Revised Sheet No. 2
First Revised Sheet No. 2A
Nineteenth Revised Sheet No. 4
Original Sheet Nos. 9 through 26; 28 through 30; 32; 70; and, 72 through 76
Substitute Original Sheet Nos. 27, 31 and 71

HIOS states that this filing is made in accordance with the Commission's Order issued on February 25, 1988 approving the Stipulation and Agreement filed by HIOS on October 2, 1987 as modified by HIOS' Reply Comments in Docket No. RP87-22. In addition to reflecting a reduction in rates, the sheets filed established an Interruptible Transportation Service under Rate Schedule IT with certain tariff modifications incorporated therein, as required by the Order.

HIOS requests that the above-described tariff sheets be made effective on April 1, 1988.

Any person desiring to be heard or to protest said filing should file a motion to intervene or to protest with the Federal Energy Regulatory Commission, 825 North Capitol Street NE., Washington, DC 20426, in accordance with Rule 211 or Rule 214 of the Commission's Rules of Practice and Procedure (18 CFR 385.211, 385.214). All such motions or protests should be filed on, or before, April 7, 1988. Protests will be considered by the Commission in determining the appropriate action to be taken but will not serve to make protestants parties to the proceeding. Any person wishing to become a party to the proceeding must file a motion to intervene. Copies of this filing are on file with the Commission and are available for public inspection.

Lois D. Cashell,

Acting Secretary.

[FR Doc. 88-7422 Filed 4-4-88; 8:45 am]

BILLING CODE 6717-01-M

ENVIRONMENTAL PROTECTION AGENCY

[AAA-FRL-3360-6]

EPA Master List of Debarred, Suspended or Voluntarily Excluded Persons

AGENCY: Environmental Protection Agency.

ACTION: EPA Master List of Debarred, Suspended, or Voluntarily Excluded Persons.

SUMMARY: 40 CFR 32.400 requires the Director, Grants Administration Division, to publish in the **Federal Register** each calendar quarter the names of, and other information concerning, those parties debarred, suspended, or voluntarily excluded from participation in EPA assisted programs by EPA action under Part 32. Assistance (grant and cooperative agreement) recipients and contractors under EPA assistance awards may not initiate new business with these firms or individuals on any EPA funded activity during the period of suspension, debarment, or voluntary exclusion.

This short list contains the names of those persons who have been listed as a result of EPA actions only. It is provided for general informational purposes only and is not to be relied on in determining a person's current eligibility status. A comprehensive list, updated weekly, is available in each Regional Office. Inquiries concerning the status of any individual, organization, or firm should be directed to EPA's Regional or Headquarters office for grants administration that normally serves you.

DATE: This short list is current as of March 25, 1987.

FOR FURTHER INFORMATION CONTACT: Frank Dawkins, of the EPA Compliance Branch, Grants Administration Division, at (202) 475-8025.

Dated: March 21, 1988.

Harvey G. Pippen, Jr.,

Director, Grants Administration Division (PM-216).

EPA MASTER LIST OF DEBARRED, SUSPENDED AND VOLUNTARILY EXCLUDED PERSONS

Name and jurisdiction	File No.	Status [1]	From	To	Grounds
A.F. Bell Electric Company, Inc. (Youngstown, OH)	85-0014-00	D	06-27-85	06-26-88	§ 32.200(a)
Alle-Catt Asphalt, Inc. (Allegany, NY)	86-0072-02	D	07-29-87	07-28-90	§ 32.200(a)(3)
AES Engineers, Inc. (Willow Springs, IL)	86-0001-00	S	12-15-87	Open	§ 32.300(b)
Altman, Larry L. (Charleston, SC)	85-0063-03	S	07-29-85	Open	§ 32.300(b)
American Recovery Co., Inc. (Glen Burnie, MD)	86-0011-00	D	06-20-86	06-19-89	§ 32.200(f)(i)
Applied Science Distributors (Pensacola, FL)	87-0013-00	D	02-05-87	04-02-90	§ 32.200(a)(i)
Averill, Ernest Jr. (Fort Myers, FL)	83-0066-06	D	12-02-83	10-29-88	§ 32.200(b)
Azzil Trucking Co., Inc. (Roslyn, NY)	85-0008-02	D	09-11-86	09-10-89	§ 32.200(a)(b)
Barnum, James Charles (Utica, MI)	86-0010-01	D	12-10-85	12-09-88	§ 32.200(a)
Batzer Construction Co. Inc. (St. Cloud, MN)	85-0052-00	D	03-07-86	08-05-90	§ 32.200(a)
Batzer, Bruce (St. Cloud, MN)	85-0052-01	D	03-07-86	08-05-90	§ 32.200(a)
Batzer, Robert (St. Cloud, MN)	85-0052-02	D	03-07-86	08-05-90	§ 32.200(a)
Beckham, Charles (Detroit, MI)	84-0030-02	D	02-24-86	07-30-89	§ 32.200(a)(b)
BECO, Inc. (High Point, NC)	85-0017-01	VE	12-10-85	12-09-88	§ 32.200(a)(3)
Bell, Bobby (Sulphur, LA)	85-0071-01	D	03-06-86	03-05-89	§ 32.200(a)(b)
Bell, Edwin (Sulphur, LA)	85-0071-02	D	03-06-86	03-05-89	§ 32.200(a)(b)
Blackwelder, Ray Martin (Concord, NC)	84-0011-01	D	06-27-85	06-26-88	§ 32.200(a)

EPA MASTER LIST OF DEBARRED, SUSPENDED AND VOLUNTARILY EXCLUDED PERSONS—Continued

Name and jurisdiction	File No.	Status [1]	From	To	Grounds
Bortugno, Frank (Bronx, NY)	86-0082-30	D	11-09-87	11-08-90	§ 32.200(a)
Bortugno, Ralph (Bronx, NY)	86-0082-29	D	11-13-87	11-12-90	§ 32.200(a)
Bowers, Darralyn (Detroit, MI)	84-0030-01	D	02-24-86	05-11-89	§ 32.200(a)(b)
Bridges, William D., Jr. (Wilmington, NC)	85-0069-01	D	04-09-86	04-08-89	§ 32.200(a)
Bryan, Charles B. (Tempe, AZ)	87-0010-03	D	07-28-87	07-27-90	§ 32.200(a)(c)(i)
Cannady, Nathaniel Ellis (Asheville, NC)	86-0047-01	D	03-18-86	07-15-89	§ 32.200(a)(i)
Careccia, Vincent (Farmingdale, NY)	86-0082-26	D	11-09-87	11-08-90	§ 32.200(a)
Carson, E. Eugene (Statesville, NC)	85-0004-01	D	01-06-86	01-05-89	§ 32.200(a)
Carson, Charles (Grosse Point Woods, MI)	85-0066-00	D	03-18-86	04-25-89	§ 32.200(b)
Chatterjee, Samar (Willow Springs, IL)	83-0065-00	S	12-15-87	OPEN	§ 32.300(b)
City Chemicals Company, Inc. (Orlando, FL)	86-0038-02	D	10-02-86	11-23-89	§ 32.200(a)(1)
City Environmental Services, Inc. (Orlando, FL)	86-0038-03	D	10-02-86	11-23-89	§ 32.200(a)(1)
City Fuel Oil Company (Orlando, FL)	86-0038-05	D	10-02-86	11-23-89	§ 32.200(a)(1)
City Industries, Inc. (Orlando, FL)	86-0038-01	D	10-02-86	11-23-89	§ 32.200(a)(1)
Commonwealth Companies Incorporated (Lincoln, NE)	86-0100-01	S	11-12-86	OPEN	§ 32.200(a)(1)
Commonwealth Electric Company, Inc. (Lincoln, NE)	86-0100-00	S	09-09-86	OPEN	§ 32.300(b)
Crolich, Peter V. (Mobile, AL)	87-0017-02	D	06-16-87	06-17-90	§ 32.200(a)(i)
Crossgrove, Richard (Pensacola, FL)	87-0013-01	D	02-05-87	04-02-90	§ 32.200(a)(i)
Cryer, John P. (Baton Rouge, LA)	85-0062-03	S	07-29-85	OPEN	§ 32.300(b)
Cummins, Robert (Enid, OK)	88-0005-00	D	12-2-87	06-3-88	§ 32.200
Cusenza, Sam (Ypsilanti, MI)	85-0024-02	D	02-24-86	04-02-89	§ 32.200(a)(b)
Cuti, Vincent J., Jr. (Huntington, NY)	83-0040-03	D	04-30-85	04-29-88	§ 32.200(a)
Dellinger, Theodore C. (Monroe, NC)	84-0012-01	VE	03-12-85	03-11-88	§ 32.200(a)
DeLuca, Nick (Staten Island, NY)	86-0082-25	D	11-09-87	11-08-90	§ 32.200(a)
Diliberto, Joseph L. (Fairless Hills, PA)	86-107-01	D	12-12-87	07-15-88	§ 32.200(a)(1)
Domanski, Gary Henry (Utica, MI)	86-0010-02	D	12-10-85	12-09-88	§ 32.200(a)
Driscoll, John William (Dundale, MD)	86-0011-02	D	10-15-86	10-14-89	§ 32.200(f)(i)
Duisen, Darrell A. (San Diego, CA)	86-0105-01	D	10-16-87	10-15-90	§ 32.200(a)(i)
Dykes, Lamar D. (Nederland, TX)	85-0071-03	D	03-06-86	03-05-89	§ 32.200(a)(b)
Enmanco (Utica, MI)	86-0010-00	D	12-10-85	12-09-88	§ 32.200(a)
Environmental Management Corporation (Utica, MI)	86-0010-00	D	12-10-85	12-09-88	§ 32.200(a)
Environmental Technology of America, Inc. (Wilbraham, MA)	86-0071-00	D	02-05-87	02-04-90	§ 32.200(a)
Federal Chandros, Inc. (Brooklyn, NY)	87-0040-00	S	07-02-87	OPEN	§ 32.300(b)
Fields, Leroy (Pensacola, FL)	87-0013-02	D	02-05-87	04-02-90	§ 32.200(a)
Floyd D. Stuckey & Associate (Winfield, KS)	84-0028-00	D	08-26-85	08-25-88	§ 32.200(a)
Foley, Bancroft T., Washington, DC	86-0004-03	D	03-07-86	03-06-89	§ 32.200(a)
Franklin Wiring Co. (Youngstown, OH)	85-0044-00	D	09-04-85	09-03-88	§ 32.200(a)(3)
FSA Engineering Consultants (Winsfield, KS)	84-0028-00	D	08-26-85	08-25-88	§ 32.200(a)
Futia, Joseph N., Jr. (Albany, NY)	88-0018-01	S	03-11-88	OPEN	§ 32.200(b)
G.B. Industries (Atlanta, GA)	87-0082-05	D	11-02-87	OPEN	§ 32.200
Gametronics Corp. (Atlanta, GA)	87-0082-06	D	11-02-87	OPEN	§ 32.200
Gates and Fox, Ltd. (Tempe, AZ)	87-0010-00	VE	07-28-87	12-01-88	§ 32.200(a)(c)(i)
Gelb, Michael (Brooklyn, NY)	87-0040-01	S	07-02-87	OPEN	§ 32.300(b)
Gelb, Thomas (Brooklyn, NY)	87-0040-02	S	07-02-87	OPEN	§ 32.300(b)
Geuther, Herbert G. (Philadelphia, PA)	86-0004-04	D	03-07-86	03-06-89	§ 32.200(a)
Goodloe, George M. (Jacksonville, FL)	86-0099-01	D	08-05-87	02-04-89	§ 32.200(a)(3)(i)
Grant, Alan Blane (Atlanta, GA)	87-0082-05	D	11-02-87	OPEN	§ 32.200
Graves, George William (Wilmington, NC)	85-0069-02	D	03-05-85	03-04-89	§ 32.200(a)
Gredig Industries Inc. (Atlanta, GA)	87-0082-04	D	11-02-87	OPEN	§ 32.200
Greer, Arthur (Maitland, FL)	86-0038-00	D	10-02-86	11-23-89	§ 32.200
Gross, William R. (Big Springs, TX)	86-0002-01	D	10-06-86	10-05-89	§ 32.200(a)
Hansen, Leonard A. (St. Peter, MN)	85-0019-02	D	09-26-85	09-25-88	§ 32.200(a)(3)
Herbst Electric Co. (Cleveland, OH)	87-0081-00	D	02-24-88	02-23-91	§ 32.200(a)
Hi-Way Surfacing, Inc. (Marshall, MN)	85-0053-00	D	12-17-85	12-16-88	§ 32.200(a)(3)
Hochreiter, Herbert (Roslyn, NY)	85-0008-01	D	09-11-86	09-10-89	§ 32.200(a)(b)
Hodges Electric Company (Wilmington, NC)	85-0070-00	D	04-04-86	04-03-89	§ 32.200(a)
Howard P. Foley, Company (Washington, DC)	86-0004-00	D	03-07-86	03-06-89	§ 32.200(a)
Hugo Schulz, Inc. (Lakefield, MN)	85-0047-00	D	05-01-86	04-30-89	§ 32.200(a)
Ingber, Brian (S. Fallsburg, NY)	86-0096-01	D	04-24-87	02-23-90	§ 32.200(a)
J.A. LaPorte, Inc. (Arlington, VA)	86-0037-00	D	08-29-86	08-28-89	§ 32.200(a)(3)
James Electric Co., Inc. (Huntington, WV)	87-0046-00	D	12-12-87	12-11-90	§ 32.200(a)(3)
Jerlow, John A. (Lakefield, MN)	85-0047-02	D	05-01-86	04-30-89	§ 32.200(a)
Jerpbak, Daniel R. (Owatonna, MN)	86-0024-01	D	09-25-86	09-24-89	§ 32.200(i)
Jethani, Nandlal (Williston Park, NY)	86-0082-27	D	11-09-87	11-08-90	§ 32.200(a)
J.N. Futia Co., Inc. (ALbany, NY)	88-0018-00	S	03-11-88	OPEN	§ 32.300(b)
Johson, C. Theodore (Indianapolis, IN)	84-0023-04	D	03-04-86	03-03-89	§ 32-200(a)(f)
Jordan, William F. (Tempe, AZ)	87-0010-02	D	07-28-87	07-27-90	§ 32-200(a)(c)(i)
Komatz Construction Co., Inc. (St. Peter, MN.)	85-0019-00	D	09-26-85	09-25-88	§ 32.200(a)(3)
Komatz, Thomas P. (St. Peter, MN)	85-0019-00	D	09-26-85	09-25-88	§ 32.200(a)(3)
Kruse, Lloyd C. (Lakefield, MN)	85-0047-01	D	05-01-86	04-30-89	§ 32.200(a)
Kruse, William B. (Tempe, AZ)	87-0010-01	S	07-28-87	OPEN	§ 32.300(b)
L&J Waste Service, Inc. (Hialeah, FL)	85-0079-02	D	12-19-86	12-18-89	§ 32.200(a)(i)
Law, David P. (Greenwell Springs, LA)	85-0064-00	S	07-29-85	OPEN	§ 32.300(b)
Law, Theresa McBeth (Greenwell Springs, LA)	85-0064-01	S	07-29-85	OPEN	§ 32.300(b)
Lench, Frank P. (Lafayette, CA)	86-0004-01	D	03-07-86	03-06-89	§ 32.200(a)
Leyendecker Highway Contractors, Inc. (Laredo, TX)	86-0014-00	D	07-17-86	03-25-88	§ 32.200(a)
Lizza Industries, Inc. (Roslyn, NY)	85-0006-00	D	09-11-86	09-10-89	§ 32.200(a)(b)
Lofgren, Sven (Lincoln, NE)	87-0014-01	S	11-12-86	OPEN	§ 32.200(i)
McDowell Contractors, Inc. (Nashville, TN)	84-0014-00	VE	12-23-85	12-22-88	§ 32.200(a)
Meyer-Rohlin, Inc. (Buffalo, MN)	86-0081-00	S	04-01-87	OPEN	§ 32.200(a)(i)

EPA MASTER LIST OF DEBARRED, SUSPENDED AND VOLUNTARILY EXCLUDED PERSONS—Continued

Name and jurisdiction	File No.	Status [1]	From	To	Grounds
Meyer, Thore P. (Buffalo, MN)	86-0061-01	S	04-01-87	OPEN	§ 32.200(a)(1)
Midhampton Asphalt (Roslyn, NY)	85-0008-03	D	09-11-86	09-10-89	§ 32.200(a)(b)
Millspaugh, Michael J. (Mobile, AL)	86-0107-02	D	06-18-87	06-17-90	§ 32.200(a)
Modern Electric Co. (Statesville, NC)	85-0004-00	D	01-06-86	01-05-89	§ 32.200(a)
Moore, Gray E. (Jr.) (Greenwood, SC)	86-0108-00	D	08-19-86	08-18-89	§ 32.200
Moorse, Lawrence (Marshall, MN)	85-0053-01	D	12-17-85	12-16-88	§ 32.200(a)(3)
Morales, Rene (Bronx, NY)	86-0082-32	D	11-09-87	11-08-90	§ 32.200(a)
Newt Solomon, Inc. (Nashville, TN)	85-0058-00	D	10-10-85	10-09-88	§ 32.200(e)(i)
O'Mara, Lawrence (Chicksville, NY)	86-0082-24	D	11-09-87	11-08-90	§ 32.200(a)
Owens, Jerry B. (Southfield, MI)	86-0065-00	D	02-24-86	03-26-89	§ 32.200(b)
Parkhill-Goodloe Co., Inc. (Jacksonville, FL)	86-0099-00	VE	04-16-87	10-15-88	§ 32.200(a)
Payne, James (Enid OK)	88-0005-01	D	12-02-87	10-14-88	§ 32.200
Piccinonna, Julio (Hollywood, FL)	85-0079-01	D	05-11-87	05-10-90	§ 32.200(a)
Pinney, J.A. Bruce (Bala Cynwyd, PA)	84-0023-06	D	01-15-86	03-03-89	§ 32.200(a)(f)
Pipeline Renovation Service, Inc. (Tacoma, WA)	86-0078-00	D	07-02-86	06-07-89	§ 32.200(c)(i)
Pirnos, Wayne (Woodbridge, NY)	86-0096-03	D	04-24-87	04-23-90	§ 32.200(a)
Polymer Chemical, Inc. (Atlanta, GA)	87-0082-00	D	11-02-87	OPEN	§ 32.200
Polymer Group, Ltd. (Atlanta, GA)	87-0082-03	D	11-02-87	OPEN	§ 32.200
Polymer Industriec, Inc. (Atlanta, GA)	87-0082-02	D	11-02-87	OPEN	§ 32.200
Resource Conservation & Recovery of America, Inc. (Orlando, FL)	86-0038-04	D	10-02-86	11-23-89	§ 32.200(a)(i)
Rio Grand Construction Company (Bunkie, LA)	85-0053-00	D	07-29-85	10-13-89	§ 32.200(a)(i)
Rogers, Joseph J. (Pittsburgh, PA)	88-0004-02	D	03-07-88	03-06-89	§ 32.200(a)
Rol-Away Systems, Inc. (Hollywood, FL)	85-0079-00	D	12-19-86	12-18-86	§ 32.200(a)(i)
Rupp Construction Company, Inc. (Slayton, MN)	85-0046-00	D	07-17-86	07-16-89	§ 32.200(a)
Rupp, Douglas (Slayton, MN)	85-0046-01	D	07-17-86	07-16-89	§ 32.200(a)
Sarandos, Constantino (Gus) (Tacoma, WA)	86-0076-02	D	07-02-86	06-07-89	§ 32.200(c)(i)
Sarandos, Dolores K. (Tacoma, WA)	86-0076-01	D	07-02-86	06-07-89	§ 32.200(c)(i)
Sarandos, George (Tacoma, WA)	86-0076-03	D	07-02-86	06-07-89	§ 32.200(c)(i)
Saunders, George F. (High Point, NC)	85-0017-02	VE	12-10-85	12-09-88	§ 32.200(a)(3)
Sauseda, Roy (Bunkie, LA)	85-0063-02	D	07-29-85	10-13-89	§ 32.200(a)(i)
Schillizzi, Jack (Bronx, NY)	86-0082-32	D	11-09-87	11-08-90	§ 32.200(a)
Schorr, Paul C. (III) (Lincoln, NE)	87-0014-00	S	11-12-86	Open	§ 32.200(i)
Service Scaffold, Inc. (S. Fallsburg, NY)	86-0096-00	D	04-24-87	04-23-90	§ 32.200(a)
Sheldon, Cynthia A. (Atlanta, GA)	87-0882-08	D	11-02-87	Open	§ 32.200
Smith, Norman F. (Wilbraham, FL)	86-0071-01	D	02-05-87	02-04-90	§ 32.200(a)
Smith, Paul F. (Lakefield, MN)	85-0047-03	D	05-01-86	04-30-89	§ 32.200(a)
Solomon, Newt (Nashville, TN)	85-0058-01	D	10-07-85	10-6-88	§ 32.200(e)(i)
Stuckey, Floyd D. (Winfield,KS)	84-0026-01	D	08-26-85	8-26-88	§ 32.200(a)
Tow Brothers Const., Company (Fairmont, MN)	85-0054-00	D	1-22-86	01-21-89	§ 32.200(a)
Tow, James (Fairmont, MN)	85-0054-01	D	1-22-86	01-21-89	§ 32.200(a)
Toy, Daniel Lee (Utica, MI)	86-0010-03	D	12-10-85	12-09-88	§ 32.200(a)
Tubre Enterprises (Bunkie, LA)	85-0062-01	S	07-29-85	Open	§ 32.300(b)
Turbre Enterprises, Inc. (Bunkie, LA)	85-0062-00	S	07-29-85	Open	§ 32.300(b)
Tubre, Charles (Baton Rouge, LA)	85-0062-02	S	07-29-85	Open	§ 32.300(b)
Tubre, Thomas (Bunkie, LA)	85-0063-01	S	07-29-85	Open	§ 32.300(b)
Universal Engineering & Supply, Inc. (Sulphur, LA)	85-0071-00	D	03-06-89	03-05-89	§ 32.200 (a)(b)
Universal Engineering (Sulphur, LA)	85-0071-05	D	03-06-86	03-05-89	§ 32.200(a)(b)
Universal Engineering Services, Inc. (Willow Springs, IL)	88-0002-05	S	12-15-87	Open	§ 32.300(b)
Universal Wheels, Inc. (Sulphur, LA)	85-0071-06	D	03-06-86	03-05-89	§ 32.200(a)(b)
Valentini, Joseph (Ypsilanti, MI)	85-0024-01	D	02-24-86	04-02-89	§ 32.200(a)(b)
Watson Electrical Construction Co. (Wilson, NC)	86-0109-00	D	12-19-86	12-18-89	§ 32.200(i)
Williams, G. Marvin (Asheville, NC)	86-0047-02	D	03-18-86	07-15-89	§ 32.200(i)
Wolverine Disposal, Inc. (Ypsilanti, MI)	85-0024-00	D	02-24-86	04-02-89	§ 32.200(a)(b)
X Chem, Inc. (Atlanta, GA)	87-0082-01	D	11-02-87	Open	§ 32.200
Young, Frank Paul (Sr.) (Glen Burnie, MD)	86-0011-01	D	08-20-86	08-19-89	§ 32.200(f)(i)

[1] D=Debarred; S=Suspended; VE=Voluntarily Excluded.

[FR Doc. 88-7378 Filed 4-4-88; 8:45 am]
BILLING CODE 6560-50-M

Diazinon; Ciby-Geigy Corporation, et al., Petitioners

[FIFRA Docket Nos. 562, et al.; FRL-3360-7]

Final Decision

Appearances:

For Petitioners: Kenneth W. Weinstein, John D. Connor, Jr., Charles A. O'Connor, III, Michael J. Anderson, Sandra A. Hoffmann, McKenna, Conner & Cuneo, 1575 Eye Street, NW., Washington, DC 20005. William H. Gurnee, Jr., Darya Smola, Ciba-Geigy Corporation, P.O. Box 18300, Greensboro, NC 27419.

For Respondent: Robert S. McLaughlin, Andrew G. Gordon, Kevin Lee, Steven Wolfson, U.S. Environmental Protection Agency, 401 M Street, SW., Washington, DC 20460.

For Intervenor: Janice K. Corr, Telisport W. Putsavage, New York State Department of Environmental Conservation, 50 Wolf Road, Albany, NY 12233.

Table of Contents

I. Background
A. Diazinon
B. The Notice of Intent to Cancel
C. The Proposed Label
D. Procedural History
II. Legal Standard
A. The Statutory Test
B. The Degree of Risk Warranting Cancellation
III. The Risks of Continued Use
A. Diazinon's Comparative Toxicity
B. Routes of Exposure
C. Magnitude of Exposure
D. Risk Assessment Based on Toxicity and Residue Data
E. Reported Bird Kills
F. Ciba-Geigy's Field Studies
G. Ultimate Risk Findings
IV. The Benefits of Continued Use
A. Economic Impact of Cancellation

1. Price Competition
2. Turf Damage
—White grubs
—Minor pests
—Resistance
3. Summary of Economic Benefits
B. The Relative Safety of Diazinon
1. Acute Toxicity
2. Chronic Health Risk
3. Wildlife Risk
V. Conclusions: The Risk-Benefit Balance

Final Decision

This proceeding represents the first attempt by the Agency to cancel pesticide registrations based solely on alleged risks to birds. The registrations at issue are those that permit the use of diazinon on golf courses and sod farms. Though the argument for cancellation is not premised on a risk to human health, the case for continued use is not based on benefits to public health programs or food crops as is often true in cancellation proceedings. Thus, the risk-benefit assessment required here under the Federal Insecticide, Fungicide and Rodenticide Act (FIFRA) involves an unprecedented balancing of factors which must be carefully evaluated.

The risk analysis encompasses issues at the forefront of the field of avian toxicology. It has been made all the more difficult by Ciba-Geigy's numerous recent label amendments and the relative lack of field experience under its proposed revisions. Nonetheless, certain identifiable risks would remain under the proposed label. Moreover, despite the massive hearing record, the benefits case presented by Ciba-Geigy is singularly weak. For the reasons set forth below, I conclude that Ciba-Geigy has failed to meet its burden of proving that the benefits of continued diazinon use on golf courses and sod farms justify the risks entailed thereby. The registrations at issue are cancelled unless amended to prohibit use on golf courses and sod farms.

I. Background

A. Diazinon

Diazinon is the popular name for O, O-diethyl O-(2-isopropyl-6-methyl-4-pyrimidinyl) phosphorothioate. EPA W-1 (pp. 3-6); CG Ex. 8 (p. 3); RX 4 (p. I-2).[1] It is marketed under several trade names, including Spectracide, AG 500, Sarolex, D-Z-N, Diazinon 14G, and Spectracide Lawn and Garden Insect Control. *Id.* In its pure form, diazinon is a colorless liquid. It is variously formulated as wettable powder, granules, and emulsifiable liquid, and used to control a variety of pests on turfgrass, fruits, nuts, vegetables, and ornamental plants, as well as household insects. *Id.*; Initial Decision at 10.

Like other organophosphates, diazinon inhibits the enzyme cholinesterase, thereby disrupting the transmission of nerve impulses. Organophosphate poisoning can result in respiratory difficulty and arrest, paralysis, convulsions, and coma. Initial Decision at 10; EPA W-5 (p. 2).

Although petitioner Ciba-Geigy is the major producer of diazinon, 494 registrants hold registrations for products containing diazinon. EPA W-1 (pp. 3-4). Of the 8,000,000 lbs. of diazinon used annually, golf courses use about 512,000 lbs., and sod farms use about 60,000 lbs. RX 4 (p. I-3). As a result of regional differences in pest problems due to climate and soil variations, diazinon is the leading pesticide in the southeast and west, but not in other areas of the country. *Id.* (pp. III-5 to III-6).

On golf courses, tees and greens require the most intensive pesticide treatments. *Id.* (p. III-5); CG Ex. 79 (pp. 4-6); Tr. 2664-67, 2671. They comprise about three percent of the typical course and are generally treated up to four times per year. *Id.* Fairways develop fewer pest problems and receive fewer applications. *Id.* They comprise 37.5 percent of the average golf course and are generally treated only once a year. *Id.* Of the 12,788 golf courses in existence in 1980, approximately 51 percent used diazinon on a total of 102,422 acres. RX 4 (pp. III-5 to III-6). Eighty percent of diazinon treatments on golf courses occur between May and September. CG Ex. 95 (p. IV-3). Applications are usually made curatively once a certain level of turf damage is observed, not on a preventative basis. CG EX. 79 (p. 5).

Sod farms generally undergo complete tillage and turf removal every 12 to 18 months, thereby disrupting the life cycles of many pests. CG Ex. 84 (p. 6); RX 4 (p. III-7). Consequently, they are relatively light users of pesticides, treating an estimated six percent (16,000 acres) of the sod under production annually with diazinon. *Id.* Diazinon application on sod farms is usually made in spot treatments. *Id.*

B. The Notice of Intent to Cancel

On January 6, 1986, the Agency initiated a Special Review of all products containing diazinon registered for use on golf courses and sod farms. 51 FR 1842. EPA simultaneously issued a Preliminary Determination proposing to cancel registrations and deny applications for use of diazinon products on these two sites. *Id.* Information supporting these actions was set forth in a Support Document (RX 4), which was made available to the public for review and comment.

After soliciting comments from the Secretary of Agriculture and the Scientific Advisory Panel as required by FIFRA, and after considering the views of the registrants and other interested parties, the Agency issued its Notice of Intent to Cancel. 51 FR 35034 (October 1, 1986) (RX 5). The Notice reviewed the evidence set forth in the Support Document as well as data obtained during the Special Review. Based on diazinon's acute toxicity, estimated doses consumed by birds, diazinon application practices, reported bird kills, problems associated with reporting bird kills, and effects on endangered species, the Agency concluded that the hazard caused by diazinon use on golf courses and sod farms is "widespread and continuous." *Id.* at 35037. The Agency also determined that the major pesticide alternatives are not less effective than diazinon, and that cancellation would increase operating costs for golf courses by $937,200 (.05 percent of total maintenance costs) and for sod farms by $300,000 (.14 percent of gross revenues). *Id.* The Agency then rejected numerous regulatory alternatives to cancellation, including reduced application rates, geographic and seasonal restrictions, and additional hazard warnings. *Id.* at 35044. It concluded that the avian risk outweighs the "minor" economic benefit of continued use, and that "cancellation is the only appropriate action." *Id.*[2]

C. The Proposed Label

Historically, diazinon application rates on turf have typically ranged from one to eleven lbs. active ingredient per acre (ai/A), with a standard application rate of four to eight lbs. to control most pests. CG Ex. 112 (p. 13); CG Ex. 8 (p. 3); CG Ex. 66 (pp. 5-6). Recommended rates for some pests were as low as one to two lbs. (sod webworms and chinch bugs) and as high as fifty-four lbs. ai/A

[1] I have adopted the record citation format used by the Presiding Officer. *See* Initial Decision at 4-5. The parties' briefs on appeal are cited as "EPA Exceptions" and "CG Reply". The parties' post-trial briefs to the Presiding Officer are cited as "[EPA/CG] Post-Tr. Bf." and "[EPA/CG] Post-Tr. Reply."

Although the entire record has been considered in making this decision, citations included in this opinion are not intended to be exhaustive.

[2] The Notice was subsequently amended to clarify its scope (52 FR 5656 (RX 7)) and to revise the provision governing existing stocks. 51 FR 45939 (RX 6).

(parasitic nematodes). *Id.*; EPA Ex. W-1 (p. 10).

In 1986, Ciba-Geigy reduced the rate on certain diazinon labels to a maximum of four lbs. Initial Decision at 8 n.11. Since the Notice of Intent to Cancel was issued, Ciba-Geigy has come forward with a series of additional proposed label amendments in an effort to reduce diazinon's risk to birds. Ciba-Geigy represents that all diazinon registrants in this proceeding have agreed to adopt the proposed label if approved. *See* Initial Decision at 10 n.14. Apparently no registrant continues to defend the existing registrations. *See* CG Reply at 22. Because FIFRA § 6(b) requires the Agency to consider label changes as an alternative to outright cancellation, I agree with the Presiding Officer that the issue here is whether the proposed label, not the existing label, comports with FIFRA. *See* Initial Decision at 7, 10 n.14.

The proposed amendments are more fully described in the Initial Decision. *Id.* at 8–10. Among other things, they reduce the maximum application rate to two lbs., to be followed seven days later by a second two-pound treatment for certain pests (referred to as the "2+2" rate). *Id.* They also require post-treatment irrigation and other application practices, and impose geographic and seasonal restrictions to protect Atlantic brant, American wigeon, and endangered species. *Id.*

On appeal, Ciba-Geigy represents that it will further amend its labels to require that only certified applicators apply diazinon on golf courses and sod farms as recommended by the Presiding Officer (CG Reply at 23), and to prohibit the feeding of birds on treated areas to protect mallard ducks. *Id.* at 27. Although it is unclear whether the other registrants have agreed to adhere to these proposals, it is within my discretion under FIFRA section 6(b) to require additional amendments, and I accept Ciba-Geigy's proposals on appeal as further refinements of the core issue in this case.

D. Procedural History

Several registrants filed objections to the Notice and requested a hearing as permitted by FIFRA section 6(b). At trial Ciba-Geigy took the lead in presenting evidence in support of continued registration. The hearing commenced August 24, 1987, and was closed December 30, 1987. Initial Decision at 3–4.

At the hearing, the parties called more than forty witnesses and generated a massive record, including 546 exhibits and more than 5,700 pages of transcript, the overwhelming majority of which relates to the risk analysis. For example, EPA called sixteen risk witnesses and five benefit witnesses, while Ciba-Geigy called sixteen risk witnesses and six benefit witnesses. The trial judge, Chief Administrative law Judge Gerald Harwood, consolidated these voluminous materials into a lucid and straight-forward Initial Decision issued January 25, 1988. Although I disagree with his ultimate recommendation, I accept many of his findings and conclusions. I want to express my appreciation for Chief Judge Harwood's excellent presentation of the salient facts which made my task much easier.

Based on laboratory toxicity data, estimated residue levels, avian exposure evidence, and the reported bird kills, the Presiding Officer found that diazinon is "a very definite hazard to birds as used under its present registered labels." Initial Decision at 47. He further found that the proposed 2+2 application rate followed by irrigation "does not reduce residues to non-hazardous levels." *Id.* at 61. He also found, however, that Ciba-Geigy's recent field studies show that the actual risk is less than that suggested by the laboratory data, stating that bird kills are "not likely to occur with any predictable frequency or in any predictable numbers." *Id.* He concluded that continued use under the proposed label would result in "an undetermined number of deaths," that the evidence "is not sufficient to quantify the adverse effects with any greater degree of precision," but that the hazard "cannot be dismissed as insignificant" and would justify cancellation if the benefits of diazinon are "trivial." *Id.* at 62–63.

On the benefits side, the Presiding Officer found that diazinon is the most economical pesticide of proven efficacy for treating all major turf pests and the only available pesticide for treating one or two minor pests; that cancellation would increase costs to those who use it and could result in a less competitive market for all golf course and sod farm pesticide users; and that cancellation might increase the likelihood that pests will build up a resistance to one or more of the remaining alternatives. *Id.* at 78–79.

In balancing the risks and benefits, the Presiding Officer concluded that the benefits could not be dismissed as trivial, stating that "[w]ithout grass there would be no golf course, no game of golf and no crop for the sod farm to sell." *Id.* at 79. He concluded that with strict compliance with the proposed label "bird kills might be reduced to an unusual occurrence," and that diazinon's benefits would justify its risks if such adherence were ensured by requiring the use of a certified applicator. *Id.* at 80. "Giving Ciba-Geigy the benefit of the doubt that rigid adherence [to the proposed label] diminishes the likelihood of bird kills," the Presiding Officer held that reclassifying the use of diazinon on golf courses and sod farms for restrictive use would eliminate unreasonable adverse effects under the new label. *Id.* at 81–82.

The Agency filed exceptions to the Initial Decision, incorporating by reference its post-trial submissions to the Presiding Officer. It argues that the "fundamental flaw" in the Initial Decision is an improper balancing of the risks and benefits which conflicts with the balance struck in the Notice of Intent to Cancel. The Agency also contends that certain factual findings are based on a misapplication of the burden of proof. It specifically challenges findings regarding the impact of uncontrolled pests, the possibility of resistance, the effect of cancellation on price competition among remaining insecticides, and whether restricting use of diazinon to certified applicators would reduce the avian risk.

Despite the numerous factual findings adverse to its position, Ciba-Geigy filed no exceptions to the Initial Decision as permitted by the Agency's rules. *See* 40 CFR 164.101(a)(1). In its Reply to the Agency's exceptions, Ciba-Geigy essentially sets out its entire affirmative case against cancellation. As noted above, it agrees to abide by the restricted use classification recommended in the Initial Decision, and proposes yet another label amendment prohibiting the feeding of birds on treated turf. CG Reply at 27. It argues that the risk to individual birds under the proposed label would be "low" (*id.* at 1185), and that FIFRA requires cancellation only where a pesticide adversely affects long-term bird populations or results in widespread, frequent, or repeated kills. *Id.* at 181–83. Characterizing diazinon's benefits as "significant," it concludes that they justify the "minimal" avian risk under the proposed label. *Id.* at 241.[3]

II. Legal Standard

A. The Statutory Test

The statutory standard for pesticide registration requires that a pesticide perform its intended function without causing "unreasonable adverse effects on the environment." FIFRA section 3(c)(5)(C), 7 U.S.C. 136a(c)(5)(C). The

[3] The New York State Department of Environmental Conservation, an intervenor in the case, also filed a response to EPA's exceptions, basically concurring with the Agency's objections to the Initial Decision.

phrase "unreasonable adverse effects on the environment" is defined as "any unreasonable risk to man or the environment, taking into account the economic, social, or environmental costs and benefits of the use of any pesticide." FIFRA section 2(bb), 7 U.S.C. 136(bb). The ultimate burden of proof—*i.e.*, the risk of non-persuasion—remains at all times on the registrant. *See, e.g.*, *Environmental Defense Fund, Inc. (EDF)* v. *EPA*, 548 F.2d 998, 1015–16 (D.C. Cir. 1976), *cert. denied*, 431 U.S. 925 (1977); *EDF* v. *EPA*, 510 F.2d 1292, 1297, 1302 (D.C. Cir. 1975). Although the proponent of cancellation has the burden of coming forward with an affirmative case, 40 CFR 164.80(a), once some cognizable risk is shown "the responsibility to demonstrate that the benefits outweigh the risks is upon the proponents of continued registration." *EDF* v. *EPA*, 548 F.2d at 1005.

FIFRA section 6(b), which specifically addresses cancellation, states that a notice of intent to cancel may be issued if:

> a pesticide or its labeling or other material required to be submitted does not comply with [FIFRA] or, when used in accordance with widespread and commonly recognized practice, generally causes unreasonable adverse effects on the environment * * *.

FIFRA section 6(b), 7 U.S.C. 136d(b) (emphasis added). In its post-trial brief to the ALJ, Ciba-Geigy focused on the word "generally" and argued that cancellation is justified only if a pesticide causes unreasonable adverse effects most of the time it is used. CG Post-Tr. Bf. at 16–17. Although it is unclear whether Ciba-Geigy maintains this interpretation on appeal (*cf.* CG Reply at 241), I will address it briefly. FIFRA section 6(b) requires compliance with all other provisions of the statute, including FIFRA section 3(c)(5)(C) which prohibits unreasonable adverse effects on the environment without regard to whether such effects are caused "generally." Moreover, Ciba-Geigy's reading of the word "generally" as meaning "most of the time" is unnatural. In light of the basic statutory standard in FIFRA section 2(bb), which requires consideration of a broad range of factors, "generally" is more appropriately read as meaning "with regard to an overall picture" (a possibility that Ciba-Geigy itself mentions in its post-trial brief, p. 17). It is simply untenable to suggest that FIFRA requires continued registration where a pesticide causes unreasonable adverse effects in less than 51 percent of the cases in which it is used.

B. The Degree of Risk Warranting Cancellation

Ciba-Geigy also contends that cancellation is justified only if continued use of diazinon would adversely affect long-term bird populations or result in widespread mortality. CG Reply at 181–83. This argument conflicts with the basic statutory standard, which requires cancellation if continued use would cause "*any* unreasonable risk to man or the environment." FIFRA section 2(bb) (emphasis added). The legislative history confirms the plain meaning of the statute "that any adverse effect ought not to be tolerated unless there are overriding benefits from the use of a pesticide." S. Rep. No. 970, 92d Cong., 2d Sess. 11 (1972); *see also* H.R. Rep. No. 511, 92 Cong., 1st Sess. 14 (1971). Neither FIFRA nor the implementing regulations suggests that some threshold level of risk must be shown as a predicate for cancellation. Indeed, the only mention of population effects as a separate basis for initiating a Special Review was deleted from the regulations in 1985. *Compare* 40 CFR 154.7(a)(1986) *with* 40 CFR 162.11(a)(3)(1984).

This conclusion is consistent with prior Agency practice. As stated in a previous FIFRA cancellation proceeding:

> The FIFRA does not specify that any specific level or magnitude of risks must be found to exist before a pesticide may be cancelled. * * *
>
> I am persuaded by the language of the FIFRA, its legislative history, and applicable case law that a finding of *any* risk from the use of a particular pesticide, if the risk is "unreasonable" in relation to the benefits of its continued use, is sufficient to warrant cancellation. It is my understanding of the law that the statute is phrased so as to avoid the necessity of establishing or proving any specific level or threshold of risk which would be required to "trigger" a risk/benefit assessment.

In re Chapman Chemical Co. (Mercury), FIFRA Docket No. 246, at 7 (February 17, 1976) (emphasis in original; footnotes omitted).

Ciba-Geigy bases its argument to the contrary on a draft EPA Guidance Document (RX 274) prepared by Agency staff scientists which sets forth guidelines for conducting terrestrial field studies. *See* CG Reply at 181–83. This document states on its face, however, that it is "a technical paper," not a policy statement. RX 274 (Preface). I agree with the Presiding Officer that this paper does not set forth Agency policy as to what constitutes an unreasonable risk under FIFRA. *See* Initial Decision at 47 n.129; EPA Ex. W–19 (p. 9). Moreover, the Guidance Document itself recognizes that regulatory action is warranted not only by widespread or frequent mortality, but also by the less stringent standard of "repeated" kills. RX 274 (p. 70). Although Ciba-Geigy correctly points out that minor risks may sometimes be addressed through regulatory restrictions short of cancellation (CG Reply at 183), cancellation is the only alternative where other restrictions would not reduce the pesticide's risk, even a minor risk, to a level justified by the benefits of continued use.

In short, Ciba-Geigy has the burden of proving that the risk, no matter how limited, associated with continued use of diazinon under the proposed label is outweighed by cognizable benefits.

III. The Risks of Continued Use

The evidence relating to avian risk presented at the hearing consists primarily of laboratory data reflecting diazinon's comparative toxicity, testimony on avian feeding ecology, residue levels, estimated consumption, reported bird kills, and field studies. Each will be discussed separately.

A. Diazinon's Comparative Toxicity

Comparative toxicity is measured by reference to a substance's median lethal dosage, or LD_{50}, the single dose that causes mortality in 50 percent of adult birds. The dose is administered by gelatin capsule or gavage, and the LD_{50} is expressed in milligrams of test substance per kilogram of bird body weight (mg/kg). Also relevant is the median lethal concentration (LC_{50}), derived from dietary tests in which young chicks are exposed to various concentrations of the test substance in their feed over five days. The LC_{50} is expressed in parts per million (ppm) and reflects the concentration estimated to kill 50 percent of the birds tested. *See* Initial Decision at 11–12.

Most published avian LD_{50} values for diazinon are below 10 mg/kg, levels categorized by EPA's Office of Pesticide Programs as "very highly toxic." *Id.* at 12–13. Diazinon's LC_{50} levels range from 245 ppm ("highly toxic") to 47 ppm ("very highly toxic"). *Id.*

B. Routes of Exposure

In any risk assessment, toxicity data must be viewed in light of potential exposure. The record demonstrates conclusively that both migratory and non-migratory waterfowl such as geese and ducks are directly exposed to diazinon residues on turf due to their use of golf courses and sod farms for foraging. *Initial Decision* at 25–27. Dr. Kenneth Abraham, Wildlife Biologist for the Ontario Ministry of National Resources, explained that such exposure

is becoming increasingly likely as natural feeding habitats such as wetlands continue to be destroyed by natural causes and human activity. *Id.* at 25–26. Golf courses provide the openness and cover necessary for feeding and escape from predators, as well as attractive expanses of sheltered water. *Id.* They can serve as extensions of nearby wetlands and other traditional habitats, or provide the only refuge in an urban environment. *Id.*[4] Although some sod farms differ from golf courses in a few material respects, the weight of the evidence shows that the similarities outweigh the differences, and that both sites, in the words of Dr. Abraham, "are important areas for refuge and feeding within flyways and urban locations." EPA W–3 (p. 9); *accord*, EPA W–5 (pp. 17–18); EPA W–13 (p. 78).[5]

Non-waterfowl species do not generally feed on grass or turf, but on insects, seeds and invertebrates such as earthworms. The primary route of diazinon exposure for these birds would be residues on seeds or invertebrates as well as direct ingestion of diazinon granules. Pierre Mineau, a pesticide evaluator with the Canadian Wildlife Service, testified that birds have been known to ingest diazinon granules directly, possibly mistaking them for food or grit ingested to facilitate digestion.[6]

Other routes of exposure for all birds include diazinon-contaminated puddles that are used for drinking water or provide opportunities for dermal exposure. Initial Decision at 43 n.111.

C. Magnitude of Exposure

The Presiding Officer thoroughly analyzed the conflicting evidence presented by the parties regarding residue levels expected to result from Ciba-Geigy's proposed 2+2 rate. Initial Deicison at 17–24. The parties' estimates are based on RUD values (Residue per Unit Dose), which reflect residues resulting from a one pound per acre application. *Id.* at 17. Because Ciba-Geigy's proposed 2+2 rate calls for a repeat application after seven days, diazinon's five-day half-life was also considered so that estimated peak values reflect the degree to which the first application has dissipated.[7] These RUD values (unit of measure=ppm) are then correlated with the LD_{50}s (unit of measure=mg/kg) to determine whether lethal residues exist after a 2+2 application. *See* Section III. D, *infra*.

On behalf of the Agency, Mr. Mineau calculated low, medium, and high "worst case scenario" RUD values of 53.3, 76.9, and 105 ppm for liquid diazinon, post-irrigation.[8] Because residues for other application rates are linearly related,[9] expected residues from a two-pound application would range from 106.6 to 210 ppm for the worst case. Although Mineau reviewed fourteen residue studies, he viewed only six as yielding statistically valid data. He gave the greatest weight to the two studies with the most samples, both of which were commissioned by Ciba-Geigy. Initial Decision at 17–18. Factoring in diazinon's five-day half-life, Mineau concluded that peak residues from a 2+2 application would range from 147 to 212 ppm. *Id.* at 24.

Ciba-Geigy attempted to refute Mineau's calculations through Mr. Larry Brewer, a field research leader for the Institute of Wildlife Toxicology. In virtually his only credibility determination, the Presiding Officer rejected Brewer's testimony as "unpersuasive" (*id.* at 19), going so far as to say that "Mr. Brewer's objectivity * * * is open to question." *Id.* at 21. This finding is apparently based on certain inconsistencies revealed during cross-examination, as well as Mr. Brewer's failure to disclose the specifics of his analysis and calculations (unlike the detailed presentation of Mr. Mineau). *Id.* at 20–22. Although my review of the record is de novo, credibility determinations made by the Presiding Officer should be given special weight.[10]

Ciba-Geigy's brief on appeal does not discuss the Presiding Officer's findings regarding residue levels. Instead, it incorporates by reference its discussion of residues set forth in its post-trial brief. *See* CG Reply at viii, n.2. Because this post-trial brief was submitted to the ALJ before the Initial Decision was issued, it obviously does not address the Presiding Officer's finding regarding Brewer's objectivity. Based on the relevant evidence, and with due deference to the Presiding Officer's credibility finding, I concur that Mr. Mineau's testimony is more persuasive and his residue estimates are accepted as accurate.

Residues from diazinon's granular formulation are apparently lower than those from liquid diazinon.[11] Nevertheless, direct ingestion of granules remains a threat. One study reported that "ingestion of fewer than five granules could be lethal to significant numbers (e.g. 50% of sparrow-sized birds)." [12] The study concluded that enough granules of diazinon are available after a typical treatment to cause significant mortality, and that the key factor in determining the risk of the granular formation is not the exact number of granules applied but the species and size of the bird exposed.[13] The Presiding Officer also found that mallards are particularly at risk from the granular formulation. Initial Decision at 27 n.69.

D. Risk Assessment Based on Toxicity and Residue Data

Dr. Margaret Rostker, a wildlife biologist and currently Special Assistant to the Assistant Administrator for EPA's Office of Pesticides and Toxic Substances, evaluated the avian hazard from diazinon based on the lab data and residue estimates set forth above.[14] Using LD_{50}s of 3.5 and 5.9 mg/kg for mallards and Canada geese, respectively, and Mineau's lowest worst case RUD of 53 ppm, Dr. Rostker developed a risk assessment model indicating the time it would take each species to reach its LD_{50} grazing on turf treated at various application rates.[15] For a four-pound application, the estimated time to LD_{50} for mallards ranges from 15 to 24 minutes, and for geese from 25 to 40 minutes.[16] Even at a two-pound rate, the time to LD_{50} is remarkably short: 30 to 47 minutes for mallards and 50 to 80 minutes for Canada geese.[17]

After addressing several objections raised by Ciba-Geigy to Dr. Rostker's calculations,[18] the Presiding Officer

[4] Of 1120 golf courses surveyed in 1986, 336 reported waterfowl as usually or always present. Initial Decision at 47–48.

[5] In light of the serious problems associated with the accurate documentation of bird kills, *see* page 22, *infra*, I find the lack of reported bird kills on sod farms to be insufficient to refute Dr. Arbaham's expert testimony in this regard.

[6] Initial Decision at 17; EPA W–4 (p. 4); *accord*, EPA W–13 (p. 25); EPA W–22 (p. 14).

[7] Initial Decision at 23–24. Although one Ciba-Geigy witness determined diazinon's half-life to be four days, he conceded that the difference did not significantly affect anticipated residue levels. *Id.* at 23 n.58; Tr. 3892–93.

[8] *See* Initial Decision at 18; EPA W–4 (p. 17–18). Although the Initial Decision (p. 18) lists a medium worst case value of 73.3, this is apparently a typographical error. Elsewhere (*e.g.* pp. 22, 24) the 76.9 value is used.

[9] *See* Initial Decision at 17; EPA W–4 (pp. 2–3).

[10] *See, e.g.*, Cheshier v. Bowen, 831 F.2d 687, 690 (7th Cir. 1987); Grissenauer v. Dept. of Energy, 754 F.2d 361, 364 (D.C. Cir. 1985).

[11] Initial Decision at 24; EPA W–4 (p. 20).

[12] EPA W–2 (pp. 13–15); RX 29 (pp. 562–63).

[13] *Id.*; *see also* Tr. 5667–69.

[14] Initial Decision at 27 and n. 70; EPA W–13 (p. 1).

[15] Initial Decision at 27–28; EPA W–1 (pp. 6–19).

[16] Initial Decision at 29; 31; EPA W–13 (pp. 18–19).

[17] *Id.*

[18] Initial Decision at 29–32.

found that her estimates "are reliable indicators of the hazards to which birds may be exposed on diazinon treated turf." [19] A review of Ciba-Geigy's criticisms,[20] the relevant record evidence, and the Presiding Officer's analysis shows that Dr. Rostker's risk assessment model is valid and may be used to evaluate the risk posed by diazinon to grazing waterfowl. As in any risk assessment model, the assumptions in hers are not intended to anticipate every conceivable exposure scenario. They are representative, however, and supported by other persuasive record evidence described by the Presiding Officer. In particular, her use of LD_{50} (not LC_{50}) values is sound. Waterfowl exposure to diazinon is often over a *single* 5-to-8 hour feeding period,[21] which is more appropriately compared to a single-dose (LD_{50}) toxicity level, not to LC_{50} values dervied from exposure over five days. Her use of an assumed body weight of 1,000 grams is representative of mallards, wigeon, and brant geese [22] and does not significantly affect her conclusions regarding larger waterfowl.[23] The model was extensively and favorably peer-reviewed by her colleagues both inside and outside the Agency, thereby withstanding the scrutiny of representatives of the scientific community.[24]

E. Reported Bird Kills

The Initial Decision (pp. 33–39) describes the disturbing history of reported bird kills associated with diazinon use on golf courses and other large grassy areas. Mr. Ward Stone, Chief Wildlife Pathologist for the State of New York, presented extensive evidence of more than fifty reported kills following the use of diazinon on turf. EPA W–5.[25] Waterfowl involved in these kills include the Atlantic brant, the Canada goose, the American wigeon, the mallard, the American black duck, and the gadwall. *Id.* at 5–6. Non-waterfowl kills have been reported for bluejays, robins, redwinged blackbrids, brown-headed cowbirds and sparrows. *Id.* Kills have occurred in every region of the country and throughout the year, and have ranged from one to more than 800 birds per incident. *Id.* (Appendix).

The Notice of Intent to Cancel noted the Problems associated with accurately projecting actual mortality levels based on reported bird kills. *See* 51 FR at 35040 (RX 5). Despite heightened public awareness of bird mortality in recent years (*e.g.*, EPA W–13 (pp. 19–20)), the evidence adduced at the hearing confirms that bird kills continue to go largely unreported for a variety of reasons. Initial Decision at 43–44. In the words of Mr. Stone, "the odds of any particular bird being examined * * * [and diagnosed] are infinitesimal, extremely small." Tr. 677; *accord* Tr. 1514 (reported kills are "the tip of the iceberg"). Even if, as Ciba-Geigy contends, waterfowl carcasses are visible, deteriorate slowly, and are not easily removed by predators (CG Ex. 104 (pp. 6–7)), these factors do not overcome the evidence that kills, even when noticed, often go unreported, uninvestigated or undiagnosed. EPA W–5 (p. 13–14); Tr. 677, 682, 729–32.

Ciba-Geigy correctly notes that only some of the reported kills occurred at application rates comparable to its proposed 2 + 2 rate. CG Reply at 151. This fact is explained, however, by the historical application of diazinon at much higher rates and by the relative newness of the current four-pound rate. In any event, diazinon applications at four pounds or less have in fact been associated with several waterfowl kills, including Canada geese, mallards, and the 85 wigeon killed during one of Ciba-Geigy's field studies (applied at an average rate of 2.6 lbs. ai/A).[26]

Based on the evidence summarized above, there is no question in my mind that the Agency met its burden of coming forward with an affirmative case regarding the risks of diazinon. I reject the suggestion (*e.g.* CG Ex. 34 (p. 5)) that cancellation should never be based on lab data, exposure information and bird kills standing alone.[27] In fact, the Notice of Intent to Cancel in this case was issued in the absence of field-study data. Ciba-Geigy is correct, however, that the best evidence of risk consists of validly conducted field studies. Such studies may be used to rebut inferences based solely on lab data.[28] Thus, the issue reduces to whether Ciba-Geigy's five field studies are sufficient to rebut the Agency's prima facie case, and, if so, to what extent will birds remain at risk under the proposed label.[29]

F. Ciba-Geigy's Field Studies

Shortly after the Notice of Intent to Cancel was issued, Ciba-Geigy commissioned five level-one field studies to determine whether its proposed label amendments would eliminate the risk to birds posed by diazinon use. A level-one field study is a screening study designed to determine only whether adverse effects occur, not the extent of those risks. RX 274 (Preface). Four studies were conducted on golf courses and focused on waterfowl, using the Canada goose or the wigeon as representative species. The fifth study was conducted on home and commercial lawn sites and examined the effects of diazinon on songbirds. All five are described in more detail in the Initial Decision at 53–58.

Based on his review of the field studies, the Presiding Officer determined that "the bird mortality indicated by the laboratory and residue data is not likely to occur with any predictable frequency or in any predictable numbers, although [the field studies] do not enlighten us as to the specific reasons why this is so."

---

[19] *Id.* at 31.

[20] *See* CG Post-Tr. Reply at 71–87

[21] EPA W–13 (p. 12).

[22] Initial Decision at 29; EPA W–12 (p. 11).

[23] Initial Decision at 30–31 & n.73.

[24] Tr. 2158–69.

[25] The Presiding Officer deemed three of these reported kills to be unsubstantiated. Initial Decision at 41 n.103. None is critical to the resolution of this case, and it is therefore unnecessary for me to determine whether they were properly rejected.

Kills involving diazinon on non-turf sites raise the number of reported incidents even higher. EPA W–5 (pp. 6, 10). Although these kills have little bearing on whether birds are *exposed* to diazinon on golf courses and sod farms, they further document diazinon's *toxicity*.

[26] Initial Decision at 45; *see also* EPA W–5 (pp. 15–17). Ciba-Geigy's contention (CG Reply at 153) that this large wigeon kill was attributable to the use of a boomless cluster sprayer is refuted by the witness who conducted the field study in question, Dr. Kendall, who concluded that wigeon remain at lethal risk if exposed to residues from the proposed 2 + 2 rate. CG Ex. 28 (pp. 8–9). I similarly find Ciba-Geigy's challenge to the accuracy of other kills at low rates (CG Reply at 156–60) to be speculative and unpersuasive.

[27] *See* EPA W–19 (pp. 3–5) (risk assessment premised on lab toxicity data and exposure information "is based on guidance recommended by the American Institute of Biological Services (AIBS) and has been peer-reviewed by the FIFRA Scientific Advisory Panel;" Such data "are routinely utilized at EPA in assessing and managing risks"); *see also* EDF v. EPA, 548 F.2d at 1005 (lab data are a "sufficient basis" for cancellation or suspension); EDF v. EPA, 489 F.2d 1247, 1254 (D.C. Cir. 1973) (same).

[28] Initial Decision at 54–55. Lab data do suffer from certain inherent defects. For example, they fail to determine whether birds in the field might avoid treated turf. Initial Decision at 13–14. LC_{50} values are derived from tests on young chicks and do not show whether adult birds are less susceptible to diazinon poisoning. *Id.* at 14–15. On the other hand, this criticism does not apply to LD_{50} values, which show median lethal dosages for adult birds and more appropriately reflect the risk to waterfowl because they feed continuously on turf for extensive periods of time. EPA W–13 (p. 12). Moreover, lab data might underestimate the actual risk in certain respects. Birds in the field are subjected to low temperatures and other routine environmental stress, or might be more sensitive than the surrogate species used in the tests due to different feeding patterns or physiology. EPA W–2 (p. 25); EPA W–19 (pp. 3–5). Field residues might be higher than those predicted due to mechanical and human error. *Id.*

[29] The Presiding Officer found, and I agree for the reasons set forth in the Initial Decision, that Ciba-Geigy's simulated field studies and pen studies "have little weight as evidence of what is likely to occur under actual field conditions." Initial Decision at 53; *see id.* at 13–16, 51–62.

Id. at 61. He further found that "an undetermined number of deaths" would occur under the proposed label, but that there "is not sufficient evidence to quantify the adverse effects with any greater degree of precision." *Id.* at 62.

In my view, the field studies are insufficient to show that use under the proposed label would eliminate avian risk altogether, or even reduce that risk to low levels. In particular, two critical defects undercut the significance of these studies.

First, each study was premised on the assumption that any significant mortality resulting from diazinon poisoning would occur relatively quickly and that the bird would remain on the site to die.[30] Thus, the carcass searches were confined to the perimeters of the testing sites, and no radiotelemetry was used to determine if birds were dying offsite. A very recent field study conducted by EPA, however, demonstrates that this assumption is incorrect. Dr. Williams, Team Leader of the Wildlife Toxicology Research Team at EPA's laboratory in Corvallis, Oregon, testified about the results of this study, which have not yet been drafted into a report (EPA W-20 (p. 9)); Ciba-Geigy's avian experts were thus apparently unaware of this study. It demonstrates, however, that birds exposed to organophosphates like diazinon left the exposure site to die elsewhere. *Id.* Dr. Williams concluded that "[i]t is probable, in fact, that birds that ingest less than immediately lethal levels of an [organophosphate] such as diazinon, will be able to fly away to other sites, making them more vunerable to predators * * * and environmental stresses in the near term and more susceptible to disease, immune dysfunction and reproductive impairment in the long term." *Id.*; *accord* EPA W-2 (pp. 17-18); EPA W-8 (pp. 3-4).[31]

The Presiding Officer concluded that the field studies nonetheless suggest that on-site mortality would be reduced under the new label. Initial Decision at 60. Even if this is true, the issue of offsite mortality continues to loom large. Two Ciba-Geigy experts, Drs. Kendall and Best, testified that diazinon intoxication and sublethal effects warrant further study.[32] Because Ciba-Geigy's field studies were based on the assumption that any significant mortality would be immediate, the extent of offsite mortality remains uninvestigated, and the significance of Ciba-Geigy's field studies is seriously eroded.

More importantly, I am troubled by the small number of studies upon which Ciba-Geigy bases its conclusions. EPA's Guidance Document for Conducting Terrestrial Field Studies recommends that fourteen studies be conducted to ensure that statistically significant data exist to show that no adverse effect has occurred. RX 274 (pp. 15-22). Although the Guidance Document notes that as few as eight sites may be adequate in certain circumstances (*id.*), here we have only four studies from which to draw conclusions regarding waterfowl, and only one study that focused on passerines.[33] The Presiding Officer concluded that this flaw precludes drawing any conclusions about effects on bird populations (Initial Decision at 60), but its significance goes deeper than that. Level-one field studies are merely screening studies to determine whether adverse effects occur; they are generally not used to quantify adverse effects or determine impacts on populations. EPA W-19 (pp. 10-11); RX 274 (Preface & p. 10).[34] The small number of sites here calls into question the very heart of Ciba-Geigy's risk case—that there will be no significant adverse effects on waterfowl under the proposed label—because the field studies fail to provide statistically significant evidence that no adverse effects will occur (as level-one studies are designed to do). EPA W-19 (pp. 14-15) EPA W-20 (pp. 10-12).

I realize that it might have been impossible to complete eight or fourteen field studies prior to the hearing to examine whether the proposed label will cause significant mortality. Because Ciba-Geigy bears the burden of proof, however, its risk case necessarily suffers from the lack of field experience under its many recent label amendments and proposed label revisions.[35]

G. Ultimate Risk Findings

In arriving at an ultimate finding regarding avian risk, I have carefully considered the testimony of the impressive array of avian experts assembled by Ciba-Geigy.[36] To the extent these experts state that the risk to birds would be "acceptable" or "reasonable," their conclusions cannot be accorded much weight because they failed to weigh risk against the benefits of continued use as required by FIFRA. Their collective testimony does convince me, however, that diazinon use under the proposed label would probably have a minimal adverse effect on overall bird *populations* (in contrast to individual birds).[37] Moreover, the proposed geographic and seasonal restrictions would undoubtedly reduce the risk associated with diazinon use under existing labels.

Due to the two critical defects in the field studies identified above, however, I cannot find that the avian risk would be as low as Ciba-Giegy contends.[38] At a

[30] *See, e.g.*, CG Ex. 33 (pp. 3-4); CG Ex. 43 (p. 20); CG Ex. 57 (p. 5).

[31] Ciba-Geigy's field studies themselves revealed several instances where Canada geese, the species used as a surrogate for all waterfowl, suffered diazinon intoxication from residues applied at the 2+2 rate. Initial Decision at 56-61. When these birds flew off, they were presumed to have recovered (*e.g.* CG Ex. 28 (p. 8)), but Dr. Williams' testimony shows that they might well have suffered continued adverse effects and died offsite.

[32] Tr. 950, 953, 1067; CG Ex. 125 (p. 46). Dr. Kendall does not believe that diazinon's sublethal effects would lead to widespread mortality. Tr. 950. It is not entirely clear how he reached this conclusion given the limited carcass-search area and absence of radiotelementry in his field studies. In any event, risks of less than widespread mortality must still be considered and require cancellation if not justified by diazinon's benefits. *See* Section II.B, *supra*.

[33] Although some of the other studies also included observations of songbirds, together these studies still fall far short of the number needed to generate statistically significant data. Although Ciba-Geigy contends that the openness of the golf courses makes it unlikely that mortality would go unobserved (CG Reply at 83), the concern here is not the accuracy of the observations but whether they resulted in statistically significant data. EPA W-19 (pp., 14-15).

[34] The more extensive "level-two" field study is needed to quantify the magnitude of the effects when an adverse impact is observed. RX 274 (Preface & p. 10).

[35] The problem raised by the small number of sites is excerbated by other flaws in the field studies. For example, the hazing that occurred at the Sudden Valley and Sea Links studies raises serious questions about the extent to which they replicated actual field conditions. EPA W-12 (pp. 10, 15, 27); EPA W-20 (p. 11). The extent to which Canada geese, the surrogate species for waterfowl, were actually feeding on treated turf is also unclear, particularly in the Connecticut study. EPA W-12 (pp. 5, 11, 18, 21-22, 24-25); EPA W-10 (p. 15). The Atlanta study was described as so defective that it "has very little to contribute to the assessment of the risks of diazinon." EPA W-12 (p. 24). Ciba-Geigy expert Dr. Best also criticized the studies as being "narrow in their temporal focus" due to time constraints in preparing for the hearing, and recommended additional studies during significant breeding seasons and other times of the year. CG Ex. 125 (pp. 45-46).

[36] *See, e.g.*, CG Exs. 28, 32-3, 43-44, 69-70, 112, and 125.

[37] *Id.*

[38] Many of Ciba-Geigy's avian experts direct their overall conclusions on risk primarily (if not exclusively) to diazinon's effects on bird populations. *See, e.g.*, Tr. 3773-74 (Klem); CG EX. 44 (pp. 4-5) (Jaber); CG Ex. 112 (p. 55) (Dickson); CG Ex. 125 (p. 47) (Best); CG Ex. 130 (pp. 3-5) (Klem); CG Ex. 99 (pp. 6-7) (Prince). Although some also state that the risks under the proposed label would be "minimal" or "insignificant," the repeated references to bird populations suggest that population effect was the benchmark used for many of these conclusions. For other witnesses, the primary concern apparently was the prevention of large kills or widespread mortality. Dr. Ringer, who reviewed Ciba-Geigy's field studies, concluded that its proposed label was "adequate" and posed no "undue threat." CG Ex. 33, Attachment E (pp. 2, 8). These rather vague assertions are put in context by his more specific and limited conclusion that the

Continued

BEST COPY AVAILABLE

minimum, EPA has established "the risk of the unknown." [39] Although the risk under the proposed label would be less than under the existing label, the risk to individual birds might well remain widespread and continuous.

Moreover, even if one were to accept Ciba-Geigy's field studies as perfectly sound, certain identifiable risks would remain. The kill of 85 wigeon during the Sudden Valley field study demonstrates conclusively that wigeon exposed to residues under the proposed label would probably be killed. Although the proposed seasonal restrictions on the west coast would reduce the risk to migratory wigeon in that area, the small non-migratory resident wigeon population would remain at some risk.[40] More significantly, wigeon outside the west coast would also remain at risk. Contrary to Ciba-Geigy's assertion that these wigeon do not feed on turf (CG Reply at 108–15), the record demonstrates that the wigeon is an "opportunistic omnivore" and could easily adapt to feeding on turf outside the west coast.[41] Indeed, wigeon have been observed regularly feeding on turf along the gulf coast. EPA/Gordon Ex. 5 (p. 58). Although this observation was made some time ago, Ciba-Geigy's recent telephone survey showed wigeon to be present on golf courses in southern states. EPA/Gordon Ex. 2 (pp. 12–13). Ciba-Geigy expert Dr. Ringer reviewed Ciba-Geigy's evidence on this issue but nevertheless recommended a field study in the Atlantic flyway on the risk to wigeon posed by diazinon. CG Ex. 33, Attachment E (p. 8).

Similarly, although the proposed seasonal restriction in New York and New Jersey would reduce the risk to the brant, these birds are present throughout the Atlantic and Pacific coasts, and would likewise remain at some risk. RX 182 (Figure I); EPA W–13 (pp. 68–69). The record does not support Ciba-Geigy's contention that brant outside its geographic restriction do not feed on turf. Initial decision at 50 n.137.[42]

Mallards would also remain at risk under the proposed label. They were involved in a reported kill at a relatively low application rate. Initial Decision at 45. The Presiding Officer found them to be especially at risk from the granular formulation, rejecting the contention that they do not feed on turf. *Id.* at 27 n.69. On appeal, Ciba-Geigy proposes for the first time to prohibit the feeding of birds on treated turf to reduce the risk to mallards. The record, however, does not support the inference that mallards are only (or even primarily) at risk when attracted to treated areas by human feeding. *Id.* Moreover, the record fails to show whether the proposed prohibition could be effectively enforced on golf courses, particularly public courses or those adjacent to residential areas.

Also of concern is the risk of granule ingestion by songbirds. Ciba-Geigy expert Dr. Best reviewed the five field studies in evidence, but nevertheless concluded that this risk has been largely uninvestigated. CG. Ex. 125 (p. 44). The reported bird kills involving songbirds show that this risk is far from speculative. Because only a few granules might cause mortality, the proposed 2+2 application rate would not significantly reduce this risk.

Finally, the record shows that even certified applicators would have some difficulty in complying precisely with the proposed label restrictions. For example, application rates may vary significantly due to mechanical and human error. EPA W–4 (pp. 5–8).[43] The record also shows that avoiding puddles during irrigation as the proposed label directs is more easily said than done. Initial Decision at 43; EPA W–13 (pp. 59–60).[44] These difficulties would increase the risk of mortality for all species exposed to diazinon.

In sum, I find that Ciba-Geigy has failed to show that the avian risk would be anything other than widespread and continuous due to the defects in its field studies. Even if these studies had been flawless, certain cognizable risk to birds would remain.

IV. The Benefits of Continued Use

A. Economic Impact of Cancellation

It is undisputed that diazinon is the most economical pesticide for most major turf pests.[45] When the Notice of Intent to Cancel was issued, I concluded that the macroeconomic impact of cancellation would be insignificant.[46] At trial the Agency tendered two economists, Ms. Amy Moll and Dr. Donald Eckerman, whose testimony basically confirmed that the increased costs for golf courses and sod farms would be negligible, less than .5 percent of annual operating costs.[47]

Ciba-Geigy offered no economic witness, but instead attacks the Agency's analysis on two grounds. First, it argues that EPA's witnesses failed to consider the the cost of alternative pesticides will rise if diazinon is removed from the market due to decreased price competition. Second, it contends that alternative pesticides are ineffective against certain pests, and that the Agency's economic analysis fails to reflect the replacement costs for turf expected to be damaged if diazinon is unavailable. These two contentions will be addressed in turn.

1. *Price Competition.* The Presiding Officer expressed his concern that diazinon cancellation might result in decreased price competition among the remaining alternatives:

> The competition afforded by diazinon, which is the lowest price pesticide would be eliminated. Thus, the net effect could be to raise prices for all users.[48]

He added that the removel of diazinon from the market "could result in a less competitive market for all golf course and sod farm users" because "it is a major competitor selling at the lowest prices." [49]

---

proposed label would "protect against catastrophic acute toxicity die-offs." *Id.* (p. 8). Thus, there is no uniform opinion among Ciba-Geigy's experts that the proposed label would reduce the risk to individual birds to negligible, trivial, or low levels as Ciba-Geigy contends.

[39] In re Stevens Industries, Inc. (DDT), 37 FR 13369, 13373 (July 7, 1972).

[40] Tr. 1513. Ciba-Geigy witness Dr. DiGuilo recommended that diazinon exposure to breeding wigeon in Washington be assessed. CG Ex. 70 (p. 13).

[41] Initial Decision at 50 n.137. Ciba-Geigy's attempt (CG Reply at 114) to limit this finding to the wigeon breeding season is unavailing. *See* Tr. 3835-37.

[42] It must also be noted that migration seasons very from year to year, sometimes by several months, due to a variety of factors. *See, e.g.* EPA W–13 (pp. 68–69). Thus, even brant that migrate to and from the areas covered by the proposed restriction would remain at some risk.

[43] Although Ciba-Geigy contends that use of boom sprayer equipment (as required by the proposed label) will reduce application variation, the Presiding Officer found that overapplication can still occur with this equipment. Initial Decision at 22 & n.53.

[44] Although the increased risk from puddling might be small when compared to the risk from residues on turf (EPA W–4 (p. 26)), the Presiding Officer found, and I agree, that diazinon-contaminated puddles can be hazardous. Initial Decision at 43 & n.111; *see also* CG Ex. 125 (p. 43).

[45] The Presiding Officer referred to diazinon's efficacy against a broad range of pests. Initial Decision at 76, but it is unclear whether he found this characteristic to be a separate benefit. Ciba-Geigy has not stressed diazinon's versatility on appeal. In any event, it is unclear whether this versatility is of any practical importance. It might be if diazinon were regularly applied on a preventative basis to repel a variety of pests, but the record shows that golf courses and sod farms generally apply pesticides as a curative measure once a pest has been identified. *See* CG Ex. 79 (p. 5); EPA W–15 (p. 11); EPA W–17 (p. 17). Moreover, several alternatives also appear to be versatile. *See* CG Ex. 132 (p. 2) (trichlorfon); EPA W–15 (p. 11) (chlorpyrifos and carbaryl).

[46] 51 FR at 35037.

[47] *See* Initial Decision at 71–74; EPA W–16 (Moll); EPA W–17 (Eckerman).

[48] Initial Decision at 74 (footnote omitted).

[49] *Id.* at 79.

I note that this finding is far from firm; in fact it is phrased almost as speculation. More importantly, even this limited finding is unsupported by the record. The only evidence cited in support is testimony by the Agency's agricultural economist, Dr. Eckerman. But a full reading of Dr. Eckerman's testimony shows that he came to precisely the opposite conclusion: that removal of diazinon from the market would *not* have a major impact on the price of the alternatives. Tr. 4637–38. He explained that because golf courses and sod farms comprise such a small portion of all pesticide users, he expects no significant impact on price to occur if diazinon use on these sites is prohibited. *Id.* A careful review of Dr. Eckerman's testimony in its entirety shows that it not only fails to support, but flatly contradicts, Ciba-Geigy's contentions in this regard.

Ciba-Geigy suggests that Dr. Eckerman conceded on cross-examination that diazinon cancellation would result in a less competitive market, and only later contradicted this admission on redirect.[50] This is not a fair reading of the record. From the beginning, Dr. Eckerman insisted that

> removal of diazinon would not appreciably affect the competition between the remaining alternatives. Thus there would be no * * * appreciable change in prices.[51]

At one point Dr. Eckerman did state that if there were only one or two pesticides to control a particular pest, the market "wouldn't be very competitive." [52] But even if this comment is viewed in the light most favorable to Ciba-Geigy (which is *not* the standard in this proceeding), it renders his testimony only somewhat ambiguous. It does nor support a finding that Ciba-Geigy met its burden of proving that diazinon cancellation will have any significant impact on the price of alternatives.

Also telling is Ciba-Geigy's failure to offer an economic witness of its own to support its contention in this regard. Although in theory Ciba-Geigy is correct in stating that it may meet its burden of proof based on the Agency's evidence,[53] Dr. Eckerman's testimony is simply insufficient to meet that burden on this issue.

Finally, even if the record convincingly showed that price competition might decrease if diazinon is cancelled, there is no evidence of the extent to which the price of alternatives might rise, or whether any price increase would appreciably add to the total operating costs of golf courses and sod farms. In light of Ciba-Geigy's burden of proof, I decline to engage in such conjecture.

2. *Turf Damage.* Ciba-Geigy also conends that the economic benefit of continued diazinon use must reflect replacement costs for turf damage that will result for cancellation. In its view, the alternatives to diazinon are ineffective for one major pest (white grubs) and two minor pests (fruit flies and bermudagrass stunt mites). It also contends that removal of diazinon would increase the possibility of of all pests developing resistance to the alternatives, thereby resulting in further turf damage.[54]

White grubs. The Presiding Officer found that there are five major pesticides, in addition to diazinon, registered for the control of white grubs: bendiocarb, carbaryl, chlorpyrifos, isofenphos, and trichlorfon.[55] Under FIFRA section 3(f)(2), mere registration of a pesticide (unless cancellation proceedings are in effect) constitutes a prima facie case of compliance with the Act, including compliance with claims of efficacy. Once registration of an alternative is shown, the burden shifts to Ciba-Geigy to demonstrate by a preponderance of the evidence that the alternative is unavailable, ineffective, or not reasonably price.[56]

Ciba-Geigy has failed altogether to meet this burden. In fact, the Presiding Officer found that trichlorfon might actually be more effective than diazinon against grubs, a finding well supported by the record.[57] Although one entomologist described trichlorfon's efficacy as "variable," he did not testify that it is ineffective or even less effective than diazinon.[58] In fact the article he cited to show trichlorfon's variability reported that diazinon is also variable.[59]

Isofenphos (Oftanol) is also a viable alternative to diazinon for white grubs. Although in isolated instances its efficacy has been lessened due to biodegradation,[60] the record does not support Ciba-Geigy's conclusion that its future efficacy is questionable nationwide. In fact, its own entomologist testified that isofenphos normally gives 100 percent control of white grubs.[61] Moreover, diazinon itself is subject to biodegradation.[62]

These two alternatives alone are sufficient to rebut Ciba-Geigy's predictions of extensive turf damage by white grubs. There are, however, several other potential alternatives. EPA concedes that benediocarb and chlorpyrifos are significantly less effective than other registered alternatives,[63] but they do offer some control of certain grub species.[64] Carbaryl traditionally offered only 18 to 55 percent control because it is targeted for surface feeding insects,[65] but a new formulation that better penetrates the soil is now available, thereby enhancing its control of the soil-inhabiting white grub.[66] Although ethoprop is not a practical alternative for golf courses due to its acute toxicity and post-application turf use restrictions,[67] it may be used for control of certain grub species on sod farms in some areas.[68] These alternatives by themselves might not provide completely effective grub control, but they certainly contribute to the arsenal of alternatives available to golf courses and sod farms.

Another alternative, isazophos (Triumph, a Ciba-Geigy product), was also recently registered for the control of white grubs. Not surprisingly, Ciba-Geigy offered no evidence to show that its own product is ineffective.[69] Instead, it contends that isazophos is registered only for domestic, not commercial use.[70] Although the Presiding Officer found that isazophos is not registered for use on golf courses and sod farms,[71] he previously ruled that such domestic products may legally be used on commercial sites.[72] Furthermore, a

---

[50] CG Reply at 223–24 (citing Tr. 4610, 4614).

[51] Tr. 4610; *see also* Tr. 4618.

[52] Tr. 4613.

[53] CG Reply at 224–25.

[54] CG Reply at 220–22.

[55] Initial Decision at 68.

[56] *See* In re Velsicol Chemical Co., 41 FR 7552, 7554 (Feb. 19, 1976); In re Stevens Industries, Inc., 37 Fed. Reg. at 13372.

[57] *See* Initial Decision at 69 & N.196 (citing EPA W–15 (p. 8); CG Ex. 137; Tr. 4557–58)).

[58] CG Ex. 132 (p. 2).

[59] CG Ex. 137.

[60] Initial Decision at 69; CG Ex. 132 (p. 4); CG Ex. 138; EPA W–15 (p. 8).

[61] CG Ex. 127 (p. 7).

[62] Tr. 4667. Although Ciba-Geigy suggests that biodegradation of diazinon does not affect its efficacy (CG Post-Tr. Reply at 168 n.31), the cited record does not specifically address biodegradation. CG Ex. 127 (p. 5).

[63] *See* EPA Post-Tr. Reply at 55 n.37.

[64] Initial Decision at 69.

[65] CG Ex. 127 (p. 6).

[66] EPA W–15 (p. 7); EPA W–14 (pp. 40–41).

[67] Initial Decision at 63 n.180.

[68] Initial Decision at 67; EPA W–17 (Tables 1, 3 and 4); EPA W–15 (Table I).

[69] Its efficacy in controlling white grubs is comparable to diazinon. EPA W–15 (Table II).

[70] CG Post-Tr. Bf. at 183 n.18; CB Ex. 127 (p. 2).

[71] Initial Decision at 70 n.203.

[72] *See* Order Denying Motion to Dismiss, at 5 (April 28, 1987).

sworn statement from an EPA enforcement official indicates that products registered for use on turf (like isazophos (CG 127 (p. 2)) may be used on golf courses and sod farms under existing registrations.[73] These assertions under oath from the responsible enforcement agency are sufficient to show that isazophos is available.[74]

The record also shows that non-chemical methods are available to fight the white grub. Biological controls such as bacteria, although requiring several years for emplacement, are currently available. CG Ex 132 (p. 5). So too is cultural control, *i.e.*, the maintenance of vigorous turf grass growth by reducing stress on turf. *Id.* (p. 6). Integrated pest management programs, combining pesticide use with one or several non-chemical methods, are also currently available. *Id.* (p. 8).[75]

I conclude that there are a variety of alternatives to the use of diazinon to control white grubs. Trichlorfon, isofenphos, and isazophos have not been shown to be less effective than diazinon. The remaining alternatives, while perhaps less effective, nevertheless provide at least partial control in some areas of the country. Non-chemical methods are available to enhance the effectiveness of alternative pesticides. Moreover, even if there were no alternatives available for grubs, Ciba-Geigy has not shown the extent of potential turf damage expected to be caused by uncontrolled grubs.[76]

Minor pests. Ciba-Geigy likewise argues that diazinon cancellation would result in turf damage by two minor pests, frit flies and bermudagrass stunt mites. Although there is apparently no registered alternative to diazinon for frit flies, Ciba-Geigy failed to offer evidence regarding the extent of damage this pest might cause if diazinon is cancelled. Although one witness testified that frit flies eat grass on golf course greens,[77] this is simply inadequate to demonstrate that golf courses would be appreciably affected by frit flies if diazinon becomes unavailable.[78]

Regarding the stunt mite, Ciba-Geigy's assertion that there is no registered alternative for this pest[79] is flatly contradicted by Dr. Kliewer, who testified that "[f]lvalinate (Mavrik), a pyrethroid, is a promising alternative registered for the control of the stunt mite * * *."[80] As noted above, registration serves as prima facie evidence of efficacy. Although there is some second-hand anecdotal evidence stating that fluvalinate "has not been tested,"[81] it is inadequate to rebut the Agency's prima facie showing, particularly in light of the expert testimony characterizing fluvalinate as "promising." Dr. Kliewer added that there are also non-chemical means to help control mites.[82]

Moreover, with respect to both mites and frit flies, the record suggests that *diazinon's* efficacy might be impaired under the proposed label due to the irrigation requirement immediately after application. Dr. Kliewer testified that for surface feeders such as mites and frit flies, irrigation of diazinon would wash it down into the thatch and soil, thereby making it less efficacious Tr. 4547–48. Ciba-Geigy's entomologist apparently agreed. Tr. 4690.

I am mindful of the recent decision of the Ninth Circuit Court of Appeals in *Love* v. *Thomas*, in which the court criticized EPA for its "insensitivity to the local economic problems" caused by its suspension of pesticide registrations for dinoseb.[83] In that case farmers and food processors in the Pacific Northwest contended that dinoseb was the only effective pesticide on the market against certain pests prevalent in that area. The court agreed that EPA acted improperly in suspending dinoseb without first considering the impact of suspension on the Pacific Northwest, given that 95 percent of the commercial raspberry crop is grown in that region and was seriously threatened without dinoseb.

In contrast to *Love*, there is no evidence in this case that uncontrolled infestations of frit flies or bermudagrass stunt mites will inflict severe economic harm on a particular geographical area or industry. To the contrary, Dr. Welterlen testified that turfgrasses have the ability to recover from pest infestations if the damage is not too severe, and that rhizomatous and stoloniferous (species of grasses that include bermudagrass), in particular have "good recuperative potential."[84] More importantly, Ciba-Geigy has failed to present evidence showing the impact of uncontrolled frit flies and mites on golf courses and sod farms. Vague descriptions such as "fairly serious on a local basis" are simply insufficient to use in any meaningful risk-benefit balance.

Resistance. The Presiding Officer found that a "significant benefit" of diazinon is that it "minimizes opportunities for insect resistance."[85] Once again, however, Ciba-Geigy's evidence is slim and speculative. Its entomologist, Dr. Niemczyk, testified only that opportunities for resistance would increase if grub control were reduced to one pesticide.[86] As discussed above, however, more than one effective alternative exists for grub control, including trichlofon, isofenphos, and isazophos. Although the record contains additional expressions of concern regarding the possibility of resistance, for the most part these are vague and anecdotal.[87] I am persuaded by the testimony of Dr. Kliewer, whose field notes reflect most of these expressions of concerns, but who nevertheless concluded that the possibility of resistance is not serious. He explained that the key factor in preventing pest resistance is the availability of pesticides from more than one class (*e.g.* organophosphates versus carbamates).[88] He concluded that the risk of resistance from diazinon cancellation is not great because several other organophosphates will remain available to rotate with the carbamates.[89] Moreover, even if resistance were a real possibility, Ciba-Geigy again failed to offer evidence as to when it might occur, which alternatives it might affect, how extensive it might be, or whether sod

[73] RX 272 (¶¶ 1–4); EPA W–1 (p. 8–9).

[74] At trial counsel for Ciba-Geigy stated that it did not contest that products registered for use on turf may legally be used on golf courses and sod farms. Tr. 4945–46. As a result, additional testimony from an Agency official regarding the use of so-called "homeowner products" on golf courses and sod farms was stricken from the record. *Id.*

[75] Dr. Niemczyk testified that integrated pest management programs may include cultural practices, mechanical manipulation, genetic selection, biological methods, tolerance of some insect damage, and chemicals. CG Ex. 132 (p. 8).

[76] Three photographs presented by Ciba-Geigy (CG Ex. 81) are inadequate to allow any extrapolation of the amount of potential turf damage expected to be caused by uncontrolled grubs or the extent to which such damage would adversely affect golf courses and sod farms.

[77] CG Ex. 77 (p. 3).

[78] Although one of EPA's entomology witnesses, Dr. Kliewer, once stated that frit flies can be "fairly serious turf pests" (CG/Kliewer Ex. 1 (p. 1)), at trial he added that this was true only on a local basis, and he classified them as "relatively minor." EPA W–15 (p. 9); Tr. 4572–74. Neither of Ciba-Geigy's entomology witnesses discussed frit flies in their written direct testimony. CG Ex. 127 and 132.

[79] CG Reply at 215.

[80] EPA W–15 (p. 9).

[81] *See* EPA W–15 (Short Exhibit).

[82] EPA W–15 (p. 10). The National Pest Information Retrieval System lists two additional alternatives for stunt mites, carbophenothion and dicofol. EPA W–15 (Table I).

[83] No. 87–3866 (9th Cir., January 29, 1988).

[84] EPA W–14 (p. 33).

[85] Initial Decision at 70.

[86] CG Ex. 132 (pp. 4–5).

[87] *See, e.g.*, CG Ex. 79 (pp. 5–6); EPA W–15 (statements by Collings, Davis and Patton).

[88] EPA W–15 (pp. 7–8).

[89] *Id.* Isofenphos, trichlorfon and chlorpyrifos are organophosphates; carbaryl and bendiocarb are carbamates. *Id.*

farm and golf course operations would be significantly affected.[90]

The Presiding Officer suggested that products that might become available in the future were not particularly relevant in this regard because they are not presently available to ward off resistence.[91] I disagree. Insect resistence offers at worst the threat of future turf damage; thus alternatives on the horizon become highly relevant in gauging the seriousness of that threat. These potential alternatives include new chemical pesticides,[92] parasitic nematods, other biological control agents, and resistant grass strains.[93]

3. *Summary of Economic Benefits.* In sum, Ciba-Geigy has failed to show by a preponderance of the evidence that even a single acre of turf will be destroyed if diazinon is cancelled, much less that golf course or sod farm operations will be significantly affected by turf replacement costs. Nor has it shown that diazinon cancellation will result in a price increase among the remaining alternatives. I conclude that the removal of diazinon will result in only a very minor increase (less than .5 percent) in operating costs for golf courses and sod farms.

B. The Relative Safety of Diazinon

Ciba-Geigy Argues that another benefit of diazinon is that it poses less risk to humans and wildlife than its alternatives.

The Presiding Officer rejected the evidence of diazinon's comparative safety as "inconclusive." Initial Decision at 78. I agree.

1. *Acute Toxicity.* The parties provided conflicting testimony on diazinon's acute toxicity to humans.[94] The Agency's calculation of the relative margins of safety appears to be based on more appropriate assumptions regarding likely exposure. EPA W–21 (pp. 3–17). Even assuming the validity of Ciba-Geigy's calculations, however, the margins of safety for most of the alternatives are so high as to eliminate any risk to applicators or other exposed individuals in normal use situations. In the words of one witness, Curt Lunchick:

> [T]he margins of safety that we're dealing with with these chemicals * * * are so large, * * * it's kind of like comparing the relative risk of drinking a glass of water and drinking a glass of milk. I mean they may be different but who cares.[95]

Ciba-Geigy attempts to rebut this assertion by citing the Agency's recent request for reentry data on isofenphos.[96] This mere request for further data does not establish that isofenphos poses any real hazard. In fact, reentry data for diazinon have been requested as well. CG/LaRocca Ex. 10 (p. 2). More importantly, the margins of safety for the other alternatives to diazinon are far greater than those for isofenphos, even using Ciba-Geigy's figures. CG Ex. 140. Furthermore, even if acute toxicity were a serious concern for all turf pesticides, I remain unconvinced that diazinon provides the highest degree of relative safety.[97]

I recognize that comparative margins of safety might become meaningless in the extraordinary event of extreme exposure through pesticide misuse or application accident. Indeed, Ciba-Geigy's in-house toxicologist, Dr. Sumner, testified that such exposure occurred when a hose broke during a Ciba-Geigy field study. Tr. 4763. Yet the record shows that trichlorfon, carbaryl, chlorpyrifos and bendiocarb all have higher dermal LD_{50} values than diazinon. EPA W–21 (p. 14). Although diazinon has the highest oral LD_{50} (CG Ex. 140 (p.2)), nothing in the record suggests that oral exposure would be of more concern than dermal exposure in the event of an accident.[98] Moreover, the only record evidence of pesticide poisoning shows that diazinon caused the greatest number (30) of reported systemic illness. *Id.* (p. 16). Only one other turf pesticide at issue, chlorpyrifos, was reported to have resulted in systemic illness (21 incidents). *Id.* None of the incidents reported were attributable to use on golf courses and sod farms. *Id.*[99]

2. *Chronic Health Risk.* I find the record to be similarly vague and inconclusive regarding chronic risks allegedly associated with the alternatives to diazinon. The Initial Decision does not discuss these concerns, but the data relied on by Ciba-Geigy in this regard were largely available when I issued the Notice of Intent to Cancel. No chronic health problems can reasonably be associated with isazophos and chlorpyrifos.[100] Although isofenphos was temporarily banned in California due to concerns about its neurotoxicity, the evidence generated during the ban, although ultimately deemed incomplete, suggested that isofenphos is not neurotoxic. CG Ex. 143; *see also* CG Ex. 141. Likewise, the evidence regarding the oncogenicity of trichlorfon is inconclusive. CG Ex. 141. Although trichlorfon showed some positive effects for mutagenicity, other tests showed negative effects. *Id.* More to the point, diazinon's mutagenicity is apparently unknown at this time, and its other chronic health risks are still being explored.[101] The recrod simply does not permit the inference that diazinon's relative safety regarding chronic health risks is a significant benefit.

3. *Wildlife Risk.* Ciba-Geigy also argues that diazinon poses less risk to smal mammals than the alternatives.[102] The Presiding Officer rejected this contention based on field data and the ample margins of safety involved, and I accept these findings. Initial Decision at 77. Moreover, it is not at all clear that diazinon is in fact the safest pesticide for small mammals. *See* EPA W–21 (pp. 17–21).

Finally, I agree with the Presiding Officer that Ciba-Geigy failed to show that diazinon is safer to birds than the alternatives. Initial Decision at 77–78. I

---

[90] As stated *In re Chapman Chemical Co.*, "the mere potential of resistance * * * to one or more of the * * * substitutes does not mean that all of them can be discarded as adequate substitutes, nor does it constitute a satisfactory showing that some of these compounds are not effective." Slip op. at 36.

[91] *See* Initial Decision at 70; *see also* CG Reply at 217 n.38.

[92] Application for registration of other turf pesticides are pending, including one for a pyrethroid material (Tempo), which would offer another class of pesticide for rotation with the existing organophosphates and carbamates. EPA W–15 (p. 7).

[93] EPA W–14 (pp. 32, 41); EPA W–15 (p. 10); CG Ex. 132 (pp. 6–9).

[94] *Compare* CG Ex. 140 (pp. 2–6) *with* EPA W–21 (pp. 4–17).

[95] Tr. 5489. Mr. Lunchick is employed by the Exposure Assessment Branch, Hazard Evaluation Division of EPA's Office of Pesticide Programs, where he evaluates human exposure to pesticides. He serves as the Branch representative to EPA's Farm Worker Task Force charged with protecting farm workers from pesticide hazards. EPA W–21 (p. 1).

[96] *See* CG Reply at 234–35; CG Post–Tr. Bf. at 204.

[97] Ciba-Geigy's use of exposure data derived from applications by large farm equipment is plainly inappropriate. EPA W–21 (pp. 7–8). So too is its use of oral (as opposed to dermal) LD_{50} values. *Id.* (p. 14). Although Mr. Lunchick's data are not perfect, his assumptions appear to be based on the best available data. His analysis shows that both trichlorfon and chlorpyrofos offer greater margins of safety than diazinon. *Id.* (p. 15).

[98] The only relevant evidence suggests that oral exposure is an insignificant route of exposure in occupational settings. EPA W–21 (p. 5). There is no indication that oral exposure was of more concern than dermal exposure in the accident described by Dr. Sumner.

[99] The report was compiled by the California Department of Food and Agriculture, and included all poisoning incidents for pesticies that caused 10 or more systemic illnesses. EPA W–21 (p. 16).

[100] Although Ciba-Geigy ominously describes carbaryl as a "species-specific teratogen" (CG Reply at 231), the record shows that it displayed teratogenicity only in dogs and in none of the other eleven species tested. CG Ex. 141. Evidence regarding its mutagenicity indicates "that carbaryl is not a potent mutagen in the reported studies and probably acts as a weak mutagen only." *Id.*

[101] *See* Tr. 109–12; CG/Larocca Ex. 10; RX 4 (p. IV–7).

[102] At trial Ciba-Geigy also argued that diazinon posed less risk to aquatic organisms (CG Post-Tr. Bf. at 211–12), but it has apparently abandoned this contention on appeal. The presiding Officer found that there is no appreciable risk to fish from pesticide use on golf courses and sod farms. Initial Decision at 77.

question the LD_{50} values used by Ciba-Geigy's in-house toxicologist, Dr. Sumner. *See* EPA W–22 (pp. 3–17). When the lowest available LD_{50} values for all turf pesticides are compared, diazinon is shown to be one of the most toxic. *Id.* This inference is borne out, at least in part, by the reported bird kills, as shown by the Presiding Officer.[103] The realtively few reported kills associated with diazinon used at low rates cannot necessarily be attributed to the safety of those rates as Ciba-Geigy insists (CF Reply at 237); the more logical explanation is that diazinon has not been historically applied at low rates.[104]

In sum, I agree with Chief Judge Harwood that the evidence of diazinon's relative safety to humans and wildlife is too inconclusive to show that continued diazinon use would result in any significant benefit in this regard.

V. Conclusions: The Risk-Bennefit Balance

A review of the record evidence, the Initial Decision,[105] and the parties' post-trial and appellate submissions indicates that Ciba-Geigy has failed to meet its burden of showing that the benefits of continued use under its proposed label justify the avian risk involved. The Agency presented a prima facie case of a widespread and continuous hazard based on lab data and reported bird kills. Ciba-Geigy's contention that the risk would be low is underminded by the critical flaws in its field studies Even if one accepted the field studies as perfectly sound, some level of avian risk would still remain. I conclude as a matter of policy that these risks are not justified by the bennefit of avoiding a negligible cost increase to golf courses and sod farms. The evidence regarding the other alleged benefits of continued use—maintaining price competition, avoding turf damage, and diazinon's comparative safety—is either non-existent, speculative, or in conflict with more persuasive evidence.

As the Presiding Officer recognized, the record in this case is suffused with uncertainty. Although the database compiled for diazinon might be more extensive than for most other pesticides (CG Reply at 27–28), the level-one field studies presented here are among the first ever to have been conducted. CF Ex. 123 (pp. 19–20). (As of January 1987, no level-two study had been completed. *Id.*) The risk assessment has been further confounded by Ciga-Geigy's many recently proposed label amendments, some of which have come at the eleventh hour. Although I do not question Ciga-Geigy's good faith in attempting to reduce the avian risk to acceptable levels, the resulting lack of experience under the new label works against its efforts to establish that the proposed lable comports with FIFRA. Moreover, Ciba-Geigy's failure to sponsor an economist or turf agronomist as a witness renders its economic analysis of cancellation a wholly conjectural enterprise.

In the face of this uncertainty, FIFRA does not permit me to give Ciba-Geigy "the benefit of the doubt" that its new label will reduce risk to justified levels, as did the Presiding Officer. Initial Decision at 79. Nor is there sufficient evidence to conclude that significant amounts of turf will be destroyed if diazinon is removed from the market, much less that the game of golf might be threatened, as the Initial Decision (p. 79) suggests.

In making the final balance, I agree with the Presiding Officer that acceptable levels of avian risk cannot be determined by reference to annual bird mortality caused by hunting or natural causes. *See* Initial Decision at 62–63. Although Ciba-Geigy is correct that hunting "is a reality that cannot be ignored" (CG Reply at 17), that reality shows only that the risk assessment here differs radically from those involving human health. As stated by the ALJ, hunting is a highly regulated activity that yields, in society's view, significant benefits. Pesticide poisoning, on the other hand, results in aimless and indiscriminate kills which, under FIFRA, must be justified by the pesticide's benefits. Moreover, just as hunting cannot be ignored, it cannot be ignored that the ultimate benefits of the uses at issues here—unblemished golf courses and lawns—are not as significant as the benefits to public health programs and food crops often implicated in cancellation proceedings.[106]

In deciding whether to cancel the registrations at issue, I have seriously considered the possibility of requiring additional restrictions to reduce the avian risk to potentially acceptable levels. Such alternatives are plainly within my discretion. The record is too limited, however, to determine whether any incremental restriction would reduce the avian risk to levels justified by diazinon's marginal benefits. With each new amendment to reduce risk by restricting use, the concomitant benefits are likewise reduced. I refuse to sail this uncharted course with no guidance from the parties. The better approach administratively is to invite Ciba-Geigy and the other registrants to determine whether the removal of diazinon does in fact result in widespread destruction of turf. New evidence to this effect that meets the criteria set forth in Subpart D of the rules (40 CFR 164.130–.133) may then be submitted in an effort to show that the risk of use can and should be reduced to levels justified by the benefits.

As required by FIFRA section 19, I have considered the proper disposition of existing diazinon stocks. There is nothing in the record to suggest that anything other than immediate cancellation of diazinon for use on golf courses and sod farms is appropriate. Thus all existing stocks will be subject to the final order requiring a label amendment prohibiting use on these sites. In addition to use on golf courses and sod farms, most (if not all) of the diazinon labels at issue permit a variety of other uses, such as on vegetables, fruits, nuts, and residential lawns. Diazinon products subject to this decision which are currently in the hands of end users may, of course, be used for any labeled purpose other than golf course and sod farm pest control. I will direct the Assistant Administrator to continue to monitor and review the appropriate treatment of existing stocks and to suggest modifications to this disposition if necessary and appropriate.

Final Order

1. The registrations at issue in this proceeding are hereby cancelled, unless the registrant submits a timely application to amend the registration to prohibit use on golf courses and sod farms. To be timely, an application must be submitted within 30 days of receipt of this Order or its publication in the Federal Register, whichever is later. The application shall propose to amend the registration of the product to include the following statement on top of the front panel of the label (or on supplemental labeling):

This product must not be used on golf courses and sod farms.

[103] *See* Initial Decision at 77–78; EPA W–22 (pp. 17–18).

[104] As noted by the Presiding Officer, even if one or more of the alternatives are as hazardous to birds as diazinon, this does not by itself justify the continued use of diazinon. Initial Decision at 78 (citing cases).

[105] All findings and conclusions set forth in the Initial Decision which are consistent with this opinion are hereby adopted.

[106] Ciba-Geigy argues that the cost of preventing each bird mortality should be considered in determining whether the adverse effects here are "unreasonable" under FIFRA section 2(bb). CG Reply 225–26. Its estimates, however, are based only on *reported* bird kills, which in all likelihood seriously underestimate *actual* mortality. *See* Section III.E, *supra*.

2. The Assistant Administrator for Pesticides and Toxic Substances may require or disallow such other language as he considers appropriate. He is directed to monitor efforts to comply with this order and, if appropriate, to suggest modifications relating to the treatment of existing stocks.

3. Distribution and sale of any diazinon product at issue in this proceeding is prohibited unless the product bears a new label (or supplemental labeling) approved by the Assistant Administrator for Pesticides and Toxic Substances.

4. All use of diazinon products on golf courses or sod farms is prohibited.

5. All applications for diazinon products for use on golf courses and sod farms are hereby denied.

6. This order applies to all diazinon products covered by the Notice of Intent to Cancel, 51 FR 35034 (Oct. 1, 1986) as amended by 52 FR 5656 (Feb. 25, 1987).

7. This Order shall become effective at the date and time it is filed with the hearing clerk.

Dated: March 29, 1988.

Lee M. Thomas,

Administrator.

[FR Doc. 88-7375 Filed 4-4-88; 8:45 am]

BILLING CODE 6560-50-M

FEDERAL DEPOSIT INSURANCE CORPORATION

Information Collection Submitted to OMB for Review

AGENCY: Federal Deposit Insurance Corporation.

ACTION: Notice of information collection submitted to OMB for review and approval under the Paperwork Reduction Act of 1980.

Title of Information Collection: Summary of Deposits (OMB No. 3064-0061).

Background: In accordance with requirements of the Paperwork Reduction Act of 1980 (44 U.S.C. Chapter 35), the FDIC hereby gives notice that it has submitted to the Office of Management and Budget a request for the review and approval of the information collection system identified above.

ADDRESS: Written comments regarding the submission should be addressed to Robert Fishman, Office of Information and Regulatory Affairs, Office of Management and Budget, Washington, DC 20503 and to John Keiper, Assistant Executive Secretary, Federal Deposit Insurance Corporation, Washington, DC 20429.

Comments: Comments on this collection of information should be submitted on or before May 5, 1988.

FOR FURTHER INFORMATION CONTACT: Requests for a copy of the submission should be sent to John Keiper, Assistant Executive Secretary, Federal Deposit Insurance Corporation, Washington, DC 20429, telephone (202) 898-3810.

SUMMARY: The FDIC is requesting OMB approval to revise the data collection form (FDIC 8020/05) used by all FDIC-insured banks with branches, both commercial and savings banks, to report the amounts of deposits held at each office and branch in the United States as of the close of business on June 30 of each year. The new report format will reduce the number of items from five deposit types and a total to two deposit types and a total. The change will reduce the data collection and verification burden and the data storage requirements. The FDIC plans to implement the revised report for June 30, 1988. The Summary of Deposits reporting provides the Federal banking agencies with a basis for measuring the competitive impact of bank mergers and it has additional use in research in banking. It it estimated that the Summary of Deposits reporting requirements imposes an annual paperwork burden of 30,333 hours on the respondents, collectively.

Dated: March 31, 1988.

Federal Deposit Insurance Corporation.

Hoyle L. Robinson,

Executive Secretary.

[FR Doc. 88-7417 Filed 4-4-88; 8:45 am]

BILLING CODE 6714-01-M

FEDERAL MARITIME COMMISSION

Ocean Freight Forwarder License; Reissuance of License; Ark International Forwarding, Inc. et al.

Notice is hereby given that the following ocean freight forwarder licenses have been reissued by the Federal Maritime Commission pursuant to section 19 of the Shipping Act of 1984 (46 U.S.C. app. 1718) and the regulations of the Commission pertaining to the licensing of ocean freight forwarders, 46 CFR Part 510.

License No.	Name/Address	Date reissued
2384R....	Ark International Forwarding, Inc., P.O. Box 520012, Miami, FL 33152.	Mar. 10, 1988.
1982R.....	Croft & Scully Co., Inc., 149 Sheldon St., El Segundo, CA 90245.	Mar. 15, 1988.

Robert G. Drew,

Director, Bureau of Domestic Regulation.

[FR Doc. 88-7373 Filed 4-4-88; 8:45 am]

BILLING CODE 6730-01-M

Ocean Freight Forwarder License; Revocations; Delta Shipping and Marketing Corp. et al.

Notice is hereby given that the following ocean freight forwarder licenses have been revoked by the Federal Maritime Commission pursuant to section 19 of the Shipping Act of 1984 (46 U.S.C. app. 1718) and the regulations of the Commission pertaining to the licensing of ocean freight forwarders, 46 CFR Part 510.

License Number: 3084
Name: Delta Shipping & Marketing Corp.
Address: 825 Windham Court North, Wycoff, NJ 07481
Date Revoked: February 22, 1988
Reason: Surrendered license voluntarily

License Number: 2100
Name: Atlantic Caribbean Export Shipping Co., Inc. dba Ace Forwarding
Address: 5705 N.W. 84th Ave., Miami, FL 33166
Date Revoked: February 22, 1988
Reason: Failed to maintain a valid surety bond

License Number: 1084
Name: Felix L. Matos
Address: 400 Comercio Street, P.O. Box 4263, Old San Juan, Puerto Rico 0091
Date Revoked: March 1, 1988
Reason: Failed to maintain a valid surety bond

License Number: 1262
Name: Robert E. Kelly
Address: 7509 Connelley Drive, Hanover, MD 21076
Date Revoked: March 4, 1988
Reason: Failed to maintain a valid surety bond

Robert G. Drew,

Director, Bureau of Domestic Regulation.

[FR Doc. 88-7372 Filed 4-4-88; 8:45 am]

BILLING CODE 6730-01-M

[Docket No. 88-9]

Benel International Co., Inc., and Benedict Ramos; Order of Investigation

This proceeding is instituted pursuant to sections 11 and 13 of the Shipping Act of 1984 ("1984 Act"), 46 U.S.C. app. §§ 1710 and 1712.

It appears that Benel International Company, Inc. ("Benel"), and Benedict Ramos ("Ramos"), acted as ocean freight forwarders in connection with at least fifty-six ocean shipments for Alpine Trading Company, and Siegel Chemical Export Corp., from January 18, 1985 until October 25, 1985, without an ocean freight forwarder license issued by the Commission, in violation of section 19(a) of the 1984 Act.

Benel is a Delaware corporation doing business at 2050 NW. 94th Avenue, Miami, Florida 33172 and at 33 Rector Street, New York, New York 10006. Ramos is the sole officer and stockholder of Benel.

It appears that Benel and Ramos may have continued, and are continuing, to act as ocean freight forwarders without a license issues by the Commission, in a continuing violation of section 19(a) of the 1984 Act.

Now therefore it is ordered, That pursuant to sections 11, 13 and 19(a) of the Shipping Act of 1984, an investigation is hereby instituted to determine:

1. Whether, during the period from January 18, 1985 and continuing to the present, Benel and Ramos violated section 19(a) of the 1984 Act by acting as ocean freight forwarders without a license issued by the Commission; and

2. Whether, in the event Benel and Ramos violated section 19(a) of the 1984 Act, civil penalties should be assessed, and, if so, the amount of such penalties and whether any other appropriate order should be issued.

It is further ordered, That a public hearing be held in this proceeding and that this matter be assigned for hearing before an Administrative Law Judge of the Commission's Office of Administrative Law Judges at a date and place to be hereafter determined by the Administrative Law Judge in compliance with Rule 61 of the Commission's Rule of Practice and Procedure, 46 CFR 502.61;

It is further ordered, That Benel International Company, Inc. and Benedict Ramos are designated Respondents in this proceeding;

It is further ordered, That the Commission's Bureau of Hearing Counsel is designated a party to this proceeding;

It is further ordered, That notice of this Order be published in the Federal Register, and a copy be served on parties of record;

It is further ordered, That other persons having an interest in participating in this proceeding may file petitions for leave to intervene in accordance with Rule 72 of the Commission's Rules of Practice and Procedure, 46 CFR 502.72;

It is further ordered, That all further notices, orders, and/or decisions issued by or on behalf of the Commission in this proceeding, including notice of the time and place of hearing or prehearing conference, shall be served on parties of record; and

It is further ordered, That in accordance with Rule 61 of the Commission's Rules of Practice and Procedure, the initial decision of the Administrative Law Judge shall be issued by March 31, 1989, and the final decision of the Commission shall be issued by July 21, 1989.

By the Commission.

Joseph C. Polking,

Secretary.

[FR Doc. 88-7414 Filed 4-4-88; 8:45 am]

BILLING CODE 6730-01-M

FEDERAL RESERVE SYSTEM

Barnett Banks, Inc.; Applications To Engage de Novo in Permissible Nonbanking Activities

The companies listed in this notice have filed an application under § 225.23(a)(1) of the Board's Regulation Y (12 CFR 225.23(a)(1)) for the Board's approval under section 4(c)(8) of the Bank Holding Company Act (12 U.S.C. 1843(c)(8)) and § 225.21(a) of Regulation Y (12 CFR 225.21(a)) to commence or to engage *de novo*, either directly or through a subsidiary, in a nonbanking activity that is listed in § 225.25 of Regulation Y as closely related to banking and permissible for bank holding companies. Unless otherwise noted, such activities will be conducted throughout the United States.

Each application is available for immediate inspection at the Federal Reserve Bank indicated. Once the application has been accepted for processing, it will also be available for inspection at the offices of the Board of Governors. Interested persons may express their views in writing on the question whether consummation of the proposal can "reasonably be expected to produce benefits to the public, such as greater convenience, increased competition, or gains in efficiency, that outweigh possible adverse effects, such as undue concentration of resources, decreased or unfair competition, conflicts of interests, or unsound banking practices." Any request for a hearing on this question must be accompanied by a statement of the reasons a written presentation would not suffice in lieu of a hearing, identifying specifically any questions of fact that are in dispute, summarizing the evidence that would be presented at a hearing, and indicating how the party commenting would be aggrieved by approval of the proposal.

Unless otherwise noted, comments regarding the applications must be received at the Reserve Bank indicated or the offices of the Board of Governors not later than April 25, 1988.

A. **Federal Reserve Bank of Atlanta** (Robert E. Heck, Vice President) 104 Marietta Street, NW., Atlanta, Georgia 30303:

1. *Barnett Banks, Inc.*, Jacksonville, Florida; to engage *de novo* through its subsidiary, Barnett Banks Insurance, Inc., Jacksonville, Florida, in providing credit life and accident and health insurance written in connection with extensions of credit by Applicant's subsidiaries and offer mortgage redemption insurance written in connection with loans made by Applicant's affiliate banks pursuant to § 225.25(b)(8)(1)(A) of the Board's Regulation Y.

2. *Barnett Banks, Inc.*, Jacksonville, Florida; to engage *de novo* through its subsidiary, Barnett Brokerage Service Inc., Jacksonville, Florida, in providing securities brokerage services, related securities credit activities and incidental activities such as custodial services, individual retirement accounts and cash management services pursuant to § 225.25(b)(15) of the Board's Regulation Y.

Board of Governors of the Federal Rerserve System, March 30, 1988.

James McAfee,

Associate Secretary of the Board.

[FR Doc. 88-7351 Filed 4-4-88; 8:45 am]

BILLING CODE 6210-01-M

First Illinois Corp. et al.; Formations of; Acquisitions by; and Mergers of Bank Holding Companies

The companies listed in this notice have applied for the Board's approval under section 3 of the Bank Holding Company Act (12 U.S.C. 1842) and § 225.14 of the Board's Regulation Y (12 CFR 225.14) to become a bank holding company or to acquire a bank or bank holding company. The factors that are considered in acting on the applications

are set forth in section 3(c) of the Act (12 U.S.C. 1842(c)).

Each application is available for immediate inspection at the Federal Reserve Bank indicated. Once the application has been accepted for processing, it will also be available for inspection at the offices of the Board of Governors. Interested persons may express their views in writing to the Reserve Bank or to the offices of the Board of Governors. Any comment on an application that requests a hearing must include a statement of why a written presentation would not suffice in lieu of a hearing, identifying specifically any questions of fact that are in dispute and summarizing the evidence that would be presented at a hearing.

Unless otherwise noted, comments regarding each of these applications must be received not later than April 22, 1988.

A. **Federal Reserve Bank of Chicago** (David S. Epstein, Vice President) 230 South LaSalle Street, Chicago, Illinois 60690:

1. *First Illinois Corporation*, Evanston, Illinois; to acquire 100 percent of the voting shares of United Illinois Bank of Troy, Troy, Illinois.

2. *First of America Bank Corporation and First of American Bank Corporation—Indiana*, both of Kalamazoo, Michigan; to acquire 100 percent of the voting shares of Lakeshore Bank and Trust Company, Michigan City, Indiana.

B. **Federal Reserve Bank of St. Louis** (Randall C. Sumner, Vice President) 411 Locust Street, St. Louis, Missouri 63166:

1. *CNB Bancshares, Inc.*, Evansville, Indiana; to acquire 100 percent of the voting shares of Haubstadt State Bank, Haubstadt, Indiana.

2. *CNB Bancshares, Inc.*, Evansville, Indiana; to acquire 100 percent of the voting shares of Posey Bancorporation, Wadesville, Indiana, and thereby indirectly acquire Farmers Bank and Trust Company, Wadesville, Indiana.

3. *First Financial Corporation of America*, Salem, Missouri; to become a bank holding company by acquiring 100 percent of the voting shares of The First National Bank of Salem, Salem, Missouri. Bank engages through a subsidiary in general insurance activities.

4. *Old National Bancorp*, Evansville, Indiana; to acquire 100 percent of the voting shares of The Peoples National Bank in Lawrenceville, Lawrenceville, Illinois.

5. *Raymond Bancorp, Inc.*, Raymond, Illinois; to acquire 100 percent of the voting shares of Peoples State Bank of Gillespie, Gillespie, Illinois. Comments on this application must be received by April 15, 1988.

Board of Governors of the Federal Reserve System, March 30, 1988.

James McAfee,

Associate Secretary of the Board.

[FR Doc. 88-7352 Filed 4-4-88; 8:45 am]

BILLING CODE 6210-01-M

Change in Bank Control Notice; Acquisition of Shares of Banks or Bank Holding Companies; Don C. McNeil

The notificant listed below has applied under the Change in Bank Control Act (12 U.S.C. 1817(j)) and § 225.41 of the Board's Regulation Y (12 CFR 225.41) to acquire a bank or bank holding company. The factors that are considered in acting on notices are set forth in paragraph 7 of the Act (12 U.S.C. 1817(j)(7)).

The notices are available for immediate inspection at the Federal Reserve Bank indicated. Once the notices have been accepted for processing, they will also be available for inspection at the offices of the Board of Governors. Interested persons may express their views in writing to the Reserve Bank indicated for that notice or to the offices of the Board of Governors. Comments must be received not later than April 15, 1988.

A. **Federal Reserve Bank of Kansas City** (Thomas M. Hoenig, Senior Vice President) 925 Grand Avenue, Kansas City, Missouri 64198:

1. *Don C. McNeil*, Thomas, Oklahoma; to acquire an additional 1.51 percent of the voting shares of Thomas Bancshares, Inc., Thomas, Oklahoma, and thereby indirectly acquire The Bank of Thomas, Thomas, Oklahoma.

Board of Governors of the Federal Reserve System, March 30, 1988.

James McAfee,

Associate Secretary of the Board.

[FR Doc. 88-7353 Filed 4-4-88; 8:45 am]

BILLING CODE 6210-01-M

GENERAL SERVICES ADMINISTRATION

Federal Property Resources Service; San Joaquin California Project (CF-LU-21), Tulare County, California; Transfer of Property; Correction

On November 30, 1987, the above transfer notice was published on page 45501 of the **Federal Register**. A portion of the legal description was incorrect and should have read, "* * * all of Section 5 and the E1/2E1/2 of Section 6, Township 23 South, Range 24 East, Mount Diablo Meridian."

Dated: March 23, 1988.

Earl E. Jones,

Commissioner, Federal Property Resources Service.

[FR Doc. 88-7359 Filed 4-4-88; 8:45 am]

BILLING CODE 6820-96-M

DEPARTMENT OF HEALTH AND HUMAN SERVICES

Food and Drug Administration

Altana, Inc.; Withdrawal of Approval of NADA

AGENCY: Food and Drug Administration.

ACTION: Notice.

SUMMARY: The Food and Drug Administration (FDA) is withdrawing approval of a new animal drug application (NADA) held by Altana, Inc. The NADA provides for the use of neomycin sulfate-sulfacetamide sodium ophthalmic ointment in the eyes of dogs and cats. The firm requested the withdrawal of approval. In a final rule published elsewhere in this issue of the **Federal Register**, FDA is removing the regulation that reflects the approval.

EFFECTIVE DATE: April 15, 1988.

FOR FURTHER INFORMATION CONTACT: Mohammad I. Sharar, Center for Veterinary Medicine (HFV-216), Food and Drug Administration, 5600 Fishers Lane, Rockville, MD 20857, 301-443-4093.

SUPPLEMENTARY INFORMATION: Altana, Inc. (formerly Byk-Gulden, Inc.), 60 Baylis Rd., Melville, NY 11747, is the sponsor of NADA 47-091 which provides for the use of neomycin sulfate-sulfacetamide sodium ophthalmic ointment in the prophylaxis and local treatment of dogs and cats for superficial eye infections caused by commonly occurring gram-negative and gram-positive bacteria such as staphylococci, streptococci, and moraxella. The NADA was approved March 17, 1978 (43 FR 11176). By letter of October 5, 1987, the sponsor requested withdrawal of approval because the product is no longer being marketed.

Therefore, under the Federal Food, Drug, and Cosmetic Act (sec. 512(e), 82 Stat. 345-347 (21 U.S.C. 360b(e))) and under authority delegated to the Commissioner of Food and Drugs (21 CFR 5.10) and redelegated to the Director of the Center for Veterinary Medicine (21 CFR 5.84), and in accordance with § 514.115 *Withdrawal of approval of applications* (21 CFR

514.115), notice is given that approval of NADA 47-091 and all supplements thereto is hereby withdrawn, effective April 15, 1988.

In a final rule published elsewhere in this issue of the **Federal Register**, FDA is removing 21 CFR 524.1484j, which reflects this approval.

Dated: March 23, 1988.

Gerald B. Guest,

Director, Center for Veterinary Medicine.

[FR Doc. 88-7391 Filed 4-4-88; 8:45 am]

BILLING CODE 4160-01-M

Health Care Financing Administration

[BERC-474-NC]

Medicare Program; Fiscal Year 1988 Legislative Changes to the Inpatient Hospital Prospective Payment System

AGENCY: Health Care Financing Administration (HCFA), HHS.

ACTION: Notice of legislative changes with comment period.

SUMMARY: This notice describes those portions of sections 4002, 4005, 4008, and 4009 of the Omnibus Budget Reconciliation Act of 1987 that affect Federal fiscal year 1988 payments to prospective payment hospitals and hospitals excluded from the prospective payments system. The changes required by this law affect the prospective payment rates; the rate-of-increase limits for hospitals excluded from the prospective payment system; the definition of a large urban area; the establishment of a new "regional floor;" the criteria for classification of rural referral centers; and outlier payments for burn cases.

DATES:

Effective Date: The legislation described in this notice is effective on April 1, 1988.

Comment Date: Comments will be considered if we receive them at the appropriate address, as provided below, no later than 5:00 p.m. on June 6, 1988.

ADDRESS: Mail comments to the following address: Health Care Financing Administration Department of Health and Human Services, Attention: BERC-474-NC, P.O. Box 26676, Baltimore, Maryland 21207.

If you prefer, you may deliver your comments to one of the following addresses:

Room 309-G, Hubert H. Humphrey Building, 200 Independence Ave. SW., Washington, DC.

Room 132, East High Rise Building, 6325 Security Boulevard, Baltimore, Maryland.

In commenting, please refer to file code BERC-474-NC. Comments received timely will be available for public inspection as they are received, generally beginning approximately three weeks after publication of a document, in Room 309-G of the Department's offices at 200 Independence Ave. SW., Washington, DC, on Monday through Friday of each week from 8:30 a.m. to 5:00 p.m. (phone: 202-245-7890).

For individual copies of this notice, contact the following: Superintendent of Documents, U.S. Government Printing Office, Washington, DC 20402, (202) 783-3238.

The charge for individual copies is $1.50 for each issue or for each group of pages as actually bound, payable by check or money order to the Superintendent of Documents.

FOR FURTHER INFORMATION, CONTACT: Linda Magno, (301) 966-4529.

To obtain copies of this document, see the "Address" section, above.

SUPPLEMENTARY INFORMATION

I. Background

On September 1, 1987, we published a final rule in the **Federal Register** (52 FR 33034) to implement the fifth year of the prospective payment system. In that rule, we set forth the methods, amounts, and factors for determining the Federal fiscal year (FY) 1988 prospective payment rates. We also established new target rate percentages for determining the rate-of-increase limits for FY 1988 for hospitals excluded from the prospective payment system.

Under that final rule, in accordance with section 1886(d)(3)(A) and section 1886(b)(3)(B) of the Social Security Act (the Act) as they then stood, the applicable percentage increase in the average standardized amounts for prospective payment system hospitals was the percentage increase in the hospital market basket minus 2.0 percentage points, or 2.7 percent. Hospitals excluded from the prospective payment system had their rate-of-increase limits increased by 2.7 percent. For discharges occurring on or after October 1, 1987, the Federal portion of a hospital's prospective payment rate was to be based on 100 percent of the national rate, rather than 50 percent of the national rate and 50 percent of the regional rate. In addition, for cost reporting periods beginning on or after October 1, 1987, the hospital's payment rate was to be comprised of 100 percent of the Federal rate, completing the transition from a blend of Federal and hospital-specific rates.

However, on September 29, 1987, the Balanced Budget and Emergency Deficit Control Reaffirmation Act of 1987 (Pub. L. 100-119) was enacted. Under the provisions of section 107(a)(1) of Pub. L. 100-119, payment for inpatient hospital services under the prospective payment system in FY 1988 was revised as follows:

- For discharges occurring on or after October 1, 1987 and before November 21, 1987, the average standardized amounts for FY 1988 were increased by zero percent rather than by 2.7 percent as provided in the September 1, 1987 final rule.
- The prospective payment transition period was extended as follows:

—For discharges occurring on or after October 1, 1987 and before November 21, 1987, the Federal portion of a hospital's prospective payment rate continued to based on a blend of 50 percent of the national rate and 50 percent of the regional rate.

—For the first 51 days of a hospital's cost reporting period beginning in FY 1988, the hospital's payment rate remains a blend of 75 percent of the Federal rate and 25 percent of the hospital-specific rate, rather than becoming 100 percent of the Federal rate. The applicable hospital-specific rate for this period is the hospital's rate that was in effect for its cost reporting period that began in FY 1987.

- The rate-of-increase limits for hospitals excluded from the prospective payment system were updated by zero percent (rather than 2.7 percent) for the first 51 days of these hospitals' cost reporting periods beginning in FY 1988.

We announced these changes in a notice published in the **Federal Register** on October 23, 1987 (52 FR 39637). The rest of the changes promulgated in the September 1, 1987 **Federal Register** went into effect as scheduled on October 1, 1987.

On November 21, 1987, the provisions of Pub. L. 100-119 concerning the applicable percentage increase, the national/regional blend of the Federal rate, and the 51-day extension of the hospital-specific-Federal rate blend expired, and the provisions of the September 1, 1987 final rule governing the updates and the transition became effective.

II. Summary of New Legislation

On December 22, 1987, the Omnibus Budget Reconciliation Act of 1987 (Pub. L. 100-203) was enacted. The provisions of sections 4002, 4005(d), 4008(d), and 4009(i) of Pub. L. 100-203 made the following changes that affect Medicare payments to hospitals in FY 1988:

- For discharges in FY 1988 occurring on or after April 1, 1988, the applicable percentage increase used to update the

standardized amounts for prospective payment system hospitals is—

—3.0 percent for hospitals located in rural areas;

—1.5 percent for hospitals located in large urban areas; and

—1.0 percent for hospitals located in other urban areas.

• A "large urban area" is defined as an urban area that the Secretary determines has a population of more than 1,000,000 based on the most recent available population data published by the Bureau of the Census. In addition, any New England County Metropolitan Area (NECMA) with a population of more than 970,000 is a large urban area.

• For discharges occurring in a fiscal year beginning on or after October 1, 1987, the Secretary computes average standardized amounts for hospitals located in rural, large urban, and other urban areas. For FY 1988 discharges occurring on or after April 1, 1988, the average standardized amounts for large urban and other urban areas are computed by applying the applicable update factor to the urban average standardized amount that was in effect for the 51-day period beginning October 1, 1987.

• For discharges occurring on or after April 1, 1988 and before October 1, 1990, "regional floors" for the standardized amounts are established. The regional floor for a region is the greater of the national adjusted diagnosis-related group (DRG) prospective payment rate or the sum of 85 percent of the national adjusted DRG prospective payment rate and 15 percent of the regional adjusted DRG prospective payment rate.

• Hospitals excluded from the prospective payment system would receive a 2.7 percent increase for cost reporting periods beginning in FY 1988, excluding the first 51 days of those cost reporting periods, for which the increase is zero percent.

• For cost reporting periods beginning on or after October 1, 1987, a sole community hospital's hospital-specific portion is increased by zero percent for the first 51 days of the cost reporting period, 2.7 percent for the next 132 days, and for the remainder of the cost reporting period by the same percentage increase as the applicable Federal rate (that is, 3.0 percent for hospitals paid the rural rate, 1.5 percent for hospitals paid the large urban rate, and 1.0 percent for hospitals paid the other urban rate).

• Effective with discharges on or after April 1, 1988, rural hospitals may qualify as rural referral centers if they have 275 or more beds.

• For discharges occurring on or after April 1, 1988 and before October 1, 1989 that are classified in DRGs relating to burn cases, the marginal cost factor to be used in computing payments for outliers is 90 percent.

III. Changes to the Prospective Payment System

A. Establishment of Large Urban Areas

Prior to the enactment of Pub. L. 100-203, section 1886(d)(2)(D) of the Act required the Secretary to compute separate average standardized amounts for hospitals located in urban and rural areas. The term "urban area" is defined as an area within a Metropolitan Statistical Area (MSA) (as defined by the Executive Office of Management and Budget) or within such similar area as the Secretary has recognized by regulations implementing cost limits for inpatient hospital services under section 1886(a) of the Act. (Under those regulations, urban areas in New England are defined as New England County Metropolitan Areas (NECMAs).) Accordingly, to identify urban areas, we have used MSAs and NECMAs, as defined by the Executive Office of Management and Budget with two exceptions. Under section 601(g) of the Social Security Amendments of 1983 (Pub. L. 98-21), certain New England counties were deemed to be urban areas. For purposes of the prospective payment system, we have treated those counties as part of the NECMAs of which they were a part in 1979. The only other exception to the strict use of MSA and NECMA definitions in identifying urban areas has been for a rural county that qualifies for reclassification into an MSA under § 412.63(b)(3). In these two instances, the population of the rural counties deemed to be urban is included in calculating the population of the MSA or NECMA to which the county has been appended. In all other cases, a rural area is any area outside of an urban area.

Section 4002(c)(1) of Pub. L. 100-203 amended section 1886(d)(3) of the Act to require the Secretary to compute three average standardized amounts for discharges occurring in a fiscal year beginning on or after October 1, 1987: One for hospitals located in rural areas; one for hospitals located in large urban areas; and one for hospitals located in other urban areas. Section 4002(b) of Pub. L. 100-203 amended section 1886(d)(2)(D) of the Act to define a "large urban area" as an urban area with a population of more than 1,000,000. In addition, section 4009(i) of Pub. L. 100-203 provides that a NECMA with a population of more than 970,000 is classified as a large urban area. As required by section 1886(d)(2)(D) of the Act, population size is determined by the Secretary based on the latest population data published by the Bureau of the Census. Under that section as now amended, urban areas that do not meet the criteria for large urban areas are referred to as "other urban areas."

Based on 1986 population estimates published by the Bureau of the Census, we have identified 46 urban areas that meet the criteria to be defined as large urban areas. A list of those areas is set forth in Table A, below. The population data we used to identify large urban areas are available to the public as follows:

• For the 50 States and the District of Columbia, we used the "Local Population Estimates—Series P-26, No. 86-A," which is available at a cost of $1.25 from the Superintendent of Documents; U.S. Government Printing Office; Washington, DC. 20402

• The most recent population data for Puerto Rico are 1986 population estimates as of October 1987. These data are unpublished and may be obtained by calling the Bureau of the Census at (301) 763-7722.

B. Increase in the Prospective Payment Rates and Rate-of-Increase Limits

Section 4002(a) of Pub. L. 100-203 amended section 1886(b)(3)(B)(i) of the Act to specify that the applicable increases for FY 1988 are—

• 3.0 percent for hospitals located in rural areas;

• 1.5 percent for hospitals located in large urban areas; and

• 1.0 percent for hospitals located in other urban areas.

Section 4002(g)(1) of Pub. L. 100-203 provides that the amendment made by section 4002(a) is effective for discharges occurring on or after April 1, 1988. However, as required by section 4002(g)(1)(B) of Pub. L. 100-203, for purposes of updating the rates for prospective payment hospitals for discharges occurring on or after October 1, 1988, the updates that are applicable on or after April 1, 1988 are deemed to have been in effect for the entire fiscal year.

We note that these update factors apply *only* to the Federal portion of the rates. Updates to the hospital-specific rates are made only on a cost reporting period basis. Thus, for other than sole community hospitals (discussed below), there will be no further update to the hospital-specific portion, since the transition to fully Federal rates is completed for a hospital effective 51 days after the end of its cost reporting period which began during FY 1987.

Section 4002(g)(5) of Pub. L. 100-203 provides that, in computing the average

standardized amounts for FY 1988 for large urban areas and other urban areas, the applicable update factor is applied to the urban standardized amount that was in effect for the 51-day period beginning on October 1, 1987 (see the October 23, 1987 notice (52 FR 39639)). The revised standardized amounts are set forth in Tables 1a,1b, and 1c, below.

As provided in section 1886(d)(5)(C)(ii) of the Act, payments to hospitals that qualify as sole community hospitals under the prospective payment system continue to be used on a blend of 75 percent of the hospital-specific rate and 25 percent of the Federal regional rate. In accordance with the provisions of section 4002(g)(2)(B) of Pub. L. 100-203, for cost reporting periods beginning during FY 1988, the hospital-specific rate of a sole community hospital is increased as follows:

- For the first 51 days of the cost reporting period, the increase is zero percent.
- For the next 132 days of that period, the increase is 2.7 percent.
- For the remainder of the cost reporting year, the hospital-specific rate is increased by—
  - —3.0 percent for hospitals located in rural areas;
  - —1.5 percent for hospitals located in rural urban areas; and
  - —1.0 percent for hospitals located in other urban areas.

For purposes of updating the hospital-specific rate of a sole community hospital for cost reporting periods beginning on or after October 1, 1988, the applicable percentage increase for cost reporting periods beginning in FY 1988 is deemed to have been 3.0 percent, 1.5 percent, or 1.0 percent for hospitals located in rural, large urban, or other urban areas, respectively.

Section 4002(e) of Pub. L. 100-203 amended section 1886(b)(3)(B) of the Act to state that the applicable percentage increase for cost reporting periods beginning in FY 1988 for hospitals that are excluded from the prospective payment system is the market basket percentage increase minus 2.0 percentage points (that is, 2.7 percent). However, under the provisions of section 4002(g)(3)(B) of Pub. L. 100-203, the update to the target rates for 12-month cost reporting periods beginning in FY 1988 is computed by multiplying 2.7 percent times the ratio of 315 to 366. Thus, after an update factor of zero percent for the first 51 days of the cost reporting period, there is an update at the rate of 2.7 percent for the remaining 315 days of the cost reporting period. This results in an actual update factor of 2.3238 percent for the cost reporting period. As required by section 4002(g)(3)(C) of Pub. L. 100-203, for purposes of updating the target rates of hospitals excluded from the prospective payment system for cost reporting periods beginning on or after October 1, 1988, the update for FY 1988 is deemed to have been 2.7 percent.

C. Establishment of a Regional Floor

Section 4002(d) of Pub. L. 100-203 amended section 1886(d)(1)(A)(iii) of the Act to establish a "regional floor" for the prospective payment rate applicable to a hospital. In accordance with this section, hospitals' payments are based on the greater of the national average standardized amount or the sum of 85 percent of the national average standardized amount and 15 percent of the average standardized amount for the region as set forth in Tables 1a and 1b. This provision is effective for discharges occurring on or after April 1, 1988 and before October 1, 1990.

Based on the updated payment rates published in this notice, we have determined that for discharges occurring on or after April 1, 1988 and before October 1, 1988, rural hospitals in regions I, II, III, and IV and hospitals in large urban areas and other urban areas in regions I and IV will receive greater payments using the national/regional blend than the national average standardized amount. Therefore, for discharges occurring on or after April 1, 1988 and before October 1, 1988, the Federal portion of the payment for these hospitals is comprised of 85 percent of the national average standardized amount and 15 percent of the applicable regional average standardized amount rather than 100 percent of the national average standardized amount.

D. Rural Referral Centers

Under the authority of section 1886(d)(5)(C)(i) the Act, § 412.96 of the regulations sets forth the criteria a hospital must meet in order to receive special treatment under the prospective payment system as a rural referral center. Prior to the enactment of Pub. L. 100-203, one of the criteria under which a rural hospital could be classified as a rural referral center was to have 500 or more beds available for use. Section 4005(d) of Pub. L. 100-203 amended section 1886(d)(5)(C)(i)(I) of the Act to reduce this bed size criterion from 500 or more beds to 275 or more beds, effective with discharges on or after April 1, 1988.

In evaluating whether a rural hospital meets the new bed size criterion, we had to determine which beds in the hospital should be counted. Section 1886(d)(5)(C)(i)(I) of the Act specifically provides for payment adjustments for a subsection (d) hospital that qualifies as a rural referral center. Section 1886(d)(1)(B) of the Act defines a subsection (d) hospital as "a hospital located in one of the fifty States or the District of Columbia * * * and * * * does not include a psychiatric or rehabilitation unit of the hospital which is a distinct part of the hospital * * *." Since section 1886(d)(5)(C)(i)(I) of the Act states that a hospital of 275 or more beds may qualify for rural referral center status under subsection (d), and since a subsection (d) hospital does not include excluded units of the hospital, then it is appropriate that only beds available for use within the subsection (d) hospital should be counted when determining whether a hospital has 275 or more beds.

We believe that this interpretation of the statute produces the most consistent application of the rural referral center provision, since data from only prospective payment hospitals (or the portions of the hospital subject to the prospective payment system) are used in determining whether a hospital qualified for rural referral center status. Since the referral center adjustment (that is, payment for discharges at the rate for urban hospitals) is not available to hospitals or units that are excluded from the prospective payment system, it is inappropriate to consider beds outside of subsection (d) hospitals when determining bed size. We note that this is the same definition of bed size that is currently used for determining the number of beds for purposes of calculating the indirect medical education adjustment.

As with other hospitals seeking to become rural referral centers, those rural hospitals with 275 beds or more will have to file an application with their regional office within 90 days after publication of this notice.

Under the provisions of § 412.96(d) and (e), rural referral centers are paid based on the applicable average standardized amount for urban hospitals, adjusted by the applicable DRG weighting factor and the rural area wage index. With the requirement under Pub. L. 100-203 that urban areas be classified into large urban areas and other urban areas with respect to the appropriate update factors and to calculate the average standardized amounts, it now is necessary to determine the appropriate urban rate for us in calculating payments for rural referral centers.

We believe that rural referral centers should be paid the applicable standardized rates for other urban areas. As we stated in the June 10, 1987 proposed rule (52 FR 22092), while our

analysis indicates that rural referral centers incur costs higher than other rural hospitals, we found that their costs are lower than those for urban hospitals. Therefore, we believe it would be inappropriate to pay rural referral centers at the higher rate assigned to hospitals located in large urban areas.

Section 4005(d)(2)(A) of Pub. L. 100–203 requires a study of the criteria for the classification of rural referral centers. Section 4005(d)(2)(A)(ii) states that the study should include an examination of "the appropriateness of providing for payment for such centers at a rate other than the rate for a hospital located in an other urban area." We believe that this language reflects the expectation of Congress that rural referral centers, for discharges on or after April 1, 1988, would be paid at the rate for hospitals in other urban areas. For these reasons, for discharges occurring on or after April 1, 1988, rural referral centers are paid the applicable standardized amount for other urban areas, adjusted by the applicable DRG weighting factor and the rural area wage index.

E. Burn Outliers

Section 1886(d)(5)(A) of the Act requires that, in addition to the basic prospective payment rates, payments must be made to hospitals for atypical cases known as "outlier cases." These are cases that have either an extremely long length of stay or extraordinarily high costs when compared to other discharges classified in the same DRG.

Section 1886(d)(5)(A) of the Act specifies that outlier payments must approximate the marginal cost of care beyond the outlier threshold. In the September 1, 1983 interim final rule, we established the ratio of marginal cost to average cost at 60 percent (48 FR 39776). Therefore, the regulations (§§ 412.82 and 412.84) currently provide that the marginal cost of outlier cases is based on a 60 percent factor.

For day outliers, an additional per diem payment is made for each covered day of care beyond the threshold. The per diem amount is based on 60 percent of the average per diem Federal rate for the DRG. For cost outliers, the additional payment is based on 60 percent of the difference between the hospital's adjusted charges for the discharge and the outlier threshold.

The provisions of section 4008(d)(1)(A) of Pub. L. 100–203 changed the marginal cost factor to 90 percent for both day and cost outliers for those DRGs related to burn cases. There are six DRGs relating specifically to burn cases as follows:

DRG	Name
456	Burns, transferred to another acute care facility.
457	Extensive burns w/o O.R. procedure.
458	Non-extensive burns with skin graft.
459	Non-extensive burns with wound debridement or other O.R. procedure.
460	Non-extensive burns w/o O.R. procedure.
472	Extensive burns with O.R. procedure.

In accordance with section 4008(d)(1)(A), of Pub. L. 100–203, for discharges occurring on or after April 1, 1988 and before October 1, 1989, payment for outlier cases classified in DRGs 456 through 460 and 472 is made based on a marginal cost factor of 90 percent, rather than 60 percent.

Section 4008(d)(1)(B) of Pub. L. 100–203 requires that total payments (PMT) made under section 1886 of the Act after reflecting the changes in outlier payments for cases in burn-related DRGs (PMT After) be neither greater nor less than the total payments under section 1886 of the Act that would have been made in the absence of this provision (PMT Before). Further, section 1886(d)(3)(B) of the Act requires that the standardized payment amounts be reduced by a percentage equal to the percentage of total DRG payments (including outlier payments) estimated to be outlier payments.

This requirement is mathematically identical to specifying that total DRG prospective payments (including outliers) based on rates reduced for outliers (PMT Before) are neither greater nor less than total DRG prospective payments with no outlier payment provision, based on rates not reduced for outliers (PMT No). Hence,

PMT After = PMT Before = PMT No

Or, expressed more simply,

PMT After = PMT No

In order to satisfy this constraint and ensure that estimated outlier payments will fall between five and six percent of total payments, as required by section 1886(d)(5)(A) of the Act, we first estimated what total prospective payments would be—

1. Based on rates not reduced for outliers;
2. Using the update factors mandated under section 4002(a) of Pub. L. 100–203;
3. Applying the regional floor required under section 4002(d) of Pub. L. 100–203 if applicable; and
4. With no additional payment for outliers.

This figure became the payment target amount.

We then simulated what total payments and outlier payments would be—

1. Based on rates reduced for outliers by the offsets specified in the September 1, 1987 final rule (542 FR 33065);
2. Using the update factors mandated under section 4002(a) of Pub. L. 100–203;
3. Applying the regional floor required under section 4002(d) of Pub. L. 100–203 if applicable;
4. Making additional payments for outliers using the thresholds specified in the September 1, 1987 final rule (52 FR 33101–114); and
5. Reflecting outlier payments with a marginal cost factor of 90 percent for burn cases.

In order to achieve equality between the payment target amount and the estimated payment amount reflecting the change in payment of burn-related outliers, it was necessary to apply the following budget neutrality factor in computing the rates published in Tables 1a, 1b, and 1c, as set forth below.

Budget Neutrality Factor

.997687

In addition, it was necessary to adjust the outlier offsets to ensure that the percentage of total payments attributable to outlier payments was equal to the reductions in the standardized amounts. The process described above also results in the following outlier offsets to the standardized amounts:

Outliers	
Urban	*Rural*
0.9441	0.9746

IV. Tables

This section contains the tables referred to in this preamble.

TABLE 1A.—NATIONAL ADJUSTED STANDARDIZED AMOUNTS, LABOR/NONLABOR

Large Urban		Other Urban		Rural	
Labor-related	Nonlabor-related	Labor-related	Nonlabor-related	Labor-related	Nonlabor-related
2303.78	616.32	2292.44	612.29	2123.97	588.19

TABLE 1B.—REGIONAL ADJUSTED STANDARDIZED AMOUNTS, LABOR/NONLABOR

	Large urban		Other urban		Rural	
	Labor-related	Nonlabor-related	Labor-related	Nonlabor-related	Labor-related	Nonlabor-related
1. New England (CT, ME, MA, NH, RI, VT)	2407.46	847.60	2395.60	843.42	2251.08	697.14
2. Middle Atlantic (PA, NJ, NY)	2182.90	812.54	2172.15	808.54	2254.62	657.73
3. South Atlantic (DE, DC, FL, GA, MD, NC, SC, VA, WV)	2314.57	743.10	2303.17	739.44	2156.33	572.45
4. East North Central (IL, IN, MI, OH, WI)	2441.79	879.44	2429.76	875.11	2181.58	635.04
5. East South Central (AL, KY, MS, TN)	2222.93	674.90	2211.98	671.56	2137.06	533.67
6. West North Central (IA, KS, MN, MO, NB, ND, SD)	2313.17	800.53	2301.78	796.59	2073.44	569.60
7. West South Central (AR, LA, OK, TX)	2322.94	742.63	2311.50	738.98	1991.53	524.36
8. Mountain (AZ, CO, ID, MT, NV, NM, UT, WY)	2216.39	790.05	2205.46	786.15	2023.63	606.72
9. Pacific (AK, CA, HI, OR, WA)	2167.56	905.56	2156.88	902.09	1959.62	679.51

TABLE 1C.—ADJUSTED STANDARDIZED AMOUNTS FOR PUERTO RICO, LABOR/NONLABOR

	Large urban		Other urban		Rural	
	Labor-related	Nonlabor-related	Labor-related	Nonlabor-related	Labor-related	Nonlabor-related
Puerto Rico	2017.21	362.89	2007.28	360.90	1366.97	260.52
National Puerto Rico	2254.16	757.14	2254.16	757.14	2254.16	757.14

Table A.—Large Urban Areas

(Constituent Counties or County Equivalents)

Anaheim-Santa Ana, CA
- Orange, CA

Atlanta, GA
- Barrow, GA
- Butts, GA
- Cherokee, GA
- Clayton, GA
- Cobb, GA
- Coweta, GA
- De Kalb, GA
- Douglas, GA
- Fayette, GA
- Forsyth, GA
- Fulton, GA
- Gwinnett, GA
- Henry, GA
- Newton, GA
- Paulding, GA
- Rockdale, GA
- Spalding, GA
- Walton, GA

Baltimore, MD
- Anne Arundel, MD
- Baltimore, MD
- Baltimore City, MD
- Carroll, MD
- Harford, MD
- Howard, MD
- Queen Annes, MD

Bergen-Passaic, NJ
- Bergen, NJ
- Passaic, NJ

Boston-Lawrence-Salem-Lowell-Brockton, MA
- Essex, MA
- Middlesex, MA
- Norfolk, MA
- Plymouth, MA
- Suffolk, MA

Charlotte-Gastonia-Rock Hill, NC–SC
- Cabarrus, NC
- Gaston, NC
- Lincoln, NC
- Mecklenburg, NC
- Rowan, NC
- Union, NC
- York, SC

Chicago, IL
- Cook, IL
- Du Page, IL
- McHenry, IL

Cincinnati, OH–KY–IN
- Dearborn, IN
- Boone, KY
- Campbell, KY
- Kenton, KY
- Clermont, OH
- Hamilton, OH
- Warren, OH

Cleveland, OH
- Cuyahoga, OH
- Geauga, OH
- Lake, OH
- Medina, OH

Columbus, OH
- Delaware, OH
- Fairfield, OH
- Franklin, OH
- Licking, OH
- Madison, OH
- Pickaway, OH
- Union, OH

Dallas, TX
- Collin, TX
- Dallas, TX
- Denton, TX
- Ellis, TX
- Kaufman, TX
- Rockwall, TX

Denver, CO
- Adams, CO
- Arapahoe, CO
- Denver, CO
- Douglas, CO
- Jefferson, CO

Detroit, MI
- Lapeer, MI
- Livingston, MI
- Macomb, MI
- Monroe, MI
- Oakland, MI
- Saint Clair, MI
- Wayne, MI

Fort Lauderdale-Hollywood-Pompano Beach, FL
- Broward, FL

Fort Worth–Arlington, TX
- Johnson, TX
- Parker, TX
- Tarrant, TX

Hartford-Middletown-New Britain-Bristol, CT
- Hartford, CT
- Litchfield, CT
- Middlesex, CT
- Tolland, CT

Houston, TX
- Fort Bend, TX
- Harris, TX
- Liberty, TX
- Montgomery, TX
- Waller, TX

Indianapolis, IN
- Boone, IN

Hamilton, IN
Hancock, IN
Hendricks, IN
Johnson, IN
Marion, IN
Morgan, IN
Shelby, IN
Kansas City, KS–MO
Johnson, KS
Leavenworth, KS
Miami, KS
Wyandotte, KS
Cass, MO
Clay, MO
Jackson, MO
Lafayette, MO
Platte, MO
Ray, MO
Los Angeles-Long Beach, CA
Los Angeles, CA
Miami-Hialeah, FL
Dade, FL
Milwaukee, WI
Milwaukee, WI
Ozaukee, WI
Washington, WI
Waukesha, WI
Minneapolis-St. Paul, MN–WI
Anoka, MN
Carver, MN
Chisago, MN
Dakota, MN
Hennepin, MN
Isanti, MN
Ramsey, MN
Scott, MN
Washington, MN
Wright, MN
St. Croix, WI
Nassau-Suffolk, NY
Nassau, NY
Suffolk, NY
New Orleans, LA
Jefferson, LA
Orleans, LA
St. Bernard, LA
St. Charles, LA
St. John The Bapist, LA
St. Tammany, LA
New York, NY
Bronx, NY
Kings, NY
New York City, NY
Putnam, NY
Queens, NY
Richmond, NY
Rockland, NY
Westchester, NY
Newark, NJ
Essex, NJ
Morris, NJ
Sussex, NJ
Union, NJ
Norfolk-Virginia Beach-Newport News, VA
Chesapeake City, VA
Gloucester, VA
Hampton City, VA
James City Co., VA
Newport News City, VA
Norfolk City, VA
Poquoson, VA
Portsmouth City, VA
Suffolk City, VA
Virginia Beach City, VA
Williamsburg City, VA
York, VA
Oakland, CA
Alameda, CA
Contra Costa, CA
Philadelphia, PA–NJ
Burlington, NJ
Camden, NJ
Gloucester, NJ
Bucks, PA
Chester, PA
Delaware, PA
Montgomery, PA
Philadelphia, PA
Phoenix, AZ
Maricopa, AZ
Pittsburgh, PA
Allegheny, PA
Fayette, PA
Washington, PA
Westmoreland, PA
Portland, OR
Clackamas, OR
Multnomah, OR
Washington, OR
Yamhill, OR
Providence-Pawtucket-Woonsocket, RI
Bristol, RI
Kent, RI
Newport, RI
Providence, RI
Washington, RI
Riverside-San Bernardino, CA
Riverside, CA
San Bernardino, CA
Sacramento, CA
Eldorado, CA
Placer, CA
Sacramento, CA
Yolo, CA
St. Louis, MO–IL
Clinton, IL
Jersey, IL
Madison, IL
Monroe, IL
St. Clair, IL
Franklin, MO
Jefferson, MO
St. Charles, MO
St. Louis, MO
St. Louis City, MO
Salt Lake City-Ogden, UT
Davis, UT
Salt Lake, UT
Weber, UT
San Antonio, TX
Bexar, TX
Comal, TX
Guadalupe, TX
San Diego, CA
San Diego, CA
San Francisco, CA
Marin, CA
San Francisco, CA
San Mateo, CA
San Jose, CA
Santa Clara, CA
San Juan, PR
Barcelona, PR
Bayoman, PR
Canovanas, PR
Carolina, PR
Catano, PR
Corozal, PR
Dorado, PR
Fajardo, PR
Florida, PR
Guaynabo, PR
Humacao, PR
Juncos, PR
Los Piedras, PR
Loiza, PR
Luguillo, PR
Manati, PR
Naranjito, PR
Rio Grande, PR
San Juan, PR
Toa Alta, PR
Toa Baja, PR
Trojillo Alto, PR
Vega Alta, PR
Vega Baja, PR
Seattle, WA
King, WA
Snohomish, WA
Tampa-St. Petersburg-Clearwater, FL
Hernando, FL
Hillsborough, FL
Pasco, FL
Pinellas, FL
Washington, D.C.–MD–VA
District of Columbia, DC
Calvert, MD
Charles, MD
Frederick, MD
Montgomery, MD
Prince Georges, MD
Alexandria City, VA
Arlington, VA
Fairfax, VA
Fairfax City, VA
Falls Church City, VA
Loudoun, VA
Manassas City, VA
Manassas Park City, VA
Prince William, VA
Stafford, VA

V. Regulatory Impact Statement

Executive Order 12291 (E.O. 12291) requires us to prepare and publish a regulatory impact statement for any notice that would be likely to result in one of the following: An annual effect on the economy of $100 million or more; a major increase in costs or prices for consumers, individual industries, Federal, State, or local government agencies, or geographic regions; or, significant adverse effects on competition, employment, investment, productivity, innovation, or on the ability of United States-based enterprises to compete with foreign-based enterprises in domestic or export markets. In addition, we generally prepare a regulatory flexibility analysis that is consistent with the Regulatory Flexibility Act (RFA) (5 U.S.C. 601 through 612), unless the Secretary certifies that a notice such as this will not have a significant economic impact on a substantial number of small entities. For purposes of the RFA, States and individuals are not small entities, but we treat all hospitals as small entities.

We have determined that this notice, in itself will not produce any effects that would meet any of the criteria of E.O.

12291 or of the RFA since the amendments to which this notice pertains are already in effect, or will go into effect without the publishing of this notice. Implementation of these amendments is not dependent on the publication of this document. Accordingly, this document is not a "rule" and its publication does not constitute "rulemaking," as those terms are defined in the Administrative Procedure Act. Therefore we have determined that a regulatory flexibility analysis under E.O. 12291 is not required. For the same reasons, we have determined and the Secretary certifies that this notice will not have a significant impact on a substantial number of small entities.

VI. Other Required Information

A. Waiver of Proposed Rulemaking

We ordinarily publish a proposed notice in the **Federal Register** and provide a period for public comment. However, we may waive that procedure if we find good cause that notice and comment are impractical, unnecessary, or contrary to the public interest. When we do so, we incorporate an explanation of our findings in the notice to be issued.

Section 4039(g) of Pub. L. 100-203 provides that we may issue regulations to implement the amendments made by Subtitle A of Pub. L. 100-203 on an interim or other basis as may be necessary. The statute, which was enacted on December 22, 1987, provided that the amendments made by sections 4002, 4005(d), 4008(d), and 4009(i) are generally effective on April 1, 1988. It is clear, therefore, that undergoing a proposed rulemaking process for this notice, which is effective April 1, 1988, would be impractical and, in terms of notifying affected parties of the provisions of the legislation as soon as possible, would not be in the public interest. Therefore, we find good cause to waive publication of a proposed notice and to issue this notice to become effective April 1, 1988. Nonetheless, we are providing a 60-day comment period as indicated at the beginning of this notice.

Because of the large number of items of correspondence we normally receive on notices, we cannot acknowledge or respond to them individually. However, we will consider all comments that are received by the date and time specified in the "Dates" section of this notice and we will respond to those comments in the preamble to the final rule that announces the FY 1989 prospective payment rates. In addition, we intend to amend the applicable regulations in 42 CFR parts 412 and 413 to conform to the provisions of Pub. L. 100-203 discussed in this notice as a part of the FY 1989 prospective payment proposed and final rules.

B. Waiver of 30-day Delay in Effective Date

We normally provide a delay of 30 days in the effective date of all final notices. However, the effective dates of the provisions of sections 4002, 4005(d), 4008(d), and 4009(i) of Pub. L. 100-203 are specified in those sections of the law. The provisions of this notice conform to the clear direction provided in the law. For this reasons, a delayed effective date is unnecessary. Therefore, we find good cause to waive the usual 30-day delay.

C. Paperwork Reduction Act

This notice does not impose information collection requirements. Consequently, it need not be reviewed by the Executive Office of Management and Budget under the authority of the Paperwork Reduction Act of 1980 (44 U.S.C. 3501-3511).

Section 1886 of the Social Security Act (42 U.S.C. 1395ww)

(Catalog of Federal Domestic Assistance Program No. 13.773, Medicare—Hospital Insurance Program)

Dated: March 21, 1988.

William L. Roper,

Administrator, Health Care Financing Administration.

Approved: March 31, 1988.

Otis R. Bowen,

Secretary.

[FR Doc. 88-7464 Filed 4-1-88; 3:29 pm]

BILLING CODE 4120-01-M

DEPARTMENT OF HEATLH AND HUMAN SERVICES

Public Health Service

National Toxicology Program; Availability of Technical Report on Toxicology and Carcinogenesis of Boric Acid

The HHS' National Toxicology Program today announces the availability of the Technical Report describing the toxicology and carcinogenesis studies of boric acid, a component of cosmetics and pharmaceuticals and also used in numerous industrial processes.

Toxicology and carcinogenesis studies were conducted by feeding groups of 50 male and 50 female mice diets containing 0, 2,500 or 5,000 ppm boric acid for 103 weeks.

Under the conditions of these 2-year feed studies, there was no evidence of carcinogenicity [1] of boric acid at doses of 2,5000 or 5,000 ppm for male or female $B6C3F_1$ mice. Testicular atrophy and interstitial cell hyperplasia were observed in high dose male mice. The decrease in survival of dosed male mice may have reduced the sensitivity of this study.

The study scientist for this bioassay is Dr. Michael P. Dieter. Questions or comments about the contents of this Technical Report should be directed to Dr. Dieter at P.O. Box 12233, Research Triangle Park, NC 27709 or telephone (919) 541-3368; FTS: 629-3368.

Copies of *Toxicology and Carcinogenesis Studies of Boric Acid in $B6C3F_1$ Mice (Feed Studies)* (TR 324) are available without charge from the NTP Public Information Office, MD B2-04, P.O. Box 12233, Research Triangle Park, NC 27709. Telephone (919) 541-3991; FTS: 629-3991.

Date: March 30, 1988.

David P. Rall,

Director.

[FR Doc. 88-7438 Filed 4-4-88; 8:45 am]

BILLING CODE 4140-01-M

DEPARTMENT OF THE INTERIOR

Bureau of Land Management

[WY-010-08-4410-08]

Availability of the Draft Cody Resource Management Plan / Environmental Impact Statement and Notice of Public Meeting

AGENCY: Bureau of Land Management, Interior.

SUMMARY: The Bureau of Land Management (BLM) announces the availability of the Draft Cody Resource Management Plan/Environmental Impact Statement (RMP/EIS) for public review and comment. The Draft RMP/EIS describes and analyzes four alternatives, including the BLM's preferred alternative, for land and resource management on approximately 1.1 million acres of public land surface and 1.5 million acres of Federal mineral estate administered by the BLM in the Cody Resource Area. The planning area includes portions of Park and Big Horn

[1] The NTP uses five categories of evidence of carcinogenicity to summarize the strength of evidence of carcinogenicity observed in each study: Two categories for positive results ("clear evidence" and "some evidence"), one category for uncertain findings ("equivocal evidence"), one category for no observable effect ("no evidence"), and one category for studies that cannot be evaluated because of major flaws ("inadequate study").

Counties in the Bighorn Basin of north-central Wyoming.

The RMP/EIS is focused on resolving three key resource management issues that were identified with public involvement early in the planning process. These issues are: (1) Competition for vegetation, (2) special management area designations, and (3) resource accessibility and manageability.

The RMP/EIS considers the desigation of five areas nominated as Areas of Critical Environmental Concern (ACEC). These are the Carter Mountain proposed ACEC (7,619 acres), the Chapman Bench proposed ACEC (15,400 acres), the Five Springs Falls proposed ACEC (160 acres), the Little Mountain proposed ACEC (20,510 acres), and the Sheep Mountain Anticline proposed ACEC (17,849 acres). The preferred alternative recommends these five areas be designated ACECs.

Notice is also given that a public meeting will be held to seek public comment on the Draft Cody RMP/EIS.

DATES: Written comments will be accepted for 90 days following the date the Environmental Protection Agency publishes the notice of filing of the Draft Cody RMP/EIS in the **Federal Register**. A public meeting on the Draft Cody RMP/EIS will be held in Cody on May 24, 1988, at 7:30 p.m., in the meeting room of the Park County Library.

ADDRESS: Written comments should be sent to: Bureau of Land Management, Cody Resource Area Office, P.O. 518, 1714 Stampede Avenue, Cody, Wyoming 82414, Attention RMP Team Leader.

FOR FURTHER INFORMATION CONTACT: Bob Ross, RMP Team Leader, at the above address, or at (307) 587-2216.

SUPPLEMENTARY INFORMATION: The Draft Cody RMP/EIS evaluates four alternative land use plans for the management of BLM administered public lands and resources in the Cody Resource Area. Each alternative analyzed in detail represents a complete and reasonable plan that could be used to guide the management of the area covered by this plan.

The preferred alternative identified in the Draft RMP/EIS consists of management actions contained in three of the alternatives analyzed in detail, and a few management actions that are unique to the preferred alternative.

The proposed ACECs would be given management priority and emphasis to maintain or enhance the following values: Alpine tundra and rare plants on Carter Mountain; colonial nesting water birds (long-billed curlews and American plovers) at Chapman Bench; rare plants near Five Springs Falls; cave resources on Little Mountain; and educational opportunities at the Sheep Mountain Anticline. The management actions for ACECs include restrictions on surface-disturbing activities and other land uses, such as limitations on oil and gas exploration, geophysical exploration, rights-of-way construction, and off-road vehicle use. Portions of each proposed ACEC would also be closed to future locatable mineral exploration and development, subject to valid existing rights. The level of these restrictions and the types of land uses affected would be different in each proposed ACEC.

Oral and written comments on the Draft RMP/EIS will be accepted during the public meeting. If possible, a written copy of oral comments should be made available to BLM personnel during the meeting.

Copies of the Draft Cody RMP/EIS are available at the Cody Resource Area Office, at the address listed above.

Date: March 23, 1988.

Hillary A. Oden,

State Director.

[FR Doc. 88-7360 Filed 4-4-88; 8:45 am]

BILLING CODE 4310-22-M

[NM-010-08-4121-02]

Albuquerque District Advisory Council; Meeting

AGENCY: Bureau of Land Management, Interior.

ACTION: Notice of Albuquerque District Advisory Council Meeting.

SUMMARY: The Bureau of Land Management's Albuquerque District Advisory Council will meet on Friday, April 29, 1988 at 8:30 a.m. in the BLM District Office Building located at 435 Montano NE in Albuquerque, New Mexico.

The purpose of the meeting will be to give the Council information about the District's hazardous materials program, especially the problems with solid waste landfills in San Juan County. The Council will use that information to develop a recommended course of action for the BLM.

The meeting is open to the public and time will be provided for public comment. The Albuquerque District Advisory Council is managed in accordance with the Federal Land Policy and Management Act of 1976. Minutes of the meeting will be made available for review within 30 days following the meeting. For additional information, contact Alan Hoffmeister, Public Affairs Specialist, 435 Montano NE Albuquerque, New Mexico 87107, (505) 761-4504.

Robert T. Dale,

District Manager.

[FR Doc. 88-7384 Filed 4-4-88; 8:45 am]

BILLING CODE 4310-FB-M

[NV-943-08-4220-10; N-47122]

Proposed Withdrawal and Opportunity for Public Meeting; Nevada

March 25, 1988.

AGENCY: Bureau of Land Management, Interior.

ACTION: Notice.

SUMMARY: The Bureau of Land Management proposes to withdraw 1,420 acres of public land in Mineral County, to protect the paleontological integrity of Stewart Valley. This notice closes the land for up to 2 years from surface entry and mining. The land will remain open to mineral leasing.

DATE: Comments and requests for a public meeting must be received by July 5, 1988.

ADDRESS: Comments and meeting requests should be sent to the Nevada State Director, BLM, 850 Harvard Way, P.O. Box 12000, Reno, Nevada 89520.

FOR FURTHER INFORMATION CONTACT: Vienna Wolder, BLM Nevada State Office, 702-784-5481.

SUPPLEMENTARY INFORMATION: On February 25, 1988, a petition was approved allowing Bureau of Land Management to file an application to withdraw the following described public land from settlement, sale, location, or entry under the general land laws, including the mining laws, subject to valid existing rights:

Mount Diablo Meridian

T. 8 N., R. 36 E.,
Sec. 1, NW¼NW¼;
Sec. 2, W½, W½E½, NE¼NE¼.
T. 9 N., R. 36 E.,
Sec. 15, E½SE¼, E½W½SE¼, S½SE¼NE¼;
Sec. 26, SE¼NW¼, SW¼NE¼, E½SW¼, W½SE¼;
Sec. 35, W½, NW¼NE¼, S½SE¼;
Sec. 36, SW¼SW¼.

The area described aggregates 1,420 acres in Mineral County.

The purpose of the proposed withdrawal is to protect the paleontological integrity of Stewart Valley for scientific research purposes.

For a period of 90 days from the date of publication of this notice, all persons who wish to submit comments, suggestions, or objections in connection with the proposed withdrawal may

present their views in writing to the undersigned officer of the Bureau of Land Management.

Notice is hereby given that an opportunity for a public meeting is afforded in connection with the proposed withdrawal. All interested persons who desire a public meeting for the purposes of being heard on the proposed withdrawal must submit a written request to the undersigned officer within 90 days from the date of publication of this notice. Upon determination by the authorized officer that a public meeting will be held, a notice of the time and place will be published in the **Federal Register** at least 30 days before the scheduled date of the meeting.

The applicaton will be processed in accordance with the regulations set forth in 43 CFR Part 2300.

For a period of 2 years from the date of publication of this notice in the **Federal Register**, the land will be segregated as specified above unless the application is denied or cancelled or the withdrawal is approved prior to that date. The temporary uses which may be permitted during this segregative period are compatible uses which can be authorized by lease, license, permit, cooperative agreement, or right-of-way.

Fred Wolf,

Associate State Director, Nevada.

[FR Doc. 88-7383 Filed 4-4-88; 8:45 am]

BILLING CODE 4310-HC-M

[AZ-020-08-4212-13; A-23254]

Realty Action; Exchange of Public Lands; Maricopa, Mohave, Pima and Santa Cruz Counties, AZ

All or part of the following described sections of federal land has been determined to be suitable for disposal by exchange pursuant to section 206 of the Federal Land Policy and Management Act of 1976, 43 U.S.C. 1716:

Gila and Salt River Base and Meridian, Maricopa County, Arizona

Township 5 North, Range 1 West,
Sections 3, 4, 5, 6, 8, 9, 10, 11, 12, 13 and 14.
Township 6 North, Range 1 West,
Sections 27, 28, 30, 31, 33, 34 and 35.
Township 6 North, Range 2 West,
Sections 25 and 26.
Township 2 North, Range 5 West,
Sections 1, 3, 4, 5, 6, 7, 8, 9, 10, 18 and 19.
Township 3 North, Range 5 West,
Sections 12, 13, 17, 18, 19, 20, 21, 24, 28, 29, 30, 31, 32, 33, 34 and 36.
Township 5 North, Range 5 West,
Sections 16, 17, 18, 19, 20, 21, 28, 29, 30, 31, 32 and 33.
Township 2 North, Range 6 West,
Sections 1, 2, 7, 10, 11, 12, 13, 14, 15, 16, 22 and 24.
Township 3 North, Range 6 West,
Sections 13, 14, 15, 16, 19, 20, 21, 22, 23, 24, 25, 26, 27, 28, 29, 30, 32, 33, 34, 35 and 36.
Township 2 North, Range 7 West,
Sections 1, 2, 3, 5, 6, 7, 8, 9, 11, 12, 15, 16, 17, 18, 19, 20, 21, 30 and 32.
Township 3 North, Range 7 West,
Sections 23, 24, 25, 26, 27, 28, 31, 32, 33, 34, 35 and 36.
Township 2 North, Range 8 West,
Sections 1, 2, 4, 9, 10, 11, 12, 13, 14, 15, 17, 18, 23, 24 and 25.
Township 15 North, Range 14 West,
Section 12, E½SE¼.

Comprising 65,270 acres, more or less.

In exchange for the above described public lands, the United States will acquire all or part of the below-described sections of private land from Seven West Properties, an Arizona General Partnership, or their nominee.

Gila and Salt River Base and Meridian, Mohave County, Arizona

Township 32 North, Range 11 West,
Sections 7, 17, 18, 19 and 21.
Township 31 North, Range 12 West,
Sections 3 and 5.
Township 32 North, Range 12 West,
Sections 20, 21, 24, 25, 26, 27, 28, 29, 31, 33 and 35.
Township 32 North, Range 13 West,
Sections 25, 27, 29, 33 and 35.

Comprising 13,202.31 acres, more or less, commonly referred to as the G & F Ranch.

The United States will also acquire all or part of the below-described sections of private land.

Gila and Salt River Base and Meridian, Pima and Santa Cruz Counties, Arizona

Township 19 South, Range 16 East,
Sections 11, 12, 13, 14, 23, 24, 25, 26 and 35.
Township 18 South, Range 17 East,
Sections 12, 13, 14, 20, 23, 24, 25, 26, 27, 31, 33, 34 and 35.
Township 19 South, Range 17 East,
Sections 2, 3, 7, 8, 9, 10, 11, 12, 13, 14, 15, 17, 18, 19, 20, 21, 22, 23, 24, 25, 26, 27, 28, 29, 30, 31, 32, 33, 34 and 35.
Township 20 South, Range 17 East,
Sections 3, 4, 5, 6, 10, 11, 12, 14, 15, 16, 21, 22, 23 and 27.
Township 18 South, Range 18 East,
Sections 7, 19, 27, 28 and 29.
Township 19 South, Range 18 East,
Sections 5, 7, 9, 17, 18, 19, 28, 29, 30 and 31.
Township 20 South, Range 18 East,
Section 7.

Comprising 37,500 acres, more or less, commonly referred to as the Empire/Cienega Ranches.

The exchange proposal involves all of the exchange proponent's interest in the surface and subsurface of the private lands and the surface and subsurface estate of the public lands. The exchange is consistent with the Bureau's land use planning objectives.

Lands to be transferred from the United States will be subject to the following reservations, terms and conditions:

1. A right-of-way for ditches and canals constructed by the authority of the United States, Act of August 30, 1890, 26 Stat. 391, 43 U.S.C. 945.

2. Rights-of-way A-21382, A-22877, AR-010943, PHX-015584, A-22681, AR-08551, A-4527, A-20017, A-22438, AR-017049, AR-17372, A-4227, A-5425, A-9878, A-10968, A-11039, A-18683, A-18684, A-22287, A-22392, A-23117, AR-010364, AR-031626, PHX-083322, A-7973, A-10202, A-11866, A-18421, A-18946, A-19151, A-20277, A-20872, A-10987, A-12037, A-13875, AR-035584, PHX-080582, PHX-082297, A-20017, A-22858, A-22392, A-21165, A-390, A-624 and A-6105.

3. Permits A-11697, A-9795 and A-10014.

4. All valid existing rights.

The lands transferred out of federal ownership will affect the following livestock grazing allotments: Bialac 3008, Bo Nine 6095, Carter Herrera 3015, Clem 3017, Douglas 3026, Flat Iron 3031 and Turner 3084.

The lands to be acquired by the United States, from Seven West Properties shall be subject to certain easements, permits and other encumbrances detailed in Schedule B of Ticor Title Insurance Company of California Policies 87071262, E-434586, E-434586-A and E-434587.

In accordance with the regulations of 43 CFR 2201.1(b), publication of this Notice shall segregate the affected public lands from appropriation under the public land laws, including the mining laws, and from any subsequent land exchange proposals filed by any proponent other than Seven West Properties or their nominee.

The Bureau of Reclamation filed withdrawal applications AR-031306, AR-031307, A-997 and A-8913 and the subject applications have been withdrawn insofar as they pertain to the lands contained in this Notice.

The lands identified in Section 12, Township 15 South, Range 14 East were reconveyed to the United States by Pima County and title was accepted on May 14, 1986. The land has been determined suitable for private exchange under Section 206 of the Federal Land Policy and Management Act.

This Notice supercedes Notice of Realty Action A-23149 published January 7, 1988, Notice of Realty Action A-23176 published February 2, 1988 and Notice of Realty Action A-23221 published March 10, 1988, only as they pertain to the lands in this Notice.

The segregation of the described selected lands shall terminate upon

issuance of a document conveying title to such lands or upon publication in the **Federal Register** of a notice of termination of the segregation, or the expiration of two years from the date of initial publication, whichever occurs first.

Upon completion of the official appraisal, acreage adjustments will be made to equalize the values of the offered and selected lands.

For a period of forty-five (45) days from the date of publication of this notice in the **Federal Register**, interested parties may submit comments to the Phoenix District Manager, Bureau of Land Management, 2015 West Deer Valley Road, Phoenix, Arizona 85027. Objections will be reviewed by the State Director who may sustain, vacate, or modify this realty action. In the absence of any objections, this realty action will become the final determination of the Department of the Interior.

Date: March 31, 1988.

Herman L. Kast,

Acting District Manager.

[FR Doc. 88-7478 Filed 4-4-88; 8:45 am]

BILLING CODE 4310-32-M

National Park Service

Aniakchak National Monument Subsistence Resource Commission

AGENCY: National Park Service, Alaska Region, Interior.

ACTION: Notice of Meeting.

SUMMARY: The Alaska Regional Office of the National Park Service announces a forthcoming meeting of the Aniakchak National Monument Subsistence Resource Commission. The following agenda items will be discussed:

(1) Call to order.

(2) Introduction of guests.

(3) Review minutes from October, 1987 meeting.

(4) Review and discuss the Governor's response to the Commission's hunting proposal AN-87-01.

(5) Review and discuss the Secretary of the Interior's response to the Commission's hunting plan AN-85-01.

(6) Identify areas in monument where traditional subsistence hunting has occurred.

(7) Elect Commission Chairman.

(8) Research data needs.

(9) Review of permits requested to or issued by NPS.

(10) Planned NPS activities during the summer field season.

(11) Old Businesses.

(12) New business.

(13) Adjourn.

DATE: The meeting will begin at 10:00 a.m. on April 18, 1988, and conclude the afternoon of April 19, 1988.

ADDRESS: The meeting will be held at the fire hall in Port Heiden, Alaska.

FOR FURTHER INFORMATION CONTACT: Ray Bane, Superintendent, Aniakchak National Monument, P.O. Box 7, King Salmon, Alaska 99613, Phone (907) 246-3305.

SUPPLEMENTAL INFORMATION: The Aniakchak National Monument Subsistence Resource Commission is authorized under Title VIII, Section 808, of the Alaska National Interest Lands Conservation Act, Pub. L. 96-487.

Richard J. Stenmark,

Acting Regional Director.

[FR Doc. 88-7444 Filed 4-4-88; 8:45 am]

BILLING CODE 4310-70-M

National Register of Historic Places; Notification of Pending Nominations

Nominations for the following properties being considered for listing in the National Register were received by the National Park Service before March 26, 1988. Pursuant to § 60.13 of 36 CFR Part 60 written comments concerning the significance of these properties under the National Register criteria for evaluation may be forwarded to the National Register, National Park Service, U.S. Department of the Interior, Washington, DC 20243. Written comments should be submitted by April 20, 1988.

Carol D. Shull,

Chief of Registration, National Register.

Alabama

DeKalb County

Fort Payne, *Fort Payne Residential Historic District*, Roughly bounded by Forrest Ave. and Elm St., Fifth St. NW, Grand and Alabama Aves., and Fourth St. SW and 2nd St. NW

Jefferson County

Birmingham, *Hanover Court Apartments*, 2620 Highland Ave.

Mobile County

Mauvila vicinity, *Davis-Oak Grove District*, W side of Oak Grove Rd. just N of Kali Oka Rd.

Indiana

Wabash County

Wabash, *Wabash Residential Historic District*, Bounded roughly by the Norfolk Southern RR and Union St., Wabash and Miami Sts., Main St., Holliday St.

Missouri

St. Louis (Independence City)

Charles Sumner High School, 4248 W. Cottage Ave.

Montana

Fergus County

Lewistown, *Judith Place Historic District*, Roughly bounded by Main St., the alley between Hawthorne and Ridgelawn Sts., Washington St., and Oullette St.

New Jersey

Essex County

Newark, *Bethany Baptist Church*, 117 W. Market St.

Ohio

Athens County (also in Hocking County)

Logan to Nelsonville, *Hocking Valley Railway Historic District*, Roughly between Bridge #494 in Logan and Bridge #629 in Nelsonville

Summit County

Northfield vicinity, *Wolcott House*, 56 E. Twinsburg Rd.

Pennsylvania

Bucks County

Bensalem, *Belmont*, 3779 Bristol Rd.

Erwinna, *Riverside Farm*, River and Headquarters Rds.

Chester County (also in Montgomery County)

Pheonixville vicinity, *Schuylkill Navigation Canal, Oakes Reach Section*, N and E bank of Schuylkill River from PA 113 to Lock 61

Indiana County

Blairsville, *St. Peter's Episcopal Church and Rectory*, 36-38 W. Campbell St.

Lackawanna County

Scranton, *First Church of Christ-Scientist*, 520 Vine St.

Lehigh County

Bethelem, *Mount Airy Historic District*, Roughly Prospect Ave. between Fifteenth and Eighth Aves.

Lehigh County (also in Northampton County)

Bethelem, *Central Bethlehem Historic District (Boundary Increase)*, Roughly bounded by Walnut St., Linden St., Lehigh River, and New St.

Bethlehem, *Fountain Hill Historic District*, Roughly bounded by Brighton, Wyandotte, W. Fourth and Seminole Sts., and Delaware Ave.

Northampton County

Bethlehem, *Elmwood Park Historic District*, Roughly bounded by Goepp Circle, Woodruff St., Park Pl., and Carson St.

Bethlehem, *Pembroke Village Historic District*, Roughly bounded by Radclyffe St., Carlisle St., Stefko Blvd., Arcadia St. and Minsi Trail

Philadelphia County

Philadelphia, *Grays Road Recreation Center*, 2501 Christian St.

Tennessee

Lewis County

Napier Furnances Historic District (40LS14) (Iron Industry on the Western Highland Rim 1790s–1920s MPS),
Steele's Iron Works (40LS15) (Iron Industry on the Western Highland Rim 1790s–1920s MPS)

Washington

Thurston County

Olympia, *Elks Building (Downtown Olympia MRA)*, 607–613 S. Capitol Way

Wisconsin

Brown County

Green Bay, *Oakland–Dousman Historic District*, Roughly bounded by Dousman St., Oakland Ave., Shawano Ave., Antoinette and Francis Sts.

Waukesha County

Wales vicinity, *Statesan Historic District*, Boys School Rd.

CORRECTION: The following property was erroneously listed on the **Federal Register** pending list dated March 29, 1988:

Alaska

Nome Borough

Nome, *Fort Davis Guardhouse*, Front St.

[FR Doc. 88–7462 Filed 4–4–88; 8:45 am]

BILLING CODE 4310–70–M

Lodging of Consent Decree Pursuant to the Safe Drinking Water Act; Carlisle, IN

In accordance with Department policy, 28 CFR 50.7, notice is hereby given that on March 14, 1988, a proposed consent decree in *United States* v. *Town of Carlisle*, Civil Action No. TH87–23–C, was lodged with the United States District Court for the Southern District of Indiana. The proposed consent decree resolves a judicial enforcement action brought by the United States against the Town of Carlisle, Indiana for violations of the Safe Drinking Water Act.

The proposed consent decree requires the Town of Carlisle to achieve and maintain compliance with the Safe Drinking Water Act in accordance with the schedule set forth in Section IV of the consent decree. Within four business days of the date of entry of the decree, the town of Carlisle is required to hire a fully certified water operator. The consent decree also requires the Town of Carlisle to make specific improvements in its drinking water system.

The Department of Justice will receive for a period of thirty (30) days from the date of this publication comments relating to the proposed consent decree. Comments should be addressed to the Assistant Attorney General of the Land and Natural Resources Division, United States Department of Justice, Washington, DC 20530, and should refer to *United States* v. *Town of Carlisle*, D.J. Ref. 90–5–1–1–2776.

The proposed consent decree may be examined at the office of the United States Attorney, 46 East Ohio Street, Indianapolis, Indiana and at the office of Regional Counsel, Environmental Protection Agency, 230 South Dearborn Street, Chicago, Illinois 60604.

Copies of the consent decree may be examined at the Environmental Enforcement Section, Land and Natural Resources Division of the Department of Justice, Room 1517, Ninth and Pennsylvania Avenue NW., Washington, DC 20530. A copy of the proposed consent decree may be obtained in person or by mail from the Environmental Enforcement Section, Land and Natural Resources Division of the Department of Justice. In requesting a copy, please enclose a check in the amount of $2.00 (10 cents per page reproduction cost) payable to the Treasurer of the United States.

Roger J. Marzulla,

Acting Assistant Attorney General, Land and Natural Resources Division.

[FR Doc. 88–7358 Filed 4–4–88; 8:45 am]

BILLING CODE 4410–01–M

DEPARTMENT OF JUSTICE

Consent Decree Under Clean Water Act to Enjoin Discharge of Water Pollutants; Gloversville-Johnstown Joint Sewer Board et al.

In accordance with Departmental Policy, 28 CFR 50.7, 38 FR 19029, notice is hereby given that a consent decree in *United States* v. *Gloversville-Johnstown Joint Sewer Board, et al.*, Civil Action No. 84–W–259, was lodged with the United States District Court for the Northern District of New York on March 15, 1988. The consent decree establishes a compliance program for the Gloversville, New York wastewater treatment plant owned and operated by defendants, to bring the facility into compliance with the Clean Water Act, 33 U.S.C. 1251 *et seq.* and its State Pollutant Discharge Elimination System ("SPDES") permit, relating to the discharge of pollutants into navigable waters of the United States.

The Department of Justice will recieve for thirty (30) days from the date of publication of this notice, written comments relating to the consent decree. Comments should be addressed to the Assistant Attorney General, Land and Natural Resources Division, Department of Justice, Washington, DC 20530 and should refer to *United States* v. *Gloversville-Johnstown Joint Sewer Board, et al.*, D.J. No. 90–5–1–1–2079.

The consent decree may be examined at the office of the United States Attorney, Northern District of New York, Syracuse, New York 13261; at the Region II office of the Environmental Protection Agency, 26 Federal Plaza, New York, New York 10278; and the Environmental Enforcement Section, Land and Natural Resources Division of the Department of Justice, Room 1515, Ninth Street and Pennsylvania Avenue NW., Washington, DC 20530. A copy of the consent decree may be obtained in person or by mail from the Environmental Enforcement Section, Land and Natural Resources Division of the Department of Justice. In requesting a copy, please enclose a check in the amount of $5.50 (10 cents per page reproduction charge) payable to the Treasurer of the United States.

Roger J. Marzulla,

Acting Assistant Attorney General, Land and Natural Resources Division.

[FR Doc. 88–7357 Filed 4–4–88; 8:45 am]

BILLING CODE 4410–01–M

DEPARTMENT OF LABOR

Office of the Secretary

Agency Recordkeeping/Reporting Requirements Under Review by the Office of Management and Budget (OMB)

Background

The Department of Labor, in carrying out its responsibilities under the Paperwork Reduction Act (44 U.S.C. Chapter 35), considers comments on the reporting and recordkeeping requirements that will affect the public.

List of Recordkeeping/Reporting Requirements Under Review

As necessary, the Department of Labor will publish a list of the Agency recordkeeping/reporting requirements under review by the Office of Management and Budget (OMB) since the last list was published. The list will have all entries grouped into new collections, revisions, extensions, or reinstatements. The Departmental Clearance Officer will, upon request, be able to advise members of the public of the nature of the particular submission they are interested in. Each entry may contain the following information:

The Agency of the Department issuing this recordkeeping/reporting requirement.

The title of the recordkeeping/reporting requirement.

The OMB and Agency identification numbers, if applicable.

How often the recordkeeping/reporting requirement is needed.

Who will be required to or asked to report or keep records.

Whether small businesses or organizations are affected.

An estimate of the total number of hours needed to comply with the recordkeeping/reporting requirements.

The number of forms in the request for approval, if applicable.

An abstract describing the need for and uses of the information collection.

Comments and Questions

Copies of the recordkeeping/reporting requirements may be obtained by calling the Departmental Clearance Officer, Paul E. Larson, telephone (202) 523-6331. Comments and questions about the items on this list should be directed to Mr. Larson, Office of Information Management, U.S. Department of Labor, 200 Constitution Avenue NW., Room N-1301, Washington, DC 20210. Comments should also be sent to the Office of Information and Regulatory Affairs, Attn: OMB Desk Officer for (BLS/DM/ESA/ETA/OLMS/MSHA/OSHA/PWBA/VETS), Office of Management and Budget, Room 3208, Washington, DC 20503 (Telephone (202) 395-6880).

Any member of the public who wants to comment on a recordkeeping/reporting requirement which has been submitted to OMB should advise Mr. Larson of this intent at the earliest possible date.

New Collection

Bureau of Labor Statistics

U.S. Export Product Information
2894D
Monthly
Business and other for-profit; small businesses or organizations
12,000 responses; 2160 hours; 1 form

The International Price Program indexes, one of the nation's primary economic indicators, are used as: measures of price movements in international product prices; indicators of inflationary trends in the economy; sources of information used to determine U.S. monetary, fiscal, trade, and commercial policies. They are also used to deflate the Gross National Product and the monthly merchandise trade figures.

U.S. Import Product Information
3007D
Monthly
Business and other for-profit; small businesses or organizations
12,000 responses; 2160 hours; 1 form

The International Price Program indexes, one of the nation's primary economic indicators, are used as: measures of price movements in international product prices; indicators of inflationary trends in the economy; sources of information used to determine U.S. monetary, fiscal, trade, and commercial policies. They are also used to deflate the Gross National Product and the monthly merchandise trade figures.

New Collection

Occupational Safety and Health Administration

Safety Testing or Certification
Recordkeeping; On occasion
Businesses and other for-profit; Small businesses or organizations
50 responses 13,550; burden hours, 0 forms

OSHA needs to collect certain information from organizations so that OSHA can make an evaluation and determine if the organization meets the criteria to be recognized as a National Recognized Testing Laboratory (NRTL).

Extension

Employment and Training Administration

Preliminary Estimates of Average Employer Tax Rates
1205-0228; no forms
Annually
State or local governments
53 respondents; 14 hours; no forms

The average rate collected from States is used to compare average tax rates among the States by the National Office and State agencies and along with the current tax rate schedule are used to certify that a State is complying with the law.

Signed Washington, DC, this 29th day of March, 1988.

Paul E. Larson,

Departmental Clearance Officer.

[FR Doc. 88-7439 Filed 4-4-88; 8:45 am]

BILLING CODE 4510-24-M

Employment and Training Administration

Investigations Regarding Certifications of Eligibility To Apply for Worker Adjustment Assistance; Allegheny Drop Forge Co. et al.

Petitions have been filed with the Secretary of Labor under section 221(a) of the Trade Act of 1974 ("the Act") and are identified in the Appendix to this notice. Upon receipt of these petitions, the Director of the Office of Trade Adjustment Assistance, Employment and Training Administration, has instituted investigations pursuant to section 221(a) of the Act.

The purpose of each of the investigations is to determine whether the workers are eligible to apply for adjustment assistance under Title II, Chapter 2, of the Act. The investigations will further relate, as appropriate, to the determination of the data on which total or partial separations began or threatened to begin and the subdivision of the firm involved.

The petitioners or any other persons showing a substantial interest in the subject matter of the investigations may request a public hearing, provided such request is filed in writing with the Director, Office of Trade Adjustment Assistance, at the address shown below, not later than April 15, 1988.

Interested persons are invited to submit written comments regarding the subject matter of the investigations to the Director, Office of Trade Adjustment Assistance, at the address shown below, not later than April 15, 1988.

The petitions filed in this case are available for inspection at the Office of the Director, Office of Trade Adjustment Assistance, Employment and Training Administration, U.S. Department of Labor, 601 D Street NW., Washington, DC 20213.

Signed at Washington, DC, this 28th day of March 1988.

Marvin M. Fooks,

Director, Office of Trade Adjustment Assistance.

BEST COPY AVAILABLE

APPENDIX

Petitioner (Union/Workers/Firm)	Location	Date received	Date of petition	Petition No.	Articles produced
Allegheny Drop Forge, Co. (USWA)	Pittsburgh, PA	3/28/88	3/21/88	20,545	Steel Forgings.
Beckley Coal Mining, Co. (Workers)	Glen Daniel, WV	3/28/88	3/21/88	20,546	Metallurgical Coal.
Cambridge Shirt Mfg., Co. (ACTWU)	Hazelton, PA	3/28/88	3/16/88	20,547	Ladie's and Men's Blouses and Shirts.
Chrysler Corp. (UAW)	Milwaukee, WI	3/28/88	3/7/88	20,548	Automotive Stampings.
Clover Knitting Mills, Inc. (Company)	Philadelphia, PA	3/28/88	3/11/88	20,549	Knitted Outerwear.
Dalton Industries, Inc., (Hqtrs) (Workers)	Willoughby, OH	3/28/88	3/11/88	20,550	Headquarters Office.
Dalton Industries, Inc., (Retail Store) (Workers)	do	3/28/88	3/11/88	20,551	Women's Sportswear.
Dalton Industries, Inc., (Workers)	Rochester, NY	3/28/88	3/11/88	20,552	Do.
Do	Pittsburgh, PA	3/28/88	3/11/88	20,553	Do.
Do	Pigeon Forge, TN	3/28/88	3/11/88	20,554	Do.
Do	Mystic, CT	3/28/88	3/11/88	20,555	Do.
Do	Lorain—Amherst, OH	3/28/88	3/11/88	20,556	Do.
Do	Hilton Head, SC	3/28/88	3/11/88	20,557	Do.
Do	Erie, PA	3/28/88	3/11/88	20,558	Do.
Do	Columbus, OH	3/28/88	3/11/88	20,559	Do.
Do	Canton, OH	3/28/88	3/11/88	20,560	Do.
Do	Buffalo, NY	3/28/88	3/11/88	20,561	Do.
Do	Bedford, OH	3/28/88	3/11/88	20,562	Do.
Do	Asheville, NC	3/28/88	3/11/88	20,563	Do.
Florsheim Shoe Co. (ACTWU)	Chicago, IL	3/28/88	3/16/88	20,564	Shoes.
J.I. Case Company (UAW)	Burlington, IA	3/28/88	3/11/88	20,565	Loader/Backhoe Tractors.
J.S. Designers Assoc. Inc. (Company)	New York, NY	3/28/88	3/11/88	20,566	Samples of Sportswear.
K.P. Explorations, Incorp. (Company)	Houston, TX	3/28/88	3/19/88	20,567	Crude Oil.
LTV Steel Company (USWA)	Chicago, IL	3/28/88	2/29/88	20,568	Steel Bars, Wire and Coke.
Levolor Lorentzen, Inc.	Hoboken, NJ	3/28/88	3/14/88	20,569	Mini Blinds, Vertical Blinds and Pleated Shades.
Mesa Limited Operating Partnership (Workers)	Amarillo, TX	3/28/88	3/2/88	20,570	Crude Oil and Natural Gas.
National Broach & Machine	Mt. Clemens, MI	3/28/88	3/18/88	20,571	Gear Tools and Machines.
Shape Systems (Workers)	SO. Portland, ME	3/28/88	3/16/88	20,572	Automatic Machines.
Texaco Inc. Comptrollers Dept. (Workers)	New Orleans, LA	3/28/88	3/7/88	20,573	Accounting Services.
W.D.H. Company (Company)	Farmingdale, NJ	3/28/88	3/17/88	20,574	Inked Typewriter Ribbons.

[FR Doc. 88-7440 Filed 4-4-88; 8:45 am]

BILLING CODE 4510-30-M

[TA-W-20,402]

Negative Determination Regarding Application for Reconsideration; Clarksburg Electro-Plating, Inc., Clarksburg, WV

By an application postmarked March 18, 1988, Local #566 of the American Flint Glass Workers' Union of North America requested administrative reconsideration of the Department's negative determination on the subject petition for trade adjustment assistance for former workers of Clarksburg Electro-Plating, Inc., Clarksburg, West Virginia. The denial notice was signed on March 3, 1988 and published in the **Federal Register** on March 17, 1988 (53 FR 8819).

Pursuant to 29 CFR 90.18(c) reconsideration may be granted under the following circumstances:

(1) If it appears on the basis of facts not previously considered that the determination complained of was erroneous;

(2) If it appears that the determination complained of was based on a mistake in the determination of facts not previously considered; or

(3) If, in the opinion of the Certifying Officer, a misinterpretation of facts or of the law justified reconsideration of the decision.

The union claims that its workers should qualify for adjustment assistance benefits since Clarksburg Electro-Plating exclusively supplied Anchor Hocking whose workers were certified eligible to apply for adjustment assistance. It also claimed that worker separations beginning several years ago occurred at the subject firm because of foreign imports in the glass industry.

Findings in the investigative case file show that Clarksburg Electro-Plating did not produce an article within the meaning of section 222(3) of the Trade Act. The plant performed plating services for its customers. The Department has consistently determined that the performance of services does not constitute the production of an article and this determination has been upheld in the U.S. Court of Appeals.

Also, the issue of an independent firm purchasing plating services from the subject firm and whose workers are certified for adjustment assistance was addressed earlier in the Department's notice of negative determination. Workers of a firm providing services may be certified only if their separations were caused importantly by a reduced demand for their services from a firm related by ownership or control and whose workers are independently certified for adjustment assistance. Findings in the case file show that these conditions were not met. There is no corporate affiliation between Clarksburg Electro-Plating, Inc., and Anchor Hocking. Further, Clarksburg Electro-Plating exclusively controls all its payroll transactions and personnel actions. The closure of Clarksburg Electro-Plating was due to the loss of their major customer which produced pressed and blown glassware.

Conclusion

After review of the application and investigative findings, I conclude that there has been no error or misinterpretation of the law or of the facts which would justify reconsideration of the Department of Labor's prior decision. Accordingly, the application is denied. Signed at Washington, DC, this 28th day of March 1988.

Barbara Ann Farmer,

Director, Office of Program Management, UIS.

[FR Doc. 88-7441 Filed 4-4-88; 8:45 am]

BILLING CODE 4510-30-M

[TA-W-20,266]

Elliott Co.; Amended Certification Regarding Eligibility To Apply for Worker Adjustment Assistance

In the matter of Elliott Company; TA-W-20,266—Jeannette, Pennsylvania, TA-W-

20,266A—Mountainside, New Jersey, TA-W-20,266B—Chicago, Illinois, TA-W-20,266C—San Francisco, California, TA-W-20,266D—Rancho Dominguez, California, TA-W-20,266E—Los Angeles, California, TA-W-20,266F—Benicia, California, TA-W-20,266G—Harahan, Louisiana, TA-W-20,266H—Houston, Texas, TA-W-20,266I—Donora, Pennsylvania, and TA-W-20,266J—Jacksonville, Florida.

In accordance with section 223 of the Trade Act of 1974, the Department of Labor issued a Certification of Eligibility to Apply for Worker Adjustment Assistance on January 19, 1988 applicable to all workers of the Elliott Company, Jeannette, Pennsylvania. The Certification was published in the **Federal Register** on February 3, 1988 (53 FR 3087).

Based on new information furnished to the Department by the company, the certification is amended to include sales and service locations of the Elliott Company in Mountainside, New Jersey; Chicago, Illinois; San Francisco, California; Rancho Dominguez, California; Los Angeles, California; Benicia, California; Harahan, Louisiana; Houston, Texas, Donora, Pennsylvania and Jacksonville, Florida. The subject sales and service locations are supplied by the Jeannette plant. All the subject sales and service locations experienced substantial worker separations in 1987.

The intent of the Certification is to cover all workers at the Elliott Company who were affected by increased imports of articles like or directly competitive with turbines produced at the Jeannette plant. The amended notice applicable to TA-W-20,266 is hereby issued as follows:

All workers of the Elliott Company, Jeannette, Pennsylvania and all workers of the Elliott Company at the following sales and service locations in Mountainside, New Jersey; Chicago, Illinois; San Francisco, California; Rancho Dominguez, California; Los Angeles, California; Benicia, California; Harahan, Louisiana; Houston, Texas; Donora, Pennsylvania and Jacksonville, Florida who became totally or partially separated from employment on or after November 6, 1986 are eligible to apply for adjustment assistance under Section 223 of the Trade Act of 1974.

Signed at Washington, DC, this 25th day of March 1988.

Robert O. Deslongchamps,

Director, Office of Legislation and Actuarial Services, UIS.

[FR Doc. 88-7442 Filed 4-4-88; 8:45 am]

BILLING CODE 4510-30-M

New Castle Piano Corp. et al. Determinations Regarding Eligibility To Apply for Worker Adjustment Assistance

In accordance with section 223 of the Trade Act of 1974 (19 USC 2273) the Department of Labor herein presents summaries of determinations regarding eligibility to apply for adjustment assistance issued during the period March 21, 1988–March 25, 1988.

In order for an affirmative determination to be made and a certification of eligibility to apply for adjustment assistance to be issued, each of the group eligibility requirements of section 222 of the Act must be met.

(1) That a significant number or proportion of the workers in the workers' firm, or an appropriate subdivision thereof, have become totally or partially separated,

(2) That sales or production, or both, of the firm or subdivision have decreased absolutely, and

(3) That increases of imports of articles like or directly competitive with articles produced by the firm or appropriate subdivision have contributed importantly to the separations, or threat thereof, and to the absolute decline in sales or production.

Negative Determinations

In each of the following cases the investigation revealed that criterion (3) has not been met. A survey of customers indicated that increased imports did not contribute importantly to worker separations at the firm.

TA-W-20,454; New Castle Piano, String Division, Mooreland, IN

TA-W-20,412; Mitchell Corporation, Ludington Div., Ludington, MI

TA-W-20,416; SKF Industries, Inc., Hornell Division, Hornell, NY

TA-W-20,467; Portage Mills, Portage, WI

In the following cases the investigation revealed that criterion (3) has not been met for the reasons specified.

TA-W-20,415; Rhone-Poulenc AG Co., Mount Pleasant, TN

U.S. imports of herbicides decreased absolutely and relative to domestic shipment in 1986 compared to 1985 and absolutely in the first six months of 1987 compared to the same period in 1986.

TA-W-20,462; Gulf Interstate Engineering Co., Houston, TX

The workers' firm does not produce an article as required for certification under section 222 of the Trade Act of 1974.

TA-W-20,440; Transco Exploration Co., Denver, CO

Increased imports did not contribute importantly to workers separations at the firm.

TA-W-20,439; Terre Resources, Inc., Midland Region, Midland, TX

Increased imports did not contribute importantly to workers separations at the firm.

TA-W-20,461; Goldston Corp., Corpus Christi, TX

The workers' firm does not produce an article as required for certification under section 222 of the Trade of 1974.

TA-W-20,425; VW Credit, Inc., Troy, MI

The workers' firm does not produce an article as required for certification under section 222 of the Trade of 1974.

TA-W-20,424; Voreloo, Warren, MI

The workers' firm does not produce an article as required for certification under section 222 of the Trade Act of 1974.

TA-W-20,399; Armco, Inc., Kansas City Works, Kansas City, MO

U.S. imports of carbon steel bar, bar size light shapes, and wire rod wire rope and cable and wire strand declined absolutely in 1987 compared to 1986.

TA-W-20,399A, Armco, Inc., Union Wire Rope Plant, Kansas City, MO

U.S. imports of carbon steel bar, bar size light shapes, and wire rod wire rope and cable and wire strand declined absolutely in 1987 compared to 1986.

TA-W-20,414; Peabody Coal Co., Charleston, WV

U.S. imports of steam coal and metallurgical coal is negligible.

TA-W-20,414A; Peabody Coal Co., Rock Lick Plant, Wharton, WV

U.S. imports of steam coal and metallurgical coal is negligible.

TA-W-20,414B; Peabody Coal Co., Wharton Preparatory Plant, Wharton, WV

U.S. imports of steam coal and metallurgical coal is negligible.

TA-W-20,414C; Peabody Coal Co., Light Foot Plant, Wharton, WV

U.S. imports of steam coal and metallurgical coal is negligible.

TA-W-20,414D Peabody Coal Co., Big Mountain Plant, Prenter, WV

U.S. imports of steam coal and metallugical coal is neglibible.

TA-W-20,419; Volkswagen of America, Inc., Edward Street Building, Madison Heights, MI

The investigation revealed that criterion (1) has not been met. Employment did not decline during the

relevant period as required for certification.

TA-W-20,421; Volkswagen of America, Inc., Hangar Pontiac, Pontiac, MI

The investigation revealed that criterion (1) has not been met. Employment did not decline during the relevant period as required for certification.

TA-W-20,422; Volkswagen of America, Inc., Howard Street, Madison Heights, MI

The investigation revealed that criterion (1) has not been met. Employment did not decrease during the relevant period as required for certification.

TA-W-20,423; Volkswagen of America, Inc., Parkview Building, Warren, MI

The investigation revealed that criterion (1) has not been met. Employment did not decrease during the relevant period as required for certification.

Affirmative Determinations

TA-W-20,404; Control Data Corp., Terminal Road Repair/ Refurbishment, Roseville, MN

A certification was issued covering all workers of the firm separated on or after December 18, 1986.

TA-W-20,411; Lake Shore, Inc., Kingsford, MI

A certification was issued covering all workers of the firm separated on or after January 5, 1987.

TA-W-20,407; Four Star Corp., Mesick, MI

A certification was issued covering all workers of the firm separated on or after December 1, 1987.

TA-W-20,401; Chrysler Corp., East Syracuse, NY

A certification was issued covering all workers of the firm separated on or after January 13, 1987.

TA-W-20,408; General Motors Corp., Inland Div., Livonia, MI

A certification was issued covering all workers of the firm separated on or after January 4, 1987.

TA-W-20,429; Capitol Industries, Capitol Records, Capitol Magnetic Products, Winchester, VA

A certification was issued covering all workers of the firm separated on or after January 22, 1987.

TA-W-20,403; Computerized Machine Tools, Farmington Hills, MI

A certification was issued covering all workers engaged in employment related to the production of control unit sub-assemblies for CNC milling machines separated on or after January 5, 1987.

TA-W-20,406; Filmation Studios Canoga Park, CA

A certification was issued covering all workers of the firm separated on or after January 11, 1987.

TA-W-20,463; Herman I. Zacharian & Son, New York, NY

A certification was issued covering all workers of the firm separated on or after January 29, 1987 and before October 31, 1987.

TA-W-20,437; Pownal Tanning Co., Inc., North Pownal, VT

A certification was issued covering all workers of the firm separated on or after January 18, 1987.

TA-W-20,430; Johnson Controls, Inc., Georgetown, KY

A certification was issued covering all workers engaged in employment related to the production of pneumatic actuators instruments and brass valve assemblies separated on or after October 25, 1987.

TA-W-20,427; Amcodyne, Inc., Longmont, CO

A certification was issued covering all workers of the firm separated on or after January 22, 1987.

I hereby certify that the aforementioned determinations were issued during the period March 21, 1988—March 25, 1988. Copies of these determinations are available for inspection in Room 6434, U.S. Department of Labor, 601 D Street NW., Washington, DC 20213 during normal business hours or will be mailed to persons who write to the above address.

Dated: March 29, 1988.

Marvin M. Fooks,

Director, Office of Trade Adjustment Assistance.

[FR Doc. 88-7443 Filed 4-4-88; 8:45 am]

BILLING CODE 4510-30-M

NATIONAL ARCHIVES AND RECORDS ADMINISTRATION

Records Schedules; Availability and Request for Comments

AGENCY: National Archives and Records Administration, Office of Records Administration.

ACTION: Notice of availability of proposed records schedules; request for comments.

SUMMARY: The National Archives and Records Administration (NARA) publishes notice at least once monthly of certain Federal agency requests for records disposition authority (records schedules). Records schedules identify records of sufficient value to warrant preservation in the National Archives of the United States. Schedules also authorize agencies after a specified period to dispose of records lacking administrative, legal, research, or other value. Notice is published for records schedules that: (1) Propose the destruction of records not previously authorized for disposal, or (2) reduce the retention period for records already authorized for disposal. NARA invites public comments on such schedules, as required by 44 U.S.C. 3303a(a).

DATE: Requests for copies must be received in writing on or before May 20, 1988. Once the appraisal of the records is completed, NARA will send a copy of the schedule. The requester will be given 30 days to submit comments.

ADDRESS: Address requests for single copies of schedules identified in this notice to the Records Appraisal and Disposition Division (NIR), National Archives and Records Administration, Washington, DC 20408. Requesters must cite the control number assigned to each schedule when requesting a copy. The control number appears in parentheses immediately after the name of the requesting agency.

SUPPLEMENTARY INFORMATION: Each year U.S. Government agencies create billions of records on paper, film, magnetic tape, and other media. In order to control this accumulation, agency records managers prepare records schedules specifying when the agency no longer needs the records and what happens to the records after this period. Some schedules are comprehensive and cover all the records of an agency or one of its major subdivisions. These comprehensive schedules provide for the eventual transfer to the National Archives of historically valuable records and authorize the disposal of all other records. Most schedules, however, cover records of only one office or program or a few series of records, and many are updates of previously approved schedules. Such schedules also may include records that are designated for permanent retention.

Destruction of records requires the approval of the Archivist of the United States. This approval is granted after a thorough study of the records that takes into account their administrative use by the agency of origin, the rights and interests of the Government and of private persons directly affected by the Government's activities, and historical or other value.

This public notice identifies the Federal agencies and their subdivisions requesting disposition authority, includes the control number assigned to each schedule, and briefly describes the

records proposed for disposal. The records schedule contains additional information about the records and their disposition. Further information about the disposition process will be furnished to each requester.

Schedules Pending:

1. Department of the Air Force (N1-AFU-88-22). Records relating to the assignment of individual personnel.
2. Department of the Air Force (N1-AFU-88-23). Reports relating to commissary operations.
3. Department of the Air Force (N1-AFU-88-24). Records relating to the control of termites and other pests.
4. Department of the Air Force (N1-AFU-88-25). Records relating to the attendance of reserve personnel at training activities.
5. Department of the Army, Corps of Engineers (N1-77-86-2). Records of the Corps of Engineers, Miama District, 1940-48, relating to routine administrative and/or housekeeping matters (schedule provides for permanent retention of records relating to significant policies and projects).
6. Department of Justice, Federal Bureau of Investigation, Records Management Division (N1-65-88-8). Documentation containing personal information of insufficient historical or other value to warrant archival retention. Expunction of the information has been mandated by court order.
7. Department of Labor, Veterans' Employment and Training Service (N1-174-88-1). Administrative records and case files.

Dated: March 30, 1988.

Don W. Wilson,

Archivist of the United States.

[FR Doc. 88-7382 Filed 4-4-88; 8:45 am]

BILLING CODE 7515-01-M

NATIONAL SCIENCE FOUNDATION

Biological, Behavioral and Social Sciences Committees, et al.; Renewal

The following NSF Advisory Committees and Advisory Panels are being renewed until March 31, 1990. Due to a reorganization, a number of advisory panels have been renamed and two advisory panels were terminated and replaced by an Advisory Panel for Genetics as noted below.

Biological, Behavioral, and Social Sciences Committees

Division of Behavorial, and Neural Sciences (BNS)

1. Advisory Panel for Animal Learning and Behavior (formerly titled Advisory Panel for Psychobiology)
2. Advisory Panel for Archaeometry
3. Advisory Panel for Cellular Neuroscience (formerly titled Advisory Panel for Molecular and Cellular Neurobiology)
4. Advisory Panel for Cultural Antropology (formerly titled Advisory Panel for Social and Cultural Antropology)
5. Advisory Panel for Developmental Neuroscience
6. Advisory Panel for Human Cognition and Perception (formerly titled Advisory Panel for Memory and Cognitive Processes)
7. Advisory Panel for Linguistics
8. Advisory Panel for Neural Mechanisms of Behavior (formerly titled Advisory Panel for Integrative Neural Systems)
9. Advisory Panel for Sensory Systems (formerly titled Advisory Panel for Sensory Physiology and Perception)
10. Advisory Panel for Social Psychology (formerly titled Advisory Panel for Social and Developmental Psychology)
11. Advisory Panel for Systematic Antropological Collections (formerly titled Advisory Panel for Anthropological Systematic Collections

Division of Biotic Systems and Resources (BSR)

1. Advisory Panel for Ecology
2. Advisory Panel for Ecosystem Studies
3. Advisory Panel for Population Biology and Physiological Ecology
4. Advisory Panel for Systematic Biology

Division of Cellular Biosciences (DCB)

1. Advisory Panel for Cell Biology
2. Advisory Panel for Cellular Physiology
3. Advisory Panel for Developmental Biology
4. Advisory Panel for Metabolic Biology
5. Advisory Panel for Regulatory Biology

Division of Molecular Biosciences (DMB)

1. Advisory Panel for Biochemistry
2. Advisory Panel for Biophysics

Division of Social and Economic Science (SES)

1. Advisory Panel for Decision, Risk, and Management Science
2. Advisory Panel for Economics
3. Advisory Panel for Geography and Regional Science
4. Advisory Panel for Law and Social Science
5. Advisory Panel for Measurement Methods and Data Improvement
6. Advisory Panel for Political Science
7. Advisory Panel for Sociology

Division of Instrumentation and Resources (DIR)

1. Advisory Panel for Ethics and Values Studies
2. Advisory Panel for Instrumentation and Instrument Development (formerly titled Advisory Panel for Biological Instrumentation)
3. Advisory Panel for History and Philosophy of Science

BBS Committees—Terminating

1. Advisory Panel for Eukaryotic Genetics
2. Advisory Panel for Prokaryotic Genetics

Computer and Information Science and Engineering Committees

1. Advisory Committee for Computer and Computation Research

Engineering Committees

1. Advisory Committee for Engineering

Geosciences Committees

1. Advisory Committee for Atmospheric Sciences
2. Advisory Committee for Earth Sciences
3. Advisory Committee for Ocean Sciences
4. Advisory Committee for Polar Programs
5. Earth Sciences Proposal Review Panel
6. Advisory Panel for Ocean Sciences Research

Mathematical and Physical Sciences Committees

1. Advisory Committee for Astronomical Sciences
2. Advisory Committee for Chemistry
3. Advisory Committee for Materials Research
4. Advisory Committee for Mathematical Sciences
5. Advisory Committee for Physics

Scientific, Technological, and International Affairs Committees

1. Advisory Committee for Industrial Science and Technological Innovation
2. Advisory Committee for International Programs.

The cognizant Assistant Directors of the above committees have determined that renewal of these committees are necessary and in the public interest.

M. Rebecca Winkler,

Committee Management Officer.

[FR Doc. 88-7411 Filed 4-4-88; 8:45 am]

BILLING CODE 7555-01-M

NUCLEAR REGULATORY COMMISSION

[Docket No. 50-155]

Consumers Power Co.; Consideration of Issuance of Amendment to Facility Operating License and Opportunity for Hearing

The United States Nuclear Regulatory Commission (the Commission) is considering issuance of an amendment to Facility Operating License No. DPR-6 issued to the Consumers Power Company (the licensee), for operation of the Big Rock Point Plant located in Charlevoix County, Michigan.

In accordance with the licensee's application for amendment dated November 9, 1987, the proposed amendment would revise the provisions of the Big Rock Point Plant Technical Specifications (TSs) relating to the installation of new out-of-core power range instrumentation. The licensee plans on replacing the existing power range instrumentation with a newer design due to limited availability of replacement parts and high expenditure of maintenance hours to keep the existing equipment in operation. Elimination of the intermediate range instrumentation is proposed due to the greater range of the new power range instrumentation.

Prior to issuance of the proposed license amendment, the Commission will have made findings required by the Atomic Energy Act of 1954, as amended (the Act) and the Commission's regulations.

By May 5, 1988, the licensee may file a request for a hearing with respect to issuance of the amendment to the subject facility operating license and any person whose interest may be affected by this proceeding and who wishes to participate as a party in the proceeding must file a written request for hearing and a petition for leave to intervene. Requests for a hearing and petitions for leave to intervene shall be filed in accordance with the Commission's "Rules of Practice for Domestic Licensing Proceeding" in 10 CFR Part 2. If a request for a hearing or petition for leave to intervene is filed by the above date, the Commission or an Atomic Safety and Licensing Board, designated by the Commission or by the Chairman of the Atomic Safety and Licensing Board Panel, will rule on the request and/or petition, and the Secretary or the designated Atomic Safety and Licensing Board will issue a notice of hearing or an appropriate order.

As required by 10 CFR 2.714, a petition for leave to intervene shall set forth with particularity the interest of the petitioner in the proceeding and how that interest may be affected by the results of the proceeding. The petition should specifically explain the reasons why intervention should be permitted with particular reference to the following factors: (1) The nature of the petitioner's right under the Act to be made a party to the proceeding; (2) the nature and extent of the petitioner's property, financial, or other interest in the proceeding; and (3) the possible effect of any order which may be entered in the proceeding on the petitioner's interest. The petition should also identify the specific aspect(s) of the subject matter of the proceeding as to which petitioner wishes to intervene. Any person who has filed a petition for leave to intervene or who has been admitted as a party may amend the petition without requesting leave of the Board up to fifteen (15) days prior to the first pre-hearing conference scheduled in the proceeding, but such an amended petitition must satisfy the specificity requirements described above.

Not later than fifteen (15) days prior to the first prehearing conference scheduled in the proceeding, a petitioner shall file a supplement to the petition to intervene, which must include a list of the contentions that are sought to be litigated in the matter and the bases for each contention set forth with reasonable specificity. Contentions shall be limited to matters within the scope of the amendment under consideration. A petitioner who fails to file such a supplement which satisfies these requirements with respect to at least one contention will not be permitted to participate as a party.

Those permitted to intervene become parties to the proceeding, subject to any limitations in the order granting leave to intervene, and have the opportunity to participate fully in the conduct of the hearing, including the opportunity to present evidence and cross-examine witnesses.

A request for a hearing or a petition for leave to intervene must be filed with the Secretary of the Commission, U.S. Nuclear Regulatory Commission, Washington, DC. 20555, Attention: Docketing and Service Branch, or may be delivered to the Commission's Public Document Room, 1717 H Street, NW., Washington, DC, by the above date. Where petitions are filed during the last ten (10) days of the notice period, it is requested that the petitioner promptly so inform the Commission by a toll-free telephone call to Western Union at 1-800-325-6000 (in Missouri 1-800-342-6700). The Western Union operator should be given Datagram Identification Number 3737 and the following message addressed to Martin J. Virgilio: (petitioner's name and telephone number); (date petition was mailed); (plant name); and (publication date and page number of this Federal Register notice). A copy of the petition should also be sent to the Office of the General Counsel, U.S. Nuclear Regulatory Commission, Washington, DC 20555, and to Judd L. Bacon, Esq., Consumers Power Company, 212 West Michigan Avenue, Jackson, Michigan 49201, attorney for the licensee.

Nontimely filing of petitions for leave to intervene, amended petitions, supplemental petitions and/or requests for hearing will not be entertained absent a determination by the Commission, the presiding officer or the presiding Atomic Safety and Licensing Board that the petition and/or request should be granted based upon a balancing of the factors specified in 10 CFR 2.714(a)(1)(i)-(v) and 2.714(d).

If a request for hearing is received, the Commission's staff may issue the amendment after it completes its technical review and prior to the completion of any required hearing if it publishes a further notice for public comment of its proposed finding of no significant hazards consideration in accordance with 10 CFR 50.91 and 50.92.

For further details with respect to this action, see the application for amendment dated November 9, 1987, which is available for public inspection at the Commission's Public Document Room, 1717 H Street, NW., Washington, DC. 20555, and at the North Central Michigan College, 1515 Howard Street, Petoskey, Michigan 49770.

Dated at Rockville, Maryland, this 25th day of March 1988.

For the Nuclear Regulatory Commission.

Thomas V. Wambach,

Acting Director, Project Directorate III-1, Division of Reactor Projects III, IV, V and Special Projects.

[FR Doc. 88-7401 Filed 4-4-88; 8:45 am]

BILLING CODE 7590-01-M

[Docket No. 50-409]

Dairyland Power Cooperative; Consideration of Issuance of Amendment to Facility License and Opportunity for Hearing

The United States Nuclear Regulatory Commission (the Commission) is considering issuance of an amendment to Facility License No. DPR-45, issued to Dairyland Power Cooperative (the licensee), for the physical security of the

LaCrosse Boiling Water Reactor (LACBWR) located in Vernon County, Wisconsin.

The licensee submitted proposed amendments to the Physical Security Plan, Guard Force Training and Qualification Plan and the Safeguards Contingency Plan for LACBWR. The proposed amendments to these plans reflect a reduction in scope to cover only the storage of spent fuel. The basis for the changes is premised on LACBWR being permanently shutdown on April 30, 1987, and the licensee's letter dated May 22, 1987 (LAC-12234) which requested that Provisional License No. DPR-45 for LACBWR be amended to a possession-only status. On June 12, 1987, all fuel had been removed from the reactor and stored in the Fuel Element Storage Well. The licensee's request for a possession-only status was approved by the NRC as reflected in License Amendment No. 56 which was issued on August 4, 1987.

The proposed amendments only eliminate areas, equipment, systems and procedures that have been deemed unnecessary for a nuclear power facility which has been permanently shutdown and require the licensee to implement certain security measures commensurate with the risks associated with storage of spent fuel.

Prior to issuance of the proposed license amendment, the Commission will have made findings required by the Atomic Energy Act of 1954, as amended (the Act) and the Commission's regulations.

By May 5, 1988, the licensee may file a request for a hearing with respect to issuance of the amendment to the subject facility license and any person whose interest may be affected by this proceeding and who wishes to participate as a party in the proceeding must file a written request for hearing and a petition for leave to intervene. Requests for a hearing and petitions for leave to intervene shall be filed in accordance with the Commission's "Rules of Practice for Domestic Licensing Proceedings" in 10 CFR Part 2. If a request for a hearing or petition for leave to intervene is filed by the above date, the Commission or an Atomic Safety and Licensing Board, designated by the Commission or by the Chairman of the Atomic Safety and Licensing Board Panel, will rule on the request and/or petition, and the Secretary or the designated Atomic Safety and Licensing Board will issue a notice of hearing or an appropriate order.

As required by 10 CFR 2.714, a petition for leave to intervene shall set forth with particularity the interest of the petitioner in the proceeding, and how that interest may be affected by the results of the proceeding. The petition should specifically explain the reasons why intervention should be permitted with particular reference to the following factors: (1) The nature of the petitioner's right under the Act to be made a party to the proceeding; (2) the nature and extent of the petitioner's property, financial, or other interest in the proceeding; and (3) the possible effect of any order which may be entered in the proceeding on the petitioner's interest. The petition should also identify the specific aspect(s) of the subject matter of the proceeding as to which petitioner wishes to intervene. Any person who has filed a petition for leave to intervene or who has been admitted as a party may amend the petition without requesting leave of the Board up to fifteen (15) days prior to the first prehearing conference scheduled in the proceeding, but such an amended petition must satisfy the specificity requirements described above.

Not later the fifteen (15) days prior to the first prehearing conference scheduled in the proceeding, a petitioner shall file a supplement to the petition to intervene which must include a list of the contentions which are sought to be litigated in the matter, and the bases for each contention set forth with reasonable specificity. Contentions shall be limited to matters within the scope of the amendment under consideration. A petitioner who fails to file such a supplement which satisfies these requirements with respect to at least one contention will not be permitted to participate as a party.

Those permitted to intervene become parties to the proceeding, subject to any limitations in the order granting leave to intervene, and have the opportunity to participate fully in the conduct of the hearing, including the opportunity to present evidence and cross-examine witnesses.

A request for a hearing or a petiton for leave to intervene shall be filed with the Secretary of the Commission, United States Nuclear Regulatory Commission, Washington, DC 20555, Attention: Docketing and Service Branch, or may be delivered to the Commission's Public Document Room 1717 H Street NW., Washington, DC, by the above date. Where petitions are filed during the last ten (10) days of the notice period, it is requested that the petitioner or representative for the petitioner promptly so inform the Commission by a toll-free telephone call to Western Union at 1-800-325-6000 [in Missouri 1-800-342-6700]. The Western Union operator should be given Datagram Identification Number 3737 and the following message addressed to Lester S. Rubenstein: Petitioner's name and telephone number; date Petition was mailed; plant name; and publication date and page number of this **Federal Register** notice. A copy of the petition should also be sent to the Office of the General Counsel, U.S. Nuclear Regulatory Commission, Washington, DC 20555, and to Kevin P. Gallen, Esq., Newman and Holtzinger, P.C. 1615 L Street NW., Washington, DC 20036, attorney for the licensee.

Nontimely filings of petitions for leave to intervene, amended petitions, supplemental petitions and/or requests for hearing will not be entertained absent a determination by the Commission, the presiding officer or the presiding Atomic Safety and Licensing Board, that the petition and/or request should be granted based upon a balancing of the factors specified in 10 CFR 2.714(a)(1)(i)-(v) and 2.714(d).

If a request for hearing is received, the Commission's staff may issue the amendment after it completes its technical review and prior to the completion of any required hearing if it publishes a further notice for public comment of its proposed finding of no significant hazards consideration in accordance with 10 CFR 50.91 and 50.92.

For further details with respect to this action, see the application for amendment dated September 24, 1987 as revised March 28, 1988, which is available for public inspection at the Commission's Public Document Room, 1717 H Street NW., Washington, DC, and at the LaCrosse Public Library, 800 Main Street, LaCrosse, Wisconsin 54601.

Dated at Rockville, Maryland, this 29th day of March 1988.

For The Nuclear Regulatory Commission.

Peter B. Erickson,

Project Manager, Standardization and Non-Power Reactor Project Directorate Division of Reactor Projects III, IV, V and Special Projects, Office of Nuclear Reactor Regulation.

[FR Doc. 88-7402 Filed 4-4-88; 8:45 am]

BILLING CODE 7590-01-M

[Docket No. 50-341]

Detroit Edison Co. and Wolverine Power Supply Cooperative, Inc.; Consideration of Issuance of Amendment to Facility Operating License and Opportunity for Hearing

The United States Nuclear Regulatory Commission (the Commission) is considering issuance of an amendment to Facility Operating License No. NPF-43, issued to the Detroit Edison

Company and Wolverine Power Supply Cooperative, Inc. (the licensees), for operation of Fermi-2 located in Monroe County, Michigan.

In accordance with the licensees' application for amendment dated January 27, 1988, the amendnment would revise Technical Specifications 3/4.2.3 and 3/4.7.9 and Bases 3/4.2.3 and 3/4.7.9 to clarify the bases of operation with a Moisture Separator Reheater (MSR) out-of-service. Specifically, the amendment would (1) modify Technical Specification 3/4.7.9 by specifying operating limitations of the MSR; (2) demonstrate conservatism to the existing transient analysis and clarify that the limits in Technical Specification 3/4.2.3, Figure 3.2.3-1 (Curve B), bound the operating scenario for the MSR out-of-service; and (3) provide an additional limitation (Curve C) to Technical Specification 3/4.2.3, Figure 3.2.3-1, for the operating scenario of an inoperable main turbine bypass and MSR out-of-service.

Prior to issuance of the proposed license amendment, the Commission will have made findings required by the Atomic Energy Act of 1954, as amended (the Act) and the Commission's regulations.

By May 5, 1988, the licensees may file a request for a hearing with respect to issuance of the amendment to the subject facility operating license and any person whose interest may be affected by this proceeding and who wishes to participate as a party in the proceeding must file a written request for hearing and a petition for leave to intervene. Requests for a hearing and petitions for leave to intervene shall be filed in accordance with the Commission's "Rules of Practice for Domestic Licensing Proceedings" in 10 CFR Part 2. If a request for a hearing or petition for leave to intervene is filed by the above date, the Commission or an Atomic Safety and Licensing Board, designated by the Commission or by the Chairman of the Atomic Safety and Licensing Board Panel, will rule on the request and/or petition, and the Secretary or the designated Atomic Safety and Licensing Board will issue a notice of hearing or an appropriate order.

As required by 10 CFR 2.714, a petition for leave to intervene shall set forth with particularity the interest of the petitioner in the proceeding, and how that interest may be affected by the results of the proceeding. The petition should specifically explain the reasons why intervention should be permitted with particular reference to the following factors: (1) The nature of the petitioner's right under the Act to be made a party to the proceeding; (2) the nature and extent of the petitioner's property, financial, or other interest in the proceeding; and (3) the possible effect of any order which may be entered in the proceeding on the petitoner's interest. The petition should also identify the specific aspect(s) of the subject matter of the proceeding as to which petitioner wishes to intervene. Any person who has filed a petition for leave to intervene or who has been admitted as a party may amend the petition without requesting leave of the Board up to fifteen (15) days prior to the first pre-hearing conference scheduled in the proceeding, but such an amended petition must satisfy the specificity requirements described above.

Not later than fifteen (15) days prior to the first prehearing conference scheduled in the proceeding, a petitioner shall file a supplement to the petition to intervene, which must include a list of the contentions that are sought to be litigated in the matter, and the bases for each contention set forth with reasonable specificity. Contentions shall be limited to matters within the scope of the amendment under consideration. A petitioner who fails to file such a supplement which satisifies these requirements with respect to at least one contention will not be permitted to participate as a party.

Those permitted to intervene become parties to the proceeding, subject to any limitations in the order granting leave to intervene, and have the opportunity to participate fully in the conduct of the hearing, including the opportunity to present evidence and cross-examine witnesses.

A request for a hearing or a petition for leave to intervene must be filed with the Secretary of the Commission, U.S. Nuclear Regulatory Commission, Washington, DC 20555, Attention: Docketing and Service Branch, or may be delivered to the Commission's Public Document Room, 1717 H Street, NW., Washington, DC, by the above date. Where petitions are filed during the last ten (10) days of the notice period, it is requested that the petitioner promptly so inform the Commission by a toll-free telephone call to Western Union at 1-800-325-6000 (in Missouri 1-800-342-6700). The Western Union operator should be given Datagram Identification Number 3737 and the following message addressed to Martin J. Vergilio: (petitioner's name and telephone number); (date petition was mailed); (plant name); and (publication date and page number of this Federal Register notice). A copy of the petition should also be sent to the Office of the General Counsel, U.S. Nuclear Regulatory Commission, Washington, DC 20555, and to John Flynn, Esq., Detroit Edison Company, 2000 Second Avenue, Detroit, Michigan 48226, attorney for Detroit Edison Company.

Nontimely filings of petitions for leave to intervene, amended petitions, supplemental petitions and/or requests for hearing will not be entertained absent a determination by the Commission, the presiding officer or the presiding Atomic Safety and Licensing Board that the petition and/or request should be granted based upon a balancing of the factors specified in 10 CFR 2.714(a)(1)(i)-(v) and 2.714(d).

If a request for hearing is received, the Commission's staff may issue the amendment after it completes its technical review and prior to the completion of any required hearing if it publishes a further notice for public comment of its proposed finding of no significant hazards consideration in accordance with 10 CFR 50.91 and 50.92.

For further details with respect to this action, see the application for amendment dated January 27, 1988, which is available for public inspection at the Commission's Public Document Room, 1717 H Street, NW., Washington, DC 20555, and at the Monroe County Library System, 3700 S. Custer Road, Monroe, Michigan 48161.

Dated at Rockville, Maryland, this 29th day of March 1988.

For the Nuclear Regulatory Commission.

Thomas V. Wambach,

Acting Director, Project Directorate III-1, Division of Reactor Projects III, IV, V & Special Projects.

[FR Doc. 88-7403 Filed 4-4-88; 8:45 am]

BILLING CODE 7590-01-M

[Docket Nos. 50-338 and 50-339]

Virginia Electric and Power Co., North Anna Power Station, Units 1 & 2; Exemption

I

Virginia Electric and Power Company (the licensee) is the holder of North Anna Power Station, Units 1 and 2 (the facility) at steady-state reactor power levels for each units not in excess of 2905 megawatts thermal. The license provides, among other things, that it is subject to all rules, regulations and Orders of the Nuclear Regulatory Commission (the Commission or NRC) now or hereafter in effect. The facilities consist of two pressurized water reactors located at the licenee's site in Louisa County, Virginia.

II

Section 50.54(g) of 10 CFR Part 50 requires a licensee authorized to operate a nuclear power reactor to follow and maintain in effect emergency plans which meet the standards of 10 CFR 50.47(b) and the requirements of Appendix E to 10 CFR Part 50. Section IV.F.2 of Appendix E requires that each licensee at each site shall annually exercise its emergency plan.

The NRC may grant exemptions from the requirements of the regulations which, pursuant to 10 CFR 50.12(a), are (1) authorized by law, will not present an undue risk to the public health and safety, and are consistent with the common defense and security; and (2) present special circumstances. Section 50.12(a)(2)(ii) of 10 CFR Part 50 describes the special circumstances for an exemption where the application of the regulation in the particular circumstances would not serve the underlying purpose of the rule or is not necessary to achieve the underlying purpose of the rule. The underlying purpose of Appendix E, Section IV.F.2 is to demonstrate that the emergency plan is adequate and capable of being implemented, and that the state of emergency preparedness provides reasonable assurance that adequate protective measures can and will be taken in the event of a radiological emergency.

III

By letter dated October 9, 1987, the licensee requested an exemption from the requirements of 10 CFR 50.47 and Appendix E to conduct an annual exercise of the North Anna Emergency Plan in 1987. The licensee had planned to conduct an exercise of its emergency plan on August 4, 1987 with the partial participation of State and local emergency response organizations. The scheduled exercise was an annual licensee off-year exercise and the Federal Emergency Management Agency (FEMA) was not scheduled to observe the exercise. The previous emergency preparedness exercise at the North Anna Power Station, conducted on June 18, 1986, was a full participation biennial exercise. The licensee requested that an exemption be granted because the requirement to perform an exercise of the North Anna Emergency Plan in 1987 was not necessary to achieve the underlying purpose of the emergency planning rule in that the emergency plan was adequately exercised and demonstrated in 1987 in the licensee's response to the Unit 1 steam generator tube rupture (SGTR) event that occurred on July 15, 1987. The schedule for future exercises will not be affected by this one-time exemption.

To support their request, the licensee provided the following information in submittals to the NRC dated August 3, 1987 and September 11, 1987.

1. Key elements of the North Anna Power Station emergency plan demonstrated during the SGTR event.

2. An overview of emergency response activities.

3. Description/sequence of events, including specific emergency response, classification and action.

4. Extent of involvement of offsite agencies.

5. A discussion of the emergency response critique conducted after the event.

6. A cross-reference between the emergency plan elements carried out during the SGTR event and NURG-0654/FEMA-REP-1 criteria.

In these submittals and in a presentation to the NRC staff on September 29, 1987, the licensee provided extensive documentation concerning their initial emergency response and followup actions to the SGTR event.

On July 15, 1987, at 6:25 a.m., North Anna Unit 1 experienced a steam generator tube rupture while operating at 100% power. The unit was manually tripped by the operators, which was followed by safety injection actuation. A small radioactive release to the environment occurred during the course of the event. An Unusual Event was declared at 6:39 a.m., and the emergency classification was upgraded to an Alert at 6:54 a.m. The licensee downgraded the emergency classification from Alert to Recovery when the unit reached a cold shutdown condition at 1:31 p.m.

In response to the SGTR event, the following key elements of the North Anna emergency plan was demonstrated:

- Classification of the event in accordance with the emergency plan implementing procedures.
- Notification of State, local and Federal emergency response organizations and personnel.
- Activation, staffing and operation of the emergency response facilities including the Control Room, Technical Support Center, Operational Support Center, Local Emergency Operations Facility, Corporate Emergency Response Center, Corporate Public News Center and Local Media Center.
- Communications between emergency facilities, principal response organizations and emergency personnel.
- Accident assessment involving the methods, systems and equipment necessary for assessing and monitoring the actual consequences of the event, including both an engineering assessment of plant status and an assessment of radiological consequences.
- Media and public information dissemination through the issuance of press releases and the conduct of press briefings at the Corporate Public News Center and Local Media Center.
- Recovery planning, including the formation of a recovery organization, identification of resources and the development of recovery actions.

Licensee response activities included the development of initial and followup messages (17 total) to offsite organizations, continuous communication with the NRC, station accountability, security access control, dispatch of inplant, onsite and offsite monitoring teams, formulation of offsite dose projections, including the determination of meteorological dispersion, collection and analysis of environmental samples, analysis of inplant radioactivity levels, and interfacing with State emergency operations personnel at the Corporate Emergency Response Center. Although protective action recommendations for the public were not required to be issued based on plant parameters and field monitoring information, the necessity for issuing such recommendations was considered by the licensee during the course of the event.

After the SGTR event, the licensee conducted interviews of personnel involved in the emergency response effort. Based upon these interviews, the licensee developed a list of 10 corrective actions resulting from the implementation of the North Anna Emergency Plan under actual conditions. In a letter to the NRC dated December 4, 1987, the licensee committed to assure completion of these corrective actions no later than the next annual emergency plan exercise.

In addition to the response to the SGTR event, other licensee activities related to the demonstration of preparedness in 1987 included a practice exercise conducted on July 14, 1987 with some offsite participation, the conduct of fire and medical drills on August 13, 1987, and a post-accident sampling system (PASS) drill on August 14, 1987. The fire, medical and PASS drills were originally to be held in conjunction with the scheduled exercise. In the December 4, 1987 letter to the NRC, the licensee listed the items resulting from the critiques of the fire, medical and PASS drills, and committed to complete the

identified corrective actions prior to the next annual exercise.

The most recent NRC Systematic Assessment of Licensee Performance (SALP) Report for North Anna, issued on December 11, 1986 for the period March 1, 1985 through August 31, 1986, indicated satisfactory overall licensee performance. Specifically, in the functional area of emergency preparedness, licensee performance was rated as Category 2, indicating a satisfactory level of performance. Inspection activities conducted since the SALP report have confirmed that the licensee has maintained a satisfactory level of performance regarding emergency preparedness.

The Commonwealth of Virginia has indicated its support for the licensee's request for an exemption in a letter to the licensee dated September 8, 1987. The State noted that the local governments and State agencies had achieved the objectives of the original scheduled exercise. The State indicated that the response to the actual event was of more value to the State agencies and local governments for training purposes than the simulated accident would have been. Copies of the State's report of the radiological emergency at North Anna were provided by the State to the Federal Emergency Management Agency.

IV

Based on a review of the licensee's request for an exemption from the requirement to conduct an exercise of the North Anna Emergency Plan in 1987, the NRC staff finds that the underlying purpose of the regulation has been achieved through the licensee's response to the SGTR event which occurred on July 15, 1987. The licensee fully activated and staffed all of its emergency response facilities and performed all necessary response actions under actual conditions. Both onsite and offsite emergency response organizations were involved in the event. The response to the SGTR event tested the adequacy of the emergency plan implementing procedures, tested emergency equipment and communications networks, and provided a unique opportunity to ensure that emergency organization personnel were familiar with their duties. The licensee has identified corrective actions to improve the level of emergency preparedness at North Ann through interviews with emergency personnel following the event. NRC Region II will assure that these corrective actions are completed on a schedule committed to by the licensee. The staff concludes that the licensee satisfactorily demonstrated the adequacy of the North Anna Emergency Plan and its capability of being implemented in the response to the SGTR event on July 15, 1987. Thus, a further exercise in 1987 was not necessary to achieve the underlying purpose of the rule. The requested exemption from the requirement of 10 CFR Part 50, Appendix E, Section IV.F, to perform an exercise of the North Anna Emergency Plan in 1987, will not adversely affect the overall state of emergency preparedness at the North Anna site because the emergency plan was adequately exercised and demonstrated during the licensee's response to the July 15, 1987 tube rupture event.

For these reasons, the Commission has determined that, pursuant to 10 CFR 50.12, the exemption requested by the licensee's letter dated October 9, 1987, as discussed above, is authorized by law, will not present an undue risk to the public health and safety, and is consistent with the common defense and security and that special circumstances are present as set forth in 10 CFR 50.12(a)(2)(ii).

Pursuant to 10 CFR 51.32, the Commission has determined that granting of this Exemption will have no significant impact on the environment (March 28, 1988, 53 FR 10002). A copy of the licensee's request for exemption and supporting documentation is available for public inspection at the Commission's Public Document Room, 1717 H Street, NW., Washington, DC and at the Board of Supervisors Office, Louisa County Courthouse, Louisa, Virginia 23093 and the Alderman Library, Manuscripts Department, University of Virginia, Charlottesville, Virginia 22901. Copies may be obtained upon written request to the U.S. Nuclear Regulatory Commission, Washington, DC 20555, Attention: Director, Division of Reactor Projects I/II.

This exemption is effective upon issuance.

Dated at Rockville, Maryland, this 28th day of March 1988.

By the Nuclear Regulatory Commission.

Steven A. Varga,

Director, Division of Reactor Projects–I/II, Office of Nuclear Reactor Regulation.

[FR Doc. 88–7404 Filed 4–4–88; 8:45 am]

BILLING CODE 7590-01-M

[Docket No. 50–397]

Washington Public Power Supply System; Consideration of Issuance of Amendment to Facility Operating License and Opportunity For Hearing

The U.S. Nuclear Regulatory Commission (the Commission) is considering issuance of an amendment to Facility Operating License No. NPF–21 issued to Washington Public Power Supply System (the licensee), for operation of Washington Nuclear Project 2 located in Benton County, Washington. The request for amendment was submitted by letter dated December 23, 1987 (Reference G02–87–293).

The proposed amendment would allow the continued operation of WNP–2 until the fourth refueling outage without meeting the requirements of Regulatory Guide 1.97 Revision 2 for flux monitoring instrumentation. This request was made because the instrumentation supplier has been unsuccessful in demonstrating the equipment is environmentally qualified. This action if approved would permit the plant to be restarted after the third refueling outage without the specified instrumentation.

Before issuance of the proposed license amendment, the Commission will have made findings required by the Atomic Energy Act of 1954, as amended (the Act) and the Commission's regulations.

By May 5, 1988, the licensee may file a request for a hearing with respect to issuance of the amendment to the subject facility operating license, and any person whose interest may be affected by this proceeding and who wishes to participate as a party in the proceeding must file a written request for hearing and petition for leave to intervene. Request for a hearing and petitions for leave to intervene must be filed in accordance with the Domestic Licensing Proceedings" in 10 CFR Part 2. If a request for a hearing or petition for leave to intervene is filed by the above date, the Commission or an Atomic Safety and Licensing Board Panel will rule on the request and/or petition, and the Secretary or the designated Atomic Safety and Licensing Board will issue a notice of hearing or an appropriate order.

As required by 10 CFR 2.714, a petition for leaving to intervene must set forth with particularity the interest of the petitioner in the proceeding, and how that interest may be affected by the results of the proceedings. The petition should specifically explain the reasons why intervention should be permitted with particular reference to the following factors: (1) The nature of the petitioner's right under the Act to be made a party to the proceeding; (2) the nature and extent of the petitioner's property, financial, or other interest in the proceeding; and (3) the possible effect of any order which may be entered in the proceeding on the petitioner's interest. The petition should

also identify the specific aspects(s) of the subject matter of the proceeding as to which petitioner wishes to intervene. Any person who has filed a petition for leave to intervene or who has been admitted as a party may amend the petition without requesting leave of the Board up to fifteen (15) days prior to the first prehearing conference scheduled in the proceeding, but such an amendment petition must satisfy the specificity requirements described above.

Not later than fifteen (15) days prior to the first prehearing conference scheduled in the proceeding, a petitioner shall file a supplement to the petition to intervene which must include a list of the contentions which are sought to be litigated in the matter, and the bases for each contention set forth with reasonable specificity. Contentions shall be limited to matters within the scope of the amendment under consideration. A petitioner who fails to file such a supplement which satisfies these requirements with respect to at least one contention will not be permitted to participate as a party.

Those permitted to intervene become parties to the proceeding, subject to any limitations in the order granting leave to intervene, and have the opportunity to participate fully in the conduct of the hearing, including the opportunity to present evidence and cross-examine witnesses.

A request for a hearing or a petition for leave to intervene must be filed with the Secretary of the Commission, U.S. Nuclear Regulatory Commission, Washington, DC 20555, Attention: Docketing and Service Branch, or may be delivered to the Commission's Public Document Room, 1717 H Street, NW., Washington, DC, by the above date. Where petitions are filed during the last ten (10) days of the notice period, it is requested that the petitioner promptly so inform the Commission by a toll-free telephone call to Western Union at 1-(800) 325-6000 (in Missouri 1-(800) 342-6700). The Western Union operator should be given Datagram Identification Number 3737 and the following message addressed to George W. Knighton: petitioner's name and telephone number; date petition was mailed; plant name; and publication date and page number of this **Federal Register** notice. A copy of the petition should also be sent to the Office of the General Counsel-Rockville, U.S. Nuclear Regulatory Commission, Washington, DC 20555, and to Mr. Nicholas S. Reynolds, Esq., Bishop, Cook, Purcell and Reynolds, 1400 L Street, NW., Washington, DC 20005-3502 and Mr. G.E. Doupe, Esq., Washington Public Power Supply System, P.O. Box 968, 3000 George Washington Way, Richland, Washington 99532, attorneys for the licensee.

Nontimely filings of petitions for leave to intervene, amended petitions, supplemental petitions and/or requests for hearing will not be entertained absent a determination by the Commission, the presiding officer or the presiding Atomic Safety and Licensing Board, that the petition and/or request should be granted based upon a balancing of the factors specified in 10 CFR 2.714(a)(1)(i)-(v) and 2.714(d).

If a request for hearing is received, the Commission's staff may issue the amendment after it completes its technical review and prior to the completion of any required hearing if it publishes a further notice for public comment of its proposed finding of no significant hazards consideration in accordance with 10 CFR 50.91 and 50.92.

For further details with respect to this action, see the application for amendment which is available for public inspection at the Commission's Public Document Room, 1717 H Street, NW., Washington, DC, and at the Richland City Library, Swift and Northgate Streets, Richland, Washington 99352.

Dated at Rockville, Maryland, this 29th day of March, 1988.

For The Nuclear Regulatory Commission.

Harry Rood,

Acting Director, Project Directorate V, Division of Reactor Projects—III, IV, V and Special Projects, Office of Nuclear Reactor Regulation.

[FR Doc. 88-7405 Filed 4-4-88; 8:45 am]

BILLING CODE 7590-01-M

[Docket No. 50-305]

Wisconsin Public Service Corp., et al.; Environmental Assessment and Finding of No Significant Impact

The U.S. Nuclear Regulatory Commission (the Commission) is considering issuance of an exemption from the requirements of 10 CFR Part 50, Appendix R, Section III.G, Fire Protection of Safe Shutdown Capability, to the Wisconsin Public Service Corporation (the licensee) for the Kewaunee Nuclear Power Plant (KNPP), located at the licensee's site in Kewaunee County, Wisconsin. The exemption was requested by the licensee by letter dated June 23, 1987.

Environmental Assessment

Identification of Proposed Action: The licensee has requested two exemptions. The first exemption was requested from the requirements of Section III.G.3 of Appendix R to the extent that it requires fixed fire suppression throughout the Control Room portion of Fire Area AX-35. Section III.G.3 requires that fire detection and fixed fire suppression systems be installed in zones for which alternative shutdown capability is provided. The second exemption was requested from the specific requirements of Section III.G.2(b) of Appendix R to the extent that it requires automatic suppression systems to be installed throughout the Shield Building (Fire Area SB-65). Section III.G.2(b) requires that fire detection and automatic fire suppression systems be installed in those areas outside of noninerted containments where redundant safe shutdown components are separated by 20 feet, free of intervening combustibles.

The Need for the Proposed Action: The proposed exemption is needed to permit the licensee to operate the plant without being in violation of the Commission's requirements.

Environmental Impact of the Proposed Action: The proposed exemption from the requirements for a fixed fire suppression system in the Control Room portion of Fire Area AX-35 and throughout the Shield Building does not involve a significant environmental impact. There is reasonable assurance that a fire in the Control Room would not prevent safe plant shutdown based on the low combustible loading of the area, the continuous manning of the Control Room by trained operators and the alternative shutdown capability provided. Likewise, there is reasonable assurance that a fire in the Shield Building would not prevent safe plant shutdown based on the low combustible loading of the area, the passive protection provided by the separation between penetration areas, the installed smoke detectors and the fire brigade's ability to extinguish a fire in the area. There are no changes in plant operation or effluents to be considered with the proposed exemptions. Therefore, in consideration of the above, the exemption does not involve a significant environmental impact.

Alternative to Proposed Action: Because the staff has concluded that there is not significant impact associated with the proposed exemptions, any alternative to the exemptions will have either no environmental impact or greater environmental impact. The installation of a fixed fire suppression system in the Control Room of Shield Building would result in an additional cost to the licensee without significantly increasing the level of fire protection currently provided.

Alternative Use of Resources: The proposed exemptions are on the basis of an acceptable alternative use of resources; the existing fire protection for the Control Room and Shield Building areas provides a level of fire protection equivalent to the technical requirements of Section III.G of Appendix R to the extent discussed previously. This alternative will save the licensee and consumers the cost of the fixed fire suppression system and the cost of maintenance/surveillance. The level of protection will be maintained with the existing systems and the intent of the specific requirement of Appendix R, Section III.G, Fire Protection of Safe Shutdown Capability, will be met.

Agencies and Persons Consulted: The NRC staff reviewed the licensee's request that supports the proposed exemption. The NRC staff did not consult other agencies or persons.

Finding of No Significant Impact

The Commission has determined not to prepare an environmental impact statement for the proposed exemption.

Based upon the environmental assessment, we conclude that the proposed action will not have a significant effect on the quality of the human environment.

For details with respect to this action, see the request for exemption dated June 23, 1987, which is available for public inspection at the Commission's Public Document Room, 1717 H Street, NW., Washington, DC, and at the University of Wisconsin Library Learning Center, 2420 Nicolet Drive, Green Bay, Wisconsin 54301.

Dated at Rockville, Maryland, this 29th day of March, 1988.

For the Nuclear Regulatory Commission

Kenneth E. Perkins,

Director, Project Directorate III-3, Division of Reactor Projects—III, IV, V and Special Projects.

[FR Doc. 88-7399 Filed 4-4-88; 8:45 am]

BILLING CODE 7590-01-M

[Docket No. 50-312]

Sacramento Municipal Utility District; Rancho Seco Nuclear Generating Station

Notice is hereby given that the Director, Office of Nuclear Reactor Regulation, has issued a Director's Decision concerning a Petition dated February 25, 1987, filed by Ms. Barbara Moller of Sacramento, California. The Petitioner asked the NRC to order the licensee of the Rancho Seco Nuclear Power Plant to show cause why the plant should not be prevented from restarting until a complete check of all cables is undertaken or in the alternative, why the plant should not be completely shut down. The two bases given by Ms. Moller for the Petition are (1) the "official investigation" concerning falsification of cable tray data and (2) the "problem-laden history" of the facility.

On April 27, 1987, the Director, Office of Nuclear Reactor Regulation (NRR), acknowledged receipt of the Petition. He informed Ms. Moller that the Petition would be treated under 10 CFR 2.206 of the Commission's regulations and that appropriate action would be taken in a reasonable time. In a letter dated September 13, 1987, the Director gave Ms. Moller the status of the ongoing efforts by the licensee and NRC staff to resolve the cable concerns, and he reiterated the NRC staff's position that Rancho Seco would not be permitted to restart until the safety concerns associated with the plant cables were resolved.

The Director has now determined that the Petitioner's request should be denied for the reasons set forth in the "Director's Decision Pursuant to 10 CFR 2.206" (DD-88-4), which is available for inspection and copying in the Commission's Public Document Room, 1717 H Street NW., Washington, DC 20555 and at the Local Public Document Room for the Rancho Seco Nuclear Generating Station located at the Sacramento City-County Library, 828 I Street, Sacramento, California 95814.

A copy of the decision will be filed with the Secretary of the Commission for its review in accordance with 10 CFR 2.206(c). As provided in 10 CFR 2.206(c), the Decision will become the final action of the Commission twenty-five (25) days after issuance unless the Commission on its own motion institutes review of the Decision within that time.

Dated at Rockville, Maryland, this 18th day of March 1988.

For the Nuclear Regulatory Commission.

Thomas E. Murley,

Director, Office of Nuclear Reactor Regulation.

[FR Doc. 88-7400 Filed 4-4-88; 8:45 am]

BILLING CODE 7590-01-M

PROSPECTIVE PAYMENT ASSESSMENT COMMISSION

Meetings

Notice is hereby given of meetings of the Prospective Payment Assessment Commission on Tuesday and Wednesday, April 19 and 20, 1988, at the Westpark Hotel, 1900 N. Fort Myer Drive, Arlington, Virginia.

The Subcommittee on Diagnostic and Therapeutic Practices will be meeting in Shenandoah A & B on the second floor at 9:00 a.m., April 19, 1988. The Subcommittee on Hospital Productivity and Cost-Effectiveness will convene its meeting at 9:00 a.m. in Rosslyn A, also on the second floor, on April 19, 1988.

The Full Commission will meet at 1:30 p.m. on April 19, 1988, and again on April 20, 1988, at 9:15 a.m. Both sessions will be held in Rosslyn A on the second floor.

Donald A. Young,

Executive Director.

[FR Doc. 88-7354 Filed 4-4-88; 8:45 am]

BILLING CODE 6820-BW-M

SECURITIES AND EXCHANGE COMMISSION

[Release No. 34-25525; File No. SR-NASD-87-21]

Self-Regulatory Organizations; National Association of Securities Dealers, Inc.; Order Approving Proposed Rule Change

The National Association of Securities Dealers, Inc. ("NASD") submitted on April 21, 1987, copies of a proposed rule change pursuant to section 19(b) of the Securities Exchange Act of 1934 ("Act") and Rule 19b-4 thereunder, to amend Schedule E of the NASD By-Laws. Schedule E provides that when a member or associated person participates in the distribution of securities issued by the member, a parent of the member, or an affiliate of the member, special requirements apply to ensure that the member or associated person discharges its due diligence and fair pricing obligations, and adheres to the NASD's suitability requirements, without conflict of interest. The NASD's proposal excludes from the definition of "affiliate of a member," corporations, trusts, partnerships, and other entities issuing financing instrument-backed securities rated by a nationally recognized statistical rating organization in one of its four highest generic rating categories.[1] Accordingly, the NASD's

[1] The term "financing-instrument backed securities" means any securities collateralized by instruments evidencing indebtedness, and includes: (1) Certificates representing interests in a pool or pools of mortgages, in which payments on the underlying mortgages are passed through, *pro rata*, to investors; (2) bonds collateralized by a pool of mortgages or by a portfolio of mortgage-backed securities, in which the cash payments on the mortgages are distributed sequentially to investors ("CMOs"); (3) securities backed by loan obligations for automobiles, boats, or credit card receivables; and (4) similar instruments.

proposal exempts from the requirements of Schedule E distributions by members of their associates of financing instrument-backed securities rated in one of the top four categories by a nationally recognized statistical rating organization.

Notice of the proposed rule change together with the terms of substance of the proposed rule change was given by the issuance of a Commission release (Securities Exchange Act Release No. 24855, August 27, 1987), and by publication in the **Federal Register** (52 FR 33488, September 3, 1987). No comments were received with respect to the proposed rule change.[2]

The Commission finds that the proposed rule change is consistent with the requirements of the Act and the rules and regulations thereunder applicable to the NASD and, in particular, the requirements of section 15A, and the rules and regulations thereunder.

It is therefore ordered, pursuant to section 19(b)(2) of the Act, that the above-mentioned proposed rule change be, and hereby is, approved.

For the Commission, by the Division of Market Regulation, pursuant to delegated authority, 17 CFR 200.30-3(a)(12).

Dated: March 29, 1988.

Jonathan G. Katz,

Secretary.

[FR Doc. 88-7389 Filed 4-4-88; 8:45 am]

BILLING CODE 8010-01-M

[2] On October 22, 1987, and January 12, 1988, respectively, the NASD filed with the Commission two amendments to this proposed rule change to clarify the intent and scope of the proposed rule change. Since the amendments are clarifying in nature, the Commission has determined to approve the amended proposed rule change without separate publication of the amendments in the **Federal Register**. The amendments are, however, available for inspection and copying in the Commission's Public Reference Room. The first amendment amends Section 9 of Schedule E, to clarify that a transaction in which an issuer proposes to utilize the proceeds from a public offering "to become a member or to form a broker-dealer subsidiary to become a member," is subject to Schedule E to the same extent as if the transaction had occurred prior to the filing of the offering. The amendatory language replaces, and is meant to clarify, earlier language that provided that Schedule E could apply to transactions in which an issuer utilizes the proceeds of a public offering to "register" a member.

The second amendment amends Sections 1 and 3(a) of Schedule E to provide that Schedule E's requirements apply not only to a member's distribution of securities to be issued by the member, its parent, or an affiliate of the member, but also to its distribution of securities *already issued* by the member, its parent, or an affiliate. Schedule E consistently has been interpreted to apply, and is intended to continue to apply, not only to offerings of securities to be issued in the future, but to offerings of securities that have been issued previously.

[Release No. 34-25533; File No. SR-NASD-87-49]

Self-Regulatory Organizations; National Association of Securities Dealers, Inc.; Order Approving Proposed Rule Change

On October 29, 1987, the National Association of Securities Dealers, Inc. ("NASD") submitted to the Securities and Exchange Commission ("Commission"), pursuant to section 19(b)(1) under the Securities Exchange Act of 1934 ("Act") [1] and Rule 19b-4 thereunder,[2] a proposed rule change that would revise the examination questions, specifications, and study outline for the Registered Options Principal (Series 4) examination administered by the NASD.

The proposed rule change was noticed in Securities Exchange Act Release No. 25126, 52 FR 44661 (November 20, 1987). No comments were received on the proposed rule change.

The NASD states that the purpose of the proposed rule change is to update the Series 4 examination in view of options products developments since the Series 4 examination was last revised in 1980. Since 1980, several new options products have been conceived, existing product mixes within general securities firms have been redefined, and the responsibilities of the registered options principal have increased as firms offer an increasingly wide range of options products.

In October 1986, the staffs of the NASD, the American, New York and Philadelphia Stock Exchanges and the Chicago Board Options Exchange, undertook a review of the material listed in the Series 4 examination in an effort to update the examination to reflect the many new options products available today. The NASD states in its filing that the proposed revisions for the Series 4 examination were developed by this joint self-regulatory organization task force pursuant to the 1986 review of the examination. In October 1987, the Qualifications Committee of the NASD Board of Governors approved the proposed changes.

The proposed rule change provides that the revised examination will be a three-hour, 125-question multiple-choice PLATO examination. In addition, the NASD proposes that the revised examination cover all option product areas covered on the present Series 4 examination as well as several new products, including index options, interest rate options, and foreign currency options.

The NASD contends that the statutory basis for the proposed rule change is section 15A(g)(3) of the act, which provides that a registered securities association may prescribe standards of training, experience and competence for persons associated with a member and may examine and verify the qualifications of such persons in accordance with procedures established by the rules of the association.

The Commission finds that the proposed rule change is consistent with the requirements of the Act and the rules and regulations thereunder applicable to a registered securities association, and, in particular the requirements of section 15A,[3] and the rules and regulations thereunder. The Commission agrees that the revised Series 4 examination, as proposed by the NASD, will accurately reflect the many new options products available today and the increase in the responsibilities of the registered options principal since 1980. The Commission has reviewed the revised examination and finds that the additions and modifications will help ensure that registered options principals have attained the requisite levels of competence and knowledge.

It is therefore ordered, pursuant to section 19(b)(2) of the Act,[4] that the proposed rule change is approved.

For the Commission, by the Division of Market Regulation, pursuant to delegated authority.[5]

Dated: March 30, 1988.

Jonathan G. Katz,

Secretary.

[FR Doc. 88-7432 Filed 4-4-88; 8:45 am]

BILLING CODE 8010-01-M

[1] 15 U.S.C. section 78s(b)(1) (1982).

[2] 17 CFR 240.19b-4 (1986).

[3] 15A U.S.C. section 78o-3(g) (1982).

[4] 15 U.S.C. section 78s(b)(2) (1982).

[5] 17 CFR 200.30-3(a)(12) (1986).

[Release No. 34-25530; File No. SR-NYSE-88-03]

Self-Regulatory Organizations; Filing of Proposed Rule Changes by New York Stock Exchange, Inc. Relating to a Change in Policy of the Exchange To Permit Registrars, in Addition To Transfer Agents, To Use Facsimile Signatures on Stock Certificates

Pursuant to section 19(b)(1) of the Securities Exchange Act of 1934, 15 U.S.C. 78s(b)(1), notice is hereby given that on March 8, 1988, the New York Stock Exchange, Inc. ("NYSE" or "Exchange") filed with the Securities

and Exchange Commission ("Commission") the proposed rule changes as described in Items I, II and III below, which Items have been prepared by the self-regulatory organization. The Commission is publishing this notice to solicit comments on the proposed rules changes from interested persons.

I. Self-Regulatory Organization's Statement of the Terms of Substance of the Proposed Rule Change

The proposed rule change amends the Exchange's policy governing transfer agent and registrar signatures on stock certificates. The proposed amendments to the policy as set forth in §§ 501.00 and 601.00 of the NYSE Listed Company Manual are available from the Commission at the address noted in Section IV below or from the Exchange. These consist of amendments in order to permit registrars, in addition to transfer agents, to use facsimile signatures on stock certificates.

II. Self-Regulatory Organization's Statement of the Purpose of, and Statutory Basis for, the Proposed Rule Changes

In its filing with the Commission, the self-regulatory organization included statements concerning the purpose of and basis for the proposed rule changes and discussed any comments it received on the proposed rule changes. The text of these statements may be examined at the places specified in Item IV below. The self-regulatory organization has prepared summaries, set forth in sections (A), (B), and (C) below, of the most significant aspects of such statements.

(A) Self-Regulatory Organization's Statement of the Purpose of, and Statutory Basis for, the Proposed Rule Changes

(1) Purpose

The purpose of the proposed rule changes is to permit registrars, in addition to transfer agents, to use facsimile signatures on stock certificates.

The present policy, adopted in 1964, permits the use of a facsimile signature on stock certificates by transfer agents providing certain documentation is filed with the Exchange. As it was intended to continue requiring some human attention and inspection of certificates, registrars were required to continue to provide manual signatures.

The Exchange now proposes to modify its policy to also permit registrars, in addition to transfer agents, to use facsimile signatures on stock certificates.

This change recognizes the fact that since 1964 transfer agents have instituted automated systems to facilitate security transfer. They also have placed great emphasis on control features which address the validity of transfers and issuances. Registrars utilize comparable system generated control reports which complete the balance check. The sophistication of these processes far surpasses the safeguards provided by the physical inspection of certificates. The requirement that each certificate be manually inspected and signed no longer serves its intended purpose, and has for the most part become a clerical function. The Exchange and shareholders will be further protected by the agreements each agent executes with the Exchange assuming full liability for listed securities processed. Fulfillment of the provisions of these agreements are subject to internal and outside audit.

Given the described safeguards and improvements in security transfer practices and procedures, the Exchange has determined that it is no longer appropriate to deprive agents, including listed companies, of the operational efficencies the new policy will permit.

(2) Basis

The statutory basis for the proposed rule change is section 6(b)(5) of the Securities Exchange Act of 1934 as amended ("the Act") which, among other things, requires Exchange rules to be designed to promote just and equitable principles of trade, to foster cooperation and coordination with persons engaged in regulating, clearing, settling, processing information with respect to, and facilitating transactions in securities, to remove impediments to and perfect the mechanism of a free and open market and a national market system, and, in general, to protect investors and the public interest; and are not designed to permit unfair discrimination between customers, issuers, brokers, or dealers, or to regulate by virtue of any authority conferred by this title matters not related to the purposes of this title or the administration of the Exchange.

(B) Self-Regulatory Organization's Statement on Burden on Competition

The proposed rule changes will not impose any burden on competition that is not necessary or appropriate in furtherance of the purposes of the Act.

(C) Self-Regulatory Organization's Statement on Comments on the Proposed Rule Changes Received From Members, Participants, or Others

The Exchange has neither solicited nor received written comments concerning these proposed rule changes.

III. Date of Effectiveness of the Proposed Rule Changes and Timing for Commission Action

Within 35 days of the date of publication of this notice in the **Federal Register** or within such longer period (i) as the Commission may designate up to 90 days of such date if it finds such longer period to be appropriate and publishes its reason for so finding or (ii) as to which the self-regulatory organization consents, the Commission will:

(A) By order approve such proposed rule change, or

(B) Institute proceedings to determine whether the proposed rule changes should be disapproved.

IV. Solicitation of Comments

Interested persons are invited to submit written data, views and arguments concerning the foregoing. Persons making written submissions should file six copies thereof with the Secretary, Securities and Exchange Commission, 450 Fifth Street, NW., Washington, DC. Copies of the submission, all subsequent amendments, all written statements with respect to the proposed rule changes that are filed with the Commission, and all written communication relating to the proposed rule changes between the Commission and any person, other than those that may be withheld from the public in accordance with the provisions of 5 U.S.C. 552, will be available for inspection and copying in the Commission's Public Reference Branch, 450 Fifth Street NW., Washington, DC. Copies of such filing will also be available for inspection and copying at the principal office of the above-mentioned self-regulatory organization. All submissions should refer to the file number in the caption above and should be submitted by April 22, 1988.

For the Commission by the Division of Market Regulation, pursuant to delegated authority.

Jonathan G. Katz,

Secretary.

Date: March 30, 1988.

[FR Doc. 88-7433 Filed 4-4-88; 8:45 am]

BILLING CODE 8010-01-M

DEPARTMENT OF TRANSPORTATION

Federal Highway Administration

Environmental Impact Statement; Oakland County, MI

AGENCY: Federal Highway Administration (FHWA), DOT.

ACTION: Notice of Intent.

SUMMARY: The FHWA is issuing this notice to advise the public that an Environmental Impact Statement will be prepared for a proposed improvement in the Haggerty Road corridor to provide access to the I-96/I-696/I-275 freeway system between 8 Mile Road and Pontiac Trail in Oakland County, Michigan.

FOR FURTHER INFORMATION CONTACT: Mr. Thomas A. Fort, Jr., District Engineer, Federal Highway Administration, P.O. Box 10147, Lansing, Michigan 48901, Telephone: (FTS) 374-1879 or (Commercial) (517) 377-1879 or Mr. Andrew J. Zeigler, Resources Specialist, Project Services Section, Bureau of Transportation Planning, Michigan Department of Transportation, P.O. Box 30050, Lansing, Michigan 48909, Telephone: (517) 373-3251.

SUPPLEMENTARY INFORMATION: The FHWA, in cooperation with the Michigan Department of Transportation, (MDOT), is preparing an Environmental Impact Statement (EIS) for a proposed improvement in the Haggerty Road corridor to improve access to the I-96/I-696/I-275 freeway system between 8 Mile Road and Pontiac Trail in Oakland County, Michigan. The proposed project is approximately 8 miles in length and is intended to improve access to a rapidly-developing area of western Oakland County. The proposed project is considered necessary to provide for the existing and projected traffic demand. Alternatives under consideration include: (1) Taking no action; (2) improve existing Haggerty Road to a free access boulevard from 8 Mile Road to Pontiac Trail, with no improved access to the freeway system; (3) construction of a new roadway connector west of existing Haggerty Road from the I-96/I-696/I-275 interchange to Haggerty Road in the vicinity of 13 Mile Road with improvements to existing Haggerty Road from 13 Mile Road to Pontiac Trail; and (4) to construction of a new roadway connector on an alignment west of existing Haggerty Road from the I-96/I-696/I-275 interchange to Pontiac Trail with improvements along Pontiac Trail to its junction with Haggerty Road. Two subalternate alignments (3)A and B, for the alignment along Haggerty Road and subalternate (4)A in the vicinity of 14 Mile Road are also being considered. Each of the construction alternatives would consist of from six to eight 12-foot lanes, an 84-foot median, and require acquisition of additional right-of-way and displacements.

Letters describing the proposed action and soliciting comments will be sent to appropriate Federal, State, and local agencies, and to private organizations and citizens who have previously expressed or are known to have interest in this proposal. The U.S. Environmental Protection Agency, U.S. Fish and Wildlife Service and Michigan Department of National Resources are requested to be cooperating agencies on this project. A scoping document has been prepared identifying the alternatives and the social, economic and environmental issues involved. This document has been provided to the above agencies and is available to all interested agencies, organizations, and individuals on request. Comments on the scoping document and issues identified are invited from the above agencies and other interested parties. Requests for a copy of the scoping document or any comments submitted should be addressed to the above contact persons. The closing date for comments is April 30, 1988. No scoping meeting is planned at this time.

A pre-study meeting was held on October 15, 1987, to provide the public an opportunity to discuss the proposed action. The Draft EIS is scheduled for completion in late 1988 and will be made available for public and agency review and comment.

(Catalog of Federal Domestic Assistance Program Number 20.205, Highway Planning and Construction. The regulations implementing Executive Order 12372 regarding intergovernmental consultation on Federal programs and activities apply to this program.)

Issued on: March 25, 1988.

Thomas A. Fort, Jr.,

District Engineer, Lansing, Michigan.

[FR Doc. 88-7356 Filed 4-4-88; 8:45 am]

BILLING CODE 4910-22-M

Sunshine Act Meetings

Federal Register
Vol. 53, No. 65
Tuesday, April 5, 1988

This section of the FEDERAL REGISTER contains notices of meetings published under the "Government in the Sunshine Act" (Pub. L. 94-409) 5 U.S.C. 552b(e)(3).

FEDERAL RESERVE SYSTEM BOARD OF GOVERNORS

TIME AND DATE: 11:00 a.m., Monday, April 11, 1988.

PLACE: Marriner S. Eccles Federal Reserve Board Building, C Street entrance between 20th and 21st Streets, NW., Washington, DC 20551.

STATUS: Closed.

MATTERS TO BE CONSIDERED:

1. Personnel actions (appointments, promotions, assignments, reassignments, and salary actions) involving individual Federal Reserve System employees.
2. Any items carried forward from a previously announced meeting.

CONTACT PERSON FOR MORE INFORMATION: Mr. Joseph R. Coyne, Assistant to the Board; (202) 452-3204. You may call (202) 452-3207, beginning at approximately 5 p.m. two business days before this meeting, for a recorded announcement of bank and bank holding company applications scheduled for the meeting.

Date: March 31, 1988.

James McAfee,

Associate Secretary of the Board.

[FR Doc. 88-7524 Filed 4-1-88; 3:12 pm]

BILLING CODE 6210-01-M

COMMODITY FUTURES TRADING COMMISSION

TIME AND DATE: 10:00 a.m., Tuesday, April 19, 1988.

PLACE: 2033 K St., NW., Washington, DC, 5th Floor Hearing Room.

STATUS: Open.

MATTERS TO BE CONSIDERED:

1. Application of the Chicago Board of Trade for designation as a contract market in 5,000-ounce silver futures options
2. Application of the Chicago Board of Trade for designation as a contract market in 100-ounce gold futures options
3. Application of the MidAmerica Commodity Exchange for designation as a contract market in Long-Term U.S. Treasury Note futures
4. Rule amendment to GNMA Futures Contract/Chicago Board of Trade (renaming the contract to Mortgage-backed futures and the reactivation of the contract)
5. Application of the Chicago Board of Trade for designation as a contract market in Mortgage-backed futures options

CONTACT PERSON FOR MORE INFORMATION: Jean A. Webb, 254-6314.

Jean A. Webb,

Secretary of the Commission.

[FR Doc. 88-7474 Filed 4-1-88; 11:55 am]

BILLING CODE 6351-01-M

COMMODITY FUTURES TRADING COMMISSION

TIME AND DATE: 10:30 a.m., Tuesday, April 19, 1988.

PLACE: 2033 K St., NW., Washington, DC, 8th Floor Hearing Room.

STATUS: Closed.

MATTERS TO BE CONSIDERED:

Enforcement Matters

CONTACT PERSON FOR FURTHER INFORMATION: Jean A. Webb, 254-6314.

Jean A. Webb,

Secretary of the Commission.

[FR Doc. 88-7475 Filed 4-1-88; 11:55 am]

BILLING CODE 6351-01-M

COMMODITY FUTURES TRADING COMMISSION

TIME AND DATE: 10:00 a.m., Tuesday, April 26, 1988.

PLACE: 2033 K St., NW., Washington, DC, 8th Floor Hearing Room.

STATUS: Closed.

MATTERS TO BE CONSIDERED:

Enforcement Matters

CONTACT PERSON FOR MORE INFORMATION: Jean A. Webb, 254-6314.

Jean A. Webb,

Secretary of the Commission.

[FR Doc. 88-7476 Filed 4-1-88; 11:55 am]

BILLING CODE 6351-01-M

EQUAL EMPLOYMENT OPPORTUNITY COMMISSION

DATE AND TIME: 2:00 p.m. (Eastern Time) Monday, April 11, 1988.

PLACE: Clarence M. Mitchell, Jr., Conference Room, No. 200-C on the Second Floor of the Columbia Plaza Office Building, 2401 "E" Street, NW., Washington, DC 20507.

STATUS: Part of the Meeting will be Open to the Public and Part will be Closed to the Public.

MATTERS TO BE CONSIDERED:

Open Session

1. Announcement of Notation Vote(s)
2. A Report on Commission Operations (Optional)

Closed Session

Litigation Authorization: General Counsel Recommendations

Note.—Any matter not discussed or concluded may be carried over to a later meeting. (In addition to publishing notices on the EEOC Commission meetings in the **Federal Register**, the Commission also provides a recorded announcement a full week in advance on future Commission sessions. Please telephone (202) 634-6748 at all times for information on these meetings.)

CONTACT PERSON FOR MORE INFORMATION: Hilda D. Rodriguez, Executive Officer (Acting) on (202) 634-6748.

Date: March 31, 1988.

Hilda D. Rodriguez,

Executive Officer (Acting), Executive Secretariat.

[FR Doc. 88-7463 Filed 4-1-88; 10:40 am]

BILLING CODE 6750-06-M

FEDERAL ENERGY REGULATORY COMMISSION

"FEDERAL REGISTER" CITATION OF PREVIOUS ANNOUNCEMENT: 53 FR 10184, March 23, 1988.

PREVIOUSLY ANNOUNCED TIME AND DATE OF MEETING: March 30, 1988, 12:00 p.m.

CHANGE IN THE MEETING: The following Docket Numbers have been added:

Item No., Docket No., and Company

CAG-9
RP88-001 and RP87-7-012, Transcontinental Gas Pipe Line Corporation

CAG-3
RP88-17-004, Southern Natural Gas Company

CAG-15
TA88-1-33-000, El Paso Natural Gas Company

Lois D. Cashell,

Acting Secretary.

[FR Doc. 88-7556 Filed 4-1-88; 3:59 pm]

BILLING CODE 6717-02-M

NUCLEAR REGULATORY COMMISSION

DATE: Weeks of April 4, 11, 18, and 25, 1988.

PLACE: Commissioner's Conference Room, 1717 H Street, NW., Washington, DC.

STATUS: Open and Closed.

MATTERS TO BE CONSIDERED:

Week of April 4

Wednesday, April 6

2:00 p.m.
Briefing on Basic Safety Principles for Nuclear Power Plants (Public Meeting)

Thursday, April 7

2:00 p.m.
Briefing on Proposed Basic QA Rule with Representatives of NRC Advisory Committee on the Medical Uses of Isotopes and Industry Scientific Committees (Public Meeting)

3:30 p.m.
Affirmation/Discussion and Vote (Public Meeting) (if needed)

Week of April 11—Tentative

Wednesday, April 13

3:30 p.m.
Affirmation/Discussion and Vote (Public Meeting) (if needed)

Week of April 18—Tentative

Thursday, April 21

10:00 a.m.
Briefing on Status of Program for Performance Indicators (Public Meeting)

2:00 p.m.
Discusion of Management-Organization and Internal Personnel Matters (Closed—Ex. 2 & 6)

3:30 p.m.
Affirmation/Discussion and Vote (Public Meeting) (if needed)

Week of April 25—Tentative

Thursday, April 28

3:30 p.m.
Affirmation/Discussion and Vote (Public Meeting) (if needed)

Note.—Affirmation sessions are initially scheduled and announced to the public on a time-reserved basis. Supplementary notice is provided in accordance with the Sunshine Act as specific items are identified and added to the meeting agenda. If there is no specific subject listed for information, this means that no item has as yet been identified as requiring any Commission vote on this date.

TO VERIFY THE STATUS OF MEETINGS CALL (RECORDING): (202) 634–1498.

CONTACT PERSON FOR MORE INFORMATION: William Hill (202) 634–1410.

William M. Hill, Jr.,
Office of the Secretary.
March 31, 1988.

[FR Doc. 88–7537 Filed 4–1–88; 3:13 pm]

BILLING CODE 7590–01–M

Corrections

Federal Register
Vol. 53, No. 65
Tuesday, April 5, 1988

This section of the FEDERAL REGISTER contains editorial corrections of previously published Presidential, Rule, Proposed Rule, and Notice documents and volumes of the Code of Federal Regulations. These corrections are prepared by the Office of the Federal Register. Agency prepared corrections are issued as signed documents and appear in the appropriate document categories elsewhere in the issue.

DEPARTMENT OF COMMERCE

International Trade Administration

[A-588-068]

Steel Wire Strand for Prestressed Concrete From Japan; Final Results of Antidumping Duty Administrative Review

Correction

In notice document 88-6584 beginning on page 9787 in the issue of Friday, March 25, 1988, make the following correction:

On page 9788, in the first column, the table should read as follows:

Manufacturer/exporter	Margin (percent)
Kokoku Steel Wire, Ltd.	*0
Mitsubishi Corp.	*0
Nissho Iwai Co., Ltd.	*0
Shinko Wire Co., Ltd.	*0
Suzuki Metal Industry Co., Ltd.	*0
Teikoku Sangyo Co., Ltd.	*0
Tokyo Rope Mfg. Co., Ltd.	*4.5

*No shipments during the period. Margins were obtained from the last review where there were shipments.

BILLING CODE 1505-01-D

DEPARTMENT OF TRANSPORTATION

Federal Aviation Administration

14 CFR Parts 27 and 29

[Docket No. 25570; Notice No. 88-7]

Airworthiness Standards; Rotorcraft Regulatory Review Program Notice No. 4

Correction

In proposed rule document 88-5986 beginning on page 9190 in the issue of Monday, March 21, 1988, make the following corrections:

§ 27.685 [Corrected]

1. On page 9197, in the third column, in § 27.685, the introductory text of paragraph (d) should read: "(d) Cable systems must be designed as follows:".

Appendix D—[Corrected]

2. On page 9208, in the first column, in the title of Appendix D, the word "Evaluation" should read "Evacuation".

BILLING CODE 1505-01-D

DEPARTMENT OF THE TREASURY

Internal Revenue Service

26 CFR Parts 1 and 602

[T.D. 8183]

Income Taxes; Investment Credit for Qualified Progress Expenditures

Correction

In rule document 88-4451 beginning on page 6614 in the issue of Wednesday, March 2, 1988, make the following corrections:

1. On page 6614, in the second column, under **SUPPLEMENTARY INFORMATION**, in the fourth paragraph, in the first line, "amend" was misspelled.

2. On page 6615, in the second column, in the first complete paragraph, in the seventh line, "and" should read "any".

3. On page 6616, in the second column, in the second complete paragraph, in the 11th line, "was" should read "has".

4. On the same page, in the third column, in the third paragraph, in the seventh line, after "having" insert "expended".

5. On page 6617, in the first column, in the second complete paragraph, in the 18th line, "care" should read "case".

6. On the same page, in the third column, in the first complete paragraph, in the first line, "§ 1.46-5(g)(1)" should read "§ 1.46-5(g)(2)".

7. On page 6618, in the first column, in the first line, "an" should read "any".

8. On the same page, in the same column, in the second complete paragraph, in the third line, "order" should read "rule".

§ 1.46-5 [Corrected]

9. On page 6621, in the second column, in § 1.46-5(h)(4), in the second line, "time" should read "item".

10. On page 6622, in the first column, in § 1.46-5(j)(7), in the example, in paragraph (ii), in the second line, "$500,00" should read "$500,000".

11. On page 6623, in the third column, in § 1.46-5(p)(3), in example (2), in paragraph (iii), in the third line, "33½" should read "33⅓" and in the fifth line, "look" should read "took".

BILLING CODE 1505-01-D

federal register

Tuesday
April 5, 1988

Part II

Department of Housing and Urban Development

Office of the Secretary

24 CFR Parts 35, 200, 510, 511, 570, 882, 886, 941, 965, and 968

Lead-Based Paint Hazard Elimination; Proposed Rule

DEPARTMENT OF HOUSING AND URBAN DEVELOPMENT

Office of the Secretary

24 CFR Parts 35, 200, 510, 511, 570, 882, 886, 941, 965, and 968

[Docket No. R-88-1382, FR-2447]

Lead-Based Paint Hazard Elimination

AGENCY: Office of the Secretary, HUD.

ACTION: Proposed rule.

SUMMARY: In response to amendments to the Lead-Based Paint Poisoning Prevention Act ("LPPPA") by section 566 of the Housing and Community Development Act of 1987 (Pub. L. 100-242 Approved, February 5, 1988) (1987 Act), HUD invites public comment concerning amendment to its regulations regarding the elimination of hazards due to lead-based paint in Public and Indian housing. This proposed rule would amend 24 CFR Part 35, Lead-Based Paint Poisoning Prevention in Certain Residential Structures, 24 CFR Part 941, Public Housing Development, Subpart H in 24 CFR Part 965, PHA-owned or Leased Projects-Maintenance and Operation and 24 CFR Part 968, Comprehensive Improvement Assistance Program (CIAP). This proposed rule also corrects technical errors in 24 CFR Parts 35 and 968.

As part of the final rulemaking required by the 1987 Act, HUD plans to change the definition of "applicable surfaces" to include all interior and exterior painted surfaces of residential structures and to change the construction cut-off dates to 1978 for other HUD programs, including certain FHA Single Family and Multifamily Housing Programs, Section 8 Housing Assistance Payments Program for Substantial Rehabilitation, Section 8 Existing Housing Certificate, Section 8 Moderate Rehabilitation Program, Community Development Block Grant, Urban Development Action Grant, Secretary's Fund, Section 312 Rehabilitation Loan and Rental Rehabilitation Programs. The current testing and abatement requirements would continue to apply.

DATE: Comment due date: April 29, 1988.

ADDRESSES: Comments on rule: Interested persons are invited to submit comments regarding this proposed rule to the Office of General Counsel, Rules Docket Clerk, Room 10276, Department of Housing and Urban Development, 451 Seventh Street, SW, Washington, DC 20410. Comments should refer to the above docket number and date of publication. A copy of each comment submitted will be available for public inspection during regular business hours at the above address.

Comments on information collection: Comments on the information collection requirements contained in this proposed rule should be submitted both to the HUD Rules Docket Clerk at the above address and the Office of Information and Regulatory Affairs, Office of Management and Budget, Washington, DC 20503, Attention: Desk Officer for HUD. They should contain the docket number and date of publication.

FOR FURTHER INFORMATION CONTACT: Nancy Chisholm, Director of Policy, Office of Public and Indian Housing, (202) 755-6713, Room 4118, Department of Housing and Urban Development, 451 Seventh Street, SW., Washington, DC 20410. (This is not a toll-free telephone number.)

SUPPLEMENTARY INFORMATION:

I. Background

HUD is proposing amendments to its current regulations implementing section 302 of the LPPPA (42 U.S.C. 4822) in response to recent amendments to the LPPPA by section 566 of the Housing and Community Development Act of 1987. Consistent with the legislative history of section 566 (S. 825, 100th Cong., 1st Sess., *Cong. Rec.* S 18615, 18618 (December 21, 1987)), this proposed rule relates primarily to Public and Indian Housing. The definition of applicable surface in all program regulations will be amended in the final rule to include all interior and exterior painted surfaces, and construction cut-off dates in all programs will be amended in the final rule to include housing constructed prior to 1978. Certain program regulations will be individually amended to include the construction cut-off date of 1978 while other programs will incorporate by reference Part 35 (*e.g.*, Urban Homesteading, Emergency Shelter Grants) which will also be amended to include housing construction prior to 1978.

As directed by the 1987 Act, HUD has consulted with the National Institute of Building Sciences, the National Bureau of Standards, and public housing groups before publication of this proposed rule.

The comment period is being abbreviated in order to make it possible for HUD to meet the schedule for final rulemaking required by section 566(b) of the 1987 Act.

On June 7, 1987 (52 FR 21743), HUD announced final guidelines for the operation of the Transitional Housing Demonstration Program authorized in HUD's appropriation for fiscal year 1987. These guidelines (THDP guidelines) imposed lead-based paint requirements that were based on the Section 8 Existing Housing regulations (24 CFR 882.109) and that applied only to structures occupied by children under seven years of age. The THDP guidelines apply to the recipients of transitional housing funds selected under Notices and Funds Availability published June 7, 1987 (52 FR 21743), September 3, 1987 (52 FR 33536), and February 16, 1988 (53 FR 4458).

The Stewart B. McKinney Homeless Assistance Act (Pub. L. 100-77, approved July 22, 1987) authorized the Supportive Housing Demonstration Program (SHDP). This program consisted of two parts—a reauthorization (with amendments) of the Transitional Housing Demonstration Program and a new program of permanent housing for handicapped homeless persons. On October 26, 1987 (52 FR 39946), HUD published a notice announcing proposed rules for the program. The rules included requirements implementing the LPPPA. These requirements reflected the Section 8 Existing Housing regulations and the lead-based paint requirements contained in the THDP guidelines. The October 26, 1987 notice stated that the proposed rules would govern the permanent housing component of the program until final regulations were issued. The provisions of the proposed rule apply to recipients of permanent housing funds selected under Notices of Funds Availability published October 26, 1987 (52 FR 39946) and February 16, 1988 (53 FR 4458).

Because the THDP guidelines are not codified and because rules for the Supportive Housing Demonstration Program are not final, this proposed rule text does not address the cited programs. HUD intends to modify the lead-based paint requirements for these homeless programs to reflect the changes made by this rule to the Section 8 Existing Housing regulations. Depending on the status of SHDP rule on the date that final lead-based paint rule is published, the text of the revisions to the lead-based paint requirements for these programs will either be announced in this rule or the SHDP final rule.

Section 566 required publication of this proposed rule by April 5, 1988 and publication of a final rule by June 6, 1988. Additional regulations may be proposed after HUD conducts the demonstration program mandated by section 566.

This preamble is divided into the following six sections: (1) Background (discussion of statutory and regulatory requirements and the HUD

demonstration program); (2) Recent HUD Experience (summary of Public and Indian Housing funding set-aside for Lead-based paint testing and abatement, public housing study and 1985–86 HUD Public and Indian Housing Rulemaking Experience); (3) Recent Studies of the Lead-Based Paint Problem (the Center for Disease Control's January 1985 Statement on Preventing Lead Poisoning in Young Children and the Environmental Protection Agency's Air Quality Criteria for Lead); (4) Discussion of Rehabilitation Under section 203(k) of the National Housing Act; (5) Discussion of Public and Indian Housing's Program; and (6) Section-by-Section Review of Proposed Regulations.

A. Statutory and Regulatory Requirements

HUD's authority to issue this rule is based on section 302 of the LPPPA. Added in 1973, and amended in 1987 by section 566 of the Housing and Community Development Act of 1987, section 302 requires the Secretary of HUD to "establish procedures to eliminate as far as practicable the hazards of lead-based paint poisoning with respect to any existing housing which may present such hazards and which is covered by an application for mortgage insurance or housing assistance payments under a program administered by the Secretary." The statute further prescribes that such procedures shall "as a minimum provide for * * * appropriate measures to eliminate as far as practicable immediate hazards due to the presence of accessible intact, and nonintact interior and exterior painted surfaces that may contain lead in any such housing in which any child who is less than seven years of age resides or is expected to reside"; and, further, that the procedures must apply to housing constructed prior to 1978.

According to new section 302(b), the procedures established by the Secretary for the detection and abatement of lead-based paint poisoning hazards in any housing, including housing assisted under section 8 of the United States Housing Act of 1937 "shall be based upon criteria that measure the condition of the housing; and shall not be based upon criteria that measure the health of the residents of the housing."

For public housing assisted under section 9 of the United States Housing Act of 1937, new section 302(d) requires the inspection of each vacant dwelling prior to rerenting, a random sample of all occupied dwellings, and inspection of each dwelling in any housing in which there is a dwelling determined (through testing of vacant dwellings prior to rerenting or from the random sample of all occupied dwellings) to have lead-based paint hazards. The Secretary is required to complete the inspection of the public housing dwellings described above prior to the expiration of five years from the date of the publication of final regulations required by section 566. The inspections are to be prioritized on the basis of vacancy, age of housing, or projected modernization or rehabilitation. The Secretary is to require abatement to eliminate the lead-based paint poisoning hazards in housing in which the test results equal or exceed 1mg/cm ^{2}. If the test results equal or exceed a level of 1 mg/cm ^{2}, the results shall be provided to any potential purchaser or tenant of the housing. The Secretary is also to periodically review and reduce the level below 1 mg/cm ^{2} to the extent that reliable technology makes feasible the detection of a lower level and medical evidence supports the imposition of a lower level.

B. HUD Demonstration Program

New section 302(d)(2) requires HUD to carry out an abatement demonstration program with respect to single family and multifamily properties owned by HUD. HUD is to utilize a sufficient variety of abatement methods in a sufficient number of areas and circumstances to demonstrate their relative cost-effectiveness and their applicability to various types of housing. Not later than 18 months after the effective date of regulations required by section 566, HUD is to transmit to Congress its findings and recommendations for legislation. HUD is to examine the most reliable technology available for detecting lead-based paint, the most cost-efficient and cost-effective methods for abatement, safety considerations in testing, overall accuracy and reliability of laboratory testing of physical samples, X-ray fluorescence machines ("XRFs") and other available testing procedures, availability of qualified samplers and testers, and an estimate of the amount, characteristics and regional distribution of housing in the United States that contains lead-based paint hazards at differing levels of contamination.

Not later than nine months after the completion of the demonstration program, HUD, based on the demonstration, is to prepare and transmit to Congress a comprehensive and workable plan, including any recommendations for changes in legislation, for the prompt and cost-effective inspection and abatement of privately owned single family and multifamily housing, including housing assisted under section 8 of the United States Housing Act of 1937.

The demonstration authorized by section 566 is expected to contribute significantly to the store of knowledge on safe and effective abatement. For the Public and Indian housing program, HUD does not intend to wait for the results of the demonstration before testing and abatement guidelines are published. The Public and Indian Housing Program will require testing now because: (1) The five-year statutory requirement for the completion of all testing makes it necessary to test now so as to assure completion in that time frame; (2) work perfomed under the modernization program creates lead-based paint hazards with the breaking of painted surfaces; (3) it is cost-effective to do testing in conjunction with the modernization program so that any abatement which must be done may be merged into the modernization work efficiently, rather than be performed independently later, when it may be necessary to repeat work performed earlier under modernization; and (4) defective paint creates ongoing hazards and must be dealt with whenever it is found during normal maintenance inspections. HUD will publish testing and abatement guidelines as soon as possible, learning from the very extensive experience of those who have been involved in this effort. Benefits resulting from the demonstration program can be incorporated into such guidelines as they are made available.

II. Recent HUD Experience

A. Comprehensive Improvement Assistance Program (CIAP) Lead-Based Paint Set-Aside

In Public and Indian Housing the cost of lead-based paint hazard abatement is a public cost, borne directly by the Public and Indian Housing authorities ("PHAs"). PHAs are funded through tenant contributions toward rent (which are based on tenant income without regard to the operating costs of the housing) and by operating subsidy and modernization funds authorized and appropriated by Congress. Pursuant to Notice PIH 83–48, HUD initiated a $35 million set-aside under CIAP in FY 1984 for lead-based paint hazard identification and treatment or elimination. Instructions for application and processing of the 1984 CIAP set-aside were issued in Notice PIH 84–6. Thirty-nine PHAs received funding to treat 99 projects and approximately 14,000 units.

BEST COPY AVAILABLE

B. Public Housing Study

HUD completed a research study with Abt Associates to provide an estimate of the incidence and condition of lead-based paint in public housing units and common areas and an estimate of the cost of abatement under different regulatory program approaches. This research was part of a larger contract to determine modernization needs in Public and Indian Housing. In this study, the Department requested Childhood Lead Poisoning Prevention Programs ("CLPPPs") to assist in data collection by visiting five randomly selected local public housing projects (in areas with less than five local public housing projects, all projects were inspected) and inspecting them for the presence of lead-based paint. A total of 34 local programs visited 131 public housing projects and 262 units to test for the presence of lead-based paint. The programs used XRFs to test units, common areas such as halls, and site-wide facilities for the presence of lead-based paint, and the amount of lead. The local inspectors also reported whether the paint was in good condition or defective (*e.g.*, peeling or chipping).

Because prior research led the researchers to expect a higher proportion of lead-based paint hazards in the oldest projects, the analysts split the sample into four age strata and obtained inspections in a larger number of older projects than new projects. Using a standard of 1.0 mg/cm ^{2} lead on chewable surfaces accessible to children or in defective paint on flat surfaces such as walls or ceilings, data shows immediate hazards in 69% of the sample units built in 1950 and before, 48% of units built between 1951 and 1959, 44% of units built between 1960 and 1977, and only 7% of units built between 1978 and 1983. Analysis of the units inspected that were built in 1978 or later showed only 1 of the 15 sampled units with lead-based paint, and none of 15 units had any defective lead-based paint. Also in the post 1977 units that did have some lead-based paint, the lead was found to be at a relatively low level, marginally over the 1.0 mg/cm ^{2} standard. These findings were expected because it became illegal to sell paint with significant amounts of lead starting in 1977. A copy of the study is available by requesting the Regulatory Impact Analysis utilized for the Public and Indian Housing rule and cited at 51 FR 27787 (August 1, 1986). It is available from the Rules Docket Clerk, Room 10276, HUD, 451 Seventh Street, SW., Washington, DC 20410. (A small service and reproduction fee may be required.)

C. 1985–86 HUD Public and Indian Housing Rulemaking Experience

Since the promulgation of a final rule providing for the mandatory testing of public housing projects being rehabilitated under CIAP, there has been a great deal of experience by PHAs utilizing the products currently available for testing surfaces to determine the extent of lead-based paint. PHAs have found that the products now available often are received in non-working condition and must be returned to the manufacturers. Even following servicing by the manufacturers, the machines provide erratic and unreliable results. Testing under uncontrolled circumstances results in both false positive and false negative readings. False positive results cause a greater amount of abatement than necessary and thus waste government funds; false negatives result in undetected lead-based paint which then continue to present a health hazard. One research institute has determined that reasonably reliable tests may be obtained using one of the available machines if the following variables are controlled: the initial calibration of the machine, the frequency of recalibration, the extent and nature of the training provided for the machine operators, the number of readings in each spot tested, and the amount of time per test. HUD has determined that the unnecessary cost and risk produced by unreliable testing is not tolerable. Consequently, HUD plans to issue guidance on safe and reliable testing. HUD intends to use all available sources and data in preparing these testing guidelines. These testing guidelines will be published in the Federal Register as a notice. Anyone who has information which may be helpful to HUD in this effort is encouraged to write to HUD. The specific testing guidelines established at any given time will not be made a part of the regulation so that HUD can respond quickly as new products and new testing information become available.

Similarly, HUD has great concern over the effectiveness and safety of various forms of abatement. Researchers have determined that children with high lead levels in their blood who are treated in a hospital to remove the lead regain the unsafe level of lead soon after returning to their homes when the lead-based paint was abated during their absence. Further, it has been found that 40% of other children in the family who were not ill before the paint was abated, became ill after the abatement. In order to avoid this situation, local health programs have devised reliable abatement and cleanup procedures. HUD is interested in receiving any additional available information on safe methods of abatement and cleanup. HUD plans to prepare guidelines for safe and reliable abatement and cleanup which will be published in the Federal Register as a notice. These guidelines will be amended to respond quickly to further research.

III. Recent Studies of Lead Poisoning Problem

A. Centers for Disease Control's January 1985 Statement

In January 1985, the Centers for Disease Control (CDC) issued a second revision to its statement entitled "Preventing Lead Poisoning in Young Children." Based on new research findings on lead toxicity, CDC redefined lead poisoning at a lower blood lead level (from 30 to 25 ug/dl, micrograms of lead per deciliter of whole blood) and updated its recommendations on lead-based paint hazard abatement. CDC is currently considering even lower blood lead levels.

B. EPA Air Quality Criteria for Lead

EPA's Air Quality Criteria for Lead evaluates and assesses scientific information on the health and welfare effects associated with exposure to various concentrations of lead in ambient air. The documentation considers all sources of lead including lead-based paint. Because of recent papers and scientific literature concerning the relationship between blood lead levels and blood pressure, EPA made available for public comment a draft addendum to the draft revised criteria document (February 11, 1986, 51 FR 5106). At the time of publication of this proposed rule, the criteria document and addendum are still under review.

IV. Proposed Requirements for Rehabilitation Under Section 203(k) of the National Housing Act

The adoption in early 1987 of revised regulations under the LPPPA (see 52 FR 1891, January 15, 1987) has raised a problem that is narrow in scope but persistently troublesome and wasteful of time and resources. The problem occurs when the surface treatment requirement of 24 CFR 200.810(b) is invoked in certain cases of rehabilitation under section 203(k) of the National Housing Act. Section 200.810(b) provides:

> The fee panel appraiser or direct endorsement appraiser of a dwelling constructed prior to 1973 shall inspect the dwelling for defective paint surfaces. If a defective paint surface is found, the commitment or other approval document will

contain the requirement that the surface is to be treated as described in paragraph (c) of this section. Under no circumstances, when such a defective paint surface has been listed to be treated, is any escrow procedure regarding that condition permitted. Treatment of the surface shall be accomplished before the mortgage is endorsed for insurance.

Section 203(k) of the National Housing Act provides for a program of mortgage insurance to facilitate the rehabilitation of one-to-four-family properties. Under the program, HUD insures rehabilitation loans to: (1) Finance rehabilitation of an existing property; (2) finance rehabilitation and refinancing of the outstanding indebtedness of a property; and (3) finance purchase and rehabilitation of a property. An eligible rehabilitation loan must involve a principal obligation not exceeding the amount allowed under the section 203(b) basic home mortgage insurance program. Legislation establishing this rehabilitation program was enacted in 1961.

In many instances, making abatement a precondition of endorsement (as is required under § 200.810(b)) compels either the buyer or the seller, where section 203(k) is being used, to perform work that must be undone during the rehabilitation for which the loan was sought. The seller is often unwilling, and prior to closing and disbursement may be unable, to undertake the expense of abatement; the buyer is usually even less able to afford it until the loan is closed. Similarly, when there is no accompanying sale of the property, the homeowner is typically unable to meet the expenses until the loan is closed. Even if one of the parties can afford the cost, the work, which usually requires an additional inspection by the appraiser, is often duplicative and wasteful. What is more disturbing, the Department believes that occupant homeowners, frustrated by this dilemma, tend to defer or forego property improvements that could abate a lead-based paint hazard or else obtain rehabilitation financing through other sources that impose no abatement requirements. The result may be that procedures intended to enhance the protection of occupants, in fact exacerbate the lead-based paint problem.

When the rehabilitation involves a sale of the property, work is usually completed before the buyer takes occupancy. The properties are typically uninhabitable prior to rehabilitation. The solution to the problem seems rather straightforward with respect to unoccupied properties. To avoid the risk of poisoning and also duplicative rehabilitation/abatement, HUD proposes to expand the exception under section 203(k) and make the abatement procedure a condition of occupancy. This rule proposes to revise § 200.810(b) to provide that, except in the case of rehabilitation work in unoccupied dwellings financed under section 203(k) of the National Housing Act, no escrow procedure will be permitted with respect to abatement of a defective paint surface, and treatment must be accomplished before the mortgage is endorsed for insurance. Where Section 203(k) financing is involved and the dwelling is unoccupied, the defective paint condition will be abated in conjunction with the rehabilitation work, and will be completed as expeditiously as possible.

More difficult is the situation where the property is occupied at the time of section 203(k) loan application, since the occupant homeowner is often not financially able to vacate the property during rehabilitation. Because of the obvious risk of exposing occupants to abatement work in progress, the rule as presently proposed would not provide for escrow of abatement (or other rehabilitation) funds if the property is occupied. HUD is aware, however, that the result of this approach may be to discourage improvement that includes abatement, thereby increasing the lead-based paint hazard in the long run. This is an issue on which the Department specifically requests public comment and suggestions and which HUD will be considering prior to adoption of a final rule. As adopted, that rule may limit escrows to the case of unoccupied dwellings as proposed in this notice of rulemaking or may permit escrows in the case of occupied dwellings, as well.

V. Proposed Requirements for Public and Indian Housing's Program

This rule proposes to amend the Public and Indian Housing lead-based paint poisoning prevention requirements in response to the amendments made by section 566 of the 1987 Act. In addition to responding to the amendments concerning detection and abatement procedures and measurement criteria, this proposed rule is designed to assure that all public housing assisted under section 9 of the United States Housing Act of 1937 (*i.e.*, public housing receiving operating subsidies including those PHAs which received special funds for the cost of insurance and audit expenses) is tested prior to the expiration of five years from the date of the publication of final regulations. Section 566 and these proposed regulations require the inspection of each vacant dwelling prior to rerenting and a random sample of all occupied dwellings. If lead-based paint hazards are detected in these dwellings, all other dwellings in the building will be inspected. HUD will maintain its 1978 construction cut-off date. HUD proposes to revise the definition of applicable surfaces in § 965.702 to parallel the LPPPA amendments and include all intact and nonintact exterior and interior painted surfaces of a residential structure except mechanical equipment rooms (*e.g.*, boiler rooms) and other rooms not normally accessible to the tenants. The current definition only covers all exterior surfaces of a residential structure, up to five feet from the floor or ground and all interior surfaces. The current definition of family project is also proposed to be amended to reflect the statutory coverage of all housing assisted under section 9 of the United States Housing Act of 1937 and in which children under seven years of age reside or are likely to reside.

Public and Indian Housing's lead-based paint poisoning prevention requirements have the following six main components for addressing the hazards of lead-based paint:

(1) Maintenance obligations (24 CFR 965.704);

(2) Unit turnover procedures (24 CFR 965.705);

(3) Emergency procedures involving children with EBLs (24 CFR 965.706);

(4) Comprehensive and homeownership modernization procedures (24 CFR 968.9(e));

(5) All other family projects (24 CFR 968.9(e)(1)(iii)); and

(6) Development/acquisition requirements (24 CFR 941.208(g)).

Each of these components are discussed below noting the proposed changes and requested comments.

Maintenance Obligations

In family projects constructed prior to 1978 or substantially rehabilitated prior to 1978, HUD proposes that the PHA shall continue to visually inspect units for defective paint surfaces as part of routine periodic unit inspections. If defective paint surfaces are found, covering or removal of defective paint spots by scraping and repainting the defective area is the proposed treatment. Treatment shall be completed within a reasonable period of time.

Unit Turnover Procedures

Following the LPPPA amendments, HUD proposes testing of applicable surfaces (including defective paint surfaces) in family projects at unit turnover (24 CFR 965.705). The current regulation only requires inspection of defective paint surfaces (maintenance

obligation). However, if the building has been randomly tested and all applicable surfaces in the random sample contain no hazardous levels of lead, no further testing is required. HUD proposes that a qualified inspector shall certify in writing the precise results of the test. Testing services available from state, local or tribal health or housing agencies or an organization recognized by HUD are proposed to be utilized to the extent available. Testing is proposed to be performed by using an XRF; however, laboratory chemical analysis may be used in limited circumstances if approved by HUD in cases where it is not practical to obtain XRF readings. As provided in the LPPPA amendments, if the test results equal or exceed a level of 1 mg/cm ^{2}, the results shall be provided to the tenant family and any potential purchaser. As required by the LPPPA amendments, this regulation proposes all units shall be tested in any building in which a unit is determined, at unit turnover, to have lead-based paint test results equal or exceeding a level of 1 mg/cm ^{2}.

If lead-based paint is found on applicable surfaces, such surfaces are proposed to be treated in accordance with § 35.24(b)(2)(ii). Treatment is proposed to consist of covering, encapsulation or removal of the applicable surfaces containing lead-based paint. Covering methods include but are not limited to adding a layer of wallboard or permanent wallcovering. Paint removal may be accomplished by such methods as scraping, heat treatment or chemicals. Covering, encapsulation or actual removal of painted surfaces (*e.g.*, trim surfaces, moldings) are the preferred methods. Sanding and use of propane or gasoline torches (open-flame methods) are not permitted. Washing and repainting without thorough removal or covering does not constitute adequate treatment. If defective but not leaded paint surfaces are found, covering or removal of defective paint spots by scraping and repainting the defective area is the proposed treatment. Treatment is proposed to be completed before occupancy. The LPPPA amendments and the proposed regulation require final inspection and certification after treatment by a qualified inspector. The final inspection shall certify that abatement of lead-based paint hazards was completed in accordance with the abatement specifications and need not be presented as an indication that the lead-based paint has been removed from the premises. This will allow for the fact that covering and encapsulation techniques do not result in the removal of lead-based paint and will ensure that any future work done in the unit will take this into account. This will also permit the unit to be deemed to have been abated if the abatement was done according to these requirements, even though an unremovable residue may remain in or on the surface. The certification should be precise as to the nature of the abatement.

As discussed above in Section II.C., testing and abatement guidance will be published in the Federal Register as notices. HUD requests any additional information on safe and cost-efficient procedures for testing and abatement. HUD would like to publish guidance as to acceptable qualifications for inspectors who perform XRF testing or comparable approved testing or sampling techniques and certify as to the precise results of such testing. HUD requests assistance and information on the nature and extent of training needed. HUD will defer to appropriate requirements for such inspectors where they are established by states or localities.

Emergency Procedures Involving Children with EBLs

In addition to the maintenance obligations, unit turnover and random testing requirements discussed in this Part, emergency procedures (24 CFR 965.706) must also apply to situations involving EBL children. In the case of a current resident EBL child, a resident EBL child or non-resident EBL child using a PHA-owned or operated child care facility, these procedures are proposed to require the PHA to test all surfaces in the unit or PHA-owned and operated child care facilities used by the EBL child for lead-based paint (testing of exteriors and interior common areas (including non-dwelling PHA facilities which are commonly used by the EBL child under seven years of age) will be done as considered necessary and appropriate by PHA and HUD. Surfaces not tested during an EBL emergency will be tested as part of the random testing) and to abate (where positive) the surfaces found to contain lead-based paint. In the case of a current resident family with an EBL child, the PHA may assign the family to a post-1978 or previously tested unit which was found to be free of lead-based paint hazards or in which such hazards have been abated. The current regulation only requires testing of all defective paint surfaces and chewable surfaces.

Current regulations (which are not proposed to be amended) require testing to be completed within five days after notification to the PHA of the identification of the EBL child. Other testing procedures are identical to § 965.705 discussed above.

Abatement actions are proposed to be amended to include all applicable surfaces. The order of priority has not been amended (*i.e.*, units, PHA owned or operated child care facilities, interior common areas and exteriors). The abatement methods are the same as those proposed under § 965.705 discussed above.

Certain miscellaneous program regulations are also proposed to be amended. The PHA recordkeeping requirements in current § 965.705(e) (proposed § 965.709) are proposed to be amended to reflect the effective date of this regulation. Applicable surfaces previously tested and abated/treated under the current rule must be included in the five-year inspection plan (discussed below under CIAP) and tested and abated in accordance with the new regulations. The recordkeeping provision is designed to prevent duplicative testing or treatment. The tenant protection requirements in current § 965.705(d)(3) (proposed § 965.707) are proposed to require PHAs to follow such tenant protection/relocation actions as shall be prescribed by HUD. It is proposed that where debris, dust or fumes is going to be created during the abatement process, children under seven years of age and pregnant women should be relocated during the abatement process. Specific guidance for relocation will be published as part of a notice in the Federal Register following the receipt of information from outside sources as to the most appropriate and safest procedures. Public comment is solicited on relocation procedures.

Comprehensive and Homeownership Modernization Procedures

These procedures are proposed to include family projects including homeownership units constructed prior to 1978 or substantially rehabilitated prior to 1978 and (1) undergoing comprehensive or homeownership modernization (current regulation does not include homeownership modernization units or current units constructed between 1973 and 1978), (2) applications for comprehensive or homeownership modernization and (3) all other family projects not covered by (1) or (2). As of the effective date of this regulation, such family projects or homeownership units (assisted under section 9 of the United States Housing Act of 1937) must be randomly tested for lead-based paint and abated where lead-based paint hazards are found.

Lead-based paint testing and abatement must be accomplished simultaneously with comprehensive or homeownership modernization projects. In order to meet the statutory five-year inspection deadline, HUD proposes to require comprehensive plans for CIAP (as described in § 968.5) to be amended to include the five-year schedule for lead-based paint testing and abatement. It is proposed that random testing as currently described in § 968.9(e)(2) should be scheduled and prioritized by age of project and projects known to have lead-based paint from unit turnover testing or presence of previous EBLs. Any previous testing or abatement work which does not meet the requirements of this rule is proposed to be tested and abated in accordance with these requirements.

The procedures for random testing are proposed to be amended to include all interior and exterior surfaces and clarify random sampling of scattered site projects. Testing methods, tenant protection, lead-based paint debris disposal, recordkeeping and state and local law as described in proposed §§ 965.705, 965.707, 965.708, 965.709 and 965.710 shall be followed. Abatement as described in § 965.705 is also to be followed.

Development/Acquisition Requirements

HUD proposes to amend its development/acquisition regulations for Public and Indian Housing to avoid acquiring properties with lead-based paint hazards and to enhance the decisionmaking process with respect to cost and new construction considerations. HUD proposes that all existing properties constructed prior to 1978 (or substantially rehabilitated prior to 1978) and proposed to be acquired for family projects (whether or not they will need rehabilitation) shall be tested for lead-based paint on applicable surfaces (including defective paint surfaces) as described in 24 CFR 968.9(e)(2). If lead-based paint is found, the cost of testing and abatement shall be considered when (1) making the cost comparison to justify new construction as well as (2) meeting maximum total development cost limitations. If units containing lead-based paint are acquired, compliance with 24 CFR Part 35 and 24 CFR Part 965, Subpart H, is required. Abatement as described in 24 CFR 965.705 shall be completed prior to occupancy.

Funding

If state and local funds are unavailable, PHAs may continue to use CIAP funds (section 14 of the United States Housing Act of 1937, 42 U.S.C. 1437) for testing and abatement of EBL units, PHA owned or operated child care facilities used by EBL children and interior common areas and exteriors where necessary and appropriate. Additionally, under section 14 of the United States Housing Act of 1937, a new funding eligibility in Group 2 will be added to address other family projects or vacant units which are not undergoing comprehensive or homeownership modernization and which must be tested and abated. The Group 1 (CIAP emergency condition) funding preference continues to be limited to provide for activities involving EBLs. Comprehensive modernization projects continue to be eligible for testing and abatement funding.

VI. Section-by-Section Review of Proposed Regulation

The proposed regulations amend Parts 35, 941, 965 and 968. With the exception of the Public and Indian Housing regulations (Parts 965 and 968) described above, the remaining amendments are described below. Part 35 would be amended by revising Subpart A's notification requirements. Section 35.5(b) reflects the 1987 Act's amendments. Each Assistant Secretary will use the same notification. Such notification will be prepared after consultation with the National Institute of Building Sciences. Section 35.5(c) was inadvertently omitted when the final regulation for rehabilitation programs was published on February 17, 1987 (52 FR 4870). Sections 35.24(b) and 35.56 would be amended to generically describe covering methods and prohibit all open flame removal methods.

As part of the final rulemaking required by the 1987 Act, HUD plans to change the definition of "applicable surfaces" to include all interior and exterior painted surfaces of residential structures and to change the construction cut-off dates to 1978 for other HUD programs, including certain FHA Single Family and Multifamily Housing Programs, Section 8 Housing Assistance Payments Program for Substantial Rehabilitation, Section 8 Existing Housing Certificate, Section 8 Moderate Rehabilitation Program, Community Development Block Grant, Urban Development Action Grant, Secretary's Fund, Section 312 Rehabilitation Loan and Rental Rehabilitation Programs. Sections to be revised with the new definition of applicable surface include §§ 35.22, 200.805, 510.410(c)(1), 511.11(f)(3)(i), 570.608(c)(2), 882.109(i)(2), 882.404(c) and 886.113(i)(2). The 1978 construction cut-off date would be inserted into the following regulations: §§ 35.24(b)(1), 200.815(b), (c) and (d); 200.820(b) and (c); 200.825(b) and (c); 510.410(c)(2); 511.11(f)(3)(ii), 570.608(c)(3); 882.109(i)(3) and (4); 882.404(c)(3) and (4); and 882.113(i)(3) and (4). The current testing and abatement requirements would continue to apply.

Other Matters

Regulatory Flexibility Act

Under 5 U.S.C. 605(b) (the Regulatory Flexibility Act), the undersigned hereby certifies that this proposed rule does not have a significant economic impact on a substantial number of small entities. HUD finds that there are not anticompetitive discriminatory aspects of the rule with regard to small entities nor are there any unusual procedures that would need to be complied with by small entities.

Environmental Impact

A Finding of No Significant Impact with respect to the environment has been made in accordance with Part 50 of this title, which implements section 102(2)(C) of the National Environmental Policy Act of 1969, 42 U.S.C. 4332. The Finding of No Significant Impact is available for inspection and copying during regular business hours in the Office of the Rules Docket Clerk, Room 10276, 451 Seventh Street, SW., Washington, DC 20410.

OMB Control Number

Information collection requirements contained in §§ 965.705, 965.706(c) and (d)(2), and 968.9(e)(2) and (3) of this proposed rule have been submitted to the Office of Management and Budget under the provisions of the Paperwork Reduction Act of 1980 (44 U.S.C. 3501–3502). No person may be subjected to a penalty for failure to comply with these information collection requirements until they have been approved and assigned an OMB control number. The OMB control number, when assigned, will be announced by separate notice in the **Federal Register**.

Regulatory Impact Analysis

This rule qualifies as a major rule as defined in Executive Order 12291. The Department is conducting cost/benefit analysis of the proposed regulations using in part the public and Indian housing modernization needs study. This cost analysis serves as a Regulatory Impact Analysis. The cost study will be available prior to publication of the final rule from the Rules Docket Clerk, Room 10276, Department of Housing and Urban Development, 451 Seventh Street, SW., Washington, DC 20410.

Semiannual Agenda of Regulations

This proposed rule was not listed under the Office of the Secretary or Office of Public and Indian Housing in the Department's Semiannual Agenda of Regulations published on October 26, 1987 (52 FR 40358) under Executive Order 12291 and the Regulatory Flexibility Act. This proposed rule is in response to section 566 of the Housing and Community Development Act of 1987 which was enacted on February 5, 1988.

Legislative Review

This proposed rule was not transmitted to the Committee on Banking, Housing, and Urban Affairs of the Senate or the Committee on Banking, Finance and Urban Affairs of the House of Representatives under section 7(o) of the Department of Housing and Urban Development Act. Section 7(o)(2)(A) requires certain rules to be transmitted to both Committees at least 15 calendar days of continuous session prior to their publication for comment in the **Federal Register**. Given section 556's 60-day and 120-day periods for proposed and final rulemaking and the 1988 Congressional recess schedules, the Department interprets the statutory rulemaking schedule as an expression of Congressional intent to exempt this rulemaking from the requirements of section 7(o)(2) and (3).

List of Subjects

24 CFR Part 35

Lead poisoning, Reporting and recordkeeping requirements.

24 CFR Part 200

Administrative practice and procedure, Claims, Equal employment opportunity, Fair housing, Housing standards, Loan programs—Housing and community development, Mortgage insurance, Organization and functions (Government agencies), Reporting and recordkeeping requirements, Minimum property standards, Incorporation by reference.

24 CFR Part 510

Loan programs—Housing and community development, Housing, Relocation assistance, Home improvement, Rehabilitation, Urban renewal.

24 CFR Part 511

Rental rehabilitation grants, Administrative practice and procedure, Grant programs—Housing and community development, Low and moderate income housing, Reporting and recordkeeping requirements.

24 CFR Part 570

Community development block grants, Grant programs—Housing and community development, Loan programs—Housing and community development, Low and moderate income housing, Pockets of poverty, Small cities.

24 CFR Part 882

Grant programs—Housing and community development, Housing, Mobile homes, Rent subsidies, Low and moderate income housing.

24 CFR Part 886

Grant programs—Housing and community development, Low and moderate income housing, Rent subsidies.

24 CFR Part 941

Loan programs—Housing and community development, Public housing, Prototype costs, Cooperative agreements, Turnkey.

24 CFR Part 965

Energy conservation, Loan programs—Housing and community development, Public housing, Utilities.

24 CFR Part 968

Loan programs—Housing and community development, Public housing, Reporting and recordkeeping requirements, Grant programs—Housing and community development, Indians.

Accordingly, 24 CFR Parts 35, 941, 965 and 968 would be amended as set forth below, and conforming amendments to Parts 200, 510, 511, 570, 882 and 886 would also be adopted as explained in section VI of the Supplementary Information.

PART 35—LEAD-BASED PAINT POISONING PREVENTION IN CERTAIN RESIDENTIAL STRUCTURES

1. The authority citation of Part 35 would continue to read as follows:

Authority: Lead-Based Paint Poisoning Prevention Act (42 U.S.C. 4821-4846); sec. 7(d), Department of Housing and Urban Development Act (42 U.S.C. 3535(d)).

2. Section 35.5 would be amended by revising paragraph (b) and adding a new paragraph (c) to read as follows:

§ 35.5 Requirements.

* * * * *

(b) Each Assistant Secretary shall take necessary actions to implement the requirements of paragraph (a) of this section with respect to the HUD programs within his/her administrative jurisdiction. Such actions shall include providing the required notification (prepared by the Secretary after consultation with the National Institute of Building Sciences) and establishing procedures to:

(1) Provide evidence that the required notification has been received by purchasers and tenants of HUD-associated housing constructed prior to 1978, and

(2) Require the inclusion of appropriate provisions in contracts of sale, rental or management of HUD-associated housing to assure that purchasers and tenants receive the required notification.

(c) Any requirement of this section, except use of the required notification, shall be deemed superseded by a regulation promulgated by an Assistant Secretary with respect to any program under his or her jurisdiction which states expressly that it is promulgated pursuant to the authorization granted in this section and supersedes, with respect to programs within its defined scope, the notification requirements prescribed by this section. *See, e.g.*, 24 CFR 570.608(b) (Community Development Block Grants).

3. Section 35.24 would be amended by revising paragraphs (b)(2)(ii) and (b)(4) to read as follows:

§ 35.24 Requirements.

* * * * *

(b) * * *

(2) * * *

(ii) Covering may be accomplished by such means as adding a layer of wallboard to the wall surface. Depending on the wall condition, wall coverings which are permanently attached may be used. Covering or replacing trim surfaces is also permitted. Paint removal may be accomplished by such methods as scraping, heat treatment (infra-red or coil-type heat guns) or chemicals. In the case of defective paint spots, scraping and repainting the defective area is considered adequate treatment. Machine sanding and use of propane or gasoline torches (open-flame methods) are not permitted. Washing and repainting without thorough removal or covering does not constitute adequate treatment.

* * * * *

(4) Any requirements of this section shall be deemed superseded by a regulation promulgated by an Assistant Secretary with respect to any program under his or her jurisdiction which states expressly that it is promulgated under the authorization granted in this section and supersedes, with respect to programs within its defined scope, the requirements prescribed by this section. *See, e.g.*, 24 CFR Part 200, Subpart O

(Mortgage Insurance and Property Disposition); § 570.608 (Community Development Block Grant); § 882.109(i) (Section 8 Existing Housing); Part 965, Subpart H (Public and Indian Housing).

4. Section 35.56(a)(2) would be revised to read as follows:

§ 35.56 Requirements.

(a) * * *

(2) Treatment necessary to eliminate hazards of lead-based paint shall consist of covering or removal of defective paint surfaces. Covering may be accomplished by such means as adding a layer of wallboard to the wall surface. Depending on the wall condition, wall coverings which are permanently attached may be used. Covering or replacing trim surfaces is also permitted. Paint removal may be accomplished by such methods as scraping, heat treatment (infra-red or coil-type heat guns) or chemicals. In the case of defective paint spots, scraping and repainting the defective area is considered adequate treatment. Machine sanding and use of propane or gasoline torches (open-flame methods) are not permitted. Washing and repainting without thorough removal or covering does not constitute adequate treatment.

* * * * *

PART 941—PUBLIC HOUSING DEVELOPMENT

5. The authority citation for Part 941 would continue to read as follows:

Authority: Secs. 4, 5, and 9 of the U.S. Housing Act of 1937 (42 U.S.C. 1437b, 1437c, and 1437g); sec. 7(d), Dept. of Housing and Urban Development (42 U.S.C. 3535(d)).

6. Section 941.208 would be revised by adding a new paragraph (h) to read as follows:

§ 941.208 Other Federal requirements.

* * * * *

(h) *Lead-based paint.* All existing properties constructed prior to 1978 (or substantially rehabilitated prior to 1978) and proposed to be acquired for family projects (whether or not they will need rehabilitation) under this part shall be tested for lead-based paint on applicable surfaces (including defective paint surfaces) as described in 24 CFR 968.9(e)(2) of this chapter. If lead-based paint is found, the cost of testing and abatement shall be considered when: (1) Making the cost comparison to justify new construction as well as (2) meeting maximum total development cost limitations. If units containing lead-based paint are acquired, compliance with 24 CFR Part 35 and 24 CFR Part 965 Subpart H is required, and abatement as described in 24 CFR 965.705 shall be completed prior to occupancy.

PART 965—PHA-OWNED OR LEASED PROJECTS—MAINTENANCE AND OPERATION

7. The authority citation for Part 965 would continue to read as follows:

Authority: Secs. 2, 3, 6, and 9, United States Housing Act of 1937, (42 U.S.C. 1437, 1437a, 1437d, and 1437g); sec. 7(d), Department of Housing and Urban Development Act (42 U.S.C. 3535(d)). Subpart H is also issued under Lead-Based Paint Poisoning Prevention Act (42 U.S.C. 4821–4846)).

8. Section 965.702 would be amended by removing the definition of chewable surface and revising the definitions of applicable surface and family project to read as follows:

§ 965.702 Definitions.

Applicable surface. All intact and nonintact exterior and interior painted surfaces of a residential structure, except mechanical equipment rooms (*e.g.*, boiler rooms) and other rooms not normally accessible to the tenants.

* * * * *

Family project. Any project assisted under section 9 of the U.S. Housing Act of 1937 which is not an elderly project. For this purpose, an elderly project is one which was designated for occupancy by the elderly at its inception (and has retained that character) or, although not so designated, for which the PHA gives preference in tenant selection (with HUD approval) for all units in the project to elderly families. A building within a mixed-use project which meets these qualifications shall, for purposes of this subpart, be excluded from any family project. This definition need not apply to 0-bedroom units.

* * * * *

9. Section 965.704 would be revised to read as follows:

§ 965.704 Maintenance obligation.

In family projects constructed prior to 1978 or substantially rehabilitated prior to 1978, the PHA shall visually inspect units for defective paint surfaces as part of routine periodic unit inspections. If defective paint surfaces are found, covering or removal of the defective paint spots as described in § 35.24(b)(2)(ii) of this title shall be required. Treatment shall be completed within a reasonable period of time.

§§ 965.706 and 965.707 [Redesignated as §§ 965.710 and 965.711]

10. Sections 965.706 and 965.707 are redesignated as 965.710 and 965.711; sections 965.705, 965.708, and 965.709 are revised; and new sections 965.706 and 965.707 are added to read as follows:

§ 965.705 Unit turnover procedures.

In family projects constructed prior to 1978 or substantially rehabilitated prior to 1978, the PHA shall test units for lead-based paint on applicable surfaces (including defective paint surfaces) at unit turnover. If the family project has been randomly tested in accordance with § 968.9(e)(2) of this chapter and no lead-based paint was found, no further testing is required. If testing finds lead-based paint and the incoming tenant family has a child under seven years of age, the tenant family shall be offered a post 1978 unit, or a unit which either has been abated to the requirements of this section or found to contain no lead-based paint. If no such unit is available, the tenant family may be offered a unit which has not been tested but which shall be tested within a reasonable period of time. If the tenant family wishes to accept the original unit which tested positive for lead-based paint, the unit shall be abated within a reasonable period of time. A qualified inspector shall certify in writing the precise results of the test. Testing services available from state, local or tribal health or housing agencies or an organization recognized by HUD shall be utilized to the extent available. Testing shall be performed by using an X-ray fluorescence analyzer (XRF). Laboratory chemical analysis may be used in limited circumstances if approved by HUD in cases where it is not practical to obtain XRF readings. If the test results equal or exceed a level of $1 mg/cm^2$, the results shall be provided to the incoming tenant family and any potential purchaser. All units shall be tested in any building in which a unit is determined, at unit turnover, to have lead-based paint test results equal or exceeding a level of $1 mg/cm^2$. If lead-based paint is found on applicable surfaces, such surfaces shall be treated in accordance with § 35.24(b)(2)(ii) of this title. Wherever possible, coverings, encapsulation and replacement of painted surfaces is strongly urged to avoid lead-dust hazards to both residents and workers. If defective but not leaded paint surfaces are found, covering or removal of the defective paint spots as described in § 35.24(b)(2)(ii) of this title shall be required. Treatment shall be completed before occupancy. Final inspection and certification after treatment shall be made by a qualified inspector. Testing and treatment of lead-based paint will be considered an eligible modernization cost under Part 968 only upon PHA

certification that such services are otherwise unavailable.

§ 965.706 Procedures involving EBLs.

(a) *Procedures where a current resident child has an EBL.* When a child residing in a PHA-owned low income family project has been identified as having an EBL, the PHA shall: (1) Test all surfaces in the unit and applicable surfaces of the PHA-owned or operated child care facility if used by the EBL child for lead-based paint (Testing of exteriors and interior common areas (including non-dwelling PHA facilities which are commonly used by the EBL child under seven years of age) will be done as considered necessary and appropriate by the PHA and HUD) and abate the surfaces found to contain lead-based paint; or (2) assign the family to a post-1978 or previously tested unit which was found to be free of lead-based paint hazards or in which such hazards have been abated as described in this section.

(b) *Procedures where a non-resident child using a PHA-owned or operated child care facility has an EBL.* When a non-resident child using a PHA-owned or operated child care facility has been identified as having an EBL, the PHA shall test all applicable surfaces of the PHA-owned or operated child care facilities and abate the surfaces found to contain lead-based paint.

(c) *Testing requirements.* Testing for lead-based paint on all surfaces in the unit housing the EBL child and the PHA owned or operated child care facilities used by the EBL child shall be completed within five days after notification to the PHA of the identification of the child. A qualified inspector shall certify in writing the precise results of the test. Testing services available from state, local or tribal health or housing agencies or an organization recognized by HUD shall be utilized to the extent available. If the results equal or exceed a level of 1 mg/cm², the results shall be provided to the tenant or the family of the EBL child using PHA owned or operated child care facilities. Testing will be considered an eligible modernization cost under Part 968 only upon PHA certification that testing services are otherwise unavailable. Testing shall be performed by using an X-ray fluorescence analyzer (XRF). Laboratory chemical analysis may be used in limited circumstances if approved by HUD in cases where it is not practical to obtain XRF readings. XRF readings of 1 mg/cm² or higher are considered positive for presence of lead-based paint.

(d) *Hazard abatement requirements*—(1) *Abatement actions.* Hazard abatement actions shall be carried out in accordance with the following requirements and order of priority:

(i) Unit housing a child with an EBL. Any surface in the unit found to contain lead-based paint shall be treated. Where full treatment of a unit housing an EBL child cannot be completed within five days after positive testing, emergency intervention actions (including removing defective lead-based paint and scrubbing surfaces after such removal with strong detergents) shall be taken within such time. Full treatment of a unit housing an EBL child shall be completed within 14 days after positive testing, unless funding sources are not immediately available. In such event, the PHA may use its operating reserves and, when necessary, may request reimbursement from the current fiscal year CIAP funds, or request the reprogramming of previously approved CIAP funds.

(ii) PHA owned or operated child care facilities used by a child with an EBL. Any applicable surface found to contain lead-based paint shall be treated.

(iii) Interior common areas (including non-dwelling PHA facilities which are commonly used by EBL children under seven years of age) and exterior surfaces of projects in which children with EBLs reside. Abatement shall be provided to all surfaces containing lead-based paint.

(2) *Abatement methods.* Surfaces found to contain lead-based paint shall be treated in accordance with § 35.24(b)(2)(ii) of this title. The PHA shall select a safe and cost-effective treatment for the surface under the circumstances. Wherever possible, coverings, encapsulation and replacement of painted surfaces is strongly urged to avoid lead-dust hazards to both residents and workers. Final inspection and certification after treatment shall be made by a qualified inspector.

§ 965.707 Tenant protection.

The PHA shall take appropriate action in order to protect tenants including children with EBLs, other children, and pregnant women from hazards associated with abatement procedures. Where debris, fumes or dust is going to be created during the abatement process, such action shall include the relocation of tenants with children under seven years of age and pregnant women in order to mitigate possible health hazards arising from the abatement process. Tenant relocation may be accomplished with CIAP assistance.

§ 965.708 Disposal of lead-based paint debris.

The PHA shall dispose of lead-based paint debris in accordance with applicable local, state or Federal requirements. (See, *e.g.*, 40 CFR Parts 260 through 271.)

§ 965.709 Records.

The PHA shall maintain records on which units, common areas, exteriors and PHA child care facilities have been tested, results of the testing, and the condition of painted surfaces by location in or on the unit, interior common area, exterior surface or PHA child care facility. The PHA shall report information regarding such testing, in accordance with such requirements as shall be prescribed by HUD. The PHA shall also maintain records of abatement provided under this subpart, and shall report information regarding such abatement, and its compliance with the requirements of 24 CFR Part 35, Subpart A and § 965.703 of this part, in accordance with such requirements as shall be prescribed by HUD. If records establish that a unit, PHA owned or operated child care facility, exterior or interior common area was tested or treated in accordance with the standards prescribed in this subpart before or after [effective date of this rule], such units, child care facilities, exteriors or interior common areas are not required to be re-tested or re-treated.

(Information collection requirements contained in this section were approved by the Office of Management and Budget under control number 2577-0090.)

PART 968—COMPREHENSIVE IMPROVEMENT ASSISTANCE PROGRAM

11. The authority citation for Part 968 would continue to read as follows:

Authority: Secs. 6 and 14 of the United States Housing Act of 1937, (42 U.S.C. 1437d and 1437l); sec. 7(d), Department of Housing and Urban Development Act (42 U.S.C. 3535(d)).

12. Section 968.4(h) and (i) would be revised to read as follows:

§ 968.4 Eligible costs.

* * * * *

(h) *Lead-based paint testing.* Lead-based paint testing costs, as described in §§ 965.705, 965.706 of this chapter and 968.9(e) of this part, are eligible modernization costs.

(i) *Lead-based paint hazard abatement.* Lead-based paint hazard abatement costs, as described in §§ 965.705, 965.706 of this chapter and

968.9(e) of this Part are eligible modernization costs.

* * * * *

13. Paragraph (h)(1) and (2) of § 968.5 would be revised to read as follows:

§ 968.5 Procedures for obtaining approval of a modernization program.

* * * * *

(h) *HUD preliminary funding decisions.* * * *

* * * * *

(1) Group 1, projects having emergency conditions that pose an immediate threat (*i.e.*, must be corrected within one year of funding approval) to tenant health and safety. Funding is limited to correction of emergency conditions and may not be used for substantial rehabilitation. Emergency conditions include all testing and abatement as required by § 965.706 of this chapter.

(2) Group 2, projects: (i) Having conditions which threaten tenant health or safety or having a significant number (10 percent or more) of vacant or substandard units and (ii) located in PHAs having demonstrated a capability of carrying out the proposed modernization activities (comprehensive, special purpose and homeownership modernization) or (iii) other family projects not receiving comprehensive modernization funds as defined in § 968.3, and are required to conduct testing and abatement under § 968.9(e)(1)(iii) of this part. Within this group, the Secretary's highest priority is for testing of lead-based paint in family projects (as defined in § 965.702 of this chapter) as described in § 968.9(e) of this part. The Secretary may also give priority to additional factors, such as the correction of physical disparities under the nondiscrimination preference, second or subsequent stage of comprehensive modernization, cost benefit, and the severity of lead-based paint hazard abatement needs.

* * * * *

14. Paragraphs (e) (1), (2) and (3) and the OMB approval number of § 968.9 would be revised to read as follows:

§ 968.9 Other program requirements.

* * * * *

(1) *General.* The PHA shall comply with the Lead-Based Paint Poisoning Prevention Act (42 U.S.C. 4821–4846) and HUD implementing regulations (24 CFR Part 35 and Part 965, Subpart H). Comprehensive plans for CIAP (as described in § 968.5 of this Part) shall be amended to include the schedule for lead-based paint testing and abatement. Testing shall be completed within five years from [the date of publication of the final rule]. Testing and abatement shall be completed with respect to family projects approved for comprehensive and homeownership modernization (paragraph (e)(i) of this section), applications for family projects for comprehensive and homeownership modernization (paragraph (e)(1)(ii) of this section) and other family projects not undergoing comprehensive and homeownership modernization (paragraph (e)(1)(iii) of this section). Any previous testing or abatement work which does not meet the requirements of this rule must be tested and abated in accordance with these requirements.

(i) *Comprehensive and Homeownership Modernization in Progress.* With respect to family projects approved for comprehensive and homeownership modernization (assisted under section 9 of the United States Housing Act of 1937) which may contain lead-based paint for which funds have been reserved by HUD before [effective date of this regulation], no construction contracts, excluding those contracts solely for emergency or energy conservation work items, shall be executed until random testing as described in this paragraph has taken place and any necessary abatement as described in this paragraph is included in the modernization budget.

(ii) *Applications for Comprehensive and Homeownership Modernization Projects.* With respect to applications for family projects for comprehensive and homeownership modernization (assisted under section 9 of the United States Housing Act of 1937) which may contain lead-based paint for which funds are reserved on or after [effective date of this regulation], no construction contracts, excluding those contracts solely for emergency or energy conservation work items, shall be executed until random testing as described in this paragraph has taken place and any necessary abatement as described in this paragraph is included in the modernization budget.

(iii) *Other Family Projects Not Undergoing Comprehensive and Homeownership Modernization.* Any family projects (assisted under section 9 of the United States Housing Act of 1937) not undergoing comprehensive and homeownership modernization (as covered in paragraphs (e)(1) (i) and (ii) in this section) including family projects which previously have been comprehensively or homeownership modernized under previous regulations shall be randomly tested as described in this paragraph and abated if lead-based paint is found as described in this paragraph.

(2) *Random testing.* If the family project (including homeownership units) was constructed prior to 1978 or substantially rehabilitated prior to 1978, the PHA shall cause a random sample of all family project units to be tested for lead-based paint on applicable surfaces (including defective painted surfaces). Random testing shall be scheduled or prioritized by age of the family projects and whether the family projects are known to have lead-based paint from unit turnover testing or presence of previous EBLs. Ten units shall be tested in family projects that are comprised of contiguous units which were built at the same time and contain twenty or more units. Six units shall be tested in similar projects with fewer than twenty units. A sample of interior common areas and exterior surfaces which are part of the family project shall also be tested. For scattered site family projects involving multi-unit structures, ten units shall be tested in structures containing twenty or more units and six units shall be tested in projects with fewer than twenty units, together with a sample of interior common areas and exterior surfaces and defective paint surfaces which are part of the family project. For other scattered site family projects involving single unit structures which are not contiguous or were built at different times, the PHA shall cause each unit to be tested for lead-based paint on applicable surfaces. The interior common areas required to be sampled by this paragraph may include PHA-owned or operated child care facilities or non-dwelling PHA facilities commonly used by children under seven years of age. If none of the tested units, interior common areas or exterior surfaces contain lead-based paint, the family projects may be considered free of lead-based paint, and no further testing or abatement action will be required. If lead-based paint is found in any units in the sample, all units in the family project are required to be tested. If lead-based paint is found in any interior common areas, all interior common areas in the family project are required to be tested. If lead-based paint is found on any exterior surface, all exterior surfaces in the family project are required to be tested. In the family projects that are known to contain some lead-based paint, no random sampling is necessary, but all applicable surfaces shall be tested. Testing, tenant protection, lead-based paint debris disposal, recordkeeping and state and local law requirements as described in §§ 965.705, 965.707, 965.708, 965.709 and 965.710 of this chapter shall be followed. Random testing as described in this paragraph (2) is an eligible planning cost as described in § 968.4(d) of this part. Where abatement

will result from rehabilitation activities planned [*i.e.*, where all applicable surfaces will be replaced, covered, or otherwise abated as described in this part], those surfaces need not be tested.

(3) *Abatement.* If lead-based paint is found on applicable surfaces, such surfaces shall be treated in accordance with § 965.705 of this chapter. Abatement within a comprehensive and homeownership modernization project should be prioritized in relation to the immediacy of the hazards found to children under seven years of age.

* * * * *

(Information collection requirements contained in paragraph (e)(1) were approved by the Office of Management and Budget under control number 2577-0096)

Dated: March 25, 1988.

Samuel R. Pierce, Jr.,

Secretary.

[FR Doc. 88-7371 Filed 4-4-88; 8:45 am]

BILLING CODE 4210-33-M

VOL 53 ISS 65 AP 5 1988 UMI

federal register

Tuesday
April 5, 1988

Part III

Department of Education

Applications for New Awards for Fiscal Year 1988 Under the Star Schools Program; Notice

DEPARTMENT OF EDUCATION

[CDFA NO: 84.203]

Notice Inviting Applications for New Awards for Fiscal Year 1988 Under the Star Schools Program

Purpose of Program: Provides demonstration grants to eligible telecommunications partnerships to develop, construct and acquire telecommunications audio and visual facilities and equipment, to develop and acquire instructional programming, and to obtain technical assistance for the use of such facilities and instructional programming, in order to encourage improved instruction in mathematics, science, and foreign languages as well as other subjects such as vocational education.

Deadline for Transmittal of Applications: June 15, 1988.

Available Funds: $19,148,000.

Estimated Range of Awards: Up to $10,000,000 per year.

Project Period: Awards will be made for a period of up to two years. Funding of projects after the first year will be contingent upon availability of funds from future Star Schools appropriations, and the other factors set forth in 34 CFR 75.253(a).

Budget Period: 12 months.

Important Notice to Applicants: This notice is a complete application package containing all the necessary information, application forms, and instructions needed to apply for a grant under this program. No other application package is necessary.

Authority and Description of the Program

The Star Schools Program for fiscal year 1988 is authorized under Pub. L. 100-202 (Permanent Continuing Appropriations for Fiscal Year 1988). Section 137(a) of Pub. L. 100-202 states that the Star Schools Program is to be carried out in accordance with the provisions of Title IX of the Education for Economic Security Act, relating to Star Schools, as contained in Section 6005, of S. 373, the Senate amendment to H.R. 5. (See Robert T. Stafford Elementary and Secondary Education Improvement Act, S. 373, 133 *Cong. Rec.* S17046-47, Dec. 2, 1987.)

Eligible Parties

Telecommunications partnerships must be organized on a statewide or multistate basis to be eligible. Two types of partnerships are eligible:

(a) A public agency or corporation established for the purpose of developing and operating telecommunications networks to enhance educational opportunities provided by educational institutions, teacher training centers, and other entities. Any such agency or corporation must represent the interests of elementary and secondary schools eligible to participate in Chapter 1 of the Act; or

(b) A partnership that will provide a telecommunications network that includes three or more of the following, at least one of which shall be an agency described in (1) or (2):

(1) A local educational agency that has a significant number of elementary and secondary schools that are eligible for assistance under Chapter 1 of the Act, or are operated by the Department of Interior for Indian children eligible under section 1005(d) of the Act;

(2) A State educational agency, or a State higher education agency;

(3) An institution of higher education;

(4) A teacher training center which provides preservice and inservice training and which receives Federal financial assistance or has been approved by a State agency;

(5) A public agency with experience or expertise in operating or planning a telecommunications network;

(6) A private organization with such experience;

(7) A public broadcasting entity with such experience.

Priorities

In accordance with 34 CFR 75.105(c)(2)(ii), the Secretary shall select an application that meets one or more of the following priorities over an application of comparable merit that meets fewer of the priorities or none of the priorities. Priority will be given to applications that demonstrate that:

(a) A concentration and quality of mathematics, science and foreign language resources will, by their distribution through the eligible telecommunications partnership, offer significant new educational opportunities to network participants, particularly to traditionally underserved populations and areas with scarce resources and limited access to courses in mathematics, science, and foreign languages.

(b) The eligible telecommunications partnership has secured the direct cooperation and involvement of public and private educational institutions, State and local government, and industry in planning the network.

(c) The eligible telecommunications network will serve the broadest range of institutions, including public and private elementary and secondary schools, particularly schools having significant numbers of children counted for the purpose of Chapter 1 of the Act, programs providing instruction outside of the school setting, institutions of higher education, teacher training centers, research institutes, and private industry.

(d) A significant number of educational institutions have agreed to participate or will participate in the use of the telecommunications system for which assistance is sought.

(f) The eligible telecommunications partnership will have substantial academic and teaching capabilities including the capability of training, retraining, and inservice upgrading of teaching skills.

(g) The eligible telecommunications partnership will serve a multistate area.

(h) The eligible telecommunications partnership will, in providing services with assistance sought under the Act, meet the needs of groups of individuals traditionally excluded from careers in mathematics and science because of discrimination, inaccessibility, or economically disadvantaged backgrounds.

Geographic Distribution

The Secretary shall assure an equitable geographic distribution of grants.

Matching Funds

The Federal share for any grant shall be 75 percent. Applicants must provide at least 25 percent matching on a cash or in-kind basis. Determinations as to which costs or contributions may be counted toward the matching requirement will be made in accordance with 34 CFR Part 74, Subpart G (Cost-Sharing or Matching). All resources must be used to supplement and not supplant resources otherwise available for purposes of the Act. The Secretary will consider requests to reduce or waive matching requirements upon a showing of financial hardship.

Budget Requirement

The Secretary is required by the Act to award not less than 25 percent of the funds appropriated for instructional programming, and not less than 50 percent for facilities, equipment, teacher training or retraining, technical assistance, or programming for local educational agencies which are eligible to receive assistance under Chapter 1 of the Act. Therefore each applicant is requested to provide a separate detailed budget for activities associated with each of these two areas. See Special Budget Requirement. (Appendix F)

Definitions

The following definitions apply to the terms used in this notice:

"Act" means the Robert T. Stafford Elementary and Secondary Education Improvement Act, as introduced in S. 373, the Senate Amendment to H.R. 5.

"Educational institution" means an institution of higher education, a local educational agency, or a State educational agency.

"Institutional" of higher education" has the same meaning given that term under section 1201(a) of the Higher Education Act of 1965, as amended.

"Instructional programming" means courses of instruction for students and training courses for teachers, and materials for use in such instruction and training which have been prepared in audio and visual form on tape, disc, film or live, and presented by means of telecommunications devices.

"Local educational agency" means a public board of education or other public authority legally constituted within a State for either administrative control or direction of, or to perform a service function for, public elementary or secondary schools in a city, county, township, school district, or other political subdivision of a State, or such combination of school districts or counties as are recognized in a State as an administrative agency for its public elementary or secondary schools. "Local educational agency" includes any other public institution or agency having administrative control and direction of a public elementary or secondary school.

"Public broadcasting entity" has the same meaning given that term in section 397 of the Communications Act of 1934.

"Secretary" means the Secretary of Education.

"State" means each of the several States, the District of Columbia, the Commonwealth of Puerto Rico, Guam, American Samoa, the Virgin Islands, the Trust Territory of the Pacific Islands, and the Commonwealth of the Northern Mariana Islands.

"State educational agency" means the officer or agency primarily responsible for the State supervision of public elementary and secondary schools.

Selection Criteria

(a)(1) The Secretary evaluates the applications for new grants under the Star Schools Program on the basis of the selection criteria in paragraph (b).

(2) The Secretary awards up to 100 points, including an additional 15 points distributed in accordance with 34 CFR 75.210(c).

(3) The maximum possible score for each criterion is indicated in parentheses after the heading of the criterion.

(b)(1) *Meeting the purpose of the authorizing statute.* (30 points) The Secretary reviews each application to determine how well the project will meet the purpose of the statute that authorizes the program, as stated in the "Purpose of Program" section of this notice, including consideration of—

(i) The objectives of the project; and

(ii) How the objectives of the project further the purposes of the authorizing statute.

(2) *Extent of need for the project.* (20 points) The Secretary reviews each application to determine the extent to which the project meets specific needs recognized in the statute that authorized the program, as stated in the "Purpose of Program" section of this notice, including consideration of—

(i) The needs addressed by the project;

(ii) How the applicant identified those needs;

(iii) How these needs will be met by the project; and

(iv) The Benefits to be gained by meeting those needs.

(3) *Plan of operation.* (20 points) The Secretary reviews each application to determine the quality of the plan of operation for the project, including—

(i) The quality of the design of the project;

(ii) The extent to which the plan of management is effective and ensures proper and efficient administration of the project;

(iii) How well the objectives of the project relate to the purpose of the program, as stated in the "Purpose of Program" section of this notice;

(iv) The quality of the applicant's plans to use its resources and personnel to achieve each objective; and

(v) How the applicant will assure that project participants who are otherwise eligible to participate are selected without regard to race, color, national origin, gender, age, or handicapping condition.

(4) *Quality of key personnel.* (10 points)

(i) The Secretary reviews each application to determine the quality of key personnel the applicant plans to use on the project, including—

(A) The qualifications of the project director (if one is to be used);

(B) The qualifications of each of the other key personnel to be used in the project;

(C) The time that each person referred to in paragraphs (b)(4)(i) (A) and (B) of this section will commit to the project; and

(D) How the applicant, as part of its nondiscriminatory employment practices, will ensure that its personnel are selected for employment without regard to race, color, national origin, gender, age, or handicapping condition.

(ii) To determine personnel qualifications under paragraphs (b)(4)(i) (A) and (B) of this section, the Secretary considers—

(A) Experience and training in fields related to the objectives of the project and

(B) Any other qualifications that pertain to the quality of the project.

(5) *Budget and cost-effectiveness.* (5 points) The Secretary reviews each application to determine the extent to which—

(i) The budget for the project is adequate to support the project; and

(ii) Costs are reasonable in relation to the objectives of the project.

(6) *Evaluation plan.* (5 points) The Secretary reviews each application to determine the quality of the evaluation plan for the project, including the extent to which the applicant's methods of evaluation—

(i) Are appropriate to the project;

(ii) To the extent possible, are objective and produce data that are quantifiable.

(Cross-reference: See 34 CFR 75.590 Evaluation by the Grantee.)

(7) *Adequacy of resources.* (10 points) The Secretary reviews each application to determine the adequacy of the resources that the applicant plans to devote to the project, including facilities, equipment and supplies.

Applicable Regulations

The Education Department General Administrative Regulations (EDGAR) in 34 CFR Part 74 (Administration of Grants), Part 75 (Direct Grant Programs), Part 77 (Definitions that Apply to Department Regulations), and Part 78 (Education Appeal Board).

Application Instructions and Forms

The application should be divided into three parts. The parts are as follows:

Part I: Federal Assistance Face Sheet. (Form SF–424 and instructions.)

Part II: Budget Information (form and instructions.)

Part III: Application narrative.

These forms and instructions are found in appendices to this notice. No grant may be awarded unless a completed application has been received (34 CFR 75.104).

Instructions for Transmittal of Applications

Applicants are advised to reproduce and complete the application forms in this notice. Applicants are required to submit an original and two copies of each application.

Application Delivered by Mail: An application sent by mail must be addressed to the U.S. Department of Education, Application Control Center (CFDA #84.203), 400 Maryland Avenue, SW., Washington DC 20202.

An applicant must show proof of mailing consisting of one of the following:

(1) A legibly dated U.S. Postal Service postmark.

(2) A legible mail receipt with the date of mailing stamped by the U.S. Postal Service.

(3) A dated shipping label, invoice or receipt from a commercial carrier.

(4) Any other proof of mailing acceptable to the Secretary of Education. If an application is sent through the U.S. Postal Service, the Secretary does not accept either of the following as proof of mailing: (1) A private meter postmark, or (2) a mail receipt that is not dated by the U.S. Postal Service.

An applicant should note that the U.S. Postal Service does not ordinarily provide a dated postmark. Before relying on this method, an applicant should check with its local post office.

An applicant is encouraged to use registered or at least first class mail. Each late applicant will be notified that its application will not be considered.

Application Delivered by Hand: An application that is hand-delivered must be taken to the U.S. Department of Education, Application Control Center, Room 3633, Regional Office Building #3, 7th & D Streets, SW., Washington DC.

The Application Control Center will accept hand-delivered applications between the hours of 8:00 a.m. and 4:30 p.m. (Washington DC time) daily, except Saturdays, Sundays and Federal holidays.

An application that is hand-delivered will not be accepted after 4:30 p.m. on the closing date.

Note.—The applicant *must* indicate on the envelope the CFDA number of the competition under which the application is being submitted. (The CFDA number for this competition is 84.203.)

Information Conference

An information conference for prospective applicants and interested parties will be held on Monday, April 18, 1988 in Room 326 of 555 New Jersey Avenue, NW., Washington, DC from 1:00 p.m. until 4:00 p.m. Prospective applicants who are unable to attend are invited to contact Gordon McAndrew (see address below) for a written summary of questions asked at the conference and the answers provided.

For Further Information Contact: Gordon McAndrew, U.S. Department of Education, Office of Educational Research and Improvement, 555 New Jersey Avenue, NW., Washington DC 20208; Phone: (202-357-6126).

Assessment of Educational Impact

The Secretary requests comments on whether the information collection requirements in this notice would require transmission of information that is being gathered by or is available from any other agency or authority of the United States.

Authority: Pub. L. 100-202, Section 137(a).

Dated: March 16, 1988.

Chester E. Finn, Jr.,

Assistant Secretary for Educational Research and Improvement.

FORM APPROVED
OMB No. 1850-0623
EXPIRATION DATE 3/19/91

Appendices—Instructions and Forms

Appendix A

Instructions for Part I Federal Assistance Face Sheet (SF 424)

This is a standard form used by applicants as a required face sheet for preapplications and applications submitted in accordance with OMB Circular A-102.

The applicant completes only items 1-23. Items 24-33 are completed by Federal agencies.

Where possible, information has been preprinted for your convenience. Items which are not applicable have been marked "N/A".

Below is a list of instructions to assist you in completing the applicable items in the form.

Item

2a. Applicant's control number, if desired.

2b. Date forms prepared (at applicant's option).

4a-h. Legal name of applicant, name of primary organizational unit which will undertake the assistance activity, complete address of applicant, and name and telephone number of the person who can provide further information about this request.

5. If the applicant's organization has been assigned an ED-CRS entity number consisting of the IRS employer identification number prefixed by "1" and suffixed by a two-digit number, enter the full entity number in block 5.

7. Provide the title and a summary description of the project.

8. "City" includes town, township or other municipality.

9. List only largest unit, or units affected, such as State, country or city.

12a. Amount requested or to be contributed during the first funding/budget period by the Federal government.

12f. Enter the same amount shown in 12a.

13. Self-explanatory.

14. Self-explanatory.

23. Name and title of authorized representatives of legal applicant and signature.

BILLING CODE 4000-01-M

Appendix B **GENERAL INSTRUCTIONS FOR THE SF-424**

This is a standard form used by applicants as a required facesheet for preapplications and applications submitted in accordance with OMB Circular A-102. It will be used by Federal agencies to obtain applicant certification that states which have established a review and comment procedure in response to Executive Order 12372 and have selected the program to be included in their process have been given an opportunity to review the applicant's submission.

APPLICANT PROCEDURES FOR SECTION I

Applicant will complete all items in Section I with the exception of Box 3, "State Application Identifier." If an item is not applicable, write "NA." If additional space is needed, insert an asterisk "*," and use Section IV. An explanation follows for each item:

Item

1. Mark appropriate box. Preapplication and application are described in OMB Circular A-102 and Federal agency program instructions. Use of this form as a Notice of Intent is at State option. Federal agencies do not require Notices of Intent.

2a. Applicant's own control number, if desired.

2b. Date Section I is prepared (at applicant's option).

3a. Number assigned by State.

3b. Date assigned by State.

4a–4h. Legal name of applicant, name of primary organizational unit which will undertake the assistance activity, complete address of applicant, and name and telephone number of the person who can provide further information about this request.

5. Employer Identification Number (EIN) of applicant as assigned by the Internal Revenue Service.

6a. Use Catalog of Federal Domestic Assistance (CFDA) number assigned to program under which assistance is requested. If more than one program (e.g., joint funding), check "multiple" and explain in Section IV. If unknown, cite Public Law or U.S. Code.

6b. Program title from CFDA. Abbreviate if necessary.

7. Use Section IV to provide a summary description of the project. If appropriate, i.e., if project affects particular sites as, for example, construction or real property projects, attach a map showing the project location.

8. "City" includes town, township or other municipality.

9. List only largest unit or units affected, such as State, county, or city.

10. Estimated number of persons directly benefiting from project.

11. Check the type(s) of assistance requested.

A. Basic Grant—an original request for Federal funds.

B. Supplemental Grant—a request to increase a basic grant in certain cases where the eligible applicant cannot supply the required matching share of the basic Federal program (e.g., grants awarded by the Appalachian Regional Commission to provide the applicant a matching share).

E. Other. Explain in Section IV.

12. Amount requested or to be contributed during the first funding/budget period by each contributor. Value of in-kind contributions should be included. If the action is a change in dollar amount of an existing grant (a revision or augmentation under item 14), indicate only the amount of the change. For decreases, enclose the amount in parentheses. If both basic and supplemental amounts are included, breakout in Section IV. For multiple program funding, use totals and show program breakouts in Section IV. 12a—amount requested from Federal Government. 12b—amount applicant will contribute. 12c—amount from State, if applicant is not a State. 12d—amount from local government, if applicant is not a local government. 12e—amount from any other sources, explain in Section IV.

13b. The district(s) where most of action work will be accomplished. If city-wide or State-wide, covering several districts, write "city-wide" or "State-wide."

14. A. New. A submittal for project not previously funded.

B. Renewal. An extension for an additional funding/budget period for a project having no projected completion date, but for which Federal support must be renewed each year.

C. Revision. A modification to project nature or scope which may result in funding change (increase or decrease).

D. Continuation. An extension for an additional funding/budget period for a project with a projected completion date.

E. Augmentation. A requirement for additional funds for a project previously awarded funds in the same funding/budget period. Project nature and scope unchanged.

15. Approximate date project expected to begin (usually associated with estimated date of availability of funding).

16. Estimated number of months to complete project after Federal funds are available.

17. Complete only for revisions (item 14c), or augmentations (item 14e).

18. Date preapplication/application must be submitted to Federal agency in order to be eligible for funding consideration.

19. Name and address of the Federal agency to which this request is addressed. Indicate as clearly as possible the name of the office to which the application will be delivered.

20. Existing Federal grant identification number if this is not a new request and directly relates to a previous Federal action. Otherwise, write "NA."

21. Check appropriate box as to whether Section IV of form contains remarks and/or additional remarks are attached.

APPLICANT PROCEDURES FOR SECTION II

Applicants will always complete either item 22a or 22b *and* items 23a and 23b.

22a. Complete if application is subject to Executive Order 12372 (State review and comment).

22b. Check if application is not subject to E.O. 12372.

23a. Name and title of authorized representative of legal applicant.

FEDERAL AGENCY PROCEDURES FOR SECTION III

Applicant completes only Sections I and II. Section III is completed by Federal agencies.

26. Use to identify award actions.

27. Use Section IV to amplify where appropriate.

28. Amount to be contributed during the first funding/budget period by each contributor. Value of in-kind contributions will be included. If the action is a change in dollar amount of an existing grant (a revision or augmentation under item 14), indicate only the amount of change. For decreases, enclose the amount in parentheses. If both basic and supplemental amounts are included, breakout in Section IV. For multiple program funding, use totals and show program breakouts in Section IV. 28a—amount awarded by Federal Government. 28b—amount applicant will contribute. 28c—amount from State, if applicant is not a State. 28d—amount from local government, if applicant is not a local government. 28e—amount from any other sources, explain in Section IV.

29. Date action was taken on this request.

30. Date funds will become available.

31. Name and telephone number of agency person who can provide more information regarding this assistance.

32. Date after which funds will no longer be available for obligation.

33. Check appropriate box as to whether Section IV of form contains Federal remarks and/or attachment of additional remarks.

☆ GPO : 1984 O - 461-275 (277)

Appendix C

OMB Approval No. 0348-0006

FEDERAL ASSISTANCE

1. TYPE OF SUBMISSION (Mark appropriate box)
- ☐ NOTICE OF INTENT (OPTIONAL)
- ☐ PREAPPLICATION
- ☒ APPLICATION

2. APPLICANT'S APPLICATION IDENTIFIER
a. NUMBER
b. DATE Year month day 19

3. STATE APPLICATION IDENTIFIER NOTE: TO BE ASSIGNED BY STATE
a. NUMBER
b. DATE ASSIGNED Year month day 19

Leave Blank

SECTION I—APPLICANT/RECIPIENT DATA

4. LEGAL APPLICANT/RECIPIENT
a. Applicant Name
b. Organization Unit
c. Street/P.O. Box
d. City
e. County
f. State
g. ZIP Code
h. Contact Person (Name & Telephone No.)

5. EMPLOYER IDENTIFICATION NUMBER (EIN)

6. PROGRAM (From CFDA)
a. NUMBER 84 . 203
MULTIPLE ☐
b. TITLE Star Schools Program

7. TITLE OF APPLICANT'S PROJECT (Use section IV of this form to provide a summary description of the project.)

8. TYPE OF APPLICANT/RECIPIENT
A—State; B—Interstate; C—Substate Organization; D—County; E—City; F—School District; G—Special Purpose District; H—Community Action Agency; I—Higher Educational Institution; J—Indian Tribe; K—Other (Specify)
Enter appropriate letter ☐

9. AREA OF PROJECT IMPACT (Names of cities, counties, states, etc.)

10. ESTIMATED NUMBER OF PERSONS BENEFITING

11. TYPE OF ASSISTANCE
A—Basic Grant; B—Supplemental Grant; C—Loan; D—Insurance; E—Other
Enter appropriate letter(s) A

12. PROPOSED FUNDING

a. FEDERAL	$ .00
b. APPLICANT	.00
c. STATE	.00
d. LOCAL	.00
e. OTHER	.00
f. Total	$ .00

13. CONGRESSIONAL DISTRICTS OF:
a. APPLICANT
b. PROJECT

14. TYPE OF APPLICATION
A—New; B—Renewal; C—Revision; D—Continuation; E—Augmentation
Enter appropriate letter A

15. PROJECT START DATE Year month day 19

16. PROJECT DURATION Months

17. TYPE OF CHANGE (For 14c or 14e)
A—Increase Dollars; B—Decrease Dollars; C—Increase Duration; D—Decrease Duration; E—Cancellation; F—Other (Specify): NA
Enter appropriate letter(s)

18. DATE DUE TO FEDERAL AGENCY ► Year month day 19

19. FEDERAL AGENCY TO RECEIVE REQUEST U.S. Department of Education
a. ORGANIZATIONAL UNIT (IF APPROPRIATE) Application Control Center
b. ADMINISTRATIVE CONTACT (IF KNOWN)
c. ADDRESS
400 Maryland Avenue, S.W.
Washington, D.C. 20202

20. EXISTING FEDERAL GRANT IDENTIFICATION NUMBER

21. REMARKS ADDED ☐ Yes ☐ No

SECTION II—CERTIFICATION

22. THE APPLICANT CERTIFIES THAT► To the best of my knowledge and belief, data in this preapplication/application are true and correct, the document has been duly authorized by the governing body of the applicant and the applicant will comply with the attached assurances if the assistance is approved.
a. YES, THIS NOTICE OF INTENT/PREAPPLICATION/APPLICATION WAS MADE AVAILABLE TO THE STATE EXECUTIVE ORDER 12372 PROCESS FOR REVIEW ON: DATE _____
b. NO, PROGRAM IS NOT COVERED BY E.O. 12372 ☐
OR PROGRAM HAS NOT BEEN SELECTED BY STATE FOR REVIEW ☐

23. CERTIFYING REPRESENTATIVE
a. TYPED NAME AND TITLE
b. SIGNATURE

SECTION III—FEDERAL AGENCY ACTION

24. APPLICATION RECEIVED Year month day 19

25. FEDERAL APPLICATION IDENTIFICATION NUMBER

26. FEDERAL GRANT IDENTIFICATION

27. ACTION TAKEN
- ☐ a. AWARDED
- ☐ b. REJECTED
- ☐ c. RETURNED FOR AMENDMENT
- ☐ d. RETURNED FOR E.O. 12372 SUBMISSION BY APPLICANT TO STATE
- ☐ e. DEFERRED
- ☐ f. WITHDRAWN

28. FUNDING

a. FEDERAL	$ .00
b. APPLICANT	.00
c. STATE	.00
d. LOCAL	.00
e. OTHER	.00
f. TOTAL	$ .00

29. ACTION DATE► Year month day 19

30. STARTING DATE Year month date 19

31. CONTACT FOR ADDITIONAL INFORMATION (Name and telephone number)

32. ENDING DATE Year month date 19

33. REMARKS ADDED ☐ Yes ☐ No

NSN 7540-01-008-8162
PREVIOUS EDITION IS NOT USABLE
BILLING CODE 4000-01-C

424-103

STANDARD FORM 424 PAGE 1 (Rev. 4-84)
Prescribed by OMB Circular A-102

Appendix D

Assurances:

The applicant hereby assures and certifies that it will comply with the following special provisions of the Act:

(1) The finanical interest of the United States in the telecommunications facilities and equipment will be protected for the useful life of such telecommunications facilities and equipment.

(2) A significant portion of the facilities, equipment, technical assistance, and programming for which assistance is sought will be made available to elementary and secondary schools of local educational agencies which have a high percentage of children counted for purposes of Chapter 1 of the Act.

(3) All grant funds awarded will be used to supplement and not supplant funds otherwise available for the purposes of this program.

(4) On a schedule to be prescribed by the Secretary, a report shall be made, listing and discribing all available courses of instruction and materials to be offered by educational institutions and teacher training centers which will be transmitted over satellite, specifying the satellite on which each transmission will occur, and the time of the transmission.

Date _____

Authorized Representative _____

Title _____

Appendix E

Instructions for Part II—Budget Data

Section A—Detailed Budget

1. Salaries and Wages: Show salary and wages to be paid to personnel employed in the project. Fees and expenses for consultants must be included in line 6.

2. Fringe benefits: Include contributions for Social Security, employee insurance, pension plans, etc. Leave blank if fringe benefits applicable to direct salaries and wages are treated as part of the indirect cost.

3. Travel: Indicate the amount requested for travel for employees.

4. Equipment: Indicate the costs of nonexpendable personal property which has a useful life of more than two years and an acquisition cost of $500 or more per unit.

5. Supplies: Include the cost of consumable supplies and materials to be used in the project. These should be items which cost less than $500 per unit with a useful life of less than two years.

6. Contractural Services: Show the amount to be used for (1) procurement contracts (except those which belong on other lines such as supplies and equipment listed above); and (2) sub-grants.

7. Other: Indicate all direct costs not clearly covered by lines 1–6 above.

8. Total Direct Costs: Show totals for line 1–7.

9. Total Indirect Costs: Indicate the amount of indirect costs to be charged to the program or project. Explain under budget narrative the indirect cost rate and base.

10. Total Project Costs: Total lines 8 and 9.

Section B—Cost-Sharing

1. Project Income: Enter the dollar amount of estimated project income that will be generated by Federal funds if authorized by the Department of Education.

2. Non-Federal Funds: Enter the dollar amount of funds to be provided from other sources, e.g. State, local governments, private organizations, etc.

3. In-Kind Contributions: Enter the dollar value of donated services and goods to be used to support the program or project.

Section C—Estimate of Funding Needs

1. Enter the amount of Federal funds needs for the first year of the program or project.

2. Enter the amount of Federal funds needed to complete a multi-year program or project in its second year.

Section D—Estimated Unobligated Funds

1. Unobligated Federal Funds: Indicate the amount of funds remaining from the preceding fiscal year if the applicant is applying for continuation. Otherwise mark the space NA.

2. Unobligated non-Federal Funds: Indicate the amount of funds remaining from the preceding fiscal year that are from non-Federal sources. Otherwise mark the space NA.

3. Total: Show total for lines 1 and 2.

Section E—Budget Narrative

Attach a budget narrative that explains—

(a) the amounts for individual direct-cost categories that may appear to be out of the ordinary;

(b) the indirect cost rate and base; and

(c) the costs or contributions that are proposed for meeting matching requirements.

Appendix F

Special Budget Requirement

Provide a separate detailed budget for activities associated with each of the two areas described below, where applicable. Each such budget should employ the format set forth in Part II, as described above, that is required for the total budget:

(a) Instructional programming.

(Note: while individual applicants are not required to propose activities in this area, the Act requires that not less than 25% of the total funds appropriated be awarded by the Secretary to support such activities.)

(b) Facilities, equipment, teacher training or retraining, technical assistance or programming for local education agencies which are eligible to receive assistance under Chapter 1 of the Act.

(Note: while individual applicants are not required to propose activities in this area, the Act requires that not less than 50% of the funds appropriated are to be awarded by the Secretary to support such activities.)

BILLING CODE 4000-01-M

Appendix G

PART II
BUDGET INFORMATION

Section A - Budget Categories for Program Year (FY) 1988-89

1. Salary and Wages	$
2. Fringe Benefits	
3. Travel	
4. Equipment	
5. Supplies	
6. Contractual Services	
7. Other (itemize)	
8. Total Direct Costs (line 1 to 7)	
9. Total Indirect Costs	
10. Total Project Costs (lines 8 + 9)	

Section B - Cost Sharing

1. Program Income	$
2. Non-Federal Funds (State, local, etc.)	
3. In-Kind Contributions	

Section C - Estimate of Funding Needs

1. First Fiscal Year	$
2. Second Fiscal Year	

BILLING CODE 4000-01-C

VOL 53 ISS 65 APR 5 1988 UMI

Appendix H

Instructions For Part III—Application Narrative

Before preparing the application narrative an applicant should read carefully the description of the program including program priorities and the selection criteria the Secretary uses to evaluate applications. This information is included in this application notice. The narrative should encompass each function or activity for which funds are being requested and should:

1. Begin with an abstract that is a summary of the proposed project.

2. Describe the proposed project in light of each of the selection criteria in the order in which these criteria are listed in this notice.

3. Describe how the proposed project will meet any or all of the several priorities listed in this notice.

4. Describe the telecommunications facilities and equipment and technical assistance for which assistance is sought which may include: (a) The design, development, construction, and acquisition of State or multistate educational telecommunications networks and technology resource centers; (b) microwave, fiber optics, cable, and satellite transmission equipment; (c) reception facilities; (d) satellite time; (e) production facilities; (f) other telecommunications equipment capable of serving a wide geographic area; (g) the provision of training services to elementary and secondary school teachers (particularly teachers in schools receiving assistance under Chapter 1 of the Act in using the facilities and equipment for which assistance is sought); and (h) the development of educational programming for use on a telecommunications network.

5. In the case of an application for assistance for instructional programming, describe the types of programming which will be developed to enhance instruction and training.

6. Describe activities that will demonstrate that the telecommunications partnership has engaged in sufficient survey and analysis of the area to be served to ensure that the services offered by the telecommunications partnership will increase the availability of courses of instruction in mathematics, science, and foreign languages, as well as the other subjects to be offered.

7. Describe the teacher training policies to be implemented to ensure the effective use of the telecommunications facilities and equipment for which assistance is sought.

8. Describe how the proposed project will ensure that the financial interest of the United States in the telecommunications facilities and equipment will be protected for the useful life of such facilities and equipment. The interest of the United States in facilities and equipment is described in 34 CFR Part 74, Subpart O.

9. Describe how the proposed project will ensure that a significant portion of the facilities and programming for which assistance is sought will be made available to elementary and secondary schools of local educational agencies which have a high percentage of children counted for the purpose of Chapter 1 of the Act.

10. Describe the manner in which traditionally underserved students will participate in the benefits of the telecommunications facilities, equipment, technical assistance, and programming provided by the proposed project.

11. Describe how the applicant will ensure that grant funds are used to supplement and not supplant funds otherwise available for purposes of the Star Schools Program, as stated in the "Purpose of Program" section of this notice.

12. Include other pertinent information that may assist the Secretary in reviewing the application, including the scope and degree of services to be provided, who will render the telecommunication service, when it will be delivered, and the role of the interactive components. Justifications and specifications for equipment purchases should be clearly related to programs to be delivered as well as to existing facilities and resources. Applicants that apply for the production of instructional programming should be specific in the scope and sequence of content and production tasks to produce proposed courses of instruction. The application should enable reviewers to make clear linkages between the proposed budget and specific project tasks, operations, and service delivery.

Please limit the application narrative to 45 double-spaced typed pages, one side only.

Attachments to the narrative must include copies of documents associated with the applicant partnership, descriptions of partnership members, and agreements and letters of commitment associated with the assurances and priorities.

[FR Doc. 88-7423 Filed 4-4-88; 8:45 am]

BILLING CODE 4000-01-M

VOL
53

ISS
65

AP
5

1988

UMI

federal register

Tuesday
April 5, 1988

Part IV

Department of Health and Human Services

Office of Community Services

Availability of Funds and Request for Applications Under the Office of Community Services' FY 1988 Demonstration Partnership Program; Notice

BEST COPY AVAILABLE

DEPARTMENT OF HEALTH AND HUMAN SERVICES

Office of Community Services

[Program Announcement No. OCS-88-2]

Availability of Funds and Request for Applications Under the Office of Community Services' FY 1988 Demonstration Partnership Program

AGENCY: Office of Community Services, Family Support Administration, HHS.

ACTION: Announcement of availability of funds and request for applications under the Office of Community Services' Demonstration Partnership Program (DPP).

SUMMARY: The Office of Community Services (OCS) announces that competing applications will be accepted for new grants pursuant to the Secretary's authority under section 408(A)(1) of the Human Services Reauthorization Act of 1986. This program announcement consists of seven parts. Part A covers information on the legislative authority and defines terms used in the program announcement. Part B describes the purposes of this program, the types of projects that will be considered for funding and who is eligible to apply. Part C provides details on application prerequisites such as funds available, the amount of matching funds, applicants are required to commit, limitations on administrative costs, and program beneficiaries. Part D provides information on application procedures including the availability of forms, where to submit an application, criteria for initial screening of applications, and project evaluation criteria. Part E provides guidance on the content of an application package and the application itself. Part F provides instructions for completing an application. Part G details post-award requirements.

CLOSING DATE: The closing date for submission of applications is June 6, 1988.

FOR FURTHER INFORMATION CONTACT: Office of Community Services, Office of the Director, Attn: Demonstration Partnership Program, 330 C Street SW., Room 2033, Washington, DC 20201. You may also call (202) 475-0339, 475-0347 or 475-0348.

Part A—Preamble

1. Legislative Authority

Section 408(a)(1) of the Human Services Reauthorization Act of 1986 (Demonstration Partnership Agreements Addressing the Needs of the Poor) authorizes the Secretary to make grants for the development and implementation of new and innovative approaches to deal with particularly critical needs or problems of the poor which are common to a number of communities.

2. Definition of Terms

For purposes of this program announcement, the following definitions apply:

—*Eligible entity:* Any organization which (1) was officially designated as a community action agency or a community action program under the provisions of Section 210 of the Economic Opportunity Act of 1964 for fiscal year 1981 and did not lose its designation; or (2) was a limited purpose agency designated under Title II of the Economic Opportunity Act of 1964 for fiscal year 1981 which served the general purposes of a community action agency under Title II of such Act and did not lose its designation; or (3) received financial assistance under section 222(a)(4) of the Economic Opportunity Act of 1964 in fiscal year 1981; or (4) received a grant in fiscal year 1984 under the waiver provision of Pub. L. 98-139; or (5) was created under section 673(1)(C) of the Community Services Block Grant Act to serve a geographic area not previously served; or (6) came into existence during fiscal year 1982 as a direct successor in interest to a community action agency or community action program and meets all the requirements under section 675(c)(3) of the Community Services Block Grant Act. All "eligible entities" are current recipients of Community Services Block Grant funds. The majority of "eligible entities" are community action agencies. In those cases where "eligible entity" status is unclear, final determination will be made by FSA.

—*Hypothesis:* A tentative assumption made in order to draw out and test its consequences, e.g. completing a vocational training program by prisoners leads to a reduction in recidivism.

—*Innovative project:* One that departs from or significantly modifies past program practices and tests a new approach.

—*Intervention:* Any activity within a project that is intended to produce changes in the target population or the environment, and can be formally evaluated during the project. An example of an intervention is the conduct of vocational training in prison to prepare prisoners for employment following release from prison.

—*Partnership:* A formal negotiated arrangement between an eligible entity and another organization (or organizations) that provides for substantive policy and management roles for each of the partners in the conduct of the project. An arrangement where the applicant serves only as a conduit for the funds is *not* a partnership.

—*Self-sufficiency:* In the ideal sense, a condition where an individual or family, by reason of employment, does not need and is not eligible for, public assistance. Individuals and families may be more or less self-sufficient, or intermittently self-sufficient, with some income from employment but not enough over the long term to become totally independent of public assistance.

Part B—Purpose

The purposes of this program are (1) to stimulate eligible entities to develop new approaches to provide for greater self-sufficiency of the poor; (2) to test and evaluate the new approaches; (3) to disseminate project results and evaluation findings so that the new approaches can be replicated; and (4) to strengthen the ability of eligible entities to integrate, coordinate, and redirect activities to promote maximum self-sufficiency among the poor.

Projects must:

(a) Involve activities which can be incorporated into, or be closely coordinated with, eligible entities' ongoing programs;

(b) involve significant new combinations of resources or new and innovative approaches involving partnership agreements;

(c) be structured in a way that will, within the limits of the type of assistance or activities contemplated, most fully and effectively promote the purposes of the Community Services Block Grant Act as amended.

Partnership(s) between the applicant and one or more other organizations is a requirement for funding. Projects must have a measurable and potentially major impact on the causes of poverty, should be applicable to other localities with similar problems, and should have the potential for widespread replication by eligible entities.

OCS intends that projects funded under this announcement will be conducted on a scale broad enough to permit a valid evaluation.

Although all proposals must focus on developing new ways of promoting individual and family self-sufficiency, OCS will not prescribe specific hypotheses to be tested nor specific population groups or geographic areas to be targeted. However, among the many problems relating to poverty and

dependency, there are a number which merit special attention and which OCS encourages applicants to address.

With respect to families, it is clear that families now dependent on such programs as Aid to Families with Dependent Children (AFDC), Low Income Home Energy Assistance, and Food Stamps will be unable to achieve self-sufficiency without stable, sustained and adequate employment income. It is also clear that programs that have focused exclusively on jobs or job training have not always led to self-sufficiency. The challenge to applicants for funds under this program is to test new approaches to a range of problems family members encounter in trying to obtain permanent jobs.

One such major problem is the scarcity of support systems that offer integrated family service covering the whole time period needed to achieve self-sufficiency. OCS welcomes the submission of proposals that test various ways of applying the integration of services concept, including a job training/job creation component, to families who depend on public assistance on a continuing or intermittent basis.

Another pervasive problem is that of teenage pregnancy. Many teenage mothers are on public assistance and fully half of the welfare budget supports families in which the mother had her first child as a teenager. OCS encourages the submission of proposals to test new ways in which the resources of the community can be mobilized to prevent premature family formation. Another serious problem is that of unemployed young men. Many anti-poverty programs have concentrated on serving female-headed households as a way of reducing public assistance dependency while too few programs have addressed the needs of young men in the most impoverished urban and rural areas. These programs, if they exist at all, have generally failed to qualify these young men for the jobs that remain in the inner cities and impoverished rural areas. OCS would be interested in testing whether providing these men with the specific skill(s) training and related services necessary to be hired for these jobs will stimulate family reunification and promote economic self-sufficiency.

The problems caused by the lack of integrated support systems for heads of households who are seeking work, unemployed young men and at-risk teenagers do not, of course, exhaust the range of major problems confronting the poor. Applications proposing new approaches to other problems are welcome so long as such problems affect large numbers of urban and/or rural poor and are serious obstacles to the achievement of self-sufficiency.

Whatever problem or problems the applicant chooses to address, the applicant will be expected to propose solutions that depart from or modify conventional approaches and that show promise of being highly effective.

Frequently, efforts by low-income families to achieve self-sufficiency, as well as efforts by service providers to help such families become self-sufficient, are impeded by legislative, administrative, and regulatory requirements at the Federal, State, and local levels. Applicants are encouraged to identify and address these impediments where feasible and appropriate.

The use of funds for the purchase, construction or improvement of real property is prohibited. This prohibition includes expenditures for weatherization and home repairs.

Approximately nine to twelve grants will be made under this program announcement. However, no more than one grant award will be made under this program announcement to any eligible entity.

Eligible applicants are those "eligible entities" defined in Part A, Section 2., Definitions of Terms, of this announcement and whose eligibility status and capability have been certified by the State Director of the Community Services Block Grant program. (See part F, Section 5c for certification requirements.)

Part C—Application Prerequisites

1. Available Funds

$2,375,000 are available for funding projects under this program announcement.

Grant requests will be considered for an amount up to $250,000 in OCS funds.

2. Grant Duration

The period of the grant award will be determined by the nature of the individual project and the justification presented in the application. However, no grant period shall exceed 24 months.

3. Matching Funds

An applicant is required to obtain commitment of at least one private or public sector dollar for each dollar of OCS funds awarded. Thus, if an applicant is requesting $175,000 in OCS funds, at least $175,000 in additional funds must be committed to the project from private or public sector sources. Public sector resources that can be counted toward the minimum match include funds from State and local governments, and funds from various block grants allocated to the States by the Federal Government providing the authorizing legislation for these grants does not prohibit such use. Federal funds other than block grant funds may not be used to satisfy the minimum match requirement, although such funds may be applied to the project, if permitted by the Federal statutes governing the use of these funds.

There is an exception to the use of block grant funds for a demonstration project under this program. The ninety percent Community Services Block Grant (CSBG) funds that by statute are designated for use by eligible entities may not be used for the minimum match. However, OCS will accept any of the remaining ten percent (CSBG funds) as match, as well as other block grant funds transferred into the Community Services Block Grant.

Funds identified by the applicant as those which will be counted toward the minimum match requirement may be in the form of cash or in-kind fairly converted into its dollar equivalent. Such funds must be definitely committed or contingent only on receipt of an OCS grant, and must be applied to specific project activities within the OCS-approved project and used only for project purposes for the duration of the OCS grant.

Funds expended or obligated prior to the approved OCS starting date for a grant cannot be considered as matching funds. Documentation of matching funds must be in the form of letters of commitment from the donors.

4. Maintenance of Effort

The activities funded under this program announcement must be in addition to, and not in substitution for, activities previously carried on without Federal assistance. Also, funds or other resources currently devoted to activities designed to meet the needs of the poor within a community, area, or State must not be reduced in order to provide the required matching contributions. This provision will generally allow the use of block grant funds as matching funds for the demonstration project when the applicant shows that (1) it has received a real increase in its block grant allotment or (2) the purpose(s) for which the block grant funds were intended can still be achieved if some of these funds are used as matching funds for the demonstration project.

5. Administrative and Indirect Costs

OCS will accept applications that include administrative costs. However, no more than 10% of the OCS funds may

be used for administrative purposes. Administrative costs are defined as costs that are necessary to protect, monitor and properly account for Federal funds awarded. Costs associated with the internal operational management of the approved project are not considered to be administrative costs nor are costs of conducting the final audit or the third-party evaluation.

Grant funds may also be used for indirect costs. In all cases where an applicant has negotiated and claims a current indirect cost rate approved by the Department of Health and Human Services (DHHS), the Defense Contracting Agency, or some other Federal agency, this rate ordinarily will be recognized by OCS and applied to any OCS grant award. However, it is understood that both administrative and indirect costs are part of, and not in addition to, the amount of funds awarded in the subject grant. In most cases, the indirect cost rate approved will include not only administrative costs but also other allowable costs that were negotiated under the applicant's approved indirect cost rate.

Therefore, applicants with an applicable indirect cost rate exceeding 10% of the OCS grant may not propose any administrative funds in excess of that rate. Thus, although the approved indirect cost rate may exceed the normal 10% administrative cost restriction, the entire approved indirect cost rate will be accepted.

6. Program Beneficiaries

Projects proposed for funding under this announcement must result in direct benefits for low-income persons whose incomes are up to 125% of the DHHS poverty income guidelines as defined in the most recent Annual Revision of Poverty Income Guidelines published by DHHS.

Attachment A to this announcement is an excerpt from the most recently published guidelines. Annual revisions of these guidelines are normally published in February or early March of each year and are applicable to projects being implemented at the time of publication. (These revised guidelines may be obtained through the U.S. Government Printing Office at the following address: Superintendent of Documents, U.S. Government Printing Office, Washington, DC 20402.)

No other government agency or privately defined poverty guidelines are applicable for the determination of low-income eligibility for this OCS program.

7. Multiple Submittals

No applications will be considered for funding which are being submitted under other OCS program announcements.

8. Sub-Contracting or Delegating Projects

OCS will not fund any project where the role of the eligible applicant is *primarily* to serve as a conduit for funds to organizations other than the applicant. This prohibition does not bar subcontracting for specific services needed to conduct the project.

Part D—Application Procedures

1. Availability of Forms

Applications for awards under this program announcement must be submitted on Standard Form (SF) 424 provided for that purpose. Part F contains all the instructions and forms required for submittal of applications. The forms may be reproduced for use in submitting applications. Copies of this announcement are available at most local libraries and Congressional District Offices for reproduction.

If copies are not available at these sources, they may be obtained by writting or telephoning: Office of Community Services, Demonstration Partnership Program, Room 2033—Switzer Building, 330 C Street, SW., Washington, DC 20201. Attn: OCS–88–2. Telephone: (202) 475–0339 or 475–0348.

2. Application Submission

Applications must be submitted by (60 days following publication). An application will be considered to be received on time under either one of the following two circumstances:

a. The application was sent via the U.S. Postal Service or by private commercial carrier and postmarked or dated by the carrier not later than midnight of the closing date unless it arrives too late to be considered by the reviewers. (Applicants are responsible for assuring that the U.S. Postal Service or private commercial carrier dates the application package. Applicants should be aware that not all post offices or private commercial carriers provide a dated postmark unless specifically instructed to do so.)

b. The application is hand delivered on or before the closing date to the Office of Grants Management, FSA, at the address indicated below. Hand delivered applications will be accepted during the normal working hours of 8:00 a.m. and 4:30 p.m., Monday through Friday (excluding Federal legal holidays) up through the closing date. In establishing the date of receipt of hand-delivered applications, reliance will be placed on documentary evidence of receipt maintained by FSA.

Late applications will be returned to the senders without consideration in the competition.

Applications once submitted are considered final and no additional materials will be accepted by OCS.

An application with an original signature and four copies is required. Applications should be mailed or hand delivered to: Family Support Administration, Office of Grants Management, Room 2222—Switzer Building, 330 C Street SW., Washington, DC 20201. Attn: OCS–88–2.

The first page of the SF–424 must contain *in the lower right hand corner* the following designation: "DP".

3. Intergovernmental Review

The OCS Demonstration Partnership Program is covered by Executive Order 12372 which provides for review of proposed Federal assistance by State and local governments. Therefore, applicants for funds under this announcement are subject to the clearance procedures and requirements established by the State(s) in which their projects will be conducted. Consequently, applicants are reminded that clearance action through appropriate State clearinghouses must be initiated by them prior to, or simultaneous with, submittal of applications to OCS. These initial actions must be reported on the SF 424, Page 1, which is submitted to OCS. Clearance action by States need not be completed before applications are submitted to OCS. When comments become available they should be forwarded to the Family Support Administration office to which applications are submitted. (See address in item 2. above.)

4. Application Consideration

Applications which meet the screening requirements in section 5 below will be reviewed competitively. Such applications will be referred to reviewers for a numerical score and explanatory comments based solely on responsiveness to the purposes outlined in Part B, the guidelines in Part F, and rating criteria published in this announcement.

Applications will be reviewed and rated by persons outside of the OCS unit which will be directly responsible for management of the grant.

The results of these reviews will assist the Director and OCS program staff in considering competing applications. Reviewers' scores will weigh heavily in funding decisions but will not be the only factors considered. Applications will generally be

considered in order of the average scores assigned by reviewers. However, highly ranked applications are not guaranteed funding since the Director may also consider other relevant factors including, but not limited to, comments of reviewers and other government officials; program staff quality review; geographic distribution; previous program performance of applicants; compliance with grant terms under previous DHHS grants; findings in audit and investigative reports; and applicant's progress in resolving any final audit disallowances on OCS or other Federal agency grants.

OCS reserves the right to discuss applications with other Federal or non-Federal funding sources to determine the applicant's performance record.

5. Criteria for Screening Applications

a. Initial Screening

All applications that meet the published deadline for submission will be screened to determine completeness and conformity to the requirements of this announcement. Only those applications meeting the following requirements will be reviewed and evaluated competitively. Others will be returned to the applicants with a notation that they were unacceptable.

(1) The application must contain a Standard Form (SF) 424 with Parts I, II, III, IV and V completed according to instructions published in Part F of this program announcement.

(2) The SF–424 must be signed by an official of the "eligible entity" who has authority to obligate the organization legally.

(3) The applicant must submit an original and four copies of the application.

(4) The application narrative (Part IV of SF–424) must not exceed 10 pages. The entire application package, including Parts I through V of the SF–424 and all attachments must not exceed 30 pages.

(5) The application must contain a letter, signed by the State Director of the Community Services Block Grant program, certifying that the applicant is an "eligible entity" as defined by this program announcement and that it has the capacity to operate the proposed project.

(6) A signed Assurances Affidavit (See part F, Section 5, Item d).

b. Pre-Rating Review

Applications which pass the initial screening will be forwarded to reviewers for analytical comment and scoring based on the criteria detailed in Section c. below and the specific requirements contained in Part B. Prior to the programmatic review, OCS staff will verify that the applications comply with this program announcement in the following areas:

(1) *Eligibility*: Applicant meets the eligibility requirements found in Part B.

(2) *Target Populations*: The application clearly serves low-income participants and beneficiaries as defined in Part C.

(3) *Matching Funds*: The required private and/or public sector match, in the required amount, has been firmly committed and maintenance of effort demonstrated.

(4) *Grant Amount*: The amount of funds requested does not exceed $250,000 in OCS funds.

(5) *Research*: A bibliography reflecting research examining previous and current approaches to the problem being addressed is included.

(6) *Project Evaluation*: The evaluation plan must include all of the required elements found in the evaluation component section in Part F, Section 5. Applications which fail to meet *all* of the above requirements may be returned to the applicant without further consideration.

c. Review Criteria

Acceptable applications will be assessed and scored by reviewers. Each reviewer will give a numerical score for each application reviewed. These numerical scores will be supported by explanatory statements on a formal rating form describing major strengths and major weaknesses under each applicable criteria published in this program announcement.

The review process will use the following criteria coupled with the specific requirements contained in Part B.

(Note: The following criteria for use by reviewers parallel the requirements for applicants contained in Part F of this announcement. These requirements are approved under OMB Control Number 0920–0062).

Criteria for Review and Evaluation of Applications

1. *Criterion I: Organizational History and Management Capability (Maximum: 8 points).*

(i) *Organizational History* (0–3 points).

—The applicant has experience in developing and operating innovative projects that utilize a variety of resources;

—The applicant has recent experience in collaborative planning, programming and operations with the proposed partners; and

—The applicant has experience in designing and/or managing staff-conducted or third party (i.e. independent) evaluations.

(ii) *Management Capability* (0–5 points).

—The applicant's proposed project director, as well as the proposed primary person responsible for conducting the third-party evaluation, are well qualified and their professional experiences are relevant to the successful implementation of this project;

—The position description(s) are relevant to the effective implementation of the project;

—The applicant describes and logically shows that sufficient time of senior staff, including the CAA director, has been budgeted to assure timely implementation and cost effective management of the project; and

—The applicant includes information that shows the ways in which it will incorporate the project into its organizational structure and shows how the new activities will result in changes, if any, to current projects.

2. *Criterion II: Problem Definition and Needs Assessment (Maximum: 18 points).*

(i) *The poverty problem* (0–6 points).

The application clearly describes the poverty problem, identifies the factors that contribute to the perpetuation of the poverty problem, documents the extent to which the problem exists in the local community, discusses known examples of this problem in other localities and regions, and analyzes the impact of the problem nationwide.

(ii) *The research problem* (0–12 points).

The applicant provides a thorough summary of the results of its research conducted in order to identify previous and current attempts to address the problem, describes the limitations of these attempts, and explains convincingly how the proposed approach constitutes an innovative departure or significant modification of previous and current approaches.

3. *Criterion III: Project Design and Methodology (Maximum: 53 points).*

(i) *The Project Design* (0–20 points).

—The hypothesis is significant, relevant, and can be tested to determine validity;

—The application includes demographic characteristics such as income, age, race, ethnic origin, sex and marital status of the target population and shows that the choice of target groups is relevant to the hypothesis;

—The application clearly demonstrates the extent to which the

intervention(s) is innovative and appropriate to the hypothesis and to the target population; and

—The applicant describes specific plans for conducting measurable activities and proposes realistic time frames.

(ii) *Expected Outcomes* (0–14 points).

—The proposed project will have a measurable and potentially major impact upon the causes of poverty and will result in a substantial increase in the self-sufficiency of the poor; and

—The anticipated results are specified and the expected benefits for the target group(s) are delineated.

(iii) *The Evaluation Component* (0–19 points).

The Evaluation Plan:

—Clearly identifies the hypothesis to be tested, the changes to be produced (outcome objectives), the activities (interventions) that will produce the changes, and the methods for measuring the performance (these methods must assure both internal and external validity);

—Addresses in a complete, clear, concise, and logical manner:

(a) Applicable accuracy standards such as context analysis, defensible information sources, valid and reliable measurement, systematic data control, and analysis of quantitative and qualitative information;

(b) Applicable utility standards such as audience identification, evaluator credibility, report dissemination, report timeliness, and report impact;

(c) Applicable feasibility standards such as cost effectiveness; and

(d) Applicable proprietary standards such as conflict of interest and balanced reporting.

—Includes procedures that will be used to compare information about participants and non-participants and, also, isolates and systematically assesses competing explanations for the observed outcomes;

—Includes a realistic plan for disseminating the project findings to other eligible entities and to States upon request;

—Includes provisions for both summative and process evaluations; and

—Includes a specific working definition (consistent with the broad definition contained in Part A) of "self-sufficiency" for this project that permits the measurement of incremental movement of individuals and families from dependency toward self-sufficiency.

4. *Criterion IV: Partnerships and Budget (Maximum: 16 points).*

—The application demonstrates that the resources requested for the project are reasonable and adequate;

—The match resources are necessary and logical for the proposed project;

—The partnership arrangements are fully described and clearly relate to the objectives of the proposed project; and

—The total cost is reasonable and consistent with the anticipated results.

5. *Criterion V: Federal Budget Impact (Maximum: 5 points).*

(i) The project, if successful, will result in either or both of the following:

—Continued provision of services, after completion of the demonstration project, with non-federal funds; and/or

—More efficient use of existing anti-poverty resources.

Part E—Contents of Application Package and Application

(Approved by the Office of Management and Budget under Control Number 0920–0062.)

1. *Application Package.*

Each application submission must include:

a. *A signed original and four additional copies of the application.* Please note the following:

—The application narrative (Part IV, SF–424) must not exceed 10 pages and the entire application including attachments must not exceed 30 pages.

—The original must bear an original signature of the certifying representative of the applicant organization.

—Applications must be uniform in composition since OCS may find it necessary to duplicate them for review purposes. Therefore, applications must be submitted on 8½ x 11 inch paper only. They must not include colored, oversized or folded materials. Do not include organizational brochures or other promotional materials, slides, films, clips, etc. in the proposal. They will be discarded if included.

—While applications must be responsive and complete, applicants should be concise and brief in their presentation of materials and should avoid unnecessary duplication of information.

Failure to comply with the above formatting requirements may result in disqualification and return of an application.

b. *A self-addressed, stamped postcard so that acknowledgement of receipt can be returned.* (This requirement applies even if the application is accompanied by a "return receipt requested card".) Please note the following:

All applications will be assigned an identification number which will be noted on the acknowledgement. This number must be referred to in all subsequent communication with OCS concerning the application. If an acknowledgement is not received within three weeks after the deadline date, please notify Pera Daniels at (202) 245–0937.

2. *Contents of Applications.*

Each copy of the application must contain, in the order listed, each of the following:

a. A Table of Contents with page numbers noted for each major section and subsection of the proposal and each section of the attachments. Each page in the application, including those in all attachments, must be numbered consecutively.

b. A Standard Form 424 (see Attachment B). The SF–424 should be completed in accordance with instructions found in Part F of this announcement. As completed, the SF–424 should include: Part I, Federal Assistance; Part II, Project Approval Information; Part III, Budget Information—Sections A through F with attachments including a detailed budget breakdown for Section B and documentation of required matching funds; Part IV, Project Narrative; and Part V, Assurances.

c. Attachments (See Part F, Section 5).

Part F—Instructions for Completing Applications

(Approved by the Office of Management and Budget under Control Number 0920–0062.)

The forms attached to this announcement shall be used to apply for funds under this announcement.

It is suggested that you reproduce the SF–424 and type your application on the copy. If an item on the SF–424 cannot be answered or does not appear to be related or relevant to the assistance requested, write "NA" for "not applicable." Prepare your application in accordance with the following instructions.

1. *SF–424, PART I.*

Section I of Part I, SF–424.

Applicants shall complete all items in Section I. If additional space is needed, insert an asterisk (*) and use the remarks section (Part I, Section IV).

Item

1. Mark "Application" when used as a grant application. (The applicant, unless otherwise advised by the State or area-wide clearinghouse shall use a copy of the SF–424 Part I as a notification of intent to apply for Federal Assistance in accordance with procedures established by these clearinghouses and Executive Order 12372. When used for this purpose, mark "Notice of Intent".)

2a. Applicant's own control number, if desired.

2b. Date Section I is prepared.

3a. All applicants shall enter the number assigned by State clearinghouses or, if delegated by State, by area-wide clearinghouse(s). Applicants submitted to OCS must contain this identifier if provided by the applicable State/area-wide clearinghouse(s). If in doubt, consult your clearinghouse(s).

3b. Data applicant notified of clearinghouse(s) identifier code(s).

4a–4h. Enter legal name of applicant/recipient, name of primary organizational unit which will undertake the assistance activity, complete address of applicant, name and telephone number of person who can provide further information about this request.

IF THE PAYEE WILL BE OTHER THAN THE APPLICANT, ENTER IN THE REMARKS SECTION (SECTION IV OF PART I), UNDER THE HEADING "PAYEE", THE PAYEE'S NAME, DEPARTMENT OR DIVISION, COMPLETE ADDRESS AND EMPLOYER IDENTIFICATION NUMBER, AS ASSIGNED BY THE INTERNAL REVENUE SERVICE, OR THE DHHS ENTITY NUMBER, IF KNOWN.

If an individual's name and/or title is desired on the payment instrument, the name and/or title of the designated individual must be specified.

5. Enter Employer Identification Number of applicant as assigned by Internal Revenue Service. If the applicant organization has been assigned a DHHS entity number consisting of the IRS employer identification number prefixed by "1" and suffixed by a two-digit number, enter the full entity number. If applicant has other grants with DHHS and has been assigned a Payee Identification Number (PIN), enter this PIN in parenthesis ( ) beside Employer Identification Number.

6a. Enter the Catalog of Federal Domestic Assistance number assigned to this program (13.797).

6b. Enter the program title from Catalog of Federal Domestic Assistance. The title is: Community Services Block Grant Discretionary Awards—Demonstration Partnership Program.

7. Enter a title and appropriate description of project.

8. Enter appropriate letter to designate grantee type—"City" includes town, township or other municipality. If the grantee is other than that listed, specify type on "Other" line e.g., Council of Governments. Note: Non-profit organizations must submit proof of non-profit status.

9. Enter governmental unit where significant and meaningful impact could be observed. List only largest unit or units affected, such as State, county, or city. If an entire unit is affected, list it rather than sub-units.

10. Identify estimated number of persons directly benefiting from project, as described in the program narrative (SF–424, Part IV).

11. All applicants for grant funds under this program announcement should enter the letter "A".

12. Enter amount requested or to be contributed during the funding/budget period by each contributor. Item 12 must include all funding for the proposed project including all non-OCS funds which the applicant plans to mobilize.

Note: WHEN COMPLETING Item 12a, "FEDERAL" FUNDING REFERS TO ANY FEDERAL FUNDS EXCEPT THOSE FROM STATE-ADMINISTERED BLOCK GRANT FUNDS BEING PROPOSED AS MATCHING FUNDS. EACH SOURCE OF FEDERAL FUNDS SHOULD BE IDENTIFIED SEPARATELY. ALL OTHER FUNDS ARE TO BE INCLUDED IN Item 12e, "OTHER". Section IV of Part I (REMARKS) must include two additional columns detailing item 12 (b) through (e) in which public funds are distinguished from private funds, and in which total mobilized funds (including 12b, 12c, 12d and 12e) are divided into separate public and private funds components by source. This information will be used in both the initial screening and subsequent review of applications. Where allowable, the value of in-kind contributions will be included. Item definitions: 12a, amount requested from OCS and amounts deriving from other Federal sources (show separately); 12b, amount applicant will contribute; 12c, amount from State (include Block Grant funds); 12d, amount from local government, if applicant is not a local government; 12e, amount from any other sources: any overlap in fund amounts should be avoided, or if this is not possible, explained.

13a. The Congressional District identified by its State and number should correspond with the applicant's address under item 4 above.

13b. Enter the number of the Congressional District(s) and State(s) where most of the actual work of the project will be accomplished. If city-wide or State-wide covering several Districts, write "city-wide" or "State-wide".

14. Enter appropriate letter. Definitions are:

a. *New:* A submittal for the first time for a new project or project period.

b. *Renewal:* Not applicable to this OCS program.

c. *Revision:* Not applicable at this time.

d. *Continuation:* Not applicable to this OCS program.

e. *Augmentation:* Not applicable to this OCS program.

15. Enter approximate date project is expected to begin.

16. Enter estimated number of months to complete project after Federal funds are available. If the project is intended to continue beyond the OCS grant expiration date, the applicant must demonstrate in Part IV of the SF–424 that it will be able to continue project operations with other sources of funding.

17. Not applicable at this time.

18. Estimated date application will be submitted to Federal agency.

19. Indicate Federal agency to which this request is addressed—HHS/FSA, Washington, DC 20201.

20. Write "NA".

21. Check appropriate box as to whether Part I, Section IV of SF–424 contains remarks and/or additional "remarks" sheets are attached.

Section II of Part I SF–424.

Applicants shall always complete items 22a or 22b as well as 23a and 23b. An explanation follows for each item.

22a and 22b. Self explanatory.

23a. Enter name and title of authorized representative of legal applicant.

23b. Self explanatory. Note: Authorized representative must personally execute this document.

Note: APPLICANT COMPLETES ONLY SECTIONS I AND II OF PART I. SECTION III IS COMPLETED BY THE FEDERAL AGENCY TO WHOM APPLICATION IS BEING MADE.

2. *SF–424, PART II.*

Negative answers will not require an explanation unless the responsible program office requests more information at a later date. All "Yes" answers must be explained on a separate page in accordance with these instructions.

Item 1—Provide the name of the governing body establishing the priority system and the priority rating assigned to this project. If the priority rating is not available, give the approximate date that it will be obtained.

Item 2—Provide the name of the agency or board which issued the clearance and attach the documentation of status or approval. If the clearance is not available, give the approximate date that it will be obtained.

Item 3—Furnish the name of the approving agency and the approval date. If the approval has not been

received, state approximately when it will be obtained.

Item 4—Show whether the approved comprehensive plan is State, local or regional; or, if none of these, explain the scope of the plan. Give the location where the approved plan is available for examination, and state whether this project is in conformance with the plan. If the plan is not available, explain why.

Item 5—Show the population residing or working on the Federal Installation who will benefit from this project. (Federally recognized Indian reservations are not "Federal Installations".)

Item 6—Show the percentage of the project work that will be conducted on Federally-owned land or leased land. Give the name of the Federal Installation and its location.

Item 7—Briefly describe the possible beneficial and/or harmful effect on the environment because of the proposed project. If an adverse environmental impact is anticipated, explain what action will be taken to minimize the impact.

Item 8—State the number of individuals, families, businesses, or farms this project will displace, if any.

Item 9—Show the Catalog of Federal Domestic Assistance number, the program number, the type of assistance, the status, the amount of each project where there is related previous, pending or anticipated assistance from another funding source. Whenever this item is answered in the affirmative (i.e. whenever items 12c, 12d, or 12e of Part I have non-zero entries), Part II must be accompanied by additional documentation which identifies the source of all of the State, local and other funds listed in item 12 of Part I of the SF–424. This documentation must include assurances of the availability of these funds. Funds already mobilized for this project must be evidenced by copies of applications to, and award documents or letters of commitment from, the expected source of these funds. OCS reserves the right to contact these sources regarding anticipated funding or previous assistance.

3. *SF–424, PART III.*

IN COMPLETING THESE SECTIONS, THE "FEDERAL" FUND/BUDGET ENTRIES WILL RELATE TO ANY FEDERAL FUNDS EXCEPT THOSE FROM STATE ADMINISTERED BLOCK GRANTS BEING PROPOSED AS MATCHING FUNDS. EACH SOURCE OF FEDERAL FUNDS SHOULD BE IDENTIFIED SEPARATELY.

Sections A and D of Part III must contain entries for both Federal and non-Federal (mobilized) funds. Section B contains entries for OCS funds only. Section C contains entries for non-Federal (mobilized) funds only. Clearly identified continuation sheets in SF–424, Part III format should be used as necessary.

Section A—Budget Summary.

Lines 1–4.

Col. (a): Enter on Line 1 under Column (a) "Administrative, applicant"; and enter on Line 2 under Column (a) "Administrative, project."

Col. (b): Enter on Line 1 under Column (b) the program announcement Number OCS–88–2. Enter on Line 2 under Column (b) the appropriate Catalog of Federal Domestic Assistance number, 13.793.

Col. (c)–(g): Leave Columns (c) and (d) blank. For each line entry, enter in Columns (e), (f), and (g) the appropriate amounts needed to support the project for the budget period.

Line 5.

Enter the totals for all columns completed, (c) through (g).

Section B—Budget Categories.

Columns (1)–(5).

In OCS applications, it is only necessary to complete Columns (1) *and* (5). For the project entered in Column 1, enter the total requirements for OCS Federal funds.

Allowability of costs are governed by applicable cost principles set forth in Sub-part Q of 45 CFR Part 74.

Personnel-Line 6a: Enter the total costs of salaries and wages of applicant/grantee staff only. Do not include costs of consultants or personnel costs of delegate agencies or of specific project(s) or businesses to be financed by the applicant.

Fringe Benefits-Line 6b: Enter the total costs of fringe benefits unless treated as part of an approved indirect cost rate which is entered on Line 6.j. Provide a breakdown of amounts and percentages that comprise fringe benefit costs.

Travel-Line 6c: Enter total costs of out-of-town travel by employees of the project. Do not enter costs for consultant's travel or local transportation. Provide justification for requested travel costs. (See Line 6h and Section F, Line 21, for additional instructions).

Equipment-Line 6d: Enter the total costs of all non-expendable personal property to be acquired by the project. "Non-expendable personal property" means tangible personal property having a useful life of more than two years and an acquisition cost of $500 or more per unit. An applicant may use its own definition of non-expendable personal property, provided that such a definition would at least include all tangible personal property as defined in the preceding sentence. (See Section F, Line 21 for additional requirements).

Supplies-Line 6e: Enter the total costs of all tangible personal property (supplies) other than that included on line 6d.

Contractual-Line 6f: Enter the total costs of all contracts, including (1) procurement contracts (except those which belong on other lines such as equipment, supplies, etc.) and, (2) contracts with secondary recipient organizations including delegate agencies and specific project(s) or businesses to be financed by the applicant. Also include any contracts with organizations for the provision of technical assistance. Do not include payments to individual service contractors on this line. If available at the time of application, attach a list of contractors indicating the name of the organization, the purpose of the contract and the estimated dollar amount of the award. If the Name of Contractor, Scope of Work, Estimated Total are not available or have not been negotiated, include in Line h, "Other".

Note: Whenever the applicant/grantee intends to delegate part of the program to another agency, the applicant/grantee must submit Sections A and B of Part III, Budget Section, completed for each delegate agency by agency title, along with the required supporting information referenced in the applicable instructions. The total costs of all such agencies will be part of the amount shown on Line 6(f). Provide back-up documentation identifying name of contractor, purpose of contract and major cost elements.

Construction-line 6g: Not Applicable.

Other-Line 6h: Enter the total of all other costs. Such costs, where applicable, may include, but are not limited to, insurance, food, medical and dental costs (noncontractual), fees and travel paid directly to individual consultants, local transportation (all travel which does not require per diem is considered local travel), space and equipment rentals, printing and publication, computer use, training costs including tuition and stipends, training service costs including wage payments to individuals and supportive service payments, and staff development costs.

Total Direct Charges-Line 6i: Show the total of Lines 6a through 6h.

Indirect Charges-Line 6j: Enter the total amount of indirect costs. If no indirect costs under a currently approved agreement are requested enter "none". This line should be used only when the applicant (except local governments) currently has an indirect

cost rate approved by the Department of Health and Human Services or other Federal agencies. Enclose a copy of the current rate agreement with the application. Local governments shall enter the amount of the indirect costs determined in accordance with the Federal agency's requirements. It should be noted that when an indirect cost rate is requested, those costs included in the indirect cost pool should not be also charged as direct costs to the grant.

Total-Line 6k: Enter the total amounts of Lines 6i and 6j. For all new applications the total amount shown in Column (5), Line 6k, should be the same as the amount shown in Section A, Column (e), Line 5.

Program Income-Line 7: Enter the estimated amount of income, if any, expected to be generated from this project. Separately show expected program income generated from OCS support and that generated from matching funds. Do not add or subtract this amount from the budget total. Show the nature and source of income in the program narrative statement in Part IV of the SF-424.

Section C—Non-Federal Resources

Lines 8–11: Enter amounts of "non-Federal" resources that will be used to support the project. Also enter here funds from State-administered federal block grants which are being proposed as matching funds. Provide a brief explanation, on a separate sheet, showing the type of contribution and whether it is in cash or in-kind. The firm commitment of these required funds must be documented and submitted with the application. Also if the applicant is proposing to use any block grant funds other than those provided under the Job Training Partnership Act, Social Services Block Grant Program, Community Development Block Grant Program, or the Low Income Home Energy Program, the legality of such use must be documented and a statement made explaining how these funds can be diverted to this project while maintaining previous anti-poverty efforts. Applicants are reminded that Community Services Block Grant funds (90%) designated for use by eligible entities may not be used as match. Failure to provide the required documentation for match will make the application ineligible for funding. *Except in unusual situations, this documentation must be in the form of letters of commitment from the organization(s)/individuals from which funds will be received.*

All material related to the match should be appended to the SF-424. When the contribution is in the form of in-kind, show the basis for computation including:

(1) Numbers and types of volunteers and rates at which their services are valued;

(2) Valuation of donated space to be used in the project, including the number of square feet and the annual rental value assigned per square foot;

(3) Determination of use allowance for grantee-owned space. (Include statement whether space was purchased or constructed, totally or in part, with federal funds for items (2) and (3));

(4) Type and value of other in-kind contributions expected. NOTE: SPECULATIVE MATCH, OR MATCH BASED ON INDEPENDENT CONTINGENCIES (SUCH AS RECEIPT OF ANOTHER GRANT) WILL NOT BE COUNTED TOWARDS THE MATCHING REQUIREMENT.

Column (a): Enter the project title.

Column (b): Enter the amount of cash and in-kind contributions to be made by the applicant.

Column (c): Enter the State contribution.

Column (d): Enter the amount of cash and in-kind contributions to be made from all other sources.

Column (e): Enter the total of Columns (b), (c), and (d).

Line 12—Enter total of each Columns (b) through (e). The amount in Column (e) should be equal to the amount on Line 5, Column (f), Section A.

Section D—Forecasted Cash Needs

Line 13—Enter the amount of Federal (OCS) cash needed for this grant, by quarter, during the budget period.

Line 14—Enter the amount of cash from all other sources needed by quarter during the budget period.

Line 15—Enter the totals of amounts on Lines 13 and 14.

Section E—Budget Estimates of Federal Funds Needed for Balance of Project(s)

No entries are required for OCS grants.

Section F—Other Budget Information

Line 21—Use this space and continuation sheets as necessary to fully explain and justify the major items included in the budget categories shown in Section B. Include sufficient detail to facilitate determination of allowability, relevance to the project, and cost benefits. Particular attention must be given to the explanation of any requested direct cost budget item which requires explicit approval by the Federal agency. Budget items which require identification and justification shall include, but not be limited to, the following:

A. Salary amounts and percentage of time worked for those key individuals who are identified in the project narrative;

B. Any foreign travel;

C. A list of all equipment and estimated cost of each item to be purchased wholly or in part with grant funds which meet the definition of nonexpendable personal property provided on Line 6d, Section B. Need for equipment must be supported in the program narrative;

D. Contractual: Major items or groups of smaller items; and

E. Other: Group into major categories all costs for consultants, local transportation, space, rental, training allowances, staff training, computer equipment, travel, etc. Provide a complete break down of all costs that make up this category. Matching funds should also be broken out in the same manner as required for Federal funds in A through E above.

Line 22—Enter the type of HHS or other Federal agency approved indirect rate (provisional, predetermined, final or fixed) that will be in effect during the funding period, the estimated amount of the base to which the rate is applied and the total indirect expense. Also, enter the date the rate was approved, where applicable. Include a copy of the rate agreement with the application.

Line 23—Provide any other explanations and continuation sheets required or deemed necessary to justify or explain any SF-424, Part III entries.

4. SF-424, PART IV, Program Narrative

The narrative should not exceed 10 pages and should include two components: (a) the Analysis of Need and (b) the Project Design.

a. *Analysis of Need.* The application should include a description of the target area and population to be served as well as a discussion of the nature and extent of the poverty problem.

The applicant should also discuss known examples of this problem in other localities and regions and provide an analysis of the impact of the problem nationwide. In addition, applicants should provide a thorough summary of the results of its research conducted in order to identify previous and current atempts to address the poverty problem and describe the limitations of these attempts. A bibliography of all the sources used in its research must be included as an attachment.

b. *Project Design.* Each applicant must include the following in its project design:

(1) A testable hypothesis that permits measurement of the extent to which the

target population has achieved greater self-sufficiency;

(2) The rationale for the approach being proposed to overcome this problem, an explanation showing how the approach proposed by the applicant is a departure from or a significant modification of previous and current approaches, and why the applicant believes that testing this approach will lead to positive outcomes;

(3) A description of the target group(s) including the number of participants and beneficiaries and their major characteristics that are relevant to the hypothesis;

(4) A thorough description of the intervention(s) that will be carried out to test the hypothesis with inclusion of target dates, in chronological order, by which the major events will occur;

(5) Inclusion of measurable objectives, intended project outcomes, and intended impact on the problems(s) that are being addressed;

(6) A concise description of all partnership agreements that involve significant combinations of resources, and/or organizations, and includes the respective responsibilities of the partners and the specific working relationships each will have with the other.

(7) Resources needed to continue project if the demonstration is successful. Explain why one or both of the following applies: (a) This demonstration, if successful, will show how to use existing anti-poverty resources more efficiently, and/or (b) services or activities conducted under this demonstration, if successful, could be continued after completion of the demonstration project with a combination non-Federal and Federal funds; and

(8) If appropriate, a plan for identifying impediments to achieving self-sufficiency that are caused by legislative, administrative, and regulatory requirements at the Federal, State, and local levels.

5. Attachments

The entire application package including attachments may not exceed 30 pages. All the attachments described below must be included in the order listed.

a. *Bibliography* (See 4a above.)

b. *Evaluation Component.* A plan for a methodologically sound third-party (i.e. independent) evaluation of the demonstration project must be attached and must:

(1) Clearly identify the hypothesis to be tested, the changes (outcome objectives) to be produced, the activities (interventions) that will produce the changes, and the methods (performance measures) for measuring the performance that will assure both internal and external validity.

(2) Address in a complete, clear, concise, and logical manner:

(a) Applicable accuracy standards such as context analysis, defensible information sources, valid and reliable measurement, systematic data control, and analysis of quantitative and qualitative information;

(b) Applicable utility standards such as audience identification, evaluator credibility, report dissemination, report timeliness, and report impact;

(c) Applicable feasibility standards such as cost effectiveness; and

(d) Applicable proprietary standards such as conflict of interest and balanced reporting.

(3) Include procedures that will be used to (a) compare information about participants and non-participants—the comparison groups—and, (b) isolate and systematically assess competing explanations for the observed outcomes. Where the use of comparison groups is not practicable, the applicant must propose an alternative method to validate the hypothesis;

(4) Include a realistic plan for disseminating the project findings, once they have been approved by OCS, to other eligible entities and to States upon request.

(5) Include provisions for both a summative and process evaluation;

(6) Include a specific working definition (consistent with the broad definition found in Part A) of "self-sufficiency" for this project that permits the measurement of incremental movement of individuals and families from dependency toward self-sufficiency. The applicant must include an assurance that the evaluation will be conducted by an independent entity, i.e. an entity organizationally distinct from, and not under the control of, the applicant.

c. *Statement on Organizational History and Management Capability.*

Each applicant must document its past efforts and current capability to address both the poverty problem and the research problem specified in the application. The applicant should demonstrate that it has (1) experience in developing and operating innovative projects that utilize a variety of resources in a cooperative and problem solving arrangement with other agencies, and (2) experience specifically related to the problem(s) and activities proposed in the application. In addition, the applicant should describe its organizational structure, summarize relevant portions, if any, of its corporate mission, strategy, and multi-year plan, summarize any examples of recent evaluation research it has conducted, and provide a current listing of all sources of funds and projects operated in the applicant's current funding year. The applicant should demonstrate and document that it has experience in designing and/or managing staff-conducted or third party (i.e. independent) evaluations.

The application must fully describe the experience and skills of the proposed project director showing that the individual is not only well qualified but that his/her professional capabilities are relevant to the successful implementation of the project. It must show clearly that sufficient time of the Executive Director and other senior staff will be budgeted to assure timely implementation and oversight of the project. Applications must also fully describe the experience and skills of the primary person responsible for conducting the third-party evaluation. If the project director and/or the person responsible for conducting the evaluation have not yet been identified, include a position description for each of these persons.

The applicant should submit for each of the partners, any of the above information which is relevant. The applicant must attach a certification from the State Director of the CSBG program stating that the applicant is (1) an eligible entity as defined in Part A and (2) that the applicant has the administrative and programmatic capability to conduct the proposed project.

The applicant should include information that shows how it will incorporate the project into its existing organizational structure and shows how the new activities will result in changes, if any, to current projects.

d. *Assurances Affidavit.*

Each applicant must submit an Assurances Affidavit in the form and language presented below:

Assurances Affidavit

The Applicant (undersigned) hereby assures and certifies that, if selected for a grant award under the Demonstration Partnership Program, it will comply with (1) Title VI of the Civil Rights Act of 1964 (Pub. L. 88–3521) and with all the requirements imposed by the Department of Health and Human Services (DHHS) regulations issued pursuant to this Title and referenced in Attachment C to this program announcement; (2) Section 504 of the Rehabilitation Act of 1973 as amended (29 U.S.C. 794) and with all requirements

imposed by the applicable DHHS regulation (45 CFR Part 84) referenced in Attachment D to this program announcement; and (3) all the regulations, policies, guidelines and requirements including 45 CFR 74 and OMB Circulars No. A-102, A-110 and applicable cost principles (Circulars A-21, A-87 and A-122) as they relate to the application, acceptance and use of Federal funds for this Federally assisted project.

The applicant further agrees that if it is selected for a grant award under the Demonstration Partnership Program, it will submit to OCS DHHS Forms 441 and 641 described in Attachments C and D to this program announcement.

Date Applicant (Type or Print)

Signature and Title of Authorized Official

Part G—Post-Award Requirements

The official award document is the Notice of Grant Award which sets forth in writing to the recipient the amount of funds awarded, the purpose of the award, other terms and conditions of the award, the effective date of the award, the budget period for which support is given, the total project period for which support is contemplated and the total recipient financial participation required.

In addition to the General Conditions and Special Conditions (where the latter are warranted) which will be applicable to grants, grantees will be subject to the provisions of appropriate Office of Management and Budget Circulars, for example, A-102 or A-110 and A-122, the last of which, among other provisions, prohibits the use of grant funds for (a) electioneering activities at the Federal, State or local level and (b) attempts to influence Federal or State legislation through either grassroots lobbying or direct contacts with Federal or State legislators or their staffs.

Grantees will be required to submit narrative quarterly progress reports, quarterly financial reports and a final audit of the project costs. (Costs associated with the completion and submission of the required grant audit may be chargeable to the grant and will not be considered as part of the up to 10% of the grant that is allowable for administrative costs.)

Grantees who will be charging administrative costs to the OCS grant will have to assure that such costs are identifiable in their records in order that auditors and OCS personnel can verify that the 10% administrative cost limitation is not exceeded where such limitation is applicable.

In addition grantees will be required to submit within sixty days of the termination of the project a final summative evaluation report and a process evaluation report. These reports will be submitted in accordance with instructions to be provided by OCS, and will be the basis for the dissemination effort to be conducted by the Office of Community Services.

David J. Kicker,

Acting Director, OCS, Deputy Administrator, Family Support Administration.

Attachment A—Annual Update of Poverty Income Guidelines
Attachment B—SF-424, Federal Assistance, Parts I through V
Attachment C—Assurance of Compliance with the Department of Health and Human Services Regulation under Title VI of the Civil Rights Act of 1964
Attachment D—Assurance of Compliance with Section 504 of the Rehabilitation Act of 1973, as amended

Attachment A—Annual Update of the Poverty Income Guidelines

This notice provides the 1988 update of the proverty income guidelines required by sections 652 and 673(2) of the Omnibus Budget Reconciliation Act of 1981 (Pub. L. 97-35). As required by the statute, this update reflects last year's change in the Consumer Price Index (CPI-U); it was accomplished using the same methodology used in previous years.

These poverty income quidelines are used as an eligibility criterion by a number of Federal programs. The guidelines are a simplified version of the Federal government's statistical poverty thresholds used by the Bureau of the Census to prepare its statistical estimates of the number of persons and families in poverty. The *poverty income guidelines* issued by the Department of Health and Human Services (formerly by the Community Services Administration) are used for *administrative* purposes—for instance, for determining whether a person or family is financially eligible for assistance or services under a particular Federal program. The *poverty thresholds* are used primarily for *statistical* purposes.

In certain cases, as noted in the relevant authorizing legislation or program regulations, a program uses the poverty income guidelines as only one of several eligibility criteria, or uses a modification of the guidelines (for example, 130 percent or 185 percent of the guidelines). Some other programs, while not using the guidelines as a criterion of individual eligibility, use them for the purpose of giving priority to lower-income persons or familes in the provision of assistance or services. In some cases, these poverty income guidelines may not become effective for a particular program until a regulation or notice specifically applying to the program in question has been issued.

The poverty guidelines given below are applicable to both farm and nonfarm families.

The following definitions (derived for the most part from language used in U.S. Bureau of the Census, Current Population Reports, series P-60, No. 158 and earlier reports in the same series) are made available for use in connection with the poverty income guidelines. Programs may use somewhat different definitions.

(a) *Family.* A family is a group of two or more persons related by birth, marriage, or adoption who reside together; all such related persons are considered as members of one family. For instance, if an older married couple, their daughter and her husband and two children, and the older couple's nephew all lived in the same house, they would all be considered members of a single family. If a household includes more than one family and/or more than one unrelated individual, the poverty guidelines are applied separately to each family and/or unrelated individual, and not to the household as a whole.

(b) *Family unit of size one.* In conjunction with the poverty income guidelines, a family unit of size one is an unrelated individual (as defined by the Census Bureau)—that is, a person 15 years old or over (other than an inmate of an institution) who is not living with any relatives. An unrelated individual may be the sole occupant of a housing unit, or may be residing in a housing unit (or in group quarters such as a rooming house) in which one or more persons also reside who are not related to the individual in question by birth, marriage, or adoption. (Examples of unrelated individuals residing with others include a lodger, a foster child, a ward, or an employee.)

(c) *Income.* Refers to total annual cash receipts before taxes from all sources, with the exceptions noted below. Income data for a part of a year may be annualized in order to determine eligibility—for instance, by multiplying by four the amount of income received during the most recent three months. Income includes money wages and salaries before any deductions. Income also includes net receipts from nonfarm or farm self-employment (receipts from a person's own business or from an

owned or rented farm after deductions for business or farm expenses). Income includes regular payments from social security, railroad retirement, unemployment compensation, strike benefits from union funds, workers' compensation, veterans' payments, public assistance (including Aid to Families with Dependent Children, Supplemental Security Income, and non-Federally-funded General Assistance or General Relief money payments), training stipends, alimony, child support, and military family allotments or other regular support from an absent family member or someone not living in the household; private pensions, government employee pensions (including military retirement pay), and regular insurance or annuity payments; college or university scholarships, grants, fellowships, and assistantships; and dividends, interest, net rental income, net royalties, periodic receipts from estates or trusts, and net gambling or lottery winnings.

As defined here, income does *not* include the following types of money received: capital gains; any assets drawn down as withdrawals from a bank, the sale of property, a house, or a car; one-time payments from a welfare agency to a family or person who is in temporary financial difficulty; tax refunds, gifts, loans, lump-sum inheritances, one-time insurance payments, or compensation for injury. Also excluded are noncash benefits, such as the employer-paid or union-paid portion of health insurance or other employee fringe benefits, food or housing received in lieu of wages, the value of food and fuel produced and consumed on farms, the imputed value of rent from owner-occupied nonfarm or farm housing, and such Federal noncash benefit programs as Medicare, Medicaid, Food Stamps, school lunches, and housing assistance.

1988 POVERTY INCOME GUIDELINES FOR ALL STATES (EXCEPT ALASKA AND HAWAII) AND THE DISTRICT OF COLUMBIA

Size of family unit	Poverty guideline
1	$5,770
2	7,730
3	9,690
4	11,650
5	13,610
6	15,570
7	17,530
8	19,490

For family units with more than 8 members, add $1,960 for each additional member.

POVERTY INCOME GUIDELINES FOR ALASKA

Size of family unit	Poverty guideline
1	$7,210
2	9,660
3	12,110
4	14,560
5	17,010
6	19,460
7	21,910
8	24,360

For family units with more than 8 members, add $2,450 for each additional member.

POVERTY INCOME GUIDELINES FOR HAWAII

Size of family unit	Poverty guideline
1	$6,650
2	8,900
3	11,150
4	13,400
5	15,650
6	17,900
7	20,150
8	22,400

For family units with more than 8 members, add $2,250 for each additional member.

BILLING CODE 4150-04-M

ATTACHMENT B

OMB Approval No. 0348-0006

FEDERAL ASSISTANCE

1. TYPE OF SUBMISSION (Mark appropriate box)
- ☐ NOTICE OF INTENT (OPTIONAL)
- ☐ PREAPPLICATION
- ☐ APPLICATION

2. APPLICANT'S APPLICATION IDENTIFIER
a. NUMBER
b. DATE Year month day 19

3. STATE APPLICATION IDENTIFIER NOTE TO BE ASSIGNED BY STATE
a. NUMBER
b. DATE ASSIGNED Year month day 19

Leave Blank

SECTION I—APPLICANT/RECIPIENT DATA

4. LEGAL APPLICANT/RECIPIENT
a. Applicant Name
b. Organization Unit
c. Street/P.O. Box
d. City
e. County
f. State
g. ZIP Code
h. Contact Person (Name & Telephone No.)

5. EMPLOYER IDENTIFICATION NUMBER (EIN)

6. PROGRAM (From CFDA)
a. NUMBER
MULTIPLE ☐
b. TITLE

7. TITLE OF APPLICANT'S PROJECT (Use section IV of this form to provide a summary description of the project.)

8. TYPE OF APPLICANT/RECIPIENT
A—State
B—Interstate
C—Substate Organization
D—County
E—City
F—School District
G—Special Purpose District
H—Community Action Agency
I—Higher Educational Institution
J—Indian Tribe
K—Other (Specify):
Enter appropriate letter ☐

9. AREA OF PROJECT IMPACT (Names of cities, counties, states, etc.)

10. ESTIMATED NUMBER OF PERSONS BENEFITING

11. TYPE OF ASSISTANCE
A—Basic Grant
B—Supplemental Grant
C—Loan
D—Insurance
E—Other
Enter appropriate letter(s) ☐☐

12. PROPOSED FUNDING

a. FEDERAL	$ .00
b. APPLICANT	.00
c. STATE	.00
d. LOCAL	.00
e. OTHER	.00
f. Total	$ .00

13. CONGRESSIONAL DISTRICTS OF:
a. APPLICANT
b. PROJECT

14. TYPE OF APPLICATION
A—New
B—Renewal
C—Revision
D—Continuation
E—Augmentation
Enter appropriate letter ☐

15. PROJECT START DATE Year month day 19

16. PROJECT DURATION Months

17. TYPE OF CHANGE (For 16c or 14e)
A—Increase Dollars
B—Decrease Dollars
C—Increase Duration
D—Decrease Duration
E—Cancellation
F—Other (Specify):
Enter appropriate letter(s) ☐☐☐

18. DATE DUE TO FEDERAL AGENCY ► Year month day 19

19. FEDERAL AGENCY TO RECEIVE REQUEST
a. ORGANIZATIONAL UNIT (IF APPROPRIATE)
b. ADMINISTRATIVE CONTACT (IF KNOWN)
c. ADDRESS

20. EXISTING FEDERAL GRANT IDENTIFICATION NUMBER

21. REMARKS ADDED
☐ Yes ☐ No

SECTION II—CERTIFICATION

22. THE APPLICANT CERTIFIES THAT►
To the best of my knowledge and belief, data in this preapplication/application are true and correct, the document has been duly authorized by the governing body of the applicant and the applicant will comply with the attached assurances if the assistance is approved.

a. YES, THIS NOTICE OF INTENT/PREAPPLICATION/APPLICATION WAS MADE AVAILABLE TO THE STATE EXECUTIVE ORDER 12372 PROCESS FOR REVIEW ON:
DATE _____
b. NO, PROGRAM IS NOT COVERED BY E.O. 12372 ☐
OR PROGRAM HAS NOT BEEN SELECTED BY STATE FOR REVIEW ☐

23. CERTIFYING REPRESENTATIVE
a. TYPED NAME AND TITLE
b. SIGNATURE

SECTION III—FEDERAL AGENCY ACTION

24. APPLICATION RECEIVED Year month day 19

25. FEDERAL APPLICATION IDENTIFICATION NUMBER

26. FEDERAL GRANT IDENTIFICATION

27. ACTION TAKEN
- ☐ a. AWARDED
- ☐ b. REJECTED
- ☐ c. RETURNED FOR AMENDMENT
- ☐ d. RETURNED FOR E.O. 12372 SUBMISSION BY APPLICANT TO STATE
- ☐ e. DEFERRED
- ☐ f. WITHDRAWN

28. FUNDING

a. FEDERAL	$ .00
b. APPLICANT	.00
c. STATE	.00
d. LOCAL	.00
e. OTHER	.00
f. TOTAL	$ .00

29. ACTION DATE► Year month day 19

30. STARTING DATE Year month date 19

31. CONTACT FOR ADDITIONAL INFORMATION (Name and telephone number)

32. ENDING DATE Year month date 19

33. REMARKS ADDED
☐ Yes ☐ No

NSN 7540-01-008-8162
PREVIOUS EDITION IS NOT USABLE

424-103

STANDARD FORM 424 PAGE 1 (Rev. 4-84)
Prescribed by OMB Circular A-102

SECTION IV—REMARKS *(Please reference the proper item number from Sections I, II or III, if applicable)*

VOL 53 ISS 65 APR 5 1988 UMI

OMB NO 0348-0006

PART II
PROJECT APPROVAL INFORMATION

Item 1
Does this assistance request require State, local regional, or other priority rating?
_____ Yes _____ No

Name of Governing Body _____
Priority Rating _____

Item 2
Does this assistance request require State, or local advisory, educational or health clearances?
_____ Yes _____ No

Name of Agency or Board _____
(Attach Documentation)

Item 3
Does this assistance request require State, local, regional or other planning approval?
_____ Yes _____ No

Name of Approving Agency _____
Date _____

Item 4
Is the proposed project covered by an approved comprehensive plan?
_____ Yes _____ No

Check one State ☐
Local ☐
Regional ☐
Location of Plan _____

Item 5
Will the assistance requested serve a Federal installation?
_____ Yes _____ No

Name of Federal Installation _____
Federal Population benefiting from Project _____

Item 6.
Will the assistance requested be on Federal land or installation?
_____ Yes _____ No

Name of Federal Installation _____
Location of Federal Land _____
Percent of Project _____

Item 7
Will the assistance requested have an impact or effect on the environment
_____ Yes _____ No

See instructions for additional information to be provided.

Item 8.
Will the assistance requested cause the displacement of individuals, families, businesses, or farms?
_____ Yes _____ No

Number of:
Individuals _____
Families _____
Businesses _____
Farms _____

Item 9.
Is there other related assistance on this project previous, pending, or anticipated
_____ Yes _____ No

See instructions for additional information to be provided.

OMB NO. 0348-0038

PART III - BUDGET INFORMATION

SECTION A - BUDGET SUMMARY

Grant Program, Function or Activity (a)	Federal Catalog No. (b)	Estimated Unobligated Funds		New or Revised Budget		
		Federal (c)	Non-Federal (d)	Federal (e)	Non-Federal (f)	Total (g)
1.		$	$	$	$	$
2.						
3.						
4.						
5. TOTALS		$	$	$	$	$

SECTION B - BUDGET CATEGORIES

6. Object Class Categories	- Grant Program, Function or Activity				Total
	(1)	(2)	(3)	(4)	(5)
a. Personnel	$	$	$	$	$
b. Fringe Benefits					
c. Travel					
d. Equipment					
e. Supplies					
f. Contractual					
g. Construction					
h. Other					
i. Total Direct Charges					
j. Indirect Charges					
k. TOTALS	$	$	$	$	$
7. Program Income	$	$	$	$	$

OMB NO 0348-0006

SECTION C - NON-FEDERAL RESOURCES

(a) Grant Program	(b) APPLICANT	(c) STATE	(d) OTHER SOURCES	(e) TOTALS
8.	$	$	$	$
9.				
10.				
11.				
12. TOTALS	$	$	$	$

SECTION D - FORECASTED CASH NEEDS

	Total for 1st Year	1st Quarter	2nd Quarter	3rd Quarter	4th Quarter
13. Federal	$	$	$	$	$
14. Non-Federal					
15. TOTAL	$	$	$	$	$

SECTION E - BUDGET ESTIMATES OF FEDERAL FUNDS NEEDED FOR BALANCE OF THE PROJECT

(a) Grant Program	FUTURE FUNDING PERIODS (YEARS)			
	(b) FIRST	(c) SECOND	(d) THIRD	(e) FOURTH
16.	$	$	$	$
17.				
18.				
19.				
20. TOTALS	$	$	$	$

SECTION F - OTHER BUDGET INFORMATION
(Attach Additional Sheets if Necessary)

21. Direct Charges:

22. Indirect Charges:

23. Remarks:

PART IV PROGRAM NARRATIVE (Attach per instruction)

PART V

ASSURANCES

The Applicant hereby assures and certifies that it will comply with the regulations, policies, guidelines and requirements, including 45 CFR Part 74 and OMB Circulars No. A-102, A-110 and applicable cost principles, (Circulars: A-21, "Educational Institutions"; A-87, "Cost Principles for State and Local Governments"; and A-122, "Nonprofit Organizations"), as they relate to the application, acceptance and use of Federal funds for this Federally assisted project. Also the applicant assures and certifies with respect to the grant that:

1. It possesses legal authority to apply for the grant; that a resolution, motion or similar action has been duly adopted or passed as an official act of the applicant's governing body, authorizing the filing of the application, including all understandings and assurances contained therein, and directing and authorizing the person identified as the official representative of the applicant to act in connection with the application and to provide such additional information as may be required.

2. It will comply with Title VI of the Civil Rights Act of 1964 (P.L. 88-352) and in accordance with Title VI of that Act, no person in the United States shall, on the ground of race, color, or national origin, be excluded from participation in, be denied the benefits of, or be otherwise subjected to discrimination under any program or activity for which the applicant receives Federal financial assistance and will immediately take any measures necessary to effectuate this agreement.

3 It will comply with Title VI of the Civil Rights Act of 1964 (42 USC 2000d) prohibiting employment discrimination where (1) the primary purpose of a grant is to provide employment or (2) discriminatory employment practices will result in unequal treatment of persons who are or should be benefiting from the grant-aided activity.

4. It will comply with requirements of the provisions of the Uniform Relocation Assistance and Real Property Acquisition Act of 1970 (P.L. 91-646) which provides for fair and equitable treatment of persons displaced as a result of Federal and federally-assisted programs.

5. It will comply with the provisions of the Hatch Act which limit the political activity of State and local government employees.

6. It will comply with the minimum wage and maximum hours provisions of the Federal Fair Labor Standards Act (29 U.S.C. 201) as they apply to employees of institutions of higher education, hospitals, other nonprofit organizations, and to employees of State and local governments who are not employed in integral operations in areas of traditional governmental functions.

   Head Start, Certification of Minimum Wage: It certifies that it has reviewed the salary structures and wages for all positions and certifies that persons employed in carrying out this program shall not receive compensation at a rate which is (a) in excess of the average rate of compensation paid in the area to persons providing substantially comparable services; or (b) less than the minimum wage rate prescribed in section 6(a) of the Fair Labor Standards Act of 1938. Documentation of the methods by which it established wage scales is available in their files for review by audit and HDS personnel.

7. It will establish safeguards to prohibit employees from using their positions for a purpose that is or gives the appearance of being motivated by a desire for private gain for themselves or others, particularly those with whom they have family, business, or other ties.

8. It will give the sponsoring agency or the Comptroller General through any authorized representative the access to and the right to examine all records, books, papers, or documents related to the grant, including the records of contractors and subcontractors performing under the grant.

9. It will comply with all requirements imposed by the Federal sponsoring agency concerning special requirements of law, program requirements, and other administrative requirements.

10. It will insure that the facilities under its ownership, lease or supervision which shall be utilized in the accomplishment of the project are not listed on the Environmental Protection Agency's (EPA) list of Violating Facilities and that it will notify the Federal grantor agency of the receipt of any communication from the Director of the EPA Office of Federal Activities indicating that a facility to be used in the project is under consideration for listing by the EPA.

The phrase "Federal financial assistance" includes any form of loan, grant, guaranty, insurance payment, rebate, subsidy, disaster assistance loan or grant, or any other form of direct or indirect Federal assistance.

11. It will comply with the flood insurance purchase requirements of Section 102(a) of the Flood Disaster Protection Act of 1973, Public Law 93-234, 87 Stat. 975, approved December 31, 1976. Section 102(a) requires, on and after March 2, 1975, the purchase of flood insurance in communities where such insurance is available as a condition for the receipt of any Federal financial assistance for construction or acquisition purposes for use in any area that has been identified by the Secretary of the Department of Housing and Urban Development as an area having special flood hazards.

12. It will assist the Federal grantor agency in its compliance with Section 106 of the National Historic Preservation Act of 1966 as amended (16 U.S.C. 470), Executive Order 11593, and the Archeological and Historic Preservation Act of 1966 (16 U.S.C. 469a-1 et seq.) by (a) consulting with the State Historic Preservation Officer on the conduct of investigations, as necessary, to identify properties listed in or eligible for inclusion in the National Register of Historic Places that are subject to adverse effects (see 36 CFR Part 800.8) by the grantee's activity and notifying the Federal grantor agency of the existence of any such properties, and by (b) complying with all requirements established by the Federal grantor agency to avoid or mitigate adverse effects upon such properties.

13. Applicants for the Administration for Native Americans Programs, hereby certify in accordance with 45 CFR 1336.53, that the financial assistance provided by the Office of Human Development Services for the specified activities to be performed under this program, will be in addition to, and not in substitution for, comparable activities provided without Federal assistance.

14. It will comply with the Age Discrimination Act of 1975 enacted as an amendment to the Older Americans Act (Pub. L. 94-135), which provides that: No person in the United States shall, on the basis of age be excluded from participation in, be denied the benefits of, or be subjected to discrimination under, any program or activity for which the applicant receives Federal financial assistance.

15. It will comply with Section 504 of the Rehabilitation Act of 1973, as amended (29 U.S.C. 794), all requirements imposed by the applicable HHS regulation (45 C.F.R. Part 84), and all guidelines and interpretations issued pursuant thereto, which prohibits discrimination on the basis of handicap in programs and activities receiving Federal financial assistance.

16. It will comply with Title IX of the Education Amendments of 1972 (20 U.S.C. 1681, et seq.) which prohibits discrimination on the basis of sex in education programs and activities receiving Federal financial assistance (whether or not the programs or activities are offered or sponsored by an educational institution).

17. It will comply with Pub. L. 93-348 as implemented by Part 46 of Title 45 (45 CFR 46, 42 U.S.C. 2891) regarding the protection of human subjects involved in research, development, and related activities supported by the grant.

18. It will comply with the equal opportunity clause prescribed by Executive Order 11246, as amended, and will require that its subrecipients include the clause in all construction contracts and subcontracts which have or are expected to have an aggregate value within a 12-month period exceeding $10,000, in accordance with Department of Labor regulations at 41 CFR Part 60.

19. It will include, and will require that its subrecipients include, the provision set forth in 29 CFR 5.5(c) pertaining to overtime and unpaid wages in any nonexempt nonconstruction contract which involves the employment of mechanics and laborers (including watchmen, guards, apprentices, and trainees) if the contract exceeds $2,500.

ATTACHMENT C

ASSURANCE OF COMPLIANCE WITH THE DEPARTMENT OF HEALTH AND HUMAN SERVICES REGULATION UNDER TITLE VI OF THE CIVIL RIGHTS ACT OF 1964

_____ (hereinafter called the "Applicant")
Name of Applicant (type or print)

HEREBY AGREES THAT it will comply with Title VI of the Civil Rights Act of 1964 (P.L. 88-352) and all requirements imposed by or pursuant to the Regulation of the Department of Health and Human Services (45 C.F.R. Part 80) issued pursuant to that title, to the end that, in accordance with Title VI of that Act and the Regulation, no person in the United States shall, on the ground of race, color, or national origin, be excluded from participation in, be denied the benefits of, or be otherwise subjected to discrimination under any program or activity for which the Applicant receives Federal financial assistance from the Department; and HEREBY GIVES ASSURANCE THAT it will immediately take any measures necessary to effectuate this agreement.

If any real property or structure thereon is provided or improved with the aid of Federal financial assistance extended to the Applicant by the Department, this Assurance shall obligate the Applicant, or in the case of any transfer of such property, any transferee, for the period during which the real property or structure is used for a purpose for which the Federal financial assistance is extended or for another purpose involving the provision of similar services or benefits. If any personal property is so provided, this Assurance shall obligate the Applicant for the period during which it retains ownership or possession of the property. In all other cases, this Assurance shall obligate the Applicant for the period during which the Federal financial assistance is extended to it by the Department.

THIS ASSURANCE is given in consideration of and for the purpose of obtaining any and all Federal grants, loans, contracts, property, discounts or other Federal financial assistance extended after the date hereof to the Applicant by the Department, including installment payments after such date on account of applications for Federal financial assistance which were approved before such date. The Applicant recognizes and agrees that such Federal financial assistance will be extended in reliance on the representations and agreements made in this Assurance, and that the United States shall have the right to seek judicial enforcement of this Assurance. This Assurance is binding on the Applicant, its successors, transferees, and assignees, and the person or persons whose signatures appear below are authorized to sign this Assurance on behalf of the Applicant.

Date _____

_____
Applicant (type or print)

By _____
Signature and Title of Authorized Official

_____

_____
Applicant's mailing address

NOTE: If this form is not returned with the application for financial assistance, return it to DHHS, Office for Civil Rights, 330 Independence Ave., S.W., Washington, D.C. 20201

HHS-441 (Rev. 12/82)

ATTACHMENT D

DEPARTMENT OF HEALTH AND HUMAN SERVICES

ASSURANCE OF COMPLIANCE WITH SECTION 504 OF THE REHABILITATION ACT OF 1973, AS AMENDED

The undersigned (hereinafter called the "recipient") HEREBY AGREES THAT it will comply with Section 504 of the Rehabilitation Act of 1973, as amended (29 U.S.C. 794), all requirements imposed by the applicable HHS regulation (45 C.F.R. Part 84), and all guidelines and interpretations issued pursuant thereto.

Pursuant to §84.5(a) of the regulation [45 C.F.R. 84.5(a)], the recipient gives this Assurance in consideration of and for the purpose of obtaining any and all Federal grants, loans, contracts (except procurement contracts and contracts of insurance or guaranty), property, discounts, or other Federal financial assistance extended by the Department of Health and Human Services after the date of this Assurance, including payments or other assistance made after such date on applications for Federal financial assistance that were approved before such date. The recipient recognizes and agrees that such Federal financial assistance will be extended in reliance on the representations and agreements made in this Assurance and that the United States will have the right to enforce this Assurance through lawful means. This Assurance is binding on the recipient, its successors, transferees, and assignees, and the person or persons whose signatures appear below are authorized to sign this Assurance on behalf of the recipient.

This Assurance obligates the recipient for the period during which Federal financial assistance is extended to it by the Department of Health and Human Services or, where the assistance is in the form of real or personal property, for the period provided for in §84.5(b) of the regulation [45 C.F.R. 84.5(b)].

The recipient: [Check (a) or (b)]

a. ( ) employs fewer than fifteen persons;

b. ( ) employs fifteen or more persons and, pursuant to §84.7(a) of the regulation [45 C.F.R. 84.7(a)], has designated the following person(s) to coordinate its efforts to comply with the HHS regulations:

_____
Name of Designee(s) (Type or Print)

Name of Recipient (Type or Print)	Street Address or P.O. Box
(IRS) Employer Identification Number	City
	State Zip

I certify that the above information is complete and correct to the best of my knowledge.

Date	Signature and Title of Authorized Official

If there has been a change in name or ownership within the last year, please PRINT the former name below:

NOTE: If this form is not returned with the application for financial assistance, return it to DHHS, Office for Civil Rights, 330 Independence Avenue, S.W., Washington, D.C. 20201.

HHS-641 (Rev. 12/82)

[FR Doc. 88-7406 Filed 4-4-88; 8:45 am]
BILLING CODE 4150-04-C

BEST COPY AVAILABLE

VOL
53

ISS
65

AP
5

1988

UMI

federal register

Tuesday
April 5, 1988

Part V

Department of Education

34 CFR Parts 600 and 668

Institutional Eligibility Under the Higher Education Act; Final Regulations

DEPARTMENT OF EDUCATION

34 CFR Parts 600 and 668

Institutional Eligibility Under the Higher Education Act of 1965, as Amended, and Student Assistance General Provisions

AGENCY: Department of Education.

ACTION: Final regulations.

SUMMARY: The Secretary adopts regulations on how the Secretary determines whether institutions and schools of postsecondary education satisfy the statutory definitions of the following terms set forth in the Higher Education Act of 1965, as amended (HEA): "institution of higher education," "proprietary institution of higher education," "postsecondary vocational institution," and "vocational school." Designation by the Secretary as an eligible institution of higher education, proprietary institution of higher education, postsecondary vocational institution, or vocational school is a prerequisite for participating in the student financial assistance and other programs authorized by the HEA.

EFFECTIVE DATE: These regulations take effect either 45 days after publication in the **Federal Register** or later if the Congress takes certain adjournments, with the exception of §§ 600.4, 600.5, 600.6, 600.7, 600.8, 600.30 and 600.31. Those sections will become effective after the information collection requirements contained in those sections have been submitted by the Department of Education and approved by the Office of Management and Budget under the Paperwork Reduction Act of 1980. However, § 600.3 (c) and (d) take effect on July 1, 1988. If you want to know the effective date of these regulations, call or write the Department of Education contact person.

FOR FURTHER INFORMATION CONTACT: Virginia G. Re, U.S. Department of Education, Office of Postsecondary Education, 400 Maryland Avenue SW., (Regional Office Building 3, Room 3030), Washington, DC 20202. Telephone number (202) 732-4906.

SUPPLEMENTARY INFORMATION: These regulations primarily recodify regulations contained in Subpart A of the Student Assistance General Provisions regulations, 34 CFR Part 668. The recodified provisions include the definitions of the terms "institution of higher education," "proprietary institution of higher education," "postsecondary vocational institution," and "vocational school." Other recodified provisions include the sections in 34 CFR Part 668, Subpart B, dealing with "Contracting for educational programs or courses," and a "Change in ownership or control." These recodified provisions are being deleted from the Student Assistance General Provisions regulations, 34 CFR Part 668.

These regulations also include a provision dealing with the transfer-of-credit alternative to accreditation (formerly known as three-institutional-certification or "3-I-C") that is currently contained in the rule published in the **Federal Register** on August 20, 1970, 35 FR 13324, by the Commissioner of Education of the Office of Education, U.S. Department of Health, Education, and Welfare. The August 20, 1970 "three-institutional-certification" rule, entitled "Procedure for Qualification Under Three-Institutional-Certification Method," is hereby revoked.

The notice of proposed rulemaking, published in the **Federal Register** on October 21, 1986, 51 FR 37366-37378, included proposed amendments to the regulations governing the College Housing Program, 34 CFR Part 614. The College Housing Program was formerly authorized by the Housing Act of 1950. However, since the College Housing Program is now authorized by Title VII of the HEA and is, therefore, subject to this part, the amendment to 34 CFR Part 614 is no longer necessary.

Revisions to the Notice of Proposed Rulemaking

The Secretary published a notice of proposed rulemaking (NPRM) in the **Federal Register** of October 21, 1986, 51 FR 37366-37378. The following is a listing of the changes made in those proposed regulations. A more complete discussion of the comments received in response to the NPRM is contained in the Appendix—Summary of Comments and Responses.

Section 600.2 Definitions.

One-year and six-month training programs. The Secretary has amended the proposed definitions of a "one-year training program" and a "six-month training program" by deleting the proposed requirement in each definition that would have required a one-year training program and a six-month training program each to contain a minimum number of calendar days. The Secretary has also modified the proposed definitions be deleting the proposed provision that would have required an institution that uses credit hours or units to measure the academic progress of a one-year or a six-month training program to be specifically legally authorized by the appropriate State agency to measure academic progress in credit hours.

In the proposed definitions of a six-month and a one-year training program, the Secretary had proposed measuring academic progress both in calendar days and in clock hours or credit hours as a response to abuses that the Secretary had discovered among institutions which, by arbitrarily assigning credit values to programs that were previously conducted in clock hours, were able to establish eligibility for academic programs which would not otherwise be eligible. The Secretary needs assurances as to whether institutions are in fact providing six-month or one-year training programs.

A great number of commenters opposed the minimum number of calendar days requirement of the proposed definitions of a six-month training program and a one-year training program. As a result, the Secretary convened a series of meetings with representatives of the nationally recognized accrediting agencies and associations to share his concerns and to request assistance in curtailing further abuse of the student assistance programs through measurement of academic progress management. As a result of those discussions, the Secretary and the accrediting agencies agreed that the accrediting agencies and associations would recommend to the Secretary procedures by which the accrediting agencies and associations would standardize the review and approval of clock-hour and credit-hour conversions. Consequently, the Secretary has modified the proposed definitions of a six-month and a one-year training program by deleting the minimum number of calendar days requirement. However, should the accrediting agencies and associations not provide recommendations of clock-hour and credit-hour conversion standards that are acceptable to the Secretary within three months of the publication of these regulations, the Secretary may again propose to modify the definitions of a six-month training program and a one-year training program in § 600.2 to include minimum calendar days.

Section 600.3 Special conditions.

Legally authorized program of education. One of the elements of the definition of an eligible institution under sections 435(b) and 1201(a) of the HEA is that the institution be legally authorized in the State in which it is located to provide a program of education beyond secondary education. Similarly, one of the elements of the

definition of a vocational school under section 435(c) of the HEA is that the school be legally authorized in the State in which it is located to provide a program of postsecondary vocational or technical education. In many States, the manner in which an institution or school measures its educational programs, i.e., in credit hours or clock hours, is relevant to the State determining whether to give an institution or school the legal authority to provide postsecondary education in that State. The Secretary has added paragraphs (c) and (d) to § 600.3, "Special conditions," to clarify the Secretary's existing policy with regard to the relationship between an institution being legally authorized to provide a postsecondary education program in a State and the manner in which the institution provides that program, i.e., clock hours or credit hours, in that State.

Some States require a certain type of institution or school to measure its educational programs in clock hours in order to be legally authorized in that State to provide a program of postsecondary education. Therefore, that type of institution or school located in that State qualifies as an eligible institution or school under the relevant HEA statutory definition only if it measures its educational programs in clock hours. The Secretary has amended § 600.3 by adding paragraph (c), which will take effect July 1, 1988, to make this requirement explicit in the regulations.

Other States require a certain type of institution or school to use clock hours to measure its educational programs in order to receive a State license or charter. Some of these States may then permit an institution or school, once it has received that license or charter, to measure its educational programs in credit hours for other purposes. However, for the purpose of satisfying the statutory definitions of an eligible institution or school under the HEA, the Secretary considers these institutions or schools to be legally authorized to provide a program of postsecondary education in these States only if they provide their educational programs in clock hours because that was a required element in receiving a license or charter from the State. The Secretary has further amended § 600.3 by adding paragraph (d), which also takes effect July 1, 1988, to make this requirement explicit in the regulations.

A third category of States may not require an institution or school to measure its educational programs in clock or credit hours for the purpose of receiving a license or charter but may require an institution or school to indicate in its application for a license or charter the method used to measure those programs. The Secretary considers that the application procedures that a State uses to govern the awarding of a license or charter to be relevant to a determination under the HEA of whether an institution or school is legally authorized in that State to provide a program of postsecondary education. Accordingly, if an institution uses clock hours in its application for a license or charter and then wishes to use credit hours, it must reapply to the State and receive a license or charter from the State based upon its application in credit hours before the Secretary will consider the institution as being legally authorized in the State in which it is located to provide a postsecondary education program in credit hours.

Section 600.7 Vocational school.

The Secretary has modified the definition of a vocational school by deleting the proposed requirement that would have required a vocational education program to consist of a minimum of 90 calendar days as well as the proposed requirement which would have required a vocational school that measures academic progress in credit hours to be specifically authorized by the appropriate State agency to measure in credit hours or units.

Section 600.8 Transfer-of-credit alternative to accreditation.

The Secretary has amended the proposed regulations to clarify the conditions under which a student is considered to have "transferred" from an unaccredited applicant institution to an accredited institution. The Secretary has included in § 600.8((b)(2)) a provision that, for the purpose of satisfying the requirements of the transfer-of-credit alternative to accreditation, a student who remains enrolled as a regular student at the unaccredited applicant institution will not be considered as having transferred to an accredited institution even if the student also enrolls in the accredited institution.

The Secretary has also amended the regulations by adding the requirement that an unaccredited applicant institution that is requesting eligibility to participate in HEA programs under the "transfer-of-credit" alternative to accreditation must include in its institutional eligibility application, for each transfer student, the dates on which each transfer student attended his or her first class at both the applicant unaccredited institution and the accredited institution.

Section 600.9 Written agreement between an eligible institution and another institution or organization.

The Secretary has amended the regulations that proposed to permit an eligible institution to retain its eligibility despite the fact that it contracts with an ineligible institution or organization for the latter to provide a portion of its educational program. Under the revised regulations, the ineligible institution or organization may provide not more than 50 percent of the educational program of a student enrolled in the eligible institution. In addition, the ineligible institution or organization may provide between 26 and 50 percent of the educational program of a student enrolled in the eligible institution only if the eligible institution and the ineligible institution or organization are not owned or controlled by the same individual, partnership, or corporation and the eligible institution's accrediting agency or association determines that the contract meets its standards for the contracting of educational services.

Section 600.10 Date, extent, duration, and consequences of eligibility.

Extent of eligibility. The Secretary has modified the proposed regulations by eliminating the proposed requirement which would have required the Secretary to make a determination of eligibility of each educational program that an institution establishes after the institution receives its initial eligibility determination.

In addition, the Secretary has amended the proposed regulations by adding new paragraphs (c) and (d) in § 600.10. Paragraph (c), entitled "Subsequent additions of educational programs," sets forth the responsibility of an institution that has been designated by the Secretary as an eligible institution if it adds educational programs after that designation. Specifically, the institution need not apply to the Secretary to have those additional educational programs designated as eligible programs but may determine on its own whether those programs satisfy the relevant statutory and regulatory eligibility requirements. However, if an institution incorrectly determines that an educational program satisfies the applicable statutory and regulatory eligibility provisions, the institution is liable to repay to ED all the student financial assistance and other ED program funds it or its students received who were enrolled in that educational program.

Duration of eligibility. The Secretary has added § 600.10(d), entitled

"Duration of eligibility," to require each eligible institution to renew its designation of eligibility, including all of its educational programs and all of its locations, every four years. The institution must renew its eligibility status during the fourth year of its eligibility.

Section 600.11 Ability to benefit.

In the preamble to the NPRM, the Secretary requested comments regarding the feasibility of establishing minimum achievement levels in specific disciplines as the measure for determining whether a student without a high school diploma or a general education development (GED) diploma has the ability to benefit from the training offered by an institution. Comments were also invited concerning the appropriate disciplines to use, the minimum achievement level for each discipline used, and the relationship, if any, between that discipline and achievement and a State standard, if any for graduation.

Numerous commenters responded to the Secretary's request for comments regarding the desirability and feasibility of establishing minimum achievement levels, and nearly all expressed strong objection to the Secretary establishing minimum achievement levels in specific disciplines as a measure for determining a student's ability to benefit from training offered by an institution.

The statutory provisions relating to ability to benefit were revised by the Higher Education Amendments of 1986 and the Higher Education Technical Amendments Act of 1987. As a result of those revisions which are contained in section 484(d) of the HEA, the Secretary has modified these regulations to include procedures that are consistent with those new statutory provisions. The ability-to-benefit provisions under § 600.11 of these regulations apply to institutions of higher education, proprietary institutions of higher education, postsecondary vocational institutions, and vocational schools that admit as regular students persons who do not have a high school diploma or its equivalent and who have the ability to benefit from the training offered.

For each regular student that is admitted under the ability-to-benefit requirements of § 600.11, an institution must maintain for at least five years a record of the examinations, counselling, or any other factors used by the institution to support its determination to admit a student on the basis of the student's ability to benefit from the training offered.

Section 600.31 Change in ownership resulting in a change of control.

The Secretary has modified the proposed regulations to require the institution to provide documentation on which ED can make a determination regarding the financial responsibility of the new owners. These documents must include a profit and loss statement and a balance sheet, or an audit prepared by a certified or licensed public accountant, for the institution's latest complete fiscal year, and any additional information requested by the Secretary.

The Secretary has also modified the proposed regulations to clarify that an institution must retain, under these regulations, all documents that pertain to its application, its notification of institutional eligibility, and its signed program participation agreement for a period of not less than five years.

The Secretary has amended proposed § 600.31(d), which contains the conditions under which the Secretary considers an eligible institution or a previously eligible institution that has undergone a change in ownership that results in a change in control to be the same institution or a new institution for the purpose of establishing institutional eligibility. If the new owner or owners of the institution have been convicted of, or have pled *nolo contendere* or guilty to a crime involving the acquisition, use, or expenditure of Federal funds, or have been judicially determined to have committed fraud involving Federal funds, the Secretary considers the institution to be the same institution only if each of the following conditions have been met: (1) The individuals who were convicted of, or pled *nolo contendere* or guilty to, a crime involving the acquisition, use, or expenditure of the funds are no longer incarcerated for that crime; (2) at least five years have elapsed from the date of the conviction, *nolo contendere* plea, guilty plea, or judicial determination; and (3) the funds that were fraudulently obtained or criminally acquired, used, or expended have been repaid to the United States, and any related financial penalty has been paid.

Paperwork Reduction Act of 1980

Organizations and individuals desiring to submit comments on the information collection requirements should direct them to the Office of Information and Regulatory Affairs, Room 3002, New Executive Office Building, Washington, DC 20503; Attention: James D. Houser.

Executive Order 12291

These regulations have been reviewed in accordance with Executive Order 12291. They are not classified as major because they do not meet the criteria for major regulations established in the order.

Assessment of Educational Impact

In the notice of proposed rulemaking, the Secretary requested comments on whether the proposed regulations would require transmission of information that is being gathered by or is available from any other agency or authority of the United States.

Based on the response to the proposed rules and on its own review, the Department has determined that the regulations in this document do not require transmission of information that is being gathered by or is available from any other agency or authority of the United States.

List of Subjects in 34 CFR Part 600

Administrative practices and procedures, Colleges and universities, Education, Reporting and recordkeeping requirements.

Dated: January 7, 1988.

William J. Bennett,

Secretary of Education.

(Catalog of Federal Domestic Assistance Number does not apply.)

The Secretary of Education amends Title 34 of the Code of Federal Regulations as follows:

1. A new Part 600 is added to read as follows:

PART 600—INSTITUTIONAL ELIGIBILITY UNDER THE HIGHER EDUCATION ACT OF 1965, AS AMENDED

Subpart A—General

Sec.
600.1 Scope.
600.2 Definitions.
600.3 Special conditions.
600.4 Institution of higher education.
600.5 Proprietary institution of higher education.
600.6 Postsecondary vocational institution.
600.7 Vocational school.
600.8 Transfer-of-credit alternative to accreditation.
600.9 Written agreement between an eligible institution and another institution or organization.
600.10 Date, duration, extent, and consequence of eligibility.
600.11 Ability to benefit.

Subaprt B—Procedures for Establishing Eligibility

600.20 Application procedures.
600.21 Eligibility notification.

Subpart C—Maintaining Eligibility

600.30 Institutional changes requiring review by the Secretary.
600.31 Change in ownership resulting in a change of control.
600.32 Loss of eligibility

Authority: 20 U.S.C. 1085, 1088, 1094 (c)(3), and 1141, unless otherwise noted.

Subpart A—General

§ 600.1 Scope.

This part establishes the rules and procedures that the Secretary uses to determine whether an institution or school qualifies as an eligible institution under the Higher Education Act of 1965, as amended (HEA). An eligible institution may apply to participate in programs authorized by the HEA (HEA programs).

(Authority: 20 U.S.C. 1085 (a), (b), and (e), 1088 (b) and (c), 1094(c)(3) and 1141(a))

§ 600.2 Definitions.

The following definitions apply to terms used in this part:

Accredited: The status of public recognition which a nationally recognized accrediting agency or association grants to an institution, school, or educational program which meets certain established qualifications and educational standards.

Clock hour: A period of time consisting of—

(a) A 50- to 60-minute class, lecture, or recitation;

(b) A 50- to 60-minute faculty-supervised laboratory, shop training, or internship; or

(c) Sixty minutes of preparation in a program of study by correspondence.

Educational program: A legally authorized postsecondary program of organized instruction or study which leads to an academic or professional degree, vocational certificate, or other recognized educational credential. However, the Secretary does not consider that an institution provides an educational program if the institution does not provide instruction itself (including a course of independent study) but merely gives credit for one or more of the following: instruction provided by other institutions or schools, examinations provided by agencies or organizations, or other accomplishments such as "life experience."

Eligible institution: Includes—

(a) An institution of higher education, as defined in § 600.4;

(b) A proprietary institution of higher education, as defined in § 600.5;

(c) A postsecondary vocational institution, as defined in § 600.6; and

(d) A vocational school, as defined in § 600.7.

Legally authorized: The legal status granted to an institution through a charter, license, or other written document issued by the appropriate agency or official of the State in which the institution is physically located.

Nationally recognized accrediting agency or association: An agency or association that the Secretary has recognized to accredit or preaccredit a particular category of institution, school, or educational program in accordance with the provisions contained in 34 CFR Part 603. The Secretary periodically publishes a list of those nationally recognized accrediting agencies and associations in the **Federal Register.**

Nonprofit institution: An institution that—

(a) Is owned and operated by one or more nonprofit corporations or associations, no part of the net earnings of which benefits any private shareholder or individual;

(b) Is legally authorized to operate as a nonprofit organization by each State in which it is physically located; and

(c) Is determined by the U.S. Internal Revenue Service to be an organization to which contributions are tax deductible in accordance with section 501(c)(3) of the Internal Revenue Code.

One-year training program: An educational program that is at least—

(a) Twenty-four semester or trimester hours or units, or 36 quarter hours or units, at an institution using credit hours or units to measure academic progress;

(b) Nine hundred clock hours of supervised training at an institution using clock hours to measure academic progress; or

(c) Nine hundred clock hours in a program of study by correspondence.

Part B loan programs: The Guaranteed Student Loan (GSL), PLUS, Supplemental Loans for Students, and Consolidated Loan Programs. Each of these loan programs is authorized under Part B of Title IV of the HEA.

Preaccredited: A status that—

(a) A nationally recognized accrediting agency or association, recognized by the Secretary to grant that status, has accorded an unaccredited public or private nonprofit institution that is progressing toward accreditation within a reasonable period of time; and

(b) The Secretary determines is the exclusive indication under sections 435(b)(5)(A) and 1201(a)(5)(A) of the HEA that an institution will meet the accreditation standards of a nationally recognized accrediting agency or association within a reasonable time.

Program of study by correspondence: An educational program offered principally by mail by an institution. Under this type of program, the institution prepares lesson materials and mails them to the student in a sequential and logical order. The student completes the lessons and mails them back to the institution within a specified period of time. The program may include a required period of residential training.

Recognized equivalent of a high school diploma:

(a) A General Education Development (GED) Certificate; or

(b) A State certificate received by a student after the student has passed a State authorized examination which the State recognizes as the equivalent of a high school diploma.

Recognized occupation: An occupation that is—

(a) Listed in an "occupational division" of the latest edition of the *Dictionary of Occupational Titles,* published by the U.S. Department of Labor, or

(b) Determined by the Secretary in consultation with the Secretary of Labor to be a recognized occupation.

Regular student: A person who is enrolled or accepted for enrollment at an institution for the purpose of obtaining a degree or certificate.

Secretary: The Secretary of the Department of Education or an official or employee of the Department of Education acting for the Secretary under a delegation of authority.

Six-month training program: Either—

(a) An educational program that is at least—

(1) Sixteen semester or trimester hours or units, or 24 quarter hours or units, at an institution using credit hours or units to measure academic progress;

(2) Six hundred clock hours of supervised training at an institution using clock hours to measure academic progress; or

(3) Six hundred clock hours in a program of study by correspondence; or

(b) An educational program which the Secretary determines is at least a six-month training program on the basis of—

(1) A certification by the nationally recognized accrediting association that accredits the institution that the program offered by the institution is equal in course content and student workload to the comparable clock or credit hour program described in paragraphs (a) (1) through (3) of this definition; and

(2) The Secretary's ratification of that accrediting agency's determination.

State: A State of the Union, American Samoa, the Commonwealth of Puerto Rico, the District of Columbia, Guam,

the Trust Territories of the Pacific Islands, the Virgin Islands, and the Commonwealth of the Northern Mariana Islands.

(Authority: 20 U.S.C. 1071 *et seq.*; 1078–2, 1085, 1088, and 1141 and 26 U.S.C. 501(c))

§ 600.3 Special conditions.

For the purpose of §§ 600.4, 600.5, 600.6, and 600.7:

(a) The Secretary considers an institution other than one offering only a program of correspondence to be "in a State" only if the institution's campus or place of instruction is physically located in that State.

(b) The Secretary considers an institution offering only a program of study by correspondence to be located only in the State in which its administrative office is located if the program does not include a period of residential training. If the program includes a period of residential training, the Secretary considers the institution to be located and the State in which its administrative office is located and the State in which its residential program is located.

(c)(1) If a State requires an institution to measure its educational programs in clock hours in order to be legally authorized in that State to provide a program of education beyond secondary education, the Secretary considers that institution is legally authorized in that State to provide a program of education beyond secondary education only if the institution measures its educational programs in clock hours.

(2) If a State requires a vocational school to measure its vocational or technical education programs in clock hours in order to be legally authorized in the State to provide a program of postsecondary vocational or technical education, the Secretary considers that vocational school to be legally authorized to provide a program postsecondary vocational or technical education in that State only if the vocational school measures its vocational or technical programs in clock hours.

(d)(1) If as part of the application process for receiving a license, charter, or other document that demonstrates it is legally authorized to provide a program of education beyond secondary education in a State, the State requires an institution to measure its educational programs in clock hours, the Secretary considers that institution to be legally authorized to provide a program of education beyond secondary education in that State only if the institution measures its educational programs in clock hours.

(2) If as part of the application process for receiving a license, charter, or other document that demonstrates it is legally authorized to provide a postsecondary vocational or technical education program in a State, the State requires a vocational school to measure its educational programs in clock hours, the Secretary considers that institution to be legally authorized to provide a program of education beyond secondary education in that State only if the institution measures its educational programs in clock hours.

(Authority: 20 U.S.C. 1065 (b) and (c), 1088 (b) and (c), and 1141(a))

§ 600.4 Institution of higher education.

(a) An institution of higher education is a public or private non-profit educational institution which—

(1) Is in a State;

(2) Admits as regular students only persons who—

(i) Have a high school diploma;

(ii) Have the recognized equivalent of a high school diploma; or

(iii) Are beyond the age of compulsory school attendance in the State in which the institution is located, and, if the institution seeks to participate in a program other than a Part B loan program, have the ability to benefit, as determined by the institution in accordance with § 600.11, from the training offered;

(3) Is legally authorized to provide an educational program beyond secondary education in the State in which the institution is located;

(4) Provides an educational program—

(i) For which it awards an associate, baccalaureate, graduate, or professional degree, or other recognized educational credential;

(ii) Which is at least a two-year program acceptable for full credit toward a baccalaureate degree; or

(iii) Which is at least a one-year training program that leads to a certificate, degree, or other recognized educational credential and prepares students for gainful employment in a recognized occupation; and

(5) Is—

(i) Accredited or preaccredited by a nationally recognized accrediting agency or association;

(ii) An institution whose credits the Secretary determines, in accordance with the provisions contained in § 600.8, to be accepted on transfer by at least three accredited institutions for credit on the same basis as transfer credits from any accredited institution; or

(iii) Approved by a State agency that the Secretary recognizes, by listing in the **Federal Register** in accordance with 34 CFR Part 603, as a reliable authority on the quality of public postsecondary vocational education in its State, if the institution—

(A) Is a public postsecondary vocational educational institution; and

(B) Seeks to participate only in Federal student assistance programs.

(b)(1) An institution, other than an institution that is eligible to participate only in a Part B loan program, that admits as regular students persons who do not have a high school diploma or its recognized equivalent and who are beyond the age of compulsory school attendance in the State in which the institution is located, shall consistently apply standards and procedures for determining, in accordance with § 600.11, whether these persons have the ability to benefit from the education or training it offers.

(2) An institution must be able to demonstrate, upon request of the Secretary, that each regular student that it admitted who did not have a high school diploma or its recognized equivalent satisfied the institution's standards under paragraph (b)(1) of this section.

(3) An institution shall retain for at least five years documentation that demonstrates a student's ability to complete successfully the program in which the student was enrolled, if the student was admitted to the institution under the institution's ability-to-benefit standards.

(c) Notwithstanding the provisions in paragraph (a) of this section, the Secretary does not determine an institution to be eligible to apply to participate in the Part B loan programs if the institution uses or employs commissioned salespersons to promote the availability of Part B loan program loans at that institution.

(Authority: 20 U.S.C. 1085, 1094(c)(3), and 1141(a))

§ 600.5 Proprietary institution of higher education.

(a) A proprietary institution of higher education is an educational institution which—

(1) Is not a public or private nonprofit educational institution;

(2) Is in a State;

(3) Admits as regular students only persons who—

(i) Have a high school diploma;

(ii) Have the recognized equivalent of a high school diploma; or

(iii) Are beyond the age of compulsory school attendance in the State in which the institution is located and have the ability to benefit, as determined by the institution in accordance with § 600.11, from the training offered;

(4) Is legally authorized to provide an educational program beyond secondary education in the State in which the institution is physically located;

(5) Provides at least a six-month training program to prepare students for gainful employment in a recognized occupation;

(6) Is accredited by a nationally recognized accrediting agency or association; and

(7) Has been in existence for at least two years. The Secretary considers a proprietary institution to have been in existence for two years only if it has been legally authorized to provide, and has provided, a continuous training program to prepare students for gainful employment in a recognized occupation during the 24 months (except for normal vacation periods) preceding the date of application for eligibility.

(b)(1) A proprietary institution that admits as regular students persons who do not have a high school diploma or its recognized equivalent and who are beyond the age of compulsory school attendance in the State in which the institution is located, shall consistently apply standards and procedures for determining, in accordance with § 600.11, whether these students have the ability to benefit from the education or training it offers.

(2) An institution must be able to demonstrate, upon request of the Secretary, that each regular student that it admitted who did not have a high school diploma or its recognized equivalent satisfied the institution's standards under paragraph (b)(1) of this section.

(3) An institution must retain for at least five years documentation that demonstrates a student's ability to complete successfully the program in which the student was enrolled, if the student was admitted to the institution under the institution's ability-to-benefit standards.

(Authority: 20 U.S.C. 1088(b))

§ 600.6 Postsecondary vocational institution.

(a) A postsecondary vocational institution is a public or private nonprofit educational institution which—

(1) Is in a State;

(2) Admits as regular students only persons who—

(i) Have a high school diploma;

(ii) Have the recognized equivalent of a high school diploma; or

(iii) Are beyond the age of compulsory school attendance in the State in which the institution is located and have the ability to benefit, as determined by the institution in accordance with § 600.11, from the training offered;

(3) Is legally authorized to provide an educational program beyond secondary education in the State in which the institution is physically located.

(4) Provides at least a six-month training program to prepare students for gainful employment in a recognized occupation;

(5) Is—

(i) Accredited or preaccredited by a nationally recognized accrediting agency or association;

(ii) An institution whose credits the Secretary determines, in accordance with the provisions contained in § 600.8, to be accepted on transfer by at least three accredited institutions for credit on the same basis as transfer credits from any accredited institution; or

(iii) Approved by a State agency that the Secretary recognizes, by listing in the **Federal Register** in accordance with 34 CFR Part 603, as a reliable authority on the quality of public postsecondary vocational education in the State, if the institution is a public postsecondary vocational educational institution.

(6) Has been in existence for at least two years. The Secretary considers an institution to have been in existence for two years only if it has been legally authorized to provide, and has provided, a continuous training program to prepare students for gainful employment in a recognized occupation during the 24 months (except for normal vacation periods) preceding the date of application for eligibility.

(b)(1) A postsecondary vocational institution that admits as regular students persons who do not have a high school diploma or its recognized equivalent and who are beyond the age of compulsory school attendance in the State in which the institution is located, shall consistently apply standards and procedures for determining, in accordance with § 600.11, whether these students have the ability to benefit from the education or training it offers.

(2) An institution must be able to demonstrate, upon request of the Secretary, that each regular student that it admitted who did not have a high school diploma or its recognized equivalent satisfied the institution's standards under paragraph (b)(1) of this section

(3) An institution must retain for at least five years documentation that demonstrates a student's ability to complete successfully the program in which the student was enrolled, if the student was admitted to the institution under the institution's ability-to-benefit standards.

(Authority: 20 U.S.C. 1088 and 1094(c)(3))

§ 600.7 Vocational school.

(a) A vocational school is a business or trade school, technical institution, or other technical or vocational school which—

(1) Is in a State;

(2) Admits as regular students only persons who—

(i) Have completed or left elementary or secondary school; and

(ii) Have the ability to benefit, as determined by the institution in accordance with § 600.11, from the training offered;

(3) Is legally authorized in the State in which the school is physically located to provide, and provides within that State a program of postsecondary vocational or technical education that—

(i) Is designed to provide occupational skills to fit individuals for useful employment in recognized occupations;

(ii) Is not less than—

(A) Eight semester or trimester hours or units, or 12 quarter hours or units, at a school using credit hours or units to measure the academic progress; or

(B) Three hundred clock hours of supervised training at a school using clock hours to measure progress;

(iii) In the case of a program of study by correspondence, requires not less than an average of 12 hours of preparation per week over each 12-week period and completion of a minimum of 300 clock hours in not less than six months; and

(iv) In the case of a flight school program, maintains current valid certification by the Federal Aviation Administration:

(4) Is—

(i) Accredited by a nationally recognized accrediting agency or association; or

(ii) In the case of a public vocational school, approved by a State agency that the Secretary recognizes, by listing in the **Federal Register**, in accordance with 34 CFR Part 603, as a reliable authority on the quality of public postsecondary vocational education in the State;

(5) Has been—

(i) In existence for two years; or

(ii) Has been specifically determined by the Secretary to be an eligible location of a vocational school despite not having been in existence for two years; and

(6) Does not use or employ commissioned sales persons to promote the availability of Part B loan program loans at that school.

(b) For purposes of this section, the Secretary considers a school to have been in existence for two years only if it

has been legally authorized to provide and has provided, a continuous training program to fit individuals for useful employment in recognized occupations during the 24 months (except for normal vacation periods) preceding the date of application for eligibility.

(c)(1) A school that admits as regular students persons who do not have a high school diploma or its recognized equivalent shall consistently apply standards and procedures for determining, in accordance with § 600.11, whether these persons have the ability to benefit from the training it offers.

(2) A school must be able to demonstrate, upon request of the Secretary, that each regular student that it admitted who did not complete, or who left, elementary or secondary school satisfied the school's standards under paragraph (c)(1) of this section.

(3) A school must retain for at least five years documentation that demonstrates a student's ability to complete successfully the program in which the student was enrolled, if the student was admitted to the institution under the institution's ability-to-benefit standards.

(Authority: 20 U.S.C. 1085 and 1094(c)(3))

§ 600.8 Transfer-of-credit alternative to accreditation.

(a) For an unaccredited public or private nonprofit institution to satisfy the requirements of § 600.4(a)(5)(ii) or § 600.6(a)(5)(ii), the Secretary must determine that—

(1) At least three accredited institutions, which satisfy the conditions in paragraph (c) of this section, have a policy of accepting on transfer the credits of a student who transfers from the unaccredited institution on the same basis as they accept on transfer the credits of a student who transfers from any accredited institution;

(2) Within the three years preceding the date the unaccredited institution applies for a determination that it satisfies the requirements of § 600.4(a)(5)(ii) or § 600.6(a)(5)(ii)—

(i) At least twelve of the unaccredited institution's regular students or former regular students transferred to at least three of the accredited institutions identified under paragraph (a)(1) of this section, with a minimum of four transfer students to each accredited institution; and

(ii) Each of at least three of the accredited institutions to which the twelve students transferred accepted the credits of the students who transferred for credit on the same basis as it accepted the credits of students who transferred from any accredited institution.

(b) For the purposes of paragraph (a)(2) of this section, the Secretary considers that a student has transferred to an accredited institution if—

(1) The student has enrolled as a regular student in an accredited educational program in the accredited institution;

(2) The student no longer remains enrolled as a regular student at the unaccredited institution;

(3) The student has attended classes at the accredited institution for a period of time that exceeds the date beyond which the student would, upon withdrawal, qualify for the maximum refund of tuition and fees available to a student who attends at least one day of class; and

(4) The accredited institution has officially applied the credits earned by the student at the unaccredited institution toward a degree or certificate that it offers.

(c) To qualify under paragraph (a) of this section, an accredited institution must—

(1) Offer an educational program that is at least as long, in terms of academic years, academic terms, or clock hours, as the longest educational program offered at the unaccredited institution;

(2) Offer a degree or certificate at least as advanced as the highest degree or certificate offered at the unaccredited institution; and

(3) Apply the transfer credits toward an accredited degree or certificate program in which the transfer students will not constitute a majority of the students enrolled.

(d) If an unaccredited institution that was previously accredited or preaccredited has lost that status and applies for a determination that it satisfies the requirements of this section—

(1) The students described in paragraph (a)(2) of this section must have earned the transferred credits from the unaccredited institution after the institution lost its accreditation or preaccreditation; and

(2) Each accredited institution described in paragraph (a) of this section must know, when it accepts the credits of the transfer students, that the applicant institution lost its accreditation or preaccreditation before the credits to be transferred were earned.

(e)(1) The applicant unaccredited institution shall provide sufficient information and documentation to enable the Secretary to determine whether the unaccredited institution satisfies the requirements of this section. The information and documentation must include, but is not limited to—

(i) Information as to the length of the educational programs offered by the applicant unaccredited institution and the highest degree or certificate it offers;

(ii) The names and addresses of the institutions described in paragraph (a) of this section, and for each institution, the length of its educational programs and the degrees and certificates it offers;

(iii) The names of students described in paragraph (a)(2) of this section, and the dates those students attended their first classes at the applicant institution as well as the accredited institution;

(iv) Enrollment records from each of the institutions identified in accordance with paragraph (e)(1)(ii) of this section for the transfer students identified in accordance with paragraph (e)(1)(iii) of this section;

(v) An official publication of each institution identified in accordance with paragraph (e)(1)(ii) of this section that contains that institution's policy with regard to the acceptance of credits on transfer from accredited and unaccredited institutions;

(vi) Whether the applicant has ever been accredited or preaccredited and if so, the date on which it lost that accreditation or preaccreditation;

(vii) A certified statement from the dean of admissions or the registrar of the applicant unaccredited institution indicating that the institution has not paid, nor will it pay, to any accredited institution identified in accordance with paragraph (e)(1)(ii) of this section, any remuneration or compensation of any kind in exchange for accepting its credits, students or former students; and

(viii) A certified statement from the dean of admissions or registrar of each accredited institution identified in accordance with paragraph (e)(1)(ii) of this section indicating—

(A) That the policy of that institution is to accept the credits of students transferring from the applicant unaccredited institution for credit on the same basis that it accepts the credits of students transferring from any accredited institution;

(B) That the institution has not received and will not receive remuneration or compensation of any kind in exchange for accepting the unaccredited institution's credits or students;

(C) That the students identified in accordance with paragraph (e)(1)(iii) of this section transferred as regular students into accredited educational programs at the institution by enrolling and attending classes in those programs;

(D) The dates of enrollment of each of the students identified in accordance with paragraph (e)(1)(iii) of this section; and

(E) That the institution knows that the unaccredited institution is unaccredited and, if applicable, that the unaccredited institution has lost its accreditation or preaccreditation and the date of that loss.

(2) The Secretary does not begin to evaluate whether the unaccredited institution satisfies the requirement of this section until the applicant unaccredited institution provides all the information and documentation required for that determination.

(3) The Secretary may require, as a condition for making a determination that the applicant unaccredited institution has satisfied the requirements of paragraph (a) of this section, that any of the accredited institutions identified in accordance with paragraph (e)(1)(ii) of this section confirm the accuracy of the information or documentation provided by the applicant which pertains to that accredited institution.

(f)(1) If the Secretary determines that an institution satisfies the requirements of this section, that determination remains in effect for three years.

(2) An institution may apply under this section for a renewal of its transfer-of-credit determination at the end of the three-year period. In that renewal application, the institution must identify an additional twelve students who have transferred, as described in paragraph (a)(2)(i) of this section.

(Authority: 20 U.S.C. 1085(b) and 1141(a))

§ 600.9 Written agreement between an eligible institution and another institution or organization.

(a) Subject to the conditions in paragraphs (b), (c), and (d) of this section, an eligible institution described in paragraph (b) of this section may, without losing its eligibility under this part, enter into a written agreement with another institution or organization under which that other institution or organization provides all or part of the educational program of students enrolled in the eligible institution.

(b) The provisions of this section apply only to an eligible institution that—

(1)(i) Is accredited or preaccredited by a nationally recognized accrediting agency or association; or

(ii) Is approved by a State agency that the Secretary recognizes, by listing in the **Federal Register** in accordance with 34 CFR Part 603, as a reliable authority on the quality of public postsecondary vocational education in the State; and

(2) Gives credit to students enrolled in the portion of the educational program that is provided by the other institution or organization on the same basis as if it provided that portion of the program itself.

(c) If an eligible institution enters into a written agreement with another eligible institution, there is no limit on the portion of a student's educational program that may be provided under the agreement.

(d) If an eligible institution enters into an agreement with an institution or organization that is not an eligible institution—

(1) The ineligible institution or organization may provide up to 25 percent of the educational program of a student enrolled in the eligible institution; or

(2) The ineligible institution or organization may provide more than 25 percent but not more than 50 percent of the educational program of a student enrolled in the eligible institution if—

(i) The eligible institution and the ineligible institution or organization are not owned or controlled by the same individual, partnership or corporation; and

(ii) The eligible institution's nationally recognized accrediting agency or association or recognized State agency specifically determines that the institution's agreement meets the agency's or association's standards for the contracting out of educational services.

(Authority: 20 U.S.C. 1094)

§ 600.10 Date, extent, duration, and consequence of eligibility.

(a) *Date of eligibility.* If the Secretary determines that an applicant satisfies all the statutory and regulatory eligibility requirements, the Secretary considers the institution as an eligible institution as of the date the Secretary receives all the information necessary to make that eligibility determination.

(b)(1) *Extent of eligibility.* If the Secretary determines that the entire applicant institution, including all its locations and all its educational programs, satisfies the applicable requirements of this subpart, the Secretary extends eligibility to all educational programs and locations identified on the institution's application for eligibility.

(2) If the Secretary determines that only certain educational programs or certain locations of an applicant institution satisfy the applicable requirements of this subpart, the Secretary extends eligibility only to those educational programs and locations which meet those requirements and identifies the eligible educational programs and locations in the eligibility notice sent in accordance with § 600.21.

(3) Eligibility does not extend to any location that the institution establishes after it receives the eligibility designation. If an eligible institution seeks to establish eligibility for a new location, the institution shall apply under § 600.20.

(c) *Subsequent additions of educational programs.* (1) If an institution that has been designated by the Secretary as an eligible institution adds educational programs after that designation, the institution need not apply to the Secretary to have those additional programs designated as eligible programs but may determine on its own whether those programs satisfy the relevant statutory and regulatory eligibility requirements.

(2) If an institution incorrectly determines that its educational program satisfies the applicable statutory and regulatory eligibility provisions, the institution shall be liable to repay to ED all the student financial assistance and other ED program funds it or its students received who were enrolled in that educational program.

(d) *Duration of eligibility.* In addition to the requirements of § 600.30, an institution shall renew its designation of eligibility, including all its educational programs and all its locations, every four years.

(e) *Consequence of eligibility.* (1) An eligible institution may apply to participate in the programs authorized by the HEA which are listed in the eligibility notice that it receives under § 600.21.

(2) Merely by virtue of its designation as an eligible institution in the eligibility notice it receives under § 600.21, an institution is not automatically eligible to—

(i) Participate in the programs authorized by the HEA which are listed in the eligibility notice that it receives under § 600.21; or

(ii) Receive funds under any program authorized by the HEA.

(Authority: 20 U.S.C. 1085, 1088, and 1141)

§ 600.11 Ability to benefit.

(a) If an institution admits as a regular student a person who does not have a high school diploma or its equivalent, the institution shall determine, at the time of admission, whether that person has the ability to benefit from the education or training the institution offers.

(b) An institution shall determine whether a person described in

paragraph (a) of this section has the requisite ability by—

(1) Administering to the person a nationally recognized, standardized, or industry developed test, subject to criteria of the institution's accrediting agency or association, that measures the applicant's aptitude to successfully complete the educational program for which the student has applied; or

(2) Determining that the person has the capability to successfully complete a GED preparation program by the end of the first year of the course of study or prior to the student's certification or graduation from the program of study, whichever is earlier; or

(3) Placing the person, after counseling or failure to meet the institution's admission's testing requirement, in an institutionally prescribed program or course of remedial or developmental education not to exceed one academic year or its equivalent.

(Authority: 20 U.S.C. 1085, 1088, 1091, and 1141)

Subpart B—Procedures for Establishing Eligibility

§ 600.20 Application procedures.

(a) An institution that wishes to establish its eligibility to apply to participate in any program authorized by the HEA must first apply to the Secretary for a determination that it qualifies as an eligible institution.

(b) An institution applying for designation as an eligible institution must—

(1) Apply on the form prescribed by the Secretary; and

(2) Provide all the information and documentation requested by the Secretary to make a determination of its eligibility.

(Authority: 20 U.S.C. 1085, 1088, and 1141)

§ 600.21 Eligibility notification.

(a) The Secretary notifies an institution in writing of the Secretary's determination—

(1) Whether the applicant institution qualifies in whole or in part as an eligible institution under the appropriate definition in §§ 600.4 through 600.7; and

(2) Of the HEA programs for which it is eligible to apply for participation.

(b) If only a portion of the applicant qualifies as an eligible institution, the Secretary specifies in the notification of eligibility letter only the locations or programs which qualify.

(Authority: 20 U.S.C. 1085, 1088, and 1141)

Subpart C—Maintaining Eligibility

§ 600.30 Institutional changes requiring review by the Secretary.

(a) An eligible institution shall notify the Secretary at the same time that it notifies its accrediting agency or association, but not later than ten days after the change occurs, of any change in the following information provided in the institution's eligibility application:

(1) Its name.

(2) Its address.

(3) The name, number, and address of locations other than the main campus at which it offers educational services.

(4) Its ownership, if that ownership change results in a change in control of the institution.

(5) The establishment of written agreements with other institutions or organizations in accordance with § 600.9(b)(2).

(b) The Secretary notifies the institution in writing if the change affects the institution's eligibility.

(c) The institution's failure to inform the Secretary of the information described in paragraph (a) of this section within the time period stated in that paragraph may result in adverse action against it, including the loss of its eligibilty.

(Authority: 20 U.S.C. 1085, 1088, and 1141)

§ 600.31 Change in ownership resulting in a change of control.

(a) An eligible institution, or a previously eligible institution that participated in any HEA program, that changes ownership resulting in a change of control is not considered by the Secretary to be the same institution unless—

(1) The new owner agrees to be liable, or the old and new owners agree to be jointly and severally liable, for all HEA program funds which the institution received and improperly expended before the effective date of the change of control;

(2) The new owner agrees—

(i) To abide by the institution's policy regarding refunds of institutional charges to students in effect before the effective date of the change of control for students who were enrolled before the effective date; and

(ii) To honor all student enrollment contracts that were signed by the institution before the effective date of the change;

(3) The institution submits individual statements for the new owners listing assets, liabilities, and net worth and either—

(i) A profit and loss statement and balance sheet for the institution's latest complete fiscal year; or

(ii) An audit for the institution's latest complete fiscal year prepared by a licensed certified public accountant;

(4) The institution submits additional financial documents if requested by the Secretary because the financial information provided in paragraph (a)(3) of this section is insufficient; and

(5) The institution provides for the retention of all records required in connection with its designation as an eligible institution and its participation in any HEA program. These records must include a copy of the latest prior application requesting a determinaton of institutional eligibility for HEA programs, the Secretary's eligibility notification received as a result of that application, and the institution's participation agreement for the student aid programs.

(b) The Secretary may require that the profit and loss statement and balance sheet provided for in paragraph (a)(3)(i) of this section be audited and certified by a licensed certified public accountant.

(c) For the purposes of this part, a change in ownership of an institution that results in a change of control means any action by which a person or corporation obtains new authority to control the actions of that institution. That action may include, but is not limited to—

(1) The sale of the institution;

(2) The transfer of the controlling interest of stock of the institution or its parent corporation;

(3) The merger of two or more eligible institutions;

(4) The division of one institution into two or more institutions;

(5) The transfer of the controlling interest of stock or assets of the institution to its parent corporation; or

(6) The transfer of the liabilities of an institution to its parent corporation.

(d)(1) Except as provided in paragraph (d)(2) of this section, the Secretary considers an eligible institution, or a previously eligible institution that has participated in any HEA program, that changes ownership resulting in a change of control to be a new institution for the purpose of establishing eligibility if the new owner or owners of the institution have been convicted of or have pled *nolo contendere* or guilty to, a crime involving the acquisition, use, or expenditure of Federal funds, or have been judicially determined to have committed fraud involving Federal funds.

(2) The Secretary may consider an eligible institution or a previously eligible institution to be the same institution for the purpose of

establishing institutional eligibility under this part, if—

(i) The individuals who were convicted of, or pled *nolo contendere* or guilty to, a crime involving the acquisition, use, or expenditure of the funds are no longer incarcerated for that crime;

(ii) At least five years have elapsed from the date of the conviction, *nolo contendere* plea, guilty plea, or judicial determination; and

(iii) The funds that were fraudulently obtained or criminally acquired, used, or expended have been repaid to the United States, and any related financial penalty has been paid.

(e) If the Secretary considers an institution to be a new institution under this section, the institution under its new owner or owners must meet all applicable requirements for establishing eligibility, including, if applicable, the two years in existence requirement.

(Authority: 20 U.S.C. 1085, 1088(b), and 1094)

§ 600.32 Loss of eligibility.

(a) An institution loses its eligibility on the date that—

(1) It fails to meet any of the eligibility requirements of this part;

(2) It permanently closes; or

(3) It ceases to provide educational programs (except during normal vacation periods).

(b) If the Secretary designates an institution as an eligible institution on the basis of inaccurate information or documentation, the Secretary's designation is void from the date it was made and the institution never qualified as an eligible institution.

(c) If an institution ceases to satisfy any of the requirements for eligibility under this part—

(1) It must notify the U.S. Department of Education within 30 days; and

(2) It becomes ineligible to continue to participate in any HEA program.

(Authority: 20 U.S.C. 1085, 1088 and 1141)

PART 668—STUDENT ASSISTANCE GENERAL PROVISIONS

§§ 668.3, 668.4, 668.5, 668.6, 668.17 and 668.18 [Removed and reserved]

2. Part 668 is amended by removing and reserving §§ 668.3, 668.4, 668.5, 668.6, 668.17, and 668.18.

Appendix—Summary of Comments and Responses

[Editorial Note: This Appendix will not appear in the Code of Federal Regulations.]

Subpart A—General

Section 600.2 Definitions.

Six-month and one-year training programs.

Comment: Approximately 1500 commenters reacted to the proposed regulations which would have defined a "six-month training program" and a "one-year training program" to include a minimum number of calendar days. Most expressed strong objection to the proposed calendar day requirement stating that to require 150 calendar days of instruction for a six-month program and 210 days of instruction for a one-year program would result in the loss of eligibility for many public and private postsecondary institutions. Many expressed the opinion that 150 and 210 calendar days of instruction are not reflective of institutional practices of degree granting postsecondary institutions which operate on a nine- or ten-month academic year.

Hundreds of commenters expressed concern that the proposed definition would eliminate from eligibility all intensive or accelerated programs of instruction. Many felt the proposed requirement was in direct conflict with the philosophy of most proprietary schools, which is to teach the necessary skills to enable a student to obtain a job in the shortest possible amount of time. Others commented that to require a minimum number of calendar days of instruction for a six-month or a one-year program would force an artificial extension of the duration of the program by reducing the number of hours of instruction offered each day; that existing contractual agreements would preclude the immediate lengthening of programs, but in the long term, the proposed minimum number of calendar days would result in an increase in both the time and cost of instruction for both the students and the schools; and that the minimum number of calendar days requirement is discriminatory against clock-hour schools.

Others questioned the Secretary's authority to specify a minimum number of calendar days, expressing the view that these requirements conflict with provisions of section 432 of the General Education Provisions Act, 20 U.S.C. 1232a, which prohibits Federal intervention in the direction, supervision, or control over the curriculum, program of instruction, administration, or personnel of any educational institution, school, or school system.

Several commenters noted that the proposed definitions were in conflict with the definitions of a six-month training program and a one-year training program in 34 CFR Part 668, the Student Assistance General Provisions regulations.

Response: A change has been made. To consider the wide range of concerns that were expressed by the commenters regarding the proposed definitions of a "one-year training program" and a "six-month training program," the Secretary convened a series of meetings with representatives of the nationally recognized accrediting agencies and associations. One of the items discussed at those meetings was the need to find ways to curtail abuse of the student financial assistance programs through measurement of academic progress management. Toward this end, the Secretary and the nationally recognized accrediting agencies and associations agreed that the accrediting agencies and associations would recommend to the Secretary policies and procedures for the accrediting agencies and associations to adopt to standardize the review and approval of clock hour and credit hour conversions. As discussed in the preamble of these regulations, pending the recommendations from the nationally recognized accrediting agencies and associations, the Secretary has modified the proposed definitions of a "one-year training program" and a "six-month training programs" by deleting the minimum calendar day requirement from each definition.

Comment: Hundreds of commenters objected to the provision included in the proposed definitions of a six-month training program and a one-year training program that would require an institution that uses credit hours or units to measure the academic progress of a one-year training program or a six-month training program to be legally authorized by the appropriate State agency to measure those program in credit hours. The commenters noted that the standards of the States vary and that some States neither authorize nor prohibit the use of credit hours; that this requirement would create an undue burden on the States and the institutions; and the ED is encroaching on the role of accreditation. The commenters questioned the Secretary's authority to require an institution to be authorized by the State to measure in credit hours.

Some questioned the need for the Secretary to "ratify" the determination of a nationally recognized accrediting agency's certification of a six-month program, as required by paragraph (c) of the definition of a six-month training program in § 668.2.

Response: A change has been made. The Secretary deleted the requirement

that an institution must be specifically legally authorized in the State in which it is located to carry out educational programs in credit hours.

As discussed in the preamble of these regulations, the Secretary has added two new sections under § 600.3, "Special conditions," to clarify ED's policy with regard to the relationship between the institution being legally authorized to provide a postsecondary education program in a State and the method that the institution uses to measure academic progress for participation in HEA programs.

Since the six months requirement is a statutory requirement, the Secretary believes it is necessary to ratify an accrediting agency's determination.

Academic year.

Comment: One commenter noted that the terms "academic year" and "first year of the course of study" are not defined in the proposed regulations and expressed the view that part-time adult students would be adversely affected if a year is defined in terms of calendar days rather than equivalent credits taken.

Response: No change has been made. For the purposes of this part, the term "first year of the course of study," as used in sec. 484(d) of the HEA, refers to the first academic year of a course of study of a regular student whom the institution has admitted on the basis of a determination of the student's ability to benefit from the training offered.

Educational program.

Comment: Several commenters expressed concern that the proposed definition of an educational program limits eligibility to schools providing instruction, while eliminating the eligibility of schools that utilize assessment of external course work and life experience. The commenters stated that non-traditional, innovative institutions provide a much-needed educational function of assessing students' knowledge and skills relative to specific educational programs. They felt that the criterion for determining the institution's eligibility should be linked to whether it is accredited, and that the Secretary's definition of an educational program exceeds congressional intent to the point of being contradictory with the HEA.

Response: A change has been made. The Secretary has modified the proposed regulations by adding the phrase "including a course of independent study" to clarify that the term "instruction," as used in the definition of an "educational program," includes programs of independent study. However, the Secretary believes that it is necessary for an institution or school to provide instruction in order to satisfy the educational program requirement of the statutory definition of an institution of higher education, a proprietary institution of higher education, a postsecondary vocational institution, or a vocational school.

Recognized equivalent of a high school diploma.

Comment: One commenter noted that the definition in the proposed regulations of the "recognized equivalent of a high school diploma" does not address those students who have excelled academically and are admitted to a postsecondary educational institution prior to receiving a high school diploma.

Response: No change has been made. In those limited situations where a postsecondary institution admits a student who has not received a high school diploma, but the student has excelled academically in high school and has met formalized, written admission policies of the institution, the Secretary considers the student as having the equivalent of a high school diploma.

Regular student.

Comment: Several commenters questioned the appropriateness of the definition in the proposed regulations of a "regular student," expressing the view that a program of study that is in compliance with State and Federal regulations should be the criterion for determining whether a student is eligible for Federal financial assistance. Others expressed the view that an institution should have the right to define a regular student and should be allowed to admit students on a provisional or conditional basis.

A few commenters were of the opinion that the definition of a "regular student" is inordinately broad and could have a negative impact on an institution's statistical base in determining its administrative capability. For instance, an accepted student who was never charged any tuition or fees and who never attended one day of classes would be classified as a "regular student" for the purpose of calculating the institution's ratio of withdrawals under the Student Assistance General Provisions regulations.

Response: No change has been made. The definition of a regular student was initially included in ED regulations in 1979 and has remained basically unchanged since that time. Moreover, it is necessary to define "regular student" in these regulations since an element of each of the statutory definitions of a postsecondary educational institution includes the type of regular student the institution admits. The Student Assistance General Provisions regulations have been revised to remove any distortion that may be caused by the definition of a regular student.

Section 600.3 Special conditions.

Comment: Two commenters requested clarification regarding the location of an institution if the institution offers a program of study by correspondence and has sales offices in numerous locations or has more than one administrative office.

Response: A change has been made. The Secretary has modified the proposed regulations by deleting the reference to the "sales office" under this section. Thus, a correspondence school is considered to be located in the State in which it has its administrative office.

Comment: Two commenters inquired whether a school offering a program of study by correspondence with a residential training component is considered to be located only in the State in which its administrative or sales office is located.

Response: A change has been made. The Secretary has modified the proposed regulations to clarify that if a program of study by correspondence includes a period of residential training, the Secretary considers the institution to be located in both the State in which its administrative office is located and the State in which its residential program is located.

Comment: One commenter inquired if the proposed regulations which require a minimum duration of 90 calendar days in a vocational education program applies to home study programs and also to programs that combine home study with residential training.

Response: A change has been made. The Secretary has modified the definition of vocational school by deleting the requirement that would require a minimum duration of 90 calendar days in a vocational education program.

Section 600.5 Proprietary institution of higher education.

Comment: Two commenters inquired if the following two criteria of the definition in the proposed regulations of a proprietary institution of higher education are inconsistent: § 600.5(a)(4), which requires an institution to be legally authorized to provide an educational program beyond secondary education, and § 600.5(a)(5), which requires the institution to provide at least a six-month training program.

Response: No change has been made. These are two separate, independent

requirements contained in the statutory definition of a proprietary institution of higher education and are not inconsistent. Each of these requirements must be met in order to qualify as an eligible proprietary institution of higher education.

Comment: One commenter noted that in recent years many high schools have developed vocational programs of instruction at a level that were previously offered only by postsecondary institutions and suggested that the definition in the proposed regulations of a vocational school is not consistent with this practice.

Response: A change has been made. The Secretary agrees and has revised the proposed definition of vocational school by deleting the phrase "more advanced than those generally offered at the high school level."

Comment: Several commenters expressed concern that the proposed regulations would eliminate one or both of the alternatives to accreditation (i.e., State agency approval and advisory committee approval) for public vocational schools that are located in those States in which the Secretary has not recognized a State agency for approval of public postsecondary vocational education. One commenter took exception to the statement in the proposed regulations that no vocational school has sought eligibility under these alternatives to accreditation in the last ten years.

A few commenters noted that the Higher Education Amendments of 1986 did not repeal the alternatives to accreditation for unaccredited vocational schools, and commented that they did not object to the Secretary's plan not to promulgate regulations, provided the regulations are not needed in order for a school to use the alternatives to accreditation for eligibility under this part.

Others expressed the view that accreditation by an agency recognized by the Secretary for that purpose is the appropriate mechanism for assuring the quality of education; therefore, to eliminate the alternative methods of accreditation for eligibility for GSL, SLS and PLUS programs is appropriate.

Response: No change has been made. The Secretary will continue to recognize State agencies, for the purpose of approving public vocational schools as an alternative to accreditation by listing in the **Federal Register** in accordance with 34 CFR Part 603.

The Secretary will not issue regulations governing the advisory committee alternative to accreditation, as nearly all categories of vocational schools now have access to a nationally recognized accrediting agency or approval by a State agency.

The statement in the proposed regulations that no vocational school has sought eligibility in the past ten years under these alternatives to accreditation applied only to the advisory committee alternative. In the event a school seeks accreditation in a category for which no appropriate nationally recognized accrediting or State agency is available, the Secretary appoints an advisory committee to prescribe standards and approve schools for a particular category. No regulations are needed for this procedure.

Section 600.8 Transfer-of-credit alternative to accreditation.

Comment: Several commenters objected to requirements in the proposed regulations to increase from three to four the number of students of an unaccredited institution whose credits must be accepted on transfer by each of three accredited institutions. They also objected to requirements that the students must be accepted into programs not specifically designed for them that the students' credits be evaluated and accepted on the same basis as transfer students from accredited institutions, that the students actually enroll and attend the accredited institution, and that the accredited institution have an educational program at least as long as the longest educational program offered at the unaccredited institution.

Two commenters also objected to requirements that an unaccredited institution must: (1) Submit an official publication from each accredited institution stating the policy of the institution regarding acceptance of transfer credits from accredited and unaccredited institutions; (2) obtain and submit enrollment records for each student transferred; and (3) certify that no payments were made to the accredited institution in conjunction with the institution's acceptance of credits of students on transfer from the unaccredited applicant institution.

Response: No change has been made. The Secretary believes that increasing from three to four the number of students or former students of an unaccredited institution that must transfer to each of three accredited institutions will provide further evidence that the accredited institution has based its decision to accept the credits of the unaccredited applicant institution on the quality of the educational program of the unaccredited institution rather than upon the qualifications of a particular student.

In accepting the credits of students on transfer from an unaccredited institution, the accredited institution must apply the same admission policies as it applies in accepting the credits of students on transfer from any accredited institution. Therefore, if it is an accredited institution's standard admission policy to charge a fee to evaluate the credits of students who apply for admissions on transfer from another accredited institution, as stated in the institution's catalogue or other official publication, the Secretary will recognize that policy with regard to the payment of fees for evaluating the credits of students who apply for admission on transfer from an unaccredited institution.

The Secretary is legally authorized to require that an unaccredited institution that is requesting eligibility to participate in HEA programs under the transfer-of-credit alternative demonstrate that it satisfies the transfer-of-credit alternative. Based upon experience, the Secretary has determined that it is the better administrative practice in this area to require the applicant institution to provide all the information and documents necessary for the Secretary to make a determination and that actual documents rather than mere certifications be provided to support that determination.

Section 600.9 Written agreement between an eligible institution and another institution or organization.

Comment: Two commenters objected to the proposed regulations to require an institution itself to be accredited or preaccredited in order to enter into a written agreement with another organization. The commenters stated that the proposed regulations would prohibit some "eligible institutions" that are neither accredited nor preaccredited from entering into a written agreement with another institution or organization to provide a portion of the eligible institution's total educational program. The opinion was expressed that all institutions that are designated as eligible should be entitled to the same benefits.

Response: No change has beeen made. The Secretary believes it to be inappropriate for an unaccredited institution to retain its eligibility as an eligible institution if it contracts to have a portion of its eligible program provided by another institution.

Section 600.10 Date, extent, duration, and consequences of eligibility.

Date of eligibility.

Comment: Several commenters expressed reservations concerning the proposed rules to establish the effective date of eligibility as of the date on which the Secretary receives all the information necessary to make that eligibility determination. Many expressed concern as to whether ED resources would be available to maintain the procedure.

Most expressed the view that the effective date of eligibility should be the date on which the institution meets the requirements for eligibility as confirmed by the Secretary. Others suggested the following: The date of application unless the Secretary changes the date for good and substantial cause; the date the accrediting agency indicates in its letter of notification to ED that a school has been accredited, a program of study was added or a change of location or ownership occurred; or the postmark date on certified mail so that both the institution and the Secretary would have a clear audit trail. Some stated that the current practice should be maintained.

Others felt the date of eligibility should be modified to state that this eligibility covers all in-school students to the extent of the academic year within that award year.

Response: No change has been made. The Secretary believes the date of eligibility cannot be established before the date on which the institution meets all requirements of the relevant statutory definition. The first date on which the Secretary can be assured that an institution or school has met all of those requirements is the date on which all materials are available to the Secretary to support that determination. The Secretary also believes that an institution should not be penalized by ED delays in processing the application.

Extent of eligibility.

Comment: Many commenters objected to the proposed regulations which would have prohibited extending an institution's eligibility to any educational program or location that an institution establishes after it receives the eligibility designation. It was stated that the effect of this provision would be to shift authority from the nationally recognized accrediting agencies directly to the Secretary, and that it would delay the eligibility of students attending new courses at extension or location facilities. Some commented that the provision is contrary to the concept of institutional accreditation, and noted that over time ED's procedures for designating eligibility have ranged from issuing blanket letters of eligibility to the current procedure of issuing eligibility letters that are program-of-study specific and require updating as program offerings change. The current procedure was described as burdensome, time-consuming, and confusing for the institutions.

Others expressed the view that if a new program is both accredited and legally authorized by the State in which the institution is located, a determination of program eligibility on a program-by-program basis should not be required.

Several questioned the need for the multiple safeguard efforts, noting that the proposed regulations would require the State, the accrediting agency, and ED to approve curriculum, program, and location changes.

Others expressed a wide range of concerns, including that the proposed provision would, in effect, eliminate institutional accreditation, that the schools will cease to have the capability to respond to the dynamics of the current job market and the needs of the community, that consideration should be given to finding ways to reduce the length of the process as students must already wait a minimum of three months for a school to be eligible to participate in the student financial assistance programs, that implementation of this provision will result in a very significant increase in the number of applications pending before ED without any clearly ascertainable benefit to the Federal interest, that the provision represents an extension of present authority and suggests that ED is moving toward the approval of all educational matters, and that the provision would impose an enormous administrative burden on the staff of ED, as well as result in a significant increase in paper production and complicate the approval process which is not in keeping with the Paperwork Reduction Act of 1980.

Response: A change has been made. The basis for many of the concerns that were expressed by the commenters is not clear. The proposed regulations would have required ED to review each educational program that an eligible institution adds after the institution receives its designation of eligibility. This was consistent with ED's former practice of reviewing individual educational programs for eligibility for participation in HEA student aid programs. However, the Secretary has tried to accommodate some of the concerns by modifying the proposed regulations to eliminate ED's review of individual educational programs that are added by an institution or school after it receives its designation of eligibility.

The Secretary has also modified the regulations by setting forth in § 600.10(c) the responsibility of an institution that has been designated as an eligible institution if it adds educational programs after that designation. The Secretary has further amended § 600.10 by adding a new paragraph (d) to limit an institution's or school's designation of eligibility to a period of four years by requiring that each eligible institution or school renew its eligibility designation, including all its educational programs and all its locations, during its fourth year of eligibility under its most recent eligibility designation.

Comment: One commenter expressed the view that an eligible institution might be required to notify ED when it adds a new or additional location or programs, but questioned the authority of ED to exclude those locations and programs from eligibility whether established before or after institutional eligibility is recognized.

Response: No change has been made. The Secretary extends eligibility to only those locations and educational programs of an institution that are identified in the institution's application and are determined to meet all requirements of this part. An institution's eligibility does not extend to any location that the institution establishes after it receives its eligibility designation. If an institution changes or adds a location, the eligibility status of that location is subject to the requirements of § 600.30 of this part.

Section 600.20 Application procedures.

Comment: One commenter stated that the proposed regulations describing the procedures for applying for institutional eligibility are vague regarding the information and documentation that must be provided to the Secretary. It was suggested that the regulations be more specific concerning the application requirements such as: Include a list of the required documents, or simply require the institution to provide all information necessary to demonstrate that it meets the definition of an eligible institution, as defined in § 600.2, § 600.4, § 600.5, § 600.6, and § 600.7.

Response: No change has been made. The eligibility application to be provided an applicant institution will contain all the specific information needed by the Secretary to determine whether the applicant qualifies as an eligible institution or school.

Section 600.30 Institutional changes requiring review by the Secretary.

Comment: Numerous commenters objected to the proposed regulations which would have required at least 45 days advance notice before the effective date of any change in the information described in § 600.30. These commenters objected to the advance notice requirement on the basis that changes are not always pre-planned, that certain programs (such as externships) may utilize a large and changing number of locations which would significantly increase the institution's paperwork burden, and that an institution is not assured of a change of ownership until the day of the sale, which may or may not be 45 days in advance of the effective date.

Many commenters expressed their concern that the 45 days advance notice requirement would result in unnecessary paperwork since in many cases it may involve a two-step procedure because the anticipated change may never occur. Questions were raised as to what purpose pre-occurrence reporting would serve.

Response: A change has been made. The Secretary has modified the regulations to require that an institution notify ED of the institutional changes described in § 600.30 concurrently with its notifying its appropriate accrediting agency, but no later than ten days after the change occurs.

To notify ED of an institution change that requires review by the Secretary, an institution may simply send to ED a copy of the completed "notice of change" form that the institution uses to notify its accrediting agency of an institutional change.

Section 600.31 Change in ownership resulting in a change of control.

Comment: A few commenters noted that, under § 668.18 of the Student Assistance General Provisions regulations, an institution which is undergoing a change of ownership is required to submit certain financial information, and inquired whether ED will continue to require, for the purpose of establishing or retaining eligibility, a profit and loss statement for the institution's latest complete fiscal year, prepared by a licensed certified public accountant, and any additional financial information which may be required by the Secretary.

Response: A change has been made. The Secretary has modified the regulations to require new owners of an institution to provide a profit and loss statement and a balance sheet, or an audit prepared by a licensed certified public accountant, for the institution's latest complete fiscal year, and any additional information requested by the Secretary.

Comment: One commenter noted that the proposed regulations provide for the retention of all records that are required in connection with an institution's participation in any HEA program, but the regulations do not indicate what records are to be retained nor for what period of time.

Response: A change has been made. The Secretary has modified the regulations to require an institution to maintain, in accordance with section 437 of the General Education Provisions Act, 20 U.S.C. 1232f, all documents that pertain to its application, its notification of institutional eligibility, and its participation agreement for a period of not less than five years.

Comment: A number of commenters requested clarification of the circumstances under which the Secretary considers an institution to be a "new institution" and, as such, subject to the two-years-in-existence requirement. Some inquired if the "new institution" requirement contained in § 600.31(d) applies solely to § 600.31(c) in which a new owner has been convicted of a crime involving an HEA program, or it § 600.31(d) applies to new owners who fail to abide by the requirements of § 600.31(a), or to other situations.

Clarification was also requested as to whether the "new institution" status, under § 600.31(d), applies to both previous owners and new owners who have been convicted of a crime involving any HEA programs. For instance, if a group of investors, one of whom has a relevant conviction, acquires control of an institution, would the institution be considered a "new institution" as a result of the new ownership and, therefore, subject to the two-years-in-existence requirement for the purpose of establishing eligibility? It was suggested that the "new institution" status under § 600.31(d) should not apply to present owners who have been convicted of a crime involving HEA programs.

Response: A change has been made. The Secretary has modified the regulations to provide criteria for determining whether a new owner of an eligible or previously eligible institution or school is subject to the two-years-in-existence requirement as a result of having been convicted of, or has pled *nolo contendere* or guilty to, a crime involving the acquisition, use, or expenditure of Federal funds, or has been judicially determined to have committed fraud involving Federal funds.

The Secretary may consider an eligible or a previously eligible proprietary institution of higher education, postsecondary vocational institution, or vocational school to be the same institution for the purpose of establishing institutional eligibility under this part, only if the new owner or owners who were convicted of, of pled *nolo contendere* or guilty to, a crime involving the acquisition, use, or expenditure of Federal funds are no longer incarcerated for that crime; at least five years have elapsed from the date of the conviction, *nolo contendere* pleas, guilty plea, or judicial determination; and the funds that were frauduently obtained or criminally acquired, used, or expended have been repaid to the United States, and any related financial penalty has been paid.

Section 600.32. Loss of eligibility.

Comment: Several commenters objected to the proposed regulations to permit the Secretary to void an eligibility designation if an institution's eligibility determination was based on inaccurate information, stating that the term "inaccurate information," as used in the proposed regulations, is too vague and general. It was suggested that the regulations be modified to indicate material inaccuracy and that only institutional intention to supply false information should be grounds for loss of eligibility.

Response: No change has been made. An institution that does not satisfy the definition of an eligible institution or school is not an eligible institution or school even though the Secretary may have determined the institution or school as eligible on the basis of inaccurate information. If an institution or school intentionally provided false information, the institution may be subject to legal action.

Comment: Two commenters objected to the proposed regulations to permit a determination regarding the loss of an institution's eligibility without due process of law. Under due process, an institution would be afforded an evidentiary administrative hearing before any action was taken to void its eligibility.

The commenters also objected to the proposed regulations because no provision is included to govern loss-of-eligibility determinations involving unexpected emergency situations, such as fire or natural disaster.

Response: No change has been made. An institution loses its eligibility if and when it no longer satisfies one of the qualifying statutory definitions. An evidentiary administrative hearing is not authorized by the HEA and that type of hearing would not be necessary since the facts with regard to compliance with the statutory definition would not be in doubt.

[FR Doc. 88-7424 Filed 4-4-88; 8:45 am]

BILLING CODE 4000-01-M

VOL 53 ISS 65 AP 5 1988 UMI

federal register

Tuesday
April 5, 1988

Part VI

Department of Housing and Urban Development

Office of the Secretary

24 CFR Parts 50, 221, 236, 241, 248

Prepayment of a HUD-Insured Mortgage by an Owner of Low Income Housing; Interim Rule

DEPARTMENT OF HOUSING AND URBAN DEVELOPMENT

Office of the Secretary

24 CFR Parts 50, 221, 236, 241 and 248

[Docket No. R-88-1385; FR-2450]

Prepayment of a HUD-Insured Mortgage by an Owner of Low Income Housing

AGENCY: Office of the Secretary.

ACTION: Interim rule.

SUMMARY: This interim rule sets forth HUD's procedures governing the prepayment of a multifamily mortgage by an owner (mortgagor) of eligible low income housing, in cases where, but for the recently-enacted legislation discussed below, the owner would be free to prepay without HUD's approval or would within one year become eligible to prepay without HUD's approval. The rule implements legislative provisions governing prepayments of HUD-insured and HUD-held mortgages that are contained in Title II, Subtitle B of the Housing Community Development Act of 1987 ("1987 Act"), Pub. L. 100-242, approved February 5, 1988, entitled "Preservation of Low Income Housing." This legislation contains a provision for the repeal of Subtitle B on February 5, 1990, at which time this rule will be terminated or revised to reflect the then-current law. Congress enacted these provisions as an interim measure to assure that affordable multifamily housing units are preserved to the maximum extent practicable for lower-income families, and that displacement of such families is minimized, while the public and private sectors work together to find long-term responses to the potential loss of affordable-housing.

DATES: *Effective Date:* May 20, 1988.
Comment Due Date: June 6, 1988.

ADDRESS: Interested persons are invited to submit comments to the Rules Docket Clerk, Office of General Counsel, Room 10276, Department of Housing and Urban Development, 451—7th Street, SW, Washington, DC 20410.

Comments should refer to the above docket number and title. A copy of each comment received will be available for public inspection during regular hours at the above address.

FOR FURTHER INFORMATION CONTACT: James Tahash, Director, Planning and Procedures Division, Department of Housing and Urban Development, 451—7th Street, SW, Washington, DC 20410. Telephone (202) 426-3944. [This is not a toll-free number.]

SUPPLEMENTARY INFORMATION:

I. Background

A. Legislative Purpose

In enacting Title II, "Preservation of Low Income Housing," Congress made a number of findings leading it to conclude that the interim measures it adopted are "needed to avoid the irreplaceable loss of low income housing and irrevocable displacement of current tenants." (*See* section 202(a)(10)). For example, the Congress has determined that, in the next 15 year, more than 330,000 low income housing units insured or assisted under sections 221(d)(3) and 236 of the National Housing Act (NHA) could be lost as a result of the termination of low income affordability restrictions, and that, in the next decade, more than 465,000 low income housing units produced with assistance under section 8 of the United States Housing Act of 1937 could be lost as a result of the expiration of the rental assistance contracts executed between project owners and HUD.

The Congress has concluded that the potential loss of these housing units in coming years "would precipitate a grave national crisis . . . that was neither anticipated nor intended when contracts for these units were entered into." Accordingly, these interim measures were enacted to assure that housing units are preserved to the maximum extent practicable, while the public and private sectors seek responses to the threatened loss of affordable low income housing units. By February 5, 1990, the date when, under section 203, title II, Subtitle B of the 1987 Act will be automatically repealed, Congress intends to act on recommendations that arise from the review undertaken by private and public organizations.

B. Section 250 of the National Housing Act

Section 250 of the NHA already places limitations on the ability of an owner of low income housing to prepay its mortgage. This statute is applicable to project loans or mortgages assisted or insured under sections 236 and 221(d)(5) of the NHA, section 101 of the Housing and Urban Development Act of 1965, or section 202 of the Housing Act of 1959.

In situations where HUD's approval is required for prepayment, section 250(a) requires the Secretary to make certain findings before granting approval. These findings are basically designed to assure that the prepayment would not result in the elimination of needed low income housing units and that the relocation needs of lower income tenants displaced as a result of the prepayment are adequately addressed.

Section 261 of the 1987 Act amended section 250(a) by further limiting the Secretary's authority to approve a prepayment. Previously, the Secretary could approve a prepayment upon determining either "that the project is no longer meeting a need for lower income families in the area *or* that the needs of lower income families in such project can be met more efficiently and effectively through other Federal housing assistance taking into account the remaining time the project could meet such needs." As amended by the 1987 Act, Section 250(a) no longer permits the Secretary to approve a prepayment on the basis of the latter determination.

Certain mortgages (e.g., a section 236 mortgage, with a limited distribution mortgagor, that is nineteen years past final endorsement) are subject to both section 250(a) and Subtitle B. If HUD approves a plan of action for such a project under Subtitle B, and the plan of action contemplates prepayment of the mortgage, the prepayment may not take place unless Section 250(a) is complied with or until Section 250(a) is no longer applicable.

In situations where HUD's approval is not required for prepayment, Section 250(b) authorizes the Secretary to offer an owner inducements (section 8 and Flexible Subsidy assistance) if the Secretary finds that this is necessary to prevent a prepayment. The project owner is not required to accept inducements and can elect instead to prepay the mortgage or loan.

The 1987 Act did not amend or repeal section 250(b) of the Act. It is clear, however, that an owner of a project with a loan or mortgage insured or assisted under sections 236 or 221(d)(5) of the NHA or section 101 of the Housing and Urban Development Act of 1965 is subject to the prepayment provisions of the 1987 Act and these regulations. Thus, section 8 and Flexible Subsidy assistance, the two inducements expressly authorized by section 250(b), are listed in section 248.231 of the rule. If the Commissioner determines that section 8 or Flexible Subsidy assistance would be appropriate, HUD would "give priority" for such assistance, as the Secretary is directed to do under section 250(b). However, section 250(c)(2), which requires that, when section 8 is provided under section 250(b), the owner give priority to applicants who have the lowest income, may conflict with section 225(b)(3)(F)(i), which requires that the proportion of each income class of tenants be maintained.

To the extent that such an inconsistency exists, section 225(b)(3)(F)(i) would prevail. If the Commissioner determines that incentives other than section 8 or Flexible Subsidy are more appropriate, HUD would not be required to "give priority" for such assistance. On the other hand, prepayment provisions contained in Subtitle B do not apply to projects assisted under the section 202 program. Accordingly, the provisions of section 250(b) continue to apply where a project owner with a section 202 loan seeks to prepay the loan and has a right to do so without HUD approval. Similarly, section 250(c), which imposes requirements on an owner who receives additional section 8 assistance pursuant to section 250(b), and section 250(d), which defines lower income families for purposes of section 250, continue in effect.

This regulation implements Subtitles A and B of the 1987 Act; it does not implement section 250 of the NHA. The Department's existing regulations, while not specifically addressing section 250, are consistent with it, and the Department has been carrying out section 250 in its servicing of mortgages and loans subject to its provisions. The Department is developing a proposed rule that will revise applicable regulations to address section 250 of the NHA.

C. Publication as an Interim Rule

Section 234 of the 1987 Act directs the Secretary to "issue final regulations to carry out this subtitle not later than 60 days after the date of the enactment of this Act." It also requires that the regulations take effect not later than 45 days after the date of issuance. The Department is publishing the rule as an interim rule, which is consistent with section 234 because the interim rule will be effective within the required time. An interim rule allows the Department to seek public comment. In order to comply with section 234 it is not necessary to submit the rule for Congressional review under section 7(o) of the Department of HUD Act, 42 U.S.C. 3535(o).

II. Content of This Rule

This rule largely reflects provisions mandated by statute, most of which do not provide for agency discretion. For clarity, whenever possible in this preamble, reference is made to the statutory provision that corresponds to the section of the rule discussed.

The new rules governing prepayments appear in a new part of the Code of Federal Regulations, 24 CFR Part 248. Part 248 consists of Subparts A and B. Subpart A discusses the purpose of the regulation, while Subpart B sets out the specific procedures governing prepayments. Subpart B applies to all prepayments governed by Subtitle B of the 1987 Act.

Before discussing the specific contents of the regulations, a brief overview of its impact on owners/mortgagors follows. As a general matter, an owner of "eligible low incoming housing" as that term is defined in the 1987 Act (*see* section 233) will no longer be able to prepay a mortgage, unless the prepayment is first approved by HUD. HUD can only approve a prepayment that involves the termination of low income affordability restrictions in accordance with an acceptable "plan of action," submitted by the owner, that discusses the impact of the proposed prepayment on the future use of the involved housing units and, most particularly, on lower income tenants (*see* sections 221 and 225(a)). If HUD determines that the mortgage cannot be prepaid under section 225(a), it can still agree to give the owner certain financial incentives to keep the mortgage in place, provided that doing so (a) is necessary to provide a fair return on the investment of the owner; (b) is the least costly alternative that is consistent with achieving the purposes of the statute; and (c) meets statutory criteria designed to protect current and future tenants (section 225(b)). Alternatively, a plan of action could combine prepayment with incentives, provided the standards set forth in section 225(b) are met.

If an owner does not submit an acceptable plan of action or HUD cannot approve a plan of action that would permit either prepayment or the provision of financial inducements, the status quo would be retained, with one possible exception. HUD could, upon request of the owner, make certain modifications to the owner's existing regulatory agreement (*see* section 228). Accordingly, there are five possible consequences where an owner notifies HUD of its intent to prepay in accordance with a plan of action:

—Prepayment will be approved and all low income affordability restrictions terminated, except with regard to protection of current very low income, low income and moderate income tenants;

—Prepayment will be approved, but the owner will receive incentives from the Federal government in return for agreeing to conditions relating to the continued use of the project as low income housing;

—Prepayment will not be approved, but the owner will receive incentives from the Federal government in accordance with a plan of action negotiated by the owner and HUD;

—Prepayment will not be approved, but, after failing to reach agreement on a negotiated plan of action, the owner and HUD agree to the package of incentives and restrictions prescribed by Section 228 of the 1987 Act (*see* § 248.241 of the rule); or

—Prepayment will not be approved, and no incentives will be offered.

In relation to each of the five possible scenarios listed, the legislation and this interim rule set out specific criteria governing the prepayment process.

Subpart A of the rule initially sets forth the purpose of this part (*see* section 202(b) of the 1987 Act). The Department's rule reflects the intent of the statute that the owners' prepayment rights be restricted only to the extent necessary to achieve the purposes of the statute. Section 248.103 provides that the requirements of Part 248 apply to any project that is eligible low income housing on or after February 5, 1988, the date of the 1987 Act's enactment. Section 235 of the 1987 Act states that the requirements of Subtitle B apply to any project that is eligible low income housing on or after November 1, 1987. However, retroactive application of the statute to prepayments that took place between November 1, 1987 and February 5, 1988 would in many cases require the rescission of refinancing mortgages and the reinstatement of the mortgages that have been prepaid. There is no evidence in the 1987 Act's legislative history that Congress intended such a result, and the Department's position is that the statute should not be so construed.

Section 248.105 is a sunset provision, indicating that upon repeal or amendment of Subtitle B of Title II of the 1987 Act, HUD will terminate or amend Part 248 accordingly. (*See* section 203). Finally, section 221(b) of the 1987 Act contains an "alternative prepayment moratorium." This provision precludes an owner of eligible low income housing from prepaying its mortgage, if the housing is located within a jurisdiction in which a Federal or State court has invalidated the requirements contained in Subtitle B. The rule contains a provision corresponding to this statutory provision.

Subpart B governs the prepayment process related to eligible low income housing. Section 248.201 defines terms used throughout this subpart, including but not limited to the terms defined in section 233 of the legislation. In some instances, the regulation (unlike the legislation) cross-references other HUD regulations that already define a term. For example, the legislation defines "lower income families or persons" in terms of income levels set forth in

BEST COPY AVAILABLE

section 3(b)(2) of the United States Housing Act of 1937. The rule therefore refers to specific income level criteria contained in 24 CFR Part 813, which implements section 3(b)(2).

In four separate provisions the statute refers to the involuntary displacement of tenants "except for good cause." The regulation, at §§ 248.221(a), 248.223(a)(1), 248.233(d)(3), and 248.241(a)(1), restates these provisions. Section 248.201 defines "good cause" to mean the temporary or permanent uninhabitability of a project justifying the relocation of all or some of the project's tenants, or actions of the tenant that, under the terms of the tenant's lease and applicable regulations, constitute a basis for eviction. For purposes of this regulation, a tenant who is induced or forced to move from the project because of increases in the rent for the unit is not deemed to have been "involuntarily displaced," since other provisions of the rule (e.g., §§ 248.221(a)(1) and (2), 248.223(a)(3)–(5), 248.233(d)(4)–(6), and 248.241(a)(4)) address the problem of affordability for current tenants.

The statutory definition of "eligible low income housing" (section 233) covers projects financed by mortgage loans (1) insured or held under section 221(d(3) *and* assisted under the Rent Supplement *or* section 8 program; (2) insured or held under the Section 221(d)(3) BMIR program; (3) "insured, assisted or held" under the Section 236 program, or (4) "held by the Secretary and formerly insured under a program referred to in clause [(1), (2), or (3)]. * * *" The Conference Report makes clear that the last category refers to purchase money mortgages originated by HUD in connection with the sale of HUD-owned projects. H.R. Rep. No. 100–426, 100th Cong., 1st Sess. 194 (1987). The statutory definition also provides that Subtitle B is applicable only if, "under regulation or contract in effect before [February 5, 1988, the mortgage] is or will within 1 year become eligible for prepayment without prior approval of the Secretary." HUD interprets this language to mean that if, at any time within the two-year duration of the statute, a mortgagor is within one year of becoming eligible to prepay its mortgage without HUD's approval in accordance with the terms of the mortgage and applicable program regulations, the mortgagor may initiate proceedings under Part 248 by filing a notice of intent. HUD infers that Congress intended to give project owners sufficient lead time to negotiate a plan of action so that the plan of action could be implemented by the date that the mortgagor would have been free, in the absence of the 1987 Act, to prepay its mortgage without HUD's consent.

With respect to section 236 projects, a question arose as to whether noninsured, State agency-financed projects assisted under the second proviso of section 236(b) would be included in the definition of eligible low income housing. The definition of "eligible low income housing" in section 233 includes mortgages "insured, assisted or held by the Secretary" under section 236 of the National Housing Act. However, the statute's use of the terms "insured, assisted or held" is not consistently correct or unambiguous. For example, the heading of Subtitle B of the statute is "Prepayment of Mortgages Insured Under the National Housing Act," implying that noninsured projects are not subject to its provisions.

The legislative history of section 233 does not contain any definitive statement to resolve this ambiguity; however, the testimony relating to the "prepayment" problem which led to the enactment of Title II related to HUD-insured and HUD-held mortgages only. Also, the statistics as to affected units offered by the Congress in section 202, *Findings and Purposes*, do not include the noninsured section 236 projects. Likewise, the "permissible incentives" specified in section 224 pertain mainly to contractual relationships between HUD and project owners under the regulatory agreement. Even though the extensive State and local involvement in the statutory preservation scheme might cause one to assume, upon an initial reading, that noninsured section 236 projects should be covered, in view of the comma separating the words "insured" and "assisted," the legislative history clarifies that the Congress did not intend to cover the noninsured projects. Under a discussion of "notice of intent to prepay," the Conference Report indicates: "The mortgages covered by this provision include purchase money mortgages held by the Secretary that were provided to provision (sic) formerly insured under Sections 221(d)(3), 221(d)(3) BMIR or 236." H.R. Rep. No. 100–426, at 194. Under a discussion of "Alternative State Strategy," the Conference Report further indicates that "some States have already begun to address the problem of expiring low income affordability restrictions in *FHA-insured projects* * * *" *id.* at 197 (emphasis added). Moreover, there would be no logical reason to include the noninsured Section 236 projects in Title II because State housing finance agencies would have control over owners and mortgagees with respect to those projects.

There are a few projects that are assisted with section 236 interest reduction payment assistance and which were refinanced and are currently insured under section 207 pursuant to section 223(f). These projects are covered by Title II because they remain assisted under section 236 and are subject to HUD control through a regulatory agreement.

Section 248.203 (general prepayment limitation) indicates that a mortgage may not be prepaid without the prior approval of a plan of action by the FHA Commissioner. Moreover, if a mortgagee accepts prepayment without prior approval, it will be subject to administrative and other legal sanctions.

Section 248.211 (notice of intent to prepay) corresponds to section 222 of the Act. It is incumbent upon an owner to assure that the appropriate State or local government agency (or both, where necessary) has received this notice. Upon receipt of the notice of intent, the Commissioner will provide the owner with information needed to prepare the plan of action. The owner should not submit the plan of action until it has received this information from the Commissioner. This information would include HUD's standards regarding approval of a plan of action that involves termination of low income affordability restrictions. In addition, it would include information concerning incentives which may be available in cases where a plan of action involving termination of low income affordability restrictions is not approvable. Such information would include, at a minimum, a list of the Federal incentives authorized under § 248.231.

Sections 248.213, 248.215, 248.217, and 248.219 concern an owner's submission and HUD's processing of a plan of action. The plan of action must include the information set forth in § 248.213(b), as appropriate. Sections 248.213 through 248.219 also cite time frames, corresponding to those set forth in Subtitle B, within which HUD must take certain actions. Congress envisions that HUD will make a final determination on a plan of action within 300 days of its initial receipt. Once HUD receives a plan, it must within 60 days alert the owner in writing of any deficiencies that prevent the plan from being approved. An owner is permitted periodically to revise its plan in order to obtain HUD approval. No later than 180 days from receipt of the plan, (or such later period if requested by the owner), HUD must provide written notice to the owner

indicating that the plan is approved or, if not, why the plan is defective and ways in which it could be amended to obtain approval. If HUD cannot approve a plan within 300 days, the legislation (and rule) allows the owner to request certain modifications to its regulatory agreement. However, HUD is not required to agree to the modifications if it determines that the modifications are unnecessary to achieve the purposes of Subtitle B.

Section 248.213 lists the information to be included in the plan of action that is submitted to HUD. An owner also may elect to submit its plan to the appropriate State or local government agency. A State or local government agency that receives the plan must, as part of its review, consult with representatives of tenants residing in the project (*see* section 223(a)).

Contents of a plan of action are enumerated in § 248.213(b). The owner must address each of six specified criteria, to the extent appropriate, as well as any other issues raised by HUD in its written response to the owner's notice of intent. In essence, the owner must define, clearly and comprehensively, the nature and impact (if any) of its proposal in relation to the project, tenants and affordable housing in the community. Of course, plans of action involving prepayment of the mortgage and termination of low income affordability restrictions will contain much different types of information than plans of action that involve the use of incentives to maintain the low income use of the project.

Section 248.221 sets forth the findings that the Commissioner must make before approving a plan of action that involves termination of low income affordability restrictions. (Such restrictions are defined at § 248.201 as limits imposed by regulation or regulatory agreement on tenant rents, rent contributions, or income eligibility on eligible low income housing.) With respect to current tenants, § 248.221(a) provides that the Commissioner must find that implementation of the plan of action will not materially increase economic hardship for such tenants or involuntarily displace such tenants except for good cause.

If the Commissioner determines that comparable and affordable replacement housing is available in the community and that current tenants will be provided reasonable relocation assistance, the plan of action will be deemed to not materially increase economic hardship. In other cases, the standards for evaluating whether the plan of action will materially increase economic hardship have been adapted from the rent structure authorized under section 17(d)(8)(A) of the United States Housing Act of 1937, 42 U.S.C. 143o(d)(8)(A), for the Housing Development Grant Program. The rule establishes a general ceiling on rent limitations of 30 percent of 50 percent of median area income for very low income tenants, 30 percent of 80 percent of median area income for low income tenants, and 30 percent of 95 percent of median area income for moderate income tenants. While the standards apply to all tenants occupying the project at the time of prepayment, they impose limitations on rent increases only on those tenants falling within each of the three income classifications at the time of the rent increases. The standards may be modified in specific cases on the basis of the particular characteristics of a project and rent levels for comparable housing in the community. The Commissioner may require that rent increases allowed in connection with the prepayment be phased in gradually for some or all of the tenants. The rule also includes a separate standard to be applied in the case of projects that will be converted to cooperative or condominium use. In the case of any project for which HUD allows prepayment under Part 248, it is the Department's current policy to provide vouchers under section 8 of the United States Housing Act of 1937, 42 U.S.C. 1437f, to any very low income tenants who would otherwise suffer economic hardship as a result of the prepayment.

The Department expects that the standards pertaining to economic hardship and involuntary displacement will be enforced through recorded use agreements and covenants binding upon the owner and its successors. These agreements and covenants could be enforced by the Department or by any tenant who is protected by its provisions.

With respect to the effect of the plan of action on the housing market generally, the rule at § 248.221(b) tracks the language of the statute. The rule sets forth the three statutory standards concerning the availability of housing in the community; however, these criteria need not be met if the plan of action has been approved by the appropriate State and local governmental agencies as being in accordance with a HUD-approved State strategy (*see* § 248.223).

Section 248.223 sets forth criteria that must be addressed if HUD is to approve a State strategy that involves the "termination of low income affordability restrictions." If a State strategy is approved, HUD will not make the findings in relation to a plan of action that are described in § 248.221(b)(1). Instead, a plan that involves the termination of low income affordability restrictions will be reviewed by HUD pursuant to § 248.221(a) and by the State (and any appropriate local government agency) in accordance with § 248.221(b)(2).

Section 248.223(a) sets forth the eight specific criteria that must be met by a State strategy if it is to be approved by HUD. The criteria ensure that under an approval strategy, a plan of action could only be approved if existing tenants could not be involuntarily displaced except for good cause; housing opportunities for minorities are not adversely affected; rent increases are subject to specified limitations; housing units remain affordable to lower income families; the housing is maintained and operated in decent, safe and sanitary condition; the State is responsible for providing a portion of any new assistance found necessary to preserve the lower income nature of the housing; and the State sets aside units or funds adequate to assure that any low income housing unit lost as a result of a plan will be replaced in the same market area. The criteria in § 248.223(a) correspond to the same provisions of section 226 of the 1987 Act; similarly, § 248.223(b) corresponds to subparagraph (b) of section 226, requiring a State to enter into all agreements necessary to implement its strategy as a prerequisite for approval, and to include any other provisions deemed necessary by HUD. Accordingly, it is incumbent upon any State that develops an alternative strategy to demonstrate to HUD that the strategy is consistent with the provisions of the legislation and section 248.223. In the absence of an approved State strategy, or if a plan of action has not been approved by a State under a HUD-approved State strategy, HUD will review a plan of action involving termination of low income affordability restrictions under the criteria of §§ 248.221(a) and (b)(1).

Even if it does not have an approved strategy, a State may be involved in the mortgage prepayment or modification process. The legislation and the rule contemplates possible State participation in relation to such matters as reviewing plans of action, consulting with affected tenants and HUD, and participating in a plan that envisions preserving low income housing through the use of incentives.

Section 248.231 (incentives to extend low income use) lists incentives the Commissioner can offer to an owner, provided that the Commissioner is first able to make certain findings. The

incentives include variations in current housing program requirements (e.g., access to greater distributions, and greater access to Reserve for Replacements or Residual Receipts funds). HUD expects that only in extreme circumstances would it approve increased access to Reserve for Replacements funds as part of a plan of action. HUD will agree more readily to increased access to Residual Receipts funds. Conforming changes to the Part 221 and Part 236 rules will also authorize HUD to permit distributions more frequently than annually or semi-annually.

Section 248.231 also includes newly authorized programs under the 1987 Act, such as provision of HUD insurance for an equity loan. Section 231 of the 1987 Act amended section 241 of the NHA to provide for insured secondary financing. However, this new program is only available to an applicant who is seeking the loan in conjunction with a plan of action under Subtitle B (and Part 248).

Both the underwriting and claims processing of this insured loan follow in large measure the requirements for an insured mortgage under other provisions of section 241 of the NHA and their implementing regulations in Part 241, Subparts A through D. The amount of the second mortgage cannot exceed ninety percent of the owner's equity in the project. The amount of the mortgage, however, is further restricted to an amount which, when added to the existing indebtedness of the property, can be supported by ninety percent of the projected net income of the project, as determined by the Commissioner. In making a determination regarding the amount of the second mortgage and the sums available to service the mortgage, the Commissioner will take into account any increase in the income of the project that will occur in accordance with the established limitations of section 225(b) of the 1987 Act. (*See* § 248.233). However, if the Commissioner provides additional assistance under section 8 of the United States Housing Act of 1937 to support the second mortgage, and the project is subsequently sold or refinanced, the project owner must reimburse the Commissioner in the amount of the additional section 8 assistance from any available sale or refinancing proceeds. The statute provides that the holder of the insured senior mortgage may not withhold its consent to the recording of the second mortgage or other security instrument as a lien upon the property. Section 241(f) of the NHA terminates on February 5, 1990.

Another new program authorized by the 1987 Act involves the financing of capital improvements under section 201 of the Housing and Community Development Amendments of 1978. The new legislation expands the allowable uses of Flexible Subsidy assistance. Applicants for this kind of assistance may include, but are not limited to, owners of projects that file a plan of action under Part 248. In order to implement the new legislation, HUD would need to add a new subpart to Part 219 of the Code of Federal Regulations (Flexible Subsidy). The Department's Office of Policy Development and Research has made a study which concludes that the capital improvement loan program is not currently needed, and therefore HUD is not implementing the program at this time. However, consistent with section 230 of the 1987 Act, § 248.235 provides that an owner who agrees to extend low income affordability restrictions will have the opportunity to convert to an alternate system of incentives that may become available between now and February 5, 1992. Accordingly, should HUD adopt a rule governing the financing of capital improvements, an owner whose plan of action has previously been approved could still seek to obtain this inducement under a "conversion" plan. (If HUD agrees to a conversion plan, section 230 of the 1987 Act and the rule further provides that HUD can make adjustments that it deems appropriate to compensate for the value of any benefits already obtained by the owner under Part 248).

Section 248.233 establishes the standards for approval of a plan of action that includes incentives. Incentives are only available if necessary to achieve the purposes of this Part 248, and provide a fair rate of return to the owner. An owner shall bear the burden of demonstrating that, absent any inducements, it would not receive a fair return from the operation of the project. To make this demonstration, the owner will be required to show that the current use of the project is not tantamount to its highest and best use. (This is a threshold determination which the Commissioner will make in order to decide whether the owner should receive incentives; however, it is not the intent of the rule that the Commissioner would necessarily provide incentives sufficient to provide the owner with a rate of return equal to the owner's rate of return if the project were converted to its highest and best use.) In this connection HUD has assessed the universe of projects to which Part 248 is applicable and has concluded that a large majority of owners either will not or are not likely to prepay their mortgages. Moreover, incentives offered by HUD must constitute the "least costly alternative" for the Federal government necessary to achieve the purposes of Part 248. The owner must make a binding commitment to ensure that, for the remaining term of the mortgage, the housing will remain affordable to lower income families, and will be properly maintained and operated. Additionally, current tenants may not be involuntarily displaced except for good cause (e.g., the project is uninhabitable because of environmental conditions), and rent increases must be regulated, phased in, and subject to caps.

Section 248.241 (modification of existing regulatory agreements) corresponds to section 228 of the 1987 Act, and applies where a plan of action cannot be approved within 300 days from the date of its receipt by HUD. The package of incentives and restrictions authorized by § 248.241 includes extending expiring project-based assistance, and increasing allowable distributions (subject to limits on any related rent increases). However, any agreement entered into under this section must terminate on February 5, 1992, at which time the affected housing units will be subject to any law then affecting low income affordability restrictions.

Section 248.251 (consultation with other interested parties) authorizes HUD to consult with appropriate units of local government and other interested parties in making determinations under §§ 248.221 and 248.233 that concern plans of action involving the use of incentives or the termination of low income affordability restrictions, respectively. Finally, § 248.261 (agreements implementing plans of action and State strategies) authorizes the Commissioner to execute agreements necessary to implement plans of action and State strategies approved under Part 248.

The approval of a plan of action or prepayment under Part 248 constitutes a Federal action that is subject to environmental review under 24 CFR Part 50. However, the Department has determined that the approval of a plan of action or prepayment would not normally have a significant effect on the human environment (and therefore should be categorically excluded from the requirements to prepare an environmental assessment under such regulations) when the action would not result in the demolition of any building, or parts of any building, containing the

primary use served by the project. Changes in the nature of the project which do not result in alteration of the external structure of the project would not have any effect on the physical environment surrounding the project. Accordingly, § 50.20 has been amended to add a new categorical exclusion for prepayments and plans of action, except where demolition would result from the prepayment. This exclusion applies to prepayments under Title II as well as under other statutes and authorities, such as Section 250(a).

Accordingly, the rule amends 24 CFR Part 50, Protection and Enhancement of Environmental Quality, to adopt a categorical exclusion from environmental review for approvals that meet these conditions.

Findings and Other Matters

A Finding of No Significant Impact with respect to the environment has been made in accordance with HUD regulations in 24 CFR Part 50, which implement Section 102(2)(C) of the National Environmental Policy Act of 1969, 42 U.S.C. 4332. The Finding of No Significant Impact is available for public inspection during regular business hours in the Office of the General Counsel, Rules Docket Clerk, Room 10276, 451 Seventh Street, SW., Washington, DC 20410.

This rule constitutes a major rule, as determined by the Office of Information and Regulatory Affairs, Office of Management and Budget, under the authority of Executive Order 12291 on Federal Regulation issued on February 17, 1981. A copy of the Regulatory Impact Analysis has been transmitted to the Office of Management and Budget, and is available for public inspection during regular business hours in the Office of General Counsel, Rules Docket Clerk, Room 10276, 451 Seventh Street, SW., Washington, DC.

Under section 605(b) of the Regulatory Flexibility Act (5 U.S.C. 601), HUD certifies that this rule does not have a significant economic impact on a substantial number of small entities, because it carries out statutorily-mandated limitations on prepayment of the affected mortgages. Any economic impact is a direct consequence of the statute and is not separately imposed by this rule.

This rule was not listed in the Department's Semiannual Agenda of Regulations published on October 26, 1987 (52 FR 40358), under Executive Order 12291 and the Regulatory Flexibility Act.

The Information collection requirements contained in this rule have been submitted to the Office of Management and Budget for review under the provisions of the Paperwork Reduction Act of 1980 (44 U.S.C. 3501–3502). No person may be subject to a penalty for failure to comply with these information collection requirements until they have been approved and assigned an OMB control number. The OMB control number, when assigned, will be announced by separate notice in the **Federal Register**.

The Catalog of Federal Domestic Assistance program number for this rule is program number 14.137 (Mortgage Insurance—Rental and Cooperative Housing for Low and Moderate Income Families).

Note.—Section 236 no longer has a CFDA Number.]

List of Subjects

24 CFR Part 50

Environmental impact statements.

24 CFR Part 221

Condominiums; Low and moderate income housing; Mortgage insurance; Displaced families; Single family housing projects; Cooperatives.

24 CFR Part 236

Low and moderate income housing; Mortgage insurance; Rent subsidies; Taxes; Utilities; Projects.

24 CFR Part 241

Energy conservation; Mortgage insurance; Solar energy; Projects.

24 CFR Part 248

Low and moderate income housing; Mortgage insurance.

Accordingly, the Department amends Title 24 of the Code of Federal Regulations as follows:

1. In Chapter II, a new Part 248 is added, to read as follows:

PART 248—PREPAYMENT OF LOW INCOME HOUSING MORTGAGES

Subpart A—General

Sec.
248.101 Purpose.
248.103 Effective date.
248.105 Termination.
248.107 Alternative moratorium provision.

Subpart B—Prepayments and Plans of Action

248.201 Definitions.
248.203 General prepayment limitation.
248.211 Notice of intent to prepay.
248.213 Plan of action.
248.215 Notification of deficiencies.
248.217 Revisions to plan of action.
248.219 Notification of approval.
248.221 Approval of a plan of action that involves termination of low income affordability restrictions.
248.223 Alternative State strategy.
248.231 Incentives to extend low income use.
248.233 Approval of plan of action that includes incentives.
248.235 Right of conversion to alternative prepayment system.
248.241 Modification of existing regulatory agreements.
248.251 Consultation with other interested parties.
248.261 Agreements implementing plans of action and State strategies.

Authority: Secs. 201–235, Housing and Community Development Act of 1987, Pub. L. 100–242 (12 U.S.C. 1715/ note); Sec. 7(d), Department of HUD Act (42 U.S.C. 3535(d)).

Subpart A—General

§ 248.101 Purpose.

The purpose of this part is to—

(a) Preserve and retain to the maximum extent practicable as housing affordable to low income families or persons those privately owned dwelling units that were produced for such purpose with Federal assistance, without unduly restricting the owners' prepayment rights;

(b) Minimize the involuntary displacement of tenants currently residing in such housing; and

(c) Work in partnership with State and local governments and the private sector in the provision and operation of housing that is affordable to low income families.

§ 248.103 Effective date.

The requirements of this Part apply to any project that is eligible low income housing on or after February 5, 1988.

§ 248.105 Termination.

Section 203 of the Housing and Community Development Act of 1987 provides that sections 221 through 235 of the Act, upon which this part is based, expire on February 5, 1990. This part will likewise be terminated or amended on the basis of the expiration or amendment of sections 221 through 235 of the Act.

§ 248.107 Alternative moratorium provision.

(a) If any court of the United States or any State invalidates the requirements established in this part, an owner of eligible low income housing located in the geographic area subject to the jurisdiction of such court may not prepay, and the mortgagee may not accept prepayment of, a mortgage on such housing until February 5, 1990.

(b) A mortgagee's acceptance of a prepayment in violation of paragraph (a) of this section is grounds for administrative action under Part 25 of

this title and for seeking any other remedies available by law.

Subpart B—Prepayments and Plans of Action

§ 248.201 Definitions.

Adjusted Income. Annual income, less allowances as specified in § 215.21 of this chapter.

Allowable Distributions. The amount of cash or other assets that the owner may withdraw from the project under the terms of the regulatory agreement, applicable regulations, and administrative instructions, including the segregation of cash or assets for subsequent withdrawal, and excluding repayment of advances made for reasonable and necessary expenses incident to the operation and maintenance of the project.

Capital Improvement Loan. A direct loan originated by the Commissioner pursuant to Section 201(k) of the Housing and Community Development Amendments of 1978.

Eligible Low Income Housing. Any housing financed by a mortgage—

(a) That is—

(1) Insured or held by the Commissioner under Section 221(d)(3) of the National Housing Act and assisted under Part 215 of this chapter or project-based assistance under Parts 880, 881 or 886 of this title;

(2) Insured or held by the Commissioner under Part 221 of this chapter and bearing a below-market interest rate as provided under § 221.518(b) of this chapter;

(3) Insured, assisted, or held by the Commissioner under Part 236 of this chapter, and subject to a regulatory agreement; or

(4) A purchase money mortgage held by the Commissioner with respect to a project which, immediately prior to HUD's acquisition, would have been classified under paragraphs (a)(1), (2), or (3) of this definition; and

(b) That, under regulation or contract in effect before February 5, 1988, is, or within one year from the date of the notice of intent would become, eligible for prepayment without the prior approval of the Commissioner.

Equity. The Owner's investment in the housing project, as approved or determined by the Commissioner.

Equity Loan. A loan insured by the Commissioner under Part 241, Subpart E of this chapter.

Fair Market Rent. The fair market rent as defined under § 882.102 of this title, applicable to the jurisdiction in which the housing is located.

Flexible Subsidy Assistance. Assistance provided by the Commissioner under Part 219 of this chapter, other than a capital improvement loan.

Good cause. Temporary or permanent uninhabitability of the project justifying relocation of all or some of the project's tenants, or actions of the tenant that, under the terms of the tenant's lease and applicable regulations, constitute a basis for eviction.

Limited Equity Cooperative. A cooperative housing corporation in which income eligibility of purchasers or appreciation upon resale of membership shares, or both, are restricted in order to maintain the housing as available to and affordable by low and moderate income families and persons.

Low Income Affordability Restrictions. Limits imposed by regulation or regulatory agreement on tenant rents, rent contributions, or income eligibility with respect to eligible low income housing.

Lower Income Families. Families or persons whose incomes do not exceed the levels established for lower income families under Part 813 of this title.

Moderate Income Families. Families or persons whose incomes are between 80 percent and 95 percent of median area income, as determined by the Commissioner with adjustments for smaller and larger families.

Mortgage. The mortgage or deed of trust insured or held by the Commissioner under Parts 221 or 236 of this chapter, or the purchase money mortgage taken back by the Commissioner in connection with the sale of a HUD-owned project and held by the Commissioner.

Notice of Intent. An owner's notification of its intent to seek prepayment of its mortgage or amendment of the mortgage or regulatory agreement pursuant to this part.

Owner. The mortgagor or trustor under the mortgage secured by eligible low income housing.

Plan of Action. A plan providing for either prepayment of the mortgage or continuation of the mortgage in place, and providing for either the termination of low income affordability restrictions, or the continuation of the project's use as lower income housing under modified terms and conditions.

Regulatory Agreement. The agreement executed by the owner and the Commissioner providing for the Commissioner's regulation of the operation of the project.

Reserve for Replacements. The escrow fund established under the regulatory agreement for the purpose of ensuring the availability of funds for needed repair and replacement costs.

Residual Receipts Fund. The fund established under the regulatory agreement for holding cash remaining after deducting from surplus cash, as defined by the regulatory agreement, the amount of all allowable distributions.

Return on Investment. The amount of allowable distributions, tax benefits, and other income or benefits received by the owner, as a percentage of the equity.

Section 8. Assistance provided under Parts 800 through 886 of this title, or assistance provided under HUD's housing voucher program.

Termination of Low Income Affordability Restrictions. Any elimination in whole or in part of low income affordability restrictions (other than the relaxation of restrictions under an approved plan of action under § 248.233 of this chapter).

Use Agreement. An agreement or covenant which is executed and recorded in the appropriate land records in connection with the prepayment of a mortgage and has lien priority over other mortgages, which is binding upon the owner and its successors and assigns, which is enforceable by the Commissioner or by tenants, and which restricts or governs the use and operation of the project with respect to rent levels and increases, relocation, and, where appropriate, tenant eligibility, civil rights and other requirements.

Very Low Income Families. Families or persons whose incomes do not exceed the level established for very low income families under § 813.102 of this title.

§ 248.203 General prepayment limitation.

(a) An owner of eligible low income housing may prepay, and a mortgagee may accept prepayment of, a mortgage on such housing only in accordance with a plan of action approved by the Commissioner.

(b) A mortgagee's acceptance of a prepayment in violation of paragraph (a) of this section is grounds for administrative action under Parts 24 and 25 of this title, in addition to any other remedies available by law.

§ 248.211 Notice of intent to prepay.

(a) An owner of eligible lower income housing seeking to prepay its mortgage or to negotiate changes in the terms of the mortgage or regulatory agreement in accordance with this part shall file a notice of intent with the HUD field office in whose jurisdiction the project is located, and shall file a duplicate copy with the HUD Headquarters Office of Multifamily Housing Management. The

notice of intent shall identify the project by name, project number and location, briefly describe the owner's plans for the project, including any timetables or deadlines for actions to be taken, and the reason the owner seeks to prepay the mortgage or change the terms of the mortgage or regulatory agreement, and briefly describe any contacts that the owner has made or is making with other governmental agencies or other interested parties in connection with the notice of intent.

(b) The owner simultaneously shall file the notice of intent with the appropriate State or local government agency for the jurisdiction in which the housing is located.

(c) Upon receipt of a notice of intent, the Commissioner will provide the owner with information that the owner needs to prepare a plan of action. This information shall include information regarding the Commissioner's standards under § 248.221 of this part regarding the approval of a plan of action involving termination of low income affordability restrictions; in addition, it shall include at a minimum a list of the Federal incentives authorized under § 248.231 of this part for those projects for which a plan of action involving termination of low income affordability restrictions would not be approvable.

(d) Filing a notice of intent with the Commissioner will lead to one of the following results:

(1) The Commissioner will approve the prepayment pursuant to § 248.221 of this part, and all low income affordability restrictions will be terminated, except with regard to protection of current very low income, low income and moderate income tenants;

(2) The Commissioner will approve prepayment, but the owner will receive incentives pursuant to § 248.231 of this part from the Federal government in return for agreeing to conditions related to the continued use of the project as low-income housing in accordance with § 248.233 of this part;

(3) The Commissioner will not approve prepayment, but will provide incentives to the owner pursuant to § 248.231 of this part in accordance with a plan of action meeting the standards of § 248.233 of this part;

(4) The Commissioner will not approve prepayment, but, after failing to reach agreement on a negotiated plan of action, the owner and the Commissioner will agree to a package of incentives and restrictions prescribed by § 248.241 of this part; or

(5) The Commissioner will not approve prepayment, and will not offer incentives of any kind.

§ 248.213 Plan of action.

(a) *Preparation and submission.* The owner shall submit the plan of action to the Commissioner in such form and manner as the Commissioner shall prescribe. The owner may submit the plan of action simultaneously to the appropriate State or local government agency, which shall, in reviewing the plan, consult with representatives of the tenants of the housing.

(b) *Contents.* The plan of action shall include:

(1) A description of any proposed changes in the status or terms of the mortgage or regulatory agreement, which may include a request for incentives to extend the low income use of the housing, as authorized under § 248.231 of this part;

(2) A description of any assistance that could be provided by State or local government agencies, as determined by prior consultation between the owner and the agencies;

(3) A description of any proposed changes in the low income affordability restrictions;

(4) A description of any proposed change in ownership related to the plan of action or prepayment;

(5) An assessment of the effect of the proposed changes on existing tenants;

(6) A statement of the effect of the proposed changes on the supply of housing affordable to low and very low income families in the community within which the housing is located and in the area that the housing could reasonably be expected to serve; and

(7) Other information determined by the Commissioner to be necessary to evaluate the proposed plan of action and achieve the purposes of this part.

§248.215 Notification of deficiencies.

Not later than 60 days after receipt of a plan of action, the Commissioner will notify the owner in writing of any deficiencies that prevent the plan of action from being approved. If deficiencies are found, the notice shall describe ways in which the plan of action could be revised to meet the criteria for approval.

§ 248.217 Revisions to plan of action.

The owner may from time to time revise the plan of action before its approval as may be necessary to obtain the Commissioner's approval thereof.

§ 248.219 Notification of approval.

(a) Not later than 180 days after initial receipt of a plan of action, or within such longer period as the owner requests, the Commissioner shall notify the owner in writing whether the plan of action, including any revisions, is approved.

(b) If approval is withheld, the notice will—

(1) Describe the reasons for withholding approval;

(2) Describe the actions that could be taken to meet the criteria for approval; and

(3) Afford the owner a reasonable opportunity to revise the plan of action and seek approval.

§ 248.221 Approval of a plan of action that involves termination of low income affordability restrictions.

The Commissioner may approve a plan of action that involves termination of the low income affordability restrictions only upon a written finding that—

(a) Implementation of the plan of action will not materially increase economic hardship for current very low income, low income and moderate income tenants or involuntarily displace current very low income, low income and moderate income tenants (except for good cause) where comparable and affordable housing is not readily available. The owner will agree to execute and allow the recordation of use agreements to safeguard current tenants against such adverse effects. The plan of action generally will not be considered materially to increase economic hardship for current tenants if—

(1) In the case of a project that is to be converted to cooperative or condominium ownership, very low income, low income and moderate income tenants who are unable or unwilling to purchase cooperative shares or condominium units are provided relocation assistance sufficient to secure adequate, comparable replacement housing at rentals not exceeding the levels set forth in paragraph (a)(2) of this section, or are allowed to remain as tenants, paying rents not exceeding such levels; and

(2) In the case of a project which will continue as rental housing, the Commissioner determines that comparable and affordable replacement housing is available in the community and that tenants will be provided reasonable relocation assistance. If the Commissioner determines that comparable and affordable replacement housing is not available, a material increase in economic hardship will not occur when rent contributions for current tenants do not exceed the following percentages: 30 pecent of 50 percent of median area income, adjusted by family size, for tenants who are very low income tenants at the time of the

increase, 30 percent of 80 percent of median area income, adjusted by family size, for tenants who are low income tenants at the time of the increase, and 30 percent of 95 percent of median area income, adjusted for family size, for tenants who are moderate income tenants at the time of the increase. The Commissioner may require that increases in rents for some or all of the such current tenants (except for increases made necessary by increased operating costs) allowed under this paragraph be phased in gradually; and

(b)(1) The supply of vacant, comparable housing is sufficient to ensure that the prepayment will not materially affect—

(i) The availability of decent, safe and sanitary housing affordable to low income and very low income families in the area that the housing could reasonably be expected to serve;

(ii) The ability of lower income and very low income families to find decent, safe and sanitary housing near employment opportunities; or

(iii) The housing opportunities of minorities in the community within which the housing is located; or

(2) The plan of action has been approved by the appropriate State agency and any appropriate local government agency for the jurisdiction in which the housing is located as being in accordance with a State strategy approved by the Commissioner under § 248.223 of this part.

§ 248.223 Alternative State strategy.

(a) The Commissioner may approve a State strategy providing for State approval of plans of action that involve termination of low income affordability restrictions only upon finding that it is a practicable statewide strategy that ensures at a minimum that—

(1) Current tenants will not be involuntarily displaced (except for good cause);

(2) Housing opportunities for minorities will not be adversely affected in the communities in which the housing is located;

(3) Any increase in rent for current tenants will be to a level that does not exceed 30 percent of the adjusted income of the tenants or fair market rent, whichever is lower, and any increase not necessitated by increased operating costs shall be phased in equally over not less than 3 years if the increase exceeds 10 percent;

(4) Housing approved under the State strategy will remain affordable to very low income, low income and moderate income families for not less than the remaining term of the mortgage, if the housing is to be made available for rental use, or for not less than 40 years, if the housing is to be made available for homeownership;

(5)(i) Not less than 80 percent of all units in eligible low income housing approved under the State strategy will be retained as affordable to families or persons meeting the income eligibility standards for initial occupancy that applied to the housing on January 1, 1987; and

(ii) Not less than 60 percent of the units in any one project will remain available to and affordable by such families or persons, within which not less than 20 percent of the units will remain available to and affordable by very low income families;

(6) Expenditures for rehabilitation, maintenance and operation will be at a level necessary to maintain the housing as decent, safe and sanitary for the period specified in paragraph (a)(4) of this section;

(7) Not less than 25 percent of new assistance required to maintain the housing as available to and affordable by low income families in accordance with this section shall be provided through State and local actions, such as tax exempt financing, low income tax credits, State or local tax concessions, and other incentives provided by the State or local governments; and

(8) For each unit of eligible low income housing approved under the State strategy that is not retained as affordable housing to families or persons meeting the income eligibility standards for initial occupancy on January 1, 1987, the State will provide, with State funds, one additional unit of comparable housing in the same market area that is available to and affordable by such families and persons. Such units will be provided by conversion of existing units or construction of new units. These units or funds will be made available before the Commissioner approves the State strategy.

(b) *Additional requirements.* (1) The State must enter into all agreements necessary to carry out the State strategy before receiving the Commissioner's approval.

(2) Each State strategy shall include any other provision that the Commissioner determines to be necessary to implement the approved State strategy.

§ 248.231 Incentives to extend low income use.

The Commissioner may agree to provide one or more of the following incentives to induce the project owner to extend the low income use of the project, if the Commissioner determines that such incentives are warranted under the standards in § 248.233 of this part:

(a) An increase in the allowable distribution, or other measures to increase the rate of return;

(b) Revisions to the method of calculating equity;

(c) Increased access to residual receipts funds or excess reserve for replacements funds;

(d) Provision of insurance for an equity loan;

(e) An increase in the rents permitted under an existing section 8 contract, within statutory and regulatory limits otherwise applicable, or (subject to the availability of amounts provided in appropriations Acts) additional assistance under section 8 or an extension of any project-based assistance attached to the housing;

(f) Provision of a capital improvement loan;

(g) Other actions to facilitate a transfer or sale of the housing to a qualified nonprofit organization, limited equity tenant cooperative, public agency, or other entity acceptable to the Commissioner, such as expedited review of a request for approval of a transfer of physical assets;

(h) Provision of flexible subsidy assistance; and

(i) Any other incentive for which the owner is eligible.

§ 248.233 Approval of a plan of action that includes incentives.

The Commissioner may approve a plan of action that includes incentives, whether or not the plan of action allows for the prepayment of the mortgage, only upon a finding that—

(a) After taking into account local market conditions, the incentives are necessary to achieve the purposes of this part;

(b) The incentives are necessary to provide a fair rate of return to the owner. Incentives will only be provided in cases where the project's current use does not represent its highest and best use;

(c) The incentives are the least costly alternative for the Federal Government to achieve the purposes of this part with respect to the housing;

(d) Binding commitments have been made to ensure that—

(1) The housing will be retained as housing affordable for very low income families, lower income families, and moderate income families for the remaining term of the mortgage;

(2) Throughout the remaining term of the mortgage, adequate expenditures will be made for the proper maintenance and operation of the housing;

(3) Current tenants will not be involuntarily displaced (except for good cause);

(4) Any increase in rent contributions for current tenants will be to a level that does not exceed 30 percent of the adjusted income of the tenant or the fair market rent, whichever is lower;

(5) Any resulting increase in rents for current tenants (except for increases made necessary by increased operating costs) will be phased in equally over a period of not less than 3 years, if the increase is 30 percent or more, and will be limited to not more than 10 percent per year, if the increase is more than 10 percent but less than 30 percent;

(6) Assistance under section 8 will be accepted by the owner if necessary to mitigate any adverse effect of the rent increases on current tenants eligible for section 8 assistance; and

(7) Rents for units becoming available to new tenants will be at levels approved by the Commissioner that will ensure, to the extent practicable, that the units will be available to and affordable by the same proportions of very low income families, lower income families, and moderate income families as resided in the housing as of January 1, 1987.

(i) For purposes of paragraph (d)(7) of this section, the percentage of moderate income families in occupancy as of January 1, 1987 shall include families who were admitted to the project as very low income, low income, or moderate income families but whose incomes had increased beyond the limit for moderate income families by January 1, 1987.

(ii) In approving rents under paragraph (d)(7) of this section, the Commissioner will take into account any additional incentives provided under this part and will make provision for annual rent adjustments necessary as a result of future reasonable increases in operating costs.

§ 248.235 Right of conversion to alternative prepayment system.

Any agreement to extend low income affordability restrictions under § 248.233 of this part shall, until February 5, 1992, provide the owner the right to convert to any system of incentives and restrictions provided in law during that period, with adjustments determined by the Commissioner to be appropriate to compensate for the value of any benefits the owner has received under this part.

§ 248.241 Modification of existing regulatory agreements.

(a) If a plan of action is not approved within 300 days after initial submission, the Commissioner may, upon request of the owner, modify existing regulatory agreements to—

(1) Prevent involuntary displacement of current tenants (except for good cause);

(2) Ensure that adequate expenditures will be made for maintenance and operation of the housing;

(3) Extend any expiring project-based assistance on the housing for the term of the agreement;

(4) Permit an increase in the allowable distribution that could be accommodated by an increase in the rents on occupied units to a level no higher than 30 percent of the adjusted income of the tenants, as determined by the Commissioner, except that rents shall not exceed the fair market rent, and any resulting increase in rents for current tenants shall be phased in equally over a period of no less than 3 years, unless such increase is less than 10 percent; and

(5) Ensure that units becoming vacant during the term of the agreement are made available in accordance with § 248.233(d)(7) of this part.

(b) *Expiration.* Agreements entered into under this section shall expire on February 5, 1992. Upon such expiration of the agreement, the housing covered by the agreement shall be subject to any law then affecting low income affordability restrictions.

§ 248.251 Consultation with other interested parties.

The Commissioner will confer with any appropriate State or local government agency to confirm any State or local assistance that is available to achieve the purposes of this part and will give consideration to the views of the State or local agency when making the determinations under §§ 248.221 and 248.233 of this part. The Commissioner also will confer with other interested parties that the Commissioner believes could assist in the development of a plan of action that best achieves the purposes of this part.

§ 248.261 Agreements implementing plans of action and State strategies.

The Commissioner is authorized to enter into agreements, including those for the provision of incentives, necessary to implement any plan of action or State strategy approved by the Commissioner under this part.

PART 221—LOW COST AND MODERATE INCOME MORTGAGE INSURANCE

2. The authority citation for Part 221 continues to read as follows:

Authority: Secs. 211, 221, National Housing Act (12 U.S.C. 1715b, 1715*l*); sec. 7(d), Department of Housing and Urban Development Act (42 U.S.C. 3535(d)).

3. In § 221.524, paragraph (a)(1) is revised, and a new paragraph (e) is added, to read as follows:

§ 221.524 Prepayment privileges.

(a) *Prepayment in full*—(1) *Without prior Commissioner consent.* Except as otherwise provided in paragraphs (d) and (e) of this section, a mortgage indebtedness may be prepaid in full and the Commissioner's controls terminated without the prior consent of the Commissioner in the following cases:

* * * * *

(e) *Prepayment of mortgages subject to Part 248.* Where the mortgage described in paragraph (a)(1) of this section is, or prior to assignment to the Commissioner was, insured under section 221(d)(3) of the Act and the mortgagor receives payments from the Commissioner under Part 215 of this chapter or project-based assistance under Parts 880, 881 or 886 of this title, or where the mortgage is, or prior to assignment to the Commissioner was, insured under section 221(d)(5) of the Act, the mortgage may be prepaid in full only in accordance with a plan of action approved by the Commissioner under Part 248 of this title.

4. In § 221.531, the first sentence in the introductory text of paragraph (b) and the first portion of the sentence up to the ";" in paragraph (b)(3) is revised, to read as follows:

§ 221.531 Supervision applicable to general mortgagors.

* * * * *

(b) *Rate of return.* Except as approved by the Commissioner under Part 248 of this chapter, dividends or other distributions as defined in the charter, trust agreement, or regulatory agreement, may be declared or made only as of or after the end of a semiannual or annual fiscal period * * *.

* * * * *

(3) Unless otherwise agreed to by the Commissioner under Part 248 of this chapter, distributions may be made for projects insured under this part which are also assisted under Part 880 (Section 8—New Construction), Part 881 (Section 8—Substantial Rehabilitation) or Part 883 (Section 8—State Housing Agencies) only in accordance with the provisions on limitation on distributions of the applicable Section 8 regulation contained at §§ 880.205, 881.205, or 883.306 of this title, respectively; * * *.

* * * * *

5. Section 221.532 is revised to read as follows:

§ 221.532 Supervision applicable to limited distribution mortgagors.

(a) The provisions of § 221.531(b) of this part (rate of return) shall apply to limited dividend mortgagors, except that, unless the Commissioner has agreed otherwise under Part 248 of this chapter, the amount of any allowable distribution or disbursement from surplus cash shall not exceed in any one fiscal year more than 6 percent of the mortgagor's initial equity investment as determined by the Commissioner.

(b) The right of any allowable distribution or disbursement from surplus cash shall be cumulative.

(c) Unless otherwise agreed to by the Commissioner in accordance with Part 248 of this chapter, for projects insured under this part which are also assisted under Part 880 (Section 8—New Construction), Part 881 (Section 8—Substantial Rehabilitation) or Part 883 (Section 8—State Housing Agencies), the provisions on limitation on distributions of the applicable Section 8 regulation, contained at 24 CFR 880.205, 881.205, or 883.306 respectively, shall apply; except that for small projects and partially-assisted projects, as defined in Part 880, 881 or 883, of this title whichever is applicable, paragraphs (a) and (b) of this section shall apply.

PART 236—MORTGAGE INSURANCE AND INTEREST REDUCTION PAYMENTS FOR RENTAL PROJECTS

6. The authority citation for Part 236 continues to read as follows:

Authority: Secs. 211 and 236 of the National Housing Act (12 U.S.C. 1715b and 1715z-1); sec. 7(d), Department of Housing and Urban Development Act (42 U.S.C. 3535(d)).

7. In § 236.30, paragraph (a)(1) is revised, and a new paragraph (f) is added, to read as follows:

§ 236.30 Prepayment privileges.

(a) Prepayment in full—(1) Without prior Commissioner consent. Except as provided in paragraph (f) of this section, a mortgage indebtedness may be prepaid in full and the Commissioner's controls terminated without the prior consent of the Commissioner where the mortgagor is a limited distribution type and either of the following conditions is met:

(i) If the prepayment occurs after the expiration of 20 years from the date of final insurance endorsement of the mortgage, provided the mortgagor is not receiving payments from the Commissioner under a rent supplement contract pursuant to the provisions of Part 215 of this chapter; or

(ii) If the prepayment occurs as a result of the sale of the project to a cooperative or private nonprofit corporation or association, provided the sale is financed with a mortgage insured under § 236.40(d).

* * * * *

(f) *Prepayment of mortgages subject to Part 248.* Mortgages which are described in paragraph (a)(1) of this section and which are, or prior to assignment to the Commissioner were, insured under this Part, may be prepaid in full only in accordance with a plan of action approved by the Commissioner pursuant to Part 248 of this chapter.

8. Section 236.50(a) is revised to read as follows:

§ 236.50 Supervision applicable to limited distribution mortgagors.

(a) Except as agreed to otherwise by the Commissioner pursuant to Part 248 of this chapter—

(1) Dividends or other distributions as defined in the charter, trust agreement, or regulatory agreement, may be declared or made only as of or after the end of a semiannual or annual fiscal period; and

(2) The amount of any allowable distribution, or disbursement from surplus cash, shall not exceed in any one fiscal year more than 6 percent of the mortgagor's initial equity investment in the project, as determined by the Commissioner.

* * * * *

PART 241—SUPPLEMENTARY FINANCING FOR INSURED PROJECT MORTGAGES

9. The authority citation for Part 241 continues to read as follows:

Authority: Sec. 211, 241, National Housing Act (12 U.S.C. 1715b, 1715z-6); sec. 7(d), Department of Housing and Urban Development Act (42 U.S.C. 3535(d)).

10. Part 241 is amended by adding new Subparts E and F, to read as follows:

Subpart E—Insurance for Equity Loans—Eligibility Requirements

Sec.
241.1000 Purpose and scope.
241.1005 Definitions.
241.1010 Feasibility letter.
241.1015 Application and commitment fees.
241.1020 Commitments.
241.1025 Refund of fees.
241.1030 Mortgage insurance premiums.
241.1035 Charges by lender.
241.1040 Eligible lenders.
241.1045 Note and security form.
241.1050 Method of loan payment.
241.1055 Date of first payment to principal.
241.1060 Maturity.
241.1065 Maximum loan amount.
241.1070 Agreed interest rate.
241.1080 Eligibility of title.
241.1085 Title evidence.
241.1090 Accumulation of next premium.
241.1095 Application of payments.
241.1100 Prepayment privilege and charge.
241.1105 Late charge.
241.1120 Mortgagee's consent.

Subart F—Insurance for Equity Loans—Contract Rights and Obligations

Sec.
241.1200 Cross-references.
241.1205 Payment of insurance benefits.
241.1210 Condition for payment of insurance benefits.
241.1215 Calculation of insurance benefits.
241.1220 Termination of insurance benefits.
241.1230 No vested right in fund.
241.1235 Cross default.
241.1240 Recapture of assistance.
241.1245 Insurance endorsement.
241.1250 Effect of endorsement.

Subpart E—Insurance for Equity Loans—Eligibility Requirements

§ 241.1000 Purpose and scope.

Section 231 of the Housing and Community Development Act of 1987 amended the National Housing Act (the "Act") by adding a new subsection (f) to section 241. This section authorizes the Secretary to provide insurance for an equity loan as a vehicle for the owner of an eligible multifamily project to capture a portion of the project's equity. The insurance of the equity loan may only be provided as a specific element of a plan of action approved by the Commissioner under section 225 of the Housing and Community Development Act of 1987, where the Commissioner does not approve prepayment of the senior mortgage, and is not available under any other departmental program. The provisions of section 225 of the Housing and Community Development Act of 1987 terminate on February 5, 1990, and therefore, unless the aforesaid section is extended an equity loan shall be insured only if the plan of action is approved by the Commissioner on or before February 5, 1990.

§ 241.1005 Definitions.

(a) All of the definitions of § 241.1 apply to equity loans insured under this Subpart E except the following definitions:

241.1 (i)—Borrower
241.1 (k)—Energy conserving improvements
241.1 (l)—Solar energy system

(b) As used in this subpart, the following terms have the meaning indicated:

"Borrower" means the owner of an eligible low income housing project, which owner receives and becomes primarily obligated for the repayment of an equity loan. This term includes a nonprofit organization or a limited equity tenant cooperative corporation, which is purchasing an eligible low income housing project by means of an equity loan and is obligated for the payment of the equity loan.

"Eligible low income housing" has the same meaning as provided at § 248.201 of this chapter.

"Equity" means, for purposes of subparts E and F of this Part only, the difference between the fair market value of the project as determined by the Commissioner and the outstanding indebtedness relating to the property.

"Equity Loan" means a loan or advance of credit to the owner of an eligible low income housing project which is made for the purpose of implementing a plan of action approved in accordance with Part 248 of this chapter.

"Limited equity tenant cooperative corporation" means a tenant cooperative corporation which, in a manner acceptable to the Secretary, restricts the initial and resale price of the shares of stock in the cooperative corporation so that the shares remain affordable to lower income families and moderate income families.

"Lower income families" has the same meaning as provided at § 248.201 of this chapter.

"Moderate income families" has the same meaning as provided at § 248.201 of this chapter.

"Plan of section" has the same meaning as provided at § 240.201 of this chapter.

§ 241.1010 Feasibility letter.

(a) *Request for study.* The owner may request the Commissioner to undertake a feasibility analysis of an equity loan, and issue a feasibility letter. At the discretion of the Commissioner the feasibility analysis may be undertaken or denied.

(b) *Findings.* The issuance of a feasibility letter indicates completion of the Commissioner's preliminary analysis for the insurance of an equity loan. The feasibility letter shall contain the Commissioner's estimate of the supportable loan amount, but shall neither constitute a commitment to insure nor bind the Commissioner in any other manner.

(c) *Fee.* The Commissioner shall not charge a fee for undertaking a feasibility analysis or the issuance of a feasibility letter.

§ 241.1015 Application and commitment fees.

(a) *Application.* An application for the issuance of either a conditional or firm commitment for insurance of an equity loan on a project shall be submitted by an approved lender and by the owner of the project to the Commissioner on a form prescribed by the Commissioner. No application shall be considered unless the exhibits called for by such forms are furnished.

(b) *Application and commitment fees.*—(1) *Application for conditional commitment.* An application-commitment fee of $2.00 per thousand dollars of the amount of the loan applied for shall accompany the application for a conditional commitment.

(2) *Application for firm commitment.* An application for a firm commitment shall be accompanied by the payment of an application-commitment fee in an amount which, when added to any prior fee received in connection with a conditional commitment application, will aggregate $3.00 per thousand dollars of the loan applied for.

§ 241.1020 Commitments.

(a) *Conditional commitment.* The issuance of a conditional commitment constitutes an agreement by the Commissioner, subject to specified terms and conditions, to accept an application for a firm commitment.

(b) *Firm commitment.* The issuance of a firm commitment indicates the Commissioner's approval of the application for insurance and sets forth the terms and conditions upon which the equity loan will be insured. The firm commitment may provide for the insurance of advances of equity loan proceeds as rent levels are achieved in accordance with a plan of action, or may provide for the insurance of the entire equity loan immediately upon endorsement of the note.

(c) *Term of commitment.* (1) A conditional commitment is effective for whatever term is specified in the text of the commitment.

(2) A firm commitment is effective for whatever term is specified in the text of the commitment.

(3) The term of either a conditional or firm commitment may be extended in such manner as the Commissioner may prescribe.

(d) *Reopening of expired commitments.* An expired conditional or firm commitment may be reopened if a request for reopening is received by the Commissioner within 90 days of the expiration of the commitment. The reopening request shall be accompanied by a fee of 50 cents per thousand dollars of the amount of the expired commitment. If the reopening request is not received by the Commissioner within the required 90-day period, a new application, accompanied by the required application and commitment fee, must be submitted.

§ 241.1025 Refund of fees.

If the amount of the commitment issued is less than the amount applied for, the Commissioner shall refund the excess amount of the application and commitment fees submitted by the applicant. If an application is rejected before it is assigned for processing, or in such other instances as the Commissioner may determine, the entire application and commitment fees or any portion thereof may be returned to the applicant. Commitment and reopening fees may also be refunded to the applicant, in whole or in part, in such other instances as the Commissioner may determine.

§ 241.1030 Mortgage insurance premiums.

The lender, upon endorsement of the note, shall pay the Commissioner a first mortgage insurance premium equal to one percent of the original face amount of the equity loan.

(a) If the date of the first principal payment is more than one year following the date of endorsement, the lender upon each anniversary of such endorsement date, shall pay a premium equal to one percent of the original face amount of the loan. On the date of the first principal payment, the lender shall pay another premium equal to one percent of the average outstanding principal obligation of the loan for the following year which shall be adjusted so as to accord with such date and so that the aggregate of the said premiums shall equal the sum of:

(1) One percent of the average outstanding principal obligation of the loan for the year following the date of endorsement and (2) one percent per annum of the average outstanding principal obligation of the loan for the period from the first anniversary of the date of endorsement to one year following the date of the first principal payment.

(b) If the date of the first principal payment is one year, or less than one year following the date of endorsement, the lender, upon such first principal payment date, shall pay a second premium equal to one percent of the average outstanding principal obligation of the loan for the following year which shall be adjusted so as to accord with such date and so that the aggregate of the said two premiums shall equal the sum of:

(1) One percent per annum of the average outstanding principal obligation of the loan for the period from the date of endorsement to the date of first principal payment and (2) one percent of the average outstanding principal obligation of the loan for the year following the date of the first principal payment.

(c) Until the equity loan is paid in full or until receipt by the Commissioner of an application for insurance benefits, or until the contract of insurance is otherwise terminated with the consent of the Commissioner, the lender, on each anniversary of the date of the first principal payment, shall pay an annual insurance premium equal to one percent of the average outstanding principal obligation of the loan for the year following the date on which such premium becomes payable.

(d) The premiums payable on or after the date of the first principal payment shall be calculated in accordance with the amortization provisions without taking into account delinquent payments or prepayments.

(e) Premiums shall be payable in cash or in debentures as par plus accrued interest. All premiums are payable in advance and no refund can be made of any portion thereof except as hereinafter provided in this subpart.

§ 241.1035 Charges by lender.

(a) The lender may collect from the borrower the amount of the fees provided for by this subpart.

(b) The lender may also collect from the borrower an initial service charge, as reimbursement for the cost of closing the transaction, in an amount not to exceed two percent of the original principal amount of the loan.

(c) Any charges to be collected by the lender in addition to those prescribed in paragraphs (a) and (b) of this section, shall be subject to the prior approval of the Commissioner.

§ 241.1040 Eligible lenders.

Lenders meeting the applicable eligibility qualifications and requirements contained in §§ 203.1 through 203.4 or § 203.6 of this chapter are eligible for insurance of equity loans under this subpart.

§ 241.1045 Note and security form.

Lender shall present for insurance a note and security instrument on forms approved by the Commissioner for use in the jurisdiction in which the property is located, which shall not be changed without the prior approval of the Commissioner.

§ 245.1050 Method of loan payment.

The loan shall provide for monthly payments on the first day of each month on account of interest and principal and shall provide for payments in accordance with the amortization plan as agreed upon by the borrower, the lender, and the Commissioner.

§ 241.1055 Date of first payment to principal.

The date for first payment to principal shall be established by the Commissioner.

§ 241.1060 Maturity.

The loan shall have a maturity satisfactory to the Commissioner.

§ 241.1065 Maximum loan amount.

The amount of the equity loan shall not exceed ninety percent of the owner's equity in the project, as determined by the Commissioner. Notwithstanding the above, the amount of the equity loan shall not exceed an amount which, when added to the existing indebtedness on the property, can be supported by ninety percent of the projected net income of the project, as determined by the Commissioner. The Secretary, in making a determination regarding the amount of an equity loan and sums available to service the said loan, shall take into account that the project's income may increase within the established limits of § 248.221(b) of this chapter.

§ 241.1070 Agreed interest rate.

The equity loan shall bear interest at the rate agreed upon by the borrower and the lender.

§ 241.180 Eligibility of title.

In order for the project to be eligible for insurance, the Commissioner shall determine that the title to the property is vested in the borrower as of the date the security instrument is filed for record. The title evidence will be examined by the Commissioner and the endorsement of the credit instrument for insurance shall be evidence of its acceptability.

§ 241.1085 Title evidence.

(a) Upon insurance of the loan, the lender shall furnish to the Commissioner a policy of title insurance as provided in paragraph (a)(1) of this section. If the lender is unable to furnish such policy for reasons satisfactory to the Commissioner, the lender shall furnish such evidence of title as provided in paragraph (a) (2), (3) or (4) of this section as the Commissioner may require. Any policy of title insurance, or evidence of title required under this section shall be furnished without expense to the Commissioner. The acceptable types of title evidence are:

(1) A policy of title insurance issued by a company satisfactory to the Commissioner. Such policy shall comply with the "L.I.C. Standard Mortgage Form," or the "ALTA Standard Mortgage Form," or such other form as may be approved by the Commissioner; shall name the lender and the Secretary of Housing and Urban Development, as their respective interests may appear, as the insured; and shall become an owner's policy, running to the lender as owner upon its acquisition of the property in extinguishment of the debt, and to the Secretary as owner upon his acquisition of the property pursuant to the loan insurance contract.

(2) An abstract of title satisfactory to the Commissioner, prepared by an abstract company or individual engaged in the business of preparing abstracts of title, accompanied by a legal opinion satisfactory to the Commissioner, as to the quality of such title, signed by an attorney at law experienced in the examination of titles.

(3) A Torrens or similar title certificate.

(4) Evidence of title conforming to the standards of a supervising branch of the Government of the United States of America, or of any State or territory thereof.

§ 241.1090 Accumulation of next premium.

The security instrument shall provide for payments by the borrower to the lender on each interest payment date of an amount sufficient to accumulate in the hands of the lender one payment period prior to its due date the next annual insurance premium payable by the lender to the Commissioner. These payments shall continue only as long as the contract of insurance remains in effect.

§ 241.1095 Application of payments.

(a) The security instrument shall provide that all monthly payments to be made by the borrower shall be added together and the aggregate amount shall be paid by the borrower upon each monthly payment date in a single payment. The lender shall apply the payment in the following order:

(1) Premium charges under the contract of insurance.

(2) Interest on the loan.

(3) Amortization of the principal of the loan.

(b) Any deficiency in the amount of any monthly payments required under paragraph (a) of this section shall constitute a default. The security instrument shall provide for a grace

period of 30 days within which time the default must be cured.

§ 241.1100 Prepayment privilege and charge.

(a) *Prepayment privilege.* (1) Except as otherwise provided in paragraph (b) of this section, the security instrument shall contain a provision permitting the borrower to prepay the loan, in whole or in part, upon any interest payment date after giving to the lender 30 days advance notice of its intention to prepay.

(2) If the loan exceeds $200,000, the security instrument may contain a provision for an additional charge in the event of prepayment of principal as may be agreed upon between the borrower and lender. The borrower shall be permitted to prepay up to 15 percent of the original principal amount of the loan in any one calendar year without any additional charge. A provision for an additional charge in the event of prepayment may not be included in a loan of $200,000 or less.

(b) *Prepayment of bond-financed loans.* Where the lender has obtained the funds for the loan by the issuance and sale of bonds or bond anticipation notes, or both, the loan may contain a prepayment restriction and prepayment penalty charge acceptable to the Commissioner as to term, amount, and conditions.

§ 241.1105 Late charge.

The note and security instrument may provide for the lender's collection of a late charge, not to exceed 2 cents for each dollar of each payment to interst or principal more than 15 days in arrears, to cover the expense involved in handling delinquent payments. Late charges shall be separately charged to and collected from the borrower and shall not be deducted from any aggregate monthly payment.

§ 241.1120 Mortgagee's consent.

The holder of an insured mortgage which is recorded prior to the equity loan shall not withhold its consent to the equity loan or the security instrument executed in connection with the equity loan transaction which subjects the project to the lien thereof.

Subpart F—Insurance for Equity Loans—Contract Rights and Obligations

§ 241.1200 Cross-references.

For the purposes of this subpart all the provisions of Part 207, Subpart B of this chapter, covering mortgages insured under Section 207 of the Act, apply to equity loans on a project insured under section 241(f) of the Act, except the following provisions:

Sections
207.251—Definitions.
207.252—First, second and third premium.
207.252a—Premiums—operating loss loans.
207.252b—Premiums—mortgages insured pursuant to section 223(f) of the Act.
207.252c—Premiums—mortgages insured pursuant to section 238(c) of the Act.
207.254—Insurance endorsement.

(a) For the purposes of this subpart, all references in Part 207 of this chapter to Section 207 of the Act and to the term "mortgage" shall be construed to refer to Section 241(f) of the Act and "equity loan," respectively.

(b) All of the definitions in § 241.1005 apply to this subpart. In addition, as used in this subpart, the term "contract of insurance" means the agreement evidenced by the Commissioner's insurance endorsement and includes the provisions of this subpart and of the Act.

§ 241.1205 Payment of insurance benefits.

All the provisions of § 207.259 of this chapter relating to insurance benefits shall apply to an equity loan insured under this subpart, except that, insurance benefits shall be payable in cash, if the insurance benefits under the senior insured mortgage are payable in cash, unless the lender files a written request for payment in debentures. If such a request is made, payment shall be made in debentures with a cash payment to adjust for any difference between the total amount of the insurance payment and the amount of the debentures issued.

§ 241.1210 Condition for payment of insurance benefits.

(a) All of the provisions of § 207.258 of this chapter apply to this subpart, except that, if the holder of the senior insured mortgage institutes a foreclosure action, the lender shall notify the Commissioner in a timely manner of such action. The Commissioner, at his option, may then direct the lender to assign the equity loan to the Commissioner, or bid an amount necessary to acquire the project and convey the project to the Commissioner.

(b) If the equity loan is assigned in accordance with this section, the Commissioner at a foreclosure sale may bid, in addition to amounts otherwise authorized, any sum not in excess of the aggregate unpaid indebtedness secured by the senior insured mortgage and equity loan, plus taxes, insurance, foreclosure costs, fees and other expenses.

§ 241.1215 Calculation of insurance benefits.

All of the provisions of § 207.259 of this chapter apply to this subpart, except that if the lender, at the direction of the Commissioner, acquires title to the project at a foreclosure sale instituted by the holder of the senior insured mortgage, the amount of the claim determined under § 207.259(c) of this chapter shall also include the amount bid by the lender to satisfy the senior insured mortgage at the foreclosure sale.

§ 241.1220 Termination of insurance benefits.

All of the provisions of § 207.253a of this chapter apply to this subpart, except that, the following shall also constitute grounds for terminating the contract of insurance:

(a) The failure of the lender to notify the Commissioner in a timely manner of a foreclosure action initiated by the holder of the senior insured mortgage; and

(b) The failure of the lender when directed by the Commissioner to assign the equity loan or bid an amount necessary to acquire title to the project and convey the project to the Commissioner, in accordance with § 241.1210 of this part.

§ 241.1230 No vested right in fund.

Neither the lender nor the borrower shall have any vested or other right in the insurance fund under which the loan is insured.

§ 241.1235 Cross Default.

In the event the borrower commits a default under a prior recorded insured mortgage and the holder thereof initiates a foreclosure proceeding, said default under the prior recorded insured mortgage shall constitute a default under the equity loan.

§ 241.1240 Recapture of assistance.

In the event of a sale or refinancing of a project formerly or presently subject to an equity loan receiving or which has received, under a plan of action, additional assistance pursuant to section 8 of the United States Housing Act of 1937, there shall be deducted from the revenues of the sale or refinancing an amount equal to the additional assistance provided under the plan of action.

§ 241.1245 Insurance endorsement.

(a) *Endorsement.* The Commissioner shall indicate his insurance of the equity loan by endorsing the original credit instrument and identifying the section of the Act and the regulations under which

the loan is insured and the date of insurance.

(b) *Endorsement of phased loan.* In the event the loan is phased, the Commissioner shall indicate his insurance of each amount by endorsing the original credit instrument and identifying the section of the Act and the regulations under which such amount is insured and the date of insurance.

(c) *Final advance of phased loan.* When all advances of a phased loan have been made and the terms and conditions of the commitment have been complied with to the satisfaction of the Commissioner, he shall indicate on the original credit instrument the total of all advances he has approved for insurance and again endorse such instrument.

§ 241.1250 Effect of endorsement.

From the date the equity loan is endorsed, the Commissioner and the lender shall be bound by the provisions of this subpart to the same extent as if they had executed a contract including the provisions of this subpart and the applicable sections of the Act.

PART 50—PROTECTION AND ENHANCEMENT OF ENVIRONMENTAL QUALITY

11. The authority citation for Part 50 continues to read as follows:

Authority: Sec. 7(d), Department of HUD Act (42 U.S.C. 3535(d)).

12. In § 50.20, a new paragraph (n) is added, to read as follows:

§ 50.20 Categorical exclusions.

* * * * *

(n) Approval of mortgage prepayments or plans of action (including incentives) under the Emergency Low Income Housing Preservation Act of 1987, and approval of mortgage prepayments under other statutes or authorities, when the proposal does not involve demolition of any building, or parts of any building, containing the primary use served by the project.

Date: March 30, 1988.

Samuel R. Pierce, Jr.,

Secretary.

[FR Doc. 88-7431 Filed 4-4-88; 8:45 am]

BILLING CODE 4210-32-M

VOL 53 ISS 65 AP 5 1988 UMI

Reader Aids

Federal Register

Vol. 53, No. 65

Tuesday, April 5, 1988

INFORMATION AND ASSISTANCE

Federal Register

Index, finding aids & general information	523-5227
Public inspection desk	523-5215
Corrections to published documents	523-5237
Document drafting information	523-5237
Machine readable documents	523-5237

Code of Federal Regulations

Index, finding aids & general information	523-5227
Printing schedules	523-3419

Laws

Public Laws Update Service (numbers, dates, etc.)	523-6641
Additional information	523-5230

Presidential Documents

Executive orders and proclamations	523-5230
Public Papers of the Presidents	523-5230
Weekly Compilation of Presidential Documents	523-5230

The United States Government Manual

General information	523-5230

Other Services

Data base and machine readable specifications	523-3408
Guide to Record Retention Requirements	523-3187
Legal staff	523-4534
Library	523-5240
Privacy Act Compilation	523-3187
Public Laws Update Service (PLUS)	523-6641
TDD for the deaf	523-5229

FEDERAL REGISTER PAGES AND DATES, APRIL

10519-10868 1
10869-11030 4
11031-11238 5

CFR PARTS AFFECTED DURING APRIL

At the end of each month, the Office of the Federal Register publishes separately a List of CFR Sections Affected (LSA), which lists parts and sections affected by documents published since the revision date of each title.

3 CFR

Executive Orders:
12634 11041

Administrative Orders:

Memorandums:
Mar. 31, 1988 11039

Proclamations:
5784 10519
5785 10521
5786 10523
5787 11031

5 CFR

Proposed Rules:
2431 10885

7 CFR

300 10525
400 10526
910 10527
946 11043

Proposed Rules:
6 11091
53 10545
54 10545
949 10887
1030 10894
1106 11092
1530 11098
1701 10545

9 CFR

92 11043

10 CFR

430 10869

12 CFR

202 11044
205 11046
226 ..... 11047, 11055

14 CFR

Ch. III 11004
71 ..... 10528, 11020, 11060, 11061
97 11062

Proposed Rules:
27 ..... 10826, 11162
29 ..... 10826, 11162
71 ..... 10546, 11100, 11101
73 11102

21 CFR

520 11063
522 11064
524 11064
558 11065
1308 ..... 10834, 10861, 10869

22 CFR

514 10528
602 10529

23 CFR

650 11065
771 11065

24 CFR

50 11224
203 10529
221 11224
236 11224
241 11224
248 11224

Proposed Rules:
35 11164
200 11164
510 11164
511 11164
570 11164
882 11164
886 11164
941 11164
965 11164
968 11164

26 CFR

1 ..... 11002, 11066, 11162
602 ..... 11066, 11162

Proposed Rules:
1 11103

28 CFR

0 ..... 10870, 10871

29 CFR

102 10872
2610 10530
2622 10530
2644 10531

30 CFR

250 10596
256 10596

32 CFR

388 10876

33 CFR

84 10532
117 ..... 10533, 10534

34 CFR

600 11208
657 10820
668 11208

Proposed Rules:
105 10808

40 CFR

52 11068
180 11071

Proposed Rules:
180 10895
761 11104
763 10546
796 11104

43 CFR

Public Land Order:
6670 10535

44 CFR

Proposed Rules:
61 10547

45 CFR

Proposed Rules:
606 10896

46 CFR

572 11072

47 CFR

2 10878
Proposed Rules:
Ch. I 10549, 10550
73 10905

48 CFR

15 10828
31 10828
52 10828
215 11073
227 10780
242 11073
252 ..... 10780, 11073

49 CFR

533 11074
1160 10536
Proposed Rules:
192 10906
571 11105

50 CFR

17 10879
301 10536

LIST OF PUBLIC LAWS

Last List April 4, 1988

This is a continuing list of public bills from the current session of Congress which have become Federal laws. It may be used in conjunction with "P L U S" (Public Laws Update Service) on 523-6641. The text of laws is not published in the **Federal Register** but may be ordered in individual pamphlet form (referred to as "slip laws") from the Superintendent of Documents, U.S. Government Printing Office, Washington, DC 20402 (phone 202-275-3030).

H.R. 2631/Pub. L. 100-274

To authorize appropriations for the Bureau of the Mint for fiscal year 1988, and for other purposes. (Mar. 31, 1988; 102 Stat. 48; 2 pages) Price: $1.00

S. 854/Pub. L. 100-275

Nevada-Florida Land Exchange Authorization Act of 1988. (Mar. 31, 1988; 102 Stat. 52; 10 pages) Price: $1.00

VOL 53 ISS 65 AP 5 1988 UMI

VOL
53

ISS
65

AP
5

1988

UMI

VOL
53

ISS
66

AP
6

1988

UMI

4-6-88
Vol. 53

United
Gover
Printin
SUPERIN
OF DOCU
Washingto

OFFICIAL
Penalty fo

4-6-88
Vol. 53 No. 66

federal register

Wednesday
April 6, 1988

United States
Government
Printing Office
SUPERINTENDENT
OF DOCUMENTS
Washington, DC 20402

OFFICIAL BUSINESS
Penalty for private use, $300

SECOND CLASS NEWSPAPER
Postage and Fees Paid
U.S. Government Printing Office
(ISSN 0097-6326)

**********5-DIGIT 48106

A FR SERIA300S NOV 88 R
SERIALS PROCESSING
UNIV MICROFILMS INTL
300 N ZEEB RD
ANN ARBOR MI 48106

VOL
53

ISS
66

AP
6

1988

UMI

4-6-88
Vol. 53
Pages

4-6-88
Vol. 53 No. 66
Pages 11239–11486

federal register

Wednesday
April 6, 1988

Briefings on How To Use the Federal Register—
For information on briefings in Washington, DC, and Boston, MA, see announcement on the inside cover of this issue.

BEST COPY AVAILABLE

FEDERAL REGISTER Published daily, Monday through Friday, (not published on Saturdays, Sundays, or on official holidays), by the Office of the Federal Register, National Archives and Records Administration, Washington, DC 20408, under the Federal Register Act (49 Stat. 500, as amended; 44 U.S.C. Ch. 15) and the regulations of the Administrative Committee of the Federal Register (1 CFR Ch. I). Distribution is made only by the Superintendent of Documents, U.S. Government Printing Office, Washington, DC 20402.

The **Federal Register** provides a uniform system for making available to the public regulations and legal notices issued by Federal agencies. These include Presidential proclamations and Executive orders and Federal agency documents having general applicability and legal effect, documents required to be published by act of Congress and other Federal agency documents of public interest. Documents are on file for public inspection in the Office of the Federal Register the day before they are published, unless earlier filing is requested by the issuing agency.

The **Federal Register** will be furnished by mail to subscribers for $340.00 per year, or $170.00 for 6 months in paper form, or $188.00 per year, or $94.00 for six months in microfiche form, payable in advance. The charge for individual copies is $1.50 for each issue, or $1.50 for each group of pages as actually bound. Remit check or money order, made payable to the Superintendent of Documents, U.S. Government Printing Office, Washington, DC 20402, or charge to your GPO Deposit Account or VISA or Mastercard.

There are no restrictions on the republication of material appearing in the **Federal Register**.

How To Cite This Publication: Use the volume number and the page number. Example: 52 FR 12345.

SUBSCRIPTIONS AND COPIES

PUBLIC	
Subscriptions:	
Paper or fiche	202-783-3238
Magnetic tapes	275-3328
Problems with public subscriptions	275-3054
Single copies/back copies:	
Paper or fiche	783-3238
Magnetic tapes	275-3328
Problems with public single copies	275-3050
FEDERAL AGENCIES	
Subscriptions:	
Paper or fiche	523-5240
Magnetic tapes	275-3328
Problems with Federal agency subscriptions	523-5240

For other telephone numbers, see the Reader Aids section at the end of this issue.

THE FEDERAL REGISTER
WHAT IT IS AND HOW TO USE IT

FOR: Any person who uses the Federal Register and Code of Federal Regulations.

WHO: The Office of the Federal Register.

WHAT: Free public briefings (approximately 3 hours) to present:
1. The regulatory process, with a focus on the Federal Register system and the public's role in the development of regulations.
2. The relationship between the Federal Register and Code of Federal Regulations.
3. The important elements of typical Federal Register documents.
4. An introduction to the finding aids of the FR/CFR system.

WHY: To provide the public with access to information necessary to research Federal agency regulations which directly affect them. There will be no discussion of specific agency regulations.

WASHINGTON, DC

WHEN: April 15; at 9:00 a.m.
WHERE: Office of the Federal Register, First Floor Conference Room, 1100 L Street NW., Washington, DC
RESERVATIONS: Carolyn Payne, 202-523-3187

BOSTON, MA

WHEN: April 19; at 9 a.m.
WHERE: Thomas P. O'Neill, Jr. Federal Building, Auditorium, 10 Causeway Street, Boston, MA.
RESERVATIONS: Call the Boston Federal Information Center, 617-565-8123

VOL 53 ISS 66 APR 6 1988 UMI

Contents

Federal Register
Vol. 53, No. 66
Wednesday, April 6, 1988

Agricultural Stabilization and Conservation Service
PROPOSED RULES
Payment limitation, and determination of eligibility of foreign individuals or entities to receive program benefits [Editorial Note: For a document on this subject, see entry under Commodity Credit Corporation.]

Agriculture Department
See also Agricultural Stabilization and Conservation Service; Commodity Credit Corporation; Federal Crop Insurance Corporation; Foreign Agricultural Service
NOTICES
Import quotas and fees:
Meat import limitations; quarterly estimates, 11323

Antitrust Division
NOTICES
National cooperative research notifications:
Bell Communications Research, Inc., et al., 11352

Arts and Humanities, National Foundation
See National Foundation on the Arts and the Humanities

Coast Guard
RULES
Anchorage regulations:
New Jersey; correction, 11395
PROPOSED RULES
Dry cargo ship subdivision and damage stability, 11440

Commerce Department
See International Trade Administration; National Oceanic and Atmospheric Administration

Committee for the Implementation of Textile Agreements
NOTICES
Cotton, wool, and man-made textiles:
Indonesia, 11327

Commodity Credit Corporation
RULES
Loan and purchase programs:
Grains and similarly handled commodities, 11239
PROPOSED RULES
Payment limitation, and determination of eligibility of foreign individuals or entities to receive program benefits, 11474
NOTICES
Contract fees, annual:
Grain and rice storage agreement, uniform, 11323

Commodity Futures Trading Commission
NOTICES
Committees; establishment, renewal, termination, etc.:
CFTC-State Cooperation Advisory Committee, 11328

Defense Department
See Navy Department; Uniformed Services University of the Health Sciences

Drug Enforcement Administration
NOTICES
Applications, hearings, determinations, etc.:
Agustin, Norberto T., M.D., 11352
Hoffman-La Roche Inc., 11353
Holme Drug Store, 11353
Knoll Pharmaceuticals, 11353
Lopez, Leonardo V., M.D., 11353
McNeilab, Inc., 11353
Nagalla, Ratnam B., M.D., 11354
Pate, James E., D.D.S., 11354
Roberts Cape Coral Pharmacy, 11354

Economic Regulatory Administration
NOTICES
Natural gas exportation and importation:
TXG Gas Marketing Co., 11331
Woodward Marketing, Inc., 11331

Education Department
NOTICES
Agency information collection activities under OMB review, 11329
Grants; availability, etc.:
Indian Education program—
Formula grants, 11330
National Institute on Disability and Rehabilitation Research—
Research and demonstration projects, etc., 11330

Energy Department
See also Economic Regulatory Administration; Federal Energy Regulatory Commission
RULES
Conflict of interests:
Financial reporting requirement exemptions, 11240
PROPOSED RULES
Acquisition regulations:
Contractor travel costs; cost principles, 11318
NOTICES
Nuclear waste management:
Spent nuclear fuel storage and disposal; nonnuclear weapon states; technical assistance update, 11398

Environmental Protection Agency
RULES
Air quality implementation plans; approval and promulgation; various States:
North Carolina, 11273
Pesticides; tolerances in food, animal feeds, and raw agricultural commodities:
3-(3,5-dichlorophenyl)-5-ethenyl-5-methyl-2, 4-oxazolidinedione, 11274
PROPOSED RULES
Air quality implementation plans; approval and promulgation; various States:
California, 11314
Pesticides; tolerances in food, animal feeds, and raw agricultural commodities:
Triflumizole, 11313

NOTICES
Environmental statements; availability, etc.:
New Bedford, MA; municipal wastewater treatment facilities, 11336
Pesticides; emergency exemptions, etc.:
Avermectin B1, 11337
Clofentezine, 11337
Clofentezine and hexythiazox, 11338
Pesticides; experimental use permits, etc.:
Ciba-Geigy Corp. et al., 11339
Pesticides; receipts of State registrations, 11339
Pesticides; temporary tolerances:
Avermectin, 11341
Toxic and hazardous substance control:
Testing consent agreement development—
Octamethylcyclotetrasiloxane (OMCTS), 11341

Export Administration
See International Trade Administration

Federal Aviation Administration
RULES
Airworthiness directives:
Hercules, 11246

Federal Communications Commission
NOTICES
Agency information collection activities under OMB review, 11342
Rulemaking proceedings; petitions filed, granted, denied, etc., 11343

Federal Crop Insurance Corporation
PROPOSED RULES
Crop insurance; various commodities:
Fresh market sweet corn, 11299

Federal Emergency Management Agency
RULES
Federal crime insurance program:
Residential and commercial rates, commercial burgulary and robbery policy premium discounts, and protective device requirements, 11275

Federal Energy Regulatory Commission
NOTICES
Electric rate, small power production, and interlocking directorate filings, etc.:
Niagara Mohawk Power Corp. et al., 11332
Natural gas certificate filings:
Southern Natural Gas Co. et al., 11332
Applications, hearings, determinations, etc.:
ANR Pipeline Co., 11334
National Fuel Gas Supply Corp., 11334
Pacific Offshore Pipeline Co., 11334
Ringwood Gathering Co., 11334
Williams Natural Gas Co., 11335
Wyoming-California Pipeline Co. et al., 11335

Federal Highway Administration
RULES
Highway safety programs; effectiveness determination, 11255
NOTICES
Environmental statements; availability, etc.:
Worcester/Milbury, MA, 11392

Federal Home Loan Bank Board
RULES
Federal Savings and Loan Insurance Corporation:
Money laundering crimes; reporting requirements, etc., 11242
Regulatory capital—
Insured institutions requirements, 11243
NOTICES
Applications, hearings, determinations, etc.:
Bankers Federal Savings, F.S.B., 11343
Safey Federal Savings & Loan Association of Kansas City et al., 11343

Federal Reserve System
NOTICES
Applications, hearings, determinations, etc.:
Compagnie Financiere de Suez et al., 11343
Lifton, Bruce G., et al., 11344
NewMil Bancorp, Inc., et al., 11344
Norwest Corp., 11345

Federal Trade Commission
RULES
Prohibited trade practices:
Great Earth International, Inc., 11247
Supermarket Development Corp. et al., 11247

Fish and Wildlife Service
NOTICES
Agency information collection activities under OMB review, 11350

Food and Drug Administration
RULES
Animal drugs, feeds, and related products:
Oxytetracycline; correction, 11251
GRAS or prior-sanctioned ingredients:
Nisin, 11247
Medical devices and radiological health regulations; editorial amendments, 11251
PROPOSED RULES
Food additives:
Polymers—
Colorants, 11402
Food for human consumption:
Pasteurized process cheese spread; identity standards, 11312
NOTICES
Medical devices; premarket approval:
Weck Model BL-12 Nd:YAG Ophthalmic Laser; correction, 11395

Foreign Agricultural Service
NOTICES
Agricultural Advisory Committees for Trade; FY 1987 topics, 11324

Health and Human Services Department
See also Food and Drug Administration; Health Resources and Services Administration; Public Health Service
RULES
Employee indemnification, 11279

Health Resources and Services Administration
See also Public Health Service
NOTICES
Grants and cooperative agreements:
Community and migrant health centers activities, 11345
Geriatric education centers, 11347

VOL 53 ISS 66 AP 6 1988 UMI

Housing and Urban Development Department
RULES
Minimum property standards:
Lead standards in water piping, 11270

Immigration and Naturalization Service
PROPOSED RULES
Aliens:
Asylum and withholding of deportation procedures, 11300

Indian Affairs Bureau
RULES
Tribal government:
Cow Creek Band of Umpqua Indians; enrollment, 11271
NOTICES
Meetings:
Child Protection National Oversight Committee, 11349

Interior Department
See Fish and Wildlife Service; Indian Affairs Bureau; Land Management Bureau

International Trade Administration
NOTICES
Export trade certificates of review, 11325
Applications, hearings, determinations, etc.:
University of California, et al., 11326
University of Pittsburgh, 11326

International Trade Commission
NOTICES
Agency information collection activities under OMB review, 11350
Import investigations:
All terrain vehicles from Japan, 11351
High geometric surface area catalysts and components, 11351
Programmable digital clock thermostats, 11351

Interstate Commerce Commission
NOTICES
Railroad operation, acquisition, construction, etc.:
Tennessee Southern Railroad Co., Inc., 11352

Justice Department
See Antitrust Division; Drug Enforcement Administration; Immigration and Naturalization Service

Labor Department
See Mine Safety and Health Administration; Occupational Safety and Health Administration; Pension and Welfare Benefits Administration

Land Management Bureau
PROPOSED RULES
Minerals management:
Onshore oil and gas operations; Federal and Indian oil and gas leases, Order Nos. 4 and 5, 11318
NOTICES
Meetings:
Yuma District Advisory Council, 11350
Realty actions; sales, leases, etc.:
New Mexico; correction, 11349
Resource management plans, etc.:
San Juan Resource Area, UT, 11349

Legal Services Corporation
NOTICES
Meetings; Sunshine Act, 11394

Mine Safety and Health Administration
RULES
Coal mine safety and health:
Underground coal mining—
Roof, face, and rib support; correction, 11395

National Foundation on the Arts and the Humanities
NOTICES
Meetings:
Music Advisory Panel, 11360

National Highway Traffic Safety Administration
RULES
Highway safety programs; effectiveness determination, 11255
Motor vehicle safety standards:
Motorcycle helmets, 11280

National Oceanic and Atmospheric Administration
RULES
Fishery conservation and management:
Gulf of Alaska groundfish, 11297
PROPOSED RULES
Fishery conservation and management:
Atlantic billfish, 11321
NOTICES
Meetings:
Gulf of Mexico and South Atlantic Fishery Management Councils, 11326
Gulf of Mexico Fishery Management Council, 11326
Pacific Fishery Mangement Council, 11327

National Transportation Safety Board
NOTICES
Meetings; Sunshine Act, 11394

Navy Department
NOTICES
Meetings:
Naval Academy; Academic Advisory Board to Superintendent, 11329
Naval Postgraduate School, Board of Advisors to Superintendent, 11329
Naval Research Advisory Committee, 11329

Nuclear Regulatory Commission
PROPOSED RULES
Practice rules:
Domestic licensing proceedings—
Gelogic repository for high-level radioactive waste; negotiated rulemaking advisory committee, 11310
Production and utilization facilities; domestic licensing:
Leak-before-break technology, 11311
NOTICES
Environmental statements; availability, etc.:
Dairyland Power Cooperative, 11361
Nuclear Waste Policy Act:
Spent nuclear fuel storage and disposal; nonnuclear weapon states; technical assistance update, 11398
Operating licenses, amendments; no significant hazards considerations
Biweekly notices, 11361
Applications, hearings, determinations, etc.:
Finlay Testing Laboratories, Inc., 11385
Union Electric Co., 11386

Occupational Safety and Health Administration
RULES
Safety and health standards:
Ethylene oxide; occupational exposure, 11414

Pension and Welfare Benefits Administration
NOTICES
Employee benefit plans; prohibited transaction exemptions:
Modern Display Service, Inc., et al., 11354
Tupelo Anesthesia Group, P.A., et al., 11359

Public Health Service
See also Food and Drug Administration; Health Resources and Services Administration
NOTICES
Organization, functions, and authority delegations:
Resource Management Office, etc., 11348

Research and Special Programs Administration
PROPOSED RULES
Hazardous materials:
Uranium hexafluoride, 11320

Securities and Exchange Commission
NOTICES
Agency information collection activities under OMB review, 11386
Self-regulatory organizations; proposed rule changes:
American Stock Exchange, Inc., 11386, 11387 (2 documents)
Philadelphia Stock Exchange, Inc., 11388–11390 (3 documents)
Applications, hearings, determinations, etc.:
Public utility holding company filings, 11391 (2 documents)

Textile Agreements Implementation Committee
See Committee for the Implementation of Textile Agreements

Transportation Department
See also Coast Guard; Federal Aviation Administration; Federal Highway Administration; National Highway Traffic Safety Administration; Research and Special Programs Administration
NOTICES
Aviation proceedings:
Hearings, etc.—
Laredo Air, Inc., 11392
Tri Freight, Inc., 11392
Westates Airlines, Inc., 11392

Uniformed Services University of the Health Sciences
NOTICES
Meetings; Sunshine Act, 11394 (2 documents)

United States Information Agency
NOTICES
Grants; availability, etc.:
Private non-profit organizations in support of international educational and cultural activities, 11393

Separate Parts In This Issue

Part II
Department of Energy and Nuclear Regulatory Commission, 11398

Part III
Department of Health and Human Services, Food and Drug Administration, 11402

Part IV
Department of Labor, Occupational and Safety and Health Administration, 11414

Part V
Department of Transportation, Coast Guard, 11440

Part VI
Department of Agriculture, Commodity Credit Corporation, 11474

Reader Aids
Additional information, including a list of public laws, telephone numbers, and finding aids, appears in the Reader Aids section at the end of this issue.

CFR PARTS AFFECTED IN THIS ISSUE

A cumulative list of the parts affected this month can be found in the Reader Aids section at the end of this issue.

7 CFR
1421 11239
Proposed Rules:
449 11299
1497 11474
1498 11474

8 CFR
Proposed Rules:
3 11300
208 11300
236 11300
242 11300
253 11300

10 CFR
1010 11240
Proposed Rules:
2 11310
50 11310

12 CFR
563 (2 documents) 11242, 11243

14 CFR
39 11246

16 CFR
13 (2 documents) 11247

21 CFR
184 11247
558 11251
800 11251
803 11251
807 11251
808 11251
809 11251
812 11251
813 11251
820 11251
860 11251
861 11251
864 11251
866 11251
876 11251
895 11251
1002 11251
1005 11251
1010 11251
1020 11251
1030 11251
1040 11251
1050 11251
Proposed Rules:
133 11312
175 11402
176 11402
177 11402
178 11402
561 11313

23 CFR
1204 11255
1205 11255

24 CFR
200 11270

25 CFR
61 11271

29 CFR
1910 11414

30 CFR
75 11395

33 CFR
Proposed Rules:
110 11395

40 CFR
52 11273
180 11274
Proposed Rules:
52 11314

43 CFR
Proposed Rules:
3160 11318

44 CFR
80 11275
82 11275
83 11275

45 CFR
36 11279

46 CFR
Proposed Rules:
Ch. I 11440

48 CFR
Proposed Rules:
916 11318
931 11318
952 11318

49 CFR
571 11280
Proposed Rules:
171 11320
173 11320

50 CFR
672 11297
Proposed Rules:
644 11321

Rules and Regulations

Federal Register
Vol. 53, No. 66
Wednesday, April 6, 1988

This section of the FEDERAL REGISTER contains regulatory documents having general applicability and legal effect, most of which are keyed to and codified in the Code of Federal Regulations, which is published under 50 titles pursuant to 44 U.S.C. 1510.
The Code of Federal Regulations is sold by the Superintendent of Documents. Prices of new books are listed in the first FEDERAL REGISTER issue of each week.

DEPARTMENT OF AGRICULTURE

Commodity Credit Corporation

7 CFR Part 1421

Grains and Similarly Handled Commodities

AGENCY: Commodity Credit Corporation (CCC), USDA.

ACTION: Interim rule.

SUMMARY: The Food Security Act of 1985 (the "1985 Act") and the Omnibus Budget Reconciliation Act of 1987 (the "1987 Act"), amended the Agricultural Act of 1949 with respect to the quantities of wheat and feed grains which must be maintained in the Farmer Owned Reserve ("FOR"). This interim rule amends 7 CFR Part 1421 to implement provisions of the 1985 and 1987 Acts. In order to provide CCC greater flexibility in maintaining these quantities, this interim rule also amends 7 CFR Part 1421 to provide that the term of the FOR agreements will be as determined and announced by CCC.

DATES: Effective Date: This interim rule shall become effective April 6, 1988. Comments must be received on or before May 6, 1988, in order to be assured of consideration.

ADDRESS: Interested persons are invited to submit written comments to the Director, Cotton, Grain and Rice Price Support Division, Agricultural Stabilization and Conservation Service (ASCS), USDA, P.O. Box 2415, Washington, DC 20013.

FOR FURTHER INFORMATION CONTACT: Lynda Flament, Program Specialist, Cotton, Grain and Rice Price Support Division, ASCS, USDA, P.O. Box 2415, Washington, DC 20013; Phone: (202) 447-4229.

SUPPLEMENTARY INFORMATION: This interim rule has been reviewed under USDA procedures established in accordance with the provisions of Departmental Regulation 1512-1 and Executive Order 12291 and has been classified as "non-major". It has been determined that the provisions of this interim rule will not result in: (1) Annual effects on the economy of $100 million or more; (2) major increases in costs or prices for consumers, individual industries, Federal, State, or local government agencies or geographic regions; or (3) significant adverse effects on competition, employment, investment, productivity, innovation, or ability of U.S.-based enterprises to compete with foreign-based enterprises in domestic or export markets.

It has been determined by an environmental evaluation that this action will have no significant impact on the quality of the human environment. Therefore, neither an environmental assessment nor an environmental impact statement is needed.

The title and number of the Federal Domestic Program to which this interim rule applies are: Title—Grain Reserve Program Number–10.067, as found in the catalog of Federal Domestic Assistance.

It has been determined that the Regulatory Flexibility Act is not applicable to this rule since CCC is not required by 5 U.S.C. 553 or any other provision of law to publish a notice of proposed rulemaking with respect to the subject matter of this rule.

This activity is not subject to the provisions of Executive Order 12372 which requires intergovernmental consultation with State and local officials. See the Notice related to 7 CFR Part 3015, Subpart V, published at 48 FR 29115 (June 24, 1983).

Section 110 of the Agricultural Act of 1949, as amended (the "1949 Act"), provides that the Secretary of Agriculture shall implement a program under which producers of wheat and feed grains would be able to store these commodities during periods of abundant supply; to extend the time for their orderly marketing; and to provide for a reliable supply of wheat and feed grains. This program is referred to as the Farmer-Owned Reserve ("FOR") Program. Section 110 was amended by the 1985 and 1987 Acts with respect to the quantities of wheat and feed grains which must be maintained in the FOR. Accordingly, section 110(e)(2) provides that the maximum quantities of wheat and feed grains which may be maintained in the FOR are 30 and 15 percent of the estimated total domestic and export use of wheat and feed grains, respectively, during the current marketing year unless the Secretary determines that an increased quantity, not to exceed 110 percent of these respective quantities, is necessary to achieve the purposes of section 110. The minimum FOR quantities set forth in section 110 are 300 million bushels of wheat and 450 million bushels of feed grains.

The maximum quantities to be maintained in the FOR are determined and announced annually. For example, the proposed determination for these quantities which would be in effect for the 1988 crop years for wheat and feed grains are set forth at 52 FR 15358 and 26707, respectively. Accordingly, since section 110 specifically sets forth the manner in which these quantities are to be determined and such determinations are announced annually in the **Federal Register**, 7 CFR 1421.742 is revised to provide that maximum FOR quantities shall be determined and announced annually by the Executive Vice President, CCC.

Prior to its amendment by the 1985 Act, section 110 of the 1949 Act provided that FOR agreements could not be for a term of less than three years or more than five year. The 1985 Act amended section 110 to provide that such agreements could not be for a term of less than three years but that these agreements could be extended as warranted by market conditions.

Accordingly, 7 CFR 1421.741 is amended by providing that: (1) FOR agreements shall be for a term based upon market conditions existing at the time the FOR agreement is executed, as determined and announced by CCC; and (2) such agreements may be extended by CCC as warranted by market conditions.

The 1985 Act also amended section 110 of the 1949 Act to provide that FOR agreements may be repaid prior to maturity when certain market prices (i.e., "trigger release levels") are attained. Generally, trigger release levels are the higher of 140 percent of the nonrecourse loan rate which has been established for the commodity or the established price (i.e., the "target price") of the commodity. Accordingly, 7 CFR 1421.753 is amended by deleting references to the manner in which the

Secretary previously determined and announced such levels.

Due to the increase in the use of wheat and feed grains and the constant change in market conditions, it has been determined that this interim rule shall become effective upon publication in the **Federal Register**. Comments, however, are requested and will be taken into consideration in the review of this rule.

List of Subjects in 7 CFR Part 1421

Grains, Loan programs/agriculture, Price support programs, Warehouses.

Interim Rule

Accordingly, 7 CFR Part 1421 is amended to read as follows:

PART 1421—GRAINS AND SIMILARLY HANDLED COMMODITIES

1. The authority citation for 7 CFR Part 1421 is revised to read as follows:

Authority: Secs. 4 and 5 of the Commodity Credit Corporation Charter Act, as amended, 62 Stat. 1070, as amended, 1072 (15 U.S.C. 714b and 714c); Secs. 101, 101A, 105C, 107D, 110, 201, 301, 401, 403, and 405 of the Agricultural Act of 1949, as amended, 63 Stat. 1051, as amended, 99 Stat. 1419, as amended, 1395, as amended, 1383, as amended, 91 Stat. 951, as amended, 63 Stat. 1052, as amended, 1053, as amended, 1054, as amended, (7 U.S.C. 1441, 1441-1, 1444e, 1445b-3, 1445e, 1446, 1447, 1421, 1423, and 1425).

2. 7 CFR 1421.741 is revised to read as follows:

§ 1421.741 Length of reserve agreements.

The length of reserve agreements shall be as determined and announced by the Executive Vice President, CCC, based upon market conditions which exist at the time such agreements are executed by CCC. Such agreements may be extended by CCC, at the producers option, upon maturity if CCC determines that an extension is warranted based upon existing market conditions.

3. 7 CFR 1421.742 is revised to read as follows:

§ 1421.742 Reserve Quantity.

The maximum quantity of wheat and feed grains stored under the program shall be determined and announced annually by the Executive Vice President, CCC.

§ 1421.753 [Amended]

4. 7 CFR 1421.753(a) is amended by removing the third, fourth, and fifth sentences.

Signed at Washington, DC, on April 1, 1988.

Vern Neppl,

Acting Executive Vice President, Commodity Credit Corporation.

[FR Doc. 88-7566 Filed 4-5-88; 8:45 am]

BILLING CODE 3410-05-M

DEPARTMENT OF ENERGY

Office of General Counsel

10 CFR Part 1010

Conduct of Employees; Statements of Employment and Financial Interest, and Interests in Energy Concerns

AGENCY: Department of Energy.

ACTION: Final rule.

SUMMARY: The Department of Energy is amending the Department's Conduct of Employees regulations (10 CFR Part 1010) by revising the provisions on exemption of Department of Energy employees at or below GS-12 from the financial reporting requirements of section 603 of the Department of Energy Organization Act (Pub L. 95-91).

EFFECTIVE DATE: April 6, 1988.

FOR FURTHER INFORMATION CONTACT: Thomas C. Buchanan, Attorney-Advisor, Office of Assistant General Counsel for General Law, GC-43, Department of Energy, 1000 Independence Avenue SW., Washington, DC 20585, (202) 586-1522.

SUPPLEMENTARY INFORMATION:

I. Background

Section 603(a) of the Department of Energy Organization Act (Pub. L. 95-91) requires all employees of the Department of Energy to file a report disclosing their energy concern interests with the Secretary of Energy not later than May 15 of each year. Such reports are also required to be filed within 30 days of commencement and termination of employment with the Department. Section 603(c) of the Act requires the Secretary to identify, by rule, specific positions, or classes thereof, which are of a nonregulatory or nonpolicymaking nature at or below grade GS-12, and to exempt such positions and the individuals occupying those positions from the filing requirements.

The requirement for identification of exemption positions is implemented by § 1010.403 of the Department of Energy Conduct of Employees regulations (10 CFR Part 1010), which provides for a listing of exempt positions in Appendix I of the regulations. Currently, such exempt positions are listed in Appendix I by position title, series, and grade, and there is a different listing for each Departmental element. This has proved to be an inefficient method of identification.

This rule amends § 1010.403 and Appendix I to provide for identification of exempt positions on a Department-wide basis, rather than by Departmental element, and by series and grade only, rather than by individual position titles. In addition, the rule permits the Counselor (defined in § 1010.103(f) of the Conduct of Employees regulations to mean the General Counsel of the Department or the General Counsel of the Federal Energy Regulatory Commission, as appropriate, or their delegates) to identify, from time to time, specific positions with duties and responsibilities substantially similar to those already covered by Apendix I, and to exempt such specific positions from the filing requirements. A list of such exempt positions will be maintained by the Conselor. The list of specific positions will be published at intervals established by the Counselor.

II. Opportunity for Public Comment

A proposed rulemaking was published on pages 17765-17767 of the **Federal Register** of May 12, 1987. A 30-day period was provided for comments. (A correction was published on page 18647 of the **Federal Register** of May 18, 1987, addressing several typographical errors in the May 12 notice.)

Only one individual responded. The Manager of a DOE field office suggested that all positions in the Engineering Series (GS-800) should be exempted at GS-12 or below. However, review of the duties and responsibilities of individuals in GS-800 series positions indicated that, on a Department-wide basis, it is not appropriate to exempt *all* GS-800 series positions that are above GS-9 and below GS-13. (Where appropriate, GS-800 series positions have been exempted at GS-12 and below, but some GS-800 series positions have been exempted only at GS-9 and below.) Therefore, the grade level of exempt positions in the GS-800 series remains as published in the notice of proposed rulemaking. (The affected field office may, of course, apply to the Counselor for ad hoc exemptions for specific positions, in accordance with the terms of the new rule.)

The same individual also suggested that the grade level of exempt positions in the Security Administration Series (GS-080), shown as GS-12 or below in the proposed regulations, be changed to GS-9 or below. However, review of the duties and responsibilities of employees occupying positions at GS-12 or below in the GS-080 series indicated that they are not of a "policymaking" or "regulatory" nature, the criteria established by the statute. Therefore, the grade level of exempt positions in the GS-080 series remain at GS-12 or below.

No other comments were received. However, a new paragraph (f)(3) has been added to the final rule to clarify

the periods covered by the new exemptions. In the case of employees occupying positions listed in Appendix I, the amendment has been made applicable to statements of financial interests required to be filed for any period beginning on or after January 1, 1987. In the case of employees occupying positions receiving ad hoc exemptions by the Counselor, the amendment has been made applicable to reports due on or after the date the position is exempted.

III. Review Under Executive Order 12291

It has been determined that this regulation is not a "major rule" within the meaning of Executive Order 12291 (February 17, 1981) because the amendment will not result in (1) an annual effect on the economy of $100 million or more; (2) a major increase in costs or prices for consumers, individual industries, Federal, State, or local government agencies, or geographic regions; or (3) significant adverse effects on competition, employment, investment, productivity, or innovation, or on the ability of United States-based enterprises to compete in domestic or export markets. Accordingly, a regulatory impact analysis is not required.

IV. Review Under the Regulatory Flexibility Act

Pursuant to section 605 of the Regulatory Flexibility Act (Pub. L. 96-354), it is hereby certified that this regulation will not have a significant economic impact on a substantial number of small entities within the meaning of the Act. It is related solely to internal agency organization, management, or personnel.

V. Review Under the National Environmental Policy Act

DOE has determined that this rule does not constitute a major Federal action significantly affecting the quality of the human environment.

VI. Review Under the Paperwork Reduction Act

This rule does not impose a "collection of information" requirement, as defined in 44 U.S.C. 3502(4).

List of Subjects in 10 CFR Part 1010

Conflict of interest, conduct of employees.

In consideration of the foregoing, Part 1010 of Title 10 of the Code of Federal Regulations is amended, as set forth below:

Issued in Washington, DC, on March 25, 1988.

John S. Herrington,
Secretary of Energy.

PART 1010—CONDUCT OF EMPLOYEES

1. The authority citation for Part 1010 is revised to read as follows:

Authority: Sec. 601–608, 644, Pub. L. 95–91, 91 Stat. 591–596, 599 (42 U.S.C. 7211–7216, 7254); sec. 522, Pub. L. 94–163, 89 Stat. 961 (42 U.S.C. 6392); sec. 308, Pub. L. 95–39, 91 Stat. 189 (42 U.S.C. 5816a); 5 U.S.C. app. 207(a); 18 U.S.C. 201–209; E.O. 11222, as amended by E.O. 12565.

2. Section 1010.403 is amended by revising paragraph (a) and adding paragraph (f) to read as follows:

§ 1010.403 Statements of employment and financial interests, and interests in energy concerns.

(a) (Applicable to FERC) The filing requirements of this section are applicable to all DOE employees, except those whose positions are exempt pursuant to paragragh (f) of this section.

* * * * *

(f) (Applicable to FERC) (1) Section 603(c) of Pub. L. 95–91 (42 U.S.C. 7213(c)) requires the Secretary to identify specific positions, or classes thereof, within the Department which are of a nonregulatory or nonpolicymaking nature at or below GS–12 of the General Schedule, and to exempt such positions or classes and the individuals occupying those positions from the reporting requirements of section 603 of the Act. Pursuant to section 603(c), the following positions are exempt from the filing requirements of this section commencing with the dates provided in paragraph (f)(3) of this section:

(i) All positions in the classes, identified by series and grades, listed in Appendix I, except those occupied by individuals described in paragraph (f)(2) of this section; and

(ii) Any specific position at or below GS–12 of the General Schedule, or the equivalent, the duties and responsibilities of which are found by the Counselor to be substantially similar to those included in the classes listed in Appendix I to this part. A list of specific positions that have been exempted from the filing requirements of this section pursuant to this paragraph shall be maintained by the Counselor. The list shall be published at intervals established by the Counselor.

(2) Notwithstanding the provisions of paragraph (f)(1) of this section, an individual who is a supervisory employee (see § 1010.103(t) for definition of "supervisory employee"), a member of an award fee board, or a contracting officer's technical representative, is not exempt from the reporting requirements of section 603 of Pub. L. 95–91.

(3) An employee who occupies a position that has been exempted pursuant to paragraph (f)(1)(i) of this section shall not be required to file a report pursuant to this section for any period beginning on or after January 1, 1987. An employee who occupies a position that has been exempted pursuant to paragraph (f)(1)(ii) of this section shall not be required to file any report due under this section on or after the date the employee's position has been exempted. Reports for any period before January 1, 1987, in the case of an employee who occupies a position that has been exempted pursuant to paragraph (f)(1)(i) of this section, and reports due before a position has been exempted, in the case of an employee who occupies a position that has been exempted pursuant to paragraph (f)(1)(ii), shall continue to be subject to the rules regarding exemption that were in effect before April 6, 1988.

3. Appendix I to Part 1010 is revised to read as follows:

Note.—Appendix I, as originally published at 44 FR 24709 *et seq.* (April 26, 1979), did not appear in the Code of Federal Regulations. The revised Appendix I will appear in the Code of Federal Regulations.

Appendix I—List of Classes of Positions Exempt from the Disclosure Requirements of Section 603 of the DOE Organization Act

The following is a list of classes of DOE positions (identified by series and grade) within the Department of Energy that are of a nonregulatory or nonpolicymaking nature at or below GS–12 of the General Schedule or the equivalent. The individuals who occupy positions that are within these classes (except individuals described in § 1010.403(f)(2)) have been exempted for the financial disclosure requirements of section 603 of the Department of Energy Organization Act (Pub. L. 95–91). (Individuals in certain confidential positions in the excepted service who fall within these classes may, nevertheless, be required to file a financial disclosure report under the Ethics in Government Act of 1978 (Pub. L. 95–521, as amended).)

All positions at GS–12 or below in the following occupational series:

018	084	132
019	085	134
020	090	140
023	099	150
026	110	160
080	130	170
081	131	180

199	486	1306
201	499	1310
203	501	1311
212	503	1320
221	525	1321
230	530	1340
233	540	1341
235	544	1350
240	550	1370
260	561	1371
301	590	1372
302	599	1373
303	602	1374
304	610	1399
305	690	1410
309	802	1411
312	806	1412
313	807	1421
318	808	1510
322	809	1515
332	817	1520
334	818	1521
335	856	1529
341	899	1530
342	904	1531
343	950	1550
344	963	1599
345	986	1601
346	1001	1640
350	1016	1654
351	1020	1670
356	1035	1701
361	1060	1712
385	1071	1910
388	1082	2001
390	1083	2003
391	1084	2005
392	1087	2010
393	[1] 1101	2090
394	1103	2050
401	1104	2101
403	1105	2102
404	1106	2130
408	1107	2131
430	1150	2132
460	1160	2134
462	1202	2151
482	1301	2161

[1] For Office of Hearings and Appeals, exemption for series 1101 positions is at GS–9 and below:

All positions at GS–11 or below in the following occupational series:

510

All positions at GS–9 or below in the following occupational series:

801	850	1102
803	855	1130
804	880	1170
810	881	1171
819	893	1220
830	896	1221
840	[2] 1101	1222

[2] For all other offices, exemption for series 1101 is at GS–12 and below.

[FR Doc. 88–7471 Filed 4–5–88; 8:45 am]

BILLING CODE 6450–01–M

FEDERAL HOME LOAN BANK BOARD

12 CFR Part 563

[No. 88–216]

Criminal Referrals; Money Laundering Crimes

Date: March 29, 1988.

AGENCY: Federal Home Loan Bank Board.

ACTION: Final rule.

SUMMARY: The Federal Home Loan Bank Board ("Board" or "FHLBB") is amending its Criminal Referral regulation (12 CFR 563.18(d)) by revising its description of bank bribery to conform to a legislative amendment and by adding a requirement to report money laundering related crimes also in accordance with recent statutory amendments. In addition, the Board is modifying the regulation to relax the filing requirement when no suspect can be identified and to eliminate overlap between the criminal referral requirement and the Board's regulation requiring that records be kept of certain external crimes (12 CFR 563a.5(b)).

EFFECTIVE DATE: April 6, 1988.

FOR FURTHER INFORMATION CONTACT: John Downing, Assistant Director, Office of Enforcement, (202) 653–2604, Federal Home Loan Bank Board, 1700 G Street, NW., Washington, DC 20552.

SUPPLEMENTARY INFORMATION: The Board is publishing this final rule in order to make amendments of a technical and minor nature to 12 CFR 563.18(d), its regulation requiring that referrals of known or suspected crimes involving insured institutions or service corporations be made to appropriate law enforcement authorities if they involve affiliated persons or actual or anticipated losses of more than $1,000. The amendments revise the regulation in accordance with changes made in the federal criminal code with respect to bank bribery and money laundering related offenses. The changes also relax and clarify the filing requirements. In addition, the Board is revising its criminal referral form, FHLBB Form 366, in accordance with these amendments. The existing form may still be used until the revised form is approved and made available.

The Board has determined to revise its regulation in four respects. First, the regulation is revised to include several money laundering related crimes that Congress recently enacted. 18 U.S.C. 1956 and 1957 and 31 U.S.C. 5324. Normally no loss to the institution will result from money laundering. Consequently the regulation is amended to require that such crimes be reported regardless of loss. In such cases only Part A of the Board's Form 366 need be used. Second, the Board has revised its description of the crime of bank bribery (18 U.S.C. 215) in accordance with the 1986 amendment to that statute, which makes corrupt intent an element of the crime.

Third, based on the experience of federal criminal investigators and prosecutors, as related to the Board's staff, and the Board's desire to lessen the burden on insured institutions and service corporations when this can be accomplished without seriously compromising the criminal justice system, insured institutions and service corporations are no longer required to make a referral when there is no substantial factual basis for identifying a suspect, unless the actual or anticipated loss totals $5,000 or more. Of course, a referral that does not meet this threshold is permitted and encouraged whenever loss is suffered.

Fourth, while all instances of robbery, burglary and non-employee larceny must still be reported to law enforcement agencies, it is no longer required that Form 366 be filed in these instances. Normally, these types of external crime are investigated by the FBI prior to the time a Form 366 would be filed. However, the recordkeeping requirements of 12 CFR 563a.5(b) will continue to apply and the crime must still be reported to law enforcement authorities, although Form 366 need not be used. As long as the requirements of § 563a.5(b) are satisfied and the crime is reported, filing Form 366 is no longer required for robbery, burglary or non-employee larceny.

In addition, in order to accommodate the varying structures of insured institutions the Board has substituted the term "the next ranking officer" for "a senior vice president" in describing who is responsible for reporting to the board of directors if the chief executive officer is suspected of criminal conduct.

Pursuant to 12 CFR 508.11 and 508.14, the Board finds that, because of the minor and technical nature of this corrective amendment, notice and public comment and the 30-day delay of the effective date are unnecessary.

List of Subjects in 12 CFR Part 563

Bank deposit insurance, Investments, Reporting and recordkeeping requirements, Savings and loan associations.

Accordingly, the Board hereby amends Part 563, Subchapter D, Chapter V, Title 12, Code of Federal Regulations, as set forth below:

SUBCHAPTER D—FEDERAL SAVINGS AND LOAN INSURANCE CORPORATION

PART 563—OPERATIONS

1. The authority citation for Part 563 continues to read as follows:

Authority: Sec. 1, 47 Stat. 725, as amended (12 U.S.C. 1421 *et seq.*); sec. 5A, 47 Stat. 727, as added by sec. 1, 64 Stat. 256, as amended (12 U.S.C. 1425a); sec. 5B, 47 Stat. 727, as added by sec. 4, 80 Stat. 824, as amended (12

U.S.C. 1425b); sec. 17, 47 Stat. 736, as amended (12 U.S.C. 1437); sec. 2, 48 Stat. 128, as amended (12 U.S.C. 1462); sec. 5, 48 Stat. 132, as amended (12 U.S.C. 1464); secs. 401–407, 48 Stat. 1255–1260, as amended (12 U.S.C. 1724–1730); sec. 408, 82 Stat. 5, as amended (12 U.S.C. 1730a); Reorg. Plan No. 3 of 1947, 12 FR 4981, 3 CFR, 1943–1948 Comp., p. 1071.

2. Amend § 563.18 by revising paragraph (d) to read as follows:

§ 563.18 Criminal referrals and other reports or statements.

* * * * *

(d) *Reports of crimes, suspected crimes, and unexplained losses.* (1) *Purpose and scope.* Insured institutions and service corporations are required promptly to notify the appropriate law enforcement authorities and the Corporation after discovery of known or suspected criminal acts:

(i) If those acts involve affiliated persons (as defined in § 561.29 of this subchapter);

(ii) If those acts involve actual or anticipated losses of more than $1,000 and the institution has a substantial factual basis for identifying a suspect or group of suspects;

(iii) If those acts result in a loss of $5,000 or more, regardless of whether a suspect is identified; or

(iv) If money laundering, engaging in monetary transactions known to have been derived from unlawful activities, or structuring a transaction to evade the reporting requirements of the Bank Secrecy Act (also known as the Currency and Foreign Transactions Act) is known or suspected.

This paragraph (d)(1) applies to known or suspected crimes involving insured institutions and service corporations committed either by their employees or others and to crimes or suspected crimes against another financial institution believed to be committed by a person associated with the reporting insured institution or a service corporation. As used in this paragraph (d)(1) the phrase "suspected crimes" refers to all matters, including unexplained losses, for which there is a known factual basis for a belief that a crime has been or may have been committed. In the case of a crime or suspected crime against a service corporation that is wholly owned by an insured institution, either the service corporation or the insured institution may make the report.

(2) *Filing of reports.* Other than under paragraph (d)(3) of this section and other than robberies, burglaries and non-employee larcenies for which a record must be kept under § 563a.5 of this subchapter, an insured institution or a service corporation shall notify the appropriate law enforcement authorities and the Corporation by filing FHLBB Form 366 within 14 business days after discovery of any crime, suspected crime, or unexplained loss that meets the criteria of paragraph (d)(1) of this section and is suffered by the insured institution or service corporation, including:

(i) Embezzlement, non-employee larceny, check-kiting operation, fraud or attempted fraud, unexplained loss, or other known or suspected misapplication of funds or other things of value belonging to an insured institution or entrusted to its care;

(ii) Bank bribery, the corrupt offering, solicitation, or acceptance of things of value in connection with any transaction or business of a financial institution;

(iii) False statements or reports of overvaluation of land, property or security, or omission to state or attempt to conceal information for the purpose of influencing the actions of an insured institution, the Corporation or the Board; or

(iv) Other violations of statutes as described in the instructions to Form 366.

(3) *Oral reports.* Required reports may be made orally in emergency cases, such as when it is likely that evidence or witnesses will become unavailable before a written report can be made; or where other circumstances dictate an immediate referral. In such cases, the report shall be documented by later completion and filing of the prescribed form(s), if required under paragraph (d)(2) of this section.

(4) *Notification of the Board of Directors.* The chief executive officer of the insured institution or his designee shall notify the board of directors concerning any report filed pursuant to this paragraph (d)(4) by the institution or a service corporation in which it has an ownership interest not later than its next regularly schedule meeting following the filing of the report. If the chief executive officer is suspected of being involved in the violation, the next ranking officer shall notify the institution's Board.

(5) *Maintenance of records.* Reports made under this section and related records of all crimes or suspected crimes shall be maintained at the insured institution's home office for three years.

By the Federal Home Loan Bank Board.

John F. Ghizzoni,

Assistant Secretary.

[FR Doc. 88-7515 Filed 4-5-88; 8:45 am]

BILLING CODE 6720-01-M

12 CFR Part 563

[No. 88-222]

Regulatory Capital Requirements of Insured Institutions

Date: March 30, 1988.

AGENCY: Federal Loan Bank Board.

ACTION: Final rule.

SUMMARY: The Federal Home Loan Bank Board ("Board"), as operating head of the Federal Savings and Loan Insurance Corporation ("FSLIC"), is amending its regulation setting the regulatory capital requirements for institutions insured by the FSLIC ("insured institutions"). Today's final rule changes the method of computing the April calculation of industry profits by basing it on the median return on assets of all insured institutions.

EFFECTIVE DATE: April 29, 1988.

FOR FURTHER INFORMATION CONTACT: Jerilyn Rogin, Staff Attorney, (202) 377-7018, Christina Gattuso, Regulatory Counsel, (202) 377-6649, Regulations and Legislation Division, Office of General Counsel; Donald G. Edwards, Director, Financial and Quantitative Analysis Division, (202) 377-6914, Donald Bisenius, Financial Economist, (202) 377-6759, Office of Policy and Economic Research, Federal Home Loan Bank Board, 1700 G Street, NW., Washington, DC 20552.

SUPPLEMENTARY INFORMATION: On August 15, 1986, the Board adopted its revised regulatory capital regulation establishing the levels of capital required for all insured institutions. *See* Board Res. No. 86-857, 51 FR 33565-88 (Sept. 22, 1986) ("capital regulation"). Among other things, § 563.13 of the capital regulation requires that insured institutions gradually increase their capital levels based, in part, on overall industry profitability. The reason for the gradual increase is that the Board recognizes that internal generation of capital from retained earnings and external generation of capital from conversion to stock form or issuance of securities takes time and depends, in part, on market conditions.

At the same time, however, the Board considers it essential that insured institutions raise their capital levels as rapidly as possible. The preamble to the capital regulation states that insured institutions have an immediate need for greater capital to support their asset base. 51 FR at 33571-73. The Board also set forth comprehensive policy reasons for requiring insured institutions to increase their capital levels, including

the recognition that the former required capital levels did not provide adequate protection for insured institutions, depositors, or the FSLIC. 51 FR at 33569–70.

As further explained in the preamble to the capital regulation, higher capital levels for insured institutions are not only necessary but feasible for the majority of the industry. An historical review of capital levels in the industry reveals that much higher levels have been sustained during certain periods in the past. The feasibility of attaining the capital levels required by the regulation over a relatively short time period was confirmed by the Board's Office of Policy and Economic Research. *See An Analysis of the Proposed Capital Requirements for Thrift Institutions: A Staff Economic Study* (August, 1986). The Board finds no reason to alter that conclusion and, accordingly, reaffirms its belief that most solvent institutions can realistically expect to achieve higher capital levels. *Id.*

Pursuant to § 563.13(b)(2)(iv) of the capital regulation, the increase in capital required on all insured institution's base liabilities is tied to the prior calendar year's aggregate average return on assets ("ROA") of all insured institutions. Insured institutions are required to increase the capital on their base liabilities by a percentage of the annual calculation of that average ROA.[1] That paragraph also provides that the Board will compute and publish the calculation in April of each year, based upon data for the prior calendar year.

On April 30, 1987, the Board released its computation of the industry's 1986 April calculation: the aggregate annual rate of return on the aggregate average level of assets of all insured institutions collectively was 0.09 percent. 52 FR 17470 (May 8, 1987). With an average ROA of 0.09 percent, it would take approximately forty years for the capital requirements to be fully phased-in.

Description of the Proposal

On June 10, 1987, the Board proposed a rule concerning regulatory capital requirements that would have altered the method by which the April calculation of industry profits is computed. 52 FR 23845 (June 25, 1987.)[2] The proposal would have amended § 563.13(b)(2)(iv) of the capital regulation concerning the method by which the figure representing annual industry profitability, used to calculate each insured institution's required level of regulatory capital, is computed.

Specifically, the Board proposed to amend § 563.13(b)(2)(iv) by using a median rather than a mean as the appropriate measure of the central tendency of insured institutions' ROAs. Second, the Board proposed to correct the deficiencies of the current measure of industry profitability by computing the April calculation to exclude all insured institutions that were insolvent pursuant to generally accepted accounting principles ("GAAP insolvent"), rather than including all insured institutions in the calculation. Third, the Board proposed to change the timing of its calculation and publication of the calculation for the prior year by computing this figure in the fourth quarter of each year based on the four quarters ending on the June 30th preceding the computation and having the required increases in insured institutions' liability factors become effective the following January 1 and July 1.

Comments were specifically requested concerning the proposed use of the median rather than the mean as the measure of central tendency for computation of the April calculation and concerning the proposed exclusion from the April calculation of GAAP insolvent institutions.

Discussion of Comments

The Board received 23 public comments in response to the proposal. Of those comments, the majority (17) were submitted by insured institutions; five were submitted by industry trade associations; and one was from an individual. The comment period ended on August 24, 1987, but the Board considered late-filed letters. After carefully considering the issues raised by the commenters, which are more fully discussed below, the Board has determined to adopt the proposal, with certain modifications, as a final rule.

With respect to the general concept of amending the method by which the calculation is computed in order to better reflect the ROA of all institutions, twelve commenters responded. Three commenters expressed their general support for the amendment. Several commenters, however, expressed concerns with respect to the amendment's potential effects. For example, one commenter feared that such an amendment would raise required levels and force insured institutions into making high risk investments just to comply with the resulting increase in required capital levels and thereby would discourage safe, long-term economic strategies. Another maintained that the amendment would place even more insured institutions into regulatory noncompliance, resulting in deterioration of public confidence in the industry.

With regard to the proposed change from the use of the mean to the median as the measurement of central tendency, eight commenters responded. Four of the commenters favored the change, noting, for example, that the use of the median will tend to eliminate the distortions in the calculation caused by extremely profitable and extremely unprofitable institutions. Another commenter asserted that use of the median will more effectively fulfill the Board's original goal of reaching higher capital levels as quickly as feasible. However, three commenters objected that the use of the median will distort the calculation by giving equal weight to all insured institutions, from small *de novo* institutions to $30 billion institutions.

The Board believes that the financial condition of the industry necessitates revision of the adjustment mechanism for increasing required capital levels. Specifically, after careful consideration of the public comments on this issue, the Board has determined to use the median rather than the mean as the measure of central tendency of insured institutions' ROAs. The fundamental reason for this decision is that the mean is too sensitive to extremely high or low ROAs. This sensitivity becomes especially critical in an environment in which the unhealthy segment of the industry operates at a severe loss.

Accordingly, the Board does not believe that the mean profitability figure accurately reflects the ability of the industry to raise capital. Rather, the Board believes that the median ROA should be used because it focuses on the profitability of the fiftieth percentile institution and on the ranking that generates that fiftieth percentile institution. This more accurately reflects the ability of the large majority of insured institutions to advance toward higher minimum required capital levels.

The use of the median ROA does not imply that half of the industry will be

[1] Pursuant to § 563.13(b)(2)(v), the appropriate percentage is determined by whether an insured institution falls within the standard group, with base ratios of three percent; or the lower group, with base ratios below three percent.

[2] As part of the same Board action, the Board proposed both to delete the provision in the regulatory capital regulation concerning the effect upon base liabilities of branch sales and to amend the earnings-based accounts regulation to conform its provisions establishing regulatory capital thresholds to current regulatory capital requirements. *Id.* At this time, the Board is not proceeding with final rules in these areas. The Board reserves the right to revisit these issues at a later time, however.

VOL 53 ISS 66 AP 6 1988 UMI

unable to meet higher capital requirements. Rather, as would be the case with adjusting the requirement based on any average measure of profitability, some portion of the industry will not be able to meet the increased requirements through retained earnings alone. As indicated in the preamble to the capital regulation, however, most of these institutions can meet their increased requirement through a number of alternative strategies including conversion to stock form, a secondary stock issuance, of subordinated debt, or because they already have capital in excess of the requirement on their books.

In response to the comment that the use of the median distorts the calculation by giving equal weight to all institutions, the Board believes that such equal weighting is not a distortion, but instead better reflects a representative institution's ability to raise capital. The former use of a weighted mean, where each institution's profitability was weighted by its assets, gave undue influence to the profitability of a few large institutions and did not reflect a representative institution's ability to raise capital. In the Board's view, the use of a median avoids this distortion.

Concerning the exclusion of GAAP insolvent insured institutions from those institutions whose ROAs are considered when determining the April calculation, seven commenters responded. Although one commenter agreed with the concept, most of the commenters suggested alternatives to the exclusion of GAAP insolvent institutions, including the exclusion only of institutions in the management consignment program and the exclusion only of those institutions that are insolvent under regulatory accounting practices. Two commenters urged that no insured institutions be excluded, reasoning that the annual figure, even if it is only .09 percent, is the only figure that accurately reflects the economic health and financial status of the whole industry. One commenter suggested that the Board simply remove from the calculation the 20 percent most profitable and the 20 percent least profitable of all institutions. Another commenter noted that, although the exclusion of either GAAP insolvent institutions or of other groups, such as FSLIC cases, would yield roughly equivalent results, the Board should not exclude any institution if does not intend to exclude such groups for all other purposes, including, for example, the calculation of aggregate operating results. Rather, the commenter asserted, the calculation should be based upon the median of all insured institutions.

After careful consideration of the comments received, the Board has determined not to exclude GAAP insolvent or any other group of institutions from the calculation. In light of the Board's determination to use the median ROA, the need to eliminate groups of institutions is significantly reduced. The Board concludes that the inclusion of the insolvent institutions will not seriously impede the goal of reaching a higher capital requirement and higher capital levels for thrift institutions.

Moreover, the Board has determined that the timing and release of the calculation as it currently appears in the capital regulation is the most practical and accurate way to proceed. The April calculation will be made based on the median ROA of all insured institutions for the calendar year preceding computation of the calculation. Thus, required capital levels will reflect this change for the quarter beginning on July 1 and ending on September 30, 1988.

Finally, because it is an accurate description and has become a term of art in the industry, the Board has determined to continue to use the phrase "April calculation" in lieu of the proposed "annual calculation".

Description of Final Rule

Today's amendment changes the method of computing the annual April calculation of industry profits by utilizing the median rather than the mean of all insured institutions' ROAs.

Final Regulatory Flexibility Analysis

Pursuant to section 3 of the Regulatory Flexibility Act, 5 U.S.C. 604, the Board is providing the following regulatory flexibility analysis.

1. *Need for and objectives of the rule.* These elements are incorporated above in **SUPPLEMENTARY INFORMATION.**

2. *Issues raised by comments and agency assessment and response.* These elements are incorporated above in **SUPPLEMENTARY INFORMATION.**

3. *Significant alternatives minimizing small-entity impact and agency response.* The Small Business Administration defines a small financial institution as "a commercial bank or savings and loan association, the assets of which, for the preceding fiscal year, do not exceed $100 million." 13 CFR 121.13(a) (1987). Therefore, the approximate number of small entities to which the rule would apply are the 1,651 insured institutions that had assets totaling $100 million or less as of December 31, 1986.

The rule would not impose any unnecessary financial, recordkeeping or administrative burdens on small insured institutions. The rule would authorize the Board and the FSLIC to compute the annual April calculation for determining industry profits and required capital levels by basing the computation on the median return on assets of all insured institutions. The rule would treat small institutions in a manner similar to large ones. Since that April calculation and the amount of capital required pursuant to the capital regulation is proportionate to an institution's level of liabilities and investments, there would be no disproportionate economic or regulatory impact on small institutions.

List of Subjects in 12 CFR Part 563

Bank deposit insurance, Investments, Reporting and recordkeeping requirements, Savings and loan associations.

Accordingly, the Board hereby amends Part 563, Subchapter D, Chapter V, Title 12, Code of Federal Regulations, as set forth below.

SUBCHAPTER D—FEDERAL SAVINGS AND LOAN INSURANCE CORPORATION

PART 563—OPERATIONS

1. The authority citation for Part 563 is revised to read as follows:

Authority: Sec. 1, 47 Stat. 725, as amended (12 U.S.C. 1421 *et seq.*); sec. 5A, 47 Stat. 727, as added by sec. 1, 64 Stat. 256, as amended (12 U.S.C. 1425a); sec. 5B, 47 Stat. 727, as added by sec. 4, 80 Stat. 824, as amended (12 U.S.C. 1425b); sec. 17, 47 Stat. 736, as amended (12 U.S.C. 1437); sec. 2, 48 Stat. 128, as amended (12 U.S.C. 1462); sec. 5, 48 Stat. 132, as amended (12 U.S.C. 1464); secs. 401–407, 48 Stat. 1255–1260, as amended (12 U.S.C. 1724–1730); sec. 408, 82 Stat. 5, as amended (12 U.S.C. 1730a); Reorg. Plan No. 3 of 1947, 12 FR 4981, 3 CFR, 1943–1948 Comp., p 1071.

2. Amend § 563.13 by revising paragraph (b)(2)(iv) to read as follows:

§ 563.13 Regulatory capital requirement.

* * * * *

(b) * * *

(2) *Calculation of base liabilities amount.* * * *

(iv) "April calculation" means the median return on assets of all insured institutions for the calendar year preceding computation of the April calculation multiplied by the appropriate percentage. The percentage to be used for insured institutions in the standard group is 75 percent. The percentage to be used for insured institutions in the lower group is 90 percent. The Board will compute and publish the calculation in April of each year.

* * * * *

By the Federal Home Loan Bank Board.

John F. Ghizzoni,

Assistant Secretary.

[FR Doc. 88-7516 Filed 4-5-88; 8:45 am]

BILLING CODE 6720-01-M

DEPARTMENT OF TRANSPORTATION

Federal Aviation Administration

14 CFR Part 39

[Docket No. 86-ASW-39; Amdt. 39-5887]

Airworthiness Directives; Hercules; Lenair Corporation; Smith Helicopters; and West Coast Fabrications; Model UH-1E, UH-1L, and TH-1L Helicopters

AGENCY: Federal Aviation Administration (FAA), DOT.

ACTION: Final rule.

SUMMARY: This amendment adopts a new airworthiness directive (AD) which requires repetitive inspections and imposes a maximum service life on certain rod end bearing assemblies in the flight control system on Model UH-1E, UH-1L, and TH-1L helicopters (certified by Hercules; Lenair Corporation; Smith Helicopters; and West Coast Fabrications). The AD is needed to preclude possible failure of the main rotor assembly which, in turn, could cause loss of the helcopter.

DATES: *Effective Date:* May 6, 1988.

Compliance: As indicated in body of the AD.

FOR FURTHER INFORMATION CONTACT: Mr. Tom Henry, Helicopter Certification Branch, ASW-170, Federal Aviation Administration, Fort Worth, Texas 76193-0170, telephone (817) 624-5168.

SUPPLEMENTARY INFORMATION: A proposal to amend Part 39 of the Federal Aviation Regulations (FAR) to include an airworthiness directive requiring repetitive inspections of the rod end bearing assembly to check for cracks and establish a 600-hour service life on newly added parts on certain model UH-1E, UH-1L, and TH-1L helicopters (modified by Hercules; Lenair Corporation; Smith Helicopters; and West Coast Fabrications) was published in the **Federal Register** on December 23, 1987 (52 FR 48542). The proposal was prompted by a U.S. Army Aviation command message which reported a rod end bearing assembly on an AH-1 helicopter failed at 790 hours' time in service due to a crack which originated near a staking mark on the bearing housing. Also, the FAA was informed by message from the Pensacola Naval Aviation Depot that the U.S. Navy would require a review of service life history on the P/N 204-076-428 rod end bearing assemblies for all Model UH-1E, UH-1L, TH-1L, and HH-1k helicopters. Bearings with 600 or more hours' time in service are to be replaced when serviceable parts become available. Failure of the rod end bearing assembly could result in possible failure of the main rotor assembly and loss of the helicopter.

Since this condition is likely to exist on FAA certificated UH-1E, UH-1L, and TH-1L helicopters of the same military design, an AD is being issued which requires repetitive inspections of the rod end bearing assembly to check for cracks and establishes a 600-hour service life on newly added parts.

Interested persons have been afforded an opportunity to participate in the making of this amendment. No comments were received. Accordingly, the proposal is adopted without change.

The FAA has determined that this regulation involves approximately 19 aircraft with an estimated cost of approximately $16,500 per aircraft. Costs would not exceed $26,000 for any one operator. Therefore, I certify that this action (1) is not a "major rule" under Executive Order 12291; (2) is not a "significant rule" under DOT Regulatory Policies and Procedures (44 FR 11034; February 26, 1979); and (3) will not have a significant impact, positive or negative, on a substantial number of small entities under the criteria of the Regulatory Flexibility Act. A copy of the final evaluation prepared for this action is contained in the regulatory docket. A copy of it may be obtained from the Regional Rules Docket.

List of Subjects in 14 CFR Part 39

Air transportation, Aircraft, Aviation safety, Safety.

Adoption of the Amendment

Accordingly, pursuant to the authority delegated to me by the Administrator, the Federal Aviation Administration amends § 39.13 of Part 39 of the FAR as follows:

PART 39—AIRWORTHINESS DIRECTIVES

1. The authority citation for Part 39 continues to read as follows:

Authority: 49 U.S.C. 1354(a), 1421, and 1423; 49 U.S.C. 106(g) (Revised Pub. L. 97-449, January 12, 1983); and 14 CFR 11.89.

§ 39.13 [Amended]

2. By adding the following new AD:

Hercules; Lenair Corporation; Smith Helicopters; and West Coast Fabrications; Applies to Models UH-1E, UH-1L, and TH-1L helicopters certified by Hercules; Lenair Corporation; Smith Helicopters, and West Coast Fabrications certified in any category that have P/N 204-076-428-1, -3, or -5 rod end bearing assemblies installed.

Compliance is required as indicated, unless already accomplished.

To detect possible cracks in the collective and cyclic rod end bearing assemblies, P/N 204-076-428-1, -3, or -5, installed on Models UH-1E, UH-1L, and TH-1L helicopters, accomplish the following:

(a) Prior to the next flight after the effective date of this AD and thereafter at intervals not to exceed 10 hours' time in service from the last inspection, visually inspect the rod end bearing assemblies for cracks. Perform the visual inspections by disconnecting the cyclic and collective control tube assemblies from the swashplate horns and the collective pitch control lever.

(b) Whenever the rod end bearing assemblies are removed for any reason, inspect for cracks using a fluorescent penetrant or equivalent method.

Note: Inspections specified by paragraphs (a) and (b) above are not required on rod end bearing assembly P/N 204-076-428-5 having documented time in service of less than 600 hours.

(c) If a crack is found during these inspections replace the rod end bearing with a serviceable part prior to further flight.

(d) Replace rod end bearing assemblies, P/N 204-076-428-1 or -3 within 11 calendar months from the effective date of this AD with rod end bearing assembly, P/N 204-076-428-5, having a documented known service life of less than 600 hours' time in service.

(e) Replace rod end bearing assembly P/N 204-076-428-5, not having a documented known service life, or those with greater than 600 hours' time in service, within 11 calendar months from the effective date of this AD with rod end bearing assembly P/N 204-076-428-5 having a documented service life of less than 600 hours' time in service.

(f) Retire from service rod end bearing assembly, P/N 204-076-428-5 at 600 hours' time in service or less after initial replacement described in paragraphs (d) and (e).

(g) An alternate method of compliance which provides an equivalent level of safety with this AD may be used when approved by the Manager, Helicopter Certification Branch, Federal Aviation Administration, Fort Worth, Texas, 76193-0170.

This amendment becomes effective May 6, 1988.

Issued in Fort Worth, Texas, on March 24, 1988.

L.B. Andriesen,

Acting Director, Southwest Region.

[FR Doc. 88-7497 Filed 4-5-88; 8:45 am]

BILLING CODE 4910-13-M

FEDERAL TRADE COMMISSION

16 CFR Part 13

[Dkt. C-3223]

Great Earth International, Inc.; Prohibited Trade Practices, and Affirmative Corrective Actions

AGENCY: Federal Trade Commission.

ACTION: Consent order.

SUMMARY: In settlement of alleged violations of federal law prohibiting unfair acts and practices and unfair methods of competition, this consent order prohibits, among other things, a Santa Ana, Calif.-based food supplements franchisor from making certain claims about the supplements' effectiveness. Respondent is also prohibited from using the name "Growth Hormone Releaser," "GHR," or any similar name unless it has substantiation that the product stimulates the body or pituitary gland to release significantly greater amounts of human growth hormone in users than in non-users.

DATE: Complaint and Order issued March 15, 1988.[1]

FOR FURTHER INFORMATION CONTACT: Janice Frankle, FTC/S-4631, Washington, DC 20580. (202) 326-3022.

SUPPLEMENTARY INFORMATION: On Tuesday, January 5, 1988, there was published in the **Federal Register**, 53 FR 141, a proposed consent agreement with analysis In the Matter of Great Earth International, Inc., a corporation, for the purpose of soliciting public comment. Interested parties were given sixty (60) days in which to submit comments, suggestions or objections regarding the proposed form of order.

No comments having been received, the Commission has ordered the issuance of the complaint in the form contemplated by the agreement, made its jurisdictional findings and entered its order to cease and desist, as set forth in the proposed consent agreement, in disposition of this proceeding.

The prohibited trade practices and/or corrective actions, as codified under 16 CFR Part 13, are as follows: Subpart—Advertising Falsely Or Misleadingly: § 13.10 Advertising falsely or misleadingly; § 13.170 Qualities or properties of product or service; § 13.170-52 Medicinal, therapeutic, healthful, etc.; § 13.170-70 Preventive or protective; § 13.170-74 Reducing, non-fattening, low-calorie, etc.; § 13.190 Results; § 13.205 Scientific or other relevant facts. Subpart—Corrective Actions And/Or Requirements: § 13.533 Corrective actions and/or requirements; § 13.533-10 Corrective advertising; § 13.533-45 Maintain records; § 13.533-45(a) Advertising substantiation; § 13.533-45(k) Records, in general; § 13.533-50 Maintain means of communication. Subpart—Misrepresenting Oneself And Goods—Goods: § 13.1590 Composition; § 13.1590-20 Federal Trade Commission Act; § 13.1710 Qualities or properties; § 13.1730 Results; § 13.1740 Scientific or other relevant facts.

List of Subjects in 16 CFR Part 13

Food Supplements, Trade practices.

(Sec. 6, 38 Stat. 721; 15 U.S.C. 46. Interprets or applies sec. 5, 38 Stat. 719, as amended; 15 U.S.C. 45, 52)

Benjamin I. Berman,

Acting Secretary.

[FR Doc. 88-7467 Filed 4-5-88; 8:45 am]

BILLING CODE 6750-01-M

[1] Copies of the Complaint and the Decision and Order are available from the Commission's Public Reference Branch, H-130, 6th Street & Pennsylvania Avenue NW., Washington, DC 20580.

---

16 CFR Part 13

[Dkt. C-3224]

Supermarket Development Corp., et al.; Prohibited Trade Practices, and Affirmative Corrective Actions

AGENCY: Federal Trade Commission.

ACTION: Consent order.

SUMMARY: In settlement of alleged violations of federal law prohibiting unfair acts and practices and unfair methods of competition, this consent order requires, among other things, Furr's, a wholly owned subsidiary of Supermarket Development Corporation, to divest supermarkets in 12 towns and cities in Texas and New Mexico, to obtain prior Commission approval for future acquisitions by Furr's of grocery store located in the El Paso division, and to hold separate the El Paso division until the required divestitures are completed.

DATE: Complaint and Order issued March 17, 1988.[1]

FOR FURTHER INFORMATION CONTACT: Joan Greenbaum, FTC/S-3302, Washington, DC 20580. (202) 326-2629.

SUPPLEMENTARY INFORMATION: On Thursday, August 20, 1987, there was published in the **Federal Register**, 52 FR 31412, a proposed consent agreement with analysis In the Matter of Supermarket Development Corporation and SSI Associates, L.P., for the purpose of soliciting public comment. Interested parties were given sixty (60) days in which to submit comments, suggestions or objections regarding the proposed form of order.

Comments were filed and considered by the Commission. The Commission has ordered the issuance of the complaint in the form contemplated by the agreement, made its jurisdictional findings and entered its order to cease and desist, as set forth in the proposed consent agreement, in disposition of this proceeding.

The prohibited trade practices and/or corrective actions, as codified under 16 CFR Part 13, are as follows: Subpart—Acquiring Corporate Stock Or Assets: § 13.5 Acquiring corporate stock or assets; § 13.5-20 Federal Trade Commission Act. Subpart—Corrective Actions And/Or Requirements: § 13.533 Corrective actions and/or requirements; § 13.533-45 Maintain records; § 13.533-45(k) Records, in general; § 13.533-50 Maintain means of communication.

List of Subjects in 16 CFR Part 13

Grocery Stores, Supermarkets, Trade practices.

(Sec. 6, 38 Stat. 721; 15 U.S.C. 46. Interpret or apply sec. 5, 38 Stat. 719, as amended; sec. 7, 38 Stat. 731, as amended; 15 U.S.C. 45, 18)

Benjamin I. Berman,

Acting Secretary.

[FR Doc. 88-7468 Filed 4-5-88; 8:45 am]

BILLING CODE 6750-01-M

[1] Copies of the Complaint and the Decision and Order are available from the Commission's Public Reference Branch, H-130, 6th Street & Pennsylvania Avenue NW., Washington, DC 20580.

DEPARTMENT OF HEALTH AND HUMAN SERVICES

Food and Drug Administration

21 CFR Part 184

[Docket No. 75G-0265]

Nisin Preparation; Affirmation of GRAS Status as a Direct Human Food Ingredient

AGENCY: Food and Drug Administration.

ACTION: Final rule.

SUMMARY: The Food and Drug Administration (FDA) is affirming that nisin preparation produced from *Streptococcus lactis* Lancefield Group N is generally recognized as safe (GRAS) for use as an optional antimicrobial agent to inhibit the outgrowth of *Clostridium botulinum* spores and toxin formation in certain pasterurized cheese spreads. This action responds to a petition filed by Aplin and Barrett Ltd., requesting that nisin be affirmed as

GRAS for use as an antimicrobial preservative in food.

DATES: Effective April 6, 1988. The Director of the Office of the Federal Register approves the incorportion by reference of certain publications at 21 CFR 184.1538 in the introductory text of paragraph (b) and in paragraph (d) effective April 6, 1988.

ADDRESS: Background information on the environmental and economic effects and the references are on display in the Dockets Management Branch (HFA-305), Food and Drug Administration, Rm. 4-62, 5600 Fishers Lane, Rockville, MD 20857.

FOR FURTHER INFORMATION CONTACT: John W. Gordon, Center for Food Safety and Applied Nutrition (HFF-334), Food and Drug Administration, 200 C St. SW., Washington, DC 20204, 202-426-5487.

SUPPLEMENTARY INFORMATION:

I. Introduction

Under the procedures described in § 170.35 (21 CFR 170.35), Aplin and Barrett Ltd., Trowbridge, Wilts., England BA14 8HS submitted a petition (GRASP 5G0049) proposing affirmation that nisin is generally recognized as safe (GRAS) for use in food as an antimicrobial preservative. FDA published a notice of the filing of this petition in the **Federal Register** of Sepetember 17, 1975 (40 FR 42912), and gave interested persons an opportunity to submit comments to the Hearing Clerk (since renamed Dockets Management Branch) (HFA-305), Food and Drug Administration, Rm. 4-62, 5600 Fishers Lane, Rockville, MD 20857. FDA did not receive any comments in response to the notice.

On April 17, 1980, the petitioner limited its request for GRAS affirmation to the use of the nisin as an antimicrobial agent in certain pasteurized process cheese covered by 21 CFR 133.169 and 133.170 and in certain pasteurized process cheese spreads covered by 21 CFR 133.179 and 133.180. The petition was amended by the petitioner further on September 30, 1984, to request GRAS affirmation of nisin for use as an antimicrobial agent to inhibit the outgrowth of *Clostridium botulinum* (*C. botulinum*) spores and toxin formation in certain standardized pasteurized cheese spreads. Concurrently, the petitioner requested that the appropriate standards of identity for these cheese spreads be amended to permit the use of nisin. The cheese spreads affected are covered by the standards of identity listed in 21 CFR 133.175 *Pasteurized cheese spread;* 21 CFR 133.176 *Pasteurized cheese spread with fruits, vegetables, or meats;* 21 CFR 133.179 *Pasteurized process cheese spread;* and 21 CFR 133.180 *Pasteurized process cheese spread with fruits, vegetables, or meats.*

Published elsewhere in this issue of the **Federal Register** is a proposal to amend the standards of identity for these foods to provide for the use of nisin preparation as an optional antimicrobial agent.

The petition for GRAS affirmation includes data that show that nisin has been used experimentally outside of the United States as an antimicrobial preservative in a variety of foods, including cheeses and cheese products, since 1953. However, nisin has been used commercially outside of the United States only since 1960 (Refs. 1 and 2). Nisin has no history of common use in food in the United States. Based on these facts, the agency has concluded that nisin is not GRAS based on history of common use in food before 1958. However, the agency has determined that the petition meets the requirements of 21 CFR 170.30(b) for consideration of nisin as GRAS based on scientific procedures.

In evaluating this petition, as amended, the agency considered the following issues: (1) Identity and production of the ingredient; (2) proposed food uses; and (3) safety of the proposed food uses.

II. Data Summary and Evaluation

A. Identify and Production of the Ingredient

As early as 1928, scientists were aware that milk may contain a substance that can inhibit microbial growth. In 1947, Shattock and Mattick (Ref. 3) identified the microbial growth inhibitory substance as a product of lactice streptococci. They found that it is a strain of *Streptococcus lactis* (*S. lactis*) belonging to Lancefield Group N. Shattock and Mattick gave the microbial growth inhibitory substance the name "nisin."

Various strains of the organism *S. lactis* occur naturally in milk and are referred to as "cheese starter organisms." Commercial grade nisin is prepared from a pure culture fermentation of nonpathogenic strains of *S. lactis* Lancefield Group N with penicillin free, heat-treated sterilized nonfat milk digest. The product is then concenterated by a foaming process, extracted by salt precipition under acid conditions, and dried by a spray process. The product, as described in the petition, is a mixture or preparation, rather than a discrete entity, of *S. lactis* Lancefield Group N. Thus, the agency concludes that the appropriate name for the product is "nisin preparation" rather than "nisin," and the product hereinafter is called "nisin preparation" (NP).

The antimicrobial material in NP is "nisin," which, as described in the petition, is a group of closely related peptides that occur naturally and have an average molecular weight of 3,510. These peptides consist of the amino acids alanine, glycine, serine, aspartic acid, valine, histidine, lysine, leucine, isoleucine, methionine, proline, lanthionine, and beta-methyllanthionine.

Section 184.1538(c) contains specifications for NP (See Joint FAO/WHO Expert Committee on Food Additives, "Specifications for Identity and Purity of Some Antibiotics," FAO Nutrition Meeting Report Series, No. 45A (1969) (Ref. 4)) to assure that the character of NP remains consistent with the product evaluated in the petition.

B. The Proposed Food Uses of Nisin Preparation

The subject petition, as amended, seeks GRAS status for the use of NP sufficient to deliver 250 parts per million (ppm) of nisin as an inhibitor of the outgrowth of *C. botulinum* spores and toxin formation in pasteurized cheese spreads and pasteurized process cheese spreads covered by the standards of identity in 21 CFR 133.175, 133.176, 133.179, and 133.180. Although not mentioned in the petition, NP has been used outside of the United States as an antimicrobial preservative in various foods including canned pears, canned mushrooms, and canned tomatoes, as well as in process cheese products.

The standards of identity for the cheese spreads affected by the NP petition provide for a product with a relatively high moisture content (more than 44 percent but not more than 60 percent) and in which salt is an optional ingredient. In general, cheese spreads manufactured under these standards contain 50 to 54 percent moisture and 2 percent salt. In addition, pasteurized process cheese spreads may contain emulsifiers at levels of not more than 3 percent by the weight of the spread. Most contain about 2.5 percent emulsifier.

Under these conditions, the outgrowth of *C. botulinum* spores and resultant toxin formation is unlikely. However, unpublished studies in the petition (Refs. 5 and 6) show that at the higher moisture levels, the possibility exists that *C. botulinum* spore growth and toxin formation could occur when salt or emulsifier concentrations are lowered. These studies report that the minimum effective concentration of nisin against *C. botulinum* is greater than 100 ppm, but that quantities of nisin of 150 ppm

and 250 ppm are fully effective. In these studies (Refs. 5 and 6), using experimental formulations of process cheese spreads, the salt content was lowered, and the moisture content was increased above 55 percent. In addition, the phosphate emulsifier content varied from 2.5 percent to 1.3 percent.

In these studies, nisin prevented the outgrowth of *C. botulinum* spores and toxin formation at the level of (1) 12.5 ppm, when the salt content was reduced below 2 percent, and the moisture content (50 to 54 percent) and phosphate emulsifier content (2.5 percent) were normal; (2) 250 ppm, when the moisture content was above 55 percent, and the phosphate emulsifier and salt content were reduced below 2.5 percent and 2 percent, respectively; and (3) 250 ppm, when the moisture content was normal (50 to 54 percent), no salt was added, and the phosphate emulsifier content was reduced to 1.7 percent or less. Thus, the data from these studies demonstrate that 250 ppm nisin is effective in inhibiting the growth of *C. botulinum* spores and toxin formation in cheese spreads that have a high moisture (55 percent), low salt (below 2 percent), or low emulsifier (below 2.5 percent) content. For this reason, the agency concludes that the current good manufacturing practice level of NP for the requested use in the cheese spreads covered by the food standards is the quantity of NP that delivers a maximum of 250 ppm of nisin in the finished product.

Based upon the proposed uses of NP to provide a final concentration of 250 ppm of nisin in pasteurized cheese spreads and pasteurized process cheese spreads, the agency has calculated the estimated daily intake (EDI) for nisin to be 1 milligram per person per day (mg/person/day) (Ref. 7). This EDI corresponds to an intake of approximately 50 mg/person/day of NP, based on the use of NP containing 1×10^6 international units of nisin per gram (g) or approximately 2.5 percent nisin by weight (Ref. 6).

C. Safety of Nisin Preparation

The petition includes published and unpublished safety studies to support the safety of NP. The material tested in these studies was NP. Because of the design of these studies, however, many of the results were expressed in terms of the active ingredient nisin. The petition includes the following studies:

1. Acute Toxicity Studies

The acute oral dose (i.e., LD_{50}) for NP was found to be 6,950 milligrams per kilogram body weight (mg/kg body weight) for the mouse (Ref. 8). This dose corresponds to 174 mg nisin/kg body weight.

2. Subchronic Toxicity Studies

The petition contains data from two short-term studies. In one of the studies, rats were fed cheese containing NP equivalent to 1,204,000, 1,806,000, and 2,408,000 units of nisin/kg body weight for 12 weeks (Ref. 9). These levels correspond to 30.1, 45.2, and 60.2 mg nisin/kg body weight/day. In the other study, rats were fed diets containing NP at a level equivalent to 10,000 units of nisin per g of feed for 12 weeks (Ref. 10). This level corresponds to approximately 15 to 25 mg nisin/kg body weight/day. Neither study reported any difference between control and test animals in any of the parameters tested (growth, fertility, and gross/microscopic pathology).

3. Chronic Toxicity Study

The petition included a published chronic feeding study with a one-generation reproduction phase (Ref. 9) in which Wistar male and female rats of the F_0 (parental) generation were fed diets containing NP at levels equivalent to 33,300 units and 3,330,000 units of nisin per kg of food in the diet for 2 years. These levels correspond to .049 mg and 4.9 mg of nisin/kg body weight/day. The F_1 generation (offspring) male and female rats were fed the same diet as their parents for 40 weeks. No differences were reported between control and experimental animals of the F_0 generation in survival or reproductive performance. Organ weights and gross pathological and histological findings were normal in F_0 and F_1 males and females. Tests for hepatic, renal, and gastrointestinal function were normal in F_1 rats.

4. Reproduction Study

In support of the safety of NP the petitioner also submitted an unpublished three-generation reproductive study (Ref. 11) in which NP was administered orally to rats. The animals were fed a standard diet containing 0, 0.2, 1.0, or 5 percent NP for 26 weeks. These levels of NP correspond to 0.005, .025, or 0.125 percent of nisin or 13, 15, or 75 mg nisin/kg body weight/day. In the study, no difference was found between the test animals and controls in any of the test parameters measured (survival, growth, reproductive performance, and gross/microscopic pathology).

5. Sensitization Studies

The petition also included a study that shows that guinea pigs (Ref. 9) could not be sensitized to NP when NP was administered orally. No evidence of NP sensitization could be found in a comprehensive search by the agency of the scientific literature since 1980, suggesting that there are no published reports of nisin causing allergic reactions.

6. In Vitro Studies

An in vitro study using NP (Ref. 12) showed that nisin is degraded by pancreatin (an intestinal enzyme preparation), whereas certain therapeutic antibiotics that were tested are not, suggesting that nisin would not affect the intestinal flora. The author of the study hypothesized that nisin is rapidly hydrolyzed and inactivated shortly after it leaves the stomach.

7. Cross-resistance Studies

There is no evidence of cross resistance in important pathogenic organisms as a result of the use of NP. For example, studies in *Staphylococcus aureus*, *Escherichia coli*, and *Micrococcus pyogenes* var. *aureus* (Refs. 13 and 14) showed that exposure to NP did not result in any cross resistance that might affect the therapeutic use of other antibiotics.

Based on the chronic feeding study in rats (Ref. 9), the agency calculated an acceptable daily intake (ADI) for nisin of 2.9 mg/person/day (Ref. 15). This ADI exceeds the EDI (1 mg/person/day) of nisin from the proposed use of NP in pasteurized cheese spread (Ref. 7).

III. Conclusion on Proposed Uses of Nisin Preparation

Based on its review of the data submitted in the GRAS affirmation petition on the use of nisin preparation and of other relevant information, the agency concludes:

(1) The appropriate name for the ingredient is "nisin preparation" (NP) rather than "nisin."

(2) NP is adequately identified by the method of manufacture and specifications contained in the petition.

(3) NP sufficient to deliver 250 ppm nisin exhibits a functional effect in those standardized cheese spreads that contain high moisture, low salt, or low emulsifier content.

(4) The proposed use of NP is safe, based on the safety studies on NP. The ADI for nisin was calculated as 2.9 mg/person/day based on a chronic feeding study of NP. This level is more than two and one-half times larger than the EDI of 1 mg/person/day for nisin.

(5) NP is not eligible for GRAS status based on common use in food prior to January 1, 1958, because it had no

history of common use in food before that date.

(6) NP is GRAS based on scientific procedures. This conclusion is based on published safety data (including a chronic feeding study) which have been supplemented with unpublished data.

Therefore, the agency is affirming that NP is GRAS for use as an optional antimicrobial agent at a level sufficient to deliver 250 ppm nisin to inhibit the outgrowth of *C. botulinum* spores and toxin formation in the following pasteurized cheese spreads: pasteurized cheese spread under 21 CFR 133.175; pasteurized process cheese spread under 21 CFR 133.179; pasteurized cheese spread with fruits, vegetables, or meats under 21 CFR 133.176; and pasteurized process cheese spread with fruits, vegetables, or meats under 21 CFR 133.180.

IV. Environmental Effects

The agency has carefully considered the potential environmental effects of this action and has concluded that the action will not have a significant impact on the human environment and that an environmental impact statement is not required. The agency's finding of no significant impact and the evidence supporting that finding may be seen in the Dockets Management Branch (address above) between 9 a.m. and 4 p.m., Monday through Friday. Under FDA's regulations implementing the National Environmental Policy Act (21 CFR Part 25), an action of this type would require an abbreviated environmental assessment under 21 CFR 25.31a(b)(5).

V. Economic Effects

FDA, in accordance with the Regulatory Flexibility Act, has considered the effect that this final rule would have on small entities including small businesses and has determined that the effect of this final rule is to provide for the use of NP as an optional antimicrobial ingredient to inhibit the outgrowth of *C. botulinum* spores and toxin formation in pasteurized cheese spreads. Therefore, FDA certifies in accordance with section 605(b) of the Regulatory Flexibility Act that no significant economic impact on a substantial number of small entities will derive from this action.

In accordance with Executive Order 12291, FDA examined the economic effects of this rule. The agency has determined that it is not a major rule as defined by the Order.

The agency's findings of no economic impact and no significant impact on a substantial number of small entities, and the evidence supporting these findings are contained in a threshold assessment which may be seen in the Dockets Management Branch (address above).

VI. References

The following references have been placed on display in the Dockets Management Branch (address above) and may be seen by interested persons between 9 a.m. and 4 p.m., Monday through Friday.

1. Hawley, H. B., "Nisin In Food Technology," *Food Manufacturer*, pp. 1–11, August and September 1957.

2. Hawley, H. B., "Antibiotics In Food," *Laboratory Practice* pp. 659–653, September 1950.

3. Shattock, P.M.F., and Mattick, A.T.R., "Further Observation on an Inhibitory Substance (Nisin) from *Lactic Streptococci*," *The Lancet*, pp. 5–12, 1947.

4. Joint FAO/WHO Expert Committee on Food Additives, "Specifications for Identity and Purity of Some Antibiotics," FAO Nutrition Meetings Report Series, No. 45A, 1969.

5. Taylor, S.L., Somers, E.B., and Krueger, L.A., "Antibotulinal Effectiveness of Nisaplin in Process Cheese Spreads," (Unpublished report, 1982).

6. Taylor, S.L., Sommers, E.B., and Krueger, L.A., "Antibotulinal Effectiveness of Nisaplin in Reduced Sodium Process Cheese Spreads," (Unpublished report, 1984).

7. Memorandum of October 26, 1984, from John P. Modderman to John W. Gordon.

8. Hara, S., Yakazu, K., Nakakawaji, K., Takenchi, T., Kobayashi, T., Sata, M., Imai, Z., and Shibuya, T., "An Investigation of Toxicity of Nisin," *Tokyo Medical University Journal, 20:175–207, 1962.*

9. Frazer, A.C., Sharratt, M., and Hickman, J.R., "The Biological Effect of Food Additives—Nisin," *Journal of Science of Food and Agriculture*, 13:32–42, 1962. (Review article covers several studies).

10. Pesquera, T.I., "Nisin—Its Use, Estimation and Toxicology in Sterilized Milk," *Revista Espanola de Lecheria*, 59:16, 1966.

11. "Effect of Nisaplin on Reproductive Function of Multiple Generations in Rats," (Unpublished report, Huntington Research Centre, Cambridgeshire, England, 1984.

12. Heinemann, B., and Williams, R., "Inactivation of Nisin by Pancreatin," *Journal of Dairy Science*, 49:312–314, 1966.

13. Carlson, S., and Bauer H.M., "Nisin, eine antibakterieller/Wirkstoff aus *Streptococcus lactis* unter berucksichtingung des Resistenzproblems" *Archin fur Hygiene und Bakteriologie*, 141:6ff, 1975.

14. Szybalski, W., "Cross resistance of *Micrococcus pyogenes* var. *aureus* to Thirty-four Antimicrobial Drugs," *Antibiotics and Chemotherapy*, 3:1095–1102, 1953.

15. Memorandum of November 9, 1984, from Alfred N. Milbert to John W. Gordon.

List of Subjects in 21 CFR Part 184

Food ingredients, Incorporation by reference.

Therefore, under the Federal Food, Drug, and Cosmetic Act and under authority delegated to the Commissioner of Food and Drugs and redelegated to the Director, Center for Food Safety and Applied Nutrition, Part 184 is amended as follows:

PART 184—DIRECT FOOD SUBSTANCES AFFIRMED AS GENERALLY RECOGNIZED AS SAFE

1. The authority citation for 21 CFR Part 184 continues to read as follows:

Authority: Secs. 201(s), 402, 409, 701, 52 Stat. 1046–1047 as amended, 1055–1056 as amended, 72 Stat. 1784–1788 as amended (21 U.S.C. 321(s), 342, 348, 371); 21 CFR 5.10, 5.61.

2. Part 184 is amended by adding new § 184.1538 to read as follows:

§ 184.1538 Nisin preparation.

(a) Nisin preparation is derived from pure culture fermentations of certain strains of *Streptococcus lactis* Lancefield Group N. Nisin preparation contains nisin (CAS Reg. No. 1414-45–5), a group of related peptides with antibiotic activity.

(b) The ingredient is a concentrate or dry material that meets the specifications that follow when it is tested as described in "Specifications for Identity and Purity of Some Antibiotics," World Health Organization, FAO Nutrition Meeting Report Series, No. 45A, 1969, which is incorporated by reference. Copies are available from the Dockets Management Branch (HFA–305), Food and Drug Administration, Rm. 4–62, 5600 Fishers Lane, Rockville, MD 20857, or available for inspection at the Office of the Federal Register, 1100 L St. NW., Washington, DC 20408

(1) Nisin content, not less than 900 international units per milligram.

(2) Arsenic, not more than 1 part per million.

(3) Lead, not more than 2 parts per million.

(4) Zinc, not more than 25 parts per million.

(5) Copper, zinc plus copper not more than 50 parts per million.

(6) Total plate count, not more than 10 per gram.

(7) *Escherichia coli*, absent in 10 grams.

(8) *Salmonella*, absent in 10 grams.

(9) Coagulase positive staphylococci, absent in 10 grams.

(c) The ingredient is used as an antimicrobial agent as defined in § 170.3(o)(2) of this chapter to inhibit the outgrowth of *Clostridium botulinum* spores and toxin formation in pasteurized cheese spreads and pasteurized process cheese spreads

listed in § 133.175; pasteurized cheese spread with fruits, vegetables, or meats as defined in § 133.176; pasteurized process cheese spread as defined in § 133.179; pasteurized process cheese spread with fruits, vegetables, or meats as defined in § 133.180 of this chapter.

(d) The ingredient is used at levels not to exceed good manufacturing practice in accordance with § 184.1(b)(1) of this chapter. The current good manufacturing practice level is the quantity of the ingredient that delivers a maximum of 250 parts per million of nisin in the finished product as determined by the British Standards Institution Methods, "Methods for the Estimation and Differentiation of Nisin in Processed Cheese," BS 4020 (1974), which is incorporated by reference. Copies are available from the Dockets Management Branch (HFA-305), Food and Drug Administration, RM. 4-62, 5600 Fishers Lane, Rockville, MD 20857, or available for inspection at the Office of the Federal Register, 1100 L Street NW., Washington, DC 20408.

Dated: March 25, 1988.

Richard J. Ronk,

Acting Director, Center for Food Safety and Applied Nutrition.

[FR Doc. 88-7459 Filed 4-5-88; 8:45 am]

BILLING CODE 4160-01-M

---

21 CFR PART 558

New Animal Drugs for Use in Animal Feeds; Lasalocid and Oxytetracycline; Correction

AGENCY: Food and Drug Administration.

ACTION: Final rule; correction.

SUMMARY: The Food and Drug Administration (FDA) is correcting the final rule that amended the animal drug regulations to reflect approval of a new animal drug application (NADA) filed by Hoffman-La Roche, Inc., providing for the safe and effective use of a Type C cattle feed manufactured from separately approved lasalocid sodium and oxytetracycline (monoalkyl trimethyl ammonium salt) Type A articles (52 FR 48095; December 18, 1987). The supplementary information in the final rule inadvertently omitted the approved level of 100-gram-per-pound oxytetracycline (monoalkyl trimethyl ammonium salt). This document corrects that error.

FOR FURTHER INFORMATION CONTACT: Jack C. Taylor, Center for Veterinary Medicine (HFV-126), Food and Drug Administration, 5600 Fishers Lane, Rockville, MD 20857, 301-443-5247.

SUPPLEMENTARY INFORMATION: In FR Doc 87-29036, appearing on page 48095 in the **Federal Register** of Friday, December 18, 1987 (52 FR 48095), in the second column under the heading "Supplementary Information" in the ninth line, the phrase "10- or 50-" should read "10-, 50-, or 100-".

Dated: March 31, 1988.

Richard A. Carnevale,

Deputy Director, Office of New Animal Drug Evaluation, Center for Veterinary Medicine.

[FR Doc. 88-7525 Filed 4-5-88; 8:45 am]

BILLING CODE 4160-01-M

---

21 CFR Parts 800, 803, 807, 808, 809, 812, 813, 820, 860, 861, 864, 866, 876, 895, 1002, 1005, 1010, 1020, 1030, 1040, and 1050

[Docket No. 87N-0373]

Medical Device and Radiological Health Regulations; Editorial Amendments

AGENCY: Food and Drug Administration.

ACTION: Final rule.

SUMMARY: The Food and Drug Administration (FDA) is amending certain of its regulations on medical device and radiological health to correct cross-references and typographical errors and to update the titles and mailing symbols of certain organizational units. This action will improve the accuracy and clarity of the regulations.

EFFECTIVE DATE: April 6, 1988.

FOR FURTHER INFORMATION CONTACT: T. Rada Proehl, Regulations Editorial Staff (HFC-222), Food and Drug Administration, 5600 Fishers Lane, Rockville, MD 20857, 301-443-2994.

SUPPLEMENTARY INFORMATION: FDA is revising certain of its regulations on medical devices and radiological health to correct cross-references and typographical errors, to update the titles and mailing symbols of certain organizational units, and to clarify the regulations. The affected regulations are 21 CFR 800.12(c) (the second time it appears), 803.33(b), 807.22(a), 807.35(b), 807.37 (a) and (b)(2), 807.90(a), 807.95(c)(1), 808.87(a), 809.5(a) (1), (2), (3), and (4) and (b), 812.2(e), 812.19, 812.20 (b)(9) and (d), 812.38(d), 813.20(a), 813.38 (b) and (c), 813.119(e)(2), 813.160, the introductory text of paragraph (a), 820.1(d), 820.3(f), 860.7(g)(4), 860.123(b)(1), 861.32 (b) and (c)(5), 864.9050(a), 864.9160(a), 866.5240(a), 866.5890(a), 876.5830(a), 895.21(d)(1), 1002.7, 1002.10, text of the introductory paragraph, 1002.20(a), the introductory text of paragraph (b), and (b)(5), 1002.31(c), 1002.41(a)(1), 1002.50, the introductory text of paragraph (a) and (b), 1002.51, 1005.11, 1005.25 (b) and (c), 1010.2 (c) and (d), 1010.3 (a)(1) and (2)(i), (b), and (c), 1010.4, the introductory text of paragraph (a), (b)(1)(viii), and (c) (1) and (3), 1010.5, the introductory text of paragraph (a), (b), (c)(12), and (e) (1) and (2), 1010.13, 1020.30 (c), (d), and (d)(3)(ii), 1020.32(a)(1), 1030.10(c) (4)(iv), (5)(iv), and (6)(iii), the introductory text of (c)(6)(iv), and (c)(6)(iv)(*d*), 1040.30(c)(1)(ii), and 1050.10(d)(5).

Because these amendments are nonsubstantive, notice and public procedure and delayed effective date are unnecessary (5 U.S.C. 553 (b)(B) and (d)).

List of Subjects

21 CFR Part 800

Administrative practice and procedure, Medical devices, Packaging and containers, Reporting and recordkeeping requirements.

21 CFR Part 803

Medical devices, Reporting and recordkeeping requirements.

21 CFR Part 807

Confidential business information, Medical devices, Reporting and recordkeeping requirements.

21 CFR Part 808

Intergovernmental relations, Medical devices.

21 CFR Part 809

Labeling, Medical devices.

21 CFR Part 812

Health records, Medical devices, Medical research, Reporting and recordkeeping requirements.

21 CFR Part 813

Medical devices, Medical research, Reporting and recordkeeping requirements.

21 CFR Part 820

Medical devices, Reporting and recordkeeping requirements.

21 CFR Part 860

Administrative practice and procedure, Medical devices.

21 CFR Part 861

Administrative practice and procedure, Medical devices, Reporting and recordkeeping requirements.

21 CFR Part 864

Blood, Biologics, Laboratories, Medical devices, Packaging and containers.

21 CFR Part 866

Blood, Biologics, Laboratories, Medical devices.

21 CFR Part 876

Medical devices.

21 CFR Part 895

Administrative practice and procedure, Labeling, Medical devices.

21 CFR Part 1002

Electronic products, Radiation protection, Reporting and recordkeeping requirements.

21 CFR Part 1005

Administrative practice and procedure, Electronics products, Imports, Radiation protection, Surety bonds.

21 CFR Part 1010

Administrative practice and procedure, Electronic products, Exports, Radiation protection.

21 CFR Part 1020

Electronic products, Medical devices, Radiation protection, Television, X-Rays.

21 CFR Part 1030

Electronic products, Microwave ovens, Radiation protection.

21 CFR Part 1040

Electronic products, Lasers, Medical devices, Radiation protection.

21 CFR Part 1050

Electronic products, Sonic, Infrasonic, and Ultrasonic products, Medical devices, Radiation protection.

Therefore, under the Federal Food, Drug, and Cosmetic Act, the Radiation Control for Health and Safety Act of 1968, and under authority delegated to the Commissioner of Food and Drugs, Parts 800, 803, 807, 808, 809, 812, 813, 820, 860, 861, 864, 866, 876, 895, 1002, 1005, 1010, 1020, 1030, 1040, and 1050 are amended as follows:

PART 800—GENERAL

1. The authority citation for 21 CFR Part 800 is revised to read as follows and the authority citations following all the sections in Part 800 are removed:

Authority: Secs. 201(n), 304, 501, 502, 505, 506, 507, 515, 519, 521, 601, 602, 701 (21 U.S.C. 321(n), 334, 351, 352, 355, 356, 357, 360e, 360i, 360k, 361, 362, 371).

§ 800.12 [Amended]

2. Section 800.12 *Contact lens solutions and tablets; tamper-resistant packaging* is amended by removing paragraph (c) the second time it appears.

PART 803—MEDICAL DEVICE REPORTING

3. The authority citation for 21 CFR Part 803 continues to read as follows:

Authority: Secs. 502(t), 510, 519, 701(a), 704 (a) and (e), 52 Stat. 1055, 76 Stat. 792–795 as amended, 90 Stat. 564–565, 578, 581 (21 U.S.C. 352(t), 360, 360i, 371(a), 374 (a) and (e)).

§ 803.33 [Amended]

4. Section 803.33 *Where to submit a report* is amended in paragraph (b) by revising "Device Monitoring Branch" to read "Product Monitoring Branch".

PART 807—ESTABLISHMENT REGISTRATION AND DEVICE LISTING FOR MANUFACTURERS OF DEVICES

5. The authority citation for 21 CFR Part 807 continues to read as follows:

Authority: Secs. 301(p), 501, 502, 510, 513, 701(a), 52 Stat. 1049–1051 as amended, 1055, 76 Stat. 794–795 as amended, 86 Stat. 462 as amended, 90 Stat. 540–546 (21 U.S.C. 331(p), 351, 352, 360, 360c, 371(a)); 21 CFR 5.10.

§ 807.22 [Amended]

6. Section 807.22 *How and where to register establishments and list devices* is amended in paragraph (a) by revising "Bureau of Medical Devices (HFK–124)" to read "Center for Devices and Radiological Health (HFZ–342)".

§ 807.35 [Amended]

7. Section 807.35 *Notification of registrant* is amended in paragraph (b) by revising "Bureau of Biologics" and "Bureau of Drugs" to read "Center for Biologics Evaluation and Research" and "Center for Drug Evaluation and Research", respectively, everywhere they appear.

§ 807.37 [Amended]

8. Section 807.37 *Inspection of establishment registration and device listings* is amended in paragraphs (a) and (b)(2) by revising "Bureau of Medical Devices (HFK–124)" to read "Center for Devices and Radiological Health (HFZ–342)".

§ 807.90 [Amended]

9. Section 807.90 *Format of a premarket notification submission* is amended in paragraph (a) by revising "Bureau of Medical Devices (HFK–20)" to read "Center for Devices and Radiological Health (HFZ–401)".

§ 807.95 [Amended]

10. Section 807.95 *Confidentiality of information* is amended in paragraph (c)(1) by revising "§ 807.87(g)" to read "§ 807.87(h)".

PART 808—EXEMPTIONS FROM FEDERAL PREEMPTION OF STATE AND LOCAL MEDICAL DEVICE REQUIREMENTS

11. The authority citation for 21 CFR Part 808 continues to read as follows:

Authority: Secs. 521, 701, 52 Stat. 1055–1056 as amended, 90 Stat. 574 (21 U.S.C. 360k, 371); 21 CFR 5.10.

§ 808.87 [Amended]

12. Section 808.87 *Oregon* is amended in paragraph (a) by revising "§ 801.420(a)(b)" to read "§ 801.420(a)(6)".

PART 809—IN VITRO DIAGNOSTIC PRODUCTS FOR HUMAN USE

13. The authority citation for 21 CFR Part 809 continues to read as follows:

Authority: Sec. 701, 52 Stat. 1055–1056 as amended (21 U.S.C. 371).

§ 809.5 [Amended]

14. Section 809.5 *Exemption from batch certification requirements for in vitro antibiotic susceptibility devices subject to section 507 of the act* is amended in paragraphs (a) (1), (2), (3), and (4) and (b) by removing "Form 5 or Form 6".

PART 812—INVESTIGATIONAL DEVICE EXEMPTIONS

15. The authority citation for 21 CFR Part 812 continues to read as follows:

Authority: Secs. 301, 501, 502, 520, 701(a), 702,704, 801, 52 Stat. 1042–1043 as amended, 1049–1051 as amended, 1055, 1056–1058 as amended, 67 Stat. 476–477 as amended, 90 Stat. 565–574 (21 U.S.C. 331, 351, 352, 360j, 371(a), 372, 374, 381); 21 CFR 5.10.

§ 812.2 [Amended]

16. Section 812.2 *Applicability* is amended in paragraph (e) by revising "investigational new drug exemption" to read "investigational new drug application".

§ 812.19 [Amended]

17. Section 812.19 *Address for IDE correspondence* is amended by revising "Bureau of Medical Devices, Document Control Center (HFK–20)" to read "Center for Devices and Radiological Health, Document Mail Center (HFZ–401)".

§ 812.20 [Amended]

18. Section 812.20 *Application* is amended in paragraph (b)(9) by

removing "of this chapter" each time it appears and amended in paragraph (d) be revising "Bureau of Medical Devices" to read "Center for Devices and Radiological Health".

§ 812.38 [Amended]

19. Section 812.38 *Confidentiality of data and information* is amended in paragraph (d) by revising "§ 314.14" to read "§ 814.9" and removing the remainder of the sentence.

PART 813—INVESTIGATIONAL EXEMPTIONS FOR INTRAOCULAR LENSES

20. The authority citation for 21 CFR Part 813 continues to read as follows:

Authority: Secs. 301, 501, 502, 520, 701, 704, 801, 52 Stat. 1042–1043 as amended, 1049–1051 as amended, 1055, 90 Stat. 567, 569–571, 576–578 (21 U.S.C. 331, 351, 352, 360j, 371, 374, 381).

§ 813.20 [Amended]

21. Section 813.20 *Application* is amended in paragraph (a) by revising "Bureau of Medical Devices, Document Control Center (HFK–20)" to read "Center for Devices and Radiological Health Document Mail Center (HFZ–401)".

§ 813.38 [Amended]

22. Section 813.38 *Confidentiality of data and information in an application* is amended in paragraph (b) by revising "§ 314.14" to read "§ 814.9" and removing the remainder of the sentence, and in paragraph (c) by revising "§ 314.14" to read "§ 814.9".

§ 813.119 [Amended]

23. Section 813.119 *Disqualification of a clinical investigator* is amended in paragraph (e)(2) by revising "paragraph (c)(1) of this section" to read "paragraph (d)(1) of this section".

§ 813.160 [Amended]

24. Section 813.160 *Conditions of exemption* is amended in the introductory text of paragraph (a) by revising "§ 813.1(c)" to read "§ 813.1(b)".

PART 820—GOOD MANUFACTURING PRACTICE FOR MEDICAL DEVICES: GENERAL

25. The authority citation for 21 CFR Part 820 continues to read as follows:

Authority: Secs. 501, 502, 518, 519, 520(f), 701(a), 52 Stat. 1049–1051 as amended, 1055, 90 Stat. 562–569 (21 U.S.C. 351, 352, 360h, 360i, 360j(f), 371(a)).

§ 820.1 [Amended]

26. Section 820.1 *Scope* is amended in paragraph (d) by revising "Bureau of Medical Devices, Division of Compliance Programs, Industry Programs Branch (HFK–132)" to read "Center for Devices and Radiological Health, Division of Compliance Programs, Manufacturng Quality Assurance Branch (HFZ–332)".

§ 820.3 [Amended]

27. Section 820.3 *Definitions* is amended in paragraph (f) by revising "Bureau of Medical Devices" to read "Center for Devices and Radiological Health".

PART 860—MEDICAL DEVICE CLASSIFICATION PROCEDURES

28. The authority citation for 21 CFR Part 860 continues to read as follows:

Authority: Secs. 513, 514, 515, 519, 520, and 701(a), 52 Stat. 1055, 90 Stat. 540–559, 564–574 (21 U.S.C. 360c, 360d, 360e, 360i, 360j, and 371(a)).

§ 860.7 [Amended]

29. Section 860.7 *Determination of safety and effectiveness* is amended in paragraph (g)(4) by revising "Bureau of Medical Devices" to read "Center for Devices and Radiological Health".

§ 860.123 [Amended]

30. Section 860.123 *Reclassification petition: Content and form* is amended in paragraph (b)(1) by revising "Bureau of Medical Devices, Document Control Center (HFK–20)" to read "Center for Devices and Radiological Health, Document Mail Center (HFZ–401)".

PART 861—PROCEDURES FOR PERFORMANCE STANDARDS DEVELOPMENT

31. The authority citation for 21 CFR Part 861 continues to read as follows:

Authority: Secs. 501, 502, 513, 514, 701, 52 Stat. 1049–1051 as amended, 1055–1056 as amended, 90 Stat. 540–552 (21 U.S.C. 351, 352, 360, 360d, 371).

§ 861.32 [Amended]

32. Section 861.32 *Contribution by the Food and Drug Administration to the cost of developing a proposed standard* is amended in paragraph (b) by revising "41 CFR Parts 1–15 of the Federal procurement regulations" to read "48 CFR Parts 1 through 51 of the Federal Acquisition Regulations System" and in paragraph (c)(5) by revising "or 41 CFR Parts 1–15 of the Federal procurement regulations" to read "of 48 CFR Parts 1 through 51 of the Federal Acquisition Regulations System".

PART 864—HEMATOLOGY AND PATHOLOGY DEVICES

33. The authority citation for 21 CFR Part 864 continues to read as follows:

Authority: Secs. 501(f), 510, 513, 515, 520, 701(a), 52 Stat. 1055, 76 Stat. 794–795 as amended, 90 Stat. 540–546, 552–559, 565–574, 576–577 (21 U.S.C. 351(f), 360, 360c, 360e, 360j, 371(a)); 21 CFR 5.10.

§ 864.9050 [Amended]

34. Section 864.9050 *Blood bank supplies* is amended in paragraph (a) by revising "Bureau of Biologics" to read "Center for Biologics Evaluation and Research".

§ 864.9160 [Amended]

35. Section 864.9160 *Blood group substances of nonhuman origin for in vitro diagnostic use* in amended in paragraph (a) by revising "Bureau of Biologics" to read "Center for Biologics Evaluation and Research".

PART 866—IMMUNOLOGY AND MICROBIOLOGY DEVICES

36. The authority citation for 21 CFR Part 866 continues to read as follows:

Authority: Secs. 501(f) 510, 513, 515, 520, 701(a), 52 Stat. 1055, 76 Stat. 794–795 as amended, 90 Stat. 540–546, 552–559, 565–574, 576–577 (21 U.S.C. 351(f), 360, 360c, 360e, 360j, 371(a)); 21 CFR 5.10.

§ 866.5240 [Amended]

37. Section 866.5240 *Complement components immunological test system* is amended in paragraph (a) by revising "$C1_q$" to read "C_{1q}".

§ 866.5890 [Amended]

35. Section 866.5890 *Inter-alpha trypsin inhibitor immunological test system* is amended in paragraph (a) by revising the word "inter-alpha" in the second sentence to read "inter-*alpha*".

PART 876—GASTROENTEROLOGY-UROLOGY DEVICES

36. The authority citation for 21 CFR Part 876 continues to read as follows:

Authority: Secs. 501(f) 510, 513, 515, 520, 701(a), 52 Stat. 1055, 76 Stat. 794–795 as amended, 90 Stat. 540–546, 552–559, 565–574, 576–577 (21 U.S.C. 351(f), 360, 360c, 360e, 360j, 371(a)); 21 CFR 5.10.

§ 876.5830 [Amended]

34. Section 876.5830 *Hemodialyzer with disposable insert (kiil type)* is amended in paragraph (a) by revising "§ 897.5820" to read § 876.5820".

PART 895—BANNED DEVICES

41. The authority citation for 21 CFR Part 895 continues to read as follows:

Authority: Secs. 502(r) 516, 518, 519, 701(a), 52 Stat. 1055, 90 Stat. 560, 562–565, 577–578 (21 U.S.C. 352(r), 360f, 360h, 360i, 371).

BEST COPY AVAILABLE

§ 895.21 [Amended]

34. Section 895.21 *Procedures for banning a device* is amended in paragraph (d)(1) by revising "§ 875.30" to read "§ 895.30".

PART 1002—RECORDS AND REPORTS

36. The authority citation for 21 CFR Part 1002 continues to read as follows:

Authority: Sec. 360A, 82 Stat. 1182–84; 42 U.S.C. 263i, 263j.

§ 1002.7 [Amended]

44. Section 1002.7 *Submission of data and reports* is amended by revising "Bureau of Radiological Health" to read "Center for Devices and Radiological Health" everywhere it appears in this section.

§ 1002.10 [Amended]

45. Section 1002.10 *Initial reports* is amended in the text of the introductory paragraph by revising "Bureau of Radiological Health" to read "Center for Devices and Radiological Health".

§ 1002.20 [Amended]

46. Section 1002.20 *Reporting of accidental radiation occurrences* is amended in paragraph (a), the introductory text of paragraph (b), and paragraph (b)(5) by revising "Bureau of Radiological Health" to read "Center for Devices and Radiological Health".

§ 1002.31 [Amended]

47. Section 1002.31 *Preservation and inspection of records* is amended in paragraph (C) by revising "Bureau of Radiological Health" to read "Center for Devices and Radiological Health".

§ 1002.41 [Amended]

48. Section 1002.41 *Disposition of records obtained by dealers and distributors* is amended in paragraph (a)(1) by revising "Bureau of Radiological Health" to read "Center for Devices and Radiological Health".

§ 1002.50 [Amended]

49. Section 1002.50 *Special exemptions* is amended in the introductory text of paragraph (a) and in paragraph (b) by revising "Bureau of Radiological Health" to read "Center for Devices and Radiological Health".

§ 1002.51 [Amended]

50. Section 1002.51 *Exemptions for manufacturers of products intended for the U.S. Government* is amended by revising "Bureau of Radiological Health" to read "Center for Devices and Radiological Health".

PART 1005—IMPORTATION OF ELECTRONIC PRODUCTS

51. The authority citation for 21 CFR Part 1005 continues to read as follows:

Authority: Secs. 215, 356, 58 Stat. 690, 82 Stat. 1174; 42 U.S.C. 216, 263d.

§ 1005.11 [Amended]

52. Section 1005.11 *Payment for samples* is amended by revising "Bureau of Radiological Health" to read "Center for Devices and Radiological Health".

§ 1005.25 [Amended]

53. Section 1005.25 *Service of process on manufacturers* is amended in paragraphs (b) and (c) by revising "Bureau of Radiological Health" to read "Center for Devices and Radiological Health".

PART 1010—PERFORMANCE STANDARDS FOR ELECTRONIC PRODUCTS: GENERAL

54. The authority citation for 21 CFR Part 1010 continues to read as follows:

Authority: Sec. 358, 82 Stat. 1177; 42 U.S.C. 263f.

§ 1010.2 [Amended]

55. Section 1010.2 *Certification* is amended in paragraphs (c) and (d) by revising "Bureau of Radiological Health" to read "Center for Devices and Radiological Health".

§ 1010.3 [Amended]

56. Section 1010.3 *Identification* is amended in paragraphs (a)(1) and (2)(i), (b), and (c) by revising "Bureau of Radiological Health" to read "Center for Devices and Radiological Health".

§ 1010.4 [Amended]

57. Section 1010.4 *Variances* is amended in the introductory text of paragraph (a) and paragraphs (b)(1)(viii) and (c) (1) and (3) by revising "Bureau of Radiological Health" to read "Center for Devices and Radiological Health".

§ 1010.5 [Amended]

58. Section 1010.5 *Exemptions for products intended for United States Government use* is amended in the introductory text of paragraph (a) and in paragraphs (b), (c)(12), and (e) (1) and (2) by revising "Bureau of Radiological Health" to read "Center for Devices and Radiological Health".

§ 1010.13 [Amended]

59. Section 1010.13 *Special test procedures* is amended by revising "Bureau of Radiological Health" to read "Center for Devices and Radiological Health".

PART 1020—PERFORMANCE STANDARDS FOR IONIZING RADIATION EMITTING PRODUCTS

60. The authority citation for 21 CFR Part 1020 continues to read as follows:

Authority: Sec. 358, 82 Stat. 1177–1179; 42 U.S.C. 263f.

§ 1020.30 [Amended]

61. Section 1020.30 *Diagnostic x-ray systems and their major components* is amended in paragraph (c) by revising "Bureau of Radiological Health" and "Division of Compliance of that Bureau" to read "Center for Devices and Radiological Health" and "Office of Compliance of that Center", respectively, in paragraph (d) by revising "Bureau of Radiological Health" to read "Center for Devices and Radiological Health", and in paragraph (d)(3)(ii) by revising "Bureau of Radiological Health" to read "Center for Devices and Radiological Health".

§ 1020.32 [Amended]

62. Section 1020.32 *Fluoroscopic equipment* is amended in paragraph (a)(1) in the last sentence by revising "§ 1020.32(h)(1)(i)" to read "§ 1020.30(h)(1)(i)".

PART 1030—PERFORMANCE STANDARDS FOR MICROWAVE AND RADIO FREQUENCY EMITTING PRODUCTS

63. The authority citation for 21 CFR Part 1030 is revised to read as follows:

Authority: Sec. 358 (42 U.S.C. 263f); sec. 701(a) (21 U.S.C. 371(a)).

§ 1030.10 [Amended]

64. Section 1030.10 *Microwave ovens* is amended in paragraphs (c)(4)(iv), (5)(iv), and (6)(iii), the introductory text of paragraph (c)(6)(iv), and paragraph (c)(6)(iv)(*d*) by revising "Bureau of Radiological Health" to read "Center for Devices and Radiological Health".

PART 1040—PERFORMANCE STANDARDS FOR LIGHT-EMITTING PRODUCTS

65. The authority citation for 21 CFR Part 1040 continues to read as follows:

Authority: Secs. 358, 360A, 82 Stat. 1177–1179, 1182 (42 U.S.C. 263f, 263i); 21 CFR 5.10.

§ 1040.30 [Amended]

66. Section 1040.30 *High-intensity mercury vapor discharge lamps* is amended in paragraph (c)(1)(ii) by revising "Bureau of Radiological Health" to read "Center for Devices and Radiological Health".

PART 1050—PERFORMANCE STANDARDS FOR SONIC, INFRASONIC, AND ULTRASONIC RADIATION-EMITTING PRODUCTS

67. The authority citation for 21 CFR Part 1050 is revised to read as follows:

Authority: Sec. 358 (42 U.S.C. 263f).

§ 1050.10 [Amended]

68. Section 1050.10 *Ultrasonic therapy products* is amended in paragraph (d)(5) by revising "Bureau of Radiological Health" to read "Center for Devices and Radiological Health".

Dated: March 17, 1988.

John M. Taylor,

Associate Commissioner for Regulatory Affairs.

[FR Doc. 88-7528 Filed 4-5-88; 8:45 am]

BILLING CODE 4160-01-M

DEPARTMENT OF TRANSPORTATION

Federal Highway Administration

National Highway Traffic Safety Administration

23 CFR Parts 1204 and 1205

[NHTSA Docket No. 81-12; Notice 5]

Uniform Standards for State Highway Safety Programs; Determination of Effectiveness

AGENCY: National Highway Traffic Safety Administration (NHTSA) and Federal Highway Administration (FHWA), Department of Transportation (DOT).

ACTION: Final rule.

SUMMARY: On April 2, 1987, Congress enacted the Surface Transportation and Uniform Relocation Assistance Act of 1987. Section 206(d) of the Act, amending 23 U.S.C. 402(j), requires the Secretary to begin a rulemaking process to determine those programs most effective in reducing accidents, injuries, and deaths and to amend 23 CFR Part Part 1205 accordingly. Pursuant to the Act, the National Highway Traffic Safety Administration and the Federal Highway Administration published a joint Notice of Proposed Rulemaking (52 FR 33422) on September 3, 1987 and held three public hearings to solicit public comments. In this final rule, the agencies have determined that, in addition to the original six National Priority program areas, Motorcycle Safety is also among those programs that should be included as one of the "most effective" programs. It therefore will be eligible for Federal funding under expedited review procedures of the State and Community Highway Safety Grant Program (23 U.S.C. 402). This final rule amends the agencies' regulations accordingly, and also replaces the terms "standard" and "standards" with the words "guideline" and "guidelines" in Part 1204 of the agencies' joint regulation, 23 CFR Part 1204, pursuant to section 206(a) of the Act.

DATES: The amendments made by this final rule are effective on October 1, 1988.

FOR FURTHER INFORMATION CONTACT: In NHTSA: Mr. Robert M. Nicholson, Traffic Safety Programs, Room 5125, Naitonal Highway Traffic Safety Administration, 400 Seventh Street, SW., Washington, DC 20590, telephone (202) 366-1755; or Ms. Heidi L. Coleman, Office of Chief Counsel, National Highway Traffic Safety Administration, telephone (202) 366-1834.

In FHWA: Mr. Howard Hanna, Office of Highway Safety, Room 3407, Federal Highway Administration, 400 Seventh Street, SW., Washington, DC 20590, telephone (202) 366-2131; or Mr. Thomas Holian, Office of Chief Counsel, Federal Highway Administration, telephone (202) 366-1350.

SUPPLEMENTARY INFORMATION: On April 2, 1987, the Surface Transportation and Uniform Relocation Assistance Act of 1987, Pub L. 100-17, was enacted by Congress. Section 206(d) of the Act, amending 23 U.S.C. 402(j), requires the Secretary to begin a rulemaking process to determine those programs most effective in reducing accidents, injuries, and deaths and to amend 23 CFR Part 1205 accordingly. Pursuant to the Act, the National Highway Traffic Safety Administration (NHTSA) and the Federal Highway Administration (FHWA) published a joint Notice of Proposed Rulemaking (NPRM) (52 FR 33422) on September 3, 1987 and held three public hearings to solicit public comments. These hearings were held in 1987 on September 29 in Washington, DC, on October 8 in Fort Worth, TX, and on October 14 in Lakewood, CO. In this final rule, the agencies have determined that the original six National Priority program areas continue to be most effective in reducing accidents, injuries and fatalities, and that Motorcycle Safety is also among the most effective programs and should be added to the list of National Priority program areas. It therefore will be eligible for Federal funding under expedited review procedures of the State and Community Highway Safety Grant Program (23 U.S.C. 402). This final rule amends the agencies' regulation accordingly.

Section 206(d) provides that if the final rule is promulgated by April 1, 1988, the rule shall take effect October 1, 1988. If the rule is promulgated on a later date, it shall take effect October 1, 1989. Since this final rule was promulgated by April 1, 1988, the rule shall take effect October 1, 1988.

Section 206(a) of the Act, amending 23 U.S.C. 402, replaces the terms "standard" and "standards" wherever they appear with the words "guideline" and "guidelines." This final rule amends Part 1204 of the agencies' joint regulation, 23 CFR Part 1204, to incorporate this change.

Background

The State and Community Highway Safety Grant Program (the 402 program) was established under the Highway Safety Act of 1966, 23 U.S.C. 402. The Act required the establishment of Uniform Standards for State Highway Programs to assist the States and local communities in organizing their highway safety programs.

In 1981, Congress passed the Omnibus Budget Reconciliation Act of 1981, Pub. L. 97-35, revising the section 403 program. The Act directed the agencies to conduct a rulemaking process to determine those State and local highway safety programs most effective in reducing accidents, injuries and fatalities.

On April 1, 1982, in accordance with section 1107(d) of the Omnibus Budget Reconciliation Act of 1981, NHTSA and FHWA issued a final rule (47 FR 15116) identifying the six program areas which the agencies then considered to be the most effective NHTSA and FHWA highway safety programs. Those program areas were determined to be National Priority program areas, and include—

NHTSA Program Areas:
- Occupant Protection
- Alcohol Countermeasures
- Police Traffic Services
- Emergency Medical Services
- Traffic Records

FHWA Program Area:
- Safety Construction and Operational Improvements

The April 1982 final rule provided that these National Priority program areas continue to be eligible for Federal funding under the 402 program, and established a mechanism by which additional programs identified by a State may be eligible for Federal funding in that State.

The rule provided for an expedited procedure for the funding of National Priority program areas. See, 23 CFR

1205.4. For the funding of other program areas, the rule permits States to select one or both of two procedures: Formal decisionmaking or problem identification. See, 23 CFR 1205.5(a) and (b).

On January 5, 1987, the Department submitted to Congress a legislative proposal to revise 23 U.S.C. 402. The Department's proposal provided for a periodic review of the effectiveness of the various programs eligible for funding under section 404 in reducing accidents, injuries and fatalities. The Department believed the periodic review procedure to be the best method for ensuring the continued relevance of the section 402 program to changing circumstances and traffic safety needs, and for ensuring that federal funds continue to be used in as cost effective a manner as possible. The proposal scheduled the first review to begin on September 1, 1987.

The legislative proposal also provided that the terms "standard" and "standards" wherever they appear be replaced with the words "guideline" and "guidelines." The purpose of this amendment was to conform the language of section 402 to the current implementation of the programs, pursuant to the 1982 determinations of program effectiveness under section 402(j). As a result of the section 402(j) determinations, the highway safety program standards have been maintained as non-binding guidelines for use by the States in their section 402 programs.

The substance of the Department's proposal was enacted by Congress as subsection 206(a) and (d) of the Surface Transportation and Uniform Relocation Assistance Act of 1987.

On September 3, 1987, NHTSA and FHWA published a joint Notice of Proposed Rulemaking (NPRM) (52 FR 33422). The NPRM states that the agencies are considering "whether the six National Priority program areas identified in 1982 continue to be the most effective in reducing accidents, injuries and fatalities, and whether any emerging program areas should be added to the list of most effective programs." For example, the NPRM suggested that commenters address whether Motorcycle Safety, Pedestrian and Bicycle Safety, or other areas should be added to the list of National Priority program areas. The NPRM also proposed to amend Part 1204 of the agencies' joint regulations, to implement the statutory change replacing the terms "standard" and "standards" wherever they appear in section 402 with the words "guideline" and "guidelines." The agencies did not propose, in the NPRM, any changes to the section 402 funding procedures.

The agencies also held three public hearings to solicit public comments. These hearings were held in 1987 on September 29 in Washington, DC, on October 8 in Fort Worth, TX, and on October 14 in Lakewood, CO.

We received a substantial number of responses to the NPRM. We received nearly 300 written comments to the docket, and heard testimony from 80 participants at the three hearings. The commenters included either the Governor, the Governor's Highway Safety Representative, the State Highway Safety Coordinator, or a designee of these officials representing 41 States, the District of Columbia, Guam and Puerto Rico. In the remainder of this notice, comments from any of these officials will be referred to as the State's comments. We also received written and oral comments from national organizations. Some of these organizations represent the interests of a particular program area, such as the American Trauma Society, Mid-Atlantic EMS Council and the National Association of State Emergency Medical Services Directors representing EMS, the League of American Wheelmen representing bicyclists, the American Driver and Traffic Safety Education Association representing driver education, and the Motorcycle Safety Foundation and American Motorcycle Association representing motorcyclists. Others represented broader highway safety interests, such as the National Association of Governors' Highway Safety Representatives (NAGHSR), National Sheriffs' Association, Insitute of Transportation Engineers (ITE), American Automobile Association (AAA), International Association of Chiefs of Police (IACP), Insurance Institute for Highway Safety (IIHS), National Safety Council (NSC), American Red Cross, American Insurance Association, Texas A&M University System, Highway Users Federation for Safety and Mobility (HUFSAM), Northwestern University Traffic Institute, and Motor Vehicle Manufacturers Association (MVMA). In addition to these 41 States and national organizations, the commenters also included Senator John C. Danforth of Missouri, Congressman Vic Fazio of California, law enforcement agencies, educators, other State and local agencies, health and injury prevention centers, State and local groups and organizations, and interested individuals.

General Comments

(1) Specific Programmatic Comments

Many commenters describe projects and activities which have been funded under the section 402 program with success, or which they believe deserve to be funded in the future. Some respondents mention organizations which have been productive recipients of 402 grant funds, or which, given the opportunity in the future, could accomplish a great deal in the highway safety area with section 402 funds. Several comments are offered suggesting that a greater or smaller proportion of funds should be dedicated to certain National Priority program areas.

The agencies appreciate the many commenters who took the time to provide these thoughts, suggestions, and recommendations. They have been valuable and instructive on whether the agencies' messages are reaching the public and on new directions the public believes the agencies should take. Throughout this final rule, we will refer to these comments to illustrate points we wish to make or to provide examples of outstanding accomplishments or desired goals. However, due to the number of these comments and the fact that they address an area that is outside the scope of this proceeding, we do not address each one individually in this final rule. Specifically, decisions regarding the projects and activities to be supported with section 402 funds, the organizations to receive funding, and the percentage of funds that will be allocated to each program area (provided the State complies with statutory requirements, such as set asides), are all made by the States. We do not wish to limit the flexibility built into the funding process.

In response to these comments, the agencies would like to take this opportunity to briefly describe the section 402 funding process. The funding procedures for National Priority program areas were promulgated in the April 1982 final rule, and are codified in 23 CFR 1205.4. Subsection 1205.4(c) of that part provides that annually each State shall conduct an evaluation of its programs of the prior year, and shall describe the evaluation in its annual Highway Safety Plan (HSP). The specific requirements regarding preparation and submission of the Plan were published in the **Federal Register** on September 16, 1982 (and issued internally as joint NHTSA/FHWA order 960–2A/7510.3A dated June 10, 1983), and in a memorandum dated October 5, 1984.

Under the joint Order, the HSP must consist of three parts: Executive

Summary, Program Areas and Evaluation. The October 5, 1984 memorandum provides that "significant projects underway or completed" are to be reported in a separate document entitled the annual Noteworthy Project Reports.

For each National Priority program area, each State must include, in its HSP, a description of the highway safety problem, the countermeasures proposed or considered to decrease or stabilize the problem, and the kinds of data relied upon in making the problem and countermeasure identifications. It must also include a description of the criteria for project selection and, where applicable, the specific projects proposed to implement planned countermeasures, planned program accomplishments, and a brief description of how the evaluation for the program area will be conducted. Finally, each State must include a summary of programmed and obligated costs by program area. If the State's HSP conforms with statutory and other Federal requirements, it will be approved for Federal funding. After approval of the HSP, section 402 funds are then obligated to these States. The Governor of the State is responsible for the administration of the program through a State highway safety agency (the Governor's Highway Safety Representative, also referred to as the Governor's Representative).

Several commenters suggest new directions they believe the agencies should take to improve highway safety generally. Those comments which are outside the scope of this rulemaking action have not been addressed in this final rule.

(2) National Priority Program Area Concept

Several commenters offer objections to the National Priority program area concept. Four commenters suggest returning instead to the concept of emphasizing all 18 standards (or guidelines). The Governor's Representative of North Carolina, for example, states that although North Carolina believes "that the 'six pack' can meet the overall needs of the States in addressing their primary highway safety concern," it also believes "flexibility currently in the rules must be expanded to allow States to move out of the 'six pack' and address the remaining * * * standards." Other commenters emphasize the need for a "comprehensive systems approach," which some argue the "18 standards [or guidelines] concept" would provide. While it does not go as far as these other commenters, the National Safety Council (NSC) shares some of their concerns. NSC supports the six emphasis areas, and agrees that they "certainly encompass many of the major traffic safety countermeasure programs." However, it suggests that "they by themselves have fractionalized the total national traffic safety effort * * *. The NSC urges the agencies to address traffic safety needs in a comprehensive manner."

As stated previously, in 1981, Congress passed the Omnibus Budget Reconciliation Act of 1981, Pub. L. 97–35, which directed the agencies to conduct a rulemaking process to determine those State and local highway safety programs most effective in reducing accidents, injuries and fatalities. Pursuant to that mandate, NHTSA and FHWA identified six National Priority program areas which would continue to be eligible for Federal funding under the 402 program. These areas are eligible for funding under an expedited procedure (see, 23 CFR 1205.4), while nonemphasis areas can only be funded in a particular State under formal decisionmaking or problem identification procedures followed by that State (23 CFR 1205.5 (a) and (b)).

To ensure that Federal funds continue to be used in as cost effective a manner as possible, and respond to changes in circumstances and traffic safety needs, on April 2, 1987, Congress passed the Surface Transportation and Uniform Relocation Assistance Act of 1987. Section 206(d) of the Act requires the agencies to conduct again a rulemaking process to determine those programs most effective in reducing accidents, injuries and fatalities. Efforts to abandon the National Priority program area concept in favor of returning to the 18 standards (or guidelines) at this time would be in contravention of our Congressional mandate. In addition, the agencies strongly believe that the current approach has the greatest impact on highway safety. By emphasizing areas of national concern for which proven effective countermeasures are available, while permitting States to receive funding for additional areas of local concern under established funding procedures, the program is designed to ensure that section 402 resources are being allocated in the most effective manner.

The vast majority of commenters addressing this issue provide strong support for the National Priority program area concept, and the 402 program in general. Missouri's comments are representative, "It is the experience from Missouri's Highway Safety Program that the improvement in Highway Safety in our State [its death rate dropped from 6.2 to 2.4 fatalities per 100 million vehicle miles traveled] can be directly attributed to the '402' program and the six National Priority program areas identified in 1982."

The commenters highlight varied reasons for their support. Some emphasize that by identifying certain areas as National Priority program areas, the agencies enable the States to focus their attention on the programs that are most effective. According to New Jersey's Department of Transportation, for example, its efforts, as well as those of other States, "are for all practical purposes totally influenced by the listed priority program areas." Another commenter puts it, "Priority program areas are more than guidelines. In essence they are the highway safety program's shared mission, the platform for which we all rally." In this way, the comments reflect the importance of the agencies' leadership role in these most effective areas.

Other commenters indicate that the identification of priority areas, and the national emphasis placed on these areas, act as a catalyst at the State and local level. This, combined with the 402 funds provided, they say, attract State, local or private funding, volunteer and public support, and ultimately may lead to the self-sufficiency of programs. Several excellent examples were described in testimony. Mr. Ray Taber of Louisiana Child Passenger Safety, for example, explained that section 402 funds have attracted volunteers and in-kind grants from the private sector, which have helped his organization to develop a successful child safety seat loaner program with only one paid staff member and limited funds. Captain William Collins of the Hurst Police Department explained that as a result of STEP (Selective Traffic Enforcement Program) grant, fatalities dropped so dramatically that the city has indicated it intends to pick up the cost for the program's continuation. Hurst is a suburban community of approximately 40,000 people in Tarrant County, TX, located in the mid-cities area between Dallas and Fort Worth.

Other benefits cited in the comments which are attributed to the National Priority program area concept and the section 402 program in general, include the expansion of successful local programs in these areas statewide and the increased professionalism in the traffic safety field throughout the nation.

Finally, as will be discussed in greater detail below (under the heading Non-Emphasis Areas), the agencies as well as the vast majority of commenters addressing this issue, believe the

National Priority program area concept and the procedures established in 1982 to permit funding of non-emphasis areas, provide sufficient flexibility to the States for designing their highway safety programs. In fact, States which identify significant problems outside the priority areas, for which there are effective countermeasures available, are encouraged to allocate 402 dollars to address their local problems. For example, pedestrian safety projects, activities addressing elderly and youth problems, or certain commercial motor vehicle safety projects may be funded in this manner. In addition, the current format of the 402 program is not intended to prevent a comprehensive approach. Although each priority area is listed separately, the agencies strongly encourage those in the highway safety community to embrace the various areas of highway safety, and address them in projects which take a "holistic and integrated approach," as suggested by the Governor's Represenative of Missouri. This can be accomplished most effectively, the agencies believe, at the community level.

(3) Comprehensive Community Based Programs

A number of commenters, including States, national organizations (such as NSC, ITE and Northwestern University Traffic Institute), and project level organizations, express a need to foster comprehensive highway safety activities. A comprehensive approach, the commenters explain, is best achieved by adopting effective countermeasures which address more than one specific priority program area. The Governor's Representative for Missouri says the goal is to have "* * * integrated community and state Highway Safety Programs using all of the very effective priority areas."

In addition to recommending that multiple countermeasures be used in an integrated manner, commenters propose that community based programs should be designed based on local needs and problems. For example, the Tidewater Automobile Association of Virginia supports "community-based programs which provide an option for municipalities to deal with local problem areas," with implementation through "coalition groups formed to include representatives of government and the private sector so that they can work in a cohesive manner on such programs * * *"

The agencies believe comprehensive community based programming represents the natural maturation of the 402 program, growing from a focus on single countermeasures to a process of integrating countermeasures in appropriate program areas to respond, in a coordinated manner, to State and local highway safety needs and problems. We view the development and implementation of comprehensive community based highway safety programs as a process for responding to a range of highway safety problems identified in each locality.

A project conducted recently in Illinois will illustrate how this process has worked. The Fulton County Health Department designed an occupant protection project to increase safety belt usage through education activities. During this project, safety belt usage increased from 25 percent to 51 percent. Because local data showed that one-third of all traffic deaths were attributable to alcohol, this local project expanded its safety belt education program to include an alcohol component.

The agencies consider community involvement to be essential for the success of comprehensive community based programs. We believe the strength of these programs derives largely from the support and commitments provided by a broad base of public and private community leaders. These leaders can bring their individual positions, talents and resources to bear on local highway safety problems. Many commenters, discussing this and other issues, endorse the use of coalitions and advisory committees as effective tools for attracting leaders from diverse backgrounds and for facilitating the integration of varied concerns regarding multiple highway safety issues. This type of cooperative effort can result in the development and execution of a focused and coordinated approach. We encourage communities to work with their State Governor's Representative for Highway Safety, who can assist in assessing local highway safety problems and can recommend countermeasures and programs to effectively address their problems.

The Governor's Representative for New Jersey recommends that we create a new priority area for "coordinated or integrated highway safety programs at the local level." The State Highway Safety Coordinator for North Dakota supports increased emphasis for comprehensive community programs, but to a lesser degree than is afforded to priority programs. The agencies strongly encourage the use of comprehensive community based programs, but we do not believe it is necessary to establish a new priority program area for these activities. We believe the current procedures provide sufficient flexibility to allow the creation of these programs within the existing framework. The State of Texas, for example, notes in its comments that it has included an "integrated community program" module in its FY88 Highway Safety Plan. The agencies encourage the States to develop such programs, and include them in future HSP's. In the event that a community program includes a non-emphasis area component, justification must be submitted in accordance with funding procedures, which are described below in the discussion entitled Non-Emphasis Areas. The agencies' regional and field staff will, as always, be available to provide the States with assistance.

National Priority Program Areas

The agencies have determined that the six program areas identified in the April 1982 final rule continue to be of national concern, that effective countermeasures have been developed in these areas which address these concerns, and that State programs in these areas appear to be the most effective in reducing accidents, injuries and fatalities. The commenters were unified in their support of these areas' continuation. Alaska's comments are representative:

> Each program area represents an essential cornerstone that provides the foundation of a comprehensive statewide highway safety program. But, like the foundation of a building, the omission of any one of these cornerstones will weaken the entire structure.

We have also determined that Motorcycle Safety has emerged as a program area of national concern, and that several countermeasures exist in this area which have proven to be effective. We believe that this program area should be included among those that are considered "most effective" in reducing accidents, injuries and fatalities. Accordingly, we have decided to add Motorcycle Safety to the list of National Priority program areas.

As authorized by section 206(d) of the Surface Transportation and Uniform Relocation Assistance Act of 1987, the agencies may revise their determination from time to time under a rulemaking process. To ensure that Federal funds continue to be used in as cost effective a manner as possible and that we are responding to changing circumstances and traffic safety needs, we intend to periodically review our list of National Priority program areas.

NHTSA-Administered Program Areas

(1) Occupant Protection

The agencies received no comments suggesting that the area of Occupant Protection be deleted from the list of National Priorities. Commenters specifically addressing this area included States, law enforcement and other State and local agencies, special interest groups and individuals. All recommend that it be continued as a priority area and, in fact, some indicate that they consider it to have been the most effective program area in the designated group.

The agencies have decided that Occupant Protection should continue to be included in the list of National Priority program areas. Our decision is based on a finding that Occupant Protection continues to be an area of national concern, and that countermeasures exist in this area which have proven to be effective.

Strong gains have been made during the 1980's, including passage (or upgrading) of child safety seat usage laws in every State, passage of safety belt laws in a majority of States and significant increases in safety belt and child safety seat usage rates. According to the agency's 19 cities surveys, safety belt use for drivers has increased from 11.3% in December 1982 to 43.2% in September 1987, and child safety seat use has increased from 22.8% in December 1982 to 77.6% in June 1987. Despite these gains, it is clear that the commenters believe that occupant protection will continue to be a major highway safety concern in the future. NAGHSR states that it "and other organizations have joined together to campaign for a nationwide use rate of at least 70% by the year 1990, so there is still much to gain by continuing the program's emphasis in this area." In addition, some commenters emphasize also the continuing need to educate the public on the *proper* use of child safety seats, and the need to address the lower safety belt usage rates among certain age groups. The agencies believe that public information and education efforts in support of safety belt and child safety seat laws have proven to be effective in reducing injuries and fatalities.

The commenters suggest that the increases in usage throughout the country indicate that countermeasures have been effective in this area. In addition to the passage of occupant protection legislation, the countermeasures cited as being effective include the following: Comprehensive community occupant protection programs, which include increased enforcement efforts combined with public information and education activities, incentives, observational surveys of belt use, and evaluation; child safety seat loaner programs; targeted audience programs for elementary and secondary schools, employers, health professionals, or senior citizens, for example; enforcement efforts which are coupled with public information and education activities; police and judicial training; and other activities which focus primarily on public information and education, and may include use of mass media, the Seat Belt Convincer (a device designed to "convince" people to buckle up) and appearances by "Vince and Larry" (the crash dummy characters created and adopted to convey the agencies' safety belt message).

A few commenters, including NAGHSR and some States, recommend that activities be conducted to improve the public's awareness of the benefits of not only safety belts and child restraints, but also air bags and other forms of automatic crash protection, and rear seat lap and shoulder harnesses. The Motor Vehicle Manufacturers Association (MVMA) states, "This will be especially important as 'air bag' systems, which require belt usage to be most effective, come into greater usage. Air bag systems are designed to supplement, not replace belts." The agencies encourage the development and implementation of activities which are designed to accomplish these goals.

The commenters suggest that 402 funds can play a key educational role to convey the idea that the use of motorcycle and bicycle helmets is an important form of occupant protection. With the inclusion of Motorcycle Safety in the list of priority program areas, motorcycle helmet use projects may be eligible for funding under expedited funding procedures for that program area. Bicycle helmet use projects may be considered for funding under the procedures for non-emphasis areas.

(2) Alcohol and Other Drug Countermeasures (formerly Alcohol Countermeasures)

Comments regarding this program area were received from States, NAGHSR, law enforcement and other State and local agencies, universities and colleges, organizations concerned specifically with alcohol countermeasures (such as Mothers Against Drunk Driving, or MADD, and the Distilled Spirits Council of the United States), organizations concerned with broader highway safety issues (including IACP, AAA, American Red Cross, American Insurance Association, NSC and HUFSAM), and individuals. None of the comments suggest deleting alcohol countermeasures from the list of National Priorities. In fact, one commenter remarks, "alcohol-impeded drivers are our greatest hazard on the public highway."

The agencies have determined that Alcohol Countermeasures continues to be an area of national concern, and that countermeasures exist in this area which have proven to be effective. Accordingly, the agencies will continue to include it in the list of National Priority program areas.

A number of commenters report great strides in reducing alcohol-involvement in fatal motor vehicle crashes, through passage of alcohol-related laws (such as administrative per se laws requiring automatic license suspension and illegal per se laws establishing BAC 0.10 as the legal level for alcohol intoxication) and successful enforcement and education efforts. However, despite these achievements, the respondents agree that alcohol-involvement in fatal motor vehicle crashes continues to be a significant national concern, constituting 52% of all fatal crashes in 1986. IACP states, "While vehicle crashes attributable to alcohol have fallen in recent years, we foresee no circumstances under which this will cease to be a problem on the highways of America. The positive momentum which the nation has experienced in the alcohol countermeasures area should continue into the next decade." Commenters also voice their concern that progress in this area seems to have leveled off.

Numerous countermeasures which have proved to be effective are noted in the comments. They include projects which focus on prevention (through alcohol information and education activities), enforcement (from identification and apprehension, to prosecution and adjudication of an offender), and rehabilitation and treatment. Specific examples which commenters believe to be particularly effective include alcohol countermeasure projects which have a community-based focus (such as Project Graduation, Techniques for Effective Alcohol Management (TEAM) and similar programs), use of sobriety checkpoints and standardized field sobriety testing (including Horizontal Gaze Nystagmus), selective DWI enforcement, formalized training for law enforcement officials, prosecutors and judges, and improvement of DWI offender tracking systems. The commenters recommend that, for the best results, alcohol countermeasures programs should involve a broad

spectrum of persons at the community le el, including law enforcement officials, prosecutors and judges, health professionals (including EMS personnel), highway safety organizations (such as MADD and AAA) and other local community and business leaders.

The issue of the repeat drunk driving offender and the alcohol abuser is raised by a few commenters as a serious concern that deserves particular attention. Mr. Don Larson of Louisiana MADD, for example, expresses concern about this rapidly emerging problem. "Studies have proved that the first offenders are really not first offenders, and 70 to 80 percent of them are abusers and potential abusers." One commenter states that "DWI is without a doubt, the single greatest crisis intervention tool for alcohol and drug abusers" and goes on to say that the impacts of DWI efforts extend beyond traffic safety. Implementation of an alcohol countermeasure program in his community led to "an immediate reduction in crime, across the board * * * all violent crime statistics showed a downward trend." However, most believe the issue requires more attention. The agencies agree that the problem of repeat offenders and alcohol abusers is serious, and are working to develop countermeasures to combat this population. We encourage States and communities to seek innovative approaches to address this particular issue in their comprehensive alcohol countermeasures programs. Commenters also note and the agencies recognize the significant involvement of alcohol in pedestrian fatalities. We encourage States to include also in their comprehensive alcohol countermeasures programs, components addressing this problem.

In the NPRM, the agencies requested comments on whether the focus of the alcohol countermeasures program area should be changed in recognition of the growing interest in the problem of drugged driving. A significant number of respondents commented on this issue, all in favor of including drugs in the program area. The Los Angeles Police Department (LAPD) recommends inclusion of drugs due to "the fact that driving under the influence of drugs represents at least 10–15 percent of what we traditionally refer to as 'drunk driving'." The Division of Substance Abuse Services in New York estimates that "20–40 percent of traffic fatalities involve other drugs—usually in combination with alcohol."

Given these comments, the agencies find that drug use is perceived as an important emerging highway safety problem. We also find that effective countermeasures have been developed to address this problem. For example, with NHTSA and State grant support, the LAPD has developed an effective method for identification of drivers impaired by alcohol and/or drugs. In cooperation with NHTSA, the IACP, and the other law enforcement agencies, LAPD intends to make these drug recognition techniques and procedures available to the nation's law enforcement community under strict standards and training criteria. Currently, the training is being conducted with State and local police at four pilot sites: Denver, CO; Nassau County, NY; Phoenix, AZ; and Virginia Beach, VA. We expect that this training will be expanded to additional sites during FY 1989. The agencies support this effort.

The commenters recommend different names for this expanded program area, including "Alcohol and Drug Countermeasures," "Alcohol and Other Drug Countermeasures," and "Impaired Driving," to name a few. In order to recognize that the use of alcohol is, and should be, treated in many respects like use of other drugs, and yet maintain the current emphasis in this program area on alcohol, which continues to be considered the most serious drug use problem in highway safety, the agencies have decided to rename this area "Alcohol and Other Drug Countermeasures."

(3) Police Traffic Services

All commenters addressing this program area, including States, NAGHSR, law enforcement associations (such as the IACP and the National Sheriffs' Association), other special interest groups and national organizations, law enforcement and other State and local agencies, and individuals, support its continuation as a priority program. We received no comments recommending that it be deleted as a National Priority.

The agencies find that Police Traffic Services (PTS) should continue to be included in the list of National Priority program areas. Our finding is based on a conclusion that PTS continues to be an area of national concern, perhaps even more so now than in 1982, and that countermeasures exist in this area which have proven to be effective.

To illustrate the need for PTS, commenters (including NAGHSR and several States and law enforcement officials) cite what they perceive to be an increasing disregard for traffic laws. The area most often mentioned in this regard is speed. Many commenters raise this issue now that speed limits are being increased to 65 MPH on certain rural Interstate (and some other) highways. They believe these increases will result in more deaths and injuries from motor vehicle creahes. For example, the New York State Police asserts that, "there is a direct correlation between an increase in speed and an increase in the loss of lives." The commenters mention also the fact that traffic law violations continue to be the primary cause of motor vehicle crashes, and that additional demands on law enforcement agencies often prevent the States from dedicating sufficient manpower to traffic enforcement. The Montana Highway Patrol, for example, states that the 402 "program has allowed the Highway Patrol to increase enforcement efforts on Montana highways at a tme when the demand for other law enforcement services has increased and agency manpower and resources have actually been reduced."

The respondents generally agree that countermeasures in this area have proved to be effective. Examples include Selective Traffic Enforcement Programs (STEP), which make it possible to dedicate additional enforcement efforts in areas with high crash rates or high incidents of traffic violations, and Operation CARE (Combined Accident Reduction Effort), which is designed to increase police presence and thereby reduce crashes during certain holiday periods when they are more likely to occur. These types of activities, it is suggested, especially when combined with public information efforts, effectively maintain a high level of visibility for the enforcement of traffic laws.

Even commenters addressing areas other than Police Traffic Services emphasize the importance of enforcement and education efforts in traffic safety. These efforts are cited as significant elements in the areas of alcohol countermeasures, occupant protection, motorcycle safety, pedestrian and bicycle safety as well as speed enforcement, truck safety and licensing. The agencies note that many enforcement agencies which responded indicate that they are developing comprehensive programs which combine a number of these areas in their PTS activities. The agencies heartily endorse this comprehensive approach. In addition, NAGHSR points out, PTS is especially important now, in light of "the remarkable proliferation of and progress in highway safety legislation in recent years."

We received one comment recommending that the scope of this

VOL 53 ISS 66 AP 6 1988 UMI

program be changed. The commenter suggests that direct funding of PTS be discontinued, and that our support should be limited to the development of new and innovative enforcement strategies for adoption by existing police agencies. The commenter asserts that direct support of PTS "will in the long term be counterproductive." (By direct funding, we understand the commenter to mean that the activity has been chosen by the State to receive Federal assistance. As stated previously, decisions regarding the projects to be supported with section 402 funds and the organizations to receive funding are all made by the States.) Although reductions in violations and crashes can be documented on single segments of roadway as a result of PTS projects, the commenter argues that PTS can not be supported as a solution to statewide problems.

The agencies strongly disagree with this assertion. It is our belief that 402 support of Police Traffic Services has been and will continue to be an essential part of the section 402 program and that it does have positive lasting effects. In 1985, the Insurance Institute for Highway Safety conducted a project in Elmira, NY, and in Sepetember 1987, the Highway Safety Research Center, University of North Carolina issued a study, each of which addressed the relationship between enforcement efforts and safety belt usage. According to their findings, enforcement efforts when combined with a public information and education campaign, can lead to significant increases in safety belt usage. We believe similar gains can be achieved using these techniques in other areas, such as speed enforcement. Programs which are chosen by States for funding, such as STEP and Operation CARE, have resulted in significant short term safety improvements, and we are unaware of evidence revealing that these short term improvements lead to adverse effects at a later date. In addition, these projects increase awareness at the local level of the importance of highway safety issues and have often led to local funding so the programs can continue over a longer period of time, extending their positive impact. For example, New York City used 402 funds to concentrate enforcement resources on a serious pedestrian problem in the cite. The program produced very noticeable positive results and local funding continues for the program today. Further, some commenters city important contributions, which are much more difficult to measure. According to the Colorado Department of Public Safety, for example, the 402 program "has been very instrumental in raising the level of professionalism in traffic enforcement throughout the United States." Activities cited which contribute to professional growth or which institutionalize improvements in enforcement techniques and strategies, include: Training in areas such as traffic safety management, traffic investigation, and speed enforcement; instructor training in DWI detection; crash reconstruction programs; evaluations of current enforcement activities; and the development of system improvements. The agencies will therefore not limit the scope of PTS as suggested.

The Governor's Representative for Maryland recommends that the Police Traffic Services area be redesignated "Traffic Law Enforcement and Reporting" to "more clearly identify the true scope" of this program. The agencies believe the program area is broader than Maryland's proposal would suggest. Police Traffic Services does involve law enforcement and reporting, but it also includes vehicle crash investigation, problem identification and education components, to name a few. Accordingly, we will retain the current name for this area.

(4) Emergency Medical Services

With only one exception, all commenters addressing this issue, support continuation of Emergency Medical Services (EMS) as a National Priority area. Commenters include States, NAGHSR, national organizations, State agencies and local groups representing EMS interests (such as the American Trauma Society, Mid-Atlantic EMS Council, National Association of State Emergency Medical Services Directors, National Association of Emergency Medical Technicians, Emergency Medical Services Division of the Colorado and Texas Departments of Health, National Council of State EMS Coordinators, and Critical Illness Trauma Foundation of Boulder, MT) and organizations and agencies with broader highway safety interests.

The one exception was Mr. Joseph E. Meyerring, a Traffic Safety Education Specialist with the Minnesota Department of Education, who recommends discontinuation of the program, asserting "states should be required to submit plans to bring [EMS] systems up to a set of standards. * * * Upon completion of the plan the state would no longer receive funds." The thrust of Mr. Meyerring's comment is already addressed through the agencies' administration of the 402 program under the seed money concept. Under this concept, section 402 funds are awarded to accomplish tasks in accordance with highway safety goals. They do not pay for ongoing operating expenses for highway safety programs once these tasks are completed. However, to the extent that Mr. Meyerring meant literally that no EMS activities Statewide should be eligible for 402 funding once certain standards are attained, the agencies disagree with his recommendation. It runs contrary to the requirement imposed by Congress that the standards be changed to guidelines, and will therefore not be adopted. In addition, we find that such an approach would stifle the development of new technologies in the EMS area.

The agencies have determined that Emergency Medical Service (EMS) continues to be an area of national concern, and that countermeasures exist in this area which have proven to be effective. Accordingly, the agencies will continue to include it in the list of National Priority program areas.

The national concern which EMS addresses is summarized in testimony of Mr. William Metcalf, Director of Emergency Medical Services, Colorado Department of Health. He states, "Unfortunately, it's doubtful that we'll ever prevent all highway accidents from occurring and, thus, we must be prepared to manage those people who are injured as a result of highway accidents. If we accept the fact that we'll never successfully eliminate all highway accidents, then we must turn our attention to Emergency Medical Services as a method for reducing highway injuries and fatalities after the crashes have occurred. This is particularly true if we keep in mind the statistics reported by the American Trauma Society, which state that one out of every five fatalities due to injury, . . . is the result of a survivable injury, if that person had received the appropriate treatment."

In the NPRM, the agencies state their belief that comprehensive systems of trauma care and improved prehospital services are effective in reducing injuries and fatalities. The comments support this statement, and identify the elements that are necessary to optimize the outcome of highway and traffic related injuries, including the single number public access, coordinated dispatch, ambulance to hospital communications, trained first responders and prehospital personnel, adequate ground and appropriate air transportation, highly trained in-hospital personnel at specialized trauma care centers, prehospital and hospital

coordination, and injury or trauma registries.

The commenters also emphasize the effectiveness of this program area in fostering integrated programs at the local level. EMS personnel they indicate, have become increasingly involved in occupant protection, alcohol prevention, public education and traffic records programs in recent years. As already stated, the agencies believe that integrated and comprehensive activities such as these should be encouraged.

The particular countermeasures which are addressed in each comment depend largely on the sophistication of the EMS system which is available to the respondent. Commenters from States still needing basic prehospital services, for example, highlight the success of pilot projects or the needs in prehospital services; those from rural areas focus on the difficulties which are unique to these communities; and States and communities having the essential prehospital components emphasize the importance of trauma system development, trauma registries, and programming to refine the delivery of care to highway injured patients.

The IACP points out, "Statistics show that the difference between life and death in motor vehicle accidents is directly related to the sophistication of the available emergency services." The agencies therefore wish to provide sufficient flexibility in the EMS program area, to enable States at all levels of sophistication to improve their systems of trauma care.

The Governor's Representative for the State of Maryland recommends changing the name of Emergency Medical Services to "Pre-Hospital Emergency Medical Services" to "more clearly identify the true scope" of the program area. The agencies believe this would unnecessarily limit the focus of the program. At the other end of the spectrum, the National Association of State Emergency Medical Services Directors recommends that we recognize that "EMS represents a sophisticated system of care that begins even before a motor vehicle accident occurs and extends through rehabilitation, far beyond the emergency room doors." The agencies believe EMS should continue to emphasize the area of acute care, which covers pre-hospital and the initial stages of hospital care for highway-injured patients, as well as prevention and intervention activities.

(5) Traffic Records

Comments were received recommending continuation of Traffic Records as a priority program from a number of respondents, including States, NAGHSR, law enforcement and other State and local agencies, universities and colleges, and national organizations (including AAA, HUFSAM, ITE, and NSC).

As he did with regard to EMS, Mr. Meyerring of the Minnesota Department of Education recommends discontinuation of this program, asserting "states should be required to submit plans to bring [Traffic Records] systems up to a set of standards. * * * Upon completion of the plan the state would no longer receive funds." As stated previously, the thrust of Mr. Meyerring's comment is already addressed through the agencies' administration of the 402 program under the seed money concept. To the extent that Mr. Meyerring meant literally that no Traffic Records activities Statewide should be eligible for 402 funding once certain standards are attained, the agencies disagree with his recommendation. It runs contrary to the requirement imposed by Congress that the standards be changed to guidelines, and will therefore not be adopted. In addition, we find that such an approach would stifle the implementation of new technologies in the Traffic Records area.

In addition, two States recommend that the area be deleted. However, in making these recommendations, both seem to assume that the traffic records functions would be integrated into other program areas. Neither suggests discontinuing funding for the types of activities which have been supported under the Traffic Records program.

The Maryland Governor's Representative states, "the Traffic Records program area as such can be eliminated without any adverse effect on federally funded state traffic records improvements." However, he also asserts, "any amendments to the program areas [should] be of a broadening nature, and not more restrictive * * * [since] states must have maximum flexibility." Most of the comments suggest, and the agencies believe, that since this program area is of such importance, and since it involves unique and specialized countermeasures, it requires separate designation as a National Priority program.

The Montana Governor's Representative, at the Lakewood, Colorado hearing, proposed deletion of the Traffic Records program and, in its place, a new priority area called "Program Administration and Management." He recognizes that "[the area of traffic records] probably is the real foundation of the whole program," but he asserts that these functions "can be provided by a good sound staff in administering a program." Montana also recommends that the agencies remove the 10 percent cap for planning and administration costs, which was established in the 1982 final rule. Since these issues were not raised in the NPRM, the agencies did not receive many comments addressing them. Two States present at the Colorado hearing commented on Montana's recommendation to establish Program Administration and Management as a new priority area, and both indicated that they do not believe this is necessary. The Governor's Representative from Oregon agreed with Montana that the 10 percent cap on planning and administrative costs should be removed.

The agencies have decided not to add Program Administration and Management to the list of priority programs, nor to remove the 10 percent cap for these costs. Our decision is based on the same concerns we cited in our 1982 joint final rule. We want to ensure that sufficient funds are put into safety programs rather than be absorbed by administrative overhead.

In addition, we find that Traffic Records should continue to be included on the list of National Priority program areas. Our finding is based on a conclusion that Traffic Records continues to be an area of national concern, and that measures exist in this area which have proven to be effective in addressing highway safety problems.

It is clear from the comments that this program area is considered to be of national concern. Arkansas' submission is representative. It states, "the Traffic Records area is the lynch pin of the national highway safety program * * * [and] should remain an emphasis area." Many comments emphasize the fact that traffic records are essential for the States to perform meaningful problem identification, evaluation, countermeasure development, planning and program management, and to make informed decisions. The Louisiana Governor's Representative states, "I think it's the basis of most of everything that we do." In addition, the commenters indicate that all other priority program areas depend on traffic records for support. As stated by NSC, "Traffic records is the unseen partner * * *" to the other priority areas. Whether it is to track problem drivers, identify portions of roadways where crash frequency is high or to type-cast pedestrian incidents, Traffic Records provide essential data.

The commenters are in agreement that measures have proved to be effective in this area. Texas, for example, indicates,

"Advances in computer technology and systems design have significantly enhanced the State's ability to access and analyze" data. Some States refer to their success with Comprehensive Computerized Safety Recordkeeping Systems, which is designed to link together State data components and integrate subfiles. However, as technology improves and traffic safety issues change (thereby requiring that new data elements be added to State data bases) the commenters stress the continuing need for support in this area. For example, there appears to be a need to improve traffic record systems (perhaps by adding new data elements) to help identify the particular causes of pedestrian fatalities. The agencies encourage the use of funds in this area to make these improvements, because we believe they will provide great assistance in the development of appropriate local countermeasures which are effective in addressing this problem. The commenters also list other areas which continue to require attention in the area of Traffic Records, including the need to: Link computer systems and integrate data elements; establish uniform data elements; implement innovative driver licensing techniques to identify problem drivers and to ensure that sanctioned drivers do not receive licenses; and increase participation in rapid interstate information exchange systems (such as the National Driver Register) and compacts to assure proper licensing (such as the Driver License Compact).

In the NPRM, the agencies tentatively determined that section 402 funds apportioned to the States should not be used to fund classified truck and bus driver licensing activities conducted pursuant to the Commercial Motor Vehicle Safety Act of 1986 (CMVSA), which are covered by a separate FHWA grant program under that Act. Interested parties were asked, if they disagree with the agencies' initial determination, to indicate why section 402 funds are necessary to support actions taken under the CMVSA, and to identify specific actions that would be appropriate for funding under section 402.

Prior to the 402 hearings, the agencies received a number of requests for clarification with regard to this tentative determination. Therefore, at each of the hearings, a statement was made in our opening remarks to clarify what the agencies were seeking in the comments regarding the issue. We stated, "The agencies' tentative determination is based on our desire to see Section 402 funds used as seed money for programs which are most effective and which do not duplicate activities for which funding is otherwise available." We encouraged witnesses to provide specific examples of projects that would fit under either section 402 or CMVSA.

This issue is addressed by several commenters, almost all of which are national organizations (including the American Insurance Association, HUFSAM and NAGHSR) or States. The comments varied widely. A few States agree with the agencies' tentative determination, and testified that CMVSA activities should receive no section 402 funds beyond what has already been set aside out of section 402 monies. Others disagree with the initial determination, and cite examples of activities that section 402 should support. A few commenters go further, and recommend Truck Safety as a new priority area. Finally, NAGHSR and the State of Hawaii recommend that items which are covered by the FHWA grant program should be eligible for funding in the same way activities in non-emphasis areas are eligible.

The agencies have decided to adopt a combination of these recommendations. We recognize that there are certain activities which have traditionally been eligible for funding under the priority program areas, and also benefit commercial motor vehicle safety. These activities should continue to be eligible for funding. For example, selective enforcement programs that address commercial motor vehicle safety problems such as speeding, alcohol and drug impaired driving, safety inspections, and the enforcement of licensing and registration laws could be covered under Police Traffic Services. Improvements in a State's licensing, registration and records systems, that may include commercial motor vehicle actions, could fall under the Traffic Records priority program.

Truck safety activities that are outside the designated priority areas should not automatically be eligible for funding. The agencies have decided that these activities should be treated as non-emphasis areas, and approved for 402 funding only upon the submission of sufficient justification to the agencies' regional offices, in accordance with the existing funding procedures for non-emphasis programs. By adopting this decision, the agencies seek to avoid duplication and to ensure that the section 402 program does not become an alternative funding mechanism for implementing projects for which CMVSA grant funds are available. The agencies also believe that the highway safety expertise in each State is an important resource in carrying out the purpose of the CMVSA and we, therefore, actively encourage close coordination between Governor's Representatives for Highway Safety and others in the States who are involved in truck safety.

(6) Motorcycle Safety

The agencies received a substantial number of comments regarding Motorcycle Safety. Comments in support of adding Motorcycle Safety as a National Priority program area included submissions by Senator John C. Danforth, 17 States, NAGHSR, State and local law enforcement and other agencies, groups representing motorcycle interests (such as the Motorcycle Safety Foundation, the Motorcycle Rights Funds, the American Motorcycle Association, the Colorado Motorcycle Dealers Association and American Bikers Against Totalitarian Enactments, or ABATE), and national organizations representing broader highway safety interests (including AAA, the National Sheriffs' Association, IIHS and the American Insurance Association). One commenter states, "Having lain fallow for many years, motorcycle safety is certainly a fertile field for innovation. * * * we can scarcely expect [the States] to give high priority to a problem that is not considered a priority by the Federal Government."

The agencies have decided that Motorcyle Safety should be added to the list of National Priority program areas. Our decision is based on a finding that Motorcycle Safety is an area of national concern, and that countermeasures exist in this area which have proven to be effective.

The commenters agree that motorcycle crashes are a national problem, accounting for 4,500 deaths and 164,000 injuries each year. It is noted in the comments that motorcycles represent only about 3–4% of vehicle registrations, but 11% of all motor vehicle crash fatalities; that the death rate per vehicle mile travelled is 20 times, and the severe injury rate is 3 times, that for automobiles; that death or injury occurs in 8 of 10 motorcycle crashes compared to 2 in 10 automobile crashes; that 40–50% of motorcycle crashes involve alcohol use; and 40–50% of fatally involved motorcycle operators are unlicensed or improperly licensed. None of the respondents asserts that motorcycle safety is not a national problem.

Numerous countermeasures are cited by the commenters as having been proved to be effective, most notably safety helmet use, conspicuity enhancement, enforcement of operator licensing standards, rider education, motorist awareness programs, and programs for the responsible use of alcohol and other drugs. Several commenters voice concern, however, about single issue solutions to the motorcycle safety problem, specifically that some States seem to believe that if a helmet law is enacted no other motorcycle safety program is needed. These respondents stress the importance of integrated, comprehensive programming in motorcycle safety and in other traffic safety program areas, and the agencies fully agree with this comprehensive approach.

A NHTSA funded study in California conducted in the early 1980's found that there were 15–21% fewer motorcycle crashes when riders passed a rigorous licensing procedure. (Current data suggest that approximately 40% of riders involved in crashes do not have valid motorcycle operator licenses.) In the area of helmet use, effectiveness data consistently show that unhelmeted riders are three times as likely to sustain fatal head injuries as helmeted riders. Section 402 funded comprehensive motorcycle safety programs show a significant decrease in motorcycle crashes. For example, a York County, PA project showed an 85% reduction in motorcycle fatalities.

The Governor's Representatives for Hawaii and New Mexico state that, in their opinion, Motorcycle Safety should not be added as a priority program since their motorcycle education programs are self-funded. The agencies believe this issue is an important one, and have taken it into consideration. We agree with these States that, unlike other program areas, revenues can be and have been raised for motorcycle safety programs through registration, licensing, insurance or other fees relating to motorcycles. The commenters note that 29 States have passed legislation implementing State funded motorcycle safety programs, the majority of which are for rider education. The agencies strongly believe that additional States are capable of funding these programs themselves. We strongly encourage them to do so, and to determine the effectiveness of these programs. The Florida Bureau of Public Safety Management indicates in its comments that 402 funds have been "effective in focusing attention to the seriousness of the [motorcycle safety] problem in Florida," which has led to adoption of legislation dedicating funds to rider education. It is the agencies' strong desire that identifying motorcycle safety as a National Priority program area will provide the added momentum needed for many more States to obtain dedicated funds for not only rider education, but also for comprehensive motorcycle safety programs.

The agencies believe 402 funding can also benefit the States which already have dedicated motorcycle funds. Only a few States are generating enough funds to support comprehensive motorcycle safety programs, and small States with few motorcycle registrations are not generating enough funds to fully support even a rider education program. It is our belief that States currently funding rider education may be able to expand into more comprehensive programs. The agencies intend to track the States' progress in establishing self-sufficient motorcycle safety programs, and to evaluate the comprehensiveness and effectiveness of these programs.

It was suggested by several commenters at hearings that section 402 funds should be used to subsidize the cost of rider education programs. Since the purpose of the section 402 program is to provide seed money, rather than to pay ongoing operating expenses for highway safety programs, this generally would be an inappropriate use of these funds. An example of an activity in the rider education area that would be appropriate for section 402 funding might be a pilot program that introduces rider education and helps it to become self-sufficient. The States should not limit their activities, however, to rider education. Section 402 funds may be used, for example, for activities that would lead to substantial increases in helmet use, programs to improve motorcycle conspicuity and motorist awareness of motorcycles, countermeasures against alcohol and drug involvement in motorcycle crashes, and programs to develop and enforce operator licensing standards and testing.

Illinois suggests and the agencies agree that this area should cover not only motorcycles, but also motor scooters, motor bikes and other similar types of vehicles. The problems associated with these vehicles, and the countermeasures which would address these problems, are similar to those for motorcycles. Accordingly, we encourage States to include motor scooters, motor bikes and other similar types of vehicles in their comprehensive motorcycle safety programs.

FHWA-Administered Program Area

Roadway Safety (formerly Safety Construction and Operational Improvements)

Comments were received from States, NAGHSR, national organizations (such as HUFSAM, ITE, and AAA), State and local highway agencies and representatives from the private sector, recommending the continuation of the FHWA program area on the list of National Priority programs. No comments were received suggesting the area's exclusion from the list.

The Governor's Representative and the engineering program manager from the State of Louisiana recommend that the title of the FHWA Priority program area be changed from "Safety Construction and Operational Improvements" to "Roadway Safety." The words "construction" and "improvements," they assert, are confusing and misleading to many since the 402 program's authorizing law prohibits use of section 402 funds for the design, construction or maintenance of highway projects. The agencies have decided to rename the FHWA program area, "Roadway Safety." We believe this new title better reflects the scope of the program.

The agencies will include Roadway Safety on the list of National Priority program areas. This decision is based on our finding that Roadway Safety is an area of national concern, and that countermeasures exist in this area which have proven to be effective.

The commenters addressing this program area agree that it is of national importance. ITE's comments summarize some of the respondent's concerns:

> * * * with traffic volumes expected to increase by 45 percent by the year 2005, higher vehicle ownership, and travel speeds projected to increase significantly in the coming years, fatalities and injuries sustained in motor vehicle accidents will continue to constitute a major health problem in the United States. * * * These trends are taking place at the same time the nation is facing a shortage of well trained traffic operations and safety personnel needed to effectively carry out the highway safety improvement programs. * * * As a result, education and training programs made possible through the section 402 program will become even more imperative in the coming years.

Other factors cited by the commenters as being of continuing concern include: Increased resurfacing and reconstruction activities on aging highways where workers and traffic must coexist; a greater number of older drivers and pedestrians; and a more diverse mix of small cars and large trucks on existing roadways.

ITE points out that it is difficult to measure the effectiveness of activities under this program area, since they serve "as the building blocks" which enable "State and local agencies to implement the direct impact projects and programs—such as the highway safety construction programs [which can not be funded under the 402 program]." Section 402 funds can be used to identify a problem, select a countermeasure and evaluate the results of an improvement. However, any construction improvements made must be financed with other funds. In addition, several commenters assert that increased funds are needed to maintain a safe roadway environment. As is discussed below under the heading Amendments That Would Require Congressional Action, they suggest that additional resources be made available to the States under the FHWA portion of section 402.

However, the respondents identify a number of countermeasures which, they find, have proved to be effective, and have provided high payoffs with the funds available. Commenters representing State and local jurisdictions, in particular, emphasize the benefits derived through training, safety engineering and traffic operational assistance provided to local jurisdictions, which have no in-house traffic engineering expertise. The agencies have found, and commenters agree, that these activities have helped to spur technological advances, information sharing, and increased support for safety and operational improvements. As noted by NAGHSR and other respondents, these activities also often trigger community-wide traffic engineering efforts and interdisciplinary cooperation in and between jurisdictions combining engineering, enforcement and education at the local level. Other countermeasures reported by the commenters to be effective, and to provide a high payoff include safety studies, record systems improvements, and activities leading to low cost traffic engineering safety improvements, such as improved signing, markings and delineations, and lighting and intersection improvements.

The Governor's Representative for Oregon suggests that certain traffic records projects should be fundable with FHWA 402 monies. The agencies agree that certain traffic records activities relating specifically to the identification of roadway safety, operations and hazard problems may be appropriate for funding under Roadway Safety.

Non-Emphasis Areas

The agencies received comments recommending that additional program areas be added to our National Priority List. As will be explained in detail below, we have decided not to include these areas. Projects in these areas may of course be funded under either or both of the funding procedures that were established in the agencies' 1982 final rule (47 FR 15116), and codified in 23 CFR 1205.5. These procedures were explained in the preamble to that final rule.

> The Formal Decisionmaking Approach * * * is a method by which States could implement a formal decisionmaking process for highway safety plan development. The result of this decisionmaking process would be the identification by the State of those program areas that represent priorities within the State. * * * Once a State implements an approved process, the State would thereafter be able merely to list and describe in its Highway Safety Plan those projects identified through an exercise of such an approved process as the most effective in reducing accidents, injuries and fatalities in that State, certify that those projects were identified in accordance with that process, and supply the final decisionmaking results. (47 FR at 15118)
>
> The Problem Identification Approach * * * consists of using the existing procedures for problem identification and countermeasure development, including guidelines. [However,] * * * a greater degree of substantive review of proposed projects outside of [the National Priority program] areas is clearly necessary and appropriate. The advantage of this approach is that all of the States currently utilize this procedure and are familiar with the review process. (47 FR at 15119)

These funding mechanisms permit States to support, under section 402, new and innovative programs in any highway safety area and to address problems which are unique to a particular State, provided sufficient justification has been submitted. Since 1982, over $9 million in 402 funds have been obligated for projects under these mechanisms. States which identify significant problems outside the priority areas, for which there are effective countermeasures available, are encouraged to continue to use these procedures in order to address their unique regional problems. We note that at least one commenter views the process for funding non-emphasis areas as a difficult hurdle to surmount. It is not the agencies' intention to create an unnecessary or difficult barrier for the States to overcome. This process was created merely to provide an orderly method for assuring that major highway safety problems at the State and local level are being addressed with effective countermeasures. Any State that has difficulty in following the non-emphasis funding procedures should contact the agencies' regional and field staff, who stand ready to actively provide assistance.

In the NPRM, we stated that we were not proposing any changes to these funding procedures. A number of respondents commented on the need for flexibility in the 402 program, and some recommended increasing the program's flexibility by adding to the list of priority programs. The State of Alaska, due to the limited size of its highway safety staff, went so far as to suggest inclusion of program areas that are not presently a concern in the State. The Governor's Representative explained, if these areas were ever to become a problem, he did not believe he could afford to spend the time necessary to develop justification under the funding procedures. For this reason, he states, program areas simply are not funded in Alaska, unless they have been designated as National Priority programs. However, he did not suggest any amendments to the procedures. The vast majority of those addressing this issue consider the procedures established in 1982 to provide sufficient flexibility to address identified highway safety problem areas. Maryland comments that "this has sometimes required a rather liberal interpretation of the types of measures covered by particular priority areas." As stated by New Mexico, "There can be little doubt that the perceived needs and problem areas will differ from state to state as well as in different communities within a state." The State continues, "* * * flexibility exists in the existing program for this state to address its primary problem areas and to develop and obtain approval of projects in other areas of highway and traffic safety as the need arises." Accordingly, these procedures will remain unchanged.

(1) Pedestrian and Bicycle Safety

Commenters in support of adding pedestrian or bicycle safety or both to the list of National Priority program areas included Congressman Vic Fazio from the State of California, 16 States, NAGHSR, groups representing bicycle interests (most notably, the League of American Wheelmen (LAW)), national organizations representing broader highway safety interests (including the National Sheriff's Association, ITE, AAA, American Insurance Association, and the NSC), universities, health and injury centers, and individuals (who are either active bicycle riders or instructors certified by LAW). Others were opposed to its inclusion. Eighteen States, for example, recommended either that the

area of pedestrian and bicycle safety, in particular, should not be included as a priority program, or that the list of priority programs should not be expanded at all.

The agencies recognize that this program, particularly with regard to pedestrians, is an area of national concern. As we stated in the NPRM, nearly 8000 non-occupants (6771 pedestrians and 941 bicyclists) were killed in motor vehicle crashes in 1986, which represents 20% of all motor vehicle fatalities. In some urban areas, non-occupant fatalities represent 50% or more of all motor vehicle deaths. The commenters note the high numbers of injuries with regard to bicycles (bicycle crashes result in 1.5 million injuries each year, 500,000 of which require emergency room treatment), although the fatality rate is not nearly as high as for pedestrians. While this area is considered to be, to a large extent, an urban problem, we received data from commenters showing that, at least in some States, fatality rates for bicycles and pedestrians in rural regions equal or exceed these rates in urban areas. In Montana, for example, 95% of bicycle crashes occur in urban areas, but 50% of the fatalities occur in the rural regions. In Wisconsin, 85% of bicycle and 80% of pedestrian incidents occur in urban areas, but 60% and 50% respectively of these fatalities occur in rural regions.

The agencies have decided, however, not to include pedestrian and bicycle safety in our list of National Priority program areas at this time. Our decision is based on a finding that many of those countermeasures funded under the existing priority programs have been proven to be effective in reducing pedestrian and bicycle safety problems. (Examples of these countermeasures are discussed above under the headings, Alcohol and Other Drugs Countermeasures, Police Traffic Services and Traffic Records.) It is based also on a determination that currently, sufficient other proven countermeasures outside the priority programs named above, have not been demonstrated to exist in this area. The agencies are not at liberty to determine that the pedestrian and bicycle area should be added to the list of National Priority programs simply on the basis that the area involves a serious problem. The Federal statute directs the agencies to determine under section 402 which programs *are "most effective in reducing* accidents, injuries and deaths [emphasis added]." The agencies can and, in fact, plan to support efforts to address pedestrian and bicycle safety problems through other means (such as through funding under other 402 priority categories, by means of the non-priority 402 funding process, and under the section 403 program which, unlike 402, is designed to conduct highway safety research and development). However, the agencies do not believe that pedestrian and bicycle safety can be properly included on the list of National Priorities until the countermeasures in these areas have been demonstrated to be effective.

In the area of pedestrian safety, NHTSA studies in the 1970's showed that some programs could achieve measurable decreases in one category of incidents (so-called dart-out accidents involving children). However, other countermeasures that would constitute a comprehensive program have either not been rigorously tested or shown no reductions in incidents.

The agencies note that alcohol-related crashes (including events where the driver, pedestrian or both had consumed alcohol) constitute the largest single type of pedestrian safety problem. As to alcohol impairment of *drivers*, the agencies note there are many effective countermeasures, and that program area has been retained on the priority list (see previous discussion); those programs serve to promote safety for pedestrians as well as vehicle occupants. However, as to alcohol impairment of *pedestrians*, NHTSA is not aware (through its own work or other sources) of countermeasures that have been either developed or tested.

Accordingly, the agencies have decided not to add pedestrian safety at this time as a separate category on the National Priority program list. However, if a State has a pedestrian safety program which it believes will be effective in reducing crashes and injuries, the State can still make use of Section 402 funding, under one of the other priority categories (e.g., "dart-out" programs funded under police traffic services), or under the non-priority funding process to address special local needs.

A number of commenters suggest that, due to a lack of funds and emphasis, activities in this area have been suspended in many States and countermeasures now need to be developed. There are few if any materials, for example, which address the problems of alcohol involvement in pedestrian and bicycle fatalities or which target the elderly population, which is over-represented in pedestrian death rates. The agencies are aware of a number of local projects which appear to be effective in addressing the safety of young pedestrians. However, this population represents only about 10% of the overall number of pedestrian fatalities. Approximately 45 percent of pedestrian fatalities for age 15 and older involve alcohol, and a considerable number involve the elderly. Countermeasures addressing these problems need to be developed and tested before this area can be considered to be among the "most effective" programs. We strongly encourage the States to use the funding processes for non-emphasis areas to obtain approval for using 402 monies to introduce effective, innovative pedestrian safety countermeasures.

We note that some commenters cite countermeasures which they believe have been demonstrated to be effective in addressing bicycle safety. Although we do not believe the bicycle safety component of the program alone represents a problem which is national in scope, we strongly encourage States and communities with specific bicycle safety problems and effective countermeasures to address these problems, to use the current non-emphasis funding process to finance bicycle safety projects.

We note also that some proven roadway countermeasures exist which have been identified by FHWA. Pedestrian and bicycle problems, for which roadway countermeasures have been identified, may be covered under the FHWA National Priority program area, entitled Roadway Safety. Since it is mentioned in some comments, we wish to make sure the public is aware that 402 funds may not be used for design and construction purposes. Roadway construction countermeasures such as fixed illumination, urban intersection improvements and barriers, for example, can not be financed with section 402 funds. What may be financed with 402 funds under Roadway Safety, are projects to identify areawide pedestrian and bicycle-related problems and to select specific countermeasures to reduce these accidents. The actual design and construction of the countermeasures which are selected under 402 could then be funded using other Federal-aid, State or local assistance.

Texas suggests, "Before committing significant amounts of federal funds to pedestrian and bicycle safety, it is recommended that an in-depth analysis of the history of such programs be made to determine a limited sample of successful or potentially successful projects." The agencies agree that, at this time, new and innovative countermeasures need to be developed and proven to be effective. To assist in

the research and development of effective countermeasures, we will compile and distribute a compendium of projects that appear to be effective in addressing pedestrian and bicycle safety problems. NHTSA intends also to devote Highway Safety Research and Development funds, under section 403 of the Highway Safety Act of 1966, to identify effective countermeasures in the area of pedestrian safety. In addition, if a State is interested in conducting a demonstration project to determine the effectiveness of a particular countermeasure, NHTSA would consider providing section 403 funds for evaluation purposes. Further, the agencies strongly encourage the States to use the non-emphasis area funding mechanisms described above, to initiate and test pedestrian and bicycle safety projects, and to report their methodology and results to us. Our regional and field staff will be available to provide States with assistance.

(2) Driver Education

The inclusion of Driver Education as a priority program was recommended by two States, AAA, the American Association of Retired Persons, groups representing driver education interests (such as the American Driver and Traffic Safety Education Association and the Driver and Safety Educators' Association of New York State), educators, and individuals.

The agencies are not persuaded that driver education should be added to the list of National Priority program areas.

The commenters generally cite the number of accidents, injuries and fatalities nationally to establish that driver education addresses a national problem. One commenter mentions that the driver causes between 87 and 93 percent of all crashes. However, this figure includes causes such as alcohol and drug use, and traffic law violations which are addressed through the existing emphasis areas. More importantly, driver education has not been demonstrated to be a most effective countermeasure for addressing these problems. Many programs and countermeasures might have *some* impact on reducing accident, injury and fatality rates. However, the agencies are required by Congress in this rulemaking to emphasize as National Priority program areas only the *most* effective programs.

The data most often cited in support of the effectiveness of driver education, are the results of a study conducted in DeKalb County, GA. The primary objective of the DeKalb project was to determine the crash reduction potential of competency-based driver education training as compared to no formal training. To accomplish this, researchers evaluated the driving records of student volunteers who completed either the Pre-Driver License (PDL) curriculum (a 30 hour course) or the Safe Performance Curriculum (SPC) (an 80 hour course), or who were in the control group. Based on a follow-up evaluation, which was presented to the Research Division of the American Driver & Traffic Safety Education Association at its Annual Conference in August 1987 by a NHTSA Research Psychologist, commenters note that driver education students were involved in 6% fewer crashes and committed 10% fewer violations than untrained students. The agencies believe, however, that the results of the DeKalb study are mixed. Although it is true that students who completed the PDL curriculum were involved in 6% fewer crashes, only male PDL graduates committed fewer traffic violations. In addition, the study found that the SPC was effective in reducing convictions but not crashes for males, and neither crashes nor convictions for females.

While we are not persuaded to add Driver Education to the list of National Priority programs, we want to point out that States may apply for section 402 funding under the 1982 funding mechanisms for new and innovative projects relating to driver education. However, we would like to emphasize that the purpose underlying the 402 program is to provide seed money for new and innovative ideas, not to provide the operating expenses for ongoing programs.

(3) Elderly and Youth Programs

A number of commenters, including 10 States, raise concerns regarding the need to develop programs designed to educate young and elderly drivers. The University of North Carolina, Highway Safety Research Center, for example, suggests that young drivers be introduced into the driving population gradually, and that older drivers gradually exit therefrom. The commenters note, in particular, the overrepresentation of youth in fatalities and the trend toward a greater proportion of older drivers in our population. Louisiana estimates that by the year 2020, one fifth of our population will be 65 or older. However, only a few of the respondents suggest adding a new emphasis area to address these concerns. Most of the commenters seem to be satisfied that these issues can be addressed through the emphasis areas currently in place, and the 1982 funding procedures. While the agencies recognize that youth are overrepresented in fatalities and consider this issue to be of importance, we believe that programs which have been proven to be effective focus not only on the age of this population, but rather on the particular cause of the fatalities. For this reason, we believe that problems affecting the young can and, in fact, should be funded under the existing priority programs discussed elsewhere in this final rule.

In addition, the agencies did not receive in the comments, nor do we have at this time, sufficient evidence to indicate that the particular highway safety problems affecting elderly and young drivers are sufficiently unique that they stand alone as separate national concerns, or that there are countermeasures outside the existing priority emphasis areas which have been proved to be most effective in these areas in reducing accidents, injuries and fatalities.

We note that, with regard to elderly drivers, section 208 of the Surface Transportation and Uniform Relocation Assistance Act of 1987, requires the Secretary to "undertake to enter into appropriate arrangements with the National Academy of Sciences to conduct a comprehensive study and investigation of (1) problems which may inhibit the safety and mobility of older drivers using the Nation's roads, and (2) means of addressing these problems," and to develop a pilot program of highway safety improvements in conjunction with the study. In accordance with the requirements of the Act, results of this study and an evaluation of the pilot program, shall be reported to Congress. The results of these analyses, due in April 1989 and April 1990 respectively, should provide valuable additional information on the significance of the problem and appropriate countermeasures.

(4) Innovative Programs

The State of North Dakota suggests reserving a portion of 402 funds, such as 10%, for innovative projects. In testimony, Mr. Joe Carlson, for the State, recommends establishing a separate category for innovative activities, which would allow the State "to try some things that may not have been tried or that may be unique to our own situation." The agencies believe, and most of the comments indicate, that the procedures put in place in 1982 provide sufficent flexibility for States to try new things. We note that many of the States, including North Dakota, have conducted some very innovative activities, both within and outside the priority programs. Accordingly, we will not add

this to the list of National Priority program areas.

(5) Periodic Motor Vehicle Inspections

One commenter suggests adding periodic motor vehicle inspections to the list of National Priority program areas. The conference report on the continuing resolution for fiscal year 1988 (Pub. L. 100–202) directed that "NHTSA conduct a comprehensive evaluation of the effectiveness of state motor vehicle safety inspection programs * * *." In accordance with the conferees' instructions, NHTSA has submitted to the House and Senate Appropriations Committees and to appropriate authorizing committees, a study plan describing study methodology and specifying a detailed study timetable. The agencies believe it would be premature to include periodic motor vehicle inspections as a priority area in light of this pending evaluation of this area's effectiveness. States with particular problems in this area, for which proven effective countermeasures are available, are encouraged to use the non-emphasis funding processes to obtain approval for local funding.

(6) Others

We also received suggestions that the following additional program areas either be added to the list of priorities or at least should receive some national attention: School bus safety, Operation Lifesaver (a program which addresses highway-railroad grade crossing safety), winter driving and regional vehicles (such as snowmobiles, dune buggies and mud buggies). The agencies did not receive in the comments, nor do we have at this time, sufficient evidence to indicate that these particular problems require designation as separate 402 National Priority areas. This does not preclude, however, the funding of particular projects which use proven effective countermeasures to address problems identified in the States, through the non-emphasis area funding mechanisms. In addition, there may be funding sources outside of the section 402 program that can address some of these programs and activities.

Additional Issues Raised in Comments

(1) Change Standards to Guidelines

Section 206(a) of the Act amends section 402 by replacing the terms "standard" and "standards" wherever they appear with the words "guideline" and "guidelines." To implement this change, the agencies proposed, in the NPRM, to amend the body of 23 CFR Part 1204. We proposed to replace the terms "standard" and "standards" with the words "guideline" and "guidelines," and to replace the term "shall" with the word "should." We received no comments objecting to these proposed regulatory changes.

As stated in the NPRM, the agencies intend to review all the regulations that implement section 402, including Part 1204, and the supplemental materials that follow, to determine whether additional revisions need to be made. See, 23 CFR Chapter II. Any additional revisions will be accomplished in a separate rulemaking action.

(2) Periodic Update of the Guidelines

The Governor's Representative for New Jersey recommends that the agencies "update the guidelines periodically and make them available to the states as models and references which can be used in developing programs." Several other commenters echo this sentiment. The agencies believe they have an important role in technology transfer in all areas of highway safety. We therefore agree with this comment in principle. However, we are unable, at this time, to set a time schedule for updating each of these guidelines. As stated above, we intend to review all the regulations that implement section 402, including Part 1204, which will contain the highway safety program guidelines, to determine whether additional revisions need to be made. Any additional revisions will be accomplished in a separate rulemaking action.

(3) Change Accident to Crash

The State of New Mexico suggests that the agencies change their terminology, by referring to a collision of one or more vehicles as a "crash" rather than as an "accident." The State contends that the term "accident" suggests that only factors that are unintentional and unavoidable contribute to a collision, and we know this to be untrue.

The agencies completely agree with this comment, and, in fact, we have tried to use the term "crash" rather than "accident" in this rulemaking and in other agency documents and statements. However, as was pointed out at the Fort Worth hearing where this comment was raised, Congress instructed us to determine those programs which are most effective in reducing "accidents, injuries and fatalities." Accordingly, when referring to our statutory mandate, we have continued to use the term "accident." We encourage New Mexico, and other members of the traffic safety community to use the term "crash" instead of "accident" where appropriate, for the reason cited above.

(4) Amendments That Would Require Congressional Action

Several respondents, most of them States, object to the earmarking of section 402 funds. The State of Idaho, for example, argues, "the use of 'earmarked' funding categories reduces a state's ability to deal flexibly with its Highway Safety problems. When funds are designated for expenditure only in specific program areas, they cannot be used for other areas where a state's problem may require extra funds. If a state is unable to develop suitable projects to deal with problems in an earmarked area, the funds may accumulate. Pressure then builds to expend these earmarked funds, and low quality projects may be funded in preference to none at all."

New Mexico objects to earmarking of funds, and also the reduction of 402 monies. Mr. Howard Graff, on behalf of the State, testified that these actions "have created some administrative and management problems because it reduces our flexibility to develop and fund projects based on our perceived needs in our particular state." Other respondents also raise the issue of reduced section 402 funds, most often with regard to FHWA's portion of these monies.

The Traffic Improvement Association (TIA) of Oakland County suggests that non-governmental organizations, such as private non-profit groups, should be made eligible for direct funding under section 402. The Pennsylvania Association for Safety Education, Inc. recommends that the agencies consider certain factors (such as the State's per capita number of accidents, miles of roadway, mileage usage and safety belt laws) in their allocation of section 402 funds. One respondent suggests that the agencies' "role be substantially reduced and a highway safety block grant program be implemented."

While we share the commenters' objections to earmarking of 402 funds, the agencies are without authority to act on any of these proposals, unless Congress first amends the laws under which we operate. Congress establishes the agencies' funding limitations for the section 402 program, and has earmarked portions of these funds, notwithstanding the agencies' objections. See, for example, section 1(b) of Pub. L. 98–363, as amended by section 202(b) of Pub. L. 100–17, which earmarks 8 percent of

States' highway safety apportionments for developing and implementing comprehensive programs concerning the use of child restraint systems, and section 5 of Pub. L. 98–363 (codified, in 23 U.S.C. 402(k)) which established a 10 percent set aside for traffic records for two years. The agencies do not have authority to apportion section 402 funds in amounts that exceed Congressional limitations, or to disregard any restrictions or earmarkings placed on those funds by law.

With regard to TIA's comment, section 402 does not permit the agencies to distribute funds directly to parties other than the States. The Act requires that funds "shall be used to aid the States to conduct the highway safety programs approved" at the Federal level (section 402(c)). "* * * the Governor of the State shall be responsible for the administration of the program through a State highway safety agency" (section 402(b)(1)). The State highway safety agency and/or political subdivisions may be able to provide support to non-profit organizations and other highway safety professionals.

The factors which must be considered in allocating section 402 funds are described in the Act. Since 1969, the agencies have been required to apportion 402 funds "75 percent in the ratio which the population of each State bears to the total population of all the States, as shown by the latest available Federal census, and 25 percent in the ratio which the public road mileage in each State bears to the total public road mileage in all States." (section 402(c)).

Implementation of a block grant would also require legislation. The roles of the agencies are defined in 23 U.S.C. 402. See, for example, section 402(a), which provides that the agencies are responsible for approving State highway safety programs, designed to reduce traffic accidents and deaths, injuries and property damage resulting therefrom.

Impact Analyses

A. Federalism Assessment

The agencies have considered whether this action has any federaliam implications. We have determined that this final rule furthers the principles of federalism established by the Framers of the Constitution while striking an appropriate balance between increased State flexibility and an appropriate level of Federal involvement as required by the enabling legislation for this grant program. Highway safety does constitute a problem of national scope, and for this reason, Congress directed the agencies to determine those programs most effective in reducing highway accidents, injuries and fatalities. In this final rule, we increase the discretion of the States, by expanding the list of National Priority program areas, which are eligible for section 402 funding. In addition, programs that are not on this list, may also be supported under section 402 under established funding procedures. As discussed earlier in this final rule, we believe, as do the vast majority of commenters who discussed them, that these procedures provide the States with sufficient flexibility to develop their highway safety programs. As stated by New Mexico, "* * * flexibility exists in the existing program for this state to address its primary problem areas and to develop and obtain approval of projects in other areas of highway and traffic safety as the need arises."

B. Economic Impacts

The agencies have analyzed the effect of this action and determined that it is not "major" within the meaning of Executive Order 12291 or "significant" within the meaning of Department of Transportation regulatory policies and procedures. The rulemaking will not affect the level of funding available in the highway safety program, or otherwise have a significant economic impact, so that neither a Regulatory Impact Analysis nor a Regulatory Evaluation is required. Although not required to do so, the agencies prepared an Evaluation in 1982 to assist them in the rulemaking process. The Evaluation was reviewed by the agencies and an Addendum prepared in association with the NPRM which led to this final rule. These documents have been submitted to the Docket Section, Room 5109, and are available for inspection. Also in association with the 1982 rulemaking process, the agencies prepared and submitted to the public docket, Effectiveness and Efficiency Papers regarding the programs then being considered to be National Priority program areas. These documents are also available in the public docket, Room 5109, Docket Number 81–12, General Reference Section.

C. Impacts on Small Entities

In compliance with the Regulatory Flexibility Act, the agencies have evaluated the effects of this action on small entities. Based on the evaluation, we certify that this action will not have a significant economic impact on a substantial number of small entities. States will be recipients of any funds awarded under the regulation and, accordingly, the preparation of a Regulatory Flexibility Analysis is unnecessary.

D. Environmental Impacts

The agencies have also analyzed this action for the purpose of the National Environmental Policy Act. The agencies have determined that this action will not have any effect on the human environment.

E. Paperwork Reduction Act

The requirement relating to this proposal, that each State must submit a highway safety plan to receive section 402 grant funds, is considered to be an information collection requirement, as that term is defined by the Office of Management and Budget (OMB) in 5 CFR Part 1320. Accordingly, this proposed action has been submitted to and approved by OMB, pursuant to the requirements of the Paperwork Reduction Act (44 U.S.C. 3501, *et seq.*). These requirements have been approved through May 31, 1989; OMB No. 2127–0003.

List of Subjects in 23 CFR Parts 1204 and 1205

Grant programs, Highway Safety.

In accordance with the foregoing, Parts 1204 and 1205 of Title 23 of the Code of Federal Regulations are amended as set forth below.

PART 1204—[AMENDED]

1. The authority citation for Part 1204 continues to read as follows:

Authority: 23 U.S.C. 402; delegations of authority at 49 CFR 1.48 and 1.50.

2. The title of Subchapter B is revised to read as follows:

SUBCHAPTER B—GUIDELINES

3. The title of and text in 23 CFR Part 1204, which consists of § 1204.4 (excluding the supplemental materials that follow, which may be amended in a separate rulemaking action on a future date) is amended by removing the term "standard" and "standards" everywhere they appear and by adding in their place the word "guideline" and "guidelines", and by removing the term "shall" everywhere it appears and by adding in its place the word "should".

PART 1205—[AMENDED]

4. The authority citation for Part 1205 is amended to read as follows:

Authority: 23 U.S.C. 402; delegations of authority at 49 CFR 1.48 and 1.50.

5. In § 1205.3 paragraph (a)(1) is revised and paragraph (a)(6) is added to read as follows:

§ 1205.3 Identification of National Priority Program Areas.

(a) * * *

(1) Alcohol and Other Drug Countermeasures.

* * * * *

(6) Motorcycle Safety.

* * * * *

6. Section 1205.3(b) is amended by removing the phrase "Safety Construction and Operational Improvements" and by adding in its place the words "Roadway Safety".

Issued on April 1, 1988.

Diane K. Steed,

National Highway Traffic Safety Administrator.

Robert E. Farris,

Deputy Federal Highway Administrator.

[FR Doc. 88-7544 Filed 4-1-88; 4:43 pm]

BILLING CODE 4910-59-M

DEPARTMENT OF HOUSING AND URBAN DEVELOPMENT

Office of the Assistant Secretary for Housing-Federal Housing Commissioner

24 CFR Part 200

[Docket No. R-88-1387; FR-2290]

Lead Standards in Water Piping

AGENCY: Office of the Assistant Secretary for Housing-Federal Housing Commissioner, HUD.

ACTION: Final rule.

SUMMARY: This final rule amends HUD's Minimum Property Standards (MPS) for water supply systems to conform those standards to a recent statutory amendment. That amendment prohibits HUD mortgage insurance or assistance to newly constructed residential property that contains a potable water system, unless such system uses only lead-free pipes, solder, and flux.

EFFECTIVE DATE: June 19, 1988.

FOR FURTHER INFORMATION CONTACT: Mark W. Holman, Manufactured Housing and Construction Standards Division, Room 9152, Department of Housing and Urban Development, 451 Seventh Street, SW., Washington, DC 20410. Telephone (202) 755-6590. (This is not a toll-free number.)

SUPPLEMENTARY INFORMATION: Section 109(c)(1) of the Safe Drinking Water Act Amendments of 1986 (Pub. L. 99-339, effective June 19, 1988) (1986 Amendments) prohibits the Department from insuring a mortgage or furnishing assistance "with respect to newly constructed residential property which contains a potable water system unless such system uses only lead-free pipe, solder, and flux." Section 109(c)(2) states that "lead free"—

(A) when used with respect to solders and flux refers to solders and flux containing not more than 0.2 percent lead, and

(B) when used with respect to pipes and pipe fittings refers to pipes and pipe fittings containing not more than 8.0 percent lead.

This rule provides that no FHA mortgage insurance or assistance will be given to newly constructed residential property for which a building permit has been applied for on or after June 19, 1988 from the appropriate authority having jurisdiction, if the water supply systems of such property do not meet the lead-free standards set forth in § 200.926d(f)(1)(i).

HUD standards for water piping are now contained in 24 CFR Part 200, Subpart S—Minimum Property Standards. The MPS, in turn, reference standards found in nationally recognized model or acceptable State and local plumbing codes. These codes may not limit lead in water piping to the levels mandated by the 1986 Amendments. Accordingly, the statutory requirement concerning "lead-free" water supply systems is being incorporated into the HUD standards for water supply systems at § 200.926d(f)(1)(i)—the section governing one- and two-family dwellings.

In addition, the provision governing water supply systems in newly contructed multifamily structures is being amended to conform to the statute. 24 CFR 200.927 incorporates by reference in Handbook 4910.1 (*MPS for Housing* (1984 ed. with changes) the minimum property standards for multifamily and care-type housing. Paragraph 615-2.1 of that Handbook will be revised to read as follows:

615-2.1 *General.* Each living unit shall be provided with a continuing and sufficient supply of safe water under adequate pressure and of appropriate quality for all household uses. Newly constructed residential property for which a building permit has been applied for on or after June 19, 1988 from the competent authority with jurisdiction in this matter shall have "lead-free" water piping. For purposes of this Handbook, water piping is "lead-free" if it uses solders and flux containing not more than 0.2 percent lead, and pipes and pipe fittings containing not more than 8.0 percent lead. This system shall not impair the functioning or durability of the plumbing system or attachments.

As noted above, the effective date of the rule will be June 19, 1988, because the authorizing legislation, enacted on June 19, 1986, becomes effective 24 months after the date of its enactment. HUD believes that the deferred effective date of the statute was intended to enable program participants to change the design of water supply systems with as little disruption as possible. Therefore, although the MPS do not now prohibit the use of lead pipes, solder or flux, HUD believes that no change should be made to the MPS regarding lead-free piping before June 19, 1988.

Since this rule implements a statutory directive, the Secretary has determined that public comment is unnecessary and that this regulation should be published as a final rule.

Findings and Certifications

A Finding of No Significant Impact with respect to the environment has been made in accordance with HUD regulations at 24 CFR Part 50, which implement section 102(2)(C) of the National Environmental Policy Act of 1969. The Finding of No Significant Impact is available for public inspection during regular business hours in the Office of the Rules Docket Clerk, Office of the General Counsel, Department of Housing and Urban Development, Room 10276, 451 Seventh Street, SW., Washington, DC 20410.

This rule does not constitute a "major rule" as that term is defined in section 1(b) of the Executive Order on Federal Regulations issued by the President on February 17, 1981. Analysis of the rule indicates that it does not (1) have an annual effect on the economy of $100 million or more; (2) cause a major increase in costs or prices for consumers, individual industries, Federal, State, or local government agencies, or geographic regions; or (3) have a significant adverse effect on competition, employment, investment, productivity, innovation, or on the ability of United States-based enterprises to compete with foreign-based enterprises in domestic or export markets.

In accordance with 5 U.S.C. 605(b) (the Regulatory Flexibility Act), the undersigned hereby certifies that this rule does not have a significant economic impact on a substantial number of small entities. The rule provides for the applicability of Federal lead-free standards with respect to water supply systems. This provision does not impose any economic burden on small entities beyond that mandated by the new law.

This rule is listed as Item #978 in the Department's Semiannual Agenda of

Regulations published on October 26, 1987 (52 FR 40379) under Executive Order 12291 and the Regulatory Flexibility Act.

The Catalog of Federal Domestic Assistance program number is 14.117.

List of Subjects in 24 CFR Part 200

Administrative practice and procedure, Claims, Equal employment opportunity, Fair housing, Housing standards, Loan programs: housing and community development, Mortgage insurance, Organization and functions (Government agencies), Reporting and recordkeeping requirements, Minimum Property Standards, Incorporation by reference.

Accordingly, the Department amends 24 CFR Part 200 as follows:

PART 200—INTRODUCTION

1. The authority citation for Part 200 continues to read as follows:

Authority: Titles I and II of the National Housing Act (12 U.S.C. 1701 through 1715a–18); sec. 7(d), Department of Housing and Urban Development Act (42 U.S.C. 3535(d)).

2. Section 200.926d is amended by revising paragraph (f)(1)(i) to read as follows:

§ 200.926d Construction requirements.

* * * * *

(f) *Water supply systems*—(1) *General.* (i) Each living unit shall be provided with a continuing and sufficient supply of safe water under adequate pressure and of appropriate quality for all household uses. Newly constructed residential property for which a building permit has been applied for on or after June 19, 1988 from the competent authority with jurisdiction in this matter shall have lead-free water piping. For purposes of these standards, water piping is "lead free" if it uses solders and flux containing not more than 0.2 percent lead and pipes and pipe fittings containing not more than 8.0 percent lead. This system shall not impair the function or durability of the plumbing system or attachments.

* * * * *

Dated: March 24, 1988.

James E. Schoenberger,

General Deputy Assistant Secretary for Housing—Federal Housing Commissioner.

[FR Doc. 88–7447 Filed 4–5–88; 8:45 am]

BILLING CODE 4210-27-M

DEPARTMENT OF THE INTERIOR

Bureau of Indian Affairs

25 CFR Part 61

Preparation of Rolls of Indians

March 4, 1988.

AGENCY: Bureau of Indian Affairs, Interior.

ACTION: Final rule.

SUMMARY: The Bureau of Indian Affairs (BIA) is amending the regulations contained in 25 CFR Part 61 governing the preparation of rolls of Indians. The Cow Creek Band of Umpqua Tribe of Indians Distribution of Judgment Funds Act of 1987 directs the Secretary to determine the eligibility of two categories of Cow Creek Indian descendants who do not qualify for tribal membership, but who do meet certain other requirements specified in the Act. These nontribal members will be eligible to participate along with tribal members in certain tribal programs funded by a judgment awarded the Cow Creek Band of Umpqua Tribe of Indians in docket numbered 53–81L by the United States Claims Court. The BIA is amending Part 61 by adding paragraphs (f) and (g) to § 61.4 to include the qualifications for enrollment and the deadline for filing applications so that the procedures contained in Part 61 will govern the actions of the BIA in determining the eligibility of the two categories of Cow Creek Indian descendants.

EFFECTIVE DATE: April 6, 1988.

FOR FURTHER INFORMATION CONTACT: Superintendent, Siletz Agency, Bureau of Indian Affairs, P.O. Box 539, Siletz, Oregon 97380, telephone number: (503) 444–2679, (FTS 423–4111).

SUPPLEMENTARY INFORMATION: The authority to use these rules and regulations is vested in the Secretary of the Interior by 5 U.S.C. 301 and 25 U.S.C. 2 and 9. This final rule is published in exercise of rulemaking authority delegated by the Secretary of the Interior to the Assistant Secretary—Indian Affairs in the Departmental Manual at 209 DM 8.

The Cow Creek Band of Umpqua Tribe of Indians was awarded judgment funds in docket numbered 53–81L by the United States Claims Court. Funds to satisfy the award were appropriated by Congress. The Cow Creek Band of Umpqua Tribe of Indians Distribution of Judgment Funds Act of October 26, 1987, Pub. L. 100–139, authorized the use and the distribution of the judgment funds.

Section 5 of the Act of October 26, 1987, directs the Secretary to prepare within 365 days of the date of the Act a tribal membership roll of the the Cow Creek Band of Umpqua Tribe of Indians in accordance with the regulations contained in 25 CFR Part 61. The Act further directs that the tribal membership roll be published in the **Federal Register**. The rulemaking action amending Part 61 to provide for the preparation of the tribal membership roll is being published separately as a proposed rule at a later date in the **Federal Register**.

Section 6 of the Act of October 26, 1987, directs the Secretary to determine the eligibility of two additional categories of individuals who do not qualify for tribal membership, but who do meet certain other requirements specified in the Act. These nontribal members will be eligible to participate along with tribal members in certain tribal programs funded by the judgment award.

Section (6)(a)(1) of the Act of October 26, 1987, provides for the certification of eligibility by the Secretary of individuals to participate in two tribal programs, Higher Education and Vocational Training Program and the Housing Assistance Program. To be eligible individuals must, among other requirements, establish that they are descended from persons considered to be members of the Cow Creek Band of the Umpqua Tribe of Indians for purposes of the treaty entered into between such Band and the United States on September 19, 1853 (10 Stat. 1027). However, such individuals could not have shared or be descendants of persons who shared in the distribution of funds under the Act entitled "An Act to provide for the termination of Federal supervision over the property of the Klamath Tribe of Indian located in the State of Oregon and the individual members thereof, and for other purposes," approve August 13, 1954 (25 U.S.C. 564 *et seq.*), or under the Act entitled "An Act to provide for the termination of Federal supervision over the property of certain tribes and bands of Indians located in western Oregon and the individual members thereof, and for other purposes," approved August 13, 1954 (25 U.S.C. 691 *et seq.*).

To establish eligibility as a nontribal member for participation in the Higher Education and Vocational Training Program and the Housing Assistance Program, individuals must file or have filed on their behalf application forms with the Superintendent, Siletz Agency, Bureau of Indian Affairs, and with the Cow Creek Band of Umpqua Tribe of Indians. There is no deadline for filing applications for eligibility by this

category of nontribal members. To relieve individuals of any potential uncertainty as to how or where to file applications with the Tribe, the amendment provides for the Superintendent, upon receipt, to furnish a copy of the application form to the Tribe.

Section (6)(a)(2) of the Act of October 26, 1987, provides for the certification of eligibility by the Secretary of individuals to participate in the Elderly Assistance Program. In addition to meeting the same requirements as nontribal members applying for participation in the Higher Education and Vocational Training Program and the Housing Assistance Program, persons applying for participation in the Elderly Assistance Program must have been 50 years of age or older as of December 31, 1985, and, in accordance with the Act, must file or have filed on their behalf an application for participation within 180 days of the date of the Act, or by April 25, 1988. Application forms must be filed with the Superintendent, Siletz Agency, Bureau of Indian Affairs, and with the Cow Creek Band of Umpqua Indians. To relieve individuals of any potential uncertainty as to how or where to file applications with the Tribe, the amendment provides for the Superintendent, upon receipt, to furnish a copy of the application form to the Tribe.

In the interest of clarity the qualifications for eligibility for participation in the Higher Education and Vocational Training Program and the Housing Assistance Program and the qualifications for eligibility and the deadline for filing application forms for participation in the Elderly Assistance Program are being added as two separate paragraphs in the amendment to § 61.4. As a practical matter, however, it is not intended that persons who establish eligibility for participation in the Elderly Assistance Program will be required to file additional applications to establish eligibility for participation in the Higher Education and Vocational Training Program and the Housing Assistance Program. Furthermore, applications of individuals who file for the Elderly Assistance Program, but who do not qualify because they fail to meet the age requirement or because they failed to file by the deadline will be considered to determine whether the individual may qualify for participation in the Higher Education and Vocational Training Program and the Housing Assistance Program.

The primary author of this document is Kathleen L. Slover, Branch of Tribal Enrollment Services, Division of Tribal Government Services, Bureau of Indian Affairs, Room 1352, Main Interior Building, 1951 Constitution Avenue NW., Washington, DC 20245, telephone number: (202) 343-1702, (FTS 343-1702).

The Department of the Interior has determined that this rulemaking action amending Part 61 is a rule of agency procedure or practice. The regulations contained in Part 61 contain general enrollment procedures that can be made applicable to the preparation of a specific roll of Indians by amending the regulations to include the qualifications for enrollment and the deadline for filing applications. This rulemaking action is to provide the procedures that the BIA will follow in the processing of applications from individuals who meet or who believe they meet the eligibility requirements specified in the Act of October 26, 1987. Therefore, this rulemaking action amending Part 61 is exempted under 5 U.S.C. 553(b)(A) from advance notice and public procedure requirements. The Act of October 26, 1987, imposes a deadline for filing applications. A deferred effective date would shorten the period in which persons may file applications. Therefore, good cause exists to make this action effective immediately upon publication in the **Federal Register** as provided by 5 U.S.C. 553(d)(3).

The Office of Management and Budget has informed the Department of the Interior that the information collection requirements contained in this Part 61 need not be reviewed by them under the Paperwork Reduction Act (44 U.S.C. 3501 *et seq.*).

The Department of the Interior has determined that this is not a major rule under E. O. 12291 because only a limited number of individuals will be affected and those individuals who are determined eligible may be participating in the programs of one tribal entity funded by a relatively small judgment award granted the Cow Creek Band by the United States Claims Court.

The Department of the Interior has determined that this rule will not have a significant economic impact on a substantial number of small entities within the meaning of the Regulatory Flexibility Act (5 U.S.C. 601 *et seq.*) because of the limited applicability as stated above.

The Department of the Interior has determined that this rule is not a major Federal action significantly affecting the quality of the human environment and that neither an environmental assessment nor an environmental impact statement is required.

List of Subjects in 25 CFR Part 61

Indians—claims, Indians—enrollment.

Accordingly, Part 61 of Subchapter F of Chapter I of Title 25 of the Code of Federal Regulations is amended as shown:

PART 61—[AMENDED]

1. The authority citation for Part 61 is revised to read as follows:

Authority: 5 U.S.C. 301; 25 U.S.C. 2 and 9; Pub. L. 93-134, 87 Stat. 466, as amended (25 U.S.C. 1401 et seq.); Pub. L. 100-139.

2. Section 61.4 is amended by adding new paragraphs (f) and (g) to read as follows:

§ 61.4 Qualifications for enrollment and the deadline for filing application forms.

* * * * *

(f) *Cow Creek Band of Umpqua Tribe of Indians descendants.* (1) Pursuant to section 6(a)(1) of the Cow Creek Band of Umpqua Tribe of Indians Distribution of Judgment Funds Act of October 26, 1987, Pub. L. 100-139, a roll of nontribal members eligible to participate in the Higher Education and Vocational Training Program and the Housing Assistance Program of the Cow Creek Band of Umpqua Tribe of Indians is to be prepared of individuals:

(i) Who are descended from persons considered members of the Cow Creek Band of Umpqua Tribe of Indians for purposes of the treaty entered into between such band and the United States on September 19, 1853 (10 Stat. 1027), as ratified by the Senate on April 12, 1854; and

(ii) Who did not share or are not descendants of persons who shared in the distribution of funds under the Act entitled "An Act to provide for the termination of Federal supervision over the property of the Klamath Tribe of Indians located in the State of Oregon and the individuals members thereof, and for other purposes," approved August 13, 1954 (25 U.S.C. 564 *et seq.*), or under the Act entitled "An Act to provide for the termination of Federal supervision over the property of certain tribes and bands of Indians located in western Oregon and the individual members thereof, and for other purposes," approved August 13, 1954 (25 U.S.C. 691 *et seq.*).

(2) Application forms for enrollment must be filed with the Superintendent, Siletz Agency, Bureau of Indian Affairs, P. O. Box 539, Siletz, Oregon 97380. Upon receipt of an application form, the Superintendent shall furnish a copy to the Cow Creek Band of Umpqua Tribe of Indians.

(g) *Cow Creek Band of Umpqua Tribe of Indians descendants.* (1) Pursuant to section 6(a)(2) of the Cow Creek Band of Umpqua Tribe of Indians Distribution of Judgment Funds Act of October 26, 1987, Pub. L. 100-139, a roll of nontribal members eligible to participate in the Elderly Assistance Program of the Cow Creek Band of Umpqua Tribe of Indians is to be prepared of individuals:

(i) Who are descended from persons considered members of the Cow Creek Band of Umpqua Tribe of Indians for purposes of the treaty entered into between such Band and the United States on September 19, 1853 (10 Stat. 1027), as ratified by the Senate on April 12, 1854;

(ii) Who did not share or are not descendants of persons who shared in the distribution of funds under the Act entitled "An act to provide for the termination of Federal supervision over the property of the Klamath Tribe of Indians located in the State of Oregon and the individual members thereof, and for other purposes," approved August 13, 1954 (25 U.S.C. 564 *et seq.*), or under the Act entitled "An Act to provide for the termination of Federal supervision over the property of certain tribes and bands of Indians located in western Oregon and the individual members thereof, and for other purposes," approved August 13, 1954 (25 U.S.C. 691 *et seq.*); and

(iii) Who were 50 years or older as of December 31, 1985.

(2) Application forms for enrollment must be filed with the Superintendent, Siletz Agency, Bureau of Indian Affairs, P. O. Box 539, Siletz, Oregon 97380 by April 25, 1988, and with the Cow Creek Band of Umpqua Tribe of Indians. Application forms filed after that date will be rejected for failure to file on time regardless of whether the applicant otherwise meets the qualifications for eligibility for inclusion on the roll of persons eligible to participate in the Elderly Assistance Program, but will be considered for inclusion on the roll of persons eligible to participate in the Higher Education and Vocation Training Program and the Housing Assistance Program. Upon receipt of an application form, the Superintendent shall furnish a copy to the Cow Creek Band of Umpqua Tribe of Indians.

* * * * *

Ralph R. Reeser,

Acting Assistant Secretary, Indian Affairs.

[FR Doc. 88-7454 Filed 4-5-88; 8:45 am]

BILLING CODE 4210-02-M

ENVIRONMENTAL PROTECTION AGENCY

40 CFR Part 52

[FRL-3359-3; NC-007]

Approval and Promulgation of Implementation Plans; North Carolina; Revision to Volatile Organic Compound Rule

AGENCY: Environmental Protection Agency (EPA).

ACTION: Final rule.

SUMMARY: On January 24, 1983, North Carolina submitted to EPA for approval several revisions to its regulation for controlling miscellaneous volatile organic compound (VOC) emissions. EPA proposed to approve these rule changes in the **Federal Register** on December 21, 1983 (48 FR 56412), because the Agency did not feel the ambient air quality standard for ozone would be threatened by the revision. In response to the comments received during the public comment period, EPA obtained additional information for the State in order to fully document that assertion. After reviewing this information, EPA has concluded that although the rule change allows sources alternative VOC compliance options, those options will continue to provide for adequate control of VOCs and that efforts to attain and maintain the national ambient ozone standards will not be thwarted.

DATES: This action is effective May 6, 1988.

ADDRESSES: Copies of the material submitted by North Carolina may be examined during normal business hours at the following locations:

Public Information Reference Unit, Library Systems Branch, Environmental Protection Agency, 401 M Street SW., Washington DC 20460.

Environmental Protection Agency, Region IV, Air Programs Branch, 345 Courtland Street NE., Atlanta, Georgia 30365.

Division of Environmental Management, North Carolina Department of Natural Resources and Community Development, Archdale Building, 512 North Salisbury Street, Raleigh, North Carolina 27611.

FOR FURTHER INFORMATION CONTACT: Mr. Thomas Hansen of EPA Region IV's Air Programs Branch, at the above address and telephone (404) 347-2864 or FTS 257-2864.

SUPPLEMENTARY INFORMATION: The North Carolina State Implementation Plan (NCSIP) contains a regulation for controlling photochemically reactive volatile organic compound (VOC) emissions from sources which have no other applicable VOC control requirements. Regulation 2D.0518 applies to all VOC sources located in attainment or unclassified areas for which there is no New Source Performance Standard (NSPS) or National Emission Standard for Hazardous Air Pollutants (NESHAP). It also applies to such non-NSPS/NESHAP sources which are located in ozone nonattainment areas and which have the potential to emit less than 100 tons per year (TPY) VOC on a total plantwide basis, or to sources in nonattainment areas for which there is no RACT (reasonably available control technology) regulation under Section 2D.0900 of the North Carolina Administrative Code. The rule requires a plant which emits a total of more than 40 pounds per day of any photochemically reactive solvent, to reduce its VOC emissions by 85 percent (by weight).

It should be noted that for purposes of this provision, North Carolina has a different definition of VOC reactivity than EPA. See 42 FR 35314, 44 FR 32042, and 45 FR 48941. The EPA is approving this definition, however, since the overall regulation being approved is not required under EPA's regulations or policy, and therefore the regulation strengthens the SIP. It is possible that future regulatory stipulations may require sources covered by this provision to fall under EPA requirements; in this case, the definition of photochemically reactive solvents may have to be changed to conform to EPA's definition for exempt solvents.

On January 24, 1983, North Carolina submitted to EPA for approval several revisions to regulation 2D.0518. In summary, the changes allow sources subject to the 85% reduction requirement under paragraph (d) of 2D.0518 to comply with the rule by choosing one of two other methods. A source would be allowed to comply by meeting one of the RACT regulations in Section 2D.0900 or by installing control equipment that meets the requirements of BACT (best available control technology). A new paragraph (g) states that individual sources at a facility which install RACT or BACT would not be included in the determination of total plant compliance under paragraph (d).

EPA proposed to approve the revisions to 2D.0518 in the **Federal Register** on December 21, 1983 (see 48 FR 56412). In that notice, EPA stated that the Agency did not have precise figures on the impact of the rule change, but was proposing to approve it because

BEST COPY AVAILABLE

EPA believed no interference with the attainment or maintenance of the ambient air quality standards would occur. EPA received two comments during the public comment period, one of which challenged the adequacy of EPA's statement in the **Federal Register** that the ambient air quality standards would not be jeopardized. In response to this comment, EPA decided that a more precise quantification of the impact of the rule change was needed.

EPA contacted North Carolina and requested the State to assess how many sources could (or would) choose one of the compliance options contained in the revised 2D.0518, and what the potential effect on statewide VOC emissions would be. EPA was also concerned that a potential VOC emissions increase would take place and wanted to estimate the effect the revision would have on any ozone nonattainment areas in the State. After receiving the survey information from the State (submitted to EPA on March 25, 1987), EPA has determined that the potential impact of the rule change is negligible and that the National Ambient Air Quality Standard (NAAQS) for ozone will not be threatened in attainment or nonattainment areas. Therefore, EPA is taking final approval action on the changes to regulation 2D.0518 which were submitted on January 24, 1983, and which EPA proposed to approve on December 21, 1983.

For a more detailed description of the comments received during the public comment period, or for a detailed analysis of the potential effect of this regulation, please consult the technical support document which is available at the EPA Region IV address listed above.

Final Action:

EPA is today approving the revision to 15 NCAC 2D.0518, which was submitted by the State of North Carolina on January 24, 1983.

The Office of Management and Budget has exempted this rule from the requirements of section 3 of Executive Order 12291.

Under section 307(b)(1) of the Act, petitions for judicial review of this action must be filed in the United States Court of Appeals for the appropriate circuit by June 6, 1988. This action may not be challenged later in proceedings to enforce its requirements. (See section 307(b)(2)).

List of Subjects in 40 CFR Part 52

Air pollution control, Intergovernmental relations, Hydrocarbons, Ozone, Incorporation by reference.

Note: Incorporation by reference of the State Implementation Plan for the State of North Carolina was approved by the Director of the Federal Register on July 1, 1982.

Date: March 28, 1988.

Lee M. Thomas,

Administrator.

Part 52, Chapter I, Title 40 of the Code of Federal Regulations is amended as follows:

PART 52—[AMENDED]

1. The authority citation for Part 52 continues to read as follows:

Authority: 42 U.S.C. 7401–7642.

Subpart II—North Carolina

2. Section 52.1770 is amended by adding paragraph (c)(49) to read as follows:

§ 52.1770 Identification of plan.

* * * * *

(c) * * *

(49) Revision to 15 NCAC 2D.0518 which was submitted by the North Carolina Division of Environmental Management on January 24, 1983.

(i) Incorporation by reference.

(A) Letter of January 24, 1983 to EPA from the North Carolina Department of Natural Resources and Community Development, and amendments to North Carolina Administrative Code regulation 2D.0518 (Miscellaneous Volatile Organic Compound Emissions) adopted by the Environmental Management Commission on December 9, 1982, which allow alternative control strategies.

(ii) Additional material—none.

[FR Doc. 88-7168 Filed 4-5-88; 8:45 am]

BILLING CODE 6560-50-M

---

40 CFR Part 180

[PP 3F2934/R947; FRL-3360-9]

Pesticide Tolerance for 3-(3,5-Dichlorophenyl)-5-Ethenyl-5-Methyl-2,4-Oxazolidinedione

AGENCY: Environmental Protection Agency (EPA).

ACTION: Final rule.

SUMMARY: This rule establishes a tolerance for the combined residues of the fungicide 3-(3,5-dichlorophenyl)-5-ethenyl-5-methyl-2,4-oxazolidinedione (hereafter called "vinclozolin") and its metabolites containing the 3,5-dichloroaniline moiety in or on leaf lettuce and raspberries at 10.0 parts per million (ppm) and onions (dry bulb) at 1.0 ppm. This regulation to establish a maximum permissible level for residues of vinclozolin on these commodities was requested by BASF Wyandotte Corp.

EFFECTIVE DATE: Effective on April 6, 1988.

ADDRESS: Written objections, identified by the document control number [PP 3F2934/R947], may be submitted to the: Hearing Clerk (A-110), Environmental Protection Agency, Rm. 3708, 401 M St., SW., Washington, DC 20460.

FOR FURTHER INFORMATION CONTACT:

By mail: Lois A. Rossi, Product Manager (PM) 21, Registration Division (TS-767C), Environmental Protection Agency, 401 M St., SW., Washington, DC 20460.

Office location and telephone number: Rm. 227, CM #2, 1921 Jefferson Davis Highway, Arlington, VA 22202, (703)-557-1900.

SUPPLEMENTARY INFORMATION: EPA issued a notice, published in the **Federal Register** of September 28, 1983 (48 FR 44266), which announced that BASF Wyandotte Corp., Agricultural Chemicals Division, 110 Cherry Hill Rd., Parsippany, NJ 07054, had submitted pesticide petition 3F2934 to EPA proposing the establishment of a tolerance for the combined residues of the fungicide vinclozolin and its metabolites in or on leaf lettuce and raspberries at 10.0 ppm and onions (green and dry bulb) at 1.0 ppm. On January 22, 1988, BASF Wyandotte Corp. submitted an amendment to the petition withdrawing the request for a tolerance on green onions.

The data submitted in the petition and all other relevant material have been evaluated. The toxicological data considered in support of the proposed tolerance include the following:

1. A 90-day rat feeding study with a no-observed-effect level (NOEL) of 450 ppm (22.5 mg/kg/day), the highest dose tested.

2. A 90-day dog feeding study with a NOEL of 300 ppm (7.5 mg/kg/day).

3. A 6-month dog feeding study with a NOEL of 100 ppm (2.5 mg/kg/day).

4. A mouse teratology study with a NOEL for maternal toxicity of 6,000 ppm (900 mg/kg/day) highest dose tested, and a NOEL for developmental toxicity of 500 ppm (90 mg/kg/day).

5. A rabbit teratology study with a NOEL for maternal toxicity of > 300 mg/kg/day (9,900 ppm) and a NOEL for developmental toxicity of 80 mg/kg/day (2,640 ppm).

6. A chronic feeding/oncogenicity study in rats for 103 weeks, with a

NOEL of 486 ppm (24 mg/kg), and no compound-related oncogenic effects under the conditions of the study at doses up to 4,374 ppm (219 mg/kg bw/day), the highest dose tested.

7. A chronic feeding/oncogenicity study in mice for 26 months, with a NOEL of 486 ppm (73 mg/kg) and no compound-related oncogenic effects under the conditions of the study at doses up to 4,374 ppm (503 mg/kg bw/day), the highest dose tested.

8. A dominant lethal assay in mice negative at 2,000 mg/kg (only level tested).

9. Sister chromatid exchange study in bone marrow of the Chinese hamster was negative.

10. Reverse mutation test with and without a metabolic activation system (*Salmonella typhimurium* strains TA98, TA100, TA1535, TA1537, and TA1538, and *E. coli* WP2 hcv), which was negative for mutagenic effects.

11. A primary rat hepatocyte unscheduled DNA synthesis assay, which was negative, and a mouse lymphoma forward mutation assay, which showed weak positive mutagenic activity only at concentrations exceeding solubility of test material in the test medium.

Based on the NOEL of 100 ppm in the 6-month dog-feeding study, and using a hundred-fold uncertainty factor, the acceptable daily intake (ADI) for vinclozolin is calculated to be 0.025 mg/kg/day. The maximum permitted intake (MPI) for a 60/kg human is calculated to be 1.5 mg/day. The theoretical maximum residue contribution (TMRC) from the proposed tolerances is 0.000181 mg/kg/day and utilizes 0.72 percent of the ADI. The proposed tolerances and the established tolerances utilize a total of 55.48 percent of the ADI.

The nature of the residues is adequately understood, and an adequate analytical method, gas chromatography using an electron capture detector, is published in Vol. II of the Food and Drug Administration (FDA) Pesticide Analytical Manual for enforcement purposes. There is no reasponable expectation of residues in eggs, milk, meat, or poultry from the use on leaf lettuce, respberries, and onions (dry bulb).

Based on the data and information considered by the Agency, it is concluded that the pesticide is useful for the purpose for which the tolerance is sought, and it is concluded that the establishment of the tolerance will protect the public health.

Any person adversely affected by this regulation may, within 30 days after publication of this document in the **Federal Register**, file written objections with the Hearing Clerk, at the address given above. Such objections should specify the provisions of the regulation deemed objectionable and the grounds for the objections. If a hearing is requested, the objections must state the issues for the hearing and the grounds for the objections. A hearing will be granted if the objections are supported by grounds legally sufficient to justify the relief sought.

The Office of Management and Budget has exempted this rule from the requirements of section 3 of Executive Order 12291.

Pursuant to the requirements of the Regulatory Flexibility Act (Pub. L. 96-354, 94 Stat. 1164, 5 U.S.C. 601-612), the Administrator has determined that regulations establishing new tolerances or raising tolerance levels or establishing exemptions from tolerance requirements do not have a significant economic impact on a substantial number of small entities. A certification statement to this effect was published in the **Federal Register** of May 4, 1981 (46 FR 24950).

List of Subjects in 40 CFR Part 180

Administrative practice and procedure, Agricultural commodities, Pesticides and pests.

Dated: March 25, 1988.

Douglas D. Campt,

Director, Office of Pesticide Programs.

Therefore, 40 CFR Part 180 is amended as follows:

PART 180—[AMENDED]

1. The authority citation for Part 180 continues to read as follows:

Authority: 21 U.S.C. 346a.

2. Section 180.380(a) is amended by adding and alphabetically inserting the following commodities, to read as follows:

§ 180.380 3-(3,5-Dichlorophenyl)-5-ethenyl-5-methyl-2,4-oxazolidinedione; tolerances for residues.

(a) * * *

Commodities	Parts per million
* * * * *	
Lettuce (leaf)	10.0
Onions (dry bulb)	1.0
* * * * *	
Raspberries	10.0

[FR Doc. 88-7508 Filed 4-5-88; 8:45 am]

BILLING CODE 6560-50-M

FEDERAL EMERGENCY MANAGEMENT AGENCY

44 CFR Part 80, 82 and 83

Crime Insurance Program; Revision

AGENCY: Federal Emergency Management Agency (FEMA).

ACTION: Final rule.

SUMMARY: These revisions to the Federal Crime Insurance Program (FCIP) achieve the following: Increase the Federal Crime Insurance Program (FCIP) rates which apply to both residential and commercial properties located in eligible states; authorize a premium discount on commercial burglary and robbery insurance policies in the form of credits for installation of hold up buttons and alarms protecting safes; and for commercial policies covering robbery away from the premises when the insured has demonstrated that he has entered into a contract with a bonded armored car service for transporting cash from the insured premises to a bank.

EFFECTIVE DATE: This rule will be effective for Federal Crime Insurance business written after May 1, 1988, and renewal policies not already billed to existing policyholders.

FOR FURTHER INFORMATION CONTACT: Robert J. DeHenzel, Federal Emergency Management Agency, Federal Insurance Administration, Donohoe Building, 500 C Street SW., Room 433, Washington, DC 20472, Telephone number (202) 646-3440.

SUPPLEMENTARY INFORMATION: On January 11, 1988, FEMA published for comment in the **Federal Register** (Vol. 53, Page 621) a proposed rule containing revisions to the existing Federal Crime Insurance regulations.

These amendments to the Federal Crime Insurance Program Regulations are the result of the experience gained over the past 17 years the Program has been in operation and the Federal Insurance Administration's continued desire to improve service to policyholders and to more closely align the Program with the underwriting and rating methods used by the private insurance sector, while reducing the general taxpayers' burden with more equitable sharing of the cost of crime losses between the general taxpayers and the program insureds.

In order to achieve these goals, the Federal Insurance Administration began in 1981 a 5 year program to reduce the taxpayer subsidy by instituting changes such as rate increases, coverage changes, higher deductibles, and increasing the extent of protective

device requirements with which an insured would be required to comply as a condition of new or continued eligibility for crime insurance.

In spite of the above progam chnages, the Federal Crime Insurance Program is sustaining underwiting losses and program expenses that would require an approximate subsidy of 13 million dollars. In order to achieve a self-sustaining status, the Federal Insurance Administration would, therefore, need to impose an overall rate increase of approximately 145% to offset the higher-than-average industry expenses associated with administering the Program. While it is the Administration's goal, within the statutory limitations prescribed by the Congress, to make the Federal Crime Insurance Program self-sustaining, and recent studies performed by the actuarial firm of Tillinghast, Nelson & Warren, Inc., for the Federal Insurance Administration comparing FCIP and ISO rates indicate a substantial rate increase is appropriate, only a 5% increase is being proposed by the FIA for Fiscal Year 1988. This action is in keeping with Congressional statutes, limiting rate increases to 5% in 1988 and 1989. However, in order to continue the Federal Insurance Administration's successful efforts to help insureds protect themselves more effectively, the FIA is proposing additional economic incentives to businesses by providing premium credits for the installation of safe burglary alarm systems; holdup alarm systems; and contracts with a bonded armored car service for transporting cash receipts from the insured premises to a bank.

No written comments were received during the comment period.

FEMA has determined that an environmental impact statement is not needed for this final rule. A copy of the finding of no significant impact and an environmental assessment is available at the above address.

FEMA has also determined that this rule will not have a significant economic impact on a substantial number of small entities, and so has not conducted a regulatory flexibility analysis.

This final rule is not a "major rule" as defined in Executive Order 12291, dated February 27, 1981, and hence no regulatory analysis has been prepared. FEMA has determined that this final rule does not contain a collection of information requirements as described in Section 3504(b) of the Paperwork Reduction Act.

List of Subjects in 44 CFR Parts 80, 82 and 83

Federal Crime Insurance Program.

Accordingly, 44 CFR Parts 80, 82, 83 are amended as follows:

PART 80—DESCRIPTION OF PROGRAM AND OFFER TO AGENTS

1. The authority citation for Part 80 continues to read as follows:

Authority: 12 U.S.C. 1749bbb–17 *et seq;* Reorganization Plan No. 3. of 1978; EO 12127.

2. Section 80.1(a)(6) is revised to read as follows:

§ 80.1 Definitions.

(a) * * *

(6) "Discounts". The premium credit issued to a residential or business insured protected by a burglar alarm system, or other protective devices or methods used to mitigate losses and considered adequate by the Administrator for the type of risk involved, such as protective armored car services.

* * * * *

PART 82—PROTECTIVE DEVICE REQUIREMENTS

1. The authority citation for Part 82 continues to read as follows:

Authority: 12 U.S.C. 1749bbb *et seq;* Reorganization Plan No. 3. of 1978; EO 12127.

Subpart A—General

2. Section 82.1 entitled Definitions is amended by redesignating current paragraphs (h), (i), (j) and (k) as paragraphs (i), (j), (k) and (l), and by adding new paragraphs (h) and (m) to read as follows:

§ 82.1 Definitions.

* * * * *

(h) Holdup Alarm means a holdup alarm system that is constantly in operation and signals at an office of law enforcement authorities or at an office of an independent agency located away from the protected property. Accessible, but inconspicuous, buttons at hand or foot or knee levels are placed throughout the premises. An insured may, at his option, cause the alarm to sound on the premises, in addition to the remote location.

* * * * *

(m) Safe or Vault Alarm means a safe or vault protected by a central station or silent alarm supervised system.

PART 83—COVERAGE RATES AND PRESCRIBED POLICY FORMS

The authority citation for Part 83 continues to read as follows:

Authority: 12 U.S.C. 1749bbb *et seq;* Reorganization Plan No. 3. of 1978; EO 12127.

Subpart A—Residential Crime Insurance Coverage

2. Section 83.4, Residential Crime Insurance Rates, is revised to read as follows.

§ 83.4 Residential crime insurance rates.

The specific limits of coverage for applicable annual premiums for residential crime insurance coverage are revised to read as follows:

Policy limits:	Annual premium
$1,000	$32
2,000	42
3,000	52
4,000	62
5,000	74
6,000	84
7,000	94
8,000	104
9,000	116
10,000	126

Subpart B—Commercial Crime Insurance Coverage

3. In § 83.25, paragraphs (e) and (f) are revised to read as follows:

§83.25 Commercial crime insurance rates.

* * * * *

(e) The following tables shall be used to determine rates for commercial risks.

Federal Crime Insurance Program, Commercial Crime Insurance Rates, Annual Premiums—Class 1

Gross Receipts

Amount of insurance	Less than $100,000		$100,000, $199,999		$200,000, $299,999		$300,000, $499,999		$500,000, $999,999		$1,000,000 or greater	
	Option		Option		Option		Option		Option		Option	
	1	2	1	2	1	2	1	2	1	2	1	2
1,000	82	112	124	168	124	168	164	222	204	276	326	442
2,000	156	200	234	298	234	298	310	396	386	496	618	794
3,000	228	288	342	430	342	430	456	574	570	716	912	1,144
4,000	296	366	446	546	446	546	594	730	742	912	1,184	1,456
5,000	350	414	526	622	526	622	702	828	876	1,034	1,402	1,652
6,000	370	454	554	680	554	680	740	908	924	1,132	1,476	1,810
7,000	384	484	576	724	576	724	768	966	958	1,206	1,534	1,928
8,000	400	512	596	768	596	768	796	1,022	994	1,276	1,590	2,046
9,000	404	522	604	764	604	784	804	1,044	1,004	1,302	1,606	2,084
10,000	412	542	618	812	618	812	824	1,082	1,026	1,350	1,644	2,160
11,000	434	590	654	886	654	886	870	1,180	1,086	1,474	1,738	2,358
12,000	454	630	680	946	680	946	906	1,258	1,132	1,570	1,812	2,514
13,000	464	648	696	974	696	974	926	1,298	1,156	1,620	1,850	2,592
14,000	468	660	702	990	702	990	934	1,316	1,168	1,644	1,870	2,632
15,000	472	666	710	1,004	710	1,004	946	1,336	1,180	1,670	1,886	2,672

(1) Option 1: Burglary only; Option 2: Robbery only; Option 3: A combination of Options 1 and 2 in uniform or varying amounts.
(2) See discount page for applicable multipliers and discounts.

Federal Crime Insurance Program, Commercial Crime Insurance Rates, Annual Premiums—Class 2

GROSS RECEIPTS

Amount of insurance	Less than $100,000		$100,000, $199,999		$200,000, $299,999		$300,000, $499,999		$500,000, $999,999		$1,000,000 or greater	
	Option		Option		Option		Option		Option		Option	
	1	2	1	2	1	2	1	2	1	2	1	2
1,000	98	140	150	210	150	210	198	280	246	346	392	554
2,000	186	252	280	376	280	376	372	500	464	624	742	998
3,000	274	362	410	542	410	542	546	722	680	900	1,090	1,440
4,000	354	460	532	690	532	690	708	920	884	1,146	1,416	1,836
5,000	418	520	626	784	626	784	836	1,042	1,044	1,300	1,670	2,062
6,000	442	572	664	856	664	856	882	1,140	1,102	1,424	1,764	2,278
7,000	460	606	688	912	688	912	918	1,214	1,146	1,516	1,834	2,426
8,000	476	644	716	968	716	968	954	1,288	1,190	1,606	1,904	2,572
9,000	484	656	724	984	724	984	966	1,312	1,206	1,638	1,926	2,622
10,000	496	682	744	1,022	744	1,022	990	1,362	1,234	1,702	1,976	2,722
11,000	526	744	788	1,116	788	1,116	1,048	1,484	1,308	1,854	2,094	2,963
12,000	548	792	822	1,188	822	1,188	1,096	1,584	1,368	1,978	2,186	3,164
13,000	560	816	840	1,226	840	1,226	1,120	1,634	1,396	2,040	2,234	3,262
14,000	564	830	846	1,244	846	1,244	1,130	1,656	1,412	2,070	2,258	3,312
15,000	572	842	856	1,262	856	1,262	1,142	1,682	1,426	2,100	2,282	3,360

(1) Option 1: Burglary Only; Option 2: Robbery Only; Option 3: A combination of Options 1 and 2 in Uniform or Varying Amounts.
(2) See Discount Page for Applicable Multipliers and Discounts.

Federal Crime Insurance Program, Commercial Crime Insurance Rates, Annual Premiums—Class 3

GROSS RECEIPTS

Amount of insurance	Less than $100,000		$100,000, $199,999		$200,000, $299,999		$300,000, $499,999		$500,000, $999,999		$1,000,000 or greater	
	Option		Option		Option		Option		Option		Option	
	1	2	1	2	1	2	1	2	1	2	1	2
1,000	112	148	168	218	168	218	222	290	276	362	442	578
2,000	208	260	312	392	312	392	416	520	518	643	830	1,040
3,000	306	376	460	564	460	564	612	752	762	938	1,220	1,500
4,000	396	476	596	718	596	718	794	958	990	1,194	1,584	1,912
5,000	468	544	702	814	702	814	934	1,086	1,166	1,354	1,864	2,168
6,000	494	594	742	892	742	892	988	1,186	1,232	1,482	1,972	2,370
7,000	514	632	772	950	772	950	1,030	1,264	1,284	1,580	2,054	2,524
8,000	536	672	802	1,006	802	1,006	1,068	1,342	1,334	1,674	2,134	2,680
9,000	542	684	812	1,026	812	1,026	1,082	1,368	1,350	1,708	2,160	2,730
10,000	554	710	832	1,064	832	1,064	1,108	1,418	1,384	1,770	2,216	2,832
11,000	588	772	882	1,162	882	1,162	1,176	1,546	1,468	1,930	2,350	3,090
12,000	616	826	924	1,236	924	1,236	1,230	1,648	1,536	2,058	2,456	3,292
13,000	628	850	942	1,276	942	1,276	1,256	1,698	1,568	2,124	2,512	3,396

GROSS RECEIPTS—Continued

Amount of insurance	Less than $100,000		$100,000, $199,999		$200,000, $299,999		$300,000, $499,999		$500,000, $999,999		$1,000,000 or greater	
	Option		Option		Option		Option		Option		Option	
	1	2	1	2	1	2	1	2	1	2	1	2
14,000	636	864	954	1,296	954	1,296	1,270	1,726	1,586	2,154	2,538	3,448
15,000	642	876	964	1,314	964	1,314	1,284	1,752	1,602	2,186	2,564	3,498

(1) Option 1: Burglary Only; Option 2: Robbery Only; Option 3: A combination of Options 1 and 2 in Uniform or Varying Amounts.
(2) See Discount Page for Applicable Multipliers and Discounts.

Federal Crime Insurance Program, Commercial Crime Insurance Rates, Annual Premiums—Class 4

GROSS RECEIPTS

Amount of insurance	Less than $100,000		$100,000, $199,999		$200,000, $299,999		$300,000, $499,999		$500,000, $999,999		$1,000,000 or greater	
	Option		Option		Option		Option		Option		Option	
	1	2	1	2	1	2	1	2	1	2	1	2
1,000	124	152	186	226	186	226	248	302	308	376	494	600
2,000	234	270	350	408	350	408	466	542	582	674	930	1,080
3,000	342	390	514	588	514	588	684	782	852	974	1,366	1,560
4,000	446	498	666	748	666	748	888	996	1,106	1,242	1,772	1,986
5,000	522	564	786	846	786	846	1,046	1,128	1,304	1,408	2,088	2,252
6,000	554	618	830	926	830	926	1,106	1,234	1,380	1,542	2,208	2,466
7,000	576	658	864	988	864	988	1,150	1,314	1,436	1,640	2,300	2,626
8,000	598	698	898	1,046	898	1,046	1,198	1,394	1,494	1,740	2,390	2,784
9,000	606	712	910	1,066	910	1,066	1,212	1,422	1,512	1,774	2,420	2,838
10,000	622	738	932	1,106	932	1,106	1,242	1,474	1,550	1,840	2,480	2,944
11,000	660	804	990	1,206	990	1,206	1,316	1,606	1,644	2,008	2,632	3,210
12,000	688	856	1,034	1,288	1,034	1,288	1,378	1,714	1,720	2,140	2,752	3,424
13,000	704	884	1,056	1,328	1,056	1,328	1,408	1,766	1,758	2,208	2,812	3,530
14,000	712	896	1,068	1,346	1,068	1,346	1,424	1,794	1,776	2,240	2,844	3,582
15,000	720	912	1,080	1,368	1,080	1,368	1,438	1,820	1,796	2,272	2,872	3,638

(1) Option 1: Burglary Only; Option 2: Robbery Only; Option 3: A Combination of Options 1 and 2 in Uniform or Varying Amounts.
(2) See Discount Page for Applicable Multipliers and Discounts.

Federal Crime Insurance Program, Commercial Crime Insurance Rates, Annual Premiums—Class 5

GROSS RECEIPTS

Amount of insurance	Less than $100,000		$100,000, $199,999		$200,000, $299,999		$300,000, $499,999		$500,000, $999,999		$1,000,000 or greater	
	Option		Option		Option		Option		Option		Option	
	1	2	1	2	1	2	1	2	1	2	1	2
1,000	118	134	178	202	178	202	236	268	294	332	468	534
2,000	218	242	330	362	330	362	436	480	544	598	872	958
3,000	320	346	478	520	478	520	638	694	796	864	1,274	1,382
4,000	412	442	620	662	620	662	824	882	1,026	1,100	1,644	1,760
5,000	480	500	720	750	720	750	960	1,000	1,198	1,248	1,918	1,996
6,000	512	548	768	822	768	822	1,024	1,094	1,278	1,366	2,048	2,184
7,000	538	584	806	874	806	874	1,074	1,166	1,340	1,454	2,144	2,326
8,000	560	618	842	928	842	928	1,122	1,234	1,400	1,542	2,240	2,468
9,000	570	630	854	946	854	946	1,138	1,260	1,422	1,570	2,274	2,514
10,000	586	654	880	980	880	980	1,172	1,306	1,462	1,632	2,340	2,608
11,000	626	712	940	1,068	940	1,068	1,252	1,424	1,562	1,778	2,502	2,846
12,000	650	760	990	1,140	990	1,140	1,316	1,518	1,644	1,896	2,632	3,034
13,000	676	784	1,012	1,176	1,012	1,176	1,350	1,568	1,684	1,956	2,696	3,130
14,000	682	796	1,024	1,192	1,024	1,192	1,366	1,590	1,706	1,984	2,728	3,176
15,000	690	806	1,038	1,210	1,038	1,210	1,382	1,612	1,726	2,014	2,762	3,224

(1) Option 1: Burglary Only; Option 2: Robbery Only; Option 3: A combination of Options 1 and 2 in Uniform or Varying Amounts.
(2) See Discount Page for Applicable Multipliers and Discounts.

Federal Crime Insurance Program, Commercial Crime Insurance Rates, Annual Premiums—Class 6

GROSS RECEIPTS

Amount of insurance	Less than $100,000		$100,000, $199,999		$200,000, $299,999		$300,000, $499,999		$500,000, $999,999		$1,000,000 or greater	
	Option		Option		Option		Option		Option		Option	
	1	2	1	2	1	2	1	2	1	2	1	2
1,000	120	120	178	180	178	180	238	240	294	298	472	476
2,000	220	216	330	324	330	324	438	430	546	538	874	858
3,000	320	310	478	466	478	466	638	622	796	774	1,274	1,240
4,000	412	396	618	594	618	594	822	792	1,024	988	1,640	1,580
5,000	476	450	716	674	716	674	954	898	1,190	1,120	1,904	1,792
6,000	512	492	766	738	766	738	1,022	980	1,276	1,224	2,042	1,960
7,000	538	522	806	786	806	786	1,074	1,046	1,340	1,304	2,144	2,088
8,000	562	554	844	832	844	832	1,126	1,108	1,402	1,384	2,248	2,214
9,000	572	564	856	848	856	848	1,142	1,130	1,426	1,410	2,280	2,256
10,000	588	586	882	880	882	880	1,176	1,172	1,468	1,464	2,348	2,342
11,000	632	638	948	960	948	960	1,262	1,276	1,576	1,596	2,520	2,552
12,000	666	682	998	1,022	998	1,022	1,330	1,362	1,660	1,702	2,656	2,722
13,000	682	704	1,022	1,054	1,022	1,054	1,362	1,404	1,704	1,754	2,724	2,806
14,000	690	714	1,036	1,072	1,036	1,072	1,380	1,426	1,724	1,780	2,758	2,850
15,000	700	724	1,050	1,086	1,050	1,086	1,398	1,446	1,746	1,806	2,794	2,892

(1) Option 1: Burglary Only; Option 2: Robbery Only; Option 3: A combination of Options 1 and 2 in Uniform or Varying Amounts.
(2) See Discount Page for Applicable Multipliers and Discounts.

(f) If the premises are protected by an acceptable burglar alarm system, class E safe, supervised safe alarm system, holdup alarm or armored car service, premium discounts shall be permitted as follows:

I. BURGLARY CREDITS

Premises alarm system	Safe alarmed		Safe not alarmed	
	Class E or better	Other safe	Class E or better	Other/ None
None	.80	.95	.85	1.00
Local	.70	.75	.75	.90
Silent	.65	.75	.70	.80
Central:				
—Without Guard	.60	.70	.65	.75
—With Guard	.55	.65	.60	.70

II. ROBBERY CREDITS

PROTECTION SERVICE

Holdup buttons	Armored car	None
Yes	.85	.90
No	.95	1.00

Note: Multiply the burglary or robbery premium by the appropriate factor.

Package Discount

Apply a factor of .90 to the total premium if both burglary and robbery are purchased.

These amendments issued under 12 U.S.C. 1249bbb–17.

Harold T. Duryee,

Federal Insurance Administrator.

[FR Doc. 88–7479 Filed 4–5–88; 8:45 am]

BILLING CODE 6718–21–M

DEPARTMENT OF HEALTH AND HUMAN SERVICES

45 CFR Part 36

Indemnification of HHS Employees

AGENCY: Department of Health and Human Services.

ACTION: Final rule.

SUMMARY: This rule adds a new Part 36 to Title 45 of the Code of Federal Regulations. It parallels provisions adopted by the Department of Justice (28 CFR Part 50) and the Small Business Administration (13 CFR Part 114) in permitting indemnification of Department of Health and Human Services employees in appropriate situations, as determined by the Secretary or his or her designee.

EFFECTIVE DATE: April 6, 1988.

FOR FURTHER INFORMATION CONTACT: Darrel Grinstead, Associate General Counsel, Department of Health and Human Services, 330 Independence Avenue, SW., Room 5362, Wilbur J. Cohen Building, Washington, DC 20201, (202) 475–0150.

SUPPLEMENTARY INFORMATION: The Department of Health and Human Services does not presently indemnify its employees who are sued personally and suffer an adverse judgment as a result of conduct taken within the scope of employment, nor does it settle claims against employees, who are sued in their individual capacities, with the Department's funds. Since the 1971 Supreme Court decision in *Bivens v. Six Unknown Named Agents of the Federal Bureau of Narcotics*, 403 U.S. 388 (1971), lawsuits against federal employees in their individual capacities have proliferated. The most recent statistics from the Department of Justice indicate that over 14,000 claims had been filed against federal employees personally since the *Bivens* case. Nearly 5,000 such suits are now pending. Despite the fact the Department of Justice is aware of only 37 adverse judgments against federal employees in their individual capacities, suits personally attacking federal employees at all levels of government continue to increase. A growing number of these suits are being filed against HHS officials.

The potential for adverse judgments against a federal employee for actions taken within the scope of employment is detrimental to both the individual employee and the federal government. Although there are currently provisions for employees to request representation by the Department of Justice in these actions, the individual employee still bears the risk of personal liability for an adverse judgment as a result of doing his or her job. Moreover, the prospect of personal liability and the uncertainty as to what conduct may result in a lawsuit against the employee personally, tend to intimidate all employees, to impede creativity and to strifle initiative and decisive action. Employees' fears of personal liability affect government operations, decisionmaking and policy determinations.

The Department believes that lawsuits against federal employees in their individual capacities seriously hinder the effective functioning of the Department. A modification of HHS policy to permit indemnification would help alleviate this problem and would afford HHS employees the same protection given other federal officials.

This modification of HHS policy permits, but does not require, the Department to indemnify a Department employee who suffers an adverse judgment, or other monetary award, provided that the actions giving rise to the award were taken within the scope of employment and that such indemnification is in the interest of the United States, as determined by the Secretary or his designee.

The policy also allows the Department to settle a claim brought against an employee in his or her individual capacity by the payment of Department funds, upon a similar determination by the Secretary. Absent exceptional circumstances, the Department will not agree either to indemnify or to settle before entry of an adverse judgment. The modification of policy, which is analogous to the approach adopted by the Department of Justice, is designed to discourage the filing of lawsuits against federal employees in their individual capacities solely in order to pressure the government into settlement. In the usual case, under these regulations, the Department will not a settle a case, before trial and judgment merely because a dispositive motion filed on behalf of the employee has been denied. This regulation is applicable to actions pending against HHS employees as of its effective date.

Paperwork Reduction Act

This regulation is not subject to the Paperwork Reduction Act because it deals solely with internal rules governing Department of Health and Human Services personnel.

Cost/Regulatory Analysis

The Secretary has determined, in accordance with Executive Order 12291, that this rule will not constitute a "major" rule and therefore is not subject to a regulatory impact analysis requirement of the Order. Major rules are those which impose a cost on the economy of $100 million or more a year or have certain other economic impacts.

The rule will not have a significant economic impact on small entities; therefore, preparation of a regulatory flexibility analysis is not required under the Regulatory Flexibility Act (5 U.S.C. 601–612).

Waiver of Public Notice and Comment

These regulations are published in final form without the opportunity for public notice and comment because they relate to HHS management and personnel.

List of Subjects in 45 CFR Part 36

Administrative practice and procedure, Government employees.

Dated: March 16, 1988.

Otis R. Bowen,

Secretary.

For reasons stated in the preamble, Part 36, as set forth below, is added to Title 45 of the Code of Federal Regulations.

PART 36—INDEMNIFICATION OF HHS EMPLOYEES

§ 36.1 Policy.

(a) The Department of Health and Human Services may indemnify, in whole or in part, its employees (which for the purpose of this regulation includes former employees) for any verdict, judgment or other monetary award which is rendered against any such employee, provided that the conduct giving rise to the verdict, judgment or award was taken within the scope of his or her employment with the Department and that such indemnification is in the interest of the United States, as determined by the Secretary, or his or her designee, in his or her discretion.

(b) The Department of Health and Human Services may settle or compromise a personal damage claim against its employee by the payment of available funds, at any time, provided the alleged conduct giving rise to the personal damage claim was taken within the scope of employment and that such settlement or compromise is in the interest of the United States, as determined by the Secretary, or his or her designee, in his or her discretion.

(c) Absent exceptional circumstances, as determined by the Secretary or his or her designee, the Department will not entertain a request either to agree to indemnify or to settle a personal damage claim before entry of an adverse verdict, judgment or monetary award.

(d) When an employee of the Department of Health and Human Services becomes aware that an action has been filed against the employee in his or her individual capacity as a result of conduct taken within the scope of his or her employment, the employee should immediately notify the Department that such an action is pending.

(e) The employee may, thereafter, request either (1) indemnification to satisfy a verdict, judgment or award entered against the employee or (2) payment to satisfy the requirements of a settlement proposal. The employee shall submit a written request, with documentation including copies of the verdict, judgment, award or settlement proposal, as appropriate, to the head of his employing component, who shall thereupon submit to the General Counsel, in a timely manner, a recommended disposition of the request. The General Counsel shall also seek the views of the Department of Justice. The General Counsel shall forward the request, the employing component's recommendation and the General Counsel's recommendation to the Secretary for decision.

(f) Any payment under this section either to indemnify a Department of Health and Human Services employee or to settle a personal damage claim shall be contingent upon the availability of appropriated funds of the employing component of the Department of Health and Human Services.

Authority: 5 U.S.C. 301.

[FR Doc. 88–7490 Filed 4–5–88; 8:45 am]

BILLING CODE 4150–04–M

DEPARTMENT OF TRANSPORTATION

National Highway Traffic Safety Administration

49 CFR Part 571

[Docket No. 85–11; Notice 2]

Federal Motor Vehicle Safety Standards; Motorcycle Helmets

AGENCY: National Highway Traffic Safety Administration (NHTSA), DOT

ACTION: Final rule.

SUMMARY: This rule announces changes to Federal Motor Vehicle Safety Standard 218, *Motorcycle Helmets*. On September 27, 1985, the agency proposed to extend its performance requirements for the first time to all helmet sizes and to improve its test procedures and conditions. In addition, the agency requested comments on several cost-related questions and issues related to possible future motorcycle helmet rulemakings. This final rule responds to the public comments and amends the motorcycle helmet safety standard. This improved standard will benefit motorcyclists, moped and other motor vehicle users who wear motorcycle helmets.

EFFECTIVE DATE: October 3, 1988.

FOR FURTHER INFORMATION CONTACT: Dr. William J. J. Liu, Office of Vehicle Safety Standards, NRM–12, National Highway Traffic Safety Administration, 400 Seventh Street SW., Washington, DC 20590, (202) 366–4923.

VOL 53 ISS 66 AP 6 1988 UMI

SUPPLEMENTARY INFORMATION:

Background

Section 103 of the National Traffic and Motor Vehicle Safety Act of 1966 (15 U.S.C. 1392) requires the establishment of Federal safety standards for motor vehicles and motor vehicle equipment. These standards are amended by the National Highway Traffic Safety Administration (NHTSA) as appropriate, such as when new safety data become available or technological development warrant.

The agency's first Federal motor vehicle safety standard for motorcycle helmets (FMVSS 218) became effective in 1974. Although this standard has been demonstrated to be a significant factor in the reduction of critical and fatal injuries involving motorcyclists in motorcycle accidents, the standard has thus far not applied to all motorcycle helmets sold in the United States. Because of limited availability of headforms on which to test motorcycle helmets, FMVSS 218 previously applied only to motorcycle helmets that could be "placed on" the available size C headform. As a practical matter, this has limited the application of the standard to medium and large motorcycle helmets, since small motorcycle helmets could not be placed on the size C headform. Small helmets constitute approximately ten percent of the motorcycle helmet market.

A manufacturer of a motorcycle helmet subject to FMVSS 218 must certify that the helmet meets all of the standard's requirements. Those requirements include performance requirements for helmets for impact attenuation (shock absorption), penetration resistance (a sharp object striking the helmet), and retention (chin strap strength). Tests to determine compliance with these requirements are conducted under prescribed conditions, with the helmet secured to a metal test headform. In addition, FMVSS 218 establishes requirements dealing with peripheral vision, labeling, and internal and external projections.

Current FMVSS 218

The first of the three principal performance requirements in FMVSS 218 is that a motorcycle helmet must exhibit a minimum level of shock absorbency upon impact with a fixed, hard object. Compliance is determined by a two-party impact attenuation test. This test involves placing a motorcycle helmet on the test headform and dropping the headform and helmet (known as the headform assembly) in a guided free fall first onto a flat steel anvil and then, in a separate test, onto a hemispherical steel anvil. Each helmet is impacted at four sites with two successive, identical impacts at each site, at any point on the area above a prescribed test line. Two of these sites are impacted upon the flat anvil by dropping the headform assembly from a height of 72 inches (182.9 centimeters), and two sites are impacted upon the hemispherical anvil from a height of 54.5 inches (138.4 centimeters).

The impact attenuation requirement is expressed as limits on the acceleration levels of the headform and is quantified in g's, the gravitational acceleration, and used as the unit of acceleration. The acceleration level relates directly to the impact on the brain. The greater the number of g's, the greater the force or impact energy that is applied to the brain. A number of test studies (including the 1980 study by the Japanese Automobile Research Institute, discussed later in this preamble) express the threshold of injury to the human brain in g's. Standard 218 limits acceleration to a peak level of 400g and requires that no helmet exceed 200g for a cumulative duration of more than 2.0 milliseconds and 150g for a cumulative duration of more than 4.0 milliseconds.

Four impact attenuation tests must be conducted within a specified time limit (discussed later in this preamble) and each must be conducted after the helmet has been conditioned in one of four conditioning environments for 12 hours. These conditioning environments are:

(a) Ambient conditions: Exposure to 70°F (21°C) and relative humidity of 50 percent.

(b) Low temperature: Exposure to 14°F (−10°C).

(c) High temperature: Exposure to 122°F (50°C).

(d) Water immersion: With water at 77°F (25°C).

The second performance requirement is a penetration test, in which a metal striker is dropped 118.1 inches (3.0 meters) in a guided free fall onto a stationary helmet. Two penetration blows are applied at least three inches (7.6 centimeters) apart from each other and at least three inches from the centers of the impact attenuation blows. To meet the performance requirement, the striker may only come in contact with the helmet and may not come in contact with the surface of the headform. The penetration test, like the impact attenuation test, is conducted within certain time constraints and with the helmet conditioned in the four previously mentioned environments.

The third performance requirement of Standard 218 tests chin strap strength. It requires that the retention system or any component of the retention system of a motorcycle helmet be able to withstand a preliminary load of 50 pounds (22.7 kilograms) of tensile force (for 30 seconds) and then a test load of an additional 250 pounds (113.4 kilograms) (for 120 seconds). To meet the performance requirement, the helmet retention system may not break during the times loads are applied and the adjustable portion of the retention system device may not move more than one inch between preliminary and test load conditions. If a retention system consists of components, each component must meet these requirements. As with the impact attenuation and penetration tests, the motorcycle helmet must be exposed to the four conditioning environments before being tested for the retention requirements.

Standard 218 also prescribes requirements for labeling, projections, and peripheral vision requirements. A manufacturer must permanently affix to each helmet labeling which includes the manufacturer's name or identification, precise model designation, size, month and year of manufacture, and, as a certification of compliance with the standard, the DOT symbol. The labeling requirements also provide that the manufacturer must supply to the purchaser information concerning shell and liner composition, cleaning instructions, and warnings to make no modifications, and to have the helmet checked by the manufacturer or destroyed if it experiences a severe blow. This additional information may be conveyed on a tag attached to the helmet, or by other appropriate means.

Standard 218 does not allow any rigid projections inside the shell and limits those outside the shell to those needed to operate essential accessories. An external protrusion may not be more than .20 inch (the new provision adopted in this rulemaking is .20 inch; the currently effective limit is .19 inch). Finally, Standard 218 requires that the helmet provide a minimum of 105° peripheral vision to either side of the mid-sagittal plane (the middle of the face).

Each manufacturer must certify that its helmets meet the performance requirements of the standard before the helmets are offered for sale. The test procedures in Standard 218 specify the manner in which procedures will be conducted by any laboratory under contract with NHTSA to test helmet compliance. Additional details on how the tests are to be conducted are contained in NHTSA Laboratory Procedure for Motorcycle Helmet Testing (TP–218–02; October 18, 1984).

The Proposed Rule and Public Comment

The agency proposed changes to FMVSS 218 on September 27, 1985 (50 FR 39144). In addition to specific changes in the Standard, the agency sought public comment on eight cost-related questions and six issues for possible future rulemaking. In response, the agency received public comments from four motorcycle helmet manufacturers (Bell Helmets, Inc., Florida Safety Products, Inc., Javelin, Inc., and Marushin Kogyo Co., Ltd) and from one company that manufactures test equipment and tests motorcycle helmets (United States Testing Company, Inc.). The proposed changes, the issues raised by the agency for possible future rulemaking, as well as public comment submitted on these, are discussed below.

Applicability of Standard to All Helmets (S3.). The principal change in FMVSS 218 is the extension of the standard to all motorcycle helmet sizes. It has been the agency's intention since it promulgated its first motorcycle helmet safety standard to extend this standard to all helmets as soon as practicable. The principal cause of the delay in doing this has been the lack of availability of headforms other than the size C headform. This situation resulted in limited application of the standard, since small motorcycle helmets were not able to be placed on the size C headform to be tested and thus were not required to be certified as complying with FMVSS 218.

This impediment no longer exists, because the agency has developed three new test headforms, small, medium, and large, which will replace the single size C headform. The September 27, 1985 proposed rule contained a lengthy description of the process used to develop these headforms. The basic steps included the development of a numerical table describing the exterior geometry of old size C headform and the creation of a new medium headform based on the table. The table then was used to derive the measurements for a small headform and a large headform, using a scaling factor of 0.8941 for the small headform and a scaling factor of 1.069 for the large headform. Detailed specifications for the headforms are contained in the Appendix to the final rule; these specifications should ensure that each headform can be accurately cast and/or machined.

As the result of testing, the agency believes that helmets previously tested on the size C headform will achieve comparable results on the new medium headform. In addition, the three new headforms will provide a more reliable fit for all helmets being tested, thereby increasing the repeatability of the testing.

For the first time, the agency proposed details on the interior geometry of the headform. While the proposal would allow the agency to retain some flexibility on the details of the interior of the headform (to allow for differently designed support assemblies and still retain the ability to meet the standard's test headform and support assembly weight requirement for the impact attenuation test), the level of specificity would be sufficient to establish a fixed center of gravity for the test headform—the center of the ball socket joint. Being able to fix the center of gravity (and, thus, fix the location of the accelerometer as well, since the accelerometer is located at the headform's center of gravity) also enhances the test's repeatability.

No specific comments were received on the development of the new headforms, although United States Testing Company, Inc. (U.S. Testing) stated that it generally supported the proposed changes in the proposed rule. In addition, Javelin, Inc. (Javelin) stated that it did not oppose the proposed test headform system. The final rule adopts the new small, medium, and large headforms as proposed.

Since the proposed dimensions of the exterior and interior of the headforms were published, the agency has noted in the FMVSS 218 rulemaking docket that the manufacturer of the headforms used for the agency's testing has made minor modifications to the interior of the headform. The manufacturer has changed the size of the four holes inside the headform for the tie-down screws from ¼ inch–20 helical coil insert to 5/16 inch–18 helical coil insert. These changes have been made to all headform sizes to increase the holding power of the screws to the headform. These changes also may reduce the frequency of adjustments to the monorail test equipment, especially when the large test headform is used. These changes are reflected in Figures 6, 7, and 8 in the Appendix to the Standard.

Impact Attenuation Test (S5.1). The current impact attenuation performance test limits the acceleration levels of the test headform. Expressed in g's, a test headform acceleration level is limited to a maximum of 400g. In addition, acceleration in excess of 200g is limited to a cumulative duration of 2.0 milliseconds and acceleration in excess of 150g to a cumulative duration of 4.0 milliseconds. Recent confirmation of the appropriateness of these requirements is found in the 1980 study of the Japan Automobile Research Institute, Inc., "Human Head Tolerance to Sagittal Impact: Reliable Estimation Deduced from Experimental Head Injury Using Subhuman Primates and Human Cadaver Skulls," K. Ono, A. Kikuchi, M. Nakamura, H. Kobaysahi, and N. Nakamuri, Proceedings from the 24th Stapp Car Crash Conference, SAE 801303, 1980 (JARI study). The JARI study developed a human head impact tolerance threshold curve, which indicates that the threshold of human concussion is about 200g at 2.3 milliseconds. Standard 218's limitation of 200g at 2.0 milliseconds provides the necessary margin of safety. The agency's compliance testing shows that, in general, modern helmet technology has no problem meeting these requirements.

Although the impact attenuation test's acceleration levels were not proposed for change, the agency solicited comments on the issue. Both Javelin and Bell Helmets, Inc. (Bell) submitted comments and both recommended that the peak g be lowered (currently 400g)—Javelin recommending that it be lowered to 250g and Bell that it be lowered to 300g. Javelin stated that most brain injuries start below 400g and that there are no brain injuries at 250g. Neither Javelin nor Bell submitted data to support its position.

With regard to the dwell time requirements (limiting acceleration of 200g to 2.0 milliseconds and acceleration of 150g to 4.0 milliseconds), Bell stated that the original dwell times were established when the compliance test system was a swing-away test rig. Thus, when the standard changed to a drop test approach, the time duration increased on all of the helmets. Bell's contention is that this was due to the change in the system, and not because of any change in the helmets.

Bell tried to discount the agency's use of the dwell time requirements by hypothesizing that what NHTSA really is regulating is a change in velocity, since NHTSA establishes maximum g levels for certain periods of time and the product of acceleration and time duration is velocity. Using this premise, Bell contends that NHTSA would fail a change in velocity greater than 3.923 meters per second at 200g for 2 milliseconds duration or more, yet would allow a change in velocity of 7.8 meters per second at 199g for 4 milliseconds duration or less. Bell commented that the standard implies that "more is less", because NHTSA would say a change in velocity of 3.923 meters per second at 200g is life

threatening, but a change in velocity of 7.8 meters per second at 199g is within human tolerance.

Bell misunderstands the role of change of velocity in relation to the dwell time requirements of FMVSS 218, and bases all of its calculations on a limited and erroneous assumption. Bell assumes that, since both acceleration and time are elements of the performance requirement, that the agency is regulating change in velocity (maximum acceleration multiplied by time duration, in the case of rectangular g-t curves). In addition, Bell developed its "more is less" theory solely on the basis of calculating change of velocity from a single rectangular acceleration-time response curve.

Calculating change of velocity from a rectangular g-t curve can result in many different impacts generating the same change of velocity. For example, a change of velocity of 9.82 m/sec is the measure of a rectangular response curve of 500g–25 (t=milliseconds, which would represent an impact on a hard surface with a high acceleration level and short stopping time), as well as the measure of a rectangular response curve of 2g–500t (which would represent an impact on a soft surface, with low acceleration and long stopping time). While these two examples have the same change of velocity measure, clearly the 500g–2t response is highly injurious while the 2g–500t is not. The sameness in the change of velocity in these very different examples demonstrates that change of velocity alone is insufficient to determine injury.

As previously stated, the agency is not regulating change in velocity because it alone is not sufficient to relate impact and injury. Rather, researchers believe that peak acceleration and time duration at a certain level of acceleration are accurate determinatives of human brain injury potential. Limiting peak g and time duration for the acceleration-time response curve, although defining limits for the elements which also constitute change of velocity, it not limiting change in velocity. In summary, the agency believes the basic premise of Bell's comment is grounded in a misunderstanding of the role that change of velocity plays in applying time duration requirements to performance levels of motorcycle helmets. Further, Bell's reliance only on rectangular response curves is inappropriate.

In response to the other commenters recommending a lower maximum g level, the agency appreciates that there is a difference of opinion in the helmet manufacturing industry. We encourage any commenter wishing that the agency consider a change in the requirement to submit biomechanical data in support of its position. To date, the commenters have not submitted data which supports or contradicts in any way the 1980 JARI study. The current requirements in FMVSS 218 are consistent with the JARI study. Accordingly, the agency believes that they are appropriate.

Retention test—(a) dynamic testing (S5.3). The agency asked whether the retention test should be changed to require dynamic testing to prevent the helmet from rotating on the head and perhaps coming off the head in an accident. Bell responded that they have done considerable research and development on this, and that retention testing should include a dynamic test to check roll-off as well as strap strength.

Retention test—(b) chin guard area. The agency asked if the standard should include procedures for the chin guard area or full facial coverage of the helmet. Bell answered affirmatively, stating that a test for face bars should be developed.

With respect to the retention test responses, for both the dynamic testing question and the chin guard area question, no substantive or quantitative data were submitted. The agency will consider changes with regard to the helmet's retention system, but only if it receives appropriate data. The agency requests data to be submitted as they become available.

Projections (S5.5). Although the agency did not propose any change to the prohibition against rigid interior projections, Marushin submitted a comment requesting that the agency define "rigid". Marushin stated that it is not realistic to prohibit *all* rigid projections inside the shell, because any fastening system for essential accessories would have some kind of inside projection. The agency will consider a clarifying amendment on rigid projections as an issue for possible future rulemaking.

Selection of applicable test headform (new S6.1). The proposed rule contained a new S6.1, Selection of appropriate headform, specifying designated size ranges of helmets to be tested on the small, medium, and large test headforms. The premise of the proposal was that each helmet should be tested on the headform that correlated most closely with the heads of the persons likely to purchase the helmet. The agency believed that the manufacturer's size designation was the best method for determining the likely size of those heads. The proposal called for a helmet with a manufacturer's designated helmet size or size range of 6⅝ (European size 53) or smaller to be tested only on the small headform; a helmet with a manufacturer's designated helmet size or size range between 6¾ and 7½ (between European size 54 and size 60) to be tested on the medium headform; and a helmet with a manufacturer's designated size or size range of 7⅝ (European size 61) or larger to be tested on the large headform. Paragraph S6.1.2 further provided that any helmet having a designated size range that overlaps all or a portion of two or more of the three specified ranges must be tested on all headforms included within the helmet's size range.

Bell recommended that the upper end of the small headform size be changed from 6⅝ to 6¾, because Bell's helmets sized at 6¾ cannot be placed on the medium headform. The intention of the proposed changes is to ensure that all motorcycle helmets are subject to compliance testing. Accordingly, the final rule reflects Bell's requested change in sizing.

Marushin Kogyo Co. (Marushin) requested that the agency define the measuring method of each helmet size, including the contour to be measured and the measuring device. Marushin also requested that the metric unit of the helmet size be added to the standard. The agency declines to specify how a manufacturer should measure its helmets for sizing, because this reflects design considerations which are most appropriately determined by the manufacturers. Also, the designation method used in the proposed rule provides adequate size information, since it is adopted from long-established industry procedures. The American designation, for example, 6¾, indicates 6¾ inches, the diameter of an equivalent circle; the European equivalent in parentheses, for example, 54, indicates 54 centimeters, the circumference of the equivalent circle. No change has been made in the final rule.

Bell opposed the requirement that a helmet be tested on more than one headform if its sizing extends beyond the limits of a single size range. As an alternative, Bell suggested that any helmet falling within the size ranges of two or more headforms be tested on the largest of those headforms, noting that approximately five percent of its helmets would have to be double tested under the proposed rule.

The agency has reviewed test results of the same helmet being tested on two different size headforms, and has found that the results are not consistent. Some smaller helmets tested better on larger test headforms and some larger helmets

tested better on smaller test headforms. This is an indication to the agency that testing only on the larger headform as Bell suggests would not ensure that a given helmet also would pass the performance requirements when tested on a small headform. The agency therefore believes the multiple testing rule is needed to ensure that any helmet falling within the size range for any particular headform size meets the performance requirements when tested on that headform. No change has been made in the final rule.

Headform test line (new S6.2.3). Paragraph S6.2.3 describes how to determine the test line of a helmet and Figure 2 in FMVSS 218 graphically shows the test line on a headform. All strikes or impacts must be above the designated test line. The area above the test line represents the more vulnerable area of the skull and the required test area on a motorcycle helmet. In the proposed rule, the agency asked three questions related to the helmet test line:

1. Should the test line marking the limit of the test surface in Figure 2 of the Standard be lowered or should the test be revised in other ways to provide more protection in accidents for the lower part of the back of the head or the front of the head in the forehead area, or to improve the performance of the helmet from the side?

2. What requirements would represent the optimal trade-off between helmet weight, visibility, hearing and other helmet design criteria?

3. Do current requirements represent a reasonable trade-off?

Bell was the only customer to respond to these questions. While Bell stated the FMVSS 218 has proven to offer good protection within the existing trade-offs scheme, Bell did recommend that the test line be lowered in the back of the head area. Bell or any other manufacturer desiring that NHTSA consider revising the test line in a future rulemaking should submit supporting data.

Temperature Conditioning (new S6.4) The agency asked whether the low temperature conditioning requirements should be changed so that the interior surface of the helmet, or the headform, is at body temperature for the impact attenuation and penetration tests.

Bell stated that it believes the agency should consider the inner and outer temperatures of the test helmets. Florida Safety Products, Inc. (Florida) believes that any tests on a helmet subjected to low temperature conditions is unrelated to real life conditions, unless the helmet has a simulated human head in it. Florida has tested helmets conditioned to 10°F containing a bladder conditioned to 98°F to simulate a human head. Although it did not elaborate, Florida indicated that these test conditions produced a "startling difference in test results" from those for helmets tested under current FMVSS 218 procedures.

Florida also attached a U.S. Army Aeromedical Research Laboratory study on this subject, which concluded that the current FMVSS 218 requirements do not simulate potential, real world, cold climate conditions, particularly because the headform is deemed too cold, and therefore are inappropriate for the determination of cold temperature dynamic response of a helmet system. The study recommended that testing be done under conditions that simulate potential, real world conditions as closely as possible. Florida concluded its comments by recommending a change in the standard which would require that the test headform be conditioned to body temperature for the impact attenuation and penetration tests.

The agency acknowledges that temperature gradients exist, and that the temperature of the test headform (or other substance on which the helmet is placed) may affect the temperature of the helmet. However, what the agency lacks, and what the commenters did not submit, are any data indicating any link between differences in impact attenuation and penetration test results and changes in temperature. NHTSA requests any data, including specific test results, which the agency may use to evaluate future rulemaking decisions.

Bell also commented on the procedure used to wet the motorcycle helmet for the water immersion conditioning requirement (new S6.4.1(d)), recommending that the wet test be a "spray" type test as opposed to the current soak test. Bell further stated that they have indications that some of the liners have been moved out of position because of excess water in the helmet. As with other "new" information received from commenters, the agency will consider this recommendation in the context of a possible future rulemaking and requests the submission of specific data.

Second Impact. The impact attenuation test (S7.1.2) states that each helmet is impacted with two successive, identical blows at each site, from a drop height of 72 inches onto the flat anvil and from a drop height of 54.5 inches onto the hemispherical anvil.

Javelin recommended that the agency change the impact attenuation test conditions. Their recommendation was that the agency eliminate the requirement for the second impact at each site and, in the alternative, specify 120J impact energy for the first (and only) impact on the flat anvil and 95J impact energy for the first (and only) impact on the hemispherical anvil (J = joules, a measure of energy).

Translating J's into drop heights, Javelin's recommendation for the medium test headform assembly would be approximately 97.2 inches, as opposed to FMVSS 218's drop height of 72 inches onto the flat anvil. The equivalent drop height for 95J is about 76 inches, as opposed to FMVSS 218's drop height of 54.5 inches onto the hemispherical anvil. If adopted, expressing the impact requirements in terms of energy units means that the drop heights would be dependent upon the mass of the test headform used and would be different for each size test headform.

Conversely, Javelin's recommendation would require that the same amount of energy be used for each size headform. However, Javelin did not provide any supporting data for their proposed test procedure change. The current FMVSS requires that the different size test headform and motorcycle helmet assembly be dropped from the same height, which results in different amounts of energy being imparted, since impact energy changes with mass, and the different headform assemblies have different amounts of mass. The agency adopted the single height requirement to simulate crash conditions. NHTSA believes that a consistent drop height more accurately simulates reality than a consistent measure of energy.

With regard to eliminating the second impact, the agency believes that current FMVSS 218 establishes minimum performance requirements. The purpose of requiring the second impact at each test site is to establish a minimum level of helmet residual impact absorbing capability. In real world accidents, a second impact may occur quickly after the first, perhaps within one or two seconds and perhaps at a different place. While there is no existing test method for conducting second impacts within such a short time frame, it is known that the human head's tolerance is lowered when subjected to repeated blows.

While the agency's second impact test does not reproduce potential, multiple impacts in a single accident, it does establish that the material has sufficient ability to recover its protective capabilities in the particular location where it has been impacted. For these reasons, the agency believes that retaining a second impact test is important.

While various manufacturers have recommended that the agency eliminate the second impact requirement, no one has submitted data to demonstrate that the second impact is not appropriate or provided a rationale for eliminating the requirement. In fact, all other known standards which have been established by private standards organization or by foreign countries require equal or higher impact levels than FMVSS 218 for both the first and second impacts. Absent contradictory data, the agency believes that it is appropriate to retain the standard's current requirements.

Test Conditions: Time limitations for the impact attenuation test and the penetration test. The NPRM proposed that the impact attenuation test (new S7.1.3) and the penetration test (new S7.2.3) start at exactly two minutes following removal of the helmet from the conditioning environment and that the two successive impacts for each test site be completed within four minutes. If either time requirement is not met, the helmet must be returned to the conditioning environment and the test series begun again. Under the current standard, there is no minimum starting time but the impacts must be conducted within five minutes. The reduction in test time limits will reduce the temperature variations from test to test with the same helmet and will provide more repeatable test results.

The agency also requested comments from manufacturers and test laboratories about whether a helmet's performance during the retention test (chin strap) is also temperature sensitive.

The agency did not receive any comments on its proposed time limitation changes to the standard or on its request concerning the time sensitivity of the retention system test. The proposed rule provisions are adopted in the final rule without change.

Resonant frequency of the test headform (new S7.1.5). The NPRM provided that a test headform may not exhibit resonant frequencies below 2,000 Hz (cycles/seconds)(new S7.1.5), lowered from the currently specified 3,000 Hz (old S7.1.4). The purpose of this requirement is to ensure that headform frequencies do not distort helmet response measurement. The fundamental helmet frequency is estimated to be below 1,000 Hz and the tested resonant frequencies for the new small, medium, and large headforms exhibit frequencies well above 2,000 Hz. Setting a minimum resonant frequency of 2,000 Hz for the headform will eliminate any risk of interference with test results, while allowing some flexibility in the design and machining of headform interiors (for example, there can be variations in wall thickness).

Since the agency did not receive any comments on this provision, it adopts the requirement as proposed.

Use of the monorail drop test equipment (new S7.1.6). The agency specified in the proposed standard that it would use the monorail drop test equipment in the conduct of the impact attenuation test (new S7.1.6). The agency has been using the monorail drop test equipment, but it had not specified its use in the standard before. The agency uses the monorail drop test equipment because the impact point on the helmet can be fixed. The other frequently used system, the twin wire system, allows the headform assembly to rotate downward, making it hard to predict successive impact points. Added friction due to this downward rotation can cause speed variations, which in turn may produce response variations.

The agency received several comments on its use of the monorail drop test equipment. Javelin suggested that test equipment be optional to the manufacturer, contending that if the twin-wire equipment is adjusted, it can match the performance of the monorail drop test equipment. Bell, while not objecting to the monorail drop test equipment itself, questioned the agency's statement that the monorail drop test equipment is more consistent, contending that two NHTSA contract laboratories, Dayton T. Brown and Southwest Research, had different test results with the monorail drop test equipment. Finally, Marushin specifically requested that the twin-wire system be authorized, since it is Marushin's belief that the reliance on the monorail drop test equipment is premature and that the twin-wire testing system is the most common system in place throughout the world. As a practical matter, Marushin does not know of a reliable source from which to get the monorail drop test equipment.

The agency does not consider the different test results experienced by Dayton T. Brown and Southwest Research as being comparable. Certain test differences were due to differences in instrument control practice. However, according to a worst case analysis report provided by each laboratory, variance due to instrumentation differences alone is less than five percent, well within the tolerance range. As mentioned earlier, NHTSA's Laboratory Procedure for Motorcycle Helmet Testing (TP-218-02, October 1984) includes procedures for the calibration of measurement and test equipment as well as provisions to record all test data. The procedures used in this manual are in accord with established industry practice and test laboratories should ensure that these procedures are used in the conduct of all compliance testing.

The testing done by these laboratories was not designed to be a comparison of like test procedures and like helmets, and should not be viewed as such. The testing labs arrived at different results for some tests, and like results for other tests. Tested helmets must meet performance requirements for any impact within the prescribed test area. Further, a manufacturer must certify that *all* areas within the test area meet the performance level. When laboratories test helmets, however, there could be a wide difference in the actual location on the helmet which is impacted. These different orientations of the helmets may result in different test results. The results should not be so disparate, however, that in one lab's test a particular helmet model passes and in another lab's test the same helmet model fails. In the 3,008 drops of the different laboratories reviewed by the agency, only three indicated different pass/fail results. (One of these was a failure due to the helmet liner splitting, not a failure based on actual helmet performance.) The agency considers these few disparities inconsequential.

The agency does not intend to impose an addition burden by identifying the monorail drop test equipment as the method by which it tests compliance. As stated in previous rulemakings and interpretations, a manufacturer is not required to follow specifically the test procedures identified in a particular standard. The manufacturer must, however, ascertain that the product will conform to the standard's requirements when it is tested by the specified method. In assuring itself that its product, if tested, will conform to the standard's requirements, the manufacturer must exercise due care and utilize sound engineering judgment. As a practical matter, the manufacturer may continue to use the twin wire system, so long as the manufacturer uses "due care" to ensure that performance is comparable to those tested with the monorail drop test equipment. "Due care" is determined on a case-by-case basis and whether a manufacturer's action constitutes "due care" will depend, in part, upon the availability of test equipment, the limitations of available technology, and, above all, the diligence evidenced by the manufacturer.

Information available to the agency concerning the one known manufacturer and seller of the monorail drop test

equipment is filed in the Standard 218 Rulemaking Docket, including an estimated cost of $17,000 for the testing equipment and instrumentation.

Penetration Test (S7.2). The agency asked whether the geometric configuration of the pointed penetration test striker should be modified to resemble the narrow surface in the 1985 Snell standard. The Snell standard includes a penetration test which involves a non-pointed object designed to represent a common roadway obstruction.

Both Bell and Marushin indicated that they preferred the non-pointed object used in the Snell standard.

Javelin recommended that the penetration test be modified to coincide with a recommendation by Professor H. H. Hurt in his 1981 study ("Motorcycle Accident Cause Factors and the Identification of Countermeasures", H. H. Hurt, J. V. Ouellet, D. R. Thom, Traffic Safety Center, University of Southern California, DOT HS-805 862, January 1981): "* * * [I]n actual accident conditions, a 90° metal edge was the much more common threat than the pointed surface of the FMVSS 218 standard penetrator * * *. The conical point penetrator of the current test should be replaced with a hardened steel edge approximately ⅛ inch thick and 1 inch long, in order to be representative of accident impact." (At page 325).

Javelin's comment indicated that Javelin believes that a thermoplastic helmet with thick and less dense liner and a matching shell of marginal penetration performance (according to current FMVSS 218) is a safer helmet than one with a denser liner designed to resist penetration by a pointed steel marker. The agency does not agree, since the biomechanical data available to NHTSA indicate that too thick a liner results in sustained g levels beyond the 2.0 and 4.0 milliseconds allowed by the standard. These responses would result in injuries.

Further, while the Hurt report does recommend that NHTSA adopt the Snell non-pointed object for its impact attenuation test, its general recommendations state that FMVSS 218 "* * * provides a high level of protection for the typical traffic accident, and appears to need only minor modifications." (Hurt Report, at p. 422) All of the Hurt recommendations, along with the specific comments of Bell, Javelin and Marushin will be evaluated in the context of a possible future rulemaking. The agency requests specific data in support of this change.

Metric Equivalents. The proposed rule contained metric equivalents for all inch and pound measurements, except for the headform dimensions in the Appendix. The metric equivalents in centimeters for the inch dimensions in Table 2 and Figures 6, 7, and 8 can be obtained by multiplying 2.54 to all dimensions. There were no comments on this issue, and the final rule includes metric equivalents as appropriate.

Other standards. The proposed rule asked if NHTSA should consider adopting additional requirements which are contained in other motor vehicle safety standards, for example, the Snell Memorial Foundation Standard, the American National Standards Institute (ANSI) Standard or European standards, such as the ECE standard.

Bell responded, in the affirmative. In considering the adoption of other standards' requirements in future rulemaking, the agency will need data related to performance of motorcycle helmets. The agency requests that anyone having this data submit it to NHTSA for consideration.

Other changes to final rule. In addition to the changes in response to comment, this final rule also contains certain technical, nonsubstantive changes, as described below:

General. The final rule places all of the tables and figures of the standard into one Appendix and the old Appendix is removed. This regrouping has required changes to several of the cross-references in the Standard. For example, in the definition of "Test headform", the previous reference to the old Appendix is removed and replaced with a reference to Table 2 and Figures 5 through 8.

S3 Application. The final rule adds the word "all" before the word "helmets", to clarify the Standard now applies to all helmets offered for sale in the United States, regardless of size.

S4 Definitions. The changes include placing the definitions in alphabetical order and making a cross reference amendment of the kind described above under General changes.

S5.6 Labeling. This section is renumbered to provide consistency in the numbering scheme and to provide for numbering for the first time to undesignated paragraphs. For example, old S5.6.1(1) is now S5.6.1(a). Previously undesignated paragraphs containing instructions to the purchasers of helmets have become numbered paragraphs (1) through (4) under S5.6.1(f), Instructions to the purchasers.

Helmet position. In S6.3.1, as well as in other places where it appears, the term "prior to" has been replaced by the word "before".

S6.4 Conditioning. An additional numerical breakdown has been provided for these provisions, so that a newly designated S6.4.1 contains the conditioning requirements before testing and S6.4.2 contains conditioning requirements during testing.

S7. Test conditions. In S7.1.4, one paragraph has been broken down into two designated paragraphs: S7.1.4(a) contains the impact attenuation free fall requirements onto the hemispherical anvil and S7.1.4(b) contains the impact attenuation free fall requirements onto the flat anvil.

In S7.1.9, the Standard requires that the acceleration data channel comply with the SAE Recommended Practice J211 requirements for channel class 1,000. The proposed rule inadvertently omitted the date of the Standard. The agency intends the incorporation by reference of SAE Recommended Practice J211, Instrumentation for Impact Tests, to be to the June 1980 edition, which is substantively the same as the previously incorporated by reference 1970 edition. Accordingly, S7.1.9 has been amended to include a reference to the 1980 edition.

Costs and Benefits of FMVSS 218

In an attempt to determine the costs associated with complying with FMVSS 218, the agency posed the following questions in the NPRM. When there was a response, it immediately follows the question.

1.(a) How many helmet manufacturers have, or do not have, their own testing equipment?

Bell and Marushin indicated that they have their own testing equipment. Marushin's is twin-wire equipment.

(b) Of the manufacturers with equipment, what percentage of helmet testing is done by outside laboratories?

Marushin stated that they have an outside laboratory test helmets for calibration and comparison purposes once a year.

2.(a) How many test headforms would helmet manufacturers, who conduct their own testing, need to purchase to meet the requirements of the rule?

Bell indicated that even though they have had a complete set of headforms for several years, they have ordered a new set to ensure that they are using the same headforms as the NHTSA compliance test contractors. Marushin indicated that they already have a set, but that they will need to perform precise dimensional checks of the headforms against the requirements of the standard to ensure continued compliance.

(b) How many manufacturers would do their own machining of the headform?

Marushin indicated that they would use a subcontractor and Bell stated their doubt that any manufacturer would do its own, even though Bell has done it in the past.

3. What are the testing costs for helmet manufacturers conducting their own testing?

Marushin estimated about $200 a helmet, while Bell stated that it was difficult to compute costs for in-house testing, since they have two full-time technicians who conduct quality control, new product research and development and competitors' model testing on a daily basis.

4. What is the cost of redesigning a motorcycle helmet shell and its liner?

Marushin estimates $50,000 and Bell indicated that the cost of redesigning a shell and linear system for a helmet varies by thousands of dollars depending on the changes made. Generally, it takes six months to a year to develop a new model and complete on-road technical testing.

5. What percent of current helmet production can be placed on the size C headform (now the medium headform)?

Marushin estimated roughly 90 percent and Bell estimated 99 percent.

6. What percent of helmet production would be tested on each of the small, medium and large headforms?

Small headform: Marushin, 10 percent; Bell, 1 percent (as the Standard is amended in this final rule).

Medium headform: Marushin, 70 percent; Bell, 85 percent.

Large headform: Marushin, 20 percent; Bell, 14 percent.

7. What percent of helmets would need to be tested on more than one size headform?

Bell: Five percent. (See previous discussion about required multiple testing.)

8. Is there any data comparing effectiveness of complying versus non-complying helmets?

Marushin replied that they had no data. Bell stated that "there is considerable data to indicate that helmets passing a more rigid standard in some ways, but that do not pass the DOT standard, have saved many lives without any negative side effects." Bell indicated that it was referring to the time duration requirement, and that the maximum g rule is much more important than the time duration requirement, and helmets that can pass a more stringent (lower) maximum g level than FMVSS 218 may not comply with FMVSS 218 because it cannot meet the time duration requirement. The agency assumes that Bell is speaking of high-performance helmets that are designed for off-road uses, such as automobile racing, or possible standards in existence in other countries.

Also in an attempt to estimate the costs associated with complying with FMVSS 218, the agency contracted with HH Aerospace Design Company to perform a cost/benefit study of the effects of using several headform sizes in testing motorcycle helmets. ("Costs/Benefit Study of Effects of Using Several Headform Sizes in Testing Motorcycle Helmets Under Federal Motor Vehicle Safety Standard 218", Contract No. DTNH 22-80-C-0736, Final Report, September, 1980.) This report, the data submitted in response to the questions in the proposed rule, and data requested orally from companies and noted in the rulemaking docket (Docket No. 85-11), were sources used by the agency in developing a thorough analysis of this rulemaking. This analysis is part of the final regulatory evaluation prepared by the agency and can be found in the rulemaking docket of this rule (See, Final Regulatory Evaluation: Amendment Extending FMVSS 218, Motorcycle Helmets, to all Helmet Sizes, NHTSA, Plans and Policy, Office of Regulatory Analysis, July 1987.) A summary of the findings follows.

The agency has determined that there are some costs associated with this rule, since small motorcycle helmets (and any other size helmet that could not be "placed on"the size C headform) now will have to be certified as complying with FMVSS 218. The possible new costs will be in the areas of capital costs (purchase three or more new headforms, if the manufacturer does its own testing), design costs (possible redesign of liner for the small helmets, and possibly, though considered unlikely, redesign of a motorcycle shell), testing costs (ten percent of helmet production, *i.e.*, small helmets, which could not be places on the size C headform and previously were not subject to FMVSS 218 now will have to be tested and certified. In addition, some helmets will have to be tested on multiple test headforms if their sizing encompasses more than one headform size), and labeling costs (ten percent of helmet production will have to be labeled for the first time).

Thus, a manufacturer that intends to test its own motorcycle helmets for compliance with FMVSS 218 may have to purchase additional headforms, at a maximum estimated cost of about $4,670. In addition, a manufacturer who performs in-house compliance tests may wish to purchase the monorail drop test equipment, at an estimated cost of $17,000 (including instrumentation). Other one-time costs for manufacturers, whether or not they do in-house compliance testing, may include the redesign of noncomplying helmets. The agency anticipates that any necessary redesign will focus on liner redesign, at an estimated cost to the industry as a whole of approximately $60,000-$72,000. Although considered unlikely, there may be an instance of a manufacturer having to redesign a helmet shell. These potential costs could vary widely, with a possible cost of between $12,000 and $36,000 per shell for a redesign of a fiberglass shell and a possible cost of between $150,000-$182,000 per shell for a redesign of a polycarbonate shell.

The other costs associated with complying with amended FMVSS 218 will be recurring costs—affecting the cost of production. Certifying the additional 10 percent of the helmets now subject to the standard will cost about $.05 per helmet; multiple testing will add approximately $.03 per helmet; and the additional labeling costs will add about $.01 per helmet.

Costs to the Consumer. The accumulated estimate of these increases is estimated to be not more than $.10 per helmet. Since helmets can range in price from $33 to $300, the agency considers this increase inconsequential.

Benefits. The agency considers there to be clear benefits to this standard. The primary benefit—the extension of test requirements to all helmet sizes—is the principal reason for undertaking the rulemaking. FMVSS 218 will now apply to all helmets, and each helmet manufacturer will have to certify each helmet model as complying with the Standard before the helmet is offered for sale in the United States. In addition, to the extent there was consumer concern about the efficacy of any helmet on the market due to a lack of universal certification, applicability of the Standard to all helmets will eliminate this concern.

Consideration of Future Action

In the NPRM, the agency asked a series of questions concerning motorcycle helmet issues that may be considered in future rulemaking proceedings. These questions elicited information on potential new areas of motorcycle helmet performance, as well as data concerning performance requirements contained in other motorcycle helmet standards, such as in the American National Standards Institute and ECE standards. The solicited information covered such issues as a different configuration for the pointed penetration test striker, enlargement of the test area of the helmet, inclusion of a chin guard performance test for full facial coverage

helmets, as well as test procedure changes for the temperature conditioning requirements and dynamic testing for the retention test.

To the extent the agency received responses to these questions, they have been discussed previously, in the context of the specific issues of this rulemaking. However, the agency would like to reaffirm its interest in receiving specific data in these areas for possible future rulemaking actions. Commenters with information on these issues should refer back to the proposed rule for the specific questions on which the agency is seeking information. (See the September 27, 1985 issue of the Federal Register, at page 39147.] To be helpful to the agency in considering each topic, submissions must be specific, contain actual data on which the conclusions are based, and lay out test procedure specifications. If any submission is based on assumptions, please describe and justify the basis for each assumption.

Other Matters

Executive Order 12291 and DOT Regulatory Policies and Procedures. The agency has considered the economic and other effects of the requirements adopted in this final rule and determined that they are not major within the meaning of Executive Order 12291 nor significant within the meaning of DOT's regulatory policies and procedures. A Final Regulatory Evaluation has been prepared and placed in the public docket (Final Regulatory Evaluation: Amendment Extending FMVSS 218, *Motorcycle Helmets*, to All Helmet Sizes, NHTSA, Plans and Policy, Office of Regulatory Analysis, July 1987).

Environmental Policy Act. The agency has analyzed this final rule for purposes of the National Environmental Policy Act and has determined that this action will not have any significant impact on the quality of the human environment.

Regulatory Flexibility Act. NHTSA has considered the effects of this rulemaking action under the Regulatory Flexibility Act. I hereby certify that it will not have a significant economic impact on a substantial number of small entities. Accordingly, the agency has not prepared a full regulatory flexibility analysis.

As discussed previously, the result of analysis of costs and benefits was an agency determination that any costs associated with the rulemaking were minor.

Paperwork Reduction Act. The current certification requirements in Standard 218 are considered to be information collection requirements, as that term is defined by the Office of Management and Budget (OMB) in 5 CFR Part 1320 and have been assigned OMB Control Number 2127-0518. A request for approval for the certification requirements for the additional helmets made subject to Standard 218 as a result of this rulemaking have been submitted to the OMB for its approval, consistent with the requirements of the Paperwork Reduction Act (44 U.S.C. 3501 *et seq.*).

Semiannual Agenda. This document appears as item number 1939 in the Department's Semiannual Regulatory Agenda, published in the Federal Register on April 27, 1987 (52 FR 14548, 14653; RIN #2127-AA40).

List of Subjects in 49 CFR Part 571

Motor vehicle safety, Motorcycle helmets, Reporting and recordkeeping requirements.

In consideration of the foregoing, 49 CFR Part 571 is amended as follows:

PART 571—FEDERAL MOTOR VEHICLE SAFETY STANDARDS

1. The authority citation for Part 571 continues to read as follows:

Authority: 15 U.S.C. 1392, 1401, 1403, 1407; delegation of authority at 49 CFR 1.50.

§ 571.218 Standard No. 218; Motorcycle helmets.

2. S3. is revised to read as follows:

S3. *Application.* This standard applies to all helmets designed for use by motorcyclists and other motor vehicle users.

3. S4. is amended by placing all existing definitions in alphabetical order and by revising the definitions for "Reference headform," "Reference plane", and "Test headform" to read as follows:

S4. *Definitions.*

* * * * *

"Reference headform" means a measuring device contoured to the dimensions of one of the three headforms described in Table 2 and Figures 5 through 8 with surface markings indicating the locations of the basic, mid-sagittal, and reference planes, and the centers of the external ear openings.

"Reference plane" means a plane above and parallel to the basic plane on a reference headform or test headform (Figure 2) at the distance indicated in Table 2.

* * * * *

"Test headform" means a test device contoured to the dimensions of one of the three headforms described in Table 2 and Figures 5 through 8 with surface markings indicating the locations of the basic, mid-sagittal, and reference planes.

* * * * *

4. S5. is revised to read as follows:

S5. *Requirements.* Each helmet shall meet the requirements of S5.1, S5.2, and S5.3 when subjected to any conditioning procedure specified in S6.4, and tested in accordance with S7.1, S7.2, and S7.3.

5. Paragraph S5.3.1(b) is revised to read as follows:

* * * * *

(b) The adjustable portion of the retention system test device shall not move more than 1 inch (2.5 cm) measured between preliminary and test load positions.

6. S5.4 is revised to read as follows:

S5.4 *Configuration.* Each helmet shall have a protective surface of continuous contour at all points on or above the test line described in S6.2.3. The helmet shall provide peripheral vision clearance of at least 105° to each side of the mid-sagittal plane, when the helmet is adjusted as specified in S6.3. The vertex of these angles, shown in Figure 3, shall be at the point on the anterior surface of the reference headform at the intersection of the mid-sagittal and basic planes. The brow opening of the helmet shall be at least 1 inch (2.5 cm) above all points in the basic plane that are within the angles of peripheral vision (see Figure 3).

7. S5.5 is revised to read as follows:

S5.5 *Projections.* A helmet shall not have any rigid projections inside its shell. Rigid projections outside any helmet's shell shall be limited to those required for operation of essential accessories, and shall not protrude more than 0.20 inch (5 mm).

8. S5.6 is revised to read as follows:

S5. 6 *Labeling.*

S5.6.1 Each helmet shall be labeled permanently and legibly, in a manner such that the label(s) can be read easily without removing padding or any other permanent part, with the following:

(a) Manufacturer's name or identification.

(b) Precise model designation.

(c) Size.

(d) Month and year of manufacture. This may be spelled out (for example, June 1988), or expressed in numerals (for example, 6/88).

(e) The symbol DOT, constituting the manufacturer's certification that the helmet conforms to the applicable Federal motor vehicle safety standards. This symbol shall appear on the outer surface, in a color that contrasts with the background, in letters at least ⅜ inch (1 cm) high, centered laterally with the horizontal centerline of the symbol

located a minimum of 1⅛ inches (2.9 cm) and a maximum of 1⅜ inches (3.5 cm) from the bottom edge of the posterior portion of the helmet.

(f) Instructions to the purchaser as follows:

(1) "Shell and liner constructed of (identify type(s) of materials).

(2) "Helmet can be seriously damaged by some common substances without damage being visible to the user. Apply only the following: (Recommended cleaning agents, paints, adhesives, etc., as appropriate).

(3) "Make no modifications. Fasten helmet securely. If helmet experiences a severe blow, return it to the manufacturer for inspection, or destory it and replace it."

(4) Any additional relevant safety information should be applied at the time of purchase by means of an attached tag, brochure, or other suitable means.

9. S6. is revised to read as follows:

S6. *Preliminary test procedures.* Before subjecting a helmet to the testing sequence specified in S7., prepare it according to the procedures in S6.1, S6.2, and S6.3.

10. S6.3 is redesignated as S6.4; S6.2 is redesignated as S6.3; S6.1 is redesignated as S6.2 and a new S6.1 is added to read as follows:

S6.1 *Selection of appropriate headform.*

S6.1.1 A helmet with a manufacturer's designated discrete size or size range which does not exceed 6¾ (European size: 54) is tested on the small headform. A helmet with a manufacturer's designated discrete size or size range which exceeds 6¾, but does not exceed 7½ (European size: 60) is tested on the medium headform. A helmet with a manufacturer's designated discrete size or size range which exceeds 7½ is tested on the large headform.

S6.1.2 A helmet with a manufacturer's designated size range which includes sizes falling into two or all three size ranges described in S6.1.1 is tested on each headform specified for each size range.

11. Newly redesignated S6.2 is revised to read as follows:

S6.2 *Reference marking.*

S6.2.1 Use a reference headform that is firmly seated with the basic and reference planes horizontal. Place the complete helmet to be tested on the appropriate reference headform, as specified in S6.1.1 and S6.1.2.

S6.2.2 Apply a 10-pound (4.5 kg) static verticle load through the helmet's apex. Center the helmet laterally and seat it firmly on the reference headform according to its helmet positioning index.

S6.2.3 Maintaining the load and position described in S6.2.2, draw a line (hereinafter referred to as "test line") on the outer surface of the helmet coinciding with portions of the intersection of that service with the following planes, as shown in Figure 2:

(a) A plane 1 inch (2.5 cm) above and parallel to the reference plane in the anterior portion of the reference headform;

(b) A vertical transverse plane 2.5 inches (6.4 cm) behind the point on the anterior surface of the reference headform at the intersection of the mid-sagittal and reference planes;

(c) The reference plane of the reference headform;

(d) A vertical transverse plane 2.5 inches (6.4. cm) behind the center of the external ear opening in a side view; and

(e) A plane 1 inch (2.5 cm) below and parallel to the reference plane in the posterior portion of the reference headform.

12. Newly redesignated S6.3 is revised as follows:

S6.3 *Helmet positioning.*

S6.3.1 Before each test, fix the helmet on a test headform in the position that conforms to its helmet positioning index. Secure the helmet so that it does not shift position before impact or before application of force during testing.

S6.3.2 In testing as specified in S7.1 and S7.2, place the retention system in a position such that it does not interfere with free fall, impact or penetration.

13. Newly redesignated S6.4 is revised to read as follows:

S6.4 *Conditioning.*

S6.4.1 Immediately before conducting the testing sequence specified in S7, condition each test helmet in accordance with any one of the following procedures:

(a) *Ambient conditions.* Expose to a temperature of 70°F(21°C) and a relative humidity of 50 percent for 12 hours.

(b) *Low temperature.* Expose to a temperature of 14°F(−10°C) for 12 hours.

(c) *High temperature.* Expose to a temperature of 122°F(50°C) for 12 hours.

(d) *Water immersion.* Immerse in water at a temperature of 77°F(25°C) for 12 hours.

S6.4.2 If during testing, as specified in S7.1.3 and S7.2.3, a helmet is returned to the conditioning environment before the time out of that environment exceeds 4 minutes, the helmet is kept in the environment for a minimum of 3 minutes before resumption of testing with that helmet. If the time out of the environment exceeds 4 minutes, the helmet is returned to the environment for a minimum of 3 minutes for each minute or portion of a minute that the helmet remained out of the environment in excess of 4 minutes or for a maximum of 12 hours, whichever is less, before the resumption of testing with that helmet.

14. S7.1 is revised to read as follows:

S7.1.1 Impact attenuation is measured by determining acceleration imparted to an instrumented test headform on which a complete helmet is mounted as specified in S6.3, when it is dropped in guided free fall upon a fixed hemispherical anvil and a fixed flat steel anvil.

S7.1.2 Each helmet is impacted at four sites with two successive identical impacts at each site. Two of these sites are impacted upon a flat steel anvil and two upon a hemispherical steel anvil as specified in S7.1.10 and S7.1.11. The impact sites are at any point on the area above the test line described in paragraph S6.2.3, and separated by a distance not less than one-sixth of the maximum circumference of the helmet in the test area.

S7.1.3 Impact testing at each of the four sites, as specified in S7.1.2, shall start at two minutes, and be completed by four minutes, after removal of the helmet from the conditioning environment.

S7.1.4 (a) The guided free fall drop height for the helmet and test headform combination onto the hemispherical anvil shall be such that the minimum impact speed is 17.1 feet/second (5.2 m/sec). The minimum drop height is 54.5 inches (138.4 cm). The drop height is adjusted upward from the minimum to the extent necessary to compensate for friction losses.

(b) The guided free fall drop height for the helmet and test headform combination onto the flat anvil shall be such that the minimum impact speed is 19.7 ft./sec (6.0 m/sec). The minimum drop height is 72 inches (182.9 cm). The drop height is adjusted upward from the minimum to the extent necessary to compensate for friction losses.

S7.1.5 Test headforms for impact attenuation testing are constructed of magnesium alloy (K–1A), and exhibit no resonant frequencies below 2,000 Hz.

S7.1.6 The monorail drop test system is used for impact attenuation testing.

S7.1.7 The weight of the drop assembly, as specified in Table 1, is the combined weight of the test headform and the supporting assembly for the drop test. The weight of the supporting assembly is not less than 2.0 lbs. and not more than 2.4 lbs. (0.9 to 1.1 kg). The supporting assembly weight for the monorail system is the drop assembly weight minus the combined weight of the test headform, the headform's clamp down ring, and its tie down screws.

S7.1.8 The center of gravity of the test headform is located at the center of the mounting ball on the supporting assembly and lies within a cone with its axis vertical and forming a 10° included angle with the vertex at the point of impact. The center of gravity of the drop assembly lies within the rectangular volume bounded by x = +0.25 inch (−0.64 cm), x = 0.85 inch (2.16 cm), y = 0.25 inch (0.64 cm), and y = −0.25 inch (−0.64 cm) with the origin located at the center of gravity of the test headform. The rectangular volume has no boundary along the z-axis. The x-y-z axes are mutually perpendicular and have positive or negative designations in accordance with the right-hand rule (See Figure 5). The origin of the coordinate axes also is located at the center of the mounting ball on the supporting assembly (See Figures 6, 7, and 8). The x-y-z axes of the test headform assembly on a monorail drop test equipment are oriented as follows: From the origin, the x-axis is horizontal with its positive direction going toward and passing through the vertical centerline of the monorail. The positive z-axis is downward. The y-axis also is horizontal and its direction can be decided by the z- and x-axes, using the right-hand rule.

S7.1.9 The acceleration transducer is mounted at the center of gravity of the test headform with the sensitive axis aligned to within 5° of vertical when the test headform assembly is in the impact position. The acceleration data channel complies with SAE Recommended Practice J211 JUN 80, Instrumentation for Impact Tests, requirements for channel class 1,000.

S7.1.10 The flat anvil is constructed of steel with a 5-inch (12.7 cm) minimum diameter impact face, and the hemispherical anvil is constructed of steel with a 1.9 inch (4.8 cm) radius impact face.

S7.1.11 The rigid mount for both of the anvils consists of a solid mass of at least 300 pounds (136.1 kg), the outer surface of which consists of a steel plate with minimum thickness of 1 inch (2.5 cm) and minimum surface area of 1 ft^2 (929 cm^2).

S7.1.12 The drop system restricts side movement during the impact attenuation test so that the sum of the areas bounded by the acceleration-time response curves for both the x- and y-axes (horizontal axes) is less than five percent of the area bounded by the acceleration-time response curve for the vertical axis.

15. S7.2 is revised as set forth below:

S7.2 *Penetration test.*

S7.2.1 The penetration test is conducted by dropping the penetration test striker in guided free fall, with its axis aligned vertically, onto the outer surface of the complete helmet, when mounted as specified in S6.3, at any point above the test line, described in S6.2.3, except on a fastener or other rigid projection.

S7.2.2 Two penetration blows are applied at least 3 inches (7.6 cm) apart, and at least 3 inches (7.6 cm) from the centers of any impacts applied during the impact attenuation test.

S7.2.3 The application of the two penetration blows, specified in S7.2.2, starts at two minutes and is completed by four minutes, after removal of the helmet from the conditioning environment.

S7.2.4 The height of the guided free fall is 118.1 inches (3 m), as measured from the striker point to the impact point on the outer surface of the test helmet.

S7.2.5 The contactable surface of the penetration test headform is constructed of a metal or metallic alloy having a Brinell hardness number no greater than 55, which will permit ready detection should contact by the striker occur. The surface is refinished if necessary before each penetration test blow to permit detection of contact by the striker.

S7.2.6 The weight of the penetration striker is 6 pounds, 10 ounces (3 kg).

S7.2.7 The point of the striker has an included angle of 60°, a cone height of 1.5 inches (3.8 cm), a tip radius of 0.02 inch (standard 0.5 millimeter radius) and a minimum hardness of 60 Rockwell, C-scale.

S7.2.8 The rigid mount for the penetration test headform is as described in S7.1.11.

16. S7.3 is revised to read as follows:

S7.3 *Retention system test.*

S7.3.1 The retention system test is conducted by applying a static tensile load to the retention assembly of a complete helmet, which is mounted, as described in S6.3, on a stationary test headform as shown in Figure 4, and by measuring the movement of the adjustable portion of the retention system test device under tension.

S7.3.2 The retention system test device consists of both an adjustable loading mechanism by which a static tensile load is applied to the helmet retention assembly and a means for holding the test headform and helmet stationary. The retention assembly is fastened around two freely moving rollers, both of which have a 0.5 inch (1.3 cm) diameter and a 3-inch (7.6 cm) center-to-center separation, and which are mounted on the adjustable portion of the tensile loading device (Figure 4). The helmet is fixed on the test headform as necessary to ensure that it does not move during the application of the test loads to the retention assembly.

S7.3.3 A 50-pound (22.7 kg) preliminary test load is applied to the retention assembly, normal to the basic plane of the test headform and symmetrical with respect to the center of the retention assembly for 30 seconds, and the maximum distance from the extremity of the adjustable portion of the retention system test device to the apex of the helmet is measured.

S7.3.4 An additional 250-pound (113.4 kg) test load is applied to the retention assembly, in the same manner and at the same location as described in S7.3.3, for 120 seconds, and the maximum distance from the extremity of the adjustable portion of the retention system test device to the apex of the helmet is measured.

17. Section 571.218 is further amended as follows:

a. The Appendix is removed.

b. Figures 1, 2, 3 and 4 and Table 1 are designated "Appendix to § 571.218". Table 1 is moved to appear before Figure 1.

c. Table 1, Figure 2 are revised and Figure 5, Table 2, and Figures 6, 7, and 8 are added.

Appendix to § 571.218

TABLE 1.—WEIGHTS FOR IMPACT ATTENUATION TEST DROP ASSEMBLY

Test headform size	Weight [1]—lb(kg)
Small	7.8 (3.5 kg).
Medium	11.0 (5.0 kg).
Large	13.4 (6.1 kg).

[1] Combined weight of instrumented test headform and supporting assembly for drop test.

* * * * *

BILLING CODE 4910-59-M

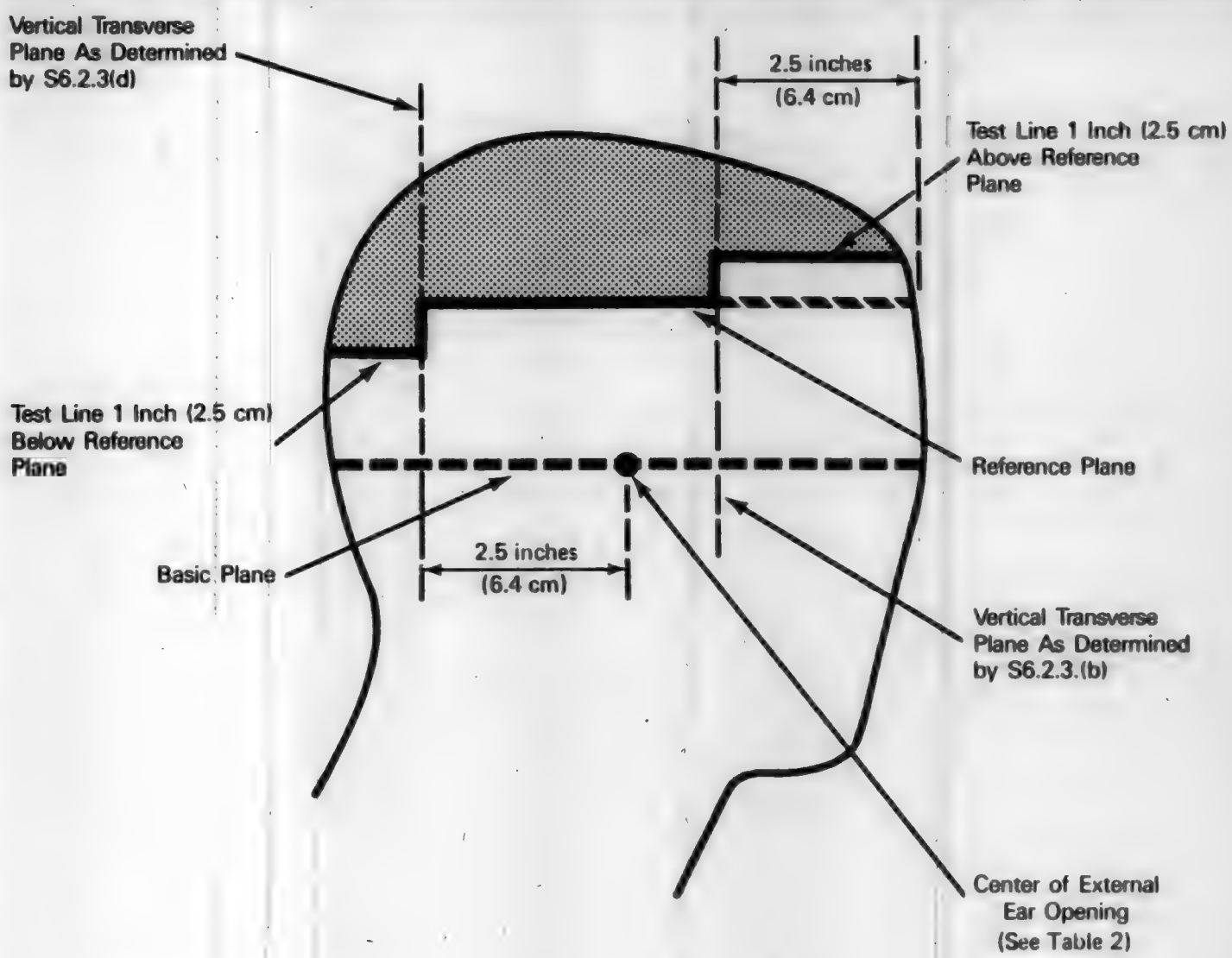

Note: Solid lines would correspond to the test line on a test helmet.

Test Surface

Figure 2

Figure 5

HEADFORM SECTIONS

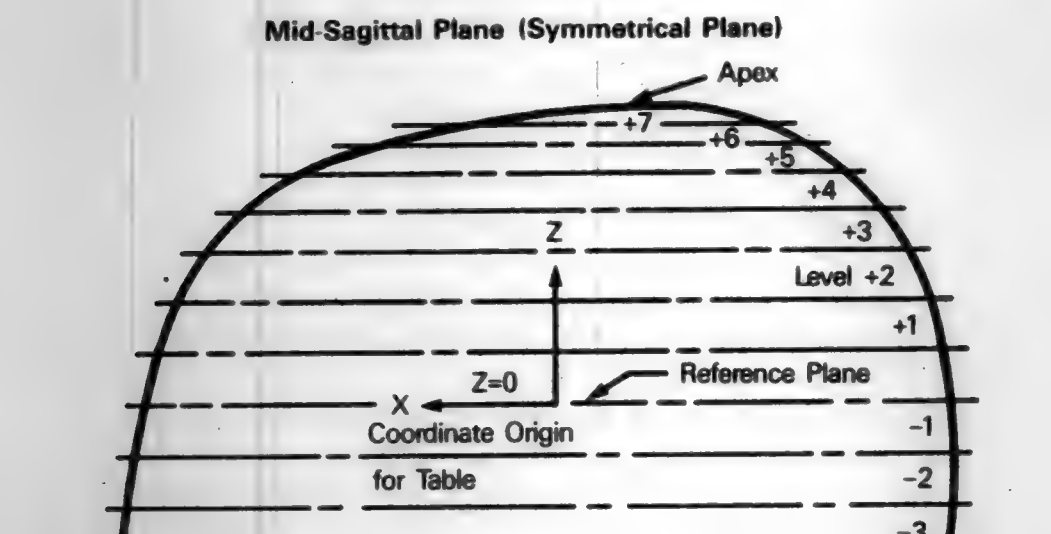

Headform Coordinate Systems
(Right-hand Rule)

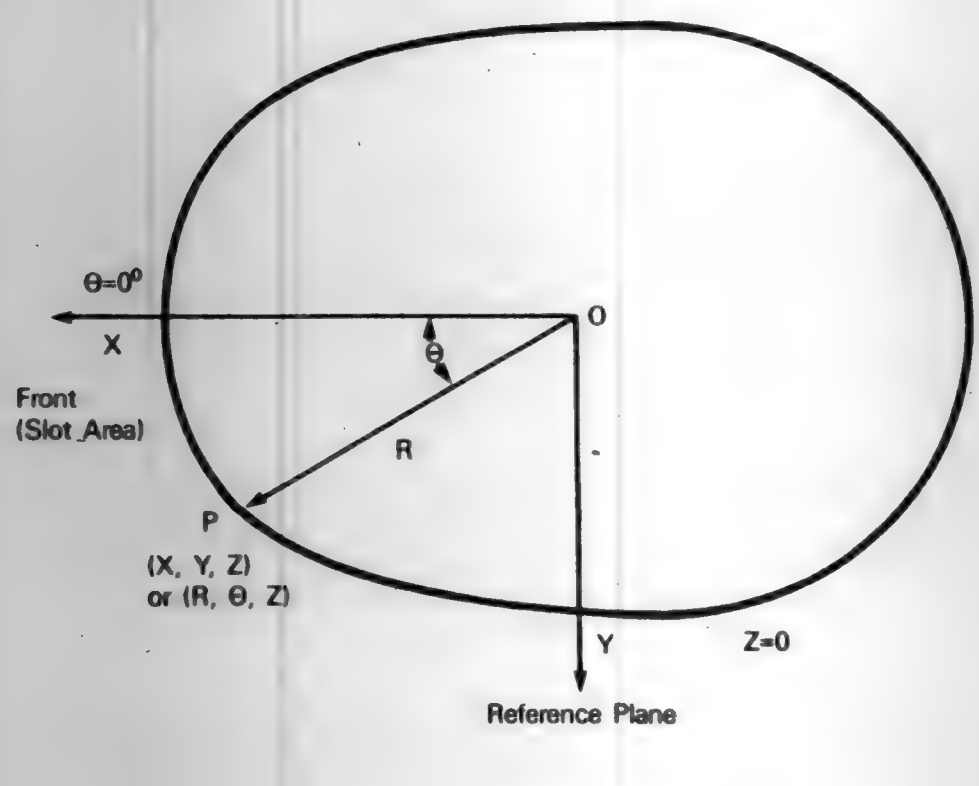

Table 2

Medium Headform — Exterior Dimensions (Continued)

	Level +5 Z=2.250			Level +6 Z=2.560		
Θ	R	X	Y	R	X	Y
0	2.526	2.526	0	1.798	1.798	0
10	2.521	2.483	0.483	1.798	1.771	0.312
20	2.464	2.315	0.843	1.757	1.651	0.601
30	2.387	2.067	1.194	1.719	1.489	0.860
40	2.305	1.766	1.482	1.678	1.285	1.079
50	2.232	1.435	1.710	1.652	1.062	1.266
60	2.174	1.087	1.883	1.641	0.821	1.421
70	2.144	0.733	2.015	1.645	0.563	1.546
80	2.132	0.370	2.100	1.673	0.291	1.648
90	2.147	0	2.147	1.712	0	1.712
100	2.213	−0.384	2.179	1.809	−0.314	1.782
110	2.316	−0.792	2.176	1.925	−0.658	1.809
120	2.463	−1.232	2.133	2.066	−1.033	1.789
130	2.624	−1.687	2.010	2.213	−1.423	1.695
140	2.763	−2.117	1.776	2.358	−1.806	1.516
150	2.863	−2.479	1.432	2.469	−2.138	1.235
160	2.919	−2.743	0.988	2.536	−2.383	0.867
170	2.954	−2.909	0.513	2.561	−2.522	0.445
180	2.958	−2.958	0	2.556	−2.556	0

	Level +7 Z=2.750		
Θ	R	X	Y
0	1.081	1.081	0
10	1.088	1.072	0.189
20	1.055	0.991	0.361
30	1.039	0.900	0.520
40	1.039	0.796	0.668
50	1.052	0.676	0.806
60	1.068	0.534	0.925
70	1.106	0.378	1.039
80	1.171	0.203	1.153
90	1.242	0	1.242
100	1.422	−0.247	1.400
110	1.489	−0.509	1.399
120	1.683	−0.842	1.458
130	1.801	−1.158	1.380
140	1.954	−1.497	1.256
150	2.083	−1.804	1.042
160	2.138	−2.009	0.731
170	2.175	−2.142	0.378
180	2.175	−2.175	0

Notes:

1. Apex is located at (-0.75, 0, 3.02) for (X,Y,Z) or (0.75, 180, 3.02) for (R, Θ, Z).
2. Center of ear opening is located at (0.40, 2.78, -2.36) for (X,Y,Z) or (2.80, 81.8, -2.36) for (R,Θ,Z).
3. Scale all dimensions by 0.8941 for small headform.
4. Scale all dimensions by 1.069 for large headform.
5. Headform is symmetrical about the mid-sagittal plane.
6. Units:
   R,X,Y,Z — inches.
   Θ — degrees.
7. To obtain metric equivalents in centimeters, multiply each figure by 2.54.

BEST COPY AVAILABLE

Figure 6

Small Headform – Interior Design

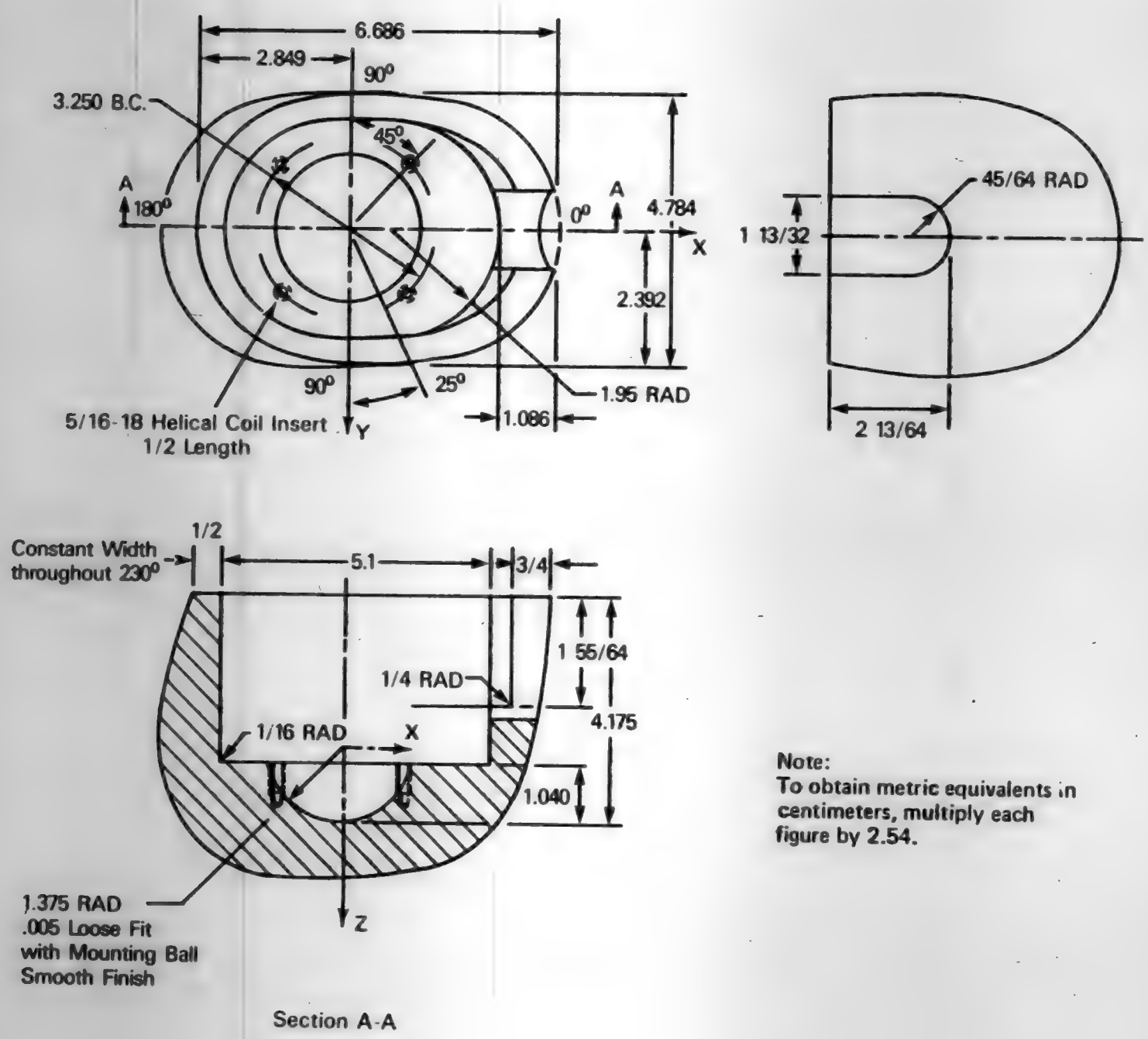

Note:
To obtain metric equivalents in centimeters, multiply each figure by 2.54.

Figure 7

Medium Headform – Interior Design

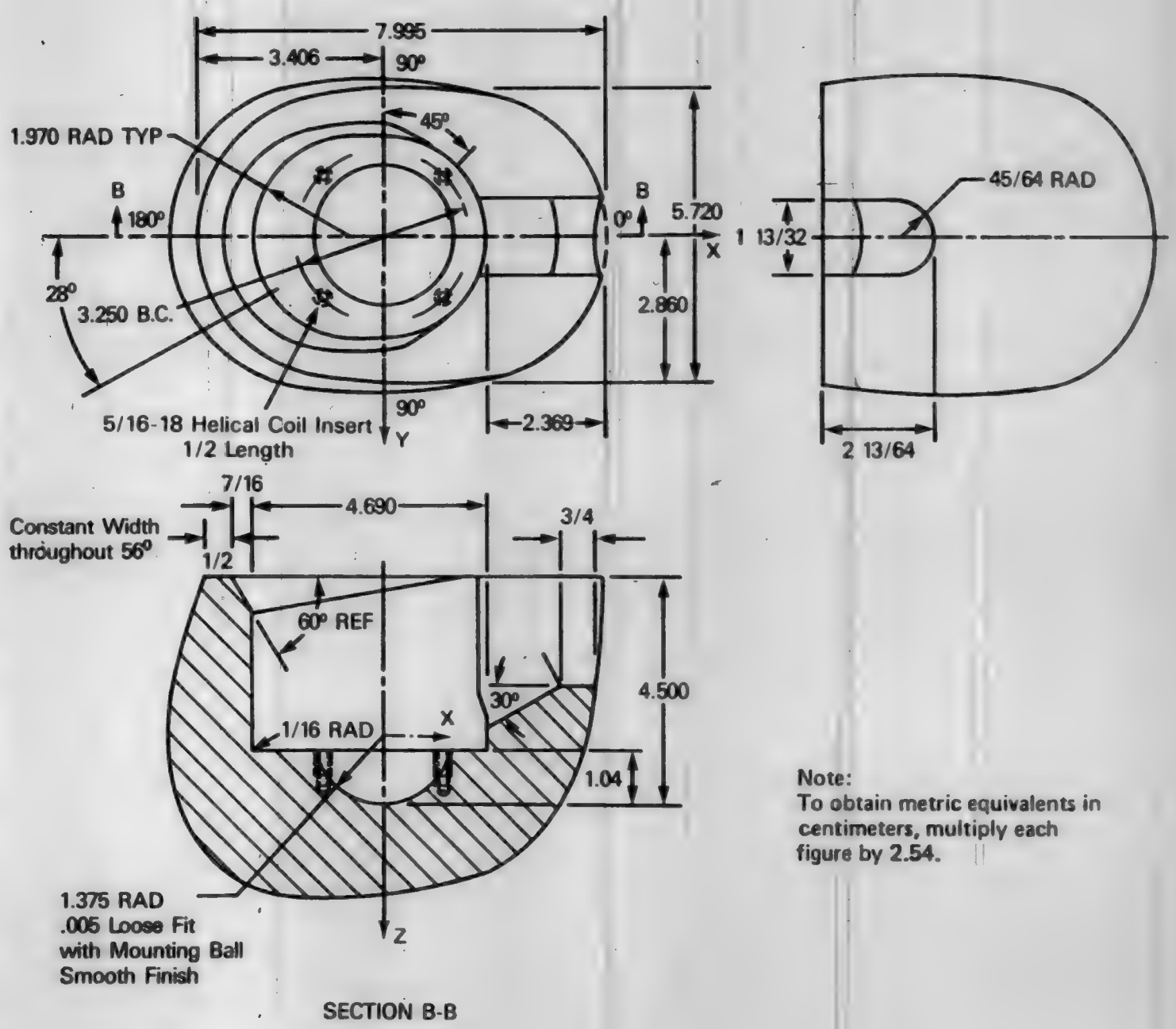

Note:
To obtain metric equivalents in centimeters, multiply each figure by 2.54.

Figure 8

Large Headform — Interior Design

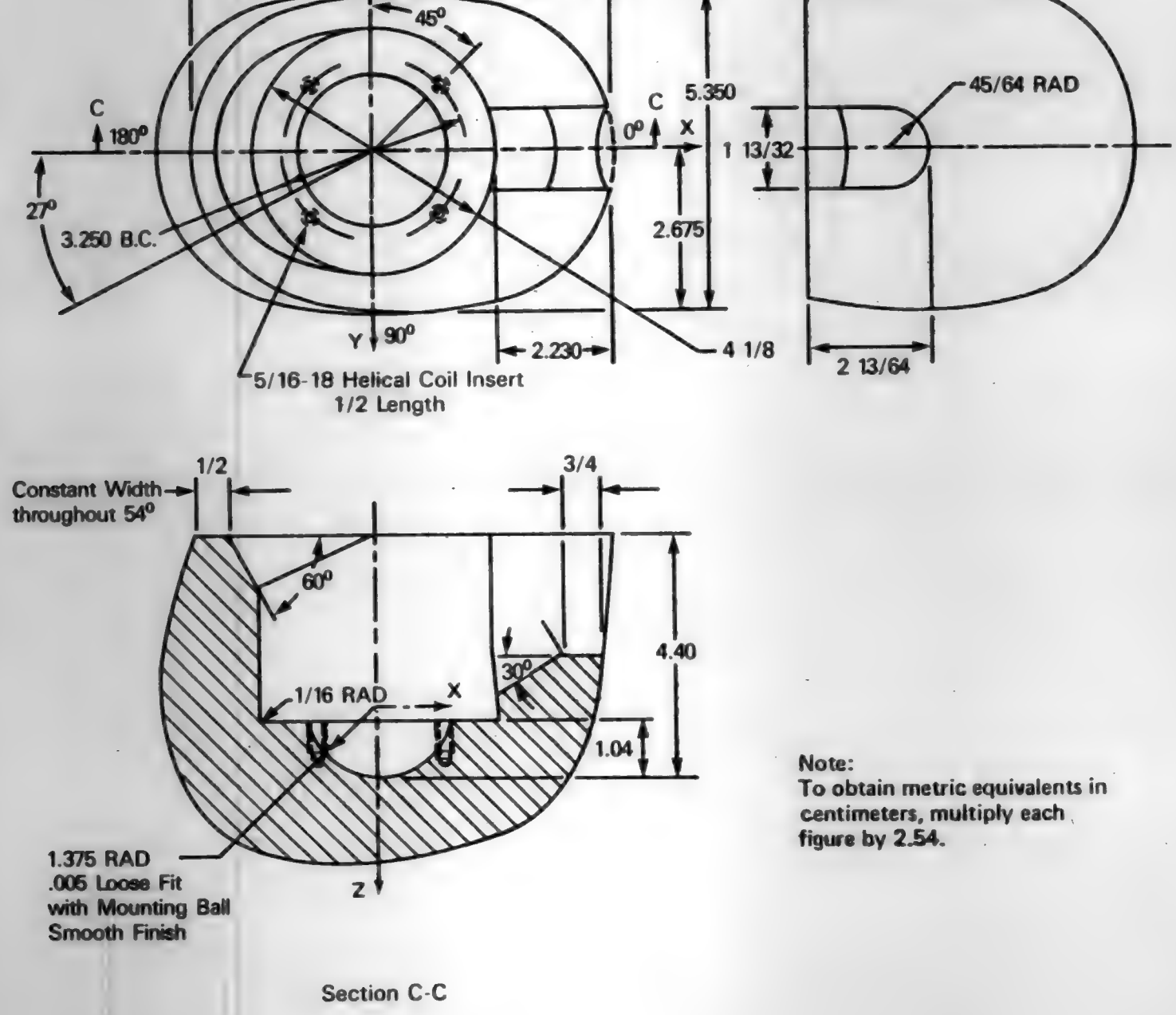

Note:
To obtain metric equivalents in centimeters, multiply each figure by 2.54.

BILLING CODE 4910-50-C

Issued on March 31, 1988.

Diane K. Steed,

Administrator.

[FR Doc. 88-7395 Filed 4-5-88; 8:45 am]

BILLING CODE 4810-55-M

DEPARTMENT OF COMMERCE

National Oceanic and Atmospheric Administration

50 CFR Part 672

[Docket No. 80112-8057]

Groundfish of the Gulf of Alaska

AGENCY: National Marine Fisheries Service (NMFS), NOAA, Commerce.

ACTION: Final rule.

SUMMARY: NOAA issues a final rule to implement an area registeration program beginning in 1988, which requires operators of hook-and-line vessels to notify the Director, Alaska Region, NMFS (Regional Director), before fishing for groundfish in any area or district which is open to directed fishing for sablefish with hook-and-line gear. This requirement is necessary to allow the Regional Director to estimate fishing effort to avoid exceeding the hook-and-line sablefish harvest quota. This action is intended as a conservation and management measure that will prevent the overharvest of sablefish and promote orderly fishing while providing for full utilization of the sable fish resource.

EFFECTIVE DATE: April 1, 1988.

ADDRESS: Copies of the documents supporting this rule may be obtained from Robert W. McVey, Director, National Marine Fisheries Service, P.O. Box 21668, Juneau, AK 99802-1668.

FOR FURTHER INFORMATION CONTACT: Ronald J. Berg (Fishery Biologist, NMFS), 907-586-7230.

SUPPLEMENTARY INFORMATION:

Background

The domestic and foreign groundfish fisheries in the exclusive economic zone (3-200 miles offshore) of the Gulf of Alaska are managed under the Fishery Management Plan for Groundfish of the Gulf of Alaska (FMP). The FMP was developed by the North Pacific Fishery Management Council (Council) under the Magnuson Fishery Conservation and Management Act (Magnuson Act) and is implemented by regulations of 50 CFR 611.92 for foreign fishing and Part 672 for domestic fishing.

This final rule implements an area registration program beginning in 1988, that requires operators of hook-and-line vessels to notify the Director, Alaska Region, NMFS (Regional Director), before fishing for groundfish in the following regulatory areas or districts which are open to directed fishing for sablefish with hook-and-line gear: (1) Western Regulatory Area, (2) Central Regulatory Area, (3) West Yakutat District of the Eastern Regulatory Area, and (4) Southeast Outside/East Yakutat Districts (combined) of the Eastern Regulatory Area.

Total allowable catches (TACs) of sablefish are established for the (1) Southeast Outside/East Yakutat Districts and (2) West Yakutat District of the Eastern Regulatory Area, and for the (3) Central and (4) Western Regulatory Areas in the Gulf of Alaska. Shares and the TACS are assigned as quotas to hook-and-line gear (53 FR 890, January 14, 1988). Large numbers of vessels using hook-and-line gear are expected to participate in the fishery in 1988 and subsequent years. The potential for hook-and-line vessels exceeding harvest quotas in any of the above management areas is high.

Information on the number of hook-and-line vessels that are fishing for sablefish is needed by the Regional Director for making projections about dates when the sablefish quota assigned to hook-and-line gear will be reached. All groundfish fishermen who are using hook-and-line gear and who are regulated under 50 CFR Part 672 must register before fishing for groundfish in any of the specified regulatory areas or districts in the Gulf of Alaska that are open to directed fishing for sablefish with hook-and-line gear. This means fishermen will be required to register each time they begin fishing in a different specified area. Fishermen may only maintain their registration in one area at any one time.

Fishermen who are fishing with hook-and-line gear for other groundfish species, such as rockfish and Pacific cod, must also register if they are fishing in areas open to directed fishing for sablefish with hook-and-line gear. Imposition of area registration on all hook-and-line fishermen during the sablefish directed fishing season is necessary to facilitate enforcement of area registration. Otherwise, no practical means exist to differentiate whether a hook-and-line fisherman is fishing for sablefish or some other species of groundfish.

A rule to implement this program was proposed in the **Federal Register** (53 FR 8789, March 17, 1988). Public comments were invited until March 29, 1988. No comments were received.

The area registration program is designed to minimize burdens on fishermen. Vessel operators must register by calling (a) one of the following numbers during business hours, 8:00 a.m. to 4:30 p.m., local time, Monday through Friday; or between the hours of 8:00 a.m. to 12:00 noon and 1:00 to 4:30 p.m., local time, Saturday and Sunday: Juneau, Alaska—Fishery Management Division, 706 West Ninth Street, toll-free telephone, in Alaska 1-800-478-7644, outside Alaska 1-800-334-7865; or (b) one of the following numbers during business hours, 8:00 a.m. to 4:30 p.m., local time, Monday through Friday: Kodiak, Alaska, Enforcement Division, 1211 Gibson Cover Road, telephone 907-486-3298; Sitka, Alaska, Enforcement Division, Post Office Building, telephone 907-774-6940.

The only information that the Regional Director requires for area registration is the name of the person who is registering, the vessel's Federal Gulf of Alaska groundfish permit number, the reguatory area or regulatory district being registered for, and the date the vessel will start fishing.

Public Comments

No comments were received.

Changes From the Proposed Rule in the Final Rule

The regulatory text in § 672.6(a) of this final rule lists the specific areas and districts that are open to directed fishing for sablefish with hook-and-line gear as of April 1 and require registration by hook-and-line fishermen before fishing for groundfish. This is a further clarification of the original intent of the Council that the registration program includes areas and districts in the Gulf of Alaska that have separate quotas for hook-and-line fishing for sablefish.

Classification

The Assistant Administrator for Fisheries, NOAA, has determined that this rule is necessary for the conservation and management of the sablefish fishery in the Gulf of Alaska and that it is consistent with the Magnuson Act and other applicable law.

The Alaska Region, National Marine Fisheries Service, prepared an environmental assessment/regulatory impact review (EA/RIR) for this rule. The Assistant Administrator for Fisheries concluded that no significant impact on the environment will occur as a result of this rule. You may obtain a copy of the EA/RIR from the Regional Director at the address above.

The Acting Under Secretary, NOAA, determined that this rule is not a "major rule" requiring a regulatory impact analysis under Executive Order 12291.

This determination is based on the socioeconomic impacts discussed in the EA/RIR. A program for area registration is superior to other alternatives considered. Since NMFS conducted an area registration program during the 1987 hook-and-line fishery, NMFS considers costs incurred in that program to be representative of those that will occur in future years. The analysis was summarized in the Classification section of the proposed rule.

The General Counsel of the Department of Commerce certified to the Small Business Administration that this rule will not have a significant economic impact on a substantial number of small entities. As a result, a regulatory flexibility analysis was not prepared.

This rule contains a collection of information requirement subject to the Paperwork Reduction Act. The Office of Management and Budget has approved this collection under OMB Control Number 0648-0182.

NOAA has determined that this rule will be implemented in a manner that is consistent to the maximum extent practicable with the approved coastal zone management program of the State of Alaska. This determination has been submitted for review by the responsible State agencies under section 307 of the Coastal Zone Management Act.

The Acting Under Secretary has determined that immediate implementation of this final rule is necessary to provide the Regional Director information on numbers of vessels participating in the fishery and thus allow effective management of this fishery. The directed hook and line fishery for sablefish opens April 1. Last year, in certain Districts of the Gulf of Alaska, the fishery was over in nine days. Due to increased effort in the fishery, 1988 openings may be even shorter in some districts than in 1987. As this rule must take effect immediately in order to provide the Regional Director with timely information on amount and distribution of vessel effort, to avoid overharvest of the resource, the agency finds good cause to waive delayed effectiveness of this rule under 5 U.S.C. 553(d)(3).

This rule does not contain policies with federalism implications sufficient to warrant preparation of a federalism assessment under Executive Order 12612.

List of Subjects in 50 CFR Part 672

Fisheries.

Dated: April 1, 1988.

James E. Douglas, Jr.,

Deputy Assistant Administrator For Fisheries, National Marine Fisheries Service.

For the reasons set out in the preamble, Part 672 is amended as follows:

PART 672—GROUNDFISH OF THE GULF OF ALASKA

1. The authority citation for Part 672 continues to read as follows:

Authority: 16 U.S.C. 1801 *et seq.*

2. For reasons given in the preamble, a new § 672.6 is added to read as follows:

§ 672.6 Area registration.

(a) *General.* The operator of any fishing vessel regulated under this part must register that vessel with the Regional Director and be issued a registration number before fishing for groundfish with hook-and-line gear in any of the following Areas or Districts, as defined at § 672.2 of this part, that are open to directed fishing for sablefish with hook-and-line gear:

(1) Western Regulatory Area

(2) Central Regulatory Area,

(3) West Yakutat District of the Eastern Regulatory Area, and

(4) Southeast Outside-East Ysakutat Districts (combined) of the Eastern Regulatory Area.

(b) *Information required for area registration.* For each registration, registrants must select only one regulatory area or regulatory district and provide the following information:

(1) The name of the vessel operator;

(2) The name of the vessel;

(3) The vessel's Federal Gulf of Alaska groundfish permit number;

(4) The date the vessel will begin fishing for groundfish in the selected regulatory area or regulatory district with hook-and-line gear; and

(5) The regulatory area or regulatory district in which such hook-and-line fishing will take place.

(c) *Limitations.* (1) Any registration under this section will have the effect of canceling any previous registration as of the date specified under paragraph (b)(4) of this section.

(2) The information required by paragraph (b) of this section must be submitted at:

(i) One of the following three NMFS locations in person or by telephone at one of the following numbers during business hours, 8:00 a.m. to 4:30 p.m., local time, Monday through Friday:

Fishery Management Division, National Marine Fisheries Service, 709 W. 9th Street, Juneau, Alaska, Toll-free telephone (In Alaska) 1-800-478-7644, (Outside Alaska) 1-800-334-7865

Enforcement Division, National Marine Fisheries Service, 1211 Gibson Cove Road, Kodiak, Alaska, Telephone 907-486-3298

Enforcement Division, National Marine Fisheries Service, Post Office Building, Sitka, Alaska, Telephone 907-747-6040

(ii) at one of the following numbers between the hours of 8:00 a.m. to 12:00 noon, and 1:00 p.m. to 4:30 p.m., local time, Saturday and Sunday:

Fishery Management Division, National Marine Fisheries Service, Juneau, Alaska, Toll-free telephone (In Alaska) 1-800-478-7644, (Outside Alaska) 1-800-334-7865

(3) It is unlawful for any person to fish for groundfish from a vessel regulated under this part with hook-and-line gear in any regulatory area or regulatory district, which is open to directed fishing for sablefish with hook-and-line gear, unless that vessel has been registered in accordance with this section and is in receipt of a registration number.

[FR Doc. 88-7487 Filed 4-1-88; 2:42 pm]

BILLING CODE 3510-22-M

Proposed Rules

Federal Register
Vol. 53, No. 66
Wednesday, April 6, 1988

This section of the FEDERAL REGISTER contains notices to the public of the proposed issuance of rules and regulations. The purpose of these notices is to give interested persons an opportunity to participate in the rule making prior to the adoption of the final rules.

DEPARTMENT OF AGRICULTURE

Federal Crop Insurance Corporation

7 CFR Part 449

[Amdt. No. 2; Doc. No. 5242S]

Fresh Market Sweet Corn Crop Insurance Regulations

AGENCY: Federal Crop Insurance Corporation, USDA.

ACTION: Proposed rule.

SUMMARY: The Federal Crop Insurance Corporation (FCIC) proposes to amend the Fresh Market Sweet Corn Crop Insurance Regulations (7 CFR Part 449, effective for the 1989 crop year only, by extending the date for filing contract changes specified in the policy for insuring fresh market sweet corn. The intended effect of this rule is to: (1) Allow additional time for FCIC to complete studies of this program prior to issuing the provisions of crop insurance protection on fresh market sweet corn as an endorsement to the general crop insurance policy which contains the standard terms and conditions common to most crops; and, (2) adapt the provisions to the needs of approved additional counties.

DATE: Written comments, data, and opinions on this proposed rule must be submitted not later than May 6, 1988.

ADDRESS: Written comments on this proposed rule should be sent to Peter F. Cole, Office of the Manager, Federal Crop Insurance Corporation, Room 4090, South Building, U.S. Department of Agriculture, Washington, DC 20250.

FOR FURTHER INFORMATION CONTACT: Peter F. Cole, Secretary, Federal Crop Insurance Corporation, U.S. Department of Agriculture, Washington, DC 20250, telephone (202) 447-3325.

SUPPLEMENTARY INFORMATION: This action has been reviewed under USDA procedures established by Departmental Regulation 1512-1. This action does not constitute a review as to the need, currency, clarity, and effectiveness of these regulations under those procedures. The sunset review date established for these regulations remains at December 1, 1990.

John Marshall, Manager, FCIC, (1) has determined that this action is not a major rule as defined by Executive Order 12291 because it will not result in: (a) An annual effect on the economy of $100 million or more; (b) major increases in costs or prices for consumers, individual industries, federal, State, or local governments, or a geographical region; or (c) significant adverse effects on competition, employment, investment, productivity, innovation, or the ability of U.S.-based enterprises to compete with foreign-based enterprises in domestic or export markets; and (2) certifies that this action will not increase the federal paperwork burden for individuals, small businesses, and other persons.

This action is exempt from the provisions of the Regulatory Flexibility Act; therefore, no Regulatory Flexibility Analysis was prepared.

This program is listed in the Catalog of Federal Domestic Assistance under No. 10.450.

This program is not subject to the provisions of Executive Order 12372 which requires intergovernmental consultation with State and local officials. See the Notice related to 7 CFR Part 3015, Subpart V, published at 48 FR 29115, June 24, 1983.

This action is not expected to have any significant impact on the quality of the human environment, health, and safety. Therefore, neither an Environmental Assessment nor an Environmental Impact Statement is needed.

Section 16 of the policy for insuring fresh market sweet corn (7 CFR Part 449) provides that any changes in the contract must be placed on file in the service office by April 30. The contract consists of the application, the policy, and the actuarial table. FCIC is reviewing the fresh market sweet corn crop insurance regulations (7 CFR Part 449), with a view toward making necessary changes in the policy for insurance according to the needs of approved additional counties, and issuing the program as an endorsement to the General Crop Insurance Policy (7 CFR Part 401), beginning with the 1989 crop year.

In order to allow time for completion of this review and the transition of the program to an endorsement format, FCIC has determined that the date by which such changes are required to be placed on file in the service office shall be extended from April 30, 1988 to May 31, 1988, and made effective for the 1989 crop year only for Fresh Market Sweet Corn.

FCIC is soliciting public comment on this proposed rule for 30 days after publication in the **Federal Register**. Written comments on this proposed rule should be sent to the Office of the Manager, Room 4090, South Building, U.S. Department of Agriculture, Washington, DC 20250.

Any written comments received pursuant to this rule will be available for public inspection in the Office of the Manager, Room 4090, South Building, U.S. Department of Agriculture, Washington, DC 20250, during regular business hours, Monday through Friday.

List of Subjects in 7 CFR Part 449

Crop insurance, Fresh market sweet corn.

Proposed Rule

Accordingly, pursuant to the authority contained in the Federal Crop Insurance Act, as amended (7 U.S.C. 1501 *et seq.*), the Federal Crop Insurance Corporation proposes to amend the Fresh Market Sweet Corn Crop Insurance Regulations (7 CFR Part 449), proposed to be effective for the 1989 calendar year only in the following instances:

PART 449—[AMENDED]

1. The authority citation for 7 CFR Part 449, continues to read as follows:

Authority: Secs. 506, 516, Pub. L. 75-430, 52 Stat. 73, 77, as amended (7 U.S.C. 1506, 1516).

2. 7 CFR 449.7(d)16 is revised to read as follows:

§ 449.7 Application and policy.

* * * * *

(d) * * *

16. Contract changes.

We may change any terms and provisions of the contract from year to year. If your amount of insurance at which indemnities are computed is no longer offered, the actuarial table will provide the amount of insurance which you are deemed to have elected. All contract changes will be available at your service office by April 30 (May 31, effective for the 1989 crop year only), preceding the cancellation date. Acceptance of any change

will be conclusively presumed in the absence of notice from you to cancel the contract.

Done in Washington, DC on March 30, 1988.

Peter F. Cole,

Acting Manager, Federal Crop Insurance Corporation.

[FR Doc. 88-7540 Filed 4-5-88; 8:45 am]

BILLING CODE 3410-08-M

DEPARTMENT OF JUSTICE

Immigration and Naturalization Service

8 CFR Parts 3, 208, 236, 242, and 253

[Atty. Gen. Order No. 1267-88]

Aliens and Nationality; Asylum and Withholding of Deportation Procedures

AGENCY: Immigration and Naturalization Service, Justice.

ACTION: Revised proposed rule.

SUMMARY: This revised proposed rule amends the procedures to be used in determining asylum under section 208 and withholding of deportation under section 243(h) of the Immigration and Nationality Act, as amended by the Refugee Act of 1980. The rule modifies the proposed rule published on August 28, 1987 (52 FR 32552) and the interim rule published on June 2, 1980 (45 FR 37392). This modification is in response to numerous and diverse comments received on the proposed rule, in particular a substantial number objecting to the original proposal to require that all asylum and withholding of deportation claims be adjudicated in a nonadversarial setting by Asylum Officers within the INS. The revised proposed rule provides for continued adversarial adjudications of asylum and withholding of deportation applications by Immigration Judges for those applicants who are in exclusion or deportation proceedings. At the same time, it preserves an opportunity, prior to the institution of proceedings, for adjudication of initial applications in a nonadversarial setting by a specially-trained corps of Asylum Officers. Other substantive and procedural modifications have been made as well, as have a number of minor clerical and format changes.

DATE: Written comments must be submitted on or before May 6, 1988.

ADDRESS: Please submit written comments in duplicate to the Director, Policy Directives and Instructions, Immigration and Naturalization Service, 425 Eye Street NW., Room 2011, Washington DC 20536.

FOR FURTHER INFORMATION CONTACT:

For General Information: Richard A. Sloan, Director, Policy Directives and Instructions, Immigration and Naturalization Service, 425 Eye Street NW., Washington, DC 20536. Telephone: (202) 633-3048.

For Specific Information: Robert C. Hill, Deputy Director and Counsel, Asylum Policy and Review Unit, Department of Justice, 10th and Constitution Ave. NW., Room 6213, Washington, DC 20530. Telephone: (202) 633-2415; or

Ralph Thomas, Deputy Assistant Commissioner, Refugee, Asylum and Parole, Immigration and Naturalization Service, 425 Eye Street NW., Washington, DC 20536. Telephone: (202) 633-5463; or

Gerald Hurwitz, Counsel to the Director, Executive Office for Immigration Review, 5203 Leesburg Pike, Suite 1609, Falls Church, Virginia 22041. Telephone: (703) 756-6470.

SUPPLEMENTARY INFORMATION: The Refugee Act of 1980 created a statutory basis for asylum in the United States and made withholding of deportation for those who qualify mandatory rather than discretionary. Eligibility for asylum requires a showing of actual persecution or a "well-founded fear of persecution on account of race, religion, nationality, membership in a particular social group, or political opinion." Entitlement to withholding of deportation requires a showing that the life or freedom of the applicant would be threatened in the country of proposed deportation on account of race, religion, nationality, membership in a particular social group, or political opinion. Interim regulations establishing procedures and standards governing applications under the provisions of the Refugee Act of 1980 were published on June 2, 1980. These interim regulations (hereafter referred to as the "1980 interim rule") were intended to be amended by the proposed rule published on August 28, 1987 (hereafter referred to as the "August 28 rule"), which in turn is further modified by this revised proposed rule (hereafter referred to as the "revised rule").

To assist individuals or organizations wishing to comment on this revised rule, the following discussion of the most significant procedural and substantive changes made to the August 28 rule is provided and should be consulted in conjunction with the supplementary information published on that date. Some of the provisions commented upon by interested parties during the public comment period on the August 28 rule are not discussed in this review because the identical or similar provisions remain in the revised rule and therefore are subject to further comment for the duration of the additional 30-day comment period.

(1) Jurisdiction—Immigration Judges

The August 28 rule would create the position of Asylum Officer within the Office of Refugee, Asylum, and Parole in INS and would require that all applications for asylum or withholding of deportation be referred to an Asylum Officer and adjudicated in a nonadversarial setting. Asylum Officers, reporting directly to the Assistant Commissioner, Office of Refugee, Asylum, and Parole, would have had exclusive jurisdiction over asylum and withholding of deportation claims and their decisions would have been binding upon Immigration Judges in any subsequent exclusion or deportation hearing. Appeals from such decisions to the Board of Immigration Appeals would have been permitted only after the decision had been incorporated into the Immigration Judge's decision in that exclusion or deportation proceeding. In short, the jurisdiction exercised by Immigration Judges over asylum and withholding of deportation claims under the 1980 interim rule would have been eliminated.

The proposal to vest exclusive jurisdiction in Asylum Officers within INS was widely criticized during the public comment period. It was argued that the proposed system of exclusive jurisdiction would infringe upon the due process rights of applicants, that by statutory intent withholding of deportation could only be considered in the context of a deportation proceeding, that Asylum Officers were to be part of the administrative agency charged with removing any applicants denied asylum and thus would be inherently biased by that agency's enforcement priorities, and finally that there was no period of experience with adjudication by such Asylum Officers which would provide justification for such a radical restructuring of the current process.

Upon consideration of these comments adverse to this part of the August 28 rule, the Department of Justice announced on December 10, 1987 (52 FR 46776) its intention to modify the rule to provide for continued adversarial adjudications of asylum and withholding of deportation applications by Immigration Judges for those applicants who are in exclusion or deportation proceedings. This revised rule fulfills that intention by maintaining a system of adjudication parallel to that established in the 1980 interim rule with the exception that Asylum Officers

under the revised rule would now assume the jurisdiction formerly exercised by District Directors. The modification as now proposed acknowledges the merit of the criticism that there is at present no base of experience with such Asylum Officers sufficient to justify vesting them with exclusive jurisdiction. But the Department reserves judgment on the merits of the other specific objections raised in the public comments pending the acquisition of such experience.

(2) Jurisdiction—Asylum Officers

The Department believes that the August 28 rule's proposal to create a specially-trained corps of Asylum Officers within the Office of Refugee, Asylum, and Parole is sound and it will be retained under the revised rule with limited rather than exclusive jurisdiction. The jurisdiction now proposed for Asylum Officers is essentially identical to that currently exercised by District Directors under the 1980 interim rule. In addition, the revised proposed rule now requires that these Asylum Officers receive appropriate training in international law and international relations under the joint direction of the Assistant Commissioner, Refugee, Asylum and Parole, and the Director of the Asylum Policy and Review Unit of the Office of Legal Policy, Department of Justice.

The original decision to give Asylum Officers exclusive jurisdiction over asylum and withholding of deportation applications was motivated by the desire to have a specialized corps dedicated solely to asylum adjudications and was intended to bring greater efficiency and uniformity to the adjudication process. It should be pointed out that this is not a new idea, but was initially a recommendation of the Select Commission on Immigration and Refugee Policy (1979–81) and was subsequently included in the immigration reform bill sent to Congress by the Reagan Administration in 1981.

At present, both the Immigration Judges and the Immigration Examiners who interview applicants for INS District Directors spend considerable time on other matters. Although the INS has moved to designated asylum examiners in many districts, these officers have not all received specialized training and most divide their attention between asylum and other applications. The proposed restructuring with retention of divided jurisdiction contained in this revised rule will create an Asylum Officer corpos which over an appropriate period of time will develop expertise in the adjudication of asylum and withholding of deportation claims. In addition, it is expected to result in a greater degree of uniformity than currently experienced under the system established by the 1980 interim rule. Finally, it will offer a transition period during which proper procedures can be adapted to adequately ensure the due process right of asylum applicants should it ultimately prove advisable to fully develop the kind of exclusive jurisdiction system contemplated in the August 28 rule and similar UNHCR recommendations.

(3) Procedure—Motions to Reopen or Reconsider

The revised rule necessarily incorporates significant procedural modifications to the August 28 rule, in particular with regard to initial filings and related reopenings of various proceedings.

Under the August 28 rule, Immigration Judges were to be removed from the asylum adjudication process. The revised rule now proposes to retain the jurisdiction of Immigration Judges existing under the 1980 interim rule, including the adjudication of asylum claims raised in the context of reopening deportation or exclusion proceedings based either on the filing of an initial application under § 208.4 of the revised rule or on the request to reopen or reconsider a previously denied claim under § 208.19 of the revised rule. In either instance, consistent with the requirements governing all proceedings, a formal motion to reopen, reconsider, or remand as appropriate is now a procedural necessity unforeseen under the system of exclusive jurisdiction contemplated in the August 28 rule.

Therefore, the revised rule incorporates, without substantive change, the requirements for the reopening of exclusion or deportation proceedings that currently exist under the 1980 interim rule and elsewhere in Title 8.

(4) Procedure—Scope of Evidentiary Hearings

Sections 236.3(c) and 242.17(c)(4) of the revised rule have been modified to clarify the proper authority of Immigration Judges, where appropriate, to limit the scope of evidentiary hearings in exclusion or deportation proceedings to matters that are dispositive of the application for relief. In part, this modification in the rule is designed to overcome the result reflected in such recent cases as *Arauz v. Rivkind*, 834 F.2d 979 (86–5415, 11th Cir., Dec. 31, 1987), in which an Immigration Judge has been required to conduct a full evidentiary hearing on all aspects of a case even though the applicant was properly subject to a mandatory grounds for denial of his asylum application.

Both the Board of Immigration Appeals and Immigration Judges have long exercised authority to limit the scope of their inquiry, and thus the scope of any necessary factual hearing, on applications for various forms of relief from deportation if it became obvious that such relief would ultimately be denied because of statutory ineligibility. This procedure has allowed the Board and Immigration Judges to dispense with evidentiary hearings on issues relating to applications that are unnecessary to the resolution of a particular case.

Therefore, the revised rule now makes it clear that, during an exclusion or deportation proceeding, a full evidentiary hearing is not required with respect to factual issues that do not form the basis for the resolution of the case if one or more grounds exist for the mandatory denial of the applicant's claim for asylum or withholding of deportation. If it is apparent upon the record developed during a proceeding that the alien is clearly ineligible for asylum or withholding of deportation, the Immigration Judge will be permitted to forego a further evidentiary hearing on questions extraneous to the decision, thus avoiding unnecessary and time consuming factual hearings on nondispositive issues.

The Immigration Judge will continue to have the discretion to address issues that are appropriate to the adjudication of the application, but would be required to follow an inflexible approach with regard to the scope of the hearing on all aspects of a particular asylum or withholding of deportation claim.

(5) Establishing Refugee Status—Burden of Proof

As mandated in section 208 of the Immigration and Nationality Act and reflected in the Supreme Court decision in the case of *Immigration and Naturalization Service v. Cardoza-Fonseca*, _____ U.S. _____, 107 S. Ct. 1207 (1987), the August 28 rule requires that an applicant for asylum establish that he is a refugee as defined in the Act. This basic requirement, which is intended to govern adjudications by both Asylum Officers and Immigration Judges, is retained in its essential form under the revised rule with one significant substantive clarification and several minor format changes.

Under the revised rule, the applicant's burden of establishing refugee status and consequent eligibility for a discretionary grant of asylum continues

to be met when he shows by a preponderance of the evidence that he has suffered actual persecution or that he has a well-founded fear of persecution in that there is a reasonable possibility that a person in the applicant's position would be persecuted if returned to his country of nationality or last habitual residence.

The August 28 rule was drafted to recognize that the flight or defection of a bona fide refugee from a country that engages in widespread persecution may leave him in a difficult position to corroborate his claim. Accordingly, under that rule as drafted, an applicant is permitted to show that a person in his position, as opposed to himself specifically, could be subject to persecution. Specifically, in evaluating whether an applicant has sustained the burden of proof, § 208.12(b)(2)(ii)(A) of the August 28 rule requires due consideration to be given to evidence establishing that the government of the applicant's country of nationality or last habitual residence persecutes groups of persons similarly situated to the applicant.

However, the INS District Director in Bangkok pointed out that the language stating that the applicant shall not be required to provide evidence that he would be singled out individually could lead to the assumption that mere group membership alone—however nominal—would be sufficient to establish refugee status. The existence of some pattern of persecution of a particular group of persons who share nominal characteristics in common with the applicant does not in itself establish a well-founded fear of persecution for that applicant. He must also explain why he would be substantially identified with that particular group such that there is a reasonable possibility of his suffering persecution should he return to his country. Section 208.13(b)(2)(i) of the revised rule has been re-drafted to clarify this requirement consistent with the case-by-case consideration of asylum claims contemplated in the Refugee Act of 1980.

(6) Entitlement to Withholding of Deportation—Burden of Proof

A provision parallel to that contained in § 208.13(b)(2)(i) of the revised rule as discussed in (4) above and which is appropriate to the adjudication of withholding of deportation claims has been included in § 208.16(b)(3) of the revised rule. In addition, other clarifications and minor format changes have been made in § 208.16.

(7) Approval or Denial of Applications

Two specific provisions in § 208.13 of the August 28 rule concerning the standards for the approval or denial of asylum attracted comment resulting in corrective modification under the revised rule.

Section 208.14(b) of the revised rule reflects a clarification of the evidentiary standard to be applied in evaluating a basis for mandatory denials under § 208.14(c). As drafted, the August 28 rule shifted the burden of proof to the applicant if the evidence raised the mere possibility that one or more of the grounds for a mandatory denial was applicable. It was observed that even a scintilla of evidence would be sufficient under this formulation to shift the burden to the applicant to disprove what may amount to no more than an allegation. Clearly, this was not the intent of the original proposal. The correct standard instead requires a balancing of factors by the adjudicator who must determine whether evidence presented to him reasonably indicates the presence of a basis for a mandatory denial before requiring the applicant to meet the burden of refuting it. Accordingly, the standard has been redrafted to provide such flexibility to the adjudicator and a corresponding clarification has been made to § 208.16(c)(3) of the revised rule appropriate to the approval or denial of applications for withholding of deportation.

In addition, because of serious concerns with respect to the difficulties in determining the validity of allegations of "serious non-political crimes" committed prior to arrival in the United States, the Department believes it preferable to eliminate § 208.14(c)(2) as a ground for the mandatory denial of asylum. The parallel provision contained in § 208.16(c)(2)(iii) with respect to mandatory denials of witholding of deportation will remain intact because it is required by statute. However, in the asylum context, evidence of the commission of such non-political crimes will now be a discretionary factor to be considered together with the totality of circumstances and equities on a case-by-case basis consistent with the proper intent of the Refugee Act of 1980 as well as the 1951 UN Convention and 1967 Protocol Relating to the Status of Refugees.

Section 208.13(d) of the August 28 rule attempted to articulate factors to be considered in discretionary grants or denials of asylum to applicants who had established eligibility as refugees. This provision, too, attracted thoughtful comment and criticism.

Serious objections were raised to the listing of adverse factors which might form the basis of discretionary denials. And, although the listing of specific favorable factors was developed and included in the August 28 rule as an addition to existing regulations under the 1980 interim rule, several comments suggested that those favorable factors be expanded. Most persuasive, however, were comments suggesting the difficulties and consequent dangers of attempting to codify comprehensive standards for such an exercise of discretion—though such was not the intent of the original provision.

The intent of § 208.13(d) of the August 28 rule was only to provide guidance to adjudicators as to the kinds of factors to be considered, but was not intended to be construed as constituting the sole or exclusive grounds for a discretionary grant or denial nor to in any way limit or restrict the Attorney General's flexibility in exercising his discretion under the Act. It is clearly impossible to foresee and enumerate all of the favorable or adverse factors which may be relevant and should be considered in the exercise of administrative discretion. The Department is now persuaded that listing some factors, even with a caveat that such list is not inclusive would be imprudent because it poses the danger that the use of such guidelines may become so rigid as to amount to an abuse of discretion.

Therefore, we have withdrawn § 208.13(d) of the August 28 rule, while making it clear that grants or denials of asylum in the exercise of discretion are appropriate and that the factors which were articulated in that section, as well as the guidance provided by recently evolving case law reflected in the decisions of the Board of Immigration Appeals, are the kinds of considerations that will continue to influence proper asylum adjudications to the extent that they are consistent with the legislative intent expressed in the Refugee Act of 1980.

(8) Restoration of Status

In order to conform with legislative requirements governing the conferral and maintainence of nonimmigrant status, § 208.23 of the revised rule now makes restoration or continuation of nonimmigrant status after a denial of asylum to an applicant who was in such status at the time of initial filing permissive rather than mandatory. This change reflects the determination that filing for asylum indicates an unwillingness to return to one's country

of residence normally sufficienct to give rise to the presumption of section 214 of the Act that an alien is an intending immigrant until he demonstrates otherwise.

Nevertheless, the revised rule is intended to allow flexibility to avoid discouraging the filing of asylum applications under reasonable circumstances such as the fact that the cancellation of non-immigrant status for A or G visa holders might preclude their continuing to perform in their jobs. Other non-immigrant visa holders might qualify for restoration of status after denial if they can establish their intention to leave the United States upon completion of the period of activity on which their nonimmigrant status is based.

(9) The new procedures established in the revised rule continue to apply only to applications for asylum or withholding of deportation filed on or after the date the rule becomes final.

Other provisions would be revised to make them consistent with changes outlined above as well as with the procedural requirements set forth throughout Title 8 of the Code of Federal Regulations, particularly those governing Immigration Judge and Board of Immigration Appeals proceedings.

The revised proposed rule will further facilitate the asylum and withholding of deportation process in a manner consistent with the language and intended effect of the Refugee Act of 1980.

In accordance with 5 U.S.C. 605(b), the Attorney General certifies that the rule will not have a significant economic impact on a substantial number of small entities. This rule, if promulgated, will not be a major rule within the meaning of section 1(b) of E.O. 12291. The information collections in this rule have been approved under the Paperwork Reduction Act.

List of Subjects

8 CFR Part 3

Administrative practice and procedures.

8 CFR Part 208

Administrative practice and procedures, Aliens, Asylum, Immigration, Jurisdiction.

8 CFR Part 236

Administrative practice and procedures, Aliens, Immigration.

8 CFR Part 242

Administrative practice and procedures, Aliens, Detention, Deportation.

8 CFR Part 253

Aliens, Asylum, Crewmen, Parole.

Accordingly, it is proposed to amend Chapter I of Title 8 of the Code of Federal Regulations as follows:

PART 3—[AMENDED]

1. The authority citation for Part 3 continues to read as follows:

Authority: Secs. 103, 292, 66 Stat. 173, 235, 8 U.S.C. 1103, 1362, sec. 2, Reorg. Plan No. 2 of 1950, 15 FR 3173, 3 CFR 1949–1953 Comp., p. 1003, unless otherwise noted.

§ 3.22 [Amended]

2. In Part 3, Executive Office for Immigration Review, § 3.22, the second sentence of paragraph (b)(1) is revised to read as follows: "Such motions shall comply with applicable provisions of 8 CFR 208.4, 208.19, and 242.22."

3. Part 208 is revised to read as follows:

PART 208—PROCEDURES FOR ASYLUM AND WITHHOLDING OF DEPORTATION

Sec.

208.1 General.
208.2 Jurisdiction.
208.3 Form of application.
208.4 Filing the application.
208.5 Special duties toward alien in custody of INS.
208.6 Disclosure to third parties.
208.7 Interim employment authorization.
208.8 Limitations on travel outside the United States.
208.9 Interview and procedure.
208.10 Failure to appear.
208.11 Comments from the Bureau of Human Rights and Humanitarian Affairs.
208.12 Reliance on information compiled by other sources.
208.13 Establishing a refugee status; burden of proof.
208.14 Approval or denial of application.
208.15 Definition of "Firm Resettlement".
208.16 Entitlement to withholding of deportation.
208.17 Decision.
208.18 Review of decisions and appeal.
208.19 Motion to reopen or reconsider.
208.20 Approval and employment authorization.
208.21 Admission of asylee's spouse and children.
208.22 Effect on deportation proceedings.
208.23 Restoration of status.
208.24 Revocation of Asylum or withholding of Deportation.

Authority: 8 U.S.C. 1103, 1158, 1226, 1252, 1253, and 1283.

§ 208.1 General.

(a) This part shall apply to all applications for asylum or withholding of deportation that are filed on or after the effective date of this rule. No application for asylum or withholding of deportation that has been filed with a District Director or Immigration Judge prior to the effective date of this rule may be reopened or otherwise reconsidered under this rule except by motion granted in the exercise of discretion by the Board of Immigration Appeals, as Immigration Judge or an Asylum Officer for proper cause shown. Motions to reopen or reconsider must meet the requirements of 8 CFR 3.2, 3.8, 3.22, 103.5, and 242.22 where applicable. The adoption of this rule shall not affect the finality or validity of any prior decision by District Directors, Immigration Judges, or the Board of Immigration Appeals in any asylum or withholding of deportation case.

(b) There shall be attached to the Office of Refugee, Asylum, and Parole such number of employees as the Commissioner, upon recommendation from the Assistant Commissioner, shall direct. These shall include a corps of professional Asylum Officers who are to receive special training in international relations and international law under the joint direction of the Assistant Commissioner, Office of Refugee, Asylum, and Parole and the Director of the Asylum Policy and Review Unit of the Office of Legal Policy of the Department of Justice. The Assistant Commissioner shall be further responsible for general supervision and direction in the conduct of the asylum program, including evaluation of the performance of the employees attached to the Office

(c) As an ongoing component of the training required by paragraph (b) of this section, the Assistant Commissioner, Office of Refugee, Asylum and Parole, shall assist the Deputy Attorney General and the Director of the Asylum Policy and Review Unit, in coordination with the Department of State, to compile and disseminate to Asylum Officers information concerning the persecution of persons in other countries on account of race, religion, nationality, membership in a particular social group, or political opinion, as well as other information relevant to asylum determinations.

§ 208.2 Jurisdiction.

(a) Except as provided in paragraph (b) of this section, the Office of Refugee, Asylum, and Parole shall have initial jurisdiction over applications for asylum and withholding of deportation filed by an alien physically present in the United States of seeking admission at a port of entry. All such applications shall be decided in the first instance by Asylum Officers under this rule.

(b) Immigration Judges shall have exclusive jurisdiction over asylum applications filed by an alien who has been served notice of referral to exclusion proceedings under Part 236 of this chapter, or served an order to show cause under Part 242 of this chapter, after a copy of the charging document has been filed with the Office of the Immigration Judge. The Immigration Judge shall make a determination on such claims *de novo* regardless of whether or not a previous application was filed and adjudicated by an Asylum Officer prior to the initiation of exclusion or deportation proceedings. Any previously filed but unadjudicated asylum application must be resubmitted by the alien to the Immigration Judge.

§ 208.3 Form of application.

(a) An application for asylum or withholding of deportation shall be made on Form I–589 (Request for Asylum in the United States). The applicant's spouse and children as defined in section 101 of the Act may be included on the application if they are in the United States. An application shall be accompanied by one completed Form G–325A (Biographical Information) and one completed Form FD–258 (Fingerprint Card) for every individual included on the application who is fourteen years of age or older; additional supporting material may also accompany the application. Forms I–589, G325A, and FD–258 shall be available from the Office of Refugee, Asylum, and Parole, each District Director, and the Offices of Immigration Judges.

(b) An application for asylum shall be deemed to constitute at the same time an application for withholding of deportation, pursuant to §§ 208.16, 236.3, and 242.17 of this chapter.

§ 208.4 Filing the application.

If no prior application for asylum or withholding of deportation has been filed, an applicant shall file any initial application according to the following procedures:

(a) *With the District Director.* Except as provided in paragraph (b) of this section, applications for asylum or withholding of deportation shall be filed with the District Director having jurisdiction over the place of the applicant's residence or over the port of entry from which the applicant seeks admission to the United States. The District Director shall immediately forward the application to an Asylum Officer with jurisdiction in his district. The Asylum Officer shall notify the Asylum Policy and Review Unit of the Department of Justice and shall forward a copy of the completed application, including any supporting material subsequently received pursuant to § 208.8(e), to the Office of Refugee Asylum and Parole and the Bureau of Human Rights and Humanitarian Affairs of the Department of State.

(b) *With the Immigration Judge.* Initial applications for asylum or withholding of deportation are to be filed with the Office of the Immigration Judge in the following circumstances:

(1) *During Exclusion or Deportation Proceedings.* If exclusion or deportation proceedings have been commenced against an alien pursuant to Part 236 or 242 of this chapter, an initial application for asylum or withholding of deportation from that alien shall be filed thereafter with the Office of the Immigration Judge.

(2) *After Completion of Exclusion or Deportation Proceedings.* If exclusion or deportation proceedings have been completed, an initial application for asylum or withholding of deportation shall be filed with the Office of the Immigration Judge having jurisdiction over the prior proceeding in conjunction with a motion to reopen pursuant to 8 CFR 3.8, 3.22 and 242.22 where applicable.

(3) *Pursuant to Appeal to the Board of Immigration Appeals.* If jurisdiction over the proceedings is vested in the Board of Immigration Appeals under Part 3 of this chapter, and initial application for asylum or withholding of deportation shall be filed with the Office of the Immigration Judge having jurisdiction over the prior proceeding in conjunction with a motion to remand or reopen pursuant to 8 CFR 3.2 and 3.8 where applicable.

(4) Any motion to reopen or remand accompanied by an initial application for asylum filed under paragraph (b) of this section must reasonably explain the failure to request asylum prior to the completion of the exclusion or deportation proceeding.

§ 208.5 Special duties toward aliens in custody of INS.

(a) When an alien in the custody of the Service requests asylum or withholding of deportation or expresses fear of persecution or harm upon return to his country of origin or to agents thereof, the Service shall make available the appropriate application form for asylum and withholding of deportation and shall provide the applicant with a list, if available, of persons or private agencies that can assist in preparation of the application.

(b) Where possible, expedited consideration shall be given to applications of aliens detained under 8 CFR Part 235 or 242. Except as provided in paragraph (c) of this section, such alien shall not be deported or excluded before a decision is rendered on his initial asylum or withholding of deportation application.

(c) A motion to reopen or remand accompanied by an application for asylum or withholding of deportation pursuant to § 208.4(b) of this part shall not stay execution of a final order of exclusion or deportation unless such a stay is specifically granted by the Board or the Immigration Judge having jurisdiction over the motion.

§ 208.6 Disclosure to third parties.

(a) An application for asylum or withholding of deportation shall not be disclosed, except as permitted by this section, without the written consent of the applicant. Names and other identifying details shall be deleted from copies of asylum or withholding of deportation decisions maintained in public reading rooms under § 103.9 of this chapter.

(b) The confidentiality of other records kept by the Service (including G–325A forms) that indicate that a specific alien has applied for asylum or withholding of deportation shall also be protected from disclosure. The Service will coordinate with the Department of State to ensure that the confidentiality of these records is maintained when they are transmitted to State Department offices in other countries.

(c) This section shall not apply to any disclosure to:

(1) Any United States Government official or contractor having a need to examine information in connection with:

(i) Adjudication of asylum or withholding of deportation applications;

(ii) The defense of any legal action arising from the adjudication of or failure to adjudicate the asylum or withholding of deportation application;

(iii) The defense of any legal action of which the asylum or withholding of deportation application is a part; or

(iv) Any United States Government investigation concerning any criminal or civil matter;

(2) A representative of the United Nations High Commissioner for Refugees when the Attorney General or his representative, in consultation with the Secretary of State or his representative, determines that examination by the High Commissioner is appropriate; or

(3) Any Federal, state, or local court of the United States considering any legal action:

(i) Arising from the adjudication of or failure to adjudicate the asylum or withholding of deportation application; or

(ii) Arising from the proceedings of which the asylum or withholding of deportation application is a part.

§ 208.7 Interim employment authorization.

(a) The Asylum Officer or District Director to whom a request for employment authorization accompanying an application for asylum or withholding of deportation is referred shall authorize employment for a period not to exceed one year, unless renewed, to applicants who are not under detention and whose applications for asylum or withholding of deportation the Asylum Officer or Immigration Judge determines are not frivolous, that is, manifestly unfounded or abusive.

(b) Employment authorization shall be renewable for the continuous period of time necessary for the Asylum Officer or Immigration Judge to decide the application and, if necessary, for final adjudication of any administrative or judicial review. If the application is denied by the Asylum Officer or Immigration Judge, the employment authorization shall automatically terminate thirty days after that denial or affirmation of that denial by appellate authority.

(c) Upon the denied applicant's request, the District Director, in his discretion, may grant further employment authorization pursuant to 8 CFR 274a.12(c)(12) (52 FR 16220, May 1, 1987).

§ 208.8 Limitations on travel outside the United States.

An applicant who leaves the United States pursuant to advance parole granted under 8 CFR 212.5(e) shall be presumed to have abandoned his application under this section if he returns to the country of claimed persecution unless he is able to establish extraordinary and urgent reasons for having assumed the risk of persecution in so returning.

§ 208.9 Interview and procedure.

(a) For each application for asylum or withholding of deportation within the jurisdiction of an Asylum Officer, an interview shall be conducted by that Officer, either at the time of application or at a later date to be determined by the Officer in consultation with the applicant. Applications within the jurisdiction of an Immigration Judge are to be adjudicated under the rules of procedure established by the Executive Office for Immigration Review in Parts 3, 236, and 242 of this chapter.

(b) The Asylum Officer shall conduct the interview in a nonadversarial manner and out of hearing and view of the general public. The purpose of the interview shall be to elicit all relevant and useful information bearing on the applicant's eligibility for the form of relief sought. The applicant may have counsel or a representative present and may submit affidavits of witnesses.

(c) The Asylum Officer shall have authority to administer oaths, present and receive evidence, and question the applicant and any witnesses, if necessary.

(d) Upon completion of the interview, the applicant or his representative shall have an opportunity to make a statement or comment on the evidence presented. The Asylum Officer, in his discretion, may limit the length of such comments or statement and may require their submission in writing.

(e) Following the interview the applicant may be given a period not to exceed 30 days to submit evidence in support of his application, unless, in the discretion of the Asylum Officer, a longer period is required.

(f) The application, all supporting information provided by the applicant, any comments submitted by the Bureau of Human Rights and Humanitarian Affairs of the Department of State, the Asylum Policy and Review Unit of the Department of Justice, or by the Service, and any other information submitted to the Asylum Officer shall comprise the record.

§ 208.10 Failure to appear.

The unexcused failure of an applicant to appear for a scheduled interview may be presumed an abandonment of the application. Failure to appear shall be excused if the notice of the interview was not mailed to the applicant's current address and such address had been provided to the Office of Refugee, Asylum, and Parole by the applicant prior to the date of mailing in accordance with section 265 of the Act and regulations promulgated thereunder, unless the Asylum Officer determines that the applicant received reasonable notice of the interview. Such failure to appear may be excused for other serious reasons in the discretion of the Asylum Officer.

§ 208.11 Comments from the Bureau of Human Rights and Humanitarian Affairs.

(a) At its option, the Bureau of Human Rights and Humanitarian Affairs (BHRHA) of the Department of State may comment on an application it receives pursuant to §§ 208.4(a), 236.3 or 242.17 of this chapter by providing:

(1) An assessment of the accuracy of the applicant's assertions about conditions in his country of nationality or habitual residence and his own experiences,

(2) An assessment of his likely treatment were he to return to his country of nationality or habitual residence,

(3) Information about whether persons who are similarly-situated to the applicant are persecuted in his country of nationality or habitual residence and the frequency of such persecution,

(4) Information about whether one of the grounds for denial specified in § 208.14 may apply, or

(5) Such other information or views as it deems relevant to deciding whether to grant or deny the application.

(b) In all cases, BHRHA shall respond within 45 days of receiving a completed application by either (1) providing comments, (2) requesting additional time in which to comment, or (3) indicating that it does not wish to comment. If BHRHA requests additional time in which to provide comments, the Asylum Officer or Immigration Judge may grant BHRHA up to 30 additional days when this is necessary to gather information pertinent to the application or may proceed without BHRHA's comments. Failure to receive BHRHA's response shall not preclude final decision by the Asylum Officer or Immigration Judge if at least 60 days have elapsed since mailing the completed application to BHRHA. If the Deputy Attorney General determines that an expedited decision is necessary or appropriate, BHRHA shall provide its comments immediately.

(c) When an Asylum Officer or Immigration Judge receives an application from an alien in detention under 8 CFR Part 235 or 242, the Officer or Judge shall so notify BHRHA and request an expedited comment on the application which shall be provided no later than 30 days after request.

(d) Any Department of State comments provided under this section shall be made a part of the asylum record. Unless the comments are classified under Executive Order 12356, 3 CFR Part 166 (1982 Comp.), the applicant shall be given a copy of such comments and be provided an opportunity to respond prior to the issuance of an adverse decision.

§ 208.12 Reliance on information compiled by other sources.

(a) In deciding applications for asylum or withholding of deportation, the Asylum Officer may rely on material provided by the Department of State, the Asylum Policy and Review Unit, the Office of Refugee, Asylum, and Parole, the District Director having jurisdiction over the place of the applicant's residence or the port of entry from which the applicant seeks admission to

the United States, or other credible sources, such as international organizations, private voluntary agencies, or academic institutions. Prior to the issuance of an adverse decision made in reliance upon such material, that material must be identified and the applicant must be provided with an opportunity to inspect, explain, and rebut the material, unless the material is classified under Executive Order 12356.

(b) Nothing in this part shall be construed to entitle the applicant to conduct discovery directed toward the records, officers, agents, or employees of the Service, the Department of Justice, or the Department of State.

§ 208.13 Establishing refugee status; burden of proof.

(a) The burden of proof is on the applicant for asylum to establish that he is a refugee as defined in section 101(a)(42) of the Act. The testimony of the applicant, if credible in light of general conditions in the applicant's country of nationality or last habitual residence, may be sufficient to sustain the burden of proof without corroboration.

(b) The applicant may qualify as a refugee either because he has suffered actual past persecution or because he has a well-founded fear of future persecution.

(1) *Past Persecution.* An applicant shall be found to be a refugee on the basis of past persecution if he can establish first that he has suffered persecution in the past in his country of nationality or last habitual residence on account of race, religion, nationality, membership in a particular social group, or political opinion and second that he is unable or unwilling to return to or avail himself of the protection of that country owing to such persecution.

(i) If it is determined that the applicant qualifies as a refugee on the basis of past persecution, he shall be presumed to have a well-founded fear of persecution unless a preponderance of the evidence establishes that since the time the persecution occurred conditions in the applicant's country of nationality or last habitual residence have changed to such an extent that the applicant no longer has a well-founded fear of being persecuted if he were to return.

(ii) An application for asylum shall be denied if the applicant qualifies for refugee status on the basis of past persecution under this paragraph but is determined not to have a well-founded fear of future persecution under paragraph (b)(2) of this section, unless it is determined that the applicant has demonstrated compelling reasons for being unwilling to return to his country of nationality or last habitual residence arising out of the severity of the past persecution; if the applicant demonstrates such compelling reasons, he may be granted asylum unless such a grant is barred by paragraph (c) of this section or § 208.14(c) of this chapter.

(2) *Well-Founded Fear of Persecution.* An applicant shall be found to be a refugee on the basis of having a well-founded fear of persecution if he can establish first, that he has a fear of persecution in his country of nationality or last habitual residence on account of race, religion, nationality, membership in a particular social group, or political opinion, second, that there is a reasonable possibility of actually suffering such persecution if he were to return to that country, and third, that he is unable or unwilling to return to or avail himself of the protection of that country because of such fear.

(i) In evaluating whether the applicant has sustained his burden of proving that he has a well-founded fear of persecution, the Asylum Officer or Immigration Judge shall not require the applicant to provide evidence that he would be singled out individually for persecution if—

(A) He establishes that there is a pattern or practice in his country of nationality or last habitual residence of persecution of groups or categories of persons similarly situated to the applicant on account of race, religion, nationality, membership in a particular social group, or political opinion; and

(B) He establishes his own inclusion in and identification with such group or category of persons such that his fear of persecution upon return is reasonable.

(ii) In addition, the Asylum Officer or Immigration judge shall give due consideration to evidence that the government of the applicant's country of nationality or last habitual residence persecutes its nationals or residents if they leave the country without authorization or seek asylum in another country.

(c) An applicant shall not qualify as a refugee if he ordered, incited, assisted, or otherwise participated in the persecution of any person on account of race, religion, nationality, membership in a particular social group, or political opinion. If the evidence indicates that the applicant engaged in such conduct, he shall have the burden of proving by a preponderance of the evidence that he did not so act.

§ 208.14 Approval or denial of application.

(a) An Immigration Judge or Asylum Officer may grant or deny asylum in the exercise of discretion to an applicant who qualifies as a refugee under section 101(a)(42) of the Act unless otherwise prohibited by paragraph (c) of this section.

(b) If the evidence indicates that one or more of the grounds for denial of asylum enumerated in paragraph (c) of this section apply, the applicant shall have the burden of proving by a preponderance of the evidence that such grounds do not apply.

(c) *Mandatory Denials.* An application for asylum shall be denied if:

(1) The alien, having been convicted by a final judgment of a particularly serious crime in the United States, constitutes a danger to the community;

(2) The applicant has been firmly resettled within the meaning of § 208.15 of this chapter; or

(3) There are reasonable grounds for regarding the alien as a danger to the security of the United States.

§ 208.15 Definition of "Firm Resettlement".

An alien is considered to be firmly resettled if he entered into another nation with, or while in that nation received, an offer of permanent resident status, citizenship, or some other type of permanent resettlement unless he establishes:

(a) That his entry into that nation was a necessary consequence of his flight from persecution, that he remained in that nation only as long as was necessary to arrange onward travel, and that he did not establish significant ties in that nation, or

(b) That the conditions of his residence in that nation were so substantially and consciously restricted by the authority of the country of refuge that he was not in fact resettled. In making his determination, the Asylum Officer or Immigration Judge shall consider the conditions under which other residents of the country live, the type of housing made available to the refugee, whether permanent or temporary, the types and extent of employment available to the refugee, and the extent to which the refugee received permission to hold property and to enjoy other rights and privileges, such as travel documentation including a right of entry and/or reentry, education, public relief, or naturalization, ordinarily available to other residents in the country.

§ 208.16 Entitlement to withholding deportation.

(a) *Consideration of Application for Withholding of Deportation.* If the Asylum Officer denies an alien's application for asylum, he shall also decide whether the alien is entitled to withholding of deportation under section

243(h) of the Act. If the application for asylum is granted, no decision on withholding of deportation will be made unless and until the grant of asylum is later revoked or terminated and deportation proceedings are commenced at which a new request for withholding of deportation is made. In such proceedings, an Immigration Judge may adjudicate both a renewed asylum claim and a request for withholding of deportation simultaneously whether or not asylum is granted.

(b) *Eligibility for Withholding of Deportation; Burden of Proof.* The burden of proof is on the applicant for withholding of deportation to establish that his life or freedom would be threatened in the proposed country of deportation on account of race, religion, nationality, membership in a particular social group, or political opinion. The testimony of the applicant may be sufficient to sustain the burden of proof without corroboration. The evidence shall be evaluated as follows:

(1) The applicant's life or freedom shall be found to be threatened if it is more likely than not that he would be persecuted on account of race, religion, nationality, membership in a particular social group, or political opinion.

(2) If the applicant is determined to have suffered persecution in the past such that his life or freedom was threatened in the proposed country of deportation on account of race, religion, nationality, membership in a particular social group, or political opinion, it shall be presumed that his life or freedom would be threatened on return to that country unless a preponderance of the evidence establishes that conditions in the country have changed to such an extent that it is no longer more likely than not that the applicant would be so persecuted there.

(3) In evaluating whether the applicant has sustained the burden of proving that his life or freedom would be threatened in a particular country on account of race, religion, nationality, membership in a particular social group, or political opinion, the Asylum Officer or Immigration Judge shall not require the applicant to provide evidence that he would be singled out individually for such persecution if—

(i) He establishes that there is a pattern or practice in the country of proposed deportation of persecution of groups or categories of persons similarly situated to the applicant on account of race, religion, nationality, membership in a particular social group, or political opinion, and

(ii) He establishes his own inclusion in and identification with such group or category of persons such that it is more likely than not that his life or freedom would be threatened upon return.

(4) In addition, the Asylum Officer or Immigration Judge shall give due consideration to evidence that the life or freedom of nationals or residents of the country of claimed persecution is threatened if they leave the country without authorization or seek asylum in another country.

(c) *Approval or Denial of Application.* The following standards shall govern approval or denial of applications for withholding of deportation:

(1) Subject to paragraph (c)(2) of this section, an application for withholding or deportation to a country of proposed deportation shall be granted if the applicant's eligibility for withholding is established pursuant to paragraph (b) of this section.

(2) An application for withholding of deportation shall be denied if:

(i) The alien ordered, incited, assisted, or otherwise participated in the persecution of any person on account of race, religion, nationality, membership in a particular social group, or political opinion;

(ii) The alien, having been convicted by a final judgment of a particularly serious crime, constitutes a danger to the community of the United States;

(iii) There are serious reasons for considering that the alien has committed a serious nonpolitical crime outside the United States prior to arrival in the United States; or

(iv) There are reasonable grounds for regarding the alien as a danger to the security of the United States.

(3) If the evidence indicates that one or more of the grounds for denial of withholding of deportation enumerated in paragraph (c)(2) of this section apply, the applicant shall have the burden of providing by a preponderance of the evidence that such grounds do not apply.

(4) In the event that asylum is denied solely in the exercise of discretion but the applicant is subsequently granted withholding of deportation under this section, thereby effectively precluding admission of the applicant's spouse or minor children following to join him, the denial of asylum shall be reconsidered. Factors to be so considered will include the reasons for the denial and reasonable alternatives available to the applicant such as reunification with his spouse or minor children in a third country.

§ 208.17 Decision.

The decision of an Asylum Officer to grant or deny asylum or withholding of deportation shall be communicated in writing to the applicant, the District Director having jurisdiction over the place of the applicant's residence or over the port of entry from which he sought admission to the United States, the Assistant Commissioner, Refugee, Asylum, and Parole, and the Director of the Asylum Policy and Review Unit of the Department of Justice. An adverse decision will state why asylum or withholding of deportation was denied and will contain an assessment of the applicant's credibility.

§ 208.18 Review of decisions and appeal.

(a) The Assistant Commissioner, Office of Refugee, Asylum, and Parole, shall have authority to review decisions by Asylum Officers, before they become effective, in any cases he shall designate. The Office of the Deputy Attorney General, assisted by the Asylum Policy and Review Unit, shall have authority to review decisions by Asylum Officers, before they become effective, in any cases designated pursuant to 28 CFR 0.15(f)(3). There shall be no right of appeal to the Office of Refugee, Asylum, and Parole, to the Office of the Deputy Attorney General, or to the Asylum Policy and Review Unit, and parties shall have no right to appear before such offices in the course of such review.

(b) Except as provided in § 253.1(f) of this chapter, there shall be no appeal from a decision of an Asylum Officer. However, an application for asylum or withholding of deportation may be renewed before an Immigration Judge in exclusion or deportation proceedings. If exclusion or deportation proceedings have not been instituted against an applicant within 30 days of the Asylum Officer's final decision, the applicant may request in writing that the District Director having jurisdiction over the applicant's place of residence commence such proceedings. Absent exceptional circumstances, the District Director shall thereafter promptly institute proceedings against the applicant.

(c) A denial of asylum or withholding of deportation may only be reviewed by the Board of Immigration Appeals in conjunction with an appeal taken under 8 CFR Part 3.

§ 208.19 Motion to reopen or reconsider.

(a) A proceeding in which asylum or withholding of deportation was denied may be reopened or a decision from such a proceeding reconsidered for proper cause upon motion pursuant to the requirements of 8 CFR 3.2, 3.8, 3.22, 103.5, and 242.17 where applicable.

(b) A motion to reopen or reconsider shall be filed (1) with the District

Director having jurisdiction over the location at which the prior determination was made who shall forward the motion immediately to an Asylum Officer or (2) with the Office of the Immigration Judge having jurisdiction over the prior proceeding.

§ 208.20 Approval and employment authorization.

When an alien's application for asylum is granted, he is granted asylum status for an indefinite period. Employment authorization is automatically granted or continued for persons granted asylum or withholding of deportation unless the alien is detained pending removal to a third country. Appropriate documentation showing employment authorization shall be provided by the INS.

§ 208.21 Admission of asylee's spouse and children.

(a) *Eligibility.* A spouse, as defined in section 101(a)(35) of the Act, or child, as defined in section 101(b)(1)(A), (B), (C), (D), or (E) of the Act, may also be granted asylum if accompanying or following to join the principal alien, unless it is determined that—

(1) The spouse or child ordered, incited, assisted, or otherwise participated in the persecution of any person on account of race, religion, nationality, membership in a particular social group, or political opinion;

(2) The spouse or child, having been convicted by a final judgment of a particularly serious crime in the United States, constitutes a danger to the community of the United States;

(3) There are serious reasons for considering that the spouse or child has committed a serious, non-political crime outside the United States; or

(4) There are reasonable grounds for regarding the spouse or child a danger to the security of the United States.

(b) *Relationship.* The relationship of spouse and child as defined in section 101(b)(1) of the Act must have existed at the time the principal alien's asylum application was approved, except for children born to or legally adopted by the principal alien and spouse after approval of the principal alien's asylum application.

(c) *Spouse or child in the United States.* When a spouse or child of an alien granted asylum is in the United States but was not included in the principal alien's application, the principal alien may request asylum for the spouse or child by filing Form I-730 with the District Director having jurisdiction over his place of residence, regardless of the status of that spouse or child in the United States.

(d) *Spouse or child outside the United States.* When a spouse or child of an alien granted asylum is outside the United States, the principal alien may request asylum for the spouse or child by filing form I-730 with the District Director, setting forth the full name, relationship, date and place of birth, and current location of each such person. Upon approval of the request, the District Director shall notify the Department of State, which will send an authorization cable to the American Embassy or Consulate having jurisdiction over the area in which the asylee's spouse or child is located.

(e) *Denial.* If the spouse or child is found to be ineligible for the status accorded under section 208(c) of the Act, a written notice explaining the basis for denial shall be forwarded to the principal alien. No appeal shall lie from this decision.

(f) *Burden of proof.* To establish the claim of relationship of spouse or child as defined in section 101(b)(1) of the Act, evidence must be submitted with the request as set forth in Part 204 of this chapter. Where possible this will consist of the documents specified in 8 CFR 204.2(c)(2) and (3). The burden of proof is on the principal alien to establish by a preponderance of the evidence that any person on whose behalf he is making a request under this section is an eligible spouse or child.

(g) *Duration.* The spouse or child qualifying under section 208(c) of the Act shall be granted asylum for an indefinite period unless the principal's status is revoked.

§ 208.22 Effect on deportation proceedings.

(a) An alien who has been granted asylum may not be excluded or deported unless his asylum status is revoked pursuant to § 208.24 of this chapter. An alien in exclusion or deportation proceedings who is granted withholding of deportation may not be deported to the country as to which his deportation is ordered withheld unless withholding of deportation is revoked pursuant to § 208.24 of this chapter.

(b) When an alien's asylum status or withholding of deportation is revoked under this chapter, he shall be placed in deportation proceedings. Deportation proceedings may be conducted concurrently with a revocation hearing scheduled under § 208.24 of this chapter.

§ 208.23 Restoration of status.

An alien who was maintaining his nonimmigrant status at the time of filing an application for asylum or withholding of deportation may continue or be restored to that status, if it has not expired, notwithstanding the denial of asylum or withholding of deportation.

§ 208.24 Revocation of asylum or withholding of deportation.

(a) *Revocation of Asylum by the Assistant Commissioner, Office of Refugee, Asylum, and Parole.* Upon motion by the Assistant Commissioner and following a hearing before an Asylum Officer, the grant to an alien of asylum made under the jurisdiction of an Asylum Officer may be revoked if, by a preponderance of the evidence, the Service establishes that:

(1) The alien is no longer a refugee due to a change of conditions in the alien's country of nationality or habitual residence;

(2) There is a showing of fraud in the alien's application such that he was not eligible for asylum at the time it was granted; or

(3) The alien has committed any act that would have been grounds for denial of asylum under § 208.13(c) of this chapter.

(b) *Revocation of Withholding of Deportation by the Assistant Commissioner, Office of Refugee, Asylum, and Parole.* Upon motion by the Assistant Commissioner, and following a hearing before an Asylum Officer, the grant to an alien of withholding of deportation made under the jurisdiction of an Asylum Officer may be revoked if, by clear and convincing evidence, the Service establishes that:

(1) The alien is no longer entitled to withholding of deportation due to a change of conditions in the country to which deportation was withheld;

(2) There is a showing of fraud in the alien's application such that he was not eligible for withholding of deportation at the time it was granted;

(3) The alien has committed any act that would have been grounds for denial of withholding of deportation under § 208.16(c)(2) of this chapter.

(c) *Notice to Applicant.* Upon motion by the Assistant Commissioner to revoke asylum status or withholding of deportation, the alien shall be given notice of intent to invoke, with the reason therefore, at least thirty days before the hearing by the Asylum Officer. The alien shall be provided the opportunity to present evidence tending to show that he is still eligible for asylum or withholding of deportation. If the Asylum Officer determines that the alien is no longer eligible for asylum or withholding of deportation, the alien shall be given written notice that asylum status or withholding of deportation along with employment authorization are revoked.

(d) *Revocation of Derivative Status.* The termination of asylum status for a person who was the principal applicant shall result in termination of the asylum status of a spouse or children whose status was based on the asylum application of the principal.

(e) *Reassertion of Asylum Claim.* A revocation of asylum or withholding of deportation pursuant to paragraph (a) or (b) of this section shall not preclude the applicant from reasserting an asylum or withholding of deportation claim in any subsequent deportation proceeding.

(f) *Review.* The Office of the Deputy Attorney General, assisted by the Asylum Policy and Review Unit, shall have authority to review decisions to revoke asylum or withholding of deportation, before they become effective, in any cases designated pursuant to 28 CFR 0.15(f)(3). There shall be no right of appeal to the Office of the Deputy Attorney General or to the Asylum Policy and Review Unit and parties shall have no right to appear before such offices in the course of such review.

(g) *Revocation of Asylum or Withholding of Deportation by the Executive Office for Immigration Review.* An Immigration Judge or the Board of Immigration Appeals may reopen a case pursuant to § 3.2 or § 242.22 of this chapter for the purpose of revoking a grant of asylum or withholding of deportation made under the exclusive jurisdiction of an Immigration Judge. In such a reopened proceeding, the Service must similarly establish by the appropriate standard of evidence one or more of the grounds set forth in paragraph (a) or (b) of this section. Any revocation under this paragraph may occur in conjunction with a deportation proceeding.

PART 236—[AMENDED]

4. The authority citation for Part 236 is revised to read as follows:

Authority: 8 U.S.C. 1103, 1182, 1224, 1225, 1226, 1362.

5. Section 236.3 is revised to read as follows:

§ 236.3 Applications for asylum or withholding of deportation.

(a) If an alien expresses fear of persecution or harm upon return to his country of origin or to a country to which he may be deported after exclusion from the United States pursuant to Part 237 of this chapter, the Immigration Judge shall (1) advise the alien that he may apply for asylum in the United States or withholding of deportation to that other country, and (2) make available the appropriate application forms.

(b) An application for asylum or withholding of deportation must be filed with the Office of the Immigration Judge, pursuant to § 208.4(b) of this chapter. Upon receipt of the application, the Office of the Immigration Judge shall forward a copy to the Bureau of Human Rights and Humanitarian Affairs of the Department of State for their comments pursuant to § 208.11 of this chapter, and shall calendar the case for hearing, which shall be deferred pending receipt of the Department of State's comments. The reply, if any, from the Department of State, unless classified under Executive Order 12356, 3 CFR Part 166 (1982 Comp.), shall be given to both the applicant and to the Trial Attorney representing the government.

(c) Applications for asylum or withholding of deportation so filed will be decided by the Immigration Judge pursuant to the requirements and standards established in Part 208 of this chapter after an evidentiary hearing that is necessary to resolve material factual issues in dispute. An evidentiary hearing extending beyond issues related to the basis for a mandatory denial of the application pursuant to 8 CFR 208.14 or 208.16 is not necessary once the Immigration Judge has determined that such a denial is required.

(1) Evidentiary hearings on applications for asylum or withholding of deportation will be closed to the public unless the applicant expressly requests that it be open pursuant to § 236.2 of this part.

(2) Nothing in this section is intended to limit the authority of the Immigration Judge properly to control the scope of any evidentiary hearing.

(3) During the exclusion hearing, the applicant shall be examined under oath on his application and may present evidence and witnesses on his own behalf. The applicant has the burden of establishing that he is a refugee as defined in section 101(a) (42) of the Act pursuant to the standard set forth in § 208.13 of this chapter.

(4) The Trial Attorney for the government may call witnesses and present evidence for the record, including information classified under Executive Order 12356, 3 CFR Part 166 (1982 Comp.) provided the Immigration Judge or the Board has determined that such information is relevant to the hearing. When the Immigration Judge receives such classified information he shall inform the applicant. The agency that provides the classified information to the Immigration Judge should provide an unclassified summary of the information for release to the applicant, whenever it determines it can do so consistently with safeguarding both the classified nature of the information and its source. The summary should be as detailed as possible, in order that the applicant may have an opportunity to offer opposing evidence. A decision based in whole or in part on such classified information shall state that such information is material to the decision.

(d) The decision of an Immigration Judge to grant or deny asylum or withholding of deportation shall be communicated to the applicant and to the Trial Attorney for the government. An adverse decision will state why asylum or withholding of deportation was denied.

PART 242—[AMENDED]

6. The authority citation of Part 242 is revised to read as follows:

Authority: 8 U.S.C. 1103, 1252, 1254, 1362.

7. Section 242.17 (c), is revised to read as follows:

§ 242.17 Ancillary matters, applications.

* * * * *

(c) *Applications for asylum or withholding of deportation.* (1) The Immigration Judge shall notify the respondent that if he is finally ordered deported his deportation will in the first instance be directed pursuant to section 243(a) of the Act to the country designated by the respondent and shall afford him an opportunity then and there to make such designation. The Immigration Judge shall then specify and state for the record the country, or countries in the alternative, to which respondent's deportation will be directed pursuant to section 243(a) of the Act if the country of his designation will not accept him into its territory, or fails to furnish timely notice of acceptance, or if the respondent declines to designate a country.

(2) If the alien expresses fear of persecution or harm upon return to any of the countries to which he might be deported pursuant to paragraph (c)(1) of this section, the Immigration Judge shall—

(i) Advise the alien that he may apply for asylum in the United States or withholding of deportation to those countries, and

(ii) Make available the appropriate application forms.

(3) An application for asylum or withholding of deportation must be filed with the Office of Immigration Judge, pursuant to § 208.4(b) of this chapter. Upon receipt of the application, the Office of the Immigration Judge shall

forward a copy to the Bureau of Human Rights and Humanitarian Affairs of the Department of State for their comments pursuant to § 208.11 of this chapter, and shall calendar the case for hearing, which shall be deferred pending receipt of the Department of State's comments. The reply, if any, of the Department of State, unless classified under Executive Order 12356, 3 CFR Part 166 (1982 Comp.), shall be given to both the applicant and to the Trial Attorney representing the government.

(4) Applications for asylum or withholding of deportation so filed will be decided by the Immigration Judge pursuant to the requirements and standards established in Part 108 of this chapter after an evidentiary hearing that is necessary to resolve factual issues in dispute. An evidentiary hearing extending beyond issues related to the basis for a mandatory denial of the application pursuant to 8 CFR 208.14 or 208.16 is not necessary once the Immigration Judge has determined that such a denial is required.

(A) Evidentiary hearing on applications for asylum or withholding of deportation will be open to the public unless the applicant expressly requests that it be closed.

(B) Nothing in this section is intended to limit the authority of the Immigration Judge properly to control the scope of any evidentiary hearing.

(C) During the deportation hearing, the applicant shall be examined under oath on his application and may present evidence and witnesses in his own behalf. The applicant has the burden of establishing that he is a refugee as defined in section 101(a)(42) of the Act pursuant to the standard set forth in § 208.13 of this chapter.

(D) The Trial Attorney for the government may call witnesses and present evidence for the record, including information classified under Executive Order 12356, 3 CFR Part 166 (1982 Comp.) provided the Immigration Judge or the Board has determined that such information is relevant to the hearing. When the Immigration Judge receives such classified information he shall inform the applicant. The agency that provides the classified information to the Immigration Judge should provide an unclassified summary of the information for release to the applicant, whenever it determines it can do so consistently with safeguarding both the classified nature of the information and its source. The summary should be as detailed as possible, in order that the applicant may have an opportunity to offer opposing evidence. A decision based in whole or in part on such classified information shall state that such information is material to the decision.

(5) The decision of an Immigration Judge to grant or deny asylum or withholding of deportation shall be communicated to the applicant and to the Trial Attorney for the government. An adverse decision will state why asylum or withholding of deportation was denied.

* * * * *

PART 253—[AMENDED]

8. The authority citation for Part 253 is revised to read as follows:

Authority: 8 U.S.C. 1103, 1182, 1282, 1283, 1285.

9. Section 253.1(f) is revised to read as follows:

§ 253.1 Parole.

* * * * *

(f) *Crewman, stowaway, or alien temporarily excluded under section 235(c) alleging persecution.* Any alien crewman, stowaway, or alien temporarily excluded under section 235(c) of the Act who alleges that he cannot return to his country of nationality or last habitual residence (if not a national of any country) because of fear of persecution in that country on account of race, religion, nationality, membership in a particular social group, or political opinion, is eligible to apply for asylum or withholding of deportation under Part 208 of this chapter.

(1) If the alien is on a vessel or other conveyance and makes such fear known to an immigration inspector or other official making an examination on the conveyance, he shall be promptly removed from the conveyance in accordance with § 233.1 of this chapter. If the alien makes his fear known to an official while off such conveyance, he shall not be returned to the conveyance but shall be retained in or transferred to the custody of the Service.

(2) In either case, the alien shall be provided the appropriate application forms and such other information as is required by § 208.5 of this chapter and may then have ten (10) days within which to file an application for such relief with the District Director having jurisdiction over the port of entry from which the applicant seeks entry into the United States. The District Director, pursuant to § 208.4(a) of this chapter, shall immediately forward any such application to an Asylum Officer with jurisdiction over his district.

(3) Pending adjudication of the application by the Asylum Officer, the applicant shall be detained by the Service, or paroled into the custody of the ship's agent or otherwise paroled in accordance with § 212.5 of this chapter and shall not be excluded or deported before a decision is rendered by the Asylum Officer on his asylum application.

(4) A decision denying asylum to an alien crewman or stowaway, but not an alien temporarily excluded under section 235(c), may be appealed directly to the Board of Immigration Appeals. Such appeal must be filed within ten (10) days of the Asylum Officer's decision by filing a notice of appeal on Form I-290A with the District Director, who shall immediately forward the notice to the Asylum Officer. The Asylum Officer shall transmit the notice of appeal, his decision, and the record on which that decision was based, to the Board of Immigration Appeals. The filing of a notice of appeal shall stay the exclusion or deportation of the applicant pending decision on the appeal by the Board.

* * * * *

Dated: March 28, 1988.

Edwin Meese III,

Attorney General.

[FR Doc. 88-7407 Filed 4-5-88; 8:45 am]

BILLING CODE 4410-01-M

NUCLEAR REGULATORY COMMISSION

10 CFR Part 2

High-Level Waste Licensing Support System Advisory Committee (Negotiated Rulemaking); Sixth Meeting

AGENCY: Nuclear Regulatory Commission.

ACTION: Notice of sixth meeting.

SUMMARY: The Nuclear Regulatory Commission will hold the sixth meeting of the High-Level Waste Licensing Support System Advisory Committee on April 18–19, 1988. The Committee, established under authority of the Federal Advisory Committee Act (FACA), is tasked with developing recommendations for revision of the Commission's Rules of Practice in 10 CFR Part 2 related to the adjudicatory proceeding for the issuance of a license for a geologic repository for the disposal of high-level waste (HLW). The Committee is attempting to negotiate a consensus on proposed revisions related to the submission and management of records and documents for the HLW licensing proceeding.

DATE: The sixth meeting of the HLW Licensing Support System Advisory Committee will be held April 18–19, 1988.

ADDRESSES: The location of the April 18–19, 1988, meeting of the HLW Licensing Support System Advisory Committee is the Conservation Foundation, 1250 Twenty-Fourth St., NW., Washington, DC 20037.

FOR FURTHER INFORMATION CONTACT: Donnie H. Grimsley, Director, Division of Rules and Records, Office of Administration and Resources Management, U.S. Nuclear Regulatory Commission, Washington, DC 20555, Telephone: 301–492–7211.

SUPPLEMENTARY INFORMATION: The sixth meeting of the HLW Licensing Support System Advisory Committee ("negotiating committee") is scheduled to include continued discussion of substantive issues related to a high-level waste licensing support system.

The following are the remaining meetings of the negotiating committee that are scheduled as of the date of this notice:

May 18–19, 1988—The Conservation Foundation, Washington, DC.

Dated at Bethesda, Maryland, this 1st day of April, 1988.

For the Nuclear Regulatory Commission.

David L. Meyer,

Chief, Rules and Procedures Branch, Division of Rules and Records, Office of Administration and Resources Management.

[FR Doc. 88–7521 Filed 4–5–88; 8:45 am]

BILLING CODE 7590-01-M

---

10 CFR Part 50

Leak-Before-Break Technology; Solicitation of Public Comment on Additional Applications

AGENCY: Nuclear Regulatory Commission.

ACTION: Request for comments.

SUMMARY: The Nuclear Regulatory Commission (NRC) is proposing to investigate the safety benefits associated with using leak-before-break technology to modify functional and performance requirements for emergency core cooling systems (ECCS) and environmental qualifications (EQ) of safety related electrical and mechanical equipment.

DATE: The comment period expires on July 5, 1988. Comments received after this date will be considered if it is practical to do so, but assurance of consideration can only be given to comments received on or before this date.

ADDRESSES: Send written comments to the Secretary of the Commission, Washington, DC 20555, Attention: Docketing and Service Branch. Copies of comments received by the Commission may be examined at the NRC Public Document Room, 1717 H Street NW., Washington, DC 20555.

FOR FURTHER INFORMATION CONTACT: John A. O'Brien, Office of Nuclear Regulatory Research, U.S. Nuclear Regulatory Commission, Washington, DC 20555. Telephone (301) 492–3928.

SUPPLEMENTARY INFORMATION:

Existing Applications of Leak-Before-Break Technology

On October 27, 1987 (52 FR 41288), the NRC published a final rule which modified General Design Criterion 4 (GDC–4) in 10 CFR Part 50, Appendix A, by allowing the use of leak-before-break technology to eliminate from design consideration the dynamic effects of postulated ruptures in all piping in all reactor types that satisfy rigorous acceptance criteria. The supplementary information to this rule states, however, that containments, ECCS, and EQ of safety related electrical and mechanical equipment are not affected by leak-before-break technology. This introduced an inconsistency into the regulations which is addressed by this request for comment. While not emphasized in the final GDC–4 modification, when leak-before-break technology was disallowed for ECCS, EQ, and containment design, functional and performance requirements cited in different portions of 10 CFR Part 50 were maintained. However, limited case-by-case modifications of EQ functional and performance requirements were allowed in the GDC–4 amendment using the exemption process.

The specific functional and performance requirements retained when leak-before-break is accepted under the recent modification to GDC–4 are as follows:

1. *For Containments.* Global loads and environments associated with postulated pipe ruptures, including pressurization, internal flooding, and elevated temperature.

2. *For ECCS.* Heat removal and mass replacement capacity needed because of postulated pipe ruptures.

3. *For EQ.* Pressure, temperature, flooding level, humidity, chemical environment, and radiation resulting from postulated pipe ruptures.

However, under the recent modification of GDC–4 local dynamic effects uniquely associated with pipe rupture may be deleted from the design basis of containment systems, structures and boundaries, from the design basis of ECCS hardware (such as pumps, valves, accumulators, and instrumentation), and from the design bases of safety related electrical and mechanical equipment when leak-before-break is accepted. "Local dynamic effects uniquely associated with pipe rupture" means dynamic effects due to pipe whipping, jet impingement, missiles, local pressurizations, pipe break reaction forces, and decompression waves in the intact portions of piping postulated to rupture. Glocal pressurizations, temperature transients, and flooding transients on containment systems and structures are not local dynamic effects and may not be uniquely related to pipe rupture, and therefore are retained for containment design. Thus, while functional and performance requirements for containments, ECCS, and EQ remain unchanged under the now effective modification of GDC–4, the design bases for these aspects of facility design have been modified in that local dynamic effects uniquely associated with ruptures in piping which qualified for leak-before-break may be excluded from consideration.

This present notice examines the potential additional application of leak-before-break technology to modifying functional and performance requirements for emergency core cooling systems and for environmental qualification of safety related electrical and mechanical equipment. Modification of functional and performance requirements for containments is explicitly excluded from consideration at this time.

Invitation To Comment

To meet its statutory obligation to assure an adequate level of safety, the NRC uses the "defense-in-depth" concept which is codified in the General Design Criteria in 10 CFR Part 50, Appendix A. Stated in simple terms, and with some notable exceptions, defense-in-depth is implemented by utilizing high standards of design, fabrication, and inspection, and then postulating severe failure in structures, systems, and components. It must be demonstrated that these severe failures will not lead to undue risk to public health and safety. Risk is generally kept low by employing redundancy and diversity in design. When severe failures are unacceptable (as for example, in reactor pressure vessels), extraordinarily high standards are required. In the case of piping, different standards of design, fabrication, and inspection are imposed depending on the safety significance of the piping. Until recently, severe failure for piping has been defined as the instantaneous double-ended guillotine break regardless of the standards applied to piping. Under leak-before-

break technology, it has become possible to exclude the double-ended guillotine break from the dynamic structural design basis because it is unrealistic and overly conservative in certain situations. Piping which meets NRC's acceptance criteria now need only postulate stipulated "leakage cracks" as severe failure. This relaxation in requirements under the final GDC-4 amendment actually improves safety because it allows the removal of counter-productive hardware which impedes inservice inspection, could restrain thermal growth of piping (leading to unforeseen stresses and cracking), and could degrade seismic performance of piping due to impacting between piping and pipe whip restraints during earthquakes. Worker occupational radiation dosages are reduced substantially.

When the Commission published the proposed broad scope amendment to GDC-4, comment was invited on the decision to limit impacts of this modification to only dynamic effects associated with pipe rupture. In response to this request, a number of commentators stated that the use of the leak-before-break technology should be extended to modify the requirements for EQ and ECCS. Safety benefits for EQ and ECCS were suggested wherein protection against the effects and consequences of postulated pipe ruptures causes less reliable overall performance. Because the NRC is primarily concerned with fulfilling its safety mission, documented evidence describing safety degradations and safety enhancements due to postulated pipe rupture requirements on EQ and ECCS is requested. Specifically, actual citations from operating experience are requested; however, conclusions based on testing and deterministic or probabilistic evaluations would also be useful.

The priority which the NRC assigns to modifying functional and performance requirements for EQ and ECCS will be determined in large measure from the balance between accrued safety benefits and detriments believed to result (including impacts on severe accident performance). If it can be shown that net safety benefits outweigh the detriments, then modification to the existing design bases may be permitted.

Dated at Washington, DC, this 1st day of April 1988.

For the Nuclear Regulatory Commission.

Samuel J. Chilk,

Secretary of the Commission.

[FR Doc. 88-7538 Filed 4-5-88; 8:45 am]

BILLING CODE 7590-01-M

DEPARTMENT OF HEALTH AND HUMAN SERVICES

Food and Drug Administration

21 CFR PART 133

[Docket No. 84P-0133]

Pasteurized Process Cheese Spread; Proposal To Amend Standards of Identity

AGENCY: Food and Drug Administration.

ACTION: Proposed rule.

SUMMARY: The Food and Drug Administration (FDA) is proposing to amend the standards of identity for pasteurized process cheese spread and, by cross-reference, three other cheese spread standards to permit the use of nisin. Nisin is an antimicrobial agent which prevents the outgrowth of *Clostridium botulinum* spores and toxin formation in the packaged cheese. This action is taken to promote honesty and fair dealing in the interest of consumers.

DATES: Comments by June 6, 1988. The agency proposes that any final rule that may issue based upon this proposal shall become effective 60 days after date of publication of the final rule in the **Federal Register**.

ADDRESS: Written comments to the Dockets Management Branch (HFA-305), Food and Drug Administration, Rm. 4-62, 5600 Fishers Lane, Rockville, MD 20857.

FOR FURTHER INFORMATION CONTACT: Karen L. Carson, Center for Food Safety and Applied Nutrition (HFF-414), Food and Drug Administration, 200 C Street, SW., Washington, DC 20204, 202-485-0110.

SUPPLEMENTARY INFORMATION: Arthur A. Checchi, Inc., representing Aplin and Barrett, Ltd. of Trowbridge, Wiltshire, England, submitted a citizen petition, dated March 30, 1984, requesting that FDA amend the standards of identity for pasteurized process cheese spread (21 CFR 133.179) and, cross-reference, pasteurized cheese spread (21 CFR 133.175), pasteurized cheese spread with fruits, vegetables, or meats (21 CFR 133.176), and pasteurized process cheese spread with fruits, vegetables, or meats (21 CFR 133.180), to require the mandatory addition of 250 parts per million (ppm) nisin to the food. The petition identifies nisin as a microbiological inhibitory substance which is produced by *Streptococcus lactis*, Lancefield group N.

The petitioner asserts that this action is necessary to prevent the outgrowth of *C. botulinum* spores and subsequent botulinal toxin production in these foods. The petitioner believes that under certain conditions this outgrowth is possible because these cheese spreads are: (1) Packaged in hermetically sealed containers, (2) not refrigerated during retail marketing, (3) not sterile, and (4) cannot be rendered sterile by heat processing without adversely affecting the texture and flavor of the food.

Pasteurized process cheese formulations commonly used in the United States are relatively low in moisture and contain emulsifiers and salt at the high end of the range of concentration permitted by the standard. The petitioner believes these factors may have been effective in preventing the outgrowth of *C. botulinum* in the past. However, with the emphasis today on reducing the sodium content of the diet, it is the petitioner's position that manufacturers may reduce the sodium content of cheese spreads and manufcture products in the high moisture range thereby increasing the potential for *C. botulinum* spore outgrowth. To combat with the petitioner perceives as a potential problem with these cheese products, the petitioner has requested that the standards be amended to require the addition of 250 ppm nisin to the finished food. In support of this request, the petitioner has included data from studies, using pasteurized process American cheese spread, demonstrating the effectiveness of nisin in preventing the outgrowth of *C. botulinum* spores and subsequent toxin formation in formulations with varying amounts of emulsifier, with and without added salt.

In a separate action, the petitioner has requested GRAS affirmation of nisin as an ingredient in pasteurized cheese spreads and pasteurized process cheese spreads. Because nisin is a component of a preparation derived from a fermentation culture, the GRAS affirmation documents deals with nisin preparation rather than pure nisin. A final rule responding to this request is published elsewhere in this issue of the **Federal Register**.

FDA has reviewed Arthur A. Checchi, Inc.'s, petition with its supporting data and has concluded that making the use of nisin in the aforementioned cheese spread products mandatory is not necessary to protect the public health. As the petitioner recognizes, typical cheese spread formulations used in the United States result in products which do not support the outgrowth of *C. botulinum* spores. Under these circumstances, a requirement that nisin be used cannot be supported.

The agency, however, recognizes that the potential for *C. botulinum* spore

outgrowth may increase when manufacturers make formulation changes which shift the balance of factors governing the susceptibility of the foods to spore outgrowth and toxin formation; i.e., lower salt content and emulsifier content, and higher moisture content. The agency is therefore proposing to provide for the optional use of nisin in pasteurized process cheese spread (21 CFR 133.179) and, by cross-reference, in pasteurized cheese spread (21 CFR 133.175), pasteurized cheese spread with fruits, vegetables, or meats (21 CFR 133.176), and pasteurized process cheese spread with fruits, vegetables, or meats (21 CFR 133.180) so that manufacturers will have the option to use nisin should they decide to alter their formulation in such a way so as to make their product more susceptible to outgrowth of *C. botulinum* spores, e.g., by reducing the amount of sodium in the finished food. The agency emphasizes that product formulation will determine the amount of nisin necessary for effective inhibition of spore outgrowth and points out that the responsibility for use of an effective amount of this ingredient rests with the manufacturer. The agency, of course, will reevaluate its position regarding the mandatory use of nisin in these products should further research indicate a need to do so.

Manufacturers should note that while use of nisin may result in a cheese spread lower in sodium content than the traditional product, the ingredient in which nisin is carried, nisin preparation, may be high in sodium. Therefore, a product made with nisin preparation may not be sufficiently low in sodium to make any label claims, as described in 21 CFR 101.13, concerning the sodium content of the food, although comparative claims may be made in accordance with the policy explained on page 15521 of the preamble to the sodium labeling final rule (49 FR 15510).

Effective Date

The agency proposes that any final rule that may issue based on this proposal shall become effective 60 days after the date of publication of the final rule in the **Federal Register**.

Economic Impact

In accordance with the Regulatory Flexibility Act (Pub. L. 96-354; 5 U.S.C. 601), FDA has reviewed this proposal to determine its impact on small businesses. The proposal permits the optional use of nisin, an antimicrobial agent, in pasteurized cheese spreads and in pasteurized process cheese spreads. The agency believes that the proposed amendment will result in the standard of identity being less restrictive than it is now, because the amendment will allow pasteurized cheese spread and pasteurized process cheese spread manufacturers more flexibility in formulating their products. Therefore, FDA certifies that this proposed action will not have a significant economic impact on a substantial number of small entities.

Environmental Impact

The agency has determined under 21 CFR 25.24(b)(1) that this action is of a type that does not individually or cumulatively have a significant effect on the human environment. Therefore, neither an environmental assessment nor an environmental impact statement is required.

Comments

Interested persons may, on or before June 6, 1988, submit to the Dockets Management Branch (HFA-305) (address above), written comments regarding this proposal. Two copies of any comments are to be submitted, except that individuals may submit one copy. Comments are to be identified with the docket number found in brackets in the heading of this document. Received comments may be seen in the office above between 9 a.m. and 4 p.m., Monday through Friday.

List of Subjects in 21 CFR Part 133

Cheese, Food standards.

Therefore, under the Federal Food, Drug, and Cosmetic Act and under authority delegated to the Commissioner of Food and Drugs and redelegated to the Director, Center for Food Safety and Applied Nutrition, it is proposed that Part 133 be amended as follows:

PART 133—CHEESES AND RELATED CHEESE PRODUCTS

1. The authority citation for 21 CFR Part 133 continues to read as follows:

Authority: Secs. 401, 701(e), 52 Stat. 1046, 70 Stat. 919 as amended (21 U.S.C. 341, 371(e)); 21 CFR 5.10 and 5.61.

2. Section 133.179 is amended by adding paragraph (f)(11) to read as follows:

§ 133.179 Pasteurized process cheese spread.

* * * * *

(f) * * *

(11) Nisin preparation in an amount which results in not more than 250 parts per million nisin in the food.

* * * * *

Dated: March 25, 1988.

Richard J. Ronk,

Acting Director, Center for Food Safety and Applied Nutrition.

[FR Doc. 88-7460 Filed 4-5-88; 8:45 am]

BILLING CODE 4160-01-M

ENVIRONMENTAL PROTECTION AGENCY

21 CFR Part 561

[FAP 6H5481/P447; FRL-3360-3]

Pesticide Tolerance for Triflumizole

AGENCY: Environmental Protection Agency (EPA).

ACTION: Proposed rule.

SUMMARY: EPA is proposing a feed additive regulation to permit the combined residues of the fungicide triflumizole and its metabolites in or on certain feed items. Uniroyal Chemical Co., Inc., requested this proposal to establish temporary maximum permissible levels for combined residues of triflumizole to permit marketing of certain feed commodities in connection with an experimental use of the fungicide on apples and grapes.

DATE: Comments, identified by the document control number [FAP 6H5481/P447], must be received on or before April 21, 1988.

ADDRESSES: By mail, submit written comments to:

Information Services Section, Program Management and Support Division (TS-757C), Office of Pesticide Programs, Environmental Protection Agency, 401 M Street., SW., Washington, DC 20460.

In person, bring comments to: Room. 246, CM #2, 1921 Jefferson Davis Highway, Arlington, VA 22202.

Information submitted as a comment concerning this notice may be claimed confidential by marking any part or all of that information as "Confidential Business Information" (CBI). Information so marked will not be disclosed except in accordance with procedures set forth in 40 CFR Part 2. A copy of the comment that does not contain CBI must be submitted for inclusion in the public record. Information not marked confidential may be disclosed publicly by EPA without prior notice. All written comments will be available for public inspection in Room. 246 at the address given above, from 8 a.m. to 4 p.m., Monday through Friday, excluding legal holidays.

BEST COPY AVAILABLE

FOR FURTHER INFORMATION CONTACT: By mail: Registration Division (TS-767C), Attention: Product Manager 21, Office of Pesticide Programs, Environmental Protection Agency, 401 M Street SW., Washington, DC 20460

In person, contact: Lois Rossi (PM 21), Room. 227, CM #2, 1921 Jefferson Davis Highway, Arlington, VA 22202, (703)-557-1900.

SUPPLEMENTARY INFORMATION: On November 18, 1985, Uniroyal Chemical Co., Inc., submitted a feed additive petition (FAP 6H5481) proposing to establish a food/feed additive regulation for the combined residues of the fungicide triflumizole (1-(1-((4-chloro-2-(trifluoromethyl)phenyl)imino)-2-propoxyethyl)-1H-imidazole) and its metabolites containing the 4-chloro-2-trifluoromethyl-aniline moiety (calculated as triflumizole) in or on apples, dried at 3.0 parts per million (ppm), apple pomace, wet at 1.0 ppm, apple pomace, dry at 3.0 ppm, grape juice at 1.0 ppm, grape pomace, wet at 4.0 ppm, grape pomace, dry at 1.0 ppm, raisins at 1.0 ppm, and raisin waste at 2.0 ppm. Subsequently, the petitioner amended its petition on November 14, 1986 and May 12, 1987, to establish tolerances for the fungicide in or on the following commodities as follows: apple pomace at 2.0 ppm, grape pomace at 25.0 ppm, and raisin waste at 8.0 ppm.

A feed additive regulation is being proposed to permit processing of apples and grapes which have been treated in connection with proposed EPA Experimental Use Permit No. 400-EUP-AU.

The scientific data reported and other related material have been evaluated. The toxicological data considered in support of the proposed regulation include the following:

1. A 90-day mouse feeding study with a no-observed effect level (NOEL) of 30 milligrams per kilogram of body weight per day (mg/kg bw/day) (200 ppm) and a lowest effect level (LEL) of 300 mg/kg/day (2,000) ppm. Liver effects were seen.

2. A rat teratology study with an NOEL of 7 mg/kg and an LEL of 35 mg/kg.

3. A rabbit teratology study, no NOEL based on decrease in 24-hour survival.

4. A 1-year dog feeding study with an NOEL of 18.75 mg/kg and an LEL of 187.5 mg/kg (7,500 ppm). Liver and blood effects were seen.

5. A two-generation rat reproduction study with an NOEL of 3.5 mg/kg bw/day (70 ppm) and an LEL of 8.5 mg/kg (170 ppm).

6. A mouse oncogenicity study with an NOEL of 15 mg/kg/day (100 ppm) and an LEL of 60 mg/kg (400 ppm). Liver effects were seen.

7. A mitotic gene conversion study that was negative for mutagenicity.

8. A rec. assay study that was negative for mutagenicity.

9. A reverse mutation in *Salmonella* and *E. coli* study that was negative for mutagenicity.

10. An unscheduled DNA synthesis study that was negative for mutagenicity.

11. A rat chronic feeding/oncogenicity study which is considered supplementary by the Agency. Because focal inflammation and necrosis of the liver was seen at all doses tested, no NOEL was established. For the purpose of the EUP, the Agency put a 1,000-fold safety factor on the lowest dose of the chronic rat study. This dose is 100 ppm or 5 mg/kg, which would give an acceptable daily intake (ADI) of 0.005 mg/kg for the purposes of the EUP, using a 1000-fold safety factor.

The maximum permitted intake (MPI) for a 60-kg human is calculated to be 0.3 mg/day. These proposed tolerances result in a theoretical maximum residue contribution (TMRC) of 0.001805 mg/kg/bw/day (1.5-kg diet) for a 60-kg human and utilize 36 percent of the PADI.

The nature of the residues is adequately understood, and an adequate analytical method is available for enforcement purposes. The method is available from William Gross, EPA, TS-757C, 401 M Street SW., Washington, DC 20460. Request method identified as MRID No. 402272-01.

Based on the information considered, the Agency concludes that the pesticide can be safely used in the prescribed manner when such use is in accordance with the label and labeling accepted in connection with the experimental use permit issued pursuant to the Federal Insecticide, Fungicide, and Rodenticide Act (FIFRA), as amended (86 Stat. 973, 7 U.S.C. 136 *et seq.*), and the regulation is proposed as set forth below.

Interested persons are invited to submit written comments on the proposed regulation. Comments must bear a notation indicating the document control number, [FAP 6H5481/P447]. All written comments filed in response to this document will be available in the Information Services Section at the address given above from 8 a.m. to 4 p.m., Monday through Friday, except legal holidays.

The Office of Management and Budget has exempted this proposed rule from the requirements of section 3, of Executive Order 12291.

Pursuant to the requirements of the Regulatory Flexibility Act (Pub. L. 96-354, 94 Stat. 1164, 5 U.S.C. 601-612), the Administrator has determined that regulations establishing new food and feed additive levels, or conditions for safe use of additives, or raising such food and feed additive levels do not have a significant economic impact on a substantial number of small entities. A certification statement to this effect was published in the **Federal Register** of May 4, 1981 (46 FR 24950).

List of Subjects in 21 CFR Part 561

Animal feeds, Pesticide and pests, Reporting and recordkeeping requirements.

Dated: March 24, 1988.

Edwin F. Tinsworth,

Director, Registration Division, Office of Pesticide Programs.

Therefore, it is proposed that Part 561 be amended as follows:

PART 561—[AMENDED]

1. The authority citation for Part 561 continues to read as follows:

Authority: 21 U.S.C. 348.

b. By adding new § 561.444, to read as follows:

§ 561.444 Triflumizole.

A feed additive regulation is established to permit residues of the fungicide triflumizole (1-(1-((4-chloro-2-(trifluoromethyl)phenyl)imino)2-propoxyethyl)-1H-imidazole) and its metabolites containing the 4-chloro-2-trifluoromethyl-aniline moiety (calculated as triflumizole) in or on the following processed feeds when present therein as a result of application to grapes and apples in connection with an experimental use program, as follows:

Feeds	Parts per million
Apple pomace	2.0
Grape pomace	25.0
Raisin waste	8.0

[FR Doc. 88-7377 Filed 4-5-88; 8:45 am]

BILLING CODE 6560-50-M

40 CFR Part 52

[FRL-3361-2]

Approval and Promulgation of Implementation Plans; California; South Coast, Cement Kilns, Nitrogen Oxides (NOx)

AGENCY: Environmental Protection Agency (EPA).

ACTION: Notice of proposed rulemaking.

SUMMARY: EPA solicits comments on a proposal to disapprove a South Coast Air Quality Management District (SCAQMD) cement plant kiln rule affecting NOx. The rule was submitted as a revision to the California State Implementation Plan (SIP) to attain the National Ambient Air Quality Standard (NAAQS) for nitrogen dioxide (NO2). This EPA action, authorized under Clean Air Act (CAA) section 110, is intended to provide states with federally enforceable regulations for the attainment and maintenance of the NAAQS. The disapproval of SCAQMD Rule 1112, is revised on June 6, and submitted to EPA on October 10, 1986, as proposed on a number of independent grounds: (1) The rule is not stringent enough to provide for expeditious attainment, and fails to require reductions from current NOx levels; (2) it constitutes a breach of the commitment in the overall plan the state submitted to reduce by 40 percent NOx emissions from cement plants; (3) it is unenforceable; (4) there is no technical demonstration of attainment to support it. The EPA-approved rule was submitted to satisfy a nonattainment area plan (NAP) commitment for 40% NOx emission reduction from cement plant kilns, adopted by the State and SCAQMD and approved by EPA. The new rule fails to meet this reduction commitment. This disapproval is necessary if the NAAQS is to be attained as expediously as practicable.

DATES: Written comments may be submitted up to June 6, 1988.

ADDRESSES: Comments may be sent to Morris I. Goldberg at the EPA Regional Office address listed below. Copies of EPA's technical evaluation report and other pertinent documents are available for public inspection during normal business hours at the EPA Region 9 office and at the following locations:

South Coast Air Quality Management District (SCAQMD), 9150 Flair Drive, El Monte, CA 91731

California Air Resources Board (ARB), 1102 "Q" Street Sacramento, CA 95814.

FOR FURTHER INFORMATION CONTACT: Morris I. Goldberg, State Implementation Plan Section, Air Management Division (A-2-3), U.S. Environmental Protection Agency, Region 9, 215 Fremont Street, 1st Floor, San Francisco, CA 94105, Telephone No. (415) 974-8213, FTS 454-8213.

SUPPLEMENTARY INFORMATION:

Background

On March 3, 1978 (43 FR 8970) California's South Coast Air Basin (SCAB) was identified as a nonattainment area for NO2. On July 25, 1979 the ARB adopted and submitted an Air Quality Management Plan (AQMP), produced by the SCAQMD, to EPA for approval.

On January 21, 1981 (46 FR 5979) EPA approved portions of the AQMP and promulgated a condition of approval at 40 CFR 52.232(a)(3)(iv)(E) which required the submittal of a commitment and schedule to develop and adopt NOx control measures and a commitment to implement those control measures necessary to provide for attainment.

On September 4, 1981, after extensive study and meetings with the public and industry, the ARB published a lengthy report, "Suggested Control Measures for the Control of Emissions of Oxides of Nitrogen from Cement Kilns" (SCM). The report established that the actual 1980 SCAB emissions from the four uncontrolled grey kilns in the basin were 10.3 tons NOx/day and that the average emission level was at 5.2 pounds of NOx/ton of clinker produced (lb/ton). The report concluded that a 3.1 lb/ton limit for kilns without waste-heat recovery, representing 38% reduction over uncontrolled basin-wide NOx emission levels, was both "technologically feasible and cost effective."

On December 24, 1981, ARB submitted a revised AQMP for the SCAB which included a commitment and schedule for the development, adoption and implementation of a regulation which would reduce NOx emissions from cement kilns in the basin by 40% from the amount actually emitted in 1980.

On January 8, 1982 the SCAQMD adopted Rule 1112 which required that NOx emissions from portland cement plant kilns in the SCAB be reduced to the 3.1 lb/ton limit in the absence of waste heat recovery, as recommended by the ARB, (averaged over 3 hours, or averaged over 24 hours with the use of continuous emission monitoring (CEMS)). The 3.1 lb/ton limit was derived from the 5.2 lb/ton average uncontrolled emissions figure, or "baseline," which was calculated by the ARB. At the hearing, California Portland Cement Company (CPCC) testifed that the 5.2 lb/ton baseline was "very close to what we had tested." (June 8, 1982 SCAQMD Hearing, Testimony of David Cahn, p. 49.) The 38% emission reduction, expected to be achieved through the implementation of the rule, was derived from the amount of control needed by the one source, Riverside Cement Company (RCC), affected by the 3.1 lb/ton limit. Approximately 71% control would be required of the RCC kilns, while 0% control would be required from CPCC kilns, which were expected to employ waste heat recovery and thus would be exempt from the 3.1 limit under the rule cited. The ARB's SCM found control technologies capable of 70 to 90% reduction in use in other combustion process industries. Thus, EPA believes these technologies were reasonably available for control of combustion process NOx emissions, although most had not been employed in the cement industry. Rule 1112 also provided for a hearing in January 1984 to consider a possible adjustment to the limits or to the rule's July 1, 1984 final compliance date.

On April 13, 1982 (47 FR 15788) EPA removed the condition of approval of the AQMP and approved the 40% commitment submitted on December 24, 1981.

On May 20, 1982, the ARB submitted Rule 1112 to EPA as a SIP revision for approval as a federally enforceable rule consistent with the 40% reduction commitment.

After the SCAQMD's adoption and the ARB's approval of Rule 1112 in 1982, RCC modified one of the kilns at its Crestmore facility as part of a NOx reduction demonstration project. The combustion modifications utilized by RCC included several recommended by the ARB in the SCM; specifically controlling excess air, burner modifications, and indirect coal firing. However, RCC did not employ any of the process modifications or other add-on technologies suggested in the SCM as being capable of achieving a total of 71% control.

On March 24, 1983 (48 FR 12108) EPA proposed to approve the SCAQMD's 1982 rule. However, EPA did not take final action prior to January 6, 1984, when the SCAQMD held a public hearing and revised the rule. At this hearing, SCAQMD extended the date of the rule review hearing to January 1986, and extended the date for final compliance to July 1986. No other changes were made. On April 19, 1984 the ARB submitted this rule (the 1984 rule) to EPA for approval.

On January 7, 1986 (51 FR 600) EPA approved the 1984 rule which limited NOx from Portland cement plant kilns to 38% of the amount actually emitted in 1980 ("1984 Rule"). EPA responded to numerous comments, including those regarding technological feasibility, interim limitations, the baseline NOx emission value, the impact on violation areas, the role of NOx control on attainment of the particulate matter and ozone NAAQS and its effect on visibility and acid rain, and others.

Two years prior to this action, EPA wrote a letter to the Governor of

California on February 24, 1984, pursuant to section 110(a)(2)(H) of the Clean Air Act. The letter required the SCAQMD to revise its plan for attaining the NO2 NAAQS by February 24, 1985 because the South Coast Air Basin had failed to meet the 1982 CAA attainment deadline.

On April 25, 1985, the ARB adopted a resolution (No. 85–29) regarding NOx control. The ARB found that "continued control of NOx emissions in the South Coast Air Basin at current or more stringent levels is needed to prevent adverse air quality impacts on concentrations of NO_2, ozone and particulate matter" On May 17, 1985 the SCAQMD Board adopted a similar resolution.

On January 24, 1986, the SCAQMD held a public hearing to review the EPA-approved Rule 1112. At this hearing the District indicated that it was going to revise the rule, based largely on information submitted by the cement industry. The industry expressed concern at this hearing that the baseline used to develop the 3.1 lb/ton emission limit was faulty. The industry submitted a recalculation of the pre-1982 data which indicated that the pre-1982 baseline figure was actually 7.8 lb/ton, a much higher uncontrolled emissions average level than the ARB's 5.2 lb/ton figure. The industry also submitted that only a 26% reduction from the recalculated pre-1982 emission level is feasible. This conclusion was based on a comparison of the mean of the emission measurements made during the RCC demonstration project at its Crestmore facility (5.8 lb/ton) to the industry recalculated baseline (7.8 lb/ton).

In March 1986 RCC and CPCC filed petitions for review of EPA's final approval of Rule 1112 in the United States Court of Appeals for the Ninth Circuit. In April 1986, the petitioners requested a stay of the effective date of the EPA approval, pending either final EPA consideration of the new limit about to be proposed by SCAQMD or the Court's final decision on the petitions for review. EPA opposed the motion and the Court denied the petitioners' motion, and ordered a stay in briefing petitioners' appeal. That stay has expired and the case is in the briefing process, as of this writing.

EPA informed SCAQMD in a May 7, 1986 letter that the information submitted at the January 24, 1986 hearing did not appear to support a revision of Rule 1112. EPA noted that the increase in the baseline to 7.8 lb/ton seemed unreasonable on technical grounds and since industry data, consisting of over 50 hours of stack test data supported the original 5.2 lb/ton baseline. The ARB expressed similar concerns to the SCAQMD in a May 30, 1986 letter. The ARB noted that if SCAQMD's proposed rule was adopted, the projected emission rate could increase "by about 6 to 7 tons per day," and further that this would represent a substantial weakening of the SIP. The ARB also echoed EPA's concern that the information submitted at the January 1986 hearing did not support the proposed rule, and further that the proposal presented very difficult enforcement problems.

Nevertheless on June 6, 1986 SCAQMD revised Rule 1112 ("1986 Rule"). The emission limit was relaxed from 3.1 lb/ton NOx, 24-hour average, to 11.6 lb/ton, 24-hour average, and 6.4 lb/ton, 30-day average. The 1986 Rule also contains an alternative emission control plan option. The July 1, 1986 compliance date and the waste-heat exeption were unchanged from the EPA-approved version of the rule. The SCAQMD asserted that this revision would produce a 26% reduction from pre-1982 emission levels. No evidence was provided at the January 1986 hearing by the cement companies or any other party that the control technologies listed in the 1981 ARB Suggested Control Measures report (SCM), on which the EPA-approved rule was based, were technologically or economically unsuitable for the subject kilns.

On July 1, 1986, EPA requested the ARB and SCAQMD to revise the December 13, 1985 AQMP prepared in response to EPA's February 24, 1984 letter. EPA asked that the revision include additional control measures because the 1985 annual air quality data indicated that the NO_2 problem had worsened since 1983 and 1984. The December 1985 AQMP stated that the existing control strategy was adequate to attain the NAAQS, and that, therefore, no rules would be relaxed or added. In April 1986, however, EPA prepared an estimate of actual 1985 emissions in the basin and compared it to the ratio of measured 1985 annual air quality data and the NAAQS. The result of this analysis indicated the need for further controls on NOx sources for the attainment of native emission control plan option. The July 1, 1986 compliance the NO_2 NAAQS in the SCAB before 1995. Since that time, the 1986 NO_2 annual average air quality data has shown that the air quality is continuing to degrade.

ARB officially submitted the relaxed Rule 1112 to EPA for consideration as a SIP revision on October 10, 1986. ARB did not explain its concerns expressed in its May 30, 1986 letter had been resolved or in what manner.

On May 15, 1987, EPA wrote to the ARB asking it to withdraw the 1986 SCAQMD revision of Rule 1112. EPA stated in this letter that it could not approve the proposed revision because it is a significant relaxation of the existing rule, does not fulfill the 40% reduction commitment, and was submitted without a technical demonstration of attainment of the NO_2 NAAQS. On June 25, 1987, the ARB responded that it would not withdraw the proposed revision based largely on its conclusion that the pre-1982 baseline figure of 5.2 lb/ton was too low and that the recalculation of the pre-1982 baseline was more accurate.

Evaluation

After a careful review of the record to date, EPA proposes to disapprove the rule because it is a breach of the SIP commitment to reduce NOx emissions, and unsupported relaxation from the applicable SIP limits, appears unenforceable, and was submitted without a demonstration of attainment. This record includes the source test data, the contractual studies, the baseline emission data, ARB's binding commitment to reduce actual NOx cement plant kiln emissions by 40% in the South Coast Air Basin, and the resolutions adopted by the ARB and SCAQMD Boards, and testimony before the SCAQMD at various hearings.

The 1986 SCAQMD Rule 1112 is flawed in a number of independent respects. First, it would effect no reduction in emissions from cement kilns. Second, it is essentially unenforceable. Third, it was submitted without any demonstration that it would not adversely affect attainment of the NAAQS for NOx. Lastly, it represents a significant and unsupported relaxation of the current emission limit. Each of these grounds standing alone is sufficient to warrant disapproval of the rule.

The 1986 Rule Would Require No Emissions Reductions

Since 1982 RCC has conducted a "demonstration project" on one of the kilns at its Crestmore facility. It has adopted several of the combustion modificants suggested by the SCM. Emissions tests conducted on this kiln indicate that the current average NO2 emission level is 5.8 lb/ton.

The SCAQMD accepted the 5.8 lb/ton figure as the new mean emission level for purposes of the 1986 revised rule. The limit, 11.6 lb/ton, is much greater than the 5.8 lb/ton average, since it represents the high end of emissions currently being produced at the already

modified kiln. Instead of representing a reduction from the baseline emissions, the relaxed rule effectively establishes an emissions limit at or above the status quo, thereby allowing for a potential increase in emissions and requiring no process modifications by the cement industry.

The SCAQMD and the ARB rationale for requiring no process controls from the cement industry is apparantly that no other control technologies are available. The ARB has failed, however, to establish this lack of technology. In its 1981 SCM report, the ARB listed a number of technologies that have been demonstrated to be reasonably available for the control of NOx in other industries in the SCAB. These include selective catalytic or non-catalytic reduction, and process modifications such as raw feed additives and pre-heating raw food.

Apparently SCAQMD, ARB and the cement companies failed to consider any of these options, beyond the combustion modifications adopted at the RCC kiln at Cestmore which produce highly variable emissions and intermittent emission reductions. Nothing submitted to EPA in support of the 1986 relaxed rule addresses this lack of consideration.

Modifications Have Not Decreased Emissions

The SCAQMD has adopted the conclusion of the cement industry, submitted in testimony during the January 24, 1986 hearing, that the combustion modifications already adopted by RCC have resulted in a 26% reduction of NO_x from one RCC kiln.

EPA's analysis of the data indicates that this conclusion is erroneous. The 26% reduction was apparently obtained by recalculating the uncontrolled pre-1982 baseline to 7.8 lb/ton, and by using it to calculate the percent reduction to the current 5.8 lb/ton means emission level.

EPA believes, however, that SCAQMD's reliance on the industry's recalculation of the pre-1982 baseline figure was inappropriate. The existing rule was based on a pre-1982 baseline of 5.2 lb/ton. SCAQMD relied upon a recalculation of the pre-1982 baseline figure which used data developed during that period which was excluded from the original baseline calculation. The recalculation of the pre-1982 baseline figure (7.8 lb/ton) is based on six emissions tests conducted over different periods of time. Only three of the RCC tests were conducted over periods comparable to the averaging times established by the rule. One 3-hour test resulted in 4.33 lb/ton and two 24-hour tests resulted in emissions of 4.42 and 5.3 lb/ton. The average of these three tests produces a 4.7 lb/ton baseline fugure. The recalculation also included the results of three tests of less than an hour duration. This short-term data, reflecting only 30, 45 and 50 minute tests, contained "spikes" of high NO_x emissions, 13.99, 14.32 and 8.78 lb/ton respectively. These figures, which do not reflect the averaging times established by the rule, severely skew the baseline figure upward to the 7.8 lb/ton baseline figure used by SCAQMD. See discusison in Technical Evaluation Report (October, 1987) at pp. 2–4.

SCAQMD's new process for calculating the baseline figure appears inappropriate and represents an unexplained reversal of SCAQMD's earlier endorsement of the data and process used to calculate the original 5.2 lb/ton baseline figure, upon which the current 3.1 lb/ton limit is based. Nothing submitted to EPA in connection with the proposed rule invalidates or discredits the data or process used to calculate the 5.2 lb/ton baseline.

Proposed Rule is Unenforceable

The 1986 SCAQMD Rule 1112 also has significant enforcement problems because it is vague and ambiguous. The rule fails to specify the method of averaging, rolling or block, which should be used to calculate emission and clinker production data. The rule also fails to establish minimum operating and recordkeeping requirements for the CEMS compliance method. The EPA-approved rule provides for the use of non-continuous in-stack testing to measure compliance.

The 1986 SCAQMD rule does not specify alternate data recovery requirements to be implemented whenever the CEMS is not operating. The 1986 SCAQMD Rule 1112 also fails to establish procedures for handling the lengthy start-up and shut-down periods, or upset-breakdown periods, in extended averaging situations. See Technical Evaluation Report at 4–5.

Failure to Establish Attainment of the NAAQS

Finally the proposed revision to Rule 1112 was submitted without any technical demonstration of attainment of the NAAQS for NO_2. See Technical Evaluation Report at 6.

Relaxation of the SIP Limit

The EPA-approved Rule 1112 sets an emission limit of 3.1 lb/ton, native emission control plan option. The July 1, 1986 compliance based on a 3-hour average, or based on a 24-hour average with CEMS. The 1986 SCAQMD Rule 1112 would relax this limit to 11.6 lb/ton based on a 24-hour average with CEMS, and 6.4 lb/ton based on a 30-day average with CEMS. As an alternative option, the 1986 Rule would allow emissions from all kilns to be averaged through an alternative emission contorl plan. This plan would require only the approval of the SCAQMD Executive Officer. The 1986 SCAQMD Rule 1112 in either form is, on its face, a significant relaxation from the current 3.1 lb/ton limit. But even if this were not the case, the previously cited grounds provide ample independent reasons to disapprove the 1986 rule.

Proposed Action

This notice proposes to disapprove the June 6, 1986 SCAQMD Rule 1112 submitted as a SIP revision to EPA on October 10, 1986. This proposal would leave unchanged EPA's previous action on the version of Rule 1112 adopted by the SCAQMD on January 6, 1984, submitted to EPA as a SIP revision by the ARB on April 19, 1984 and approved by EPA on January 7, 1986.

Regulatory Process

Under 5 U.S.C. 605(b), I certify that this action will not have a significant economic impact on a substantial number of small entities (46 FR 8709). Although this action proposes to disapprove a part of the California SIP, no additional requirements are proposed through this action, as the SCAQMD has previously adopted and EPA previously approved a more stringent rule for such sources.

Under Executive Order 12291, this action is not "Major". It has been submitted to the Office of Management and Budget (OMB) for review.

List of Subjects in 40 CFR Part 52

Air pollution control, Nitrogen dioxide.

Authority: 42 U.S.C. 7401–7642.

Dated: October 21, 1987.

John Wise,

Acting Regional Administrator.

[FR Doc. 88–7509 Filed 4–5–88; 8:45 am]

BILLING CODE 6560-50-M

DEPARTMENT OF THE INTERIOR

Bureau of Land Management

43 CFR Part 3160

[AA-630-08-4211-02]

Onshore Oil and Gas Operations; Federal and Indian Oil and Gas Leases, Onshore Oil and Gas Order No. 4, Measurement of Oil, and Onshore Oil and Gas Order No. 5, Measurement of Gas; Extension of Comment Period

AGENCY: Bureau of Land Management, Interior.

ACTION: Notice of extension of comment period.

SUMMARY: Proposed rulemakings that would issue Onshore Oil and Gas Orders No. 4 and 5 under 43 CFR Part 3160 were published in the **Federal Register** on February 3, 1988 (53 FR 3158 and 3168), with a 60-day comment period. The comment period is being extended to April 19, 1988, in response to public requests. Notice is hereby given that the comment period for the proposed rulemaking issuing oil and gas orders No. 4 and 5 is extended to April 19, 1988.

DATE: The period for the submission of comments is hereby extended to April 19, 1988. Comments received or postmarked after this date may not be considered as part of the decisionmaking process on issuance of the final rulemakings.

ADDRESS: Comments should be sent to: Director (140), Bureau of Land Management, Room 5555, Main Interior Building, 1800 C Street NW., Washington, DC 20240.

FOR FURTHER INFORMATION CONTACT: Richard T. Hunter, (303) 236-1767, or Sie Ling Chiang, (202) 653-2127, or Ted R. Hudson, (202) 343-8735.

J. Steven Griles,

Assistant Secretary of the Interior.

[FR Doc. 88-7496 Filed 4-5-88; 8:45 am]

BILLING CODE 4310-84-M

DEPARTMENT OF ENERGY

Office of the Secretary

48 CFR Parts 916, 931 and 952

Acquisition Regulation Concerning Cost Principles on Contractor Travel Costs

AGENCY: Office of the Secretary, DOE.

ACTION: Notice of proposed rulemaking.

SUMMARY: The Department of Energy (DOE) proposes to amend the Department of Energy Acquisition Regulation (DEAR), Chapter 9 of the Federal Acquisition Regulations system, in order to describe the contractor employee travel expense limitations that will apply to DOE contracts awarded to state and local governments, educational institutions, nonprofit organizations, and state, local or Federally recognized Indian tribal government, as established by the Federal Civilian Employee and Contractor Travel Expense Act of 1985 (Pub. L. 99-234). The rule, when final, will establish consistent application of Pub. L. 99-234 to all DOE contractors.

DATE: Written comments should be submitted no later than May 6, 1988.

ADDRESSES: Comments should be addressed to: U.S. Department of Energy, James J. Cavanagh, Director, Business and Financial Policy Division (MA-422), 100 Independence Avenue SW., Washington, DC 20585.

FOR FURTHER INFORMATION CONTACT:

Rudolph J. Schuhbauer, Business and Financial Policy Division, (MA-422), Procurement and Assistance Management Directorate, Washington, DC 20585, (202) 586-8175.

Mary L. Bosch, Office of the Assistant General Counsel for Procurement and Financial Incentives, (GC-34), Washington, DC 20585, (202) 586-1526.

SUPPLEMENTARY INFORMATION:

I. Background
II. Procedural Requirements
A. Review Under Executive Order 12291
B. Review Under the Regulatory Flexibility Act
C. Paperwork Reduction Act
D. National Environmental Policy Act
E. Public Hearing
III. Public Comments

I. Background

DOE is proposing to amend the DEAR to ensure that reimbursements for contractor employee travel expenses under DOE contracts placed with educational institutions, nonprofit organizations and State, local and Federally recognized Indian tribal governments are compatible and consistent with existing statutory requirements. Title II, Travel Expenses of Government Contractors, of Pub. L. 99-234 provides, in part, that "[u]nder any contract with any executive agency, costs incurred by contractor personnel for travel, including costs of lodging, other subsistence, and incidental expenses, shall be considered to be reasonable and allowable only to the extent that they do not exceed the rates and amounts set by subchapter I of chapter 57 of title 5, United States Code, or by the Administrator of General Services or the President (or his designee) pursuant to any provision of such subchapter." Referenced subchapter I (5 U.S.C. 5700), at 5 U.S.C. 5702, generally provides that when traveling on official business a Federal employee is entitled to a per diem allowance or actual expense reimbursement not to exceed the rates and amounts established in applicable regulations by the Administrator of General Services and that for travel consuming less than a full day, the payment prescribed by regulation shall be allocated in such manner as the Administrator may prescribe.

To implement the new statutory limits imposed on Federal travelers by Title 1, Travel Expenses of Federal Civilian Employees, of Pub. L. 99-234, appropriate amendments to the Federal Travel Regulations were published by the General Services Administration on May 30, 1986 (51 FR 19660) and were further amended on July 15, 1987 (52 FR 26630), with regard to the reimbursement of a Federal traveler's subsistence expenses. The Federal Travel Regulations currently provide that payments to Federal travelers may not exceed the employee's actual cost of lodging, up to specified lodging maximums, plus a specified meals and incidental expense allowance, allocated within prescribed limitations, for a full travel day and require the payment of lesser amounts for travel days where an employee does not require lodging and/or a full day's meals and incidental expense allowance, e.g., on the day of departure and day of return.

The requirements of Pub. L. 99-234 for contractor travel were implemented in the Federal Acquisition Regulation (FAR) travel cost principle applicable to commercial organizations which was published as a notice for public comment in the **Federal Register** on May 30, 1986 (51 FR 19690) and as a final rule on July 31, 1986 (51 FR 27488). The existing FAR cost principle provisions for commercial organizations are intended to apply to the classes of contractors to which this proposed rule would be applicable.

Although the cited statute applies the same travel cost limitations to contracts in general, and makes no reference to awardee type, the FAR failed to mention the application of the law to contracts with educational institutions and nonprofit organizations, or to State, local and Federally recognized Indian tribal governments. This is because appropriate modifications were expected to be made to OMB Circulars A-21, A-122 and A-87, respectively. Notwithstanding all these administrative documents, the law has established the applicable principles which have been in effect in excess of

two years. It should be noted that the contractor travel cost limitations were established by law with no flexibility provided for administrative changes. As such there is no room for debate as to the wisdom of the law, or the need to implement it. In order to harmonize the DEAR to the recently enacted statutory requirements, DOE is issuing this proposed rule.

II. Procedural Requirements

A. Review Under Executive Order 12291

This Executive Order, entitled "Federal Regulations," requires that certain regulations be reviewed by OMB prior to their promulgation. Bulletin 85-7 exempts all but certain types of procurement regulations from such review. This proposed rule does not involve any of the topics requiring prior review under the Bulletin and is accordingly exempt from such review.

B. Review Under the Regulatory Flexibility Act

This proposed rule was reviewed under the Regulatory Flexibility Act of 1980, Pub. L. 96-354, which requires preparation of a regulatory flexibility analysis for any rule which is likely to have significant economic impact on a substantial number of small entities. This rule will have no impact on interest rates, tax policies or liabilities, the costs of goods or services or other direct economic factors. It will not have a signficant economic impact on a substantial number of small entities and, therefore, no regulatory flexibility analysis has been prepared.

C. Paperwork Reduction Act

This proposed rule may impose some additional recordkeeping requirements. Since the information collected moves directly from the contractor to the GSA, responsibility for recordkeeping and paperwork burden remains with GSA. DOE has requested an OMB control number from GSA.

D. National Environmental Policy Act

DOE has concluded that promulgation of this proposed rule would not represent a major Federal action having significant impact on the human environment under the National Environmental Policy Act (NEPA) of 1969 (42 U.S.C. 432 *et seq.*, 1976), or the Council on Environmental Quality regulations (40 CFR Part 1020), and therefore does not require an environmental impact statement or an environmental assessment pursuant to NEPA.

E. Public Hearing

The Department has concluded that this proposed rule does not involve a substantial issue of fact or law and that the proposed rule should not have a substantial impact on the nation's economy or large numbers of individuals or business. Therefore, pursuant to Pub. L. 95-91, the DOE Organization Act, the Department does not plan to hold a public hearing on this proposed rule.

III. Public Comments

Interested persons are invited to participate by submitting data, views or arguments with respect to the proposed DEAR amendments set forth in this notice. All comments received on or before the date specified in the beginning of this notice and all other relevant information will be considered by DOE before taking final action on the proposed regulation changes. DOE will make best efforts to consider any late comments as well.

List of Subjects in 48 CFR Parts 916, 931 and 952

Government procurement.

For the reasons set out in the preamble, Chapter 9 of Title 48 of the Code of Federal Regulations is proposed to be amended as set forth below.

Issued in Washington, DC, on March 28, 1988.

Berton J. Roth,

Director, Procurement and Assistance Management Directorate.

1. The authority citation for Parts 916, 931 and 952 will continue to read as follows:

Authority: 42 U.S.C. 7254; 40 U.S.C. 486(c).

PART 916—[AMENDED]

2. Section 916.307 is amended by adding paragraph (a) to read as follows:

916.307 Contract clauses.

(a) The clause at FAR 52.216-7, Allowable Cost and Payment, as prescribed at FAR 16.307(a), shall be further modified as follows:

(1) When contracting with a commercial organization, modify paragraph (a) of the clause at FAR 52.216-7 by adding the phrase, "as supplemented by Subpart 931.2 of the Department of Energy Acquisition Regulation (DEAR)," after the acronym "(FAR)."

(2) If the contract is with an educational institution, modify paragraph (a) of the clause at FAR 52.216-7 by adding the phrase, "as supplemented by Subpart 931.3 of the Department of Energy Acquisition Regulation (DEAR)," after the acronym "(FAR)."

(3) If the contract is with a State, local or Federally recognized Indian tribal government, modify paragraph (a) of the clause at FAR 52.216-7 by adding the phrase, "as supplemented by Subpart 931.6 of the Department of Energy Acquisition Regulation (DEAR)," after the acronym "(FAR)."

(4) If the contract is with a nonprofit organization other than an educational institution, a State, local, or Federally recognized Indian tribal government, or a nonprofit organization exempted under OMB Circular No. A-122, modify paragraph (a) of the clause at FAR 52.216-7 by adding the phrase, "as supplemented by Subpart 931.7 of the Department of Energy Acquisition Regulation (DEAR)," after the acronym "(FAR)."

* * * * *

PART 931—[AMENDED]

3. Part 931 is amended by adding Subparts 931.3, 931.6 and 931.7 to read as follows:

Subpart 931.3—Contracts with Educational Institutions

931.303 Requirements.

(c) The reasonableness and allowability of travel costs claimed for reimbursement under the contract for the cost of lodging, meals and incidental expenses incurred by contractor employees shall be subject to the travel cost principles at FAR 31.205-46(a) in lieu of OMB Circular A-21, Section J.43, paragraph a.

Subpart 931.6—Contracts with State, Local, and Federally Recognized Indian Tribal Governments

931.603 Requirements.

(c) The reasonableness and allowability of travel costs claimed for reimbursement under the contract for the costs of lodging, meals and incidental expenses incurred by contractor employees shall be subject to the travel cost principles at FAR 31.205-46(a) in lieu of OMB Circular A-87, Attachment B, paragraph B-28, Travel.

Subpart 931.7—Contracts with Nonprofit Organizations

931.703 Requirements.

(c) The reasonableness and allowability of travel costs claimed for reimbursement under the contract for the costs of lodging, meals and incidental expenses incurred by contractor employees shall be subject to

the travel cost principles at FAR 31.205-46(a) in lieu of OMB Circular A-122, Attachment B, Section 50, paragraph a.

PART 952—[AMENDED]

4. Section 952.216-7 is revised to read as follows:

952.216-7. Allowable cost and payment.

Insert the clause at FAR 52.216-7 as prescribed in FAR 16.307(a) and as supplemented by 916.307(a).

[FR Doc. 88-7408 Filed 4-5-88; 8:45 am]

BILLING CODE 6820-01-M

DEPARTMENT OF TRANSPORTATION

Research and Special Programs Administration

49 CFR Parts 171 and 173

[Docket No. HM-166V; Notice No. 88-2]

Hazardous Materials; Uranium Hexafluoride

AGENCY: Research and Special Programs Administration (RSPA), DOT.

ACTION: Notice of proposed rulemaking; supplemental proposals.

SUMMARY: By these supplemental proposals to the Notice of Proposed Rulemaking (NPRM; Notice No. 87-7) published in the **Federal Register** on July 6, 1987 (52 FR 25342), RSPA is proposing to amend the Hazardous Materials Regulations (HMR) to permit the transport of uranium hexafluoride (UF_6) in packagings that meet the requirements of American National Standard N14.1-1987 (ANSI N14.1-1987), and to permit the transport of depleted UF_6 in packagings filled to a capacity not exceeding 62% by volume at 70 °F. This action is necessary to permit the design and fabrication of UF_6 packaging in accordance with the latest revision of ANSI N14.1, and to increase the filling limit of packages of depleted UF_6 from 61% to 62% of the volumetric capacity.

DATE: Comments must be received on or before May 6, 1988.

ADDRESS: Address comments to Dockets Unit, Office of Hazardous Materials Transportation, U.S. Department of Transportation, Washington, DC, 20590. Comments should identify the docket and notice and be submitted, if possible, in 5 copies. Persons wishing to receive confirmation of receipt of their comments should include a self-addressed stamped postcard. The Dockets Unit is located in Room 8426 of the Nassif Building, 400 Seventh Street SW., Washington, DC, 20590. Office hours are 8:30 a.m. to 5:00 p.m., Monday through Friday.

FOR FURTHER INFORMATION CONTACT: Michael E. Wangler, Chief, Radioactive Materials Branch, Technical Division, Office of Hazardous Materials Transportation, U.S. Department of Transportation, 400 Seventh Street SW., Washington, DC 20590. (202) 366-4545.

SUPPLEMENTARY INFORMATION:

Background

On July 6, 1987, RSPA published a notice of proposed rulemaking (NPRM; Notice 87-7) in the **Federal Register** (52 FR 25342) which proposed to permit the transport of uranium hexafluoride (UF_6) in packagings not meeting either the requirements of American National Standard N14.1-1982 (ANSI N14.1-1982), or the specifications for DOT Class 106A multi-unit tank car tanks, provided the packagings were designed, fabricated and marked in accordance with an earlier edition of the ANSI N14.1 standard, or Section VIII, Division I of the American Society of Mechanical Engineers (ASME) Code. In addition, the packagings had to meet the mimimum wall thickness requirements, and be used within their original design specifications. Finally, the packagings would be subject to the periodic testing and marking requirements of § 173.420(b). RSPA took this action to permit the continued use of more than 50,000 existing packagings that had been used safely for the transport of UF_6. The proposed regulation will ensure that the packagings have been manufactured in accordance with an acceptable standards. RSPA believes that these controls are necessary to ensure an acceptable level of safety.

At the time of the publication of Notice 87-7, the new American National Standard 14.1-1987 (ANSI N14.1-1987) had not been approved by the ANSI Committee. However, on November 19, 1987, RSPA was notified that the ANSI Board of Standards Review had approved ANSI N14.1-1987 with an effective date of October 30, 1987. RSPA believes that it is now appropriate to consider incorporation of the new ANSI N14.1 standard.

One area of interest in ANSI N14.1-1987 is the establishment of standards for a type of packaging to be used primarily for the transportation and storage of depleted UF_6. The packagings will have a nominal diameter of 48 inches and a wall thickness of 0.25 inch. The packagings must meet specified service pressure requirements and must be marked in accordance with Section VIII, Division I of the ASME Code. Although this type of packaging has been used by the industry for storage for many years, it has not been specifically covered by previous editions of ANSI N14.1 for use in transport. Incorporation of ANSI N14.1-1987 would also allow the use of existing and newly manufactured packaging of this type.

Another issue of interest is that unlike previous ANSI N14.1 standards, ANSI N14.1-1987 recognizes that a wide variety of packagings are currently in service, although not specifically covered by an ANSI N14.1 standard, and may be acceptable for service, provided the packagings are used within their original design limitations and are inspected, tested, and maintained, in conformance with ANSI N14.1-1987. RSPA's proposal, in § 173.420(a)(2)(iv), may be more limited in scope than the packagings addressed in ANSI N14.1. Comments are requested concerning the need, if any, to "grandfather" any categories of packagings not addressed in proposed § 173.420.

RSPA has reviewed ANSI N14.1-1987 and has found this standard to be acceptable for incorporation by reference and, therefore, proposes to incorporate this document in its entirety In addition to the incorporation of ANSI N14.1-1987, RSPA proposes to permit the shipment of packages containing depleted UF_6 up to a filling capacity not exceeding 62% by volume. The current fill limit of 61% of the volumetric capacity was promulgated by RSPA on November 18, 1986 (51 FR 41632), and was derived from Table 1 of ANSI N14.1-1982. Prior to that time, the Department of Energy (DOE) had filled over 6000 cylinders with depleted UF_6 to about 62% of the capacity of the packaging. DOE had based its fill limit on one of its internal documents, ORO-651. ANSI N14.1-1982 did not specifically address fill limits for depleted UF_6. However, the new ANSI N14.1-1987 indicates that a fill limit of 62% is acceptable for packagings containing depleted UF_6. Since a 62% fill limit still provides a safety margin of 38% during transportation, RSPA believes that this fill limit is acceptable for transportation.

Since the proposed incorporation of ANSI N14.1-1987 affects a number of paragraphs in § 173.420 and Notice 87-7 substantially changes § 173.420(a), the entire § 173.420 is being published for reference. However, only those changes referring to ANSI N14.1-1987 and to the change in the permitted fill limit are the subject of this notice. Comments addressing only these two issues are requested.

Administrative Notices

The RSPA has determined that this rulemaking (1) is not "major" under Executive Order 12291; (2) is not "significant" under DOT's regulatory policies and procedures (44 FR 11034); (3) will not affect not-for-profit enterprises, or small governmental jusrisdictions; and (4) does not require an environmental impact statement under the National Environmental Policy Act (42 U.S.C. 4321 *et seq.*). A regulatory evaluation is available for review in the docket. Based on limited information concerning the size and nature of entities likely to be affected, I certify that this regulation will not have a significant economic impact on a substantial number of small entities under the criteria of the Regulatory Flexibility Act. I have reviewed this regulation in accordance with Executive Order 12612 ("Federalism"). Although this proposed regulation intends to incorporate ANSI N14.1–1987, it has no substantial direct effects on the states, on the Federal-state relationship or the distribution of power and responsibilities among levels of government. Thus, this proposed regulation contains no policies that have Federalism implications, as defined in Executive Order 12612.

List of Subjects

49 CFR Part 171

Hazardous materials transportation, Matter incorporated by reference.

49 CFR Part 173

Hazardous materials transportation, Packaging, Radioactive materials.

In consideration of the foregoing, 49 CFR Parts 171 and 173 are amended as follows:

PART 171—GENERAL INFORMATION, REGULATIONS, AND DEFINITIONS

1. The authority citation for Part 171 continues to read as follows:

Authority: 49 U.S.C. 1802, 1803, 1804, 1808; 49 CFR Part 1, unless otherwise noted.

2. In § 171.7, paragraph (d)(4)(iii) would be revised to read as follows:

§ 171.7 Matter incorporated by reference.

* * * * *

(d) * * *

(4) * * *

(iii) American National Standard N14.1 is entitled, "Uranium Hexafluoride Packaging for Transport," 1987 edition.

* * * * *

PART 173—SHIPPERS—GENERAL REQUIREMENTS FOR SHIPMENTS AND PACKAGINGS

3. The authority citation for Part 173 continues to read as follows:

Authority: 49 U.S.C. 1803, 1804, 1805, 1806, 1807, 1808; 49 CFR Part 1, unless otherwise noted.

4. § 173.420 would be revised to read as follows:

§ 173.420 Uranium hexafluoride (fissile and low specific activity).

(a) In addition to any other applicable requirements of this subchapter, uranium hexafluoride, fissile or low specific activity, must be packaged in conformance with the following requirements:

(1) Before initial filling and during periodic inspection and test, packaging shall be cleaned in accordance with American National Standard N14.1–1987;

(2) Packagings must be designed, fabricated, inspected, tested and marked in accordance with—

(i) American National Standard N14.1–1987;

(ii) An edition of American National Standard N14.1 issued prior to 1987 provided the standard was in effect at the time the packaging was manufactured;

(iii) Specifications for DOT Class 106A multi-unit tank car tanks (§§ 179.300, 179.301, and 179.302 of this subchapter); or

(iv) Section VIII, Division I of the ASME Code, provided the packaging—

(A) Was manufactured on or before June 30, 1987;

(B) Conforms to the edition of the ASME Code in effect at the time the packaging was manufactured;

(C) Is used within its original design limitations; and

(D) Has wall (shell and head) thicknesses that have not decreased below the minimum value specified in the following table:

Packaging model	Minimum thickness millimeters (inches)
1S, 2S	1.58 (0.062)
5A, 8A	3.17 (0.125)
12A, 12B	4.76 (0.187)
30B	7.93 (0.312)
48A, F, X, and Y	12.70 (0.500)
48T, O, OM, OM Allied, HX, H, and G	6.35 (0.250)

(3) Uranium hexafluoride must be in solid form when offered for transportation;

(4) The volume of the solid uranium hexafluoride, except solid depleted uranium hexafluoride, at 21.1 °C (70 °F) may not exceed 61% of the volumetric capacity of the packaging. The volume of solid depleted uranium hexafluoride, at 21.1 °C (70 °F) may not exceed 62% of the volumetric capacity of the packaging.

(5) The pressure in the package at 21.1 °C (70 °F) must be less than 101.3 kPa (14.8 psia).

(b) Packagings of uranium hexafluoride must be periodically inspected, tested and marked in accordance with American National Standard N14.1–1987.

(c) Each repair to a packaging for uranium hexafluoride shall be performed in conformance with American National Standard N14.1–1987.

Issued in Washington, DC on April 1, 1988, under authority delegated in 49 CFR Part 106, Appendix A.

Alan I. Roberts,

Director, Office of Hazardous Materials Transportation.

[FR Doc. 88–7548 Filed 4–5–88; 8:45 am]

BILLING CODE 4910-60-M

DEPARTMENT OF COMMERCE

National Oceanic and Atmospheric Administration

50 CFR Part 644

Atlantic Billfishes

AGENCY: National Marine Fisheries Service (NMFS), NOAA, Commerce.

ACTION: Notice of availability of a fishery management plan and request for comments.

SUMMARY: NOAA issues this notice that the South Atlantic Fishery Management Council, in cooperation with the New England, Mid-Atlantic, Gulf of Mexico, and Carribbean Fishery Management Councils, has submitted the Fishery Management Plan for Atlantic Billfishes (FMP) for review by the Secretary of Commerce. Comments from the public are invited.

DATE: Comments will be accepted until June 3, 1988.

ADDRESSES: Send comments to Rodney C. Dalton, Fishery Operation Branch, National Marine Fisheries Service, 9450 Koger Boulevard, St. Petersburg, FL 33702. Limited copies of the FMP are available at this address.

Copies of the FMP and supporting documents may also be obtained from the South Atlantic Fishery Management

Council, Southpark Building, Suite 306, 1 Southpark Circle, Charleston, SC 29407, telephone 803-571-4366.

FOR FURTHER INFORMATION CONTACT: Rodney C. Dalton (Plan Coordinator) at 813-893-3722.

SUPPLEMENTARY INFORMATION: The FMP was prepared by the Councils under the authority of the Magnuson Fishery Conservation and Management Act. The Magnuson Act requires that the Secretary of Commerce, upon receipt of the FMP, immediately publish notice of its availability for public review and comment. The Secretary will consider public comments in determining whether to approve the FMP.

The FMP proposes regulations for managing the foreign and domestic fisheries for Atlantic billfishes within the exclusive economic zone in the Atlantic Ocean (including the Gulf of Mexico and the Caribbean Sea). The FMP proposes: (1) Prohibition of the sale of blue marlin, white marlin, sailfish, and spearfish caught in specified portions of the Atlantic Ocean; (2) minimum size limits for blue marlin, white marlin, and sailfish; (3) prohibition of possession of billfishes by pelagic longline and drift net vessels; (4) mandatory reporting from billfish tournaments selected by NMFS; and (5) incorporation into the FMP of the foreign fishing management measures, pertinent to billfishes, currently contained in the Preliminary Fishery Management Plan for Atlantic Billfishes and Sharks.

On September 25, 1987, the Environmental Protection Agency published a notice of availability of a draft environmental impact statement for this FMP (52 FR 36096). Proposed regulations based on this FMP are scheduled to be published within 15 days.

(16 U.S.C. 1801 *et seq.*)

Dated: April 1, 1988.

Richard H. Schaefer,

Director, Office of Fishery Conservation and Management.

[FR Doc. 88-7572 Filed 4-5-88; 8:45 am]

BILLING CODE 3510-22-M

Notices

Federal Register
Vol. 53, No. 66
Wednesday, April 6, 1988

This section of the FEDERAL REGISTER contains documents other than rules or proposed rules that are applicable to the public. Notices of hearings and investigations, committee meetings, agency decisions and rulings, delegations of authority, filing of petitions and applications and agency statements of organization and functions are examples of documents appearing in this section.

DEPARTMENT OF AGRICULTURE

Office of the Secretary

Meat Import Act; Second Quarterly Estimate

Public Law 88–482, enacted August 22, 1964, as amended by Pub. L. 96–177 (hereinafter referred to as the "Act"), provides for limiting the quantity of fresh, chilled, or frozen meat of cattle, sheep except lamb, and goats (TSUS 106.10, 106.22, and 106.25), and certain prepared or preserved beef and veal products (TSUS 107.55, 107.61, and 107.62), which may be imported into the United States in any calendar year. Such limitations are to be imposed when the Secretary of Agriculture estimates that imports of articles provided for in TSUS 106.10, 106.22, 106.25, 107.55 and 107.62 (hereinafter referred to as "meat articles"), in the absence of limitations under the Act during such calendar year, would equal or exceed 110 percent of the estimated aggregate quantity of meat articles prescribed for calendar year 1988 by section 2(c) as adjusted under section 2(d) of the Act.

As published on January 6, 1988 (53 FR 267), the estimated aggregate quantity of meat articles prescribed by section 2(c), as adjusted by section 2(d) of the Act, for calendar year 1988 is 1,386.8 million pounds.

In accordance with the requirements of the Act, I have determined that the second quarterly estimate for 1988 of the aggregate quantity of meat articles which would, in the absence of limitations under the Act, be imported during calendar year 1988 is 1,480 million pounds.

Done at Washington, DC this 31st day of March, 1988.

Richard E. Lyng,

Secretary of Agriculture.

[FR Doc. 88–7503 Filed 4–5–88; 8:45 am]

BILLING CODE 3410-10-M

Commodity Credit Corporation

Uniform Grain and Rice Storage Agreement Fees

AGENCY: Commodity Credit Corporation, USDA.

ACTION: Notice of fees.

SUMMARY: The purpose of this notice is to publish a schedule of fees to be paid to Commodity Credit Corporation (CCC) by grain and rice warehousemen requesting: (a) To enter into a storage agreement; or (b) renewal of an existing storage agreement in accordance with the regulations governing the Standards for Approval of Warehouses for Grain, Rice, Dry Edible Beans, and Seed (7 CFR 1421.5551 *et seq.*). The fees are charged by CCC to defray the costs of periodic examination of warehouses operated by such warehousemen who do not have a Federal warehouse license or State warehouse license issued by a State having a cooperative agreement with CCC for warehouse examination services and to defray the costs of contract application processing and examination of warehouses operated by warehousemen who do not have an existing storage agreement.

EFFECTIVE DATE: April 1, 1988.

FOR FURTHER INFORMATION CONTACT: Steven Closson, Chief, Storage Contract Branch, Warehouse Division, ASCS, USDA, Room 5962-South Building, P.O. Box 2415, Washington, DC 20013, (202) 447–5647.

SUPPLEMENTARY INFORMATION: This notice has been reviewed in conformity with Executive Order 12291 and Departmental Regulation 1512–1 and has been classified as "not major" since implementation will not result in: (1) An annual effect on the economy of $100 million or more; (2) a major increase in costs or prices for consumers, individual industries, Federal, State, or local government agencies, or geographic regions; or (3) significant adverse effects on competition, employment, investments, productivity, innovation, the environment, or the ability of United States-based enterprises to compete with foreign-based enterprises in domestic or export markets.

It has been determined by an environmental evaluation that this action will have no significant impact on the quality of the human environment. Therefore, neither an Environmental Assessment nor an Environmental Impact Statement is required.

This program is not subject to the provisions of Executive Order 12372 which requires intergovernmental consultation with State and local officials. See the Notice related to 7 CFR Part 3015, Subpart V, published at 48 FR 29115 (June 24, 1983).

It has been determined that this rule will not increase the federal paperwork burden for individuals, small businesses, and other persons. CCC is also not required by 5 U.S.C. 553 or any other provision of law to publish a notice of proposed rulemaking with respect to the subject matter of this notice. Therefore, the Regulatory Flexibility Act is not applicable to this notice, and a Regulatory Flexibility Analysis was not prepared.

The CCC Charter Act (15 U.S.C. 714 *et seq.*) authorizes CCC to conduct various activities to stabilize, support, and protect farm income and prices. CCC is authorized to carry out such activities as making price support available with respect to various agricultural commodities, removing and disposing of surplus agricultural commodities, exporting or aiding in the exportation of agricultural commodities, and procuring agricultural commodities for sale both in the domestic market and abroad. Section 4(h) of the CCC Charter Act provides that CCC will not acquire real property in order to provide storage facilities for agricultural commodities unless CCC determines that private facilities for the storage of such commodities are inadequate. Further, section 5 of the CCC Charter Act requires that in carrying out purchasing and selling operations and in the warehousing, transporting, or handling of agricultural commodities, CCC use, to the maximum extent practicable, the usual and customary channels, facilities, and arrangements of trade and commerce.

Pursuant to these provisions, CCC enters into storage agreements with private grain and rice warehousemen to provide for the storage of commodities owned by CCC or pledged as security to CCC for price support loans. CCC examines all grain and rice warehouses which are the subject of a storage agreement, or for which a warehouseman has requested approval of a new storage agreement, to determine whether the warehouseman

satisfies the standards of approval or has the ability to do so, or is complying with the terms and conditions of the storage agreement. Application procedures include review of an applicant's financial statement, establishment of net worth, verification of licensing requirements, and other contract administrative procedures.

7 CFR 1421.5558 provides that all grain and rice warehousemen who do not have an existing agreement with CCC for storage and handling of CCC-owned commodities or commodities pledged to CCC as loan collateral, but who desire such an agreement, must pay an application and examination fee for each warehouse for which CCC approval is sought prior to CCC conducting the original warehouse examination.

Section 1421.5558 provides further that each warehouseman who has a nonfederally licensed grain or rice warehouse in States that do not have a cooperative agreement with CCC for warehouse examinations must pay an annual contract fee to CCC for each such warehouse which is approved by CCC or for which CCC approval is sought. A grain or rice warehouseman who has entered into a storage agreement with CCC must pay the annual contract fee in advance of the renewal date of the agreement. A grain or rice warehouseman who is seeking to enter into a storage agreement with CCC must also pay the annual contract fee for each warehouse for which CCC approval is sought prior to the time that the agreement is approved by CCC. Section 1421.5558 also provides that the amount of the contract fee will be determined and announced in the **Federal Register**. By proposed rule published October 8, 1987, (52 FR 37619) this section was proposed to be modified to provide that CCC may announce in the **Federal Register** a fee schedule that will remain effective until changed by CCC rather than announced annually. However, by notice published February 1, 1988, (53 FR 2759) the comment period for the proposed rule was reopened to February 12, 1988, and a final rule has not been issued. The contract fee is designed to reimburse CCC for approximately 50 percent of the cost of warehouse examinations and contract origination administrative costs.

A review of the revenue collected from application and examination fees and contract fees indicated that the fee schedules presently being used have generated sufficient revenues to cover approximately 50 percent of the cost incurred performing warehouse examinations and other contract origination administrative costs for the current year. Projections of program costs indicate that CCC's expenditures for the examination of grain and rice warehouses should remain relatively stable. Accordingly, the fees are unchanged from those fees which were applicable to the 1987–88 contract year.

Determination

The fees set forth herein will be collected by the Commodity Credit Corporation (CCC) from warehousemen who have entered into a Uniform Grain Storage Agreement (UGSA) or a Uniform Rice Storage Agreement (URSA) with CCC or who are seeking to enter into a UGSA or URSA with CCC.

Applicants for a Contract

The application and examination fees and contract fee will be collected by CCC from all warehousemen requesting a UGSA or URSA who do not have an existing agreement with CCC.

Application and Examination Fees

The fee will be computed at the rate of $10 for each 10,000 bushels of storage capacity or fraction thereof, but the fee will be not less than $100 nor more than $1,000; however, if the applicant is licensed under the United States Warehouse Act or is applying for such a license, the fee will be computed at the rate of $2.50 per 10,000 bushels of storage capaacity or fraction thereof but not less than $25 nor more than $250.

Before any original application is processed or examination is made, the applicant must deposit with CCC the amount of the fee prescribed. Such deposit must be made in the form of a check, draft or post office or express money order payable to the order of "Commodity Credit Corporation."

New and Existing Contracts

The contract fee will be collected by CCC from warehouse men who have entered into a URSA or a UGSA with CCC or who will enter into a URSA or UGSA with CCC but who do not have a Federal warehouse license or a State warehouse license issued by a State having a cooperative agreement with CCC for warehouse examination services.

TWELVE-MONTH CONTRACT FEE SCHEDULE

Location capacity (bushels)	Contract fees (dollars)
1 to 150,000	100
150,001 to 250,000	200

TWELVE-MONTH CONTRACT FEE SCHEDULE—Continued

Location capacity (bushels)	Contract fees (dollars)
250,001 to 500,000	300
500,001 to 750,000	400
750,001 to 1,000,000	500
1,000,001 to 1,200,000	600
1,200,001 to 1,500,000	700
1,500,001 to 2,000,000	800
2,000,001 to 2,500,000	900
2,500,001 to 5,000,000	1,000
5,000,001 to 7,500,000	1,100
7,500,001 to 10,000,000	1,200
10,000,001 plus	[1] 1,200

[1] Plus $30 per million bushels of capacity above 10 million or fraction thereof.

The location capacity of the warehouse will be determined by the Secretary of Agriculture and will be the capacity of a fully functional facility operated as a public warehouse or functional unit of a group of warehouses usually within the same town or freight tariff point. A functional facility is one which could operate independently if it was separate from other facilities that may be included in a merged warehouse code. Any outlying unit which is not a fully functional facility would have its capacity included as part of the combined capacity of the nearest fully functional operating location.

The contract fee will be the sum total of the fees for all functional units within the warehouse code and will be assessed and must be paid in advance of the annual contract renewal date or, in the case of a warehouseman who is seeking aproval of a new URSA or UGSA, prior to the time that the agreement is approved by CCC. The failure of a warehouseman to pay such fee at that time will be grounds for termination of an existing URSA or UGSA or for rejection of approval of a new URSA and UGAS.

Signed at Washington, DC on March 31, 1988.

Milton Hertz,

Executive Vice President, Commodity Credit Corporation.

[FR Doc. 88–7504 Filed 4–5–88; 8:45 am]

BILLING CODE 3410-05-M

Foreign Agricultural Service

Topics Discussed in FY 1987 by Agricultural Advisory Committees for Trade

AGENCY: Foreign Agricultural Service, USDA.

ACTION: Notice.

SUMMARY: This notice is provided in order to notify the public of activities of the Agricultural Policy Advisory Committee and the nine Agricultural Technical Advisory Committees for Trade as required by section 10(d) of the Federal Advisory Committee Act. The advice received from the committees during fiscal year 1987 concerned an array of agricultural trade issues, the most significant being the following:

Uruguay Round—Regarding the Uruguay Round agriculture negotiations, Committee discussions concentrated on developments related to the preparation and tabling of the U.S. negotiating proposal, and on building domestic and international support for the bold and comprehensive market-oriented reforms in the U.S. approach. Committee discussions also centered on examining and comparing the proposals tabled by other countries participating in the negotiations.

Harmonized Tariff System—The private sector advisory committees examined the draft proposal to convert the existing Tariff Schedule to a Harmonized Tariff Schedule, which is based on an international classification system. They also considered the converted tariff schedules of our major trading partners to determine whether U.S. agricultural exporters would be adversely affected by their adoption of this international system. They received reports from U.S. negotiators on progress in aligning GATT concessions in Geneva GATT talks.

Section 1132 Reports—The Committees reviewed "Trade Policies and Market Opportunities U.S. Farm Exports", an annual report required under section 1132 of the Food Security Act of 1985. This report describes the agricultural production and trade policies of more than 100 countries. It identifies government programs that aid agricultural exports or impede agricultural imports from the United States, and identifies market opportunities for U.S. agricultural exports. The Committees developed specific recommendations for action to be taken by the Federal Government and private industries to reduce the trade barriers and to expand export opportunities identified in the report.

Canada Free Trade Agreement—The Committees discussed the agricultural issues under consideration in the U.S. negotiations with Canada to create a free trade area between the two countries.

Other Bilateral Trade Issues—Regarding Japan, the most important issues discussed were those concerning that country's agricultural import quotas Specifically, the strategy to eliminate restrictions on beef and citrus trade upon the expiration of a four year understanding on April 1, 1988, and the successful GATT challenge to quotas on 12 other product categories were detailed.

Regarding the European Community, the Committees discussed issues relating to the agreement between the United States and the EC to settle the trade dispute arising from the enlargement of the EC to include Spain and Portugal. Other issues included developments in the citrus-pasta dispute, the EC ban on the use of growth promoting hormones in livestock, the EC Third Country Meat Directive relating to slaughter plant certification, and the proposed EC tax on vegetable oils.

Details of these discussions are not available since meetings and advice given are open only to members of the committees in accordance with section 135(f)(2) of the Trade Act of 1974, as amended by the Trade Agreements Act of 1979.

Issued at Washington, DC this 31 day of March 1988.

Thomas O. Kay,

Administrator, Foreign Agricultural Service.

[FR Doc. 88-7505 Filed 4-5-88; 8:45 am]

BILLING CODE 3410-01-M

DEPARTMENT OF COMMERCE

International Trade Administration

[Application 88-00001]

Export Trade Certificate of Review

AGENCY: International Trade Administration, Commerce.

ACTION: Notice of Issuance of an Export Trade Certificate of Review.

SUMMARY: The Department of Commerce has issued an export trade certificate of review to Michael R. Mace d/b/a Mutual Trade Services (MTS). This notice summarizes the conduct for which certification has been granted.

FOR FURTHER INFORMATION CONTACT: John E. Stiner, Director, Office of Export Trading Company Affairs, International Trade Administration, 202-377-5131. This is not a toll-free number.

SUPPLEMENTARY INFORMATION: Title III of the Export Trading Company Act of 1982 ("the Act") (Pub. L. No 97-290) authorizes the Secretary of Commerce to issue export trade certificates of review. The regulations implementing Title III are found at 15 CFR Part 325 (50 FR 1804, January 11, 1985).

The Office of Export Trading Company Affairs is issuing this notice pursuant to 15 CFR 325.6(b), which requires the Department of Commerce to publish a summary of a certificate in the **Federal Register.** Under section 305(a) of the Act and 15 CFR 325.11(a), any person aggrieved by the Secretary's determination may, within 30 days of the date of this notice, bring an action in any appropriate district court of the United States to set aside the determination on the ground that the determination is erroneous.

Description of Certified Conduct

Export Trade

All products and services

Related Services

Consulting, international market research, advertising, marketing, insurance, product research and design, transportation, trade documentation and freight forwarding, communication and processing of foreign orders to and for exporters and foreign purchasers, warehousing, foreign exchange, financing, and taking title to goods.

Export Markets

All parts of the world except the United States (the fifty states of the United States, the District of Columbia, the Commonwealth of Puerto Rico, the Virgin Islands, American Samoa, Guam, the Commonwealth of the Northern Mariana Islands, and the Trust Territory of the Pacific Islands)

Export Trade Activities and Methods of Operation

MTS may:

1. Enter into nonexclusive and/or exclusive agreements with individual suppliers to act as an Export Intermediary.

2. Enter into nonexclusive and/or exclusive agreements with Export Intermediaries for the sale of products and services in the Export Markets.

3. Contact individual suppliers to elicit information relating to sales of products and services in the Export Markets, including price, volume, and estimated delivery schedules.

4. Enter into nonexclusive or exclusive agreements with individual purchasers in the Export Markets to act as a Purchasing Agent with respect to particular transactions.

A copy of each certificate will be kept in the International Trade Administration's Freedom of Information Records Inspection Facility, Room 4102, U.S. Department of Commerce, 14th Street and Constitution Avenue NW., Washington, DC 20230.

Date: March 31, 1988.

John E. Stiner,

Director, Office of Export Trading Company Affairs.

[FR Doc. 88-7553 Filed 4-5-88; 8:45 am]

BILLING CODE 3510-DR-M

University of California, Los Angeles et al.; Consolidated Decision on Applications for Duty-Free Entry of Scientific Instruments

This is a decision consolidated pursuant to section 6(c) of the Educational, Scientific, and Cultural Materials Importation Act of 1966 (Pub. L. 89-651), 80 Stat. 897; 15 CFR Part 301). Related records can be viewed between 8:30 a.m. and 5:00 p.m. in Room 1523, U.S. Department of Commerce, 14th and Constitution Avenue, NW., Washington, DC.

Docket Number: 87-294. Applicant: University of California, Los Angeles, CA 90024. *Instrument:* Preparative Quench and Stopped-Flow Sample Handling Unit, Model PQ/SF-53. *Manufacturer:* Hi-Tech Scientific Ltd., United Kingdom. *Reasons for this Decision:* The foreign instrument provides stopped flow and rapid chemical quench for kinetic mixing measurements. *Advice Submitted By:* National Institutes of Health, February 9, 1988.

Docket Number: 87-163R. *Applicant:* University of Nebraska, Lincoln, NE 68588. *Instrument:* Circular Dichroism Spectropolarimeter, Model J-600C. *Manufacturer:* JASCO, Japan. *Reasons for this Decision:* The foreign instrument provides a time constant of 0.5 milliseconds. *Advice Submitted By:* National Institutes of Health, January 12, 1988.

Docket Number: 87-099R. *Applicant:* USDA/ARS Beltsville Agricultural Research Center, Beltsville, MD 20705. *Instrument:* GC/Mass Spectrometer, Model MS 25RFA with Data System. *Manufacturer:* Kratos Analytical, United Kingdom. *Reasons for this Decision:* The foreign instrument provides mass range to 4000 amu and resolution to 15000. *Advice Submitted By:* National Institutes of Health, January 12, 1988.

Docket Number: 87-077R. *Applicant:* Texas A & M University, College Station, TX 77843. *Instrument:* Stopped Flow/Preparative Quench Spectrophotometer, Model PQ-53 with Accessories. *Manufacturer:* Hi-Tech Scientific Ltd., United Kingdom. *Reasons for this Decision:* The foreign instrument provides stopped flow and rapid chemical quench for kinetic mixing measurements. *Advice Submitted By:* National Institutes of Health, January 12, 1988.

Comments: None received.

Decision: Approved. No instrument of equivalent scientific value to the foreign instrument, for such purposes as each is intended to be used, is being manufactured in the United States. The National Institutes of Health advise that (1) the capabilities of each of the foreign instruments described above are pertinent to each applicant's intended purpose and (2) they know of no domestic instrument or apparatus of equivalent scientific value for the intended use of each instrument.

We know of no other instrument or apparatus being manufactured in the United States which is of equivalent scientific value to any of the foreign instruments.

Frank W. Creel,

Director, Statutory Import Programs Staff.

[FR Doc. 88-7554 Filed 4-5-88; 8:45 am]

BILLING CODE 3510-DS-M

University of Pittsburgh; Decision on Application for Duty-Free Entry of Scientific Instrument

This decision is made pursuant to section 6(c) of the Educational, Scientific, and Cultural Materials Importation Act of 1966 (Pub. L. 89-651, 80 Stat. 897; 15 CFR Part 301). Related records can be viewed between 8:30 a.m. and 5:00 p.m. in Room 1523, U.S. Department of Commerce, 14th and Constitution Avenue NW., Washington, DC.

Docket Number: 88-026. *Applicant:* University of Pittsburgh, Pittsburgh, PA 15261. *Instrument:* High Pressure PVT Cell, Model JEFRI 155-10-PVT. *Manufacturer:* D.B. Robinson and Associates, Canada. *Intended Use:* See notice at 52 FR 46613, December 10, 1987.

Comments: None received.

Decision: Approved. No instrument of equivalent scientific value to the foreign instrument, for such purposes as it is intended to be used, is being manufactured in the United States.

Reasons: The foreign instrument provides a maximum operating pressure of 10,000 psi (70 MPa), temperature to 400°F (200°C) and an interior cell volume free of pressure distortion permitting accurate density measurements without having to calibrate cell volume at different pressures. the National Bureau of Standards has advised that (1) this capability is pertinent to the applicant's intended purpose and (2) it knows of no domestic instrument or apparatus of equivalent scientific value to the foreign instrument for the applicant's intended use.

We know of no other instrument or apparatus of equivalent scientific value to the foreign instrument which is being manufactured in the United States.

Frank W. Creel,

Director, Statutory Import Programs Staff.

[FR Doc. 88-7555 Filed 4-5-88; 8:45 am]

BILLING CODE 3510-DS-M

National Oceanic and Atmospheric Administration

Gulf of Mexico Fishery Management Council; Public Meetings

AGENCY: National Marine Fisheries Service, NOAA, Commerce.

The Gulf of Mexico Council and its Committees will convene separate public meetings at the Crowne Plaza Holiday Inn, 333 Poydras, New Orleans, LA, as follows:

Council—On April 28, 1988, will convene at 8:30 a.m., to discuss the stock assessment and economic analysis for reef fish; discuss committee actions; review the Environmental Protection Agency (EPA) Gulf initiative; discuss the Administrative Policy Committee's report, and review the ecosystems workshop and enforcement reports; adjournment is at 3:15 p.m.

Committees—On April 26, 1988, at 1 p.m., the Administrative Policy Committee will convene, followed by a meeting of the Reef Fish Management Committee; adjournment is at 5:30 p.m.

For further information contact Wayne E. Swingle, Gulf of Mexico Fishery Management Council, 5401 West Kennedy Boulevard, Suite 881, Tampa, FL; telephone: (813) 228-2815.

Date: April 1, 1988.

Richard H. Schaefer,

Director, Office of Fisheries Conservation and Management, National Marine Fisheries Service.

[FR Doc. 88-7573 Filed 4-5-88; 8:45 am]

BILLING CODE 3510-22-M

Gulf of Mexico and South Atlantic Fishery Management Councils; Public Meetings

AGENCY: National Marine Fisheries Service, NOAA, Commerce.

The Gulf of Mexico and South Atlantic Fishery Management Councils and their Intercouncil Mackerel, Spiny Lobster, and Habitat Management Committees will convene separate public meetings at the Crowne Plaza Holiday Inn, 333 Poydras, New Orleans, LA, as follows:

Joint Council—On April 27, 1988, will convene at 8:30 a.m., to review actions of the committee on setting total allowable catch (TAC) and allocations; discuss principal elements for Amendment 3 for the Coastal Migratory Pelagic (Mackerel) Fishery Management Plan (FMP); review the threshold concept; discuss elements for inclusion in framework measures for the spiny lobster fishery, and review habitat issues; adjournment is at 5 p.m.

Joint Committee—On April 25, 1988, will convene at 9 a.m., with the Mackerel Management Committee to review the mackerel stock assessment; discuss the stock assessment group report and stock identification workshop; review Advisory Panel and Scientific and Statistical Committee recommendations; recommend TAC and allocations, and discuss principal elements for Amendment 3; adjournment is at 5 p.m. On April 26 at 8 a.m., the Spiny Lobster Management Committee will convene, followed by the Habitat Protection Committee; adjournment is at noon.

For further information contact Wayne E. Swingle, Executive Director, Gulf of Mexico Fishery Management Council, 5401 West Kennedy Boulevard, Suite 881, Tampa, FL 33609; telephone: (813) 228–2815.

Date: April 1, 1988.

Richard H. Schaefer,

Director, Office of Fisheries Conservation and Management, National Marine Fisheries Service.

[FR Doc. 88–7574 Filed 4–5–88; 8:45 am]

BILLING CODE 3510-22-M

Pacific Fishery Management Council; Public Meeting

AGENCY: National Marine Fisheries Service, NOAA, Commerce.

The Pacific Fishery Management Council's Limited Entry Committee is scheduled to meet in conjunction with the Council's Téchnical Advisory Subgroup, April 19, 1988, at 9 a.m., at the Viscount Hotel, 1441 N.E. 2nd, Portland, OR, to assess the results of the Council's review of the preliminary license limited entry framework, and revise it as necessary for presentation in July 1988 to the Council. The public meeting will adjourn April 20 at 4:30 p.m.

For further information contact Mr. Lawrence D. Six, Executive Director, Pacific Fishery Management Council, Metro Center, Suite 420, 2000 S.W. First Avenue, Portland, OR 97201; Telephone: (503) 221–6352.

Date: April 1, 1988.

Richard H. Schaefer,

Director, Office of Fisheries Conservation and Management, National Marine Fisheries Service.

[FR Doc. 88–7575 Filed 4–5–88; 8:45 am]

BILLING CODE 3510-22-M

COMMITTEE FOR THE IMPLEMENTATION OF TEXTILE AGREEMENTS

Adjustment of Import Limits for Certain Cotton, Wool and Man-Made Fiber Textile Products Produced or Manufactured in the People's Republic of Indonesia

March 31, 1988.

The Chairman of the Committee for the Implementation of Textile Agreements (CITA), under the authority contained in E.O. 11651 of March 3, 1972, as amended, has issued the directive published below to the Commissioner of Customs to be effective on April 7, 1988. For further information contact Jennifer Tallarico, International Trade Specialist, Office of Textiles and Apparel, U.S. Department of Commerce, (202) 377–4212. For information on the quota status of these limits, please refer to the Quota Status Reports which are posted on the bulletin boards of each Customs port or call (202) 535–9480. For information on embargoes and quota re-openings, please call (202) 377–3715.

Background

A CITA directive dated June 25, 1987 (52 FR 24504) established limits for cotton, wool and man-made fiber textile products, produced or manufactured in Indonesia and exported during the twelve-month period which began on July 1, 1987 and extends through June 30, 1988. Subsequent CITA directive dated December 28, 1987 were published in the **Federal Register** (52 FR 49465 and 52 FR 49468) which established new import restraint limits and amended the previously established limits for two restraint periods which began on July 1, 1987 and extended through December 31, 1987 and which began on January 1, 1988 and extends through June 30, 1988.

Under the terms of the Bilateral Cotton, Wool, Man-Made Fiber, Silk Blend and Other Vegetable Fiber Textile Agreement, effected by exchange of notes dated September 25 and October 3, 1985, as amended, between the Governments of the United States and the Republic of Indonesia, the limits for cotton, wool and man-made fiber textile products in Group I, and within the group Categories 315, 336, 337, 340, 445/446, 604-A, 635, 640 and 648; Categories 345, 369-D, 636, 637 and 651 in Group II; and the wool subgroup in Group II are being increased for carryover for the six-month period January 1, 1988 through June 30, 1988. The limits for the period July 1, 1987 through December 31, 1987 are being adjusted in a separate directive.

A description of the textile categories in terms of T.S.U.S.A. numbers is available in the CORRELATION: Textile and Apparel Categories with Tariff Schedules of the United States Annotated (see **Federal Register** notice 52 FR 47745 dated December 11, 1987).

The letters to the Commissioner of Customs and the actions taken pursuant to them are not designed to implement all of the provisions of the bilateral agreement, but are designed to assist only in the implementation of certain of its provisions.

James H. Babb,

Chairman, Committee for the Implementation of Textile Agreements.

March 31, 1988.

COMMITTEE FOR THE IMPLEMENTATION OF TEXTILE AGREEMENTS

Commissioner of Customs, *Department of the Treasury, Washington, DC 20229*

Dear Mr. Commissioner:

This directive amends, but does not cancel, the directive issued to you on December 28, 1987 by the Chairman, Committee for the Implementation of Textile Agreements, concerning imports into the United States of certain cotton, wool, man-made fiber, silk blend and other vegetable fiber textiles and textile prouducts, poroduced or manufactured in the Republic of Indonesia and exported during the six-month period which began on January 1, 1988 and extends through June 30, 1988.

Effective on April 7, 1988, the directive of December 28, 1987 is amended to adjust the previously established limits for cotton, wool and man-made fiber textile products in the following categories, as provided under the terms of the bilateral agreement, effected by exchange of notes dated September 25 and October 3, 1985, as amended:

Category	Adjusted 6-month limit [1]
Group I: 219, 313-315, 317/617/326, 331, 334-337, 338/339, 340, 341, 347/348, 351, 369-S [2], 445/446, 604-A [3], 613/614/615, 625/626, 631-W [4], 635, 638/639, 640, 641, 645/646, 647 and 648, as a group.	150,960,758 square yards equivalent.
Sublevels within group I:	
315	9,354,055 square yard.
336	61,052 dozen.
337	50,394 dozen.
340	243,148 dozen.
445/446	42,341 dozen.
604-A	741,133 pounds.
635	54,013 dozen.
640	280,441 dozen.
648	822,720 dozen.
Sublevels within Group II:	
345	123,074 dozen.
369-D [5]	657,729 pounds.
636	152,207 dozen.
637	112,208 dozen.
651	74,798 dozen.
Subgroup within Group II: 400-444 and 447-469, as a group.	3,024,318 square yards equivalent.

[1] The limits limits have not been adjusted to account for any imports exported after December 31, 1987.
[2] In Category 369-S, only TSUSA number 366.2640.
[3] In Category 604-A, only TSUSA numbers 310.5049 and 310.6045.
[4] In Category 631-W, only TSUSA numbers 704.3215, 704.8525, 704.8550 and 704.9000.
[5] In Category 369-D, only TSUSA numbers 365.6615, 366.1720, 366.1740, 366.2020, 366.2040, 366.2420, 366.2440 and 366.2860.

The Committee for the Implementation of Textile Agreements has determined that these actions fall within the foreign affairs exception to the rulemaking provisions of 5 U.S.C. 553(a)(1).

Sincerely,

James H. Babb,

Chairman, Committee for the Implementation of Textile Agreements.

March 31, 1988.

COMMITTEE FOR THE IMPLEMENTATION OF TEXTILE AGREEMENTS

Commissioner of Customs; Department of the Treasury Washington, DC 20229

Dear Mr. Commissioner:

To facilitate implementation of the Bilateral Cotton, Wool, Man-Made Fiber, Silk Blend and Other Vegetable Fiber Textile Agreement, effected by exchange of notes dated September 25 and October 3, 1985, as amended, between the Governments of the United States and Indonesia, I request that, effective on April 7, 1988, you adjust the limits established in the directive of June 25, 1987, as amended on December 28, 1987, for cotton, wool and man-made fiber textile products in the following categories, produced or manufactured in Indonesia and exported during the period which began on July 1, 1987 and extend through December 31, 1987:

Category	Adjusted 6-Month Limit [1]
313-315, 317, 317-S [2], 319, 320-P [3], 331, 334-337, 338/339, 340, 341, 347/348, 351, 369-S [4], 445/446, 604-A [5], 613, 614, 631-W [6], 635, 638/639, 640, 641, 645/646, 647 and 648 as a group.	112, 673, 315 square yards equivalent.
Sublevels within group I:	
315	8,058,452 square yards.
336	15,634 dozen.
337	33,878 dozen.
340	185,056 dozen.
445/446	8,664 dozen.
604-A	45,387 pounds.
614	4,843,234 square yards.
635	20,257 dozen.
640	76,564 dozen.
648	482,536 dozen.
Sublevels within group II:	
345	94,226 dozen.
369-D [5]	243,271 pounds.
636	97,105 dozen.
637	25,592 dozen.
651	47,484 dsozen.
Subgroup within group II: 400-444 and 447-469, as a group.	35,982 square yards equivalent.

[1] The limits have not been adjusted to account for any imports exported after June 30, 1987.
[2] In Category 317-S, only TSUSA items 320.— through 331.—with statistical suffixes 50, 87 and 93.
[3] In Category 320-P, only TSUSA items 320.—, 321.—, 322.—, 326.—, 327.— and 328.—, with statistical suffixes 21, 22, 24, 31, 38, 49, 57, 74, 80 and 98.
[4] In Category 369-S, only TSUSA number 366.2640.
[5] In Category 604-A, only TSUSA numbers 310.5049 and 310.6045.
[6] In Category 631-W, only TSUSA numbers 704.3215, 704.8525, 704.8550 and 704.9000.

Goods exported during the period July 1, 1987 through December 31, 1987 in excess of the foregoing adjusted limits are to be charged to the limits established for these categories for the period January 1, 1988 through June 30, 1988.

This letter will be published in the **Federal Register.**

Sincerely,

James H. Babb,

Chairman, Committee for the Implementation of Textile Agreements.

[FR Doc. 88-7465 Filed 4-5-88; 8:45 am]

BILLING CODE 3510-DR-M

COMMODITY FUTURES TRADING COMMISSION

Advisory Committee on CFTC-State Cooperation; Sixth Renewal

The Commodity Futures Trading Commission has determined to renew again for a period of two years its advisory committee designated as the Commission's "Advisory Committee on CFTC-State Cooperation." As required by section 14(a)(2)(A) of the Federal Advisory Committee Act, 5 U.S.C. App. I, section 14(a)(2)(A), and 41 CFR 101-6.1007 and 101.6.1029, the Commission has consulted with the Committee Management Secretariat of the General Services Administration, and the Commission certifies that the renewal of the advisory committee is in the public interest in connection with duties imposed on the Commission by the Commodity Exchange Act, 7 U.S.C. 1, *et seq.*, as amended.

The objectives and scope of activities of the Advisory Committee on CFTC-State Cooperation are to conduct public meetings and submit reports and recommendations on matters of joint concern to the states and the Commission arising under the Commodity Exchange Act regarding regulation of commodity transactions and related activities.

Commissioner Fowler C. West serves as Chairman and Designated Federal Official of the Advisory Committee on CFTC-State Cooperation. State officials who have had experience in the commodities and consumer protection fields, a representative of the industry's only registered futures association, and a representative from an industry trade association serve as members.

Interested persons may obtain information or make comments by writing to the Commodity Futures Trading Commission, 2033 K Street NW., Washington, DC. 20581.

Issued in Washington, DC this 31st day of March 1988 by the Commission.

Jean A. Webb,

Secretary of the Commission.

[FR Doc. 88-7473 Filed 4-5-88; 8:45 am]

BILLING CODE 6351-01-M

DEPARTMENT OF DEFENSE

Department of the Navy

Academic Advisory Board to the Superintendent; United States Naval Academy; Open Meeting

Pursuant to the provisions of the Federal Advisory Committee Act (5 U.S.C. App. 2), notice is hereby given that the Academic Advisory Board to the Superintendent, United States Naval Academy, will meet on April 25 1988, in Rickover Hall, Room 301, United States Naval Academy, Annapolis, Maryland. The meeting will commence at 8:00 a.m. and terminate at 5:00 p.m.

The purpose of the meeting is to advise and assist the Superintendent of the Naval Academy concerning the education of midshipmen. To accomplish this objective, the Board will review academic policies and practices of the Naval Academy and will submit their proposals to the Superintendent to aid him in improving education standards and insolving Academy problems. The meeing will be open to the public for observation to the extent that space is available.

For further information concerning this meeting, contact: Major R. C. Funk, USMC, Military Secretary to the Academic Advisory Board, Office of the Academic Dean, United States Naval Academy, Annapolis, MD 21402-5000, Telephone No. (301) 267-2500.

Date: March 30, 1988.

W. R. Babington,

CDR, JAGC, USN, Federal Register Liaison Officer.

[FR Doc. 88-7484 Filed 4-5-88; 8:45 am]

BILLING CODE 3810-AE-M

Board of Advisors to the Superintendent, Naval Postgraduate School; Meeting

Pursuant to the provisions of the Federal Advisory Committee Act (5 U.S.C. app.), notice is hereby given that the Board of Adivsors to the Superintendent, Naval Postgraduate School, Monterey, California, will neet on May 5-6 1988, in Herrmann Hall at the School. On both days the first session will commence at 8:15 a.m. and terminate at 12:00 noon and the second session will commence at 1:15 p.m. and terminate at 5:00 p.m. All sessions are open to the public.

The purpose of the meeting is to elicit the advice of the board on the Navy's Postgraduate Education Program. The board will examine the effectiveness with which the Naval Postgraduate School is accomplishing its mission. To this end, the board will inquire into the graduate education policy; curricula; instruction; research; physical resources; administration; staff, faculty and student morale; fiscal affairs; and any other matters relating to the operation of the Naval Postgraduate School as the board considers pertinent.

For further information concerning this meeting contact: Commander G.K. Iversen, USN (Code 007), Naval Postgraduate School, Monterey, California 93943-5000, Telephone: (408) 646-2511.

Dated: March 31, 1988.

W.R. Babington, Jr.,

Commander, JAGC, U.S. Navy, Federal Register Certifying Officer.

[FR Doc. 88-1486 Filed 4-5-88; 8:45 am]

BILLING CODE 3810-AE-M

Naval Research Advisory Committee: Closed Meeting

Pursuant to the provisions of the Federal Advisory Committee Act (5 U.S.C. App.), notice is hereby given that the Naval Research Advisory Committee Panel on Next Generation Computer Resources will meet on April 28-29, 1988. The meeting will be held at the Pentagon, Washington, DC. The meeting will commence at 9:00 a.m. and terminate at 4:30 p.m. on April 28; and commence at 8:00 a.m. and terminate at 4:00 p.m. on April 29, 1988. All sessions of the meeting will be closed to the public.

The purpose of the meeting is to provide briefings for the panel members on computer resources. The agenda will include technical briefings, and discussions addressing congressional guidance, Navy strategy and program studies for current and projected computer resource needs. The these briefings, and discussions will contain classified information that is specifically authorized under criteria established by Executive Order to be keep secret in the interest of national defense and is in fact properly classified pursuant to such Executive Order. The classified and nonclassified matters to be discussed are so inextricably intertwined as to preclude opening any portion of the meeting. Accordingly, the Secretary of the Navy has determined in writing that the public interest requires that all sessions of the meeting be closed to the public because they will be concerned with matters listed in section 552b(c)(1) of Title 5, United States Code.

For further information concerning this meeting contact: Commander L.W. Snyder, U.S. Navy, Office of Naval Research, 800 North Quincy Street, Arlington, VA 22217-5000, Telephone Number: (202) 696-4870.

Dated: March 30, 1988.

W.R. Babington, Jr.,

Commander, JAGC, U.S. Navy, Federal Register Liaison Officer.

[FR Doc. 88-7485 Filed 4-5-88; 8:45 am]

BILLING CODE 3810-AE-M

DEPARTMENT OF EDUCATION

Proposed Agency Information Collection Requests Under OMB Review

AGENCY: Department of Education.

ACTION: Notice of proposed information collection requests.

SUMMARY: The Director, Information Technology Services, invites comments on the proposed information collection requests as required by the Paperwork Reduction Act of 1980.

DATES: Interested persons are invited to submit comments on or before May 6, 1988.

ADDRESSES: Written comments should be addressed to the Office of Information and Regulatory Affairs, Attention: Jim Houser, Desk Officer, Department of Education, Office of Management and Budget, 726 Jackson Place NW., Room 3208, New Executive Office Building, Washington, DC 20503. Requests for copies of the proposed information collection requests should be addressed to Margaret B. Webster, Department of Education, 400 Maryland Avenue SW., Room 5624, Regional Office Building 3, Washington, DC 20202.

FOR FURTHER INFORMATION CONTACT: Margaret B. Webster, (202) 732-3915.

SUPPLEMENTARY INFORMATION: Section 3517 of the Paperwork Reduction Act of 1980 (44 U.S.C. Chapter 35) requires that the Office of Management and Budget (OMB) provide interested Federal agencies and the public an early opportunity to comment on information collection requests. OMB may amend or waive the requirement for public consultation to the extent that public participation in the approval process would defeat the purpose of the information collection, violate State or Federal law, or substantially interfere with any agency's ability to perform its statutory obligations.

The Director, Information Technology Services, publishes this notice containing proposed information collection requests prior to submission of these requests to OMB. Each proposed information collection,

grouped by office, contains the following: (1) Type of review requested, e.g., new, revision, extension, existing or reinstatement; (2) title; (3) frequency of collection; (4) the affected public; (5) reporting burden; and/or (6) recordkeeping burden; and (7) abstract. OMB invites public comment at the address specified above. Copies of the requests are available from Margaret Webster at the address specified above.

Dated: April 1, 1988.

Carlos U. Rice,

Director for Information Technology Services.

Office of Management

Type of Review: Extension.
Title: Application for the Excellence in Education, Mathematics and Science, and Critical Foreign Languages Programs.
Frequency: One time only.
Affected Public: State or local governments; non-profit institutions.
Reporting Burden:
Responses: 1,000
Burden Hours: 6,000
Recordkeeping:
Recordkeepers: 0
Burden Hours: 0
Abstract: This form will be used by State educational agencies, local educational agencies, institutions of higher education and non-profit organizations to apply for grants under the Excellence in Education, Mathematics and Science, and Critical Foreign Languages Programs. The Department uses the information to make grant awards.

Office of Planning, Budget and Evaluation

Type of Review: New.
Title: Case Studies of Effective Migrant Education Projects.
Frequency: One time only.
Affected Public: Individuals or households; State or local governments
Reporting Burden:
Responses: 663
Burden Hours: 179
Recordkeeping:
Recordkeepers: 0
Burden Hours: 0
Abstract: This study will collect and identify information on effective migrant education practices from State and local educators and individuals. The Department will use the information to assess migrant education projects and to prepare a handbook on effective practices for State and local migrant educators.

Office of Special Education and Rehabilitation Services

Type of Review: Revision.
Title: State Plan for Vocational Rehabilitation Services.
Frequency: Triennally.
Affected Public: State or local governments.
Reporting Burden:
Responses: 86
Burden Hours: 1,032
Recordkeeping:
Recordkeepers: 86
Burden Hours: 1,450,000
Abstract: State Vocational Rehabilitation (VR) agencies must submit State plans to apply for grants under Title I of the Rehabilitative Act of 1973, as amended. The Department uses the information to monitor State VR agency compliance under Title I of the Act and its implementing regulations.

[FR Doc. 88-7542 Filed 4-5-88; 8:45 am]

BILLING CODE 4000-01-M

[CFDA No. 84.133A]

Notice Inviting Applications for a Research and Demonstration Project Under the National Institute on Disability and Rehabilitation Research for Fiscal Year 1988

Purpose: Provides support to public and private agencies and organizations, including institutions of higher education, Indian tribes, and tribal organizations, for research and training for hearing loss assessments for native Hawaiian children.

Deadline for Transmittal of Applications: June 10, 1988.

Applications available: April 15, 1988.

Available funds: $500,000.

Estimated average size of awards: $250,000 per year for two years.

Estimated number of awards: 1

Project period: 24 months.

Applicable regulations: (a) Education Department General Administrative Regulations, 34 CFR Parts 74, 75, 77, and 78; and (b) National Institute on Disability and Rehabilitation Research Regulations, 34 CFR Parts 350 and 351.

Authority for this competition: The Department of Education Appropriations Act, 1988 provides that $500,000 shall be available on a competitive basis for research and training for hearing loss assessments for native Hawaiian children under section 204 of the Rehabilitation Act until September 30, 1989.

For applications or information contact: National Institute on Disability and Rehabilitation Research, U.S. Department of Education, 400 Maryland Avenue SW., Switzer Building, Room 3070, Washington, DC 20202. Telephone: (202) 732-1207; deaf and hearing impaired individuals may call (202) 732-1198 for TTY services.

Program authority: 29 U.S.C. 762(a).

Dated: April 1, 1988.

Madeleine Will,

Assistant Secretary for Special Education and Rehabilitative Services.

[FR Doc. 88-7568 Filed 4-5-88; 8:45 am]

BILLING CODE 4000-01-M

Office of Elementary and Secondary Education

Indian Education Programs; Formula Grants; Local Educational Agencies and Tribal Schools; Extension of Closing Date; New Applications

AGENCY: Department of Education.

ACTION: Notice of extension of closing date for transmittal of new applications for Fiscal Year 1988 Assistance under the Formula Grants—Local Educational Agencies and Tribal Schools Program.

SUMMARY: This notice extends the closing date of February 12, 1988 to April 22, 1988, for the transmittal of new applications under the Formula Grants—Local Educational Agencies and Tribal Schools Program (84.060A). The application notice for this program, published in the **Federal Register** on September 25, 1987 (52 FR 36090), provides detailed information concerning the program.

SUPPLEMENTARY INFORMATION: To ensure that awards under this formula grant program are issued in sufficient time to inform grantees of the amount of their grants for the following school year, closing dates are established annually for submission of applications. These dates are published in the **Federal Register**.

As a courtesy, the Department also mails application packages to all current grantees under the program. In addition, newsletters announcing the closing date are sent to current grantees by the five Resource and Evaluation Centers established under the Indian Education Act to provide technical assistance to grantees and potential applicants for Indian Education Act funds. The notice establishing the closing date for applications for fiscal year 1988 grants was published on September 25, 1987. Application packages were mailed on November 6, 1987.

In February 1988, the Department received 1,090 grant applications. Thirty-two school districts currently participating in the program have notified the Department that they were unaware of the deadline, or in a few cases, missed the postmark deadline as a result of unavoidable circumstances. The Department has determined that

this reduction in school district participation would represent a loss of services to approximately 3,400 eligible Indian students enrolled in these districts. Many school districts that need the financial assistance provided under this program cannot afford to subscribe to the **Federal Register**. Further, while the Department has attempted in the past three years to establish annual closing dates in February so that LEAs may plan accordingly and request application packages if they have not received them reasonably in advance of that month, the dates were extended in those years due to special circumstances. As a result, many LEAs may have expected a closing date later in the year.

The extension of the closing date to April 22, 1988, will enable all eligible applicants to apply or to amend their applications at their discretion. This extension will not substantially alter the schedule for issuance of grant awards.

FOR FURTHER INFORMATION CONTACT: Inquiries concerning this extension should be addressed to Ms. Julie Lesceux, Indian Education Programs, Office of Elementary and Secondary Education, U.S. Department of Education, 400 Maryland Avenue SW., Room 2177 (Mail Stop 6267), Washington, DC 20202, Telephone (202) 732-5146.

(20 U.S.C. 241aa-241ff)

(Catalog of Federal Domestic Assistance Number 84.060, Formula Grants—Local Educational Agencies and Tribal Schools)

Dated: March 31, 1988.

Beryl Dorsett,

Assistant Secretary for Elementary and Secondary Education.

[FR Doc. 88-7543 Filed 4-5-88; 8:45 am]

BILLING CODE 4000-01-M

DEPARTMENT OF ENERGY

Economic Regulatory Administration

[ERA Docket No. 88-03-NG]

TXG Gas Marketing Co.; Order Granting Blanket Authorization To Import Natural Gas

AGENCY: Economic Regulatory Administration; DOE.

ACTION: Notice of order granting blanket authorization to import natural gas.

SUMMARY: The Economic Regulatory Administration (ERA) of the Department of Energy (DOE) gives notice that it has issued an order granting TXG Gas Marketing Company (TXG Marketing) blanket authorization to import natural gas. The order issued in ERA Docket No. 88-03-NG authorizes TXG Marketing to import up to 73 Bcf of natural gas over two-year period beginning on the date of first delivery.

A copy of this order is available for inspection and copying in the Natural Gas Division Docket Room, GA-076, Forrestal Building, 1000 Independence Avenue, SW., Washington, DC, 20585, (202) 586-9478. The Docket room is open between the hours of 8:00 a.m. and 4:30 p.m., Monday through Friday, except Federal holidays.

Issued in Washington, DC, March 31, 1988.

Constance L. Buckley,

Director, Natural Gas Division, Office of Fuels Programs, Economic Regulatory Administration.

[FR Doc. 88-7470 Filed 4-5-88; 8:45 am]

BILLING CODE 6450-01-M

[ERA No. 88-10-NG]

Woodward Marketing, Inc.; Application To Import Natural Gas From and Export Natural Gas To Canada

AGENCY: Economic Regulatory Administration, DOE.

ACTION: Notice of application for blanket authorization to import natural gas from and export natural gas to Canada.

SUMMARY: The Economic Regulatory Administration (ERA) of the Department of Energy (DOE) gives notice of receipt on March 14, 1988, of an application filed by Woodward Marketing, Inc. (Woodward Marketing) to import up to 100 Bcf of domestic U.S. natural gas over a two-year term beginning on the date of first delivery. Woodward Marketing, Texas, would import or export gas for its own account or act as a broker for both U.S. and Canadian purchasers and suppliers. Woodward Marketing intends to utilize existing pipeline facilities for transportation of the volumes to be imported or exported. Woodward Marketing also proposes to submit quarterly reports detailing each transaction.

The application is filed with the ERA pursuant to section 3 of the Natural Gas Act and DOE Delegation Order No. 0204-111. Protests, motions to intervene, notices of intervention and written comments are invited.

DATE: Protests, motions to intervene or notices of intervention, as applicable, request for additional procedures and written comments are to be filed no later than May 6, 1988.

FOR FURTHER INFORMATION CONTACT:

Tom Dukes, Natural Gas Division, Economic Regulatory Administration, Forrestal Building, Room GA-076, 1000 Independence Avenue SW., Washington, DC 20585 (202) 586-9590

Diane Stubbs, Natural Gas and Mineral Leasing, Office of General Counsel, U.S. Department of Energy, Forrestal Building, Room 6E-042, 1000 Independence Avenue SW., Washington, DC 20585 (202) 586-6667.

SUPPLEMENTARY INFORMATION: Under the instant import/export authority sought, Woodward Marketing intends to make natural gas sales to either United States or Canadian customers on both a firm and interruptible spot basis. The specific terms of each import or export sale would be negotiated on an individual basis, including price and volume. Woodward Marketing asserts that the sale of Canadian natural gas imports will be made pursuant to terms dictated by the prevailing economic conditions in the domestic market and that surplus U.S. natural gas supplies will be exported to Canada on the basis of their competitiveness and need by U.S. purchasers.

The decision on the application for import authority will be made consistent with the DOE's gas import policy guidelines, under which the competitiveness of an import arrangement in the markets served is the primary consideration in determining whether it is in the public interest (49 FR 6684, February 22, 1984). In reviewing natural gas export applications, the ERA considers the domestic need for the gas to be exported, and any other issue determined by the Administrator to be appropriate in a particular case. Parties that may oppose this application should comment in their responses on the issue of competitiveness as set forth in the policy guidelines for the import authority and on the domestic need for the gas in their responses on the requested export authority. The applicant asserts that this import/export arrangement will be in the public interest in that the pricing terms for each import/export sale must be competitive in the U.S. and Canadian gas markets served or no sales will be made. Parties opposing the arrangement bear the burden of overcoming this assertion.

Public Comment Procedures

In response to this notice, any person may file a protest, motion to intervene or notice of intervention, as applicable, and written comments. Any person wishing to become a party to the proceeding and to have the written comments considered as the basis for any decision on the application must, however, file a motion to intervene or notice of intervention, as applicable. The filing of a protest with respect to

this application will not serve to make the protestant a party to the proceeding, although protests and comments received from persons who are not parties will be considered in determining the appropriate action to be taken on the application. All protests, motions to intevene, notices of intervention, and written coments must meet the requirements that are specified by the regulations in 10 CFR Part 590.

Protests, motions to intervene, notices of intervention, requests for additional procedures, and written comments should be filed with the Natural Gas Division, Office of Fuels Programs, Economic Regulatory Adminsitration, Room GA-076, RC-23, Forrestal Building, 1000 Independence Avenue SW., Washington, DC 20585, (202) 586-9478. They must be filed no later than 4:30 p.m. e.d.t., May 6, 1988.

The Administrator intends to develop a decisional record on the application through responses to this notice by parties, including the parties' written comments and replies thereto. Additional procedures will be used as necessary to achieve a complete understanding of the facts and issues. A party seeking intervention may request that additional procedures be provided, such as additional written comments, an oral presentation, a conference, or trial-type hearing. Any request to file additional written comments should explain why they are necessary. Any request for an oral presentation should identify the substantial question of fact, law, or policy at issue, show that it is material and relevant to a decision in the proceeding, and demonstrate why an oral presentation is needed. Any request for a conference should demonstrate why the conference would materially advance the proceeding. Any request for a trial-type hearing must show that there are factual issues genuinely in dispute that are relevant and material to a decision and that a trial-type hearing is necessary for a full and true disclosure of the facts.

If an additional procedure is scheduled, the ERA will provide notice to all parties. If no party requests additional procedures, a final opinion and order may be issued based on the official record, including the application and responses filed by parties pursuant to this notice, in accordance with 10 CFR 590.316.

A copy of Woodward Marketing's application is available for inspection and copying in the Natural Gas Division Docket Room, GA-076 at the above address. The docket room is open between the hours of 8:00 a.m. and 4:30 p.m., Monday through Friday, except Federal holidays.

Issued in Washington, DC, March 29, 1988

Constance L. Buckley,

Director, Natural Gas Division, Office of Fuels Programs, Economic Regulatory Administration.

[FR Doc. 88-7469 Filed 4-5-88; 8:45 am]

BILLING CODE 6455-01-M

Federal Energy Regulatory Commission

[Docket No. ER85-109-000 et al.]

Niagara Mohawk Power Corp. et al.; Electric Rate and Corporate Regulation Filings; Small Power Production and Cogeneration Facilities

March 30, 1988.

Take notice that the following filings have been made with the Commission:

1. Niagara Mohawk Power Corp.

[Docket No. ER85-109-000]

Take notice that on March 21, 1988, Niagara Mohawk Power Corporation (Niagara Mohawk) tendered for filing, pursuant to Ordering Paragraph (C) of Opinion No. 296, a revised rate and a superseding rate schedule sheet in accordance with Opinion No. 296.

Comment date: April 14, 1988, in accordance with Standard Paragraph E at the end of this notice.

2. Idaho Power Co.

[Docket No. ER88-299-000]

Take notice that on March 25, 1988, Idaho Power Company tendered for filing in compliance with the Federal Energy Regulatory Commission's Order of October 7, 1978, a summary of sales made under the Company's 1st Revised FERC Electric Tariff, Volume No. 1 (Supersedes Original Volume No. 1) during February 1988, along with cost justification for the rate charged. This filing includes the following supplements:

Pacific Gas & Electic Co.—Supplement No. 31

Montana Power Company—Supplement No. 56

Sacramento Municipal Utility Dist.—Supplement No. 6

Sierra Pacific Power Co.—Supplement No. 73

Utah Power & Light Co.—Supplement No. 75

Washington Water Power Company—Supplement No. 56

Comment date: April 14, 1988, in accordance with Standard Paragraph E at the end of this notice.

3. Holyoke Water Power Co.

[Docket No. ER84-574-005]

Take notice that on March 25, 1988, Holyoke Water Power Company and Holyoke Power and Electric Company tendered for filing, pursuant to Commission Order dated February 8, 1988, a compliance report and the following:

Attachment A—Monthly billing determinants and revenues at present and compliance rate for the period March 5, 1987 through March 9, 1988.

Attachment B—Revenues under prior rates which reflect the billing terms in effect prior to Docket No. ER84-574-000.

Attachment C—Computation of the additional monthly charges, including interest, for the monthly bills for the period March 5, 1987 through March 9, 1988. Revenue receipt dates are included.

Copies of this filing have been served upon all parties affected by this proceeding.

Comment date: April 14, 1988, in accordance with Standard Paragraph E at the end of this notice.

Standard Paragraph

E. Any person desiring to be heard or to protest said filing should file a motion to intervene or protest with the Federal Energy Regulatory Commission, 835 North Capitol Street, NW., Washington, DC 20426, in accordance with Rules 211 and 214 of the Commission's Rules of Practice and Procedure (18 CFR 385.211 and 385.214). All such motions or protests should be filed on or before the comment date. Protests will be considered by the Commission in determining the appropriate action to be taken, but will not serve to make protestants parties to the proceeding. Any person wishing to become a party must file a motion to intervene. Copies of this filing are on file with the Commission and are available for public inspection.

Lois D. Cashell,

Acting Secretary.

[FR Doc. 88-7482 Filed 4-5-88; 8:45 am]

BILLING CODE 6717-01-M

[Docket Nos. CP88-288-000 et al.]

Southern Natural Gas Co. et al.; Natural Gas Certificate Filings

Take notice that the following filings have been made with the Commission:

1. Southern Natural Gas Co.

[Docket No. CP88-288-000]

March 30, 1988.

Take notice that on March 10, 1988, Southern Natural Gas Company

(Southern), P.O. Box 2563, Birmingham, Alabama 35202, filed in Docket No. CP88-288-000 an application pursuant to section 7(b) of the Natural Gas Act to abandon Marvyn Gate Regulator Station and appurtenances located near Montgomery County, Alabama.

Southern requests authority to abandon the Marvyn Gate Regulatory Station. Southern states that the facilities it seeks to abandon were installed in 1950 pursuant to a certificate of public convenience and necessity issued to Southern in Docket No. G-1308 and consist of the Marvyn Gate Regulator Station and appurtenances located at Milepost 173.110 on Southern's 10-inch Montgomery-Columbus line. It is stated that prior to the installation of Southern's 8-inch Phenix City line these facilities were needed to enable gas to be shifted from Southern's 16-inch South Main line to its 10-inch Montgomery-Columbus line in order to have an alternate feed for the Phenix City-Columbus area. As part of its annual pipeline replacement program, Southern states that it plans to replace this summer, the segment of its Montgomery-Columbus line where the Marvyn Gate Regulator Station is located. It is stated that because the regulatory station is no longer necessary as an alternate feed for the Phenix City-Columbus area, Southern does not want to incur the costs involved in modifying and reconnection these facilities to the replacement pipelines. It is indicated that the proposed abandonment will not affect the capacity of Southern's pipeline system or require termination of any service to Southern's cutomers.

Accordingly, Southern requests the Commission to issue an order authorizing the abandonment of the regulatory station and appurtenances as proposed herein. Upon receipt of such authorization, the regulator station and appurtenances will be removed and the facility will be retired.

Comment date: April 20, 1988, in accordance with Standard Paragraph F at the end of this notice.

2. Columbia Gas Transmission Corp.

[Docket No. CP88-13-000]

March 31, 1988.

Take notice that on October 7, 1987, Columbia Gas Transmission Corporation (Columbia), 1700 MacCorkle Avenue, SE. Charleston, West Virginia 25314, filed in Docket No. CP88-13-000 a request pursuant to § 157.205 of the Commission's Regulations under the Natural Gas Act (18 CFR 157.205) for authorization to construct and operate a delivery point and related facilities under the authorization issued to Columbia in Docket No. CP83-76-000 for a new point of delivery to T.W. Phillips Gas and Oil Company (Phillips), all as more fully set forth in the request on file with the Commission and open to public inspection.

Columbia proposes to construct and operate the facilities necessary to provide a new point of delivery to an existing wholesale customer, Phillips, for residential, commercial, and industrial service. Columbia states that this new point of delivery has been requested by Phillips to meet anticipated demand and to enhance Phillips' system deliverability and supply diversity, along with the opportunity to access the interstate spot market through transportation arrangements on the Columbia system. In this regard, it is stated that Columbia has agreed to provide 2,000 dth per day of FTS service to Phillips.

It is stated that the volumes to be provided through the new point of delivery would be within Columbia's authorized level of sales and such volumes would not affect the peak day and annual deliveries to which Phillips would be entitied.[1] Columbia further states that the sales to be made from the proposed point of delivery would be under its currently effective contract demand service rate schedule.

Comment date: May 16, 1988, in accordance with Standard Paragraph G at the end of this notice.

3. Northern Natural Gas Co., Division of Enron Corp.

[Docket No. CP88-304-000]

March 31, 1988.

Take notice that on March 18, 1988, Northern Natural Gas Company, Division of Enron Corporation, (Northern), 2223 Dodge Street, Omaha, Nebraska 68102, filed in Docket No. CP88-304-000 an application pursuant to section 7(b) of the Natural Gas Act for permission and approval to abandon by sale a compressor station in Andrews County, Texas, all as more fully set forth in the application which is on file with the Commission and open to public inspection.

Northern proposes to abandon the 5,200 horsepower Andrews Compressor Station (Andrews Station) by selling it to Regal Gas Corporation for $660,000. Northern explains that the reason for the abandonment is that Northern was receiving gas from Phillips Petroleum Company (Phillips) at a point adjacent to the Andrews Station, but Phillips' delivery point has been relocated. Northern asserts that the relocation means that the compression facilities are no longer needed.

It is stated that the proposed abandonment would not cause any termination of service to Northern's customers.

Comment date: April 21, 1988, in accordance with Standard Paragraph F at the end of this notice.

Standard Paragraphs

F. Any person desiring to be heard or make any protest with reference to said filing should on or before the comment date file with the Federal Energy Regulatory Commission, 825 North Capitol Street, N.E., Washington, DC 20426, a motion to intervene or a protest in accordance with the requirements of the Commission's Rules of Practice and Procedure (18 CFR 385.211 and 385.214) and the Regulations under the Natural Gas Act (18 CFR 157.10). All protests filed with the Commission will be considered by it in determining the appropriate action to be taken but will not serve to make the protestants parties to the proceeding. Any person wishing to become a party to a proceeding or to participate as a party in any hearing therein must file a motion to intervene in accordance with the Commission's Rules.

Taken further notice that, pursuant to the authority contained in and subject to jurisdiction conferred upon the Federal Energy Regulatory Commission by sections 7 and 15 of the Natural Gas Act and the Commission's Rules of Practice and Procedure, a hearing will be held without further notice before the Commission or its designee on this filing if no motion to intervene is filed within the time required herein, if the Commission on its own review of the matter finds that a grant of the certificate is required by the public convenience and necessity. If a motion for leave to intervene is timely filed, or if the Commission on its own motion believes that a formal hearing is required, further notice of such hearing will be duly given.

Under the procedure herein provided for, unless otherwise advised, it will be unnecessary for the applicant to appear or be represented at the hearing.

G. Any person or the Commission's staff may, within 45 days after the issuance of the instant notice by the Commission, file pursuant to Rule 214 of

[1] Phillips and Acme Natural Gas Company (Acme) have agreed to merge Acme into Phillips. Columbia is concurrently herewith filing an application to partially abandon service to Acme, whereby its contract demand would be reduced from 19,860 dth per day to 4,750 dth per day. Following the merger of Acme into Phillips, Phillips' contract demand from Columbia under Rate Scheduel CDS would be 5,000 dth per day.

BEST COPY AVAILABLE

the Commission's Procedural Rules (18 CFR 385.214) a motion to intervene or notice of intervention and pursuant to § 157.205 of the Regulations under the Natural Gas Act (18 CFR 157.205) a protest to the request. If no protest is filed within the time allowed therefore, the proposed activity shall be deemed to be authorized effective the day after the time allowed for filing a protest. If a protest is filed and not withdrawn within 30 days after the time allowed for filing a protest, the instant request shall be treated as an application for authorization pursuant to Section 7 of the Natural Gas Act.

Lois D. Cashell,

Acting Secretary.

[FR Doc. 88-7481 Filed 4-5-88; 8:45 am]

BILLING CODE 6717-01-M

[Docket No. RP88-85-000]

ANR Pipeline Co.; Petition for Waiver of Regulations Under Order No. 483

April 1, 1988.

Take notice that on March 3, 1988, ANR Pipeline Company (ANR) tendered for filing a petition for waiver of regulations under Order No. 483.

ANR states that pursuant to Order No. 483 it must make four PGA filings between March 31 and October 1, 1988. ANR recognizes that the Commission wants all pipelines to implement the new PGA regulations at the same time and will file the new terms and conditions of its FERC Gas Tariff on May 1, 1988. However, ANR requests a waiver of the two PGA filings of May 1 and July 1, 1988, pointing out that it cannot develop and implement a reliable quarterly cost projection process in time, and that it is in the process of implementing new accounting and computer systems to prepare its March 31, 1988 PGA filing and cannot begin the further conversion until after it files its last PGA under existing rules. If this waiver is granted, ANR states it would file its first rate adjustment on October 1, 1988 and would make all required subsequent quarterly and annual filings.

In the event the Commission does not grant ANR's request for a waiver of the May 1 and July 1 filing, ANR requests waiver of these filing to be on magnetic tape and states that it would supply as much information as possible on 9-track magnetic tape with the remainder on hard copy and on a PC disk.

ANR states that Order No. 483 requires ANR to make cash refunds within 30 days after a trigger mechanism is activated and ANR requests permanent waiver of the 30-day deadline to allow 90 days for making cash refunds. ANR states that 30 days is not enough time within which to assess whether the trigger has been activated and make cash refunds.

Any person desiring to be heard or to protest said filing should file a motion to intervene or a protest with the Federal Energy Regulatory Commission, 825 North Capitol Street, NE., Washington, DC 20426, in accordance with Rules 214 and 211 of the Commission's Rules of Practice and Procedure (18 CFR 385.214, 385.211 (1987)). All such motions or protests should be filed on or before April 8, 1988. Protests will be considered by the Commission in determining the appropriate action to be taken, but will not serve to make protestants parties to the proceeding. Any person wishing to become a party must file a motion to intervene. Copies of this filing are on file with the Commission and are available for public inspection.

Lois D. Cashell,

Acting Secretary.

[FR Doc. 88-7558 Filed 4-5-88; 8:45 am]

BILLING CODE 6717-01-M

[Docket Nos. RP86-136-000]

National Fuel Gas Supply Corp.; Informal Settlement Conference

(April 1, 1988).

Take notice that an informal settlement conference will be convened in the above proceeding on April 14, 1988, at 10:00 a.m. at the offices of the Federal Energy Regulatory Commission, 825 North Capitol Street, NE., Washington, DC., 20426.

Any party, as defined by 18 CFR 385.102(c), is invited to attend. Persons wishing to become a party must move to intervene and receive intervenor status pursuant to the Commission's regulations (18 CFR 385.214).

For additional information, contact John C. Walley (202) 357-8458, or Robert C. Fallon (202) 357-8461.

Lois D. Cashell,

Acting Secretary.

[FR Doc. 88-7559 Filed 4-5-88; 8:45 am]

BILLING CODE 6717-01-M

[Docket Nos. RP88-42-000]

Pacific Offshore Pipeline Co.

(April 1, 1988).

Take notice that an informal conference will be convened in the above proceeding on April 21, 1988, at 10:00 a.m. at the offices of the Federal Energy Regulatory Commission, 825 North Capitol Street, NE., Washington, DC., 20426.

Any party, as defined by 18 CFR 385.102(c), is invited to attend. Persons wishing to become a party must move to intervene and receive intervenor status pursuant to the Commission's regulations (18 CFR 385.214).

For additional information, contact John C. Walley (202) 357-8458, or Anja M. Clark (202) 357-5740.

Lois D. Cashell,

Acting Secretary.

[FR Doc. 88-7560 Filed 4-5-88; 8:45 am]

BILLING CODE 6717-01-M

[Docket No. RP88-89-000]

Ringwood Gathering Co.; Request for Waiver

April 1, 1988.

Take notice that on March 25, 1988, Ringwood Gathering Company (Ringwood) filed a request for waiver of the May 1, 1988 filing deadline and temporary waiver of the nine-track magnetic computer tape filing requirement.

Ringwood requests that the Commission grant it a three-month waiver of the May 1, 1988 filing deadline. The term of the waiver would coincide with the August 1, 1988 annual PGA filing. Ringwood states the waiver would also include a waiver of the June 1, 1988 quarterly filing. Ringwood states that it is in the process of implementing a new accounting process and is unsure whether it will have compiled sufficient data to make a valid May 1, 1988 filing.

Ringwood requests a three-month waiver of the nine-track magnetic tape requirement stating that it has never submitted a PGA filing on magnetic tape and development of computer software sufficient to submit a PGA filing would be time consuming and expensive relative to Ringwood's size and rate base. While Ringwood will make every effort to fully comply with the regulations, Ringwood reserves the right to seek a permanent waiver after its accounting transition is complete and it has been able to fully evaluate the expense of compliance.

Any person desiring to be heard or to protest said filing should file a motion to intervene or a protest with the Federal Energy Regulatory Commission, 825 North Capitol Street, NE., Washington, DC. 20426, in accordance with Rules 214 and 211 of the Commission's Rules of Practice and Procedure (18 CFR 385.214,

385.211 (1987)). All such motions or protests should be filed on or before April 8, 1988. Protests will be considered by the Commission in determining the appropriate action to be taken, but will not serve to make protestants parties to the proceeding. Any person wishing to become a party must file a motion to intervene. Copies of this filing are on file with the Commission and are available for public inspection.

Lois D. Cashell,

Acting Secretary.

[FR Doc. 88-7561 Filed 4-5-88; 8:45 am]

BILLING CODE 6717-01-M

[Docket No. RP87-33-008]

Williams Natural Gas Co.; Proposed Changes in FERC Gas Tariff

April 1, 1988.

Take notice that on March 24, 1988, Williams Natural Gas Company (WNG) tendered for filing a corrected tariff sheet to its FERC Gas Tariff. On March 9, 1988, WNG tendered for filing revised tariff sheets in Docket No. RP87-33-007. Pursuant to discussions with FERC Staff, WNG has noted an irregularity in a certain tariff sheet and is tendering the following revised tariff sheet to correct such. The instant tariff sheet is filed only to make it consistent with the entire filing.

Original Volume No. 2

Revised First Revised Sheet No. 252

WNG respectfully requests that the instant tariff sheet be incorporated into its March 9, 1988 filing.

Any person desiring to be heard or to protest said filing should file a motion to intervene or protest with the Federal Energy Regulatory Commission, 825 North Capitol Street NE., Washington, DC 20426, in accordance with §§ 385.211 and 385.214 of the Commission's Rules of Practice and Procedure (18 CFR 385.211, 385.214). All such motions or protests should be filed on or before April 8, 1988. Protests will be considered by the Commission in determining the appropriate action to be taken but will not serve to make protestants parties to the proceeding. Any person wishing to become a party must file a motion to intervene. Copies of this filing are on file with the Commission and are available for public inspection.

Lois D. Cashell,

Acting Secretary.

[FR DOc. 88-7562 Filed 4-5-88; 8:45 am]

BILLING CODE 6717-01-M

[Docket No. CP87-479-000, et al., Docket No. CP85-437-000, et al., and Docket No. CP85-552-000, et al.]

Wyoming-California Pipeline Co. et al.; Applications

In the matter Wyoming-California Pipeline Co., Mojave Pipeline Co., *et al.*, and Kern River Gas Transmission Co., *et al.*; pipeline projects to supply natural gas for enhanced oil recovery in California; notification of schedule for public scoping meetings on environmental issues to be addressed in the environmental impact statement on the proposed Wyoming-California pipeline.

April 4, 1988

The staff of the Federal Energy Regulatory Commission (FERC) hereby announces its schedule of public scoping meetings to be held jointly with the California State Lands Commission (SLC) in the dockets referenced above. The meetings will be conducted to identify the scope and significance of environmental impact associated with the proposed Wyoming-California Pipeline Company (WyCal) project. WyCal is one of three competing applicants proposing to construct new interstate pipeline facilities and transport natural gas from various sources outside of California to the Bakersfield, California area for use in enhanced oil recovery (EOR) and related cogeneration projects.

Background

During 1985, three applications were filed with the Commission to serve the EOR market. Specifically, Kern River Gas Transmision Company (Kern River) proposed to build an 837-mile pipeline (Docket No. CP85-552-000); Mojave Pipeline Company (Mojave) proposed to build a 389-mile pipeline (Docket No. CP85-437-000); and El Dorado Interstate Transmission Company (El Dorado) proposed to build a 381-mile pipeline (Docket No. CP85-62[illegible]-000).[1] The Commission's "Notice of Intent to Prepare A Draft Environmental Impact Statement" for these proposals was published in the **Federal Register** on August 23, 1985 (50 FR 34, 174) and supplemented on December 13, 1985, and May 19 and June 30, 1986 (50 FR 50,941, FR 18,357 and 23,579). These notices identified that the SLC was working with the FERC staff to produce a joint environmental impact report/statement (EIR/EIS). During February 1986, six scoping meetings were announced and subsequently held at Albuquerque, new Mexico; Flagstaff, Arizona; Barstow, California; Bakersfield California; Heber City, Utah; and Las Vegas, Nevada (51 FR 3,402). An additional scoping meeting was held in Grand Junction, Colorado in July 1986 (51 FR 23,580) to discuss an alternative associated with the Mojave proposal. The Draft EIR/EIS was released and noticed in the **Federal Register** on January 23, 1987 (52 FR 2,584). Public meetings to receive comments on the Draft EIR/EIS were announced and subsequently held during the week of March 23, 1987 in Bakersfield and Barstow, California; Las Vegas, Nevada; and Salt Lake City, Utah (52 FR 6,379). The Final EIR/EIS for the Kern River/Mojave projects was released to the public on December 18, 1987, and noticed in the **Federal Register** on December 24, 1987 (52 FR 48,753). Formal evidentiary hearings began at FERC on September 9, 1987 before Administrative Law Judge Isaac D. Benkin and are ongoing. The Final EIR/EIS was placed into this evidentiary hearing with accompanying FERC staff testimony on December 24, 1987. The environmental phase of the hearing to determine the adequacy of the Final EIR/EIS will commence April 12, 1988.

On August 4, 1987, WyCal filed its application with FERC to transport natural gas from various sources outside of California to the Bakersfield, California area for use in EOR and related cogeneration projects. On December 14, 1987, four days prior to the release of the Kern River/Mojave FEIS, the FERC issued a notice of intent to prepare a Supplement to this FEIS in order to analyze the WyCal project. The forthcoming Supplement to this FEIS will address only those aspects of the WyCal project not previously addressed in the FEIS for the Kern River and Mojave projects.

The proposed WyCal pipeline deviates from Kern River's proposal at the northern end of the project from Opal to Evanston, Wyoming for approximately 52 miles. From that point on, except as noted below, WyCal proposes to follow the very same right-of-way (ROW) which Kern River proposed from a point approximately 5 miles east of Evanston, Wyoming to Kern River's proposed Milepost (MP) 480 south of Dry Lake, Nevada and four miles east of Apex, Nevada. From this point, the WyCal route deviates to the west of Kern River's proposal until it recrosses the route at Kern River's MP 486. The WyCal route then deviates to the east until it intersects with MP 6 of the East Las Vegas System Alternative route identified in the Final EIR/EIS. WyCal would follow the very same

[1] The El Dorado application was subsequently dismissed from the FERC proceeding on October 20, 1987. While the FEIS examines portions of the El Dorado route as an alternative, it is no longer a competitor to Mojave, Kern River or WyCal.

ROW examined along this alternative to Piute Junction, California where it would interconnect with the route proposed by Mojave. WyCal then proposes to follow the exact same ROW Mojave proposes both east to Topock, Arizona and west to Bakersfield, California. Since the proposed WyCal project is on the very same ROW proposed by both Kern River and Mojave in many areas, a significant amount of work has already been completed relevant to the environmental impact caused by the construction and operation of the pipeline. The Supplemental EIS can therefore be structed in such a way as to tier or build upon the Final EIR/EIS issued in December 1987. The tiering process is encouraged in § 1502.20 of the Council on Environmental Quality regulations implementing the National Environmental Policy Act. The Supplemental EIS issued pursuant to this notice will therefore only address those areas of the WyCal project which deviate from the Mojave and Kern River proposals and the East Las Vegas route alternative previously analyzed in the FEIS. Deviations of compressor site locations will also be examined in the Supplemental EIS.

Locations and Purpose Public Meetings

The purpose of this notice is to announce that joint public scoping meetings, similar to those conducted in 1986 for the Kern River and Mojave proposals, will now be held for the WyCal proposal. The cities of Salt Lake City, Utah, and Las Vegas, Nevada, have been selected as meeting locations for two reasons. In the past, these locations have been used for public meetings on the EOR proposals, and have been well attended by numerous interested parties. Further, both locations are appropriate from the standpoint that the focus of the Supplemental EIS will be on those areas where the WyCal route deviates from that previously reviewed for either Kern River or Mojave.

The meetings will begin promptly at 7:00 p.m. at the following two locations:

Monday, April 18, 1988—Board Room of the Clark County School District Education Center, 2832 East Flamingo Road, Las Vegas, NV

Wednesday, April 20, 1988—State Office Building Auditorium (immediately behind the State Capitol Building), 500 North State Street, Salt Lake City, UT

The staff intends to conduct aerial and on-site reviews of the areas where WyCal deviates from the Kern River and Mojave routes, and variations to these routes in the Las Vegas and Salt Lake City areas. The staff also intends to meet with local government officials, as appropriate.

As referenced in past notices, the public scoping meetings are intended as an opportunity for state and local governments and the general public to provide information and assistance directly to the FERC staff and the SLC in defining the range of environmental issues and concerns that need to be addressed in the impact analysis. As previously stated, Federal agencies with an interest in the proposals have formal channels for input into the analysis and are expected to coordinate their comments through the lead Federal agency outside the public meeting forum.

Further information concerning the WyCal public scoping meetings or about the EOR proposals in general is available from either of the following individuals:

Mr. Robert K. Arvedlund, Room 7312-J, Environmental Analysis Branch, OPPR, Federal Energy Regulatory Commission, 825 North Capitol Street, Washington, DC 20426, Telephone (202) 357-9091

or

Ms. Mary Griggs, California State Lands Commission, 1807-13th Street, Sacramento, CA 95814, Telephone (916) 322-0354

Lois Cashell,

Acting Secretary.

[FR Doc. 88-7557 Filed 4-5-88; 8:45 am]

BILLING CODE 6717-01-M

ENVIRONMENTAL PROTECTION AGENCY

[ER-FRL-3357-W]

Upgrading and Enlargement of Municipal Wastewater Treatment Facilities in the City of New Bedford, MA; Intent To Prepare an Environmental Impact Statement

AGENCY: U.S. Environmental Protection Agency (EPA), Region I.

ACTION: Notice of intent to prepare an Environmental Impact Statement (EIS) on the upgrading and enlargement of the City of New Bedford, MA municipal wastewater facilities including treatment plant and sludge disposal facilities.

Purpose: In accordance with EPA procedures on the implementation of the National Environmental Policy Act, 40 CFR Part 6, the EPA will prepare an EIS on the proposed wastewater management program. This Notice of Intent is issued pursuant to 40 CFR 6.510(a)(1).

For Further Information and to be Placed on the Project Mailing List Contact: Susan S. Coin, Environmental Engineer, U.S. EPA Region I, JFK Federal Building, WQE-1900, Boston, MA 02203. Telephone: (Commercial) (617) 565-4425 or (FTS) 835-4425.

Summary and Need for Action

The City of New Bedford discharges partially-treated primary wastewater effluent into Buzzards Bay. In addition, numerous sewer system outlets discharge raw wastewater into New Bedford Harbor and Clark's Cove. Both actions are in violation of the Clean Water Act, 33 U.S.C. 1251 *et seq.*

In response to a Federal District Court Consent Decree, the City of New Bedford is developing plans for upgrading the municipal wastewater treatment facilities from primary to secondary treatment, increasing plant capacity to provide for treating mixed wastewater and stormwater, and upgrading and enlarging sludge disposal facilities.

EPA actions may include providing federal grants for the construction of wastewater treatment facilities and issuing associated permits.

Significant Issues and Alternatives

- The EIS/EIR and facilities plan will examine a full range of options for siting the facilities.
- Alternative technologies for waste and sludge treatment and sludge disposal alternatives such as incinerators, composting systems, and landfills will be evaluated. In addition, sludge transport routes and modes will be evaluated and selected.
- Relationships between clean-up options for the hazardous PCB-laden sediment deposits in New Bedford Harbor and the wastewater management facilities will be defined.
- Multi-disciplinary factors associated with alternative wastewater management systems and sites will be assessed, focusing on the affected environment and the environmental consequences of alternatives.
- Mitigating measures will be proposed to deal with all significant negative impacts.

Scoping

EPA Region I, and the Massachusetts Executive Office of Environmental Affairs held a joint EIS/EIR scoping meeting on March 23, 1988. The purpose of the meeting was to ascertain public and agency views on the issues that should be addressed in the EIS and in the EIR.

A preliminary scope of work for the EIS is now available. For thirty(30) days from the publication of this Notice of Intent, EPA will be accepting written comments on both the proposed scope of work and any other issues that should be considered in the EIS.

Estimated Date of Draft EIS Release: December, 1988.

Responsible Official: Michael R. Deland, Regional Administrator.

Richard E. Sanderson,

Director, Office of Federal Activities.

[FR Doc. 88-7520 Filed 4-5-88; 8:45 am]

BILLING CODE 6560-50-M

[OPP-180771; FRL-3359-8]

Receipt of an Application for a Specific Exemption to Use Avermectin B_1; Solicitation of Public Comment

AGENCY: Environmental Protection Agency (EPA).

ACTION: Notice.

SUMMARY: EPA has received a specific exemption request from the Washington Department of Agriculture (hereafter referred to as the "Applicant") for use of avermectin B_1 (Agrimec 0.15 EC Miticide/Insecticide") to control two-spotted spider mites (*Tetranychus urticae*); European red mites (*Panonychus ulmi*); and McDaniel spider mites (*Tetranychus mcdanielii*) on 19,400 acres of pears in Washington. Avermectin B_1 (CAS 63AB) contains a mixture of avermectins containing > 80% avermectin B_{1a} (5-0-demethyl avermectin A_{1a}) and < 20% avermectin B_{1b} (5-0-demethyl-25-de(1-methylpropyl-25-(l-methylethyl)avermectin A_{1a}). In accordance with 40 CFR 166.24, EPA is soliciting comment before making the decision whether or not to grant this specific exemption request.

DATE: Comments must be received on or before April 21, 1988.

ADDRESS: Three copies of written comments, bearing the identification notation "OPP-180771" should be submitted by mail to:

Information Services Section, Program Management and Support Division (TS-757C), Office of Pesticide Programs, Environmental Protection Agency, 401 M St., SW., Washington, DC 20460.

In person, bring comments to: Rm. 246, Crystal Mall #2, 1921 Jefferson Davis Highway, Arlington, VA.

Information submitted as a comment concerning this notice may be claimed confidential by marking any part or all of that information as "Confidential Business Information (CBI)." Information so marked will not be disclosed except in accordance with procedures set forth in 40 CFR Part 2. A copy of the comment that does contain CBI must be submitted for inclusion in the public record. Information not marked confidential may be disclosed publicly by EPA without prior notice to the submitter. All written comments will be available for inspection in Rm. 246 at the address given above from 8 a.m. to 4 p.m., Monday through Friday, excluding legal holidays.

FOR FURTHER INFORMATION CONTACT:

By mail: Libby Pemberton, Registration Division (TS-767C), Office of Pesticide Programs, Environmental Protection Agency, 401 M St., SW., Washington, DC 20460.

Office location and telephone number: Rm. 716, Crystal Mall #2, 1921 Jefferson Davis Highway, Arlington, VA, (703-557-1806).

SUPPLEMENTARY INFORMATION: Pursuant to section 18 of the Federal Insecticide, Fungicide, and Rodenticide Act (FIFRA) (7 U.S.C. 136p), the Administrator may, at his discretion, exempt a State agency from any provisions of FIFRA if he determines that emergency conditions exists which require such exemption.

The Applicant has requested the Administrator to issue a specific exemption for the use of avermectin B_1, manufactured as Agrimec 0.15 EC Miticide/Insecticide", by MSD AGVET, a division of Merck & Co., Inc., on pears in Washington. No tolerances have been established for avermectin B_1 on any raw agricultural commodities.

Information in accordance with 40 CFR Part 166 was submitted as part of this request. The Applicant proposes ground applications applied at a rate of 10 to 20 ounces of product per acre per application. A maximum of two applications will be made per crop season. Applications would be made through August 1, 1988.

The Applicant indicates that with the recent withdrawal of cyhexatin growers are dependent on inferior products with demonstrated problems. Those products include fenbutatin-oxide, superior spray oil, oxamyl, formetanate, and propargite.

The Applicant indicates that without adequate control of the mites economic losses expected could total over $12.6 million.

This notice does not constitute a decision by EPA on the application itself. The regulations governing section 18 require that the Agency publish notice in the **Federal Register** and solicit public comment on an application involving the first food use of a pesticide. Accordingly, interested persons may submit written views on this subject to the Program Management and Support Division at the address above.

The Agency, accordingly, will review and consider all comments received during the comment period.

Dated: March 24, 1988.

Edwin F. Tinsworth,

Director, Registration Division, Office of Pesticide Programs.

[FR Doc. 88-7174 Filed 4-5-88; 8:45 am]

BILLING CODE 6560-50-M

[OPP-180772; FRL-3361-4]

Receipt of Application For Specific Exemption To Use Clofentezine; Solicitation of Public Comment

AGENCY: Environmental Protection Agency (EPA).

ACTION: Notice.

SUMMARY: EPA has received a specific exemption request from the West Virginia Department of Agriculture (hereafter referred to as "Applicant") for use of the unregistered active ingredient clofentezine (3,6-bis-(2-chlorophenyl)-1,2,4,5-tetrazine) to control European red mites on apples. In accordance with 40 CFR 166.24, EPA is soliciting comment before making the decision whether or not to grant this specific exemption request.

DATE: Comments must be received on or before April 21, 1988.

ADDRESS: Three copies of written comments, bearing the identifying notation "OPP-180772," should be submitted by mail to: Information Services Section, Program Management and Support Division (TS-757C), Office of Pesticide Programs, Environmental Protection Agency, 401 M St. SW., Washington, DC 20460.

In person, bring comments to: Rm. 246, CM #2, 1921 Jefferson Davis Highway, Arlington, VA.

Information submitted as a comment concerning this notice may be claimed confidential by marking any part or all of that information as "Confidential Business Information (CBI)." Information so marked will not be disclosed except in accordance with procedures set forth in 40 CFR Part 2. A copy of the comment that does not contain CBI must be submitted for inclusion in the public record. Information not marked confidential may be disclosed publicly by EPA without prior notice to the submitter. All written comments will be available for inspection in Rm. 246 at the address given above from 8 a.m. to 4 p.m., Monday through Friday excluding legal holidays.

FOR FURTHER INFORMATION CONTACT: By mail: Libby A. Pemberton, Registration Division (TS-767C), Office of Pesticide Programs, Environmental Protection Agency, 401 M St. SW., Washington, DC 20460.

Office location and telephone number: Rm. 716A, CM#2, 1921 Jefferson Davis Highway, Arlington, VA (703-557-1806).

SUPPLEMENTARY INFORMATION: Pursuant to section 18 of the Federal Insecticide, Fungicide, and Rodenticide Act (FIFRA) (7 U.S.C. 136p), the Administrator may, at his discretion, exempt a State agency from any registration provision of FIFRA if he determines that emergency conditions exist which require such exemption.

The Applicant has requested the Administrator to issue a specifc exemption to permit the use of the unregistered active ingredient, clofentezine, available as the pesticide product Apollo SC, manufactured by Nor-Am Chemical Company, to control European red mites on apples.

Information in accordance with 40 CFR Part 166 was submitted as part of this request.

The Applicant has requested authorization to make one complete or two "alternate row middle spray" applications with Apollo. A maximum of four ounces of formulated product (0.125 pound active ingredient) is proposed to be applied per acre by ground equipment as a dilute or concentrate spray. The time of treatment extends from "pink" until 45 days before harvest.

The Applicant proposes to treat a maximum of 14,000 acres of apples in Morgan, Hampshire, Berkely and Jefferson Counties. A maximum of 437.5 gallons of product would be needed under the proposed exemption.

The Applicant claims that European red mites have developed resistance to Plictran (cyhexatin) which historically (prior to its removal from the market in 1987) had been used for control of mites. Similar resistance also exists to the related organo-tin acaricide, Vendex (fenbutatin-oxide). Dicofol has also been used in the past, however, resistance appears to have developed to this pesticide as well. Other acaricides such as formetanate hydrochloride, oxamyl and propargite are not effective, toxic to beneficials or otherwise not appropriate for mite control at various times.

The Applicant states that the result of not having an effective control of the European red mite would be decreased fruit size, loss of fruit set and reduced fruit quality.

The Applicant estimates that losses of up to $1.7 million in gross revenues if Apollo is not available for use in the 1988 growing season.

This notice does not constitute a decision by EPA on the application itself. The regulations governing section 18 require that the Agency publish notice in the **Federal Register** and solicit public comment on applications involving an unregistered active ingredient. Accordingly, interested persons may submit written views on this subject to the Program Management and Support Division at the address above.

The Agency, accordingly, will review and consider all comments received during the comment period.

Dated: March 25, 1988.

Edwin F. Tinsworth,

Director, Registration Division, Office of Pesticide Programs.

[FR Doc. 88-7510 Filed 4-5-88; 8:45 am]

BILLING CODE 6560-50-M

[OPP-180773; FRL-3361-5]

Receipt of Applications for Specific Exemptions To Use Clofentezine and Hexythiazox; Solicitation of Public Comment

AGENCY: Environmental Protection Agency (EPA).

ACTION: Notice.

SUMMARY: EPA has received specific exemption requests from the New Jersey Department of Environmental Protection (hereafter referred to as "Applicant") for use of the unregistered active ingredients clofentezine (3,6-bis(2-chlorophenyl)-1,2,4,5-tetrazine) and hexythiazox (*N*-cyclohexyl-4-methyl-2-oxothiazolidine-3-carboxamide) to control European red mites on apples. In accordance with 40 CFR 166.24, EPA is soliciting comment before making the decision whether or not to grant these specific exemption requests.

DATE: Comments must be received on or before April 21, 1988.

ADDRESS: Three copies of written comments, bearing the identifying notation "OPP-180773," should be submitted by mail to:

Information Services Section, Program Management and Support Division (TS-757C), Office of Pesticide Programs, Environmental Protection Agency, 401 M Street SW., Washington, DC 20460

In person, bring comments to: Rm. 246, CM #2, 1921 Jefferson Davis Highway, Arlington, VA.

Information submitted as a comment concerning this notice may be claimed confidential by marking any part or all of that information as "Confidential Business Information (CBI)." Information so marked will not be disclosed except in accordance with procedures set forth in 40 CFR Part 2. A copy of the comment that does not contain CBI must be submitted for inclusion in the public record. Information not marked confidential may be disclosed publicly by EPA without prior notice to the submitter. All written comments will be available for inspection in Rm. 246 at the address given above from 8 a.m. to 4 p.m., Monday through Friday excluding legal holidays.

FOR FURTHER INFORMATION CONTACT:

By mail: Libby A. Pemberton, Registration Division (TS-767C), Office of Pesticide Programs, Environmental Protection Agency, 401 M Street SW., Washington, DC 20460

Office location and telephone number: Rm. 716A, CM #2, 1921 Jefferson Davis Highway, Arlington, VA, (703-557-1806).

SUPPLEMENTARY INFORMATION: Pursuant to section 18 of the Federal Insecticide, Fungicide, and Rodenticide Act (FIFRA) (7 U.S.C. 136p), the Administrator may, at his discretion, exempt a State agency from any registration provision of FIFRA if he determines that emergency conditions exist which require such exemption.

The Applicant has requested the Administrator to issue specific exemptions to permit the use of the unregistered active ingredients, clofentezine, available as the pesticide product Apollo SC, manufactured by Nor-Am Chemical Company, and hexythiazox, available as the pesticide product Savey WP, manufactured by E.I. du Pont de Nemours Chemical Company, to control European red mites on apples.

Information in accordance with 40 CFR Part 166 was submitted as part of these requests.

The Applicant has requested authorization to make one application with Apollo SC or Savey WP. A maximum of four ounces of formulated Apollo SC (0.125 pound active ingredient) or 3 ounces (0.094 pound active ingredient) of formulated Savey WP is proposed to be applied per acre by ground equipment as a dilute or concentrate spray. The time of treatment extends from "tight cluster" until 45 days before harvest for Apollo SC and until 28 days before harvest for Savey WP.

The Applicant proposes to treat a maximum of 6500 acres of apples. A maximum of 102 gallons of Apollo SC

and 610 pounds of Savey WP would be needed under the proposed exemptions.

Applications would be made May 1 through August 31, 1988.

The Applicant claims that European red mites have developed resistance to Plictran (cyhexatin) which historically (until it became unavailable in 1987) has been used for control of mites. Similar resistance also exists to the related organo-tin acaricide, Vendex (fenbutatin-oxide). Dicofol has also been used in the past, however, resistance appears to have developed to this pesticide as well. Other acaricides such as formetanate hydrochloride, oxamyl and propargite are not effective, toxic to beneficials or otherwise not appropriate for mite control at various times.

The Applicant indicates that by having both materials available, growers could alternate miticides and reduce the buildup of resistance in the European red mite population. The Applicant also indicates that there is a very limited quantity of Apollo SC available in this country for use during the 1988 season.

The Applicant estimates that losses of up to $716,297 in gross revenues for New Jersey apple growers will result in Apollo SC or Savey WP is not available for use in 1988.

This notice does not constitute a decision by EPA on the applications themselves. The regulations governing section 18 require that the Agency publish notice in the **Federal Register** and solicit public comment on applications involving an unregistered active ingredient. Accordingly, interested persons may submit written views on this subject to the Program Management and Support Division at the address above.

The Agency, accordingly, will review and consider all comments received during the comment period.

Dated: March 25, 1988.

Edwin F. Tinsworth,

Director, Registration Division, Office of Pesticide Programs.

[FR Doc. 88-7511 Filed 4-5-88; 8:45 am]

BILLING CODE 6560-50-M

[OPP-50677; FRL-3361-3]

Issuance of Experimental Use Permits: Ciba-Geigy Corp. et al.

AGENCY: Environmental Protection Agency (EPA).

ACTION: Notice.

SUMMARY: EPA has granted experimental use permits to the following applicants. These permits are in accordance with, and subject to, the provisions of 40 CFR Part 172, which defines EPA procedures with respect to the use of pesticides for experimental purposes.

FOR FURTHER INFORMATION CONTACT:

By mail: Registration Division (TS-767C), Office of Pesticide Programs, Environmental Protection Agency, 401 M St., SW., Washington, DC 20460.

In person or by telephone: Contact the product manager at the following address at the office location or telephone number cited in each experimental use permit: 1921 Jefferson Davis Highway, Arlington, VA.

SUPPLEMENTARY INFORMATION: EPA has issued the following experimental use permits:

100-EUP-91. Issuance. Ciba-Geigy Corporation, P.O. Box 18300, Greensboro, NC 27419. This experimental use permit allows the use of 3.6 pounds of herbicide methyl 2-[[[[[4,6-bis(difluoromethoxy)-2-pyrimidinyl]amino]carbonyl]amino]sulfonyl]benzoate on a total of 150 acres of corn to evaluate control of selective postemergence weed control. The program is authorized only in the States of Illinois, Kansas, Kentucky, Maryland, Missouri, Nebraska, Ohio, and Tennessee. The experimental use permit is effective from February 18, 1988 to February 18, 1989. This permit is issued with the limitation that all crops are destroyed or used for research purposes only. (Richard Mountford, PM 23, Rm. 237, CM#2, (703-557-1830))

38574-EUP-2. Issuance. New Mexico State University, Department of Entomology, Las Cruces, NM 88003. This experimental use permit allows the use of 94.37 pounds of the insecticide malathion on 3,999 acres of clover, rangeland, pasture and non-agricultural land to evaluate the control of grasshoppers. The program is authorized only in the States of Arizona, New Mexico, South Dakota, and Wyoming. The experimental use permit is effective from March 2, 1988 to March 2, 1989. Permanent tolerances for residues of the active ingredient in or on clover, grass, and grass hay have been established (40 CFR 180.111). (William Miller, PM 16, Rm. 211, CM#2, (703-557-2600))

34704-EUP-9. Issuance. Platte Chemical Company, P.O. Box 667, Greeley, CO 80632. This experimental use permit allows the use of 13,200 pounds of each of the nematicide/insecticide ethoprop and the insecticide phorate on a total of 4,400 acres of potatoes to evaluate the control of the Colorado pototo beetle, fleabeetles, green peach aphid, leafhopper, leafminer, nematodes, potato aphid, psyllid, and wireworms. The program is authorized only in the States of California, Colorado, Idaho, Maine, Michigan, Minnesota, New York, North Carolina, North Dakota, Oregon, Washington, and Wisconsin. The experimental use permit is effective from March 8, 1988 to March 8, 1989. A permanent tolerance for residues of each of the active ingredients phorate and ethoprop in or on potatoes has been established (40 CFR 180.206 and 40 CFR 180.262, respectively). (William Miller, PM 16, Rm. 211, CM#2, (703-557-2600))

Persons wishing to review these experimental use permits are referred to the designated product managers. Inquiries concerning these permits should be directed to the persons cited above. It is suggested that interested persons call before visiting the EPA office, so that the appropriate file may be made available for inspection purposes from 8 a.m. to 4 p.m., Monday through Friday, excluding legal holidays.

Authority: 7 U.S.C. 136c.

Dated: March 28, 1988.

Edwin F. Tinsworth,

Director, Registration Division, Office of Pesticide Programs.

[FR Doc. 88-7512 Filed 4-5-88; 8:45 am]

BILLING CODE 6560-50-M

[OPP-240080; FRL-3360-8]

State Registrations of Pesticides; Arizona et al.

AGENCY: Environmental Protection Agency (EPA).

ACTION: Notice.

SUMMARY: EPA has received notices of registration of pesticides to meet special local needs under section 24(c) of the Federal Insecticide, Fungicide, and Rodenticide Act (FIFRA), as amended, from 22 States. A registration issued under this section of FIFRA shall not be effective for more than 90 days if the Administrator disapproves the registration or finds it to be invalid within that period. If the Administrator disapproves a registration or finds it to be invalid after 90 days, a notice giving that information will be published in the **Federal Register.**

DATE: The last entry for each item is the date the State registration of that product became effective.

FOR FURTHER INFORMATION CONTACT:

Owen F. Beeder, Registration Division (TS-767C), Office of Pesticide Programs, Environmental Protection Agency, 401 M St., SW., Washington, DC.

Office location and telephone number: Rm. 716A, CM #2, 1921 Jefferson Davis Highway, Arlington, VA 22202, (703)–557–7893.

SUPPLEMENTARY INFORMATION: This notice only lists the section 24(c) applications submitted to the Agency. The Agency has 90 days to approve or disapprove each application listed in this notice. Applications that are not approved are returned to the appropriate State for action. Most of the registrations listed below were received by the EPA in January through February 1988. Receipts of State registrations will be published periodically. Of the following registrations, none involve a changed-use pattern (CUP). The term "changed-use pattern" is defined in 40 CFR 162.3(k) as a significant change from a use pattern approved in connection with the registration of a pesticide product. Examples of significant changes include, but are not limited to, changes from a nonfood to food use, outdoor to indoor use, ground to aerial application, terrestrial to aquatic use, and nondomestic to domestic use.

Arizona

EPA SLN No. AZ 87 0022. Stauffer Chemical Co. Registration is for Eptam R 7–E Selective Herbicide to be used on idle season fallow ground to control yellow and purple nutsedge. December 2, 1987.

EPA SLN No. AZ 87 0023. Gowan Co. Registration is for Gowan Azinphos–M 2 EC to be used on cotton to control boll weevils. January 8, 1987.

EPA SLN No. AZ 87 0024. E.I. du Pont de Nemours. Registration is for Du Pont Bladex 4L Herbicide to be used on cotton to control weeds. January 12, 1988.

EPA SLN No. AZ 87 0025. E.I. du Pont de Nemours. Registration is for Du Pont Bladex 90 DF Herbicide to be used on cotton to control weeds. January 12, 1988

EPA SLN No. AZ 88 0001. Rhone Poulenc Ag Co. Registration is for Rovral Fungicide to be used on crucifer crops grown for seed to control alternaria leaf and pod blight and sclerotinia white rot. January 18, 1988.

California

EPA SLN No. CA 88 0001. California Grape and Tree Fruit League. Registration is for Sinbar Herbicide to be used on nectarines to control marestail. January 4, 1988

EPA SLN No. CA 88 0002. Malcolm Ricci. Registration is for Treflan 5 to be used on daikon (Japanese radish) to control broadleaf and grassy weeds. January 5, 1988.

EPA SLN No. CA 88 0004. El Dorado County Dept. of Agriculture. Registration is for Pro-Gibb to be used on grapes (Chenin Blanc and Zinfandel varieties only) to control bunch rot on flower clusters. January 13, 1988.

Connecticut

EPA SLN No. CT 88 0001. Hopkins Agricultural Chemical Co. Registration is for Ramik Brown to be used on orchards to control orchard mice. January 13, 1988.

EPA SLN No. CT 88 0002. Chempar, A Divsion of Lipha Chemicals, Inc. Registration is for Rozol Paraffinized Pellets to be used on orchards to control orchard mice. February 11, 1988.

EPA SLN No. CT 88 0003. Chempar, A Division of Lipha Chemicals, Inc. Registration is for Rozol Ground Spray Concentrate to be used on apple orchards to control orchard mice. February 11, 1988.

Delaware

EPA SLN No. DE 88 0001. FMC Corp. Registration is for Talstar 10 WP to be used on ornamental trees, shrubs, plants, and flowers to control aphids, armyworms, and mites. January 24, 1988.

Florida

EPA SLN No. FL 88 0001. Florida Dept. of Agriculture. Registration is for Cythion/Malathion JLV Concentrate to be used on citrus groves and adjacent noncrop lands to control aphids and spider mites. January 21, 1988.

EPA SLN No. FL 88 0002. Coopers Animal Health, Inc. Registration is for Tomahawk™ Insecticide Ear Tags to be used on beef and nonlactating dairy cattle and calves to control horn flies. February 1, 1988.

EPA SLN No. FL 88 0003. Phone-Poulenc Ag Co. Registration is for Temik Brank 15 G Aldicarb Pesticide to be used on citrus to control citrus nematodes. February 8, 1988.

Georgia

EPA SLN No. GA 88 0001. Griffin Corp. Registration is for Manex 4L to be used on mustard greens, turnip greens, collards, and kale to control alternaria leafspot and downy mildew. February 12, 1988.

Hawaii

EPA SLN No. HI 88 0002. Hawaii Anthurium Industry Association. Registration is for Physan 20 to be used on anthuriums to control borrowing nematodes. January 14, 1988.

Illinois

EPA SLN No. IL 88 0001. Clarke Outdoor Spraying Co., Inc., Reistration is for Temephos to be used on tire piles to control *aedes alboplctus* mosquito larvae. January 22, 1988.

Iowa

EPA SLN No. IA 88 0001. Coopers Animal Health, Inc. Registration is for Tomahawk™ Insecticide Ear Tags to be used on beef and nonlactating dairy cattle to control horn flies. February 15, 1988.

Louisiana

EPA SLN No. LA 87 0012. Mobay corp. Registration is for Monitor 4 to be used on cotton to control aphids, thrips, whiteflies, and mites. November 16, 1988.

EPA SLN No. LA 88 0001. E.I. du Pont de Nemours & Co., Inc. Registration is for Du Pont Bidrin 8 Water Miscible Insecticide to be used on pecan trees to control aphids. January 28, 1988.

Mississippi

EPA SLN No. MS 88 0001. Hoechst-Roussel Agri-Vet Co. Registration is for Whip 1EC Herbicide to be used on rice and soybeans for postemergence, annual, and perennial control of grass. February 23, 1988.

Missouri

EPA SLN No. MO 88 0001. FMC Corp. Registration is for Command 4 EC Herbicide to be used preemergence on soybeans to control various weeds. January 28, 1988.

Montana

EPA SLN No. MT 88 0001. Coopers Animal Health, Inc. Registration is for Tomahawk™ Insecticide Ear Tags to be used on beef and nonlactating dairy cattle to control horn flies. January 15, 1988.

Nevada

EPA SLN No. NV 87 0003. Wilcon Distributors, Inc. Registration is for Wilcon Gopher Getter Bait Type 2 to be used on range and pasture land to control gophers. December 3, 1987.

North Carolina

EPA SLN No. NC 87 0006. Chevron Chemcal Co. Registration is for Orthene 75S Soluble Powder to be used on southern pine seed orchards to control slash pine flower thrips, coneworms, coneborers, and seedbugs. November 30, 1987.

Ohio

EPA SLN No. OH 88 0001. Rohm and Haas Co. Registration is for Kerb 50W Herbicide to be used on preemergence application to seeded lettuce to control weeds. January 29, 1988.

Oklahoma

EPA SLN No. OK 88 0001. USDA-APHIS-ADC. Registration is for 2% Zinc Phosphide to be used on phosphide-treated oats to control black-tailed prairie dogs. February 1, 1988.

South Dakota

EPA SLN No. SD 87 0008. Dow Chemical Co. Registration is for Tordon 22K Weed Killer to be used on noncropland areas and fence rose and around farm buildings and roadsides to control various weeds. December 18, 1987.

Tennessee

EPA SLN No. TN 88 0001. Chevron Chemical Co. Registration is for Orthocide 50 Wettable to be used post planting on pine seedlings to control damping off and root rot. February 2, 1988.

EPA SLN No. TN 88 0002. Dow Chemcial U.S.A. Registration is for Lorsban 4E Insecticide to be used on grapes to control grape root borers. February 23, 1988.

Washington

EPA SLN No. WA 88 0001. Great Lakes Chemical Co. Registration is for Chlor-O-Pic to be used on Douglas Fir stumps to control inoculum of laminated root rot. January 11, 1988.

West Virginia

EPA SLN No. WV 88 0001. Fermenta Animal Health Co. Registration is for Terminator Insecticide Cattle Ear Tag to be used on beef and nonlactating dairy cattle to control horn flies and face flies. January 28, 1988.

Wyoming

EPA SLN No. WY 88 0001. American Cyanamide Co. Registration is for Thimet 20-G Soil and Systemic Insecticide to be used on barley to control Russian wheat aphids and other aphids. February 22, 1988.

(Sec. 24, as amended, 92 Stat. 835 (7 U.S.C. 136))

Dated: March 25, 1988.

Douglas D. Campt,

Director, Office of Pesticide Programs.

[FR Doc. 88-7513 Filed 4-5-88; 8:45 am]

BILLING CODE 6560-50-M

[PP 6G3320/T557; FRL-3361-1]

Avermectin; Renewal of Temporary Tolerance

AGENCY: Environmental Protection Agency (EPA).

ACTION: Notice.

SUMMARY: EPA has renewed a temporary tolerance for residues of the miticide avermectin and its delta 8,9-geometric isomer in or on the raw agricultural commodity cottonseed.

DATE: This temporary tolerance expires January 21, 1989.

FOR FURTHER INFORMATION CONTACT: By mail:

George LaRocca, Product Manager (PM) 15, Registration Division (TS-767C), Office of Pesticide Programs, Environmental Protection Agency 401 M St., SW., Washington, DC 20460

Office location and telephone number: Rm. 204, CM#2, 1921 Jefferson Davis Highway, Arlington, VA, (703) 557-2400.

SUPPLEMENTARY INFORMATION: EPA issued a notice which was published in the **Federal Register** of January 21, 1987 (52 FR 2282), stating that a temporary tolerance had been established for residues of the miticide avermectin and its delta 8,9-geometric isomer in or on the raw agricultural commodity cottonseed at 0.005 part per million (ppm).

This tolerance was renewed in response to pesticide petition (PP) 6G3320, submitted by Merck Sharp and Dohme Research Laboratory, Division of Merck and Co., Inc., Hillsborough Rd., Three Bridges, NJ 08887.

The company has requested a 1-year renewal of the temporary tolerance to permit the continued marketing of the above raw agricultural commodity when treated in accordance with the provisions of experimental use permit 50658-EUP-2, which is being renewed under the Federal Insecticide, Fungicide, and Rodenticide Act (FIFRA) as amended (Pub. L. 95-396, 92 stat. 819; 7 U.S.C. 136).

The scientific data reported and other relevant material were evaluated, and it was determined that a renewal of the temporary tolerance will protect the public health. Therefore, the temporary tolerance has been renewed on the condition that the pesticide be used in accordance with the experimental use permit and with the following provisions:

1. The total amount of the active ingredient to be used must not exceed the quantity authorized by the experimental use permit.

2. Merck Sharp and Dohme Research Lab. must immediately notify the EPA of any findings from the experimental use that have a bearing on safety. The company must also keep records of production, distribution, and performance, and on request make the records available to any authorized officer or employee of the EPA or the Food and Drug Administration.

This tolerance expires January 21, 1987. Residues not in excess of this amount remaining in or on the above raw agricultural commodity after this expiration date will not be considered actionable if the pesticide is legally applied during the term of, and in accordance with, the provisions of the experimental use permit and temporary tolerance. This tolerance may be revoked if the experimental use permit is revoked or if any experience with or scientific data on this pesticide indicate that such revocation is necessary to protect the public health.

The Office of Management and Budget has exempted this notice from the requirements of section 3 of Executive Order 12291.

Pursuant to the requirements of the Regulatory Flexibility Act (Pub. L. 96-354, 94 Stat. 1164, 5 U.S.C. 601-612), the Administrator has determined that regulations establishing new tolerances or raising tolerance levels or establishing exemptions from tolerance requirements do not have a significant economic impact on a substantial number of small entities. A certification statement to this effect was published in the **Federal Register** of May 4, 1981 (46 FR 24950).

Authority: 21 U.S.C. 346a(j).

Dated: March 24, 1988.

Edwin F. Tinsworth,

Director, Registration Division, Office of Pesticide Programs.

[FR Doc. 88-7514 Filed 4-5-88; 8:45 am]

BILLING CODE 6560-50-M

[OPTS-42071A; FRL-3361-8]

Testing Consent Agreement; Development for Octamethylcyclotetrasiloxane (OMCTS); Solicitation for Interested Parties

AGENCY: Environmental Protection Agency (EPA).

ACTION: Notice.

SUMMARY: EPA's procedures for requiring the testing of chemical substances and mixtures under section 4 of the Toxic Substances Control Act (TSCA) include the adoption of testing consent orders and the promulgation of test rules. Consent orders may be adopted where consensus on an industry test program is reached in a timely manner by EPA, affected manufactures and/or processors and other interested parties. If timely consensus cannot be reached or appears

unlikely, and the Agency makes certain statutory findings under TSCA, EPA issues test rules. This notice announces EPA's decision to consider negotiating a consent order for environmental effects and chemical fate testing of octamethylcyclotetrasiloxane (OMCTS; CAS No. 556-67-2), announces a public meeting to discuss such testing, and requests all persons desiring to have the status of "interested parties" in negotiation of a consent order for IMCTS to notify EPA of their interest.

DATES: Submit written notice of interest to be designated an "interested party" on or before April 28, 1988. A public meeting will be held on April 20, 1988 at 1:00 in Room NE-103, 401 M St., SW., Washington, DC.

ADDRESS: Submit written request to be an "interested party" in triplicate, identified by the document control number (OPTS-42071A) to: TSCA Public Docket Office (TS-793), Office of Pesticides and Toxic Substances, Environmental Protection Agency, Rm. NE-G004, 401 M St., SW., Washington, DC 20460.

FOR FURTHER INFORMATION CONTACT: Michael, M. Stahl, Acting Director, TSCA Assistance Office (TS-799), Office of Toxic Substances, Rm. E-543, 401 M St., SW., Washington, DC 20460, (202) 554-1404. Persons interested in attending the public meeting should notify EPA by telephone on or before April 20, 1988

SUPPLEMENTARY INFORMATION: EPA published a proposed test rule requiring environmental effects and chemical fate testing of OMCTS in the **Federal Register** of October 30, 1985 (50 FR 45123). Since that time, EPA has issued amendments to the procedural regulation in 40 CFR Part 790, which govern the development and implementation of testing requirements under section 4 of TSCA. These amendments establish procedures for using testing consent orders to develop testing requirements under section 4 of the Act

Representatives of manufacturers have proposed performing most of the testing included in the proposed rule under a testing consent order with EPA. EPA has agreed to consider negotiating a consent order that would include appropriate testing of OMCTS. This notice serves three purposes. First, it requires "interested parties" who wish to participate in testing negotiations for OMCTS to identify themselves to EPA. Second, it announces a public meeting to initiate testing negotiations for this chemical. Third, it proposes a target schedule for the development of a consent order.

I. Identification of Interested Parties

Under 40 CFR 790.22, the testing negotiation procedures are initiated by the publication of a **Federal Register** notice which invites persons interested in participating in or monitoring negotiations for the development of a testing consent order to notify the Agency in writing. Those individuals and groups who respond to EPA's notice by the deadline established in the notice will have the status of "interested parties" and will be afforded opportunities to participate in the negotiations process. These "interested parties" will not incur any obligations by being designated "interested parties". The procedures for these negotiations are described in 40 CFR 790.22. Individuals and groups desiring to have the status of "interested parties" in the development of the consent order for OMCTS should submit a written request to the Agency at the address given above on or before April 28, 1988.

II. Public Meeting

A public meeting will be held at 1:00 on April 20, 1988, in Rm. 103, Northeast Mall, EPA Headquarters, 401 M St., SW., Washington, DC to announce EPA's determination of testing needs for OMCTS and to initiate testing negotiations. Persons interested in attending this meeting should notify the EPA TSCA Assistance Office by telephone at the number listed above on or before April 18, 1988.

III. Timetable for Negotiating Test Agreement

In accordance with the procedures for the development of consent orders established in 40 CFR 790.22, and the Agency's plans to propose a test rule for OMCTS by September 30, 1988 (if a consent order cannot be developed in that time), the following target schedule is established for OMCTS:

April 20, 1988—Public meeting to initiate testing negotiations.

April 28, 1988—Deadline for notice of interested party designations.

May 26, 1988—Decision by EPA on whether to use consent order or test rule.

June 23, 1988—Draft consent order sent to interested parties (if EPA decides to use consent order).

September 15, 1988—Issuance of consent order to industry for signatures.

Authority: 15 U.S.C. 2603.

Dated: March 28, 1988.

J. Merenda,

Director, Existing Chemical Assessment Division.

[FR Doc. 88-7637 Filed 4-5-88; 8:45 am]

BILLING CODE 6560-50-M

FEDERAL COMMUNICATIONS COMMISSION

Public Information Collection Requirement Submitted to Office of Management and Budget for Review

March 25, 1988.

The Federal Communications Commission has submitted the following information collection requirement to OMB for review and clearance under the Paperwork Reduction Act of 1980 (44 U.S.C. 3507).

Copies of this submission may be purchased from the Commission's copy contractor, International Transcription Service, (202) 857-3800, 2100 M Street NW., Suite 140, Washington, DC 20037. For further information on this submission contact Terry Johnson, Federal Communications Commission, (202) 632-7513. Persons wishing to comment on this information collection should contact J. Timothy Sprehe, Office of Management and Budget, Room 3235 NEOB, Washington, DC 20503, (202) 395-4814.

OMB Number: None.

Title: Sections 63.801 and 43.61, Regulatory Policies and International Telecommunications.

Action: New collection.

Respondents: Businesses or other for-profit.

Frequency of Response: Quarterly and annually.

Estimated Annual Burden: 68 Responses, 3,400 Hours.

Needs and Uses: Interexchange carriers having more than $100 million in total regulated revenues and Tier 1 local exchange carriers, their holding companies and affiliates are required to file an annual procurement report concerning their purchase of core equipment for the preceding year. Foreign-owned carriers operating domestic long distance services are required to file quarterly revenue and traffic reports on all common carrier services offered within the U.S. The information will be used by the FCC to assess the nature and extent of foreign participation in the core equipment and interexchange services market in the U.S.

Federal Communications Commission.

H. Walker Feaster III,

Acting Secretary.

[FR Doc. 88-7452 Filed 4-5-88; 8:45 am]

BILLING CODE 6712-01-M

[Report No. 1718]

Petitions for Reconsideration of Actions in Rule Making Proceedings

March 28, 1988.

Petitions for reconsideration have been filed in the Commission rule making proceeding listed in this Public Notice and published pursuant to 47 CFR 1.429(e). The full text of these documents are available for viewing and copying in Room 239, 1919 M Street NW., Washington, DC, or may be purchased from the Commission's copy contractor, International Transcription Service (202–857–3800). Opposition to these petitions must be filed on or before April 22, 1988. See § 1.4(b)(1) of the Commission's rules (47 CFR 1.4(b)(1)). Replies to an opposition must be filed with in 10 days after the time for filing oppositions has expired.

Subject: Amendment of § 73.202(b), Table of Allotments, FM Broadcast Stations. (Keokuk, Iowa) MM Docket No. 86–416, RM–5112)

Number of petitions received: 1.

Subject: Amendment of § 73.202(b), Table of Allotments, FM Broadcast Stations. (Glenwood Springs, Colorado) (MM Docket No. 87–174, RM–5465).

Number of petitions received: 1.

Federal Communications Commission.

H. Walker Feaster III,

Acting Secretary.

[FR Doc. 88–7453 Filed 4–5–88;8:45am]

BILLING CODE 6712–01–M

FEDERAL HOME LOAN BANK BOARD

[No. AC–706]

Bankers Federal Savings, FSB, New York, NY; Final Action; Approval of Conversion Application

Date: March 31, 1988.

Notice is hereby given that on March 24, 1988, the Office of General Counsel of the Federal Home Loan Bank Board, acting pursuant to the authority delegated to the General Counsel or his designee, approved the application of Bankers Federal Savings, FSB, New York, New York for permission to convert to the stock form of organization. Copies of the application are available for inspection at the Office of the Secretariat at the Federal Home Loan Bank Board, 1700 G Street, NW., Washington, DC 20552, and at the Office of the Supervisory Agent at the Federal Home Loan Bank of New York, One World Trade Center, Floor 103, New York, New York 10048.

By the Federal Home Loan Bank Board.

John F. Ghizzoni,

Assistant Secretary.

[FR Doc. 88–7517 Filed 4–5–88; 8:45 am]

BILLING CODE 6720–01–M

[No. AC–705; FHLBB Nos. 0010 and 2882]

Safety Federal Savings and Loan Association of Kansas City, Kansas City, MO and Home Savings Association of Kansas City, F.A., Kansas City, MO; Final Action; Approval of Conversion Application

Date: March 29, 1988.

Notice is hereby given that on March 29, 1988, the Federal Home Loan Bank Board, as operating head of the Federal Savings and Loan Insurance Corporation, pursuant to section 5(i) of the Home Owner's Loan Act of 1933, as amended, approved the application of Safety Federal Savings and Loan Association of Kansas City, Kansas City, Missouri ("Safety") and Home Savings Association of Kansas City, F.A., Kansas City, Missouri ("Home"), for permission to convert Safety to the stock form of organization by merging the Association into Home. Copies of the application are available for inspection at the Office of the Secretariat at the Federal Home Loan Bank Board, 1700 G Street, NW., Washington, DC 20552, and at the Office of the Supervisory Agent at the Federal Home Loan Bank of Des Moines, 907 Walnut Street, Des Moines, Iowa 50309.

By the Federal Home Loan Bank Board.

John F. Ghizzoni,

Assistant Secretary.

[FR Doc. 88–7518 Filed 4–5–88; 8:45 am]

BILLING CODE 6720–01–M

FEDERAL RESERVE SYSTEM

Compagnie Financiere De Suez, et al.; Applications To Engage de Novo in Permissible Nonbanking Activities

The companies listed in this notice have filed an application under § 225.23(a)(1) of the Board's Regulation Y (12 CFR 225.23(a)(1)) for the Board's approval under section 4(c)(8) of the Bank Holding Company Act (12 U.S.C. 1843(c)(8)) and § 225.21(a) of Regulation Y (12 CFR 225.21(a)) to commence or to engage *de novo*, either directly or through a subsidiary, in a nonbanking activity that is listed in 225.25 of Regulation Y as closely related to banking and permissible for bank holding companies. Unless otherwise noted, such activities will be conducted throughout the United States.

Each application is available for immediate inspection at the Federal Reserve Bank indicated. Once the application has been accepted for processing, it will also be available for inspection at the offices of the Board of Governors. Interested persons may express their views in writing on the question whether consummation of the proposal can "reasonable be expected to produce benefits to the public, such as greater convenience, increased competition, or gains in efficiency, that outweigh possible adverse effects, such as undue concentration of resources, decreased or unfair competition, conflicts of interests, or unsound banking practices." Any request for a hearing on this question must be accompanied by a statement of the reasons a written presentation would not suffice in lieu of a hearing, identifying specifically any questions of fact that are in dispute, summarizing the evidence that would be presented at a hearing, and indicating how the party commenting would be aggrieved by approval of the proposal.

Unless otherwise noted, comments regarding the applications must be received at the Reserve Bank indicated or the offices of the Board of Governors not later than April 25, 1988.

A. Federal Reserve Bank of New York (William L. Rutledge, Vice President) 33, Liberty Street, New York, New York 10045:

1. *Compagnie Financiere de Suez* and *Banque Indosuez*, both of Paris, France; to engage *de novo* through their subsidiary Indosuez Advisory Services, Inc., in serving as the advisory company for a mortgage or real estate trust and providing portfolio investment advice to other persons, to the extent such activities are permissible nonbanking activities under the provisions under 225.25(b)(4) of the Board's Regulation Y.

B. Federal Reserve Bank of Richmond (Lloyd W. Bostian, Jr., Vice President) 701 East Byrd Street, Richmond, Virginia 23261:

1. *Highlands Bankshares, Inc.*, Petersburg, West Virginia; to engage *en novo* through its subsidiary HBI Life Insurance Company, Phoenix, Arizona, in underwriting credit life and accident and health insurance for all locations of all bank held by the holding company, pursuant to § 225.25(b)(8) of the Board's Regulation Y.

C. Federal Reserve Bank of Atlanta (Robert E. Heck, Vice President) 104 Marietta Street, NW., Atlanta, Georgia 30303:

1. *The Colonial BancGroup, Inc.*, Montgomery, Alabama; to engage *de novo* in performing appraisals of real estate and tangible and intangible personal property, including securities, pursuant to § 225.25(b)(13) of the Board's Regulation Y.

D. Federal Reserve Bank of St Louis (Randall C. Sumner, Vice President) 411 Locust Street, St. Louis, Missouri 63166:

1. *Liberty Financial Services, Inc.* ("Company), Louisville, Kentucky; to engage *de novo* in (1) making, acquiring, or servicing loans and other extensions of credit for Company's account and for the account of others, pursuant to § 225.25(b)(1) of the Board's Regulation Y; and (2) operating an industrial loan company under Tennessee State law, pursuant to § 225.25(b)(2) of the Board's Regulation Y.

E. Federal Reserve Bank of San Francisco (Harry W. Green, Vice President) 101 Market Street, San Francisco, California 94105:

1. *Banque National de Paris*, Paris, France; to enagage *de novo* through its subsidiary BNP Leasing Corporation, Dallas Texas; in making, acquiring or servicing loans or other extensions of credit (including issuing letters of credit and accepting drafts) for the company's account or for the account of others, such as would be made by a commercial finance or factoring company § 225.25(b)(1)) and leasing personal property or acting as agent, broker or adviser in leasing such property, provided that all such leasing shall company with § 225.25(b)(5) of the Board's Regulation Y.

Board of Governors of the Federal Reserve System, March 31, 1988.

James McAfee,

Associate Secretary of the Board.

[FR Doc. 88-7455 Filed 4-5-88; 8:45 am]

BILLING CODE 6210-01-M

Change in Bank Control; Acquisitions of Shares of Banks or Bank Holding Companies; Bruce G. Lifton, et al.

The notificants listed below have applied under the Change in Bank Control Act (12 U.S.C. 1817(jj)) and § 225.41 of the Board's Regulation Y (12 CFR 225.41) to acquire a bank or bank holding company. The factors that are considered in acting on the notices are set forth in paragraph 7 of the Act (12 U.S.C. 1817(j)(7)).

The notices are available for immediate inspection at the Federal Reserve Bank indicated. Once the notices have been accepted for processing, they will also be available for inspection at the offices of the Board of Governors. Interested persons may express their views in writting to the Reserve Bank indicated for that notice or to the offices of the Board of Governors. Comments must be received not later than April 29, 1988.

A. Federal Reserve Bank of New York (William L. Rutledge, Vice President) 33 Liberty Street, New York, New York 10045:

1. *Bruce G. Lifton*, East Hills, New York; to acquire 24.38 percent of the voting shares of Great Neck Bancorp, Great Neck, New York, thereby indirectly acquire Bank of Great Neck, Great Neck, New York.

2. *Elinor Lifton*, East Hills, New York; to acquire 24.38 percent of the voting shares of Great Neck Bancorp, Great Neck, New York, thereby indirectly acquire Bank of Great Neck, Great Neck, New York.

3. *Judie B. Lifton, West Hills, New York; to acquire 24.38 percent of the voting shares of Great Neck Bancorp, Great Neck, New York, thereby indirectly acquire Bank of Great Neck, Great Neck, New York.*

4. *Martin Lifton*, East Hills, New York; to acquire 24.38 percent of the voting shares of Great Neck Bancorp, Great Neck, New York, thereby indirectly acquire Bank of Great Neck, Great Neck, New York.

5. *Steven J. Lifton*, East Hills, New York; to acquire 24.38 percent of the voting shares of Great Neck Bancorp, Great Neck, New York, thereby indirectly acquire Bank of Great Neck, Greant Neck, New York.

B. Federal Reserve Bank of Kansas City (Thomas M. Hoenig, Vice President) 925 Grand Avenue, Kansas City, Missouri 64198:

1. *Charles Travis Henderson*, Oklahoma City, Oklahoma; to acuire an additional 95.65 percent of the voting shares of Allied Oklahoma Boncorporation, Inc., Oklahoma City, Oklahoma, thereby indirectly acquire Allied Oklahoma Bank, N.A. Oklahoma City, Oklahoma.

2. *Dennis J. O'Neal* Holyoke, Colorado; to acquire an additional 2.34 percent of the voting shares of Holyoke Bancorp, Inc., Holyoke, Colorado, thereby indirectly acquire Security National Bank, Holyoke, Colorado.

3. *Thomas Derald Sweneford*, Gunnison, Colorado; to acquire 18.6 percent of the voting shares of Gunnison Bank Holding Corporation, Gunnison, Colorado, thereby indirectly acquire Gunnison Bank and Trust Company, Gunnison, Colorado.

4. *Peter D. Van Dorn*, Broomfield, Colorado; to acquire 18.6 percent of the voting shares of Gunnison Bank Holding Corporation, Gunnison, Colorado, thereby indirectly acquire Gunnison Bank and Trust Company, Gunnison, Colorado.

5. *Travis L. Waller*, Pueblo West, Colorado; to acquire an additional 19.19 percent of the voting shares of Bank of Southern Colorado, Pueblo West, Colorado (a state member bank).

C. Federal Reserve Bank of Minneapolis (James M. Lyon, Vice President) 250 Marguete Avenue, Minneapolis, Minnesota 55480:

1. *Laurel Fait*, Sioux Falls, South Dakota; to retain 47 percent of the Investment Corporation of America, Sioux Falls, South Dakota, thereby indirectly retain The Peoples Bank, Conde, South Dakota.

Board of Governors of the Federal Reserve System, March 31, 1988.

James McAfee,

Associate Secretary of the Board.

[FR Doc. 88-7456 Filed 4-5-88; 8:45 am]

BILLING CODE 6210-01-M

Newmil Bancorp, Inc., et al.; Formations of; Acquisitions by; and Mergers of Bank Holding Companies

The companies listed in this notice have applied for the Board's approval under section 3 of the Bank Holding Company Act (12 U.S.C. 1842) and § 225.14 of the Board's Regulation Y (12 CFR 225.14) to become a bank holding company or to acquire a bank or bank holding company. The factors that are considered in acting on the applications are set forth in section 3(c) of the Act (12 U.S.C. 1842(c)).

Each application is available for immediate inspection at the Federal Reserve Bank indicated. Once the application has been accepted for processing, it will also be available for inspection at the offices of the Board of Governors. Interested persons may express their views in writing to the Reserve Bank or to the offices of the Board of Governors. Any comment on an application that requests a hearing must include a statement of why a written presentation would not suffice in lieu of a hearing, indentifying specifically any questions of fact that are in dispute and summarizing the evidence that would be presented at a hearing.

Unless otherwise noted, comments regarding each of these applications must be received not later than April 28, 1988.

A. Federal Reserve Bank of Boston (Robert M. Brady, Vice President) 600 Atlantic Avenue, Boston, Massachusetts 02106:

1. *NewMil Bancorp, Inc.*, New Milford, Connecticut; to acquire 6.97 percent of

the voting shares of Cenvest, Inc., Meriden, Connecticut, thereby indirectly acquire Central Bank, Meriden, Connecticut.

2. *NewMil Bancorp, Inc.*, New Milford, Connecticut; to acquire 7.68 percent of the voting shares of West Mass Bankshares, Greenfield, Massachusetts, thereby indirectly acquire United Savings Bank, Conway, Massachusetts.

B. Federal Reserve Bank of New York (William L. Rutledge, Vice President) 33 Liberty Street, New York, New York 10045:

1. *North Fork Bancorporation, Inc.*, Mattituck, New York, to acquire 100 percent of the voting shares of Southold Savings Bank, Southold, New York. Bank operates an insurance agency subsidiary and a savings bank life insurance department.

C. Federal Reserve Bank of Philadelphia (Thomas K. Desch, Vice President) 100 North 6th Street, Philadelphia, Pennsylvania 10105:

1. *UNB Corporation*, Mount Carmel, Pennsylvania; to become a bank holding company by acquiring 100 percent of the Voting shares of the Union National Bank of Mount Carmel, Mount Carmel, Pennsylvania.

D. Federal Reserve Bank of St. Louis (Randall C. Sumner, Vice President) 411 Locust Street, St. Louis, Missouri 63166:

1. *DSB Bancshares, Inc.*, Dermott, Arkansas; to become a bank holding company by acquiring at least 80 percent of the voting shares of Dermott State Bank, Dermott, Arkansas.

E. Federal Reserve Bank of Dallas (W. Arthur Tribble, Vice President) 400 South Akard Street, Dallas, Texas 75222:

1. *First Parker Bancshares, Inc.*, Weatherford, Texas; to become a bank holding company by acquiring 99.85 percent of the voting shares of Weatherford Bancshares, Inc., Weatherford, Texas, thereby indirectly acquire The First National Bank of Weatherford, Weatherford, Texas.

2. *First Jacksboro Banchares of Delaware, Inc.*, Wilmington, Delaware; to become a bank holding company by acquiring 99.80 percent of the voting shares of the First National Bank of Jacksboro, Jacksboro, Texas.

3. *First Weatherford Bancshares, Inc.*, Weatherford, Texas; to become a bank holding company by acquiring 99.30 percent of the voting shares of the First National Bank of Weatherford, Weatherford, Texas.

F. Federal Reserve Bank of San Francisco (Harry W. Green, Vice President) 101 Market Street, San Francisco, California 94105:

1. *U.S. Bancorp*, Portland, Oregon, to acquire 100 percent of the voting shares of Mt. Baker Bank, A Savings Bank, Bellingham, Washington.

Board of Governors of the Federal Reserve System, March 31, 1988.

James McAfee,

Associate Secretary of the Board.

[FR Doc. 88-7457 Filed 4-5-88; 8:45 am]

BILLING CODE 6210-01-M

Norwest Corporation; Acquisition of Company Engaged in Permissible Nonbanking Activities

The organization listed in this notice has applied under § 225.23(a)(2) or (f) of the Board's Regulation Y (12 CFR 225.23(a)(2) or (f)) for the Board's approval under section 4(c)(8) of the Bank Holding Company Act (12 U.S.C 1843(c)(8)) and section 225.21(a) of Regulation Y (12 CFR 225.21(a)) to acquire or control voting securities or assets of a company engaged in a nonbanking activity that is listed in § 225.25 of Reguation Y as closely related to banking and permissible for bank holding companies. Unless otherwise noted, such activities will be conducted throughout the United States.

The application is available for immediate inspection at the Federal Reserve Bank indicated. Once the application has been accepted for processing, it will also be available for inspection at the offices of the Board of Governors. Interested persons may express their views in writing on the question whether consummation of the proposal can "reasonably be expected to produce benefits to the public, such as greater convenience, increased competition, or gains in efficiency, that outweigh possible adverse effects, such as undue concentration of resources, decreased or unfair competition, conflicts of interests, or unsound banking practices." Any request for a hearing on this question must be accompanied by a statement of the reasons a written presentation would not suffice in lieu of a hearing, identifying specifically any questions of fact that are in dispute, summarizing the evidence that would be presented at a hearing, and indicating how the party commenting would be aggrieved by approval of the proposal.

Comments regarding the application must be received at the Reserve Bank indicated or the offices of the Board of Governors not later than April 21, 1988.

A. Federal Reserve Bank of Minneapolis (James M. Lyon, Vice President) 250 Marquette Avenue, Minneapolis, Minnesota 55480:

1. *Norwest Corporation*, Minneapolis, Minnesota; to acquire through its wholly-owned subsidiary, Norwest Mortgage, Inc., certain assets, including eleven residential mortgage loan origination offices located in Ohio, of Magnet Mortgages, Inc., a corporation engaged in the general mortgage banking business. Upon consummation of this transaction, Norwest Mortgage, Inc. will engage in general mortgage banking activities and in the underwriting and dealing in bank-eligible securities pursuant to §§ 225.25(b)(1) and 225.25(b)(16) of the Board's Regulation Y.

Board of Governors of the Federal Reserve System, March 31, 1988.

James McAfee,

Associate Secretary of the Board.

[FR Doc. 88-7458 Filed 4-5-88; 8:45 am]

BILLING CODE 6210-01-M

DEPARTMENT OF HEALTH AND HUMAN SERVICES

Health Resources and Services Administration

Public Health Service; Availability of Funds for Community and Migrant Health Centers Activities Including Special Infant Mortality Reduction Program

AGENCY: Health Resources and Services Administration, HHS.

ACTION: Notice.

SUMMARY: The Health Resources and Services Administration (HRSA) is announcing, for Fiscal Year (FY) 1988: (1) The availability of approximately $383 million for community health center (CHC) activities and approximately $43.5 million for migrant health center (MHC) activities funded under sections 330 and 329 of the Public Health Service Act (42 U.S.C. 254c and 254b, respectively) for current service capacity; (2) the availability of approximately $19M for CHCs and $1M for MHCs to undertake new activities designed to reduce infant mortality; and (3) the criteria that will be used in evaluating applications for FY 1988 funding. Within the aforementioned section 330 current service capacity funding, the following will occur: (1) Funds will be provided to maintain or expand the provision of essential services by existing grantees that are performing according to program requirements; (2) Approximately $3 million will be provided to award grants to provide technical and other non-financial assistance under section 330(f)(1) of the Act; (3) Approximately $1.8 million will be provided to support

substance abuse activities and linkages for the provision of substance abuse prevention, treatment, referral and/or followup; and (4) Limited funds will be provided to expand the range of services at existing access points.

DATE: Applications for funds to maintain the provision of essential services by existing grantees are generally due 120 days prior to the expiration of the current grant award. Proposals for the infantry mortality reduction funds must be received no later than June 1, 1988.

FOR FURTHER INFORMATION CONTACT: Application kits for and additional information on current services grant funds and deadline dates may be obtained from, and completed applications should be sent to, the appropriate Regional Health Administrator (see Appendix). For general information about the availability of funds and information on funding for infant mortality reduction activities, contact Richard C. Bohrer, (301) 443-2260.

SUPPLEMENTARY INFORMATION:

Criteria for Evaluating Competing and Noncompeting C/MHC Applications

As is the practice every year, when determining whether Federal support will be made available, the Department will review C/MHCs for compliance with standard criteria stipulated in the regulations (42 CFR Part 51c for CHC and Part 56 for MHC Activities) and, if applicable, their use of previously awarded sections 330 and 329 funds. This year's reviews again will emphasize community need, clinical, governance, and financial/administrative expectations as set out below:

(a) Community Need (42 CFR 51c.104(b), 51c.305(b) and 56.104(b))

Because of limited grant funds, it is particularly important that C/MHCs assess the current needs of their service populations. Grant applicants must include the results of an assessment of the need for their services. This assessment must take into account the health status and demograhic characteristics of the population to be served and identify the extent to which the center is currently providing care to the needy population in its service area. In order to make relative need determinations, the Department will consider the results of the assessment along with other relevant factors. In addition, the applications must include a description of the needs of special population groups for whom the centers are the primary care providers, such as the homeless, AIDS patients, and substance abusers. Specific mention should be made of how their care has been integrated into the centers' overall health care plans.

(b) Clinical (42 CFR 51c.102(c)(1)(i), 51c.303(a) and (p), 56.303(a) and (p), 56.603(a) and (n), and 56.102(g)(1)(i))

C/MHCs must provide high quality primary health care services to medically disadvantaged and underserved populations in their communities recognizing that people progress through five stages of life: Prenatal, pediatric, adolescent, adult, and geriatric. A service area health care plan addressing each stage of the life cycle must be developed for the purpose of directing the delivery of services. The plan must be based on a needs/demand assessment of the community, provide for an ongoing quality assurance program, and include a method for evaluating its goals and objectives. The role and responsibility of the clinical director should be addressed with particular attention placed on the clinical director's responsibility for leading the clinical team and conducting the quality assurance program.

(c) Governance (42 CFR 51c.304 and 56.304)

Each governing board must represent the population of the catchment area, with center users comprising a majority of membership of the board. Governing boards are expected to be representative of and responsive to the communities they serve, fulfilling all of the functions and responsibilities specified in the legislation and implementing regulations.

(d) Financial/Administrative (42 CFR 51c.303(g), 56.303(r) and (s), and 56.305(a)(3))

C/MHCs and programs must seek to develop and utilize to the greatest extent possible other public and private resources, and must seek to maximize non-grant revenues. In considering which projects to fund, we will assess applicants' plans to minimize dependence upon and need for subsequent C/MHC grants. Priority will be given to centers that demonstrate use of combined resources in coordinated health care service delivery. We will consider the extent to which applicants seeking expansion funds have or plan to develop cooperative linkages and arrangements with other health care organizations, such as through rural consortia and urban networks. See 42 CFR 51c.305(i) and (j), 56.305(a)(6) and (7) and 56.604(a)(2)(iii) and (iv).

To determine each grantee's level of funding, we will review its entire section 330 and/or 329 financed program using a zero-based assessment process. These assessments will be used to ascertain the need for the services and assure that costs of providing the services and revenues generated are acceptable. The reviews will incorporate all of the considerations listed in 42 CFR 51c.305 for CHC grantees and 42 CFR 56.305 or 56.604, as appropriate, for MHC grantees, analyzing: (1) The population to be served; (2) the services to be provided; and (3) the first and third party revenues which can be expected to be generated in that community and State for the services provided.

Proposals for the expansion of activities of existing grantees may incldue, but are not limited to, the establishment of satellite clinics, the expansion of service capacity, and related activities directed toward the expansion and the improvement of the delivery of services, such as improved financial management, planning, marketing, and outreach activities. Expansion dollars will fund specific investments in capital, prepaid or other activities that are both significant components of strategic plans and mutual Bureau of Health Care Delivery and Assistance, State, local and grantee priorities.

Eligibility and Criteria for Evaluating Applications To Provide Technical and Other Non-Financial Assistance Under Section 330(f)(1)

Eligibility to receive funds under this category is based on the provisions of section 330(f)(1) of the PHS Act, authorizing awards to entities which will provide a broad range of technical assistance to CHC/MHCs. A full explanation of the basis on which applications will be reviewed is included in the **Federal Register** Notice, Volume 50, July 8, 1985, page 27851, which will also be included in application kits. In addition, the performance of grant recipients in using previously awarded section 330(f)(1) funds will be considered in determining whether Federal support will be made available to continuation applicants.

Criteria for Evaluating Requests for Funding of Substance Abuse Activities

A full explanation of the basis on which applications will be reviewed is included in the **Federal Register** Notice, Volume 52, Number 64, Friday, April 3, 1987, page 10822, which will also be incldued in the application kits. In addition, the performance of grant recipients in using previously awarded substance abuse funds will be considered in determining whether

Federal support will be made available to continuation applicants.

Criteria for Evaluating Applications for Infant Mortality Reduction Activities

The following will be considered when each proposal is reviewed and evaluated:

• Evidence that the center has demonstrated the ability to conduct an effective perinatal care program serving high-risk women, infants, and children.

• The extent to which the center has documented the unmet need for prenatal, neonatal and infant care of residents of its community. The center should demonstrate its knowledge of other resources available in its community, region, and State to serve high-risk, low income pregnant women and infants, and the extent to which these other providers are serving this population.

• The adequacy and feasibility of the health care plan and new or expanded efforts proposed to meet the needs of the population and to improve pregnancy outcomes by reducing the incidence of infant mortality and morbidity. Particular attention will be focused on the applicant's ability to integrate a case management approach to perinatal care into its overall care delivery program.

• The extent to which the center is part of a system of care within its own community and/or region and has established linkages with referral sources and relevant organizations to supplement its own capacity. A center's ongoing objective must be to increase patient access to services that the State MCH program provides and to State Medicaid benefits, including improved benefits available under the Omnibus Budget Reconciliation Acts of 1986 and 1987.

• The adequacy of the center's plan to evaluate the results of the new activity in terms of improved health status.

• The appropriateness of the proposed budget for this initiative.

Executive Order 12372

All grants to be awarded under this notice are subject to the provisions of Executive Order 12372, as implemented by 45 CFR Part 100, which allows States the option of setting up a system for reviewing applications from within their States for assistance under certain Federal programs. The application packages to be made available by DHHS (standard DHHS Form No. 424 which has been approved under OMB Control No. 0348-0006) will contain a listing of States which have chosen to set up such a review system and will provide a point of contact in the States for that review. Applicants are to contact their State single point of contact and follow their instructions for the review of applications.

In the OMB Catalog of Federal Domestic Assistance, the Community Health Center program is listed as Number 13.224; the Migrant Health Center program is Number 13.246; and the Technical and Other Non-financial Assistance to Community Health Centers in Number 13.129.

Dated: March 4, 1988.

David N. Sundwall,

Administrator.

Appendix—Regional Health Administrators

Edward J. Montminy, Regional Health Administrator, DHHS-Region I, John F. Kennedy Federal Building, Boston, Massachusetts 02203, (617) 565-1420

Vivian Chang, M.D., Regional Health Administrator, DHHS-Region II, 26 Federal Plaza, New York, New York 10278, (212) 264-2560

William Lassek, M.D., Regional Health Administrator, DHHS-Region III, P.O. Box 13716, Philadelphia, Pennsylvania 19101, (215) 596-6637

John Whitney, Acting Regional Health Administrator, DHHS-Region IV, 101 Marietta Tower, Suite 1202, Atlanta, Georgia 30323, (404) 331-2316

E. Frank Ellis, M.D., Regional Health Administrator, DHHS-Region V, 300 South Wacker Drive, Chicago, Ilinois 60606, (312) 353-1385

John M. Dyer, M.D., Regional Health Administrator, DHHS-Region VI, 1200 Main Tower Building, Dallas, Texas 75202, (214) 767-3879

Mr. Youn Bock Rhee, Regional Health Administrator, DHHS-Region VII, 601 East 12th Street, Kansas City, Missouri 64106, (816) 374-3291

Audrey H. Nora, M.D., Regional Health Administrator, DHHS-Region VIII, 1961 Stout Street, Denver, Colorado 80294, (303) 844-6163

Sheridan L. Weinstein, Regional Health Administrator, DHHS-Region IX, 50 United Nations Plaza, San Francisco, California 94102, (415) 556-5810

Ms. Dorothy H. Mann, Regional Health Administrator, DHHS-Region X, 2901 Third Avenue, Mail Stop 501, Seattle, Washington 98121, (206) 442-0430.

[FR Doc. 88-7461 Filed 4-5-88; 8:45 am]

BILLING CODE 4150-15-M

Health Resources and Service Administration

Public Health Service; Program Announcement and Funding Preferences for Grants for Geriatric Education Centers

The Health Resources and Services Administration announces the acceptance of applications for Fiscal Year 1988 Grants for Geriatric Education Centers under the authority of section 788(d) of the Public Health Service Act, as amended by Pub. L. 99-129 and section 301 of the PHS Act, as appropriated under Pub. L. 100-202.

It is expected that approximately $500,000 will be available to support two or three approved proposals submitted in response to this announcement.

The grant requirements and review procedures were published in the **Federal Register** of November 12, 1987 (FR 43399). Grants may be awarded to support the improvement and development of organizational arrangements called Geriatric Education Centers focused on strengthening and coordinating multidisciplinary training in geriatric health care involving several health professions. These centers are established to facilitate training of medical, dental, optometric, pharmacy, podiatric, nursing, and appropriate allied health and public health faculty, students, and practitioners in the diagnosis, treatment and prevention of diseases and other problems of the aged.

To be eligible for a grant under section 788(d) of the PHS Act, the applicant must meet the requirements of a health professions school as defined by section 701(4), program for the training of physician assistants as defined in section 701(8) or a school of allied health as defined in section 701(10). Applicants conducting projects to be administered in other types of organizational settings will be considered for geriatric education center grants under section 301 of the PHS Act.

Applicants must be located in the United States, the Commonwealth of Puerto Rico, the Commonwealth of the Northern Mariana Islands, the Virgin Islands, Guam, American Samoa, the Trust Territory of the Pacific Islands (the Republic of Palau), the Republic of the Marshall Islands, or the Federated States of Micronesia.

Functioning within a defined geographic area, which may be a metropolitan area, a State or portion thereof, or an area including all or part of two or more States, a Geriatric Education Center provides the health professions educational community

within the area with multidisciplinary services which:

(a) Improve the training of health professionals in geriatrics;

(b) Develop and disseminate curricula relating to the treatment of the health problems of elderly individuals;

(c) Expand and strengthen instruction in methods of such treatment;

(d) Support the training and retraining of faculty to provide such instruction (other than training and retraining of faculty of schools of medicine and osteopathy);

(e) Support continuing education of health professionals and allied health professionals who provide such treatment; and

(f) Establish new affiliations with nursing homes, chronic and acute disease hospitals, ambulatory care centers, and senior centers in order to provide students with clinical training in geriatric medicine.

Questions concerning the programmatic aspects of grants should be directed to: Geriatric Program Representative, Division of Associated and Dental Health Professions, Bureau of Health Professions, Health Resources and Services Administration, 5600 Fishers Lane, Room 8-103, Rockville, Maryland 20857, Telephone: (301) 443-0887.

Grant application materials will be provided upon request. Requests for application materials and questions regarding grants policy should be directed to: Grants Management Officer (D-31), Bureau of Health Professions, Health Resources and Services Administration, 5600 Fishers Lane, Room 8C-22, Rockville, Maryland 20857, Telephone: (301) 443-6880.

The standard application, Form PHS 6025-1, HRSA Competing Training Grant Application, General Instructions and supplement for this program, have been approved by the Office of Management and Budget under the Paperwork Reduction Act. The OMB clearance number is 0915-0060.

The application deadline is June 6, 1988. Applications will be considered as meeting the deadline if they are either:

1. *Received* on or before the deadline date, or

2. *Postmarked* on or before the deadline and received in time for submission to the independent review group. A legibly dated receipt from a commercial carrier of the U.S. Postal Service will be accepteed in lieu of a postmark. Private metered postmarks shall not be acceptable as proof of timely mailing. Applications received after the deadline will be returned to the applicant.

Final funding preferences were published in the **Federal Register** of February 18, 1988 (FR 4894) and are listed below. A funding preference will be given to applications from existing Geriatric Education Centers which have trained substantial numbers of health professions faculty and satisfactorily address the program priorities listed below. Among proposals for new geriatric education centers, preference will be given to applications which satisfactorily address the program priorities addressed below. All applications, however, will be reviewed and given consideration for funding.

(1) Projects which will provide training for faculty from four or more health professions, at least one of which must be allopathic or osteopathic medicine, with respect to the treatment of health problems of the elderly by multidisciplinary teams of health professionals. A retraining program for faculty in schools of medicine and osteopathy in geriatrics or a one-year or two-year internal medicine or family medicine fellowship program as identified in section 788(e)(3) of the Act is not eligible under section 788(d) of the PHS Act and does not qualify for this funding preference.

(2) Projects which currently have or plan to provide for a high degree of areawide collaboration as evidenced by:

(a) Significant multidisciplinary health care educational activities;

(b) Letters of agreement or assurance, among participating entities, such as professional schools, teaching facilities and other clinical sites, professional associations, and State and local health agencies; and

(c) Organizational or other arrangements for participation by the social and behavioral sciences disciplines;

(3) Preference will be given to applicants from institutions that demonstrate a commitment to increase minority participation in their program, show evidence of efforts to recruit minority faculty participants, or demonstrate substantial benefit from the project to disadvantaged population groups in primary medical care manpower shortage area(s) designated under section 332 of the Public Health Service Act.

After a peer review group composed principally of non-Federal experts makes recommendation concerning each application, the Secretary will consult with the National Advisory Council on Health Professions Education with respect to such applications. The following factors listed in 42 CFR 57.3905 will be considered, among other factors, in the review of applications.

(1) The degree to which the proposed project adequately provides for the project requirements described in 42 CFR 57.3904;

(2) The adequacy of the qualifications and experience of the staff and faculty;

(3) The administrative and managerial ability of the applicant to carry out the proposal in a cost-effective manner; and

(4) The protential of the project to continue on a self-sustaining basis.

In determining projects to be funded from among applicants recommended for approval, including those assigned a funding preference, the Secretary, after consultation with the National Advisory Council on Health Professions Education, may give consideration to the geographic location of the project in relation to other Geriatric Education Centers funded or to be funded by this grant program and to regional and areawide needs.

This program is listed at 13.969 in the *Catalog of Federal Domestic Assistance.* It is not subject to the provisions of Executive Order 12372, Intergovernmental Review of Federal Programs (as implemented through 45 CFR Part 100).

Dated: March 31, 1988.

David N. Sundwall,

Administrator, Assistant Surgeon General.

[FR Doc. 88-7527 Filed 4-5-88; 8:45 am]

BILLING CODE 4160-15-M

Public Health Service

Office of the Assistant Secretary for Health; Statement of Organization, Functions and Delegations of Authority

Part H, Public Health Service (PHS), Chapter HA (Office of the Assistant Secretary for Health) of the Statement of Organization, Functions and Delegations of Authority for the Department of Health and Human Services (DHHS) (42 FR 61318, as amended most recently at 53 FR 5321-5322, February 23, 1988) is amended to reflect establishment of a new Division of PHS Budget within the Office of Resource Management, Office of Management, Office of the Assistant Secretary for Health (OASH), and to make other changes within the Office of Management to reflect more accurately the current responsibilities of the Office of Management.

Office of the Assistant Secretary for Health

Under *Chapter HA, Office of the Assistant Secretary for Health, Section HA.20, Functions, Office of Management (HAU), Office of Resource Management*

(HAU4), after the statement for *Divison of Health Facilities Planning (HAU43)* add the following title and statement:

Division of PHS Budget (HAU44) The Director of the Division of PHS Budget serves as the principal advisor in the area of the PHS budget activities.

The division: (1) Provides recommendations to the Director, Office of Resource Management, Office of Management, and the Deputy Assistant Secretary for Health Operations, on PHS budget priorities, proposals, allocations and budgetary activities; (2) provides guidance and instructions to PHS components in budget preparations and allocations; (3) provides technical assistance to PHS agencies, initiates and provides recommendations on reprogramming; (4) prepares material and briefs the ASH for discussions with the Secretary, the Assistant Secretary for Management and Budget, the Office of Management and Budget and committee staff; (5) prepares testimony for ASH before Congress; (6) analyzes and assesses agency programs related to budgetary implications and program objectives; (7) operates the Budget Information System; (8) manages a system of budget apportionment and review; (9) provides recommendations on budgetary implications of legislative proposals; (10) maintains liaison with the Office of the Secretary and the Office of Management and Budget, and (11) coordinates, analyzes and prepares reports for intra- and interagency resource allocations and utilization.

Under the statement for the Division of Financial Management (HAU41), delete the last line of the statement "and maintains liaison with the Office of the Secretary and the Office of Management and Budget," and add the following to the end of the statement: "serves as principal advisor within PHS for developing policies, guidelines and procedures in the area of cost and audit management; and maintains liaison with the Office of the Secretary and the Office of Management and Budget."

Under the statement for the Division of Grants and Contracts (HAU42), delete the first two lines of the statement, "In the area of grants, procurement, and cost management," and add the following: "In the area of grants and procurement,"

At the end of the statement for the Division of Grants and Contracts (HAU42), delete the line "and prepares reports as required." and add "manages a total PHS claims program (i.e., investigation, evaluation and recommendation for disposition of a wide variety of claims, etc.); administers debt management activities; and prepares reports as required."

Under the title and statement for the Administrative Services Center (HAU1), Division of Administrative Operations (HAU15), delete from the statement, the function "providing a total PHS claims program (i.e., investigation, evaluation and recommendation for disposition of a wide variety of claims, etc.);

Dated: March 25, 1988.

Robert E. Windom,

Assistant Secretary for Health.

[FR Doc. 88-7488 Filed 4-5-88; 8:45 am]

BILLING CODE 4160-17-M

DEPARTMENT OF THE INTERIOR

Bureau of Indian Affairs

Indian Health Service; National Oversight Committee on Child Protection; Meeting

March 30, 1988.

Time and Date: 9:00 a.m. to 4:00 p.m., April 11-14, 1988.

Place: Department of the Interior; Main Interior Building, Room B-270.

Status: Open. Attendees should preregister by 4:00 p.m. of April 10, 1988 by calling (202) 343-6434, to insure entrance into the building as the meeting room is located in a government secured facility.

Matters to be Considered: The purpose of the meeting will be to discuss, update and work on specific activities and tasks related to Indian child protection issues previously identified by the oversight committee. This information will be available to non-committee members at the meeting or will be mailed upon request prior to the meeting. The committee will also discuss the national conference, "Promoting Child Protection In Indian Country," for June 28-30, 1988, in Green Bay, Wisconsin.

Contact Person for More Information: Louise Zokan—Delos Reyes, Chief, Branch of Child and Family Services, Division of Social Services, Bureau of Indian Affairs, (202) 343-6435.

Ross O. Swimmer,

Assistant Secretary, Indian Affairs.

[FR Doc. 88-7448 Filed 4-5-88; 8:45 am]

BILLING CODE 4310-02-M

Bureau of Land Management

[NM-010-3110-10-7202, NM 68533); 8-00153-I-LM-NM-010-GP8-0116]

Albuquerque District, NM; Realty Action of Proposed BLM/State Land Exchange in Cibola, Valencia, Bernalillo and Socorro Counties, NM; Correction

AGENCY: Bureau of Land Management (BLM), Interior.

ACTION: Corretion. Notice of Realty Action on Proposed BLM/State Land Exchange (NM 68533).

SUMMARY: In FR Doc. 88-4827 appearing in page 7404 in the issue of Tuesday, March 8, 1988, make the following correction: Under T. 4N., R. 9W., the entry for "Sec. 6" should read Lots 1, 2, 4, 5.

Michael F. Reitz,

Associate District Manager.

[FR Doc. 88-7472 Filed 4-5-88; 8:45 am]

BILLING CODE 4310-FB-M

[UT-060-06-4410-08]

Utah; Propane Resources Management Plan, San Juan Area

AGENCY: Bureau of Land Management, Utah, Interior.

ACTION: Notice of further review and comment of the San Juan Resource Area Proposed Resource Management Plan.

SUMMARY: As a result of the public review and protest process of the Final Environmental Impact Statement and Proposed Resource Management Plan (FEIS/PRMP) for the San Juan Resource Area in Utah, the Bureau of Land Management (BLM) has decided to obtain further review and public input on the document.

In order to aid in this review of the Proposed Resources Management Plan, the Moab District Manager will be accepting comments on the proposed plan until June 13, 1988. No specific form or format is required, but comments shall be sent to: District Manager, Bureau of Land Management, 82 East Dogwood, Moab, Utah 84532.

All protests and comments that have been received and all new comments will be incorporated into the review and will become part of the record. Upon completion of the review and reconsideration, another opportunity to protest the plan will be provided before the plan is approved.

FOR FURTHER INFORMATION CONTACT: Daryl Trotter, Moab District, Bureau of Land Management, 82 East Dogwood, Moab, Utah 84532; (801) 259-6111. Copies of the proposed San Juan RMP are available for review nationwide at Depository Libraries and in all BLM offices within Utah.

Dated: March 30, 1988.

Kemp Conn,

Acting State Director.

[FR Doc. 88-7477 Filed 4-5-88; 8:45 am]

BILLING CODE 4310-DQ-M

[AZ-050-08-4830-02]

Arizona; Yuma District Advisory Council Meeting

AGENCY: Bureau of Land Management, Interior.

ACTION: Yuma (Arizona) District Advisory Council Meeting and Field Tour.

SUMMARY: A meeting and field tour of the Yuma District Advisory Council will occur on Friday, May 6, 1988. Council members will meet briefly at 9 a.m. at Havasu Springs Resort located off Highway 95 on Lake Havasu, approximately ½ mile north of Parker Dam, Arizona. At approximately 9:15 a.m., the Council will leave on a field tour of the Bill Williams River. At approximately 1 p.m., the Council will hold a regular meeting at the Havasu Springs Restaurant.

DATE: Friday, May 6, 1988.

FOR FURTHER INFORMATION CONTACT: Douglas B. Stockdale, Yuma District Office, 3150 Winsor Avenue, Yuma, Arizona 85365, 602-726-6300.

SUPPLEMENTARY INFORMATION: During the regular Council meeting, the Bill Williams River tour will be summarized, and District and Resource Area program updates will be discussed. Additional agenda topics will include an update on Wilderness, a review of the District's leases, a review of the 1988 Quartzsite Pow Wow and Parker-SCORE 400, a review of the Wild Horse and Burro Program including adoptions, an update on water transfer bills, and other Council initiated business. The public is invited to attend the tour and the meeting, but must furnish their own transportation. Written statements from the public may be filed for the Council's consideration. Statements must arrive at the Yuma District Office by April 30, 1988. Oral statements will also be accepted, but depending on the number of persons wishing to address the Council, a per person time limit may be imposed.

Summary minutes of the District Advisory Council meeting will be maintained in the Yuma District Office, and will be available for inspection and reproduction during regular business hours (7:45 a.m. through 4:30 p.m.) within 30 days of the meeting.

Robert V. Abbey

Acting District Manager.

Dated: March 28, 1988.

[FR Doc. 88-7492 Filed 4-5-88; 8:45 am]

BILLING CODE 4310-32-M

Fish and Wildlife Service

Information Collection Submitted to the Office of Management and Budget for Review Under the Paperwork Reduction Act

The proposal for the collection of information listed below has been submitted to the Office of Management and Budget (OMB) for approval under the provisions of the Paperwork Reduction Act (44 U.S.C. Chapter 35). Copies of the proposed information collection requirement and related forms and explanatory material may be obtained by contacting the Service's clearance officer at the phone number listed below. Comments and suggestions on the requirement should be made directly to the Service Clearance Officer and the OMB Interior Desk Officer, Washington, DC 20503, telephone 202-395-7340.

Title: Taking of Marine Mammals Incidental to Commercial Fishing Operations; Small Take Exemption

Abstract: The Marine Mammal Protection Act (Act), as amended in 1981, provides guidelines for the establishment of a cooperative system among fishermen in Alaska for the monitoring of incidental takes of small numbers of non-depleted species or stocks of marine mammals while engaged in commercial fishing. The information collected will be used by the Service to issue Letters of Exemption.

Service Form Number(s): N/A

Frequency: Annually

Description of Respondents: Individuals or households; small businesses; State and local governments

Annual Responses: 205

Annual Burden Hours: 102

Service Clearance Officer: James E. Pinkerton, 202-653-7500, Room 859, Riddell Building, U.S. Fish and Wildlife Service, Washington, DC 20240

Dated: February 16, 1988.

Gary Edwards,

Assistant Director, Fisheries.

[FR Doc. 88-7491 Filed 4-5-88; 8:45 am]

BILLING CODE 4310-55-M

INTERNATIONAL TRADE COMMISSION

Agency Form Submitted for OMB Review

AGENCY: International Trade Commission.

ACTION: In accordance with the provisions of the Paperwork Reduction Act of 1980 (44 U.S.C. Chapter 35), the Commission has submitted a proposal for the collection of information to the Office of Management and Budget (OMB) for review.

Purpose of Information Collection: The proposed information collection is for use by the Commission in connection with investigation No. 332-253, Competitive Conditions in the U.S. Market for Asparagus, Broccoli, and Cauliflower, instituted under the authority of section 332 of the Tariff Act of 1930 (19 U.S.C. 1332).

Summary of Proposal:

(1) Number of forms submitted: four

(2) Title of form: Competitive Conditions in the U.S. Market for Asparagus, Broccoli, and Cauliflower—Questionnaires for U.S. (1) Growers, (2) Freezers, (3) Canners, and (4) Importers and/or Purchasers

(3) Type of request: new

(4) Frequency of use: nonrecurring

(5) Description of respondents: firms which grow, freeze, process (can), import or purchase asparagus, broccoli, and cauliflower

(6) Estimated number of respondents: 242.

Growers: 120, based on an estimated response rate of 80 percent.

Freezers: 16, based on an estimated response rate of 80 percent.

Canners: 16, based on an estimated response rate of 80 percent.

Importers/purchasers: 90, based on an estimated response rate of 60 percent.

(7) Estimated total number of hours to complete the forms: 5,480. Field testing of the questionnaires yielded an estimated response time of 20 hours per questionnaire for growers and importer/purchasers and 40 hours per questionnaire for freezers and canners.

(8) Information obtained from the form that qualifies as confidential business information will be so treated by the Commission and not disclosed in a manner that would reveal the individual operations of a firm.

Additional Information or Comment: Copies of the proposed form and supporting documents may be obtained from David L. Ingersoll (USITC tel. No. 202-252-1309). Comments about the proposal should be directed to the Office of Information and Regulatory Affairs, Office of Management and Budget, New Executive Office Building, Washington, DC 20503, Attention: Francine Picoult, Desk Officer for U.S. International Trade Commission. Any comments should be specific, indicating which part of the questionnaire or study plan is objectionable, describing the problem in detail, and including specific

suggested revisions or language changes.

Submission of Comments: Comments should be submitted to OMB within two weeks of the date this notice appears in the **Federal Register.** If you are unable to submit them promptly you should advise OMB within the two week period of your intent to comment on the proposal. Ms. Picoult's telephone number is 202–395–7340. Copies of any comments should be provided to Charles Ervin (United States International Trade Commission, 500 E Street SW., Washington, DC 20436.)

Hearing impaired individuals are advised that information on this matter can be obtained by contacting our TDD terminal on (202) 252–1810.

By order of the commission.

Kenneth R. Mason,

Secretary.

Issued: April 1, 1988.

[FR Doc. 88–7549 Filed 4–5–88; 8:45 am]

BILLING CODE 7020-02-M

[Investigation No. 731-TA-388 (Preliminary)]

Certain All-Terrain Vehicles From Japan

Determination

On the basis of the record [1] developed in the subject investigation, the Commission unanimously determines, pursuant to section 733(a) of the Tariff Act of 1930 (19 U.S.C. 1673b(a)), that there is a reasonable indication that an industry in the United States is materially injured by reason of imports from Japan of certain all-terrain vehicles (ATVs),[2] provided for in item 692.10 of the Tariff Schedules of the United States, that are alleged to be sold in the United States at less than fair value (LTFV).

Background

On February 9, 1988, a petition was filed with the Commission and the Department of Commerce by Polaris Industries L.P., Minneapolis, MN, alleging that an industry in the United States is materially injured or threatened with material injury, or the establishment of an industry in the United States is materially retarded by reason of LTFV imports of all-terrain vehicles from Japan. Accordingly, effective February 9, 1988, the Commission instituted preliminary antidumping investigation No. 731–TA–388 (Preliminary).

Notice of the institution of the Commission's investigation and of a public conference to be held in connection therewith was given by posting copies of the notice in the Office of the Secretary, U.S. International Trade Commission, Washington, DC, and by publishing the notice in the **Federal Register** of February 18, 1988 (53 FR 4904). The conference was held in Washington, DC, on March 1, 1988, and all persons who requested the opportunity were permitted to appear in person or by counsel.

The Commission transmitted its determination in this investigation to the Secretary of Commerce on March 25, 1988. The views of the Commission are contained in USITC Publication 2071 (March 1988), entitled "All-Terrain Vehicles from Japan: Determination of the Commission in Investigation No. 731–TA–388 (Preliminary) Under the Tariff Act of 1930, Together With the Information Obtained in the Investigation."

By order of the Commission.

Kenneth R. Mason,

Secretary.

Issued: March 25, 1988.

[FR Doc. 88–7550 Filed 4–5–88; 8:45 am]

BILLING CODE 7020-02-M

---

[1] The record is defined in § 207.2(i) of the Commission's Rules of Practice and Procedure (19 CFR 207.2(i)).

[2] The products covered by this investigation are all-terrain vehicles, assembled or unassembled, currently reported under item 692.1090 of the Tariff Schedules of the United States Annotated (TSUSA) and classifiable in subheading 8703.21.0000 of the proposed Harmonized Tariff Schedule of the United States. ATVs are motor vehicles designed for off-payment use by one operator and no passengers and contain internal combustion engines of less than 1000cc cylinder capacity. The ATVs under investigation are non-amphibious, have three or four wheels, and weigh less than 600 pounds. They have a seat designed to be straddled by the operator and handlebars for steering control.

[Investigation No. 337-TA-280]

Certain High Geometric Surface Area Catalysts and Components Thereof; Initial Determination Terminating Respondent on the Basis of Settlement Agreement

AGENCY: U.S. International Trade Commission.

ACTION: Notice is hereby given that the Commission has received an initial determination from the presiding officer in the above-captioned investigation terminating the following respondent on the basis of a settlement agreement: Haldor Topsoe, A/S and Haldor Topsoe, Inc.

SUPPLEMENTARY INFORMATION: This investigation is being conducted pursuant to section 337 of the Tariff Act of 1930 (19 U.S.C. 1337). Under the Commission's rules, the presiding officer's initial determination will become the determination of the Commission thirty (30) days after the date of its service upon the parties, unless the Commission orders review of the initial determination. The initial determination in this matter was served upon the parties on April 1, 1988.

Copies of the initial determination, the settlement agreement, and all other nonconfidential documents filed in connection with this investigation are available for inspection during official business hours (8:45 a.m. to 5:15 p.m.) in the Office of the Secretary, U.S. International Trade Commission, 500 E Street SW., Washington, DC 20436, telephone 202–252–1000. Hearing impaired individuals are advised that information on this matter can be obtained by contacting the Commission's TDD terminal on 202–252–1810.

Written Comments; Interested persons may file written comments with the Commission concerning termination of the aforementioned respondent. The original and 14 copies of all such comments must be filed with the Secretary to the Commission, 500 E Street SW., Washington, DC 20436, no later than 10 days after publication of this notice in the **Federal Register.** Any person desiring to submit a document (or portion thereof) to the Commission in confidence must request confidential treatment. Such requests should be directed to the Secretary to the Commission and must include a full statement of the reason why confidential treatment should be granted. The Commission will either accept the submission in confidence or return it.

FOR FURTHER INFORMATION CONTACT: Ruby J. Dionne, Office of the Secretary, U.S. International Trade Commission, telephone 202–252–1805.

By order of the Commission.

Kenneth R. Mason,

Secretary.

Issued: April 1, 1988.

[FR Doc. 88–7551 Filed 4–5–88; 8:45 am]

BILLING CODE 7020-02-M

[Investigation No. 337-TA-278]

Certain Programmable Digital Clock Thermostats; Notice

Notice is hereby given that the prehearing conference in this matter will commence at 9:00 a.m. on April 11, 1988, in Courtroom C (Room 217), U.S. International Trade Commission

Building, 500 E St. S.W., Washington, DC, and the hearing will commence immediately thereafter.

The Secretary shall publish this notice in the **Federal Register**.

Janet D. Saxon,

Administrative Law Judge.

Issued: March 31, 1988.

[FR Doc. 88-7552 Filed 4-5-88; 8:45 am]

BILLING CODE 7020-02-M

INTERSTATE COMMERCE COMMISSION

[Finance Docket No. 31224]

Tennessee Southern Railroad Co., Inc.; Acquisition and Operation Exemption, Certain Lines of the Southern Railway Co.

AGENCY: Interstate Commerce Commission.

ACTION: Notice of exemption.

SUMMARY: The Interstate Commerce Commission exempts under 49 U.S.C. 10505 from the prior approval requirements of 49 U.S.C. 11343, *et seq.*, the acquisition and operation by Tennessee Southern Railroad Company, Inc. (TSRC) of 1.40 miles of railroad between milepost 7.0-MF and milepost 8.4-MF in Florence, AL, subject to standard labor protective conditions and a historic preservation condition.

DATES: This exemption will be effective on May 6, 1988. Petitions to stay must be filed by April 18, 1988, and petitions for reconsideration must be filed by April 26, 1988.

ADDRESSES: Send pleadings referring to Finance Docket No. 31224 to:

(1) Office of the Secretary, Case Control Branch, Interstate Commerce Commission, Washington, DC 20423

(2) Petitioner's representative: Mark M. Levin, Weiner, McCaffrey, Brodsky, & Kaplan, P.C. 1350 New York Avenue NW., Suite 800, Washington, DC 20005.

FOR FURTHER INFORMATION CONTACT: Joseph H. Dettmar, (202) 275-7245. (TDD for hearing impaired: (202) 275-1721)

SUPPLEMENTARY INFORMATION: Additional information is contained in the Commission's decision. To purchase a copy of the full decision, write to Dynamic Concepts, Inc., Room 2229, Interstate Commerce Commission Building, Washington, DC 20423, or call (202) 289-4357/4359 (DC Metropolitan Area).

Decided: March 30, 1988.

By the Commission, Chairman Gradison, Vice Chairman Andre, Commissioners Sterrett, Simmons, and Lamboley.

Noreta R. McGee,

Secretary.

[FR Doc. 88-7483 Filed 4-5-88; 8:45 am]

BILLING CODE 7035-01-M

DEPARTMENT OF JUSTICE

Antitrust Division

National Cooperative Research Notifications; Bell Communications Research, Inc.

Notice is hereby given that, pursuant to section 6(a) of the National Cooperative Research Act of 1984, 15 U.S.C. 4301 et seq. ("the Act"), Bell Communications Research, Inc. ("Bellcore") has filed written notifications, on behalf of Bellcore and Sumitomo Electric Industries, Ltd., ("Sumitomo"), simultaneously with the Attorney General and the Federal Trade Commission disclosing (1) the identities of the parties of the joint venture and (2) the nature and objectives of the joint venture. The notifications were filed for the purpose of invoking the Act's provisions limiting the recovery of antitrust plaintiffs to actual damages under specified circumstances. Pursuant to section 6(b) of the Act, the identities of the parties to the joint venture, and its general areas of planned activities, are given below.

Bellcore is a Delaware corporation with its principal place of business at 290 W. Mt. Pleasant Avenue, Livingston, New Jersey 07039.

Sumitomo is a Japanese corporation with its principal place of business at 15 Kitahama 5-chome, Higashi-ku, Osaka, 541 Japan.

Bellcore and Sumitomo entered into a agreement effective January 20, 1988 to collaborate in research with respect to semiconductor materials and experimental semiconductor devices of interest for high speed electronics applications to integrated optoelectronic devices useful for exchange and exchange access services, including demonstrating feasibility of research concepts by experimental prototypes and experimental systems.

Joseph H. Widmar,

Director of Operations, Antitrust Division.

[FR Doc. 88-7519 Filed 4-5-88; 8:45 am]

BILLING CODE 4410-01-M

Drug Enforcement Administration

Norberto T. Agustin, M.D., Revocation of Registration

On September 30, 1987, the Deputy Assistant Administrator, Office of Diversion Control, Drug Enforcement Administration (DEA) issued an Order to Show Cause to Norberto T. Agustin, M.D., 219 Central Avenue, Wilmette, Illinois 60091, proposing to revoke his DEA Certificate of Registration AA5922869, and to deny any pending applications for renewal of such registration. The proposed action was predicated on Dr. Agustin's lack of state authorization to handle controlled substances in the State of Illinois. 21 U.S.C. 842(a)(3).

The Order to Show Cause was sent registered mail, return recipient requested, to the address Dr. Agustin used for his registration. It was returned undelivered on November 1, 1987. With Dr. Agustin's permission, his attorney accepted service on December 8, 1987. By letter dated December 23, 1987, Dr. Agustin's attorney indicated that she could not locate Dr. Agustin and requested that this matter be set aside until he could be contacted. DEA advised that no action would be taken before February 1, 1988. Since neither Dr. Agustin, nor his attorney, has filed a written request for a hearing, the Administrator finds that Dr. Agustin has waived his opportunity for a hearing on the issues raised by the Order to Show Cause, and enters this final order based on the record as it appears. 21 CFR 1301.54(d) and 1301.54(e).

The Administrator finds that on February 14, 1985, the Illinois Department of Registration and Education filed a complaint against Dr. Agustin alleging that he wrote prescriptions for Schedule II controlled substances on another physician's triplicate prescription forms while signing the order physician's name and DEA registration number. The Illinois Medical Disciplinary Board and the Illinois Controlled Substances Hearing Officer held hearings in September, October, and December 1986, and January 1987. Both the Medical Disciplinary Board and the Hearing Officer recommended that Dr. Agustin's medical license and controlled substances license be revoked for a period of not less than two years. Dr. Agustin filed a motion for rehearing which was denied. On May 21, 1987, the Illinois Department of Registration and

Education revoked Dr. Agustin's medical license and controlled substances license for a period of not less than two years.

The Administrator finds that Dr. Agustin is not authorized to handle controlled substances in the State of Illinois. The Administrator has consistently held that when a DEA registrant is not authorized to handle controlled substances under the laws of the state in which he practices, DEA is without lawful authority to maintain a registration. See *Emerson Emory, M.D.*, Docket No. 85-46, 51 FR 9543 (1986); *Avner Kauffman, M.D.*, Docket No. 85-8, 50 FR 34208 (1985).

Accordingly, the Administrator of the Drug Enforcement Administration, pursuant to the authority vested in him by 21 U.S.C. 823 and 824 and 28 CFR 0.100(b), hereby orders that DEA Certificate of Registration AA5922869, previously issued to Dr. Norberto T. Agustin be, and it hereby is, revoked. It is further ordered that any pending applications for renewal be, and they hereby are, denied. This order is effective May 6, 1988.

Dated: March 30, 1988.

John C. Lawn,

Administrator.

[FR Doc. 88-7528 Filed 4-5-88; 8:45 am]

BILLING CODE 4410-09-M

Hoffmann-La Roche Inc., Manufacturer of Controlled Substances; Registration

By Notice dated December 15, 1987, and published in the **Federal Register** on December 22, 1987; (52 FR 48466), Hoffmann-La Roche Inc., 340 Kingsland Street, Nutley, New Jersey 07110, made application to the Drug Enforcement Administration to be registered as a bulk manufacturer of the basic classes of controlled substances listed below:

Drug	Schedule
Tetrahydrocannabinols (7370)	I
Alphaprodine (9010)	II
Levorphanol (9220)	II

No comments or objections have been received. Therefore, pursuant to section 303 of the Comprehensive Drug Abuse Prevention and Control Act of 1970 and Title 21, Code of Federal Regulations, § 1301.54(e), the Deputy Assistant Administrator hereby orders that the application submitted by the above firm for registration as a bulk manufacturer of the basic classes of controlled substances listed above is granted.

Gene R. Haislip,

Deputy Assistant Administrator, Office of Diversion Control, Drug Enforcement Administration.

Dated: March 30, 1988.

[FR Doc. 88-7529 Filed 4-5-88; 8:45 am]

BILLING CODE 4410-09-M

[Docket No. 87-75]

Holme Drug Store, Philadelphia, PA; Hearing

Notice is hereby given that on October 28, 1987, the Drug Enforcement Administration, Department of Justice, issued to Roberts Cape Coral Pharmacy an Order to Show Cause as to why the Drug Enforcement Administration should not revoke your DEA Certificate of Registration AH2343438 and deny any pending applications for registration.

Thirty days having elapsed since the said Order to Show Cause was received by Respondent, and written request for a hearing having been filed with the Drug Enforcement Administration, notice is hereby given that a hearing in this matter will be held on Wednesday, April 27, 1988, commencing at 10:00 a.m., at the U.S. Claims Court, Courtroom 10, Room 309, 717 Madison Place NW., Washington, DC.

Dated April 1, 1988.

John C. Lawn,

Administrator, Drug Enforcement Administration.

[FR Doc. 88-7530 Filed 4-5-88; 8:45 am]

BILLING CODE 4410-09-M

Knoll Pharmaceuticals, Manufacturer of Controlled Substances; Application

Pursuant to § 1301.43(a) of Title 21 of the Code of Federal Regulations (CFR), this is notice that on February 8, 1988, Knoll Pharmaceuticals, 30 North Jefferson Road, Whippany, New Jersey 07981, made application to the Drug Enforcement Administration (DEA) for registration as a bulk manufacturer of the Schedule II controlled substance hydrocodone (9193).

Any other such applicant and any person who is presently registered with DEA to manufacture such substance may file comments on objections to the issuance of the above application and may also file a written request for a hearing thereon in accordance with 21 CFR 1301.54 and in the form prescribed by 21 CFR 1316.47.

Any such comments, objections or requests for a hearing may be addressed to the Deputy Assistant Administrator, Drug Enforcement Administration, United States Department of Justice, 1405 I Street, NW., Washington, DC 20537, Attention: DEA Federal Register Representative (Room 1112), and must be filed no later than May 6, 1988.

Gene R. Haislip,

Deputy Assistant Administrator, Office of Diversion Control, Drug Enforcement Administration.

Dated: March 30, 1988.

[FR Doc. 88-7531 Filed 4-5-88; 8:45 am]

BILLING CODE 4410-09-M

[Docket No. 87-74]

Leonardo V. Lopez, M.D., Southgate, MI; Hearing

Notice is hereby given that on October 1, 1987, the Drug Enforcement Administration, Department of Justice, issued to Leonardo V. Lopez, M.D., an Order to Show Cause as to why the Drug Enforcement Administration should not deny your application for registration.

Thirty days having elapsed since the said Order to Show Cause was received by Respondent, and written request for a hearing having been filed with the Drug Enforcement Administration, notice is hereby given that a hearing in this matter will be held on Tuesday, April 12, 1988, commencing at 9:30 a.m., at the University of Michigan Law School, Room 232, Hutchins Hall, Ann Arbor, Michigan.

Dated: April 1, 1988.

John C. Lawn,

Administrator, Drug Enforcement Administration.

[FR Doc. 88-7532 Filed 4-5-88; 8:45 am]

BILLING CODE 4410-09-M

McNeilab, Inc., Importation of Controlled Substances; Application

Pursuant to section 1008 of the Controlled Substances Import and Export Act (21 U.S.C. 958(h)), the Attorney General shall, prior to issuing a registration under this section to a bulk manufacturer of a controlled substances in Schedule I or II and prior to issuing a regulation under section 1002(a) authorizing the importation of such a substance, provide manufacturers holding registrations for the bulk manufacture of the substance an opportunity for a hearing.

Therefore, in accordance with § 1311.42 of Title 21, Code of Federal Regulations (CFR), notice is hereby given that on January 4, 1988, McNeilab, Inc., Welsh and McKean Roads, Spring

BEST COPY AVAILABLE

House, Pennsylvania 19477, made application to the Drug Enforcement Administration to be registered as an importer of difenoxin (9168), a basic class controlled substance in Schedule I.

Any manufacturer holding, or applying for, registration as a bulk manufacturer of this basic class of controlled substance may file written comments on or objections to the application described above and may, at the same time, file a written request for a hearing on such application in accordance with 21 CFR 1301.54 in such form as prescribed by 21 CFR 1316.47.

Any such comments, objections or requests for a hearing may be addressed to the Deputy Assistant Administrator, Drug Enforcement Administration, United States Department of Justice, 1405 I Street NW., Washington, DC 20537, Attention: DEA Federal Register Representative (Room 1112), and must be filed no later than May 6, 1988.

This procedure is to be conducted simultaneously with and independent of the procedures described in 21 CFR 1311.42 (b), (c), (d), (e) and (f). As noted in a previous notice at 40 FR 43745–46 (September 23, 1976), all applicants for registration to import a basic class of any controlled substance in Schedule I or II are and will continue to be required to demonstrate to the Deputy Assistant Administrator of the Drug Enforcement Administration that the requirements for such registration pursuant to 21 U.S.C. 958(a), 21 U.S.C. 823(a), and 21 CFR 1311.42 (a), (b), (c), (d), (e) and (f) are satisfied.

Gene R. Haislip,

Deputy Assistant Administrator, Office of Diversion Control, Drug Enforcement Administration.

Dated: March 30, 1988.

[FR Doc. 88–7533 Filed 4–5–88; 8:45 am]

BILLING CODE 4410-09-M

[Docket No. 87–78]

Ratnam B. Nagalla, M.D., Winnfield, LA; Hearing

Notice is hereby given that on November 13, 1987, the Drug Enforcement Administration, Department of Justice, issued to Ratnam B. Nagalla, M.D., an Order to Show Cause as to why the Drug Enforcement Administration should not revoke your DEA Certificate of Registration, AN7413230, and deny any pending applications for registration.

Thirty days having elapsed since the said Order to Show Cause was received by Respondent, and written request for a hearing having been filed with the Drug Enforcement Administration, notice is hereby given that a hearing in this matter will be held on Thursday, May 12, 1988, commencing at 10:00 a.m., at the U.S. Court of Appeals for the Fifth Circuit, 600 Camp Street, Courtroom No. 223, Room 102, New Orleans, Louisiana.

Dated: April 1, 1988.

John C. Lawn,

Administrator, Drug Enforcement Administration.

[FR Doc. 88–7534 Filed 4–5–88; 8:45 am]

BILLING CODE 4410-09-M

[Docket No. 87–79]

James E. Pate, D.D.S., Nashville TN; Hearing

Notice is hereby given that on November 13, 1987, the Drug Enforcement Administration, Department of Justice, issued to James E. Pate, D.D.S., an Order to Show Cause as to why the Drug Enforcement Administration should not revoke your DEA Certificate of Registration, BPO322228, and deny any pending applications for registration.

Thirty days having elapsed since the said Order to Show Cause was received by Respondent, and written request for a hearing having been filed with the Drug Enforcement Administration, notice is hereby given that a hearing in this matter will be held on Tuesday, May 10, 1988, commencing at 10:00 a.m., at the U.S. Bankruptcy Court, 218 Customs House, 701 Broadway, Courtroom No. 218, Nashville, Tennessee.

Dated: April 1, 1988.

John C. Lawn,

Administrator, Drug Enforcement Administration.

[FR Doc. 88–7535 Filed 4–5–88; 8:45 am]

BILLING CODE 4410-09-M

[Docket No. 88–17]

Roberts Cape Coral Pharmacy, Cape Coral, FL; Hearing

Notice is hereby given that on October 1, 1987, the Drug Enforcement Administration, Department of Justice, issued to Roberts Cape Coral Pharmacy an Order to Show Cause as to why the Drug Enforcement Administration should not revoke your DEA Certificate of Registration, AR7370694 and deny any pending applications for registration.

Thirty days having elapsed since the said Order to Show Cause was received by Respondent, and written request for a hearing having been filed with the Drug Enforcement Administration, notice is hereby given that a hearing in this matter will be held on Thursday, April 14, 1988, commencing at 10:00 a.m., at the U.S. Tax Court, Federal Building, 51 SW. First Avenue, Courtroom 1524, Miami, Florida.

Dated: April 1, 1988.

John C. Lawn,

Administrator, Drug Enforcement Administration.

[FR Doc. 88–7536 Filed 4–5–88; 8:45 am]

BILLING CODE 4410-09-M

DEPARTMENT OF LABOR

Pension and Welfare Benefits Administration

[Application No. D–7248 et al.]

Proposed Exemptions; Modern Display Service, Inc., et al.

AGENCY: Pension and Welfare Benefits Administration, Labor.

ACTION: Notice of proposed exemptions.

SUMMARY: This document contains notices of pendency before the Department of Labor (the Department) of proposed exemptions from certain of the prohibited transaction restrictions of the Employee Retirement Income Security Act of 1974 (the Act) and/or the Internal Revenue Code of 1954 (the Code).

Written Comments and Hearing Requests

All interested persons are invited to submit written comments or requests for a hearing on the pending exemptions, unless otherwise stated in the Notice of Pendency, within 45 days from the date of publication of this **Federal Register** Notice. Comments and requests for a hearing should state the reasons for the writer's interest in the pending exemption.

ADDRESS: All written comments and requests for a hearing (at least three copies) should be sent to the Pension and Welfare Benefits Administration, Office of Regulations and Interpretations, Room N–5669, U.S. Department of Labor, 200 Constitution Avenue, NW., Washington, DC 20210. Attention: Application No. stated in each Notice of Pendency. The applications for exemption and the comments received will be available for public inspection in the Public Documents Room of Pension and Welfare Benefit Programs, U.S. Department of Labor, Room N–4677, 200 Constitution Avenue, NW., Washington, DC 20210.

Notice to Interested Persons

Notice of the proposed exemptions will be provided to all interested persons in the manner agreed upon by the applicant and the Department within 15 days of the date of publication in the **Federal Register**. Such notice shall include a copy of the notice of pendency of the exemption as published in the **Federal Register** and shall inform interested persons of their right to comment and to request a hearing (where appropriate).

SUPPLEMENTARY INFORMATION: The proposed exemptions were requested in applications filed pursuant to section 408(a) of the Act and/or section 4975(c)(2) of the Code, and in accordance with procedures set forth in ERISA Procedure 75–1 (40 FR 18471, April 28, 1975). Effective December 31, 1978, section 102 of Reorganization Plan No. 4 of 1978 (43 FR 47713, October 17, 1978) transferred the authority of the Secretary of the Treasury to issue exemptions of the type requested to the Secretary of Labor. Therefore, these notices of pendency are issued solely by the Department.

The applications contain representation with regard to the proposed exemptions which are summarized below. Interested persons are referred to the applications on file with the Department for a complete statement of the facts and representations.

Modern Display Service, Inc. Employees Profit Sharing Plan (the Plan) Located in Salt Lake City, Utah

[Application No. D–7248]

Proposed Exemption

The Department is considering granting an exemption under the authority of section 408(a) of the Act and section 4975(c)(2) of the Code and in accordance with the procedures set forth in ERISA Procedure 75–1 (40 FR 18471, April 28, 1975). If the exemption is granted the restrictions of section 406(a) and 406 (b)(1) and (b)(2) of the Act and the sanctions resulting from the application of section 4975 of the Code, by reason of section 4975(c)(1) (A) through (E) of the Code shall not apply to: (1) The proposed sale by the Plan of a parcel of improved real property (the Property) located in Salt Lake City, Utah for the greater of $340,000 or the fair market value on the date of the sale to THA Investments (THA), a limited partnership in which the trustee of the Plan owns limited and general partnership interests; and (2) the assignment of a third party lease by the Plan to THA.

Summary of Facts and Representations

1. The Plan is a defined contribution profit sharing plan which has approximately twenty-four (24) participants. As of December 31, 1986, the assets of the Plan totaled approximately $1,559,111. The trustee for the Plan is William C. Vriens, Jr. (Mr. Vriens, Jr.), who is a participant in the Plan, a shareholder of a 48% interest in, and president of Modern Display Service, Inc. (the Employer).

2. The Employer, a Utah corporation which sponsors the Plan, is located at 424 South 7th East, Salt Lake City, Utah. William C. Vriens, Sr. (Mr. Vriens, Sr.) and Heidi Vriens (Mrs. Vriens), wife of Mr. Vriens, Jr., also own shares in the Employer. Mr. Vriens, Sr., a former president of the Employer, is currently a part-time employee of the Employer and a participant in the Plan.

3. Mr. Vriens, Jr. owns an 18.112% limited partnership interest in THA, a Utah limited partnership. He and Mrs. Vriens are also general partners in THA with a three percent (3%) and two percent (2%) interest, respectively. The remaining 76.888% limited partnership interest in THA is held in an irrevocable trust on behalf of each of the seven children of Mr. Vriens, Jr. and Mrs. Vriens.

4. The Property is located at 436 South 7th East, Salt Lake City, Utah, on parcels adjacent to and south of those belonging to the Employer. The Property consists of a front and rear parcel totaling 12,546 square feet. The total area of the front parcel is 9,801 square feet. The 2,745 square foot rear parcel of the Property serves as a parking lot (the Parking Lot). The Property is improved by a single story commercial building (the Building) of approximately 6,036.75 square feet. The Building was constructed in two separate portions. The original front portion was built in 1964 and has a total gross area of approximately 3,978 square feet. The rear portion, added in 1973, contains approximately 2,058.75 square feet. The basement under the front and rear portions of the Building covers an additional area of 5,850 square feet. As of December 31, 1986, the fair market value of the Property and the Building constituted 22.6% of the assets of the Plan.

The Plan originally purchased the Property and the Building from the Employer on December 31, 1973, for a total consideration of $135,000. As part of the financing for the acquisition of the Property, the Plan made a down payment of $20,000, assumed the obligation of $54,063.59 on a real estate contract dated June 1, 1964, payable to John Price Associates, an unrelated third party, and signed an installment contract of sale with the Employer in the amount of $60,936.41. It is represented that the final installment payments on the contracts with the Employer and John Price Associates were made by the Plan on December 4, 1975, and January 1, 1985, respectively.[1] It is represented that no interest was charged to the Plan on the amount payable under the contract to the Employer. Further, the Plan paid no commissions in connection with the acquisition of the Property and the Building.

At the time the Plan acquired the Property, the Building was utilized by the Employer as its principal place of business. By lease (the Old Lease) dated November 1, 1973, and executed January 3, 1974, the Plan rented the entire Building to the Employer. The term of the Old Lease was ten (10) years, renewable for two additional terms of five (5) years each, at a rental rate per month of the greater of $1,500 or two percent (2%) of the gross sales per month of the Employer.[2] On November 1, 1980, the Employer terminated the Old Lease upon completion of construction on a new building (the New Building) on the lot adjacent to the Property and moved the location of his business headquarters to the New Building.

After the Employer's move, during the period between November 1, 1980 to September 7, 1981, the Building was vacant, while the Plan attempted unsuccessfully to find a tenant to occupy the entire space.[3]

On September 7, 1981, the Plan entered into a lease (the Briggs Lease), with an unrelated third party, Jeffrey S. Briggs (Mr. Briggs) d/b/a Designer Textiles. Under the terms of the Briggs Lease, only the front of the Building was let.

---

[1] The applicants represent that the installment contract of sale on the Property between the Plan and the Employer was exempt from the prohibited transaction provisions of the Act, because it was entered into before July 1, 1974, the date specified in the transitional rules under section 414 and therefore, is covered by the statutory exemption provided by section 414(c)91) of the Act until June 30, 1984. The Department, herein, expresses no opinion as to whether the requirements of section 414(c)(1) of the Act were met.

[2] The applicants represent that the Old Lease between the Plan and the Employer was exempt from the prohibited transaction provisions of the Act, because it was entered into before July 1, 1974, the date specified in the transitional rules under section 414 and therefore, is covered by the statutory exemption provided by section 414(c)(2) of the Act. The Department, herein, expresses no opinion as to whether the Old Lease met the requirements of section 414(c)(2) of the Act.

[3] The applicants represent that they will pay to the Plan compensation, and interest thereon, for the period when the Building was vacant between November 1980 and September 1981.

After October 1982, the Employer recommended use of the Building, consisting in essence of all of the unleased portion of the Building and Property, other than the Parking Lot. The applicants represent that with respect to the Parking Lot on the Property there has been no substantial use by the Employer. The applicants state that the entrance to the Employer's New Building is on the north side, whereas the Parking Lot on the Property is on the south. Further, as a requirement for a building permit on the Employer's New Building, 44 parking stalls were placed on the north side of the north adjacent parcel. It is represented that there is no alley or driveway at the rear of either of the two buildings to connect the separate parking areas.

After October 1982, the area occupied by the Employer in the Building consisted of a total area of 7,908.75 square feet. This included 2,058.75 square feet in the upstairs rear portion of the Building and 5,850 square feet in the basement of the Building. The Employer's use of the rear and the basement of the Building required construction of a doorway between the Employer's New Building and the Plan's Building. All costs of construction were borne by the Employer. Since commencement in 1982 of the use of the rear portion and basement of the Building, the Employer has paid to the Plan an amount equal to $13,100 yearly.[4]

On October 28, 1986, effective August 1, 1986, the Briggs Lease was renewed. The terms for the renewal of the Briggs Lease were at a base monthly rental rate of $3,333 for a term of twelve (12) months. It is represented that Mr. Vriens, Jr. and Mr. Briggs are negotiating another twelve month extension at the same monthly rental rate of the Briggs Lease which expired on August 1, 1987. It is anticipated that any extension of the Briggs Lease will be assigned by the Plans to THA, as part of the transaction for which an exemption is requested.

5. Mr. Vriens, Jr. proposes to sell the Building and the Property to THA for cash in the greater amount of $340,000 or the fair market value of the Property and the Building on the date of sale and to assign any extension of the Briggs Lease to THA. It is represented that the Plan will pay no commissions in connection with the sale and that the Employer or THA will bear all transaction costs. It is represented that the sale of the Property and the Building to THA would eliminate the prohibited use by the Employer and would permit the Employer to expand as needed without any continuing involvement by the Plan. Further, the Plan will benefit from an opportunity to convert an illiquid real estate investment into cash which would allow the Plan considerable latitude in its investment and diversification policy.

6. E.H. Throndsen (Mr. Throndsen), whose business is located at 50 West Broadway, Suite 200, Salt Lake City, Utah, valued the Building and Property at $315,000, as of August 1, 1986. By an addendum (the Addendum) Mr. Throndsen updated the original appraisal (the Original Appraisal) on May 15, 1987, to $340,000. The Addendum addresses the comparable fair market rental rates for the rear and basement portions of the Building.

Based on market rents of comparables in the area, Mr. Throndsen states that the basement should rent as storage for $1.10 per square foot and the rear should rent for $7.50 per square foot, if finished, while a rental rate of $7.50 per square foot for the front of the Building is within the range of from $6.00 to $15.00 for fair market rentals of retail and office space in the area. In a letter dated May 26, 1987, which accompanied the Addendum, Mr. Throndsen stated that the Original Appraisal was completed on the basis of less than market value payments made under the use by the Employer for the rear and basement portions of the Building. Mr. Throndsen states that in reaching a higher valuation in the Addendum, he took into consideration rental rates on finished comparables and the market rental that an owner of the Property and the Building could expect without regard to any existing lease with an affiliated entity.

The Original Appraisal did not consider any special value which the Property may have to Mr. Vriens, Jr. as shareholder of the Employer which owns the adjoining parcel and as the general partner of THA, the proposed purchaser of the Property. With respect to this point, in another letter dated May 26, 1987, Mr. Throndsen states that there would be no added or special value to Mr. Vriens, Jr., because the Property is not needed by the Employer to perform its business and each parcel is distinctly separate with ample parking and storage.

Mr. Throndsen represents that he is independent in that he has no present or contemplated future interest in the Property or bias or personal interest with respect to the parties involved. Mr. Throndsen is qualified to value the Property and the Building, as a member of the American Institute of Real Estate Appraisers, the Society of Real Estate Appraisers, and as an M.A.I. certified appraiser.

7. In summary, the aplicants represent that the proposed transaction will satisfy the statutory criteria of section 408(a) of the Act and section 4975(c)(2) of the Code because: (a) The sale of the Property and the Building to THA will be a one time transaction for cash; (b) the Plan will pay no commissions or transaction costs as a result of the sale; (c) the purchase price to be paid by THA will be determined by a qualified independent appraiser and will be the higher of $340,000 or the fair market value on the date of the sale; (d) the Plan will use the proceeds from the sale to further diversify its portfolio of investments; and (e) the sale of the Property and the Building will terminate the prohibited use of the Property and Building by the Employer.

For Further Information Contact: Angelena C. Le Blanc of the Department, telephone (202) 523-8883. (This is not a toll-free number.)

Brandlin & McAllister, APC Defined Benefit Pension Plan (the Plan) Located in Los Angeles, California

[Application No. D-7426]

Proposed Exemption

The Department is considering granting an exemption under the authority of section 4975(c)(2) of the Code and in accordance with the procedures set forth in ERISA Procedure 75-1 (40 FR 18471, April 28, 1975). If the exemption is granted the sanctions resulting from the application of section 4975 of the Code, by reason of section 4975(c)(1) (A) through (E) of the Code shall not apply to the proposed purchase of certain real property (the Property) by the Plan from J.J Brandlin and Judith G. Brandlin, husband and wife, and disqualified persons with respect to the Plan, provided the Plan pays no more than the fair market value for the Property as of the date of purchase.[5]

Summary of Facts and Representations

1. The Plan is a defined benefit plan with one participant and total assets of

[4] The applicants represent that within 60 days of the date of the grant of this proposed exemption, they will file the Form 5330 with the Internal Revenue Service, and will pay an amount equal to any difference between the fair market rental value of the Building and Property and the sum actually paid to the Plan, plus interest thereon, and any applicable excise tax due on the Employer's use of the Building and the Property for the period after October 1982.

[5] Since J. J. Brandlin is the sole owner of the Brandlin & McAllister, APC (the Employer) and the only participant in the Plan, there is no jurisdiction under Title I of the Act pursuant to 29 CFR 2510.3-3(b). However, there is jurisdiction under Title II of the Act pursuant to section 4975 of the Code.

$1,709,600, as of January 31, 1988. J.J. Brandlin, Esquire (Mr. Brandlin) is the only Plan participant and is the sole owner of the Employer, which is a law firm being terminated. All former participants of the Plan have received their vested and accrued benefits upon termination of employment. The applicant also represents that he, Mr. Brandlin, will be the only participant at risk with respect to the Property and, since the Employer is terminating, there will be no future participants in the Plan.

2. The Property is an 11-unit two-story frame and stucco apartment building with another building in the rear for 11 garage parking spaces and is located at 359 Glasgow Avenue, Inglewood, California. The Property has been appraised, as of February 29, 1988, to have a fair market value of $407,500. The appraisal was conducted by Robert S. Bell, M.A.I. of Redondo Beach, California, an independent appraiser with no interest in the ownership of the Property or affiliation with the Plan or Mr. Brandlin.

3. Mr. Brandlin has offered to sell the Property to the Plan for cash. Neither sales commissions nor fees of any kind will be paid by the Plan to any person in connection with the sale of the Property. The proposed transaction will involve less than 25 percent of the total assets of the Plan. The applicant also represents that the Plan will only lease the Property to persons who are not parties in interest or disqualified persons with respect to the Plan. At no time will Mr. Brandlin and/or members of his family rent or otherwise use the Property.

4. In summary, the applicant represents that the proposed transaction satisfies the statutory criteria of section 4975(C)(2) of the Code because (a) the purchase price of the Property will be less than 25 percent of the total assets of the Plan; (b) the Plan will be paying no more for the Property than the fair market value as determined by a qualified, independent appraiser; (c) Mr. Brandlin is the only participant to be affected by the proposed transaction and he desires that the proposed transaction be consumated.

Notice to Interested Persons: Since Mr. Brandlin is the sole owner of the Employer and the only participant of the Plan, it has been determined that there is on need to distribute the notice of the proposed exemption to interested persons. Comments and requests for a hearing are due 30 days after publication of this notice in the **Federal Register.**

For Further Information Contact: Mr. C.E. Beaver of the Department, telephone (202) 523-8881. (This is not a toll-free number.)

Central Ohio Building and Construction Industry Investment Plan (the Program) Located in Columbus, OH

[Application Nos. D-7435]

Proposed Exemption

The Department is considering granting an exemption under the authority of section 408(a) of the Act and section 4975(c)(2) of the Code and in accordance with the procedures set forth in ERISA Procedure 75-1 (40 FR 18471, April 28, 1975). If the exemption is granted, the restrictions of section 406(a) of the Act and the sanctions resulting from the application of section 4975 of the Code, by reason of section 4975(c)(1) (A) through (D) of the Code shall not apply to the proposed participation by pension plans (the Plans) in construction loans through the Program where such loans are already committed to parties in interest with respect to such Plans by certain lending institutions, provided that the terms of the loans are not less favorable to the Plans than those terms available in transactions with unrelated parties; and provided that the terms and conditions, as described herein are complied with during the operation of the Program.

Summary of Facts and Representations

1. The Plans are pension plans that are co-sponsored by local building and construction industry unions [6] all of which are associated with the Columbus/Central Ohio Building and Construction Trades Council and Contractors affiliated with the Central Ohio Division of the Associated General Contractors of America and/or other employer associations representing building and construction industry employers in Central Ohio area. The Plans are in the process of establishing the Central Ohio Building and Construction Industry Foundation (the Foundation). The following Plans will be part of the Foundation and participate in the Program: Asbestos Workers Local No. 44 Annuity Fund; Bricklayers Local No. 55 Pension Plan; Ohio Carpenters Pension Plan; Cement Masons Local No. 536 Pension Plan; International Brotherhood of Electrical Workers Local No. 683 Pension Plan; Iron Workers. District Council of Southern Ohio and Vicinity Pension Trust; International Brotherhood of Painters and Allied Trades Union and Industry Pension Fund; Plasterers Local No. 800 Pension Plan; Plumbers and Pipe Fitters Local No. 189 Pension Plan; Roofers Local No. 86 Pension Fund; and Sheet Metal Workers Local No. 98 Pension Plan. The jurisdiction covered by the Plans is the Central Ohio area.

2. The Foundation will provide a procedure and system whereby the Plans may invest in construction loans. The Foundation is to be administered by a Board of Trustees (the Trustees). Every Plan participating in the Foundation will name two trustees (one union trustee and one management trustee) to serve on its Board. The Trustees are required and directed by the Foundation Agreement to establish and administer the Program.

3. The Trustees are developing a package of documents for the operation and administration of the Program. The Trustees are also contacting every bank, savings and loan association and insurance company, as defined in Part B of Prohibited Transaction Exemption 76-1 (PTE 76-1, 41 FR 12740, at 12743, March 6, 1976), in the jurisdiction covered by the Foundation, and requesting that such entities allow the Foundation to participate in all construction loans of $200,000 or more in which such lending institutions have made a legally enforceable commitment.[7]

4. All institutions agreeing to participate with the Foundation will agree to: (a) Notify the Trustees (or Administrative Manager) of the Foundation of all applications for construction mortgage loans which have been approved by the institution and consented to be submitted by the borrower; and (b) supply the Trustees with any requested data and information concerning the loans. The applicants represent that all lending institutions will affirmatively recommend that borrowers consent to the submission of the loan documents to the Program. In this regard, the applicants represent that the borrower refusal rate will probably constitute 12 percent to 20 percent of all transactions. Upon receipt of this information from the institutions, the Foundation will notify the trustees or other designated representatives of every participating Plan of all information received by them. The trustees of the participating Plans will then determine whether they intend

[6] All of the local unions are local affiliates of international unions affiliated with the AFL-CIO Building and Construction Trades Department.

[7] Part B of PTE 76-1 provides, in general, exemptive relief from section 406(a) of the Act for construction loans made by a multiple employer plan to a participating employer if, among other requirements, the decision to make the loans is made on behalf of the plan by a bank, savings and loan association or insurance company as described in that exemption.

to participate in a specific construction loan and, if so, the amount of their participation.

5. The Foundation will accumulate the responses received from all of the participating Plans and will then advise the lending institution of the Foundation's desire to participate in a loan and, if so, the amont of the participation. The amount of the participation will be the amount of the aggregate participation by the individual Plans. Each said loan will be deemed and construed to constitute a separate and distinct legal transaction and will be documented as a separate trust. The Foundation will maintain its books and records of account accordingly.

6. Each participating Plan will, within 30 days of its determination and notification of its intention to participate in a specific construction loan, forward the amount of its participation to the lead lending institution. The lead lending institution will keep all such advances productively invested until advances are required to be made to the borrower. The earnings on such advances will be a part of the advance and any excess will be remitted by the institution to the participating Plans.

7. The Foundation will keep proper books and records to account for all advances from participating Plans and all returns of principal and/or interest from the lending institution making the loan. All returns of principal and/or interest by the lending institution for participation in any construction loan will be returned to the trustees of the participating Plan(s) within five days after receipt. Periodically, the Foundation will report to the trustees of the participating Plans and to the affiliated local unions and management associations on its operations. No Foundation Trustee will receive any compensation for his services to the Foundation or the Program. The Foundation may incur reasonable expenses for necessary professional services to implement and operate the Program and may obtain from the lead mortgage lenders and/or the participating Plans reimbursement for reasonable expenses actually incurred. No part of the principal or income of any investment will be received or retained by the Foundation or its Trustees.

8. Because some construction loans may be made to parties in interest with respect to the participating Plans, such as contributing employers, the applicants seek an exemption from section 406(a) of the Act for the transactions. The applicants represent that the Program documents will provide that a trustee of any Plan which has an interest in the employer entity involved in a construction project to be financed by a commitment must: (a) Abstain himself from voting on a participation determination; (b) absent himself from that portion of the Plan trustees' meeting when the issue of the purchase of such participation is under discussion and consideration; and (c) represent on the record that he has not attempted to exert any influence on any trustee regarding the participation. The applicants further represent that, because the Program document will provide that independent plan trustees or other fiduciaries will have sole and exclusive authority with regard to a Plan's decision to participate in a loan, no relief from section 406(b) of the Act for Program transactions is requested.[8]

9. The applicants represent that lending institutions will have made a formal and legally binding commitment to make the construction loan before the opportunity for participation by the Plans is distributed through the Program. The applicants represent that the Foundation will receive from all cooperating lending institutions all qualified loan commitments for consideration whether or not such commitments are for local or non-local developers or construction projects, or union-built or non-union built construction projects. The applicants further represent that the Foundation will not participate in a loan unless it is at or above the prevailing market rate of interest and value for comparable loans.[9] In no event will participationg Plans either individually or in the aggregate acquire more than a 50 percent participation in any one loan.

10. Applicants represent that participating Plans will initially invest together with a lending institution and will not be purchasing participation interests from such lending institution. In addition, the applicants represent that the participating Plans will receive their pro rata share of the points charged by the lending institution to the extent such points represent a return on the loan and not compensation and/or reimbursement to the lending institution for actual expenses incurred and/ or services rendered in servicing the construcion loan. A Plan's pro rata share will be the ratio of the amount of the Plan's funding participation to the total amount of the loan. To the extent the above transactions, or any other transactions between the Plans and the lending institutions, constitute violations of section 406 of the Act, the Department is not proposing relief for such transactions.

11. The applicants represent that, in the event of a default by a borrower, the lead lending institution will have responsibility to enforce the rights of all the lenders, including participation interest holders, under the loan. The applicants further represent that all of the loans subject to the Program will remain in the portfolio of the lead lending institution and thus not be transferred to the other lenders.

12. The applicants represent that before a loan is made, the Foundtion will receive from the lead lender a written commitment for permanent financing from a person other than a Plan which is a member of the Foundation to enable full repayment of

[8] In this exemption, the Department expresses no opinion as to whether transactions involving construction loans to parties in interest will involve transactions as described in section 406(b) of the Act. As well, the Department is not expressing an opinion as to whether the structure, maintenance, and operation of the Program, including the participation with the lending institutions in construction loans to non-parties in interest, will violate provisions of Part 4 of Title I of the Act. The Department notes, as stated in the preamble to Part B of PTE 76–1, *supra* at 12743, that a loan made to a non-party in interest may give rise to a prohibited transaction if, for example, the loan is made in the context of an arrangement for a specific participating employer to furnish a portion of the construction and such employer has a controlling influence over the plan's decision to make the loan.

[9] The Department notes that to the extent the fiduciaries of the participating Plans restrict their consideration of investment opportunities for non-economic reasons, such conduct may involve certain violations of Part 4 of Title I of the Act which violations, if present, would not be provided relief by this exemption.

In this regard, section 404(a)(1) of the Act requires, among other things, that a fiduciary of a plan act prudently, solely in the interest of the plan's participants and beneficiaries, and for the exclusive purpose of providing benefits to participants and beneficiaries. To act prudently, a plan fiduciary must consider, among other factors, the availability, riskiness, and potential return of alternative investments for his plan. Because construction loans are investments which would be selected, if at all, in preference to alternative investments, a loan would not be prudent if it provided a plan with less return, in comparison to risk, than comparable investments available to the plan, or if it involves a greater risk to the security of plan assets than other investments offering a similar return.

The Department has construed the requirements that a fiduciary act solely in the interest of, and for the exclusive purpose of providing benefits to, participants and beneficiaries as prohibiting a fiduciary from subordinating the interests of participants and beneficiaries in their retirement income to unrelated objectives. Thus, in deciding whether and to what extent to invest in consutruction loans, a fiduciary must ordinarily consider only factors relating to the interest of plan participants and beneficiaries in their retirement income. For example, a decision to make a loan may not be influenced by a desire to stimulate the construction industry and generate employment, unless the loan, when judged solely on the basis of its economic value to the plan, would be equal or superior to alternative investments available to the plan (See Advisory Opinion 81–12A, January 13, 1981).

the loan upon completion of construction. In addition, the Foundation will not accept loan participations by any Plan which would, as to any individual loan participation, exceed 10 percent of the assets of the Plan, or in the aggregate with all other construction loan participations, exceed 25 percent of the assets of the Plan. Further, the Foundation will maintain or cause to be maintained for a period of six years from the date of each loan participation such records as are necessary to enable the Department, the Internal Revenue Service, the Plans' participants and beneficiaries, any employer of Plan participants and beneficiaries, or any employee organization whose members are covered by the Plans to determine whether all conditions of the exemption have been met.

13. In summary, the applicants represent that the proposed transactions satisfy the statutory criteria of section 408(a) of the Act because (a) the trustees of each participating Plan will have sole and exclusive authority to cause the Plan to participate in a loan; (b) the lending institutions will have made a legally enforceable commitment to make a construction loan before the Plans consider participation in a loan; and (c) no more than 10 percent of the assets of any participating plan may be invested in any individual loan participation and no more than 25 percent of a plan's assets may be invested in construction loans in the aggregate.

Notice To Interested Persons

Notice of the proposed exemption will be provided to all interested persons within 30 days of the date of publication of the notice of pendency in the **Federal Register**. Such notice will include a copy of the notice of proposed exemption as published in the **Federal Register** and a statement informing interested persons of their right to comment with respect thereto. Comments to the Department are due within 60 days of the date of publication of this notice.

For Further Information Contact: Ms. Jan D. Broady of the Department, telephone (202) 523-8883. (This is not a toll-free number.)

General Information

The attention of interested persons is directed to the following:

(1) The fact that a transaction is the subject of an exemption under section 408(a) of the Act and/or section 4975(c)(2) of the Code does not relieve a fiduciary or other party in interest or disqualified person from certain other provisions of the Act and/or the Code, including any prohibited transaction provisions to which the exemption does not apply and the general fiduciary responsibility provisions of section 404 of the Act, which among other things require a fiduciary to discharge his duties respecting the plan solely in the interest of the participants and beneficiaries of the plan and in a prudent fashion in accordance with section 404(a)(1)(B) of the Act; nor does it affect the requirement of section 401(a) of the Code that the plan must operate for the exclusive benefit of the employees of the employer maintaining the plan and their beneficiaries;

(2) Before an exemption may be granted under section 408(a) of the Act and/or section 4975(c)(2) of the Code, the Department must find that the exemption is administratively feasible, in the interests of the plan and of its participants and beneficiaries and protective of the rights of participants and beneficiaries of the plan; and

(3) The proposed exemptions, if granted, will be supplemental to, and not in derogation of, any other provisions of the Act and/or the Code, including statutory or administrative exemptions and transitional rules. Furthermore, the fact that a transaction is subject to an administrative or statutory exemption is not dispositive of whether the transaction is in fact a prohibited transaction.

(4) The proposed exemptions, if granted, will be subject to the express condition that the material facts and representations contained in each application are true and complete, and that each application accurately describes all material terms of the transaction which is the subject of the exemption.

Signed at Washington, DC, this 31st day of March, 1988.

Robert J. Doyle,

Acting Associate Director, Regulations and Interpretations, Pension and Welfare Benefits Administration, U.S. Department of Labor.

[FR Doc. 88-7449 Filed 4-5-88; 8:45 am]

BILLING CODE 4510-29-M

[Prohibited Transaction Exemption 88-23; Exemption Application No. D-7332 et al.]

Grant of Individual Exemptions; Tupelo Anesthesia Group, P.A. Profit Sharing Plan, et al.

AGENCY: Pension and Welfare Benefits Administration, Labor.

ACTION: Grant of individual exemptions.

SUMMARY: This document contains exemptions issued by the Department of Labor (the Department) from certain of the prohibited transaction restrictions of the Employee Retirement Income Security Act of 1974 (the Act) and/or the Internal Revenue Code of 1954 (the Code).

Notices were published in the **Federal Register** of the pendency before the Department of proposals to grant such exemptions. The notices set forth a summary of facts and representations contained in each application for exemption and referred interested persons to the respective applications for a complete statement of the facts and representations. The applications have been available for public inspection at the Department in Washington, DC. The notices also invited interested persons to submit comments on the requested exemptions to the Department. In addition the notices stated that any interested person might submit a written request that a public hearing be held (where appropriate). The applicants have represented that they have complied with the requirements of the notification to interested persons. No public comments and no requests for a hearing, unless otherwise stated, were received by the Department.

The notices of pendency were issued and the exemptions are being granted solely by the Department because, effective December 31, 1978, section 102 of Reorganization Plan No. 4 of 1978 (43 FR 47713, October 17, 1978) transferred the authority of the Secretary of the Treasury to issue exemptions of the type proposed to the Secretary of Labor.

Statutory Findings

In accordance with section 408(a) of the Act and/or section 4975(c)(2) of the Code and the procedures set forth in ERISA Procedure 75-1 (40 FR 18471, April 28, 1975), and based upon the entire record, the Department makes the following findings:

(a) The exemptions are administratively feasible;

(b) They are in the interests of the plans and their participants and beneficiaries; and

(c) They are protective of the rights of the participants and beneficiaries of the plans.

Tupelo Anethesia Group, P.A. Profit Sharing Plan (the Plan) Located in Tupelo, MS

[Prohibited Transaction Exemption 88-23; Exemption Application No. D-7332]

Exemption

The restrictions of section 406(a) and 406(b)(1) and 406(b)(2) of the Act and the sanctions resulting from the application of section 4975 of the Code, by reason of section 4975(c)(1) (A)

through (E) of the Code, shall not apply to the cash purchase of 196.5 acres of timberland, including the timber thereon, located in Lee County, MS, from H. Read Jones, M.D. by his participant-directed account under the Plan, provided the purchase price does not exceed the fair market value of said timberland and timber on the date of the purchase.

For a more complete statement of the facts and representations supporting the Department's decision to grant this exemption refer to the notice of proposed exemption published on February 22, 1988 at 53 FR 5230.

For Further Information Contact: Mrs. Miriam Freund of the Department, telephone (202) 523-8194. (This is not a toll-free number.)

Erwine's Marine Sales & Services, Inc. Profit Sharing Plan and Trust (the Plan) Located in Frostproof, Florida

[Prohibited Transaction Exemption 88-24; Exemption Application No. D-7380]

Exemption

The restrictions of section 406(a), 406 (b)(1) and (b)(2) of the Act and the sanctions resulting from the application of section 4975 of the Code, by reason of section 4975(c)(1) (A) through (E) of the Code, shall not apply to the proposed sale by the Plan to Erwine's Marine Sales & Service, Inc., the sponsor of the Plan, of a certain parcel of improved real property (the Property), provided that the sales price is no less than the fair market value of the Property on the date of sale.

For a more complete statement of the facts and representations supporting the Department's decision to grant this exemption refer to the notice of proposed exemption published on February 22, 1988 at 53 FR 5230.

For Further Information Contact: Mr. E.F. Williams of the Department, telephone (202) 523-8883. (This is not a toll-free number.)

L & S Anesthesiologist Associates, M.D., P.A., Retirement Plan and Trust (the Plan) Located in Galveston, Texas

[Prohibited Transaction Exemption 88-25; Exemption Application No. D-7366]

Exemption

The sanctions resulting from the application of section 4975 of the Code, by reason of section 4975(c)(1) (A) through (E) of the Code, shall not apply to the cash purchase by the Plan from C.D. Litton, M.D. (Dr. Litton), a party in interest with respect to the Plan, of a 640-acre tract (the Property) located in Edwards County, Texas, provided the purchase price does not exceed the Property's fair market value as of the date of the purchase.

Because Dr. Litton is the sole owner of the sponsor of the Plan and the sole participant in the Plan, the Plan is subject to the provisions of Title II of the Act only and is not subject to Title I (see 29 CFR 2510.3-3 (b) and (c)).

For a more complete statement of the facts and representations supporting the Department's decision to grant this exemption refer to the notice of proposed exemption published on February 22, 1988 at 53 FR 5231.

For Further Information Contact: Mrs. Miriam Freund of the Department, telephone (202) 523-8194. (This is not a toll-free number.)

General Information

The attention of interested persons is directed to the following:

(1) The fact that a transaction is the subject of an exemption under section 408(a) of the Act and/or section 4975(c)(2) of the Code does not relieve a fiduciary or other party in interest or disqualified person from certain other provisions of the Act and/or the Code, including any prohibited transaction provisions to which the exemption does not apply and the general fiduciary responsibility provisions of section 404 of the Act, which among other things require a fiduciary to discharge his duties respecting the plan solely in the interest of the participants and beneficiaries of the plan and in a prudent fashion in accordance with section 404(a)(1)(B) of the Act; nor does it affect the requirement of section 401(a) of the Code that the plan must operate for the exclusive benefit of the employees of the employer maintaining the plan and their beneficiaries;

(2) These exemptions are supplemental to and not in derogation of, any other provisions of the Act and/or the Code, including statutory or administrative exemptions and transitional rules. Furthermore, the fact that a transaction is subject to an administrative or statutory exemption is not dispositive of whether the transaction is in fact a prohibited transaction.

(3) The availability of these exemptions is subject to the express condition that the material facts and representations contained in each application accurately describes all material terms of the transaction which is the subject of the exemption.

Signed at Washington, DC, this 31st day of March, 1988.

Robert J. Doyle,

Acting Associate Director for Regulations and Interpretations, Pension and Welfare Benefits Administration, U.S. Department of Labor.

[FR Doc. 88-7450; Filed 4-5-88; 8:45 am]

BILLING CODE 4510-29-M

NATIONAL FOUNDATION ON THE ARTS AND THE HUMANITIES

Music Advisory Panel; Meeting

Pursuant to section 10(a)(2) of the Federal Advisory Committee Act (Pub. L. 92-463), as amended, notice is hereby given that a meeting of the Music Advisory Panel (Solo Recitalists Fellowships Section) to the National Council on the Arts will be held on April 21, 1988 from 9:00 a.m.-5:30 p.m., and on April 22, 1988 from 9:00 a.m.-5:00 p.m. in room 730 of the Nancy Hanks Center, 1100 Pennsylvania Avenue, NW., Washington, DC 20506.

A portion of this meeting will be open to the public on April 22, 1988, from 3:00 p.m.-5:00 p.m. for a general program overview and guidelines discussion.

The remaining sessions of this meeting on April 21, 1988 from 9:00 a.m.-5:30 p.m., and on April 22, 1988 from 9:00 a.m.-3:00 p.m. are for the purpose of Panel review, discussion, evaluation and recommendation on applications for financial assistance under the National Foundation on the Arts and the Humanities Act of 1965, as amended, including information given in confidence to the agency by grant applicants. In accordance with the determination of the Chairman published in the **Federal Register** of February 13, 1980, these sessions will be closed to the public pursuant to subsection (c)(4), (6) and (9)(b) of section 552b of Title 5, United States Code.

If you need special accommodations due to a disability, please contact the Office for Special Constituencies, National Endowment for the Arts, 1100 Pennsylvania Avenue, NW., Washington, DC 20506, 202/682-5532, TTY 202/682-5496 at least seven (7) days prior to the meeting.

Further information with reference to this meeting can be obtained from Ms. Yvonne M. Sabine, Advisory Committee Management Officer, National Endowment for the Arts, Washington, DC 20506, or call 202/682-5433.

March 29, 1988.

Yvonne Sebine,

Acting Director, Council and Panel Operations, National Endowment for the Arts.

[FR Doc. 88-7493 Filed 4-5-88; 8:45 am]

BILLING CODE 7537-01-M

NUCLEAR REGULATORY COMMISSION

[Docket No. 50-409]

Dairyland Power Cooperative; Environmental Assessment and Finding of No Significant Impact

The U.S. Nuclear Regulatory Commission (the Commission) is considering issuance of an amendment to Provisional License No. DPR-45, issued to Dairyland Power Cooperative (the licensee) for the La Crosse Boiling Water Reactor (LACBWR), located in Vernon County, Wisconsin.

Environmental Assessment

Identification of Proposed Action

The proposed amendment would revise the Technical Specifications (TS) to reduce the required crew size.

LACBWR was permanently shutdown on April 30, 1987 and reactor defueling completed on June 11, 1987. The LACBWR Operating License No. DPR-45 was modified to possess-but-not-operate status on August 4, 1987.

Need for Proposed Action

The amendment is needed to reduce crew size requirements that were appropriate for an operating plant but not at the permanently shutdown LACBWR facility.

Environmental Impact of the Proposed Action

The proposed action will have no environmental impact because with the reactor permanently shutdown our accident analysis shows that potential offsite exposures are reduced to less than protective action guide levels. The reduced crew size would be adequate to respond to these potential accidents and there can be no reactor accident since all fuel has been removed from the reactor and placed in the Fuel Element Storage Well. This staff has also determined that the amendment involves no increase in the amounts, and no significant change in the types of any effluents that may be released offsite and that there would be no increase in individual or cumulative occupational radiation exposures.

Alternative Use of Resources

This action does not involve the use of resources.

Agencies and Persons Consulted

The licensee initiated this amendment action. The NRC staff has reviewed their request. No other agencies or persons were consulted.

Finding of No Significant Impact

The Commission has determined not to prepare an environmental impact statement for the proposed amendment.

Based upon the foregoing environmental assessment, we conclude that the proposed action will not have a significant effect on the quality of the human environment.

For further details with respect to this action, see the licensee's application dated November 12, 1987 as revised January 29, 1988, which is available for public inspection at the Commission's Public Document Room, 1717 H Street, NW., Washington, DC 20555 and at the La Crosse Public Library, 800 Main Street, La Crosse, Wisconsin 54601.

Dated at Rockville, Maryland this 31 day of March 1988.

For The Nuclear Regulatory Commission.

Peter B. Erickson,

Project Manager, Standardization and Non-Power Reactor Project Directorate, Division of Reactor Projects-III, IV, V and Special Projects, Office of Nuclear Reactor Regulation.

[FR Doc. 88-7522 Filed 4-5-88; 8:45 am]

BILLING CODE 7590-01-M

Biweekly Notice Applications and Amendments to Operating Licenses Involving No Significant Hazards Considerations

I. Background

Pursuant to Public Law (Pub. L.) 97-415, the Nuclear Regulatory Commission (the Commission) is publishing this regular biweekly notice. Pub. L. 97-415 revised section 189 of the Atomic Energy Act of 1954, as amended (the Act), to require the Commission to publish notice of any amendments issued, or proposed to be issued, under a new provision of section 189 of the Act. This provision grants the Commission the authority to issue and make immediately effective any amendment to an operating license upon a determination by the Commission that such amendment involves no significant hazards consideration, notwithstanding the pendency before the Commission of a request for a hearing from any person.

This biweekly notice includes all notices of amendments issued, or proposed to be issued from March 14, 1988 through March 25, 1988. The last biweekly notice was published on March 23, 1988 (53 FR 9496).

NOTICE OF CONSIDERATION OF ISSUANCE OF AMENDMENT TO FACILITY OPERATING LICENSE AND PROPOSED NO SIGNIFICANT HAZARDS CONSIDERATION DETERMINATION AND OPPORTUNITY FOR HEARING

The Commission has made a proposed determination that the following amendment requests involve no significant hazards consideration. Under the Commission's regulations in 10 CFR 50.92, this means that operation of the facility in accordance with the proposed amendments would not (1) involve a significant increase in the probability or consequences of an accident previously evaluated; or (2) create the possibility of a new or different kind of accident from any accident previously evaluated; or (3) involve a significant reduction in a margin of safety. The basis for this proposed determination for each amendment request is shown below.

The Commission is seeking public comments on this proposed determination. Any comments received within 30 days after the date of publication of this notice will be considered in making any final determination. The Commission will not normally make a final determination unless it receives a request for a hearing.

Written comments may be submitted by mail to the Rules and Procedures Branch, Division of Rules and Records, Office of Administration and Resource Management, U.S. Nuclear Regulatory Commission, Washington, DC 20555, and should cite the publication date and page number of this **Federal Register** notice. Written comments may also be delivered to Room 4000, Maryland National Bank Building, 7735 Old Georgetown Road, Bethesda, Maryland from 8:15 a.m. to 5:00 p.m. Copies of written comments received may be examined at the NRC Public Document Room, 1717 H Street, NW., Washington, DC. The filing of requests for hearing and petitions for leave to intervene is discussed below.

By May 6, 1988, the licensee may file a request for a hearing with respect to issuance of the amendment to the subject facility operating license and any person whose interest may be affected by this proceeding and who wishes to participate as a party in the proceeding must file a written petition for leave to intervene. Requests for a hearing and petitions for leave to

VOL 53 ISS 66 APR 6 1988 UMI

intervene shall be filed in accordance with the Commission's "Rules of Practice for Domestic Licensing Proceedings" in 10 CFR Part 2. If a request for a hearing or petition for leave to intervene is filed by the above date, the Commission or an Atomic Safety and Licensing Board, designated by the Commission or by the Chairman of the Atomic Safety and Licensing Board Panel, will rule on the request and/or petition and the Secretary or the designated Atomic Safety and Licensing Board will issue a notice of hearing or an appropriate order.

As required by 10 CFR 2.714, a petition for leave to intervene shall set forth with particularity the interest of the petitioner in the proceeding, and how that interest may be affected by the results of the proceeding. The petition should specifically explain the reasons why intervention should be permitted with particular reference to the following factors: (1) The nature of the petitioner's right under the Act to be made a party to the proceeding; (2) the nature and extent of the petitioner's property, financial, or other interest in the proceeding; and (3) the possible effect of any order which may be entered in the proceeding on the petitioner's interest. The petition should also identify the specific aspect(s) of the subject matter of the proceeding as to which petitioner wishes to intervene. Any person who has filed a petition for leave to intervene or who has been admitted as a party may amend the petition without requesting leave of the Board up to fifteen (15) days prior to the first prehearing conference scheduled in the proceeding, but such an amended petition must satisfy the specificity requirements described above.

Not later than fifteen (15) days prior to the first prehearing conference scheduled in the proceeding, a petitioner shall file a supplement to the petition to intervene which must include a list of the contentions which are sought to be litigated in the matter, and the bases for each contention set forth with reasonable specificity. Contentions shall be limited to matters within the scope of the amendment under consideration. A petitioner who fails to file such a supplement which satisfies these requirements with respect to at least one contention will not be permitted to participate as a party.

Those permitted to intervene become parties to the proceeding, subject to any limitations in the order granting leave to intervene, and have the opportunity to participate fully in the conduct of the hearing, including the opportunity to present evidence and cross-examine witnesses.

If a hearing is requested, the Commission will make a final determination on the issue of no significant hazards consideration. The final determination will serve to decide when the hearing is held.

If the final determination is that the amendment request involves no significant hazards consideration, the Commission may issue the amendment and make it immediately effective, notwithstanding the request for a hearing. Any hearing held would take place after issuance of the amendment.

If the final determination is that the amendment involves a significant hazards consideration, any hearing held would take place before the issuance of any amendment.

Normally, the Commission will not issue the amendment until the expiration of the 30-day notice period. However, should circumstances change during the notice period such that failure to act in a timely way would result, for example, in derating or shutdown of the facility, the Commission may issue the license amendment before the expiration of the 30-day notice period, provided that its final determination is that the amendment involves no significant hazards consideration. The final determination will consider all public and State comments received before action is taken. Should the Commission take this action, it will publish a notice of issuance and provide for opportunity for a hearing after issuance. The Commission expects that the need to take this action will occur very infrequently.

A request for a hearing or a petition for leave to intervene must be filed with the Secretary of the Commission, U.S. Nuclear Regulatory Commission, Washington, DC 20555, Attention: Docketing and Service Branch, or may be delivered to the Commission's Public Document Room, 1717 H Street, NW., Washington, DC, by the above date. Where petitions are filed during the last ten (10) days of the notice period, it is requested that the petitioner promptly so inform the Commission by a toll-free telephone call to Western Union at (800) 325-6000 (in Missouri (800) 342-6700). The Western Union operator should be given Datagram Identification Number 3737 and the following message addressed to *(Project Director)*: petitioner's name and telephone number; date petition was mailed; plant name; and publication date and page number of this **Federal Register** notice. A copy of the petition should also be sent to the Office of the General Counsel-White Flint, U.S. Nuclear Regulatory Commission, Washington, DC 20555, and to the attorney for the licensee.

Nontimely filings of petitions for leave to intervene, amended petitions, supplemental petitions and/or requests for hearing will not be entertained absent a determination by the Commission, the presiding officer or the presiding Atomic Safety and Licensing Board, that the petition and/or request should be granted based upon a balancing of factors specified in 10 CFR 2.714(a)(1) (i)-(v) and 2.714(d).

For further details with respect to this action, see the application for amendment which is available for public inspection at the Commission's Public Document Room, 1717 H Street, NW., Washington, DC, and at the local public document room for the particular facility involved.

Alabama Power Company, Docket Nos. 50-348 and 50-364, Joseph M. Farley Nuclear Plant, Units 1 and 2, Houston County, Alabama

Date of amendments request: December 2, 1986, September 16, 1987 and November 17, 1987.

Brief description of amendments: In accordance with the requirements of 10 CFR 73.55, the licensee has submitted a proposed amendment to the Physical Security Plan for the Joseph M. Farley Nuclear Plant, Units 1 and 2, to reflect recent changes to that regulation. The proposed amendment would change paragraphs 2.D of Facility Operating License No. NPF-2 and Facility Operating License No. NPF-8 to require compliance with the revised plans.

Basis for proposed no significant hazards consideration determination: On August 4, 1986 (51 FR 27817 and 27822), the Nuclear Regulatory Commission amended Part 73 of its regulations, "Physical Protection of Plants and Materials," to clarify plant security requirements to afford an increased assurance of plant safety. The amended regulations required that each nuclear reactor power licensee submit proposed amendments to its security plan to implement the revised provisions of 10 CFR 73.55. The licensee submitted its revised plan on December 2, 1986, September 16, 1987, and November 17, 1987 to satisfy the requirements of the amended regulations. The Commission proposes to amend the licenses to reference the revised plan.

In the supplementary materials accompanying the amended regulations the Commission indicated that it was amending its regulations "to provide a more safety conscious safeguards

system while maintaining the current levels of protection" and that the "Commission believes that the clarification and refinement of requirements as reflected in these amendments is [sic] appropriate because they afford an increased assurance of plant safety."

The Commission has provided guidance concerning the application of the criteria for determining whether or not a no significant hazards consideration exists by providing certain examples of actions not likely to involve significant hazards considerations ard examples of actions likely to involve significant hazards considerations (51 FR 7750). One of the examples of actions not likely to involve significant hazards considerations is example (vii) "a change to conform a license to changes in the regulations, where the license change results in very minor changes to facility operations clearly in keeping with the regulations." The changes in this case fall within the scope of the example. For the foregoing reasons, the Commission proposes to determine that the proposed amendment involves no significant hazards consideration.

Local Public Document Room location: George S. Houston Memorial Library, 212 W. Burdeshaw Street, Dothan, Alabama 36303.

Attorney for licensee: Ernest L. Blake, Esquire, 2300 N Street, NW., Washington, DC 20037.

NRC Project Director: Elinor G. Adensam.

Arizona Public Service Company et al., Docket Nos. STN 50-528, STN 50-529 and STN 50-530, Palo Verde Nuclear Generating Station (PVNGS), Units 1, 2 and 3 Maricopa County, Arizona

Date of amendment request: November 21, 1986, as supplemented by letter dated December 7, 1987.

Description of amendment request: In accordance with the requirements of 10 CFR 73.55, the licensees submitted an amendment to the Physical Security Plan for the Palo Verde Nuclear Generating Station, Units 1, 2 and 3 to reflect recent changes to that regulation. The proposed license amendments would modify paragraph 2.E of Facility Operating License Nos. NPF-41, NPF-51 and NPF-74 for these units to require compliance with the revised Plan.

Basis for proposed no significant hazards consideration determination: On August 4, 1986 (51 FR 27817 and 27822), the Nuclear Regulatory Commission amended Part 73 of its regulations, "Physical Protection of Plants and Materials," to clarify plant security requirements to afford an increased assurance of plant safety. The amended regulations required that each nuclear power reactor licensee sumit proposed amendments to its security plan to implement the revised provisions of 10 CFR 73.55. The licensees submitted a revised Plan on November 21, 1986 and December 7, 1987, to satisfy the requirements of the amended regulations. The Commission proposes to amend the licenses to reference the revised Plan.

In the Supplementary Material accompanying the amended regulations, the Commission indicated that it was amending its regulations "to provide a more safety conscious safeguards system while maintaining the current levels of protection" and that the "Commission believes that the clarification and refinement of requirements as reflected in these amendments is appropriate because they afford an increased assurance of plant safety."

The Commission has provided guidance concerning the application of the criteria for determining whether a significant hazards consideration exists by providing certain examples of actions involving no significant hazards considerations (51 FR 7751). One of these examples is example (vii): "A change to conform a license to changes in the regulations, where the license change results in very minor changes to facility operations clearly in keeping with the regulations." The changes in this case fall within the scope of the example.

For the foregoing reasons, the Commission proposes to determine that the proposed amendments involve no significant hazards consideration.

Local Public Document Room location: Phoenix Public Library, Business and Science Division, 12 East McDowell Road, Phoenix, Arizona 85004.

Attorney for licensees: Mr. Arthur C. Gehr, Snell & Wilmer, 3100 Valley Center, Phoenix, Arizona 85007.

NRC Project Director: George W. Knighton.

Arizona Public Service Company et al., Docket Nos. STN 50-528, STN 50-529, and STN 50-530, Palo Verde Nuclear Generating Station (PVNGS), Units 1, 2 and 3, Maricopa County, Arizona

Date of amendment request: February 26, 1988.

Description of amendment request: The proposed amendment consists of a proposed change to the Technical Specifications (Appendix A to Facility Operating License Nos. NPF-41, NPF-51, and NPF-74 for PVNGS, Units 1, 2 and 3 respectively). The proposed change would replace the Action statement of Technical Specification Table 3.3-1 section I.B.2a, Startup Logarithmic Power Level-High Channels. Presently the Action statement referenced is No. 8; the proposed change would replace the Action statement with statements Nos. 2 and 3.

Table 3.3-1 currently requires that with less than 3 log channel detectors operating, an inoperable channel must be restored to Operable status within 48 hours or an affected reactor trip breaker must be opened within the next hour (Action No. 8). However, the licensees state that the log power bistables input into the RPS matrix logic and are not assigned in any particular reactor trip breaker; therefore determining which reactor trip breaker is the affected one becomes difficult. Also, if the operator were to perform Action No. 8 when 1 less than the minimum operable log channels are operable the result would be that a 2 out of 2 trip logic would occur. By changing the action statement to Actions #2 and #3, which requires 1 channel to be bypassed and one tripped thus establishing a 1 out of 2 trip logic, this logic would be consistent with other similar RPS input parameters.

Basis for proposed no significant hazards consideration determination: The Commission has provided standards for determining whether a significant hazards consideration exists as stated in 10 CFR 50.92. A proposed amendment to an operating license for a facility involves no significant hazards considerations if operation of the facility in accordance with a proposed amendment would not: (1) Involve a significant increase in the probability or consequences of an accident previously evaluated; (2) Create the possibility of a new or different kind of accident from any accident previously evaluated; or (3) Involve a significant reduction in a margin of safety.

The licensees have provided a discussion of the proposed change as it relates to these standards; the discussion is presented below.

Standard 1—Involve a Significant Increase in the Probability or Consequences of an Accident Previously Evaluated

The proposed change does not involve a significant increase in the probability or consequences of an accident previously evaluated. The proposed change only modifies an existing action statement. The proposed change does not modify or replace equipment or components important to safety. Therefore the current safety analyses remain bounding. Thus, the probabilities

or consequences of an accident previously evaluated will not significantly increase.

Standard 2—Create the Possibility of a New or Different Kind of Accident From Any Accident Previously Evaluated

The proposed amendment will not create the possibility of a new or different kind of accident from any accident previously evaluated. Changing the action statement to the more appropriate actions of #2 and #3 would establish a 1 out of 2 trip logic and would be consistent with the assumptions of the safety analysis and therefore not create the possibility of a new or different kind of accident from any accident previously evaluated.

Standard 3—Involve a Significant Reduction in a Margin of Safety

The proposed change does not involve a significant reduction in a margin of safety because it does not affect the design basis of the plant. The trip setpoints for the log channel detectors have not been changed. Changing the action statement to establish a 1 out of 2 trip logic when one less than the minimum operable log channels are operable would be consistent with the current safety analyses. Therefore the appropriate safety margins are maintained. Thus the proposed change does not involve a significant reduction in a margin of safety.

The staff has reviewed the licensees' no significant hazards consideration determination and agrees with the licensees' analysis.

Accordingly, the Commission has proposed to determine that the above change does not involve a significant hazards consideration.

Local Public Document Room location: Phoenix Public Library, Business and Science Division, 12 East McDowell Road, Phoenix, Arizona 85004.

Attorney for licensees: Mr. Arthur C. Gehr, Snell & Wilmer, 3100 Valley Center, Phoenix, Arizona 85007.

NRC Project Director: George W. Knighton.

Arizona Public Service Company et al., Docket No. STN 50-528, Palo Verde Nuclear Generating Station (PVNGS), Unit 1, Maricopa County, Arizona

Date of amendment request: March 2, 1988.

Description of amendment request: The proposed amendment would include a new license condition to implement an augmented vibration monitoring program for the reactor coolant pump shafts to be consistent with the licensees' written commitments for these pumps.

Basis for Proposed No Significant Hazards Consideration Determination: The Commission has provided guidance for determining whether a proposed amendment to an operating license for a facility involves a significant hazards consideration and has provided examples of amendments that are not likely to involve a significant hazards consideration (51 FR 7751). Example (ii) in 51 FR 7751 is as follows: (ii) A change that constitutes an additional limitation, restriction or control not presently included in the technical specifications: for example, a more stringent surveillance requirement. The staff considers the proposed amendment to be similiar to example (ii) since it would impose additional monitoring requirements on the reactor coolant pump shafts.

Accordingly, the Commission has proposed to determine that the above change does not involve a significant hazards consideration.

Local Public Document Room location: Phoenix Public Library, Business and Science Division, 12 East McDowell Road, Phoenix, Arizona 85004.

Attorney for licensees: Mr. Arthur C. Gehr, Snell & Wilmer, 3100 Valley Center, Phoenix, Arizona 85007.

NRC Project Director: George W. Knighton.

Arizona Public Service Company et al., Docket No. STN 50-530, Palo Verde Nuclear Generating Station (PVNGS), Unit No. 3, Maricopa County, Arizona

Date of Amendment Request: March 1, 1988.

Description of Amendment Request: The proposed amendment would modify the Technical Specifications (Appendix A to Facility Operating License No. NPF-74, for PVNGS, Unit 3), to revise Surveillance Pequirement 4.7.9.b. This Surveillance Requirement relates to the visual inspection program for various snubbers, whose function is to ensure the structural integrity of the reactor coolant system and all other safety related systems during and following a seismic event or another event which would initiate dynamic loads. The requested amendment would postpone the initial inservice inspection of all inaccessible snubbers in Unit 3 until the first refueling outage (approximately a 6 month delay).

Basis for Proposed No Significant Hazards Consideration Determination: The Commission has provided standards for determining whether a significant hazards consideration exists as stated in 10 CFR 50.92. A proposed amendment to an operating license for a facility involves no significant hazards considerations if operation of the facility in accordance with a proposed amendment would not: (1) Involve a significant increase in the probability or consequences of an accident previously evaluated; (2) Create the possibility of a new or different kind of accident from any accident previously evaluated; or (3) Involve a significant reduction in a margin of safety.

The licensees have provided a discussion of the proposed change as it relates to these standards; the discussion is presented below.

Standard 1—Involve a Significant Increase in the Probability or Consequences of an Accident Previously Evaluated

The proposed change requests a delay of approximately 6 months in performing the initial inservice visual inspection for all inaccessible snubbers. The inaccessible snubbers that are the subject of this amendment request function to ensure the structural integrity of the RCS and several other safety related systems during seismic events or other events initiating dynamic loads on the systems. The events that initiate seismic occurrences or other transients are independent of the frequency of performing snubber visual inspections. The inaccessible snubbers help to ensure that the consequences of previously evaluated accidents are not increased by ensuring the structural integrity of safety related systems. The proper operation of these snubbers is assured by the following considerations: (i) The relatively short time frame involved with this amendment request, (ii) the successful completion of previous inspections of this type on Units 1 and 2, and (iii) a portion of these snubbers are in an inactive portion of the containment spray system. Thus, the proposed change will not increase the probability or the consequences of previously evaluated accidents.

Standard 2—Create the Possibility of a New or Different Kind of Accident From any Accident Previously Evaluated

The proposed change will not create the possibility of a new or different kind of accident from any accident previously analyzed. Proper operation of the inaccessible snubbers during seismic or transient events helps to ensure the structural integrity of the RCS and other safety related systems. No new or different types of accidents are created by this proposed change since the snubbers will operate as intended which

will help to ensure that the associated mechanical systems perform as originally intended.

Standard 3—Involve a Significant Reduction in a Margin of Safety

The proposed change does not involve a significant reduction in a margin of safety because it does not affect the design basis of the plant. The bases section for Technical Specification 3.7.9 states that the purpose of the snubbers is to ensure the structural integrity of the RCS and all other safety related systems during and following a seismic event or another event initiating dynamic loads. Based upon the successful completion of previous inspections of this type on Units 1 and 2, there is adequate assurance that the inaccessible snubbers in Unit 3 will perform as required to ensure the structural integrity of the RCS and other safety related systems.

The staff has reviewed the licensees' no significant hazards consideration determination and agrees with the licensees' analysis.

Accordingly, the Commission has proposed to determine that the above change does not involve a significant hazards consideration.

Local Public Document Room location: Phoenix Public Library, Business and Science Division, 12 East McDowell Road, Phoenix, Arizona 85004.

Attorney for licensees: Mr. Arthur C. Gehr, Snell & Wilmer, 3100 Valley Center, Phoenix, Arizona 85007.

NRC Project Director: George W. Knighton.

Boston Edison Company, Docket No. 50-293, Pilgrim, Nuclear Power Station, Plymouth, Massachusetts

Date of amendment request: May 20, 1987.

Description of amendment request: The amendment would revise the Technical Specifications (TS) to reduce the testing (frequency) requirements of the Anticipated Transients Without Scram (ATWS) Reactor Pump Trip/Automatic Rod Injection from (RPT/ARI) not less than one month nor more than three months surveillance test interval to once/cycle. The new surveillance frequency is consistent with industry practice and the Pilgrim TS for other analog transmitters.

Basis for proposed no significant hazards consideration determination: The Commission has provided standards for determining whether a significant hazards determination exists as stated in 10 CFR 50.92(c). A proposed amendment to an operating license involves no significant hazards considerations if operation of the facility in accordance with the proposed amendment would not: (1) Involve a significant increase in the probability or consequences of an accident previously evaluated, or (2) create the possibility of a new or different kind of accident from any accident previously evaluated, or (3) involve a significant reduction in a margin of safety.

The licensee has evaluated the proposed amendment against the standards in 10 CFR 50.92 and has determined the following:

1. Operating Pilgrim Station in accordance with the proposed amendment will not involve a significant increase in the probability or consequences of an accident previously evaluated.

The proposed amendment will not involve a significant increase in the probability or consequences of an accident previously evaluated because the availability, accuracy and reliability of the analog transmitters identified on Table 4.2.G are not reduced by this change. In fact, overall availability is enhanced because the injection of a simulated signal into the transmitter requires that it be isolated during power operation, reducing its availability to perform its designed function. Isolation also creates a higher risk of spurious scram. Compliance with the existing requirement does not enhance safety because, as detailed in NEDO 21617-A, the type of transmitter being surveilled is subject to constant cross-checking by comparison of its output currents against other transmitters in the system. This provides a means to determine if a transmitter is malfunctioning without periodically isolating it and injecting a simulated signal into it. A gross failure immediately activates an annunciator in the control room. Minor "drifting" is detected by the daily instrument checks required by Technical Specification Table 4.2.G.

These constant checks, along with the proven reliability of the transmitters, is reflected by the once/cycle calibration of transmitters found in the calibration column of Table 4.2.G. Therefore this change will not involve a significant increase in probability or consequences of a previously evaluated accident.

2. Operating Pilgrim Station in accordance with the proposed amendment will not create the possibility of a new or different kind of accident from any accident previously evaluated.

The proposed amendment does not create a new or different kind of accident from any previously evaluated because the ATWS RPT/ARI was designed and installed as backup to other Reactor Protection Systems (RPS) signals. The instrumentation is intended to function in transients not covered by the primary Control Rod (CR) insertion signals; therefore the instruments enhance safety. The change does not create new or different accident scenarios; in fact, the change is beneficial because isolating the analog transmitters to perform the currently required surveillance reduces the availability of the ATWS RPT/ARI to perform its designated function, and increases the potential for spurious scram.

The reliability of these instruments, coupled with the required daily check and constant alarmed monitoring ensure that the accuracy, availability and reliability of the transmitters will be unchanged by the proposed amendment. Therefore this proposed change does not create the possibility of a new or different kind of accident from any previously evaluated.

3. Operating Pilgrim Station in accordance with the proposed amendment will not involve a significant reduction in a margin of safety.

The proposed amendment does not involve a significant reduction in a margin of safety. The only potential impact on the margin of safety involved in this proposal is associated with the reliability, accuracy and availability of the transmitter. As discussed in (1) and (2) above, the change will improve instrument reliability, accuracy and availability, therefore:

(a) Monthly testing of the transmitters will not increase reliability. Industry experience and recommendations indicate the reliability of the transmitters can be assured by testing once/refueling. This is reflected in the once/operating cycle calibration for the other transmitters included in Table 4.2.G.

(b) Monthly testing will not improve the ability to detect instrument malfunctions because the accuracy of the instrument is detectable on a daily basis. Gross failure or deviation is immediately identified through a control room alarm. Since a loss of accuracy has a direct impact on the confidence level assigned to relying on an instrument to assure previously identified safety margin, and since transmitter accuracy is in this case verified by constant cross checking, a high level of confidence in the transmitter's accuracy can be assumed because deviation will be quickly detected and corrected; therefore the component of the safety margin reliant on transmitter accuracy can also be assured.

(c) The proposed amendment actually improves transmitter availability because the transmitter would not need to be isolated during normal operations to allow a simulated signal to be injected into it.

The NRC staff has reviewed the licensee's no significant hazards consideration determination and agrees with the licensee's analysis. Based on this review, the staff therefore proposes to determine that the requested amendment does not involve a significant hazards consideration.

Local Public Document Room location: Plymouth Public Library, 11 North Street, Plymouth, Massachusetts 02360.

Attorney for licensee: W.S. Stowe, Esq., Boston Edison Company, 800 Boylston Street, 36th Floor, Boston, Massachusetts 02199.

NRC Project Director: Richard Wessman, Director.

Carolina Power & Light Company et al., Docket Nos. 50–325 and 50–324, Brunswick Steam Electric Plant, Units 1 and 2, Brunswick County, North Carolina

Dates of application for amendments: November 26, 1986 and September 23, 1987.

Brief description of amendments: In accordance with the requirements of 10 CFR 73.55, the licensee has submitted a proposed amendment to the Physical Security Plan for the Brunswick Steam Electric Plant, Units 1 and 2, to reflect recent changes to that regulation. The proposed amendment would delete paragraphs 2.D(1), 2.D(2) and 2.D(3) of Facility Operating License No. DPR–71 and add a new license condition as paragraph 2.D(1); and it would also delete paragraphs 2.C(6), 2.C(7) and 2.C(8) of Facility Operating License No. DPR–62 and add a new license condition as paragraph 2.C(6) to require compliance with the revised plans.

Basis for proposed no significant hazards consideration determination: On August 4, 1986 (51 FR 27817 and 27822), the Nuclear Regulatory Commission amended Part 73 of its regulations, "Physical Protection of Plants and Materials," to clarify plant security requirements to afford an increased assurance of plant safety. The amended regulations required that each nuclear power licensee submit proposed amendments in its security plan to implement the revised provisions of 10 CFR 73.55. The licensee submitted its revised plan on November 26, 1986 and September 23, 1987, to satisfy the requirements of the amended regulations. The Commission proposes to amend the licenses to reference the revised plan.

In the supplementary materials accompanying the amended regulations the Commission indicated that it was amending its regulations "to provide a more safety conscious safeguards system while maintaining the current levels of protection" and that the "Commission believes that the clarification and refinement of requirements as reflected in these amendments is [sic] appropriate because they afford an increased assurance of plant safety."

The Commission has provided guidance concerning the application of the criteria for determining whether or not a no significant hazards consideration exists by providing certain examples of actions not likely to involve significant hazards considerations and examples of actions likely to involve significant hazards considerations (51 FR 7750). One of the examples of actions not likely to involve significant hazards considerations is example (vii) "a change to conform a license to changes in the regulations, where the license change results in very minor changes to facility operations clearly in keeping with the regulations." The changes in this case fall within the scope of the example. For the foregoing reasons, the Commission proposes to determine that the proposed amendment involves no significant hazards consideration.

Local Public Document Room location: University of North Carolina at Wilmington, William Madison Randall Library, 601 S. College Road, Wilmington, North Carolina 28403–3297.

Attorney for licensee: R.E. Jones, General Counsel, Carolina Power & Light Company, P.O. Box 1551, Raleigh, North Carolina 27602.

NRC Project Director: Elinor G. Adensam.

Carolina Power & Light Company, North Carolina Eastern Municipal Power Agency, Docket No. 50–400, Shearon Harris Nuclear Power Plant, Unit 1, Wake and Chatham Counties, North Carolina

Date of amendment request: November 26, 1986 and September 23, 1987.

Brief description of amendments: In accordance with the requirements of 10 CFR 73.55, the licensee has submitted a proposed amendment to the Physical Security Plan for the Shearon Harris Nuclear Power Plant, Units 1, to reflect recent changes to that regulation. The proposed amendment would change paragraph 2.E. of Facility Operating License No. NPF–63 to require compliance with the revised plans.

Basis for proposed no significant hazards consideration determination: On August 4, 1986 (51 FR 27817 and 27822), the Nuclear Regulatory Commission amended Part 73 of its regulations, "Physical Protection of Plants and Materials," to clarify plant security requirements to afford an increased assurance of plant safety. The amended regulations required that each nuclear reactor power licensee submit proposed amendments to its security plan to implement the revised provisions of 10 CFR 73.55. The licensee submitted its revised plan on November 26, 1986 and September 23, 1987, to satisfy the requirements of the amended regulations. The Commission proposes to amend the licenses to reference the revised plan.

In the supplementary materials accompanying the amended regulations the Commission indicated that it was amending its regulations "to provide a more safety conscious safeguards system while maintaining the current levels of protection" and that the "Commission believes that the clarification and refinement of requirements as reflected in these amendments is [sic] appropriate because they afford an increased assurance of plant safety."

The Commission has provided guidance concerning the application of the criteria for determining whether or not a no significant hazards consideration exists by providing certain examples of actions not likely to involve significant hazards considerations and examples of actions likely to involve significant hazards considerations (51 FR 7750). One of the examples of actions not likely to involve significant hazards considerations is example (vii) "a change to conform a license to changes in the regulations, where the license change results in very minor changes to facility operations clearly in keeping with the regulations." The changes in this case fall within the scope of the example. For the foregoing reasons, the Commission proposes to determine that the proposed amendment involves no significant hazards consideration.

Local Public Document Room location: Richard B. Harrison Library, 1313 New Bern Avenue, Raleigh, North Carolina 27610.

Attorney for licensees: R.E. Jones, General Counsel, Carolina Power & Light Company, P.O. Box 1551, Raleigh, North Carolina 27602.

NRC Project Director: Elinor G. Adensam.

Commonwealth Edison Company, Docket Nos. STN 50-454 and STN 50-455, Byron Station Unit Nos. 1 and 2, Ogle County, Illinois; Docket Nos. STN 50-456 and STN 457, Braidwood Station, Unit Nos. 1 and 2, Will County, Illinois

Date of application for amendments: January 18, 1988.

Brief description of amendments: These amendments would revise the Technical Specifications in the following seven areas:

1. *Specific Activity* (pages 3/4 4-27 and 28, B 3/4 4-5 and 6, and 6-16) The amendment would change the shutdown and reporting requirements resulting from high specific activity of the reactor coolant.

2. *Cold Overpressure Protection (COP) System Setpoints* (page 3/4 4-40) The amendment would change the curve on page 3/4 4-40 to more conservative COP System Setpoints.

3. *Accumulator* (page 3/4 5-1) The amendment would allow other indications, in addition to the absence of alarms, to be used to verify accumulator borated water level and nitrogen cover pressure.

4. *Containment Isolation Valves* (page 3/4 6-23, Byron only) The amendment would correct a typographical error.

5. *Plant Systems* (page 3/4 7-14, Byron only) The amendment would correct a typographical error.

6. *Component Cyclic or Transient Limits* (page 5-6) The amendment would make Technical Specification Table 5.7-1 consistent with the FSAR and Section XI of the ASME code.

7. *Administrative Controls* (pages 6-8 and 6-13, Byron only, and page 6-7) The amendment would correct and update the titles of various management personnel, and clarify the authority of some Quality Assurance personnel.

Basis for proposed no significant hazards consideration determination: The staff has evaluated this proposed amendment and has determined that it involves no significant hazards considerations. According to 10 CFR 50.92(c), a proposed amendment to an operating license involves no significant hazards considerations if operation of the facility in accordance with the proposed amendment would not:

1. Involve a significant increase in the probability or consequences of an accident previously evaluated; or

2. Create the possibility of a new or different kind of accident from any accident previously evaluated; or

3. Involve a significant reduction in a margin of safety.

All the changes requested have been evaluated as presented below:

1. The changes to the Specific Activity Technical Specifications 3.4-6, Bases 3/4.4.8, and 6.9.1.5 are consistent with Generic Letter 85-19. The reporting requirements for iodine spiking are being reduced from a Special Report to an item to be included in an Annual Report. Also, the requirement to shutdown the plant if coolant iodine activity limits are exceeded for 800 hours in a 12-month period has been deleted because improved industry wide fuel quality has resulted in normal coolant iodine activity which is well below this limit. In addition, 10 CFR 50.72(b)(1)(ii) requires that NRC be immediately notified of fuel cladding failures that exceed expected values or that are caused by unexpected factors. Therefore, this Technical Specification limit is no longer considered necessary on the basis that proper fuel management and existing reporting requirements should preclude ever approaching the limit. Therefore, the changes do not involve a significant increase in the probability or consequences of an accident previously evaluated.

Since the changes are consistent with the appropriate Byron/Braidwood FSAR section and analysis and no physical modifications are being made in the plant, the possibility for an accident or malfunction of a different type than any previously evaluated is not created.

Since appropriate measures will remain in place to address primary coolant iodine spiking, the margin of safety will not be reduced.

2. The Cold Overpressure Protection (COP) system setpoints (page 3/4 4-40) in the current Technical Specifications and those requested both meet the Appendix G criteria. The changes request more conservative COP system setpoints to address a larger uncertainty assumed in the wide range temperature instrumentation and to prevent the need for additional stress evaluations following a single overpressure event. Therefore, the changes do not involve a significant increase in the probability or consequences of an accident previously evaluated.

Since the changes are consistent with the appropriate Byron/Braidwood FSAR section and analysis and no physical modifications are being made in the plant, the possibility for an accident or malfunction of a different type than any previously evaluated is not created.

Since the cold overpressure protection response setpoints are more conservative than the current Technical Specifications, the margin of safety does not involve a significant reduction.

3. Accumulator Technical Specification 4.5.1.1.a.1 will still require verification of accumulator parameters assumed in the Byron/Braidwood FSAR analysis but the revised wording will allow the operators flexibility in how these parameters will be verified. The changes do not involve a significant increase in the probability or consequences of an accident previously evaluated.

Since the changes are consistent with the appropriate Byron/Braidwood FSAR section and analysis and no physical modifications are being made in the plant, the possibility for an accident or malfunction of a different type, than any previously evaluated is not created.

Since the appropriate administrative controls will remain in place to verify accumulator parameters assumed in the Byron/Braidwood FSAR, the margin of safety is not reduced.

4. The change to Table 3.6-1 is being made to correct a typographical error for one Safety Injection Valve number. The change does not involve an increase in the probability or consequences of an accident previously evaluated.

Since the changes are consistent with the appropriate Byron/Braidwood FSAR section and analysis and no physical modifications are being made in the plant, the possibility for an accident or malfunction for a different type than any previously is not created.

Since the Table 3.6-1 changes are being made to be consistent with the Byron/Braidwood FSAR, the margin of safety is not reduced.

5. The change to Technical Specification 4.7.5 is being made to correct a typographical error for the UHS cooling tower basin water level. The change does not involve a significant increase in the probability or consequence of an accident previously evaluated.

Since the changes are consistent with the appropriate Byron/Braidwood FSAR section and analysis and no physical modifications are being made in the plant, the possibility for an accident or malfunction of a different type than any previously evaluated is not created.

Since the changes are being made to be consistent with the Byron/Braidwood FSAR, the margin of safety is not reduced.

6. The changes to Table 5.7-1 are being made to make the values be consistent with the Byron/Braidwood FSAR. The changes do not involve a significant increase in the probability or consequences of an accident previously evaluated.

Since the changes are consistent with the appropriate Byron/Braidwood FSAR section and analysis and no physical modifications are being made in the

plant, the possibility for an accident or malfunction of a different type than any previously evaluated is not created.

Since the Table 5.7-1 changes are being made to be consistent with the Byron/Braidwood FSAR, the margin of safety is not reduced.

7. The changes to Technical Specification 6.5 are administrative in nature and are being made to clarify some management titles and to further describe the functional authority of some Quality Assurance personnel. The change does not involve a significant increase in the probability or consequence of an accident previously evaluated.

Since the changes are consistent with the appropriate Byron/Braidwood FSAR section and analysis and no physical modifications are being made in the plant, the possibility for an accident or malfunction of a different type than any previously evaluated is not created.

Since the appropriate administrative controls will remain in place and are not being changed, the margin of safety is not reduced.

Therefore, based upon the previous analysis, the staff concludes that the proposed amendment to the Technical Specifications does not involve significant hazards considerations.

Local Public Document Room location: For Byron Station the Rockford Public Library, 215 N. Wyman Street, Rockford, Illinois 61101; for Braidwood Station the Wilmington Township Public Library, 201 S. Kankakee Street, Wilmington, Illinois 60481.

Attorney to licensee: Michael Miller, Esq., Sidley and Austin, One First National Plaza, Chicago, Illinois 60603.

Detroit Edison Company, Docket No. 50-341, Fermi-2, Monroe County, Michigan

Date of amendment request: December 2, 1986, and October 8, 1987.

Description of amendment request: In accordance with the requirements of 10 CFR 73.55, the licensee submitted an amendment to the Physical Security Plan for Fermi-2 to reflect recent changes to that regulation. The proposed amendment would modify paragraph 2.E of Facility Operating License No. NPF-43 to require compliance with the revised Plan.

Basis for proposed no significant hazards consideration determination: On August 4, 1986 (51 FR 27817 and 27822), the Nuclear Regulatory Commission amended Part 73 of its regulations, "Physical Protection of Plants and Materials," to clarify plant security requirements to afford an increased assurance of plant safety. The amended regulations required that each nuclear power reactor licensee submit proposed amendments to its security plan to implement the revised provisions of 10 CFR 73.55. The licensee submitted its revised plan on December 2, 1986, and October 8, 1987, to satisfy the requirements of the amended regulations. The Commission proposes to amend the license to reference the revised plan.

In the Supplementary Materials accompanying the amended regulations, the Commission indicated that it was amending its regulations "to provide a more safety conscious safeguards system while maintaining the current levels of protection" and that the "Commission believes that the clarification and refinement of requirements as reflected in these amendments is appropriate because they afford an increased assurance of plant safety."

The Commission has provided guidance concerning the application of the criteria for determining whether a significant hazards consideration exists by providing certain examples of actions involving no significant hazards considerations and examples of actions involving significant hazards considerations (51 FR 7750). One of these examples of actions involving no significant hazards considerations is example (vii) "a change to conform a license to changes in the regulations, where the license change results in very minor changes to facility operations clearly in keeping with the regulations." The changes in this case fall within the scope of the example. For the foregoing reasons, the Commission proposes to determine that the proposed amendment involves no significant hazards consideration.

Local Public Document Room location: Monroe County Library System, 3700 South Custer Road, Monroe, Michigan 48161.

Attorney for licensee: John Flynn, Esq., Detroit Edison Company, 2000 Second Avenue, Detroit, Michigan 48226.

NRC Project Director: Martin J. Virgilio.

Duke Power Company, Docket Nos. 50-369 and 50-370, McGuire Nuclear Station, Units 1 and 2, Mecklenburg County, North Carolina

Date of amendment request: February 5, 1988.

Description of amendment request: The proposed amendment would delete from the Design Features section 5.3.1 of the Technical Specifications (TS) the maximum fuel rod weight limit of 1700 grams of uranium. The purpose of the change would be to permit the use of assemblies found to be slightly over the weight limit. Additional change requests within the February 5, 1988 letter are outside the scope of this notice.

Basis for proposed no significant hazards consideration determination: The Commission has made a proposed determination that the amendment request involves no significant hazards consideration. Under the Commission's regulations in 10 CFR 50.92, this means that operation of the facility in accordance with the proposed amendment would not: (1) involve a significant increase in the probability or consequences of an accident previously evaluated; or (2) create the possibility of a new or different kind of accident from any accident previously evaluated; or (3) involve a significant reduction in a margin of safety.

The deletion of the fuel rod uranium weight limit does not significantly increase the probability or consequences of previously evaluated accidents. The variation in fuel rod weight that can occur even without a Technical Specification limit is small based on other fuel design constraints, e.g., rod diameter, gap size, UO_2 density and active fuel length; all of which provide some limit on the variation in rod weight. The current safety analyses are not based directly on fuel rod weight, but rather on design parameters such as power, and fuel dimensions. These parameters are either (1) not affected at all by fuel rod weight, or (2) only slightly affected. A review of design parameters which may be affected indicated that a change in fuel weight does not cause other design parameters to exceed the values assumed in the various safety analyses, or to cause acceptance criteria to be exceeded. The effects are not significant with respect to measured nuclear parameters (power, power distribution, nuclear coefficients), i.e., they remain within their Technical Specification limits. Thus, the Technical Specification modification would not involve a significant increase in the probability or consequences of a previously evaluated accident.

No new or different kind of accident from any previously evaluated accident would be created. All of the fuel contained in the fuel rod is similar to and designed to function similarly to previous fuel. In addition, the existing new and spent fuel storage criticality analyses bound the proposed changes observed.

The margin of safety is maintained by adherence to other fuel related Technical Specification limits and the FSAR design bases. The deletion of fuel rod weight limits in the Technical Specifications Design Features section

5.3.1 does not directly affect any safety analysis, system or the safety limits, thus it does not affect the plant margin of safety.

Therefore, based on the above considerations, the Commission proposes to determine that the changes do not involve a significant hazards consideration.

Local Public Document Room location: Atkins Library, University of North Carolina, Charlotte (UNCC Station), North Carolina 28242.

Attorney for licensee: Mr. Albert Carr, Duke Power Company, 422 South Church Street, Charlotte, North Carolina 28242.

NRC Project Director: Lawrence P. Crocker, Acting.

Duke Power Company, Docket Nos. 50-369 and 50-370, McGuire Nuclear Station, Units 1 and 2, Mecklenburg County, North Carolina

Date of application for amendments: March 14, 1988.

Description of amendment request: The proposed amendments would change the Technical Specifications (TS) by removing all text regarding Upper Head Injection (UHI) system.

Basis for proposed no significant hazards consideration determination: By previous Amendments 57 (McGuire Unit 1) and 38 (McGuire Unit 2), dated May 13, 1986, the Commission approved changes to the TS allowing operation with the UHI system (1) functionally disabled by closure of isolation valves or (2) physically removed. Because the changes applied to both of two units in the common TS document, each with different refueling outage schedules, and because each unit would operate one fuel cycle with UHI functionally disabled prior to physical removal, the previous changes contained provisions for the plant transition by specifying requirements during which the UHI system was (1) operable, (2) isolated but present, and (3) physically removed. The transition was completed during the 1987 refueling outages at which time the UHI system piping and valves were physically removed from each unit. Accordingly, all references in the TS to the UHI system are now obsolete. The licensee has requested that reference to the UHI system in the TS be removed to preclude any possible confusion over applicability of the extraneous specifications.

The Commission has provided guidance concerning the application of the standards for determining whether a significant hazard exists by providing certain examples (51 FR 7744). One of the examples of actions involving no significant hazards considerations is example (i) "a purely administrative change to technical specifications; for example, a change to achieve consistency throughout the technical specifications, correction of an error, or a change in nomenclature." The requested change to delete obsolete text has no safety implication, is purely administrative, and matches this example. Accordingly, the Commission proposes to determine that the proposed amendment would involve no significant hazards considerations.

Local Public Document Room location: Atkins Library, University of North Carolina, Charlotte (UNCC Station), North Carolina 28223.

Attorney for licensee: Mr. Albert Carr, Duke Power Company, 422 South Church Street, Charlotte, North Carolina 28242.

NRC Project Director: Darl S. Hood, Acting.

Duke Power Company, Docket Nos. 50-269, 50-270 and 50-287, Oconee Nuclear Station, Units 1, 2 and 3, Oconee County, South Carolina

Date of amendment request: July 28, 1987.

Description of amendment request: The proposed amendments would revise the Station's common Technical Specifications (TSs) in two areas: (1) To delete requirements to test redundant components for operability before initiating maintenance on any component of the high pressure injection (HPI) system, low pressure injection (LPI) system, reactor building cooling (RBC) system, reactor building spray (RBS) system, and the low pressure service water (LPSW) system, and (2) to correct and update TS with administrative-type of revisions. Specific administrative changes are:

- T.S. 3.7.2 *Auxiliary Electrical Systems* (page 3.7-3) is updated by the deletion of an expired footnote.
- T.S. Table 4.1-2 *Minimum Equipment Test Frequency* (page 4.1-9) is clarified by the addition of a footnote which indicates that functional testing of refueling system interlocks (Item 4) is applicable only to those interlocks associated with the reactor building purge system.
- T.S. 4.6.4 *Emergency Power Periodic Testing* (page 4.6-1) is updated by the deletion of an expired footnote.
- T.S. 4.18 *Snubbers* (page 4.18-1 and 4.18-2) is updated by the deletion of expired footnotes.

Currently at Oconee Nuclear Station testing of components of the HPI, LPI RBC, RBS, and LPSW systems is performed in accordance with the requirements of the ASME Boiler and Pressure Vessel Code, Section XI. The specific schedule and requirements for fulfilling ASME Section XI are provided in the Oconee Nuclear Station Inservice Inspection Program Manual. TS 4.0.4 requires performance of the Inservice Inspection (ISI) Program. Therefore, the ISI Program Manual is considered to be a binding extension of the TSs and any failure to meet these requirements is a violation of the TSs. In addition to Section XI, before initiating maintenance on any component of the HPI, LPI, RBC, RBS, and LPSW Systems, redundant components are tested for operability per the requirements of TS 3.3.

TS 3.3 requirements for redundant component testing were written prior to 10 CFR 50.55a which requires testing per ASME Section XI. The intent of TS 3.3 was to provide assurance and documentation that the redundant component is operable.

Specific pump testing requirements for Section XI require measurement or observation of pump speed, inlet pressure, differential pressure, flow rate, vibration amplitude, proper lubricant level or pressure, and bearing temperature every three months, (with the exception of flow and differential pressure measurement of the LPI "A" pump). The LPI "A" flow and differential pressure are checked during cold shutdowns due to the lack of accuracy of the installed instrumentation and assurance of repeatability in the recirculation mode. Pump testing per TS 3.3 is comprised of a relatively simple flow verification.

For valve testing, the stroke test procedure used to satisfy Section XI is normally used to satisfy TS 3.3.

Redundant component testing per TS 3.3 is not performed if testing of a redundant component would remove it from service, or if the redundant component is already in service (i.e. a running pump).

Basis for proposed no significant hazards consideration determination: The Commission has provided standards (10 CFR Part 50.92(c)) for determining whether a significant hazards consideration exists. A proposed amendment to an operating license for a facility involves no significant hazards consideration if operation of the facility in accordance with the proposed amendment would not:

1. Involve a significant increase in the probability or consequences of an accident previously evaluated; or

2. Create the possibility of a new or different kind of accident from any accident previously evaluated; or

3. Involve a significant reduction in a margin of safety.

First Standard

The amendments would not involve a significant increase in the probability or consequences of an accident previously evaluated.

Each accident analysis addressed in the Oconee Final Safety Analysis Report (FSAR) has been examined by the licensee with respect to the deletion of requirements to test redundant components for operability before initiating maintenance on any component of the HPI, LPI, RBC, RBS, or the LPSW Systems (TS 3.3). Currently, periodic testing such as that required by the ASME Boiler and Pressure Vessel Code, Section XI provides the necessary assurance and documentation that the redundant component is operable. Based on the effectiveness of the Section XI surveillance program and the lack of inoperable components identified by TS 3.3, redundant testing requirements will not involve a significant increase in the probability or consequences of any previously evaluated accident.

In addition, each accident analysis addressed in the Oconee FSAR has been examined with respect to administrative changes included in this amendment request. Specifically:

- T.S. 3.7.2 *Auxiliary Electrical Systems* (page 3.7–3) would be updated by the deletion of an expired footnote.
- T.S. Table 4.1–2 *Minimum Equipment Test Frequency* (page 4.1–9) would be clarified by the addition of a footnote which indicates that functional testing of refueling system interlocks (Item 4) is applicable only to those interlocks associated with the reactor building purge system.
- T.S. 4.6.4 *Emergency Power Periodic Testing* (page 4.6–1) would be updated by the deletion of an expired footnote.
- T.S. 4.18 *Snubbers* (pages 4.18–1 and 4.18–2) would be updated by the deletion of expired footnotes.

The preceding changes are administrative in nature and, as such, are not an initiator or contributor to any Design Basis Accident (DBA). Therefore, there will not be a significant increase in the probability or consequences of previously analyzed accidents due to this change.

Second Standard

The amendments would not create the possibility of a new or different kind of accident from any accident previously evaluated.

The licensee states that periodic testing such as required by the ASME Boiler and Pressure Vessel Code, Section XI provides the necessary assurance and documentation that redundant components of the HPI, LPI, RBC, RBS, and the LPSW Systems are operable. As such, the deletion of redundant testing requirements will not create the possibility of a new kind of accident from any accident previously evaluated.

The changes to TS 3.7.2, TS Table 4.1–2, TS 4.6.4, and TS 4.18 are purely administrative in nature. As such, the possibility of a new or different kind of accident from any accident previously evaluated will not be created as a result of these changes.

Third Standard

The amendments would not involve a significant reduction in a margin of safety.

The deletion of redundant testing requirements from TS 3.3 will not involve a significant reduction of a margin of safety as the necessary assurance and documentation of operability for redundant components of the HPI, LPI, RBC, RBS, and LPSW Systems is provided by periodic testing such as that required by the ASME Code.

The changes to TS 3.7.2, TS Table 4.1–2, TS 4.6.4, and TS 4.18 do not involve any margin of safety as they are purely administrative in nature. Therefore, there will be no reduction in any margin of safety.

Therefore, the proposed action would not: (1) Involve a significant increase in the probability or consequences of an accident previously evaluated; (2) create the possibility of a new or different kind of accident from any accident previously evaluated; or (3) involve a significant reduction in a margin of safety.

On this basis, the Commission proposes to determine that the application involves no significant hazards consideration.

Local Public Document Room location: Oconee County Library, 501 West South Broad Street, Walhalla, South Carolina 29691.

Attorney for licensee: J. Michael McGarry, III, Bishop, Liberman, Cook, Purcell and Reynolds, 1200 17th Street, NW., Washington, DC 20036.

NRC Project Director: Kahtan Jabbour, Acting.

Duke Power Company, Docket Nos. 50–269, 50–270 and 50–287, Oconee Nuclear Station, Units 1, 2 and 3, Oconee County, South Carolina

Date of amendment request: August 11, 1987.

Description of amendment request: The proposed amendments would revise the Station's common Technical Specifications (TSs) to revise Table 3.17–1 (Fire Hose Stations). The amendments would also change the location and valve numbers of a number of fire hose stations and correct typographical errors.

The proposal consists of revisions to Table 3.17–1 (Fire Hose Stations) in the Fire Protection and Detection System TS. Presently, there are a number of fire hose stations located inside the Cable Spreading and Equipment Rooms at Oconee. The location number, valve number and the area or component protected by each of the hose stations is listed in Table 3.17–1. The licensee determined that it is not practical to have these fire hose stations inside the rooms where a fire may be occurring. A station modification will relocate some of these hose stations from inside to just outside the entrances to the rooms. The licensee states that this modification will enhance the accessibility of the hose stations in the event of a fire and will remove portions of the fire protection header from the rooms. With this modification, in the case of a fire in these rooms, fire brigade personnel would not have to enter the room to obtain use of the fire equipment.

For the Cable Spreading Rooms, the modification includes moving AX–35, AX–33, AX–32, AX–30 and AX–31 to stairwell locations outside the room. The new hose stations will have the same location number and valve number as previously assigned. The fire hose station at location AX–34 is being deleted. Coverage for this entire room (#1 Cable Spreading Room) is being provided by AX–35. In addition, the hose station at AX–33 is providing coverage for both the #1 and #2 Cable Spreading Rooms from a common stairwell. The hose stations in the Electrical Equipment rooms are being deleted. Credit for adequate fire protection coverage is being taken for existing hose stations outside the rooms. Once the hose stations are relocated, all areas of the affected rooms will still be within 100 feet of a hose station thereby maintaining adequate manual fire suppression capability.

Also included in this proposed revision to Table 3.17–1 are corrections to typographical errors. These errors were identified in the descriptions for location numbers, valve numbers and protected areas.

Basis for proposed no significant hazards consideration determination: The Commission has provided standards (10 CFR Part 50.92(c)) for determining whether a significant hazards consideration exists. A proposed amendment to an operating

license for a facility involves no significant hazards consideration if operation of the facility in accordance with the proposed amendment would not:

1. Involve a significant increase in the probability or consequences of an accident previously evaluated; or

2. Create the possibility of a new or different kind of accident from any accident previously evaluated; or

3. Involve a significant reduction in a margin of safety.

Table 3.17-1 of the Oconee Technical Specifications, as proposed, would provide an accurate listing of the manual fire suppression capabilities which are available at Oconee. The proposed amendments would not involve a significant increase in the probability or consequences of an accident previously evaluated. By relocating the hose stations outside the Cable Spreading Rooms and Electrical Equipment Rooms, the potential for soaking electrical equipment, from a rupture of pressurized hose systems, is eliminated. The modifications would result in reducing the probability and consequences of this type of accident occurring.

The proposed amendments would not create the possibility of a new or different kind of accident from any accident previously evaluated. The relocated hose stations would he located in stairwells where no other equipment is located.

Lastly, the proposed amendments would not involve a sigrificant reduction in a margin of safety. The fire hose stations will be more safe to use once all the hose stations are located outside the rooms which could potentially contain a fire. Fire brigade personnel will be able to obtain control of the equipment before entering the fire hazard area. Also, each room will continue to have complete fire protection coverage by relocating or reassigning the hose stations which are responsible for protection. Once the hose stations are relocated, all areas of the affected rooms will still be within 100 feet of a hose station as committed to in Appendix A to Branch Technical Position 9.5-1.

Therefore, the proposed action would not: (1) Involve a significant increase in the probability or consequences of an accident previously evaluated; or (2) create the possibility of a new or different kind of accident from any accident previously evaluated; or (3) involve a significant reduction in a margin of safety.

On this basis, the Commission proposes to determine that the application involves no significant hazards consideration.

Local Public Document Room location: Oconee County Library, 501 West South Broad Street, Walhalla, South Carolina 29691.

Attorney for licensee: J. Michael McGarry, III, Bishop, Liberman, Cook, Purcell and Reynolds, 1200 17th Street, NW., Washington, DC 20036.

NRC Project Director: Kahtan Jabbour, Acting.

Florida Power and Light Company, Docket Nos. 50-250 and 50-251, Turkey Point Plant Units 3 and 4, Dade County, Florida

Date of amendments request: February 11, 1988.

Description of amendments request: Currently, the plant Technical Specifications (TS) require the use of slightly enriched uranium in the reactor cores. Also, the TS do not permit fewer than 204 fuel rods per assembly. The proposed amendments will revise the plant TS to permit the use of natural uranium axial blankets in the core fuel assemblies. The revised TS would also permit the use of a stainless steel replacement rod or the removal of a fuel rod from a fuel assembly once that rod has been determined to be leaking.

Basis for proposed no significant hazards consideration determination: The Commission has provided standards for determining whether a significant hazards consideration exists (10 CFR 50.92(c)). A proposed amendment to an operating license for a facility involves no significant hazards considerations if operation of the facility in accordance with the proposed amendment would not: (1) Involve a significant increase in the probability or consequences of an accident previously evaluated; or (2) create the possibility of a new or different kind of accident from an accident previously evaluated; or (3) involve a significant reduction in a margin or safety.

The licensee addressed the above three standards in the amendment application. Text from the licensee's evaluation is provided below:

Using these criteria, this proposed amendment does not involve a significant hazards consideration. This is based on the following:

1. The amendment will not increase the probability of an accident since the configuration of the plant remains the same and the plant operating modes will be unchanged. Additionally, the consequences of a previously analyzed accident will not be increased since the plant operating and safety limits are not changed by this amendment.

2. The amendment will not create the possibility of a new or different accident not previously analyzed since the operating and plant configuration will not be changed.

3. This amendment will not reduce the margin of safety since the plant operating and safety limits will remain unchanged. Future cycle designs utilizing unenriched uranium will be required to meet all required safety and operation limits.

In addition the NRC had provided examples of amendments that are considered not likely to involve significant hazards considerations (Reference) [SIC]. This proposed amendment matches example (iii):

A change resulting from a nuclear reactor core reloading, if no fuel assemblies significantly different from those found previously acceptable to the NRC for a previous core at the facility in question are involved. This assumes that no significant changes are made to acceptance criteria for the Technical Specifications, that the analytical methods used to demonstrate conformance with the Technical Specifications and regulations [not] significantly changed, and that the NRC has previously found such methods acceptable.

This particular amendment for the proposed use of natural uranium blankets or replacement of fuel rods matches this example since these assemblies are not significantly different from the fuel assemblies previously approved for Turkey Point. In addition, the same rigorous RSE is performed for each reload cycle and all operating and safety limits specified in the Technical Specification are met. Based on the standards of 10 CFR 50.92(c), this proposed amendment does not involve a significant hazards consideration.

This is further verified by comparing this change with the example given the Federal Register, where it is obvious that this is a change that results from reactor core reloading and, therefore, clear that operation of the Turkey Point Plant, in accordance with this proposed amendment, will not pose a threat to the public health and safety.

The staff has reviewed the licensee's no significant hazards consideration evaluation. The Commission has provided guidance to the staff concerning the application of the standards for determining whether a significant hazards consideration exists by providing certain examples (51 FR 7751) of changes that are considered not likely to involve significant hazards considerations. The staff believes the licensee's proposal is typical of example (iii) noted above in the licensee's evaluation. Therefore, the staff concludes the licensee has met the three standards, and the staff proposed to determine that the proposed changes do not involve a significant hazards consideration.

Local Public Document Room location: Environmental and Urban Affairs Library, Florida International University, Miami, Florida 33199.

Attorney for licensee: Harold F. Reis, Esquire, Newman and Holtzer, P.C., 1615 L Street, N.W., Washington, D.C. 20036.

NRC Project Director: Herbert N. Berkow.

GPU Nuclear Corporation et al., Docket No. 50-289, Three Mile Island Nuclear Station, Unit No. 1, Dauphin County, Pennsylvania

Date of amendment request: March 17, 1988.

Description of amendment request: This amendment would remove the GPU Nuclear organization charts from Section 6.2 of the Technical Specifications

Basis for proposed no significant hazards consideration determination: As required by 10 CFR 50.91(a), GPU Nuclear Corporation performed an analysis of the requested amendment and concluded that they do not involve a significant hazards consideration because the changes would not:

(1) Involve a significant increase in the probability or consequences of an accident previously evaluated.

The proposed change does not involve a significant increase in the probability or consequences of an accident previously evaluated because deletion of the organization charts and position titles from the Technical Specifications does not affect plant operation. As in the past, the NRC will continue to be informed of organizational changes through other required controls. In accordance with 10 CFR 50.34(b)(6)(i) the applicant's organizational structure is required to be included in the Updated Final Safety Analysis Report. Chapter 12 of the Updated Final Safety Analysis Report provides a description of the organization and detailed organization charts. As required by 10 CFR 50.71(e) GPUN submits annual updates to the Updated FSAR. Appendix B to 10 CFR Part 50 and 10 CFR 50.54(a)(3) govern changes to organization described in the Quality Assurance Program. Some of these organizational changes require prior NRC approval. Also, it is GPUN's practice to inform the NRC of organizational changes affecting the nuclear facilities prior to implementation.

The requirements for training are also contained in the Updated FSAR and the same controls apply.

(2) Create the possibility of a new or different kind of accident from any accident previously evaluated.

The proposed amendment does not create the possibility of a new or different kind of accident than previously evaluated because the proposed change is administrative in nature, and no physical alterations of plant configuration or changes to setpoints or operating parameters are proposed.

(3) Involve a significant reduction in a margin of safety.

The proposed amendment does not involve a significant reduction in a margin of safety because GPUN, through its Quality assurance programs, its commitment to maintain only qualified personnel in positions of responsibility, and other required controls, assures that safety functions will be performed at a high level of competence. Therefore, removal of the organization chart from the Technical Specifications will not affect the margin of safety.

The staff has reviewed the proposed amendment and agrees with the licensee's conclusion that it does not involve a significant hazards consideration.

Local Public Document Room location: Government Publications Section, State Library of Pennsylvania, Walnut Street and Commonwealth Avenue, Box 1601, Harrisburg, Pennsylvania 17105.

Attorney for licensee: Ernest L. Blake, Jr., Esquire, Shaw, Pittman, Potts & Trowbridge, 2300 N Street, NW, Washington, D.C. 20037.

NRC Project Director: John F. Stolz.

Gulf States Utilities Company, Docket No. 50-458, River Bend Station, Unit 1 West Feliciana Parish, Louisiana

Date of amendment request: February 18, 1988.

Description of amendment request: The proposed amendment would modify Technical Specification (TS) 3.4.2.1 to change the setpoint tolerance of the safety valve function of the safety/relief valves (S/RV) from ±1% to (+)(0)(−)2% of the set pressure to be consistent with the licensee's safety analysis report (SAR) and the reactor vendor's design specification.

Basis for proposed no significant hazards consideration determination: The Commission has provided standards for determining whether a significant hazards consideration exists as stated in 10 CFR 50.92(c). A proposed amendment to an operating license for a facility involves no significant hazards consideration if operation of the facility in accordance with the proposed amendment would not: (1) Involve a significant increase in the probability or consequences of an accident previously evaluated; or (2) create the possibility of a new or different kind of accident from any accident previously evaluated; or (3) involve a significant reduction in a margin of safety. The licensee provided an analysis that addressed the above three standards in the amendment application.

(1) The change proposed by this submittal would not increase the probability or the consequences of a previously evaluated accident because:

This change has been determined to be more conservative by lowering the allowable S/RV setpoint tolerance by 1 percent, and agrees with the originally analyzed conditions presented in SAR Section 5.2.2.10 and reviewed by the staff in the Safety Evaluation Report (NUREG-0989) and therefore will not affect the response of the plant or equipment required for safety.

(2) The change proposed by this submittal would not create the possibility of a new or different kind of accident from any previously evaluated because:

The proposed change has been previously evaluated in the SAR Section 5.2.2.10 and will maintain the plant response within all previous analyses.

(3) This proposal as submitted would not involve a significant reduction in the margin of safety because:

The reduction in the allowable S/RV setpoint tolerance will act to increase, not decrease, any existing margin of safety. This proposed change does not reduce the margin of safety as defined in the basis of the Technical Specification.

The proposed amendment, as discussed above, has not changed the system design, function and operation contained in the SAR and therefore, will not increase the probability or the consequences of a previously evaluated event or will not create a new or different event. Since the ability to perform, as described in the SAR, is maintained by this change, the proposed changes do not result in a significant reduction in the margin of safety. Gulf States Utilities proposes that no significant hazards are involved.

The staff has reviewed the licensee's no significant hazards consideration. Based on the review and the above discussions, the staff proposes to determine that the proposed changes do not involve a significant hazards consideration.

Local Public Document Room location: Government Documents Department, Louisiana State University, Baton Rouge, Louisiana 70803.

Attorney for licensee: Troy B. Conner, Jr., Esq., Conner and Wetterhahn, 1747 Pennsylvania Avenue, NW., Washington, DC 20006.

NRC Project Director: Jose A. Calvo.

Illinois Power Company, Docket No. 50-461, Clinton Power Station, Unit 1, DeWitt County, Illinois

Date of application for amendment: February 5, 1988.

Description of amendment request: This amendment consists of a proposed change to Technical Specification Table 3.3.2-2, item 2.h, concerning the Trip Setpoint and Allowable Value for Turbine Building Temperature Monitors. The proposed change would increase the Trip Setpoint from less than or equal to 131.2 °F to less than or equal to 143.2 °F and the Allowable Value from less than or equal to 138 °F to less than or equal to 150 °F for Turbine Building Temperature Monitors 1E31-N563A, B, C, and D. The instrument setpoint calculations, performed in accordance with Regulatory Guide 1.105 "Instrument

Setpoints", established the current setpoint of 131.2 °F for these instruments. A maximum normal operating temperature of 122 °F was assumed for the setpoint calculations. Operating experience to date has shown that the ambient temperature that typically exists in the area of the subject instruments is 120–125 °F when the reactor is operating at 90–100% rated thermal power. Since Clinton has not yet operated at a sustained full reactor power level during summer conditions, the peak normal operating temperature in the applicable area may be higher. Based on the currently specified setpoint of 131.2 °F and the drift allowance of plus or minus 6.6 °F, the resulting effective setpoint is 124.4 °F. This effective setpoint value, which represents a very small operating margin, could result in an unwanted trip.

Basis for proposed no significant hazards consideration determination: The staff has evaluated this proposed amendment and determined that it involves no significant hazards considerations. According to 10 CFR 50.92(c), a proposed amendment to an operating license involves no significant hazards considerations if operation of the facility in accordance with the amendment would not:

1. Involve a significant increase in the probability or consequences of an accident previously evaluated; or

2. Create the possibility of a new or different kind of accident from any accident previously evaluated; or

3. Involve a significant reduction in a margin of safety.

The proposed amendment does not involve a significant increase in the probability or consequences of an accident previously evaluated because (a) Localized temperatures of 150 °F will cause no adverse environmental impact on systems, structures or components necessary for safe shutdown, (b) the proposed change does not impact the probability of occurrence of a leak, (c) only one of five turbine building areas in the vicinity of the main steam lines is affected by the proposed change, and (d) the trip setpoints for the monitors in the affected area are still based on the leakage rate assumed for the original setpoint and a leakage time determined to be acceptable such that the proposed change does not constitute a significant change in leak detection capability. In addition, the proposed change should decrease the probability of inadvertent main steam line isolations and reactor scrams. Radiation detection will continue to be provided as designed.

The proposed change does not create the possibility of a new or different kind of accident from any accident previously evaluated because the proposed change introduces no new modes of operation, failure modes or changes to any equipment other than the affected monitors (for which the effects on the applicable accident scenarios have been evaluated).

The proposed change does not involve a significant reduction in a margin of safety because the leak detection capability provided by the affected monitors will not be significantly reduced by the proposed change to the monitor setpoints. Other temperature monitors, as well as the associated radiation monitors, will not be affected at all.

For the reasons stated above, the staff believes the proposed amendment involves no significant hazards considerations.

Local Public Document Room location: The Vespasian Warner Public Library, 120 West Johnson Street, Clinton, Illinois 61727.

Attorney for licensee: Sheldon Zable, Esq., of Schiff, Hardin & Waite, 7200 Sears Tower, 233 Wacker Drive, Chicago, Illinois 60606.

NRC Project Director: Daniel R. Muller.

Louisiana Power and Light Company, Docket No. 50-382, Waterford Steam Electric Station, Unit 3, St. Charles Parish, Louisiana

Date of amendment request: December 23, 1987.

Description of amendment request: The Administrative Controls Section of the Technical Specifications describes, in part, the on-site and off-site organization charts of Waterford 3. The proposed change will revise the organization charts in Figures 6.2-1, Organization for Management and Technical Support, and 6.2-2, Plant Operations Organization. The licensee is requesting this revision as a result of their recent organizational restructuring.

The restructuring will include: the creation of a new position ertitled Nuclear Operations Manager, which will report to the Vice President—Nuclear; the elevation of the Event Analysis and Reporting Engineer to the Event Analysis, Reporting, and Response Superintendent, who will now report to the Plant Manager—Nuclear rather than the Assistance Plant Manager—Technical Services; the repositioning of the Nuclear Safety and Regulatory Affairs Manager, who will now report to the Senior Vice President—Nuclear rather than the Nuclear Services Manager; and the repositioning of the Nuclear Operations Construction Manager, who will now report to the Nuclear Operations Engineering Manager rather than the Vice President—Nuclear.

Basis for proposed no significant hazards consideration determination: The Commission has provided standards for determining whether a significant hazards consideration exists as stated in 10 CFR 50.92. A proposed amendment to an operating license for a facility involves no significant hazards consideration if operation of the facility in accordance with a proposed amendment would not (1) Involve a significant increase in the probability or consequences of an accident previously evaluated, (2) create the possibility of a new or different kind of accident from any accident previously evaluated, or (3) involve a significant reduction in a margin of safety.

The organizational changes proposed by the licensee will not affect any accident previously evaluated nor will they create the possibility of a new or different kind of accident from any previously evaluated. The changes are to promote more effective management and therefore, do not involve any reduction in a margin of safety.

Based on the above the staff proposes to determine that the proposed change does not involve a significant hazards consideration.

Local Public Document Room location: University of New Orleans Library, Louisiana Collection, Lakefront, New Orleans, Louisiana 70122.

Attorney for licensee: Bruce W. Churchill, Esq., Shaw, Pittman, Potts and Trowbridge, 2300 N St., NW., Washington, DC 20037.

NRC Project Director: Jose A. Calvo.

Northeast Nuclear Energy Company, et al., Docket Nos. 50-245, 50-336, and 50-423 Millstone Nuclear Power Station, Unit Nos. 1, 2, and 3, New London County, Connecticut

Date of amendment request: December 2, 1986 as supplemented by letter dated December 23, 1987.

Description of amendment request: In accordance with the requirements of 10 CFR 73.55, the licensee submitted an amendment to the Physical Security Plan for Millstone Unit Nos. 1, 2 and 3 to reflect recent changes to that regulation. The proposed amendment would modify paragraph (4), of Facility Operating License No. DPR-21, paragraph (4) of Facility Operating License No. DPR-65 and paragraph E of Facility Operating License No. NPF-49 to require compliance with the revised Plan.

Basis for proposed no significant hazards consideration determination: On August 4, 1986 (51 FR 27817 and 27822), the Nuclear Regulatory

BEST COPY AVAILABLE

Commission amended Part 73 of its regulations, "Physical Protection of Plants and Materials," to clarify plant security requirements to afford an increased assurance of plant safety. The amended regulations required that each nuclear power reactor licensee submit proposed amendments to its security plan to implement the revised provisions of 10 CFR 73.55. The licensee submitted its revised plan on December 2, 1986, as supplemented by letter dated December 23, 1987, to satisfy the requirements of the amended regulations. The Commission proposes to amend the licenses to reference the revised plan.

In the Supplementary Materials accompanying the amended regulations, the Commission indicated that it was amending its regulations "to provide a more safety conscious safeguard system while maintaining the current levels of protection" and that the "Commission believes that the clarification and refinement of requirements as reflected in these amendments is appropriate because they afford an increased assurance of plant safety."

The Commission has provided guidance concerning the application of the criteria for determining whether a significant hazards consideration exists by providing certain examples of actions involving no significant hazards considerations and examples of actions involving significant hazards considerations (51 FR 7750). One of these examples of actions involving no significant hazards considerations is example (vii) "a change to conform a license to changes in the regulations, where the license change results in very minor changes to facility operations clearly in keeping with the regulations." The changes in this case fall within the scope of the example. For the foregoing reasons, the Commission proposes to determine that the proposed amendment involves no significant hazards consideration.

Local Public Document Room location: Waterford Public Library, 49 Rope Ferry Road, Waterford, Connecticut 06385.

Attorney for licensee: Gerald Garfield, Esquire, Day, Berry and Howard, One Constitution Plaza, Hartford, Connecticut 06103.

NRC Project Director: John F. Stolz.

Northeast Nuclear Energy Company, et al., Docket No. 50-423, Millstone Nuclear Power Station, Unit No. 3, New London County, Connecticut

Date of amendment request: February 18, 1988.

Description of amendment request: The amendment would revise Technical Specification Section 3.4.9.3 to change the minimum Reactor Coolant System (RCS) vent area required for cold overpressure protection from 7.0 to 5.4 square inches. In addition, administrative changes to Technical Specification Sections 3.8.1.2, 3.8.2.2 and 3.8.3.1 would be changed to make them consistent with the revised Section 3.4.9.3.

The design basis cold overpressure transients are mitigated by the operation of one Power Operated Relief Valve (PORV) (see FSAR Section 5.2.2.11.2). The current value of 7 square inches in Technical Specification Section 3.4.9.3 was selected to ensure that one PORV would be removed to provide the vent area. There was an error in this selected value. This error necessitates the removal of both PORVs to meet the required vent area. The proposed changes would require the removal of only one PORV to provide the required vent area.

Basis for proposed no significant hazards consideration determination: In accordance with 10 CFR 50.92, NNECO has reviewed the proposed changes and has concluded that they do not involve a significant hazards consideration because the changes would not:

1. Involve a significant increase in the probability or consequences of an accident previously evaluated. The proposed changes lower the minimum required vent area to that of the pipe for each PORV. The design basis cold overpressure protection transients are mitigated by the operation of one PORV. The cross-sectional area of the piping for each PORV is 5.4 square inches. This area is more than sufficient to provide the required flow rate for cold overpressurization events. Therefore, the use of an equivalent 5.4 square inch vent will not impact the consequences of the cold overpressure transients. The changes only modify the minimum required vent size for cold overpressure protection transients. Therefore, the changes will not affect the probability of failure of this system. Therefore, the proposed changes do not involve an increase in the probability or consequences of an accident previously evaluated.

2. Create the possibility of a new or different kind of accident from any previously evaluated. The proposed changes lower the minimum required vent area while still keeping it larger than that assumed in the design basis analysis. Therefore, plant response is not modified to the point when it can be considered a new accident. Therefore, the proposed changes do not create the possibility of an accident or malfunction of a different type than any evaluated previously in the safety analysis report.

3. Involve a significant reduction in a margin of safety. Since the proposed changes do not affect the consequences of an accident previously analyzed, there is no reduction in a margin of safety.

The staff has reviewed NNECO's proposed amendment and agrees with its conclusion that the amendment does not involve a significant hazards consideration.

Local Public Document Room location: Waterford Public Library, 49 Rope Ferry Road, Waterford, Connecticut 06385.

Attorney for licensee: Gerald Garfield, Esquire, Day, Berry & Howard, One Constitution Plaza, Hartford, Connecticut 06103-3499.

NRC Project Director: John F. Stolz.

Northern States Power Company, Docket No. 50-263, Monticello Nuclear Generating Plant, Wright County, Minnesota

Date of amendment request: November 24, 1986, September 8, 1987, and November 30, 1987.

Description of amendment request: In accordance with the requirements of 10 CFR 73.55, the licensee submitted an amendment to the Physical Security Plan for the Monticello Nuclear Generating Plant to reflect recent changes to that regulation. The proposed amendment would modify paragraph 2.C.3 of Facility Operating License No. DPR-22 to require compliance with the revised Plan.

Basis for proposed no significant hazards consideration determination: On August 4, 1986 (51 FR 27817 and 27822);, the Nuclear Regulatory Commission amended Part 73 of its regulations, "Physical Protection of Plants and Materials," to clarify plant security requirements to afford an increased assurance of plant safety. The amended regulations required that each nuclear power reactor licensee submit proposed amendments to its security plan to implement the revised provisions of 10 CFR 73.55. The licensee submitted its revised plan on November 24, 1986, September 8, 1987, and November 30, 1987, to satisfy the requirements of the amended regulations. The Commission proposes to amend the license to reference the revised plan.

In the Supplementary Materials accompanying the amended regulations, the Commission indicated that it was amending its regulations "to provide a more safety conscious safeguards system while maintaining the current levels of protection" and that the "Commission believes that the clarification and refinement of requirements as reflected in these amendments is appropriate because they afford an increased assurance of plant safety."

The Commission has provided guidance concerning the application of the criteria for determining whether a significant hazards consideration exists

by providing certain examples of actions involving no significant hazards considerations and examples of actions involving significant hazards considerations (51 FR 7750). One of these examples of actions involving no significant hazards considerations is example (vii) "a change to conform a license to changes in the regulations, where the license change results in very minor changes to facility operations clearly in keeping with the regulations." The changes in this case fall within the scope of the example. For the foregoing reasons, the Commission proposes to determine that the proposed amendment involves no significant hazards consideration.

Local Public Document Room location: Minneapolis Public Library, Technology and Science Department, 300 Nicollet Mall, Minneapolis, Minnesota 55401.

Attorney for licensee: Gerald Charnoff, Esq., Shaw, Pittman, Potts and Trowbridge, 2300 N Street, NW., Washington, DC 20037.

NRC Project Director: Martin J. Virgilio.

Northern States Power Company, Dockets Nos. 50-282 and 50-306, Prairie Island Nuclear Generating Plant, Units Nos. 1 and 2, Goodhue County, Minnesota

Date of amendments request: November 24, 1986, September 4, 1987, and November 30, 1987.

Description of amendments request: In accordance with the requirements of 10 CFR 73.55, the licensee submitted an amendment to the Physical Security Plan for the Prairie Island Nuclear Generating Plant, Units 1 and 2, to reflect recent changes to that regulation. The proposed amendments would modify paragraphs 2.C(3) of Facility Operating Licenses Nos. DPR-42 and DPR-60 to require compliance with the revised Plan.

Basis for proposed no significant hazards consideration determination: On August 4, 1986 (51 FR 27817 and 27822), the Nuclear Regulatory Commission amended Part 73 of its regulations, "Physical Protection of Plants and Materials," to clarify plant security requirements to afford an increased assurance of plant safety. The amended regulations required that each nuclear power reactor licensee submit proposed arendments to its security plan to implement the revised provisions of 10 CFR 73.55. The licensee submitted its revised plan on November 24, 1986, September 4, 1987, and November 30, 1987, to satisfy the requirements of the amended regulations. The Commission proposes to amend the licenses to reference the revised plan.

In the Supplementary Materials accompanying the amended regulations, the Commission indicated that it was amending its regulations "to provide a more safety conscious safeguards system while maintaining the current levels of protection" and that the "Commission believes that the clarification and refinement of requirements as reflected in these amendments is appropriate because they afford an increased assurance of plant safety."

The Commission has provided guidance concerning the application of the criteria for determining whether a significant hazards consideration exists by providing certain examples of actions involving no significant hazards considerations and examples of actions involving significant hazards considerations (51 FR 7750). One of these examples of actions involving no significant hazards considerations is example (vii) "a change to conform a license to changes in the regulations, where the license change results in very minor changes to facility operations clearly in keeping with the regulations." The changes in this case fall within the scope of the example. For the foregoing reasons, the Commission proposes to determine that the proposed amendments involve no significant hazards consideration.

Local Public Document Room location: Technology and Science Department, Minneapolis Public Library, 300 Nicollet Mall, Minneapolis, Minnesota.

Attorney for licensee: Jay Silberg, Esq., Shaw, Pittman, Potts, and Trowbridge, 2300 N Street, NW., Washington, DC 20037.

NRC Project Director: Martin J. Virgilio.

Omaha Public Power District, Docket No. 50-285, Fort Calhoun Station, Unit No. 1, Washington County, Nebraska

Date of amendment request: March 9, 1988.

Description of amendment request: The proposed amendment would change the Technical Specifications to incorporate organizational changes. Specifically, the Senior Vice President resporsible for the operation of Fort Calhoun Station is designated as Senior Vice President—Nuclear Production, Production Operations, Quality Assurance and Regulatory Affairs, and Production Engineer. In addition, the former arrangement included the reporting of the Fuels Division to this Senior Vice President. This change reflects the addition of a new Division, Production Engineering which will report to the Senior Vice President and will perform the engineering function and support for the facility. A new Security Services position has been created which reports to the Division Manager—Nuclear Production. The Supervisor—Security position, who currently was designated as reporting under the Manager—Fort Calhoun Station, has been removed from this reporting change and reports to the new Security Services position. Also, two existing supervisors reporting to Supervisor—Maintenance have been replaced with 6 supervisory positions, one for each maintenance craft. Finally, the Plant Review Committee membership has been changed as a result of the above changes. The Plant Review Committee membership will be expanded by one member. Figures 5-1 and 5-2 have been revised to reflect these organizational changes. These changes being made are also being reflected in the titles in Sections 5.5.2.2, 5.5.2.8i, 5.5.2.9, 5.5.2.10a, 5.5.2.10b and 5.5.2.10c.

Basis for proposed no significant hazards consideration determination: The Commission has provided guidance concerning the application of the standards for determining whether a significant hazards consideration exists by providing certain examples (51 FR 7751) of amendments that are considered not likely to involve significant hazards considerations. This amendment request is similar to the example of a purely administrative change to the Technical Specifications. This amendment request is also similar to the example that constitutes an additional limitation, restriction or control not presently included in the Technical Specifications. Based on the above, the Commission proposes to determine that the requested amendment does not involve a significant hazards consideration.

Local Public Document Room location: W. Dale Clark Library, 215 South 15th Street, Omaha, Nebraska 68102.

Attorney for licensee: LeBoeuf, Lamb, Leiby, and MacRae, 1333 New Hampshire Avenue, NW., Washington, DC. 20036.

NRC Project Director: Jose A. Calvo.

Portland General Electric Company et al., Docket No. 50-344, Trojan Nuclear Plant, Columbia County, Oregon

Date of amendment request: February 17, 1988.

Description of amendment request: The proposed amendment would revise Trojan Technical Specification (TS) Section 3/4.3.3.10, "Radioactive Liquid

Effluent Instrumentation" by adding operability and surveillance requirements for a new radiation monitor (PRM–17) and flowrate monitor (FI–4921). This instrumentation is being added to the TS as a result of a system modification for the Steam Generator Blowdown System (SGBS).

Basis for proposed no significant hazards consideration determination: 10 CFR 50.92 states that a proposed amendment will not involve a significant hazards consideration if the proposed amendment does not: (1) Involve a significant increase in the probability or consequences of an accident previously evaluated; or (ii) Create the possibility of a new or different kind of accident from any accident previously evaluated; or (iii) Involve a significant reduction in a margin of safety.

The proposed change will revise the list of instruments for which operability is governed by TS 3/4.3.3.10, "Radioactive Liquid Effluent Instrumentation," to incorporate modifications being implemented by a design change to the SGBS. A new steam generator blowdown ion exchanger effluent line gross radioactivity monitor providing automatic termination of release is being added to Tables 3.3–12 and 4.3–8. This new monitor (PRM–17) is being added as a result of the redesign of the SGBS effluent piping arrangement and will provide indication of the effluent radioactivity level immediately before release. A second steam generator blowdown effluent line flow rate monitor (FI–4921) is being added to Tables 3.3–12 and 4.3–8. This new effluent flow rate monitor is also being installed as part of the SGBS design change. The new monitor performs the same function as an existing monitor FI–6715, but provides remote indication on the SGBS control panel in the Turbine Building. The proposed change to the TS will allow either flow rate monitor to be used for blowdown effluent flow rate measurement.

This change does not involve a significant increase in the probability or consequences of an accident previously evaluated since the purpose of the instrumentation being added to TS 3/4.3.3.10 is to monitor steam generator blowdown effluent radioactivity levels and flow rate. The addition of this radioactivity monitor does not affect accident probability since its function is to detect and prevent a potential radioactivity release after an accident or event. Likewise, the probability of an accident is not changed by adding a blowdown flow rate instrument which provides only a monitoring function.

The consequences of an accident are likewise not increased by this change. Radiation Monitor PRM–17, which is being added to the TS will be located closer to the point of effluent release than the present steam generator blowdown effluent monitor and vill provide monitoring of blowdown effluent independent of the liquid radioactive waste system. Its location will allow it to provide accurate indication of activity in liquid effluent being released. The monitor will supply isolation signals to terminate steam generator blowdown to the blowdown tank and to block the ion exchanger discharge path. The present monitor used to perform the termination function is not being replaced. Rather, the new monitor will provide additional monitoring and isolation capability and will assume the function of isolating the discharge valve to the Discharge and Dilution Structure. The present monitor will continue to provide alarm and blowdown termination functions, and its operability will still be governed by the TS. It will continue to provide isolation of steam generator blowdown upon receipt of a containment isolation signal.

Section 15.6.3 of the Trojan UFSAR describes the analysis of a postulated steam generator tube rupture accident. The sequence of events initiated by such an accident is delineated, which includes termination of blowdown by the "steam generator liquid monitor", ie, PRM–10. The accuracy of that paragraph is not affected by the proposed change, except that the blowdown isolation signal may be provided by PRM–17.

The addition of the new flow rate monitor will have no effect on accident consequences. This proposed change would make two instruments available for monitoring blowdown rate, thus providing additional monitoring reliability. Additionally, the new monitor provides remote indication at the SGBS control panel in the turbine building. This proposed TS change would provide increased monitoring and isolation capability of the steam generator blowdown effluent path and therefore, reduce the potential consequences of an accident and probability for an unplanned release.

This change does not create the possibility of a new or different kind of accident from any previously evaluated. The operability of steam generator blowdown monitoring instrumentation is not relevant to accident creation. Its purpose is to monitor steam generator blowdown flow rate and activity and provide indication of elevated radioactivity levels after an accident has occurred.

This change does not involve a significant reduction in a margin of safety. The new radioactivity monitor to be added is the currently available replacement model for the monitor presently in use. The additional flow rate monitor is of similar design and performance capability as the present monitor and has the added feature of remote indication. This change adds to and enhances the steam generator blowdown effluent monitoring capability, and serves to decrease the potential for an undesirable release of radioactive liquid.

Based on the above, the staff proposes to determine that the requested changes do not involve a significant hazards consideration.

Local Public Document Room location: Portland State University Library, 731 SW., Harrison Street, Portland, Oregon 97207.

Attorney for licensee: Leonard A. Girard, Esq., Portland General Electric Company, 121 SW., Salmon Street, Portland, Oregon 97204.

NRC Project Director: George W. Knighton.

Southern California Edison Company, et al., Docket No. 50–206, San Onofre Nuclear Generating Station, Unit No. 1, San Diego County, California

Date of amendment request: April 28, 1987 (reference proposed change no. 164).

Description of amendment request: The proposed amendment would require all three reactor coolant pumps to be in operation when the reactor trip breakers are closed and the reactor plant is in Mode 3 (average coolant temperature above 350 °F). The additional restriction is needed to be consistent with the safety analysis assumptions for the main steam line break and control rod withdrawal accidents.

Basis for proposed no significant hazards consideration determination: As required by 10 CFR 50.91, the licensee has provided its analysis as to whether or not the proposed amendment involves a significant hazards consideration, as follows:

Proposed Change No. 164 is deemed not to constitute a significant hazards consideration, based on the following discussion. (1) Will operation of the facility in accordance with this proposed change involve a significant increase in the probability or consequences of an accident previously evaluated? *Response:* No. As seen in the Description, this proposed change upgrades the Mode 3 decay heat removal (DHR) requirements with reactor trip breakers closed to those that presently exist for Modes 1 and 2. This change is totally consistent with the plant safety analysis

assumptions regarding the number of operating reactor coolant (RC) loops in Mode 3. If for some reason it is desired or becomes necessary to take one or two RC loops out of service while remaining in Mode 3, this can be accomplished if the reactor trip breakers are first opened to preclude the possibility of an accidental control rod bank withdrawal. Thus, this proposed change does not involve a significant increase in the probability or consequences of an accident previously evaluated; (2) Will operation of the facility in accordance with this proposed change create the possibility of a new or different kind of accident from any accident previously evaluated? *Response:* No. This proposed change does not change the physical configuration of the plant. It upgrades an existing limiting condition for operation for San Onofre Unit 1 consistent with the FSAR assumptions, but does not relax any other existing limiting condition for operation. Thus, the possibility of a new or different kind of accident from any accident previously evaluated is not created by this proposed change; and (3) Will operation of the facility in accordance with this proposed change involve a significant reduction in a margin of safety? *Response:* No. The San Onofre Unit 1 Technical Specifications require that all three reactor coolant loops be in operation in Modes 1 and 2 (reactor is at power). An extension of this requirement to Mode 3 (reactor is subcritical) cannot cause a reduction in a margin of safety.

Proposed Change No. 184 satisfies Example (ii) of the Examples of Amendments that are Considered Not Likely to Involve Significant Hazards Considerations (page 7751 of the Federal Register, dated March 6, 1986) in that it 'constitutes an additional limitation, restriction or control not presently included in the technical specifications'.

The NRC staff has reviewed this analysis and agrees that the criteria appear to be satisfied. The NRC staff, therefore, proposes to determine that the amendment involves no significant hazards consideration.

Local Public Document Room location: General Library, University of California, P.O. Box 19557, Irvine, California 92713.

Attorney for licensee: Charles R. Kocher, Assistant General Counsel, and James Beoletto, Esquire, Southern California Edison Company, P.O. Box 800, Rosemead, California 91770.

NRC Project Director: George W. Knighton.

The Cleveland Electric Illuminating Company, Duquesne Light Company, Ohio Edison Company, Pennsylvania Power Company, Toledo Edison Company, Docket No. 50-440, Perry Nuclear Power Plant, Unit No. 1, Lake County, Ohio

Date of amendment request: February 9, 1988.

Description of amendment request: This amendment requests revision of the wording of Technical Specification 4.8.1.1.3 to allow reporting to be on a per diesel generator basis. The amendment also requests revision of notes to Technical Specification Table 4.8.1.1.2-1 to clarify how the number of failures is determined and how test frequency can be reduced by performance of overhauls and tests.

Basis for proposed no significant hazards consideration determination: The Commission has provided a standard for determining whether an action would involve a significant hazards consideration as stated in 10 CFR 50.92. A proposed amendment to an operating license for a facility would involve no significant hazards considerations if operation of the facility in accordance with the proposed amendment would not: (1) Involve a significant increase in the probability or consequences of an accident previously evaluated, (2) create the possibility of a new or different kind of accident from any accident previously evaluated, or (3) involve a significant reduction in a margin of safety. A discussion of the proposed change as it relates to these standards is provided below:

The proposed change does not involve a significant increase in the probability or consequences of an accident previously evaluated.

This proposed change does not change any of the requirements to demonstrate the reliability of the diesel generator following an appropriate overhaul. The purpose of the proposed change is to clarify the present wording to provide the flexibility, with the manufacturer's approval, to overhaul those parts of the diesel generator which have been causing test failures, without unnecessary overhauls of other parts of the diesel which have been demonstrated to be reliable. Since the reliability must be demonstrated after the overhaul the proposed change does not involve any significant increase in the probability or consequences of an accident previously evaluated. The footnote change to Table 4.8.1.1.2-1 and the change to 4.8.1.1.3 are clarifications and as such do not change the reliability of the diesel generator. Therefore the changes do not increase the probability or consequences of a previously evaluated accident.

The proposed change does not create the possibility of a new or different kind of accident from any previously evaluated.

This proposed change is a clarification of what an adequate overhaul of the diesel generator encompasses for the purpose of reducing the amount of testing performed on the diesel generator. The proposed change still requires that any portion of the diesel generator that has caused test failures be overhauled to like new conditions, that the overhaul be approved by the manufacturer, and that the diesel generator be tested to ensure reliability prior to reducing the number of valid test failures. The change would eliminate the need for doing unnecessary testing or maintenance on the diesel generator. The Table 4.8.1.1.2-1 footnote change and the change to 4.8.1.1.3 are clarifications which cannot create the possibility of a new or different kind of accident. As such no new or different kind of accident can be introduced by this change.

The proposed change does not involve a significant reduction in the margin of safety.

The licensee intends to establish a program to reduce unnecessary diesel generator surveillance testing by performance of a manufacturer approved overhaul of selected portions of the diesel generators to correct known, documented diesel gererator problems, demonstrate that reliability has been restored and ultimately reduce the testing frequency of the diesel generators to a monthly frequency and thus avoid the possibility of engine degradation due to excessive testing. This is in keeping with the intent of the staff's Generic Letter 84-15 dated July 2, 1984 to all Licensees of Operating Reactors, Applicants for an Operating License and Holders of Construction Permits. While the details of the licensee's program must be reviewed and evaluated, the concept of restoration of the diesel generators to like-new condition through overhaul, followed by demonstrated reliability testing is judged by the staff to be acceptable in forming a basis for reduction of testing frequency, thereby reducing the likelihood of premature engine degradation through excessive testing. Therefore, the staff proposes to determine that the proposed amendment involves no significant hazards considerations.

Local Public Document Room location: Perry Public Library, 3753 Main Street, Perry, Ohio 44081.

Attorney for licensee: Jay Silberg, Esq., Shaw, Pittman, Potts & Trowbridge, 2300 N Street, NW, Washington, DC 20037.

NRC Project Director: Kenneth E. Perkins.

Toledo Edison Company and The Cleveland Electric Illuminating Company, Docket No. 50-346, Davis-Besse Nuclear Power Station, Unit No. 1, Ottawa County, Ohio

Date of amendment request: March 12, 1987 and May 19, 1987.

Description of amendment request: The proposed amendment would revise the provisions in the Technical Specifications (TS's) in Appendix A, TS 3/4.7.7, relating to surveillance and functional testing of snubbers. Specifically, the proposed amendment would add a surveillance requirement for a post-transient inspection of all hydraulic and mechanical snubbers attached to sections of safety-related systems that have experienced a potentially damaging transient, and would add an acceptance criterion regarding functional testing for snubber activation. In addition, certain editorial changes to improve consistency, add clarity, and delete redundancy are proposed.

Basis for proposed no significant hazards consideration determination: The Commission has made a proposed determination that the amendment involves no significant hazards consideration. Under the Commission's regulations in 10 CFR 50.59, this means that the operation of the facility in accordance with the proposed amendment would not (1) Involve a significant increase in the probability or consequences of an accident previously evaluated; or (2) create the possibility of a new or different kind of accident from any accident previously evaluated; or (3) involve a significant reduction in a margin of safety.

The licensee has evaluated the proposed change against the above standards as required by 10 CFR 50.91(a). We have reviewed the licensee's evaluation, and agree with it. The licensee concluded that:

A. The change does not involve a significant increase in the probability or consequences of an accident previously evaluated because the proposed changes are either increasing the surveillance requirements or are administrative and, therefore, do not increase the probability or consequences of an accident previously evaluated.

B. The change does not create the possibility of a new or different kind of accident from any accident previously evaluated because the changes involve no accident or malfunction scenario. On matters related to nuclear safety, all accidents are bounded by previous analyses and no new accidents are involved.

C. The change does not involve a significant reduction in a margin of safety because the margin of safety is not reduced by these increased surveillance requirements and administrative changes.

Local Public Document Room location: University of Toledo Library, Documents Department, 2801 Bancroft Avenue, Toledo, Ohio 43606.

Attorney for licensee: Gerald Charnoff, Esquire, Shaw, Pittman, Potts and Trowbridge, 2300 N Street, NW, Washington, DC 20037.

NRC Project Director: Kenneth E. Perkins.

Toledo Edison Company and The Cleveland Electric Illuminating Company, Docket No. 50-346, Davis-Besse Nuclear Power Station, Unit No. 1, Ottawa County, Ohio

Date of amendment request: December 8, 1987.

Description of amendment request: The proposed amendment would revise the provisions in the Technical Specifications (TS's) relating to the surveillance requirements to demonstrate, periodically, the containment leak rate. Specifically, the amendment would change Surveillance Requirement 4.6.1.2.c.3 to specify that the supplemental test be conducted with a gas injection or bleed rate that is between 0.75 and 1.25 times the allowable leakage rate at the calculated internal peak pressure.

Basis for proposed no significant hazards consideration determination: The Commission has provided standards for determining whether a significant hazards consideration exists as stated in 10 CFR 50.92. A proposed amendment to an operating license for a facility involves no significant hazards consideration if operation of the facility in accordance with the proposed amendment would not (1) Involve a significant increase in the probability or consequences of an accident previously evaluated; or (2) create the possibility of a new or different kind of accident from any accident previously evaluated; or (3) involve a significant reduction in a margin of safety.

The licensee has evaluated the proposed change against the above standards as required by 10 CFR 50.91(a). The Commission has reviewed the licensee's evaluation and agrees with it. The licensee concluded that:

A. The change does not involve a significant increase in the probability or consequences of an accident previously evaluated because the proposed change only modifies the supplemental test used to verify the accuracy of the Type A test and does not modify any conditions assumed in previous accident evaluations.

B. The change does not create the possibility of a new or different kind of accident from any accident previously evaluated because the proposed change only modifies the supplemental test used to verify the accuracy of the Type A test.

C. The change does not involve a significant reduction in a margin of safety because all the Updated Safety Analysis Report assumptions remain unchanged.

Local Public Document Room location: University of Toledo Library, Documents Department, 2801 Bancroft Avenue, Toledo, Ohio 43606.

Attorney for licensee: Gerald Charnoff, Esquire, Shaw, Pittman, Potts and Trowbridge, 2300 N Street, NW, Washington, DC 20036.

NRC Project Director: Kenneth E. Perkins.

Virginia Electric and Power Company, Docket Nos. 50-338 and 50-339, North Anna Power Station, Units No. 1 and No. 2, Louisa County, Virginia

Date of amendment request: December 11, 1986, October 14, 1987 and February 14, 1988.

Description of amendment request: In accordance with the requirements of 10 CFR 73.55, the Virginia Electric and Power Company submitted amendments to the Physical Security Plan for the North Anna Power Station, Units No. 1 and No. 2 to reflect recent changes to that regulation. The proposed amendments would modify paragraph 2.E of Facility Operating Licenses No. NPF-4 and NPF-7 to require compliance with the revised Plan.

Basis for proposed no significant hazards consideration determination: On August 4, 1986 (51 FR 27817 and 27822), the Nuclear Regulatory Commission amended Part 73 of its regulations, "Physical Protection of Plants and Materials," to clarify plant security requirements to afford an increased assurance of plant safety. The amended regulations required that each nuclear power reactor licensee submit proposed amendments to its security plan to implement the revised provisions of 10 CFR 73.55. The licensee submitted its revised Plan on December 11, 1986, October 14, 1987 and February 14, 1988, to satisfy the requirements of the amended regulations. The Commission proposes to amend the licenses to reference the revised Plan.

In the Supplementary Materials accompanying the amended regulations, the Commission indicated that it was amending its regulations "to provide a

more safety conscious safeguards system while maintaining the current levels of protection" and that the "Commission believes that the clarification and refinement of requirements as reflected in these amendments is appropriate because they afford an increased assurance of plant safety."

The Commission has provided guidance concerning the application of the criteria for determining whether a significant hazards consideration exists by providing certain examples of actions involving no significant hazards considerations and examples of actions involving significant hazards considerations (51 FR 7750). One of these examples of actions involving no significant hazards considerations is example (vii), "a change to conform a license to changes in the regulations, where the license change results in very minor changes to facility operations clearly in keeping with the regulations." The charges in this case fall within the scope of the example. For the foregoing reasons, the Commission proposes to determine that the proposed amendments involve no significant hazards considerations.

Local Public Document Room location: Board of Supervisors Office, Louisa County Courthouse, Louisa, Virginia 23093 and the Alderman Library, Manuscripts Department, University of Virginia, Charlottesville, Virginia 22901.

Attorney for licensee: Michael W. Maupin, Esq., Hunton and Williams, P.O. Box 1535, Richmond, Virginia 23212.

NRC Project Director: Herbert N. Berkow.

Yankee Atomic Electric Company, Docket No. 50-029, Yankee Nuclear Power Station, Franklin County, Massachusetts

Date of amendment request: January 5, 1988 and as supplemented March 11, 1988.

Description of amendment request: The proposed amendment would put into effect the following four administrative changes:

1. The Plant Operations Manager would not be required to maintain a Senior Reactor Operator's license.

2. The Security Organization would report to a Security Manager who in turn would report to the Administrative Services Manager.

3. The Reactor Engineering Manager would report to the Assistant Technical Director.

4. Move the organization charts from Section 6.0 of the Technical Specifications to Section 501 of the Final Safety Analysis Report.

Basis for proposed no significant hazards consideration determination: The Commission has provided standards for determining whether a significant hazards determination exists as stated in 10 CFR 50.92(c). A proposed amendment to an operating license involves no significant hazards considerations if operation of the facility in accordance with the proposed amendment would not: (1) Involve a significant increase in the probability or consequences of an accident previously evaluated; or (2) create the possibility of a new or different kind of accident from any accident previously evaluated; or (3) involve a significant reduction in a margin of safety.

The licensee's analyses pertaining to the first three proposals, contained in the January 5, 1988 letter, states the following:

> This proposed change is administrative in nature. It has been evaluated and determined to involve no significant hazards consideration. As such, this proposed change would not:
>
> 1. Involve a significant increase in the probability or consequences of an accident previously evaluated.
>
> 2. Create the possibility of a new or different kind of accident from any previously analyzed.
>
> 3. Involve a significant reduction in a margin of safety.
>
> Based on the considerations contained herein, it is concluded that there is reasonable assurance that operation of the Yankee plant, consistent with the proposed Technical Specifications, will not endanger the health and safety of the public. This proposed change has been reviewed by the Nuclear Safety Audit and Review Committee.

The licensee's analysis pertaining to the fourth proposed change, contained in the March 11, 1988 letter, states the following:

> This proposed change is administrative in nature and as such would not:
>
> 1. Involve a significant increase in the probability or consequences of an accident previously evaluated. Since all existing operating restrictions would remain intact, there could not be any significant increase in the probability or consequences of an accident previously evaluated.
>
> 2. Create the possibility of a new or different kind of accident from any previously evaluated. The administrative relocation of the organization charts does not create the possibility of a new or different kind of accident from those previously evaluated.
>
> 3. Involve a significant reduction in a margin of safety. The deletion of organization figures from the Technical Specification does not involve a significant reduction in a margin of safety.
>
> Based on the considerations contained herein, it is concluded that there is reasonable assurance that operation of the Yankee plant, consistent with the proposed Technical Specifications, will not endanger the health and safety of the public. This proposed change has been reviewed by the Nuclear Safety Audit and Review Committee.

The staff has reviewed the licensee's analysis and agrees with it. Therefore, we conclude that the amendment satisfies the three criteria listed in 10 CFR 50.92. Based on that conclusion the staff proposes to make no significant hazards consideration determination.

Local Public Document Room location: Greenfield Community College, 1 College Drive, Greenfield, Massachusetts 01301.

Attorney for licensee: Thomas Dignan, Esquire, Ropes and Gray, 225 Franklin Street, Boston, Massachusetts 02110.

NRC Project Director: Richard H. Wessman.

PREVIOUSLY PUBLISHED NOTICES OF CONSIDERATION OF ISSUANCE OF AMENDMENTS TO OPERATING LICENSES AND PROPOSED NO SIGNIFICANT HAZARDS CONSIDERATION DETERMINATION AND OPPORTUNITY FOR HEARING

The following notices were previously published as separate individual notices. The notice content was the same as above. They were published as individual notices either because time did not allow the Commission to wait for this biweekly notice or because the action involved exigent circumstances. They are repeated here because the biweekly notice lists all amendments issued or proposed to be issued involving no significant hazards consideration.

For details, see the individual notice in the Federal Register on the day and page cited. This notice does not extend the notice period of the original notice.

Nebraska Public Power District, Docket No. 50-298, Cooper Nuclear Station Nemaha County, Nebraska

Date of amendment request: December 14, 1987, as supplemented January 21, 1988.

Brief description of amendment request: The proposed would modify the Technical Specifications to permit the use of fuel assembly and control blade Lead Test Assemblies under the provisions of 10 CFR 50.59. Specifically, during the forthcoming Cycle 11 refueling outage, the licensee, in cooperation with the reactor vendor (General Electric Co.) plans to install two Lead Test Assembly (LTA) control blades and four LTA fuel assemblies of different designs than previously approved for the Cooper Nuclear Station.

Date of publication of individual notice in **Federal Register**: March 1, 1988 (53 FR 6212).

Expiration date of individual notice: March 31, 1988.

Local Public Document Room location: Auburn Public Library, 118 15th Street, Auburn, Nebraska 68305.

NOTICE OF ISSUANCE OF AMENDMENT TO FACILITY OPERATING LICENSE

During the period since publication of the last biweekly notice, the Commission has issued the following amendments. The Commission has determined for each of these amendments that the application complies with the standards and requirements of the Atomic Energy Act of 1954, as amended (the Act), and the Commission's rules and regulations. The Commission has made appropriate findings as required by the Act and the Commission's rules and regulations in 10 CFR Chapter I, which are set forth in the license amendment.

Notice of Consideration of Issuance of Amendment to Facility Operating License and Proposed No Significant Hazards Consideration Determination and Opportunity for Hearing in connection with these actions was published in the **Federal Register** as indicated. No request for a hearing or petition for leave to intervene was filed following this notice.

Unless otherwise indicated, the Commission has determined that these amendments satisfy the criteria for categorical exclusion in accordance with 10 CFR 51.22. Therefore, pursuant to 10 CFR 51.22(b), no environmental impact statement or environmental assessment need be prepared for these amendments. If the Commission has prepared an environmental assessment under the special circumstances provision in 10 CFR 51.12(b) and has made a determination based on that assessment, it is so indicated.

For further details with respect to the action see: (1) The applications for amendments, (2) the amendments, and (3) the Commission's related letters, Safety Evaluations and/or Environmental Assessments as indicated. All of these items are available for public inspection at the Commission's Public Document Room, 1717 H Street, NW., Washington, DC, and at the local public document rooms for the particular facilities involved. A copy of items (2) and (3) may be obtained upon request addressed to the U.S. Nuclear Regulatory Commission, Washington, DC 20555, Attention: Director, Division of Reactor Projects.

Arizona Public Service Company et al., Docket Nos. STN 50-529 and STN 50-530, Palo Verde Nuclear Generating Station, Units 2 and 3, Maricopa County, Arizona

Date of application for amendments: September 14, 1987, as supplemented October 1, 1987.

Brief description of amendments: The Amendments revise Section 5.3.1 of the Technical Specifications by increasing the maximum enrichment for reload fuel from 4.0 to 4.05 weight percent U-235.

Date of issuance: March 9, 1988.

Effective date: March 9, 1988.

Amendment Nos.: 18 and 6.

Facility Operating License Nos. NPF-51 and NPF-74: Amendments changed the Technical Specifications.

Date of initial notice in **Federal Register**: December 30, 1987 (52 FR 49219). The Commission's related evaluation of the amendments is contained in a Safety Evaluation dated March 9, 1988.

No significant hazards consideration comments received: No.

Local Public Document Room location: Phoenix Public Library, Business and Science Division, 12 East McDowell Road, Phoenix, Arizona 85004.

Arizona Public Service Company et al., Docket No. STN 50-528 Palo Verde Nuclear Generating Station, Unit 1, Maricopa County, Arizona

Date of application for amendment: August 7, 1987.

Brief description of amendment: The amendment revises the Technical Specifications by making administrative changes in a number of areas in order to be consistent with those areas of the Technical Specifications for Palo Verde, Units 2 and 3.

Date of issuance: March 2, 1988.

Effective date: March 2, 1988.

Amendment No.: 27.

Facility Operating License No. NPF-41: Amendment changes the Technical Specifications.

Date of initial notice in **Federal Register**: September 9, 1987 (52 FR 33998). The Commission's related evaluation of the amendment is contained in a Safety Evaluation dated March 2, 1988.

No significant hazards consideration comments received: No.

Local Public Document Room location: Phoenix Public Library, Business and Science Division, 12 East McDowell Road, Phoenix, Arizona 85004.

Carolina Power & Light Company et al., Docket No. 50-324, Brunswick Steam Electric Plant, Units 2, Brunswick County, North Carolina

Date of application for amendments: November 11, 1987.

Description of amendment: Change chloride intrusion monitor tag number on TS Tables 3.3.5.6-1, 3.3.5.6-2, and 4.3.5.6-1.

Date of issuance: March 15, 1988.

Effective date: March 15, 1988.

Amendment No.: 145.

Facility Operating License Nos. DPR-71 and DPR-62. Amendment revises the Technical Specifications.

Date of initial notice in **Federal Register**: January 27, 1988 (53 FR 2311) The Commission's related evaluation of the amendments is contained in a Safety Evaluation dated March 15, 1988.

No significant hazards consideration comments received: No.

Local Public Document Room location: University of North Carolina at Wilmington, William Madison Randall Library, 601 S. College Road, Wilmington, North Carolina 28403-3297.

Cleveland Electric Illuminating Company, Duquesne Light Company, Ohio Edison Company, Pennsylvania Power Company, Toledo Edison Company, Docket No. 50-440, Perry Nuclear Power Plant, Unit No. 1, Lake County, Ohio

Date of application for amendment: December 16, 1986, and September 11, 1987.

Brief description of amendment: The amendment modified paragraph 2.E of the license to require compliance with the amended Physical Security Plan. This plan was amended to conform to the requirements of 10 CFR 73.55. Consistent with the provisions of 10 CFR 73.55, search requirements must be implemented within 60 days and miscellaneous amendments within 180 days from the effective date of this amendment.

Date of issuance: March 15, 1988.

Effective date: March 15, 1988.

Amendment No.: 11.

Facility Operating License No. NPF-58. This amendment revised the license.

Date of initial notice in **Federal Register**: February 10, 1988 (53 FR 3951 and 3961). The Commission's related evaluation of the amendment is contained in a letter to Cleveland Electric Illuminating Company dated March 15, 1988 and a Safeguards Evaluation Report dated March 15, 1988.

No significant hazards consideration comments received: No.

Local Public Document Room location: Perry Public Library, 3753 Main Street, Perry, Ohio 44081.

Commonwealth Edison Company, Docket Nos. 50-373 and 50-374, LaSalle County Station, Units 1 and 2, LaSalle County, Illinois

Date of application for amendments: November 9, 1987.

Brief description of amendments: These amendments revise the LaSalle County Station, Units 1 and 2 Technical Specifications to conform with the LER Rule, 10 CFR 50.73.

Date of issuance: March 16, 1988.

Effective date: Forty-five days following date of issuance.

Amendment No.: 56 and 37.

Facility Operating License Nos. NPF-11 and NPF-18: Amendments revised the Technical Specifications.

Date of initial notice in **Federal Register**: December 30, 1987 (52 FR 49221). The Commission's related evaluation of the amendment is contained in a Safety Evaluation dated March 16, 1988.

No significant hazards consideration comments received: No.

Local Public Document Room location: Public Library of Illinois, Valley Community College, Rural Route No. 1, Oglesby, Illinois 61348.

Consumers Power Company, Docket No. 50-255, Palisades Plant, Van Buren County, Michigan

Date of application for amendment: September 28, 1984, as supplemented June 5, September 15, and December 17, 1987.

Brief description of amendment: This amendment revised the Technical Specifications to modify the inservice inspection program for the steam generators to be more consistent with the NRC Standard Technical Specifications and provide additional inspection requirements, techniques and criteria for an improved ability to identify and isolate degraded tubes.

Date of issuance: March 24, 1988.

Effective date: March 24, 1988.

Amendment No.: 112.

Provisional Operating License No. DPR-20. The amendment revised the Technical Specifications.

Date of initial notice in **Federal Register**: September 28, 1984 (50 FR 20975) and July 1, 1987 (52 FR 24546). Since the date of the initial notices in the **Federal Register**, the licensee has provided supplemental information and modified proposals dated September 15, and December 17, 1987. This information and modified proposals were made to be more consistent with NRC Standard Technical Specifications, the objective stated in the initial notice, and did not change the initial determination, thus not warranting a renotice.

The Commission's related evaluation of the amendment is contained in a Safety Evaluation dated March 24, 1988. No significant hazards consideration comments received: No.

Local Public Document Room location: Van Zoeren Library, Hope College, Holland, Michigan 49423.

Dairyland Power Cooperative, Docket No. 50-409, La Crosse Boiling Water Reactor, La Crosse, Wisconsin

Date of application for amendment: August 21, 1987 as revised August 28, 1987.

Brief description of amendment: This amendment revises the Technical Specifications (TS) to delete requirements for Type A, integrated leak rate testing of the containment building at the permanently shutdown La Crosse facility. Also, an exemption grants relief from 10 CFR Part 50.54(o) and Part 50 Appendix J with respect to the above Type A testing.

Date of issuance: March 15, 1988.

Effective Date: March 15, 1988.

Amendment No.: 59.

Facility License No. DPR-45. This Amendment revised the Technical Specifications.

Date of initial notice in **Federal Register**: September 23, 1987 (52 FR 35790). The Commission's related evaluation of the amendment is contained in a Safety Evaluation dated March 15, 1988.

No significant hazards consideration comments received: No.

Local Public Document Room location: La Crosse Public Library, 800 Main Street, La Crosse, Wisconsin 54001.

Detroit Edison Company, Docket No. 50-341, Fermi-2, Monroe County, Michigan

Date of application for amendment: January 15, 1988, as supplemented February 24, 1988.

Brief description of amendment: This amendment revises the Fermi-2 Technical Specifications to allow the low pressure coolant injection (LPCI) system cross-tie valve to be placed in the closed position during plant shutdown. Closure of the cross-tie valve is necessary to isolate a LPCI subsystem for maintenance.

Date of issuance: March 14, 1988.

Effective date: March 14, 1988.

Amendment No.: 15.

Facility Operating License No. NPF-43. The amendment revises the Technical Specifications.

Date of initial notice in **Federal Register**: February 10, 1988 (53 FR 3954). The Commission's related evaluation of the amendment is contained in a Safety Evaluation dated March 14, 1988.

No significant hazards consideration comments received: No.

Local Public Document Room location: Monroe County Library System, 3700 South Custer Road, Monroe, Michigan 48161.

Detroit Edison Company, Docket No. 50-341, Fermi-2, Monroe County, Michigan

Date of application for amendment: February 4, 1986, June 7, 1986, and July 13, 1987.

Brief description of amendment: This amendment revises the Fermi-2 Technical Specification (TS) Table 3.6.3-1, entitled "Primary Containment Isolation Valves" to delete isolation valve numbers T50-F406A and T50-F406B from the Primary Containment Monitoring System (PCMS). The PCMS is used to continuously monitor hydrogen and oxygen concentrations in the containment drywell during a loss-of-coolant accident (LOCA) and during the post-LOCA period. Isolation valves T50-F406A and T50-F406B are remote-manual isolation valves used in the system. As a result of PCMS design modification performed to meet the Commission's environmental qualification requirements, these valves are no longer required. The sample line in which these valves are installed is to be permanently sealed closed by weld-capping in accordance with ASME Code requirements once the T50-F406A and T50-F406B valves are physically removed.

Date of issuance: March 21, 1988.

Effective date: March 21, 1988.

Amendment No.: 16.

Facility Operating License No. NPF-43. The amendment revises the Technical Specifications.

Date of initial notice in **Federal Register**: December 30, 1986 (51 FR 47078). The Commission's related evaluation of the amendment is contained in a Safety Evaluation dated March 21, 1988.

No significant hazards consideration comments received: No.

Local Public Document Room location: Monroe County Library System, 3700 South Custer Road, Monroe, Michigan 48161.

Duke Power Company et al., Docket Nos. 50-413 and 50-414, Catawba Nuclear Station, Units 1 and 2, York County, South Caroline

Date of application for amendments: February 10, 1988.

Brief description of amendments: The amendments modified the Technical

Specifications to reduce the required Reactor Coolant System total flow from 396,100 gpm to 367,800 gpm.

Date of issuance: March 21, 1988.

Effective date: March 21, 1988.

Amendment Nos.: 42 and 35.

Facility Operating License Nos. NPF-35 and NPF-52. Amendments revised the Technical Specifications.

Date of initial notice in Federal Register: February 17, 1988 (53 FR 4793). The Commission's related evaluation of the amendments is contained in a Safety Evaluation dated March 21, 1988.

No significant hazards consideration comments received: No

Local Public Document Room location: York County Library, 138 East Black Street, Rock Hill, South Carolina 29730.

Duquesne Light Company, Docket No. 50-334, Beaver Valley Power Station, Unit No. 1, Shippingport, Pennsylvania

Date of application for amendment: November 20, 1987.

Brief description of amendment: The amendment changes the Technical Specifications for Beaver Valley Unit No. 1 to reflect the NRC Staff's technical position on certain radioactive effluent specifications. The revision would bring Unit 1's specifications into conformance with the same of Unit 2, and with the Westinghouse Standard Technical Specifications.

Date of issuance: March 14, 1988.

Effective date: March 14, 1988.

Amendment No.: 121.

Facility Operating License No. DPR-66. Amendment revised the Technical Specifications.

Date of initial notice in Federal Register: December 30, 1987 (52 FR 49226). The Commission's related evaluation of the amendment is contained in a Safety Evaluation dated March 14, 1988.

No significant hazards consideration comments received: No.

Local Public Document Room location: B.F. Jones Memorial Library, 663 Franklin Avenue, Aliquippa, Pennsylvania 15001.

Duquesne Light Company, Docket No. 50-334, Beaver Valley Power Station, Unit No. 1, Shippingport, Pennsylvania

Date of application for amendment: July 1, 1987 and supplemented by letter dated October 26, 1987.

Brief description of amendment: The amendment changes the Technical Specifications regarding voltage requirement for the station batteries, and was issued in partial response to the licensee's request.

Date of issuance: March 21, 1988.

Effective date: March 21, 1988.

Amendment No.: 122.

Facility Operating License No. DPR-66. Amendment revised the Technical Specifications.

Date of initial notice in Federal Register: August 12, 1987 (52 FR 29915). (The licensee's October 26, 1987 letter provided supplemental information to the part not covered by this amendment. That part of the request has been denied.) The Commission's related evaluation of the amendment is contained in a Safety Evaluation dated March 21, 1988.

No significant hazards consideration comments received: No.

Local Public Document Room location: B.F. Jones Memorial Library, 663 Franklin Avenue, Aliquippa, Pennsylvania 15001.

Florida Power and Light Company et al., Docket No. 50-389, St. Lucie Plant, Unit No. 2, St. Lucie County, Florida

Date of application of amendment: October 17, 1986, as supplemented July 15, 1987.

Brief description of amendment: The amendment (1) Changed the auxiliary feedwater actuation values for steam generator steam line differential pressure and feedwater differential pressure; (2) changed the auxiliary feedwater actuation title under low steam generator water level conditions; (3) deleted auxiliary feedwater initiation and feedwater isolation response times associated with feedwater header and steam generator differential pressures; and (4) changed various operability and surveillance requirements associated with the above.

Date of Issuance: March 22, 1988.

Effective Date: March 22, 1988.

Amendment No.: 28.

Facility Operating License No. NPF-16: Amendment revised the Technical Specifications.

Date of initial notice in Federal Register: December 3, 1986 (51 FR 43680). Additional information was submitted by the licensee by letter dated July 15, 1987. The additional information did not change, in any way, the staff's proposed no significant hazards consideration determination. The Commission's related evaluation of the amendment is contained in a Safety Evaluation dated March 22, 1988.

No significant hazards consideration comments received: No.

Local Public Document Room location: Indian River Junior College Library, 3209 Virgina Avenue, Ft. Pierce, Florida.

General Public Utilities Nuclear Corporation, Docket No. 50-320, Three Mile Island Nuclear Station Unit 2 (TMI-2), Dauphin County, Pennsylvania

Date of amendment request: May 16, 1986.

Brief description of amendment: The amendment revised the Technical Specifications by modifying the Appendix B Technical Specifications Section 3.2.1, 3.2.2, 3.2.3, and 5.6. Specifically, the proposed amendment (1) Modifies the radiological environmental monitoring program to be consistent with the Standard Radiological Effluent Technical Specification for Pressurized Water Reactors (Draft NUREG-0472, Revision 3, 1983) and the Technical Specifications for the Three Mile Island Nuclear Generating Station, Unit 1 (TMI-1) located on the same site as TMI-2 (2) modifies the station reporting requirements to be consistent with the guidance of draft Standard Radiological Effluent Technical Specifications for Pressurized Water Reactors (NUREG-0472, Revision 3, 1983) and the TMI-1 Technical Specifications (3) corrects typographical errors and makes editorial changes which improve clarity in the specifications, and (4) deletes non-essential monitoring requirements.

Date of issuance: March 17, 1988.

Effective date: March 17, 1988.

Amendment No.: 29.

Facility Operating License No. DPR-61. Amendment revised the Technical Specifications.

Date of initial notice in Federal Register: October 21, 1987 (52 FR 39290). The Commission's related evaluation of the amendment is contained in a Safety Evaluation dated March 17, 1988.

No significant hazards consideration comments received: No.

Local Public Document Room location: State Library of Pennsylvania, Government Publications Section, Education Building, Commonwealth and Walnut Streets, Harrisburg, Pennsylvania 17126.

Georgia Power Company, Oglethorpe Power Corporation, Municipal Electric Authority of Georgia, City of Dalton, Georgia, Docket No. 50-366, Edwin I. Hatch Nuclear Plant, Unit 2, Appling County, Georgia

Date of application for amendment: January 4, 1988.

Brief description of amendment: The amendment modified the Technical Specifications to permit hydrostatic and leak testing with a non-critical reactor core.

Date of issuance: March 12, 1988.

Effective date: March 12, 1988.
Amendment No.: 91.
Facility Operating License No. NPF-5. Amendment revised the Technical Specifications.
Date of initial notice in **Federal Register**: February 10, 1988 (53 FR 3955). The Commission's related evaluation of the amendment is contained in a Safety Evaluation dated March 12, 1988.
No significant hazards consideration comments received: No.
Local Public Document Room location: Appling County Public Library, 301 City Hall Drive, Baxley, Georgia 31513.

GPU Nuclear Corporation et al., Docket No. 50-219, Oyster Creek Nuclear Generating Station, Ocean County, New Jersey

Date of application for amendment: January 19, 1988.
Brief description of amendment: The amendment revises the Technical Specifications to incorporate (1) New pressure-temperature (P-T) operating curves for operation beyond 10 effective full power years (EFPY) and (2) requirements of material surveillance specimens and neutron flux monitors. A definition of Reactor Vessel Pressure Testing and the testing conditions is also added to the Technical Specifications.
Date of Issuance: March 21, 1988.
Effective date: March 21, 1988.
Amendment No.: 120.
Provisional Operating License No. DPR-50. Amendment revised the Technical Specifications.
Date of initial notice in **Federal Register**: February 17, 1988 (53 FR 2316). The Commission's related evaluation of this amendment is contained in a Safety Evaluation dated March 21, 1988.
No significant hazards consideration comments received: No.
Local Public Document Room location: Ocean County Library, Reference Department, 101 Washington Street, Toms River, New Jersey 08753.

GPU Nuclear Corporation et al., Docket No. 50-289, Three Mile Island Nuclear Station, Unit No. 1, Dauphin County, Pennsylvania

Date of application for amendment: July 28, 1987, (as Supplemented December 21, 1987 supersedes a September 9, 1986 request in its entirety).
Brief description of amendment: Revises Technical Specifications to be more consistent with the Standard Radiological Effluent Technical Specifications.
Date of Issuance: March 22, 1988.
Effective date: March 22, 1988.
Amendment No.: 137.
Facility Operating License No. DPR-50. Amendment revised the Technical Specifications.
Date of initial notice in **Federal Register**: September 9, 1987 (52 FR 34006). The December 21, 1987 letter which provided supplemental information in response to a staff request, did not change the initial determination of no significant hazards consideration. The Commission's related evaluation of this amendment is contained in a Safety Evaluation dated March 22, 1988.
No significant hazards consideration comments received: No.
Local Public Document Room location: Government Publications Section, State Library of Pennsylvania, Education Building, Commonwealth and Walnut Streets, Harrisburg, Pennsylvania, 17126.

Illinois Power Company, etc., Docket No. 50-461, Clinton Power Station, Unit 1, DeWitt County, Illinois

Date of application for amendment: December 10, 1987, as supplemented January 29, 1988.
Brief description of amendment: Specified valve local leak rate tests (LLRTs) have been extended until the first refueling outage, currently scheduled to be initiated in January of 1989.
Date of issuance: March 18, 1988.
Effective date: March 18, 1988.
Amendment No.: 1.
Facility Operating License No. NPF-62. Amendment revised the Technical Specification.
Date of initial notice in **Federal Register**: February 10, 1988 (53 FR 3966). The Commission's related evaluation of the amendment is contained in a Safety Evaluation dated March 18, 1988.
No significant hazards consideration comments received: No.
Local Public Document Room location: Vespasian Warner Public Library, 120 West Johnson Street, Clinton, Illinois 61727.

Illinois Power Company, Docket No. 50-461, Clinton Power Station, Unit 1, DeWitt County, Illinois.

Date of application for amendment: October 30, 1987.
Description of amendment request: Test connections will be added upstream of certain excess flow check valves in order to facilitate the testing of these valves.
Date of issuance: March 21, 1988.
Effective date: March 21, 1988.
Amendment No.: 2.
Facility Operating License No. NPF-62. Amendment revised the Technical Specifications.
Date of initial notice in **Federal Register**: January 27, 1988 (53 FR 2320). The Commission's related evaluation of the amendment is contained in a Safety Evaluation dated March 21, 1988.
Local Public Document Room location: The Vespasian Warner Public Library, 120 West Johnson Street, Clinton, Illinois 61727.

Louisiana Power and Light Company, Docket No. 50-382, Waterford Steam Electric Station, Unit 3, St. Charles Parish, Louisiana

Date of amendment request: October 8, 1987.
Brief description of amendment: The amendment revised the Technical Specifications by revising the time limits for monitoring linear heat rate and departure from nucleate boiling ratio using the core protection calculators when the core operating limit supervisory system is inoperable.
Date of issuance: March 21, 1988.
Effective date: March 21, 1988.
Amendment No.: 32.
Facility Operating License No. NPF-38: Amendment revised the Technical Specifications.
Date of initial notice in **Federal Register**: December 16, 1987 (52 FR 47787). The Commission's related evaluation of the amendment is contained in a Safety Evaluation dated March 21, 1988.
No significant hazards consideration comments received: No.
Local Public Document Room location: University of New Orleans Library, Louisiana Collection, Lakefront, New Orleans, Louisiana 70122.

Louisiana Power and Light Company, Docket No. 50-382, Waterford Steam Electric Station, Unit 3, St. Charles Parish, Louisiana

Date of amendment request: August 28, 1987.
Brief description of amendment: The amendment revised the Technical Specifications by changing the limiting conditions for operation or shutdown margin with the control element assemblies (CEAs) withdrawn and with the CEAs inserted.
Date of issuance: March 21, 1988.
Effective date: March 21, 1988.
Amendment No.: 33.
Facility Operating License No. NPF-38: Amendment revised the Technical Specifications.
Date of initial notice in **Federal Register**: December 16, 1987 (52 FR 47786). The Commission's related evaluation of the amendment is contained in a Safety Evaluation dated March 21, 1988.

No significant hazards consideration comments received: No.

Local Public Document Room location: University of New Orleans Library, Louisiana Collection, Lakefront, New Orleans, Louisiana 70122.

Niagara Mohawk Power Corporation, Docket No. 50-220, Nine Mile Point Nuclear Station, Unit No. 1, Oswego County, New York

Date of application for amendment: July 8, 1987.

Brief description of amendment: This amendment revises the Technical Specification 3.2.2, *Minimum Reactor Vessel Temperature for Pressurization,* and the associated Bases. The change was necessary because of measured nil-ductility temperature shifts of irradiated vessel material samples.

Date of issuance: March 15, 1988.

Effective date: March 15, 1988.

Amendment No.: 95.

Facility Operating License No. DPR-63: Amendment revised the Technical Specifications and associated Bases.

Date of initial notice in **Federal Register:** September 9, 1987 (52 FR 34015). The Commission's related evaluation of the amendment is contained in a Safety Evaluation dated March 15, 1988.

No significant hazards consideration comments received: No.

Local Public Document Room location: Reference and Documents Department, Penfield Library, State University of New York, Oswego, New York 13126.

Northeast Nuclear Energy Company, et al., Docket No. 50-245, Millstone Nuclear Power Station Unit No. 1, New London County, Connecticut

Date of application for amendment: May 15, 1987.

Brief description of amendment: The technical specification change would delete Tables 3.6.1.a and 3.6.1.b, the listings of safety-related hydraulic and mechanical snubbers, respectively, and make changes to the testing ard surveillance of snubbers.

Date of issuance: March 17, 1988.

Effective date: March 17, 1988.

Amendment No.: 15.

Facility Operating License No. NPF-21: Amendment revised the Technical Specifications.

Date of initial notice in **Federal Register:** July 15, 1987 (52 FR 26590). The Commission's related evaluation of the amendment is contained in a Safety Evaluation dated.

No significant hazards consideration comments received: No.

Local Public Document Room location: Waterford Public Library, 49 Rope Ferry Road, Waterford, Connecticut 06385.

Philadelphia Electric Company, Docket No. 5C-352, Limerick Generating Station, Unit 1, Montgomery County, Pennsylvania

Date of application for amendment: March 23, 1987.

Brief description of amendment: This amendment revised the Technical Specifications (TSs) to include consideration of wind speed during verification of reactor enclosure secondary containment integrity.

Date of issuance: March 10, 1988.

Effective date: March 10, 1988.

Amendment No.: 8.

Facility Operating License No. NPF-39. This amendment revised the Technical Specifications.

Date of initial notice in **Federal Register:** July 29, 1987 (52 FR 28384) The Commission's related evaluation of the amendment is contained in a Safety Evaluation dated March 10, 1988.

No significant hazards consideration comments received: No.

Local Public Document Room location: Pottstown Public Library, 500 High Street, Pottstown, Pennsylvania 19464.

Sacramento Municipal Utility District, Docket No. 50-312, Rancho Seco Nuclear Generating Station, Sacramento County, California

Date of application for amendment: October 1, 1987, as supplemented November 25, and December 3, 1987.

Brief description of amendment: The amendment incorporates changes which were compiled during an overall review of the technical Specifications. The changes modify various sections of the technical specifications to make them more closely resemble the Babcock and Wilcox Standard Technical Specifications.

Date of issuance: March 15, 1988.

Effective date: Within 30 days of issuance or prior to reactor criticality following the 1986/87 outage, whichever occurs first.

Amendment No.: 97.

Facility Operating License No. DPR-54: Amendment revised the Technical Specifications.

Date of initial notice in **Federal Register:** December 16, 1987 (52 FR 47792) The Commission's related evaluation of the amendment is contained in a Safety Evaluation dated March 15, 1988. The letters of November 25 and December 3, 1987 provided supplemental information which did not change the initial proposed determination of no significant hazards.

No significant hazards consideration comments received: No.

Local Public Document Room location: Sacramento City-County Library, 828 I Street, Sacramento, California 95814.

Toledo Edison Company and The Cleveland Electric Illuminating Company, Docket No. 50-346, Davis-Besse Nuclear Power Station, Unit No. 1, Ottawa County, Ohio

Date of application for amendment: September 29, 1987.

Brief description of amendment: This amendment revised the TSs to permit an extension of the range of the Reactor Coolant System (RCS) Pressure instrument on the Auxiliary Shutdown Panel to 3000 psig from 2500 psig. The change revises Specification 3.3.3.5, Table 3.3-9, Item 3 to have a range of 0 psig to 3000 psig.

Date of issuance: March 14, 1988.

Effective date: March 14, 1988.

Amendment No.: 110.

Facility Operating License No. NPF-3. Amendment revised the Technical Specifications.

Date of initial notice in **Federal Register:** February 10, 1988 (53 FR 3961). The Commission's related evaluation of the amendment is contained in a Safety Evaluation dated March 14, 1988.

No significant hazards consideration comments received: No.

Local Public Document Room location: University of Toledo Library, Documents Department, 2801 Bancroft Avenue, Toledo, Ohio 43606.

Union Electric Company, Docket No. 50-483, Callaway Plant, Unit 1, Callaway County, Missouri

Date of application for amendment: December 15, 1987.

Brief description of amendment: The amendment revised Technical Specification Figures 6.2-1 and 6.2-2 and Section 6.5.1 to reflect nuclear function organizational changes associated with the establishment of the positions of Manager, Licensing and Fuels, and Assistant Manager, Work Control, and the elimination of the Assistant Manager, Support Services, position and the resulting changes in the operating organization, engineering organization and On-Site Review Committee.

Date of issuance: January 29, 1988.

Effective date: January 29, 1988.

Amendment No.: 32.

Facility Operating Licenee No. NPF-30. Amendment revised the Technical Specifications.

Date of initial notice in **Federal Register:** December 30, 1987 (52 FR 49217 at 49233). The Commission's related

evaluation of the amendment is contained in a Safety Evaluation dated January 29, 1988.

No significant hazards consideration comments received: No.

Local Public Document Room location: Callaway County Public Library, 710 Court Street, Fulton, Missouri 65251 and the John M. Olin Library, Washington University, Skinker and Lindell Boulevards, St. Louis, Missouri 63130.

Virginia Electric and Power Company et al., Docket Nos. 50-338 and 50-339, North Anna Power Station, Units No. 1 and No. 2, Louisa County, Virginia

Date of application for amendments: June 1, 1987.

Brief description of amendments: The amendment changed NA-1&2 TS 3/4.4.8, B3/4.4.8, 6.9.1.5.c, and 6.9.2.f, which are associated with primary coolant specific activity limits, in order to comply with NRC Generic Letter 85-19, "Reporting Requirements on Primary Coolant Iodine Activity."

Date of issuance: March 11, 1988.

Effective date: March 11, 1988.

Amendment Nos.: 96 and 83.

Facility Operating License Nos. NPF-4 and NPF-7: Amendments revised the Technical Specifications.

Date of initial notice in **Federal Register:** July 15, 1987 (52 FR 26601) The Commission's related evaluation of the amendments is contained in a Safety Evaluation dated March 11, 1988.

No significant hazards consideration comments received: No.

Local Public Document Room locations: Board of Supervisors Office, Louisa County Courthouse, Louisa, Virginia 23093, and the Alderman Library, Manuscripts Department, University of Virginia, Charlottesville, Virginia 22901.

Virginia Electric and Power Company, Docket Nos. 50-280 and 50-281, Surry Power Station, Unit Nos. 1 and 2, Surry County, Virginia

Date of applications for amendments: April 23, 1987 and May 29, 1987.

Brief description of amendments: The amendments include the core exit thermocouple (CET) system in the accident monitoring instrumentation listed in Tables 3.7-6 and 4.1-2 of the Surry Technical Specifications. The changes address the CET requirements of NUREG-0737, Item II.F.2, "Instrumentation for Detection of Inadequate Core Cooling." In addition, minor editorial changes were made in both of the above tables to reflect the consolidation of the CET system along with the already existing subcooling margin monitor (SMM) and the reactor vessel level indicating system (RVLIS) into one system called the inadequate core cooling monitor. In addition, the amendment revised Table 3.21-1 of the Surry Technical Specifications by adding two additional smoke detectors to the listing for the auxiliary building general area.

Date of issuance: March 15, 1988.

Effective date: March 15, 1988.

Amendment Nos. 118 and 118.

Facility Operating License Nos. DPR-32 and DPR-37: Amendments revised the Technical Specifications.

Date of initial notice in **Federal Register:** September 23, 1987 (52 FR 35809 and 52 FR 35812). The Commission's related evaluation of the amendment is contained in a Safety Evaluation dated March 15, 1988.

No significant hazards consideration comments received: No.

Local Public Document Room location: Swem Library, College of William and Mary, Williamsburg, Virginia 23185.

Wisconsin Public Service Corporation, Docket No. 50-305, Kewaunee Nuclear Power Plant, Kewaunee County, Wisconsin

Date of application for amendment: October 8, 1987.

Brief description of amendment: The amendment revised the Technical Specifications covering the low frequency trip setpoints for the reactor coolant pump motor breakers and made a minor editorial change. Specifically, for the reactor coolant pump motor breakers, the low frequency trip setpoints were changed from 57.5 Hz to 55.0 Hz.

Date of issuance: March 14, 1988.

Effective date: March 14, 1988.

Amendment No.: 77.

Facility Operating License No. NPF-30. Amendment revised the Technical Specifications.

Date of initial notice in **Federal Register:** February 10, 1988 (53 FR 3961). The Commission's related evaluation of the amendment is contained in a Safety Evaluation dated March 14, 1988.

No significant hazards consideration comments received: No.

Local Public Document Room location: University of Wisconsin Library Learning Center, 2420 Nicolet Drive, Green Bay, Wisconsin 54301.

Wisconsin Public Service Corporation, Docket No. 50-305, Kewaunee Nuclear Power Plant, Kewaunee County, Wisconsin

Date of application for amendment: February 5, 1988.

Brief description of amendment: The amendment added a paragraph 2.C.(6), to the Kewaunee Nuclear Power Plant (KNPP) operating license to allow a plant modification to the steam generator upper lateral support snubbers. The modification involves reducing the number of snubbers on the SG upper lateral supports from four to one based on application of "leak-before-break" technology as permitted by revised General Revision Criterion 4.

Date of issuance: March 18, 1988.

Effective date: March 18, 1988.

Amendment No.: 78.

Facility Operating License No. NPF-30. Amendment revised the License.

Date of initial notice in **Federal Register:** February 16, 1988 (53 FR 4479). The Commission's related evaluation of the amendment is contained in a Safety Evaluation dated March 18, 1988.

No significant hazards consideration comments received: No.

Local Public Document Room location: University of Wisconsin Library Learning Center, 2420 Nicolet Drive, Green Bay, Wisconsin 54301.

Dated at Rockville, Maryland, this 31st day of March, 1988.

For the Nuclear Regulatory Commission.

Dennis M. Crutchfield,

Director, Division of Reactor Projects—III, IV, V and Special Projects, Office of Nuclear Reactor Regulation.

[FR Doc. 88-7398 Filed 4-5-88; 8:45 am]

BILLING CODE 7590-01-M

[Docket No. 30-13435, ASLBP No. 88-559-01-SC]

Finlay Testing Laboratories, Inc.; Hearing

March 30, 1988.

Before Administrative Judges: Robert M. Lazo, Chairman, Glenn O. Bright, Richard F. Cole.

Please take notice that an evidentiary hearing in this proceeding shall convene at 10 a.m., local time, Wednesday, May 18, 1988, in Room 3322, U.S. Coast Guard Legal Office, PJKK Federal Building, 300 Ala Moana Boulevard, Honolulu, HI 96850.

The hearing shall be conducted continuously day to day until all evidence on matters outstanding has been received or until continued by further order of the Board.

It is so ordered.

Dated at Bethesda, Maryland, this 30th day of March 1988.

For the Atomic Safety and Licensing Board.

Robert M. Lazo,

Chairman, Administrative Judge.

[FR Doc. 88-7539 Filed 4-5-88; 8:45 am]

BILLING CODE 7590-01-M

[Docket No. STN 50-483]

Union Electric Co.; Issuance of Amendment to Facility Operating License

The U.S. Nuclear Regulatory Commission (the Commission) has issued Amendment No. 35 to Facility Operating License No. NPF-30, issued to Union Electric Company (the licensee) which amended the license and revised the Technical Specifications for operation of the Callaway Plant, Unit 1, located in Callaway County, Missouri. The Amendment was effective as of the date of its issuance.

The amendment revised the license and technical specifications to support an increase in the authorized core thermal power from 3411 MWt to 3565 MWt.

The application for the amendment complies ith the standards and requirements of the Atomic Energy Act of 1954, as amended (the Act), and the Commission's rules and regulations. The Commission has made appropriate findings as required by the Act and the Commission's rules and regulations in 10 CFR Chapter I, which are set forth in the license amendment.

Notice of Consideration of Issuance of Amendment and Opportunity for Prior Hearing in connection with this action was published in the **Federal Register** on June 1, 1987 (52 FR 20481). No request for a hearing or petition for leave to intervene was filed following this notice.

For further details with respect to this action, see (1) the application for amendment dated March 31, 1987, as supplemented April 21, September 18, October 7, October 23, and November 13, 1987; (2) Amendment No. 35 to Facility Operating License No. NPF-30; (3) the Commission's related Safety Evaluation dated March 30, 1988; and (4) the Environmental Assessment dated February 17, 1988 (53 FR 5331). All of these items are available for public inspection at the Commission's Public Document Room, 1717 H Street NW., Washington, DC, and at the Callaway County Public Library, 710 Court Street, Fulton, Missouri 65251 and the John M. Olin Library, Washington University, Skinker and Lindell Boulevards, St. Louis, Missouri 63130. A copy of items (2), (3) and (4) may be obtained upon request addressed to the U.S. Nuclear Regulatory Commission, Washington, DC 20555, Attention: Director, Division of Reactor Projects.

Dated at Rockville, Maryland this 30th day of March 1988.

For the Nuclear Regulatory Commission.

Thomas W. Alexion,

Project Manager, Project Directorate III—3, Division of Reactor Projects-III, IV, V and Special Projects.

[FR Doc. 88-7523 Filed 4-5-88; 8:45 am]

BILLING CODE 7590-01-M

SECURITIES AND EXCHANGE COMMISSION

Forms Under Review by Office of Management and Budget

Agency Clearance Officer: Kenneth A. Fogash (202) 272-2142.

Upon Written Request Copy Available From: Securities and Exchange Commission, Office of Consumer Affairs, Washington, DC 20549.

Extension, Form TA-1, Rule 17Ac2-1(c), 270-95.

Extension, Form TA-2, Rule 17Ac2-2, 270-298.

Notice is hereby given that pursuant to the Paperwork Reduction Act of 1980 (44 U.S.C. 3501 *et seq.*) the Securities and Exchange Commission has submitted a request for extension of OMB approval of Form TA-1 (17 CFR 249b.100), and Rule 17Ac2-1(c) (17 CFR 240.17Ac2-1(c)), both previously having been granted clearance, as well as extension of OMB approval of Form TA-2 and Rule 17Ac2-2 under the Securities Exchange Act of 1934 (15 U.S.C. 78a *et seq.*). Form TA-1 is used by transfer agents to register with the Commission, Comptroller of the Currency, the Board of Governors of the Federal Reserve System or the Federal Deposit Insurance Corporation. Form TA-1 is also used by transfer agents to amend their registration. Part II of Form TA-1, which requires transfer agents to provide certain background information regarding control persons, should only be completed by transfer agents registering directly with the Commission. Rule 17Ac2-1(c) requires a transfer agent to correct information submitted on Form TA-1 which becomes inaccurate, misleading or incomplete within sixty days following the date on which the information became inaccurate, misleading or incomplete. Three hundred fifty respondents incur an estimated burden of 1.57 hours to comply with the requirements of Rule 17Ac2-1 (a) and (c).

Rule 17Ac2-2 requires registered transfer agents to file an annual report of their business activities on Form TA-2. Form TA-2 is to be filed with the transfer agent's appropriate regulatory agency, which would be either the Commission, the Comptroller of the Currency, the Board of Governors of the Federal Reserve System or the Federal Deposit Insurance Corporation. Transfer agents who satisfy the criteria set forth in 17 CFR 240.0-10(h) (restated in Rule 17Ac2-2) would only be required to complete Page One and the execution section of Form TA-2. Twenty-four hundred respondents incur an estimated burden of three hours to comply with the requirements of Rule 17Ac2-2.

Submit comments to OMB Desk Officer: Robert Neal (202) 395-7340, Office of Information and Regulatory Affairs, Room 3228, NEOB, Washington, DC 20503.

Jonathan G. Katz,

Secretary.

April 1, 1988.

[FR Doc. 88-7503 Filed 4-5-88; 8:45 am]

BILLING CODE 8010-01-M

[Release No. 34-25532; File No. SR-Amex-87-30]

Self-Regulatory Organization; Order Approving Proposed Rule Change by the American Stock Exchange, Inc., Relating to Suspension of Employees of Members Who Fail To Pay Disciplinary Fines

On November 17, 1987, the American Stock Exchange, Inc. ("Amex" or "Exchange") submitted to the Securities and Exchange Commission ("Commission") pursuant to section 19(b)(1) under the Securities Exchange Act of 1934 ("Act") and Rule 19b-4 thereunder, a proposed rule change that would amend Rule 345 to permit the Exchange to suspend summarily from association with a member or member organization employees of a member or member organization who fail to pay disciplinary fines. The proposed rule change was noticed in Securities Exchange Act Release No. 25176 (December 7, 1987), 52 FR 47469. No comments were received.

The proposed amendment would permit the Amex to suspend summarily an employee from association with a member or member organization who fails to pay a disciplinary fine within thirty days after it becomes due, but provides that such suspension may only occur after any appeal of the original sanction had been exhausted and the decision had become final. Under the proposed rule such summary suspension will be in effect until the fine is paid.

Article V Section 3(e) of the Amex Constitution currently allows the summary suspension of members and member organizations for non-payment of fines assessed against them. It does

not, however, provide for the summary suspension of an employee's association with a member or member organization for failure to pay fines which are subsequently levied. Thus, where an employee of a member or member organization fails to pay a fine, a second disciplinary proceeding must be initiated, with a formal hearing and full appeal. In its filing, the Amex claims the inability to suspend employees of members who fail to pay disciplinary fines undermines the effectiveness of the Exchange's disciplinary sanctions. Amex has established certain notice procedures concerning the ability to suspend summarily an employee under the proposed rule.[1] The initial decision letter will inform the respondent about the determination and penalty levied against him, the rights to appeal under Amex and Commission rules, and that if he fails to pay the fine within 30 days after it becomes due, he may, after written notice, be summarily suspended from association with his member firm.[2] If the fine is 30 days overdue after the decision becomes final (after all appeals and reviews have been taken), the Amex will send an enforcement letter to the respondent informing him that he will be summarily suspended from assoication with his member firm if he fails to pay the fine in 30 days.

The Commission has carefully reviewed the proposal and believes the rule change adequately balances the need to provide due process to employees who are subject to a grievance with the Exchange's need to enforce its sanctions in an efficient manner. It is reasonable for the Amex to extend its summary suspension powers for non-payment of fines that it has for members to employees associated with members. As noted above, summary action for enforcement of non-payment of fines under the proposed rule could only take place after all appeals under Amex rules and the Act have been exhausted and the decision imposing the sanction is final. Amex procedures should also ensure that adequate notice is given to respondents that could be subject to such a summary suspension under the proposed rule. Based on the above, the Commission finds that the proposed rule change is consistent with the requirements of the Act and the rules and regulations thereunder applicable to a national securities exchange and, in particular, the requirements of Section 6 and the rules and regulations thereunder.

It Is Therefore Ordered, pursuant to section 19(b)(2) of the Act, that proposed rule change (File No. SR-Amex-87-30) be, and hereby is, approved.

For the Commission, by the Division of Market Regulation, pursuant to delegated authority.

Dated: March 30, 1988.

Jonathan G. Katz,

Secretary.

FR Doc. 88-7498 Filed 4-5-88; 8:45 am]

BILLING CODE 8010-01-M

[1] *See* letter from J. Bruce, Ferguson, Assistant Vice President, Amex, to Sharon Lawson, Branch Chief, SEC dated March 6.

[2] Amex states that if no appeal under Amex or Commission rules are taken, the fine is deemed due at the end of the appeal period when the decision becomes final. If the decision is appealed (or reviewed on its own motion by the Commission) the fine will be deemed due as of the date of the final appeal decision. We note the Amex Constitution provides 20 days to appeal a decision to the Board of Governors. Pursuant to section 19(d) of the Act, this 20 day period is followed by the right to appeal to the Commission within 30 days after notice of final disciplinary action has been filed with the Commission. The Commission also has the right to review decisions by self-regulatory organizations on its own motion under section 19(d) of the Act.

[Release No. 34-25542; File No. SR-Amex-83-27; Amdt. No. 4]

Self-Regulatory Organizations; Proposed Rule Change by the American Stock Exchange, Inc. Concerning Amendments to its Specialist Unit Evaluation Questionnaire

Pursuant to section 19(b)(1) of the Securities Exchange Act of 1934, ("Act") 15 U.S.C. 78s(b)(1), notice is hereby given that on March 17, 1988, the American Stock Exchange, Inc. ("Amex" or "Exchange") filed with the Securities and Exchange Commission ("Commission") the proposed rule changes as described in Items I, II, and III below, which Items have been prepared by the self-regulatory organization. The Commission is publishing this notice to solicit comments on the proposed rule change from interested persons.

I. Self-Regulatory Organization's Statement of the Terms of Substance of the Proposed Rule Change

The Exchange hereby files for Commission approval changes to its Specialist Unit Evaluation Questionnaire ("Questionnaire") which expand and clarify its content.

II. Self-Regulatory Organization's Statement of the Purpose of, and Statutory Basis for, the Proposed Rule Change

In its filing with the Commission, the self-regulatory organization included statements concerning the purpose of and basis for the proposed rule change and discussed any comments it received on the proposed rule change. The text of these statements may be examined at the places specified in Item IV below. The self-regulatory organization has prepared summaries, set forth in sections (A), (B), and (C) below, of the most significant aspects of such statements.

A. Self-Regulatory Organization's Statement of the Purpose and Statutory Basis for, the Proposed Rule Change

(a) Purpose

In November 1981, the Commission staff ("staff") recommended that the Amex submit to the Commission for approval its procedures for the evaluation of equity specialist performance and for the allocation and reallocation of stocks.[1] The Amex complied with the staff's recommendation and in November, 1983, the Commission published for notice and comments the Amex's equities specialist performance evaluation, allocation, and reallocation procedures.[2] Included in these procedures is the Amex's Questionnaire. The questionnaire is completed, on a quarterly basis, by floor brokers and registered traders who are requested to evaluate a specialist unit's performance in four categories for the preceding three month period. In this filing, the Amex seeks to amend the questionnaire to expand and clarify its contents.[3]

The proposed amendment to the Questionnaire would, among other things, expand from 4 to 26 the number of questions included in the questionnaire and divide the questions into four categories. All questions would be given equal weight. The unit's overall rating will be based on the combined evaluations of the responding brokers using a weighted average of the four categores of questions. In addition, the

[1] *See* letter from Douglas Scarff, Director, Division of Market Regulation, to Robert Birnbaum, President, Amex, dated November 10, 1981.

[2] *See* Securities Exchange Act Release No. 20353 (November 4, 1983) 48 FR 51992, (November 15, 1983). The Amex submitted Amendment No. 1 to the proposal on April 23, 1984; however, due to a number of concerns raised by the amendment, the Commission determined not to publish this amendment for notice and comment, but rather requested the Amex to provide additional amendments to the filing that would address its concerns. The Amex filed amendments number 2 and 3 to the proposal on February 7 and May 20, 1985, respectively. The Commission published these amendments for notice and comments in August, 1985. *See*, Securities Exchange Act Rel. No. 22312 (August 12, 1985) 50 FR 33139.

[3] A copy of the amended specialist unit evaluation questionnaire was included in the filing as Exhibit 3. Copies of the Questionnaire are available from the Commission at the address noted in Section IV below and from the Amex.

proposal would incorporate a new alphabetical rating scale in place of the current numerical rating scale [4] and redesignate the four major areas of performance evaluated on the Questionnaire.[5]

The identity of and specific comments provided by responding members will remain strictly confidential, although no survey is accepted unless it is signed, for validation purposes. Members assigning a 4 or 5 rating to a unit in any category will no longer be required to furnish written comments in support of the rating.

(b) Basis

The proposed rule change is consistent with section 6(b) of the Act in general and furthers the objectives of section 6(b)(5) in particular in that the Exchange's procedures are designed to promote just and equitable principles of trade and protect investors and the public interest.

(B) Self-Regulatory Organization's Statement on Buden on Competition

The Exchange's procedures encourage specialists to compete with each other for the allocation of new issues and the retention of those securities in which they are currently registered. The proposed rule change rewards superior performance and thus promotes and enhances competition among Exchange specialists.

(C) Self-Regulatory Organization's Statement on Comments on the Proposed Rule Change Received from Members, Participants or Others

No written comments were solicited or received with respect to the proposed rule change.

III. Date of Effectiveness of the Proposed Rule Changes and Timing for Commission Action

Within 35 days of the date of publication of this notice in the **Federal Register** or within such longer period (i) as the Commission may designate up to 90 days of such date if it finds such longer period to be appropriate and publishes its reasons for so finding or (ii) as to which the self-regulatory organization consents, the Commission will:

(A) By order approve such proposed rule changes, or

(B) Institute proceedings to determine whether the proposed rule changes should be disapproved.

IV. Solicitation of Comments

Interested persons are invited to submit written data, views and arguments concerning the foregoing. Persons making written submissions should file six copies thereof with the Secretary, Securities and Exchange Commission, 450 Fifth Street, NW., Washington, DC 20549. Copies of the submission, all subsequent amendments, all written statements with respect to the proposed rule changes that are filed with the Commission, and all written communications relating to the proposed rule changes between the Commission and any person, other than those that may be withheld from the public in accordance with the provisions of 5 U.S.C. 552, will be available for inspection and copying in the Commission's Public Reference Section, 450 Fifth Street, NW., Washington, DC. Copies of such filing will also be available for inspection and copying at the principal office of the Amex.

All submissions should refer to the file number in the caption above and should be submitted by April 27, 1988.

For the Commission, by the Division of Market Regulation, pursuant to delegated authority.

Jonathan G. Katz

Secretary.

Dated: March 31, 1988.

[FR Doc. 88-7564 Filed 4-5-88; 8:45 am]

BILLING CODE 8010-01-M

---

[4] The current 1 through 5 rating system, which ranges from outstanding to weak, would be replaced by A=Always, F=Frequently, S=Satisfactory, O=Occasionally, N=Never. The alphabetical rating (A, F, S, O, N) would be translated into a numerical rating by correlating A to 1, F to 2, S to 3, O to 4, and N to 5. Units receiving a 4 or 5 Questionnaire rating in any quarter will continue to be precluded from applying for any allocation until its quarterly performance rating has improved.

[5] Under the proposed amendment the 28 questions would be divided into 4 categories evaluating specialist principal obligations, agency/fiduciary obligation, communication function and auction market maintenance.

[Release No. 34-25538; File No. PHLX 88-13]

Self-Regulatory Organizations; Proposed Rule Change by the Philadelphia Stock Exchange, Inc. Relating to Introduction of Quarter Point Strikes in French Franc Options

Pursuant to section 19(b)(1) of the Securities Exchange Act of 1934, 15 U.S.C. 78s(b)(1), notice is hereby given that on March 24, 1988 the Philadelphia Stock Exchange, Inc. filed with the Securities and Exchange Commission the proposed rule change as described in Items I, II and III below, which Items have been prepared by the self-regulatory organization. The Commission is publishing this notice to solicit comments on the proposed rule change from interested persons.

I. Self-Regulatory Organization's Statement of the Terms of Substance of the Proposed Rule Change

The Philadelphia Stock Exchange, Inc. ("PHLX" or the "Exchange") proposes to revise certain of its strike price policies to permit the orderly introduction of one quarter point [$.0025] strike price intervals for French franc options contracts.

II. Self-Regulatory Organization's Statement of the Purpose of, and Statutory Basis for, the Proposed Rule Change

In its filing with the Commission, the self-regulatory organization included statements concerning the purpose of and basis for the proposed rule change and discussed any comments it received on the proposed rule change. The text of these statements may be examined at the places specified in Item IV below. The self-regulatory organization has prepared summaries, set forth in sections (A), (B), and (C) below, of the most significant aspects of such statements.

A. Self-Regulatory Organization's Statements of the Purpose of, and Statutory Basis for the Proposed Rule Change

The purpose of the proposed rule change is to reduce maximum strike price intervals in French franc options contracts to one quarter point. In effectuating the proposed rule change, the Exchange does not propose to add quarter point strikes between all existing half point strikes. Rather, to avoid a proliferation of series, the Exchange proposes to add quarter point strikes gradually and only for at-or near-the-money strikes.

The proposal is being made because the French franc has proven to be considerably less volatile in relation to the dollar than the Exchange originally anticipated. As a result, the half point strike price intervals currently in place have been found by investors and broker-dealers to be inadequate to meet their trading needs, particularly for at or near-the-money options. The availability of additional strike prices would enhance the opportunity of market participants in the French franc options to manage and hedge their currency risk more effectively.

There are currently approximately 90 put and call series in both the American and European style foreign currency options on the French franc. While this is a large number of strikes compared to most equity options, it is fewer than most other currency options. The Exchange is mindful of the potential

operational burdens that have resulted from the proliferation of options series in recent months. To minimize any potential burdens of the proposed rule change, the Exchange proposes to introduce quarter point strike prices gradually, to the extent coordinating their introduction with the expiration or removal of current deep-in or deep-out-of-the-money strikes.

The proposed rule change is based on section 6(b)(5) of the Securities Exchange Act of 1934 in that it is designed to facilitate transactions in French franc foreign currency options contracts and to promote the protection of investors and the public interest.

B. Self-Regulatory Organizations Statement on Burden on Competition

The PHLX does not believe that the proposed rule change will impose any inappropriate burden on competition.

C. Self-Regulatory Organization's Statement on Comments on the Proposed Rule Change Received From Members, Participants, or Others

No written comments were either solicited or received.

III. Date of Effectiveness of the Proposed Rule Change and Timing for Commission Action

Within 35 days of the date of publication of this notice in the **Federal Register** or within such longer period (i) as the Commission may designate up to 90 days or such date if it finds such longer period to be appropriate and publishes its reasons for so finding or (ii) as to which the self-regulatory organization consents, the Commission will:

(A) By order approve such proposed rule change, or,

(B) Institute proceedings to determine whether the proposed rule change should be disapproved.

IV. Solicitation of Comments

Interested persons are invited to submit written data, views and arguments concerning the foregoing. Persons making written submissions should file six copies thereof with the Secretary, Securities and Exchange Commission, 450 Fifth Street, NW., Washington, DC 20549. Copies of the submission, all subsequent amendments, all written statements with respect to the proposed rule change that are filed with the Commission, and all written communications relating to the proposed rule change between the Commission and any person, other than those that may be withheld from the public in accordance with the provisions of 5 U.S.C. 552, will be available for inspection and copying in the Commission's Public Reference Section, 450 Fifth Street, NW., Washington, DC 20549. Copies of such filing will also be available for inspection and copying at the principal office of the above-mentioned self-regulatory organization. All submissions should refer to the file number in the caption above and should be submitted by April 27, 1988.

For the Commission by the Division of Market Regulation, pursuant to delegated authority.

Jonathan G. Katz,

Secretary.

Dated: March 31, 1988.

[FR Doc. 88-7499 Filed 4-5-88; 8:45 am]

BILLING CODE 8010-01-M

[Release No. 34-25539; File No. PHLX 88-14]

Self-Regulatory Organizations; Proposed Rule Change by the Philadelphia Stock Exchange, Inc. Relating To Reduction in Minimum Tick Size of British Pound Options

Pursuant to section 19(b)(1) of the Securities Exchange Act of 1934, 15 U.S.C. 78s(b)(1), notice is hereby given that on March 24, 1988 the Philadelphia Stock Exchange, Inc. filed with the Securities and Exchange Commission the proposed rule change as described in Items I, II and III below, which Items have been prepared by the self-regulatory organization. The Commission is publishing this notice to solicit comments on the proposed rule change from interested persons.

I. Self-Regulatory Organization's Statement of the Terms of Substance of the Proposed Rule Change

The Philadelphia Stock Exchange, Inc. ("PHLX" or the "Exchange") proposes to change the minimum fractional change (*i.e.*, minimum premium change for dealing on the Exchange on option contracts on the British pound from $.0005 to $.0001.) The text of the proposed rule change is set forth below. [Brackets] indicate deletions; *italics* indicates additions.

Minimum Fractional Changes

Rule 1034. The minimum fractional change for dealing on the Exchange in option contracts shall be as follows:

(i) In the case of options on stocks, one-eighth point in option contracts trading at $3.00 per share per option or higher, and one-sixteenth point in option contracts trading under $3.00 per share per option.

(ii) In the case of options on foreign currencies, [$.0005] *$.0001* for option contracts on the British pound, $.0001 for option contracts on the German mark, $.0001 for option contracts on the Swiss franc, $.0001 for option contracts on the Canadian dollar, $.0001 for option contracts on the Australian dollar, $.0001 for option contracts on the ECU, $.0005 for option contracts on the French franc and $.000001 for option contracts on the Japanese yen.

II. Self-Regulatory Organization's Statement of the Purpose of, and Statutory Basis for, the Proposed Rule Change

In its filing with the Commission, the self-regulatory organization included statements concerning the purpose of and basis for the proposed rule change and discussed any comments it received on the proposed rule change. The text of these statements may be examined at the places specified in Item IV below. The self-regulatory organization has prepared summaries, set forth in sections (A), (B), and (C) below, of the most significant aspects of such statements.

A. Self-Regulatory Organization's Statements of the Purpose of, and Statutory Basis for the Proposed Rule Change

The purpose of the proposed rule change is to enable market participants trading PHLX listed British pound foreign currency options contracts to more competitively transact business in this product. By decreasing the minimum premium change from the equivalent of $6.25 per tick to $1.25 per tick the PHLX will enable market participants to more effectively trade and hedge their over the counter currency risk with Exchange traded British pound foreign currency options since over the counter British pound currency options are usually transacted on a one tick basis. The ability of the PHLX to offer a one tick minimum premium change in British pound currency options would enable the PHLX to be competitive with the options on futures contracts presently traded on a two tick differential basis on the Chicago Mercantile Exchange. The proposal will impose no operational burdens on member firms or public investors.

The proposed rule change is based on section 6(b)(5) of the Securities

BEST COPY AVAILABLE

Exchange Act of 1934 in that it is designed to facilitate transactions in British pound foreign currency options contracts.

B. Self-Regulatory Organizations Statement on Burden on Competition

The PHLX does not believe that the proposed rule change will impose any inappropriate burden on competition.

C. Self-Regulatory Organization's Statement on Comments on the Proposed Rule Change Received from Members, Participants, or Others

No written comments were either solicited or received.

III. Date of Effectiveness of the Proposed Rule Change and Timing for Commission Action

Within 35 days of the date of publication of this notice in the **Federal Register** or within such longer period (i) as the Commission may designate up to 90 days or such date if it finds such longer period to be appropriate and publishes its reasons for so finding or (ii) as to which the self-regulatory organization consents, the Commission will:

(A) By order approve such proposed rule change, or,

(B) Institute proceedings to determine whether the proposed rule change should be disapproved.

IV. Solicitation of Comments

Interested persons are invited to submit written data, views and arguments concerning the foregoing. Persons making written submissions should file six copies thereof with the Secretary, Securities and Exchange Commission, 450 Fifth Street, NW., Washington, DC 20549. Copies of the submission, all subsequent amendments, all written statements with respect to the proposed rule change that are filed with the Commission, and all written communications relating to the proposed rule change between the Commission and any person, other than those that may be withheld from the public in accordance with the provisions of 5 U.S.C. 552, will be available for inspection and copying in the Commission's Public Reference Section, 450 Fifth Street, NW., Washington, DC 20549. Copies of such filing will also be available for inspection and copying at the principal office of the above-mentioned self-regulatory organization. All submissions should refer to the file number in the caption above and should be submitted by April 27, 1988.

For the Commission by the Division of Market Regulation, pursuant to delegated authority.

Jonathan G. Katz,

Secretary.

Dated: March 31, 1988.

[FR Doc. 88-7500 Filed 4-5-88; 8:45 am]

BILLING CODE 8010-01-M

[Release No. 34-25540; File No. SR-PHLX-88-10]

Self-Regulatory Organizations; Philadelphia Stock Exchange, Inc.; Filing and Order Granting Accelerated Approval to Proposed Rule Change

On March 9, 1988, the Philadelphia Stock Exchange, Inc. ("Phlx" or Exchange") submitted to the Securities and Exchange Commission ("Commission"), pursuant to section 19(b)(1) under the Securities Exchange Act of 1934 ("Act") [1] and Rule 19b-4 thereunder,[2] a proposed rule change to permit the Exchange to commence operation of its Automated Options market ("AUTOM") system on a pilot basis.

AUTOM, which has been in development for over a year, is an on-line system that allows electronic delivery of options orders from member firms directly to the appropriate specialist on the Phlx options trading floor, with electronic confirmation of order executions. Because all orders received through AUTOM will be exposed to the specialist's limit order book, the trading crowd, and at least one registered options trader ("ROT"),[3] the Exchange believes best execution of AUTOM orders is assured.

All orders entered into the system will be executed manually by the specialist, who, upon execution of the order, will enter the relevant trade information [*e.g.*, the number of contracts executed, the price, and the identity of the contra-broker(s)] into the system. An execution report will then automatically be sent to the firm that placed the orders.

The Exchange states that the AUTOM system, hardware as well as software, is completely separate from and independent of the hardware and software for Phlx's Philadelphia Stock Exchange Automated Communication and Execution ("PACE") system for routing and executing stock orders. The two systems, AUTOM and PACE, are exclusive unto themselves and neither relies on the other for the performance of any function. Because the systems are independent, one system cannot adversely impact on the other during volume surges in terms of volume handling capabilities or queuing.[4]

During the AUTOM pilot, the Phlx has requested Commission authorization to include up to 12 equity options; up to five order entry firms; and up to six specialist units. During the pilot phase, only market orders of five or fewer contracts in the near-term expiration month will be delivered through the system for manual execution.

The Exchange will establish a service desk on the options trading floor to handle AUTOM trade inquiries and status of reports.

The Amex proposes to implement the AUTOM system as a 90-day pilot program, commencing in April 1988. The Exchange, however, requests from the Commission the authority to terminate the program prior to the 90th day or extend the pilot beyond the 90th day upon notice and approval of the Commission.

The Commission finds that the proposed rule change is consistent with the requirements of the Act and the rules and regulations thereunder applicable to a national securities exchange, and, in particular, the requirements of section 6 [5] and section 11A[6] and the rules and regulations thereunder. The Commission believes that the development and implementation of AUTOM will provide for more efficient handling and reporting of orders in Phlx equity options through the use of new data processing and communications techniques, thereby improving order processing and turnaround time. The Commission also believes that the proposed rule change, by offering increased order routing efficiencies, will benefit public customers and Phlx member firms and customers. In addition, because the AUTOM system is completely independent from the PACE system, the Phlx has informed the Commission that neither AUTOM nor the PACE system will impact on the other during periods of high volume. Moreover, the Phlx has informed the Commission that the AUTOM system's order handling and disc capacity at the present time is five times the estimated daily order flow for the pilot, and the AUTOM system

---

[1] 15 U.S.C. 78s(b)(1) (1982).

[2] 17 CFR 240.19b-4 (1987).

[3] Phlx Rule 1083(a) requires an Options Floor Broker to ascertain that at least one ROT is present at the trading post prior to representing an order for execution.

[4] Letter from Michael A. Finnegan, Senior Vice President, Phlx, to Howard L. Kramer, Assistant Director, Commission, dated March 22, 1988.

[5] 15 U.S.C. 78f (1982).

[6] 15 U.S.C. 78k-1 (1982).

capacity could be increased up to five times the current capacity if needed.[7]

The Commission finds good cause for approving the proposed rule change prior to the thirtieth day after the date of publication of the proposal in the **Federal Register** in that the proposed order routing system is substantially identical to order routing systems that have been approved by the Commission and currently are in effect at other securities exchanges.[8] In addition, the pilot is small (limited number of firms) and involves only order routing and reporting. The Phlx has projected that its system will be operational by the first week in April. Accelerated approval of the proposal will enable the start-up of the pilot at that time.

Interested persons are invited to submit written data, views and arguments concerning the foregoing. Persons making written submission should file six copies thereof with the Secretary, Securities and Exchange Commission, 450 Fifth Street NW., Washington, DC 20549. Copies of the submission, all subsequent amendments, all written statements with respect to the proposed rule change that are filed with the Commission, and all written communications relating to the proposed rule change between the Commission and any person, other than those that may be withheld from the public in accordance with the provisions of 5 U.S.C. 552, will be available for inspection and copying in the Commission's Public Reference Section, 450 Fifth Street, NW., Washington, DC. Copies of such filing will also be available for inspection and copying at the principal office of the above-mentioned self-regulatory organization. All submissions should refer to the file number in the caption above and should be submitted by April 27, 1988.

It is therefore ordered, pursuant to section 19(b)(2) of the Act,[9] that the proposed rule change is approved for a 90-day pilot program.[10]

[7] *See* letter from Michael A. Finnegan, Senior Vice President, Phlx, to Howard L. Kramer, Assistant Director, Commission, dated March 30, 1988.

[8] For example, the American Stock Exchange's options routing system, AUTOAMOS, was approved by the Commission in Securities Exchange Act Release No. 21441 (November 6, 1984), 49 FR 44575.

[9] 15 U.S.C. 78s(b)(2) (1982).

[10] The Commission expects that at the conclusion of the 90-day pilot, the Phlx should be able to evaluate the pilot and submit a rule change for final approval with any appropriate modifications, or that the Phlx will submit a rule change extending the pilot beyond the 90th day. The Phlx is authorized to terminate the program prior to the 90th day upon due notice and approval by the Commission.

For the Commission, by the Division of Market Regulation, pursuant to delegated authority.[11]

Jonathan G. Katz,

Secretary.

Dated: March 31, 1988.

[FR Doc. 88-7565 Filed 4-5-88; 8:45 am]

BILLING CODE 8010-01-M

[Release No. 35-24613]

Filings Under the Public Utility Holding Company Act of 1935 ("Act")

March 31, 1988.

Notice is hereby given that the following filing(s) has/have been made with the Commission pursuant to provisions of the Act and rules promulgated thereunder. All interested persons are referred to the application(s) and/or declaration(s) for complete statements of the proposed transaction(s) summarized below. The application(s) and/or declaration(s) and any amendment(s) thereto is/are available for public inspection through the Commission's Office of Public Reference.

Interested persons wishing to comment or request a hearing on the application(s) and/or declaration(s) should submit their views in writing by April 25, 1988 to the Secretary, Securities and Exchange Commission, Washington, DC 20549, and serve a copy on the relevant applicant(s) and/or declarant(s) at the address(es) specified below. Proof of service (by affidavit or, in case of an attorney at law, by certificate) should be filed with the request. Any request for hearing shall identify specifically the issues of fact or law that are disputed. A person who so requests will be notified of any hearing, if ordered, and will receive a copy of any notice or order issued in the matter. After said date, the application(s) and/or declaration(s), as filed or as amended, may be granted and/or permitted to become effective.

Finch, Pruyn & Company, Inc. (31-633)

Finch, Pruyn & Company, Inc. ("Finch, Pruyn"), One Glen Street, Glen Falls, New York, has filed an application for an exemption from the provisions of the Act pursuant to section 3(a)(3) thereof.

Finch, Pruyn's business is primarily that of a regional producer of high-quality, uncoated, free-sheet printing and writing papers. In addition, Finch, Pruyn owns one-third of the voting stock of Moreau Manufacturing Corporation ("Moreau"), which owns and operates hydro-electric facilities that produce electric power for sale. Finch, Pruyn uses its entitlement to one-third of Moreau's power solely to operate its papermill. The other two-thirds goes to the two-thirds owner of Moreau, Hydro-Co. Enterprises, Inc. (a subsidiary of the former owner, Niagara Mohawk Power Corporation). The primary reason for Finch, Pruyn's initial investment in Moreau was to gain some degree of control over the level of the Hudson River and the water flow for its papermaking operation.

In support of its application, Finch, Pruyn states that it had revenues of $164 million for the fiscal year ended January 3, 1988. For the fiscal year ended December 31, 1987, Moreau had revenues of $678,000, which amounted to 0.41% of Finch, Pruyn's revenues. The dividend income derived from Finch Pruyn's one-third stock ownership of Moreau amounted to 0.34% of the net income of Finch, Pruyn.

[11] 17 CFR 200.30-3(a)(12) (1987).

For the Commission, by the Division of Investment Management, pursuant to delegated authority.

Shirley F. Hollis,

Assistant Secretary.

[FR Doc. 88-7501 Filed 4-5-88; 8:45 am]

BILLING CODE 8010-01-M

[Release No. 35-24614]

Filings Under the Public Utility Holding Company Act of 1935 ("Act")

March 31, 1988.

Notice is hereby given that the following filing(s) has/have been made with the Commission pursuant to provisions of the Act and rules promulgated thereunder. All interested persons are referred to the application(s) and/or declaration(s) for complete statements of the proposed transaction(s) summarized below. The application(s) and/or declaration(s) and any amendment(s) thereto is/are available for public inspection through the Commission's Office of Public Reference.

Interested persons wishing to comment or request a hearing on the application(s) and/or declaration(s) should submit their views in writing by April 25, 1988 to the Secretary, Securities and Exchange Commission, Washington, DC 20549, and serve a copy on the relevant applicant(s) and/or declarant(s) at the address(es) specified below. Proof of service (by affidavit or, in case of an attorney at law, by certificate) should be filed with the request. Any request for hearing shall identify specifically the issues of fact or law that are disputed. A person who so

requests will be notified of any hearing, if ordered, and will receive a copy of any notice or order issued in the matter. After said date, the application(s) and/or declaration(s), as filed or as amended, may be granted and/or permitted to become effective.

The Southern Company (70-7513)

Notice of Issuance and Sale of Common Stock; Order Authorizing Proxy Solicitation

The Southern Company ("Southern") 64 Perimeter Center East, Atlanta, Georgia 30346, a registered holding company, has filed a declaration pursuant to sections 6(a), 7 and 12(e) of the Act and Rules 50(a)(5), 62 and 65 thereunder.

Southern proposes to grant Incentive Stock Options, Non-qualified Stock Options, Stock Appreciation Rights and Restricted Stock Awards ("Options & Rights"), from time to time through December 7, 1997. A total of 3,000,000 shares of commong stock, par value $5 per share, is available for grants by the Compensation Committee of the board of directors of Southern ("Committee") pursuant to The Southern Company Executive Stock Plan ("Plan"). The Plan permits the Committee to grant, in its discretion, the Options & Rights to certain employees of the Southern electric system recommended by the president of Southern and approved by the Committee.

Southern has filed its proxy solicitation material and requests that the effectiveness of its declaration with respect to the solicitation of proxies for voting by its shareholders on the proposal to approve the Southern Company Executive Plan, be permitted to become effective as provided in Rule 62. Southern proposes to mail the notice of meeting, proxy statement and proxy to its shareholders for the stockholders meeting on May 25, 1988.

It appears to the Commission that Southern's declaration regarding the proposed solicitation of proxies should be permitted to become effective forthwith, pursuant to Rule 62:

It Is Ordered, that the declaration regarding the proposed solicitation of proxies be, and it hereby is, permitted to become effective forthwith, pursuant to Rule 62 and subject to the terms and conditions prescribed in Rule 24 under the Act.

For the Commission, by the Division of Investment Management, pursuant to delegated authority.

Jonathan G. Katz,

Secretary.

[FR Doc. 88-7502 Filed 4-5-88; 8:45 am]

BILLING CODE 8010-01-M

DEPARTMENT OF TRANSPORTATION

Office of the Secretary

[Order 88-4-1]

Fitness Determination of Laredo Air, Inc.; Order to Show Cause

AGENCY: Department of Transportation.

ACTION: Notice of Commuter Air Carrier Fitness Determination—Order 88-4-1, Order to Show Cause.

SUMMARY: The Department of Transportation is proposing to find Laredo Air, Inc., fit, willing, and able to provide commuter air service under section 419(c)(2) of the Federal Aviation Act.

Responses: All interested persons wishing to respond to the Department of Transportation's tentative fitness determination should file their responses with the Air Carrier Fitness Division, P-56, Department of Transportation, 400 Seventh Street SW., Room 6420, Washington, DC 20590, and serve them on all persons listed in Attachment A to the order. Responses shall be filed no later than April 8, 1988.

FOR FURTHER INFORMATION CONTACT: Ms. Carol A. Woods, Air Carrier Fitness Division (P-56, Room 6420), U.S. Department of Transportation, 400 Seventh Street SW., Washington, DC 20590, (202) 366-2340.

Dated: April 1, 1988.

Matthew V. Scocozza,

Assistant Secretary for Policy and International Affairs.

[FR Doc. 88-7545 Filed 4-5-88; 8:45 am]

BILLING CODE 4910-62-M

[Order 88-4-2]

Fitness Determination of Tri Air Freight, Inc.; Order to Show Cause

AGENCY: Department of Transportation.

ACTION: Notice of Commuter Air Carrier Fitness Determination—Order 88-4-2, Order to Show Cause.

SUMMARY: The Department of Transportation is proposing to find that Tri Air Freight, Inc., is fit, willing, and able to provide commuter air service under section 419(c)(2) of the Federal Aviation Act.

RESPONSES: All interested persons wishing to respond to the Department of transportation's tentative fitness determination should file their responses with the Air Carrier Fitness Division, Room 6420, Department of Transportation, 400 7th Street SW., Washington, DC 20590, and serve them on all persons listed in Attachment A to the order. Responses shall be filed no later than April 8, 1988.

FOR FURTHER INFORMATION CONTACT: Barbara P. Dunnigan, Air Carrier Fitness Division, Department of Transportation, 400 7th Street SW., Washington, DC 20590, (202) 366-2342.

Dated: April 1, 1988.

Matthew V. Scocozza,

Assistant Secretary for Policy and International Affairs.

[FR Doc. 88-7546 Filed 4-5-88; 8:45 am]

BILLING CODE 4910-62-M

[Order 88-4-4; Docket 45242]

Application of Westates Airlines, Inc. for Redetermination of Its Fitness, Order to Show Cause

AGENCY: Department of Transportation.

ACTION: Notice of Order to Show Cause (Order 88-44) Docket 45242.

SUMMARY: The Department of Transportation is directing all interested persons to show casue why it should not isuse an order finding that Westates Airlines, Inc., is fit and reissue it a certificate of public convenience and necessity for interstate and overseas scheduled air transportation.

DATE: Persons wishing to file objections should do so no later than April 8, 1988.

ADDRESSES: Objections and answers to objections should be filed in Docket 45242 and addressed to the Documentary Services Division (C-55, Room 4107), U.S. Department of Transportation, 400 Seventh Street SW., Washington, DC 20590 and should be served upon all parties listed in Attachment A to the order.

FOR FURTHER INFORMATION CONTACT: Ms. Kathy A. Lusby, Air Carrier Fitness Division (P-56, Room 6420), U.S. Department of Transportation, 400 Seventh Street SW., Washington, DC 20590, (202) 366-2337.

Dated: April 1, 1988.

Matthew V. Scocozza,

Assistant Secretary

[FR Doc. 88-7547 Filed 4-5-88; 8:45 am]

BILLING CODE 4910-62-M

Federal Highway Administration

Environmental Impact Statement; Worcester/Millbury, MA

AGENCY: Federal Highway Administration (FHWA), DOT.

ACTION: Supplemental notice of intent.

SUMMARY: The FHWA is issuing this notice to advise the public of a project change for an environmental impact statement that is being prepared for a proposed highway project in Worcester and Millbury, Massachusetts.

FOR FURTHER INFORMATION CONTACT: Arthur R. Churchill, District Engineer, FHWA, Transportation System Center, 10th Floor, 55 Broadway, Cambridge, Massachusetts 02142; Frank Bracaglia, Deputy Chief Engineer, Project Development, Massachusetts Department of Public Works, 10 Park Plaza, Room 4261, Boston, Massachusetts 02116.

SUPPLEMENTARY INFORMATION: The proposed project change involves a new alternative to relocate a three mile section of Route 146 starting at a point approximately 300 feet north of Route 20 and proceeds northerly to Grammont Road on a westerly alignment closer to the Blackstone River. Also included are improvements to the interchange at I-290 and Route 146 at Brosnihan Square and the addition of a travel lane in each direction on Route 20 which would extend from Granite Street in Worcester, westerly to the off-ramp for the proposed new interchange at the Massachusetts Turnpike, a distance of approximately 0.5 mile.

A scoping meeting is scheduled to be held on April 20, 1988 at 10:00 AM at the Massachusetts Department of Public Works District #3 Office, 403 Belmont Street, Worcester, Massachusetts 01604.

(Catalog of Federal Domestic Assistance Program Number 20.205 Highway Planning and Construction. The regulations implementing Executive Order 12372 regarding intergovernmental consultation on Federal Programs and activities apply to this program.)

Issued on March 30, 1988.

Arthur R. Churchill,

District Engineer.

[FR Doc. 88-7494 Filed 4-5-88; 8:45 am]

BILLING CODE 4910-22-M

UNITED STATES INFORMATION AGENCY

Grants Program for Private Not-for-Profit Organizations in Support of International Educational and Cultural Activities

The United States Information Agency (USIA) announces a program of selective assistance and limited grant support to non-profit activities of United States institutions and organizations in the Private Sector. The program is designed to increase mutual understanding between the people of the U.S. and other countries and to strengthen the ties which unite our societies. The information collection involved in this solicitation is covered by OMB Clearance Number 3116-0175, entitled "A Grants Program for Private, Non-Profit Organizations in Support of International Educational and Cultural Activities," announced in the **Federal Register** June 3, 1987.

Private sector organizations interested in working cooperatively with USIA on the following concept are encouraged to so indicate:

Higher Education in the United States: A Program for Soviet Education Officials: The Office of Private Sector Programs will assist in supporting a two/three-week study tour for eight/twelve Soviet education officials. This program will focus on the higher education and post-secondary academic options available in the U.S. and the structure of the American higher education system. The program will include travel to Washington, DC and at least one state capital. Participants will include Soviet university rectors (equivalent to American university presidents), representatives of the State Committee for Public Education of the USSR, and officials from the central and republic governments.

USIA is mot interested in working with organizations that show promise for innovative and cost-effective programming; and with organizations that have potential for obtaining private-sector funding in addition to USIA support. Organizations must have the substantive expertise and logistical capability needed to successfully develop and conduct the above project and should also demonstrate a potential for designing programs which will have a lasting impact on their participants.

Interested organizations should submit a request for complete application materials—postmaked no later than twenty days from the date of this notice—to the address listed below. The Office of Private Sector Programs will then forward a set of materials which contains proposal guidelines.

Office of Private Sector Programs, Bureau of Educational and Cultural Affairs (ATTN: Initiative Programs), United States Information Agency, 301 4th Street, SW., Washington, DC 20547.

Dated: March 24, 1988.

Robert Francis Smith,

Director, Office of Private Sector Programs.

[FR Doc. 88-7495 Filed 4-5-88; 8:45 am]

BILLING CODE 8230-01-M

BEST COPY AVAILABLE

Sunshine Act Meetings

Federal Register
Vol. 53, No. 66
Wednesday, April 6, 1988

This section of the FEDERAL REGISTER contains notices of meetings published under the "Government in the Sunshine Act" (Pub. L. 94-409) 5 U.S.C. 552b(e)(3).

LEGAL SERVICES CORPORATION

Voucher Subcommittee to the Provision for the Delivery of Legal Services Committee Amendment to the Agenda

"FEDERAL REGISTER" CITATION OF PREVIOUS ANNOUNCEMENT: 53 FR 11000.

PREVIOUSLY ANNOUNCED TIME AND DATE OF MEETING: The meeting will commence at 9:00 a.m. on Friday, April 9, 1988, and continue until the close of business.

EXPLANATION OF CHANGE: The meeting is to be held on Saturday, not Friday as stated in the previous notice.

PLACE: The International Hotel, BWI, Scott Room, Elm Road, Baltimore, Maryland 21240.

STATUS OF MEETING: Open.

MATTERS TO BE CONSIDERED:

1. Approval of Agenda
2. Approval of Minutes
   —March 24, 1988
3. Report on the History of the LSC Voucher Program
4. Report on the Current Status of Voucher Studies

Discussion and Public Comment follow each item.

CONTACT PERSON FOR MORE INFORMATION: Maureen R. Bozell, Executive Office, (202) 863-1839.

Date issued: April 4, 1988.

Maureen R. Bozell,
Secretary.

[FR Doc. 88-7029 Filed 4-4-88; 12:56 pm]

BILLING CODE 7050-01-M

NATIONAL TRANSPORTATION SAFETY BOARD

TIME AND DATE: 9:30 a.m. Tuesday, April 12, 1988.

PLACE: Board Room (812A), Eighth Floor, 800 Independence Avenue, SW., Washington, DC 20594.

STATUS: Open.

MATTERS TO BE CONSIDERED:

1. Aircraft Accident Report: Air New Orleans, Inc., British Aerospace 3101, New Orleans International Airport, Kenner, Louisiana, May 26, 1987.
2. Public Hearing: Recommendation for No Hearing re Aircraft Accident Involving a Fairchild Metroliner, Cary, North Carolina, February 19, 1988.

FOR MORE INFORMATION CONTACT: Bea Hardesty (202) 382-6525.

Bea Hardesty,
Federal Register Liaison Officer.
April 1, 1988.

[FR Doc. 88-7580 Filed 4-4-88; 9:56 am]

BILLING CODE 7533-01-M

UNIFORMED SERVICES UNIVERSITY OF THE HEALTH SCIENCES

TIME AND DATE: 7:00 p.m., April 8, 1988.

PLACE: Room 3263, Xerox Training Center, Leesburg, Virginia.

STATUS: Open—under "Government in the Sunshine Act" (5 U.S.C. 552b(e)(3)).

MATTERS TO BE CONSIDERED:

7:00 p.m.—Meeting, Board of Regents

(1) Report—Executive Secretary;
(2) Report—President, USUHS: Tri-Service Training;
(3) Comments—Members, Board of Regents;
(4) Comments—Acting Chairman, Board of Regents

New Business

SCHEDULE MEETINGS: April 11, 1988.

CONTACT PERSON FOR MORE INFORMATION: Donald L. Hagengruber, Executive Secretary of the Board of Regents, 202/295-3028.

L.M. Bynum,
Alternate OSD Federal Register Liaison Officer Department of Defense.
April 1, 1988.

[FR Doc. 88-7630 Filed 4-4-88; 2:06 pm]

BILLING CODE 3810-01-M

UNIFORMED SERVICES UNIVERSITY OF THE HEALTH SCIENCES

TIME AND DATE: 8:00 a.m., April 11, 1988.

PLACE: Uniformed Services University of the Health Sciences, Room D3-001, 4301 Jones Bridge Road, Bethesda, Maryland 20814-4799.

STATUS: Open—Under "Government in the Sunshine Act" (5 U.S.C. 552B(e)(3)).

MATTERS TO BE CONSIDERED:

8:00 a.m.—Meeting, Board of Regents

(1) Approval of Minutes—April 8, 1988;
(2) Faculty Matters;
(3) Report—Admissions;
(4) Report—Associate Dean for Operations;
(5) Report—President, USUHS;
(6) Comments—Members, Board of Regents;
(7) Comments—Chairman, Board of Regents

New Business

SCHEDULED MEETINGS: July 11, 1988.

CONTACT PERSON FOR MORE INFORMATION: Donald L. Hagengruber, Executive Secretary of the Board of Regents, 202/295-3028.

L.M. Bynum,
Alternate OSD Federal Register Liaison Officer, Department of Defense.
April 1, 1988.

[FR Doc. 88-7631 Filed 4-4-88; 2:06 pm]

BILLING CODE 3810-01-M

Corrections

Federal Register
Vol. 53, No. 66
Wednesday, April 6, 1988

This section of the FEDERAL REGISTER contains editorial corrections of previously published Presidential, Rule, Proposed Rule, and Notice documents and volumes of the Code of Federal Regulations. These corrections are prepared by the Office of the Federal Register. Agency prepared corrections are issued as signed documents and appear in the appropriate document categories elsewhere in the issue.

DEPARTMENT OF HEALTH AND HUMAN SERVICES

Food and Drug Administration

[Docket No. 88M-0020]

Weck Surgical Systems; Premarket Approval of Weck Model BL-12 Nd: YAG Ophthalmic Laser

Correction

In notice document 88-3858 beginning on page 5468 in the issue of Wednesday, February 24, 1988, make the following corrections:

On page 5469, in the first column, under **SUPPLEMENTARY INFORMATION**, in the 1st and 2nd lines, "May 21, 1987" should read "May 13, 1987". In the 9th line, "ophthalmic" was misspelled. In the 11th line, after "of" insert "the" and in the 14th line, "pseudophakic" was misspelled.

BILLING CODE 1505-01-D

DEPARTMENT OF LABOR

Mine Safety and Health Administration

30 CFR Part 75

Safety Standards for Roof, Face and Rib Support

Correction

In rule document 88-1560 beginning on page 2354 in the issue of Wednesday, January 27, 1988, make the following corrections:

§ 75.220 [Corrected]

1. On page 2376, in the third column, in § 75.220, the paragraph designation "(b)(i)" should read "(b)(1)".

§ 75.223 [Corrected]

2. On page 2380, in the second column, in § 75.223(c), in the first line, "of" should read "on".

BILLING CODE 1505-01-D

DEPARTMENT OF TRANSPORTATION

Coast Guard

33 CFR Part 110

[CGD1-87-067]

Special Anchorage Area; Keansburg, NJ

Correction

In proposed rule document 88-3189 beginning on page 4422 in the issue of Tuesday, February 16, 1988, make the following correction:

On page 4422, in the third column, in the third paragraph, in the 17th line, "74°27'14"" should read "40°27'14"".

BILLING CODE 1505-01-D

VOL
53

ISS
66

APR
6

1988

UMI

federal register

Wednesday
April 6, 1988

Part II

Department of Energy
•
Nuclear Regulatory Commission

Nuclear Waste Policy Act of 1982; Spent Fuel Storage and Disposal; Compliance with Section 223; Notice Update

DEPARTMENT OF ENERGY

NUCLEAR REGULATORY COMMISSION

Nuclear Waste Policy Act of 1982; Spent Fuel Storage and Disposal; Compliance with Section 223

AGENCIES: Department of Energy and Nuclear Regulatory Commission.

ACTION: Update of the previously published notice of offer to cooperate with and provide technical assistance to non-nuclear weapon states in the field of spent nuclear fuel storage and disposal.

SUMMARY: The Department of Energy and the Nuclear Regulatory Commission, in accordance with section 223 of the Nuclear Waste Policy Act of 1982 (Pub. L. 97-425), January 7, 1983 (the Act), published in the **Federal Register** on March 30, 1983 (48 FR 13253, corrected on April 20, 1983 by notice 48 FR 16960) and updated and reissued in the **Federal Register** on April 6, 1984 (49 FR 13858), April 5, 1985 (50 FR 13738), April 3, 1986 (51 FR 11463), and April 3, 1987 (52 FR 10792) an offer to cooperate with and provide technical assistance to non-nuclear weapon states in the field of spent nuclear fuel storage and disposal. This notice is the fifth and final update and again tenders this offer as provided by the Act. Available resources, scope, criteria, and modes of cooperation are described in this offer.

Background

Section 223 of the Act provides that "it shall be the policy of the United States to cooperate with and provide technical assistance to non-nuclear weapon states in the field of spent fuel storage and disposal."

Section 223(b)(1) of the Act required that within 90 days of enactment of the Act the Department of Energy and the Nuclear Regulatory Commission would:

> Publish a joint notice in the **Federal Register** stating that the United States is prepared to cooperate with and provide technical assistance to non-nuclear weapon states in the fields of at-reactor spent fuel storage; away-from-reactor spent fuel storage; monitored retrievable spent fuel storage; geologic disposal of spent fuel; and the health, safety, and environmental regulation of such activities. The notice shall summarize the resources that can be made available for international cooperation and assistance in these fields through existing programs of the Department and the Commission, including the availability of: (i) Data from past or ongoing research and development projects; (ii) consultations with expert Department or Commission personnel or contractors; and (iii) liaison with private business entities and organizations working in these fields.

It is the intention of the Department of Energy and the Nuclear Regulatory Commission to offer to provide cooperation and technical assistance to other nations to improve spent fuel storage conditions as deemed necessary. It is not the intention of this offer to include transfer to the United States of spent fuel from foreign nuclear power reactors.

Section 223(c) of the Act specifies:

> Following publication of the annual joint notice referred to in paragraph (2), the Secretary of State shall inform the governments of non-nuclear weapon states and, as feasible, the organizations operating nuclear power plants in such states that the United States is prepared to cooperate with and provide technical assistance to non-nuclear weapon states in the fields of spent fuel storage and disposal, as set forth in the joint notice. The Secretary of State shall also solicit expressions of interest from non-nuclear weapon state governments and non-nuclear weapons state nuclear power reactor operators concerning their participation in expanded United States cooperation and technical assistance programs in these fields. The Secretary of State shall transmit any such expressions of interest to the Department and the Commission.

Response to the Offers

This notice was first published in the **Federal Register** on March 30, 1983 and was updated and reissued in the **Federal Register** on April 6, 1984, April 5, 1985, April 3, 1986, and April 3, 1987. (To date, fifteen countries have responded to this offer.)

Discussion and Description of Proposed Cooperative Activities and Programs

For several years the United States has been cooperating with other nations as well as international organizations in areas related to spent fuel handling, storage, and geologic disposal. The Department of Energy and the Nuclear Regulatory Commission have adhered to policies of sharing the results of their studies and programs in these areas with other nations and they have sought to establish a framework to permit U.S. private organizations working in these fields to cooperate with their counterparts in the other nations. To the extent feasible, it is the intention of the Department of Energy and the Nuclear Regulatory Commission to augment their international cooperative ties in these areas. Any arrangements relative to funding of joint research and development projects will be developed on a case by case basis subject to program demands and the authorization and appropriation of funds by Congress.

In the course of developing the proposed new arrangements with other governments of foreign institutions, both the Department of Energy and the Nuclear Regulatory Commission will be guided by a number of factors and criteria, including the following:

—Whether the proposed program of arrangements will be useful in assisting a non-nuclear weapon state in overcoming significant and timely spent fuel storage or handling problems;
—Whether the arrangements will serve to advance knowledge in the field;
—Whether the arrangements will help solve common spent fuel handling problems; and
—Whether the arrangements will contribute to more predictability in fuel cycle operations.

While it is anticipated that in the near future most nations will be able to solve their spent fuel storage problems on a national basis, this is an area that could benefit from enhanced international cooperation. As noted by the Final Report of the International Atomic Energy Agency's Expert Group on International Spent Fuel Management (IAEA-ISFM/EG/26, Rev. 1, page 4, July 1982), prior to 1990 there is reasonably good assurance that adequate provision for dealing with spent fuel will exist. During the 1990's, however, the Report states that greater reliance must be placed on spent fuel management options which are now mainly in the planning stage, and further states that "By the year 2000 additional capacity remains to be identified and eventually provided. As greater reliance is placed upon planned facilities, some international cooperation could provide greater assurances that adequate means to deal with the spent fuel arisings would be provided."

Some new storage technologies now under development hold promise for achieving further economies in storage arrangements. Also, there are incentives for developing common standards and guidelines between nations relating to the conditions for shipping spent fuel. Nations can benefit from comparing information on the applicable regulatory practices and, in some cases, it may be productive for nations sharing common spent fuel storage problems to explore new institutional mechanisms designed to facilitate joint action.

The following paragraphs in this notice briefly summarize the nature of the activities of the Department of Energy and the Nuclear Regulatory Commission in these areas, as well as the cooperative activities that these

agencies would propose to explore or engage in, as circumstances warrant.

The U.S. Department of Energy

The Department of Energy is now working with U.S. industry and utilities to assure that sufficient spent fuel storage capacity will be available for meeting domestic needs. U.S. utilities operating power reactors are presently storing spent fuel in water-filled pools at their reactor sites. In the next few years, additional capacity will be needed at some sites and the gravity of this problem could increase rapidly unless additional storage capacities are made available on a timely basis. Accordingly, the Department of Energy, industry, and utilities are now actively developing alternative methods for consolidating, transporting, and storing spent light water reactor fuel in order to increase at-reactor storage capacity.

The emphasis of this domestic program is to work jointly with industry for developing and licensing alternative storage technologies. Within this context, the Department of Energy is now in the process of working with industry and utilities in developing and demonstrating spent fuel rod consolidation and dry storage equipment and technology in support of utility license applications and is participating in efforts to assure the licensability of the entire system for handling, packaging, transportation, and storage. In addition, monitored retrievable storage facilities are being evaluated as integral components of the nuclear waste management system.

With these considerations in mind and considering the criteria cited above, the Department of Energy is prepared to engage in the following kinds of cooperative activities with non-nuclear weapon states and international organizations:

—To provide information, in the form of exchanges of documents and reports, on Department of Energy funded research and development projects in the specific areas of spent fuel handling and storage; pool storage; spent fuel packaging for storage or disposal; dry storage in metal casks, drywells, vaults and concrete silos; and on the technology of away-from-reactor and monitoried retrievable storage;

—To arrange, on an appropriate basis, visits and briefings between foreign representatives and Department of Energy and contractor personnel in those areas and to facilitate, within the terms of applicable U.S. laws, regulations and policies, contacts with private U.S. business entities and organizations with specialized capabilities in these fields;

—To arrange consultations between foreign representatives and expert Department of Energy and contractor personnel to review and comment on, as appropriate, other nations' proposed development program plans and facility designs;

—To furnish, under mutually agreed terms, information on certain U.S. standards and verified computer codes that may be used for equipment, component and facility design; and

—To cooperate, as appropriate, with international organizations to disseminate information to non-nuclear weapon states.

As U.S. program demands and the authorization and appropriation of funds by Congress permit, the Department of Energy also is prepared to participate in jointly funded development and demonstration activities such as:

—The demonstration of concepts for disassembling spent fuel assemblies and for consolidating fuel rods in operating reactor pools;

—The development and demonstration of technology for packaging spent fuel for storage and disposal;

—Activities related to assessing the feasibility of away-from-reactor storage, including foreign participation in, or observation of, U.S. tests and demonstrations of equipment and technology for dry storage of spent fuels; and

—The conduct of joint studies to evaluate monitored retrievable spent fuel storage.

In addition to the management of spent fuel in retrievable modes, the Department of Energy also is conducting extensive research and development on the geologic disposal of nuclear waste, including the spent fuel option. Where there is mutual interest, information in these areas can be exchanged through:

—The transmittal of published information;

—Arrangement of visits and consultations with the Department of Energy and contractor experts on spent fuel disposal methodology;

—Program planning; and

—Systems analyses.

The research and development activities conducted under the Department of Energy geologic disposal program include:

—The detailed characterization of spent fuel as required for disposal;

—Research and systems studies on spent fuel disposal packages and containers, and their materials;

—Safety analyses; and

—Disposal repository designs, including their performance evaluations in various host rock media.

Under the cooperative activities that have been described above, the information to be provided could possibly include exchanges of documents and reports, visits with U.S. specialists, short- or long-term assignments, the undertaking of joint seminars and meetings.

The Nuclear Regulatory Commission

In regard to the issue at hand, the Nuclear Regulatory Commission is responsible for safety and environmental reviews, licensing, inspection and enforcement, and the conduct of research on the safety and environmental regulation of reactor waste in the United States, including the handling, storage, treatment, and disposal of spent reactor fuel. These responsibilities include licensing dry and wet at-reactor and away-from-reactor storage, monitored retrievable storage, and spent fuel and waste disposal (including geological disposal) at permanent repositories.

The Nuclear Regulatory Commission is prepared to cooperate with, and provide technical assistance to, non-nuclear weapon states in the areas of the health, safety, and environmental regulation of spent fuel management and disposal activities. Cooperation could include the following:

—Making available data from past and ongoing research and regulatory efforts: These data consist of evaluated and documented experimental results, validated and fully documented computer codes, and research results for which documentation and evaluation are complete. These data are primarily documented as written reports, which the Nuclear Regulatory Commission can provide in specific technical subject areas, as agreed. State-of-the-art information on ongoing safety research programs can be acquired through attendance by representatives from participating countries at the annual Water Reactor Safety Research Information Meeting and other occasional topical meetings. Additional data more directly related to regulatory activities, such as regulations, standards, and guides, can also be provided as appropriate in specific subject areas as requested;

—Consulting with expert Nuclear Regulatory Commission personnel and Nuclear Regulatory Commission contractor staff. As arranged by

specific agreement with the Nuclear Regulatory Commission, expert technical consultation can be provided by Nuclear Regulatory Commission personnel and, as needed, by contractor employees in the regulatory areas within the Commission's purview;

—Helping (to the extent permitted by U.S. laws, regulations, and policies) foreign governments to establish initial contacts with private U.S. entities that conduct business in the applicable waste management activities;

—Cooperating, as appropriate, with international organizations to disseminate information to non-nuclear weapon states; and

—Participating in joint research programs. The Nuclear Regulatory Commission is ready to negotiate and engage in jointly funded research programs, consistent with the Agency's mission, with appropriate foreign entities, subject to the authorization and appropriation of funds by the Congress.

Relationships With Multinational Organizations and International Scientific Bodies

In addition to the foregoing activities, and within the framework of such foreign policy guidance as may be provided by the U.S. Department of State, it is expected that the Nuclear Regulatory Commission and Department of Energy will continue to participate in activities related to spent fuel handling and disposal that are undertaken by international organizations, if appropriate. These organizations have sponsored a range of activities relevant to this subject, and it is recognized that some non-nuclear weapon states may wish to avail themselves of the services of these bodies as well as the cooperative programs that are available bilaterally. The Nuclear Energy Agency of the Organization for Economic Cooperation and Development, for example, has been actively involved in studies related to the disposal of nuclear wastes. Also, as mentioned above, through the efforts of an Expert Group on International Spent Fuel Management, the International Atomic Energy Agency in 1982 completed a study on the potential for international cooperation in the management of spent fuel, giving emphasis to technical, economic, institutional, and legal considerations. Several of the recommendations of the International Atomic Energy Agency Expert Group could serve as a stimulus for further cooperative initiatives. Areas that may merit further study include the establishment of nuclear safety standards recommended by the International Atomic Energy Agency for spent fuel storage and transport, and possible further studies, as the interests of the international community dictate, such as multinational or regional approaches to spent fuel management and disposal. Storage and Disposition of Research Reactor Spent Fuels.

The cooperative programs described in this announcement are addressed to the problems associated with the storage and handling of power reactor spent fuel that originates primarily in light water reactors. As such, they do not address any issues associated with the accumulation of foreign research reactor fuels.

Solicitation of Expressions of Interest from Nonnuclear Weapon States

As the next step in developing this offer of cooperation and technical assistance, non-nuclear weapon states will again be contacted through diplomatic channels to acquaint them with this proposal and to solicit expressions of interest. The Department of State will transmit any such expression of interest to the Department of Energy and the Nuclear Regultory Commission.

Requests for Information

Inquiries about this notice may be sent to the following:

Charles E. Kay, Acting Director, Office of Civilian Radioactive Waste Management, U.S. Department of Energy, Washington, DC 20585 (Tel. No. 202/586-6842)

James R. Shea, Director, Office of International Programs, U.S. Nuclear Regulatory Commission, Washington, DC 20555 (Tel. No. 301/492-0347)

Approval.

Charles E. Kay,

Acting Director, Office of Civilian Radioactive Waste Management, Department of Energy.

Dated: March 30, 1988.

Approval.

Victor Stello,

Executive Director for Operations, Nuclear Regulatory Commission.

Dated: March 17, 1988.

[FR Doc. 88-7409 Filed 4-5-88; 8:45 am]

BILLING CODE 6450-01-M

federal register

Wednesday
April 6, 1988

Part III

Department of Health and Human Services

Food and Drug Administration

21 CFR Parts 175, 176, 177, and 178
Colorants for Polymers; Tentative Final Rule

VOL 53 ISS 66 APR 6 1988 UMI

DEPARTMENT OF HEALTH AND HUMAN SERVICES

Food and Drug Administration

21 CFR Parts 175, 176, 177, and 178

[Docket No. 80N-0428]

Colorants for Polymers

AGENCY: Food and Drug Administration.

ACTION: Tentative final rule.

SUMMARY: The Food and Drug Administration (FDA) is announcing its tentative decision to revise the food additive regulations to provide for the safe use of substances used as colorants for polymers. The agency initiated this rulemaking with a proposal that it published in the **Federal Register** on June 6, 1972 (37 FR 11255). This proposal described five food additive petitions that the agency had received requesting approval of a number of colorants for use in polymers. The agency is responding to comments on the 1972 proposal and on two final rules that FDA published in the **Federal Register** on October 14, 1983 (48 FR 46773 and 48 FR 46774), that also addressed issues concerning colorants for polymers. In addition, FDA is announcing its tentative decision to transfer the listings of all regulated colorants that are used in food-contact polymers to § 178.3297 *Colorants for polymers* (21 CFR 178.3297). These listings are scattered throughout Parts 175, 176, 177, and 178 (21 CFR 175, 176, 177, and 178).

DATE: Comments by June 6, 1988.

ADDRESS: Written comments to the Dockets Management Branch (HFA-305), Food and Drug Administration, Rm. 4-62, 5600 Fishers Lane, Rockville, MD 20857.

FOR FURTHER INFORMATION CONTACT: Mary W. Lipien, Center for Food Safety and Applied Nutrition (HFF-335), Food and Drug Administration, 200 C Street SW., Washington, DC 20204, 202-472-5690.

SUPPLEMENTARY INFORMATION:

I. History of Rulemaking

The Food Additives Amendment of 1958 (Pub. L. 85-929, 72 Stat. 1784-1789), which was enacted into law on September 6, 1958, required that the safety of all food additives be established before marketing, and that FDA issue regulations specifying safe conditions of use of food additives. It also contained an interim provision for the continued use of those food ingredients that were in commercial use at the time the Food Additives Amendment was passed. This interim provision provided time for manufacturers to determine whether a particular ingredient was a food additive and, if it was, to develop information demonstrating that the use of that substance was safe. This information and other relevant data supporting the request for use of an additive were to be submitted to FDA in a food additive petition.

FDA listed in § 121.91 (deleted 31 FR 8008; June 7, 1966) of Title 21 of the Code of Federal Regulations those substances whose continued use it permitted under the interim provision. Included among the substances listed under § 121.91 *Further extensions of effective date of statute for certain specified food additives as indirect food additives*, the so-called "FAX list," were 14 colorants for use in food packaging materials: Pigment blue 15 (phthalocyanine blue), Color Index No. 74160; pigment green 7 (phthalocyanine green), Color Index No. 74260; pigment green 17 (chromium oxide green), Color Index No. 77288; pigment white 21 (barium sulfate), Color Index No. 77120; quinacridone red; pigment orange 13 (benzidine orange), Color Index No. 21110; pigment orange 23 (cadmium mercury sulfide), Color Index No. 77201; pigment red 48 (red 2B; rubine red), Color Index No. 15865; pigment red 108 (cadmium selenide), Color Index No. 77196; pigment red 113 (cadmium mercury sulfide), Color Index No. 77201; pigment yellow 12 (benzidine yellow), Color Index No. 21090; pigment yellow 14 (benzidine yellow OT), Color Index No. 21095; pigment yellow 17 (benzidine yellow), Color Index No. 21105; and pigment yellow 35 (cadmium zinc sulfide), Color Index No. 77117. The first five colorants listed were the subjects of one or more food additive petitions submitted to FDA.

When the authority for § 121.91 expired on December 31, 1965, the regulatory status of the colorants listed in this regulation was uncertain. In response to numerous inquiries, in early 1966, FDA began to issue opinion letters concerning different colorants. Generally, these opinions allowed the continued use of the colorants that had been on the FAX list and of those colorants that were the subject of food additive petitions submitted after enactment of the Food Additives Amendment.

Five petitions were filed between 1967 and 1971 and were the basis for the proposal "Colorants for Plastics" which was published in the **Federal Register** of June 6, 1972 (37 FR 11255) (corrected 37 FR 18562; September 13, 1972). The petitioners, the colorants that were the subjects of their petitions, and the dates and **Federal Register** citations for the publication of the notices of filing of these petitions are:

1. Dr. Carl Nau, Institute of Environmental Health, University of Oklahoma, Norman, OK 73104 (FAP 6R1862), for carbon black in polyethylene and ethylene alkene-1 copolymers; filed September 30, 1967 (32 FR 13734).

2. American Cyanamid Co., Wayne, NJ 07470 (FAP 8R2288), for all the pigments and colorants listed for use in § 175.300 *Resinous and polymeric coatings* (21 CFR 175.300), for use in ureaformaldehyde resins; filed June 18, 1968 (33 FR 8856).

3. Morton International, Inc., 110 North Wacker Dr., Chicago, IL 60606 (FAP OR2512), for phthalocyanine blue (pigment blue 15), phthalocyanine green (pigment green 7), titanium dioxide-barium sulfate, and carbon black (channel process), as colorants in polyethylene containers for dry food; filed May 7, 1970 (35 FR 7195).

4. Pennwalt Corp., 900 First Avenue, King of Prussia, PA 19476 (FAP OR2534), for iron oxide, carbon black (channel process), and phthalocyanine blue (pigment blue 15), as colorants in polyvinylidene fluoride resins; filed June 2, 1970 (35 FR 8506).

5. Eastman Chemical Products, Inc., Kingsport, TN 37660 (FAP IR2641), for phthalocyanine blue (pigment blue 15), phthalocyanine green (pigment green 7), chromium oxide green (pigment green 17), barium sulfate (pigment white 21), and quinacridone red (pigment violet 19) for use in polyolefin food-contact articles; filed March 17, 1971 (36 FR 5150).

After publication of the 1972 proposal, FDA received a number of comments and numerous requests for opinions on the use of the colorants listed in the proposal. In early 1973, the agency began issuing opinion letters that stated that only the colorants listed in the proposal could be used in food-contact polymers. These opinions letters differed from the agency's earlier opinions on colorants in that FDA no longer sanctioned the use of benzidine pigments, cadmium pigments, or pigment red 48 (see also comment 4).

Because of the numerous informal authorizations that resulted from the issuance of the post-1972 opinion letters, as well as the low public health concern about these substances, FDA did not take any action on the colorants proposal until 1983. FDA had, however, announced the filing, in 1980 and 1982, of two food additive petitions by the Ciba-Geigy Corp. for the use of an optical brightener in food-contact plastics. Food Additive Petition No.

6R3185 requested the use of 2,2'-(2,5-thiophenediyl)-bis(5-*tert*-butylbenzoxazole), commercially referred to as "Uvitex OB," in various polymers. The notice of filing for this petition was published on May 16, 1980 (45 FR 32433). Food Additive Petition No. 1B3550 requested the use of "Uvitex OB" in polypropylene only. The notice of filing for this petition was published on January 12, 1982 (47 FR 1332).

FDA completed its evaluation of these two petitions at approximately the same time and concluded that promulgation of one regulation approving both petitions would be appropriate. However, final action on both FAP No. 6R3185 and FAP No. 1B3550 was dependent on the establishment of a section in the food additive regulations where the colorant could be listed.

The agency therefore concluded that it would issue a final rule based upon those parts of the 1972 proposal relating to the establishment of a section in the Code of Federal Regulations for the listing of colorants and to the definition of "colorants." Thus, in the Federal Register of October 14, 1983, FDA published two final rules on colorants. One of these final rules (48 FR 46773) established 21 CFR 178.3297 *Colorants for polymers*, providing a place in the Code of Federal Regulations for the listing of colorants. In addition, to clarify terminology that would apply to these substances, FDA included a detailed definition of the term "colorants" in this regulation. The second final rule (48 FR 46774) listed the Ciba-Geigy Corp. optical brightener for use as a colorant in food-contact polymers under 21 CFR 178.3297.

Although the regulation establishing 21 CFR 178.3297 *Colorants for polymers* was a final rule, FDA solicited comments on it because of the amount of time that had passed since the 1972 proposal, and because the final rule did not address all of the issues that were raised in the 1972 proposal. The agency permitted 30 days for comment.

In the Federal Register of June 22, 1984 (49 FR 25630), the agency reopened the comment period for an additional 30 days, and in the Federal Register of August 1, 1984 (49 FR 30668), the agency extended the comment period to August 10, 1984.

II. Comments on the 1972 Proposal

In response to the 1972 proposal, FDA received eight letters containing various comments. A summary of the comments and the agency's responses follow:

1. One comment contended that it is reasonable to expect that most of the colorants proposed for use in food-contact polymeric substances will not migrate from the food-contact article to food, and that these colorants, therefore, should not be regarded as food additives as defined by section 201(s) of the Federal Food, Drug, and Cosmetic Act (the act) (21 U.S.C. 321(s)). The comment also contended that the final rule should not list such colorants, but that the rule should state that colorants that do not migrate to food may be used in food-contact articles without approval by FDA.

FDA disagrees with this comment. Section 201(s) of the act defines a food additive as "any substance the intended use of which results or may reasonably be expected to result, directly or indirectly, in its becoming a component or otherwise affecting the characteristics of any food (including any substance intended for use in producing, manufacturing, packing, processing, preparing, treating, packaging, transporting, or holding food; and including any source of radiation intended for any such use) * * *."

In *Monsanto Co.* v. *Kennedy*, 613 F. 2d 947, 955 (1979), the court pointed out that under this definition, the intended use of the substance must be reasonably expected to result in its becoming a component of food. For this element to be satisfied, the agency must determine with a fair degree of confidence that the substance, if an indirect food additive, migrates into food in more than insignificant amounts. The court said that it is not necessary that the level of migration be significant with reference to the threshold of direct detectability, so long as the substance's presence in food can be predicted on the basis of a meaningful projection from reliable data.

FDA finds that colorants used in food-contact polymers do become components of food. Existing theory and data produced by industry demonstrate that, under normal conditions of use, colorants will migrate to food from all polymers.

The migration of colorants from polymers is described by Fick's First and Second Laws of Diffusion, first enunciated in 1855 (Crank, J., "The Mathematics of Diffusion," 2d Ed., pp. 2 through 4, Oxford Press, London, 1975). The differential equations expressing these laws contain a variable called "diffusivity." The form of the differential equations derived from Fick's laws depends on such conditions as the initial colorant concentration, the time and temperature of exposure to food, the thickness of the polymer, and other properties of the polymer such as its permeability.

When applied to a particular situation to predict the migration of a colorant from a polymer, the diffusion equations derived from Fick's Second Law always predict a finite migration of the colorant to food based on initial colorant concentration in the polymer, provided that the diffusivity is not zero. Only if diffusivity is zero would no migration be likely.

Based on its review of published experimental results and of theoretical calculations based on numerous systems, FDA believes that the diffusivity of colorants in polymers will always be greater than zero, and that migration will occur whenever a colorant is present in the polymer. These published experimental results and theoretical calculations are supported by actual extraction studies with food-simulating solvents that have either been included in petitions by industry to support the use of colorants in polymers (see FAP 1R2641, above, for example) or submitted to the agency in letters that have requested opinions from FDA. These studies, demonstrating that colorants migrate to foods from polymers at low levels, have been very important to the agency in determining the safe conditions of use of the colorants.

The agency notes that this comment included no data to support its contention that there is no migration of colorants used in polymers. Therefore, based on the evidence before it, FDA concludes that colorants will become components of food, and that the extent that they will do so depends, at least in part, on the amount of colorant in the polymers. Given these facts, FDA has tentatively decided that colorants are food additives under the act (21 U.S.C. 348), and that it would not be correct to delete any colorants from the list of substances in proposed § 178.3297(e) on the ground that they do not migrate from polymeric food-contact surfaces.

2. One comment stated that there should be an opportunity for oral objection before final action on the proposal is taken.

This tentative final rule provides a 60-day comment period on the agency's tentative determinations. Thus, FDA is providing interested persons with an appropriate opportunity to comment or to submit new data. There is no requirement to provide an opportunity for oral objection before issuance of a final rule on this matter. However, any final rule that is issued in this proceeding may be the subject of objections and requests for hearing under the formal rulemaking provisions of the act (21 U.S.C. 345, 371).

3. One comment requested that the agency permit the use of oil as well as

stripped natural gas in the manufacture of carbon black. The comment claimed that some oil is used as a raw material by all carbon black manufacturers. The comment also stated that in the near future, the manufacture of carbon black from natural gas will cease.

Only carbon black that is produced by the channel process was listed in the 1972 proposal. In addition, in the **Federal Register** on August 8, 1961 (26 FR 7088), FDA listed this carbon black in §175.300 *Resinous and polymeric coatings* (21 CFR 175.300) as a colorant.

In the channel process, which is approved by the agency, natural gas is burned with the flame depositing carbon black on a cool iron surface such as channel iron. When oil or fuels other than natural gas are burned to produce a black coloring substance, the method is referred to as the "furnace" process. Furnace black colorant has not been approved by the agency. FDA has been concerned that this colorant contains relatively high levels of carcinogenic polycyclic aromatic hydrocarbons. The agency has not received any new information since 1972 that would eliminate that concern.

In response to this comment, the agency believes that a food additive petition with adequate analytical data would be required for the approval of a furnace black colorant.

4. One comment contended that benzidine yellows should be permitted as colorants in food-contact materials. The comment stated that FDA has permitted the use of benzidine yellows as colorants for food packaging, and that the U.S. Department of Agriculture (USDA) approved the use of benzidine yellows in meat wrappings.

Benzidine yellows (pigment yellow 12, Color Index No. 21090; Pigment yellow 14, Color Index No. 21095; and pigment yellow 17, Color Index No. 21105) were included on the FAX list (21 CFR 121.91) for use as colorants in food packaging materials (see History of Rulemaking in Section I). Between 1965, when authority for the FAX list expired, and 1972, when the colorants proposal was published, FDA issued numerous opinion letters allowing the continued use of these benzidine pigments and the other colorants on the FAX list for food-contact materials. However, because no acceptable food additive petitions were submitted requesting the use of these FAX list benzidine yellows, there was no basis for FDA to include these colorants in the 1972 proposal. FDA stopped issuing opinion letters allowing their use after the 1972 proposal was published, and no petitions have been received since that time for these colorants.

If there are persons interested in using these benzidine yellows, or other colorants for which FDA has not received a food additive petition, to color polymeric food-contact materials, they should submit an appropriate food additive petition to FDA.

Although USDA has approved benzidine yellows in meat wrappings in the past, current agreements between FDA and USDA (49 FR 2230) require that colorants used in meat and poultry wrappings have FDA clearance. Those persons who are using colorants that FDA has not approved for use in food contact polymers should contact Charles Edwards, Chief, Product Safety Branch, Food Ingredient Assessment Division, Science, Food Safety and Inspection Service, U.S. Department of Agriculture, Beltsville, MD 20705, for further information.

5. One comment requested that burnt Italian sienna, as well as raw sienna, be listed as colorants.

FDA concludes that it is appropriate to list both colorants in this tentative final rule. Raw sienna, which was included in the list of colorants in the June 6, 1972, proposal, is a yellowish clay colored by oxides of iron and manganese. It is found within the United States in Alabama, California, and Pennsylvania and in Cyprus and Italy. Burnt sienna is an orange-brown pigment made by calcining raw sienna. A review of the data on the calcining process submitted to FDA demonstrates that there is little difference between the two types of sienna. FDA, therefore, has revised the list of colorants to include both of these substances.

6. Several comments objected to the proposed maximum extraction limits for chromium oxide green (0.1 part per million (ppm)), phthalocyanine green (0.03 ppm), and quinacridone red (0.006 ppm). The comments claimed that the extraction limits are not necessary to assure the safe use of these colorants in food-contact polymeric substances.

The agency agrees with these comments. Generally, the agency does not place extraction limits on the use of indirect food additives unless such limits are necessary to assure the safety of the use of the substance. In this case, however, review of the data on these three colorants, particularly the data in Eastman Chemical Co.'s food additive petition, FAP 1R2641, reveals that the maximum limits of extraction included in the 1972 proposal were based upon estimates of migration into food and the results of preliminary extraction studies. These estimates and extraction studies provided useful information on the potential migration of the colorants into food; however, the extraction limits specified in the 1972 proposal are not necessary to assure the safe use of the colorants. Therefore, in this tentative final rule, FDA is removing the extraction limits that were in the 1972 proposal for these colorants.

7. Several comments requested that FDA approve for general use in all polymers those colorants that the agency proposed to limit to use in specific polymers. The colorants covered by this request are chromium oxide green, cobalt oxide-aluminum oxide (now cobalt aluminate (see Section IV of the preamble)), phthalocyanine green, quinacridone red, zinc carbonate, and zinc oxide.

FDA notes that, in the 1972 proposal, it proposed to restrict zinc carbonate, zinc oxide, and cobalt oxide-aluminum oxide to use in five different polymers, and that it proposed to restrict the remaining three colorants to use in olefin polymers. The agency has reviewed the available data in deciding whether to grant the comment's request.

In its review, FDA noted that migration data reported in Eastman Chemical Co.'s FAP 1R2641 for phthalocyanine green, chromium oxide green, and quinacridone red were obtained from low density polyethylene (LDPE) extractions, in which the colorants were incorporated into the polymer at an exaggerated level of three weight percent. FDA considers extraction data from migration testing with LDPE to represent a "worst-case" condition for all polymer types, and, therefore, FDA has determined that for purposes of evaluating exposure and safety, extractions from LDPE represent a worst-case migration rate for all polymers (Ref. 1). Data from agency files have shown that migration from other types of food-contact polymers would be lower and would not alter this safety assessment. The agency thus believes that removal of the proposed restrictions, as requested by the comment for these colorants, would not result in migration levels higher than those for LDPE, which levels FDA considers to be safe.

Zinc carbonate, zinc oxide, and cobalt oxide-aluminum oxide, which were listed in the 1972 proposal, are already approved for use without limitations in polyolefins of the type discussed above by virtue of their listing as components of resinous and polymeric coatings complying with § 175.300. The agency finds that the approval of the use of these colorants in other polymers would not result in migration levels higher than those already considered safe (Ref. 1).

Although FDA finds that available safety data support the requested

broader uses for these six colorants, the agency does not have the data needed to assess the environmental impact of the expanded use of each of these colorants. In the absence of this environmental data, FDA is precluded from removing the use restrictions that it included in the 1972 proposal. The agency is therefore requesting, as comments on this tentative final rule, the information necessary to address the environmental effects of the proposed broader uses. The information required is described later in this document under the section entitled, "Environmental Impact." Therefore, FDA has not modified the codified language in this tentative final rule to reflect the changes that were requested by this comment. However, FDA will adopt the requested broader uses if the environmental data support such uses.

III. Comments on the 1983 Final Rules Establishing 21 CFR 178.3297 and Regulating an Optical Brightener

The agency received nine comments on the October 14, 1983 (48 FR 46773 and 48 FR 46774), final rules establishing § 178.3297 *Colorants for polymers* (21 CFR 178.3297), and listing a new optical brightener under § 178.3297. A summary of these comments and the agency's responses follow:

8. One comment expressed concern that only one optical brightener was listed in new § 178.3297 and pointed out that there were other such compounds that should be transferred to new § 178.3297 from other food additive regulations. The comment stated that persons reading the new section will misunderstand the fact that only one optical brightener is listed and conclude that that optical brightener is the only colorant authorized for use in polymers. The comment consequently urged FDA to make certain editorial changes in the regulations.

FDA finds that although only one optical brightener was listed in § 178.3297, the preamble to the October 14, 1983 (48 FR 46773), final rule made clear that the agency intended to transfer to § 178.3297 all currently listed colorants, including optical brighteners. The agency's intention to make these editorial transfers was also stated in the 1972 proposal. FDA is proposing to make these transfers in this tentative final rule.

9. Two comments questioned the definition of the term "colorant" set forth in the October 14, 1983 (48 FR 46773), final rule. The comments noted that FDA has used the term "colorant" to include materials that are actually dyes or pigments. One of the comments included technical definitions for the terms "dye" and "pigment" and stated that dyes, pigments, and colorants should be distinguished in the regulations.

FDA recognizes that it has used a number of terms including "dye" and "pigment" when it has regulated substances for use in imparting color to food-contact materials. FDA did not intend to limit the definition of "colorant" in § 178.3297 to include just a dye or a pigment. The agency is including in this definition any "* * * substance that is used to impart color to, or to alter the color of, a food-contact material."

The agency finds that both dyes and pigments impart color, and because they both have this effect, they both can be considered colorants. The agency additionally finds that there is no need to specify whether a particular colorant is a dye, pigment, or some other type of substance. Section 178.3297 includes any substance that imparts or alters the color of a food-contact material.

The agency concludes that the definition of "colorant" requires no distinction between the types of substances that could be colorants, and that an attempt to make a distinction in § 178.3297 would be cumbersome and would serve no particular purpose. Therefore, the agency has not included definitions for other terms in this tentative final rule and has retained the definition for "colorant" that it included in the 1983 final rule.

10. One comment generally supported FDA's efforts to approve the use of colorants in polymers and suggested that all of the colorants listed in the 1972 proposal be approved for use in pulp and paperboard products. The comment suggested that this expanded use was logical because pulp and paperboard products are made from cellulose fibers, which consist of a linear polymer of repeating β-D-glucopyranose units.

FDA finds that the intent of the 1972 proposal was to list colorants for use in resinous polymeric substances and not for use in paper and paperboard products. Because the physical properties of pulp and paperboard products are significantly different from resinous polymers, the use of these colorants in, and their migration from, paper and paperboard are expected to be significantly different from their use in, and migration from, resinous polymers. Consequently, the agency would need specific data on the use of colorants in paper and paperboard before it can approve such use. At the present time, safety and extraction data are inadequate, or not available, to support such use of all of the colorants listed in the 1972 proposal. Therefore, a food additive petition must be submitted to support the requested expanded use of these colorants in paper and paperboard products.

11. One comment from an organization objected to both of the final rules but did not request a hearing. The comment stated that the final rule establishing § 178.3297 (48 FR 46773) did not make clear whether the colorant listed in this regulation contained a carcinogen, or what actions, if any, FDA had taken with respect to this colorant if the colorant did contain such a chemical, knowing that there is a prohibition in the Delaney clause against approving carcinogenci food additives. The comment requested that FDA clarify this matter, and that the agency stay the regulation until the organization that submitted the comment was given an opportunity to comment further on the agency's response.

The organization also objected to the regulation listing 2,2'-(2,5-thiophenediyl)bis(5-*tert*-butylbenzoxazole) as an optical brightener (48 FR 46774) because the regulation did not discuss the health effects of use of this colorant. The comment stated that other optical brighteners have been shown to be photocarcinogenic (Ref. 2) and have shown evidence of mutagenicity (Ref. 3). The comment requested that FDA supply a copy of the studies that support that the use of 2,2'-(2,5-thiophenediyl)bis(5-*tert*-butylbenzoxazole) is safe and stay the regulation for this colorant until the organization submitted supplemental comments on the studies.

On March 5, 1984, FDA sent the organization the requested copy of the safety studies on 2,2'-(2,5-thiophenediyl)bis(5-*tert*-butylbenzoxazole). The agency explained in a letter to this organization, dated June 15, 1984, that FDA would permit the organization to submit supplementary objections on the regulated uses of this optical brightener and would render a final decision after the agency had received and reviewed those supplementary objections. FDA also explained that it does not routinely discuss in its final rules details of the safety and functionality studies that are submitted by petitioners and evaluated by the agency. The agency pointed out, however, that as stated in the final rule on 2,2'-(2,5-thiophenediyl)bis(5-*tert*-butylbenzoxazole), these materials are publicly available.

The agency also explained that FDA believes that its final rule establishing § 178.3297 (48 FR 46773), and the final

rule listing the use of 2,2'-(2,5-thiophenediyl)bis(5-*tert*-butylbenzoxazole) as a colorant for polymers (48 FR 46774), made clear that colorants are indirect food additives subject to the provisions of section 409 of the act (21 U.S.C. 348), including the Delaney clause (21 U.S.C. 348(c)(3)(A)). FDA informed the organization that the agency makes its determination about the types of toxicology studies that are necessary to demonstrate that the use of a colorant is safe, as it does for other food additives, on the basis of the chemical structure of the substance and the level of human exposure to it.

The agency assured the organization that if the possibility exists that a colorant contains a carcinogenic chemical as an impurity, FDA will conduct a risk assessment as part of its safety evaluation and will include a discussion of the risk assessment in the preamble to the final regulation on the use of that substance. The agency also informed the organization that it would reopen the comment period for 30 days to receive any comments on the agency's regulation establishing § 178.3297.

FDA did not receive any additional comments from this organization during the reopened comment periods announced on June 22, 1984 (49 FR 25630) and on August 1, 1984 (49 FR 30689). The organization also did not submit any supplementary objections on the agency's regulation listing 2,2'-(2,5-thiophenediyl)bis(5-*tert*-butylbenzoxazole) as a colorant for certain polymers (48 FR 46774) or any comments on the June 15, 1984, letter. FDA, therefore, contacted this organization regarding whether it intended to submit any additional objections to the agency. The organization replied that it had not prepared any additional objections, and that it did not intend to submit any further comments or objections on the regulation. Because of this reply, the agency finds that the original concerns of the organization are moot.

FDA has, however, reviewed the two studies reported by the organization.

The agency finds that the photocarcinogenicity study cited in the organization's objection did not test 2,2'-(2,5-thiophenediyl)bis(5-*tert*-butylbenzoxazole) but tested other optical brighteners under conditions that produced a carcinogenic response only when mice were exposed to both the optical brightener dissolved in dimethyl sulfoxide solvent and high-energy ultraviolet light (217 to 270 nanometer wavelength) for 6 hours daily. The authors of the study acknowledged that the ultraviolet light and dimethyl sulfoxide solvent, without the optical brighteners, produced a tumorigenic effect on the skin of mice. Because of this effect, FDA finds that this study was not adequately designed to test the toxicity of the optical brightener, and that no evaluation of the safety of the optical brightener in question can be made on the basis of this study because the optical brightener was never actually tested.

The agency finds that the mutagenicity study referenced in the organization's objection (Ref. 3) concerning 2,2'-(2,5-thiophenediyl)bis(5-*tert*-butylbenzoxazole) did not test this substance. The study involved optical brighteners of similar structure to the compound in question but not that specific compound. Although the study indicates that petite mutants are produced in yeast by the substances tested, such a finding is not conclusive. It would be necessary to perform a battery of mutagenic studies on the substances tested before a conclusion could be drawn that they are mutagenic. Therefore, the agency concludes that no relevant conclusions can be drawn regarding this colorant from this study. FDA has also reexamined the results of an acute oral toxicity study submitted by the petitioner in support of the safety of the optical brightener. Based on this review, FDA concludes that, at the low level of exposure to the substance that results from its use as an optical brightener, this study supplies sufficient safety data to support its listing under the conditions of use set forth in the regulation.

12. Two comments stated that substitution of the word "polymers" for "plastics" in the October 14, 1983 (48 FR 46773), final rule establishing § 178.3297 was not appropriate. The comments stated that the term "polymer"; usually means a macro-molecular substance, whereas food-contact articles are not composed of polymers alone but of polymers plus stabilizers, lubricants, plasticizers, and other materials. The comments argued that these food-contact products are more accurately referred to as "plastics."

FDA disagrees with these comments. The agency stated in the 1983 final rule that the term "polymers" was used in the title "Colorants for polymers" because it is scientifically more precise than the term "plastics." The most common definition for the word "plastic" means capable of being molded or modeled. As applied to organic synthesis it is a shortened version of the term "thermoplastic," which refers to a type of material that, as a finished article, can be softened by an increase of temperature and hardened by a decrease of temperature. The term "polymer" is more precise in that it refers to a specific material that results from a polymerization reaction and that, in final form, cannot be substantially changed.

The agency finds that the listing of colorants in a section entitled "Colorants for polymers" is consistent with the current listing in the Code of Federal Regulations of food additives under part 177 "Indirect Food Additives: Polymers" (21 CFR Part 177).

Additionally, the agency finds that the term "polymer" is consistent with the original intent of the 1972 proposal to list colorants for use in specified food-contact polymers. Although the 1972 proposal used the term "plastic," careful scrutiny of the limitations in the proposal clearly demonstrates that the agency intended to allow the use of colorants in specific polymers. The limitations in the proposal provide adequate examples of polymers as the appropriate vehicles to contain a colorant. The agency, therefore, has decided to retain the word "polymer" in the title of § 178.3297.

13. One comment observed that in the 1972 proposal, color additives listed for direct use in food were proposed for use as colorants in polymers. The comment urged FDA to include all color additives that are listed for use in ingested drugs and cosmetics, and the lakes of these color additives, as colorants for polymers. The comment stated that available data supporting the safe use of ingested D&C color additives should also be adequate to support their safe use as colorants for polymers in contact with food.

The agency agrees with this comment. The agency finds that there will be no significant increase in human exposure from use of permanently listed color additives that are currently used in ingested drugs and ingested cosmetics if these color additives are also used as colorants in polymers that contact food. Additionally, the toxicological and other data that have been submitted to support the safety of the use of permanently listed color additives in foods, ingested drugs, and ingested cosmetics are considerably more extensive than the data required to support the safety of the use of colorants in food-contact polymers. However, FDA does not have the data needed to assess the environmental impact of the expanded use of ingested D&C color additives and their lakes for use as colorants in polymers. In the absence of this environmental data, the agency is precluded from including these color additives in this tentative final rule. The

agency is therefore requesting, as comments on this tentative final rule, the information necessary to address this deficiency in the final rule. The information required is described later in this document under the section entitled, "Environmental Impact."

14. One comment stated that the definition of "colorant" in new § 178.3297 is misleading because it includes substances that are not colored, such as optical brighteners.

The agency agrees that optical brighteners and fluorescent whiteners may not themselves be colored, and that they may not directly impart color to food-contact materials. However, as defined in § 178.3297, the term "colorant" includes substances that alter or otherwise affect the color of food-contact materials. This definition includes optical brighteners and fluorescent whiteners because they affect the color of food-contact materials. The agency, therefore, does not agree that the definition of "colorant" is misleading or ambiguous in this respect. For this reason, FDA has not made any change in § 178.3297 in response to this comment.

15. One comment requested that the substance ultramarine violet be added to the list of colorants. The comment claimed that ultramarine violet is simply a very red shade of ultramarine blue, and that it is no different in chemical structure, formula, and stability than ultramarine blue. The comment referred to FDA opinion letters that offered no object to the use of ultramarine violet as a colorant in polymers.

The agency agrees with this comment. Ultramarine blue is listed as a colorant for food-contract materials in 21 CFR 178.3970. However, the color additive regulation for ultramarines in 21 CFR 73.2725 makes clear that ultramarines vary in color (blue, green, pink, red, and violet) depending upon the amount of kaolin, sulfur, sodium carbonate, silicaceous matter, sodium sulfate, and carbonaceous matter included in a calcined mixture of some or all of these substances. The regulation also makes clear that ultramarines are stable complexes of sodium aluminum sulfosilicates, having a typical formula of Na(A1SiO)S, and that the predominant color is dependent upon the proportion of each element in the formula.

Because of these chemical similarities, FDA has tentatively concluded that ultramarine violet may be safely used as an alternative to ultramarine blue as a colorant for polymers. The agency also tentatively concludes that because of these chemical similarities, and because there is no toxicological concern about the use of any of the different ultramarine shades as colorants in polymers, all ultramarine colors can be listed for this use. The agency is, therefore, including all shades of ultramarine under the colorant listing of ultramarines in this tentative final rule.

IV. Scope of the Tentative Final Rule

In this section, FDA is setting forth the changes that it intends to make in the food additive regulations to provide a comprehensive listing under § 178.3297 of colorants allowed for use in food-contact polymers.

FDA is proposing to list in one regulation all of the colorants permitted for use in food-contact polymers. This tentative final rule also proposes to permit the use of those color additives and their lakes that are permanently listed for direct addition to food. Because this broad approval includes a large number of color additives, FDA is not listing each of them under 21 CFR 178.3297 but is including their use by a general cross-reference in paragraph (d).

FDA currently designates the pigments and colorants allowed for use in paper and paperboard in § 176.170 *Components of paper and paperboard in contact with aqueous and fatty foods* (21 CFR 176.170) by means of a cross-reference in § 176.170(b)(1) to 21 CFR 175.300(b)(3)(xxvi). Because FDA is proposing to remove the list of colorants from § 175.300(b)(3)(xxvi) and replace it with a general reference to § 178.3297, this cross-reference is no longer appropriate. Therefore, FDA is proposing to individually list under 21 CFR 176.170(b)(2) those colorants that are approved for use in food contact paper and paperboard.

FDA is also proposing to modify the name of the substance listed as "cobalt oxide-aluminum oxide" in the 1972 proposal. The agency finds that the term "cobalt aluminate" is a more appropriate name. This colorant is a calcination product of cobalt oxide and aluminum oxide and not a mixture of cobalt oxide and aluminum oxide, as the term used in the 1972 proposal suggests.

In addition, FDA is making a number of editorial changes to its regulations in this tentative final rule:

(1) Instead of listing specific colorants, FDA is including a cross reference to § 178.3297 in paragraph (b)(3)(xxvi) of § 175.300 *Resinous and polymeric coatings;* § 177.1350 *Ethylene-vinyl acetate copolymers;* § 177.1460 *Melamine-formaldehyde resins in molded articles;* § 177.1520 *Olefin polymers;* § 177.1680 *Polyurethane resins;* § 177.2260 *Filters, resin-bonded;* § 177.2600 *Rubber articles intended for repeated use;* and § 177.2800 *Textiles and textile fibers;*

(2) Paragraph (c) of § 178.3297 *Colorants for polymers* is being revised to reflect a change in the mailing address of FDA's Division of Food and Color Additives.

In the table below, FDA is listing the colorants that the agency is proposing to include in § 3279. In the "Sources" column, FDA sets forth the basis for including the substance in this regulation. If the agency is including a substance in § 178.3297 because that substance is already approved for use in polymers, FDA is setting forth the current listing of the substance. If the agency is including the substance in response to the 1972 proposal, that fact is reflected in the "Sources" column. The "Comments" column identifies the permissible uses of the substance and identifies any changes the agency is proposing to make in Parts 175, 177, and 178 in the food additive regulations as a result of this action.

SUBSTANCES TENTATIVELY TO BE LISTED UNDER § 178.3297 COLORANTS FOR POLYMERS

Substances	Sources	Comments
1. Aluminum	1972 Proposal, § 175.300(b)(3)(xxvi)	Permitted for use in all polymers without limitations.
2. Aluminum hydrate	do	Do.
3. Aluminum and potassium silicate (mica)	do	Do.
4. Aluminum mono-, di-, and tristearate	do	Do.
5. Aluminum silicate (China clay)	do	Do.
6. Barium sulfate	do	Do.
7. Bentonite	do	Do.
8. Bentonite, modified with dimethyldioctadecyl-ammonium ion.	do	Do.

SUBSTANCES TENTATIVELY TO BE LISTED UNDER § 178.3297 COLORANTS FOR POLYMERS—Continued

Substances	Sources	Comments
9. 4,4'-Bis(4-aniline-6-diethanolamine-s-(triazin-2-ylamino)-2,2'-stilbene-disulfonic acid, disodium salt.	§ 177.2600(d)(5)	Permitted for use only as described in source regulation which is transferred to § 178.3297.
10. Burnt umber	1972 Proposal, § 175.300(b)(3)(xxvi)	Permitted for use in all polymers without limitations.
11. Calcium carbonate	do	Do.
12. Calcium silicate	do	Do.
13. Calcium sulfate	do	Do.
14. Carbon black (channel process, prepared by the impingement process from stripped natural gas).	do	Permitted for use in all polymers without limitations. Use of carbon black is limited to the channel-process type. See comment No. 3.
15. Chromium oxide green, Cr_2O_3 (C.I. pigment green 17, C.I. No. 77288).	1972 Proposal, § 177.2600(c)(4)(vi)	Permitted for use in polymers with limitations included in the 1972 proposal. Environmental data requested for use in additional polymers. See comments' Nos. 6 and 7. The agency notes that the chrome oxide listing in § 177.2600 actually refers to chromium oxide green.
16. Cobalt aluminate	1972 Proposal, § 175.300(b)(3)(xxvi)	Permitted for use in polymers with limitations included in the 1972 proposal. Environmental data requested for use in additional polymers. See comment No. 7. Nomenclature revised for accuracy. See Section IV.
17. Diatomaceous earth	do	Permitted for use in all polymers without limitations.
18. Iron oxides	1972 Proposal, § 175.300(b)(3)(xxvi), and § 177.2600(c)(4)(vi).	Do.
19. Magnesium oxide	1972 Proposal, § 175.300(b)(3)(xxvi)	Do.
20. Magnesium silicate (talc)	do	Do.
21. 7-(2*H*-Naphtho[1,2*d*]triazol-2-yl)-3-phenylcoumarin (CAS Reg. No. 3333-62-8) having a melting point of 250 to 251 °C and a nitrogen content of 10.7 to 11.2 percent.	§ 177.1520(b) and § 177.2600(d)(5)	Permitted for use only as described in source regulations which are transferred to § 178.3297.
22. Phthalocyanine blue (C.I. pigment blue 15, C.I. No. 74160).	1972 Proposal, § 175.300(b)(3)(xxvi), § 177.2260(d)(5), § 177.2600(c)(4)(vi).	Permitted for use in all polymers without limitations.
23. Phthalocyanine green (C.I. pigment green 7, C.I. No. 74260).	1972 Proposal, § 177.2600(c)(4)(vi)	Permitted for use in polymers with limitations included in the 1972 proposal. Environmental data requested for use in additional polymers. See comments' Nos. 6 and 7. The agency notes that the "phthalocyanine" listing in § 177.2600 actually refers to phthalocyanine green. green.
24. Pigment red 38 (C.I. No. 21120)	§ 177.2600(c)(4)(vi)	Permitted for use only as described in source regulation which is transferred to § 178.3297.
25. Quinacridone red (C.I. pigment violet 19, C.I. No. 46500).	1972 Proposal	Permitted for use in polymers with limitations included in the 1972 proposal. Environmental data requested for use in additional polymers. See comments' Nos. 6 and 7.
26. Sienna (raw and burnt)	1972 Proposal, § 175.300(b)(3)(xxvi)	Permitted for use in all polymers without limitations. See comment No. 5.
27. Silica	do	Permitted for use in all polymers without limitations.
28. Tartrazine lake (certified FD&C Yellow No. 5 only).	§ 175.300(b)(3)(xxvi)	Permitted for use only as described in source regulation which is transferred to § 178.3297.
29. Titanium dioxide	1972 Proposal, § 175.300(b)(3)(xxvi) and § 177.2600(c)(4)(vi).	Do.
30. Titanium dioxide-barium sulfate	1972 Proposal, § 175.300(b)(3)(xxvi)	Do.
31. Titanium dioxide-magnesium silicate	do	Do.
32. Ultramarines (pink, red, blue green, violet).	1972 Proposal, § 178.3970	Permitted for use in all polymers without limitations. See comment No. 15. Nomenclature revised for accuracy. Section 178.3970 is removed from the food additive regulations and transferred to § 178.3297.
33. Zinc carbonate	1972 Proposal, § 175.300(b)(3)(xxvi)	Permitted for use in polymers with limitations included in the 1972 proposal. Environmental data requested for use in other polymers. See comment No. 7.
34. Zinc chromate	§ 177.2600(c)(4)(vi)	Permitted for use only as described in source regulation which is transferred to § 178.3297
35. Zinc oxide	1972 Proposal, § 175.300(b)(3)(xxvi)	Permitted for use in polymers with limitations included in the 1972 proposal. Environmental data requested for use in other polymers. See comment No. 7.

Environmental Impact

The food additive petitions on which the 1972 proposal was based did not include a consideration of the environmental impact because those petitions were submitted before there was any requirement to consider the environmental impact of a final rule. However, before FDA can take final action on the petitions that are the subject of this tentative final rule, FDA must meet its obligations under the National Environmental Policy Act.

Even before the 1972 proposal was published, FDA had issued many opinion letters stating that the colorants listed in the proposed rule, including color additives listed for direct use in food, could be used in food-contact polymers. Since FDA has permitted these color additives to be used in polymers for a long period of time, the agency expects that its action to include them in this tentative final rule will not affect the market volume or use level of the colorants. Based on this finding, the agency has determined under 21 CFR 25.24(a)(9) that its action, to include in the tentative final rule those colorants listed in the 1972 proposal, is of a type that does not individually or cumulatively have a significant effect on the human environment. Therefore, neither an environmental assessment nor an environmental impact statement is required.

Several comments submitted on the 1972 proposed rule requested that FDA approve for general use in all polymers those colorants that the agency proposed to limit to use in specific

VOL 53 ISS 66 AP 6 1988 UMI

polymers. The colorants included in this request are chromium oxide green, cobalt oxide-aluminum oxide (now colbalt aluminate (see Section IV of the preamble)), phthalocyanine green, quinacridone red, zinc carbonate, and zinc oxide. In addition, one comment requested that FDA include all color additives that are listed for use in ingested drugs and cosmetics, and the lakes of these color additives, as colorants for polymers.

FDA does not have the data needed to assess the environmental impact of the expanded use of these colorants and color additives. To address this deficiency and to permit the agency to include these expanded uses in the final rule, interested persons must submit the data for each colorant of interest in an environmental assessment. Based on the assumption that the colorants would be present in the finished food packaging material at not greater than 5 percent by weight, these environmental data may be submitted in the abbreviated environmental assessment format specified in 21 CFR 25.31a(b)(1) within the comment period. The agency also encourages interested persons to obtain further guidance on the submission of the required environmental data by contacting the agency contact person (address above).

Economic Impact

FDA, in accordance with the Regulatory Flexibility Act, has considered the effect that this regulation would have on small entities, including small businesses, and has determined that the effect of this regulation is to maintain current known uses of colorants for polymers. This action merely formalizes the approvals FDA has been providing in informal advisory opinion letters during the past 25 years. Therefore, FDA certifies in accordance with section 605(b) of the Regulator Flexibility Act that no significant economic impact on a substantial number of small entities will derive from this action.

The agency's findings of no major economic impact and of no significant impact on a substantial number of small entities, and the evidence supporting these findings, are contained in the threshold assessment which may be seen in the Dockets Management Branch (address above).

References

The following references have been placed on display in the Dockets Management Branch (address above) and may be reviewed in that office between 9 a.m. and 4 p.m., Monday through Friday.

1. Memorandum for the Record, dated January 28, 1988, entitled "Colorants for polymers: extraction testing," by Gregory Cramer, Division of Food Chemistry and Technology.

2. Bingham, E., and H. L. Falk, "Combined Action of Optical Brighteners and Ultraviolet Light in the Production of Tumors," *Food and Cosmetics Toxicology*, 8:173, 1970.

3. Gilberg, B. O., and J. Aman, "Petite Mutants Induced in Yeast by Optical Brighteners," *Mutation Research*, 13:149, 1971.

Comments

Interested persons may, on or before June 6, 1988, submit to the Dockets Management Branch (address above) written comments regarding this tentative final rule. Two copies of any comments are to be submitted, except that individuals may submit one copy. Comments are to be identified with the docket number found in brackets in the heading of this document. Received comments may be seen in the office above between 9 a.m. and 4 p.m., Monday through Friday.

List of Subjects

21 CFR Part 175

Adhesives, Food additives, Food packaging.

21 CFR Part 176

Food additives, Food packaging.

21 CFR Part 177

Food additives, Food packaging.

21 CFR Part 178

Food additives, Food packaging, Sanitizing solutions.

Therefore, under the Federal Food, Drug, and Cosmetic Act and under authority delegated to the Commissioner of Food and Drugs, it is proposed that Parts 175, 176, 177, and 178 be amended as follows:

PART 175—INDIRECT FOOD ADDITIVES: ADHESIVES AND COMPONENTS OF COATINGS

1. The authority citation for 21 CFR Part 175 continues to read as follows:

Authority: Secs. 201(s), 409, 72 Stat. 1784–1788 as amended (21 U.S.C. 321(s), 348); 21 CFR 5.10 and 5.61.

2. Section 175.300 is amended by revising paragraph (b)(3)(xxvi) to read as follows:

§ 175.300 Resinous and polymeric coatings.

* * * * *

(b) * * *

(3) * * *

(xxvi) Colorants complying with § 178.3297 of this chapter.

* * * * *

PART 176—INDIRECT FOOD ADDITIVES: PAPER AND PAPERBOARD COMPONENTS

3. The authority citation for 21 CFR Part 176 continues to read as follows:

Authority: Secs. 201(s), 409, 72 Stat. 1784–1788 as amended (21 U.S.C. 321(s), 348); 21 CFR 5.10 and 5.61.

4. Section 176.170 is amended in paragraph (b)(1) by adding "(xxvi)" after "(xx)" and in paragraph (b)(2) by alphabetically inserting 27 items in the table under the heading "List of substances" with their corresponding entries under the heading "Limitations" to read as follows:

§ 176.170 Components of paper and paperboard in contact with aqueous and fatty foods.

* * * * *

(b) * * *

(2) * * *

List of substances	Limitations
* * *	* *
Aluminum	For use as a colorant only.
Aluminum hydrate	Do.
Aluminum and potassium silicate (mica).	Do.
Aluminum mono-, di-, tristearate.	Do.
Aluminum silicate (China clay).	Do.
Barium sulfate	Do.
Bentonite	Do.
Bentonite, modified with dimethyldioctadecyl-ammonium ion.	Do.
* * *	* *
Burnt umber	For use as a colorant only.
* * *	* *
Calcium carbonate	For use as a colorant only.
Calcium silicate	Do.
Calcium sulfate	Do.
* * *	* *
Carbon black (channel process).	For use as a colorant only.
* * *	* *
Cobalt aluminate	For use as a colorant only.
* * *	* *
Diatomaceous earth	For use as a colorant only.
* * *	* *
Iron oxides	For use as a colorant only.
* * *	* *
Magnesium oxide	For use as a colorant only.
Magnesium silicate (talc)	Do.
* * *	* *
Phthalocyanine blue (C.I. pigment blue 15, C.I. No. 74160).	For use as a colorant only.
* * *	* *
Raw sienna	For use as a colorant only.

List of substances	Limitations
Silica	Do.
* * *	* * *
Tartrazine lake (certified FD&C Yellow No. 5 only).	For use as a colorant only.
* * *	* * *
Titanium dioxide	For use as a colorant only.
Titanium dioxide-barium sulfate.	Do.
Titanium dioxide-magnesium silicate.	Do.
* * *	* * *
Zinc carbonate	For use as a colorant only.
Zinc oxide	Do.

* * * * *

PART 177—INDIRECT FOOD ADDITIVES: POLYMERS

5. The authority citation for 21 CFR Part 177 continues to read as follows:

Authority: Secs. 201(s), 409, 72 Stat. 1784–1788 as amended (21 U.S.C. 321(s), 348); 21 CFR 5.10 and 5.61.

6. Section 177.1350 is revised in paragraph (a)(3) to read as follows:

§ 177.1350 Ethylene-vinyl acetate copolymers.

* * * * *

(a) * * *

(3) Substance identified in § 175.300(b)(3)(xxv), (xxvii), (xxx), and (xxxiii), and colorants complying with § 178.3297 of this chapter.

* * * * *

7. Section 177.1460 is amended in paragraph (b) by removing the table entry "Pigments and colorants identified in § 175.300(b)(3)(xxvi) of this chapter." under the heading "List of substances" and by alphabetically adding a new table entry to read as follows:

§ 177.1460 Melamine-formaldehyde resins in molded articles.

* * * * *

(b) * * *

List of substances	Limitations
Colorants complying with § 178.3297 of this chapter.	
* * *	* * *

* * * * *

8. Section 177.1520 is amended in the table in paragraph (b) by removing the entry "7-(2*H*-Napththo[1,2-*d*]triazol-2-yl)-3-phenylcoumarin (Chemical Abstracts Service Registry No. 3333–62–8) having a melting point of 250 ° to 251 °C and a nitrogen content of 10.7 to 11.2 percent." under the heading "Substance," and the corresponding entry under the heading "Limitations," and by alphabetically adding a new item to read as follows:

§ 177.1520 Olefin polymers.

* * * * *

(b) * * *

Substance	Limitations
Colorants complying with § 178.3297 of this chapter	
* * *	* * *

* * * * *

9. Section 177.1680 is amended in the table in paragraph (b) by removing the items "Phthalocyanine blue (C.I. pigment blue 15, C.I. No. 74160)" and "Ultramarine blue" under the heading "List of Substances," and their corresponding entries under the heading "Limitations," and by alphabetically adding a new table item to read as follows:

§ 177.1680 Polyurethane resins.

* * * * *

(b) * * *

List of substances	Limitations
* * *	* * *
Colorants complying with § 178.3297 of this chapter	
* * *	* * *

* * * * *

10. Section 177.2260 is amended by alphabetically adding a new item to paragraph (d)(5) to read as follows:

§ 177.2260 Filters, resin-bonded.

* * * * *

(d) * * *

(5) * * *

Colorants complying with § 178.3297 of this chapter.

* * * * *

11. Section 177.2600 is amended by revising paragraph (c)(4)(vi) to read as follows:

§ 177.2600 Rubber articles intended for repeated use.

* * * * *

(c) * * *

(4) * * *

(vi) *Colorants.*

Colorants complying with § 178.3297 of this chapter.

* * * * *

12. Section 177.2800 is amended in the table in paragraph (d)(5)(ii) by removing the items "4,4'-Bis(4-anilino-6-diethanolamine-*a*-triazin-2-ylamino)-2,2'-stilbene-disulfonic acid, disodium salt," and "7-(2*H*-Naphtho[1,2-*d*]triazol-2-yl)-3-phenylcoumarin (CAS Reg. No. 3333–62–8) having a melting point of 250 ° to 251 °C and a nitrogen content of 10.7 to 11.2 percent." under "List of substances," and their corresponding entries under the heading "Limitations," and by alphabetically adding a new table item, to read as follows:

§ 177.2800 Textiles and textile fibers.

* * * * *

(d) * * *

(5) * * *

List of substances	Limitations
* * *	* * *
(ii) Adjuvant substances:	
* * *	* * *
Colorants complying with § 178.3297 of this chapter.	
* * *	* * *

* * * * *

PART 178—INDIRECT FOOD ADDITIVES: ADJUVANTS, PRODUCTION AIDS, AND SANITIZERS

13. The authority citation for 21 CFR Part 178 continues to read as follows:

Authority: Secs. 201(s), 409, 72 Stat. 1784–1788 as amended (21 U.S.C. 321(s), 348), 21 CFR 5.10 and 5.61.

14. Section 178.3297 is amended by revising paragraph (c), by adding new paragraph (d), and by alphabetically adding new items to the table in paragraph (e) to read as follows:

§ 178.3297 Colorants for polymers.

* * * * *

(c) The colorant must conform to the specifications and extraction limits where indicated. Conformance to the extraction limits must be determined by established methods or their equivalent. Copies of the analytical methods and extraction procedures are available free of charge upon request from the Center for Food Safety and Applied Nutrition, Division of Food and Color Additives (HFF–335), Food and Drug Administration, 200 C Street SW., Washington, DC 20204. If the finished food-contact article is itself the subject of a regulation promulgated under section 409 of the act, it shall also comply with any specifications and limitations prescribed for it by that regulation.

(d) Color additives and their lakes permanently listed for direct use in foods, under the provisions of the color additive regulations in Parts 73 and 74 of this chapter, may also be used as colorants for food-contact polymers.

(e) List of substances:

Substances	Limitations
Aluminum.	
Aluminum hydrate.	
Aluminum and potassium silicate (mica).	
Aluminum mono-, di-, and tristearate.	
Aluminum silicate (China clay).	
Barium sulfate.	
Bentonite.	
Bentonite, modified with dimethyldioctadecylammonium ion.	
4,4'-Bis(4-anilino-6-diethanolamino-s-triazin-2-ylamino)-2,2'-stilbene-disulfonic acid, disodium salt.	For use only in cotton, polyethylene terephthalate, and rayon as specified in § 177.2800 of this chapter.
Burnt umber.	
Calcium carbonate.	
Calcium silicate.	
Calcium sulfate.	
Carbon black (channel process, prepared by the impingement process from stripped natural gas).	
Chromium oxide green, Cr_2O_3 (C.I. pigment green 17, C.I. No. 77288).	For use only in olefin polymers complying with § 177.1520 of this chapter.
Cobalt aluminate	For use only: (1) In resinous and polymeric coatings complying with § 175.300 of this chapter. (2) Melamineformaldehyde resins in molded articles complying with § 177.1460 of this chapter. (3) Xylene-formaldehyde resins condensed with 4-4'-isopropylidenediphenol-epichlorohydrin epoxy resins complying with § 175.380 of this chapter. (4) Ethylenevinyl acetate copolymers complying with § 177.1350 of this chapter. (5) Urea-formaldehyde resins in molded articles complying with § 177.1900 of this chapter.
Diatomaceous earth.	
Iron oxides.	
Magnesium oxide.	
Magnesium silicate (talc).	
7-(2*H*-Naphtho[1,2-*d*]triazol-2-yl)-3-phenylcoumarin [CAS Reg. No. 3333-62-8] having a melting point of 250 to 251 °C and a nitrogen content of 10.7 to 11.2 percent.	For use as an optical brightener only in: (1) Olefin polymers complying with § 177.1520 of this chapter only at levels such that the product of concentration of the optical brightener (expressed in parts per million by weight of the olefin polymer) multiplied by the thickness of the olefin polymer (expressed in thousandths of an inch and limited to no more than 0.400 inch) shall not exceed 500; provided that the level of the brightener shall not exceed 20 parts per million by weight of the olefin polymer, and further that the olefin polymers shall comply with specifications for items 1.1, 2.1, 3.1, 3.3, and 4 of § 177.1520(c) of this chapter. The polymer may be used under the conditions described in § 176.170(c) of this chapter, Table 2, under conditions of use E, F, and G. (2) Polyethylene terephthalate specified in § 176.2800(d)(5)(i) of this chapter at a level not to exceed 0.035 percent by weight of the finished fibers.
* * *	* *
Phthalocyanine blue (C.I. pigment blue 15, C.I. No. 74160).	
Phthalocyanine green (C.I. pigment green 7, C.I. No. 74260).	For use only in olefin polymers complying with § 177.1520 of this chapter.
Pigment red 38 (C.I. No. 21120).	For use only in olefin rubber articles for repeated use complying with § 177.2600 of this chapter; total use is not to exceed 10 percent by weight of rubber article.
Quinacridone red (C.I. pigment violet 19, C.I. No. 46500).	For use only in olefin polymers complying with § 177.1520 of this chapter.
Sienna (raw and burnt).	
Silica.	
Tartrazine lake (certified FD&C Yellow No. 5 only).	For use only as a component of resinous and polymeric coatings complying with § 177.300 of this chapter.
* * *	* *
Titanium dioxide.	
Titanium dioxide-barium sulfate.	
Titanium dioxide-magnesium silicate.	
Ultramarines (pink, red, blue, green, violet).	As identified in § 73.2725 of this chapter.
Zinc carbonate	For use only: (1) In resinous and polymeric coatings complying with § 175.300 of this chapter. (2) Melamineformaldehyde resins in molded articles complying with § 177.1460 of this chapter. (3) Xylene-formaldehyde resins condensed with 4-4'-isopro-pylidene-diphenol-epichlorohydrin epoxy resins complying with § 175.380 of this chapter. (4) Ethylenevinyl acetate copolymers complying with § 177.1350 of this chapter. (5) Urea-formaldehyde resins in molded articles complying with § 177.1900 of this chapter.
Zinc chromate	For use only in rubber articles for repeated use complying with § 177.2600 of this chapter; total use is not to exceed 10 percent by weight of rubber article.
Zinc oxide	For use only: (1) In resinous and polymeric coatings complying with § 175.300 of this chapter. (2) Melamineformaldehyde resins in molded articles complying with § 177.1460 of this chapter. (3) Xylene-formaldehyde resins condensed with 4-4'-isopropylidene-diphenol-epichlorohydrin epoxy resins complying with § 175.380 of this chapter. (4) Ethylenevinyl acetate copolymers complying with § 177.1350 of this chapter. (5) Urea-formaldehyde resins in molded articles complying with § 177.1900 of this chapter.
* * *	* *

§ 178.3970 [Removed]

15. Section 178.3970 *Ultramarine blue* is removed.

Dated: March 28, 1988.

John M. Taylor,

Associate Commissioner for Regulatory Affairs.

[FR Doc. 88-7425 Filed 4-5-88; 8:45 am]

BILLING CODE 4160-01-M

VOL
53

ISS
66

AP
6

1988

UMI

federal register

Wednesday
April 6, 1988

Part IV

Department of Labor

Occupational Safety and Health Administration

29 CFR Part 1910

Occupational Exposure to Ethylene Oxide; Final Standard

BEST COPY AVAILABLE

DEPARTMENT OF LABOR

Occupational Safety and Health Administration

29 CFR Part 1910

[Docket No. H-200B]

Occupational Exposure to Ethylene Oxide

AGENCY: Occupational Safety and Health Administration (OSHA), Labor.

ACTION: Final standard.

SUMMARY: By this notice, the Occupational Safety and Health Administration (OSHA) amends its existing standard that regulates occupational exposure to ethylene oxide (29 CFR 1910.1047) by adopting an excursion limit for ethylene oxide (EtO) of 5 parts of EtO per million parts of air (5 ppm) averaged over a sampling period of 15 minutes.

Where the excursion limit is exceeded, employers are obligated to reduce exposure through implementation of feasible engineering controls and work practices, supplemented by the use of respirators where necessary. In addition, employers are required to establish and implement a written compliance program to achieve the excursion limit, establish exposure monitoring and training programs for employees subjected to EtO exposure above the excursion limit, identify as regulated areas any locations where airborne concentrations of EtO normally exceed the excursion limit, and affix warning labels on products capable of releasing EtO to the extent that an employee's exposure would foreseeably exceed the excursion limit.

DATES: For the purposes of 29 CFR 1911.18(d), this document will be officially filed in the Office of the Federal Register at 12:00 p.m. on Monday, April 4, 1988.

This final standard shall become effective June 6, 1988, except the following paragraphs which contain information collection requirements pertinent to the excursion limit which are under review at OMB: § 1910.1047 (a)(2), (d), (f)(2), (g)(3), and (j).

FOR FURTHER INFORMATION CONTACT: Mr. James F. Foster, Occupational Safety and Health Administration, Office of Public Affairs, Room N-3649, U.S. Department of Labor, 200 Constitution Avenue, NW., Washington, DC 20210. Telephone (202) 523-8151.

For additional copies of this notice, contact: OSHA, Office of Publications, U.S. Department of Labor, Room N-3101, Washington, DC 20210, Telephone 202-523-8576.

SUPPLEMENTARY INFORMATION:

I. Events Leading to This Action

On January 26, 1982, OSHA published an Advance Notice of Proposed Rulemaking (47 FR 3566) announcing its intention to reevaluate its existing EtO standard of 50 ppm as an 8-hour TWA. In addition to a request for public comment on the adequacy of 50 ppm as a TWA, comment was also solicited on the question of the necessity of a short-term limit as follows:

> Is a short-term or ceiling limit for EtO exposures necessary and why, and what would be the technological and economic feasibility of complying with that limit? (48 FR 3566)

On April 21, 1983, OSHA published a Notice of Proposed Rulemaking for EtO that proposed to reduce the permissible 8-hour TWA from 50 ppm to 1 ppm (48 FR 17284). Although a specific short-term limit for EtO was not included in the proposed regulatory text, public comment on that issue was solicited by the following questions:

> Is a short-term or ceiling exposure limit for EtO exposure necessary for the PEL or action level in view of recent information regarding increased spontaneous abortions and chromosome changes in workers exposed to EtO? What monitoring methods and control technology are available to meet such a short-term limit and what would be the economic burdens, if any, of such a limit? (48 FR 17284)

and,

> What are the most suitable methods for determining compliance with EtO permissible exposure limits (PEL's) of 0.5 and 1 ppm as 8-hour time-weighted averages and for ceilings ranging from 5 to 50 ppm for 30 minutes or less? What are the problems associated with such monitoring methods? Do they require special training or experience? Are there serious limitations as to the accuracy or precision of the available sampling techniques? (48 FR 17284)

Numerous comments and data were received by OSHA in response to the short-term limit questions set forth in the ANPR and NPRM (Ex. 168). However, the final EtO rule published on June 22, 1984, which lowered the permissible 8-hour TWA from 50 ppm to 1 ppm (49 FR 25734) reserved decision on the question of whether the standard should contain a short-term limit (Ex. 167A). In the June 22, 1984 final rule, OSHA stated that upon its review of comments submitted by the Office of Management and Budget (OMB) pursuant to Executive Order 12291 (Ex. 162), OSHA determined that certain issues relating to a short-term limit were important and merited further consideration. To develop the fullest possible administrative record, all exhibits in the docket relating to the short-term limit (compiled as Ex. 168), were submitted to a number of scientifically qualified peer reviewers for comment, analysis, and criticism. The peer reviewers filed statements that were placed in the public docket. Public comments on the statements filed by the peer reviewers on the issues raised by OMB on the June 14, 1984 draft standard were solicited by a **Federal Register** notice published September 19, 1984 (49 FR 36659).

After a review of the rulemaking record pertaining to the short-term limit, OSHA published a **Federal Register** notice on January 3, 1985 (50 FR 64) announcing its determination that the available health data did not necessitate the establishment of a short-term limit to supplement the 8-hour TWA of 1 ppm. OSHA's decision not to issue a short-term limit for EtO centered on three findings: First, the available health data did not demonstrate the risks from EtO exposure to be dose rate-dependent. In other words, the studies did not indicate that the risk from exposure to a given dose of EtO are greater when that dose is distributed at high concentrations over a short period of exposure during a workday rather than at a lower concentration during a longer period of time. Second, since the effects of EtO are assumed to be *dose* dependent rather than dose-*rate* dependent, OSHA concluded that reduction of the total dose was the critical factor in dealing with the significant risks of EtO exposure. Therefore, the Agency believed that the 1 ppm TWA was sufficient to minimize significant risk, within the bounds of feasibility. Third, in terms of industrial hygiene and methods of controlling EtO, it was felt that compliance with the TWA would in itself necessitate the control of short-term exposures, particularly for employees whose exposure consists primarily of short-term bursts.

Petition for review of OSHA's decision not to adopt a short-term limit for EtO subsequently was filed by the Public Citizen Health Research Group, pursuant to section 6(f) of the OSH Act (29 U.S.C. 655(f)).

On July 25, 1986, the U.S. Court of Appeals for the District of Columbia Circuit issued a decision on the ethylene oxide standard (*Public Citizen Health Research Group* v. *Tyson*, 796 F. 2d 1479) in response to the petition from Public Citizen. In that decision, the Court upheld OSHA's permissible exposure limit of 1 ppm as an 8-hour time-weighted average, finding that OSHA had "complied with the relevant legal standards in promulgating the 1

ppm PEL." 796 F. 2d at 1503. In addition, the Court upheld OSHA's determination that the evidence in the rulemaking record did not establish the existence of a dose-rate relationship for the health effects of EtO. However, the Court rejected OSHA's argument that the lack of such an established dose-rate effect rendered it unnecessary for the Agency to promulgate a short-term limit for EtO. The Court noted:

> The agency recognized that EtO exposures at 1 ppm still allowed a significant health risk * * *. If in fact a STEL would further reduce a significant health risk and is feasible to implement, then the OSH Act *compels* the agency to adopt it (barring alternative avenues to the same result). 796 F. 2d at 1505.

Therefore, the Court said, in order for OSHA to avoid issuing a short-term limit for EtO, the Agency must find either that a short-term limit would have no effect on the significant risk which is still present at 1 ppm TWA, or that a short-term limit is not feasible. If the Agency cannot make either of these two findings, then a short-term limit must be issued. The Court proceeded to remand the EtO standard to the Agency for further proceedings on these issues, specifically directing OSHA to "either adopt a short-term limit or explain why empirical or expert evidence on exposure patterns makes a short-term limit irrelevant to controlling long-term exposures". 796 F. 2d at 1507.

On July 21, 1987 the Court of Appeals for the District of Columbia Circuit issued a further decision on the ethylene oxide rulemaking, in *Public Citizen Health Research Group* v. *Brock*, 823 F. 2d 626. In that decision, the Court clarified its mandate to OSHA by ordering that "OSHA's final decision on the EtO short-term exposure limit is to issue no later than March 1988." 823 F. 2d at 629.

Pursuant to the Court decision, OSHA's proposed rule on EtO was published January 21, 1988 (53 FR 1724). The proposal limited short-term exposures to EtO to 5 ppm averaged over a 15 minute period and contained additional provisions which OSHA believed appropriate. In the preamble to the proposal, OSHA requested public comments, information, and evidence on all issues raised. A public comment period was established running through February 22, 1988. Hearing requests were also to be submitted by February 22, 1988.

An informal public hearing was convened by Administrative Law Judge Stuart Levin on March 3, 1988 pursuant to notice and section 6(b) of the Act (29 U.S.C. 655(b)(3)). The hearing concluded on that date. Post-hearing submissions of data requested by parties at the hearing were received through March 10, 1988; post-hearing comments and briefs from participants in the hearing were received through March 17, 1988.

The entire record was certified by Judge Levin on March 18, 1988 in accordance with 29 CFR 1911.17. Copies of materials contained in the record may be obtained from the Docket Office, Room N-3670, U.S. Department of Labor, 200 Constitution Avenue NW., Washington DC 20210. The final amendment to OSHA's standard on occupational exposure to ethylene oxide is based on full consideration of the entire record of this proceeding, including materials discussed or relied upon in the proposal, the record of the informal hearing, and all written comments and exhibits received.

II. Pertinent Legal Authority

The primary purpose of the Occupational Safety and Health Act (29 U.S.C. 651 *et seq.*) (the Act) is to assure, so far as possible, safe and healthful working conditions for every American worker over the period of his or her working lifetime. One means prescribed by the Congress to achieve this goal is the mandate given to, and the concomitant authority vested in, the Secretary of Labor to set mandatory safety and health standards. The Congress specifically directed that:

> The Secretary, in promulgating standards dealing with toxic materials or harmful physical agents under this subsection, shall set the standard which most adequately assures, to the extent feasible, on the basis of the best available evidence, that no employee will suffer material impairment of health or functional capacity even if such employee has regular exposure to the hazard dealt with by such standard for the period of his working life. Development of standards under this subsection shall be based upon research, demonstrations, experiments, and such other information as may be appropriate. In addition to the attainment of the highest degree of health and safety protection for the employee, other considerations shall be the latest available scientific data in the field, the feasibility of standards, and experience gained under this and other health and safety laws. [Section 6(b)(5)].

Where appropriate, the standards are required to include provisions for labels or other appropriate forms of warning to appraise employees of hazards, suitable protective equipment, exposure control procedures, monitoring and measuring of employee exposure, employee access to the results of monitoring, and training and education. Standards may also prescribe recordkeeping requirements where necessary or appropriate for enforcement of the Act or for the development of information regarding occupational accidents and illnesses [section 8(c)].

In vacating OSHA's 1978 revision to its benzene standard, the Supreme Court required in *Industrial Union Department, AFL-CIO* v. *American Petroleum Institute*, 448 U.S. 601, 64 L. Ed. 2d 1010, 100 S. Ct. 2844 (1980), that before the issuance of a new or revised standard pursuant to section 6(b)(5) of the Act, OSHA must make two theshold findings that: A significant risk exists under the current standard, and that the issuance of a revised standard would reduce or eliminate the risk.

After OSHA has determined that a significant risk exists and that such risk can be reduced or eliminated by the regulatory action, it must set the standard "which most adequately assures, to the extent feasible, on the basis of the best available evidence, that no employees will suffer material impairment of health * * *" (Section 6(b)(5) of the Act). The Supreme Court has interpreted this section to mean that OSHA must enact the most protective standard possible to eliminate a significant risk of material health impairment, subject to the constraints of technological and economic feasibility. *American Textile Manufacturers Institute, Inc.* v. *Donovan*, 452 U.S. 490 (1981).

Authority for this action is also found in section 8(c)(3) of the Act. In general, this section empowers the Secretary to require employers to make, keep, and preserve records regarding activities related to the Act. In particular, section 8(c)(3) gives the Secretary authority to require employers to "maintain accurate records of employee exposures to potentially toxic materials or harmful physical agents which are required to be monitored or measured under section 6."

The Secretary's authority to issue this amendment is further supported by the general rulemaking authority granted in section 8(g)(2) of the Act. This section empowers the Secretary "to prescribe such rules and regulations as he may deem necessary to carry out (his) responsibilities under the Act"—in this case as part of or ancillary to a section 6(b) standard. The Secretary's responsibilities under the Act are defined largely by its enumerated purposes, which include:

> Encouraging employers and employees in their efforts to reduce the number of occupational safety and health hazards at their places of employment, and to stimulate employers and employees to institute new and to perfect existing programs for providing safe and healthful working conditions (29 U.S.C. 651(b)(1);

Authorizing the Secretary of Labor to set mandatory occupational safety and health standards applicable to businesses affecting interstate commerce (29 U.S.C. 651 (b)(3);

Building upon advances already made through employer and employee initiative for providing safe and health working conditions (29 U.S.C. 651(b)(4));

Providing for the development and promulgation of occupational safety and health standards; (29 U.S.C. 651 (b)(9));

Providing for appropriate reporting procedures with respect to occupational safety and health which procedures will help achieve the objectives of this Act and accurately describe the nature of the occupational safety and health problem (29 U.S.C. 651(b)(12));

Exploring ways to discover latent diseases, establishing causal connections between diseases and work in environmental conditions * * * (29 U.S.C. 651 (b)(6);

Encouraging joint labor-management efforts to reduce injuries and disease arising out of employment (29 U.S.C. 651(b)(13)), and

Developing innovative methods, techniques, and approaches for dealing with occupational safety and health problems (29 U.S.C. 651(b)(5)).

Because this amendment to the ethylene oxide standard is reasonably related to these statutory goals, the Secretary finds that this action is necessary to carry out his responsibilities under the Act.

In addition, section 4(b)(2) of the Act provides that standards issued under OSHA apply to construction and maritime employment where the Secretary determines these standards to be more effective than existing standards which otherwise apply to that employment. (As set forth in 29 CFR 1910.19(h), the current EtO standard applies to construction and maritime employment, in addition to its coverage of general industry).

III. Justification for the Adoption of an Excursion Limit

Section 6(b)(5) of the OSH Act requires the Agency to set health standards which most adequately assure protection against significant risks of material health impairment, to the extent feasible. OSHA established its 8-hour TWA of 1 ppm for EtO (49 FR 25734) based upon considerations of feasibility, and determined that a significant cancer risk would persist at that level. As discussed above, the U.S. Court of Appeals has directed that OSHA reconsider further means of reducing that risk and "either adopt a STEL or explain why empirical or expert evidence on exposure patterns makes a STEL irrelevant to controlling long-term average exposures." 798 F.2d at 1507. The Agency believes that additional protection against continuing significant risk will be provided by a limitation on short-term exposures of 5 ppm over a 15 minute period. This additional protection has been determined to be feasible in the affected industries (see discussion under "Regulatory Flexibility and Impact Analysis"). The rulemaking record indicates that for industry sectors whose exposure patterns involve periods of intermittent, burst-type exposures to EtO, the excursion limit in certain instances will result in TWA exposures below those being experienced now.

In developing the final rule, OSHA has evaluated EtO exposure patterns to determine which employees are currently being exposed above the 5 ppm excursion limit. Of particular concern are those employees whose 8-hour TWA exposures are below the current 1 ppm permissible exposure limit but incorporate one or more short-term bursts which would exceed 5 ppm averaged over 15 minutes. It is these employees who would benefit the most from an excursion limit, because a reduction in short-term bursts would serve to reduce their total EtO dose, and thus would reduce their cancer risks. The Court in *Tyson* directed OSHA to issue an excursion limit if it would further reduce the significant risk attributable to total EtO dose; OSHA has determined that there are employees whose total EtO does would, in fact, be reduced by the imposition of an excursion limit, in accordance with the *Tyson* decision.

Based upon their site visits and a review of reports provided to the record by the National Institute for Occupational Safety and Health (Ex. 205–17), Meridian Research estimates that approximately six percent of all EtO-using facilities have at least one employee who is currently exposed below the 8-hour TWA of 1 ppm but above the proposed 5 ppm excursion limit. Therefore, OSHA has determined that the proposed excursion limit is, in fact, reasonably necessary to provide additional reduction of the significant risk which persists under the current standard. Further, OSHA has determined that such an excursion limit is generally feasible for the affected industry as a whole.

OSHA previously concluded that a short-term limit was not needed since "the compliance program designed to maintain exposure at or below the 1 ppm * * * limit * * *will also substantially reduce the magnitude of short-term exposures" (50 FR 64). The Agency also argued to the Court in *Public Citizen*, that "the record clearly indicates that for a number of reasons the benefits that would be achieved by a short-term limit will be almost entirely achieved by the PEL". Repondent's brief at 55. The Court disagreed with these assertions. In the opinion of the Court, the Agency's conclusions were not supportable since it had not been demonstrated that "in attempting to meet the 1 ppm PEL, employers will *in every case* reduce short-term exposures * * *" 798 F. 2nd at 1505.

The Court concluded that:

> The evidence in this record * * * does not demonstrate that employers will necessarily reduce short-term exposures below 10 ppm in order to meet the PEL. For example, an employer might measure a very low background level of EtO exposure, a level significantly below the 1 ppm PEL. Conceivably, such an employer could allow short-term exposures to exceed 10 ppm over a fifteen-minute period but still have cumulative exposure fall below the 1 ppm PEL, which is an eight-hour average. 798 F 2d at 1505.

The 8-hour TWA for EtO of 1 ppm was established because OSHA believed that this new exposure limit would substantially reduce the significant risk associated with EtO exposures at the previous TWA of 50 ppm, and that the 1 ppm level would be feasible for most operations in most workplaces that use EtO. However, as OSHA's quantitative risk assessment shows, an excess EtO-related cancer mortality risk of 12 to 23 deaths per 10,000 workers persists even at the 1 ppm 8-hour TWA level. Congress has mandated that reducing significant occupational health risks to the lowest feasible level clearly lies within OSHA's authority under the Act. The Court of Appeals remand on this issue in the EtO context further supports this position. OSHA believes that promulgation of a 5 ppm excursion limit for EtO is consonant with the intent of the Act. The available data on current exposure patterns and control measures indicate that compliance with a 5 ppm, 15-minute excursion limit will augment the employee protection provided by the 8-hour TWA in many cases. Because implementation of the 5 ppm excursion limit will further reduce the residual risk which persists at the current 1 ppm TWA, OSHA has determined that the Act compels its adoption, in accordance with the *Tyson* decision.

As noted in section V of this preamble below, OSHA estimates that approximately 6 percent of EtO facilities have at least one employee whose 8 hr. TWA exposures are below the current 1 ppm PEL, but who continue to be exposed to short-term levels exceeding 5 ppm as averaged over any 15 minute period during the workday. Based on OSHA's risk assessment, an employee

receiving one such 15-minute exposure during each workday, with no other EtO exposures, would have an 8-hour TWA exposure of 0.16 ppm, and a corresponding excess lifetime cancer risk of 2-4 per 10,000. OSHA believes that this excess risk is not insignificant. Further, since employees would virtually always be exposed to some background levels of EtO in the workplace in addition to their 15 minute excursion, their total dose would be higher than the short-term exposure alone would indicate. The imposition of an excursion limit will, in accordance with the *Tyson* decision, further reduce the significant risk remaining under the current standard, although the precise degree of such reduction cannot be quantified. The record indicates that of the total EtO-exposed population of 67,728, approximately 580 are exposed below the 1 ppm TWA but above the 5 ppm 15-minute EL.

The written and oral comments of several expert witnesses that were made during OSHA's previous rulemaking on EtO suggest that the 8-hour TWA and 15-minute excursion limit may well work hand-in-hand to achieve effective control over exposures of this nature. [Exhibits (Ex.) 11-68, 11-83, 11-113, 11-142, 78, March 3 Transcript (Tr.) 216]. Based on the current record, OSHA believes that the excursion limit/TWA combination will act to minimize both the number and the magnitude of excursions occurring during the working day in many EtO workplaces, resulting in a reduction in the risk that persists with the TWA alone.

It is important to draw a distinction between reducing short term exposures to reach the mandatory 1 ppm TWA (the issue addressed by OSHA in its 1985 decision not to issue an EtO STEL), and reducing short term exposures to further reduce average exposures *below* that achieved by the TWA (the issue raised by the Court in the Tyson decision). The Court in Tyson directed OSHA to reconsider whether a separate limit on short term burst-type exposures could reduce total EtO dose below that achievable through the 8-hour TWA alone. If total dose could be further reduced in this manner, there would be a further reduction in significant risk. The Court concluded that the Act would compel the Agency to adopt a short-term limit under these conditions.

There is no question that many employers have sought to reduce total dose by reducing short-term exposures, as discussed earlier. This strategy is clearly an easy and cost-effective way to reduce average exposures. The report by Meridian Research Inc., as well as other evidence in the record (Exs. 11-68, 11-83, 11-142, 78, 112, TR. 216) support this strategy. OSHA invited comments and specific data on circumstances or conditions in which an excursion limit would fail to further reduce total dose and, therefore, the risk that would persist at the 1 ppm TWA. OSHA also asked if there were specific situations in which the incorporation of an excursion limit would result in work practices which would be counterproductive in reducing residual risk. These issues are discussed below.

The Office of Management and Budget (OMB) submitted comments [Ex. 205-27] to the docket on the Agency's proposed rule for a 15 ppm 5-minute excursion limit (EL) for EtO. OMB acknowledged that the 5 ppm short-term limit "is likely to be technically feasible" [Ex. 205-27, p. 2], but raised questions about several aspects of the proposed rule. Many of the issues addressed by OMB are closely related and pertain to OSHA's finding that the controls necessary to reach the 8-hour time-weighted permissible exposure limit are the same as those necessary to comply with the 15-minute excursion limit (53 FR 1724 et seq.).

Specifically, OMB expressed the following views with regard to the promulgation of an EL for EtO:

1. Because compliance with an EL requires different controls than compliance with a PEL, an EL will increase the costs of compliance in certain sectors;

2. An EL will not directly affect long-term exposures and may actually increase them;

3. Respirators may provide equal or substantially greater protection than engineering controls for short-term exposures;

4. The proposed monitoring requirements are unnecessarily burdensome.

Each of these points is addressed separately below.

Feasibility and Costs

OMB is of the opinion that the controls necessary to achieve compliance with a short-term limit are different from those required to comply with the 8-hour TWA PEL of 1 ppm. As stated in the proposed preamble, OSHA concluded that the controls needed to comply with the 1 ppm limit would simultaneously reduce employees' exposures to or below the 5 ppm 15-minute excursion limit. OSHA based its conclusion on the written and oral comments of several expert witnesses during OSHA's previous EtO rulemaking, who reported that the 8-hour TWA and excursion limit would work hand-in-hand to achieve control over episodic exposures to EtO [Exs. 11-68, 11-83, 11-113, 11-142, Tr. 216]. In addition, OSHA relied on the findings of Meridian Research, Inc. [Ex. 204], a contractor to OSHA, which showed that, almost without exception, where employers had achieved compliance with the final rule's 1 ppm 8-hour TWA PEL, controlling short-term employee exposures to either 10 ppm or 5 ppm would be neither difficult nor expensive. Moreover, Meridian found that the controls to achieve both types of limits (i.e., long-term TWA PEL and short-term EL) would be the same.

It is OMB's contention that, at least for some employers, the controls chosen to meet the PEL and the EL may be different. According to OMB:

> It is incorrect to conclude from the Meridian report that reducing short-term exposures is *necessary* to comply with the PEL. Other firms have chosen to reach the PEL more cost-effectively by reducing background ambient levels (through general ventilation, for example) instead of short-term exposures (through conveyor systems, for example). For these firms, a STEL will require a different mix of controls that is more costly [Ex. 205-27, p 4].

OMB thus believes that, at least for a few employers, promulgation of a short-term limit will impose additional compliance costs and require different controls from those needed to comply with the 8-hour TWA. OMB's belief that some employers will be forced by promulgation of a short-term limit to implement different and costly engineering controls derives from the Budget Office's categorization of engineering controls into two classes: Longterm controls and short-term controls. OMB classifies isolation of the sterilization areas and general dilution ventilation in the first group, and categorizes as "short-term" controls such technologies as design of the sterilizer, use of a conveyor handling system, use of thermocouples, and use of a microprocessor-controlled sterilization process [Ex. 205-27, p. 4]. Having classified controls as short-term and long-term, OMB then explains that none of the small contract sterilizers visited by Meridian Research [Ex. 204] had implemented "short term" controls and would be forced to do so at substantial cost if the Agency promulgates a short-term limit.

OSHA's knowledge of industrial hygiene, which derives from experience with the controls needed to comply with hundreds of hazardous substances that

have exposure limits ranging from instantaneous peaks to 8-hour TWAs, suggests that the line drawn by OMB between long-term and short-term controls is not, in fact, reflected in the compliance strategies followed by employers in real-world workplaces. The traditional hierarchy of controls, which has been the underlying tenet of industrial hygiene since the 1950s, emphasizes that certain general types of control, i.e., engineering controls, are to be preferred over others, i.e., personal protective equipment, but nowhere makes a distinction between long-term and short-term controls. Within the category of engineering controls, certain control methods, such as those that eliminate or substantially reduce emissions at their source, are ordinarily preferred and considered to be more effective than other controls, such as general dilution ventilation, which simply dilute rather than eliminate the amount of the hazardous substance in the air.

OSHA believes that, when confronted with hazardous exposures in their workplaces, the overwhelming majority of employers will analyze their workplaces to identify and locate specific sources of emission and that they will then design an integrated control strategy to reduce these emissions. Such an integrated control approach in a medical products sterilization facility would generally include, for example, local exhaust ventilation; general dilution ventilation; the use of T-valves, hoods, and/or isolation to control exposures from EtO canisters; and observance of the work practice of cracking the sterilizer door for several minutes before unloading. In the facilities in all sectors that were in compliance with the PEL, Meridian found that employers were using a combination of the following controls: General dilution ventilation, local exhaust ventilation, isolation, and work practices [Ex. 204].

Further, no site visited by Meridian had attempted only to implement a general dilution ventilation system to achieve the 8-hour TWA PEL. In every case where employers had implemented engineering controls, they were using an integrated approach that focused on removing EtO at the source of emission and were supplementing these controls with general dilution ventilation.

OSHA finds that EtO-using or producing facilities will (1) be in compliance with both the 1 ppm PEL and the 5 ppm EL at the present time; (2) be out of compliance with both the PEL and the EL at the present time; or (3) in fewer than 6 percent of all cases, be in compliance with the 8-hour TWA and be exceeding the 15-minute EL. In the first instance, employers will already be in full compliance, and will incur no costs to comply with the EL. Employers in the second category will, OSHA believes, implement an integrated control strategy to address their EtO exposure problems. This control strategy will undoubtedly adopt the surest, most direct, and most cost-effective control approach: elimination of emissions at their source. Employers in this group may also choose to supplement these point source controls with general dilution ventilation.

Workplaces falling into the third category, i.e., that have employee exposures at or below the 8-hour TWA but short-term exposures above the 5 ppm level, will need to analyze their situation carefully to identify the source of their exposure problem. This emission source inventory and industrial hygiene task analysis will help employers to locate the problem and to address it most cost-effectively. The following theoretical example illustrates this approach to the management of workplace exposures. A medical product company's sterilizer operator has a short-term exposure above 5 ppm (15 minutes), although her 8-hour TWA exposure is within the full-shift limit. A source inventory and task analysis would help to determine whether this operator's work practices were poor (e.g., she was not cracking the door before removing freshly sterilized product or was bending too closely over the product to remove biological indicators), whether inadequate isolation of offgassing product was responsible for the elevated exposure, or whether a particular product mix was the source of the problem. The control strategy adopted by the employer to address each of these problems would be quite different, and could range from re-training of the sterilizer operator to walling off a product quarantine area to scheduling the most difficult loads for times when longer aeration periods are available. Each of these hypothetical control solutions would involve minimal or no additional costs.

Thus, OSHA reaffirms its findings that achieving the 8-hour TWA PEL and the short-term limit are linked in all but a small percentage of cases, and that compliance with one limit will simultaneously achieve compliance with the other in the great majority of workplaces. The Agency also finds that effective industrial hygiene control of both short-term and long-term exposures requires the control of point source emissions at their point of origin, and that controlling these emissions sources has a direct impact on the total dose or overall exposures of affected employees. Because control of the workplace depends on control of emissions at their source, and because this control approach is essential to achieve either EtO exposure limit, OSHA concludes that the control involved in complying with either limit are the same and will impose no additional EL-related costs on employers. Thus, with the exception of the small minority firms discussed above, no additional costs will be incurred to achieve compliance with the final rule's excursion limit.

Effect on Long-Term Exposures

OMB's comment states that, before OSHA can promulgate a short-term limit for EtO, the Agency must "establish that adoption of a STEL is 'relevant' to average long-term exposures" [Ex. 205-27, p. 5]. According to OMB, "a PEL controls total dose, which is the only relevant exposure measure when timing and duration [i.e., a dose-rate effect] do not affect the risk" [Ex. 205-27, p. 6]. The argument put forward by OMB is that an 8-hour limit "directly" reduces risk, while a STEL is only a "means * * * to reach the [desired] end (changing the total dose)" [Ex. 205-27, p. 6]. OMB appears to be saying that the imposition of an EL will serve only to redistribute the *pattern* by which the total dose is administered and will not actually reduce total dose.

OSHA does not agree with this view of the function of a short-term exposure limit. The record contains evidence (Company D, Ex. 204; Hospital E, NIOSH 1986, Ex. 205-17) that as many as 6 percent of affected facilities are currently in compliance with the final rule's 1 ppm 8-hour TWA but are achieving a 5 ppm 15-minute excursion limit. In these two real-world instances, controlling the excursions of these employees will reduce their total EtO dose to a level below the exposures they are currently experiencing.

To illustrate the interaction between the 8-hour TWA and the EL, the preamble to the proposal described a hypothetical example where an employee is exposed to 24 ppm for a single 15-minute interval and to no other exposure during the day. In this example, the employee's 8-hour TWA exposure would be 0.75 ppm. After controlling the short-term peak to 5 ppm, this employee's 8-hour TWA would fall to 0.16 ppm. In these and other instances cited in the record, OSHA finds that control of short-term exposures will have a direct impact on employees' long-term exposures (total dose) of EtO.

To illustrate its contention that promulgation of an EL will not affect (and may even increase rather than decrease) long-term exposures, OMB described the following hypothetical situation: An employer, finding that general dilution ventilation has reduced his employees' total EtO dose to levels below the action level of 0.5 ppm, chooses to purchase controls to achieve compliance with the newly promulgated excursion limit. To purchase these controls, he uses the money he saved as a result of cutting back on the general dilution ventilation that achieved the reduction in total dose in the first place. OSHA finds this scenario implausible, for several reasons.

First, the Agency believes that there are no (or very few) workplaces where the 8-hour TWA PEL is being achieved solely with general dilution ventilation. Such an approach would involve uncontrolled emission sources emitting EtO into the atmosphere continuously (i.e., from a slowly leaking canister) or intermittently (i.e., whenever a sterilizer or canister was opened) while the employer attempted to control the resulting ambient EtO concentrations by exchanging the air in the workplace at a high rate. In such an environment, ambient concentrations would be likely to be very high and to increase as the work week progressed. Thus an EtO-using workplace controlled only by means of general dilution ventilation would have ambient levels that are increased, while one using point source controls would be characterized by decreased levels.

Second, OSHA believes that employers will select that mix of controls that will most efficiently reduce exposures to the levels necessary to comply with both limits (the PEL and the EL) most cost-effectively. This mix will almost certainly consist of general dilution ventilation and point source controls. Even if it is true, as OMB states, that requiring employers to implement effective point source controls will divert resources away from maintaining general dilution ventilation systems, OMB is not accurate when it states that such a reduction in dilution ventilation is likley to increase the ambient EtO level. The ambient concentation would not increase in such a case because the operation of the point source controls will eliminate (or nearly eliminate) any contribution to ambient EtO levels generated by these emission sources. Thus, the ambient EtO level would decrease after point source controls were implemented.

Third, OSHA finds the scenario presented by OMB highly improbable because the likelihood is vanishingly small that EtO-using facilities exist that are (1) maintaining their employees' 8-hour TWA exposures below the action level solely by means of general dilution ventilation, and (2) have short-term exposures above 5 ppm. As discussed above, the Agency is aware only of a small percentage of facilities where the 1 ppm TWA is being met but the 5 ppm EL is being exceeded, and OSHA is aware of no instances where the 8-hour PEL has been achieved by means of general dilution ventilation alone.

Methods of Compliance

OMB [Ex. 205–27, pp. 9–11] commented at length on OSHA's proposed requirement that employers must implement feasible engineering and work practice controls to achieve the 5 ppm excursion limit. The comment addresses two main points. First, OMB states that many of the criticisms against primary reliance on respirators (i.e., that they are uncomfortable and cause irritation) are less relevant when respirators are used for short periods of time. OMB's second point is that, since the least protective respirator permitted under the EtO standard reduces exposure by a factor of 50, respirators may be more effective than engineering and work practice controls in reducing short-term exposure. OMB states that OSHA should permit employers to rely on respiratory protection to comply with the 5 ppm excursion limit as long as the employer is complying with the 8-hour TWA by means of feasible engineering and work practice controls.

Because of the difficulties associated with relying on respiratory protection as a first line of defense against exposure to toxic substances, OSHA has traditionally required that employers use feasible engineering controls and work practices to comply with the Agency's exposure limits. This policy has been applied consistently in all of OSHA's previous health rulemakings. Although it may be the case that, as OMB argues, discomfort and facial irritation are less of a problem during short periods of respirator use, these problems are not entirely eliminated with short-term use and the safety hazards associated with respirator use, such as reduced vision and communication, are present whenever respirators are worn.

Furthermore, for respirators to be effective in reducing exposures, employers must implement a comprehensive respirator program, including adequate fit-gesting, training of employees, and proper respirator maintenance. If these programs are not in place, respirators will not be nearly as effective as their protection factors would suggest. Moreover, as OMB itself acknowledges [Ex. 205–27, p. 10], adequate respiratory protection programs were not in place at some of the facilities visited by Meridian [Ex. 204]. Thus, OSHA is not persuaded that employees will receive equal or greater protection against high short-term exposures to EtO if they use respirators during these excursions. Accordingly, the final rule requires employers to achieve compliance with the excursion limit by using feasible engineering and work practice controls. (OSHA notes, however, that the issue of engineering controls is moot for all but the 6 percent of facilities in which the 8-hour TWA is being achieved but the EL is being exceeded.)

The issue of whether to apply different methods of compliance principles to short-term or excursion limits was raised in OSHA's recent rulemakings for benzene (52 FR 34460) and formaldehyde (52 FR 46168). In both cases, the rulemaking record did not offer specific comments on this issue, and OSHA determined that applying the traditional methods of compliance requirements to the short-term limits for benzene and formaldehyde was a protective and cost-effective approach. This issue is expected to arise in the proceeding on OSHA's methods of compliance rulemaking (see the 1987 Regulatory Program of the United States Government). As is the case with both the benzene and formaldehyde standards, if appropriate evidence is submitted in the methods of compliance rulemaking, OSHA will consider making appropriate changes to the EtO standard.

Proposed Monitoring Requirements

OMB [Ex. 205–27] also commented on OSHA's proposed amendments to the final rule's monitoring requirements, stating that they "do not appear to be the least burdensome necessary to identify accurately those workers exposed above the * * * [excursion limit]" [Ex. 205–27, p. 12]. Specifically, OMB compared the proposed short-term monitoring requirements for EtO with the short-term monitoring requirements in OSHA's final benzene standard. OMB points out that, instead of requiring the employer to conduct representative sampling on each shift, for each job, and for each work area, the final benzene standard requires short-term monitoring "only where there is reason to believe exposures are high" [Ex. 205–27, p. 12], and also permits employers to conduct sampling on the one shift where exposures are highest. OMB also took

issue with OSHA's proposed requirement that the employer repeat short-term EtO monitoring every 6 months as long as short-term exposures exceed the excursion limit; the Budget Office argued that OSHA's benzene standard requires periodic short-term monitoring only as necessary to evaluate employee exposures. OMB believes that OSHA's short-term monitoring requirements for benzene are more flexible and less burdensome than the proposed short-term monitoring requirements for EtO, and states that OSHA should "completely justify" any short-term monitoring requirement for EtO that goes beyond the same requirements in the Agency's recent benzene standard.

In formulating the proposed short-term monitoring requirements for EtO, OSHA's intent was to ensure that employers monitor the short-term exposures of those employees who are performing tasks that may result in high short-term exposures. OSHA did not intend that employers measure the short-term exposures of employees whose work activities were not associated with a potential for elevated short-term exposures to EtO. Thus, OSHA expects employers to monitor short-term exposures of employees engaged in activities such as sterilizer loading and unloading, changing EtO tanks on sterilizer equipment, taking process quality control samples, or disconnecting a loading arm from a railcar; these activities carry a potential for elevated short-term exposures to EtO. On the other hand, OSHA would not expect an employer to measure the short-term exposures of employees who, for example, work in an enclosed control room where there is no potential for elevated short-term exposures to EtO. OSHA's intent is reflected in the language contained in proposed paragraph (d)(1)(ii), which states that the employer shall collect samples "representing 15-minute exposures *associated with operations that are most likely to produce exposures above the excursion limit* for each shift for each job classification in each work area" (emphasis added). Thus, OSHA believes that the final rule's short-term monitoring requirements for EtO are consistent with those of OSHA's benzene standard: both standards require short-term monitoring only where there is a potential for elevated short-term exposure.

OMB [Ex. 205–27, p. 12] also pointed out that the proposed monitoring requirements for EtO would require that employers conduct short-term monitoring on each shift, in contrast to OSHA's benzene standard, which permits the employer to conduct short-term monitoring only on the shift where the highest exposures occur. First, the requirement in the benzene standard referred to by OMB does not apply in the case of initial monitoring, where the benzene standard requires employers initially to monitor on every shift. Second, once the employer has made these initial determinations, the employer may restrict periodic monitoring to include one shift only if the employer can demonstrate that employee exposures on the remaining shifts are similar or lower. Thus, the benzene standard permits employers to conduct monitoring on one shift only after the employer has adequately determined that exposure measurements taken during one shift are representative of employee exposures that occur during other shifts. Since benzene is most frequently encountered in closed, controlled chemical process or storage systems (i.e., petroleum refining, petrochemical production, bulk motor fuel storage, and fuel transport), OSHA believes that an employer in a benzene-using facility can have some degree of confidence that exposures encountered during one shift are representative of employee exposures during other shifts.

However, in the case of EtO, OSHA believes that a number of factors may cause employee exposures during one shift to differ from those on other shifts, particularly during sterilization operations. For example, many companies sterilize a variety of different products that offgas EtO at different rates; this can lead to very different short-term exposures among employees working on different shifts. Additionally, short-term exposures to EtO are highly dependent on work practices, which may vary markedly among different employees. The importance of collecting short-term samples of EtO on each shift was demonstrated during a visit to a medical products sterilizing facility conducted by Meridian Research, Inc. [Ex. 204]. At this facility (Company D), the daytime sterilizer operator had short-term exposures below the 5 ppm excursion limit, but the night shift operator had two short-term exposure measurements exceeding 5 ppm. The difference in exposure measurements obtained during the two shifts was attributed to the different periods of time that the product was allowed to offgas in the sterilizer after the end of the sterilizer cycle. Clearly, in this particular case, the daytime operator's exposure would not have been representative of the short-term exposure of the nightshift operator. Therefore, OSHA concludes that the nature of the particular operations in which EtO is used makes it necessary for employers to characterize the short-term exposures of employees on each of their shifts.

OMB's final point concerns OSHA's proposed monitoring frequency requirements for short-term exposures to EtO. OMB stated that—

> The more flexible benzene approach [which requires that employers monitor short-term exposures "as necessary] seems particularly sensible with regard to a STEL because the separate annual monitoring required for the action level and twice-a-year monitoring required for the PEL would be useful in determining when exposures had changed sufficiently to trigger additional STEL monitoring * * *. Since the agency already requires periodic monitoring for total dose, periodic monitoring for the STEL in the absence of changes in total dose would be of little benefit. [Ex. 205–27, pp. 12–13]

OSHA believes that the situation with regard to EtO is unique in that, for many operations such as EtO sterilization, employee exposures are characterized predominently by periodic peak exposures to relatively high levels of EtO. Because employees are exposed to EtO in this manner, OSHA believes that it is particularly important that the employer continue monitoring short-term exposures when prior monitoring results indicate that employee exposures exceed the excursion limit. It is only by periodic monitoring of short-term exposures that employers can fully understand how their operations are contributing to such exposures, and what steps may be effective in reducing short-term exposures. Periodic monitoring of short-term exposures will also direct the employee's attention to those work operations that present a potential for high short-term exposure to EtO, and will reinforce the need to use good work practices during those operations. Thus, OSHA does not agree that monitoring short-term exposures to EtO provides no benefit, even if TWA exposures remain fairly constant. In addition, OSHA does not believe that the proposed periodic short-term monitoring requirements are unduly burdensome, since OSHA is only requiring such monitoring if short-term exposures exceed the excursion limit; that is, unlike the monitoring requirements for the 1 ppm TWA PEL, there is no corresponding action level below the excursion limit that would trigger periodic monitoring.

IV. Regulatory Flexibility and Impact Analysis

Introduction

Executive Order 12291 (46 FR 13197, February 19, 1981) requires that a regulatory analysis be conducted for any rule having major economic consequences on the national economy, individual industries, geographical regions, or levels of government. The Regulatory Flexibility Act (5 U.S.C. 601 *et seq.*) similarly requires OSHA to consider the impact of the proposed regulation on small entities.

The Secretary has determined that this action would not be "major" as defined by Section 1(b) of Executive Order 12291. The Secretary also certifies that this action would not have a significant impact on a substantial number of small entities as defined by the Regulatory Flexibility Act. This determination is based upon cost and feasibility data provided to OSHA in a report prepared by Meridian Research, Inc. (Ex. 204, *Assessment of Short-Term Exposures to Ethylene Oxide*).

On March 31, 1983, the Office of Management and Budget (OMB) published a new 5 CFR Part 1320, implementing the information collection provisions of the Paperwork Reduction Act of 1980, 44 U.S.C. 3501 *et seq.* (48 FR 13666). Part 1320, which became effective on April 30, 1983, sets forth procedures for agencies to follow in obtaining OMB clearance for collection of information requirements in proposed and final rules. In particular § 1320.13 requires agencies to submit information requirements contained in proposed rules to OMB not later than the date of publication of the proposal in the **Federal Register**. It also requires agencies to include a statement in the notice of proposed rulemaking, indicating that such information requirements have been submitted to OMB for review under section 3504(h) of the Paperwork Reduction Act.

In accordance with the above mentioned provisions of both the Paperwork Reduction Act and the regulations issued pursuant thereto, OSHA certifies that it has submitted the information collection requirements contained in its rule on occupational exposure to ethylene oxide to OMB for review under section 3504(h) of that Act.

Summary of Exposure, Technological Feasibility, and Cost Data

In repsonse to the Court's remand discussed above, OSHA has evaluated short-term employee exposures to EtO in the sectors which would principally be affected by promulgation of an excursion limit, assessed the technological feasibility of achieving compliance with the excursion limit alternatives under consideration, and developed cost-of-compliance data for firms in the affected sectors. In particular, OSHA has made a determination as to the portion of an employee's full-shift exposure that is accounted for by short-term peaks.

For this effort, OSHA contracted with Meridian Research, Inc., to gather the information specified above and to conduct a total of nine site visits to selected facilities in four industry sectors: EtO producers, EtO ethoxylators (i.e., facilities using EtO as a chemical feedstock), hospitals, and firms that use EtO to sterilize medical and other products and devices. Meridian was unable to arrange a site visit to a facility in the fifth potentially affected sector, spice manufacturing, because no spice manufacturing frim was willing to permit a site visit. Meridian's final report appears in the docket as Exhibit 204. For the purposes of this analysis, OSHA considered two regulatory alternatives: A 10 ppm excursion limit (15 minutes) and a 5 ppm excursion limit (15 minutes). OSHA's principal findings are discussed below.

The five sectors listed above were identified for further study by OSHA based on the information available in the rulemaking record (see the Regulatory Impact Assessment for the final rule for ethylene oxide, Ex. 164, and the report entitled *Economic and Environmental Impact Study of Ethylene Oxide*, written by JRB Associates, 1984, Ex. 6–22). In two of these sectors—chemical production and ethoxylation—a total of approximately 50 U.S. firms produce or use EtO as a chemical feedstock in closed systems in an outdoor environment. In the three other sectors—hospitals, spice manufacturing, and medical products sterilizing—EtO is used as a sterilant gas to sterilize medical equipment and devices, paper and other products, and spices. OSHA estimated (49 FR 25767, June 22, 1984) that there were as many as 6,300 hospitals, 125 medical products sterilizers, and fewer than 30 spice manufacturers in the United States. Medical and other product sterilization firms can be divided into two groups of companies: Those that have a sterilization department within a larger facility that produces the medical devices or other products to be sterilized, and small firms that provide sterilization services exclusively, generally on a contract basis. At the time of the 1984 rulemaking, OSHA estimated that a total of 71,196 directly exposed employees and 69,175 incidentally exposed employees were exposed to EtO in these five sectors (49 FR 25767, June 22, 1984). Meridian has recently estimated the total number of exposed workers to be 67,728 as of 1988. (See Table A taken from Ex. 223.)

TABLE A.—EXPOSED EMPLOYEES BY INDUSTRY SECTOR

Number of sector	Exposed employees [1]
EtO Producers	[2] 1,046
Ethoxylators	[2] 1,436
Medical Products Sterilizers	[3] 1,814
EtO-Sterilizer-Using Hospitals	[4] 63,000
Spice Manufacturers	[5] 432
Total	67,728

Source: Meridian Research, 1988.

[1] Exposed workers are those who do at least some work in the vicinity of EtO units.

[2] As reported in Heiden Associates, Inc., *An Estimate of Industry Costs for Compliance with Two Ethylene Oxide Workplace STEL Scenarios: Ethylene Oxide Production and Ethoxylation Plants*, 1988, p. ii.

[3] As reported in Heiden Associates, Inc., *A Medical Products Industry Profile for Evaluating Compliance with Two Ethylene Oxide Workplace STEL Scenarios*: 10 ppm STEL and 5 ppm STEL, 1988, p. ii.

[4] Calculated by multiplying the estimated number of facilities (see footnote k of Exhibit 1) (4,500) by the number of exposed employees per facility (14), as reported in JRB Associates, *Economic and Environmental Impact Study of Ethylene Oxide*, 1983, pp. 3–5.

[5] JRB Associates, *Economic and Environmental Impact Study of Ethylene Oxide*, 1983, pp. 3–11

Short-term Exposure Data

On the site visits conducted in connection with this analysis, Meridian took 8-hour TWA personal samples on all potentially exposed employees at eight of the sites visited. Using passive dosimeters, these long-term breathing zone samples were taken over the full shift of the employees sampled. In addition, whenever these employees initiated an activity having the potential for a short-term peak exposure, Meridian's Certified Industrial Hygienist took short-term (15-minute) breathing zone samples using hydrogen-bromine-treated charcoal tubes, as specified by OSHA's Method 50. Short-term samples were taken during all activities during the working day that were associated with episodic exposures. The specific activities characterized by such short-term peaks varied according to sector. For example, in production and ethoxylation facilities, peaks were associated with activities such as quality control sampling and railcar unloading, while high, short-duration exposures occurred in the sectors that use EtO as a sterilant during such activities as sterilizer loading and unloading and removal of biological indicators from freshly sterilized goods.

OSHA's employee sampling results showed that implementation of engineering and work practice controls have reduced employee exposure to below that anticipated by OSHA when promulgating the final standard in June 1984. In addition, almost without exception, where employers had achieved compliance with the final rule's 1 ppm 8-hour permissible exposure limit (PEL), controlling short-term employee exposures to either 10 ppm or 5 ppm would neither be difficult nor expensive. OSHA therefore believes that a 5 ppm excursion limit is feasible.

The results of OSHA's data gathering on short-term exposures were as follows: In the EtO-producing sector, 8-hour employee exposures ranged from 0.21 to 0.78 (TWA), while 15-minute short-term exposures did not exceed 2.2 ppm. (In this sector, no samples were taken by Meridian because of inclement weather during the site visit; these results were given to Meridian by the EtO-producing company itself.) In the ethoxylator sector, 8-hour TWAs were non-dectectable, while 15-minute short-term exposures ranged from non-detectable to 1.07 ppm.

In the sterilant-using sectors, short-term exposures tend to be higher because of the episodic exposure pattern characteristic of these sectors. Samples taken by Meridian at three hospitals showed that the 8-hour TWA exposures of sterilizer operators in these facilities ranged from 0.14 to 0.34 ppm, while their 15-minute short-term exposures never exceeded 0.95 ppm. The hospitals selected for this analysis included a large, private-sector facility, a small rural hospital, and a large public-sector institution.

EtO exposures in the medical products sterilization sector appear to be strikingly dependent on the size of the facility in question. In large sterilization facilities owned by firms that manufacture medical products and sterilize them before shipping them off site, employee exposures in the facilities studied by Meridian have been reduced to levels well below the 1 ppm TWA, and short-term exposures are correspondingly low. The full-shift samples taken at two large facilities in this sector ranged from 0.08 to 0.36 ppm, and the 15-minute short-term exposures at these plants ranged from 0.24 to 4.1 ppm. At two small sterilization facilities in this sector, however, full-shift exposure levels were measured that were considerably above the 1 ppm PEL promulgated in the final rule. At one of these small facilities, the sterilizer operator had an 8-hour TWA of 3.97 ppm, and at the other small contract-sterilization plant, the sterilizer's full-shift exposure was 2.84 ppm, while that of the laboratory technician was 2.27 ppm. The short-term exposures of these employees were correspondingly high. At the first small facility, the short-term exposures (approximately 15 minutes) of the sterilizer operator ranged from 2.15 to 7.89 ppm, while the sterilizer operator's short-term exposures at the second facility ranged as high as 32.2 ppm (15 minutes) and those of the laboratory technician were as high as 7.21 ppm.

As stated earlier, no spice manufacturing firm was willing to permit Meridian to visit a spice facility; consequently, OSHA was unable to obtain any current data on short-term exposures of employees in this sector. However, information obtained during the rulemaking for the final EtO standard shows that the sterilization technology used in the spice manufacturing industry is similar to the technologies used in the sterilization of medical products (JRB Associates, Ex. 6–22). Short-term exposures in the spice sterilization operation may occur during the unloading of sterilized spices from the sterilizer, the handling of newly sterilized product, and the changing of EtO cylinders. OSHA has no data to suggest that short-term exposures in the spice manufacturing industry are substantially different from those in other EtO sterilant-using industry sectors. Therefore, by analogy to the exposure data obtained from medical product sterilizer facilities, OSHA believes that it will be possible to control the short-term exposures of employees in the spice manufacturing sector at or below 5 ppm.

The pattern that emerged at all the sites visited was thus consistent across sectors: Where employers have achieved compliance with the 1 ppm PEL, their facilities would already be in compliance with either a 5- or a 10-ppm short-term limit or could feasibly achieve these levels with minor changes in work practices. There was only a single exception to this finding among all sites visited by Meridian: At one facility, the evening-shift sterilizer operator's short-term (approximately 15 minutes) exposures were 3.56, 10.97, 8.49, and 0.39 ppm; no full-shift measurement was taken on this operator, and thus it is possible that his 8-hour TWA exceeded 1 ppm. However, because 87 percent of the 8-hour TWA exposure level of the day-shift operator at the same facility was accounted for by his four short-term exposures, OSHA considers it unlikely that the evening shift operator's 8-hour TWA actually exceeded 1 ppm. (As described below, OSHA believes that this employee's short-term exposure could be reduced to 5 ppm by a modification in work practices.) OSHA therefore believes that firms that have achieved compliance with the 1 ppm TWA promulgated in the final rule in 1984 should be able to lower employee exposures to a 10- or 5-ppm short-term level, at minimal cost.

TABLE B.—ESTIMATED COSTS FOR INITIAL ETO EXCURSION LIMIT MONITORING AND RECORDKEEPING IN THE AFFECTED INDUSTRY SECTORS

Number of Hours Needed To Conduct Sampling [1]	Costs For Conduction	Number of Short-Term Samples To Be Air Sampling [2]	Sample Collected Per Facility [3]	Number of Hours Needed for Analysis Costs [3]	Recordkeeping [4]	Cost for Recordkeeping [4]	Cost Per Facility [5]	Total Number of Burden-Hours for Number of Facilities in Sector	Initial Monitoring and Recordkeeping [6]	Total Estimated Cost for Initial Monitoring and Recordkeeping [7]
EtO Producers	8	$320	6	$210	1	$10.75	$540.75	[8]13	117	$7,030
Exthoxylators	8	320	6	210	1	10.75	540.75	[9]38	342	20,549
Medical Products Sterilizers	8	320	6	210	1	10.75	540.75	[10]95	855	51,371
EtO Sterilizer-using Hospitals	8	320	6	210	1	10.75	540.75	[11]4,500	40,500	2,433,375
Spice Manufacturers	8	320	6	210	1	10.75	$540.75	[12]27	243	14,600
TOTAL								4,873	42,057	$2,526,925

SOURCE: Meridian Research, 1988.

[1] Meridian estimate, based on 1986-87 site visits.

[2] The cost for conducting air monitoring is based on hiring an industrial hygiene consultant at a cost of $40 per hour, or $320 per day. The cost of an industrial hygiene consultant includes the costs of pumps, sampling tubes, and packaging and mailing of samples for analysis. (SKC, Inc. sells 50 tubes suitable for measuring EtO excursions using OSHA Method 50 for $79, according to their 1988 comprehensive catalog and guide (p.6)).

[3] The sample analysis cost is based on the number of short-term samples to be collected multiplied by an analytical cost of $35 per sample (American Medical Laboratory Inc., Fairfax, Virginia, 1987 estimate). Two additional labs contacted in 1988 quote analysis costs of $28 and $45 per sample, respectively: thus $35 appears to be a reasonable estimate.

[4] Recordkeeping costs are estimated by multiplying the number of hours needed by the average hourly wage of clerical personnel in 1988. This wage estimate ($10.75 hour) was calculated by compounding the 1986 average hourly wage of $9.75 for secretaries (source: March 9, 1988 telephone conversation between R. Gering, Meridian Research, Inc., and P. Doyle, Bureau of Labor Statistics, U.S. Department of Labor) by five percent annually over two years.

[5] Cost per facility is estimated as the sum of costs for air sampling, sample analysis, and recordkeeping.

[6] The estimated total number of burden-hours is calculated by multiplying the number of facilities in each industry sector by the sum of the number of hours needed to conduct sampling and the number of hours needed for recordkeeping.

[7] The total estimated cost for initial monitoring and recordkeeping was calculated by multiplying the number of facilities in each industry sector by the sum of the costs of conducting air sampling, the cost of sample analysis, and the cost of recordkeeping.

[8] Sources: 49 FR 25767, June 22, 1984; and Heiden Associates, Inc., *An Estimate of Industry Costs for Compliance with Two Ethylene Oxide Workplace STEL Scenarios: Ethylene Oxide Production and Ethoxylation Plants* (Final Report), p. ii, prepared for the Ethylene Oxide Industry Council of the Chemical Manufacturers Association, February 5, 1988.

[9] Source: Heiden Associates, Inc., *An Estimate of Industry Costs for Compliance with Two Ethylene Oxide Workplace STEL Scenarios: Ethylene Oxide Production and Ethoxylation Plants* (Final Report), p. ii, prepared for the Ethylene Oxide Industry Council of the Chemical Manufacturers Association, February 5, 1988.

[10] Source: Estimate made by Heiden Associates, Inc., in *A Medical Products Industry Profile for Evaluating Compliance with Two Ethylene Oxide Workplace STEL Scenarios: 10 ppm STEL and 5 ppm STEL* (Final Report), p. i, prepared for the health industry Manufacturers Association, February 22, 1988.

[11] Based on the following: Estimate of 3,600 EtO using facilities (out of 6,300 hospitals) may be Charles R. Manning of Assay Technology, Inc., in "Analytical Chemistry Testimony Regarding Rulemaking on Employee Exposure to Ethylene Oxide," p. 2, presented to U.S. Department of Labor, Occupational Safety and Health Administration, February 20, 1988; and estimate of 4,500 facilities made by Charles O. Hancock, Manager, Process and Power Equipment RD&E, of MDT Corporation, in p. 1 of letter dated February 19, 1988 to Docket Officer, Docket No. H-200, U.S. Department of Labor, Occupational Safety and Health Administration. The estimate of 4,500 facilities was used because it represents the upper bound.

[12] Based on the number of facilities reported in 40 FR 25767, June 22, 1984.

Representativeness and Reliability of the Meridian and Heiden Approaches

In its Proposal (53 FR 1724), OSHA stated Meridian's belief that the sites visited represented the "better" firms in their respective sectors (*i.e.* firms that have active safety and health programs and/or have expended considerable time and effort to attempt to achieve the 1 ppm PEL). The Health Industry Manufacturers Association (HIMA) has contended that Meridian "went into the tail of the curve looking for worst case examples in the noncompliant tail of the curve" (Tr. p. 82). However, in response to questioning at the hearing, Meridian indicated that it chose, for its observations of procedures at small medical product sterilizers two companies which had indicated in earlier rule making that they would have great difficulty in meeting a PEL of 1 ppm or any STEL (Tr. p. 55). This was done so OSHA would not overlook the possible problems of HIMA members in meeting the standard. It is the opinion of OSHA that Meridian's selections of "better" and "worst case" sites added to the broad representativeness of its observations.

HIMA also maintained that Meridian did not visit any companies with large sterilizing facilities (Tr. p. 83). HIMA and the Ethylene Oxide Industry Council (EOIC) criticized the small number of facilities in Meridian's study, compared to the large number of facilities which submitted information sheets to Heiden Associates for the HIMA and EOIC surveys. OSHA believes that the independent review and analysis of workplace conditions performed by Meridian's professional industrial hygiene team provided the Agency with the best available information on the impacts of implementing the excursions limit in actual workplace settings.

Heiden's studies were commissioned directly by the industry groups and were surveys developed with the assistance of members of industry. The "Heiden A" report stated that incremental costs of "STEL compliance measures are 'hypothetical' in the sense that survey-participating firms may not have had experience with measuring short-term exposure levels and/or administering STEL's for ethylene oxide as past or current voluntary company workplace policy of the absence of regulations" (Ex. 205-6, App. A, p. 4).

Although "Heiden A" presented data for 71 facilities (extrapolated to represent 95 total facilities potentially subject to OSHA EtO short-term limit regulations), only four separate companies, operating nine separate facilities, currenty had EtO short-term exposure limits (*Ibid*, p. 12). "Heiden B" was based upon samples from nine companies. The report did not indicate how representative they might be of the universe of sterilizer facilities and chambers (Ex. 205-6, p. 26).

Heiden Associates made no visits to the facilities in its surveys. Although Heiden made follow-up calls by telephone, its staff included no engineers. Heiden's principal investigator testified that "we are economists, so we are not qualified to make judgments as to the feasibility or reliability or quality of the engineering estimates * * *" (Tr. p. 93). Heiden accepted the respondents' estimates of which items they needed, on checklists printed on the survey forms, and merely costed out the engineering control methods. Heiden also included work practice changes in the category of engineering controls and did not analyze or list them separately.

The derivation of cost estimates in Heiden's reports involved methodology which is not convincing to OSHA. For example, Heiden converted all data which were reported as "less than" or "greater than" a specific value to "equal to" that value for the purpose of computer analysis. A further bias entered from the use of the arithmetic mean to represent per-facility costs, which were than multiplied by the number of facilities. This allowed extreme estimates by a few respondents to distort results. For example, Exhibit 7 of the "Heiden A" shows that 17 respondents estimated incremental costs (without respirators) of equipment operation under a 5 ppm STEL to range from $0 to $2,249,520 per facility. The median cost was $0. Yet the arithmetic mean of $188,416 was taken to represent all 17 respondents. OSHA appreciates the willingness of HIMA and EOIC to submit the types of information contained in the Heiden surveys. However, OSHA has determined that the lack of independent engineering or industrial hygiene verification of any of the costs or compliance methods submitted to Heiden, together with the lack of actual site visits by the contractor, leaves the results of the surveys open to considerable question. Accordingly, the Agency does not believe that it can rely upon the estimates contained in the Heiden surveys.

Technological Feasibility

Site visit observations, exposure data, and reports from the trade literature have shown that, in the producer, ethoxylator, hospital, and medical product sterilizer sectors (and, by analogy, the spice manufacturing sector), achieving compliance with 5 or

10 ppm EL is feasible with the use of the same engineering and work practice controls determined by OSHA at the time of the final rule to be feasible to achieve the 1 ppm PEL. The engineering controls implemented by those employers who had achieved compliance with the 1 ppm PEL were standard and widely available controls: local exhaust and general dilution ventilation, the use of closed-loop sampling devices, vapor recovery systems at railcar loading racks, and enclosure/ventilation of aeration and quarantine areas.

HIMA has objected that Meridian did not try any of the controls which it said would work at the sites where it found high exposures (Tr. p. 39). However, Meridian actually observed these controls in use at other facilities, where they had proven effective in achieving the desired exposure levels (Tr. p. 46).

At least one spice manufacturing firm is planning to adopt a substitute for EtO, thus eliminating employee exposures (Meridian Research personal communication, spice company representative, November 21, 1986). OSHA believes it likely that other spice manufacturers will also be able to use a substitute sterilant.

Work practice controls used by employers at the sites visited to reduce exposures include: Opening ("cracking") sterilizer doors for 15 minutes before unloading the sterilizer, pulling rather than pushing carts containing offgassing goods, and performing manual leak detection.

The use of respiratory protection was observed during a few short-term activities: During railcar loading at the EtO producer facility and when entering walk-in sterilizers at medical product sterilization facilities.

In addition to exposure data obtained from site visits, a number of submissions to the EtO docket (Exs. 4–13, 11–132, 139, 179, 198A) indicate that a 5 ppm excursion limit can be achieved during operation of EtO sterilizers in hospitals. Several articles submitted by T. Joel Loving of the University of Virginia's Environmental Health and Safety Office show that the use of vacuum purge systems and exhaust hoods can reduce the 8-hour TWA to or below 1 ppm and the short-term limit to or below 5 ppm for 15 minutes.

The major engineering controls in use at the sites visited to achieve the excursion limits are the same controls that OSHA determined in the Regulatory Impact Assessment (Ex. 163) and JRB Associates' report (Ex. 6–22) to be necessary to achieve compliance with the current 1 ppm PEL. OSHA's analysis shows that, in some instances, employers may need to implement additional work practice controls, such as extending the period of offgassing in the sterilizer, to achieve compliance with a 5 ppm excursion limit. OSHA's findings thus demonstrate that it is feasible to comply with a 5 ppm excursion limit.

Summary of Costs

To assess the magnitude of the costs that might be incurred by employers to comply with a short-term limit, OSHA estimated the costs potentially associated with achieving a 5 ppm short-term limit at each of the nine facilities visited by Meridian Research. OSHA's analysis shows that the 5 ppm short-term limit was already being achieved at the EtO producer site, the ethoxylator site, one large medical product sterilizer facility, and three hospital sites. Therefore, no significant additional costs would be incurred at any of these sites to comply with a 5 ppm excursion limit.

At the remaining large medical product sterilizer site visited by Meridian, exposure data collected on the day-shift sterilizer operator show that both the 10 ppm and 5 ppm short-term limits, were achieved. However, samples taken on the night-shift operator at this site showed that his 15 minute short-term exposures exceeded 5 and 10 ppm. OSHA believes that this operator's short-term exposure could be reduced by allowing the sterilizer load to offgas inside the sterilizer for four hours before the sterilized product is removed by the operator. This practice would not interfere with the work schedule currently being used at this site and would thus be unlikely to result in an increase in costs. If allowing the load to offgas for 4 hours did not reduce this operator's short-term exposures to below 5 ppm, OSHA believes that the sterilization unit's work schedule could be adjusted so that the load could offgas for 8 hours before the operator unloaded the sterilizer.

Neither of the two small medical product sterilizer facilities was currently achieving the 5 ppm excursion limit, and one short-term sample taken at one site (Company F, Ex. 204) exceeded 10 ppm for a sterilizer operator. However, at both of these sites, sterilizer operators and a laboratory technician also had 8-hour TWA exposures that exceeded the current 1 ppm PEL. Area samples taken at these sites indicate that high ambient levels of EtO were present as a result of the offgassing of sterilized product. OSHA believes that installing ventilated, enclosed, quarantine areas and modifying existing ventilation systems are necessary in order to comply with the existing 1 ppm PEL and that these changes would substantially aid in achieving compliance with a 5 ppm excursion limit.

OSHA's findings thus demonstrate that employers are not likely to incur significant costs to comply with an excursion limit. These findings reflect site visit observations and evidence in the record (Ex. 11–132) that the engineering controls that are necessary to achieve the 1 ppm 8-hour TWA also can be implemented to reduce short-term exposures to 5 ppm, although some minor work practice changes may be necessary in some activities. In addition, in those limited situations in which changes in work practices and engineering controls are not feasible, some respirator use may be necessary in for certain sterilization operations, as discussed below.

The 5 ppm excursion limit will be associated with an increased cost burden primarily in connection with the provision dealing with exposure monitoring. The requirement for the monitoring of excursion levels will increase the burden of affected employers because the type of sampling required to evaluate short-term exposures is different from the type of monitoring required to monitor the final standard's 8-hour TWA PEL or the action level. Because some methods for monitoring short-term exposures to EtO have only recently been developed and become commercially available, the cost analysis assumes that employers in the affected sectors will not yet have been able to perform short-term employee monitoring and thus, that all affected firms will need to perform initial excursion limit monitoring. It is clear that this assumption is a worst-case analysis, in that some firms in the principally affected sectors have already performed some short-term sampling and thus will be able to submit previous monitoring results as long as they meet the accuracy requirements of the standard. Further, OSHA has used the cost of its own validated method (OSHA Method 50) as the basis of its monitoring cost estimates. To the extent that other available methods are less costly, these cost estimates will overstate the true monitoring costs under the excursion limit.

OSHA has based the cost estimate for initial monitoring on the assumption that each firm will conduct such monitoring in accordance with the OSHA 50 method. This is assumed to require the retention of the services of an industrial hygiene consultant for 8 hours, at a cost of $40.00 per hour, to collect the necessary short-term samples. The

effect of using this assumption is also to overstate costs somewhat, because many facilities have in-house industrial hygiene personnel and laboratory facilities available to collect and analyze their monitoring samples at a lower cost. This will also substantially overstate costs since data in the record now strongly suggests that passive dosimeters can adequately measure for the excursion limit.

OSHA's original estimate of a cost of $35 per hour for an industrial hygienist (53 FR 1729) was criticized as too low by the Association of Ethylene Oxide Users (Ex. 205–3, p. 6), EOIC (Ex. 205–15A, p. 27), the American Hospital Association (AHA) (Hearings, p. 130), and Kem Medical Corp. (Ex. 206–6, p. 4). These comments apparently based their comments on the need for a *certified* industrial hygienist. The standard does not require the person performing the monitoring to be certified. In response to the comments, Meridian Research reexamined the hourly rate of an industrial hygienist and indicated that a more accurate figure is $40 per hour. This cost includes the costs of pumps, sampling tubes, and packaging and mailing of samples for analysis (Ex. 223). AHA has objected that the sampling tubes cost approximately $100 each, according to "a basic phone survey to the industry itself" (Tr. pp. 130, 140). For the purpose of analysis, OSHA accepts Meridian's estimate, which includes material costs for sampling tubes based upon a supplier's catalog (Ex. 223).

The sectors principally affected by OSHA's EtO standard are: EtO producers; EtO ethoxylaters (*i.e.*, firms which use EtO as a feedstock chemical); sterilizers of heat- and moisture-sensitive medical products and devices; hospitals; and spice manufacturers. The number of short-term samples to be collected will depend on the number and pattern of activities occurring during the day that may cause elevated short-term exposures to EtO. The pattern of exposure varies from sector to sector; for example, sterilizer operators using EtO to sterilize medical devices are generally exposed to elevated short-term exposures four or five times per shift, while the unit operator in an ethoxylation facility performs activities having the potential for short-term exposures two or three times in a working day.

To estimate the average number of short-term samples that employers in each of these sectors would collect to comply with an initial excursion limit monitoring requirement, OSHA relied on the feasibility study conducted by Meridian Research, Inc. [Ex. 204]. While conducting site visits to facilities in the affected sectors, Meridian collected from 3 to 10 short-term (15 minute) samples at each facility. In order to estimate monitoring costs, OSHA thus assumes that employers at each facility will need to collect an average of six short-term samples to fulfill their initial EL monitoring obligation. EOIC claimed that this assumption was "off by an order of magnitude" (Ex. 205–15A, p. 22). Kem Medical Products asserted that collecting only five or six samples "gives you no statistical validity" (Tr. p. 195). However, insufficient evidence has been submitted to persuade OSHA to change its assumption.

OSHA estimates that, under a worst-case scenario, employers in the five principally affected EtO sectors will incur a total cost of $2,526,925 for initial monitoring to comply with the excursion limit. Individual sector costs are: $7,030 for EtO producers; $20,549 for ethoxylators, $51,371 for medical products sterilizers; $2,433,375 for hospitals; and $14,600 for spice manufacturers. This estimate has been revised downward from the $3,161,480 in OSHA's original Proposal (53 FR 1730), primarily because of a drop in the estimated number of EtO-using facilities. (See Table B, below, taken from Ex. 223.)

OSHA has recognized the need to add to the estimated costs of initial monitoring per facility (which includes $320 for eight hours of hygienists' time, $210 for laboratory analysis for six samples, and $10.75 for one hour of clerical time to set up record keeping) an allowance for costs of periodic monitoring. On the basis of their site visits and their review of National Institute for Occupational Safety and Health reports, Meridian has estimated that approximately six percent of EtO-using facilities have at least one employee who is currently exposed below the 8-hour PEL of 1 ppm but above the proposed EL of 5 ppm. It is possible that promulgation of the EL would induce some facilities to change work practices at little or no cost and that employees who had been exposed over the EL would be under it by the time of initial monitoring. As a "worst case," six percent of all facilities would discover upon initial monitoring that they had to continue monitoring until two successive periodic measurements indicated that all employees were under the EL. Thus OSHA is adding an allowance for periodic monitoring costs of 6%, times two, times the total of $530 for conducting sampling and analyzing samples, times the number of facilities. Total costs for the EL standard thus increase to $2,824,128 under this revised worst-case scenario for employers in the five principally affected EtO sectors.

The cost estimates presented above assumed the use of charcoal tubes and OSHA Method 50. Costs would be even lower with the use of dosimeters. According to Assay Technology, Inc., more than 95% of personal monitoring tests for the 8-hour PEL are being done with some type of diffusional badge. (Ex. 206–2, p. 3). Similar dosimeters have been developed for personal monitoring tests for the 15-minute EL, using the same readers. Assay Technology's "EtO STEL BADGE" system which requires the same electronic badge reader as their 8-hour badge, has a list price of $14.00 per test, down to $7.50 per test with large quantity discounts. Establishments that do not have Assay Technology's Electronic Badge Reader may purchase it separately for $950, or at a discount with yearly badge orders (Ex. 206–2, p. 3). Kem Medical Products can collect 24 samples, including analysis, samples for a retail list price of $585.

OSHA believes that in general the only significant incremental costs of the 5 ppm EL involve initial monitoring, record keeping, and (for 6% of facilities) periodic monitoring. HIMA and EOIC have insisted that "ancillary costs" estimated by respondents to Heiden surveys should also be accounted for. OSHA has examined these categories. Leak detection, hazard communication and training, and medical surveillance for meeting the EL do not logically involve any significant incremental cost. There might be incremental administrative respirator program costs—*if* imposing an EL required putting respirators on employees who are now working without them. However, it should be noted that HIMA's "Heiden A" report, hearing testimony, and post-hearing comments (Ex. 222, pp. 4, 12) estimate that of 36 workers (two percent of all "potentially" exposed workers in the medical products industry) who are under the PEL and over 5 ppm short-term exposure. It is unclear how many are currently using respirators. Heiden's principal investigator testified (Tr. p. 87) that Heiden "didn't ask the specific details" of the administrative costs of respirators. Heiden's final "ancillary requirement, "other costs (e.g., "consulting", lab fees, administrative, etc.)" provides insufficient information to enable OSHA to evaluate or incorporate it into this analysis. Under EtO assumption that the number of employees in this group (greater than 5 ppm EL but below 1 ppm TWA) in the

affected industry is 406, these "other costs" cannot be determining and would probably be minimal.

EOIC has objected that the EL standard would impose significant "downstream" costs for products which are capable of releasing EtO in excess of the EL (Hearings, pp. 148–150, 155–163). EOIC was unable to indicate the extent of this potential problem. OSHA considers that, if a manufacturer had reason to believe that a product was capable of significant emissions the manufacturer could monitor for 8-hour exposures (as required under the current standard) and for 15-minute exposures at the same time.

OSHA does not foresee nor do data in the record indicate that there will be any incremental cost in extending the current requirement for precautionary labelling to cover containers whose contents are capable of causing employee exposures above the EL. It is likely that containers of EtO products that could result in exposures above the excursion limit, also could result in exposures above the action level of 0.5 ppm as an 8-hour TWA. Products which may release EtO in concentrations above the action level are already required to be labelled under the 1984 EtO standard. Thus, there are likely to be few products, if any, that require labelling because the excursion limit may be exceeded while the action level may not be. OSHA believes that the possibility of such a situation arising is extremely remote. Moreover, EOIC has submitted no evidence of the extent of this purported problem.

Economic Impact and Regulatory Flexibility Analyses

Based on the proceeding cost analysis, OSHA has determined that the additional costs of complying with the proposed 5 ppm excursion limit are likely to be negligible for employers that are in compliance with the existing 1 ppm PEL. Thus the promulgation of a 5 ppm excursion limit is not likely to have a significant economic impact on typical firms, in each sector or cause adverse differential impacts on small entities in each sector.

Total estimated incremental cost of the 5 ppm EL is less than three million dollars. Total hospital care expenditures (the revenues of the hospital sector, where most EtO users are located) were nearly 180 *billion* dollars in 1986. OSHA agrees with Gas Monitoring and Analysis, Inc. that for hospitals which are in compliance with the PEL, there is "no significant economic impact caused by the pending excursion limit" (Ex. 205–25, p. 3). In the industrial sterilizer sector, OSHA notes that Meridian was told by the two small facilities which it visited that these companies' clients "insisted on full compliance with OSHA regulations and were willing to absorb any compliance costs necessary"* * * (Tr. pp. 37–38).

Relationship Between Short-Term and 8-Hour TWA Exposures to EtO

To address the Court's request that OSHA examine the impact of controlling short-term employee exposures on the residual health risks that remain at the 1 ppm TWA PEL, OSHA assessed the contribution of employees' short-term exposures to their 8-hour TWA exposures. To accomplish this analysis, Meridian obtained concurrent personal 8-hour TWA and short-term air samples during visits to sites in several sectors. Meridian then calculated each employee's total EtO exposure from short-term activities (in ppm-minutes) and each employee's total full-shift exposure in ppm-minutes (determined from the 8-hour TWA). This analysis permitted OSHA to determine the extent to which an employee's 8-hour TWA would be reduced by controlling that employee's short-term exposures.

For example, exposure data were obtained at one ethoxylator facility. The top operator had a non-detectable 8-hour TWA exposure and a single 15-minute exposure of 1.07 ppm that occurred while the operator was collecting a quality control sample from a railcar. Even assuming that this employee's 8-hour TWA was 0.05 ppm (i.e., the limit of detection), the exposure to EtO that occurred during railcar sampling contributed 67 percent of the operator's total exposure for the day. These results show that controlling the operator's 15-minute exposure during this activity (i.e. close loop sampling system) had a significant impact on reducing the employee's 8-hour TWA to well below 1 ppm (see Site Visit Report for Company A, Ex. 204). In addition, short-term and 8-hour TWA exposure data collected at three medical product sterilizer facilities show that reducing the short-term exposures of sterilizer operators and forklift drivers contributed significantly to reducing their 8-hour TWA exposures to below 1 ppm (see Site Visit Reports for Companies C, D, and F, Ex. 204).

This analysis of the contribution of exposures experienced during short-duration, high-exposure activities has shown that controlling short-term exposures has had a substantial impact on reducing employees' 8-hour exposures to EtO. Although most of the sites visited by Meridian will not need to implement additional controls to achieve compliance with an excursion limit of 5 ppm, one site may need to change its work schedule to extend the amount of offgassing time before removal of the load from the sterilizer or of biological indicators from sterilized product. OSHA believes other firms in the affected sectors may also need to implement additional work practices or alter their work schedules to accommodate longer offgassing times, and there may be some limited use of respirators where those controls are not effective or feasible.

OSHA has examine comments by HIMA on the existence of sterilization operations which take place in large industrial sterilizers continuously at full capacity over the full 24-hour day, seven day days a week, and which would not allow time for extended offgassing of sterilized materials. HIMA stated at the hearing that "most large sterilizers are already running continuous cycles." (Ex. 222). However, the Association did not provide additional information on the number of such facilities or the extent to which full capacity is being utilized. OSHA has evaluated HIMA's submittals and acknowledges that there may be some limited situations involving employee entry into large industrial sterilizers, under conditions of full capacity utilization and continuous sterilization cycles, in which there may not be adequate time for offgassing of the sterilized materials in the sterilizer before employees are exposed. In these situations, as is the case with the current 1 ppm TWA, employees would need to be protected by respirators during their entry into and exit from the sterilizer. However, based on its review of the record, including Meridian's site visits, OSHA does not believe that a general exclusion of "sterilizer unloading" is warranted. The Agency has determined that for most sterilizer unloading, a combination of engineering controls and work practices will enable employers to comply with the 5 ppm excursion limit.

Summary of Benefits

To the extent an excursion limit reduces average long-term exposures, then the cancer deaths prevented by adoption of an excursion limit represent the primary benefit derived from this action. As discussed previously in this preamble, it is not possible to quantify the number of deaths prevented by compliance with the excursion limit since data do not reveal the precise incremental EtO dose reduction that will result from limiting 15-minute short-term exposures to 5 ppm. However, OSHA has estimated the risk from a lifetime exposure, assuming exposure only once

a day to a 5 ppm short-term limit, with no other exposure or background levels of EtO, to be approximately 2 to 4 excess deaths per 10,000 workers. The calculated risks, 2 per 10,000 to 4 per 10,000 probably understate the overall risk because it has been established that short-term exposures often occur more than once per day and that background EtO concentration during the day is above zero, additionally contributing to worker exposure. Thus, OSHA believes that the risk from 5 ppm short term exposures will not be insignificant, even if such exposure constituted the employees' only EtO exposure during the workday (*See Industrial Union Department, AFL-CIO* v. *American Petroleum Institute*, 448 U.S. 607 (1980)).

OSHA believes that implementation of this amendment will act to reduce the number of EtO-related cancer cases, although the number of additional lives saved cannot be quantified.

Environmental Assessment-Finding of No Significant Impact

During OSHA's previous rulemaking on EtO, information was solicited from the public on a variety of issues including possible environmental impacts of a revised standard which might contain both a TWA and short-term limit. The information and comments submitted have been reviewed in accordance with the requirements of the National Environmental Policy Act (NEPA) of 1969 (42 U.S.C. 4321, *et seq*), the regulations of the Council on Environmental Quality (40 CFR Part 1500), and OSHA's DOL NEPA Procedures (29 CFR Part 11). As a result of this review, the Assistant Secretary has determined that this proposed action will not have a significant impact on the external environment.

EtO is used primarily as an intermediate in the production of several industrial products, such as antifreeze, polyester fibers, films, and bottles. EtO is also used as a pesticide, fumigant, and antimicrobial sterilant for medical products and spices, and in limited applications for items such as cosmetics, books, railcars, etc.

Adoption of an excursion limit is not anticipated to affect the external environment because: (1) The process equipment containing EtO generally consists of tightly closed and highly automated systems: (2) any emissions that occur to the external atmosphere would dissipate and disperse rapidly; and (3) no solid waste is directly associated what EtO fumigation and sterilization.

Although the removal of increased amounts of EtO from the workplace air might seem to contribute to the pollution of ambient air surrounding EtO operations and applications, this is not anticipated because direct exhaust to the external environment is regulated under EPA air quality standards. In cases where worker exposure is reduced by the use of improved control methods such as chamber ventilation and purge systems, atmospheric emissions of EtO would remain constant, having an insignificant impact on the external environment.

Only minimal amounts of EtO are released from manufacturing processes as wastewater effluents. Treatment of EtO containing wastes usually involves degradation in water (producing ethylene glycol). Wastewater treatment must comply with the requirements of the Clean Water Act of 1977, and under this standard, conventional biological wastewater treatment would effectively remove EtO from water effluents.

In cases where liquid EtO is transported or stored, there may be some potential for spills or leaks. Because of the nature of EtO, however, such occurrences are not anticipated to impact on the environment, since EtO quickly volatilizes and dissipates. Although instances of waste disposal have not been presented to the record, such disposal would be covered by EPA regulations and transportation would be regulated by the Department of Transportation. The requirements of the proposed standard will not alter present methods for waste disposal or transportation of EtO.

Based on this discussion, OSHA concludes that there will be no significant impact on the general quality of the human environment outside the workplace, particularly in terms of ambient air quality, water quality, or solid waste disposal.

V. Summary and Explanation

The requirements set forth in this notice are those which, based on currently available data, OSHA believes are necessary and appropriate to provide additional protection to employees who are now exposed to airborne concentrations of EtO at levels that pose a significant risk of material impairment to their health. OSHA has considered all data and recommendations on the short-term limit issue contained in the EtO docket (H-200).

The following sections discuss new individual requirements of the EtO standard. The sections include an analysis of the record evidence and the reasons underlying the adoption of the various provisions of the standard. The final standard adopts an additional permissible exposure limit of 5 ppm excursion limit averaged over a sampling period of 15 minutes. Engineering controls, work practices, and respirators are required where necessary to reach the excursion limit, and written compliance plans must be developed where the excursion limit is exceeded. Engineering controls must be completed within 6 months from the effective date of the standard. Several proposed provisions of the standard, including those on exposure limits, exposure monitoring, labels, regulated areas, and recordkeeping have been revised and clarified as described in detail below.

Scope and Application, Paragraph (a)(2)

This paragraph currently specifies that the EtO standard does not apply to products containing EtO where data demonstrate that the product is not capable of releasing EtO in airborne concentrations at or above the 8-hour TWA action level of 0.5 ppm. This provision provides for such materials to be excluded from coverage, regardless of their potential for short-term high exposures. Because employers will now be required to comply with an excursion limit as well as an 8-hour TWA, it is no longer appropriate for EtO-containing products to be excluded automatically from the standard if they are capable of exposing employees to EtO concentrations above the EL. Therefore, the product exclusion provision is being revised, as proposed, to incorporate the EL. Briefly, in order for a product containing EtO to be exempted from all provisions of this standard, it must be incapable of releasing EtO above both the 8-hour TWA action level and the 15-minute excursion limit. If a material is capable of exposing employees above any of the levels which would trigger protections under the standard, it is not appropriate to provide an automatic exclusion for such material. To illustrate the potential for dose reduction attributable to this provision it can be calculated that under the present standard a product is exempt if emitted dose remains below 240 ppm/minutes (0.5 ppm × 480 minutes). Thus, for products which may by nature initially emit relatively high EtO concentrations over a short time span, the current standard would exempt such products only if they are not capable of releasing 16 ppm EtO over a 15 minute period (16 ppm × 15 min=240 ppm-minutes). Imposition of the excursion limit would not allow exemption in this example (e.g. for product exemption emitted dose could not exceed 75 ppm-minutes [5 ppm × 15 minutes], rather than 240 ppm-

minutes). Thus, incorporation of the excursion limit, under worst case exposure conditions, into the product exemption, will reduce the allowable release of EtO for products to be exempted from the standard.

The impact of this provision is felt primarily in the area of labeling. Some participants opposed the extension of the product exemption criteria to include the EL, based primarily on the potential burden of having to label products which do not currently require labeling, i.e., products which release EtO below the action level over 8 hours, but which could release EtO in concentrations exceeding the 15-minute excursion limit (Ex. 205–6, 205–11, 205–14). These commenters suggested that OSHA's generic Hazard Communication Standard (§ 1910.1200) adequately addresses issues associated with product labelling and warning of potential hazards to downstream users. In response, the Agency notes that the current labeling provisions for EtO, which were upheld by the Court in *Tyson*, as consistent with those set forth in § 1910.1200. In particular, § 1910.1200(d)(5)(iv) provides that a component in a chemical mixture is "hazardous" (and therefore the mixture must be labeled) if that component "could be released in concentrations which would exceed an established OSHA permissible exposure limit * * *" Permissible exposure limits in Subpart Z of Part 1910 take various forms, ranging from 8-hour time-weighted averages to "ceilings" to "peaks." Under the revised EtO standard, there will be two permissible exposure limits: The 1ppm 8-hour TWA, and the 5 ppm 15-minute EL. Thus, under § 1910.1200, an EtO chemical mixture which could release EtO in excess of either of these permissible exposure limits would require labeling. This is no different from the criteria contained in the revised EtO standard itself.

In testimony at the hearing and in their post-hearing comments (Ex. 225), EOIC contended that there would be an additional burden on manufacturers and formulators of EtO-containing products to provide data to downstream users, in order to enable those users to take advantage of the product exclusion under the standard. However, no data were provided to indicate how the burden would be increased over that of the existing provision, nor was there evidence as to products which currently qualify for exclusion but which would not qualify under the revised rule. OSHA believes that the testing procedures which determine a product's capability of releasing EtO over an 8-hour period can also be used to determine the maximum releases during 15 minute segments within that period.

The intent of the product exemption (paragraph (a)(2)) and labelling requirement (paragraph (j)(1)) is not to encompass products which under extremely unusual instances may unexpectedly or unpredictably release EtO above the excursion limit. OSHA's proposed language that products are within the scope of the rule and must be labelled if they are "capable of releasing" EtO above the excursion limit has caused confusion regarding OSHA's intended practical application of those provisions. OSHA agrees with the suggestion by the EOIC that product exemption and labelling would be more clearly defined by predicating exemption where objective data demonstrate it is "not reasonably foreseeable" that the product will release EtO above the excursion limit (Ex. 225). Thus, as EOIC suggests, OSHA amends paragraph (a)(2) to indicate that this section does not apply to EtO products where objective data demonstrate that the product "may not reasonably be foreseen to release EtO in excess of the excursion limit" * * *. Also as suggested by EOIC, OSHA amends the labelling requirement in paragraph (j) to require labelling of containers of EtO * * * "where contents may reasonably be foreseen to cause employee exposure above the excursion limit." (Labelling is discussed further below).

Permissible Exposure Limit, Paragraph (c)(2)

In the final amendment, OSHA establishes a 5 ppm excursion limit for EtO end revises proposed paragraph (c)(2) to clarify that the excursion limit is to be determined as a time weighted average over a sampling time of 15 minutes. The proposal required that the excursion limit was to be "* * * determined over a maximum sampling period of fifteen (15) minutes." The word "maximum" appears to have led to the misconception that 5 ppm was to be treated as a ceiling limit rather than a time weighted excursion limit. (Exs. 205–6, 205–16). OSHA has no data to support the adoption of a health related ceiling limit for EtO and did not intend to propose the adoption of such a limit. Therefore, for purposes of clarification, paragraph (c)(2) is revised to read: "The employer shall ensure that no employee is exposed to an airborne concentration of EtO in excess of 5 parts of EtO per million parts of air (5 ppm) as determined over a sampling period of fifteen (15) minutes."

OSHA proposed a 5 ppm EL as being both effective and feasible at lowering total EtO dose below that achievable through the 1 ppm 8 hour TWA alone. Other limits were suggested by several parties, ranging from Public Citizen's & AFSCME's recommendation of 3 ppm (Exs. 205–2, 205–9) to EOIC & HIMA's (Exs. 205–3, 205–6) OSHA has determined that, based on the Meridian data and other evidence in the record, a 5 ppm 15 minute EL is feasible and can be reliably and consistently monitored, using available monitoring methodology. There is insufficient evidence on the feasibility of monitoring and attaining lower short-term exposures. Further, the record indicates that no monitoring method has been thoroughly validated for use in monitoring 3 ppm over a 15 minute sampling period. By contrast the record reflects that a 10 ppm EL, while clearly feasible and measurable would not provide adequate reduction total dose, and that a 5 ppm EL is both achievable and effective.

With respect to the length of the permitted sampling period, OSHA believes that collection of EtO over 15 minutes is necessary to ensure that a sufficient amount of EtO is collected for accurate analysis.

Data in the record on available exposure monitoring devices and methods (discussed below under *Exposure Monitoring*) suggest that a reasonable adequate representation of typical short term exposures in the EtO industry can be obtained by performing sampling for a period of 15 minutes. While one commenter (Ex. 205–17) suggested reducing the permitted sampling period to 10 minutes, OSHA retains the proposed 15 minute period based on data in the record that indicates that a variety of devices have undergone validation testing over 15 minute periods and have been reported to exhibit an acceptable degree of accuracy under those test conditions. Equivalent validation test data for sampling over a 10 minute period are not in the record.

Other commentors suggested that the excursion limit sampling period should be related to the length of the short-term task being performed (Exs. 225, 205–6). EOIC (Tr. 157) pointed out that sterilizer loading and unloading can take up to 30 minutes in the medical products sector and that sampling should be averaged over the entire task period. EOIC stated that "The goal of short term exposure monitoring is observation, not interaction" (Tr. 157), and therefore, the length of the short-term task should dictate the length of the monitoring period. OSHA disagrees with these

arguments. The 15 minute monitoring period was chosen based on the length of time believed necessary to collect a sufficient amount of EtO for reliable analysis. It has been shown by data submitted to the record that 5 ppm can be feasibly measured by performing sampling for 15 minutes. More lengthy sampling is not necessary to collect enough EtO for analysis. To permit more lengthy monitoring periods over which the amount of EtO collected could be time-weighted would permit higher doses to occur for operations that take less than 15 minutes. HIMA in the Heiden report (Ex. 205–6) only 36 employees in the EtO medical products sector are exposed above the excursion limit during OSHA does not believe that a 30-minute period for determining the 5 ppm EL is appropriate, for several reasons. First, most employees exposed to short-term bursts of EtO receive those exposures in periods of 15 minutes or less. For example, based on the figure of 3600 to 4500 health care facilities performing EtO sterilization (Exs. 206–2, 205–22), OSHA estimates that 7,200 to 9,000 employees are exposed to short-term EtO bursts in these facilities, lasting 15 minutes or less. By contrast, HIMA's Heiden report indicates that only 36 employees have short term peak exposures 30 minutes in the health care manufacturing sector (Ex. 205–6). For an employee whose actual exposures are 15 minutes or less in duration, a 30-minute EL sampling period would result in an increased total dose of EtO as compared to the 15 minute EL. The employee would be allowed to have 150 ppm-minutes of exposure (5 ppm times 30 minutes) as opposed to 75 ppm-minutes (5 ppm times 15 minutes) under the 15 minute period. In essence, for employees exposed for 15 minutes, averaged over 30 minutes would double the total allowable short-term dose as compared with a 5 ppm 15-minute EL, and would not produce the desired reduction in total dose which this standard is directed at achieving.

OSHA has determined that exposure to EtO under the present standard still presents a significant risk of material impairment to employees. Based on the current record, OSHA believes that compliance with the excursion limit as set-forth in this paragraph will further reduce such significant risk.

As required, OSHA has given consideration to the economic and technological feasibility of the proposed and final excursion limit during the EtO rulemaking. In order to obtain the information necessary to allow the Agency to perform such feasibility analyses, OSHA contracted for the services of Meridian Research, Inc. of Silver Spring, Maryland, to perform site visits and exposure monitoring in representative EtO-using facilities prior to publication of the proposal (Ex. 204). In addition, Meridian staff provided testimony on feasibility at the hearing and provided an analysis of the feasibility issues and data provided to the record during the rulemaking proceeding. Based on these data, and data previously provided to the EtO record, OSHA believes that compliance with the excursion limit is both technologically and economically feasible (see "Regulatory Flexibility and Impact Analysis" section).

Exposure Monitoring, Paragraphs (d)(1)(i), (d)(1)(ii), (d)(2)(ii), (d)(3)(iv), (d)(4)(iii), (d)(4)(iv), and (d)(7)(ii)

Section 6(b)(7) of the Act (29 U.S.C. 655) mandates that any standard promulgated under section 6(b) shall, where appropriate, "provide for monitoring or measuring of employee exposures at such locations and intervals, and in such a manner as may be necessary for the protection of employees." The primary purpose of monitoring is to determine the extent of employee exposures to EtO.

Exposure monitoring informs the employer whether the employer is meeting the obligation to keep employee exposures below the established permissible exposure limits. Exposure monitoring also permits the employer to evaluate the effectiveness of engineering and work practice controls and informs the employer whether additional controls need to be installed. In addition, section 8(c)(3) of the Act (29 U.S.C. 657(c)(3)) requires employers to notify promptly any employee who has been or is being exposed to toxic materials or harmful physical agents at levels that exceed those prescribed by an applicable occupational safety or health standard. Finally, the results of exposure monitoring are part of the information that must be supplied to the physician, and these results may contribute information on the causes and prevention of occupational illness.

One of the more significant issues raised during this stage of the EtO rulemaking involved the availability of monitoring methods and equipment which could be used for an excursion limit. OSHA notes that many of the same arguments about monitoring were raised in the earlier stages of this rulemaking, as well. As was discussed in the preamble to the 1984 final rule, there are many methods available for monitoring EtO in the workplace. Although these methods varied considerably in accuracy and precision, OSHA was at that time confident that they would be refined within a short period of time after the final rule was issued. The record of this rulemaking indicates that such refinement has, in fact, occurred. Data submitted by several manufacturers of monitoring equipment indicates that monitoring of 8-hour TWA exposures is a routine matter today. Further, the available data also indicate that extending many of the existing monitoring methods, including those utilizing passive dosimeters, to incorporate 15-minute periods of exposure will not be a significant problem, either technologically or economically (Exs. 205–5, 205–20, 205–25). OSHA itself has modified and refined its monitoring technology, as reflected in its revised OSHA method 50 (Ex. 203). This method which no longer requires refrigeration of samples, has been validated by OSHA's Salt Lake City Laboratory for concentrations well below the 5 ppm excursion limit over a 15-minute sampling period. Although it was suggested by one commenter that only the OSHA laboratory would either be capable or willing to perform the analysis, (Ex. 206–3) the record indicates that such is not the case. A cursory set of telephone contacts of analytical laboratories by Meridian research revealed that other laboratories are available to do this work. Two such laboratories contacted by Meridian were Galston Technical Services in New York City and Analytics, Inc., in Richmond, Virginia.

It should also be noted that EOIC has submitted a revised monitoring method to ASTM for evaluation of its use at concentrations of less than 5 ppm over 15 minutes (Ex. 205–15). It is clear to OSHA that there are and will be methods available to monitor the excursion limit accurately to determine employee short-term exposures.

Further, the OSHA 50 is far from the only method available for monitoring the 5 ppm excursion limit. As noted above, the most promising development in the EtO monitoring area is the wide use and acceptability of passive diffusion monitors. These monitors, which involve the use of relatively-unobtrusive badges which are affixed to the employee's clothing, use different means of absorbing EtO from the employee's breathing zone. At the end of the sampling period, the badge is removed and analyzed. Data submitted to the record indicate that several dosimeters are now commercially available for use by the EtO industry. For example, as Laurence Locker of Kem Medical Products stated at the hearing with respect to the EO–TRAK device

manufactured by Kem Medical. "There is no difficulty in using this * * * badge to measure this short-term exposure limit" (Tr. 188). Assay Technology (Ex. 206-2) provided written testimony indicating that their " * * * EtO STEL Badge is specially designed to monitor 15-minute exposures in the range of 0-20 ppm * * *" and is " * * * fully available to the EtO industry in a convenient format which is easy to use."

Bacharach, Inc. (Ex. 205-20) also provided technical data with respect to their "AirScan" diffusion monitor. From their test data, Bacharach concluded that " * * * the Bacharach AirScan technology is capable of precisely determining compliance with a 5 ppm 15 minute STEL."

The standard does not specify which method of monitoring is used by the employer to monitor the excursion limit, just as it does not specify the method for monitoring either the action level or 8-hour TWA. The employer has considerable flexibility in determining the monitoring method or methods which best suit the type of work being done, the configuration of the workplace, and other factors.

A number of the specific monitoring provisions that were set forth in the Notice of Proposed Rulemaking have been modified in this final rule, based on data in the record. These provisions pertain to the use of prior results for initial monitoring determination, frequency of excursion limit monitoring, and required accuracy of monitoring methodology. The basis for these revised requirements and for retention of other proposed paragraphs is discussed below.

The final amendment to paragraph (d)(1)(i), as proposed, requires that the employer perform breathing zone sampling that is representative of the 15-minute short-term exposure of each employee. Paragraph (d)(1)(ii) is retained as proposed and requires that representative 15-minute short-term employee exposures be determined on the basis of one or more samples representing 15-minute exposures associated with operations that are most likely to produce exposures above the excursion limit for each shift for each job classification in each work area.

While these exposure monitoring provisions require that the employer determine the short-term exposure for each employee exposed to EtO, it does not necessarily require separate measurements for each employee. If a number of employees perform essentially the same job under the same conditions, it may be sufficient to monitor a fraction of such employees. Representative personal sampling for employees engaged in similar work and exposed to similar short-term EtO levels can be achieved by measuring the exposure of that member of the exposed group who can reasonably be expected to have the highest exposure. This result would then be attributed to the remaining employees of the group.

In many specific work situations, the representative monitoring approach can be more cost-effective in identifying the exposures of affected employees. However, employers may use any monitoring strategy that correctly identifies the extent to which their employees are exposed.

Existing paragraph (d)(2)(i) applies to the excursion limit, and requires employers to perform initial monitoring to determine accurately the short-term airborne concentrations of EtO to which employees are exposed. However, proposed paragraph (d)(2)(iii), which is modified in the final rule as discussed below, contains a provision designed to eliminate unnecessary and redundant exposure monitoring. As proposed, it would permit employers who have monitored short-term employee exposures to EtO within a one-year period immediately preceding publication of a final rule in the **Federal Register** to forego the initial monitoring required by paragraph (d)(2)(i) if the results of monitoring within this period have shown that their employees are not exposed to EtO levels above the excursion limit.

This provision was designed to make clear that OSHA does not intend to require employers who have voluntarily performed employee monitoring to repeat such monitoring if they have reliable and objective data showing that their employees are not exposed to EtO above the excursion limit. There were no substantive comments with respect to the monitoring provisions discussed above with the exception that several parties suggested that monitoring results taken more than over a year prior to publication of the standard should be acceptable in lieu of performing initial monitoring (Ex. 205-6, 205-16). OSHA agrees that a 1 year limitation on acceptable monitoring results may be unnecessarily arbitrary in the instance of EtO excursion limit monitoring. The issue with respect to an EtO short-term exposure limit was initially raised by the Agency in its 1982 ANPR. Data received during the ensuing rulemaking reveals that it has been feasible to monitor short-term elevated exposure for a number of years. In fact, the record reveals that a number of EtO facilities have been conducting monitoring for a voluntarily established short-term limit since at least 1984 (Exs. 11-68, 11-113). OSHA believes that the results of any prior monitoring designed to determine an employer short-term exposure, should be acceptable if such sampling was conducted in accordance with the monitoring provisions prescribed for excursion limit monitoring in this standard. That is, additional initial excursion limit monitoring is not required under this new revision if: prior exposures (paragraph (d)(1)(ii); if such from breathing zone air samples that are representative of 15 minute short-term exposures (paragraph (d)(1)(ii)); if such determinations were associated with operations that are most likely to produce exposures above the excursion limit (paragraph (d)(1)(ii)); and if the monitoring method was accurate, to a confidence level of 95 percent, within plus or minus 35 percent for airborne concentrations of EtO at the excursion limit of 5 ppm (paragraph (d)(6)(ii)). It is noted here that recognition of the fact that employers have been able to monitor for short-term exposures and have been doing so for many years, further supports OSHA's determination that such monitoring is clearly feasible under the new standard.

Based on the discussion above, final paragraphs (d)(1)(i) and (d)(1)(ii) are adopted as proposed, and proposed paragraph (d)(2)(iii) is modified in the final standard to permit the use of any prior monitoring results to fulfill the initial monitoring requirements prescribed under paragraph (d), as long as such monitoring satisfies all other requirements of the new monitoring provisions.

The final frequency of monitoring and termination of monitoring requirements regarding the excursion limit are found in paragraphs (d)(3)(iv), (d)(4)(iii) and (d)(4)(iv) and, with the exception of frequency of periodic monitoring, carry the same provisions as proposed. The excursion limit itself would not change the current frequency and termination of monitoring provisions as they apply to the TWA.

With the adoption of an excursion limit the final rule would contain a TWA, an excursion limit, and an action level. The interrelationship among these three exposure levels would determine the frequency at which employers are obligated to monitor employee exposures. There would be six possible exposure scenarios, or combinations of TWA and short-term exposures, that would determine the frequency of required monitoring if an excursion limit were promulgated. The table below lists these six exposure scenarios, along with the monitoring frequency for each. As indicated previously, the frequency of

monitoring dictated by the action level and TWA would not be changed by adoption of the excursion limit. However, these levels are included in the Table below to clarify what the overall monitoring obligations would be if all three triggering levels existed. (Note: "EL" means "excursion limit" in the table below).

Exposure scenario	Required monitoring activity
Below the action level and at or below the EL.	No monitoring required.
Below the action level and above the EL.	No TWA monitoring required; monitor short-term exposures 4 times per year.
At or above the action level, at or below the TWA, and at or below the EL.	Monitor TWA exposures 2 times per year.
At or above the action level, at or below the TWA, and above the EL.	Monitor TWA exposures 2 times per year and monitor short-term exposures 4 times per year.
Above the TWA and at or below the EL.	Monitoring TWA exposures 4 times per year.
Above the TWA and above the EL.	Monitor TWA exposures 4 times per year; monitor excursion limit exposures 4 times per year.

As is shown by the table above, the action level trigger largely determines whether employers must monitor employee exposure to EtO; the only exception would be the scenario in which 8-hour TWA exposures are below the action level and short-term exposures are above the excursion limit. In this particular case, the existence of an excursion limit would obligate employers to monitor short-term exposures 4 times per year at those job locations where the excursion limit is exceeded, but employers would not be obligated to monitor 8-hour TWA exposures at those job locations. Although OSHA proposed that excursion limit monitoring the performed semiannually where overexposure is found, comment was solicited on the adequacy of this monitoring frequency. The Agency sought comment on whether quarterly or even more frequent periodic monitoring where the excursion limit is exceeded was necessary due to the potential variability in burst type exposure levels from day to day, week to week, or month to month. Views were requested on whether semiannual monitoring of employees who are likely to receive short-term exposures above the excursion limit is sufficiently representative of expected exposures throughout the year.

Data submitted to the record suggest that OSHA's proposed semiannual period requirement may provide an adequate indication as to what an employeee's expected excursion limit exposure profile may be. Operations that cannot be controlled to below 5 ppm on a short-term basis by engineering controls may be subject to widely fluctuating excursion exposures. For example, field investigations conducted by NIOSH (Ex. 205–17) revealed that short-term exposures in 2 poorly controlled hospital sterilization operations ranged from 0.2 ppm to 17.6 ppm. Triodyne, Inc. provided hospital sampling data they collected that revealed 8-hour TWA exposure ranging from 0.1 to 0.6 ppm, while short term exposures during door opening ranged up to 10 ppm (Ex. 205–1). Assay Technology stated that high exposure variations require frequent monitoring (Ex. 2062). AFSCME commented that monitoring should be quarterly and preferably monthly (Ex. 205–9). MDT asserted that continuous monitoring of excursion levels in the only real protection for workers (Ex. 205–22). Gas Monitoring and Analysis, Inc. recommended that continuous documentation of exposure variations is necessary to allow employers to focus on control of short-term exposures (Ex. 205–25). This commenter also stated that monitoring only for the 8-hour TWA leads to workability problems in complying with the excursion limit. Kem Medical stated that continuous monitoring should be performed due to the potential for leaks, spills, and equipment malfunction, and that periodic diagnostic monitoring for the excursion limit is essential (Ex. 206–6). Kem Medical further testified that at least quarterly monitoring should be prescribed. HIMA supported OSHA's proposed semiannual periodic monitoring provision (Ex. 206–1), as did Professional Medical Products (Ex. 205–16). These two commenters further suggested that excursion limit monitoring frequency should be permitted as necessary as determined by professional judgment. Assay Technology (Ex. 206–2) suggested adopting the short-term sampling strategy recommended by Leidel and Busch (Ex. 205–17) that "* * * the employer should monitor each employee in such a fashion that there is a high dose of confidence that each employee has a high percentage of daily exposures below the standard. OMB (Ex. 205–27) urged that OSHA require EtO excursion limit monitoring "as necessary" as prescribed in the recently promulgated benzene standard (52 FR 34460).

The record on EtO indicates that short-term exposures to EtO occur, for the most part, at predictible times during recognized operations (sterilized unloading, tank changing, sterilizer entry etc.) and that the magnitude of such excursions can be great in those instances where the excursion limit is exceeded due to lack of effective controls. It is during periods when the excursion limit is exceeded poorly controlled operations, therefore, that monitoring is justified. This is based on the assumption that exposures which will exceed the excursion limit, as determined by initial monitoring, will continue to exceed the excursion limit whenever that particular activity is performed. Thus, such instances should be closely observed, especially in view of the potentially wide fluctuation in the magnitude of such exposures.

Excursions are experienced predictably in the EtO industry, as opposed to the types of short-term exposures encountered in operations in the benzene industry. In the benzene industry, most short-term bursts are encountered unpredictably. Thus, a requirement to monitor "as necessary" may be appropriate for benzene excursion determinations since it is not clearly defined when short-term benzene exposures will occur. For EtO, however, most burst exposures occur during recognized activities and can fluctuate widely in magnitude. Thus, periodic monitoring for EtO at a minimum frequency is appropriate because it can be performed during periods known to be present potential exposure problems. Based on EtO exposure patterns, OSHA believes that semiannual periodic monitoring, as proposed, is inadequate. It was pointed out by one commenter that semiannual monitoring is "statistically useless" (Ex. 205–26). OSHA agrees and, therefore, requires at least quarterly excursion limit monitoring in the final rule. OSHA also requires additional periodic exposure monitoring where necessary to determine the extent to which an employee exposure exceeds the excursion limit, as suggested by commenters cited above.

Paragraph (d)(4)(iii), permits termination of excursion limit monitoring where initial monitoring required under paragraph (d)(2)(i) reveals employee exposure to be at or below the excursion limit. Likewise, paragraph (d)(4)(iv) permits termination of the periodic excursion limit monitoring under paragraph (d)(3), if at least two consecutive excursion limit measurements taken at least 7 days apart, are at or below the excursion limit. These are the same termination of monitoring requirements that were

proposed and are also the same requirements applicable to the existing action level (i.e. TWA monitoring not required where exposures are below the action level). OSHA believes that incorporating some monitoring termination mechanisms with respect to the excursion limit is reasonable and appropriate as proposed. Comment was requested on these proposed amendments. Comment was particularly requested on the degree of confidence that could be placed in assuming that short-term exposures would remain below the excursion limit, if initial monitoring or two specific periodic measurements indicated such. The Agency requested data on whether short-term EtO exposures in industry could be expected to consistently remain below a given limit, or whether the magnitude of short-term exposures fluctuates so frequently and widely that more stringent demonstration of short-term exposure stabilization was necessary prior to permitting the termination of excursion limit monitoring.

Data were submitted to the record that reveal that relatively large fluctuations in short-term exposure levels can occur during sterilizer unloading operations for which adequate engineering and work practice controls have not been instituted (Ex. 205–17, 206–1, 206–2). Other data reveal, however, that exposures below the excursion limit can be consistently maintained through effective implementation of engineering controls such as local exhaust ventilaton at the sterilizer door and vacuum pump discharge, sterilizer cycle modification, and work practices such as leaving the sterilization area after door opening (Ex. 205–17, 205–22, 205–25). As stated by Meridian Research during testimony at the hearing:

> In the hospital sector, extensive data in the docket, from our site visits, and from NIOSH surveys show that the use of local exhaust ventilation and proper handling of sterilized goods will maintain the short-term exposures of sterile supply technicians to levels below the 5 ppm limit" (TR. 34).

James E. Notarianni of Gas Monitoring and Analysis, Inc., stated:

> I believe that the 5 ppm excursion limit is highly achievable within the hospital gas sterilization environment. In my experience as a consultant to hundreds of hospitals throughout the country, providing real-time EtO exposure measurements as well as breathing zone average exposure measurements, I feel that most hospitals will not experience difficulty maintaining exposure below the 5 ppm excursion limit. The current level of engineering controls generally in use with hospital EtO sterilization equipment, if operating as designed, should be capable of minimizing employee exposure below 5 ppm as a 15 minute average. (Ex. 205–25)

Thus, OSHA believes that employers controlling exposures to within the excursion limit by the engineering controls, and work practices prescribed in this standard are able to maintain such exposures to within that level, mitigating the need for periodic monitoring. As discussed below, however, subsequent exposure determination is required in certain instances. Existing paragraph (d)(5) of OSHA's EtO standard requires additional monitoring for TWA exposures whenever there has been a change in production, process, control equipment, personnel or work practices that may result in new or additional EtO exposures. With the adoption of an excursion limit, revised paragraph (d)(5) will, as proposed also require additional excursion limit monitoring where the employer suspects that workplace changes may increase short-term exposures. The Agency requested comment on this proposed provision. There were no objections to this proposed requirement for additional exposure monitoring. Support for this provision was provided by HIMA in their written testimony as follows: "HIMA agrees that short-term monitoring should be repeated whenever situations arise or workplace changes occur which could possibly increase employe exposure (Ex. 206–1)." OSHA therefore, adopts this provision as proposed.

Paragraph (d)(6) of the current EtO standard requires that monitoring methods be accurate to within plus or minus 25% for EtO concentrations at the 1 ppm TWA, and plus or minus 35% at the action level of 0.5 ppm. These accuracy specifications were based on data in the record that showed that several EtO measurement methods and devices were readily available to employers, and that these methods and devices could meet the specified accuracy requirements for compliance determinations. OSHA believed at the time of the proposal, that a number of measurement methods and devices were also available to employers that could accurately determine compliance with the EtO excursion limit. These included the Qazi-Ketcham Method (Ex. 11–133), direct reading instruments such as infrared detection units, photoionization detection units and gas chromatographs, and the recently developed OSHA method 50 (Ex. 203). Other devices, such as passive dosimeters, were also being developed for use in determining short-term exposures. Data available at the time of the proposal did not indicate, however, that dosimeters were yet capable of accurately measuring short-term EtO levels. Further, because of the wide range of methods and the developmental work being conducted at the time, OSHA did not propose specific accuracy limitations with respect to excursion limit monitoring. The Agency indicated in the Notice of Proposed rulemaking that it believed that additional data were needed to reach an appropriate determination on this issue of accuracy of excursion limit sampling.

Data submitted to the record convinces the Agency that an accuracy requirement for excursion limit monitoring is necessary. For example, the Association for the Advancement of Medical Instrumentation commented that an "* * * issue that concerns us is the absence of accuracy requirements for STEL monitoring. We feel that it is important that OSHA establish accuracy requirements in the final standard's." (Ex. 205–13). Gas Monitoring and Analysis, Inc., comments that they" * * * strongly support the inclusion of an accuracy requirement for short-term exposure monitoring" (Ex. 205–25). Janet Patzman, a Certified Industrial Hygienist employed by a firm that sterilizes packaging components states that:

> OSHA's decision not to propose "specific accuracy limitations with respect to STEL monitoring renders this standard unenforceable. Without defined precision and accuracy requirements for short term monitoring methods, the monitoring becomes a meaningless exercise; there is no recourse or proof that a short term limit has been exceeded. If an employer has conducted short term monitoring by any method indicating compliance, without defined validation parameters OSHA will not be able to "prove" that short term limits are being exceeded and that exposure control measures are required. OSHA must not promulgate a standard without precision and accuracy requirements for an acceptable monitoring method. (Ex. 205–26).

Data in the record further indicate that an accuracy of plus or minus 35 percent, at the 95 percent confidence level, is appropriate and is achievable by a variety of available sampling devices and methods. As discussed previously, several manufacturers of passive diffusion monitors submitted data that suggested that those devices are now suitable for determining 15 minute short term EtO exposures. Included in those submissions were accuracy specifications for those devices. AMSCO provided test data reporting an accuracy of plus or minus 11.4 percent for measurements taken at the excursion limit level by the STELSCAN diffusion monitor (Ex.

205–5). Bacharach reported that their AirScan monitor is capable of measurements in the 3 to 30 ppm range for 15 minutes with an accuracy of plus or minus 10 percent to plus or minus 18 percent (Ex. 205–25). Assay Technology states in their submission that their ChemChip/STELs car has been fully validated at plus or minus 35 percent accuracy at the 5 ppm level (Ex. 208–2. Kem Medical Products Corp. concluded from validated test data on the EO-Trak badge that the accuracy is approximately plus or minus 15 percent, with 95% confidence, for badges exposed to 5 ppm for a period of 15 minutes (Ex. 2056–6). During the informal hearing, Dr. Laurence Locker of Kem Medical Products testified that the accuracy limitation" * * * should not be more stringent than plus or minus 35 percent * * * I would have no trouble * * * meeting that" (Tr. 196).

In conclusion, it is clear to OSHA, based on data in record, that adoption of excursion limit accuracy requirements are necessary to ensure that employees exposures are adequately determined. OSHA also finds that the record supports adoption of accuracy parameters of plus or minus 35 percent at the 95 percent confidence level. As discussed above, the Agency further believes that employers will be able to choose from a variety of exposure monitoring methods that will be in conformance with these requirements.

OSHA, therefore, adopts in final paragraph (d)(6)(ii), the requirement that monitoring to a confidence level of 95 percent, shall be accurate, to within plus or minus 35 percent for airborne concentrations of EtO at the 15 minute excursion limit of 5 ppm.

Final paragraph (d)(7) requires that employers notify employees of the results of excursion limit monitoring performed pursuant to the standard, and inform employees of corrective action being taken by the employer to reduce exposure to or below the excursion limit where the excursion limit has been exceeded. These are the same notification requirements as proposed. Such notification has been determined to be appropriate where TWA monitoring is performed, and is believed to be appropriate where excursion limit monitoring is performed. No objections were received with respect to this proposed requirement. OSHA therefore adopts paragraph (d)(7) as proposed in the final standard.

Regulated Areas, Paragraph (e)(1)

The final provisions of paragraph (e) require employers to identify as regulated areas any locations in their workplaces where occupational exposures to airborne concentrations of EtO exceed the excursion limit or can reasonably be expected to exceed the excursion limit.

The final EtO provision for designating regulated areas conforms to the provision established in the recently promulgated benzene standard (52 FR 34460). Commenters appropriately pointed out that OSHA's proposed regulated areas language for EtO (e.g. that regulated areas be established" * * * wherever * * * exposure * * * may exceed the * * * excursion limit) unreasonably required permanent designation of areas where transient or temporary excess exposures occurred (Exs. 205–11, 205–15, 205–16). OSHA's intention with respect to the provision is to only require designation when excessive exposure occurs.

The language of the final standard therefore has been changed to include language that states that a regulated area is to be established where airborne concentrations of EtO "exceed, or can reasonably be expected to exceed, the excursion for 15 minutes." This also conforms to the comparable provision of the recently promulgated Asbestos Standard (29 CFR 1910.1001). OSHA believes that this new wording more clearly defines the intent of the provision, that, when an employer reasonably expects exposures to be above the excursion limit at a work location or site, he should establish a regulated area in order to prevent employees from unknowingly entering a high exposure area without the proper respiratory protection.

Texaco, Inc. in its submission (Ex. 205–11) stated that areas of a facility that" * * * may be subject to transient or temporary EtO exposures, especially during maintenance activities * * * should be considered "temporarily regulated." OSHA agrees with this assessment.

The intent of OSHA's regulated area requirement is to protect employees from unknowingly entering areas where their exposures would be expected to be above the excursion limit. The final standard, therefore, requires establishment of regulated areas where a reasonable expectation exists that the excursion limit would be exceeded if an employee were to work at that location all day. This both warns employees of the possible need to wear respirators and to keep out if they have no need to be present.

Regulated areas are to be established at all work areas where the excursion limit is exceeded, including maintenance operations. Areas where transient activities such as maintenance operations are being performed and where exposures are temporarily over the excursion limit only need to be temporarily demarcated in the same manner as other areas of overexposure so employees who are not needed in these areas will stay out, and so employees who must enter the areas will put on respirators before entering them. The regulated area provisions of this standard are similar to other OSHA health standards.

Methods of Compliance, Paragraphs (f)(1)(i), (f)(1)(ii), (f)(2)(i) and (f)(2)(ii)

As discussed previously (see section on Summary of Regulatory Flexibility and Impact Analysis) OSHA believes that compliance with the proposed excursion limit can be accomplished by the majority of the EtO industry through implementation of feasible engineering and work practice controls. OSHA, therefore, requires in paragraph (f)(1)(i) of the existing EtO standard, that the employer institute engineering and work practice controls to reduce and maintain employee exposure to or below the excursion limit except to the extent that such controls are not feasible. The final rule further requires, in paragraph (f)(1)(ii), that wherever feasible engineering controls and work practices that can be instituted are not sufficient to reduce employer exposure to or below the excursion limit the employer shall use them to reduce exposure to the lowest levels achievable by those controls, and shall supplement them by the use of respirators. These final provisions are the same as those proposed. Based on available evidence, OSHA believes that the use of engineering and work practices controls will reduce employer exposure to or below the excursion limit for practically all situations. OSHA recognizes in paragraph (f)(1)(iii) of the existing standard, however, that there are some situations where engineering controls are not generally feasible, especially as they pertain to control of short-term exposures. These EtO activities include: Collection of quality assurance samples from sterilized materials; removal of biological indicators from sterilized materials; loading and unloading of tank cars; changing of EtO tanks on sterilizers; and vessel cleaning. These operations generally result in short-term high exposures. Thus, considering that the existing standard permits the use of respirators during these difficult to control activities, OSHA has greater confidence that it is feasible to control virtually all other short-term exposure activities through implementation of engineering and work practice controls. In the Notice of Proposed Rulemaking,

BEST COPY AVAILABLE

OSHA requested comment on whether employers should be permitted to use respirators to achieve compliance with the excursion limit in other situations.

Industry commenters, primarily from the EtO medical products sterilizing sector, asserted that respirator use should be permitted as the primary excursion limit control means for EtO sterilization operations involving entry into large volume walk-in EtO sterilization chambers for product removal. (Ex. 205–6, 205–14, 205–16, 205–26). These commenters asserted that engineering and work practice controls are economically and technologically infeasible for control of this activity and, therefore, respirator use for excursion limit compliance in this instance should be explicitly permitted under the standard.

OSHA has evaluated the available data on the feasibility of the 5 ppm excursion limit in the affected industry sectors, including and has determined that with few exceptions, noted below, employers should have little difficulty in coming into compliance. As reflected in the EOIC submission (Ex. 205–15) and Meridian's site visits (Ex. 205), the EtO production and ethoxylation sectors are almost totally in compliance with the 5 ppm EL at present. The only employees who would be directly affected by the EL in those sectors are those whose tasks are already recognized under the current standard as being generally infeasible to control by engineering and work practices, namely such operations as tank car loading and unloading. (Paragraph (f)(i)(ii) of the current standard allows for the 1 pm TWA to be met through use of respirators for these operations). Thus, the impact of the EL on EtO production and ethoxylation sectors will be minimal.

Similarly, the record indicates that for most sterilization uses of EtO, namely in hospitals and contract sterilizers, exposures can be controlled to meet the EL through a combination of engineering and work practice controls, with some limited use of respirators in large industrial sterilizing facilities under certain circumstances. As is noted in OSHA's regulatory analysis, and as was reflected in the reports of Meridian's site visits, meeting the EL in sterilization facilities involves the control of EtO from two basic sources: first, from the sterilizer itself, and, second, from the sterilized materials, which continue to offgas after the sterilization process, thus exposing employees who move the materials from the sterilizer to storage areas. As the American Hospital Association (AHA) noted in their testimony, the key to controlling EtO exposure from sterilizers in hospitals, which tend to produce short periods of high exposures and very low background levels, is to install certain sterilizer safety features and implement proper work practices. As Freelove S. Knott, R.N., representing AHA, discussed,

> These work place safety features include continuous or pulsing purges that prevent ethylene oxide build up in the sterilizer chamber before the door is open. Installation of dedicated local exhaust at the door opening to remove residual ethylene oxide present as the door opens. An audible alarm to alert the operator when the cycle is completed and the use of transfer carts or baskets to avoid operator exposure to ethylene oxide through the handling of products transferred from the sterilizer to the aerator. (Tr. 121).

The types of controls discussed by Ms. Knott are the same types of controls used to control exposures to meet the current 1 ppm TWA, and are clearly feasible.

Data submitted by the National Institute for Occupational Safety and Health (NIOSH) further support the feasibility of a 5 ppm EL in hospitals (Ex. 205–17). NIOSH investigations of sterilizers control systems in 9 hospitals indicated that the following control measures were effective in controlling EtO exposure: Modifications of the sterilizer cycle to reduce end of cycle EtO concentrations inside the sterilizer chamber, local exhaust ventilation at the vacuum pump discharge, and above the sterilizer door. Work practices that helped to reduce employee exposure to EtO included "cracking" the sterilizer door for 15 minutes before opening it and removing sterilized goods, pulling (not pushing) carts containing EtO-sterilized materials, and performance of leak detection.

Many of the same types of controls and procedures which are effective for lowering EtO exposures in hospitals can also be effective in smaller sterilizers used in industry. As noted by Dr. Laurence Hecker of HIMA, "I think it is a matter of scale * * * (Regarding) our R & D units, * * * which tend to be the same size as hospital sterilizers. If one were to remove goods from a small sterilizer the size of a microwave oven it would not be an engineering challenge or very—or extremely costly, I would think, to be able to engineer some type of an activity where you take the goods out and do something with them." (Tr. 105–106).

OSHA is well aware of the greater difficulty involved in controlling EtO exposures in the unloading of larger sterilizers, for both the 1 ppm TWA and the 5 ppm EL. In the preamble to the final rule in 1984, OSHA anticipated that compliance with the PEL might involve some limited use of respirators. As evidenced by the data provided by HIMA in the EL phase of the rulemaking, the Agency's assessment has proven to be accurate. It is true for the EL, as it is with the TWA, that some operations may need to supplement engineering and work practice controls with respirators. However, as was also the case with the 1 ppm TWA, OSHA does not believe that the need to use respirators in unloading sterilizers under certain conditions justifies a wholesale finding that engineering and work practice controls for all unloading of sterilizers are, therefore, infeasible. The record clealy shows that for most operations involving sterilizer unloading, engineering and/or work practice controls are feasible to control employees' exposures below the EL. Meridian's site visits provide graphic evidence of this fact. As Meridian testified at the hearing,

> We paid particular attention to the way we selected small medical product sterilizers because we were aware from the earlier rulemaking that they anticipated great problems. So, what we did was to go into the record and find, thanks to the EOIC, a list of—I think the number was six, it may have been larger, small companies which came into the record in the earlier rule making and said that if they had to comply with the one ppm TWA they would have to go out of business and if they had to do a STEL. I mean well they would leave before we even published. So we went into that worst case group. We selected the companies that really thought they couldn't do anything at all, and of that group we selected two who were willing to host a site visit and those other two we reported on, they ought thus to be really worst case. They were as happy as we were to find that it wasn't going to be quite so awful. (Tr. 55).

Meridian determined that a change in work practices and a longer offgassing time for sterilized materials in the sterilizer were sufficient to control employee exposures in those facilities that they visited. OSHA recognizes that the work practices recommended by Meridian would not work in all sterilization installations under all operating conditions. In particular, OSHA acknowledges that there may be difficulty in one type of sterilization operation: where sterilization of medical products and other materials is performed in large, room-sized sterilizers into which employees must enter to remove those materials after sterilization, and where those facilities are operated in consecutive 8-hour shifts throughout the full 24-hour day, where it is not possible to provide additional

offgassing time for the sterilized materials in the sterilizer without sevrely disrupting the production process and capacity. As noted above, the Agency has long recognized the problems associated with this type of operation. The standard allows for findings of infeasibility of given operations, and the employer making such findings under the standard must provide adequate respiratory protection for his employees. Therefore, while OSHA recognizes some potential for infeasibility in some operations, the Agency does not believe that it justifies a blanket finding of infeasibility for "sterilizer unloading" per se.

OSHA therfore retains the requirement, as proposed in paragraph (f)(1)(i), that employers institute engineering and work practice controls to reduce and maintain employee exposure to or below the excursion limit except to the extent that such controls are not feasible.

Final paragraph (f)(2)(i), as proposed, requries, where the excursion limit is exceeded, that the employer establish and implement a written program to reduce employer exposure to or below the excursion limit, by means of engineering and work practice controls, and by the use of respirators when permitted. There were no objections to this proposed provision.

OSHA therefore adopts this requirement as proposed, based on the determination that the written plan for achieving the excursion limit is as essential as the written plan requirement adopted for achieving the TWA, in ensuring that the employer implement the necessary controls to reduce exposure. The plan also provides the information that would allow OSHA, the employer, and employees to examine the excursion limit control methods chosen and to evaluate the extent to which these planned controls are being implemented. As with the TWA written plan, the excursion limit compliance plan will be accessible to individuals designated in paragraph (f)(2)(iii) for inspection and copying.

Final paragraph (f)(2)(iv), as proposed, prohibits employee rotation as a means of compliance with the excursion limit for the same reasons that employee rotation is not permitted for compliance with the TWA. This prohibition is consistent with OSHA's view that this control strategy is not appropriate in occupational environmetns involving exposure to potential carcinogens. It results in exposure of a large number of employees to levels of EtO which still present a significant risk. There were no objections to this proposed provision and, therefore, for the reasons discussed above, the final standard includes this requirement.

Respiratory Protection and Personal Protective Equipment, Paragraph (g)(1)(iii)

The final standard, with adoption of an excursion limit, provides that respirators be used to limit short-term employee exposure to EtO in the following circumstances:

(i) During the interval necessary to install or implement feasible engineering and work practice controls to achieve the excursion limit;

(ii) In work operations such as maintenance and repair activities or vessel cleaning or other activities for which the employer establishes that engineering and work practice controls are not feasible to achieve the excursion limit; and

(iii) In work situations where feasible engineering and work practice controls are not yet sufficient to reduce exposure to or below the excursion limit.

These same requirements apply under the current standard with respect to respirator use in complying with the TWA, and are based on OSHA's established policy on compliance methodology (see preamble discussion in the current EtO standard, 49 FR 25734).

Other requirements under this paragraph (g) dealing with "Respirator selection" and "Respirator program," remain unchanged and apply where respirators are used to achieve the excursion limit. There was no substantive objection to these provisions in the record and, therefore, they are adopted as proposed.

Communication of EtO Hazards to Employees, Paragraphs (j)(1)(ii), (j)(3)(i)

The existing EtO standard requires, in paragraph (j)(1)(ii), that employers ensure that precautionary labels are affixed to all containers of EtO whose contents are capable of causing employee exposure at or above the action level. OSHA also adopts in this paragraph, a requirement for labelling of containers of EtO whose contents can foreseeably be expected to cause employee exposure above the excursion limit. This requirement, as discussed above under *Scope* and *Application*, does not conflict with nor exceed the provisions under the Hazard Communications standard that require labelling of hazardous materials that could give rise to employee exposure above an established exposure limit. Rulemaking participants were in favor of ensuring that the final labelling provisions for EtO conformed to and did not go beyond those in the Hazard Communication Standard. The final EtO labelling requirements satisfy those suggestions.

As discussed previously, various participants objected to expanding the labelling requirement based on the potential burden associated with product evaluation. OSHA notes, however, that employers are required under the 1984 standard to evaluate and label EtO products capable of causing exposure above the action level. OSHA believes that the information the employer has gained in performing product evaluation response to this current requirement will substantially assist them in determining the potential for release of ETO above the excursion limit could be exceeded. In addition, employers are aware that, in general, properly offgassed EtO products retain little EtO that may be released downstream. Peak exposures during offgassing will occur immediately upon conclusion of sterilization and diminish over time. Thus, EtO products that may be removed after sterilization and packaged in tight containers without the benefit of a proper offgassing period, would be candidates for products capable of causing substantial downstream exposures. These products are to be labelled, in accordance with the EtO and Hazard Communication Standard, to warn downstream employees who otherwise would be unaware of the existence of a hazardous situation of the potential for such exposure.

It has been suggested (Ex. 225) that the EtO labelling requirement is more restrictive than that required by Hazard Communication. On the contrary, OSHA believes that requiring that EtO products to be labelled only if they may result in exposure above the action level or the excursion limit, is less restrictive than the requirement under Hazard Communication. By contrast, the Hazard Communication standard requires that warning labels be provided for a substance if it is simply determined to be hazardous. Ethylene oxide is considered a hazardous chemical under the Hazard Communication standard by virtue of it having established permissible exposure limits in Part 1910, Subpart Z and by virtue of it being a human carcinogen. Further, OSHA believes that exposure to EtO at 5 ppm or above for 15 minutes, continues to present a significant risk of adverse health effects to affected employees. Thus, warning employees that exposure to a product may present a significant risk to their health is justified. This warning will alert employers to implement control means to ensure that the material will be used in the

workplace in such a manner that the excursion will not be exceeded, thus, reducing the dose of ETO that employees would otherwise receive.

The intent of this labelling requirement is not to encompass products which under extremely unusual instances may unexpectedly or unpredictably release EtO above the excursion limit. OSHA's proposed language that products be labelled if they are "capable of releasing" EtO above the excursion limit has caused confusion regarding OSHA's intended practical application of the provision. OSHA agrees with the suggestion by the EOIC that product exemption would be more clearly defined by predicating exemption where objective data demonstrate it is "not reasonably foreseeable" that the product will release EtO above the excursion limit (Ex. 225). Thus, as EOIC suggests, OSHA amends the labelling requirement in paragraph (j) to require labeling of containers of EtO * * * "whose contents may reasonably be foreseen to cause employee exposure above the excursion limit.

Existing paragraph (j)(3)(i) requires that information and training on EtO be provided to employees exposed above the action level. OSHA also adopts in this final rule, as proposed in paragraph (j)(3)(i), a requirement that information and training on EtO be provided to employees exposed above the excursion limit. There were no objections to this requirement.

OSHA is adopting these provisions based on the determination that informing employees through labeling and training that high levels of hazardous materials might be released into the workplace will better enable affected employees to take precautionary measures to protect themselves.

Dates, Paragraph (m) Effective date

As proposed, the final amendments to the EtO standard would become effective sixty (60) days following publication in the **Federal Register**. In order to establish appropriate start-up dates from the effective date, OSHA requested comment on the length of time employers believed would be necessary in order to achieve compliance with the proposed excursion limit, and the time necessary to establish additional exposure monitoring, respirator, and training programs that would be required by adoption of an excursion limit for EtO. The startup dates discussed below that are established for the various new provisions of the final standard are based on the record and on OSHA's experience with other standards including the 1984 EtO standard, as to the time required for employers to complete exposure monitoring, to obtain necessary equipment such as respirators, to produce written compliance programs, to design, procure, and install engineering controls, to implement training programs, and to evaluate products with respect to required labelling. OSHA believes that the dates set in this standard should be adequate in all but unusual circumstances.

If the time period for meeting any of these startup dates cannot be met because of technical difficulties, employers are entitled to petition the Assistant Secretary for a temporary variance under Section 6(b)(6)(A) of the Act. Based on its evaluation of the feasibility of the standard as discussed above, however, OSHA does not anticipate that many employers will need to use this variance mechanism.

Startup Dates

OSHA believes that expeditious action by employers to achieve compliance with the provision of this standard is warranted. Employees under the current standard are being exposed to EtO at concentrations that present a significant risk of adverse health effects. Compliance with the excursion limit will further reduce total EtO dose, and therefore the risk, to which employees are presently being exposed under the existing rule.

The information provided to OSHA clearly indicates that, with few exceptions, affected employers can be reasonably expected to be able to install feasible engineering controls that would bring their workplaces into compliance with the final standard's excursion limit within 6-months from the effective date of this standard.

Available engineering controls combined with good work practices, such as simply vacating the sterilizer area for 10–15 minutes after opening the sterilizer door after cycle completion, provide a readily available means for employers to comply with this standard in the time-frame specified.

Compliance with the other requirements of the standard within ninety (90) days of the effective date also is believed by OSHA to be appropriate. In response to the requirements set forth in OSHA's 1984 EtO standard, EtO employer have already instituted programs regarding training, compliance plans, respirators, exposure monitoring and work practices, recordkeeping, signs and labels, and regulated areas. Thus, compliance with new burdens imposed by adoption of the excursion limit within the periods specified is believed to be reasonable and appropriate.

VI. State Plan Applicability

Twenty-four states and U.S. territories have their own OSHA-approved occupational safety and health plans. These states and territories are: Alaska, Arizona, California, Connecticut (for state and local government employees only), Hawaii, Indiana, Iowa, Kentucky, Maryland, Michigan, Minnesota, Nevada, New Mexico, North Carolina, Oregon, Puerto Rico, South Carolina, Tennessee, Utah, Vermont, Virginia, Virgin Islands, Washington, and Wyoming. These states and territories are to adopt a standard comparable to that of OSHA's within 6 months of the effective data of the Federal rule.

VII. Authority

This document was prepared under the direction of John A. Pendergrass, Assistant Secretary of Labor for Occupational Safety and Health, U.S. Department of Labor, 200 Constitution Avenue, NW., Washington, DC 20210.

Pursuant to sections 4, 6(b), 8(c) and 8(g)(2) of the Occupational Safety and Health Act (29 U.S.C. 653, 655, 657), 29 CFR 1910.1047 is hereby amended as set forth below.

List of Subjects in 29 CFR Part 1910

Ethylene oxide, Occupational Safety and Health, Chemicals, Cancer, Health, Risk assessment.

Signed at Washington, DC, this 31st day of March, 1988.

John A. Pendergrass,

Assistant Secretary of Labor.

Part 1910 of Title 29 of the Code of Federal Regulations is amended as set forth below:

PART 1910—[AMENDED]

1. The authority citation for Subpart Z of 29 CFR Part 1910 continues, in pertinent part, to read as follows:

Authority: Secs. 6 and 8, Occupational Safety and Health Act, 29 U.S.C. 655, 657, Secretary of Labor's Orders Nos. 12–71 (36 FR 8754), 8–76 (41 FR 25059), or 9–83 (48 FR 35736), as applicable; and 29 CFR Part 1911.

* * * * *

Sections 1910.1045 and 1910.1047 also issued under 29 U.S.C. 653.

2. Paragraphs (a)(2), (c), (d)(1)(i), (d)(1)(ii), (d)(4), (d)(7)(ii), (e)(1), (f)(1)(i), (f)(1)(ii), (f)(2)(i), (f)(2)(iv), (g)(1)(iii), (j)(1)(ii) introductory text, and (j)(3)(i) of § 1910.1047 are revised, (d)(6) and (m)(1) are redesignated as (d)(6)(i) and (m)(1)(i), and new paragraphs (d)(2)(iii), (d)(3)(iv), (d)(6)(ii), (m)(1)(ii) and

(m)(2)(iii) are added to § 1910.1047 to read as follows:

§ 1910.1047 Ethylene oxide.

(a) * * *

(2) This section does not apply to the processing, use, or handling of products containing EtO where objective data are reasonably relied upon that demonstrate that the product is not capable of releasing EtO in airborne concentrations at or above the action level, and may not reasonably be foreseen to release EtO in excess of the excursion limit, under the expected conditions of processing, use, or handling that will cause the greatest possible release.

* * * * *

(c) *Permissible exposure limits*—(1) *8-hour time weighted average (TWA).* The employer shall ensure that no employee is exposed to an airborne concentration of EtO in excess of one (1) part EtO per million parts of air (1 ppm) as an 8-hour time-weighted average (8-hour TWA).

(2) *Excursion limit.* The employer shall ensure that no employee is exposed to an airborne concentration of EtO in excess of 5 parts of EtO per million parts of air (5 ppm) as averaged over a sampling period of fifteen (15) minutes.

(d) * * *

(1) * * *

(i) Determinations of employee exposure shall be made from breathing zone air samples that are representative of the 8-hour TWA and 15-minute short-term exposures of each employee.

(ii) Representative 8-hour TWA employee exposure shall be determined on the basis of one or more samples representing full-shift exposure for each shift for each job classification in each work area. Representative 15-minute short-term employee exposures shall be determined on the basis of one or more samples representing 15-minute exposures associated with operations that are most likely to produce exposures above the excursion limit for each shift for each job classification in each work area.

* * * * *

(2) * * *

(iii) Where the employer has previously monitored for the excursion limit and the monitoring satisfies all other requirements of this sections, the employer may rely on such earlier monitoring results to satisfy the requirements of paragraph (d)(2)(i) of this section.

(3) * * *

(iv) If the monitoring required by paragraph (d)(2)(i) of this section reveals employee exposure above the 15 minute excursion limit, the employer shall repeat such monitoring for each such employee at least every 3 months, and more often as necessary to evaluate exposure the employee's short-term exposures.

(4) *Termination of monitoring.* (i) If the initial monitoring required by paragraph (d)(2)(i) of this section reveals employee exposure to be below the action level, the employer may discontinue TWA monitoring for those employees whose exposures are represented by the initial monitoring.

(ii) If the periodic monitoring required by paragraph (d)(3) of this section reveals that employee exposures, as indicated by at least two consecutive measurements taken at least 7 days apart, are below the action level, the employer may discontinue TWA monitoring for those employees whose exposures are represented by such monitoring.

(iii) If the initial monitoring required by paragraph (d)(2)(1) of this section reveals employee exposure to be at or below the excursion limit, the employer may discontinue excursion limit monitoring for those employees whose exposures are represented by the initial monitoring.

(iv) If the periodic monitoring required by paragraph (d)(3) of this section reveals that employee exposures, as indicated by at least two consecutive measurements taken at least 7 days apart, are at or below the excursion limit, the employer may discontinue excursion limit monitoring for those employees whose exposures are represented by such monitoring.

* * * * *

(6) * * *

(i) * * *

(ii) Monitoring shall be accurate, to a confidence level of 95 percent, to within plus or minus 35 percent for airborne concentrations of EtO at the excursion limit.

(7) * * *

(i) * * *

(ii) The written notification required by paragraph (d)(7)(i) of this section shall contain the corrective action being taken by the employer to reduce employee exposure to or below the TWA and/or excursion limit, wherever monitoring results indicated that the TWA and/or excursion limit has been exceeded.

(e) *Regulated areas.* (1) The employer shall establish a regulated area wherever occupational exposure to airborne concentrations of EtO may exceed the TWA or wherever the EtO concentration exceeds or can reasonably be expected to exceed the excursion limit.

* * * * *

(f) * * *

(1) * * *

(i) The employer shall institute engineering controls and work practices to reduce and maintain employee exposure to or below the TWA and to or below the excursion limit, except to the extent that such controls are not feasible.

(ii) Wherever the feasible engineering controls and work practices that can be instituted are not sufficient to reduce employee exposure to or below the TWA and to or below the excursion limit, the employer shall use them to reduce employee exposure to the lowest levels achievable by these controls and shall supplement them by the use of respiratory protection that complies with the requirements of paragraph (g) of this section.

* * * * *

(2) *Compliance program.* (i) Where the TWA or excursion limit is exceeded, the employer shall establish and implement a written program to reduce exposure to or below the TWA and to or below the excursion limit by means of engineering and work practice controls, as required by paragraph (f)(1) of this section, and by the use of respiratory protection where required or permitted under this section.

* * * * *

(iv) The employer shall not implement a schedule of employee rotation as a means of compliance with the TWA or excursion limit.

(g) * * *

(1) * * *

(iii) In work situations where feasible engineering and work practice controls are not yet sufficient to reduce exposure to or below the TWA or excursion limit; and

* * * * *

(j) * * *

(1) * * *

(ii) The employer shall ensure that precautionary labels are affixed to all containers of EtO whose contents are capable of causing employee exposure at or above the action level or whose contents may reasonably be foreseen to cause employee exposure above the excursion limit, and that the labels remain affixed when the containers of EtO leave the workplace. For the purpose of this paragraph, reaction vessels, storage tanks, and pipes or piping systems are not considered to be containers. The labels shall comply with the requirements of 29 CFR 1910.1200(f) of OSHA's Hazard Communication

standard, and shall include the following legend:

* * * * *

(3) * * *

(i) The employer shall provide employees who are potentially exposed to EtO at or above the action level or above the excursion limit with information and training on EtO at the time of initial assignment and at least annually thereafter.

* * * * *

(m) * * *

(1) * * *

(ii) The requirements in the amended paragraphs in this section which pertain only to or are triggered by the excursion limit shall become effective June 6, 1988.

(2) * * *

(iii) Compliance with the excursion limit requirements in this section shall be by September 6, 1988, except that implementation of engineering controls specified for compliance with the excursion limit shall be by December 6, 1988.

* * * * *

[FR Doc. 88-7397 Filed 4-4-88; 12:00 pm]

BILLING CODE 4510-26-M

VOL 53 ISS 66 AP 6 1988 UMI

federal register

Wednesday
April 6, 1988

Part V

Department of Transportation

Coast Guard

46 CFR Ch. 1

Dry Cargo Ship Subdivision and Damage Stability; Advance Notice of Proposed Rulemaking

DEPARTMENT OF TRANSPORTATION

Coast Guard

46 CFR Ch. I

[CGD 87-094]

Dry Cargo Ship Subdivision and Damage Stability Regulations

AGENCY: Coast Guard, DOT.

ACTION: Advance notice of proposed rulemaking.

SUMMARY: The Coast Guard is considering regulations to require new, oceangoing, foreign and domestic dry cargo ships greater than 330 feet (100 meters) in length and of 500 gross tons or over entering U.S. ports to meet a minimum standard of subdivision and damage stability. At the present time there are no requirements for cargo ships, which may carry sizeable quantities of hazardous materials in packages, to be designed to remain afloat without capsizing after sustaining even minor damage which may occur as a result of a collision or grounding. This advance notice provides a preliminary draft of the proposal for public comment. These draft regulations represent a commitment by the United States to expedite implementation of a standard approved by the Sub-Committee on Stability and Load Lines and Fishing Vessels Safety (SLF) of the International Maritime Organization (IMO) in anticipation that the Maritime Safety Committee (MSC) will approve the Circular that implements this standard. The standard is outlined in Annex 2 of SLF 32/21, the report of the Sub-Committee. It has been forwarded to the MSC of the IMO, for adoption as an amendment to the International Convention for the Safety of Life at Sea, 1974 (1974 SOLAS). It is anticipated that these draft regulations will become effective concurrently with the international standard.

Because of the paramount marine safety issues involved, and consistent with the recommendation of the SLF Sub-Committee, the United States intends to implement the provisions of Annex 2 of SLF 32/21 at the earliest possible date consistent with international application. In the unlikely event that the MSC fails to adopt these standards, it will be necessary to reconsider the application of these draft regulations. In particular, to be effective and in order to ensure a uniform level of safety to the U.S. ports and the surrounding environments, the Coast Guard will consider a phased in application of the draft regulations to existing dry cargo ships entering U.S. waters. Most existing U.S. flag dry cargo ships are expected to meet the draft regulations without modification.

DATES: Comments on this advance notice must be received on or before January 3, 1989.

ADDRESSES: Comments should be mailed to Commandant (G-CMC/21) (CGD 87-094), U.S. Coast Guard, Washington, DC 20593-0001. The comments and materials referenced in this notice will be available for examination and copying between 8 a.m. and 4 p.m., Monday through Friday, except holidays, at the Marine Safety Council (G-CMC/21), Room 2110, Coast Guard Headquarters, 2100 Second Street SW., Washington, DC 20593-0001. Comments may also be hand delivered to this address.

FOR FURTHER INFORMATION CONTACT: Mr. J.S. Spencer, Office of Marine Safety, Security, and Environmental Protection (G-MTH-3/13), Room 1308, U.S. Coast Guard Headquarters, Washington, DC 20593-0001, PH: (202) 267-2988.

SUPPLEMENTARY INFORMATION: The public is invited to participate in this advance notice of proposed rulemaking by submitting written views, data, or arguments. Persons submitting comments should include their names and addresses, identify this notice as CGD 87-094, give the specific sections of the proposal to which their comments apply, and give reasons for the comments. If acknowledgement of receipt of a comment is desired, a stamped self-addressed postcard or envelope should be enclosed. No public hearing is planned, but one may be held if written requests for a hearing are received and it is determined that the opportunity to make oral presentation will aid the rulemaking process.

An analysis of the economic effects of this proposal along with an analysis of its technical content has been done. The purpose of this advance notice is to solicit comments on the technical merits of the proposal, its safety and environmental benefits, and its probable economic effect. Reference numbers in the preamble text refer to the Section "I. References Cited," at the end of the preamble. Comments from the maritime community and any other interested parties are requested. All comments received will be considered in preparing a Notice of Proposed Rulemaking.

Drafting Information

The principal persons involved in the drafting of this proposal are LT Randall R. Gilbert, Project Manager, and LCDR Joseph P. Brusseau, Staff, Office of Marine Safety, Security, and Environmental Protection; and LCDR Don M. Wrye, Project Attorney, Office of the Chief Counsel.

A. Introduction

Subdivision is the partitioning of a ship's internal volume into watertight compartments. Its purpose is to limit the quantity of water which may enter the ship following accidental hull damage or internal piping failure. Damage stability is the ability of a ship to avoid capsizing following accidental flooding. If uncontrolled flooding occurs without adequate subdivision and damage stability, the loss of the ship is virtually certain. Many disasters could possibly have been avoided if the ships had been subdivided and many others did not become disasters because the ships were subdivided. Casualties which result in capsizing or sinking typically involve loss of life, loss of the ship and its cargo, and release of quantities of oil and toxic chemicals into the environment. A recent study of casualty statistics [1] shows that as many as 37 percent of Roll-on/Roll-off (RO-RO) dry cargo ships were total losses following a collision. This is more than twice the rate for similar ships having some degree of subdivision in their cargo holds. This loss of life and property can be reduced if adequate subdivision and damage stability is provided in the design of all dry cargo ships.

Samuel Johnson, the 18th Century English author and critic, summed up the perils of the sea by observing,

> Being in a ship is being in a jail with the chance of being drowned.

It took more than a century of lost ships and mariners before his countryman, Samuel Plimsoll, succeeded in gaining agreement on a standard to limit the overloading of ships. Today the Plimsoll Mark, or Load Line, is firmly established among the standards of ship safety which have since emerged through international deliberations and treaties. These standards include structural adequacy, stability, fire protection, lifesaving equipment, and radio communications aboard all merchant ships.

For dry cargo ships there are not yet any domestic requirements, or internationally adopted agreements for dealing with the most common peril of the sea—flooding of the hull. Roughly 100 million dollars may be spent to build a ship which will take to sea a crew of up to thirty, and will carry 50 to 100 million dollars in goods as cargo, but which will sink if even a single, small opening is made in the hull below the waterline. Although the ship and cargo may be insured, there can be no

justification for the lives lost, the huge sums spent on inquiries and litigation, the pollution of the environment, the interruption of vital transportation services, the disruption of regular port activities and all their associated costs to society. In most cases, well-placed, watertight bulkheads can substantially reduce these effects because the ship would not be lost.

Flooding may be caused by a wide variety of circumstances. The draft regulations will not prevent those circumstances, which have already been addressed to a great degree in other domestic and international regulations. Instead, they will improve maritime safety by requiring ship design practices that reduce the consequences of any flooding that may occur.

These technical standards will impact on nearly everyone in the marine industry. Therefore this notice is addressed particularly to each of the following groups:

Ship Owners and Operators: The draft regulations should be useful when purchasing or chartering a ship in that the safety of the ship will be increased.

Ship Designers: The draft Regulations should ensure a proper subdivision index and adequate level of safety against flooding. International standards for dry cargo ships have been in the making for over 27 years. Since the draft regulations implement a standard that has been agreed to and will soon be adopted internationally, designers can be confident that some other standard will not make a new design obsolete and that their designs will remain competitive with the international fleet.

Ship Masters, Officers, and Crew: The draft regulations increase the likelihood that ships and their crews will survive accidental damage resulting in flooding, which occasionally occurs in this hazardous occupation.

Port Authorities and The Public: By improving the survivability of ships, the draft regulations would reduce the likelihood that ports and waterways will be obstructed by a collision or grounding. They would reduce the probability of disruption of vital transportation services. They would also reduce the threat to the surrounding environment from pollution by fuel oil or hazardous chemicals following a casualty.

National and International Shipping Interests: Maritime commerce is an inherently international activity, so the improved maritime safety sought by these draft regulations is in the best interests of all those who send their fortunes to sea in ships.

Marine Underwriters, Chambers, Unions, Brokers, and Classification Societies: The draft regulations will provide a tool for risk assessment and management.

Other Administrations and Flag States: The draft regulations for subdivision and damage stability will require new, oceangoing, dry cargo ships of every flag entering U.S. ports to comply with them.

Search and Rescue Organizations: The draft regulations will increase the probability of detection of survivors in a casualty by reducing the probability of sinking following flooding.

B. Background and History

1. The Problem

There are a number of circumstances by which a ship's hull may be opened to the sea and flooded. These include:

- Collision with another ship or ice
- Striking a shoal, pier, or other fixed object
- Structural failure of the hull
- Breaching of a hatch or hull closure due either to negligence or to structural failure
- Internal seawater piping system failure
- Firefighting water
- Terrorism or sabotage
- Warfare

Collisions, rammings, and groundings account for 40% of ship casualties. Recent studies [2,3,4] have shown that about four percent of ships will be involved in a collision each year.

It is a simple fact that, in the absence of adequate subdivision, unchecked flooding will eventually sink even the largest ship. A hole no bigger than a dinner plate can cause flooding so rapid that even prompt action by the crew may not save a poorly subdivided ship. Capsizing, which virtually rules out a means of escape, may occur within minutes after flooding begins.[5,6] In the words of Marshall Meek, former deputy chairman of "British Maritime Technology;"

> It should be clearly understood that the concept of a ship capsizing rapidly before the personnel can get off is new and constitutes the fundamental difference between ro/ros and all conventional ships from time immemorial.[7]

Watertight subdivision bulkheads are a built-in, passive defense intended to confine flooding. When flooding water is confined by bulkheads, the damaged portion of the ship is isolated. Properly located subdivision bulkheads are intended to provide the undamaged part of the ship with sufficient buoyancy and stability to remain afloat without capsizing. The restricted time available to abandon ship has a very profound affect in terms of human survival. One study found that in incidents which involved sinking within minutes, 86% of personnel on board perished.[8] In almost every case of accidental flooding, the properly subdivided ship remains the crew's best hope for survival. In those cases where the ship is so grievously damaged that it cannot be saved, subdivision and damage stability give the crew enough time to use their lifesaving equipment and abandon ship in an orderly fashion.

Although the value of subdivision has long been recognized, there is still no U.S. requirement or internationally required standard for subdividing dry cargo ships. For a variety of reasons, many existing ships satisfy or nearly satisfy the draft regulations, and many ship designers, owners, and operators routinely incorporate subdivision as a matter of professional pride and sound business practice. The long-established rules of construction did not envision the open cargo holds of today's RO–RO ships. These rules have not been updated, principally because the classification societies have been looking to the governments of the world for initiative in this area.

2. Casualties

Casualty information has been gathered from a number of sources, primarily from existing published papers and analyses based on the Lloyd's Shipping Information Service-Lloyd's Register returns, Det norske Veritas (DnV), and the compilations of the International Maritime Organization.

The following are capsule descriptions of various casualties directly and indirectly related to subdivision that affected lives and property inside and outside the shipping industry.

MONT LOUIS, a 5486 ton deadweight French RO–RO, was hit by the RO–RO car-passenger ferry OLAU BRITANNIA off Ostende, Belgium in August 1984. After withdrawal of the passenger ferry's bow, the MONT LOUIS capsized and sank within minutes. This sinking caused much controversy after it was announced that some of the MONT LOUIS' cargo was spent low grade radioactive material. Fortunately, the sinking occurred in only 43 feet of water, so the cargo could be recovered.

HERALD OF FREE ENTERPRISE, a 7951 gross ton British RO–RO car ferry designed to carry many passengers, capsized just outside Zeebrugge, Belgium in March 1987 after water rushed into the vehicle deck through open bow doors. Because of the large expense of open deck which flooded, the capsizing was rapid and left no time to abandon ship. At least 193 people

perished. Although the draft regulations would not apply to this ship, this casualty illustrates the danger of large, open decks near the waterline and the absolute necessity of maintaining watertight closures.

EDMUND FITZGERALD, a 26,000 ton deadweight U.S. Great Lakes bulk carrier, foundered in a severe November 1975 Lake Superior storm. Typical of Great Lakes ships before the advent of the 1986 U.S. regulations requiring tight transverse bulkheads, it was fitted with nontight screen bulkheads between the three holds. Once hold flooding began, it was progressive; the end was so quick that no distress calls were issued and all hands went down with the ship.

MARIEVA, a 3953 gross ton Greek general cargo ship, developed leaks in hold Number 3 and sank off Bajaia in February 1984. When water in the hold reached sea level, the crew abandoned ship. The investigation found that the sinking was due to hull cracks in the hold.

LAGODA BEACH, a 4350 gross ton Greek general cargo ship, developed a leak in hold Number 1 and eventually sank at Lat.13°50′ N., Long. 49°15′ E. in November 1983. The investigation board found that the sinking was caused by pipes that were badly stowed and continuously striking the hull in hold Number 1.

Increasingly, packaged dangerous goods are being shipped around the world. The potential for serious environmental damage is high when a ship carrying such goods is sunk. Every effort should be made to protect dangerous cargoes after accidents. The following cargo casualties are intended to demonstrate the potential for catastrophe if a ship carrying similar cargoes were to capsize or sink.

ARIADNE, a 24,198 ton deadweight Panamanian bulk carrier, ran aground departing Mogadishu, Somalia in August 1985. Of the 600 containers on board, 118 were loaded with hazardous and toxic chemicals such as xylene, toluene, acetone, tetraethyl lead, and calcium carbide. During the forty days it took to clean up the damage, many inhabitants had to be evacuated from the port and environs.

CASON, a 9191 gross ton Panamanian cargo ship, grounded and burned off Cape Finesterre, Spain in December 1987. Approximately twenty percent of the cargo included toxic and explosive chemicals such as pure sodium, aniline oil, and ethane. Besides claiming the lives of 23 crew members, the thick black smoke billowing from the wreck caused an estimated evacuation of 20,000 people from the nearby Spanish coast.

Adequate subdivision and damage stability can give the crew of a stricken ship time to abandon it in an orderly fashion.

PACBARONESS, a 26,681 ton deadweight Liberian bulk carrier, was hit by the pure car carrier ATLANTIC WING off Point Conception, California in September 1987. Struck at a bulkhead between holds four and five, the ship began to sink, but slowly enough to allow the crew to abandon ship to the car carrier. For nearly ten hours the ship lay with the stern awash. Some of the crew even reboarded the vessel and attempted to save it. Unfortunately, the ship was eventually lost, apparently due to slow progressive leakage into the machinery spaces.

Given all the different types of serious accidents that occur to ships, which types of ships suffer the most serious accidents? Det norske Veritas (DnV) has investigated this question for vessels classed by their society between 1978 and 1983.[8] From Figure 1 below it can be seen that dry cargo ships, which make up the biggest portion of the world's fleet, suffer the most serious accidents per year per 1000 ships.

BILLING CODE 4910-14-M

VOL 53 ISS 66 AP 6 1988 UMI

Figure 1

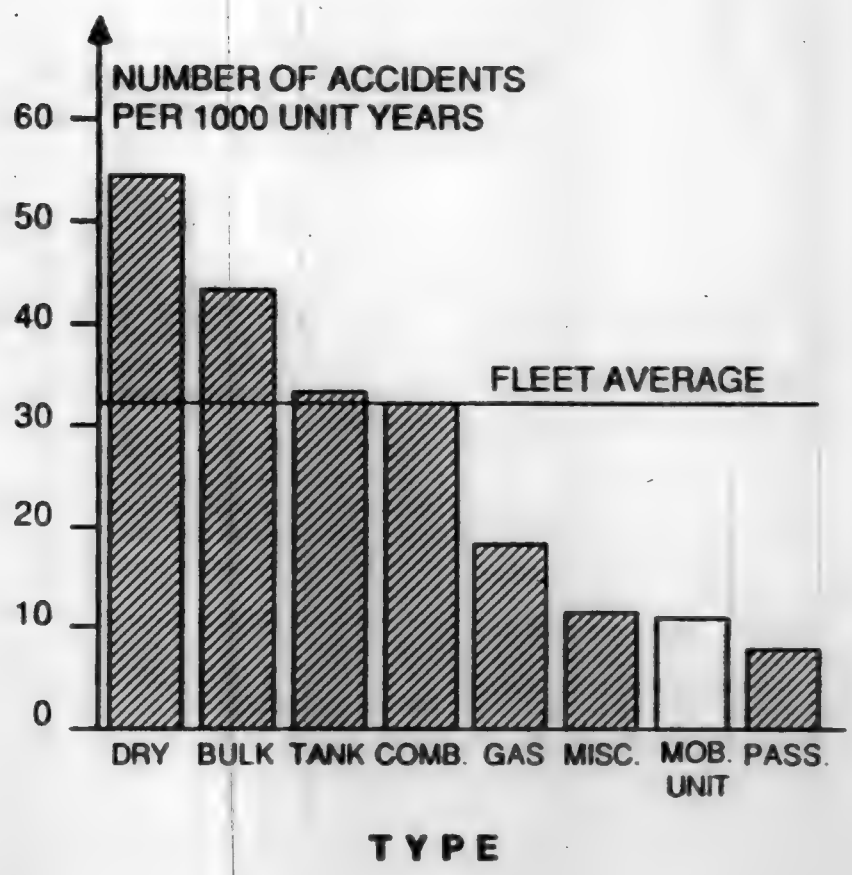

Figure 1. Number Of Serious Accidents Per 1000 Unit-Years Between 1978-1983 For DnV Fleet Over 100 GRT.

BILLING CODE 4910-14-C

On average, collisions and groundings account for between forty and fifty percent of the world fleet's total losses.[9] In terms of numbers the general risk of serious collision alone (i.e. pentration of the hull below the waterline to ships is about four to five a year per one thousand ships.[10] To evaluate the risk of collision and to assess the survival capability of different types of dry cargo ships, DnV in the same study referenced earlier analyzed 616 collisions for ships classed in their society. The results of their study, given in Table 1, show that passenger/cargo ferries, RO–ROs, and general cargo ships have the lowest collision survival capabilities.

TABLE 1. COLLISION SURVIVAL CAPABILITY FOR VARIOUS SHIP TYPES

Shiptype	n	x	Survival percent
Bulk Carrier	20	6	70.0
General	110	67	39.1
RO/RO	9	6	33.3
Pass./Cargo/Ferry	2	2	0.00
Container	5	0	100.0
Other	3	0	100.0
Total	149	81	45.6

n=Number Of Collisions With Water Ingress
x=Number Of Non Survivals With Water Ingress

RO–ROs form a unique and interesting subset to the family of dry cargo ships. Beginning in the late 1940s and early 1950s, the roll-on, roll-off principle has become a popular, permanent, and growing segment of the dry cargo fleet. For the shipper, the RO–RO ship offers a number of advantages over traditional cargo ships, notably cargo handling speed. As the name implies, wheeled cargo can be driven straight on board at one port and off at another port shortly after the ship docks.

Although RO–ROs have been a commercial success, concern about their safety has been expressed ever since the first RO–ROs were introduced. This concern continues to the present as indicated by the "International Conference on RO–RO Safety and Vulnerability: The Way Ahead," held in the United Kingdom last year. A number of potential problem areas make these vessels unique, such as a lack of full breadth transverse bulkheads, large cargo access doors near the waterline, low freeboards to the cargo access doors, and cargo stowage and securing.[11]

Compared to the world fleet average, the study showed that total losses as a result of collision were much higher for RO–ROs (9% world fleet vs. 25% RO–RO). The study also noted that 70% of all RO–RO total losses due to collision resulted in loss of life and that 60% were reported to have capsized or sunk following collision in less than ten minutes! Quoting a prominent British naval architect,

> Most accidents to ships are unusual, but for a RO–RO ferry to capsize after an accident is not unusual.[7]

The point to be made is not that RO–RO ships sink or suffer serious accidents more often than other ships, but that they do so for different reasons.

With regard to collisions and the phenomenon of rapid capsizing and sinking, an interesting study cited by Galloway[5] was carried out by a Dutch shipyard, which believed there was a need to investigate the subdivision and damage stability of RO–ROs. The ship used in their studies was a 183.2 meter, 23,500 ton deadweight RO–RO. Among the conclusions reached is that RO–ROs which are not subdivided are susceptible to capsizing and sinking when progressive flooding takes place and that sinking is rapid when water reaches and accumulates on decks. In one damage case:

> The study found that a five meter square hole effecting the middle hold, wing tank ventilator duct and, indirectly, two lower holds, caused capsize in about five minutes.

A further study by a major classification society, also cited by Galloway,[5] concluded that a RO–RO vessel with no subdivision in the tween decks will sink in about two and one-half minutes when the standard damage defined by the SOLAS 1960 Convention is applied.

The subdivision of RO–ROs need not be this poor. Some designers have traded away subdivisions in their desire for open decks. Others[12] have found ways to provide both open decks and adequate subdivision. In fact, some RO–ROs have been built which not only comply with the draft regulations, but in fact significantly exceed them.

Any discussion of shipping casualties, especially when the goal is to improve safety of shipping, must address the inexorable and pervasive loss of dry cargo ships. Unfortunately the facts most associated with marine casualties are the sinkings of passenger ships where the loss in human terms is high. Almost everybody has heard of the TITANIC and LUSITANIA and more recently the DONA PAZ, ADMIRAL NAKHIMOV, and the HERALD OF FREE ENTERPRISE. However, how many have heard of the ARIADNE or the CASON mentioned earlier? The tragic loss in human terms of the occasional and well publicized casualty obscures the routine, almost every-other-day loss of ships. On average, between 140 and 150 total losses occur per year to ships of 1600 gross tons and over or 500 gross tons and over when loss of life occurs.[13] The total losses in terms of ships alone tend to obscure the fact that quite often tremendous amounts of cargo are also lost, which in the public mind might popularly include refrigerators and television sets. The "what" quite realistically might also include acetone cyanohydrin (an industrial chemical), aluminum phosphide (a pesticide), tetraethyl lead (a gasoline additive), methyl isocyanate (an industrial chemical associated with the infamous Bhopal tragedy), or any in a nearly endless number of extremely toxic materials that can be packaged and transported on board ship.

Dry cargo ships constitute a majority of the world fleet and suffer the highest number of serious casualties both in absolute numbers and per ship per year. By virtue of the number of vessels and number of casualties, dry cargo ships form the largest and potentially most dangerous segment of unregulated ships from a subdivision and damage stability standpoint.

By every indication, the past year has been a very disastrous one for ships. Discounting the well publicized passenger ship disasters, 1987 claimed some large and notable cargo ships including:[14]

- TESTAROSSA, a large Philippine bulk carrier
- CATHAY SEATRADE, a large Taiwanese bulk carrier
- TUXPAN, 8,350 gross ton Mexican containership
- HANJIN INCHEON, 17,679 gross ton Korean containership
- CUMBERLANDE, 21,384 gross ton British bulk carrier
- TOPKAPI S., 36,900 gross ton Turkish bulk carrier

Without a change in the way ships are designed and operated, the casualty rate in the future can be expected to remain the same.

3. Existing Regulations and Policies

Some measure of subdivision and damage stability is required by regulations for every type of U.S. flag ship except ocean-going dry cargo ships. The regulations require subdivision and damage stability for large and small passenger ships, petroleum product and crude oil tankships, gas carriers, hazardous chemical carriers, mobile offshore drilling units, school ships, oceanographic research ships, nuclear powered ships, and Great Lakes dry bulk cargo ships. The overriding reason for the regulations is safety. Of primary

concern in each case is the personal safety of the passengers and crew. Second is a concern for the safety of the world environment and all that this implies for the safety of the public.

Until recently, most U.S. flag dry cargo ships, including RO–RO ships, were built under a subsidy or mortgage insurance program administered by the U.S. Maritime Administration (MARAD), which required them to be subdivided. Many foreign flag dry cargo ships do not have subdivided cargo spaces. The draft regulations are necessary to ensure that subdivision and damage stability standards are maintained at a uniformly high level for the entire world fleet serving United States ports.

Figure 2 summarizes U.S. and international subdivision and damage stability standards. The gap where dry cargo ships are concerned is conspicuous. The draft regulations would fill this gap.

BILLING CODE 4810-14-M

Figure 2

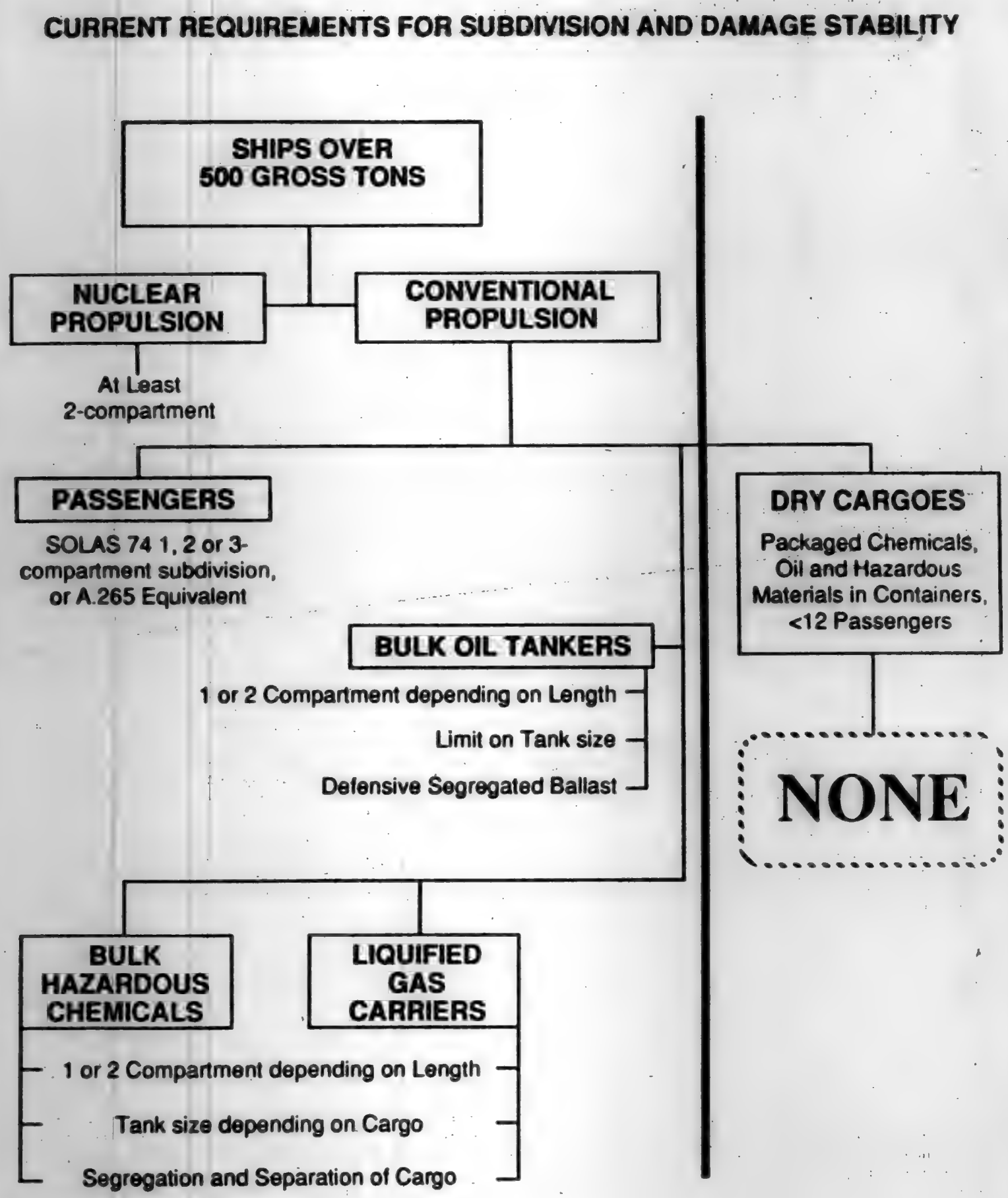

BILLING CODE 4910-14-C

4. History

Various measures of flooding protection have been employed in ships for several hundred years. Almost 700 years ago, Marco Polo reported that Chinese ships were fitted with wooden bulkheads, expertly crafted and joined to be watertight. For centuries sail ships carried, and occasionally used, what were known as "collision mats." These mats were applied externally to the hull in the event of damage to limit flooding until repairs could be made. Both of these safety measures were worth the cost to the ship owner because they were of direct benefit.

Shipping changed dramatically as it moved from the 19th to the 20th century. After the loss of the TITANIC in 1912, the first international passenger ship subdivision requirements were formed at the 1913 Safety of Life at Sea (SOLAS) Convention. These, and changes made in 1929, rated ship subdivision according to the number of adjacent spaces which could be flooded and the amount of reserve buoyance or freeboard after such flooding. This approach neglected to consider the accompanying loss of stability, so that the ship might be calculated to remain afloat but would be unstable and subject to capsizing.

The losses of the MOHAWK and MORRO CASTLE in the early 1930's spurred the U.S. Congress to investigate the state of the U.S. Merchant Marine. Even before the investigation report was published Congress passed the Merchant Marine Act of 1936, requiring that the U.S. Merchant Marine be composed of the "best equipped, safest, and most suitable" type ships.

Senate Report 184, published in 1937 following the SS MOHAWK and SS MORRO CASTLE casualties, was:

> A comprehensive set of rules for the construction of all classes of new vessels concerning structural strength, loading, watertight subdivision, stability under all conditions, * * *, and such other features as may be necessary to insure properly equipped and safe ships.[15]

Awareness of the potential use of merchant ships during hostilities led the U.S. Maritime Commission to require all ships submitted for approval, including cargo ships, to meet the standards of Senate Report 184. Experiences during World War II bore out the need for the subdivision and damage stability features required by that report.

In the 1948 SOLAS Convention, the deficiencies of the 1929 Convention were corrected by the addition of regulations requiring damage stability for passenger ships. There were, however, no requirements for cargo ship subdivision or damage stability.

In 1957 the Commandant of the Coast Guard assembled an industry task force to consider subdivision requirements for cargo ships. This task force met for the next three years, and in 1960 one of its recommendations was international adoption of the one compartment damage stability criterion for cargo ships.

By the time of the 1960 SOLAS Conference many people recognized that a more rational measure of safety was not the number of flooded compartments with which a ship could survive, but the extent of hull damage it could survive. The U.S. delegation presented a hull damage survivability proposal to the conference. At about the same time, papers by Wendel,[16, 17] Krappinger,[18] and Varges [19] in Germany recognized that the extent and longitudinal location of damage varied and that a better assessment of safety could be obtained by treating the damage probabilistically.

The 1960 Conferees could not agree to alter the basic concepts of the 1948 SOLAS Passenger Ship Subdivision Regulations. However, they did agree that the subject required further study and that these studies should be initiated by the International Maritime Consultative Organization (IMCO), which is now the International Maritime Organization (IMO). At the same time, they agreed that IMCO:

> Should, at an early date, initiate studies on the extent to which it would be reasonable and practicable to apply subdivision and damage stability requirements to cargo ships, * * * having as its aim the formulation of such international standards as may appear necessary.[20]

IMCO had been formed only a year earlier and one of its very first assignments concerned cargo ship subdivision. In the deliberations that followed over the years, IMCO concentrated on passenger ships to the exclusion of cargo ships.

Concern for safety of the ports and prevention of pollution caused the SOLAS 1960 Convention to require any ship propelled by nuclear power to be capable of surviving the flooding of any two adjacent compartments. This precedent for requiring subdivision in order to protect the environment was echoed by the Convention for the Prevention of Pollution from Ships 1973, as modified by the Protocol of 1978 (MARPOL 73/78).

In 1965, MARAD issued Design Letter No. 3. This updated construction standards for federally financed ships, requiring all cargo ships to meet a one compartment subdivision. Because most U.S. flag dry cargo ships built since World War II have been built with U.S. Government financing, most have also met Design Letter No. 3. For this reason, until recently, there has been very little incentive to develop domestic regulations addressing subdivision of dry cargo ships.

The 1966 Load Line Convention permits a reduced freeboard for cargo ships provided they have the ability, when at full load draft, to withstand the flooding of an empty compartment.

In January 1967, at the urging of the United States, IMCO formed a special committee to develop codes of construction for cargo ships carrying chemicals or liquified gases in bulk. As this was being deliberated, in March 1967, the TORREY CANYON grounded off the Scilly Isles and spilled massive quantities of oil on the shores of the English Channel. The work program of the new international technical group was therefore extended to design measures to prevent and limit the release of oil as well as chemicals. The subdivision measures which emerged from these deliberations placed limits on the size of cargo tanks in order to control possible outflow of polluting cargoes. Highly dangerous substances must be stowed well clear of the ship sides. The ability to survive flooding of the machinery spaces and adjacent compartments was required when it was recognized that the entire ship could be lost with all its hazardous cargo if damaged in this "Achilles heel." Oil tankers and product carriers of certain sizes are required to be designed with segregated tanks for clean ballast water, and those tanks must be arranged to serve as "defensive spaces." MARPOL 73/78 incorporates these design restrictions to ensure containment of polluting and hazardous cargoes.

IMCO considered some non-probabilistic subdivision procedures, and eventually adopted, in 1973, a probabilistic procedure for passenger ships that provides a direct and logical means of evaluating relevant factors and frees designers from arbitrary restrictions on bulkhead locations.[21] Those regulations, Resolution A.265(VIII), were put forward as an equivalent to the existing "classic" regulations. Shortly afterwards, this equivalence was formalized by its adoption at the International Convention for the Safety of Life at Sea, 1974 (1974 SOLAS). The draft regulations for dry cargo ships have the same approach as Resolution A.265(VIII).

The subject of dry cargo ship subdivision and damage stability remained on the work program of the

Sub-Committee on Stability and Load Lines and on Fishing Vessels Safety (SLF). But for the next eleven years there was no concerted effort to finalize a standard.

In 1985, the IMO Maritime Safety Committee (MSC) decided that:

> There is a compelling need for the development of standards for subdivision and damage stability for dry cargo ships and such standards should be based on the probabilistic method. The Committee expressed the hope that the Sub-Committee on Stability and Load Lines and on Fishing Vessels Safety could develop the standards in a relatively short time.[23]

In 1987, the SLF Sub-Committee approved such a standard [23] and proposed that it be published as an MSC advisory circular in 1988, with the request that countries apply the standard and submit results to the IMO as early as possible. The Sub-Committee considered it work complete and removed this item from its work program.

The Coast Guard has honored the request of the Sub-Committee, and has completed significant research, applying Annex 2 of SLF 32/21 to both new and existing U.S. and foreign ship designs. The results demonstrate that the standards approved by the Sub-Committee indeed have a bearing on marine safety and should be implemented. The draft regulations in this advance notice are substantially an embodiment of Annex 2 of SLF 32/21.

The international discussions and negotiations which contributed to the development of Annex 2 of SLF 32/21 were extraordinarily protracted. When they began, in 1960, the United States was a strong proponent of a deterministic approach because such an approach would have been simple and easy to implement. The U.S. eventually agreed to developing a probabilistic standard because it was both a rational approach to subdivision and it held some promise of eventual acceptance by the IMO. Annex 2 of SLF 32/21 is actually a compromise between a deterministic and a probabilistic approach to subdivision. It is probabilistic in approach, but deterministic in application. After 27 years in the making, it has finally been approved by the cognizant technical experts at the IMO and removed from the SLF Sub-Committee work program as a complete project.

The SLF Sub-Committee is the foremost international body of experts on ship stability and subdivision, representing all the major maritime nations of the world. The decisions of the SLF Sub-Committee are based on thorough research, experience, and in-depth understanding of naval architecture and ship safety. The United States is represented on the SLF Sub-Committee by the U.S. Coast Guard, which prepares for the sessions by holding public meetings at which experts from all aspects of the marine community are encouraged to present their views.

The United States was represented during the development of the standard in Annex 2 of SLF 32/21 by qualified members of the Coast Guard's maritime safety technical staff. These persons receive their authority to attend each international meeting from the Department of State. Official reports of these meeting were directed though the Commandant of the Coast Guard to the Secretary of State.

The longstanding objectives of the Coast Guard in the International Maritime Organization are: In a cost effective manner,

- To enhance the overall safety of all shipping,
- To ensure the safety of U.S. citizens and cargoes embarked in all ships,
- To prevent deterioration of the environment by pollution from ships,
- To promote the efficient and safe operation of U.S. ports and waterways, and
- To eliminate safety as an economic factor in international trade by promoting international safety standards.

C. Immediate Need

In a growing number of ship losses, the cargoes are found to menace human health either directly or through the food chain by pollution of the sea. A prominent example is the capsize of the MONT LOUIS off Belgium in August 1984 with containers of nuclear waste aboard. Fortunately, the MONT LOUIS was in shallow water and its cargo could be salved.

Failing to regulate dry cargo ships now leaves us with a glaring inconsistency. (Fig. 2) The crews of these ships are not afforded the same protections they would have if they had embarked in most other types of ships, and the public is not afforded the same protection from safety and environmental hazards. The International Maritime Dangerous Goods Code deals with the packaging, marking, stowing and separation of toxic and other hazardous substances. It does not, however, take any notice of the stability and subdivision of the ship in which these materials are carried. The stability and subdivision of ships carrying dangerous cargoes in bulk are regulated, but ships carrying the same total amount in small parcels do not have to meet similar requirements.

Annex 2 of SLF 32/21 is the dry cargo ship subdivision and damage stability standard currently under consideration by the Maritime Safety Committee of the IMO. 1974 SOLAS, to which the United States is a party, was developed by the IMO. By approving Annex 2 of SLF 32/21 as an amendment to the 1974 SOLAS, and by following the tacit amendment procedure under Article VIII, it will become binding on U.S. dry cargo ships in 1991. It is the Coast Guard's intention that the final rules stemming from this advance notice will become effective at the same time.

Since 1961, the United States has refrained from implementing domestic subdivision regulations for dry cargo ships in the expectation that an international standard would be forthcoming. Ship designers repeatedly expressed their need for specific rules for subdivision and damage stability, especially for RO-RO ships.[24] Yet it was during these same years that ships like the MONT LOUIS were lost.

The subject of subdivision and damage stabilty is indeed complex, and standards addressing the subject should be carefully considered. It should also be considered that an incident such as the MONT LOUIS off U.S. shores can be expected to produce a public outcry of major proportions. A subsequent investigation which discloses that measures which might have mitigated the event have been in deliberation for 27 years can hardly be expected to be sympathetic to the complexity of the subject.

D. Maritime Industry Support

There has been considerable discussion in the maritime industry over the years concerning the merits of various subdivision schemes.

It was a group made up of industry leaders who conducted the investigations demanded by the Congress following the ship disasters of the early 1930's and who recommended the criteria adopted in Senate Report 184 ("MORRO CASTLE" and "MOHAWK" Investigations) and in the Merchant Marine Act of 1936. From that date to the present, the Maritime Administration and its predecessor Commission have required ships built with federal subsidy funds to satisfy a one-compartment standard.

Between 1957 and 1960, it was an industry task force assembled by the Commandant of the Coast Guard that recommended international adoption of the one compartment criterion for cargo ships. Since then, in the regular meetings

of the SOLAS Working Groups, industry members have sustained the U.S. Representative's continued advancement of the one compartment criterion.

In 1969, a special industry group was convened by the National Academy of Sciences. This group was concerned with the effect of regulations on U.S. competition in the shipbuilding field. Despite their concern, they endorsed the Maritime Administration criterion.

In 1981 the Technical and Research Steering Committee of the Society of Naval Architects and Marine Engineers (SNAME), undertook a review of the one compartment standard. After three years of deliberation SNAME again endorsed this criterion, concluding that it was technically feasible and desirable "provided such a standard was imposed on an international basis."[25]

The U.S. has not been alone in appreciating the value of subdivision for dry cargo ships. In recent years, prominent members of the British and European shipping industries have also advocated improved standards. The efforts of the Royal Institution of Naval Architecture, especially following the loss of the EUROPEAN GATEWAY and the HERALD OF FREE ENTERPRISE have been invaluable in gaining approval of SLF 32/21.

Shipbuilders and designers do want and need an internationally agreed upon standard of subdivision for dry cargo ships. The following quote from Senior Montes of Astilleros Espanoles SA, expresses the concerns of the ship design and building community.

> As shipbuilders, we have been attending these meetings (RO-RO Conference, 1983), for many years in the hope that by the next one, the national authorities, international associations, and even classification societies, will have put in black and white some rules and criterion about the RO-RO compartment and about damage stability. Unfortunately, we have not yet achieved any clear criteria regarding international regulations.[24]

Since the second decade of this century the classification societies have had, as a part of their class rules, recommendations for subdivision. These are "rules of thumb" suggesting the number of watertight transverse bulkheads to be installed, based primarily on the length of the ship. Det norske Veritas has improved considerably on the rules of thumb by instituting the "SC" notation which addresses the survival capability of dry cargo ships. It is apparent, however, that the classification societies will not, by themselves, make subdivision mandatory.[27]

E. Cost of Compliance and Effect on Ship Design, Construction, and Operation

The Coast Guard believes that the draft regulations represent a technically feasible and practical approach to subdivision and damage stability of dry cargo ships. However, the Coast Guard has some concerns for the economic effects the draft regulations may have on the maritime industry. Some shipbuilders and ship owners, may be adversely affected by the cost of complying with the draft regulations. This has been taken into consideration, and the impact of the draft regulations on the shipping industry has been investigated. It is expected that the impact of the draft regulations will be greater for foreign flag ships than for U.S. ships because traditional U.S. practice has been to provide subdivision while non-U.S. practice has not. It is anticipated that much information will continue to come to light as the maritime industry applies the draft regulations and gains experience during this rulemaking period.

The investigation consisted of:

- An analysis of the subdivision of different types of cargo ships, using assistance from private contractors and other U.S. government agencies. To the extent possible the ship data represents both U.S. and non-U.S. designers, builders, and owners, and
- A determination of the costs associated with modifying the designs of ships with an inadequate degree of subdivision, including the short term impact on intitial construction and the long term impact on operating a ship.

The materials referenced in this document and certain non-proprietary materials associated with the studies addressing compliance costs, are included in the docket file, and are available for inspection and copying as indicated under "ADDRESSES."

The Coast Guard conducted an analysis of the state of subdivision of a variety of existing ships. To the extent possible, these included dry cargo ships designed, built, and operated by both U.S. and non-U.S. parties. There were five major sources of ship data for the subdivision analysis: Data obtained from consultants, information submitted by IMO Member governments,[28] information volunteered by independent designers and ship owners, information submitted to the Coast Guard as part of the Certification process, and information found in professional publications.

For the analysis, the ships were categorized as bulk carriers, containerships, combination container RO-ROs, deep sea RO-ROs, pure car carriers, rail ferries, and general cargo ships. They were divided into three different length categories. For each ship, both the Required Subdivision Index (R) and the Attained Subdivision Index (A) were calculated. The results of these calculations are summarized in Table 2. Where "A" is shown as greater than "R", the ship complies with the draft regulations, and no further analysis is necessary. In each category of Table 2, such ships are listed above the dotted line. Where "A" is shown as less than "R", the ship does not comply as is, and it is listed below the dotted line. If it were to be built with the draft regulations in mind, some design modifications would be necessary to make it comply.

BILLING CODE 4910-14-M

Table 2. Collation Matrix

Vessel Type \ Vessel Length	100 - 149 Meters	150 - 199 Meters	200 - 249 Meters	Greater than 250 Meters
BULK CARRIERS	No. 31 - A=0.574 (R=0.519)	No. 3 - A=0.644 (R=0.553) No. 4 - A=0.617 (R=0.564) No. 5 - A=0.605 (R=0.570) No. 11 - A=0.600 (R=0.545) No. 20 - A=0.630 (R=0.570) No. 28 - A=0.766 (R=0.536) Ship L - A=0.648 (R=0.553)	No. 21 - A=0.775 (R=0.597)	
			No. 6 - A=0.591 (R=0.615)	
CONTAINER SHIPS	No. 9 - A=0.634 (R=0.504) No. 32 - A=0.530 (R=0.529) Ship F - A=0.588 (R=0.530)	Ship T - A=0.675 (R=0.582) Ship U - A=0.664 (R=0.583)	No. 35 - A=0.622 (R=0.600)	Ship V - A=0.972 (R=0.634)
	No. 24 - A=0.380 (R=0.474) No. 25 - A=0.376 (R=0.487) No. 26 - A=0.444 (R=0.506)			
COMBINATION RO-RO CONTAINER SHIPS			Ship Z - A=0.709 (R=0.618)	Ship D - A=0.958 (R=0.659)
DEEP SEA RO-ROs		No. 10 - A=0.582 (R=0.539) Ship B - A=0.937 (R=0.590)	Ship X - A=0.634 (R=0.597) Ship W - A=0.633 (R=0.607)	Ship R - A=0.763 (R=0.662)
	No. 15 - A=0.059 (R=0.523) No. 33 - A=0.226 (R=0.531)	No. 19 - A=0.432 (R=0.556) Ship O - A=0.520 (R=0.572) Ship Y - A=0.560 (R=0.573)	No. 36 - A=0.266 (R=0.607)	
PURE CAR CARRIERS		Ship A - A=0.330 (R=0.550)		
GENERAL CARGO SHIPS	No. 8 - A=0.597 (R=0.503) No. 13 - A=0.583 (R=0.466) No. 16 - A=0.730 (R=0.528) No. 23 - A=0.477 (R=0.471) No. 27 - A=0.800 (R=0.512) Ship I - A=0.959 (R=0.513) Ship J - A=0.759 (R=0.709)	No. 2 - A=0.673 (R=0.547) No. 17 - A=0.713 (R=0.543) No. 34 - A=0.688 (R=0.532) Ship K - A=0.899 (R=0.760)		
	No. 14 - A=0.215 (R=0.468)	No. 18 - A=0.259 (R=0.544)		

Note: Numbered ships are the results of SLF 32/3/8 Collation of the multi-nation study of annex 2 to SLF 31/32
Lettered ships are the results of the study described above.

BILLING CODE 4810-14-C

The probabilistic method of the draft regulations offers a designer great flexibility in the placement of watertight boundaries to increase the Attained Subdivision Index. There is not a unique "right" answer, so the approach taken was to evaluate the costs of a number of subdivision "building blocks" a designer might use, and then choose those that give a reasonable and straightforward solution. The emphasis was on modifications of existing designs. It is likely that a more efficient solution can be found for a ship designed from the keel up with subdivision and damage stability in mind.

The costs of a variety of items which are likely to be employed was gathered from three independent sources: A report prepared by Ernst & Whinney for MARAD in 1979,[29] a paper presented to SNAME in 1979,[30] and proprietary data from naval architects.

Table 3 contains data extracted from the first two sources. It has been adjusted for the variation in the purchasing power of the U.S. dollar using the consumer price index recommended for economic analyses. Prices will vary between different locations and different manufacturers. It can be seen that an additional bulkhead for a containership will cost $328,000. For a RO–RO ship, it will cost $248,000 to install two watertight ramps instead of non-watertight ramps.

There are other increases involved with the long term operating costs. Bulkheads increase the ship weight, reduce the cargo deadweight capacity, and increase fuel cost. Watertight closures may increase operational cargo handling time and maintenance costs. In conducting the studies the Coast Guard has accounted for these increases to the extent possible.

TABLE 3

Equipment	Dimensions	1978 E$	1987 $
Fixed ramp.	40m × 7m	$90,000	$150,000.
Hinged water-tight ramp.	40m × 7m	165,000	274,000.
Moveable WT ramp cover.	40m × 7m	145,000	241,000.
Bulkhead door.	4.25m × 3.5m	30,000	50,000.
Fixed bulk-head.	not given	218,000	328,000.
Stern door.	11.5m × 6.15m.	60,000	100,000.
Bow door	6.15m × 8.50m.	55,000	92,000.
Side door	4.25m × 4.25m.	45,000	75,000.

On a case by case basis, the Coast Guard considered various design modifications that might be suitable to bring the ships into compliance. Some of the ship designs, submitted to the SLF Sub-Committee for collation and study could only be looked at in a cursory way. The following paragraphs summarize the results from both the detailed and cursory analyses.

Ten *bulk carriers* were considered in the study. Nine have satisfied the requirements of the draft regulations. One large bulk carrier design from the SLF collation (No. 6 in Table 2) has an Attained Subdivision Index just marginally less than is required. Such a small difference in the index can usually be corrected with a slight change to the intact stability required GM curve dismissing the need for either a design or operational change. Since no changes in any of the designs would be necessary the economic impact of the draft regulations on these ships is considered to be nil. Bulk carriers are generally limited in the amount they can carry by the weight of their cargo. It is highly desirable for these ships to obtain a Type "B"/reduced 60% freeboard assignment so they can carry more weight. To obtain the assignment, they are required under the International Load Line Convention to be designed to remain afloat with any one of their compartments flooded. This supports the conclusion that if a ship has been designed and built to meet a subdivision standard, it generally will have a satisfactory Attained Subdivision Index and comply with the draft regulations. All of these bulk carrier designs have enough bulkheads to satisfy the minimum number of bulkheads recommended by the major classification societies.

Ten *containerships* were considered. This is another group of ships that have traditionally been transversely subdivided and show a high degree of subdivision, some of them by a significant margin. Four of them were designed to meet the requirements of the MARAD Design Letter No. 3 and all of them had enough bulkheads to satisfy the minimum number of bulkheads recommendation of the classification societies. Three of the designs submitted as a part of the SLF collation study, all of them less than 150 meters, had a lesser Attained Subdivision Index than required. One of them (No. 24 in Table 2) did not have the minimum number of bulkheads recommended by the major classification societies, and the other two (Nos. 25 and 26 in Table 2) appear to have a problem of a combination of either poor bulkhead spacing, marginal intact stability, low freeboard or low downflooding angle. Because significant structure is in place on Lift-on/Lift-off designs, the addition of a bulkhead in a design like No. 24 is feasible and would add no more than 1% to the initial construction cost of the ship. For the other two designs, Nos. 25 and 26, the Attained Subdivision Indices are just marginally less than is required, so the small differences can usually be corrected with a slight change to the intact stability required GM curve. It is also feasible in the construction of a new ship to subdivide the wing tanks in two places. This design modification would add a small amount of steel and cause some piping changes, but the construction cost would account for no more than 1% of the original ship cost.

Two *combination container RO-RO* ships were considered. Both of them showed compliance with the draft regulations. Both were designed to meet the requirements of MARAD Design Letter No. 3. No changes in these designs are necessary, so the economic impact of the draft regulations on designs of this type of ship is nil. These ships are a highly competitive hybrid RO-RO designs, purposely built to carry a wide variety of the worlds cargoes, and both have a high degree of subdivision.

Ten *deep-sea RO-RO* ships were considered. As a type category, this group showed the greatest total variation between the ship designs in the amount of the Attained Subdivision Index. Four of the ships complied with the draft regulations, one of them (ship B in Table 2) by a significant margin. Ship B had been modified to comply with the requirements of MARAD Design Letter No. 3. Ships R, W and X are highly competitive ships, designed with flooding protection from their conception using the same probabilistic methods of these draft regulations. They are clear examples supporting the conclusion that once subdivision is required for all cargo ships designers will find the most efficient and economical way to make it work.

Six of the *deep-sea RO-ROs*, did not comply with the draft regulations, three of them (Nos. 15, 33, and 36 in Table 2) had significantly less of an Attained Subdivision Index than required. A cursory look at those submitted for the

SLF collation revealed the following observations. No. 36 is the type of design that would require the most changes to comply. It is an example of a ship that had not been designed or built with subdivision in mind. To serve the same purpose, the new design would have a larger beam, have wing tanks and more freeboard, and perhaps three watertight bulkheads with cargo doors on the main deck. The cost difference for this ship was not estimated. No. 15 is a design that might be made to comply by subdividing the main deck in two places and making sure the freeboard deck was watertight. This modification would require three large watertight cargo doors and a watertight bulkhead. The difference in the initial construction cost might be about $250,000.; about two percent of a $12 million dollar ship. The operational cargo handling time would be increased only slightly because of having to manuever through and around the doors and bulkheads. No. 19 is a very similar design to Ship Y. It appears to have one less subdivision bulkhead on the freeboard deck. It appears that both designs might be modified sufficiently by adding watertight cargo doors on the main deck above the forward engine room bulkhead. In general there might need to be an increase in the intact stability and downflooding angle. Some of the modifications may appear to be relatively significant for these designs, but the increase in flooding protection, particularly for design Nos. 15, 33 and 36, would more than justify the need.

One *pure car carrier* was considered. It was designed and built overseas but operated under the U.S. flag. Although it has the minimum number of bulkheads recommended by the major classification societies, it does not comply with the draft regulations as built. However, when the vent ducts are made watertight at the freeboard deck and the access doors are made watertight up to the next higher deck, there is enough of an increase in the Attained Subdivision Index to comply with the draft regulations. Making both of these modifications was estimated to be less than $100,000 or less than 1% of a new ship's initial construction cost. These modifications would not require any operational change. This supports the conclusion that a slight modification, made at the beginning of the design process to take subdivision into account, can produce an acceptable level of subdivision for very little extra cost.

Thirteen *general cargo ships* were considered. Eleven complied with the draft regulations. Ships I, J, and K were designed to meet the requirements of MARAD Design Letter No. 3, and all of them had the minimum number of bulkheads recommended by the major classification societies. Two of the ships submitted for the SLF collation (Nos. 14 and 18) did not comply with the draft regulations. Both of the designs had very long unsubdivided cargo holds and one did not have enough bulkheads to satisfy the minimum number recommended by the major classification societies. The easiest modification to the designs, but not always the most practical for a ship that must be capable of carrying very long cargoes, is to add another bulkhead and divide the cargo space into three holds. The other possibility is to widen the wing tanks slightly, subdivide them again by adding another wing bulkhead, and raise the freeboard slightly to make up for the slight loss in cargo hold volume. These design modifications are estimated to be between 1% and 4% of the initial construction cost of the ship. More information on these ships would be needed in order to give a more accurate estimation. This type of ship is by far the most abundant in the worlds fleet. If subdivision is required for these ships, it will not have a significant economic impact for most. For those that need to carry especially large cargoes, the probabilistic method of subdivision, contained in these draft regulations, will offer designers the greatest flexibility to put flooding protection into their ship designs.

Conclusions

1. Most modern cargo ship designs comply with the draft regulations. In particular, those that are transversely subdivided with the minimum number of transverse watertight bulkheads recommended by the classification societies, would require little or no modification. Those few exceptions which have the right number of bulkheads but still do not comply, either have poor bulkhead spacing, marginal intact stability, low freeboard or low downflooding angle. Most current designs could be made to comply with modifications averaging about 2% of initial construction costs, but not exceeding 4%, and some design changes would have a slight operational impact on the ship.

2. If the design satisfies the requirements of either the MARAD Design Letter No. 3, or Type "B"/ reduced 60% freeboard requirements for load line assignment, or the DnV Rules for "SC" notation, it will comply with these draft regulations and no design modifications will be necesssary.

3. Some ships that were built with exceptionally large and unsubdivided cargo spaces, such as some RO–RO designs, were apparently designed with little or no regard for subdivision. Their Attained Subdivision Indices were so low that they can not comply with the draft regulations without a change in the design. However, there are many RO–RO designs which not only comply with the draft regulations, but in fact exceed the Attained Subdivision Index of traditionally subdivided ships with only Lift-on/Lift-off capabilities.

F. Request for Data, Information, and Comments

Considerable effort was expended in developing the draft regulations and the supporting casualty information, statistical data, sample calculations, and computer program. The Coast Guard recognizes, however, that the public is likely to have important questions and information that should be addressed in the rulemaking process. In particular, the Coast Guard would like members of the concerned public to address a number of specific questions.

Question 1. What are the required and attained subdivision indices for specific ships presently operating or being designed? While the required and attained indices have been calculated for a number of ships, a broader sample of these important indices will provide a better comparison between the draft regulations and current design practice. Results from the application of the draft regulations will be most useful if they are submitted in a simple format including ship particulars, general arrangements, watertight boundaries, external and internal openings with related closing devices, and a damage stability analysis summary. Appendix 3 contains information and guidance for assistance in preparing these calculations.

Question 2. What is the likely economic impact of the draft regulations on your business? Members of the shipping industry are in the best position to estimate the costs and economic effects of the draft regulations. Answers to this question will be most useful if they address individual items expected to be affected, such as: reduction in cargo capacity and resulting lost revenues, increased loading and off loading time and the associated costs, additional labor costs, etc.

Question 3. What would be the impact on the revenues and commerce within the jurisdictions of the various port authorities due to the obstruction to navigation that might be caused by a sunk or capsized wreck in a major waterway?

Question 4. Would insurance underwriters be willing to reduce premiums for ships which meet or exceed the proposed attained subdivision indices? Some marine underwriters have expressed a desire to contribute to the development of sound ship systems as well as a need for well founded safety information.[30] The draft regulations provide an index for the safety of ships with respect to flooding survivability.

Question 5. Likewise, would insurers to cargo be willing to reduce premiums for cargoes shipped in ships which meet or exceed the proposed attained subdivision indices?

Question 6. Should the attained and required subdivision indices be listed on the face of a ship's Certificate of Inspection or similar document? This information would provide a ready indication of the degree of subdivision with respect to the required index.

Question 7. Which passages of the draft regulations require clarification or explanation? The Coast Guard is considering publishing explanatory notes to the draft regulations.

Question 8. Are there circumstances under which the draft regulations should apply to existing ships as well as new ships? The draft regulations have been written in the belief that the IMO Maritime Safety Committee (MSC) will approve Annex 2 of SLF 32/21. When this happens the tacit amendment procedures of SOLAS 74 will bring Annex 2 of SLF 32/21 into effect in 1991. In that case, the draft regulations will apply to new ships only. Over a period of time the entire world fleet would comply with the requirements as new vessels replace older ones. This is the usual way new international requirements affecting design are applied. However, if Annex 2 of SLF 32/21 is not adopted by the Maritime Safety Committee, and the U.S. adopts the draft regulations for new ships only, then the United States could become a repository for the world's most decrepit ships, because new foreign flag ships not meeting the proposed standard would be excluded from entering U.S. ports. In this event the Coast Guard would have to consider applying the draft regulations to both new and existing ships. The Coast Guard believes that such action, if adopted, would have minimum effect on U.S. ships, since most of them meet a one compartment standard of subdivision and can therefore probably meet the draft regulations.

Question 9. What is the likely economic impact of the draft regulations on your business if they applied to existing ships as well as to new ones? Answers to this question will be most useful if they address separately items such as: the cost of any alterations necessary to comply with the draft regulations, the lost revenues associated with the time to make alterations, reduction in cargo capacity, and resulting lost revenues.

Question 10. If it becomes necessary to make the draft regulations applicable to existing ships, what would be an appropriate phase-in period for them? The phase-in period would have to be long enough to avoid unnecessary disruption of shipping but short enough to provide incentive to upgrade vessels calling at U.S. ports. Comments from operators and shipyards concerning the time necessary to make any required alterations are also solicited.

G. Preliminary Economic Analysis and Certification

Although the draft regulations, if adopted, are considered to be non-major under Executive Order 12291, they are considered to be significant under the Department of Transportation regulatory policies and procedures (44 FR 11034; February 26, 1979). The draft regulations are considered significant because of the high level of interest in the international community. As explained earlier in this ANPRM, the international standard approved by the SLF Sub-Committee in Annex 2 of SLF 32/21 has been forwarded to the MSC of the IMO and will be discussed at IMO shortly. The draft regulations are considered non-major because the economic data available at this time does not warrant a conclusion that the program is likely to result in an annual effect on the economy of $100 million or more, a major increase in costs or prices for the affected industry or public, or have significant adverse effects on competition, employment, or other market-place factors. One of the purposes of this ANPRM is to generate additional cost data with which, if warranted, a full regulatory evaluation can be made.

The draft regulations, if adopted, would impact owners and operators of large, ocean/going vessels. None of these entities can be classified as a small entity. Therefore, the Coast Guard certifies at this time that, if adopted, the draft regulations will not have a significant economic impact on a substantial number of small entities.

Paperwork Reduction Act

The draft regulations do not increase the paperwork burden on the public. The only paperwork requirements involve vessel design plan development and submittal for review, which are similar to requirements already approved by the Office of Management and Budget (OMB).

Federalism

The draft regulations, if adopted, affect only large entities which own or operate vessels engaged in interstate or international commerce. This action has been analysed in accordance with the principles and criteria contained in Executive Order 12612, and it has been determined that the draft regulations do not have sufficient federalism implications to warrants the preparation of a Federalism Assessment.

H. Appendices

Annex 2 of SLF 32/21 has been referred to many times in this advance notice. Since information about the IMO work in this area may be helpful to those considering the text of the draft Rules for the Subdivision and Damage Stability of Dry Cargo Ships, the text of Annex 2 of SLF 32/21 is reproduced as Appendix 1.

The draft rules under consideration are reproduced as Appendix 2.

Appendix 3 contains information and guidance to render assistance in performing calculations.

I. References Cited

1. Sen, P. and Konstantinidis, C.; "A Time Simulation Approach to the Assessment of Damage Survivability of RO/RO Cargo Ships", presented at the Annual Meeting of SNAME, New York, NY, Nov 11–14, 1987.
2. Cashman, J.P., "Analysis of World Merchant Ship Losses 1967–75", Paper No. 2, Proceedings of The Second West European Conference on Marine Technology, Safety at Sea, May 1977.
3. Doerffer, J.W., "Safety at Sea Through Manoeuvring Standards," Symposium of the Operations of Large Ships, RINA and the Nautical Institute, London, March 1976.
4. Drager, H., "Cause Relationships of Collisions and Groundings", Det norske Veritas, Report No. 80–0295, March 1980.
5. Galloway, A.; "RO–RO's: The Problem Areas"; delivered at RO–RO 81, Hamburg, 2 July 1981.
6. Pyman, M.A.F. ., "Casualty Rates in Abandoning Ships at Sea", Trans. Royal Institution of Naval Architects (RINA), 1985.
7. Meek, M.; "Analysis: RO/RO Safety", Seatrade Business Review, Sept/Oct 1987.
8. Telle, J., "Safety of Dry Cargo Ships," DnV Paper No. 85 PO17, October 1985.
9. Jansson, B.O., "Safety of RO–RO Vessels—Casualty Statistics," RO–RO Conference, Hamburg, June 1981.
10. Tagg, R.D., "Damage Survivability of Cargo Ships," Northern California Section, SNAME, March 1982.
11. "IMO and RO–RO Safety," International Maritime Organization, May 1986.
12. Trans Consultants AB; "Survival Capability of General Cargo Ships",

BEST COPY AVAILABLE

submitted to the Maritime Safety Committee as Sweden MSC 51/Inf.3, 1984.

13. IMO; "Reports on Serious Casualties", 46/17 Jan 82, 48/20 Jan 83, 49/15 Jan 84, 50/15 Aug 84, 52/18 Nov 85, and 54/11 Jan 87.

14. Foy, D.B.; "Safety and 1987: Annual Review", from "Safety at Sea", Dec 1987.

15. Senate Report 184, "MORRO CASTLE" and "MOHAWK" Investigations, March 17, 1937.

16. Wendel, Kurt; "Probability to Survive a Damage", "Schiffstechnik', No. 36, 1960.

17. Wendel, Kurt; "The Evaluation of Subdivision", translated from the paper "Die Bewertung von Unterteilungen" from "Jahrbuch der Schiffbautechnischen Gesellschaft", 1961.

18. Krappinger, O.; "Stability Criteria", British Ship Research Association Translation No. 1506 from Forschungsch. Schiffstechnik, No. 9, 1962.

19. Varges, G.; "Water in the Ship", Schiffstechnik, No. 34, 1959.

20. International Conference on Safety of Life at Sea, 1960, Annex D, Recommendation II.

21. IMCO Resolution A.265(VIII) adopted on 20 November 1973.

22. MSC 52/28, Report of the Maritime Safety Committee on its Fifty-Second Session, dated 26 February 1986.

23. SLF 32/21, Report to the Maritime Safety Committee, dated 25 September 1987.

24. Montes, A.; published discussion of a paper, "Damage Survivability of RO–RO Vessels" by R.D. Tagg, delivered at RO–RO 83.

25. Capt. Perry W. Nelson, USN (Ret), President, Society of Naval Architects and Marine Engineers in a letter dated 1 August 1985 to Admiral James S. Gracey, USCG, Commandant.

26. Lloyd's Register of Shipping, "Rules and Regulations for the Classification of Ships, 1987", paragraph 4.1.4.

27. Nordenstrom, N., Chairman of IACS Council, in a letter dated 14 February 1985 to C.L. French, President, Society of Naval Architects and Marine Engineers.

28. IMO; "Collation of the Multi-Nation Study of Annex 2 to SLF 32/21"; SLF 32/3/8, 30 April 1987.

29. Ernst &Whinney, "Cost Impact of U.S. Government Regulations on U.S. Flag Ocean Carriers," Washington, December 1979.

30. Argyriadis, D.A., et al, "Design and Construction of Modern RO–RO and Container Carriers," Trans., SNAME, 1979.

31. Danielsson, N.; "RO–RO Safety and Securing Lashings for Freight on Trailers", RO–RO Conference, Hamburg, June 1981.

March 2, 1988.

J.W. Kime,

Rear Admiral, U.S. Coast Guard, Chief, Office of Marine Safety, Security and Environmental Protection.

BILLING CODE 4910-14-M

APPENDIX 1

Annex 2 of SLF 32/21

SLF 32/21

ANNEX 2

DRAFT MSC CIRCULAR

SUBDIVISION AND DAMAGE STABILITY OF DRY CARGO SHIPS INCLUDING RO-RO SHIPS

1 The Organization in implementing recommendation 2 of resolution 1 adopted by the International Convention of the Safety of Life at Sea, 1974, developed a draft set of regulations on subdivision and damage stability of dry cargo ships, including ro-ro ships given in the Annex.

2 The Committee at its fifty-fifth session:

CONSIDERING the importance of a mandatory introduction of such regulations;

BEING AWARE of the difficulties to establish an acceptable level of safety in an area where little experience exists;

AGREED that these regulations should, in the future, amend the present SOLAS Convention;

URGES that the Administration during the period prior to the approval of the amendment use the regulations in the annex for the calculation of Attained Subdivision Index "A" on all new dry cargo ships over 100 m in length on a trial basis.

3 While there was agreement on the calculation of the Attained Subdivision Index "A", concern still exists as to whether the level of the Required Subdivision Index "R" is appropriate. This level is represented by the factors "C_1" and "C_2" in the formula for "R".

4 As the Committee intends to take a final decision not later than ..., Administrations are requested to submit to the Organization, as early as possible, results from the application of the Annex. By this procedure it is hoped to enable the Committee in the shortest possible period of time to finally agree on the subdivision index "R".

ANNEX

DRAFT REGULATIONS ON SUBDIVISION AND DAMAGE STABILITY OF DRY CARGO SHIPS, INCLUDING RO-RO SHIPS (BUT EXCLUDING THOSE SHIPS DEALT WITH BY OTHER DAMAGE STABILITY REGULATIONS IN IMO INSTRUMENTS)

Regulation 1

Application

1 The requirements in these regulations shall apply to new ships over 100 m in length (L_s) intended primarily for the carriage of dry cargoes, but shall exclude those ships already covered by other damage stability regulations in IMO instruments.

2 Any reference to regulations hereunder refer to the set of regulations contained in regulations 1 to 13.

3 The Administration may for a particular ship or group of ships accept alternative arrangements, if it is satisfied that at least the same degree of safety as represented by these regulations is achieved. Any Administration which allows such alternative arrangements shall communicate to the Organization particulars thereof.

Regulation 2

Definitions

For the purpose of these regulations, unless expressly provided otherwise:

1.1 a "subdivision load line" is a waterline used in determining the subdivision of the ship;

1.2 the "deepest subdivision load line" is the subdivision load line which corresponds to the summer draught to be assigned to the ship;

1.3 the "partial load line" is the light ship draught plus 60% of the difference between the light ship draught and deepest subdivision load line;

2.1 the "subdivision length of the ship" (L_s) is the greatest projected moulded length of that part of the ship at or below the deck or decks limiting the vertical extent of flooding;

2.2 the "mid-length" is the mid point of the subdivision length of the ship;

2.3 the "aft terminal" is the aft limit of the subdivision length;

2.4 the "forward terminal" is the forward limit of the subdivision length;

3 the "breadth" (B) is the greatest moulded breadth of the ship at mid-length at or below the deepest subdivision load line;

4 the "draught" (d) is the vertical distance from the moulded baseline at mid-length to the waterline in question;

5 the "permeability" ( ) of a space is the proportion of the immersed volume of that space which can be occupied by water.

Regulation 3

Required Subdivision Index "R"

1 These regulations are intended to provide ships with a minimum standard of subdivision.

2 The degree of subdivision to be provided shall be determined by the required Subdivision Index "R", as follows:

$R = (C_1 + C_2 L_s)^{1/3}$ where L_s is in metres

and

$$\left.\begin{array}{l} C_1 = 0 \\ C_2 = 0.001 \end{array}\right\} *$$

Regulation 4

Attained Subdivision Index "A"

1 The attained Subdivision Index "A", calculated in accordance with this regulation, shall not be less than the required Subdivision Index "R", calculated in accordance with paragraph 2 of regulation 3.

---

* Reference is made to MSC/Circ...

2 The attained Subdivision Index "A" shall be calculated for the ship by the following formula:

$$A = 0.5A_L + 0.5A_p$$

where:

A_L is that part of the attained subdivision index for the ship obtained at the deepest subdivision load line,

A_p is that part of the attained subdivision index for the ship obtained at the partial load line,

In calculating A_L and A_p, level trim shall be used, except when inconsistent with the ship's operation.

For both A_L and A_p, the following summation shall be used:

$$A = \sum p_i s_i v_i$$

where:

i represents each compartment or group of compartments under consideration,

p_i accounts for the probability that only the compartment or group of compartments under consideration may be flooded,

s_i accounts for the probability of survival after flooding the compartment or group of compartments under consideration,

v_i accounts for the probability that only the compartment(s) under consideration are flooded within the assumed vertical extent of damage.

3 This summation covers only those cases of flooding, which contribute to the value of the attained Subdivision Index "A".

4 The summation indicated by the above formulae shall be taken over the ship's length for all cases of flooding in which a single compartment or two or more adjacent compartments are involved.

VOL 53 ISS 66 AP 6 1988 UMI

5 Wherever wing compartments are fitted, the summation indicated by the formula shall be taken over the ship's length for all cases of flooding in which only wing compartments are involved; and additionally, for all cases of simultaneous flooding of wing compartment(s) and adjacent inboard compartment(s), assuming a rectangular penetration which extends to the ship's centreline, but excludes damage to any centreline bulkhead.

6 The assumed vertical extent of damage is to extend from baseline upwards to any watertight horizontal subdivision above the waterline or higher. However, if a lesser extent will give a more severe result, such extent is to be assumed.

7 If pipes, ducts or tunnels are situated within assumed flooded compartments, arrangements are to be made to ensure that progressive flooding cannot thereby extend to compartments other than those assumed flooded.

8 In the flooding calculations carried out according to the Regulations, only one breach of the hull need be assumed.

Regulation 5

Calculation of the factor "p_i"

1 The factor "p_i" shall be calculated according to paragraph 1.1 as appropriate, using the following notations:

x_1 = the distance from the aft terminal of L_s to the foremost portion of the aft end of the compartment being considered;

x_2 = the distance from the aft terminal of L_s to the aftermost portion of the forward end of the compartment being considered;

$\xi 1 = x_1/L_s$

$\xi 2 = x_2/L_s$

$\xi = (\xi 1 + \xi 2)/2$

$\lambda = \xi 2 - \xi 1$

$\lambda' = 1 - 2\xi 1$, if $\xi \geq 0.5$

$\lambda' = 2\xi 2 - 1$, if $\xi < 0.5$

The maximum non-dimensional damage length,

λ max = $48/L_s$, but not more than 0.24.

The assumed distribution density of damage location along the ship's length

$a = 0.4 + 1.6\ \xi$, but not more than 1.2

The assumed distribution function of damage location along the ship's length

$$F = 0.4 + (\xi - 0.5)\ (0.6 + 0.5a)$$

$$y = \lambda / \lambda max$$

$$p = \lambda max F_1$$

$$q = 0.4\ (\lambda max)^2\ F_2$$

$$F_1 = y^2 - \frac{1}{3}\ y^3 \qquad \text{if } y < 1$$

$$F_1 = y - \frac{1}{3} \qquad \text{otherwise}$$

$$F_2 = \frac{1}{3}\ y^3 - \frac{1}{12}\ y^4 \qquad \text{if } y < 1$$

$$F_2 = \frac{1}{2}\ y^2 - \frac{1}{3}\ y + \frac{1}{12} \qquad \text{otherwise}$$

1.1 The factor "p_i" is determined for each single compartment:

1.1.1 Where the compartment considered extends over the entire ship length, L_s:

$$p_i = 1$$

1.1.2 Where the aft limit of the compartment considered coincides with the aft terminal:

$$p_i = F + 0.5ap + q$$

1.1.3 Where the forward limit of the compartment considered coincides with the forward terminal:

$$p_i = 1 - F + 0.5ap$$

1.1.4 When both ends of the compartment considered are inside the aft and forward terminals of the ship length, L_s:

$$p_i = ap$$

1.1.5 In applying the formulae of paragraphs 1.1.2, 1.1.3 and 1.1.4, where the compartment considered extends over the "mid-length", these formulae values shall be reduced by an amount determined according to the formula for "q", in which F_2 is calculated taking y to be λ'/λ_{max}.

1.1.6 The factor "p_i" for a group of three or more adjacent compartments equals zero if the non-dimensional length of such a group minus the outer compartments is greater than λ max.

2 Wherever wing compartments are fitted, the "p_i" value for a wing compartment shall be obtained by multiplying the value as determined in paragraph 3 by the reduction factor "r" according to sub-paragraph 2.2, which represents the probability that the inboard spaces will not be flooded.

2.1 The "p_i" value for the case of simultaneous flooding of a wing and adjacent inboard compartment shall be obtained by using the formulae of paragraph 3, multiplied by the factor (1 - r).

2.2 The reduction factor "r" shall be determined by the following formulae:

For $\lambda \leq 0.2$ b/B:

$$r = \frac{b}{B}\left(2.3 + \frac{0.08}{\lambda + 0.02}\right) + 0.1, \qquad \text{if } b/B \leq 0.2$$

$$r = \left(\frac{0.016}{\lambda + 0.02} + \frac{b}{B} + 0.36\right), \qquad \text{if } b/B > 0.2$$

For $\lambda < 0.2$ b/B the reduction factor "r" shall be determined by linear interpolation between

$r = 1$, for $\lambda = 0$

and

r = as above, for $\lambda = 0.2$ b/B

where:

b = the mean transverse distance in metres measured at right angles to the centreline at the subdivision load line between the shell and a plane through the outermost portion of and parallel to that part of the longitudinal bulkhead which extends between the longitudinal limits used in calculating the factor "p_i".

3 To evaluate "p_i" for compartments taken singly the formulae in paragraphs 3 and 4 shall be applied directly.

3.1 To evaluate the "p_i" values attributable to groups of compartments the following applies:

for compartments taken by pairs:

$p_i = p_{12} - p_1 + p_2$
$p_i = p_{23} - p_2 + p_3$, etc.

for compartments taken by groups of three:

$p_i = p_{123} - p_{12} - p_{23} + p_2$
$p_i = p_{234} - p_{23} - p_{34} + p_3$ etc.

for compartments taken by groups of four:

$p_i = p_{1234} - p_{123} - p_{234} + p_{23}$
$p_i = p_{2345} - p_{234} - p_{345} + p_{34}$, etc.

where:

p_{12}, p_{23}, p_{34}, etc.,
p_{123}, p_{234}, p_{345}, etc. and
p_{1234}, p_{2345}, p_{3456}, etc.

VOL 53 ISS 66 APR 6 1988 UMI

shall be calculated according to the formulae in paragraphs 1 and 2 for a single compartment whose non-dimensional length λ corresponds to that of a group consisting of the compartments indicated by the indices assigned to p.

Regulation 6
Calculation of factor "s_i"

1 The factor "s_i", shall be determined according to the following:

.1 $s_i = C\sqrt{0.5(GZmax)(Range)}$

with $C = 1$, if $\theta e \leq 25°$

$C = 0$, if $\theta e > 30°$

$C = \sqrt{\frac{30 - \theta e}{5}}$, otherwise

GZmax = maximum positive righting lever (m) within the range as given below but not more than 0.1 m

Range = range of positive righting levers beyond the angle of equilibrium (in degrees) but not more than 20°, however, the range shall be terminated at the angle where openings not capable of being closed weathertight are immersed.

θe = final equilibrium angle of heel (degrees)

.2 $s_i = 0$ where the final waterline taking into account sinkage, heel and trim, immerses the lower edge of openings through which progressive flooding may take place. However, if the compartments so flooded are taken into account in the calculations the requirements of this regulation shall be applied.

Regulation 7
Calculation of factor "v_i"

1 The probability factor "v_i" shall be calculated according to:

$$v_i = \frac{V - d}{Vmax - d}, \quad \text{but not more than 1}$$

However, if the uppermost horizontal subdivision in way of the damaged region is below Vmax, then $v_i = 1$

SLF 32/21
ANNEX 2
Page 10

with $V_{max} = d + 0.056\ L_s \left(1 - \frac{L_s}{500}\right)$, but V_{max} is $(d + 7)$m when $L_s \geq 250$ m

where:

v_i = probability that the vertical extent of damage has a value V or less

V = assumed vertical extent of damage above baseline (m)

V_{max} = maximum vertical extent of damage above baseline (m)

Regulation 8

Permeability

For the purpose of the subdivision and damage stability calculations of the regulations, the permeability of each space or part of a space shall be as follows:

Spaces	Permeability
Appropriated to stores	0.60
Occupied by accommodation	0.95
Occupied by machinery	0.85
Void spaces	0.95
Dry cargo spaces	0.70
Intended for liquid	0 or 0.95*

Regulation 9

Stability information

1 The master of the ship shall be supplied with such reliable information as is necessary to enable him by rapid and simple means to obtain accurate guidance as to the stability of the ship under varying conditions of service. The information shall include:

.1 a curve of minimum operational metacentric height (GM) versus draught which assures compliance with the relevant intact stability requirements and the requirements of regulations 1 to 7,

---

* Whichever results in the more severe requirements.

alternatively a corresponding curve of the maximum allowable vertical centre of gravity (KG) versus draught, or with the equivalents of either of these curves;

.2 instructions concerning the operation of cross-flooding arrangements; and

.3 all other data and aids which might be necessary to maintain stability after damage.

2 There shall be permanently exhibited, for the guidance of the officer in charge of the ship, plans showing clearly for each deck and hold the boundaries of the watertight compartments, the openings therein with the means of closure and position of any controls thereof, and the arrangements for the correction of any list due to flooding. In addition, booklets containing the aforementioned information shall be made available to the officers of the ship.

3 In order to provide the information referred to in 1.1, the limiting GM (or KG) values to be used, if they have been determined from considerations related to the subdivision index, the limiting GM shall be varied linearly between the deepest subdivision load line and the partial load line. In such cases, for draughts below the partial load line if the minimum GM requirement at this draught results from the calculation of the subdivision index, then this GM value shall be assumed for lesser draughts, unless the intact stability requirements apply.

Regulation 10

Collision bulkhead

1 A collision bulkhead .....*

2 The "s_i" value calculated for all compartments forward of the collision bulkhead at the deepest subdivision loadline and assuming unlimited vertical extent of damage is not to be less than 1.

---

* To be inserted after having been considered by the Sub-Committee on Ship Design and Equipment.

BILLING CODE 6210-14-C

***

Appendix 2—Draft Rules for the Subdivision and Damage Stability of Dry Cargo Ships

§ XXX.200 Specific applicability.

This subpart applies to each new, oceangoing ship greater than 330 feet (100 meters) in length (L_s) and 500 gross tons or over intended primarily for the carriage of dry cargoes, including roll-on/roll-off ships.

§ XXX.205 Definitions.

(a) "Subdivision load line" means a waterline used in determining the subdivision of the ship.

(b) "Deepest subdivision load line" means the subdivision load line which corresponds to the summer draft to be assigned to the ship.

(c) "Partial load line" means the light ship draft plus 60% of the difference between the light ship draft and deepest subdivision load line.

(d) "Subdivision length of the ship" (L_s) is the greatest projected molded length in feet or meters of that part of the ship at or below the deck or decks limiting the vertical extent of flooding.

(e) "Mid-length" means the mid point of the subdivision length of the ship.

(f) "Aft terminal" means the after limit of the subdivision length of the ship.

(g) "Foward terminal" means the forward limit of the subdivision length of the ship.

(h) "Breadth" (B) is the greatest molded breadth of the ship in feet or meters at mid-length at or below the deepest subdivision load line;

(i) "Draft" (d) is the vertical distance in feet or meters from the molded baseline at mid-length to the waterline in question;

(j) "Permeability" of a space is the proportion of the immersed volume of that space which can be occupied by water.

(k) A "new" vessel is one

(1) for which the building contract is placed after (the effective date of the regulations); or

(2) in the absence of a building contract, the keel of which is laid or which is at a similar stage of construction after (a date six months past the effective date of the regulations); or

(3) the delivery of which is after (a date five years past the effective date of the regulations); or

(4) which has undergone a major conversion:

(i) for which the contract is placed after (the effective date of the regulations); or

(ii) in the absence of a contract, the construction work of which is begun after (a date six months past the effective date of the regulations); or

(iii) which is completed after (a date five years past the effective date of the regulations).

(l) An "existing" vessel is one which is not new.

§ XXX.207 Calculations.

(a) For each vessel to which this subpart applies, calculations of the required subdivision index "R" and the attained subdivision index "A" must be submitted to: Commanding Officer, Coast Guard Marine Safety Center, Washington, DC 20593–0001.

(b) For each vessel, the attained subdivison index "A" calculated in accordance with this subpart shall not be less than the required subdivision index "R".

§ XXX.210 Required Subdivision Index.

The Required Subdivision Index "R" shall be calculated for each vessel as follows:

$$R=(C_1+C_2 L_s)^{1/3}$$

where:

$C_1=0.0$

$C_2=0.0003048$ if L_s is in feet

$C_2=0.001$ if L_s is in meters

§ XXX.215 Attained Subdivision Index.

(a) The attained Subdivision Index "A" shall be calculated for each ship by the following formula:

$$A=0.5A_L+0.5A_p$$

Where:

A_L is that part of the attained subdivision index for the ship obtained at the deepest subdivision load line.

A_p is that part of the attained subdivision index for the ship obtained at the partial load line.

In calculating A_L and A_p, level trim shall be used, except when inconsistent with the ship's operation.

For both A_L and A_p, the following summation shall be used:

$$A_L, A_p=\Sigma p_i s_i h_i$$

where

i is an index representing each compartment or group of compartments under consideration.

p_i accounts for the probability that only the compartment(s) under consideration are flooded within the assumed longitudinal and transverse extent of damage.

s_i accounts for the probability of survival after flooding the compartment or group of compartments under consideration, and

h_i accounts for the probability that only the compartment(s) under consideration are flooded within the the assumed vertical extent of damage.

(b) The summation in paragraph (a) of this section should include only those cases of flooding which make a positive contribution to the value of the attained Subdivision Index "A".

(c) The summation in paragraph (a) of this section should include all possible cases of flooding along the ship's length in which a single compartment or two or more adjacent compartments are involved. Cases involving flooding in non-adjacent compartments need not be considered. Only one breach of the hull is to be assumed.

(d) Wherever wing compartments are fitted:

(1) The summation in paragraph (a) of this section shall be taken over the ship's length for all cases of flooding involving:

(i) Wing compartments only, and

(ii) Wing compartments together with the adjacent inboard compartments, assuming a rectangular penetration of damage to the centerline.

(2) The following cases should not be included in the summation:

(i) Those involving only inboard compartments without damage to adjacent outboard wing compartments; or

(ii) Those involving diagonally adjacent compartments having no common bulkhead; or

(iii) Those involving damage to the centerline bulkhead.

(e) The assumed vertical extent of damage extends from the molded baseline upwards to any watertight horizontal subdivision above the waterline. Within this extent, the damage case which gives the most severe result is to be assumed.

(f) If pipes, ducts or tunnels are situated within assumed flooded compartments, they are assumed to be damaged and flooded also. Arrangements are to be made to ensure that progressive flooding cannot thereby extend to compartments other than those assumed flooded.

§ XXX.220 The "p_i" Factor.

(a) The factor "p_i" shall be calculated for each single compartment as follows:

(1) Where the compartment considered extends over the entire ship length, L_s:

$$p_i=1$$

(2) Where the aft limit of the compartment considered coincides with the aft terminal:

$$p_i=F+0.5ag+q$$

(3) Where the forward limit of the compartment considered coincides with the forward terminal:

$$p_i=1-F+0.5ag$$

(4) When both ends of the compartment considered are inside the aft and forward terminals of the ship length, L_s:

$p_i = ag$

where, for the formulas in paragraphs (1), (2), (3), and (4) of this section:

x_1 = the distance in feet or meters from the aft terminal of L_s to the foremost portion of the aft end of the compartment being considered;

x_2 = the distance in feet or meters from the aft terminal of L_s to the aftermost portion of the forward end of the compartment being considered;

$E_1 = x_1/L_s$

$E_2 = x_1/L_s$

$E = (E_1 + E_2)/2$

$J = E_2 - E_1$

$J_1 = 1 - 2E_1$, if E is greater than or equal to 0.5

$J_1 = 2E_2 - 1$, if E is less than 0.5

$J_{max} = 157.44/L_s$, but not more than 0.24 if L_s is in feet.

$J_{max} = 48/L_s$, but not more than 0.24 if L_s is in meters.

$a = 0.4 + 1.6E$, but not more than 1.2

$F = 0.4 + (E - 0.5)(0.6 + 0.5a)$

$y = J/J_{max}$

$F1 = y^2 - 0.333y^3$ if y is less than 1

$F1 = y - 0.333$ otherwise

$g = J_{max}F_1$

$F2 = 0.333y^3 - 0.083y^4$ if y is less than 1

$F2 = 0.5y^2 - 0.333y + 0.083$ otherwise

$q = 0.4(J_{max})^2F_2$

(5) In applying the formulas of paragraphs (2), (3), and (4) of this section, where the compartment considered extends over the "mid-length" (that is, where J_1 is greater than 0), an amount "z" shall be subtracted from p_i.

where $z = 0.4(J_{max})^2F_2$

and, in calculating F_2, y shall be taken as $y = J_1/J_{max}$.

(6) Wherever wing compartments are fitted, the "p_i" value for a wing compartment shall be obtained by multiplying the value as determined in paragraphs (2), (3), or (4) of this section by the reduction factor "r" given in paragraph (b)(3) of this section.

(b) The factor "p_i" shall be calculated for each group of compartments as follows:

for compartments taken by pairs:

$p_i = p_{1,2} - p_1 - p_2$

$p_i = p_{2,3} - p_2 - p_3$ etc.

for compartments taken by groups of three:

$p_i = p_{1,2,3} - p_{1,2} - p_{2,3} + p_2$

$p_i = p_{2,3,4} - p_{2,3} - p_{3,4} + p_3$ etc.

for compartments taken by groups of four:

$p_i = p_{1,2,3,4} - p_{1,2,3} - p_{2,3,4} + p_{2,3}$

$p_i = p_{2,3,4,5} - p_{2,3,4} - p_{3,4,5} + p_{3,4}$ etc.

where:

$p_{1,2}$, $p_{2,3}$, $p_{3,4}$ etc.,

$p_{1,2,3}$, $p_{2,3,4}$, $p_{3,4,5}$ etc. and

$p_{1,2,3,4}$, $p_{2,3,4,5}$, $p_{3,4,5,6}$ etc.

shall be calculated according to the formulas in paragraphs (a)(1) through (a)(4) of this section for a single compartment whose non-dimensional length, J, corresponds to that of a group consisting of the compartments indicated by the indices assigned to p.

(1) The factor "p_i" for a group of three or more adjacent compartments equals zero if the non-dimensional length of such a group minus the non-dimensional lengths of the aftermost and forwardmost compartments in the group is greater than J_{max}.

(2) The "p_i" value for the case of simultaneous flooding of a wing and adjacent inboard compartment shall be obtained by using the formulas of paragraph (b) of this section, multiplied by the factor (1–r).

(3) The reduction factor "r", which represents the probability that the inboard spaces will not be flooded, shall be determined by the following formulas:

For J greater than or equal to 0.2 b/B:

$r = b/B\,[2.3 + 0.08/(J + 0.02)] + 0.1$, if b/B is less than or equal to 0.2

$r = [0.016/(J + 0.02) + (b/B) + 0.36]$ if b/B is greater than 0.2

For J less than 0.2 b/B the reduction factor "r" shall be determined by linear interpolation between

r = as above, with J = 0.2 b/B

and

r = 1 with J = 0

where:

b = the mean transverse distance in feet or meters measured at right angles to the centerline at the subdivision load line between the shell and a plane through the outermost portion of and parallel to that part of the longitudinal bulkhead which extends between the longitudinal limits used in calculating the factor "p_i".

§ XXX.225 The "s_i" Factor.

(a) The factor "s_i", shall be determined according to the following:

$s_i = C[0.15(GZ_{max})(Range)]^{0.5}$ if GZ_{max} is in feet.

$s_i = C[0.5(GZ_{max})(Range)]^{0.5}$ if GZ_{max} is in meters.

where

C = 1, if T_e is less than or equal to 25 degrees.

C = 0, if T_e is greater than 30 degrees.

$C = [(30 - T_e)/5]^{0.5}$ otherwise

GZ_{max} = maximum positive righting lever in feet or meters within the range as given below but not more than 0.328 feet (0.1 meters)

Range = range of positive righting levers beyond the angle of equilibrium (in degrees) but not more than 20 degrees. The range shall be terminated at the angle which immerses the lower edge of openings which are not capable of being closed weathertight.

T_e = final equilibrium angle of heel (degrees)

(b) $s_i = 0$ where the final waterline taking into account sinkage, heel and trim, immerses the lower edge of openings through which progressive flooding may take place. However, if the compartments so flooded are taken into account in the calculations, the requirements of paragraph (a) of this section shall be applied. Weathertight closures are considered to be openings through which progressive flooding may take place.

§ XXX.230 The "h_i" Factor.

(a) The factor "h_i" shall be calculated according to:

$h_i = (H - d)/(H_{max} - d)$, but not more than 1. However, if the uppermost horizontal subdivision in way of the damaged region is below H_{max}, then $h_i = 1$

where:

$H_{max} = d + [0.017\,L_s]\,[1 - (L_s/1640)]$ feet if L_s is less than 820 feet.

$H_{max} = d + [0.056\,L_s]\,[1 - (L_s/500)]$ meters if L_s is less than 250 meters.

$H_{max} = (d + 23)$ feet if L_s is greater than or equal to 820 feet.

$H_{max} = (d + 7)$ meters if L_s is greater than or equal to 250 meters

h_i = probability that the vertical extent of damage has a value H or less

H = assumed vertical extent of damage in feet or meters above the molded baseline.

H_{max} = maximum vertical extent of damage in feet or meters above the molded baseline.

§ XXX.235 Permeability.

For the purpose of the subdivision and damage stability calculations of the regulations, the permeability of each space or part of a space shall be as follows:

Spaces	Permeability
Appropriated to stores	0.60
Occupied by accommodation	0.95
Occupied by machinery	0.85
Void spaces	0.95
Dry cargo spaces	0.70
Intended for liquid	0 or 0.95, whichever is more severe.

§ XXX.240 Stability information.

(a) The master of the ship shall be supplied with a stability booklet as required in 46 CFR 170.110.

(b) There shall be permanently exhibited, on the navigating bridge, plans showing clearly for each deck and hold the boundaries of the watertight compartments, the openings therein with the means of closure and position of any controls thereof, and the arrangements for the correction of any list due to flooding.

(c) In developing the information referred to in paragraph (a) of this section, the limiting GM values determined from the subdivision index shall be calculated for the deepest subdivision loadline and the partial load line. For all drafts between the deepest subdivision loadline and the partial loadline, the limiting GM from the subdivision index shall be obtained by linearly interpolating between the limiting values at the subdivision and partial loadlines. For all drafts shallower than the partial load line

draft, the limiting GM shall be the same as that for the partial load line draft.

§ XXX.245 Collision bulkhead.

(a) Each vessel shall be fitted with a collision bulkhead meeting the requirements of 46 CFR 171.085(a) through (g).

(b) The placement of the collision bulkhead shall be such that the "s_i" value for all compartments forward of the collision bulkhead at the deepest subdivision loadline and assuming unlimited vertical extent of damage is not to be less than 1.

Appendix 3—Information and Guidance to Render Assistance

The information and guidance given here is intended to render assistance to practicing naval architects in planning and in making the calculations necessary to comply with the new Subdivision and Damage Stability Regulations. The complete flexibility of these new regulations may not be shown in its entirety by the examples and illustrations, so further study of the regulations themselves is highly encouraged. Further reading on the subject can be found in the reference section of this advanced notice of proposed rule making.

Input Data

The input data fall into three categories, the first measured directly from the ship's plans, the remainder calculated.

1. Data measured directly from the ship's plans: L_s, Midlength, B, X_1, X_2, b and H for each compartment or compartment groups so that $X_2 - X_1$ is a minimum distance (see Appendix 3 Figure 1), and the coordinates of the location of the downflood points on the ship indexed to the compartment into which they flood so they can be disregarded for particular damage cases.

2. Information for intact ship loading conditions:

Subdivision load line draft, Partial load line draft, and the intact metacentric height for the relevant loading requirements at each draft in accordance with XXX.240.

3. Damage specifications:

All one compartment and multiple compartment damage combinations desired for inclusion in the calculations for A_L and A_P, and the premeabilities of each compartment in accordance with XXX.235. For the convenience of naval architects, it is suggested that a systematic numbering system be applied to each compartment and combination of compartments.

Systematic Calculation and Output Data Format

For the sake of having a systematic calculation process and uniform presentation of data from naval architects it is suggested that a spreadsheet format be used for calculating and presenting the data. Computer programs can assist in the process of calculating the probability factors "p" and "h", and are a necessity for calculating the reserve buoyancy and righting levers associated with each assumed case of damage so the probability factor "s" can be determined. Appendix 3 Figure 1 is an easy reference set of equations and a suggested spreadsheet format.

BILLING CODE 4910-14-M

Appendix 3 Figure 1

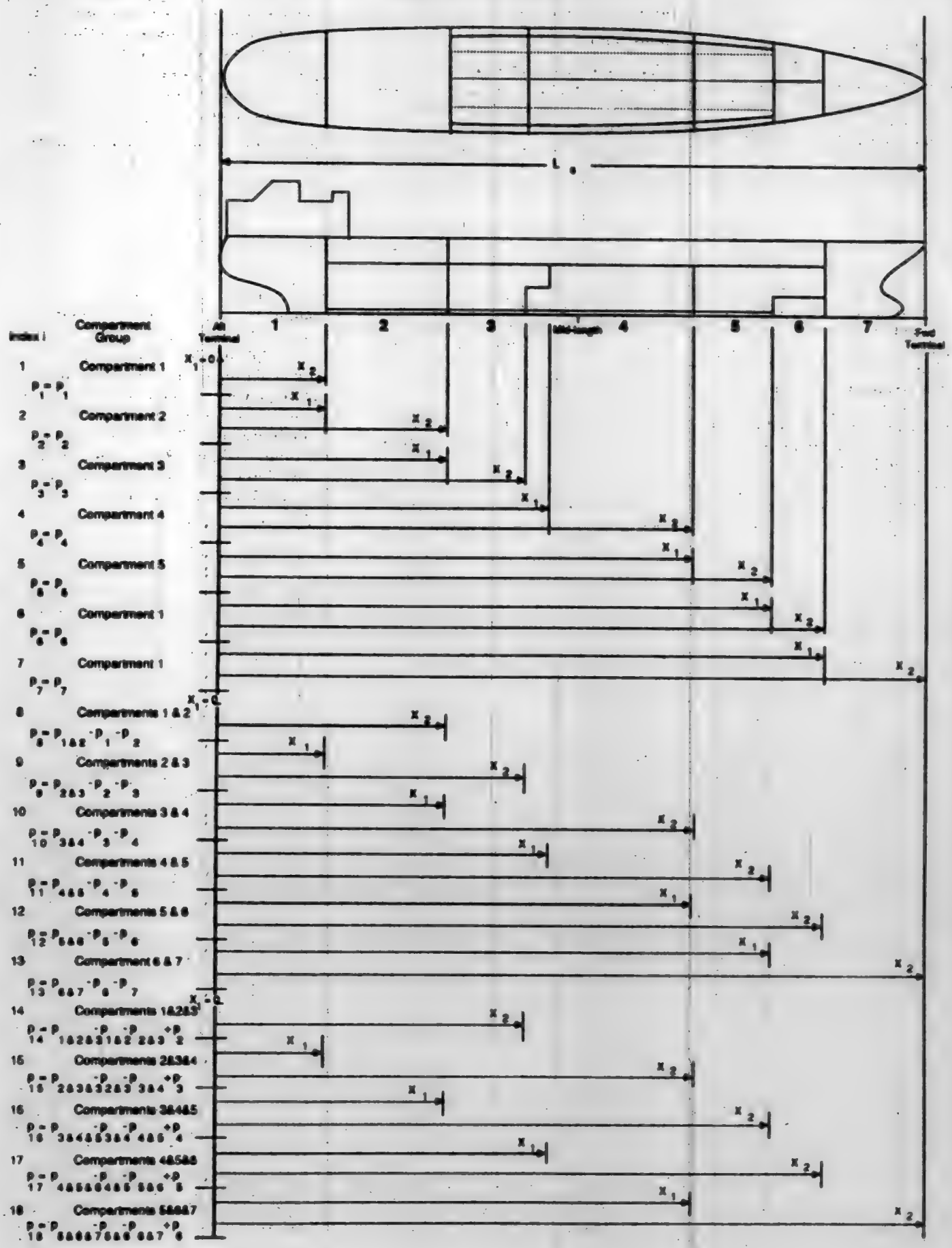

Appendix 3 Figure 2

FORMULAS NECESSARY TO COMPLETE THE CALCULATION SUMMARY SHEET

$R = (C_2 L_s)^{0.3333}$

$A = 0.5A_L + 0.5A_p$

$E_1 = \dfrac{X_1}{L_s}$

$J = E_2 - E_1$

$J_{max} = 157.44/L_s$ (feet) but not more than 0.24
$= 48/L_s$ (meters) but not more than 0.24

$E_2 = \dfrac{X_2}{L_s}$

$J_1 = 1 - 2E_1$ when: E is greater than or equal to 0.5
$= 2E_2 - 1$ E is less than 0.5

$E = (E_1 + E_2)/2$

$y = J/J_{max}$

$a = 0.04 + 1.6\,E$ (but not more than 1.2)

$q = 0.4\,J_{max}^2\,F_2$

$F = 0.4 + (E-0.5)\,(0.6 + 0.5a)$

$z = 0.4\,J_{max}^2\,F_2$ —— in calculating F_2, $y = \dfrac{J_1}{J_{max}}$

$F_1 = y^2 - 0.333\,y^3$ (when y is less than 1.0)
$= y - 0.333$ (otherwise)

$F_2 = 0.333y^3 - 0.083y^4$ (when y is less than 1.0)
$= 0.5y^2 - 0.333y + 0.083$ (otherwise)

$g = J_{max}\,F_1$

Where p_i = one of 4 possible formulas depending on the type of damage;

(1) $p_i = 1.0$
(2) $p_i = F + 0.5\,ag + q$
(3) $p_i = 1 - F + 0.5\,ag$
(4) $p_i = ag$

N.B. The '$_i$' is only an index to each 'p' calculated. It is recommended that each 'p_i' have a separate and distinct number or letter.

if 'z' reduction by subtraction is necessary

$p_i = F + 0.5\,ag + q - z$
$p_i = 1 - F + 0.5\,ag - z$
$p_i = ag - z$

For J greater than or equal to 0.2b/B

$r = b/B\,[2.3 + 0.08/(J+0.02)] + 0.1$ if b/B is less than or equal to 0.2
$r = [0.016/(J + 0.02) + (b/B) + 0.36]$ if b/B is greater than 0.2

For J less than 0.2b/B

$r = [\,r_{(J=0.2b/B)} - 1.0\,]\,(J_{actual})/(0.2b/B)$ select the equation above based on the 'b/B' ratio, and evaluate r with J=0.2b/B

examples of p_i reduced by multiplying by the 'r' reduction for minor* damage

1 compartment examples
$p_i = p_1\,r$
$p_i = p_2\,r$

2 compartment examples
$p_i = (p_{1\&2} - p_1 - p_2)\,r$
$p_i = (p_{2\&3} - p_2 - p_3)\,r$
$p_i = (p_{3\&4} - p_3 - p_4)\,r$

* replace 'r' by 1- r for MAJOR damage

3 compartment examples
$p_i = (p_{1\&2\&3} - p_{1\&2} - p_{2\&3} + p_2)\,r$
$p_i = (p_{2\&3\&4} - p_{2\&3} - p_{3\&4} + p_3)\,r$
$p_i = (p_{3\&4\&5} - p_{3\&4} - p_{4\&5} + p_4)\,r$

4 compartment examples
$p_i = (p_{1\&2\&3\&4} - p_{1\&2\&3} - p_{2\&3\&4} + p_{2\&3})\,r$
$p_i = (p_{2\&3\&4\&5} - p_{2\&3\&4} - p_{3\&4\&5} + p_{3\&4})\,r$
$p_i = (p_{3\&4\&5\&6} - p_{3\&4\&5} - p_{4\&5\&6} + p_{4\&5})\,r$

$s_i = C[0.15(GZ_{max})(Range)]^{0.5}$ if GZ_{max} is in feet
$= C[0.5(GZ_{max})(Range)]^{0.5}$ if GZ_{max} is in meters

$C = 1.0$ if τ_e is less than or equal to 25 degrees
$= 0.0$ if τ_e is greater than 30 degrees
$= [(30-\tau_e)/5]^{0.5}$ otherwise

s_i = 0.0 if progressive downflooding takes place

Appendix 3 Figure 2 continued

$h_i = (H-d)/(H_{max} - d)$ but NOT more than 1.0. However, $h_i = 1.0$ if uppermost horizontal subdivision in way of the damaged region is below H_{max}

where: L_s is less than 820 ft or 250 meters

$$H_{max} = d + [0.017\ L_s][1 - (L_s/1640)] \text{ feet}$$
$$d + [0.056\ L_s][1 - (L_s/500)] \text{ meters}$$

where: L_s is less greater than or equal to 820 ft or 250 meters

$$H_{max} = (d + 23) \text{ feet}$$
$$(d + 7) \text{ meters}$$

CALCULATION SUMMARY SHEET

Compt.	X_1	E_1	X_2	E_2	E	J	J_{max}	y	F_1	F_2	g	a	ag	F	p_i	p_i reduced for z (if necessary)	p_i reduced for r (if necessary)	s_i	h_i	$p_i s_i h_i$
1 minor																				
MAJOR																				
2 minor																				
MAJOR																				
3 minor																				
MAJOR																				
4 minor																				
MAJOR																				
etc.																				

Compt.	X_1	E_1	X_2	E_2	E	J	J_{max}	y	F_1	F_2	g	a	ag	F	p_i	p_i reduced for z (if necessary)	p_i reduced for r (if necessary)	s_i	h_i	$p_i s_i h_i$
(1&2) minor																				
MAJOR																				
(2&3) minor																				
MAJOR																				
(3&4) minor																				
MAJOR																				
etc.																				

Compt.	X_1	E_1	X_2	E_2	E	J	J_{max}	y	F_1	F_2	g	a	ag	F	p_i	p_i reduced for z (if necessary)	p_i reduced for r (if necessary)	s_i	h_i	$p_i s_i h_i$
(1&2&3) minor																				
MAJOR																				
(2&3&4) minor																				
MAJOR																				
(3&4&5) minor																				
MAJOR																				
etc.																				

summate quantity of ($p_i s_i h_i$)

[FR Doc. 88-7480 Filed 4-5-88; 8:45 am]
BILLING CODE 4910-14-C

VOL
53

ISS
66

AP
6

1988

UMI

federal register

Wednesday
April 6, 1988

Part VI

Department of Agriculture

Commodity Credit Corporation

7 CFR Parts 1497 and 1498

Payment Limitation and Foreign Persons Ineligible for Program Benefits; Proposed Rule

BEST COPY AVAILABLE

VOL 53 ISS 66 AP 6 1988 UMI

DEPARTMENT OF AGRICULTURE

Commodity Credit Corporation

7 CFR Parts 1497 and 1498

Payment Limitation and Foreign Persons Ineligible for Program Benefits

AGENCY: Commodity Credit Corporation (CCC) and Agricultural Stabilization and Conservation Service (ASCS) USDA.

ACTION: Proposed rule.

SUMMARY: Subtitle C of the Agricultural Reconciliation Act of 1987 (The "1987 Act"), as included in the Omnibus Budget Reconciliation Act of 1987, amended the Food Security Act of 1985 (The "1985 Act") with respect to the application of maximum payment limitation to specified payments which are made in accordance with: (1) Price support and production adjustment programs for the 1989 and 1990 crops; and (2) Conservation Reserve Program contracts executed after December 22, 1987. Accordingly, this proposed rule would set forth at 7 CFR Part 1497 the regulations which would be used in limiting the making of such payments to a person, as defined by the 1985 Act. In order to provide for the uniform application of payment limitation provisions which are applicable to other agricultural conservation programs, 7 CFR Part 1497 would also be applicable to: (1) The Rural Clean Water Program; (2) The Agricultural Conservation Program; (3) The Forestry Incentive Program; (4) The Emergency Conservation Program; and (5) The Colorado River Salinity Control Program.

The 1987 Act also amended the 1985 Act to provide that any person who is not a citizen of the United States or an alien lawfully admitted into the United States shall be ineligible to receive any type of production adjustment payments, price support program loans, payments or benefits made available under the Agricultural Act of 1949, The Commodity Credit Corporation Charter Act, and Subtitle D of title XII of the 1985 Act. A corporation or other entity in which more than a 10 percent ownership interest of the entity is held by a person who is not a citizen of the United States or a lawfully admitted alien is also ineligible to receive such payments, loans, and benefits. Accordingly, this proposed rule would set forth at 7 CFR Part 1498 the regulations which would be applied in determining whether a foreign individual or entity is eligible to receive such payments, loans, and benefits.

DATES: Written comments must be received not later than May 6, 1988, in order to be assured of consideration.

ADDRESS: Written comments on this proposed rule must be submitted to Director, Cotton, Grain, and Rice Price Support Division, Agricultural Stabilization and Conservation Service (ASCS), USDA, P.O. Box 2415, Washington, DC 20013.

FOR FURTHER INFORMATION CONTACT: Charles J. Riley, Section Chief, Cotton, Grain, and Rice Price Support Division, ASCS, USDA, P.O. Box 2415, Washington, DC 20013.

SUPPLEMENTARY INFORMATION: This proposed rule has been reviewed under USDA procedures implementing Executive Order 12291 and Departmental Regulation 1512-1 and has been classified "not major" It has been determined that this rule will not result in: (1) An annual effect on the economy of $100 million or more; (2) a major increase in costs or prices for consumers, individual industries, Federal, State or local governments, or geographic regions; or (3) significant adverse effects on competition, employment, investment, productivity, innovation or the ability of United States-based enterprises to compete with foreign-based enterprises in domestic or export markets.

The titles and numbers of the Federal assistance programs to which this proposed rule applies are: Commodity Loan and Purchases—10.051; Cotton Production Stabilization—10.052; Emergency Conservation Program—10.054; Feed Grain Production Stabilization—10.055; Wheat Production Stabilization—10.058; Agricultural Conservation Program—10.063; Forestry Incentives Program—10.064; Rice Production Stabilization—10.065; and Conservation Reserve Program—10.069 as found in the Catalog of Federal Domestic Assistance.

It has been determined by an environmental evaluation that this action will have no significant impact on the quality of the human environment. Therefore, neither an environmental assessment nor an Environmental Impact Statement is needed.

This program/activity is not subject to the provisions of Executive Order 12372 which requires intergovernmental consultation with State and local officials. See the Notice related to 7 CFR Part 3015, Subpart V, published at 48 FR 29115 (June 24, 1983).

Statutory Background

Maximum payment limitations for commodity programs were first mandated by Section 101 of the Agricultural Act of 1970. This Act provided for such restrictions with respect to the 1971 through 1973 crops of wheat, feed grains, and upland cotton. Subsequent legislation expanded the application of similar restrictions to subsequent crops of these commodities as well as rice and extra long staple cotton. The most recent payment limitation provisions were authorized by Section 1001 of the Food Security Act of 1985 (the "1985 Act").

The Agricultural Reconciliation Act of 1987 (the "1987 Act"), as included in the Omnibus Budget Reconciliation Act of 1987, Pub. L. 99-203, amended the 1985 Act with respect to the application of maximum payment limitation restrictions to certain agricultural price support, production adjustment and conservation programs. The amendments made by the 1987 Act are effective for the 1989 and 1990 crops of wheat, feed grain, rice, upland, and extra long staple cotton, honey, and any other commodity for which a price support loan program is established under the Agricultural Act of 1949, as amended (the "1949 Act"), which allows a producer to repay such a loan at less than the original loan level. The amendments are applicable to any conservation reserve program contract entered into on or after December 22, 1987 but are applicable to such contracts entered into before that date.

Section 1001(1) of the 1985 Act provides that, with respect to each of the 1987 through 1990 crops, the total amount of deficiency payments (excluding any payment which is the result of any reduction in the price support rate for wheat or feed grains under section 107D(c)(1) or 105(c)(1) of the 1949 Act, respectively, i.e., a "Findley payment") and land diversion payments that a person may receive under one or more of the annual programs established under the 1949 Act for wheat, feed grains, upland cotton, extra long staple cotton, and rice may not exceed $50,000.

Section 1001(2) of the 1985 Act provides that for each of the 1987 through 1990 crops the total amount of the following payments that a person may receive under one or more of the annual programs established under the 1949 Act for wheat, feed grains, upland cotton, extra long staple cotton, rice, honey and any other commodity with respect to which producers may repay a loan at less than the original loan level may not exceed $250,000: (1) Deficiency payments; (2) diversion payments; (3) any part of any payment that is determined by the Secretary to represent compensation for resource

adjustment (excluding land diversion payments) or public access for recreation; (4) disaster payments; (5) any gain realized by a producer from repaying a price support loan at less than the original loan level; (6) Findley payments; (7) loan deficiency payments; and (8) inventory reduction payments.

As originally enacted, the 1985 Act required the Secretary to issue regulations defining the term "person" and to provide for such rules as the Secretary determines necessary to assure a fair and reasonable application of the maximum payment limitations of the 1985 Act. However, the 1987 Act made significant amendments to the 1985 Act by: (1) Specifying the requirements that must be met by participants in various agricultural programs in order for such participants to be considered to be a person who is eligible to receive the above specified program payments; (2) generally limiting the amount of benefits which a farming operation may receive if an individual or entity who is a program participant has an interest in two or more entities which are engaged in farming operations; (3) providing that foreign individuals and entities would be ineligible to receive specified agricultural program payments, loans, and benefits unless such individuals, or the individuals who own the entity, provide a substantial amount of personal labor in the production of crops on the farm owned or operated by the individual or entity.

Accordingly, this proposed rule would set forth at 7 CFR Part 1497 the regulations which define the term "person" for purposes of applying the maximum payment limitation provisions of the 1985 Act. This proposed rule would also set forth at 7 CFR Part 1498 the regulations which would be applicable in determining whether foreign individuals or entities are eligible to receive specified program, payments, loans, and benefits.

Other payment limitation provisions are applicable to the Agricultural Conservation Program; the Emergency Conservation Program; the Forestry Incentive Program; the Rural Clean Water Program; and the Colorado River Salinity Control Program. In order to provide for the uniform administration of these programs, this proposed rule would provide that payments made in accordance with contracts or agreements entered into under these programs after August 1, 1988, would be subject to the provisions of 7 CFR Part 1497.

Proposed Rule

Section 1301 of the 1987 Act amended the 1985 Act by adding a new section 1001A to provide that: (1) A person, as defined in section 1001 (5)(B)(i) of the 1985 Act, who receives specified farm program payments may not also hold directly or indirectly substantial beneficial interests in more than two entities, as defined in section 1001 (5)(B)(i)(II) of the 1985 Act, which are engaged in farming operations that receive such payments; and (2) such a person that does not receive such payments may not hold directly or indirectly substantial beneficial interest in more than three such entities. If a person owns a substantial beneficial interest in excess of the permitted number of entities, the payment which is made to the "excess" entity is reduced by an amount that bears the same relation to the full payment that the person's beneficial interest in the entity bears to all beneficial interests in the subject entity.

In order for an individual or entity to be made aware of these limitations, section 1001A(a)(2) of the 1985 Act provides that an entity receiving a specified payment must notify each individual or entity that holds a substantial beneficial interest in such entity of these provisions. In addition, each affected person must notify the Secretary of Agriculture of those entities which are to be considered eligible to receive payments. Failure of the affected person to provide the required notification will result in the reduction of payments commensurate with the individual's or entity's share in the subject entity.

Accordingly, the proposed rule would set forth at 7 CFR § 1491.3 the definitions of the terms "permitted entity", "person", and "substantial beneficial interest". A permitted entity would be an entity which is designated annually by an individual or by an entity who is eligible to receive payments which are subject to the payment limitation provisions of the 1985 Act.

Generally, a person would be defined as an individual, corporation, joint stock company, association, limited partnership, irrevocable trust, charitable organization or similar entity including any individual or entity participating in a farming operation as: A partner in a general partnership; a participant in a joint venture; or a participant in a similar entity. A State, political subdivision and agencies thereof would also be considered to be one person.

A substantial beneficial interest would be defined as an interest which, either directly or indirectly, results in an ownership interest of 10 percent or more. A lesser amount would be applicable if it was determined that a financial arrangement had been established for the purpose of circumventing the provisions of 7 CFR Part 1497.

The notification procedure which would be applicable to an entity receiving a payment and those individuals and entities who have a substantial beneficial interest in such an entity would be set forth at 7 CFR 1497.5. In accordance with 7 CFR 1497.5, under the following example, the following notifications would be required.

AGRICULTURAL INCORPORATED

Stockholder	Ownership interest (percent)
A Incorporated [1]	33⅓
B and F Partnership [2]	33⅓
Individual C	33⅓

[1] A Incorporated:

Stockholder	Ownership interest (percent)
Individual A	50
Individual D	25
Individual E	25

[2] B and F Partnership:

Partners	Ownership interest (percent)
Individual B	50
Individual F	50

Agricultural, Inc., consisting of A, Inc., B and F Partnership, and Individual C, must inform the local Agricultural Stabilization and Conservation (ASC) Committee of the stockholders of Agricultural, Inc., and must inform each stockholder of the "permitted entity" provision.

A, Inc., consisting of Individual A, Individual D, and Individual E must inform each stockholder of the "permitted entity" provision. Each stockholder and partner must then inform the local ASC committee of their selected entities for payment.

B and F Partnership, consisting of Individual B and Individual F must inform each partner of the "permitted entity" provision and each partner must then inform the local ASC committee of their selected entities for payment.

If Individual E, a stockholder of A, Inc., does not choose A, Inc., as a

"permitted entity", the payments made to Agricultural, Inc., would then be reduced by Individual E's ownership interest in A, Inc. For example, if Agricultural, Inc., is eligible to receive $50,000, the 33⅓ interest of A, Inc., in Agricultural, Inc., would be $16,665. Individual E's 25 percent interest in the $16,665 would be $4,166. Therefore, Agricultural, Inc., would be eligible to receive $45,834.

Section 1302 of the 1987 Act amended the 1985 Act by providing in section 1001A(b) of the 1985 Act that in order for a person to be eligible to receive specified payments such person must be actively engaged in farming. In order for an individual, including an individual who is a partner in a general partnership or a participant in a joint venture, to be considered to be actively engaged in farming the individual must make a significant contribution to the farming operation of: (1) Capital, equipment, or land, and (2) active personal labor or active personal management.

With respect to limited partnerships, corporations, and similar entities, the entity must make a significant contribution of capital, equipment, or land to the farming operation and the stockholders or participants must make a significant contribution of active personal labor or active personal management.

Special provisions are applicable to landowners, family members, and sharecroppers so long as their contributions are at risk and commensurate with the person's share of the profits and losses from such operation. Landowners who contribute owned land to a farming operation in return for a share rent of the crop produced on the farm or who retain control of the land and receive all of the income from the land are considered to be actively engaged in farming. Similarly, a sharecropper who makes a significant contribution of active personal labor to the farming operation and who receives a specified share of the crop produced on the farm in total payment for such labor is considered to be actively engaged in farming.

Section 1001A(b)(3)(B) of the 1985 Act provides that with respect to a farming operation conducted by persons, a majority of whom are individuals who are family members, an adult family member who makes a significant contribution of active personal management or active personal labor shall be considered to be actively engaged in farming if such person's contribution to the farming operation is at risk and is commensurate with the person's share of the profits and losses from such operation.

Section 1001A(b)(4) of the 1985 Act provides that a landlord who is contributing land to the farming operation will not be considered to be actively engaged in farming if the landlord receives cash rent or a crop share guaranteed to be paid as rent. This section also provides that any other person who does not meet the actively engaged requirements for individuals, entities, landowners, family members, or sharecroppers shall not be considered to be actively engaged in farming.

Accordingly, 7 CFR 1497.3 sets forth the following definitions which will be used in determining whether a person is actively engaged in farming: "active personal labor"; "active personal management"; "capital"; "equipment"; "family member"; "land"; and "sharecropper." 7 CFR 1497.6–1497.16 sets forth the regulations which will be used to determine whether a person is actively engaged in farming.

Section 1001(5)(B)(iii) of the 1985 Act provides that, with respect to any married couple, the husband and wife shall be considered to be one person. However, any married couple consisting of spouses who prior to their marriage were separately engaged in unrelated farming operations shall be treated as separate persons with respect to such operations so long as the operations remain separate. Accordingly, 7 CFR 1497.19 sets forth the regulations with respect to farming operations conducted by a husband and wife.

The regulations currently set forth at 7 CFR Part 795 with respect to minor children, charitable organizations and Indian tribal ventures are generally the same as the regulations set forth in 7 CFR Part 1497. However, 7 CFR 1497.22 provides that Indian tribal ventures would not be subject to payment limitations provisions only with respect to land which is owned by the tribal venture.

An estate is currently considered to be the same person as the sole heir of the estate. 7 CFR 1497.12 would provide that an estate would be a separate person if the heirs or the personal representative of the estate are determined to be actively engaged in farming. In addition, 7 CFR 1497.12 provides that if the deceased would have been combined with another person for purposes of 7 CFR Part 1497, such person and the estate will continue to be combined.

Section 1001(5)(E) of the 1985 Act require that a change in a farming operation which results in an increase in the number of persons must be bona fide and substantive. Accordingly, 7 CFR 1497.18 sets forth provisions applicable to changes in farming operations.

Section 1305(b) of the 1987 Act provides that the Secretary may waive these provisions in order to allow for the equitable reorganization of farming operations so long as the reorganization is completed prior to final date by which producers must execute a contract to participate in the 1989 commodity programs and the reorganization will not result in an increase in the amount of program payments. Accordingly, 7 CFR 1497.26 provides that the Deputy Administrator may approve of such reorganizations to the extent that payments are not increased.

Section 1305(d) of the 1987 Act provides that this part shall apply to all conservation reserve program contracts entered into on or after December 22, 1987. However, since the final rule which will set forth the regulations which implement this section will not become effective until after the execution of such contracts, the provisions of 7 CFR Part 795 would apply to such contracts unless the producer elects in writing to use the provisions of this part for contracts entered into on or after December 22, 1987 and before August 1, 1988. Accordingly, 7 CFR 1497.1 provides that this part would apply to contracts entered into with respect to the program specified in 7 CFR 1497.1(a)(3) on or after August 1, 1988.

Section 1001(7) of the 1985 Act provides that the Secretary shall establish time limits for the various steps involved in the administrative appeal with respect to the application of the maximum payment limitation provisions. Accordingly, 7 CFR 1497.27 sets forth the time limits which apply to disputes rising under 7 CFR Part 1497.

In accordance with the proposed provisions of 7 CFR Part 1497, the following determinations would be made:

Landowner

Example 1. Landowner A rents land for one-fourth of the crop to Corp. B. Landowner A's share of the profits or losses from the farming operation are commensurate with the landowner's contribution to the operation and the contributions are at risk.

Determination. Landowner A is considered to be actively engaged in farming. The actively engaged determination for Corp. B will be determined separately.

Example 2. AB Partnership owns land and rents the land to Individual E for one-third of the crop. The partnership's share of the profits or losses from the farming operation are commensurate with the partnership's contribution to

the operation and the contributions are at risk.

Determination. AB Partnership is not actively engaged in farming. A partnership is not considered a "person" for payment limitation purposes and therefore would not be considered to be actively engaged as a landowner. The partnership's partners would need to make a significant contribution of either active personal management or active personal labor in order for the partners to be considered actively engaged in farming.

Individual

Example. Individual Z, a producer, rents 1,500 acres of land on a share rent basis. Individual Z owns the equipment and contributes at least 50 percent of the producer's commensurate share of active personal labor and contributes 100 percent of the producer's active personal management. In this situation, Individual Z's share of the profits or losses from the farming operation are commensurate with the contribution to the operation and the contributions are at risk.

Determination. Individual Z is considered to be actively engaged in farming.

Sharecropper

Example. Individual D, a producer, farms 800 acres of land for Landowner F. Individual D agrees to farm Landowner F's land for one-third of the cotton crop. Individual D contributes 80 percent of active personal labor and the other 20 percent of the labor is hired. Individual D's share of the profits or losses from the farming operation are commensurate with Individual D's contribution to the operation and the contributions are at risk.

Determination. Individual D is considered to be actively engaged in farming. The actively engaged determination for Landowner F will be determined separately.

Joint Operation

Example 1. Partnership AB farms 2,000 acres of land. The partnership owns the equipment and the individual partners provide at least 50 percent of their commensurate share of active personal labor and active personal management. Each partner's share of the profits or losses from the farming operation are commensurate with the partner's contribution to the operation and their contributions are at risk.

Determination. Partner A and Partner B are considered to be actively engaged in farming.

Example 2. Partnership CD farms 2,000 acres of land. The individual partners contribute capital and at least 50 percent of their commensurate share of active personal management for the operation. Labor is hired. Equipment and land are rented from third parties. Each partner's share of the profits or losses from the farming operation are commensurate with the partner's contribution to the operation and their contributions are at risk.

Determination. Partner C and Partner D are considered to be actively engaged in farming.

Limited Partnerships and Corporations

Example. Corp. XYZ rents 3,000 acres of land for one-fourth of the crop. Corp. XYZ contributes capital to the operation. The stockholders, owning a total of 54 percent of Corp. XYZ, contribute at least 50 percent of their commensurate share of active personal management. The stockholder's share of the profits or losses from the farming operation are commensurate with their contributions to the operation and the contributions are at risk.

Determination. Corporation XYZ is considered to be actively engaged in farming.

Irrevocable Trusts

Example 1. EF Trust, with Individual E and Individual F, each having a interest of 50 percent, contributes capital to the farming operation. Each beneficiary contributes at least 50 percent of their commensurate share of active personal management. All labor is hired. The land and equipment are leased. The beneficiaries share of the profits or losses from the farming operation are commensurate with the beneficiaries contribution to the operation and the contributions are at risk. Individual E also has another farming interest as an individual.

Determination. EF Trust is considered to be actively engaged in farming. Individual E may also be considered as a separate person with respect to Individual E's own farming operation and could also be considered to be a separate person if all requirements are met.

Example 2. Individual G is a 100 percent beneficiary of G Trust. G Trust contributes equipment and capital to the farming operation. Individual G contributes at least 50 percent of the operation's personal labor. G Trust leases all land and hires all management and 50 percent of the labor. Individual G also has farming interests as an individual.

Determination. G Trust is considered to be actively engaged in farming. Individual G and G Trust are considered as one person because Individual G is the sole beneficiary of the trust.

Revocable Trusts

Example. ST Trust is a revocable trust with Individual S and Individual T, each having an interest of 50 percent. Individual U is the grantor. ST Trust contributes capital and equipment to the farming operation. The beneficiaries each contribute at least 50 percent of their commensurate share of active personal management to the operation. All land is leased and all labor is hired. The beneficiaries share of the profits or losses from the farming operation are commensurate with their contribution to the operation and the contributions are at risk.

Determination. ST Trust is considered to be actively engaged in farming. ST Trust and Individual U are considered as one person because Individual U is the grantor of a revocable trust.

Estates

Example 1. E Estate is formed upon the death of Individual E in February of 1989. Individual B is the sole heir of the estate and provides at least 50 percent of Individual B's commensurate share of active personal management. E Estate provides equipment and rented land. All labor is hired. Individual B also has individual farming interests. All contributions are commensurate and are at risk.

Determination. All estates may be considered to be actively engaged in farming if the heirs or personal representative of the estate are considered to be actively engaged in farming. Even though Individual B is the sole heir of the estate, Individual B and the estate are not considered to be one person. Therefore, if Individual B is determined to be actively engaged in farming with respect to the separate farming operation, Individual B may also be considered to be a person so long as Individual E and Individual B would not have been combined as one person in accordance with 7 CFR Part 1497.

Example 2. C Estate was formed in October 1987. The heirs are Individual E, F, and G, each having a one-third interest. Prior to the death of Individual C, Individual C owned equipment and all of the acreage farmed was cash leased. Individual E will serve as executor for the estate. For 1989, the C Estate will cash lease land. C Estate will contribute cash rented land, owned equipment, and capital for the farming operation. Individual E will provide active personal management with the estate hiring all labor. All contributions are commensurate and are at risk.

Determination. C Estate is considered to be actively engaged in farming. The heirs may also be considered to be separate persons with respect to other farming operations if all conditions are met for such operation.

Example 3. Y Estate is formed on August 1989. The deceased Individual Y had previously entered into a contract to participate in the 1989 Acreage Reduction Program. Y Estate will continue to farm the acreage that was leased to Individual Y as a successor-in-interest. Y Estate will hire any labor that is needed for the crops in the farming operation. The personnal representative of Y Estate will manage the farming operation.

Determination. Y Estate is considered to be actively engaged in farming because Individual Y was had executed a contract to participate in the program. However to continue to be actively engaged in farming for the following year, the heirs or personal representative of the estate will have to provide active personal labor or active personal management and the estate will have to provide capital, equipment, or land.

Cash Rent Tenants

Example 1. Individual B rents 800 acres of cropland from Landowner C for $30 per acre. Individual B contributes 80 percent of active personal labor and capital to the farming operation. 20 percent of the labor is hired and 100 percent of the management is hired. Individual B's share of the profits or losses from the farming operation are commensurate with Individual B's contributions to the operation and the contributions are at risk.

Determination. Individual B is considered to be actively engaged in farming.

Example 2. Individual C rents 800 acres of cropland from Landowner D for $35 per acre. Individual C contributes 100 percent of active personal management and capital to the operation. 100 percent of the labor is hired. The equipment is leased. Individual C's share of the profits or losses from the farming operation are commensurate with Individual C's contributions to the operation and the contributions are at risk.

Determination. Individual C is not considered to be actively engaged in farming. Individual C is contributing active personal management and is not contributing equipment. In this situation, Individual C and Landowner D would be considered to be one person. A cash rent tenant may contribute active personal labor and either land or equipment and be considered to be actively engaged in farming. If a cash rent tenant contributes active personal management and does not contribute a significant contribution of active personal labor, such tenant must also contribute a significant contribution of equipment to the farming operation.

Family Member

Example. Father A has been farming owned land and rented land for approximately 15 years. Son B, an adult, is starting to farm with his father. Son B contributes a significant amount of active personal labor. Father A contributes all of the farming operation's capital, equipment, and active personal management.

Determination. Father A and Son B are both considered to be actively engaged in farming and would be considered to be two persons.

Husband and Wife

Example 1. Husband A and Wife B both were involved in separate unrelated farming operations prior to their marriage. Husband A rents 1,000 acres of cropland for one-fourth of the crop. Wife B owns land that was given to her by her father before her marriage to Husband A. Both operations have been kept separate and distinct during the marriage. Both persons have been determined to be actively engaged in farming.

Determination. Husband A and Wife B would be considered to be two persons since both farming operations have remained separate and distinct.

Example 2. Husband C owns 500 acres of land that he rents to Producer Z for one-third of the crop. Wife D also owns 500 acres of land which was given to her before her marriage by her grandfather and is rented to Producer Z for one-third of the crop. Both farms were reconstituted as one farm when both rented their land to Producer Z. The financing and accounting for each person has been kept separate and distinct.

Determination. Husband C and Wife D are each considered to be actively engaged in farming because both are landowners but they would be considered to be one person because all aspects of the farming operations were not kept separate and distinct.

Example 3. Husband G owns 500 acres of land that is rented to Producer Y for one-fourth of the crop. Wife D owns 600 acres of land which was bought by her before her marriage and is rented to Producer Y for one-fourth of the crop. Both farms were reconstituted as one farm when both rented their land to Producer Y. Accounting and farming operations were not kept separate after the reconstitution.

Determination. Husband C and Wife D are each considered to be actively engaged in farming because both are landowners; however, because the farming operations were not kept separate and distinct, they would be considered as one person.

Example 4. Both Husband A and Wife B were engaged in their farming operations before their marriage. Husband A is a partner in Partnership AD. Wife B is a stockholder in Corporation BC. Each farming operation has remained separate and distinct. Husband A and Corporation BC are determined to be actively engaged in farming.

Determination. Husband A and Corporation BC will be considered to be two persons. If a married couple prior to marriage were separately engaged in unrelated farming operations, each spouse will be treated as a separate person regardless of the nature of the farming operations so long as such operations remain separate and distinct.

Minor Children

Example. Minor A has a farming operation in which Parents B and C have interest. Minor A also has housing separate from Parents B and C. Minor A contributes equipment leased from an unrelated party, active personal labor, and active personal management to the farming operation.

Determination. Minor A would be considered to be actively engaged in farming. Minor A and Parents B and C would be considered to be separate persons since Minor A maintains a separate household.

Indian Tribal Ventures

Example. Indian tribal venture AB farms owned land. The Bureau of Indian Affairs (BIA) has certified that no one Indian will receive payments exceeding the applicable payment limitation with respect to such land. Individual Indians also farm land owned by third parties.

Determination. The BIA certification is effective only for land owned by the Indian tribal venture. Each individual Indian farming on other land is subject to the applicable payment limitation provisions for their individual operations. Such Indians would be required to report to the local county ASC committee their share of payments received through the Indian tribal venture in order to assure that each Indian would not receive payments in excess of the applicable payment limitation.

Section 1001C of the 1985 Act provides with respect to the 1989 and 1990 crops that any person who is not a citizen of the United States or an alien lawfully admitted into the United States for permanent residence shall be ineligible to receive any type of production adjustment payment, price support program loan, payment, or benefit made available under the 1949 Act, the Commodity Credit Corporation Charter Act, as amended (the "Charter Act"), or Subtitle D of XII of the 1985 Act with respect to any commodity produced, or any land set aside from production, on a farm that is owned or operated by such person. However, such an individual who is providing land, capital, and a substantial amount of personal labor in the production of crops on such a farm would not be ineligible to receive such payments, loans, and benefits.

Section 1001C of the 1985 Act also provides that a corporation or other entity shall be ineligible to receive such payments, loans, or other benefits if more than 10 percent of the beneficial ownership of the entity is held by persons who are not citizens of the United States or aliens lawfully admitted to the United States for permanent residence unless such persons provide a substantial amount of active personal labor in the production of crops produced on the farm. The Secretary is also authorized to make payments, loans, and other benefits to such an ineligible entity in an amount which the Secretary determines to be representative of the percentage interests in the entity that is owned by citizens of the United States and aliens lawfully admitted to the United States for permanent residence.

Accordingly, this proposed rule would set forth at 7 CFR Part 1498 the regulations which implement section 1001C of the 1985 Act with respect to the 1989 and 1990 crops. For purposes of 7 CFR Part 1498, the terms "person", "entity", "capital", "land", and "active personal labor" are defined in 7 CFR 1498.3 in virtually the same manner as in 7 CFR 1497.3 Those payments, loans, and benefits which are subject to the provisions of 7 CFR Part 1498 are defined in 7 CFR 1498.3 as any cash or in-kind payment, loan disbursement or other benefit made in accordance with the 1949 Act, the Charter Act, and subtitle D of title XII of the 1985 Act which results in an expenditure by the Commodity Credit Corporation or any other Federal agency.

The regulations at 7 CFR 1497.25, 1497.27 and 1497.28 set forth provisions which are applicable to: Determinations of a scheme or device which are designed to evade 7 CFR Part 1497; the granting of equitable relief by the Deputy Administrator; and the right to seek an administrative appeal in accordance with 7 CFR Part 780. Similar provisions are set forth at 7 CFR 1498.6, 1498.7, and 1498.8.

In determining whether more than 10 percent of the beneficial ownership of an entity is held by persons who are not citizens of the United States or by aliens lawfully admitted into the United States for permanent residence, 7 CFR 1498.4 would provide that such a determination would be made based upon such ownership interest which is the higher of such amount on the date the applicable program contract or agreement is executed or as determined by the Deputy Administrator, the final harvest date which normal in the area for the applicable program crop. Accordingly, any increase in the foreign ownership of an entity after the date of execution of such a contract or agreement would affect the eligibility of an entity to receive a payment, loan, and benefit. Any payment, loan, and benefit which had been made prior to the date on which the beneficial ownership requirement was exceeded would be required to be refunded by the entity.

In accordance with 7 CFR 1498.4, payments, loans, and benefits may be received by: (1) A citizen of the United States; (2) an alien legally admitted to the United States for permanent residence; and (3) an entity which is not subject to 7 CFR Part 1498 who, through such means as a lease, is in lawful possession of a farm owned by an entity or individual who is ineligible to receive payments, loans, and benefits. Similarly, such individual or entity who is a successor-in-interest to a program contract or agreement such executed by a foreign individual or entity with respect to such a farm may be eligible to receive payments, loans, and benefits.

In accordance with 7 CFR 1498.5, an entity who is subject to the provisions of 7 CFR Part 1498 would be required to provide to the county ASC committee or other party who is executing the program contract or agreement, the names and social security or tax identification numbers of all foreign individuals and foreign entities who have a beneficial ownership interest in an entity in excess of 10 percent. Failure to provide such information would result in the ineligibility of the entity to receive any payment, loan, and benefit.

Accordingly, this proposed rule would amend Title 7 of the Code of Federal Regulations as follows:

1. A new Part 1497 is added to read as follows:

PART 1497—PAYMENT LIMITATION

Sec.
1497.1 Applicability.
1497.2 Administration.
1497.3 Definitions.
1497.4 Timing for determining status of persons.
1497.5 Limitation on the number of entities through which an individual or entity may receive a payment and required notification.
1497.6 General provisions for determining whether an individual or entity is actively engaged in farming.
1497.7 Individuals.
1497.8 Joint operations.
1497.9 Limited partnerships and corporations.
1497.10 Irrevocable trusts.
1497.11 Revocable trusts.
1497.12 Estates.
1497.13 Landowners.
1497.14 Family members.
1497.15 Sharecroppers.
1497.16 Cash rent tenants.
1497.17 Persons not considered to be actively engaged in farming.
1497.18 Changes in farming operations.
1497.19 Husband and wife.
1497.20 Minor children.
1497.21 Charitable organizations.
1497.22 Indian tribal ventures.
1497.23 States, political subdivisions, and agencies thereof.
1497.24 Scheme or device.
1497.25 Joint and several liability.
1497.26 Equitable Adjustments.
1497.27 Appeals.
1497.28 Paperwork Reduction Act assigned number.

Authority: Sections 1001 through 1001C of the Food Security Act of 1985, as amended, 99 Stat. 1444, as amended (7 U.S.C. 1308, et seq.); The Rural Development, Agriculture, and Related Agencies Appropriations Act, 1988, as contained in section 101(k) of Pub. L. 100-202.

§ 1497.1 Applicability.

(a) This part is applicable to the following programs and any other programs as may be provided for in individual program regulations:

(1) The annual price support and production adjustment programs for the 1989 and subsequent crops of wheat, feed grains, upland cotton, extra long staple cotton, and rice;

(2) Any program authorized by the Agriculture Act of 1949 under which a gain is realized by the repayment of a loan at a level lower than the original loan level;

(3) The Conservation Reserve Program;

(4) The Agricultural Conservation Program;

(5) The Emergency Conservation Program;

(6) The Forestry Incentive Program;

(7) The Rural Clean Water Program; and

(8) The Colorado River Salinity Control Program.

(b) This part shall be applied to the programs specified in paragraph (a) (1) and (2) of this section on a crop year basis and with respect to all of the programs in paragraph (a) (3) through (8) of this section shall be applied on a fiscal year basis.

(c) This part is applicable to rental payments made in accordance with a Conservation Reserve Program contract entered into on or after August 1, 1988. For Conservation Reserve Program contracts entered into on or after December 22, 1987 and before August 1, 1988, the person may elect in writing to have the provisions of this part apply to such a contract by notifying the county committee in writing.

(d) With respect to any program specified in paragraph (a) (4) through (8) of this section, this part is applicable to any payment made in accordance with a contract or agreement entered into on or after August 1, 1988.

(e) The regulations set forth at Part 795 of this title (1988 edition) shall be applicable to Conservation Reserve Program contracts entered into prior to December 22, 1987, any such contract entered into after such date and before August 1, 1988, if the person has not made the notification specified in paragraph (a) of this section and, with respect to any program specified in paragraph (a) (4) through (8) of this section, a contract or agreement entered into prior to August 1, 1988.

(f) This part shall be used to determine whether certain individuals or legal entities are to be treated as one person or as separate persons for the purpose of applying the payment limitation provisions which are applicable to the programs specified in paragraph (a) of this section.

(g) In cases in which more than one provision of this part are applicable, the provision which is most restrictive shall apply.

(h) Payments made to public schools with respect to land which is owned by a public school district and payments made to a State with respect to land owned by a State which is used to maintain a public school shall not be subject to the payment limitation.

§ 1497.2 Administration.

(a) The regulations in this part will be administered under the general supervision and direction of the Executive Vice President, CCC and the Administrator, ASCS. In the field, the regulations in this part will be administered by the Agricultural Stabilization and Conservation State and county committees (herein referred to as "State and county committees", respectively.

(b) State executive directors, county executive directors and State and county committees do not have authority to modify or waive any of the provisions of this part.

(c) The State committee may take any action authorized or required by this part to be taken by the county committee which has not been taken by such committee. The State committee may also:

(1) Correct or require a county committee to correct any action taken by such county committee which is not in accordance with this part; or

(2) Require a county committee to withhold taking any action which is not in accordance with this part.

(d) No delegation herein to a State or county committee shall preclude the Executive Vice President, CCC, and the Administrator, ASCS, or a designee, from determining any question arising under this part or from reversing or modifying any determination made by a State or county committee.

§ 1497.3 Definitions.

(a) The terms defined in Part 719 of this title shall be applicable to this part and all documents issued in accordance with this part, except as otherwise provided in this section.

(b) The following definitions shall be applicable to this part:

Active personal labor. Active personal labor is providing physical activities involved in land preparation, planting, cultivating, or harvesting of agricultural commodities in the farming operation, or where applicable, providing physical activities required to establish and maintain conserving cover crops or conserving use acreages.

Active personal management. Active personal management is providing:

(1) The general supervision and direction of activities and labor involved in the farming operation; or

(2) Providing services (whether performed on-site or off-site) reasonably related and necessary to the farming operation including any of the following:

(i) Supervision of activities involved in land preparation, planting, cultivating, and harvesting of agricultural commodities;

(ii) Business-related action which include discretionary decision-making;

(iii) Evaluation of the financial condition and needs;

(iv) Assistance in the structuring or preparation of financial reports or analyses;

(v) Consultations in or structuring of business-related financing arrangements; or

(vi) Any other service reasonably necessary to conduct the farming operation and for which service the operation would ordinarily be charged a fee.

Capital. Capital consists of the funding provided by an individual or entity to the farming operation in order for such operation to conduct farming activities. In determining whether an individual or entity has contributed capital to the farming operation such capital must have been derived from a fund or account separate and distinct from that of any other individual or entity involved in such operation. Capital does not include the value of any labor or management which is contributed to the farming operation. A capital contribution may be a direct out-of-pocket input of a specified sum or an amount borrowed by the individual or entity. With respect to a farming operation which consists of more than one individual or entity, such capital must be contributed directly by the individual or entity and must not be acquired as a result of a loan made to:

(1) The farming operation in which the individual or entity has an interest;

(2) Such individual, entity, or farming operation by the farming operation or any of its members, beneficiaries or related entities; or

(3) Such individual, entity, or farming operation, which was guaranteed or secured by the farming operation or any of its members, beneficiaries or related entities.

Entity. An entity is a corporation, joint stock company, association, limited partnership, irrevocable trust, revocable trust, estate, charitable organization, or other similar entity including any such organization participating in the farming operation as a partner in a general partnership, a participant in a joint venture, a grantor of a revocable trust, or as a participant in a similar entity.

Equipment. Equipment is the machinery and implements needed by the farming operation for land preparation, planting, cultivating, or harvesting of the crops involved. With respect to a farming operation which consists of more than one individual or entity, such equipment must be contributed directly by the individual or entity and must not have been acquired as a result of a loan made to:

(1) The farming operation in which the individual or entity has an interest;

(2) Such individual, entity, or farming operation by the farming operation or

any of its members, beneficiaries or related entities; or

(3) Such individual, entity, or farming operation, which was guaranteed or secured by the farming operation or any of its members, beneficiaries or related entities.

Family member. The term "family member" means an individual to whom another member in the farming operation is related as lineal ancestor, lineal descendant, or sibling, including spouses of those family members who do not make a significant contribution to the farming operation themselves.

Farming operation. A farming operation is a business enterprise operated by an individual or entity which is receiving payments under one or more of the programs specified in § 1497.1.

Financing. Financing is the providing or securing of funds for the farming operation or the provision of service or goods to such operation at less than the fair market value.

Land. Land is cropland with normal crop acreage bases for the farming area. With respect to a farming operation which consists of more than one individual or entity, any land contributed to the farming operation by an individual or entity must be contributed directly by the individual or entity and not acquired as a result of a loan made to:

(1) The farming operation in which the individual or entity has an interest;

(2) Such individual, entity, or farming operation by the farming operation or any of its members, beneficiaries or related entities; or

(3) Such individual, entity, or farming operation, which was guaranteed or secured by the farming operation or any of its members, beneficiaries or related entities.

Payment. A payment includes:

(1) With respect to the programs specified in § 1497.1(a) (1) and (2):

(i) Any part of any payment that is determined by the Deputy Administrator to represent compensation for resource adjustment (excluding land diversion payments) or public access for recreation;

(ii) Any disaster payment made under one or more of the annual programs for a commodity established under the Agricultural Act of 1949;

(iii) Any gain realized by a producer from repayng a loan for a crop of wheat, feed grains, upland cotton, rice, or honey at the rate permitted under section 107D(a)(5), 105C(a)(4), 103A(a)(5), 101A(a)(5), or 201(b)(2), respectively, of the Agricultural Act of 1949, or any gain realized by a producer from repaying a loan for a crop of any other commodity at a lower level established than the original loan level under the Agricultural Act of 1949;

(iv) Any deficiency payment received for a crop of wheat or feed grains under section 107D(c)(1) or 105C(c)(1), respectively, or the Agricultural Act of 1949 as the result of a reduction of the loan level for such crop under section 107D(a)(4) or 105C(a)(3) of the Agricultural Act of 1949;

(v) Any loan deficiency payment received for a crop of wheat, feed grains, upland cotton, or rice under section 107D(b), 105C(b), 103A(b), or 101A(g), respectively, of the Agricultural Act of 1949; (F) Any inventory reduction payment received for a crop of wheat, feed grains, upland cotton, or rice under section 107D(g), 105C(g), 103A(g), or 101A(g), respectively, of the Agricultural Act of 1949;

(vi) With respect to the Conservation Reserve Program, annual rental payments; and

(vii) With respect to the programs specified in § 1497.1 (a)(4) through (8), all payments.

Permitted entity. A permitted entity is an entity designated annually by an individual or other entity which is to receive a payment, loan, or benefit under a program specified in § 1497.1.

Person. (1) A person is:

(i) An individual, including any individual participating in a farming operation as a partner in a general partnership, a participant in a joint venture, or a participant in a similar entity;

(ii) A corporation, joint stock company, association, limited partnership, irrevocable trust, revocable trust together with the grantor of the trust, estate, or charitable organization, including any such entity or organization particpating in the farming operation as a partner in a general partnership, a participant in a joint venture, a grantor of a revocable trust, or as a participant in similar entity; and

(iii) A State, political subdivision, or agency thereof.

(2) In order to be considered a separate person for the purposes of this part, in addition to other provisions of this part, the individual or entity must:

(i) Have a separate and distinct interest in the land or the crop involved;

(ii) Exercise separate responsibility for such interest; and

(iii) Be responsible for the cost of farming related to such interest from a fund or account separate from that of any other individual or entity

(3) Any cooperative association of producers that markets commodities for producers with respect to the commodities so marketed for producers shall not be considered to be a person.

Public school. A public school is a primary, elementary, or secondary school supported by public funds and does not include a college or university.

Sharecropper. An individual who farms and receives a specified share of the crop produced on the farm in total payment for such individual's labor.

Significant contribution. A significant contribution is the provision of the following to a farming operation by an individual or entity:

(1)(i) If either land, capital, or equipment is contributed by an individual or entity, such contribution must have a value which is equal to at least 50 percent of the individual's or entity's commensurate share of the total value of the capital or the total rental value of either the land or equipment necessary to conduct the farming operation; or

(ii) If the contribution by an individual or entity consists of any combination of land, capital, and equipment, such combined contribution must have a value which is equal to 30 percent of the individual's or entity's commensurate share of the total value of the farming operation; and

(2) Active personal management or active personal labor in an amount which is the smaller of:

(i) 1,000 hour per calendar year; or

(ii) 50 percent of the total hours which would be required to conduct a farming operation which is comparable in size to such individual's or entity's commensurate share in the farming operation.

Substantial beneficial interest. A substantial beneficial interest in any entity is an interest of 10 percent or more. In determining whether such an interest equals at least 10 percent, all interests in the entity which are owned by an individual or entity directly or indirectly through such means as ownership of a corporation which owns the entity shall be taken into consideration. In order to ensure that the provisions of this part are not circumvented by an individual or entity, the Deputy Administrator may determine that an ownership interest requirement or less than 10 percent shall be applied to such individual or entity.

Total value of the farming operation. The total value of the farming operation is the total of the costs, excluding the value of active personal labor and active personal management which is contributed by a person who is a member of the farming operation, needed to carry out the farming

operation for the year for which the determination is made.

§ 1497.4 Timing for determination status of persons.

(a) Except as otherwise set forth in this part, the status of an individual or entity on April 1 of the current year, or such other date as may be determined and announced by the Deputy Administrator, shall be the basis on which determinations are made in accordance with this part for the year in which the determination is made.

(b) Actions taken by an individual or entity after April 1, or such other date as determined and announced by the Deputy Administrator, but on or before the final harvest date as determined by the Deputy Administrator which is to be normal for the area for the applicable program crop, shall not be used to determine whether there has been an increase the number of persons for the current year. Actions taken by a person after April 1, or such other date as may be determined and announced by the Deputy Administrator, but on or before the harvest of the last program crop in the area, shall be used to determine whether there has been a decrease in the number of persons for the current year.

§ 1497.5 Limitation on the number of entities through which an individual or entity may receive a payment and required notification.

(a) An individual or entity shall receive a payment under a program specified in § 1497.1 either directly or indirectly from no more than three permitted entities. An individual or entity which receives such a payment shall notify the county committee in the county in which they maintain a farming operation whether or not the farming operation is to be considered a permitted entity. An individual shall only receive such payments as a result of a farming operation conducted by:

(1) The individual and by no more than two entities in which the individual holds a substantial beneficial interest; or

(2) No more than three entities in which the individual holds a substantial beneficial interest.

(b) Each entity entering into a contract or agreement under a program specified in § 1497.1 shall, by date the contract or agreement is submitted to the county committee, notify in writing:

(1) Each individual or other entity that acquires or holds an interest in such entity of the requirements and limitations provided in this part; and

(2) The county committee of the name and social security number of each individual and the name and taxpayers identification number of each entity that holds or acquires a substantial beneficial interest in such entity.

(c)(1) An individual or entity that holds a substantial beneficial interest in more than the number of permitted entities specified in paragraph (a) of this section for which a contract or agreement has been submitted to the county committee shall notify the county committee, in each county in which they conduct a farming operation, in writing of those entities that shall be considered as permitted entities by no later than 15 days following the date the contract or agreement was submitted to the county committee, or such other date as may be determined and announced by the Deputy Administrator.

(2) The remaining entities in which the individual or entity holds a substantial beneficial interest shall be subject to reductions in the payments earned by the remaining entity. Such a reduction shall be made in an amount that bears the same relationship to the full payment that the individual's interest in the entity bears to all interest in the entity.

(d) If an individual or entity fails to make such a notification as specified in paragraph (c) of this section, all entities in which the individual or entity holds a substantial beneficial interest shall be subject to a reduction in payments in the manner specified in paragraph (c)(1) of this section.

§ 1497.6 General provisions for determining whether an individual or entity is actively engaged in farming.

(a) To be considered a person who is eligible to receive payments with respect to a particular farming operation, a person must be an individual or entity actively engaged in farming with respect to such operation.

(b) Actively engaged in farming means, except as otherwise provided in this part, that the individual, shareholder, beneficiary, or entity, independently makes a significant contribution to a farming operation, of:

(1) Capital, equipment, or land; and

(2) Active personal labor or active personal management.

(c) In determining if the individual or entity is actively contributing a significant amount of active personal labor or active personal management the following factors shall be taken into consideration:

(1) The types of crops produced by the farming operation;

(2) The normal and customary farming practices of the area; and

(3) The total amount of hours which are necessary to provide adequate personal management and personal labor for such a farming operation.

(d) In order to be considered to be actively engaged in farming an individual or entity specified in §§ 1497.6 through 1497.16 must have:

(1) A share of the profits or losses from the farming operation which is commensurate with the individual's or entity's contribution to the operation; and

(2) Contributions to the farming operation which are at risk.

§ 1497.7 Individuals.

An individual shall be considered to be actively engaged in farming with respect to a farming operation if the individual makes a significant contribution of:

(a) Capital, equipment, or land; and

(b) Active personal labor or active personal management.

§ 1497.8 Joint operations.

(a) Members of a general partnership, joint venture, or similar entity (herein referred to as "joint operation"), must furnish satisfactory evidence that their contributions of land, labor, management, equipment, or capital to the joint operation are commensurate with their claimed shares of the proceeds.

(b) If a joint operation separately makes a significant contribution of capital, equipment, or land, and the joint operation meets the provisions of § 1497.6(d), the members of the joint operation who make a significant contribution of active personal labor or active personal management to the farming operation shall be considered to be actively engaged in farming with respect to such farming operation.

(c) Each individual who shares in the proceeds derived by such farming operation shall not be considered to be a separate person unless the individual is actively engaged in the farming operation.

§ 1497.9 Limited partnership and corporations.

(a) A limited partnership or corporation shall be considered to be actively engaged in farming with respect to a farming operation if:

(1) The entity separately makes a significant contribution to the farming operation of capital, equipment, or land; and

(2) The partners or stockholders make a significant contribution of active personal labor or active personal management to the farming operation. The combined beneficial interest of all the partners or stockholders providing

active personal labor or active personal management must exceed 50 percent.

(b) A limited partnership or corporation shall be considered to be a person separate from an individual partner or stockholder except that a limited partnership or corporation in which more than 50 percent of the interest in such limited partnership or corporation is owned by an individual (including the interest owned by the individual's spouse, minor children, and trusts for the benefit of such minor children) or by an entity shall not be considered as a separate person from such individual or entity.

(c) If the same two or more individuals, limited partnerships, corporations, or other entities own more than 50 percent of the interest in each of two or more limited partnerships or corporations engaged in farming, all such limited partnerships or corporations shall be considered to be one person.

(d) The percentage share of the value of the interest in a limited partnership or corporation which is owned by an individual or other entity shall be determined as of April 1 or such other date as may be determined and announced by the Deputy Administrator. If a partner or stockholder acquires an interest in the limited partnership or corporation after such date, and before the harvest of the last program crop in the area as determined by the Deputy Administrator, the amount of any such interest shall be included in determining the percentage share of such value.

(e) Where there is only one class of stock or other similar unit of ownership, an individual's or entity's percentage share of the limited partnership or corporation shall be based upon the value of the outstanding stock or other similar unit of ownership. If the limited partnership or corporation has more than one class of stock or other unit of ownership, the percentage share of the limited partnership or corporation owned by an individual or entity shall be determined by the Deputy Administrator on the basis of market quotations. If market quotations are lacking or are too scarce to be recognized, such percentage share shall be determined by the Deputy Administrator on the basis of all relevant factors affecting the fair market value of such stock or other unit of ownership, including the various rights and privileges which are attributed to each such class.

§ 1497.10 Irrevocable trusts.

(a) An irrevocable trust shall be considered to be actively engaged in farming with respect to a farming operation if:

(1) The entity separately makes a significant contribution to the farming operation of capital, equipment or land; and

(2) The beneficiaries make a significant contribution of active personal labor or active personal management to the farming operation.

(b) An irrevocable trust shall be considered to be a person separate from the individual beneficiaries of the trust except that an irrevocable trust which has a sole beneficiary shall not be considered to be a separate person from such beneficiary.

(c) Where two or more irrevocable trusts have common beneficiaries (including a spouse and minor children) with more than 50 percent interest, all such trust shall be considered to be one person.

§ 1497.11 Revocable trusts.

(a) A revocable trust shall be considered to be actively engaged in farming with respect to a farming operation if:

(1) The entity separately makes a significant contribution to the farming operation of capital, equipment, or land; and

(2) The beneficiaries make a significant contribution of active personal labor or active personal management to the operation.

(b) A grantor and the revocable trust shall be considered to be one person.

§ 1497.12 Estates.

(a) An estate shall be considered to be actively engaged in farming if the estate makes a significant contribution of capital, equipment, or land and the personal representative or heirs of the estate make a significant contribution of active personal labor or active personal management.

(b) If the deceased individual would have been considered to be one person with respect to an heir, the estate shall also be considered to be one person with such heir.

§ 1497.13 Landowners.

A person who is a landowner contributing owned land to the farming operation shall be considered to be actively engaged in farming if the landowner receives rent or income for such use of the land based on the land's production or the operation's operating results.

§ 1497.14 Family members.

With respect to a farming operation conducted by individuals, a majority of whom are family members, an adult family member who makes a significant contribution of active personal management or active personal labor, shall be considered to be actively engaged in farming.

§ 1497.15 Sharecroppers.

A sharecropper who makes a significant contribution of active personal labor to the farming operation shall be considered to be actively engaged in farming.

§ 1497.16 Cash rent tenants.

Any tenant that conducts a farming operation in which the tenant rents the land for cash, shall be considered to be the same person as the landlord unless the tenant makes a significant contribution to the farming operation of:

(a) Active personal labor and capital, land or equipment; or

(b) Active personal management and equipment, and such equipment used in the farming operation is not leased from the landowner.

§ 1497.17 Persons not considered to be actively engaged in farming.

An individual or entity who does not meet any of the provisions of §§ 1497.6 through 1497.16 and a landlord who cash rents land to a farming operation shall not be considered to be actively engaged in farming.

§ 1497.18 Changes in farming operations.

(a) Any change in a farming operation that would increase the number of persons must be bona fide and substantive. The addition of a family member to a farming operation in accordance with § 1497.14 shall be considered to be such a change, except that such an addition will not affect the status of any other individual or entity which is added to the farming operation. A change in a farming operation in a previous year that was not considered to be bona fide and substantive shall not increase the number of persons in a subsequent year. If bona fide, the following shall be considered to be substantive changes in the farming operation:

(1) With respect to a landowner only, a change from a cash rent to a share rent; and

(2) An increase through the acquisition of land not previously involved in the farming operation of approximately 20 percent or more in the total cropland involved in the farming operation if such cropland has crop acreage bases which are normal for the area.

(b) In order to provide for the orderly restructuring of a farming operation such as the dissolution of a corporation or

other similar entity, the Deputy Administrator may determine other bona fide changes to be a substantive change.

§ 1497.19 Husband and wife.

With respect to any married couple, the husband and wife shall be considered to be one person except that any married couple who, prior to their marriage, were separately engaged in unrelated farming operations each spouse will be determined to be a separate person with respect to such farming operation so long as the operation remains separate and distinct from any farming operation conducted by the other spouse.

§ 1497.20 Minor children.

(a) Except as provided in paragraph (b) of this section, a minor, including a minor who is the beneficiary of a trust or who is an heir of an estate, and the parent or any court-appointed person such as a guardian or conservator who is responsible for the minor shall be considered to be one person.

(b) A minor may be considered to be a separate person if the minor is a producer on a farm in which the parent or any court-appointed person such as a guardian or conservator who is responsible for the minor, including any entity in which a parent of such person has a substantial beneficial interest, owns no interest in the farm or in any production from the farm and the minor:

(1) Has established and maintains a separate household from the minor's parents or any court-appointed person such as a guardian or conservator who is responsible for the minor and such minor pesonally carries out the farming activities with respect to a farming operation for which there is a separate accounting; or

(2) Does not live in the same household as such minor's parent and:

(i) Is represented by a court-appointed guardian or conservator who is responsible for the minor; and

(ii) Ownership of the farm is vested in the minor.

(c) A person shall be considered to be a minor until the age 18 is reached. Court proceedings conferring majority on a person under 18 years of age will not change such person's status as a minor.

§ 1497.21 Charitable organizations.

Charitable organizations, including a club, society, fraternal or religious organization, shall be considered to be a separate person to the extent that such an entity is engaged in the production of crops as a separate person except where the land or the proceeds from the farming operation may revert to an entity which exercises control or authority over such organization.

§ 1497.22 Indian tribal ventures.

Payments may be made in excess of an applicable payment limitation provision with respect to land which is owned and not rented or otherwise acquired by an Indian tribal venture if a responsible official of the Bureau of Indian Affairs (BIA) or the Indian tribal council certifies that no payment in excess of such limitation will accrue directly or indirectly to any individual Indian, including the individual's spouse and minor children.

§ 1497.23 States, political subdivisions, and agencies thereof.

A State, political subdivision and agencies thereof shall be considered to be one person.

§ 1497.24 Scheme or device.

(a) All or any part of the payment otherwise due a person on all farms in which the person has an interest may be withheld or be required to be refunded if the person adopts or participates in adopting a scheme or device which is designed to evade this part or which has the effect of evading this part. Such acts shall include, but are not limited to:

(1) Concealing information which affects the application of this part;

(2) Submitting false or erroneous information; or

(3) Creating fictitious entities for the purpose of concealing the interest of a person in a farming operation.

(b) If the Deputy Administrator determines that any person has adopted a scheme or device to evade, or that has the purpose of evading, the provisions of sections 1001 1001A, or 1001C of the Food Security Act of 1985 such person shall be ineligible to receive payments under the programs specified in § 1497.1(a) (1) through (3) with respect to the year for which such scheme or device was adopted and the succeeding year.

§ 1497.25 Joint and several liability.

If two or more individuals or entities are considered to be one person and either receives a payment in excess of the applicable payment limitation provision, such individuals or entities shall be jointly and severally liable for the liability which arises therefrom. The provisions of this section shall be applicable in addition to any liability which arises under a criminal or civil statute.

§ 1497.26 Equitable adjustments.

(a) Actions taken by an individual or an entity in good faith on action or advice of an authorized representative of the Deputy Administrator may be accepted as meeting the requirements of this part to the extent the Deputy Administrator deems necessary in order to provide fair and equitable treatment to such individual or entity.

(b) In cases in which the application of this part will reduce payments to a farming operation, the Deputy Administrator may waive the application of the provisions of § 1497.18 with respect to any reorganization applied for prior to April 1, 1989, or such other date as may be determined and announced by the Deputy Administrator, to the extent the Deputy Administrator determines appropriate to facilitate equitable reorganizations that do not result in an increase in payments.

§ 1497.27 Appeals.

(a) Any person may obtain reconsideration and review of determinations made under this part in accordance with the appeal regulations set forth at Part 780 of this title. With respect to such appeals, the applicable reviewing authority shall:

(1) Schedule a hearing with respect to the appeal within 45 days following receipt of the written appeal; and

(2) Issue a determination within 60 days following the hearing.

(b) The time limitations provided in paragraph (a) of this section shall not apply if:

(1) The appellant, or the appellant's representative, requests a postponement of the scheduled hearing;

(2) The appellant, or the appellant's representative, requests additional time following the hearing to present additional information or a written closing statement;

(3) The appellant has not timely presented information to the reviewing authority; or

(4) An investigation by the Office of Inspector General is ongoing or a court proceeding which affects the amount of payments a person may receive is involved.

(c) If the deadlines provided in paragraphs (a) and (b) of this section are not met, the relief sought by the producer's appeal will be granted for the applicable crop year unless the Deputy Administrator determines that the producer did not follow the farm operating plan which was presented initially to the county committee for the year which is the subject of the appeal.

(d) An appellant may waive the provisions of paragraphs (a) and (b) of this section.

§ 1497.28 Paperwork Reduction Act assigned number.

The information collection requirements contained in this part have been approved by the Office of Management and Budget under the provisions of 44 U.S.C. Chapter 35 and have been assigned OMB control number 0560-0096.

2. A new Part 1498 is added to read as follows:

PART 1498—FOREIGN PERSONS INELIGIBLE FOR PROGRAM BENEFITS

Sec.
1498.1 Applicability.
1498.2 Administration.
1498.3 Definitions.
1498.4 Ineligibility.
1498.5 Notification.
1498.6 Scheme or device.
1498.7 Equitable relief.
1498.8 Appeals.
1498.9 Paperwork Reduction Act assigned number.

Authority: Section 1001C of the Food Security Act of 1985, as amended, AA Stat. 1444, as amended, (7 U.S.C. 1308, *et seq.*).

§ 1498.1 Applicability.

This part is applicable to any type of payment, loan, and benefit made with respect to 1989 and 1990 crops. This part is not applicable to any payment, loan, and benefit which is made with respect to the production of a crop of a commodity planted, or commodity program or Conservation Reserve Program contract approved before December 22, 1987.

§ 1498.2 Administration.

(a) The regulations in this part will be administrated under the general supervision and direction of the Executive Vice President, CCC, and the Administrator, ASCS. In the field, the regulations in this part will be administered by the Agricultural Stabilization and Conservation State and county committees (herein referred to as "State and county committees", respectively). State and county executive directors and State and county committees do not have authority to modify or waive any of the provisions of this part.

(b) The State committee may take any action authorized or required by this part to be taken by the county committee which has not been taken by such committee. The State committee may also:

(1) Correct or require a county committee to correct any action taken by such county committee which is not in accordance with this part; or

(2) Require a county oommittee to withhold taking any action which is not in accordance with this part.

(c) No delegation herein to a State or county committee shall preclude the Executive Vice President, CCC, and the Administrator, ASCS, or a designee, from determining any question arising under this part or from reversing or modifying any determination made by a State or county committee.

§1498.3 Definitions.

(a) The terms defined in Part 719 of this title shall be applicable to this part and all documents issued in accordance with this part, except as otherwise provided in this section.

(b) The following definitions shall be applicable to this part:

Active personal labor. Active personal labor is providing physical activities involved in land preparation, planting, cultivating, and harvesting of agricultural commodities in the farming operation, or where applicable, providing physical activities required to establish and maintain conserving cover crops or conserving use acreages.

Capital. Capital consists of the funding provided by an individual or entity to the farming operation in order for such operation to conduct farming activities. In determining whether an individual or entity has contributed capital to the farming operation such capital must have been derived from a fund or account separate and distinct from that of any other individual or entity involved in such operation. Capital does not include the value of any labor or management which is contributed to the farming operation. A capital contribution may be a direct out-of-pocket input of a specified sum or an amount borrowed by the individual or entity. With respect to a farming operation which consists of more than one individual or entity, such capital must be contributed directly by the individual or entity and must not be acquired as a result of a loan made to:

(1) The farming operation in which the individual or entity has an interest;

(2) Such individual, entity, or farming operation by the farming operation or any of its members, beneficiaries or related entities; or

(3) Such individual, entity, or farming operation, which was guaranteed or secured by the farming operation or any of its members, beneficiaries or related entities.

Entity. An entity is a corporation, joint stock company, association, limited partnership, irrevocable trust, revocable trust, estate, charitable organization, or other similar entity including any such organization participating in the farming operation as a partner in a general partnership, a participant in a joint venture, a grantor of a revocable trust, or as a participant in a similar organization.

Land. Land is cropland with normal crop acreage bases for the farming area. With respect to a farming operation which consists of more than one individual or entity, any land contributed to the farming operation by an individual or entity must be contributed directly by the individual or entity and not acquired as a result of a loan made to:

(1) The farming operation in which the individual or entity has an interest;

(2) Such individual, entity, or farming operation by the farming operation or any of its members, beneficiaries or related entities; or

(3) Such individual, entity, or farming operation, which was guaranteed or secured by the farming operation or any of its members, beneficiaries or related entities.

Lawful alien. Lawful alien means an alien lawfully admitted into the United States for permanent residence under the Immigration and Nationality Act.

Payment, loan, and benefit. Payment, loan and benefit means a payment, loan, or benefit made in accordance with the Agricultural Act of 1949, the Commodity Credit Corporation Charter Act, or Subtitle D of Title XIII of the Food Security Act of 1985, which results in a direct expenditure by the Commodity Credit Corporation or any other agency of the Federal Government, including a payment made in accordance with Part 770 of this title. Such term does not include the establishment of crop acreage bases, farm program payment yields, acreage allotments, marketing quotas, and similar program provisions.

Person. A person is:

(1) An individual, including any individual participating in a farming operation as a partner in a general partnership, a participant in a joint venture, or a participant in a similar entity; and

(2) A corporation, joint stock company, association, limited partnership, irrevocable trust, revocable trust together with the grantor of the trust, estate, charitable organization, or other similar entity, including any such entity or organization participating in the farming operation as a partner in a general partnership, a participant in a joint venture, a grantor of a revocable trust, or as a participant in a similar entity.

Substantial amount of active personal labor. Substantial amount of active personal labor means the provision of active personal labor in an amount which is the smaller of:

(1) 1,000 hours per calendar year; or

(2) 50 percent of the total hours which would be required to conduct a farming operation which is comparable in size to such individual's or entity's commensurate share in the farming operation.

§ 1498.4 Ineligibility.

(a) Any person who is not a citizen of the United States or a lawful alien shall be ineligible to receive payments, loans and benefits, with respect to any commodity produced, or land set aside from production, on a farm that is owned or operated by such person unless such person is an individual who is providing land, capital, and a substantial amount of active personal labor in the production of crops on such farm.

(b)(1) A corporation or other entity shall be ineligible to receive payments, loans, and benefits if more than 10 percent of the beneficial ownership of the entity is held by persons who are not citizens of the United States or lawful aliens unless such persons provide a substantial amount of active personal labor in the production of crops on a farm owned by such an entity. However, upon the written request of the entity, the Deputy Administrator may make payments in an amount determined by the Deputy Administrator to be representative of the percentage interest of the entity which is owned by citizens of the United States and lawful aliens.

(2) In determining whether more than 10 percent of the beneficial ownership of an entity is held by such persons, the beneficial ownership interest shall be the higher of the amount of such interest on:

(i) The date the applicable program contract or agreement is executed by the entity; or

(ii) Any other date prior to the final harvest date which is determined and announced by the Deputy Administrator to be normal in the area for the applicable program crop.

(3) A corporation or other entity shall inform the county committee of any increase in such ownership which occurs after the applicable program contract or agreement is executed.

(4) In the event of an increase in such ownership after a payment, loan, and benefit has been made, the entity shall refund such payment, loan, and benefit.

(5) Where there is only one class of stock or other similar unit of ownership, an individual's or entity's percentage share of a limited partnership or corporation shall be based upon the value of the outstanding stock or other similar unit of ownership. If the limited partnership or corporation has more than one class of stock or other unit of ownership, the percentage share of the limited partnership or corporation owned by an individual or entity shall be determined by the Deputy Administrator on the basis of market quotations. If market quotations are lacking or are too scarce to be recognized, such percentage share shall be determined by the Deputy Administrator on the basis of all relevant factors affecting the fair market value of such stock or other unit of ownership, including the various rights and privileges which are attributed to each such class.

(c) A citizen of the United States, lawful alien, and entity which is not subject to this part who is in lawful possession, through a lease or otherwise, of a farm owned by an individual or entity who is subject to this part or who is successor-in-interest to a program contract or agreement with respect to such a farm may receive a payment, loan, and benefit without regard to this part.

§ 1498.5 Notification.

Any entity, whether foreign or domestic, must provide written notification to the county committee or other party who executes the program contract or agreement under which a payment, loan, and benefit is made if any individual or entity who, in accordance with § 1498.4 would be ineligible to receive a payment, loan, and benefit, directly or indirectly holds more than a 10 percent beneficial interest in such entity. Such entity must also furnish the names, social security number, and tax identification number of each individual and entity with a substantial beneficial interest which exceeds this amount. The failure of the entity to provide this information will result in the ineligibility of the entity to receive any payment, loan, and benefit.

§ 1498.6 Scheme or device.

(a) All or any part of the payment otherwise due a person on all farms in which the person has an interest may be withheld or be required to be refunded if the person adopts or participates in adopting a scheme or device which is designed to evade this part or which has the effect of evading this part. Such acts shall include, but are not limited to, concealing information which affects the application of this part. Submitting false or erroneous information, or creating any fictitious entity for the purpose of concealing the interest of a person in a farming operation.

(b) If the Deputy Administrator determines that any person has adopted a scheme or device to evade, or that has the purpose of evading, the provisions of section 1001, 1001A, or 1001C, of the Food Security Act of 1985, such person shall be ineligible to receive payments under the programs specified in § 1497.1(a) (1) through (3) with respect to the year for which such scheme or device was adopted and the succeeding year.

§ 1498.7 Equitable relief.

Actions taken by an individual or an entity in good faith on action or advice of an authorized representative of the Deputy Administrator may be accepted as meeting the requirements of this part to the extent the Deputy Administrator deems necessary in order to provide fair and equitable treatment to such individual or entity.

§ 1498.8 Appeals.

Any person may obtain reconsideration and review of determinations made under this part in accordance with the appeal regulations set forth as Part 780 of this title.

§ 1498.9 Paperwork Reduction Act assigned number.

The information collection requirements contained in this part have been approved by the Office of Management and Budget under the provisions of 44 U.S.C. Chapter 35 and have been assigned OMB control number 0560-0096.

Signed at Washington, DC on April 1, 1988.

Vern Neppl,

Acting Executive Vice President, Commodity Credit Corporation and Administrator, Agricultural Stabilization and Conservation Service.

[FR Doc. 88-7567 Filed 4-4-88; 10:02 am]

BILLING CODE 3410-05-M

Reader Aids

Federal Register
Vol. 53, No. 66
Wednesday, April 6, 1988

INFORMATION AND ASSISTANCE

Federal Register

Index, finding aids & general information	523-5227
Public inspection desk	523-5215
Corrections to published documents	523-5237
Document drafting information	523-5237
Machine readable documents	523-5237

Code of Federal Regulations

Index, finding aids & general information	523-5227
Printing schedules	523-3419

Laws

Public Laws Update Service (numbers, dates, etc.)	523-6641
Additional information	523-5230

Presidential Documents

Executive orders and proclamations	523-5230
Public Papers of the Presidents	523-5230
Weekly Compilation of Presidential Documents	523-5230

The United States Government Manual

General information	523-5230

Other Services

Data base and machine readable specifications	523-3408
Guide to Record Retention Requirements	523-3187
Legal staff	523-4534
Library	523-5240
Privacy Act Compilation	523-3187
Public Laws Update Service (PLUS)	523-6641
TDD for the deaf	523-5229

FEDERAL REGISTER PAGES AND DATES, APRIL

10519-10868	1
10869-11030	4
11031-11238	5
11239-11486	6

CFR PARTS AFFECTED DURING APRIL

At the end of each month, the Office of the Federal Register publishes separately a List of CFR Sections Affected (LSA), which lists parts and sections affected by documents published since the revision date of each title.

3 CFR

Executive Orders:
12634 11041
Administrative Orders:
Memorandums:
Mar. 31, 1988 11039
Proclamations:
5784 10519
5785 10521
5786 10523
5787 11031

5 CFR

Proposed Rules:
2431 10885

7 CFR

300 10525
400 10526
910 10527
946 11043
1421 11239
Proposed Rules:
6 11091
53 10545
54 10545
449 11299
949 10887
1030 10894
1106 11092
1497 11474
1498 11474
1530 11098
1701 10545

8 CFR

Proposed Rules:
3 11300
208 11300
236 11300
242 11300
253 11300

9 CFR

92 11043

10 CFR

430 10869
1010 11240
Proposed Rules:
2 11310
50 11311

12 CFR

202 11044
205 11046
226 ..... 11047, 11055
563 ..... 11242, 11243

14 CFR

Ch. III 11004
39 11246
71 ..... 10528, 11020, 11060, 11061
97 11062
Proposed Rules:
27 ..... 10826, 11162
29 ..... 10826, 11162
71 ..... 10546, 11100, 11101
73 11102

16 CFR

13 11247

21 CFR

184 11247
520 11063
522 11064
524 11064
558 ..... 11065, 11251
800 11251
803 11251
807 11251
808 11251
809 11251
812 11251
813 11251
820 11251
860 11251
861 11251
864 11251
866 11251
876 11251
895 11251
1002 11251
1005 11251
1010 11251
1020 11251
1030 11251
1040 11251
1050 11251
1308 ..... 10834, 10861, 10869
Proposed Rules:
133 11312
175 11402
176 11402
177 11402
178 11402
561 11313

22 CFR

514 10528
602 10529

23 CFR

650 11065
771 11065
1204 11255
1205 11255

24 CFR

50 11224
200 11270

203 10529
221 11224
236 11224
241 11224
248 11224
Proposed Rules:
35 11164
200 11164
510 11164
511 11164
570 11164
882 11164
886 11164
941 11164
965 11164
968 11164

25 CFR
61 11271

26 CFR
1 ..... 11002, 11066, 11162
602 ..... 11066, 11162
Proposed Rules:
1 11103

28 CFR
0 ..... 10870, 10871

29 CFR
102 10872
1910 11414
2610 10530
2622 10530
2644 10531

30 CFR
75 11395
250 10596
256 10596

32 CFR
388 10876

33 CFR
84 10532
117 ..... 10533, 10534
Proposed Rules:
110 11395

34 CFR
600 11208
657 10820
668 11208
Proposed Rules:
105 10608

40 CFR
52 ..... 11068, 11273
180 ..... 11071, 11274
Proposed Rules:
52 11314
180 10895
761 11104
763 10546
796 11104

43 CFR
Proposed Rules:
3160 11318
Public Land Order:
6670 10535

44 CFR
80 11275
82 11275
83 11275
Proposed Rules:
61 10547

45 CFR
36 11279
Proposed Rules:
606 10896

46 CFR
572 11072
Proposed Rules:
Ch. I 11440

47 CFR
2 10878
Proposed Rules:
Ch. I 10549, 10550
73 10905

48 CFR
15 10828
31 10828
52 10828
215 11073
227 10780
242 11073
252 ..... 10780, 11073
Proposed Rules:
916 11318
931 11318
952 11318

49 CFR
533 11074
571 11280
1160 10536
Proposed Rules:
171 11320
173 11320
192 10906
571 11105

50 CFR
17 10679
301 10536
672 11297
Proposed Rules:
644 11321

LIST OF PUBLIC LAWS

Last List April 5, 1988

This is a continuing list of public bills from the current session of Congress which have become Federal laws. It may be used in conjunction with "P L U S" (Public Laws Update Service) on 523-6641. The text of laws is not published in the **Federal Register** but may be ordered in individual pamphlet form (referred to as "slip laws") from the Superintendent of Documents, U.S. Government Printing Office, Washington, DC 20402 (phone 202-275-3030).

H.J. Res. 523/Pub. L. 100-276

To provide assistance and support for peace, democracy, and reconciliation in Central America. (Apr. 1, 1988; 102 Stat. 62; 5 pages) Price: $1.00

VOL 53 ISS 66 AP 6 1988 UMI

VOL
53

ISS
66

AP
6

1988

UMI

VOL
53

ISS
67

AP
7

1988

UMI

4-7-88
Vol. 5

United
Gover
Printin
SUPERIN
OF DOCU
Washingto

OFFICIAL
Penalty fo

4-7-88
Vol. 53 No. 67

federal register

Thursday
April 7, 1988

United States
Government
Printing Office
SUPERINTENDENT
OF DOCUMENTS
Washington, DC 20402

OFFICIAL BUSINESS
Penalty for private use, $300

**********5-DIGIT 48106

A FR SERIA300S NOV 88 R
SERIALS PROCESSING
UNIV MICROFILMS INTL
300 N ZEEB RD
ANN ARBOR MI 48106

SECOND CLASS NEWSPAPER
Postage and Fees Paid
U.S. Government Printing Office
(ISSN 0097-6326)

VOL
53

ISS
67

AP
7

1988

UMI

4-7-88
Vol. 53
Pages

4-7-88
Vol. 53 No. 67
Pages 11467-11632

federal register

Thursday
April 7, 1988

Briefings on How To Use the Federal Register—
For information on briefings in Washington, DC, and Boston, MA, see announcement on the inside cover of this issue

BEST COPY AVAILABLE

FEDERAL REGISTER Published daily, Monday through Friday, (not published on Saturdays, Sundays, or on official holidays), by the Office of the Federal Register, National Archives and Records Administration, Washington, DC 20408, under the Federal Register Act (49 Stat. 500, as amended; 44 U.S.C. Ch. 15) and the regulations of the Administrative Committee of the Federal Register (1 CFR Ch. I). Distribution is made only by the Superintendent of Documents, U.S. Government Printing Office, Washington, DC 20402.

The **Federal Register** provides a uniform system for making available to the public regulations and legal notices issued by Federal agencies. These include Presidential proclamations and Executive orders and Federal agency documents having general applicability and legal effect, documents required to be published by act of Congress and other Federal agency documents of public interest. Documents are on file for public inspection in the Office of the Federal Register the day before they are published, unless earlier filing is requested by the issuing agency.

The **Federal Register** will be furnished by mail to subscribers for $340.00 per year, or $170.00 for 6 months in paper form, or $188.00 per year, or $94.00 for six months in microfiche form, payable in advance. The charge for individual copies is $1.50 for each issue, or $1.50 for each group of pages as actually bound. Remit check or money order, made payable to the Superintendent of Documents, U.S. Government Printing Office, Washington, DC 20402, or charge to your GPO Deposit Account or VISA or Mastercard.

There are no restrictions on the republication of material appearing in the **Federal Register**.

How To Cite This Publication: Use the volume number and the page number. Example: 52 FR 12345.

SUBSCRIPTIONS AND COPIES

PUBLIC	
Subscriptions:	
Paper or fiche	202-783-3238
Magnetic tapes	275-3328
Problems with public subscriptions	275-3054
Single copies/back copies:	
Paper or fiche	783-3238
Magnetic tapes	275-3328
Problems with public single copies	275-3050
FEDERAL AGENCIES	
Subscriptions:	
Paper or fiche	523-5240
Magnetic tapes	275-3328
Problems with Federal agency subscriptions	523-5240

For other telephone numbers, see the Reader Aids section at the end of this issue.

THE FEDERAL REGISTER
WHAT IT IS AND HOW TO USE IT

FOR: Any person who uses the Federal Register and Code of Federal Regulations.

WHO: The Office of the Federal Register.

WHAT: Free public briefings (approximately 3 hours) to present:
1. The regulatory process, with a focus on the Federal Register system and the public's role in the development of regulations.
2. The relationship between the Federal Register and Code of Federal Regulations.
3. The important elements of typical Federal Register documents.
4. An introduction to the finding aids of the FR/CFR system.

WHY: To provide the public with access to information necessary to research Federal agency regulations which directly affect them. There will be no discussion of specific agency regulations.

WASHINGTON, DC

WHEN: April 15; at 9:00 a.m.
WHERE: Office of the Federal Register, First Floor Conference Room, 1100 L Street NW., Washington, DC
RESERVATIONS: Carolyn Payne, 202-523-3187

BOSTON, MA

WHEN: April 19; at 9 a.m.
WHERE: Thomas P. O'Neill, Jr. Federal Building, Auditorium, 10 Causeway Street, Boston, MA.
RESERVATIONS: Call the Boston Federal Information Center, 617-565-8123

Contents

Federal Register
Vol. 53, No. 67
Thursday, April 7, 1988

Agency for International Development
NOTICES
Meetings:
International Food and Agricultural Development Board, 11568

Agricultural Marketing Service
RULES
Milk marketing orders:
Greater Kansas City
Correction, 11590

Agriculture Department
See also Agricultural Marketing Service; Animal and Plant Health Inspection Service; Forest Service; Rural Electrification Administration; Soil Conservation Service
NOTICES
Agency information collection activities under OMB review, 11521

Animal and Plant Health Inspection Service
RULES
Interstate transportation of animals and animal products (quarantine):
Tuberculosis in cattle and bison—
State and area designations, 11491
NOTICES
Environmental statements; availability, etc.:
Tomato plants, genetically engineered herbicide tolerant; field test permit, 11521

Army Department
See Engineers Corps

Blind and Other Severely Handicapped, Committee for Purchase From
See Committee for Purchase From the Blind and Other Severely Handicapped

Census Bureau
NOTICES
Meetings:
American Indian and Alaska Native Populations for 1990 Census Advisory Committee et al., 11538

Coast Guard
RULES
Regattas and marine parades:
Harborfest 1988; Elizabeth River, Norfolk and Portsmouth, VA, 11502
PROPOSED RULES
Anchorage regulations:
Virginia, 11515
Drawbridge operations:
Kentucky, 11516
Virginia, 11517
NOTICES
Bridges, proposed construction:
New Rochelle, NY, 11584
Meetings:
Houston/Galveston Navigation Safety Advisory Committee, 11585
New York Harbor Traffic Management Advisory Committee, 11586

Commerce Department
See also Census Bureau; Foreign-Trade Zones Board; International Trade Administration; National Bureau of Standards; National Oceanic and Atmospheric Administration; National Technical Information Service
NOTICES
Agency information collection activities under OMB review, 11538

Committee for Purchase From the Blind and Other Severely Handicapped
NOTICES
Procurement list, 1988:
Additions and deletions, 11542

Committee for the Implementation of Textile Agreements
NOTICES
Cotton, wool, and man-made textiles:
Romania, 11541, 11542
(2 documents)

Commodity Futures Trading Commission
RULES
Foreign futures and options transactions, 11491

Defense Department
See also Defense Logistics Agency; Engineers Corps
NOTICES
Agency information collection activities under OMB review, 11544
Meetings:
DIA Scientific Advisory Committee, 11545
Science Board task forces, 11545

Defense Logistics Agency
NOTICES
Privacy Act:
Computer matching program, 11545

Economic Regulatory Administration
NOTICES
Consent orders:
Stanco Petroleum Inc., 11548

Employment Standards Administration
See Wage and Hour Division

Energy Department
See Economic Regulatory Administration; Federal Energy Regulatory Commission

Engineers Corps
NOTICES
Environmental statements; availability, etc.:
Bassett Creek, MN, 11547
Monmouth County, NJ, 11548

Environmental Protection Agency
RULES
Air pollution; standards of performance for new stationary sources:
Total gaseous nonmethane organic emissions as carbon determination
Correction, 11590
PROPOSED RULES
Acquisition regulations, 11519

Executive Office of the President
See Presidential Documents; Trade Representative, Office of United States

Export Administration
See International Trade Administration

Federal Election Commission
NOTICES
Meetings; Sunshine Act, 11589

Federal Emergency Management Agency
RULES
Flood elevation determinations:
Florida, 11510

Federal Energy Regulatory Commission
NOTICES
Electric rate, small power production, and interlocking directorate filings, etc.:
Southern California Edison Co. et al., 11553
Natural gas companies:
Certificates of public convenience and necessity; applications, abandonment of service and petitions to amend, 11554
Natural Gas Policy Act:
Well category determinations, etc. (Doran & Associates, Inc.), 11556
Preliminary permits surrender:
American Hydro Power Co., 11555
Applications, hearings, determinations, etc.:
Colorado Interstate Gas Co. et al., 11555
Commercial Pipeline Co., Inc., 11556
Panhandle Eastern Pipe Line Co., 11557
Southern Natural Gas Co., 11557
Texas Gas Transmission Corp., 11557
Transcontinental Gas Pipe Line Corp., 11558

Federal Financial Institutions Examination Council
NOTICES
Bank call reports submission, 11558

Federal Maritime Commission
NOTICES
Agreements filed, etc., 11559

Federal Reserve System
NOTICES
Applications, hearings, determinations, etc.:
Colonial BancGroup, Inc., et al., 11560
MCorp et al., 11560

Fish and Wildlife Service
RULES
Endangered and threatened species:
Palo de Nigua, 11610
White-haired goldenrod, 11612

Food and Drug Administration
RULES
Animal drugs, feeds, and related products:
Oxytetracycline hydrochloride injection, 11493
Sponsor name and address changes—
Norbrook Laboratories, Ltd., 11492
NOTICES
Medical devices:
In vitro diagnostic products; GMP guidelines for manufacture availability, 11561
Meetings:
Advisory committees, panels, etc., 11561

Foreign-Trade Zones Board
NOTICES
Applications, hearings, determinations, etc.:
Louisiana—
TransAmerican Natural Gas Corp., 11539

Forest Service
NOTICES
Environmental statements; availability, etc.:
Angeles National Forest, CA, 11522
Colville National Forest, WA, 11523
(2 documents)
Payette National Forest, ID, 11523
Land and jurisdiction transfers, etc.:
Libby Dam and Lake Koocanusa, MT, 11523
Lumber base indexes adjustment; certain western timber species, 11527

General Services Administration
PROPOSED RULES
Federal Information Resources Management Regulation:
Reutilization of excess and exchange/sale automatic data processing equipment with original cost below $1,000,000, 11518

Health and Human Services Department
See Food and Drug Administration; Health Care Financing Administration; Public Health Service

Health Care Financing Administration
RULES
Medicaid and medicare:
Hospitals, skilled nursing facilities, hospices, etc.; fire safety standards, 11504

Health Resources and Services Administration
See Public Health Service

Interior Department
See Fish and Wildlife Service; Land Management Bureau; Minerals Management Service; Reclamation Bureau; Surface Mining Reclamation and Enforcement Office

International Development Cooperation Agency
See Agency for International Development

International Trade Administration
NOTICES
Antidumping and countervailing duties:
Administrative review requests, 11540

Interstate Commerce Commission
NOTICES
Railroad operation, acquisition, construction, etc.:
Marino, John H., et al., 11569

VOL 53 ISS 67 APR 7 1988 UMI

Justice Department
See also Parole Commission
NOTICES
Pollution control; consent judgments:
Sun Metal Finishing, Inc., 11569
USX Corp.; correction, 11569

Labor Department
See Mine Safety and Health Administration; Occupational Safety and Health Administration; Wage and Hour Division; Workers' Compensation Programs Office

Land Management Bureau
NOTICES
Meetings:
Battle Mountain District Grazing Advisory Board, 11563
Lakeview District Advisory Council, 11564
Lakeview District Grazing Advisory Board, 11564
Realty actions; sales, leases, etc.:
Idaho, 11564, 11565
(2 documents)
Louisiana, 11565
Montana, 11565
Survey plat filings:
Arizona, 11565
Colorado, 11566
Wilderness study areas; characteristics, inventories, etc.:
Colorado, 11566

Mine Safety and Health Administration
PROPOSED RULES
Hazard communication; chemical-related illnesses and injuries [Editorial Note: This document, appearing at page 10257 in the **Federal Register** of March 30, 1988, was listed incorrectly in that issue's table of contents.]

Minerals Management Service
NOTICES
Outer Continental Shelf; development operations coordination:
Apache Corp., 11566
Chevron U.S.A. Inc., 11567
Samedan Oil Corp., 11567
Tenneco Oil Co., 11567

National Aeronautics and Space Administration
NOTICES
Meetings:
Aeronautics Advisory Committee, 11569

National Bureau of Standards
NOTICES
Meetings:
Applications portability profile; workshop, 11540

National Oceanic and Atmospheric Administration
RULES
Tuna, Atlantic fisheries, 11510

National Science Foundation
NOTICES
Meetings:
Archaeology Advisory Panel, 11570
Chemistry Advisory Committee, 11570
Decision, Risk, and Management Science Program Advisory Panel, 11570
Geography and Regional Science Advisory Panel, 11571
Molecular & Cellular Neurobiology Program Advisory Panel, 11571
Political Science Advisory Panel, 11571
Sociology Advisory Panel, 11571

National Technical Information Service
NOTICES
Inventions, Government-owned; availability for licensing, 11540

National Transportation Safety Board
PROPOSED RULES
Notification of Railroad accidents; amendments, 11520

Nuclear Regulatory Commission
NOTICES
Abnormal occurrence reports:
Quarterly reports to Congress, 11571, 11575
(2 documents)
Environmental statements; availability, etc.:
Carolina Power & Light Co., 11576
Washington Public Power Supply System, 11577
Applications, hearings, determinations, etc.:
Northeast Nuclear Energy Co. et al., 11578

Occupational Safety and Health Administration
PROPOSED RULES
Safety and health standards:
Lead; occupational exposure, 11511

Office of United States Trade Representative
See Trade Representative, Office of United States

Parole Commission
NOTICES
Meetings; Sunshine Act, 11589

Presidential Documents
PROCLAMATIONS
Special observances:
Former Prisoners of War Recognition Day, National (Proc. 5788), 11489
ADMINISTRATIVE ORDERS
Anti-Drug Abuse Act; certifications (Presidential Determination No. 88-10 of February 29, 1988), 11487

Public Health Service
See also Food and Drug Administration
NOTICES
Patent licenses, exclusive:
Henkin, Robert J., M.D., 11562
Privacy Act:
Computer matching program, 11562

Reclamation Bureau
NOTICES
Environmental statements; availability, etc.:
Seawater Intrusion Project, CA, 11568

Research and Special Programs Administration
PROPOSED RULES
Hazardous materials:
Highway routing standards for transportation of non-radioactive materials, 11618
NOTICES
Hazardous materials:
Inconsistency rulings, etc.—
Nevada; Southern Pacific Transportation, 11600

Meetings:
International standards on transport of dangerous goods, 11586

Rural Electrification Administration
PROPOSED RULES
Rural Electrification and Telephone Revolving Fund; cushion of credit payments program and rural economic development subaccount, 11511

Securities and Exchange Commission
NOTICES
Meetings; Sunshine Act, 11589
Self-regulatory organizations; proposed rule changes:
National Association of Securities Dealers, Inc., 11578
New York Stock Exchange, Inc., 11579

Small Business Administration
NOTICES
Interest rates; quarterly determinations, 11580

Soil Conservation Service
NOTICES
Environmental statements; availability, etc.:
Ross County, OH, 11537

State Department
RULES
Defense articles and services; exports, 11494

Surface Mining Reclamation and Enforcement Office
RULES
Federal/State cooperative agreements:
North Dakota, 11500
Permits and coal exploration systems:
Coal mining operations; permit requirements and processing, 11606

Textile Agreements Implementation Committee
See Committee for the Implementation of Textile Agreements

Trade Representative, Office of United States
NOTICES
Generalized System of Preferences:
Articles eligible for duty-free treatment, etc., 11580, 11581 (2 documents)

Transportation Department
See Coast Guard; Research and Special Programs Administration; Urban Mass Transportation Administration

Treasury Department
PROPOSED RULES
Currency and foreign transactions; financial reporting and recordkeeping requirements:
Bank Secrecy Act; implementation—Casinos, 11513
NOTICES
Agency information collection activities under OMB review, 11586, 11587 (3 documents)

United States Information Agency
NOTICES
Grants; availability, etc.:
Private non-profit organizations in support of international educational and cultural activities, 11587

Urban Mass Transportation Administration
NOTICES
Urban mass transportation programs:
Legal opinions summary, 11624

Veterans Administration
RULES
Loan guaranty:
Interest rates, 11502

Wage and Hour Division
PROPOSED RULES
Homeworkers; employment in industries
Correction, 11590

Workers' Compensation Programs Office
RULES
Federal employees:
Compensation claims, 11594
PROPOSED RULES
Federal employees:
Compensation claims, 11596

Separate Parts In This Issue

Part II
Department of Labor, Office of Workers' Compensation Programs, 11594

Part III
Department of Transportation, Research and Special Programs Administration, 11600

Part IV
Department of Interior, Office of Surface Mining Reclamation and Enforcement, 11606

Part V
Department of Interior, Fish and Wildlife Service, 11610

Part VI
Department of Transportation, Research and Special Programs Administration, 11618

Part VII
Department of Transportation, Urban Mass Transportation Administration, 11624

Reader Aids
Additional information, including a list of public laws, telephone numbers, and finding aids, appears in the Reader Aids section at the end of this issue.

CFR PARTS AFFECTED IN THIS ISSUE

A cumulative list of the parts affected this month can be found in the Reader Aids section at the end of this issue.

3 CFR
Proclamations:
5788 11489
Administrative Orders:
Presidential Determinations:
No. 88-10 of February 29, 1988 11487

7 CFR
1064 11590
Proposed Rules:
1700 11511

9 CFR
77 11491

17 CFR
30 11491

20 CFR
10 11594
Proposed Rules:
10 11596

21 CFR
510 11492
522 11493
540 11492

22 CFR
120 11494
121 11494
122 11494
123 11494
124 11494
125 11494
126 11494
127 11494
128 11494

29 CFR
Proposed Rules:
516 11590
530 11590
1910 11511
1915 11511
1917 11511
1918 11511

30 CFR
773 11606
934 11500

31 CFR
Proposed Rules:
103 11513

33 CFR
100 11502
Proposed Rules:
100 11515
110 11515
117 (2 documents) 11516, 11517

38 CFR
36 11502

40 CFR
60 11590

41 CFR
Proposed Rules:
201-33 11518

42 CFR
405 11504
416 11504
418 11504
442 11504
482 11504

44 CFR
67 11510

46 CFR
Proposed Rules:
1505 11519
1506 11519

49 CFR
Proposed Rules:
177 11618
840 11520

50 CFR
17 (2 documents) 11609, 11612
285 11510

VOL
53
ISS
67
AP
7
1988
UMI

Federal R
Vol. 53, N
Thursday,

Title 3—

The P

[FR Doc. 8
Filed 4-5-8
Billing cod

Federal Register
Vol. 53, No. 67
Thursday, April 7, 1988

Presidential Documents

Title 3—

The President

Presidential Determination No. 88-10 of February 29, 1988

Certifications for Narcotics Source and Transit Countries Under P.L. 99-570

Memorandum for the Secretary of State

By virtue of the authority vested in me by Section 481(h)(2)(A)(i) of the Foreign Assistance Act of 1961, as amended by the Anti-Drug Abuse Act of 1986 (P.L. 99-570), I hereby determine and certify that the following major narcotics producing and/or major narcotics transit countries have cooperated fully with the United States, or taken adequate steps on their own, to control narcotics production, trafficking and money laundering:

The Bahamas, Belize, Bolivia, Brazil, Burma, Colombia, Ecuador, Hong Kong, India, Jamaica, Malaysia, Mexico, Morocco, Nigeria, Pakistan, Peru and Thailand.

By virtue of the authority vested in me by Section 481(h)(2)(A)(ii) of the Act, I hereby determine that it is in the vital national interests of the United States to certify the following countries:

Laos, Lebanon, and Paraguay.

Information for these countries as required under Section 481(h)(2)(B) of the Act is enclosed.

I have determined that the following major producing and/or major transit countries do not meet the standards set forth in Section 481(h)(2)(A):

Afghanistan, Iran, Panama and Syria.

In making these determinations, I have considered the factors set forth in Section 481(h)(3) of the Act, based on the information in the International Narcotics Control Strategy Report of 1988.

You are hereby authorized and directed to report this determination to the Congress immediately and to publish it in the **Federal Register**.

Ronald Reagan

THE WHITE HOUSE,
Washington, February 29, 1988.

[FR Doc. 88-7745
Filed 4-5-88; 2:06 pm]
Billing code 3195-01-M

VOL
53

ISS
67

AP
7

1988

UMI

[FR Doc.
Filed 4-5
Billing c

Presidential Documents

Proclamation 5788 of April 1, 1988

National Former Prisoners of War Recognition Day, 1988

By the President of the United States of America

A Proclamation

It is truly fitting that America observe April 9 in recognition of our former prisoners of war; that date is the 46th anniversary of the day in 1942 when U.S. forces holding out on the Bataan Peninsula in the Philippines were captured. Later, as prisoners of war, these gallant Americans were subjected to the infamous Bataan Death March and to other inhumane treatment that killed thousands of them before they could be liberated. In every conflict, brutality has invariably been meted out to American prisoners of war; on April 9 and every day, we must remember with solemn pride and gratitude that valor and tenacity have ever been our prisoners' response.

That is clear from the words of then-Captain Jeremiah Denton, USN, when he and other U.S. prisoners of war were freed in 1973 after years of captivity in North Vietnam. "We are honored to have had the opportunity to serve our country under these difficult circumstances," Captain Denton said. Implacable and incredible courage, endurance, faith, and patriotism were behind those words—eloquent and immortal testimony to the spirit of America's Armed Forces in the Vietnam War and throughout our history.

The term "difficult circumstances" referred to nothing less than physical and mental torture, starvation, disease, separation from loved ones, and deprivation of medical treatment—an ordeal that for some, in every conflict, did not end until death. To their brave families we offer solace and salute. To our former prisoners of war who endured so much, we say that with your example and with God's help we will seek to meet the standards of devotion you have set; we will never forget your service or your sacrifice.

The Congress, by Public Law 100–269, has designated April 9, 1988, as "National Former Prisoners of War Recognition Day" and authorized and requested the President to issue a proclamation in observance of this event.

NOW, THEREFORE, I, RONALD REAGAN, President of the United States of America, do hereby proclaim April 9, 1988, as National Former Prisoners of War Recognition Day, and I urge all Americans to observe this day of remembrance with appropriate ceremonies and activities.

IN WITNESS WHEREOF, I have hereunto set my hand this first day of April, in the year of our Lord nineteen hundred and eighty-eight, and of the Independence of the United States of America the two hundred and twelfth.

Ronald Reagan

[FR Doc. 88–7753
Filed 4–5–88; 3:04 pm]
Billing code 3195–01–M

VOL
53

ISS
67

AP
7

1988

UMI

Rul

This se
contains
general
of whic
the Co
publishe
U.S.C.
The Co
by the
Prices
first FE
week.

DEPAR

Anima
Servic

9 CFR

[Docke

Tuberc
Design

AGENC
Inspec

ACTION

SUMMA
change
regulat
movem
of tube
design
accred
state.

EFFECT

FOR FU
Dr. Ral
Veterin
Suppor
815, Fe
Road,
8438.

SUPPLE

Backgr

The
(contai
to belo
interst
becaus

In ar
Federa
30, 198
Numbe
the reg
from th
states
accred
Comm
require
on or b

Rules and Regulations

Federal Register
Vol. 53, No. 67
Thursday, April 7, 1988

This section of the FEDERAL REGISTER contains regulatory documents having general applicability and legal effect, most of which are keyed to and codified in the Code of Federal Regulations, which is published under 50 titles pursuant to 44 U.S.C. 1510.
The Code of Federal Regulations is sold by the Superintendent of Documents. Prices of new books are listed in the first FEDERAL REGISTER issue of each week.

DEPARTMENT OF AGRICULTURE

Animal and Plant Health Inspection Service

9 CFR Part 77

[Docket No. 88-032]

Tuberculosis in Cattle and Bison; State Designations

AGENCY: Animal and Plant Health Inspection Service, USDA.

ACTION: Affirmation of interim rule.

SUMMARY: We are affirming without change an interim rule that amended the regulations governing the interstate movement of cattle and bison because of tuberculosis by raising the designation of Kentucky from a modified accredited state to an accredited-free state.

EFFECTIVE DATE: May 9, 1988.

FOR FURTHER INFORMATION CONTACT: Dr. Ralph L. Hosker, Senior Staff Veterinarian, Domestic Programs Support Staff, VS, APHIS, USDA, Room 815, Federal Building, 6505 Belcrest Road, Hyattsville, MD 20782, (301) 436-8438.

SUPPLEMENTARY INFORMATION:

Background

The "Tuberculosis" regulations (contained in 9 CFR Part 77 and referred to below as the regulations) regulate the interstate movement of cattle and bison because of tuberculosis.

In an interim rule published in the **Federal Register** and effective December 30, 1987 (52 FR 49155-49156, Docket Number 87-144), we amended § 77.1 of the regulations by removing Kentucky from the list of modified accredited states and adding it to the list of accredited-free states in that section. Comments on the interim rule were required to be postmarked or received on or before March 1, 1988. We did not receive any comments. The facts presented in the interim rule still provide a basis for the rule.

Executive Order 12291 and Regulatory Flexibility Act

We are issuing this rule in conformance with Executive Order 12291, and we have determined that it is not a "major rule." Based on information compiled by the Department, we have determined that this rule will have an effect on the economy of less than $100 million; will not cause a major increase in costs of prices for consumers, individual industries, federal, state, or local government agencies, or geographic regions; and will not cause a significant adverse effect on competition, employment, investment, productivity, innovation, or on the ability of United States-based enterprises to compete with foreign-based enterprises in domestic or export markets.

For this action, the Office of Management and Budget has waived its review process required by Executive Order 12291.

Cattle and bison moved interstate are moved for slaughter, for use as breeding stock, or for feeding. Changing the status of the state of Kentucky may affect the marketability of cattle and bison from that state since some prospective cattle and bison buyers prefer to buy cattle and bison from accredited-free states. This may result in some beneficial economic impact on some small entities. However, based on our experience in similar designations of other states, the impact should not be significant.

Under these circumstances, the Acting Administrator of the Animal and Plant Health Inspection Service has determined that this action will not have a significant economic impact on a substantial number of small entities.

Paperwork Reduction Act

This rule contains no information collection or recordkeeping requirements under the Paperwork Reduction Act of 1980 (44 U.S.C. 3501 *et seq.*).

Executive Order 12372

This program/activity is listed in the Catalog of Federal Domestic Assistance under No. 10.025 and is subject to the provisions of Executive Order 12372, which requires intergovernmental consultation with state and local officials. (See 7 CFR Part 3015, Subpart V.)

List of Subjects in 9 CFR Part 77

Animal diseases, Bison, Cattle, Transportation, Tuberculosis.

PART 77—TUBERCULOSIS

Accordingly, we are adopting as a final rule, without change, the interim rule that amended 9 CFR Part 77 and that was published at 52 FR 49155-49156 on December 30, 1987.

Authority: 21 U.S.C. 111, 114, 114a, 115-117, 120, 121, 134b, 134f; 7 CFR 2.17, 2.51, and 371.2(d).

Done in Washington, DC, this 4th day of April, 1988.

James W. Glosser,
Acting Administrator, Animal and Plant Health Inspection Service.

[FR Doc. 88-7613 Filed 4-6-88; 8:45 am]

BILLING CODE 3410-34-M

COMMODITY FUTURES TRADING COMMISSION

17 CFR Part 30

Foreign Futures and Option Transactions

AGENCY: Commodity Futures Trading Commission.

ACTION: Extension of interim order regarding the application of foreign futures and option rules to certain persons located outside the United States.

SUMMARY: The Commodity Futures Trading Commission ("Commission") has determined to extend the interim relief granted in its order of January 29, 1988, 53 FR 3338 (February 5, 1988), pursuant to which certain persons located outside the United States selling foreign futures products to clients in the U.S. may be permitted to continue those relationships notwithstanding the effective date of the foreign futures and option rules.

DATES: Subject to the terms and conditions specified herein and in the Commission's order of relief dated January 29, 1988, the interim relief granted by the Commission by order of that date is extended to July 5, 1988.

FOR FURTHER INFORMATION CONTACT: Jane C. Kang, Attorney, Division of

Trading and Markets, Commodity Futures Trading Commission, 2033 K Street, NW., Washington, DC 20581. Telephone: (202) 254–8955.

SUPPLEMENTARY INFORMATION: On August 5, 1987, the Commission published in the **Federal Register** final rules governing the offer and sale of foreign futures and option contracts in the United States. 52 FR 28980. By order dated December 21, 1987, the Commission postponed the effective date of the rules from January 4, 1988 to February 1, 1988, 52 FR 48811 (December 28, 1987), and the rules generally became effective on that date.

On January 29, 1988, the Commission issued an interim order regarding the application of the rules to certain persons located outside the United States on whose behalf a foreign regulator and/or foreign exchange had applied for a broad-based exemption under rule 30.10. 53 FR 3338 (February 5, 1988). Specifically, the Commission's interim order permitted such persons to continue selling foreign futures products to existing foreign futures clients located in the U.S. for a sixty-day period, through April 4, 1988, provided the following conditions were satisfied:

(1) A petition for exemption under rule 30.10 had been filed prior to February 1, 1988;

(2) Such persons actually were in the business of selling products which are the subject of the part 30 rules to customers located in the U.S. as defined in rule 30.1(c), 52 FR 28998, prior to January 4, 1988;

(3) Such persons: (a) agreed not to solicit or attempt to solicit and (b) do not solicit or attempt to solicit, transactions in respect of foreign futures products for or on behalf of any new customers located in the U.S. pending a final determination by the Commission on the above-referenced exemption request;

(4) Such persons effected a valid and binding appointment of an agent in the United States for service of process in accordance with the procedures set forth in rule 30.5(a), 52 FR 28999, prior to accepting any new positions on or after February 1, 1988 from or on behalf of existing customers located in the U.S.[1] and

(5) The applicable foreign exchange or regulator notified the National Futures Association of the persons on whose behalf it requested interim relief.

In issuing its interim relief, the Commission stated that it would permit the Commission to address the petitions filed under rule 30.10 of the foreign futures and options rules without requiring the persons covered thereby to cease sales of foreign futures products to customers located in the U.S. on February 1, 1988, the effective date of those rules. 53 FR 3338.

The Commission has determined to extend, for an additional 90 days, to July 5, 1988, the interim relief granted in its order of January 29, 1988 for firms in compliance with the five conditions set forth above provided that, on or before April 15, 1988, the applicable foreign exchange, regulator, or self-regulator acknowledges in writing to the Commission that with respect to each firm in its jurisdiction operating under the interim relief, such firm is, or would be eligible to be, registered, licensed or authorized, as appropriate, and is otherwise in good standing under the standards which it has described in the petition for exemption under rule 30.10. In addition, the foreign exchange, regulator or self-regulator must agree to notify the Commission of any material change in the qualification of the firm to be, or remain, registered, licensed or authorized. Further, such acknowledgment should include a representation that the firms covered thereby are operating in accordance with the conditions of the interim relief previously granted. In the event the foreign exchange, regulator or self-regulator fails or is unable to provide the acknowledgment and representations set forth above with respect to any firm currently operating under the interim order, the relief accorded with respect to that firm will be suspended effective April 15, 1988, and the foreign exchange, regulator or self-regulator must so notify that firm. Moreover, in the event the foreign exchange, regulator or self-regulator notifies the Commission that any firm operating under the interim relief is no longer in good standing, the relief accorded such firm will be suspended immediately upon such notification. Any suspension of the interim relief will remain in effect pending a final determination by the Commission on the petition filed pursuant to rule 30.10 and a final determination by the appropriate regulator in the foreign jurisdiction as to the particular firm's qualification for registration, licensing or authorization.

All terms and conditions set forth in the Commission's interim order of relief dated January 29, 1988 in addition to those set forth above will continue to apply with respect to those firms operating under the interim relief granted herein.

Issued in Washington, DC on April 4, 1988, by the Commission.

Jean A. Webb,

Secretary to the Commission.

[FR Doc. 88–7654 Filed 4–6–88; 8:45 am]

BILLING CODE 6351-01-M

[1] Under the terms of the interim order of January 29, 1988, absent a valid and binding appointment of an agent in the U.S. for service of process, persons operating under the interim relief are limited to accepting liquidation orders and servicing positions entered into prior to the effective date of the interim relief.

DEPARTMENT OF HEALTH AND HUMAN SERVICES

Food and Drug Administration

21 CFR Parts 510 and 540

Animal Drugs, Feeds, and Related Products; Change of Sponsor

AGENCY: Food and Drug Administration.

ACTION: Final rule.

SUMMARY: The Food and Drug Administration (FDA) is amending the animal drug regulations to reflect a change of sponsor for an NADA from Maurry Biological Co., Inc., to Norbrook Laboratories, Ltd.

EFFECTIVE DATE: April 7, 1988.

FOR FURTHER INFORMATION CONTACT: John R. Markus, Center for Veterinary Medicine (HFV–142), Food and Drug Administration, 5600 Fishers Lane, Rockville, MD 20857, 301–443–3442.

SUPPLEMENTARY INFORMATION: Maurry Biological Co., Inc., 6109 South Western Ave., Los Angeles, CA 94007, advised FDA of a change of sponsor of NADA 65–010 (Procaine Penicillin G Suspension) to Norbrook Laboratories, Ltd., Station Works, Newry BT35 6JP, Northern Ireland. The agency is amending the regulations in 21 CFR 510.600(c) (1) and (2) and 540.274b(c)(3)(ii) to reflect the change.

List of Subjects

21 CFR Part 510

Administrative practice and procedure, Animal drugs, Labeling, Reporting and recordkeeping requirements.

21 CFR Part 540

Animal drugs, Antibiotics.

Therefore, under the Federal Food, Drug, and Cosmetic Act and under

authority delegated to the Commissioner of Food and Drugs and redelegated to the Center for Veterinary Medicine, Parts 510 and 540 are amended as follows:

PART 510—NEW ANIMAL DRUGS

1. The authority citation for 21 CFR Part 510 continues to read as follows:

Authority: Secs. 512, 701(a) (21 U.S.C. 360b, 371(a)); 21 CFR 5.10 and 5.83.

2. Section 510.600 is amended alphabetically in paragraph (c)(1) and numerically in paragraph (c)(2) by adding a new entry to read as follows:

§ 510.600 Names, addresses, and drug labeler codes of sponsors of approved applications.

* * * * *

(c) * * *

(1) * * *

Firm name and address	Drug labeler code
* * * *	*
Norbrook Laboratories, Ltd., Station Works, Newry BT35 6JP, Northern Ireland	055558
* * * *	*

(2) * * *

Drug labeler code	Firm name and address
* * * *	*
055558	Norbrook Laboratories, Ltd., Station Works, Newry BT35 6JP, Northern Ireland.

PART 540—PENICILLIN ANTIBIOTIC DRUGS FOR ANIMAL USE

3. The authority citation for 21 CFR Part 540 continues to read as follows:

Authority: Sec. 512, 82 Stat. 343–351 (21 U.S.C. 360b); 21 CFR 5.10 and 5.83.

§ 540.274b [Amended]

4. Section 540.274b *Procaine penicillin G aqueous suspension* is amended in paragraph (c)(3)(ii) by removing No. "010719" and adding in its place No. "055558."

Dated: March 31, 1988.

Richard A. Carnevale,

Deputy Director, Office of New Animal Drug Evaluation, Center for Veterinary Medicine.

[FR Doc. 88–7581 Filed 4–6–88; 8:45 am]

BILLING CODE 4160-01-M

21 CFR Part 522

Implantation or Injectable Dosage Form New Animal Drugs Not Subject to Certification; Oxytetracycline Hydrochloride Injection

AGENCY: Food and Drug Administration.

ACTION: Final rule.

SUMMARY: The Food and Drug Administration (FDA) is amending the animal drug regulations to reflect approval of a new animal drug application (NADA) filed by Anthony Products Co. providing for safe and effective use of a 50- and 100-milligram-per-milliliter (mg/mL) oxytetracycline hydrochloride injection for treatment of diseases due to oxytetracycline-susceptible organisms in beef cattle and nonlactating dairy cattle.

EFFECTIVE DATE: April 7, 1988.

FOR FURTHER INFORMATION CONTACT: Charles E. Haines, Center for Veterinary Medicine (HFV–133), Food and Drug Administration, 5600 Fishers Lane, Rockville, MD 20857, 301–443–3410.

SUPPLEMENTARY INFORMATION: Anthony Products Co., 5600 Peck Rd., Arcadia, CA 91006, filed NADA 140–582 which provides for intravenous use of an injectable oxytetracycline hydrochloride containing 50- or 100-mg/mL oxytetracycline hydrochloride. It is labeled for over-the-counter use for treating diseases due to oxytetracycline-susceptible organisms in beef cattle and nonlactating dairy cattle as follows: pneumonia and shipping fever complex associated with *Pasteurella* spp. and *Hemophilus* spp.; foot rot and diphtheria caused by *Fusobacterium necrophorum;* bacterial enteritis (scours) caused by *Escherichia coli*; wooden tongue caused by *Actinobacillus lignieresii;* leptospirosis caused by *Leptospira pomona;* acute metritis and wound infections caused by staphylococcal and streptococcal organisms. It is labeled for use by or on the order of a licensed veterinarian for the treatment of anaplasmosis caused by *Anaplasma marginale* and anthrax caused by *Bacillus anthracis.* Anthony Products' 50- and 100-mg/mL oxytetracycline hydrochloride injections are similar to Pfizer's 50- and 100-mg/mL injections. Pfizer's 50-mg/mL injection was one of several oxytetracycline hydrochloride injectable preparations reviewed by the National Academy of Sciences/National Research Council (NAS/NRC) Drug Efficacy Study Group. The evaluation was published in the **Federal Register** of July 21, 1970 (35 FR 11646). In that document, NAS/NRC and FDA concluded that the preparations were probably effective for treating infections in cattle, sheep, swine, horses, cats, dogs, chickens, and turkeys caused by pathogens sensitive to oxytetracycline hydrochloride.

Pfizer responded to the evaluation notice by submitting supplemental NADA 8–769 that revised the labeling for safe and effective use of injections containing 50-mg/mL of oxytetracycline hydrochloride for treating cattle, swine, and poultry. The supplemental application was approved and a regulation was published in the **Federal Register** of September 18, 1974 (39 FR 33509). The regulation reflecting this approval amended 21 CFR 135b.65 (recodified as 21 CFR 522.1662a) by adding a new paragraph (d).

Anthony Products submitted in vitro biological and chemical equivalence data to support the biological equivalence of the intravenous use of Pfizer's 100-mg/mL product and their products. The NADA is approved and the regulations in 21 CFR 522.1662a are amended by adding a new paragraph (k). The basis for approval is discussed in the freedom of information summary.

In accordance with the freedom of information provisions of Part 20 (21 CFR Part 20) and § 514.11(e)(2)(ii) (21 CFR 514.11(e)(2)(ii)), a summary of safety and effectiveness data and information submitted to support approval of this application may be seen in the Dockets Management Branch (HFA–305), Food and Drug Administration, Rm. 4–62, 5600 Fishers Lane, Rockville, MD 20857, from 9 a.m. to 4 p.m., Monday through Friday.

The agency has determined under 21 CFR 25.24(d)(1)(i) that this action is of a type that does not individually or cumulatively have a significant effect on the human environment. Therefore, neither an environmental assessment nor an environmental impact statement is required.

List of Subjects in 21 CFR Part 522

Animal drugs.

Therefore, under the Federal Food, Drug, and Cosmetic Act and under authority delegated to the Commissioner of Food and Drugs, and redelegated to the Center for Veterinary Medicine, Part 522 is amended as follows:

PART 522—IMPLANTATION OR INJECTABLE DOSAGE FORM, NEW ANIMAL DRUGS NOT SUBJECT TO CERTIFICATION

1. The authority citation for 21 CFR Part 522 continues to read as follows:

Authority: Sec. 512(i), 82 Stat. 347 (21 U.S.C. 360b(i)); 21 CFR 5.10 and 5.83.

VOL 53 ISS 67 APR 7 1988 UMI

2. Section 522.1662a is amended by adding a new paragraph (k) to read as follows:

§ 522.1662a Oxytetracycline hydrochloride injection.

* * * * *

(k)(1) *Specifications.* Each milliliter of sterile solution contains either 50 or 100 milligrams of oxytetracycline hydrochloride.

(2) *Sponsor.* See No. 000664 in § 510.600(c) of this chapter.

(3) *Conditions of use in beef cattle and nonlactating dairy cattle.*

(i) *Amount.* 3 to 5 milligrams per pound of body weight daily, 5 milligrams per pound for anaplasmosis, severe foot rot, and severe forms of other diseases.

(ii) *Indications for use.* Treatment of diseases due to oxytetracycline-susceptible organisms as follows: pneumonia and shipping fever complex associated with *Pasteurella* spp. and *Hemophilus* spp.; foot rot and diphtheria caused by *Fusobacterium necrophorum;* bacterial enteritis (scours) caused by *Escherichia coli;* wooden tongue caused by *Actinobacillus lignieresii;* leptospirosis caused by *Leptospira pomona;* acute metritis and wound infections caused by staphylococcal and streptococcal organisms; if labeled for use by or on the order of a licensed veterinarian, it may be used for treatment of anaplasmosis caused by *Anaplasma marginale* and anthrax caused by *Bacillus anthracis.*

(iii) *Limitations.* Administer by intravenous injection. Treatment should be continued 24 to 48 hours following remission of disease symptoms, but not to exceed a total of 4 consecutive days. If no improvement occurs within 24 to 48 hours, reevaluate diagnosis and therapy. Discontinue use at least 19 days prior to slaughter. Not for use in lactating dairy cattle.

Dated: March 28, 1988.

Gerald B. Guest,

Director, Center for Veterinary Medicine.

[FR Doc. 88-7582 Filed 4-6-88; 8:45 am]

BILLING CODE 4160-01-M

DEPARTMENT OF STATE

22 CFR Parts 120, 121, 122, 123, 124, 125, 126, 127 and 128

[Departmental Regulations 108.866]

The International Traffic in Arms Regulations (ITAR) and Implementation of the Foreign Relations Authorization Act

AGENCY: Department of State.

ACTION: Final rule.

SUMMARY: The Foreign Relations Authorization Act, Fiscal Years 1988 and 1989, of December 22, 1987, amended section 38 of the Arms Export Control Act (the Act), the basic authority for the regulation of exports of defense articles and services. The final rule implements several requirements of the Act. It also makes several unrelated changes that clarify or improve the existing regulations.

EFFECTIVE DATE: April 4, 1988.

FOR FURTHER INFORMATION CONTACT: Clyde Bryant, Chief, Compliance Analysis Division, Office of Munitions Control, Department of State (202-875-6650), or Miriam Sapiro, Office of the Legal Adviser, Department of State (202-647-7838).

SUPPLEMENTARY INFORMATION:

Section 1255 of the Foreign Relations Authorization Act, Fiscal Years 1988 and 1989 (Dec. 22, 1987, Pub. L. 100-204, 101 Stat. 1331, 1429) amended section 38 of the Arms Export Control Act (22 U.S.C. 2778) (the Act), which is the basic authority for the International Traffic in Arms Regulations (22 CFR Parts 120-130). The amendments provide additional authority for the Department of State in its implementation of the Act. They are designed primarily to ensure that individuals or firms convicted of certain offenses or debarred by U.S. Government agencies are denied export privileges.

The statutory amendments provide a valuable addition to existing law on the export of defense articles and defense services. They significantly expand the authority of the U.S. Department of State to deny licenses or other export approvals based on the past behavior of applicants.

The final rule implements some but not all of the recent amendments. For example, new section 38(g) of the Act provides that the President shall (in coordination with law enforcement agencies) develop standards for identifying high risk exports for regular end-use verification. It also provides that the initial standards shall be published in the **Federal Register** no later than October 1, 1988. These standards are not included in the current rule, but will be published subsequently. Additional changes are currently contemplated to improve the regulatory scheme and to implement other recent statutory enactments. Members of the public are invited to submit any recommended changes to the Office of Munitions Control within the next sixty days so that they may be considered in formulating the revisions.

Amended section 38 of the Act provides that applications for licenses and other approvals may not be issued to persons who have been convicted of certain offenses or who are currently ineligible for certain export licenses. Several provisions have been added to the International Traffic in Arms Regulations (ITAR) to deal with this issue, including a new § 127.10 entitled "Past violations."

Amended section 38 of the Act and the final rule authorize the Office of Munitions Control to deny licenses or other approvals to individuals or firms who have either been indicted for or may have committed violations of various statutes; or who have been debarred by agencies of the U.S. Government from importing defense articles or defense services, or from contracting with the U.S. Government. The Office of Munitions Control, in cooperation with the Department of Justice and other agencies, has developed means to identify such persons.

In addition, changes are made in the registration process in order to facilitate implementation of these requirements. The registration requirements of the Arms Export Control Act are primarily a means to ensure that the U.S. Government is aware of who is engaged in the manufacture of defense articles, the export of such articles, or the furnishing of defense services to foreign persons. Registration has never conferred a right to export. Rather, the purpose of registration has been similar to the registration requirement of the Foreign Agents Registration Act of 1938, as amended (June 9, 1939, Pub. L. 75-538, 22 U.S.C. 611-621) in that it is designed to ensure that responsible U.S. Government officials are aware of who is involved in certain activities.

The final rule makes it clear that all registrants will have a continuous duty to inform the U.S. Government of acts that may result in the denial of applications for licenses or other approvals. It amends the registration requirements in a significant way by requiring new and all current registrants to provide information on a timely basis on whether any of their senior officers or officials have been indicted, convicted, or debarred in any way. The obligation to provide this information is in force as of the effective date of the revised ITAR. The failure to provide such information will constitute a violation of the ITAR, and could result in criminal and civil penalties.

Another significant change is the implementation of the statutory prohibition on providing licenses or other approvals to foreign persons (with the exception of foreign governmental

entities in the United States). It has been the general practice of the Department of State to require that applicants be U.S. persons. The recent amendments to the Act codify this practice. The registration requirements have been amended to ensure that appropriate information is provided to the Department of State on whether the applicant is a foreign person. It is not uncommon for firms to be incorporated in more than one country. Firms incorporated in the United States, including firms that may be incorporated also in foreign countries, are generally ineligible for licenses pursuant to the new legislation if the facts demonstrate that the natural persons involved in the export are subject to U.S. laws.

Amended section 38 also requires that each applicant for a license shall identify in the application all consignees and freight forwarders involved in the proposed export. Pending revision of the existing forms, all such information and other information that may be needed to ensure compliance with the Arms Export Control Act and the ITAR shall be provided in an addendum to the current forms or other requests for approval. A new section in the revised regulations specifies the information required (§ 126.13). It is the intention of the Department of State to delete this provision once the application forms have been revised. The obligation to provide this information is in force as of the effective date of the revised ITAR. However, as a matter of administrative discretion, until May 16, 1988, the Office of Munitions Control may nevertheless review applications that omit the required information. Effective May 16, 1988, incomplete applications will be returned and appropriate penalties may be considered under Parts 127 and 128.

Other changes made to the ITAR are not related to the new legislation. Most of the changes are for purposes of accuracy and are not substantive. One substantive change addresses the uncertainty that has existed in the past regarding whether certain Federal Aviation Agency (FAA)-certified aircraft or components were on the U.S. Munitions List (USML). In order to clarify the situation, a change is made to Category VIII of the USML. The change requires that a formal commodity jurisdiction review take place to determine whether any FAA-certified aircraft or components will be removed from the USML after FAA certification. This change conforms the language of the regulations to the current practice of the Department of State, and will ensure that items excluded under section 17(c) of the Export Administration Act, as amended, are properly identified.

The amendment to section 38 and its legislative history make it clear that Congress expects strict enforcement of the new policy on denying export privileges in certain situations based on the past conduct of the parties to an export, and of compliance with the ITAR provisions. Concern has been expressed in particular regarding the failure of some applicants to provide all the required information. The Department of State has in fact noticed that a significant number of applications for licenses and other approvals are egregiously incomplete (e.g., not all of the information expressly required is provided, particularly information on political contributions, fees and commissions). In the past, the Department has generally returned such applications without action. However, the failure to provide required information is now an express basis for denying an application. Henceforth, the Department may chose to deny such applications if this is deemed appropriate. Such denied applications normally will not be reconsidered for a period of 30 days following the denial or the decision to impose administrative penalties, whichever is later. The Department is aware that such a delay could cause an applicant to lose business, and therefore urges all applicants to ensure that applications are properly completed and carefully reviewed prior to submission.

The recent statutory amendments provide specific authority to require that licenses or other approvals be obtained prior to the sale or other transfer (as opposed to the export) of USML items to foreign persons. This authority is relied upon in the new amendments to require approval before certain transactions (e.g., sales or proposals to sell) may be made with respect to the prohibited destinations specified in § 126.1, which includes the embassies of such countries. The Department of State intends to consider whether to use this authority for other transactions in the next revision of the ITAR.

Concern has been expressed regarding whether the ITAR prohibits transactions with countries that have repeatedly provided support for acts of terrorism. It has in fact been the policy of the Department of State to deny licenses and other approvals with respect to defense articles and defense services destined for countries that the Secretary of State has determined, for purposes of section 6(j) of the Export Administration Act, as amended, have repeatedly provided support for acts of terrorism. The revised ITAR states explicitly that such exports and sales are prohibited. It also identifies the proscribed countries, which are Cuba, Iran, Libya, Syria, South Yemen (P.D.R.Y.) and North Korea.

Finally, the Department wishes to remind all registrants that section 38 of the Act provides expressly that any willful violation of the ITAR is a criminal offense. This includes the failure to provide information expressly required by the ITAR. The failure to comply with the requirements could lead to the criminal and civil penalties prescribed, as well as severely affect the business operations of the U.S. firms concerned. The Department recommends that registrants bring this final rule to the attention of all those involved in the licensing process.

The following amendments deal with a foreign affairs function of the United States and are thus excluded from the major rule procedures of Executive Order 12291 (46 FR 13193) and the procedures of 5 U.S.C. 553 and 554. The Department of State believes that the public should generally have an opportunity to comment on proposed amendments dealing with the ITAR before they are promulgated as a final rule. The basic regulations that are amended by this final rule were the subject of public comment because of the desirability of obtaining public views. However, as was the case with the most recent amendments to the ITAR dealing with South Africa (51 FR 47013), these amendments implement statutory requirements that have entered into force and consequently the regulations are promulgated as a final rule.

List of Subjects in 22 CFR Parts 120, 121, 122, 123, 124, 125, 126, 127, and 128

Arms and munitions, Exports.

Accordingly, for the reasons set forth in the preamble, Title 22, Chapter I, Subchapter M (consisting of Parts 120 through 130), of the Code of Federal Regulations, is amended as set forth below:

PART 120—PURPOSE, BACKGROUND, AND DEFINITIONS

1. The authority citation for Part 120 continues to read as follows:

Authority: Sec. 38, Arms Export Control Act, 90 Stat. 744 (22 U.S.C. 2778); E.O. 11958, 42 FR 4311; 22 U.S.C. 2658.

2–3. In § 120.1, revise the section heading to read "General"; the current text is designated as new paragraph (a) and the heading "Purpose" is added;

and a new paragraph (b) is added to read as follows:

§ 120.1 General.

(a) *Purpose.* * * *

(b) *Eligibility.* Licenses or other approvals under this subchapter may be granted only to U.S. persons (as defined in § 120.23) and foreign governmental entities in the United States. Foreign persons (as defined in § 120.11) other than governments are not eligible. U.S. persons who have been convicted of violating the U.S. criminal statutes enumerated in § 120.24, or who have been debarred pursuant to Part 127 of this subchapter, are also generally ineligible (*see* § 127.6(c)). Applications for licenses or requests for other approvals will generally be considered only if the applicant has registered with the Office of Munitions Control pursuant to Part 122 of this subchapter. All applications and requests for approval must be signed by a responsible official who has been empowered by the registrant to sign such documents.

4. In § 120.10, the last sentence of paragraph (e) is revised and a new sentence is added as follows:

§ 120.10 Export.

* * * * *

(e) * * * A launch vehicle or payload shall not, by reason of the launching of such vehicle, be considered an export for purposes of this subchapter. Most of the requirements of this subchapter relate only to exports, as defined above. However, for certain limited purposes, the controls of this subchapter apply to sales and other transfers of defense articles and defense services (*see*, e.g., § 126.1) of this subchapter.

§ 120.19 [Amended]

5. In § 120.19, paragraph (b) is amended by removing "VIII (a), (b)(1), (c) and (d)" and adding in its place "VIII (a), (b)(1), (c), (d), (g), (h), and (i)."

6. Section 120.23 is revised to read as follows:

§ 120.23 U.S. Person.

"U.S. Person" means a natural person (as defined in § 120.16 of this part) who is a citizen or national of the United States, or has been lawfully admitted to the United States for permanent residence (and maintains such a residence) under the Immigration and Nationality Act (8 U.S.C. 1101(a), 101(a), 60 Stat. 163). It also means any corporation, business association, partnership, society, trust, or any other entity, organization or group that is incorporated or organized to do business in the United States. It also includes any governmental (federal, state or local) entity. It does not include any foreign person as defined in § 120.11 of this part.

§ 120.24 [Redesignated as § 120.25]

7. Section 120.24 is redesignated as § 120.25, and a new § 120.24 is added to read as follows:

§ 120.24 U.S. criminal statutes.

For purposes of this subchapter, the phrase "U.S. criminal statutes" means:

(a) Section 38 of the Arms Export Control Act (22 U.S.C. 2778);

(b) Section 11 of the Export Administration Act of 1979 (50 U.S.C. App. 2410);

(c) Sections 793, 794, or 798 of Title 18, United States Code (relating to espionage involving defense or classified information);

(d) Section 16 of the Trading with the Enemy Act (50 U.S.C. App. 16);

(e) Section 206 of the International Emergency Economic Powers Act (relating to foreign assets controls; 50 U.S.C. App. 1705);

(f) Section 30A of the Securities Exchange Act of 1934 (15 U.S.C. 78dd-1) or section 104 of the Foreign Corrupt Practices Act (15 U.S.C. 78dd-2);

(g) Chapter 105 of Title 18, United States Code (relating to sabotage);

(h) Section 4(b) of the Internal Security Act of 1950 (relating to communication of classified information; 50 U.S.C. 783(b));

(i) Sections 57, 92, 101, 104, 222, 224, 225, or 226 of the Atomic Energy Act of 1954 (42 U.S.C. 2077, 2122, 2131, 2134, 2272, 2274, 2275, and 2276);

(j) Section 601 of the National Security Act of 1947 (relating to intelligence identities protection; 50 U.S.C. 421);

(k) Section 603(b) or (c) of the Comprehensive Anti-Apartheid Act of 1986 (22 U.S.C. 5113(b) and (c)); and

(l) Section 371 of Title 18, United States Code (when it involves conspiracy to violate any of the above statutes).

PART 121—THE UNITED STATES MUNITIONS LIST

8. The authority citation for Part 121 continues to read as follows:

Authority: Sec. 38, Arms Export Control Act, 90 Stat. 744 (22 U.S.C. 2778); E.O. 11958, 42 FR 4311; 22 U.S.C. 2658.

9. In § 121.1, Category VIII, paragraph (h) is revised to read as follows:

§ 121.1 General. The United States Munitions List.

* * * * *

Category VIII—Aircraft, Spacecraft, and Associated Equipment

* * * * *

*(h) Developmental aircraft and components thereof which have a significant military applicability, excluding such aircraft and components that have been certified by the Federal Aviation Administration and determined through the commodity jurisdiction procedure specified in § 120.5 of this subchapter. To be subject to the export control jurisdiction of the Department of Commerce for purposes of section 17(c) of the Export Administration Act, as amended.

* * * * *

PART 122—REGISTRATION OF MANUFACTURERS AND EXPORTERS

10. The authority citation for Part 122 continues to read as follows:

Authority: Sec. 38, Arms Export Control Act, 90 Stat. 744 (22 U.S.C. 2778); E.O. 11958, 42 FR 4311; 22 U.S.C. 2658.

11. In § 122.1, a new paragraph (c) is added to read as follows:

§ 122.1 Registration requirements.

* * * * *

(c) *Purpose.* Registration is primarily a means to provide the U.S. Government with necessary information on who is involved in certain manufacturing and exporting activities. Registration does not confer any export rights or privileges. It is generally a precondition to the issuance of any license or other approval under this subchapter.

§ 122.2 and 122.6 [Removed]

12. Sections § 122.2 and 122.6 are removed, § 122.3 and 122.4 are revised, and new § 122.2 is added to read as follows:

§ 122.2 Submission of registration statement.

(a) *General.* An original and two copies of the Department of State Form DSP-9 (Registration Statement) and the transmittal letter required by paragraph (b) of this section must be submitted by an intended registrant with a payment by check or money order payable to the Department of State of one of the fees prescribed in § 122.3(a) of this part. The Registration Statement and transmittal letter must be signed by a senior officer who has been empowered by the intended registrant to sign such documents. The intended registrant shall also submit three copies of documentation that demonstrates that it is incorporated or otherwise authorized to do business in the United States. The Office of Munitions Control will return to the sender any Registration Statement that is incomplete, or that is not accompanied by the required letter or payment of the proper registration fee.

(b) *Transmittal Letter.* A letter of transmittal, signed by an authorized senior officer of the intended registrant, shall accompany each Registration Statement.

(1) The letter shall state whether the chief executive officer, president, vice-presidents, other senior officers or officials (e.g., comptroller, treasurer, general counsel) or any member of the board of directors:

(i) Has ever been indicted for or convicted of violating any of the U.S. criminal statutes enumerated in § 120.24 of this subchapter; or

(ii) Is ineligible to contract with, or to receive a license or other approval to import defense articles or defense services from, or to receive an export license or other approval from, any agency of the U.S. Government.

(2) The letter shall also declare whether the intended registrant is owned or controlled by foreign persons (as defined in § 120.11 of this subchapter). If the intended registrant is owned or controlled by foreign persons, the letter shall also state whether the intended registrant is incorporated or otherwise authorized to engage in business in the United States.

(c) *Definition.* For purposes of this section, "ownership" means that more than 50 percent of the outstanding voting securities of the firm are owned by one or more foreign persons. "Control" means that one or more foreign persons have the authority or ability to establish or direct the general policies or day-to-day operations of the firm. Control is presumed to exist where foreign persons own 25 percent or more of the outstanding voting securities if no U.S. persons control an equal or larger percentage. The standards for control specified in 22 CFR 60.2(c) also provide guidance in determining whether control in fact exists.

§ 122.3 Registration fees.

(a) *Fees.* A person who is required to register may do so for a period of 1 to 5 years upon submission of a completed form DSP–9, transmittal letter, and payment of a fee as follows:

1 year	$250
2 years	500
3 years	700
4 years	850
5 years	1,000

(b) *Lapses in registration.* A registrant who fails to renew a registration after its lapse and, after an intervening period, seeks to register again must pay registration fees for any part of such intervening period during which the registrant engaged in the business of manufacturing or exporting defense articles or defense services.

(c) *Refund of fee.* Fees paid in advance for future years of a multiple year registration will be refunded upon request if the registrant ceases to engage in the manufacture or export or defense articles and defense services. A request for a refund must be submitted to the Office of Munitions Control prior to the beginning of any year for which a refund is claimed.

§ 122.4 Notification of changes in information furnished by registrants.

(a) A registrant must, within five days of the event, notify the Office of Munitions Control by registered mail if:

(1) Any of the persons referred to in § 122.2(b) are indicted for or convicted of violating any of the U.S. criminal statutes enumerated in § 120.24 of this subchapter, or become ineligible to contract with, or to receive a license or other approval to import defense articles or defense services from, or to receive an export license or other approval from any agency of the U.S. government; or

(2) There is a material change in the information contained in the Registration Statement, including a change in the senior officers; the establishment, acquisition or divestment of a subsidiary or foreign affiliate; a merger; a change of location; or the dealing in an additional category of defense articles or defense services.

(b) A registrant must notify the Office of Munitions Control by registered mail at least sixty days in advance of any intended planned sale or transfer to a foreign person of ownership or control of the registrant or any entity thereof. Such notice does not relieve the registrant from obtaining the approval required under this subchapter for the export of defense articles or defense services to a foreign person, including the approval required prior to disclosing technical data. Such notice provides the Office of Munitions Control with the information necessary to determine whether the authority of section 38(g)(6) of the Arms Export Control Act regarding licenses or other approvals for certain sales or transfers (as opposed to exports) of articles or data should be invoked (*see* §§ 120.10(f) and 126.1(f) of this subchapter).

PART 123—LICENSES FOR THE EXPORT OF DEFENSE ARTICLES

13–15. The authority citation for Part 123 continues to read as follows:

Authority: Sec. 38, Arms Export Control Act, 90 Stat. 744 (22 U.S.C. 2778); E.O. 11958, 42 FR 4311; 22 U.S.C. 2658.

§ 123.1 [Amended]

16. In § 123.1, paragraph (b) is amended by removing the second sentence.

PART 124—MANUFACTURING LICENSE AGREEMENTS, TECHNICAL ASSISTANCE AGREEMENTS, AND OTHER DEFENSE SERVICES

17. The authority citation for Part 124 continues to read as follows:

Authority: Sec. 38, Arms Export Control Act, 90 Stat. 744 (22 U.S.C. 2778); E.O. 11958, 42 FR 4311; 22 U.S.C. 2658.

18. In § 124.14, paragraph (e) is redesignated as paragraph (f), paragraph (d) is redesignated as paragraph (e), new paragraph (d) is added and newly redesignated paragraph (f) is revised to read as follows:

§ 124.14 Exports to warehouses or distribution points outside the United States.

* * * * *

(d) *Special clauses for agreements relating to significant military equipment.* With respect to agreements for the warehousing and distribution of significant military equipment, the following additional provisions must be included in the agreement:

(1) A completed nontransfer and use certificate (DSP–83) must be executed by the foreign end-user and submitted to the U.S. Department of State before any transfer may take place.

(2) The prior written approval of the U.S. Department of State must be obtained before entering into a commitment for the transfer of the licensed article by sale or otherwise to any person or government outside the approved distribution territory.

(f) *Additional clause.* Unless the articles covered by the agreement are in fact intended to be distributed to private persons or entities (*e.g.*, sporting firearms for commercial resale, cryptographic devices and software for financial and business applications), the following clause must be included in all warehousing and distribution agreements: "Sales or other transfers of the licensed article shall be limited to governments of the countries in the distribution territory and to private entities seeking to procure the licensed article pursuant to a contract with a government within the distribution territory, unless the prior written approval of the U.S. Department of State is obtained."

PART 125—LICENSES FOR THE EXPORT OF TECHNICAL DATA AND CLASSIFIED DEFENSE ARTICLES

19. The authority citation for Part 125 continues to read as follows:

Authority: Sec. 38, Arms Export Control Act, 90 Stat. 744 (22 U.S.C. 2778); E.O. 11958, 42 FR 4311; 22 U.S.C. 2658.

20–21. In § 125.4, paragraph (b)(4) is amended by removing the words "additional" and "exported or" in the first sentence and paragraph (b)(7) is amended to read as follows:

§ 125.4 Exemptions of general applicability.

* * * * *

(b) * * *

(7) Technical data, including classified information, being returned to the original source of import;

* * * * *

PART 126—GENERAL POLICIES AND PROVISIONS

22. The authority citation for Part 126 is revised to read as follows:

Authority: Sec. 38, Sec. 42, Arms Export Control Act, 90 Stat. 744 (22 U.S.C. 2778, 2780); E.O. 11958, 42 FR 4311, E.O. 11322, 32 FR 119; 22 U.S.C. 2658; sec. 317, Comprehensive Anti-Apartheid Act of 1986 (22 U.S.C. 5067); E.O. 12571, 51 FR 39505.

23. In § 126.1, the section heading and the fourth sentence of paragraph (a) are revised, and new paragraphs (d), (e) and (f) are added to read as follows:

§ 126.1 Prohibited exports and sales to certain countries.

(a) * * * This policy also applies to countries or areas with respect to which the United States maintains an arms embargo (*e.g.*, Angola) or whenever an export would not otherwise be in furtherance of world peace and the security and foreign policy of the United States * * *

* * * * *

(d) *Terrorism.* Exports to countries that have repeatedly provided support for acts of international terrorism are contrary to the foreign policy of the United States and are thus subject to the policy specified in paragraph (a) of this section and the requirements of section 40 of the Arms Export Control Act (22 U.S.C. 2780). The countries in this category are Cuba, Iran, Libya, Syria, South Yemen (P.D.R.Y.) and North Korea. These are the same countries identified pursuant to section 6(j) of the Export Administration Act, as amended.

(e) *Chile.* The Government of Chile is subject to a statutory arms embargo. No export license or other approval may be granted under this subchapter to or for the Government of Chile unless the President makes the certifications required pursuant to section 726 of the International Security Development Cooperation Act of 1981, as amended. The prohibition does not apply to the export of cartridge actuated devices, propellant actuated devices, and technical manuals for aircraft of the F-5E/F or A/T-37 type which were sold to the Chilean Air Force by the United States before January 1, 1976, so long as the items are provided only for the purpose of enhancing the safety of the aircraft crew.

(f) *Proposed Sales.* No sale or transfer and no proposal to sell or transfer any defense articles, defense services or technical data subject to this subchapter may be made to any country referred to in this section (including the embassies or consulates of such a country), or to any person acting on its behalf, whether in the United States or abroad, without first obtaining a license or other written approval from the Office of Munitions Control. (*See* § 120.10(f) of this subchapter), in accordance with paragraph (a) of this section, it is the policy of the Department of State to deny licenses and approvals in such cases. Any person who knows or has reason to know of such a proposed or actual sale, or transfer, of such articles, services or data must inform the Office of Munitions Control.

24. In § 126.7, the section heading and paragraph (a) are revised and paragraphs (d) and (e) are added to read as follows:

§ 126.7 Denial, revocation, suspension, or amendment of licenses and other approvals.

(a) *Policy.* Licenses or approvals shall be denied or revoked whenever required by any statute of the United States (*see* § 127.6 and § 127.10 of this subchapter). Any application for an export license or other approval under this subchapter may be disapproved, and any license or other approval or exemption granted under this subchapter may be revoked, suspended, or amended without prior notice whenever:

(1) The Department of State deems such action to be in furtherance of world peace, the national security or the foreign policy of the United States, or is otherwise advisable; or

(2) The Department of State believes that 22 U.S.C. 2778, any regulation contained in this subchapter, or the terms of any U.S. government export authorization (including the terms of a manufacturing license or technical assistance agreement, or export authorization granted pursuant to the Export Administration Act, as amended) has been violated by any party to the export or other person having significant interest in the transaction; or

(3) An applicant is the subject of an indictment for a violation of any of the U.S. criminal statutes enumerated in § 120.24 of this subchapter; or

(4) An applicant or any party to the export or the agreement has been convicted of violating any of the U.S. criminal statutes enumerated in § 120.24 of this subchapter; or

(5) An applicant is ineligible to contract with, or to receive a license or other authorization to import defense articles or defense services from, any agency of the U.S. Government; or

(6) An applicant, any party to the export or agreement, or any person who has a significant interest in the transaction has been debarred, suspended, or otherwise is ineligible to receive an export license or other authorization from any agency of the U.S. government (*e.g.*, pursuant to debarment by the Department of Commerce under 15 CFR Part 388 or by the Department of State under Part 127 or 128 of this subchapter); or

(7) An applicant has failed to include any of the information or documentation expressly required to support a license application or other request for approval under this subchapter or as required in the instructions in the applicable Department of State form.

* * * * *

(d) *Reconsideration of Certain Applications.* Applications for licenses or other requests for approval denied for repeated failure to provide information or documentation expressly required will normally not be reconsidered during the thirty day period following denial. They will be reconsidered after this period only after a final decision is made on whether the applicant will be subject to an administrative penalty imposed pursuant to this subchapter. Any request for reconsideration shall be accompanied by a letter explaining the steps that have been taken to correct the failure and to ensure compliance with the requirements of this subchapter.

(e) *Special Definition.* For purposes of this section, the term "party to the export" means:

(1) The chief executive officer, president, vice-presidents, other senior officers and officials (e.g., comptroller, treasurer, general counsel) and any member of the board of directors of the applicant;

(2) The freight forwarders or designated exporting agent of the applicant; and

(3) Any consignee or end-user of any item to be exported.

§ 126.3 [Amended]

25. In § 126.3, the section heading is revised to read "Exceptions."

26. A new § 126.13 is added to read as follows:

§ 126.13 Required information.

(a) Pending revisions to the application forms, all applications for licenses (DSP–5, DSP–61, DSP–73, and DSP–85), all requests for approval of agreements and amendments thereto under Part 124 of this subchapter, all requests for other written authorizations, and all 30-day prior notifications of sales of significant military equipment under § 126.8(c) of this part must include the original and seven copies of a letter signed by a responsible official empowered by the applicant and addressed to the Director, Office of Munitions Control, stating whether:

(1) The applicant or the chief executive officer, president, vice-presidents, other senior officers or officials (e.g., comptroller, treasurer, general counsel) or any member of the board of directors is the subject of an indictment for or has been convicted of violating any of the U.S. criminal statutes enumerated in § 120.24 of this subchapter since the effective date of the Arms Export Control Act, Pub. L. 94–329, 90 Stat. 729 (June 30, 1976);

(2) The applicant of the chief executive officer, president, vice-presidents, other senior officers or officials (e.g., comptroller, treasurer, general counsel) or any member of the board of directors is ineligible to contract with, or to receive a license or other approval to import defense articles or defense services from, or to receive an export license or other approval from, any agency of the U.S. Government;

(3) To the best of the applicant's knowledge, any party to the export as defined in § 126.7(e) has been convicted of violating any of the U.S. criminal statutes enumerated in § 120.24 of this subchapter since the effective date of the Arms Export Control Act, Pub. L. 94–329, 90 Stat. 729 (June 30, 1976), or is ineligible to contract with, or to receive a license or other approval to import defense articles or defense services from, or to receive an export license or other approval from any agency of the U.S. government; and

(4) The natural person signing the application, notification or other request for approval is a citizen of the United States, has been lawfully admitted to the United States for permanent residence (and maintains such a residence) under the Immigration and Nationality Act (8 U.S.C. 1101(a), 101(a) 20, 60 Stat. 163), or is an official of a foreign governmental entity in the United States.

(b) In addition, all applications for licenses must include, on the application or an addendum sheet, the complete names and addresses of all U.S. consignors and freight forwarders, and all foreign consignees and foreign intermediate consignees involved in the transaction. If there are multiple consignors, consignees or freight forwarders, and all the required information cannot be included on the application form, an addendum sheet and seven copies containing this information must be provided. The addendum sheet must be marked at the top as follows: "Attachment to Department of State License Form (*insert* DSP–5, 61, 73, or 85, as appropriate) for Export of (*insert* commodity) valued at (*insert* U.S. dollar amount) to (*insert* country of ultimate destination)." The Office of Munitions Control will impress one copy of the addendum sheet with the Department of State seal and return it to the applicant with each license. The sealed addendum sheet must remain attached to the license as an integral part thereof. District directors of customs and Department of Defense transmittal authorities will permit only those U.S. consignors or freight forwarders listed on the license or sealed addendum sheet to make shipments under the license, and only to those foreign consignees named on the documents. Applicants should list all freight forwarders who may be involved with shipments under the license to ensure that the list is complete and to avoid the need for amendments to the list after the license has been approved.

(c) If there are unusual or extraordinary circumstances that preclude the specific identification of all the U.S. consignors and freight forwarders and all foreign consignees, the applicant must provide a letter of explanation with each application.

PART 127—VIOLATIONS AND PENALTIES

27. The authority citation for Part 127 continues to read as follows:

Authority: Sec. 38, Arms Export Control Act, 90 Stat. 744 (22 U.S.C. 2778); E.O. 11958, 42 FR 4311; 22 U.S.C. 401; 22 U.S.C. 2658.

28. In § 127.1, paragraph (a)(1) is revised to read as follows:

§ 127.1 Violations in general.

(a) * * * (1) to export or attempt to export from the United States any defense article or technical data or to furnish any defense service for which a license or written approval is required by this subchapter without first obtaining the required license or written approval from the Office of Munitions Control * * *

* * * * *

29. Section 127.6 is revised to read as follows:

§ 127.6 Debarment.

(a) *General.* Section 38 of the Arms Export Control Act authorizes the denial of applications for licenses or other approvals based on the past conduct of the applicant or other party to the export. Section 126.7 of this subchapter is the primary means used to deny individual applications in such cases. In implementing section 38, the Assistant Secretary of State for Politico-Military Affairs may also prohibit any person from participating directly or indirectly in the export of defense articles or technical data or in the furnishing of defense services for which a license or approval is required by this subchapter for any of the reasons listed below. Any such prohibition is referred to as a debarment for purposes of this subchapter. The Assistant Secretary of State shall determine the appropriate period of time for debarment, which shall generally be for a period of three years.

(b) *Grounds.* (1) The basis for a statutory debarment, as described in paragraph (c) of this section, is any conviction for violating the Arms Export Control Act (see § 127.3 of this subchapter) or any conspiracy to violate the Arms Export Control Act.

(2) The basis for administrative debarment, described in Part 128 of this subchapter, is any violation of 22 U.S.C. 2778 or any rule or regulation issued thereunder when such a violation is of such a character as to provide a reasonable basis for the Office of Munitions Control to believe that the violator cannot be relied upon to comply with the statute or these rules or regulations in the future, and when such violation is established in accordance with Part 128 of this subchapter.

(c) *Statutory Debarment.* Section 38(g)(4) of the Arms Export Control Act prohibits the issuance of licenses to persons who have been convicted of violating the U.S. criminal statutes enumerated in § 120.24 of this subchapter. Discretionary authority to issue licenses is provided, but only if certain statutory requirements are met. It is the policy of the Department of State not to consider applications for licenses or requests for approvals involving any person who has been convicted of violating the Arms Export

BEST COPY AVAILABLE

Control Act or conspiracy to violate that Act for a three year period following conviction. Such individuals shall be notified in writing that they are debarred pursuant to this policy. A list of persons who have been convicted of such offenses and debarred for this reason shall be published periodically in the Federal Register. Debarment in such cases is based solely upon the outcome of a criminal proceeding, conducted by a court of the United States, that established guilt beyond a reasonable doubt in accordance with due process. The procedures of Part 128 of this subchapter are not applicable in such cases.

(d) *Appeals.* Any person who is ineligible pursuant to paragraph (c) of this section may appeal to the Under Secretary of State for Security Assistance, Science and Technology for reconsideration of the ineligibility determination. The procedures specified in § 128.13 of this subchapter are applicable in such appeals.

30. Section 127.7 is revised to read as follows:

§ 127.7 Interim suspension.

(a) The Director of the Office of Munitions Control is authorized to order the interim suspension of any person when the Director believes that grounds for debarment (as defined in § 127.6 of this part) exist and where and to the extent the Director finds that interim suspension is reasonably necessary to protect world peace or the security or foreign policy of the United States. The interim suspension orders prohibit that person from participating directly or indirectly in the export of any defense article for which a license or approval is required by this subchapter. The suspended person shall be notified in writing as provided in § 127.6(c) of this part (statutory debarment) or § 128.3 of this subchapter (administrative debarment) of this subchapter, whichever is appropriate. In both cases, a copy of the interim suspension order will be served upon that person in the same manner as provided in § 128.3 of this subchapter. The interim suspension order may be made effective immediately, without prior notice. The order will briefly recite the relevant facts, state the grounds for issuance of the order, and describe the nature and duration of the interim suspension. No person may be suspended for a period exceeding 60 days unless proceedings under § 127.6(c) of this part or under Part 128 of this subchapter, or criminal proceedings, are initiated before the expiration of that period.

(b) A motion or petition to vacate or modify an interim suspension order may be filed at any time with the Under Secretary of State for Security Assistance, Science and Technology. After a final decision is reached, the Director of the Office of Munitions Control will issue an appropriate order disposing of the motion or petition and will promptly inform the respondent accordingly.

31. In § 127.9, paragraph (b) is revised to read as follows:

§ 127.9 Civil penalty.

* * * * *

(b) The Office of Munitions Control may make (1) the payment of a civil penalty under this section or (2) the completion of any administrative action pursuant to Part 127 or 128 of this subchapter a prior condition for the issuance, restoration, or continuing validity of any export license or other approval.

32. Section 127.10 is added to read as follows:

§ 127.10 Past violations.

(a) *General.* Pursuant to section 38 of the Arms Export Control Act, licenses or other approvals may not be granted to persons who have been convicted of violating any of the U.S. criminal statutes enumerated in § 120.24 of this subchapter or who are ineligible to receive any export licenses from any agency of the U.S. government, subject to a narrowly defined statutory exception. This provision establishes a presumption of denial for licenses or other approvals involving such persons. This presumption is applied by the Office of Munitions Control to all persons convicted or deemed ineligible in this manner since the effective date of the Arms Export Control Act, Pub. L. 94–329, 90 Stat. 729 (June 30, 1976).

(b) *Policy.* It is the policy of the Department of State to deny applications for licenses or other approvals that involve persons described in paragraph (a) of this section. An exception shall not be considered unless there are extraordinary circumstances surrounding the conviction or ineligibility to export, and only if the applicant demonstrates, to the satisfaction of the Office of Munitions Control, with the concurrence of the Office of the Legal Adviser, that the applicant has taken appropriate steps to mitigate any law enforcement and other legitimate concerns, and to deal with the causes that resulted in the conviction, ineligibility, or debarment. Any person described in paragraph (a) of this section who wishes to request consideration of any application must explain, in a letter to the Director, Office of Munitions Control, the reasons why the Department of State should consider the application. If the Department of State concludes that the application and written explanation have sufficient *prima facie* merit, it shall consult with the Department of the Treasury regarding law enforcement concerns. The Department of State may also request the views of other departments, including the Department of Justice. If the Department of State does grant the license or other approval, subsequent applications from the same person need not repeat the information previously provided. The applicant should instead refer to the favorable decision.

(c) *Debarred Persons.* Persons debarred pursuant to § 127.6(c) (statutory debarment) of this part may not utilize the procedures provided by this section while the debarment is in force. Such persons may utilize only the procedures provided by § 127.6(d) of this part.

Date: April 4, 1988.

John C. Whitehead,

Acting Secretary.

[FR Doc. 88–7709 Filed 4–5–88; 11:13 am]

BILLING CODE 4710-25-M

DEPARTMENT OF THE INTERIOR

Office of Surface Mining Reclamation and Enforcement

30 CFR Part 934

Surface Coal Mining and Reclamation Operations Under the Federal Lands Program; State-Federal Cooperative Agreements, North Dakota

AGENCY: Office of Surface Mining Reclamation and Enforcement (OSMRE); Interior.

ACTION: Final rule.

SUMMARY: The Office of Surface Mining Reclamation and Enforcement (OSMRE) is adopting an amendment to the cooperative agreement between the Department of the Interior and the State of North Dakota for the regulation of surface coal mining and reclamation operations on Federal lands in North Dakota under the permanent regulatory program. Cooperative agreements are provided for under section 523(c) of the Surface Mining Control and Reclamation Act of 1977 (SMCRA). This final rule provides the terms of the amendment to the cooperative agreement.

EFFECTIVE DATE: May 9, 1988.

FOR FURTHER INFORMATION CONTACT: Mr. Jerry R. Ennis, Director, Casper Field Office, Office of Surface Mining

Reclamation and Enforcement, Federal Building, 100 East "B" Street, Room 2128, Casper, Wyoming 82601–1918; Telephone: (307) 261–5776.

SUPPLEMENTARY INFORMATION:

I. Background
II. Public Comment and Summary of Amendment to Cooperative Agreement
III. Procedural Matters

I. Background

Section 523(c) of SMCRA, 30 U.S.C. 1201 *et seq.*, and the implementing regulations at 30 CFR Parts 740 and 745, allow a State and the Secretary of the Interior to enter into a permanent program cooperative agreement if the State has an approved State program for the regulation of surface coal mining and reclamation operations, including surface operations and surface impacts incident to underground mining operations, on non-Federal and non-Indian lands.

Permanent program cooperative agreements are authorized by the first sentence of section 523(c), which provides that "[a]ny State with an approved State program may elect to enter into a cooperative agreement with the Secretary to provide for State regulation of surface coal mining and reclamation operations on Federal lands within the State, provided the Secretary determines in writing that such State has the necessary personnel and funding to fully implement such a cooperative agreement in accordance with the provision(s) of (SMCRA)." 30 U.S.C. 1273(c).

On November 14, 1980, the State of North Dakota requested a cooperative agreement between the Department of the Interior and the State of North Dakota to give the State primacy in the administration of its approved regulatory program on Federal lands in North Dakota. The Secretary approved the cooperative agreement on September 15, 1983 (48 FR 41387). The text of the existing cooperative agreement can be found at 30 CFR 934.30.

On February 10, 1987, OSMRE promulgated revised regulations concerning the consideration which must be accorded historic properties during the permitting of surface coal mining operations (52 FR 4244–4263). Specific to this proposed amendment, OSMRE has revised 30 CFR 773.12 to require that where Federal and Indian lands are involved, each regulatory program shall provide for the coordination of review and issuance of permits for surface coal mining and reclamation operations with applicable requirements of the Archaeological Resources Protection Act of 1979.

On June 9, 1987, OSMRE notified North Dakota of the change to 30 CFR 773.12 and the need for a corresponding amendment pursuant to 30 CFR 732.17(d). The State responded on July 28, 1987, and indicated its intent to modify the existing cooperative agreement to satisfy OSMRE's requirement to amend the State program.

On September 16, 1987, the State of North Dakota submitted to OSMRE a proposed amendment to its approved cooperative agreement under the permanent regulatory program. The proposed amendment consists of the addition of the Archaeological Resources Protection Act of 1979 to the list of other applicable laws for permit coordination in Appendix A of the agreement.

II. Public Comment and Summary of Amendment to Cooperative Agreement

The proposed amendment which the published in the **Federal Register** on December 28, 1987, announced that the public comment period would close January 27, 1988, and that a public hearing would be held, if it were requested. Since no one asked to testify, a public hearing was not held. No substantive comments were received from the respondents.

The proposed amendment adds the Archaeological Resources Protection Act of 1979 to the list of other applicable laws for permit coordination in Appendix A of the agreement. There are no other changes to the document.

III. Procedural Matters

1. Executive Order No. 12291 and the Regulatory Flexibility Act

On October 21, 1982, the Department of the Interior received from the Office of Management and Budget an exemption for State-Federal cooperative agreements from the requirements of sections 3 and 7 of Executive Order 12291.

The Department has reviewed this proposed agreement in light of the Regulatory Flexibility Act (Pub. L. 96–354). Having conducted this review, the Department has determined that this document will not have a significant economic effect on a substantial number of small entities because no significant departure from either the State or Federal requirements already in effect will occur and no new or additional information will be required by the proposed agreement.

2. Paperwork Reduction Act of 1980

This proposed amendment to the North Dakota Cooperative Agreement does not contain information collection requirements which require clearance from the Office of Management and Budget under 44 U.S.C. 3507.

3. National Environmental Policy Act

Proceedings relating to adoption or amendment of a permanent program State-Federal cooperative agreement are part of the Secretary's implementation of the Federal lands program pursuant to section 523 of the Act. Such proceedings are exempt under section 702(d) of the Act from the requirements to prepare a detailed statement pursuant to section 102(2)(C) of the National Environmental Policy Act of 1969 (42 U.S.C. 4332(2)(C)).

4. Author

The author of this regulation is Mr. Jerry R. Ennis, Director, Casper Field Office, Office of Surface Mining Reclamation and Enforcement, Federal Building, 100 East "B" Street, Room 2128, Casper, Wyoming 82601–1918; Telephone: (307) 261–5776.

List of Subjects in 30 CFR Part 934

Coal mining, Intergovernmental relations, Surface mining, Underground mining.

J. Steven Griles,

Assistant Secretary—Land and Minerals Management.

Date: April 1, 1988.

For the reasons set out in the preamble, Title 30, Chapter VII, Subchapter T of the Code of Federal Regulations is amended as set forth below:

PART 934—NORTH DAKOTA

1. The authority citation for Part 934 is revised to read as follows:

Authority: 30 U.S.C. 1201 *et seq.*, as amended; 16 U.S.C. 470 *et seq.*, and Pub. L. 100–34.

2. In § 934.30, State-Federal Cooperative Agreement, Appendix A is amended by redesignating items 14 and 15 as items 15 and 16, respectively, and adding new item 14 to read as follows:

§ 934.30 State-Federal Cooperative Agreement.

* * * * *

Appendix A

* * * * *

14. The Archaeological Resources Protection Act of 1979, 16 U.S.C. 470aa., *et seq.*

* * * * *

Approved:
Donald Paul Hodel,
Secretary of the Interior.

Date: March 23, 1988.
George A. Sinner,
Governor of North Dakota.

Date: September 10, 1987.
Dale Sandstrom,
President, North Dakota Public Service Commission.

Date: August 18, 1987.
Bruce Hagen,
Commissioner, North Dakota Public Service Commission.

Date: August 18, 1987.
Leo M. Reinbold,
Commissioner, North Dakota Public Service Commission.

Date: August 18, 1987.
[FR Doc. 88-7870 Filed 4-6-88; 8:45 am]
BILLING CODE 4310-05-M

DEPARTMENT OF TRANSPORTATION

Coast Guard

33 CFR Part 100

[CGD 05-88-11]

Special Local Regulations for Harborfest 1988; Waterside Area of the Elizabeth River Between Norfolk and Portsmouth, VA

AGENCY: Coast Guard, DOT.

ACTION: Notice of implementation of 33 CFR 100.501.

SUMMARY: This notice implements 33 CFR 100.501 for Harborfest 1988, an annual event held in the Waterside area of the Elizabeth River between Norfolk and Portsmouth, Virginia. These special local regulations are needed to control vessel traffic within the immediate vicinity of the Waterside due to the confined nature of the waterway and the expected vessel congestion during the Harborfest 1988 activities. The effect will be to restrict general navigation in the regulated area for the safety of participants and spectators.

EFFECTIVE DATES: The regulations in 33 CFR 100.501 are effective as follows:

a. 9:30 a.m. to 8:00 p.m., June 3, 1988
b. 9:00 a.m. to 10:00 p.m., June 4, 1988
c. 9:00 a.m. to 10:00 p.m., June 5, 1988

FOR FURTHER INFORMATION CONTACT: Billy J. Stephenson, Chief, Boating Affairs Branch, Fifth Coast Guard District, 431 Crawford Street, Portsmouth, Virginia 23704-5004 (804) 398-6204.

SUPPLEMENTARY INFORMATION:

Drafting Information

The drafters of this notice are Billy J. Stephenson, project officer, Chief, Boating Affairs Branch, Boating Safety Division, Fifth Coast Guard District, and Commander Robert J. Reining, project attorney, Fifth Coast Guard District Legal Office.

Discussion

The City of Norfolk, Virginia, has submitted an application to hold Harborfest 1988 on June 4, 5, and 6, 1988, in the Waterside area of the Elizabeth River, which is the area covered by 33 CFR 100.501 and generally includes the waters of the Elizabeth River between Town Point Park, Norfolk, Virginia; the mouth of the Eastern Branch of the Elizabeth River; and Hospital Point, Portsmouth, Virginia.

Since this event is the type of event contemplated by this regulation and the safety of the participants and spectators viewing the event would be enhanced by the implementation of special local regulations for the Elizabeth River, 33 CFR 100.501 will be in effect during Harborfest 1988.

Harborfest 1988, a three day event, sponsored by Norfolk Harborfest, Inc., will consist of a Navy jet fly over, aerobatic demonstrations, an air/sea rescue demonstration, fire works, and numerous other water events, including a parade of sails, water ski exhibitions, and various boat races. Commercial vessels will be permitted to transit the regulated area between events, and thus commercial traffic should not be severely disrupted at any given time.

In addition to this notice implementing 33 CFR 100.501, two notices of proposed rulemaking are being published in this same issue of the Federal Register. One proposes to amend 33 CFR 100.501 to establish special anchorage areas to be used as spectator anchorages in conjunction with events regulated by that regulation. If adopted the proposed rule will be applied to Harborfest 1988. The second proposal would regulate the openings of the Berkley Street Drawbridge over the Eastern Branch of the Elizabeth River during Harborfest 1988.

Dated: March 17, 1988.
R.M. Polant,
Acting Captain, U.S. Coast Guard Commander, Fifth Coast Guard District.
[FR Doc. 88-8488 Filed 4-6-88; 8:45 am]
BILLING CODE 4910-14-M

VETERANS ADMINISTRATION

38 CFR Part 36

Increase in Maximum Permissible Interest Rates on Guaranteed Manufactured Home Loans, Home and Condominium Loans, and Home Improvement Loans

AGENCY: Veterans Administration.

ACTION: Final regulations.

SUMMARY: The VA (Veterans Administration) is increasing the maximum interest rates on guaranteed manufactured home unit loans, lot loans, and combination manufactured home unit and lot loans. In addition, the maximum interest rates applicable to fixed payment and graduated payment home and condominium loans, and to home improvement and energy conservation loans are also increased. These increases are necessary because previous rates were not competitive enough to induce lenders to make guaranteed or insured home loans without substantial discounts, or to make manufactured home loans. The increase in the interest rates will assure a continuing supply of funds for home mortgages, home improvement and manufactured home loans.

EFFECTIVE DATE: April 4, 1988.

FOR FURTHER INFORMATION CONTACT: Mr. George D. Moerman, Loan Guaranty Service (264), Department of Veterans Benefits, Veterans Administration, 810 Vermont Avenue NW., Washington, DC 20420 (202-233-3042).

SUPPLEMENTARY INFORMATION: The Administrator is required by section 1819(f), title 38, United States Code, to establish maximum interest rates for manufactured home loans guaranteed by the VA as he finds the manufactured home loan capital markets demand. Recent market indicators—including the prime rate, the general increase in interest rates charged on conventional manufactured home loans, and the increase in other short-term and long-term interest rates—have shown that the manufactured home capital markets have become more restrictive. It is now necessary to increase the interest rates on manufactured home unit loans, lot loans, and combination manufactured home unit and lot loans in order to assure an adequate supply of funds from lenders and investors to make these types of VA loans.

The Administrator is also required by section 1803(c), title 38, United States Code, to establish maximum interest rates for home and condominium loans, including graduated payment mortgage

loans, and for loans for home improvement purposes. Recent market indicators—including the rate of discount charged by lenders on VA loans and the general increase in interest rates charged by lenders on conventional loans, have shown that the mortgage money market has become more restrictive. The maximum rates in effect for VA guaranteed home and condominium loans and those for energy conservation and home improvement purposes have not been sufficiently competitive to induce private sector lenders to make these types of VA guaranteed or insured loans without imposing substantial discounts. To assure a continuing supply of funds for home mortgages through the VA loan guaranty program, it has been determined that an increase in the maximum permissible rates applicable to home and improvement loans is necessary. The increased return to the lender will make VA loans competitive with other available investments and assure a continuing supply of funds for guaranteed and insured mortgages.

Regulatory Flexibility Act/Executive Order 12291

For the reasons discussed in the May 7, 1981 **Federal Register** (46 FR 25443), it has previously been determined that final regulations of this type which change the maximum interest rates for loans guaranteed, insured, or made pursuant to chapter 37 of title 38, United States Code, are not subject to the provisions of the Regulatory Flexibility Act, 5 U.S.C. 601–612.

These regulatory amendments have also been reviewed under the provisions of Executive Order 12291. The VA finds that they do not come within the definition of a "major rule" as defined in that Order. The existing process of informal consultation among representatives within the Executive Office of the President, OMB, the VA and the Department of Housing and Urban Development has been determined to be adequate to satisfy the intent of this Executive Order for this category of regulations. This alternative consultation process permits timely rate adjustments with minimal risk of premature disclosure. In summary, this consultation process will fulfill the intent of the Executive Order while still permitting compliance with statutory responsibilities for timely rate adjustments and a stable flow of mortgage credit at rates consistent with the market.

These final regulations come within exceptions to the general VA policy of prior publication of proposed rules as contained in 38 CFR 1.12. The publication of notice of a regulatory change in the VA maximum interest rates for VA guaranteed, insured, and direct home and condominium loans, loans for energy conservation and other home improvement purposes, and loans for manufactured home purposes would create an acute shortage of funds pending the final rule publication date which would necessarily be more than 30 days after publication in proposed form. Accordingly, it has been determined that publication of proposed regulations prior to publication of final regulations is impracticable, unnecessary, and contrary to the public interest.

(Catalog of Federal Domestic Assistance Program numbers 64.113, 64.114, and 64.119)

These regulations are adopted under authority granted to the Administrator by sections 210(c), 1803(c)(1), 1811(d)(1), and 1819 (f) and (g) of title 38, United States Code. The regulations are clearly within that statutory authority and are consistent with Congressional intent.

These increases are accomplished by amending §§ 36.4212(a) (1), (2), and (3), and 36.4311 (a), (b), and (c), and 36.4503(a), title 38, Code of Federal Regulations.

List of Subjects in 38 CFR Part 36

Condominiums, Handicapped, Housing, Loan programs—housing and community development, Manufactured homes, Veterans.

Approved: April 1, 1988.

Thomas K. Turnage,

Administrator.

38 CFR Part 36, Loan Guaranty, is amended as follows:

PART 36—[AMENDED]

1. In § 36.4212, paragraph (a) is revised as follows:

§ 36.4212 Interest rates and late charges.

(a) The interest rate charged the borrower on a loan guaranteed or insured pursuant to 38 U.S.C. 1819 may not exceed the following maxima except on loans guaranteed or insured pursuant to guaranty or insurance commitments issued by the Veterans Administration prior to the respective effective date:

(Authority: 38 U.S.C. 1819(f))

(1) Effective April 4, 1988, 12½ percent simple interest per annum for a loan which finances the purchase of a manufactured home unit only.

(2) Effective April 4, 1988, 12 percent simple interest per annum for a loan which finances the purchase of a lot only and the cost of necessary site preparation, if any.

(3) Effective April 4, 1988, 12 percent simple interest per annum for a loan which will finance the simultaneous acquisition of a manufactured home and a lot and/or the site preparation necessary to make a lot acceptable as the site for the manufactured home.

* * * * *

2. In § 36.4311, paragraphs (a), (b), and (c) are revised as follows:

§ 36.4311 Interest rates.

(a) Excepting loans guaranteed or insured pursuant to guaranty or insurance commitments issued by the VA which specify an interest rate in excess of 10 per centum per annum, effective April 4, 1988, the interest rate on any home or condominium loan, other than a graduated payment mortgage loan, guaranteed or insured wholly or in part on or after such date may not exceed 10 per centum per annum on the unpaid principal balance.

(Authority: 38 U.S.C. 1803(c)(1))

(b) Excepting loans guaranteed or insured pursuant to guaranty or insurance commitments issued by the VA which specify an interest rate in excess of 10¼ per centum per annum, effective April 4, 1988, the interest rate of any graduated payment mortgage loan guaranteed or insured wholly or in part on or after such date may not exceed 10¼ per centum per annum.

(Authority: 38 U.S.C. 1803(c)(1))

(c) Effective April 4, 1988, the interest rate on any loan solely for energy energy conservation improvements or other alterations, improvements or repairs, which is guaranteed or insured wholly or in part on or after such date may not exceed 11½ per centum per annum on the unpaid principal balance.

(Authority: 38 U.S.C. 1803(c)(1))

* * * * *

3. In § 36.4503, paragraph (a) is revised as follows:

§ 36.4503 Amount and amortization.

(a) The original principal amount of any loan made on or after October 1, 1980, shall not exceed an amount which bears the same ratio to $33,000 as the amount of the guaranty to which the veteran is entitled under 38 U.S.C. 1810 at the time the loan is made bears to $27,500. This limitation shall not preclude the making of advances, otherwise proper, subsequent to the making of the loan pursuant to the provisions of § 36.4511. Except as to home improvement loans, loans made by the VA shall bear interest at the rate of 10 percent per annum. Loans solely for the purpose of energy conservation

improvements or other alterations, improvements, or repairs shall bear interest at the rate of 11½ percent per annum.

(Authority: 38 U.S.C. 1811(d)(1) and (2)(A))

* * * * *

[FR Doc. 88-7628 Filed 4-6-88; 8:45 am]

BILLING CODE 8320-01-M

DEPARTMENT OF HEALTH AND HUMAN SERVICES

Health Care Financing Administration

42 CFR Parts 405, 416, 418, 442, and 482

[BERC-358-F]

Medicare/Medicaid Programs; Fire Safety Standards for Hospitals, Skilled Nursing Facilities, Hospices, Intermediate Care Facilities and Ambulatory Surgical Centers

AGENCY: Health Care Financing Administration (HCFA), HHS.

ACTION: Final rule.

SUMMARY: This final rule amends the fire safety standards for hospitals, skilled nursing facilities, hospices, intermediate care facilities and ambulatory surgical centers. It incorporates by reference the 1985 edition, rather than the 1981 edition now required, of the Life Safety Code of the National Fire Protection Association. This change primarily affects new applicants to the program. The incorporation of the 1985 edition of the LSC is intended to ensure that patients, personnel, providers and the public have the benefit of the most current fire protection standards.

EFFECTIVE DATE: The regulations are effective May 9, 1988.

FOR FURTHER INFORMATION CONTACT: Samuel Kidder, (301) 966-4620.

SUPPLEMENTARY INFORMATION:

I. Legislative and Regulatory Background

A. Summary of Proposed Rule

We published a proposed rule in the **Federal Register** on January 22, 1987 (52 FR 2430) proposing to amend the fire safety standards for hospitals, skilled nursing facilities, intermediate care facilities, hospices and ambulatory surgical centers. It proposed to incorporate by reference the 1985 edition of the Life Safety Code (LSC) of the National Fire Protection Association (NFPA). Current regulations incorporate the 1981 edition of the LSC. The incorporation of the 1985 edition of the LSC is intended to ensure that Medicare and Medicaid providers and recipients have the benefit of the most current fire protection standards.

B. Health Care Entities Affected by the LSC

In the proposal published on January 22, 1987, we cited the legislative history and requirements for the entities affected by the LSC. Listed below is a legislative and regulatory summary for those entities.

- Section 1861(e)(9) of the Social Security Act (the Act) and 42 CFR 440.10 requires that, to participate in Medicare, or Medicaid a hospital must meet the health and safety requirements as set forth by the Secretary. Those requirements are set forth in the regulations at 42 CFR Part 482, Subpart C—Basic Hospital Functions.
- Sections 1861(j)(13) and 1902(a)(28) of the Act requires skilled nursing facililties (SNFs) participating in Medicare or Medicaid to meet those provisions of the LSC of the NFPA applicable to nursing facilities. Those requirements are set forth in regulations at 42 CFR 405.1134, Conditions of participation-physical environment.
- Section 1861(dd) of the Act authorizes coverage of and reimbursement for hospice care. To participate in Medicare, hospices must meet the requirements in the regulations at 42 CFR Part 418, Subpart C—Conditions of Participation. the current hospice standard on fire protection, contained in 42 CFR 418.100(d), requires that a hospice meet the health care occupancy provisions of the 1981 edition of the LSC of the NFPA.
- Section 1905(c) of the Act authorizes optional Medicaid coverage for services in intermediate care facilities (ICFs). Those requirements are set forth in the regulations at 42 CFR Parts 442.321, 442.322 and 442.323, Subpart F—Standards for Intermediate Care Facilities Other Than Facilities for the Mentally Retarded.
- Section 1832(a)(2)(F) of the Act authorizes the Secretary to specify health and safety regulations for ambulatory surgical centers (ASCs). ASCs must meet the requirements in regulations at 42 CFR Part 416, Subpart B—Ambulatory Surgical Centers: Coverage and Benefits.

II. The Life Safety Code of the National Fire Protection Association

Since the beginning of the Medicare and Medicaid programs, we have been concerned with ensuring that health care facilities meet certain health and safety requirements to make certain that patients are safe from fire. Generally, the Life Safety Code (LSC) developed by the National Fire Protection Association (NFPA) serves as the basis for governmental regulations, including those of the Medicare and Medicaid programs. Many Federal, State, and local governmental authorities have adopted the LSC as the basis for laws and regulations and have enforced provisions of the LSC. The LSC is a nationally recognized consensus standard, and includes fire protection requirements necessary to protect patients and residents in health care facilities.

The LSC is designed to provide a reasonable degree of safety from fire and similar emergencies. The LSC covers construction, fire protection, and occupancy features to minimize danger to life from fire, smoke, fumes, and panic. The code many be applied to both new and existing buildings. The development and maintenance of a body of fire safety codes and standards is one of the NFPA's primary functions. The standards development is accomplished by technical committees, which are composed of experts in the fire safety field, and represent a broad spectrum of interests including fire marshals, architects, engineers, and representatives from private industry and government.

The Fire Safety Evaluation System (FSES) for health care facilities was introduced in 1978 and was included as part of the 1981 LSC. The FSES provides health care facilities with an alternative method for achieving compliance other than waivers, if the facility does not meet the Health Care Occupancy Chapter of the LSC.

The NFPA revises the LSC every 3 to 4 years to reflect advancements in fire protection. In the past, whenever the Secretary determined that a revised LSC contained significant changes which would be in the interest of health and safety, we have revised the regulations accordingly.

A significant change in the 1985 LSC is the inclusion of a new Chapter 21 of the LSC entitled "Residential Board and Care Occupancies." Also, included in the 1985 LSC is a new equivalency evaluation system for Residential Board and Care Occupancies, extending the principles of the FSES developed earlier for other types of occupancies, entitled "Fire Safety Evaluation System for Board and Care Homes" (FSES/BC). Both Chapter 21 and the FSES/BC allow flexibility in the physical plant requirements that a facility must meet depending on the clients and the staffing of the facility. If the facility has a high staff client ratio, and clients who are

mobile and capable of understanding fire hazard, then the physical plant requirement need not be as rigid.

The 1985 LSC contains several other features that clarify code requirements for health care occupancies:

- A gift shop is no longer automatically considered to be a hazardous area and is not required to be sprinklered or separated by 1 hour fire-rated construction. Fire protection requirements will be dependent upon the fuel load (combustibles) in the area and other factors.
- Stairway doors may now be held open, if this is accomplished by means of approved devices and methods.
- Atriums are now permitted in health care facilities, but some smoke barriers are required.

III. Provisions of the Proposed Regulations

On January 22, 1987, we proposed to amend, §§ 405.1134 (SNFs), 416.44(b) (ASCs), 418.100(d) (Hospices), 442.321 (ICFs), and 482.41 (Hospitals) to incorporate by reference the 1985 LSC. We proposed to retain the existing requirements in each of these sections for waivers. In addition, we proposed to retain acceptance of a State's fire and safety code in lieu of the LSC for hospitals, SNFs and ICFs that meet the Health Care Occupancies Chapters of the LSC. We also proposed to retain existing grandfathering provisions for hospitals, SNFs, and ICFs that meet the Health Care Occupancies Chapters of the LSC, and we proposed to add provisions for grandfathering ASCs and hospices. In addition, we proposed to rewrite §§ 405.1134(a), 416.44(b), 418.100 (d) and (e), and 482.41(b) to improve their clarity without substantive change.

IV. Discussion of Public Comments on the Proposed Rule

We received 8 pieces of timely correspondence concerning suggested changes to the present fire safety standards for hospitals, SNFs, hospices, ICFs and ASCs. We received comments from the Texas Department of Human Services, the Council of American Building Officials (CABO), the Building Officials and Code Administrators International (BOCA), the American Health Care Association (AHCA), the American Hospital Association (AHA), the City of Middleton, Ohio, the City of Philadelphia, Pennsylvania, and the City of St. Louis, Missouri.

1. Comment: Five commenters urged the Department to recognize three building codes, as well as the LSC of the NFPA. The building codes recommended are promulgated by the following organizations: International Conference of Building Officials (ICBO), BOCA, and Southern Building Code Congress International (SBCCI). Their codes are applicable in different States, when adopted by State law, but generally the BOCA code is used in the northeast and midwest States. The ICBO code is used in the west and northwest and the SBCCI code is used in the south and the southeast.

These commenters maintain that the building codes are equivalent to the LSC in terms of fire safety and in addition contain standards for other hazards, such as earthquakes, which the LSC does not contain. They also stated that they have unsuccessfully petitioned the Department on numerous occasions to recognize the building codes.

Response: The Secretary's authority to adopt a standard for fire protection other than that of the NFPA on a nationwide basis is very limited. For SNFs, section 1861(j)(13) requires the Secretary to adopt the LSC of the NFPA. For nursing facilities, section 4211 of Pub. L. 100-203 (at section 1919(d)) requires the Secretary to adopt the standards of the NFPA by October 1, 1990 (nursing facilities under this provision include all SNFs and ICFs that are Medicaid certified). This only leaves hospitals, hospices, and ambulatory care centers for which the Secretary could conceivably adopt one of the building codes on a nationwide basis.

However, the law under the new statute as well as current law, allows the Secretary to adopt a different fire safety standard in a particular State if the State imposes that requirement and the Secretary finds that it adequately protects residents and personnel. In order to assist States in determining whether the various building codes adequately protect residents and personnel, we have asked the National Institute of Building Sciences to evaluate these building codes. This evaluation will assist the Secretary in deciding whether State adopted building codes provide adequate protection. It will also help in judging the adequacy of these codes for hospitals, hospices and ambulatory surgical centers on a nationwide basis. Once this evaluation has been completed we will publish a recommendation as a notice in the **Federal Register** reflecting the results of the analysis and containing our conclusions as to whether the codes are comparable to the LSC of the NFPA. However, we could not accept any of the building codes for skilled nursing facilities under Medicare or nursing facilities under Medicaid on any other than a State by State basis.

2. Comment: Two commenters asserted that the Department should prepare a regulatory impact statement on the cost to health care providers of having to meet two different codes. These commenters maintain that States and local governments adopt one of the three building codes. Consequently, a particular health care facility must comply with two different codes (a building code and a fire safety code required for Medicare and Medicaid participation), which at times are conflicting. The commenter asked the Department to prepare a regulatory impact statement on the cost of this conflict.

Response: We do not believe this problem results in any substantial economic impact. The differences, if any, are worked out in plan review by building code experts and fire safety code experts before construction. Moreover, architects are responsible for knowing the requirements of these codes and for developing plans that satisfy all codes. One commenter in discussing the problem of compliance with duplicate codes stated that, in all cases in his jurisdiction, the facilities that have been built under the BOCA code and who have had simultaneous review by the State agency, there have been no discrepancies noted for those facilities that were not caught on the plan review from the BOCA code. In most cases, the plan review deficiencies from the LSC review and the local review have ended up with duplicate "notations" which had to be corrected before the permits were issued or the buildings were approved. The commenter was speaking about duplicate agencies reviewing plans for nursing homes and hospitals and the duplicate fees from these agencies. This example does, however, illustrate the fact that differences in these codes, where they do exist, may be worked out at the plan review stage and do not necessarily result in expensive construction costs or retrofitting.

3. Comment: Two commenters complimented the Department for proposing the adoption of the 1985 LSC. They were particularly pleased with the provisions that would allow existing facilities to remain in the program if they continue to comply with previous editions of the LSC (grandfathering). One commenter did not like the grandfathering provision because it would allow older facilities to remain in the program while only complying with older editions of the LSC.

Response: Traditionally the Department has not required facilities to meet the provisions of a new code as long as they meet and continue to meet the provisions of the previous code. This

grandfathering is a necessary feature of the fire safety standards because to do otherwise would result in requiring facilities to meet specific standards that, if later changed, would require physical plant modifications and attendant expenditures.

4. Comment: One commenter was concerned about the definition of "new applicant." This term is used in the preamble to explain that facilities already in the program under one of the previous LSCs (for example, the 1967, 1973 or the 1981 editions of the LSC) did not have to meet the 1985 edition unless they were a new applicant. The commenter asked whether a new applicant would be a facility that was terminated (for reasons not related to fire safety) or a facility that changed ownership.

Response: The term "new applicant" is used only in the preamble. The regulation text does not use this term, but it does specify the date at which a facility can no longer comply with a previous code (the effective date of the final regulation adopting the newer code). The regulation text goes on to say that the facility is considered to be in compliance with the fire safety standard if it "continues to remain in compliance with that edition of the code." This means that a facility will not have a newer code applied to it under circumstances of change of ownership or decertification (for other than fire safety reasons) as long as it continues to meet the provisions of the applicable previous code. If, however, the facility is decertified for fire safety reasons, then it will be required to comply with the provisions of the currently applicable code if and when it reapplies for participation in the program.

5. Comment: One commenter stated that existing ICFs that currently comply with the LSC for health care facilities (Chapter 12 or 13) should not be required to comply with Chapter 21 of the LSC. Chapter 21 of the LSC establishes more flexible physical plant requirements depending upon the mobility status of the clients and the number of staff present in the facility.

Response: There is nothing in this regulation that would force an ICF to meet Chapter 21 of the LSC. The regulation requires the facility to meet the "applicable provisions" of the 1985 edition of the LSC. This allows a facility to meet Chapter 21, if applicable, but if it wishes, the facility may comply with the more stringent Chapters 12 or 13. As explained in the proposed rule, when we use the term "applicable provisions of the 1985 LSC", we mean that the surveyor has the discretion to apply the chapter of the Code that is pertinent to the type of occupancy being surveyed. For example, if the surveyor determines that a facility provides only personal care, he or she will apply the Residential Board and Care Occupancies Chapter in most cases. On the other hand, if nursing care is provided, the Health Care Occupancies Chapters will be applied in most cases.

6. Comment: One commenter stated that there is a need for clarification about retaining the "alternative provisions for sprinkler requirements" for nonsprinklered one-story protected combustible facilities. This alternative provision can be found in the LSC survey report forms (Form HCFA 2786A, B and D). This provision allows a facility to remain in the program if it does not have sprinklers but does have equivalent or "alternative" provisions.

The alternative provisions require the facility to have: sprinklers in hazardous areas, automatic fire detection devices, patient room walls of 1 hour fire resistance rating, and an adequate fire department response time in lieu of sprinklers throughout the facility.

Response: This regulation does not affect the inclusion of the alternative provisions for sprinkler requirements presently contained in the survey report form. These "alternative provisions" have been in the survey report form since the early 1970s and before the FSES was adopted in 1982. (This is a system which allows a facility to be determined in compliance by having compensating building safety features even though it does not meet the exact building features of the LSC). Since the "alternative provisions" in the survey report form are basically equivalency features much like those found in the FSES, we do not intend to delete them.

V. Provisions of the Final Notice

Based on our analysis of the comments, we do not agree that any of the comments necessitate a change in the proposed rule. Therefore, as proposed, the following changes are being made:

A. SNFs: § 405.1134—Condition of Participation—Physical Environment

- We are amending the regulations to require newly participating SNFs to meet the applicable provisions of the 1985 edition of the LSC rather than the 1981 edition currently required.
- We are retaining the existing provisions for waivers of specific requirements of the LSC, and the use of a State's fire and safety code, in lieu of the LSC, if that code adequately protects patients in SNFs.
- We are retaining the provision that allows a SNF to continue to comply with previous editions, including the 1981 edition, of the LSC. However, we are deleting the December 4, 1980, date up to which the 1967 and 1973 LCSs could apply. Currently, the regulations specify two dates: December 4, 1980 and November 26, 1982. It is not administratively feasible to establish two dates up to which previous codes could apply. Thus, we have retained the latest date possible.
- We are retaining the provision that prohibits the placement of blind, non-ambulatory and physically handicapped patients above the street level floor, if the facility is two or more stories and participating on the basis of a waiver of construction type or height and is not of fire resistive construction.

B. ASCs: § 416.44—Condition for Coverage—Environment

- We are revising the regulations to require newly participating ASCs to meet the applicable provisions of the 1985 edition of the LSC rather than the 1981 edition currently required.
- We are retaining the existing provision for waiver of specific requirements of the LSC, if the waiver will not adversely affect the health and safety of the patients and rigid application of specific provisions of the code would result in unreasonable hardship for the ASC.
- We are including a provision that will allow ASCs in compliance with the 1981 edition of the LSC to be considered to be in compliance with this standard as long as the facility continues to remain in compliance with that edition of the Code.

C. Hospices: § 418.100—Condition of Participation for Freestanding Hospices Providing Inpatient Care Directly

- We are revising § 418.100(d) to require newly participating hospices to meet the applicable provisions of the 1985 LSC rather than the 1981 edition currently required.
- We are retaining the existing provision for waiver of specific requirements of the LSC, if the waiver will not adversely affect the health and safety of the patients and rigid application of specific provisions of the Code would result in unreasonable hardship for the hospice.
- We are including a provision that will allow hospices in compliance with the 1981 edition of the LSC to be considered to be in compliance with this standard as long as the facility continues to remain in compliance with that edition of the Code.
- We are retaining the provision for hospices that prohibits the placement of

blind, non-ambulatory and physically handicapped patients above the street level floor, if the facility is two or more stories and participating on the basis of a waiver of construction type or height and is not of fire resistive construction.

D. ICFs: § 442.321—Fire Protection

• We are revising the regulations to require newly participating ICFs to meet the applicable provisions of the 1985 LSC rather that the 1981 edition currently required.

• We are retaining the existing provisions for waivers of specific requirements of the LSC, and the use of a State's fire and safety code, in lieu of the LSC, if that code adequately protects patients in ICFs.

• We are retaining the provision that allows an ICF to continue to comply with previous editions, including the 1981 edition, of the LSC.

• We are retaining the provision that prohibits the placement of blind, non-ambulatory and physically handicapped patients above the street level floor, if the facility is two or more stories and participating on the basis of a waiver of construction type or height and is not of fire resistive construction.

(We note that final regulations concerning fire safety for ICFs/MR were published in the **Federal Register** on April 18, 1986 (51 FR 13224) and comparably amended fire safety requirements for those facilities).

E. ICFs: § 442.322—Fire protection: Exception for Smaller ICFs

• We are deleting the existing provision that allows smaller ICFs (15 beds or less) primarily engaged in the treatment of alcoholism and drug abuse to comply with the less stringent lodging and rooming houses section of the residential occupancy requirement of the 1981 edition of the LSC. These less stringent requirements are allowed in the above facilities if a physician certifies that the residents are ambulatory, engaged in active treatment, and capable of following directions. The ICF regulations have been amended by this regulation to require the facility to meet the "applicable provisions" of the LSC. Chapter 21, the Residential Board and Care chapter, will be among the "applicable provisions." Thus, Chapter 21 would be applied to smaller ICFs primarily engaged in the treatment of alcoholism and drug abuse; depending on the evacuation capability of the residents and staff, the facility could be subject to less stringent physical plant requirements.

F. ICFs: § 442.323—Fire Protection: Waivers

• We are rewriting this section for clarity, without making any substantive changes.

G. Hospitals: § 482.41(b)—Condition of Participation—Physical Environment

• We are revising the regulations to require newly participating hospitals to meet the applicable provisions of the 1985 edition of the LSC rather than the 1981 edition currently required.

• We are retaining the existing provisions for the use of a State's fire and safety code, in lieu of the LSC, if that code adequately protects patients in hospitals.

• We are retaining the provision that allows a hospital to continue to comply with previous editions, including the 1981 edition, of the LSC.

• We are retaining the existing provision for waiver of specific requirements of the LSC, but only if the waiver will not adversely affect the health and safety of the patients.

VI. Regulatory Impact Statement

A. Executive Order 12291

Executive Order 12291 (E.O. 12291) requires us to prepare and publish a regulatory impact analysis for any final regulation that meet one of the E.O. criteria for a "major rule" that would be likely to result in: an annual effect on the economy of $100 million or more; a major increase in costs or prices for consumers, individual industries, Federal, State, or local government agencies, or geographic regions; or significant adverse effects on competition, employment, investment, productivity, innovation or on the ability of United States-based enterprises to compete with foreign-based enterprises in domestic or export markets.

Although we cannot develop an estimate, we believe that the impact of this rule, considering both costs and savings, will not exceed the annual $100 million threshold or other threshold criteria under Executive Order 12291. Therefore, we have not prepared a regulatory impact analysis.

Any impact of this rule will result primarily from previously implemented regulations. The 1985 LSC is an update of previously implemented requirements. Providers who continue to meet earlier editions of the code as appropriate have an option of converting to 1985 code requirements or, in certain circumstances, may meet the equivalency requirements of the FSES, instead of the LSC.

B. Regulatory Flexibility Act

Consistent with the Regulatory Flexibility Act (RFA) (5 U.S.C. 601 through 612), we prepare and publish a regulatory flexibility analysis unless the Secretary certifies that a regulation will not have a significant economic impact on a substantial number of small entities. For purposes of the RFA, we consider all hospitals, SNFs, ICFs, ASCs, and hospices to be small entities.

The 1985 LSC is basically a modernization of previous requirements. Without sacrificing patient health and safety certain providers are given alternatives that were not previously available in meeting code requirements. In addition, the major cost factor in the 1985 LSC, the requirement that all new health care facilities 75 feet or higher must be fully sprinklered, is limited to new applicants. We anticipate only a small number of new facilities 75 feet or higher will apply to participate in the program, and that these requirements will not be unduly burdensome for them.

We cannot estimate quantitatively the potential impact of this regulation. We anticipate that the adoption of the Residential Board and Care Chapter of the LSC and the Fire Safety Evaluation System for Board and Care Homes (FSES/BC) will enable some small ICFs to serve more residents in a wider variety of settings with reduced capital expenditures for fire protection features. Since the Residential Board and Care Occupancy Chapter of the LSC and FSES/BC provides for various methods of achieving needed fire protection features, facilities will be able to tailor fire protection capital improvements to the specific needs of residents and staff.

For these reasons, we have determined, and the Secretary certifies, that this final rule will not have a significant economic impact on a substantial number of small entities. We have therefore not prepared a regulatory flexibility analysis.

C. Paperwork Reduction Act of 1980

These changes do not impose information collection requirements. Consequently, they need not be reviewed by the Executive Office of Management and Budget under the authority of the Paperwork Reduction Act of 1980 (44 U.S.C. 3501 et seq.).

List of Subjects

42 CFR Part 405

Administrative practice and procedure, Health facilities, Health professions, Incorporation by reference, Kidney diseases, Laboratories, Medicare, Nursing homes, Reporting and

recordkeeping requirements, Rural areas, X-rays.

42 CFR Part 416

Health facilities, Health professions, Incorporation by reference, Medicare, Reporting and recordkeeping requirements.

42 CFR Part 418

Health facilities, Hospice care, Incorporation by reference, Medicare, Reporting and recordkeeping requirements.

42 CFR Part 442

Grant programs-health, Health facilities, Health professions, Incorporation by reference, Health records, Medicaid, Nursing homes, Nutrition, Reporting and recordkeeping requirements, Safety.

42 CFR Part 482

Administrative practice and procedure, Certification of compliance, Contracts (Agreements), Health care, Health facilities, Incorporation by reference, Health professions, Hospitals, Laboratories, Medicare, Onsite surveys, Outpatient providers, Reporting requirements, Rural areas, X-rays.

42 CFR Chapter IV is amended as set forth below:

I. Part 405 is amended as follows:

PART 405—FEDERAL HEALTH INSURANCE FOR THE AGED AND DISABLED

Subpart K—Conditions of Participation; Skilled Nursing Facilities

1. The authority citation for Subpart K continues to read as follows:

Authority: Secs. 1102, 1861(j), and 1871 of the Social Security Act (42 U.S.C. 1302, 1395x(j), and 1395hh), unless otherwise noted.

2. In § 405.1134, the introductory language preceding paragraph (a) is republished, and paragraph (a) and the footnote are revised to read as follows:

§ 405.1134 Condition of participation—physical environment.

The skilled nursing facility is constructed, equipped, and maintained to protect the health and safety of patients, personnel, and the public.

(a) *Standard: Life safety from fire.* Except as provided in paragraphs (a)(1) through (a)(3) of this section, the skilled nursing facility must meet the applicable provisions of the 1985 edition of the Life Safety Code of the National Fire Protection Association (which is incorporated by reference).[1]

(1) A skilled nursing facility is considered to be in compliance with this standard as long as the facility—

(i) On November 26, 1982, complied, with or without waivers, with the requirements of the 1967 or 1973 editions of the Life Safety Code and continues to remain in compliance with those editions of the Code; or

(ii) On May 9, 1988, complied, with or without waivers, with the 1981 edition of the Life Safety Code and continues to remain in compliance with that edition of the Code.

(2) After consideration of State survey agency findings, HCFA may waive specific provisions of the Life Safety Code which, if rigidly applied, would result in unreasonable hardship upon the facility, but only if the waiver does not adversely affect the health and safety of patients.

(3) The provisions of the Life Safety Code do not apply in a State where HCFA finds, in accordance with applicable provisions of section 1861(j)(13) of the Social Security Act, that a fire and safety code, imposed by State law, adequately protects patients in skilled nursing facilities.

(4) Any facility of two or more stories that is not of fire resistive construction and is participating on the basis of a waiver of construction type of height, may not house blind, nonambulatory, or physically handicapped patients above the street-level floor unless the facility—

(i) Is one of the following construction types (as defined in the Life Safety Code):

(A) Type II (1, 1, 1)—protected non-combustible.

(B) Fully sprinklered Type II (0, 0, 0)—non-combustible.

(C) Fully sprinklered Type III (2, 1, 1)—protected ordinary.

(D) Fully sprinklered Type V (1, 1, 1)—protected wood frame; or

(ii) Achieves a passing score on the Fire Safety Evaluation System (FSES).

* * * * *

II. Part 416 is amended as follows:

[1] Incorporation of the 1985 edition of the National Fire Protection Association's Life Safety Code (published February 7, 1985; ANSI/NFPA) was approved by the Director of the Federal Register in accordance with 5 U.S.C. 552(a) and 1 CFR Part 51 that govern the use of incorporations by reference. The Code is available for inspection at the Office of the Federal Register Information Center, Room 8401, 1100 L Street, NW., Washington, D.C. Copies may be obtained from the National Fire Protection Association, Batterymarch Park, Quincy, Mass. 02269. If any changes in this code are also to be incorporated by reference, a notice to that effect will be published in the Federal Register.

PART 416—AMBULATORY SURGICAL SERVICES

Subpart B—Ambulatory Surgical Centers: Coverage and Benefits

1. The authority citation for Part 416 continues to read as follows:

Authority: Secs. 1102, 1832(a)(2), 1833, 1863 and 1864 of the Social Security Act (42 U.S.C. 1302, 1395k(a)(2), 1395l(l), 1395z and 1395aa).

2. In § 416.44 paragraph (b) and the footnote are revised to read as follows:

§ 416.44 Condition for coverage—Environment.

* * * * *

(b) *Standard: Safety from fire.* (1) Except as provided in paragraphs (b) (2) and (3) of this section, the ASC must meet the provisions of the 1985 edition of the Life Safety Code of the National Fire Protection Association (which is incorporated by reference)[1] that are applicable to ambulatory surgical centers.

(2) In consideration of a recommendation by the State survey agency, HCFA may waive, for periods deemed appropriate, specific provisions of the Life Safety Code which, if rigidly applied, would result in unreasonable hardship upon an ASC, but only if the waiver will not adversely affect the health and safety of the patients.

(3) Any ASC that, on May 9, 1988, complies with the requirements of the 1981 edition of the Life Safety Code, with or without waivers, will be considered to be in compliance with this standard, so long as the ASC continues to remain in compliance with that edition of the Life Safety Code.

* * * * *

III. Part 418 is amended as follows:

PART 418—HOSPICE CARE

Subpart C—Conditions of Participation

1. The authority citation for Part 418 continues to read as follows:

Authority: Secs. 1102, 1811–1814, 1861–1866, and 1871 of the Social Security Act (42 U.S.C. 1302, 1395c–1395f, 1395x–1395cc and 1395hh).

2. Section 418.100 is amended by revising paragraph (d) to read as follows: removing paragraph (e); redesignating the current paragraphs (f)–(l) as (e)–(k); and by amending redesignated (f)(2) by changing the reference "(g)(i)(v) and (vi)" to "(i)(i)(v) and (vi)."

[1] See footnote to § 405.1134(a) of this chapter.

§ 418.100 Condition of participation for freestanding hospices providing inpatient care directly.

* * * * *

(d) *Standard: Fire protection.* (1) Except as provided in paragraphs (d) (2) and (3) of this section, the hospice must meet the provisions of the 1985 edition of the Life Safety Code of the National Fire Protection Association (which is incorporated by reference) [1] that are applicable to hospices.

(2) In consideration of a recommendation by the State survey agency, HCFA may waive, for periods deemed appropriate, specific provisions of the Life Safety Code which, if rigidly applied would result in unreasonable hardship for the hospice, but only if the waiver would not adversely affect the health and safety of the patients.

(3) Any hospice that, on May 9, 1988, complies with the requirements of the 1981 edition of the Life Safety Code, with or without waivers, will be considered to be in compliance with this standard, as long as the hospice continues to remain in compliance with that edition of the Life Safety Code.

(4) Any facility of two or more stories that is not of fire resistive construction and is participating on the basis of a waiver of construction type or height, may not house blind, nonambulatory, or physically handicapped patients above the street-level floor unless the facility—

(i) Is one of the following construction types (as defined in the Life Safety Code):

(A) Type II (1, 1, 1)—protected non-combustible.

(B) Fully sprinklered Type II (0, 0, 0)—non-combustible.

(C) Fully sprinklered Type III (2, 1, 1)—protected ordinary.

(D) Fully sprinklered Type V (1, 1, 1)—protected wood frame; or

(ii) Achieves a passing score on the Fire Safety Evaluation System (FSES).

* * * * *

IV. Part 442 is amended as follows:

PART 442—STANDARDS FOR PAYMENTS FOR SKILLED NURSING AND INTERMEDIATE CARE FACILITY SERVICES

Subpart F—Standards for Intermediate Care Facilities Other Than Facilities for the Mentally Retarded

1. The authority citation for Part 422 continues to read as follows:

Authority: Sec. 1102 of the Social Security Act (42 U.S.C. 1302), unless otherwise noted.

[1] See footnote to § 405.1134(a) of this chapter.

2. In § 442.321 paragraphs (a) and (c) are revised to read as follows:

§ 442.321 Fire protection.

(a) Except as provided in § 442.323 and paragraph (b) of this section, the ICF must meet the applicable provisions of the 1985 edition of the Life Safety Code of the National Fire Protection Association which is incorporated by reference.[1]

* * * * *

(c) Any facility that on November 26, 1982 complies with the requirements of the 1967 edition of the Life Safety Code, or, on May 9, 1988, complies with the requirements of the 1981 edition of the Life Safety Code, with or without waivers, will be considered to be in compliance with this standard as long as the facility continues to remain in compliance with that edition of the Code.

§ 442.322 [Removed]

3. Section 442.322 is removed.

4. Section 442.323 is revised to read as follows:

§ 442.323 Fire protection: waivers.

The State survey agency may waive specific provisions of the Life Safety Code required by § 442.321, for so long as it considers appropriate, if—

(a) The waiver would not adversely affect the health and safety of the residents;

(b) Rigid application of specific provisions of the Life Safety Code would result in unreasonable hardship for the ICF; and

(c) The waiver is granted in accordance with guidelines issued by HCFA.

(d) Any facility of two or more stories that is not of fire resistive construction and is participating on the basis of a waiver of construction type or height may not house blind, nonambulatory, or physically handicapped patients above the street-level floor unless the facility—

(i) Is one of the following construction types (as defined in the Life Safety Code):

(A) Type II (1, 1, 1)—protected non-combustible.

(B) Fully sprinklered Type II (0, 0, 0)—non-combustible.

(C) Fully sprinklered Type III (2, 1, 1)—protected ordinary.

(D) Fully sprinklered Type V (1, 1, 1)—protected wood frame; or

(ii) Achieves a passing score on the Fire Safety Evaluation System (FSES).

V. Part 482 is amended as follows:

[1] See footnote to § 405.1134(a) of this chapter.

PART 482—CONDITIONS OF PARTICIPATION

Subpart C—Basic Hospital Functions

1. The authority citation for Part 482 continues to read as follows:

Authority: Secs. 1102, 1814(a)(7), 1861 (e), (f), (k), (r), (v)(1)(G), and (z), 1864, 1871, 1883, 1886, and 1905(a) of the Social Security Act (42 U.S.C. 1302, 1395f(a)(7), 1395x (e), (f), (k), (r), (v)(1)(G), and (z), 1395aa, 1395hh, 1395tt, 1395ww, and 1396 d(a)).

2. In § 482.41, paragraph (b)(1) and the footnote are revised to read as follows:

§ 482.41 Condition of participation—physical environment.

* * * * *

(b) *Standard: Life safety from fire.* (1) Except as provided in paragraphs (b)(1)(i) through (b)(1)(iii) of this section, the hospital must meet the applicable provisions of the 1985 edition of the Life Safety Code of the National Fire Protection Association (which is incorporated by reference).[1]

(i) Any hospital that on November 26, 1982, complied, with or without waivers, with the requirements of the 1967 edition of the Life Safety Code, or on May 9, 1988, complied with the 1981 edition of the Life Safety Code, is considered to be in compliance with this standard as long as the facility continues to remain in compliance with that edition of the Code.

(ii) After consideration of State survey agency findings, HCFA may waive specific provisions of the Life Safety Code which, if rigidly applied, would result in unreasonable hardship upon the facility, but only if the waiver does not adversely affect the health and safety of patients.

(iii) The provisions of the Life Safety Code do not apply in a State where HCFA finds that a fire and safety code imposed by State law adequately protects patients in hospitals.

* * * * *

(Catalog of Federal Domestic Assistance Program No. 13.714 Medical Assistance Program; 13.743, Medicare—Hospital Insurance; and 13.744, Medicare—Supplementary Medical Insurance)

Dated: October 27, 1987.

William L. Roper,

Administrator, Health Care Financing Administration.

Approved: December 10, 1987.

Otis R. Bowen,

Secretary.

[FR Doc. 88-7588 Filed 4-6-88; 8:45 am]

BILLING CODE 4120-01-M

[1] See footnote to § 405.1134(a) of this chapter.

FEDERAL EMERGENCY MANAGEMENT AGENCY

44 CFR Part 67

[Docket No. FEMA-6920]

Final Flood Elevation Determinations

AGENCY: Federal Emergency Management Agency.

ACTION: Deletion of final rule.

SUMMARY: The Federal Insurance Administration has erroneously published the final flood elevation determination for the City of Ormond Beach, Volusia County, Florida. This notice will serve to delete that publication. Following an engineering analysis and review, a new notice of final flood elevation determination will be issued.

EFFECTIVE DATE: April 7, 1988.

FOR FURTHER INFORMATION CONTACT: Mr. John L. Matticks, Chief, Risk Studies Division, Federal Insurance Administration, Federal Emergency Management Agency, Washington, DC 20472 (202) 646-2767.

SUPPLEMENTARY INFORMATION: As a result of a recent engineering analysis, the Federal Emergency Management Agency has determined that the notice of final flood elevation determination for the City of Ormond Beach, Volusia County, Florida, published at 53 FR 7917, on March 11, 1988, should be deleted, in accordance with Section 110 of the Flood Disaster Protection Act of 1973 (Pub. L. 93-234), 87 Stat. 980, which added section 1363 to the National Flood Insurance Act of 1968 (Title XIII of the Housing and Urban Development Act of 1968 (Pub. L. 90-448)), 42 U.S.C. 4001-4128, and 44 CFR Part 67.

Issued: April 1, 1988.

Harold T. Duryee,

Administrator, Federal Insurance Administration.

[FR Doc. 88-7618 Filed 4-6-88; 8:45 am]

BILLING CODE 6718-21-M

DEPARTMENT OF COMMERCE

National Oceanic and Atmospheric Administration

50 CFR Part 285

[Docket No. 70355-7127]

Atlantic Tuna Fisheries

AGENCY: National Marine Fisheries Service (NMFS), NOAA, Commerce.

ACTION: Notice of closure.

SUMMARY: NOAA issues this notice to close the fishery for Atlantic bluefin tuna conducted by vessels permitted in the Incidental longline category. Closure of this fishery is necessary because the total annual quota of 145 short tons (st) for this category will be exceeded by the effective date. The intent of this action is to prevent further overharvest of the total annual quota established for the U.S. fishery and thereby maintain the United States' obligations under the International Commission for the Conservation of Atlantic Tunas.

EFFECTIVE DATE: 0001 hours local time, April 7, 1988, through December 31, 1988.

FOR FURTHER INFORMATION CONTACT: Kathi L. Rodrigues, 617-281-3600, extension 324.

SUPPLEMENTARY INFORMATION: Regulations promulgated under the authority of the Atlantic Tunas Convention Act (16 U.S.C. 971-971h) regulating fishing for Atlantic bluefin tuna by persons and vessels subject to U.S. jurisdiction appear at 50 CFR Part 285.

Section 285.22(f)(1) of the regulations provides for an annual quota of 145 st of Atlantic bluefin tuna to be taken by vessels permitted in the Incidental longline category in the Regulatory Area. Of this amount, 115 st is allocated for the area south of 36°00'N. latitude. The southern area was closed on March 16, 1988 (53 FR 8631, March 16, 1988), when it was determined that the 115 st quota for that area was reached.

The Assistant Administrator for Fisheries, NOAA, is required under § 285.20(b)(1) to monitor the landing statistics and, on the basis of these statistics, to project a date when any quota under § 285.22 will be reached. He is further required under § 285.20(b)(1) to prohibit the fishing for, or retention of, Atlantic bluefin tuna by the category of vessels subject to the quotas. The Assistant Administrator has determined, based on the reported landings of Atlantic bluefin tuna, that the annual quota of Atlantic bluefin tuna allocated to vessels permitted in the Incidental longline category has been attained. Fishing for or retention of any Atlantic bluefin tuna by these vessels must cease at 0001 hours, local time, on April 7, 1988.

Notice of this action has been mailed to all Atlantic bluefin tuna dealers and vessel owners holding a valid vessel permit for this fishery.

Other Matters

This action is taken under the authority of 50 CFR 285.20, and is taken in compliance with Executive Order 12291.

List of Subjects in 50 CFR Part 285

Fisheries, Penalties, Reporting and recordkeeping requirements, Treaties.

(16 U.S.C. 971 *et seq.*)

Dated: April 4, 1988.

Ann D. Terbush,

Acting Director, Fisheries Conservation and Management, National Marine Fisheries Service.

[FR Doc. 88-7691 Filed 4-4-88; 4:44 pm]

BILLING CODE 3510-22-M

Proposed Rules

Federal Register
Vol. 53, No. 67
Thursday, April 7, 1988

This section of the FEDERAL REGISTER contains notices to the public of the proposed issuance of rules and regulations. The purpose of these notices is to give interested persons an opportunity to participate in the rule making prior to the adoption of the final rules.

DEPARTMENT OF AGRICULTURE

Rural Electrification Administration

7 CFR Part 1700

Cushion of Credit Payments Program; Rural Economic Development Subaccount

AGENCY: Rural Electrification Administration, USDA

ACTION: Advance notice of proposed rulemaking

SUMMARY: The Rural Electrification Administration (REA) is proposing to amend 7 CFR Chapter XVII, by adding a new part. The new part will establish policies and procedures to implement the provisions of section 313 of the Rural Electrification Act of 1936 (7 U.S.C. 901 *et seq.*) (the "RE Act") relating to the Cushion of Credit Payments Program and the creation of a Rural Economic Development Subaccount in the Rural Electrification and Telephone Revolving Fund (the "RETRF"). Section 313 authorizes the Administrator of REA to utilize funds in this subaccount to provide grants or zero interest loans to RE Act borrowers for the purpose of promoting rural economic development and job creation projects, including funding for project feasibility studies, start-up costs, incubator projects, and other reasonable expenses for the purposes of fostering rural development.

DATE: Public comments must be received by REA no later than May 9, 1988.

ADDRESSES: Submit written comments to Mr. Blaine D. Stockton, Jr., Assistant Administrator—Management, Rural Electrification Administration, Room 4063, South Building, U.S. Department of Agriculture, Washington, DC 20250–1500. Comments received may also be inspected at Room 4063 between 8:15 a.m. and 4:45 p.m.

FOR FURTHER INFORMATION CONTACT: Mr. Blaine D. Stockton, Jr., Assistant Administrator—Management, Rural Electrification Administration, Room 4063, South Building, U.S. Department of Agriculture, Washington, DC 20250–1500, telephone number (202) 382–9552.

SUPPLEMENTARY INFORMATION: Under section 313 of the RE Act, the Administrator of REA is to develop and promote a program to encourage RE Act borrowers to voluntarily make deposits into cushion of credit accounts established within the RETRF. Balances in such cushion of credit accounts shall bear interest at an annual rate of 5 percent.

Additionally, the Administrator is to maintain a Rural Economic Development Subaccount in the RETRF, which is to be credited monthly with the difference between interest earned by the RETRF on outstanding cushion of credit deposits made after October 1, 1987, and the amount of interest accruing to the borrower on these funds. Balances in the Rural Economic Development Subaccount are to be fully used on a fiscal year basis to make zero interest loans and grants for the purposes contemplated by section 313 of the RE Act.

It is anticipated that this proposed new Part of 7 CFR Chapter XVII will establish the policies and procedures relating to the Rural Economic Development loans and grants. Since a cushion of credit program already exists and a number of telephone and electric borrowers have made deposits into such accounts, the REA policies and procedures covering the cushion of credit program, including procedures for making deposits, the crediting of accrued interest, and the use of cushion of credit balances for scheduled loan payments will be covered in another Part of 7 CFR Chapter XVII.

Some of the issues that will need to be addressed in the regulations covering rural economic development loans and grants include: Eligibility of borrowers, qualifying projects, application procedures, review and evaluation of proposals, eligibility criteria for grants, eligibility criteria for zero interest loans, loan terms and conditions, and security for loans. Interested parties wishing to make suggestions on any of these areas and their coverage in the proposed regulations are invited to provide written comments to the Assistant Administrator—Management at the address shown above. The rural electrification program is listed in the Catalog of Federal Domestic Assistance as 10.850, Rural Electrification Loans and Loan Guarantees and 10.851, Rural Telephone Loans and Loan Guarantees.

Further public comment will be solicited when the proposed rule is published.

List of Subjects in 7 CFR Part 1700

Loans programs—electric; Loans programs—telephony, Rural economic development.

Dated: April 1, 1988.

Harold V. Hunter,
Administrator.

[FR Doc. 88–7689 Filed 4–6–88; 8:45 am]

BILLING CODE 3410–15–M

DEPARTMENT OF LABOR

Occupational Safety and Health Administration

29 CFR Parts 1910, 1915, 1917 and 1918

[Docket No. H–004J]

Occupational Exposure to Lead

AGENCY: Occupational Safety and Health Administration (OSHA), Department of Labor.

ACTION: Notice of limited reopening of lead remand rulemaking record.

SUMMARY: For the limited purpose of seeking public comment on certain documents, this notice reopens the rulemaking record for the OSHA lead standard regarding the feasibility of meeting the permissible exposure level (PEL) specified in the lead standard (29 CFR 1910.1025(e)(1)) through engineering and work practice controls in nine remand industry sectors. The nine industry sectors are: lead chromate pigments (SIC 2816), lead chemicals (SIC 2816/2819), nonferrous foundries (SIC 3362/3369), brass and bronze ingot production (SIC 3341/3362), secondary copper smelting (SIC 3341), independent battery breaking (SIC 5093), leaded steel (SIC 3312/3313), shipbuilding and ship repair (SIC 3731), and stevedoring (SIC 4463).

DATE: Written comments must be received by May 9, 1988.

ADDRESSES: Comments should be mailed or delivered in quadruplicate to the Docket Officer, Occupational Safety and Health Administration, Docket No. H–004J, Room N–3670, U.S. Department

of Labor, 200 Constitution Avenue, NW., Washington, DC 20210. Telephone 202-523-7894. All materials submitted will be available for public inspection and copying from 8:15 a.m. to 4:15 p.m., Monday through Friday at the above address.

FOR FURTHER INFORMATION CONTACT: James F. Foster, Director, Office of Information and Consumer Affairs, Occupational Safety and Health Administration, U.S. Department of Labor, Room N-3647, 200 Constitution Avenue, NW., Washington, DC 20210. Telephone 202-523-8148.

SUPPLEMENTARY INFORMATION:

I. Background and Judicial History

On November 14, 1978, OSHA promulgated the lead standard (29 CFR 1910.1025), which, in part, limited occupational exposure to airborne concentrations of lead to 50 micrograms per cubic meter of air ($\mu g/m^3$), based on an 8-hour time-weighted average (TWA) (43 FR 52952 and 43 FR 54354, November 21, 1978). On August 15, 1980, the United States Court of Appeals for the District of Columbia Circuit upheld the validity of the lead standard in most respects; however, it remanded the record to OSHA for reconsideration of the question of technological and economic feasibility for 38 industry sectors. *United Steelworkers of America v. Marshall*, 647 F.2d 1189 (D.C. Cir. 1980), cert. denied., 453 U.S. 913 (1981).

After conducting an expedited rulemaking (45 FR 63476, September 24, 1980), OSHA filed its response to the remand order on January 19, 1981, in which OSHA concluded that attainment of the 50 $\mu g/m^3$ PEL through engineering and work practice controls was feasible in the expanded list of remand industries. *See*, 46 FR 6134. However, after requesting and receiving time from the court to reconsider the matter, OSHA, on December 11, 1981 (46 FR 60758), stated that it lacked sufficient information to reach a feasibility determination for eight of the remand industries and that it wished to reexamine applicability of the lead standard for the stevedoring industry. Therefore, OSHA requested the Court of Appeals for the District of Columbia Circuit to remand the record concerning these nine industries for supplementary administrative proceedings (46 FR 60761, December 10, 1981). The court granted the motion on March 31, 1987 and ordered OSHA to return the record on the nine remand industries by October 1, 1987. On July 31, 1987, the court granted OSHA's motion to extent to January 1, 1988 the date for return of the record. (A fuller explanation of the background and legal history surrounding the lead standard can be found at 52 FR 28727).

After the March 31, 1987 remand, OSHA contracted with Meridian Research, Inc., a private consulting firm, to collect and develop new data concerning the feasibility of compliance with the PEL through the use of engineering and work practice controls in each of the remand industries. The Meridian study was placed into the rulemaking record on August 3, 1987 for public review and comment, and OSHA set a September 15, 1987 date for an informal public hearing (52 FR 28727, August 3, 1987). Thereafter, at industry request and without objection from other parties to the rulemaking, the deadline for prehearing comment and the date for public hearings were twice deferred (52 FR 32312, August 27, 1987 and 52 FR 35731, September 23, 1987).

During the extended prehearing comment period, OSHA received very little useful recent air lead exposure data from industry. Consequently, on October 27, 1987, OSHA by letter made specific requests to 14 companies for such data to be entered into the rulemaking record (Ex. 646).

Thereafter, a public hearing was held in Washington, DC, from November 3-6, 1987. At the close of the hearing, the administrative law judge, contingent upon the court granting a deferral of its January 1, 1988 return date, ordered that the closing date for submission of additional post hearing information and data would be January 8, 1988, and that the closing date for submission of post hearing comments and briefs would be February 5, 1988. On November 25, 1987, OSHA requested the court to extend until July 15, 1988 the deadline for return of the record to allow the Agency time to receive and evaluate more data, to conduct post hearing plant visits and produce necessary reports, and to develop and publish a final rule. The court granted the motion by its order of December 16, 1987.

II. Request for Comments

Interested parties are requested to submit in quadruplicate written comments on the documents described below (Exhibits 684-690) for purposes of providing more information for OSHA to determine the technological and economic feasibility of compliance with the 50 $\mu g/m^3$ PEL by means of engineering and work practice controls. The documents on which OSHA seeks public comment include: (1) Documents relating to eight site visits recently conducted by OSHA in four of the remand industries; and (2) certain other supplemental documents consisting of: (a) updates of the Meridian Research, Inc. reports on each of the nine industry sectors and of other documents already in the lead rulemaking record, and (b) excerpts from standardized textbooks and reference materials.

A. Plant Visit Reports and Related Documents

During the remand hearing, certain industry participants expressed concern about the lack of recent plant visits by OSHA or its contractor, Meridian, in preparing the 1987 update of feasibility data. No Plant visits had been conducted by OSHA in the remand industries since 1981-82. While OSHA considered the existing record sufficient to make a basic feasibility determination for each of the remand sectors, the Agency agreed that site visits and receipt of more recent data would useful. Therefore, at the close of the administrative hearing OSHA proposed that it conduct expedited post hearing site visits on a voluntary basis in some of the remand industry sectors. (Tr. 1289-90). The purpose of the site visits was to collect information on manufacturing processes, employment, exposure levels, engineering and work practice controls, and costs and other economic data which would aid OSHA in its determination of feasibility.

OSHA successfuly negotiated with industry representatives to make eight site visits in four industry sectors. (As indicated by Exhibit 690, A-B, during negotiations, representatives from one industry sector in which OSHA sought to make site visits declined to arrange them and representatives from another industry, when they were unable to schedule a suitable date for the site visit, withdrew their offer to arrange plant visits.)

The eight plant visits were conducted during January and February 1988. As specified in agreements executed between OSHA and each plant (Ex. 685, A-F), factual reports on each site visit were prepared by the OSHA team and each plant was afforded the opportunity to review the report for accuracy, completeness and trade secrets prior to its submission into the lead rulemaking record. OSHA is entering the eight trip reports into the lead rulemaking record as Exhibit 684, A-H, and by this notice reopens the rulemaking record to invite public comment on these trip reports and related exposure data by interested parties.

B. Other Supplemental Documents

In addition to the trip reports, OSHA is inserting in the record and inviting comment on certain other supplemental

documents. (Exhibits 686–689). These documents provide incremental or cumulative information to the rulemaking record consisting of updates of documents already in the record and excerpts from standardized textbooks and reference materials.

1. Updates of Meridian Reports on the Nine Remand Industries and of Other Documents in the Record

OSHA is entering into the lead rulemaking record for public comment updates of the industry-by-industry feasibility assessments by Meridian Research, Inc., OSHA's contractor in the lead remand proceedings (Ex. 686, A–I). These updates are based on the current lead remand rulemaking record, including testimony at the remand hearing and post hearing submissions as well as the 1988 OSHA post hearing site visit reports. Material supporting the Meridian updates also is included to facilitate comment by interested parties (Ex. 687).

Public comment also is invited on other updates of air lead monitoring data such as those submitted by a leaded steel plant and a shipbuilding and ship repair yard in response to the October 27, 1987 letter from Frank A. White, Deputy Assistant Secretary of Labor (Ex. 688, A–E)

2. Excerpts from Standardized Textbooks and Reference Materials

OSHA is also entering Exhibit 689, A–O, into the lead rulemaking record, which consists of excerpts from standardized textbooks and reference materials. These excerpts, for example, include six chapters from the Foundry Environmental Control series produced by the American Foundreymen's Society, Inc., and three chapters on forging and casting from the Metals Handbook produced by the American Society for Metals. They also include a submission to the chromium rulemaking record (41 FR 18869, May 7, 1976) by the DuPont Company containing process descriptions and exposure data for a lead pigments plant in Newark, then owned by the company.

OSHA believes that excerpts from standardized textbooks and reference materials need not necessarily be inserted into the record, and indeed the Agency in the past has relied on such materials without entering them into the record. Nevertheless, OSHA believes that placing such standardized reference materials in the record will facilitate full and thorough public comment which will assist the Agency in making the best informed decision possible.

Comments received in response to this limited reopening of the lead rulemaking record will be carefully reviewed and used, as appropriate, by OSHA in determining the feasibility of implementing paragraph (e)(1) of the OSHA lead standard in each of the nine remand industry sectors.

III. Public Comment Procedures

Written comments must be received by May 9, 1988. Comments should be mailed or delivered in quadruplicate to the Docket Officer, Occupational Safety and Health Administration, Docket No. H–004J, Room N–3670, U.S. Department of Labor, 200 Constitution Ave., NW., Washington, DC 20210. Telephone 202–523–7894. All materials submitted will be available for public inspection and copying from 8:15 a.m. to 4:15 p.m., Monday through Friday at the above address.

IV. Authority

This document was prepared under the direction of John A. Pendergrass, Assistant Secretary of Labor for Occupational Safety and Health Administration, 200 Constitution Avenue, NW., Washington, DC 20210. It is issued pursuant to section 6(b) of the Occupational Safety and Health Act of 1970 (84 Stat. 1593; 29 U.S.C. 655), and section 41 of the Longshore and Harbor Workers' Compensation Act (33 U.S.C. 941).

Signed at Washington, D.C., this 4th day of April 1988.

John A. Pendergrass,

Assistant Secretary of Labor.

[FR Doc. 88–7692 Filed 4–6–88; 8:45 am]

BILLING CODE 4510-26-M

DEPARTMENT OF THE TREASURY

31 CFR Part 103

Bank Secrecy Act; Recordkeeping Requirements by Casinos

AGENCY: Departmental Offices, Treasury.

ACTION: Notice of proposed rulemaking.

SUMMARY: Treasury is proposing two amendments to the Bank Secrecy Act regulations regarding casinos. The first amendment adds a requirement that casinos subject to the regulations retain the records which they use for monitoring their customers' gaming activity. The second amendment adds a requirement that casinos which input, retain, or store certain information on computer disk, tape, or other machine-readable media retain such information in machine-readable form. The second amendment goes on to require that casinos retain the indexes, books, file descriptions, programs, and similar materials that would enable a person readily to access and review the records which are required to be made and retained under the Bank Secrecy Act regulations and are kept in machine-readable form.

DATES: Deadline for comments: May 9, 1988.

ADDRESS: Send comments to: Amy G. Rudnick, Office of Financial Enforcement, Office of the Assistant Secretary (Enforcement), Department of the Treasury, Room 4320, 1500 Pennsylvania Avenue NW., Washington, DC 20220.

FOR FURTHER INFORMATION CONTACT: Amy G. Rudnick, Director, Office of Financial Enforcement, Office of the Assistant Secretary (Enforcement), Department of the Treasury, Room 4320, 1500 Pennsylvania Avenue NW., Washington, DC 20220, (202) 566–8022.

SUPPLEMENTARY INFORMATION: The Bank Secrecy Act, Pub. L. No. 91–508, (codified at 12 U.S.C. 1829b, 12 U.S.C. 1951 *et seq.*, and 31 U.S.C. 5311–5324), authorizes the Secretary of the Treasury to require financial institutions to keep records and file reports that the Secretary determines have a high degree of usefulness in criminal, tax, and regulatory matters. Pursuant to 31 U.S.C. 5312(a)(2)(U), the Secretary has designated certain casinos as "financial institutions" for purposes of the Bank Secrecy Act. *See* 31 CFR 103.11(g)(7). The Secretary has imposed particular recordkeeping requirements on these casinos. *See* 31 CFR 103.36

Under this proposed rule, casinos would have to retain additional records and information which the Secretary has determined have a high degree of usefulness in criminal, tax, and regulatory matters. Specifically, new § 103.36(b)(8) would require casinos to retain the records which they use to monitor their customers' gaming activity. This retention requirement is aimed at so-called "player rating forms" or "player rating records" which are prepared during play and are used for determining complimentary services and items. Frequently, these records are the only records in the casino that reflect cash gaming activity of players on the casino floor.

In addition, the proposed rule provides new requirements regarding the media on which casinos keep records and related information. New § 103.36(c) would prescribe that, if a casino inputs, retains, or stores any record required to be maintained pursuant to §§ 103.33 and 103.36 on

computer disk, tape or other machine-readable media, the casino must retain the record in machine-readable form for a period of five years. Thus, if a casino keeps track of a player's gaming activity by inputting some of the data from a rating card on that player into a computer, even for a short period of time, such data must be retained in machine-readable form. For purposes of the proposed rule, the term "machine-readable" means capable of being read by the automated data processing system used by the casino. The data may be transferred to other computer disks, tapes, or machine-readable media and may be retained off-line.

It is emphasized that this proposal, if adopted as a final rule, would not impose a requirement on casinos to use automated data processing systems to comply with the recordkeeping requirements of §§ 103.33 and 103.36. Rather, the requirement would be that casinos which do use such systems must retain the inputted information in machine-readable form. Further, the instructions, manuals, software, etc. which would enable a person readily to access and review the records required to be retained by §§ 103.33 and 103.36, and which are in machine-readable form, would also have to be retained.

Treasury believes that casinos could comply with these requirements without great cost or administrative burden. The law enforcement benefits of the first proposed amendment are apparent in that a record which tracks a player's gaming activity would reflect the point at which a report as described in 31 CFR 103.22(a)(2) should have been filed. The second amendment is intended to lessen significantly the amount of time involved in reviewing specific records required of casinos under the Bank Secrecy Act regulations in connection with examinations for Bank Secrecy Act compliance. The requirement that the instructions, manuals, software, etc. be retained is essential to insure accessibility of the records required of casinos under the regulations which are kept in machine-readable form.

Executive Order 12291

This proposed rule, if adopted, would not be a major rule for purposes of Executive Order 12291. It is not anticipated to have an annual effect on the economy of $100 million or more. It will not result in a major increase in costs or prices for consumers, individual industries, Federal, state, or local government agencies, or geographic regions. It will not have any significant adverse effects on competition, employment, investment, productivity, innovation, or on the ability of United States-based enterprises to compete with foreign-based enterprises in domestic or foreign markets. A Regulatory Impact Analysis therefore is not required.

Regulatory Flexibility Act

It is hereby certified under section 605(b) of the Regulatory Flexibility Act, 5 U.S.C. 601 *et seq.*, that this rule, if adopted, will not have a significant economic impact on a substantial number of small entities.

Paperwork Reduction Act

The collection of information requirements contained in this Notice of Proposed Rulemaking has been submitted to the Office of Management and Budget pursuant to the requirements of the Paperwork Reduction Act (44 U.S.C. 3504(h)). Comments on these requirements should be directed to the Office of Information and Regulatory Affairs, Office of Management and Budget, Washington, DC 20503, Attention: Desk Officer for the Departmental Offices, Department of the Treasury. Copies of such comments should also be submitted to the Department at the address previously specified.

Drafting Information

The principal author of this document is the Office of the Assistant General Counsel (Enforcement). However, personnel from other offices participated in its development.

Comments

Treasury requests comments from all interested persons concerning the proposed amendments. All comments received before the closing date will be carefully considered. Comments received after the closing date and too late for consideration will be treated as possible suggestions for future action. The Treasury Department will not recognize any materials or comments, including the name of any person submitting comments, as confidential. Any material not intended to be disclosed to the public should not be included in the comments. All comments submitted will be available for public inspection during the hours that the Treasury Library is open to the public. The Treasury Library is located in Room 5030, 1500 Pennsylvania Avenue NW., Washington, DC. Appointments must be made to view the comments. Persons wishing to view the comments submitted should contact the Office of Financial Enforcement at the number listed above. Treasury requests comments on all aspects of this proposal, but is particularly interested in specific information about the anticipated increased costs to individual casinos that would result because of imposition of the new requirements.

List of Subjects in 31 CFR Part 103

Authority delegation, Banks and banking, Currency, Foreign Banking, Investigation, Law Enforcement, Reporting and recordkeeping requirements, Taxes.

Proposed Amendments

For the reasons set forth in the preamble, 31 CFR Part 103 is proposed to be amended as follows:

PART 103—[AMENDED]

1. The authority citation for Part 103 would continue to read as follows:

Authority: Pub. L. 91–508, Title I, 84 Stat. 1114, 1116 (12 U.S.C. 1829(b), 1951–1959); and the Currency and Foreign Transactions Reporting Act, Pub. L. No. 91–508, Title II, 84 Stat. 1118, as amended (31 U.S.C. 5311–5324).

2. It is proposed to amend § 103.36 by adding a new paragraph (b)(8) to read as follows:

§ 103.36 Additional records to be made and retained by casinos.

* * * * *

(b) * * *

(8) All records which are prepared or used by a casino to monitor a player's gaming activity.

* * * * *

3. It is proposed to amend further § 103.36 by adding at the end a new paragraph (c) to read as follows:

* * * * *

(c)(1) Casinos which input, store, or retain, in whole or in part, for any period of time, any record required to be maintained by § 103.33 or this section on computer disk, tape, or other machine-readable media shall retain the same on computer disk, tape, or machine-readable media.

(2) All indexes, books, programs, record layouts, manuals, formats, instructions, file descriptions, and similar materials which would enable a person readily to access and review the records that are described in § 103.33 and this section and that are input, stored, or retained on computer disk, tape, or other machine-readable media shall be retained for the period of time such records are required to be retained.

Dated: March 14, 1988.

Francis A. Keating, II,

Assistant Secretary (Enforcement).

[FR Doc. 88–7690 Filed 4–6–88; 8:45 am]

BILLING CODE 4810-25-M

DEPARTMENT OF TRANSPORTATION

Coast Guard

33 CFR Parts 100 and 110

[CGD 05-88-12]

Special Anchorage Areas; Waterside Area of Elizabeth River between Norfolk and Portsmouth, VA

AGENCY: Coast Guard, DOT.

ACTION: Notice of proposed rulemaking.

SUMMARY: This notice of proposed rulemaking proposes the establishment of special anchorage areas to be used as spectator anchorages during events when the special local regulations in 33 CFR 100.501 are in effect. 33 CFR 100.501 applies to special events held throughout the year in the Waterside area of the Elizabeth River between Norfolk and Portsmouth, Virginia.

DATES: Comments must be received May 9, 1988.

ADDRESSES: Comments should be mailed to Commander (bb), Fifth Coast Guard District, 431 Crawford Street, Portsmouth, Virginia 23704-5004. The comments and other materials referenced in this notice of proposed rulemaking will be available for inspection and copying at the above address, Room 209. Normal office hours are between 8 a.m. and 4:30 p.m., Monday through Friday, except holidays. Comments may also be hand-delivered to this address.

FOR FURTHER INFORMATION CONTACT: Billy J. Stephenson, Chief, Boating Affairs Branch, Fifth Coast Guard District, 431 Crawford Street, Portsmouth, Virginia 23705 (804)398-6204.

SUPPLEMENTARY INFORMATION: Interested persons are invited to participate in this rulemaking by submitting written views, data, or arguments. Persons submitting comments should include their names and addresses, identify this notice (CGD 05-88-12), and the specific section of the proposal to which their comments apply, and give the reasons for each comment.

The Commander, Fifth Coast Guard District, will evaluate all communications received and determine a course of final action on this proposal. The proposed regulations may be changed in light of comments received.

Drafting Information

The drafters of this notice are Billy J. Stephenson, project officer, Chief, Boating Affairs Branch, Boating Safety Division, Fifth Coast Guard District, and Commander Robert J. Reining, project attorney, Fifth Coast Guard District Legal Office.

Discussion of Proposed Regulation

This notice proposes the establishment of special anchorage areas to be used as spectator anchorages during events when the special local regulations in 33 CFR 100.501 are in effect. These special anchorage areas are needed to accommodate spectator craft during the special events held throughout the year in the Waterside area of the Elizabeth River between Norfolk and Portsmouth, Virginia.

The proposal also amends 33 CFR 100.501 to permit vessels to remain in the regulated area established by that regulation without the permission of the Patrol Commander if the vessels are anchored within one of the special anchorage areas.

These special anchorage areas will only be in effect when an event regulated by 33 CFR 100.501 is being held. At all other times vessels are prohibited from anchoring in these areas by 33 CFR 110.168.

The regulations in 33 CFR 100.501 are normally in effect during the annual Harborfest, fireworks displays through out the year, marine parades, and various boat races.

Vessels of not more than 65 feet in length, when at anchor in a special anchorage area are not required to carry or exhibit the white anchor lights required by the Inland Navigation Rules, 33 U.S.C. 2001 *et seq.*

Economic Assessment and Certification

These proposed regulations are considered to be non-major under Executive Order 12291 on Federal regulation and nonsignificant under Department of Transportation regulatory policies and procedures (44 F.R. 11034; February 26, 1979). The economic impact of this proposal is expected to be so minimal that a full regulatory evaluation is unnecessary. No commercial entities will be affected by the establishment of these limited duration special anchorage areas.

Since the impact of this proposal is expected to be minimal, the Coast Guard certifies that, if adopted, it will not have a significant economic impact on a substantial number of small entities.

List of Subjects

33 CFR Part 100

Marine safety, Navigation (water)

33 CFR Part 110

Special anchorage areas, Anchorage grounds.

Proposed Regulations

In consideration of the foregoing, the Coast Guard proposes to amend Parts 100 and 110 of Title 33, Code of Federal Regulations, as follows:

1. The authority citation for Part 100 continues to read as follows:

Authority: 33 U.S.C. 1233; 49 CFR 1.46 and 33 CFR 100.35.

2. The authority citation for Part 110 continues to read as follows:

Authority: 33 U.S.C. 471, 2030, 2035, and 2071; 49 CFR 1.46 and 33 CFR 1.05-1(g). Section 110.1a and each section listed in § 110.1a are also issued under 33 U.S.C. 1223 and 1231.

3. Section 100.501 is amended by adding paragraph (b)(5) to read as follows:

§ 100.501 Norfolk Harbor, Elizabeth River, Norfolk, Virginia and Portsmouth, Virginia

* * * * *

(b) * * *

(5) Vessels anchored in the special anchorage areas described in § 110.72aa(a) of this title may remain in the regulated area without the permission of the Patrol Commander.

* * * * *

4. Section 110.72aa is added to read as follows:

§ 110.72aa Elizabeth River Spectator Vessel Anchorage Areas, between Norfolk and Portsmouth, Virginia.

(a) Special Anchorage Areas:

(1) The waters of the Elizabeth River bounded by the shore and a line drawn between Hospital Point at latitude 36°50'50.5" North, longitude 76°18'09" West, and the tip of the channelside pier at the Holiday Inn Marina at latitude 36°50'29.5" North, longitude 76°17'52.5" West.

(2) The waters of the Elizabeth River adjacent to the Port Norfolk Reach section of the Elizabeth River, bounded by the shore and a line drawn between Hospital Point at latitude 36°50'55" North, longitude 76°18'14.5" West, and the tip of the southern most railroad pier at Port Norfolk at latitude 36°51'14.5" North, longitude 76°18'44" West.

(b) These special anchorage areas in paragraph (a) are only in effect when the regulations in § 100.501 of this title are in effect.

Dated: March 30, 1988.

A. D. Breed,

Rear Admiral, U. S. Coast Guard, Commander, Fifth Coast Guard District.

[FR Doc. 88-7659 Filed 4-6-88; 8:45 am]

BILLING CODE 4910-14-M

VOL 53 ISS 67 APR 7 1988 UMI

33 CFR Part 117

[CGD2-88-01]

Drawbridge Operation Regulations; Green River, KY

AGENCY: Coast Guard, DOT.

ACTION: Proposed Rule.

SUMMARY: The Coast Guard is considering a change to the regulations governing the operation of the Seaboard System Railroad bridges at Spottsville, Mile 8.3, Livermore, Mile 71.2, Smallhouse, Mile 79.6 and the Paducah & Louisville (formerly Illinois Central Gulf) Railroad bridge at Rockport, Mile 94.8, presently listed as located at Mile 95.8. This change would accurately describe the operation of the draw, correct the river mile number, and reflect the name change of the bridge at Rockport. It would also delete the requirement in the existing regulation that owners of drawbridges at Spottsville, Livermore, Smallhouse, and Rockport post a summary of the regulation at Green River Locks 1, 2, 3 and 4. This revision will not change the requirement in the existing regulation that advance notice be given for bridge openings when river levels affect vertical clearance at these bridges. This proposal is being made because the existing regulation does not adequately reflect the operation of the bridge at Rockport, and incorrectly publishes the river mile number for this bridge as 95.8 instead of 94.8. In addition, compliance with the existing posting requirement is not feasible, as explained below in the "Discussion of Proposed Regulation." This action should provide an adequate description of the automatic operation of the bridge at Rockport, should correct the river mile to show structure is located at Mile 94.8, should result in bridge owners complying with posting requirements contained in § 117.55, and still provide for the reasonable needs of navigation.

DATE: Comments must be received on or before May 23, 1988.

ADDRESS: Comments should be mailed to Commander (ob), Second Coast Guard District, 1430 Olive Street, St. Louis, MO 63103–2398. The comments and other materials referenced in this notice will be available for inspection and copying at 1430 Olive Street, Room 400, St. Louis, MO 63103–2398. Normal office hours are between 7:45 a.m. and 4:15 p.m., Monday through Friday, except holidays. Comments may also be hand-delivered to this address.

FOR FURTHER INFORMATION CONTACT: Roger K. Wiebusch, Bridge Administrator, Second Coast Guard District, telephone (314) 425–4607.

SUPPLEMENTARY INFORMATION: Interested persons are invited to participate in this rulemaking by submitting written views, comments, data, or arguments. Persons submitting comments should include their names and addresses, identify the bridge, and give reasons for concurrence with or any recommended change in the proposal.

The Commander, Second Coast Guard District, will evaluate all communications received and determine a course of final action on this proposal. The proposed regulations may be changed in light of comments received.

Drafting Information

The drafters of this notice are Wanda G. Renshaw, bridge administration specialist, project officer, and Commander F.P. Hopkins, project attorney.

Discussion of Proposed Regulations

The bridge over the Green River at Rockport, Kentucky, is a single leaf bascule drawspan that is operated automatically. River mile for this bridge was incorrectly published as 95.8 in the Final Rule that reorganized drawbridge operation regulations contained at 33 CFR Part 117 Final Rule was published in the **Federal Register** of Tuesday, April 24, 1984 (49 FR 17450). The Paducah & Louisville Railroad recently purchased this structure from Illinois Central Gulf Railroad. Position of the drawspan is regulated by a device on the bridge pier that determines if drawspan will open based on water elevation. When water level is at normal pool or lower, a vertical clearance of 34 feet or more is available, and bridge is in the closed-to-navigation position. Vessels requiring more than 34 feet vertical clearance must provide 8 hours advance notice for a bridge opening. When vertical clearance beneath the draw is less than 34 feet, drawspan is automatically raised to the open-to-navigation position and closed automatically for passage of rail traffic.

To ensure the safety of navigation, the former bridge owner had installed warning lights and sound devices on the bridge's superstructure to signal river traffic when drawspan is open and span's closing cycle has been activated. When drawspan is in the open position, and a train approaches the bridge, a siren sounds continuously and amber lights, mounted on the bridge and oriented upstream and downstream, begin flashing. After five minutes, the amber flashing lights change to red, and the drawspan begins to close. If a boat is under, or enters under, the drawspan while it is closing, the boat is automatically detected by an electronic device, and the drawspan stops its downward motion and returns to the open position. After the boat passes, the drawspan closes. When the drawspan is fully closed, the siren stops and channel lights flash red. After the train has passed, the draw opens fully, and the flashing red light changes to steady green. When bridge is operating automatically, rotating red lights are displayed atop the bridge.

In addition to the lights mounted on the bridge structure, a warning light located on the left bank 1,000 feet upstream of the bridge is tied into the bridge's operating circuits. If water level is high, and bridge has closed for a train, upstream light will show red. If water level is high and drawspan is in the up position, upstream light will show green. If water level is at normal pool or lower, drawspan will be in the closed-to-navigation position, and light will show green.

The existing regulation further requires that owners of bridges at Spottsville, Livermore, Smallhouse, and Rockport, each post a summary of the operating regulation at Green River Navigation Locks 1, 2, 3, and 4. Navigation Locks 3 and 4 have been closed to navigation. Lock operators report that there are no summaries of drawbridge operation regulations posted at Locks 1 and 2. The Commander, U.S. Army Engineer District, Louisville, Kentucky, advised that installation of signs or fixtures, other than those pertaining to lock operations, is prohibited at locks in the Louisville District. Therefore, consistent with the Corps of Engineers' policy and procedures for operation and maintenance of Green River navigation locks, the posting requirement in the existing regulation would be deleted, and the bridge owners would be governed by the posting requirements contained in 33 CFR 117.55.

Economic Assessment and Certification

These proposed regulations are considered to be non-major under Executive Order 12291 on Federal Regulation and non-significant under the Department of Transportation regulatory policies and procedures (44 FR 11034; February 26, 1979).

The economic impact of this proposal is expected to be so minimal that a full regulatory evaluation is unnecessary. This proposal will not change the operation of the bridges for rail or river traffic. It merely describes the operation of warning signals and devices in conjunction with the automatic

operation of the drawspan at Rockport. It also deletes the requirement that the bridge owners each post summaries of the operation regulation at Green River Locks 1, 2, 3 and 4. Since the economic impact of this proposal is expected to be minimal, the Coast Guard certifies that, if adopted, it will not have a significant economic impact on a substantial number of small entities.

List of Subjects in 33 CFR Part 117

Bridges.

Proposed Regulations

In consideration of the foregoing, the Coast Guard proposes to amend Part 117 of Title 33, Code of Federal Regulations as follows:

PART 117—DRAWBRIDGE OPERATION REGULATIONS

1. The authority citation for Part 117 continues to read as follows:

Authority: 33 U.S.C. 499; 49 CFR 1.46; 33 CFR 1.05-1(g).

2. Section 117.415 is revised to read as follows:

§ 117.415 Green River.

(a) The draw of the Seaboard System railroad bridge, Mile 8.3 at Spottsville, shall open on signal when there is 40 feet or less of vertical clearance beneath the draw. When vertical clearance is more than 40 feet, at least four hours notice shall be given. The owners of, or agencies controlling, the bridge shall arrange for ready telephone communication with the authorized representative at any time from the bridge or its immediate vicinity.

(b) The draws of the Seaboard System railroad bridges, Miles 71.2 and 79.6 at Livermore and Smallhouse, are normally maintained in the fully open position and a vessel may pass through the draw without further signals. When the draws are in the closed position, they shall open on signal when there is 40 feet or less of vertical clearance. When the vertical clearance is more than 40 feet, at least four hours notice shall be given. During this period, if the drawtender is informed at the time the vessel passes through the draw that the vessel will return within four hours, the drawtender shall remain on duty until the vessel returns but is not required to remain for longer than four hours. The owners of, or agencies controlling, the bridge shall arrange for ready telephone communication with the authorized representative at any time from the bridge or its immediate vicinity.

(c) The Paducah and Louisville railroad bridge, Mile 94.8 at Rockport, is operated as follows:

(1) When river stage permits a vertical clearance of 34 feet or more under the closed draw, as determined from gauges attached to the bridge, drawspan is in the closed-to-navigation position. Draw will open on signal for vessels requiring greater clearance if at least eight hours advance notice is given.

(2) When vertical clearance under the closed draw is less than 34 feet, drawspan is automatically raised to and maintained in the open to navigation position and closes automatically for passage of rail traffic. When drawspan is in the "open" position, and a train approaches the bridge, a siren sounds continuously and amber lights, mounted on the bridge and oriented upstream and downstream, begin flashing. After five minutes the amber flashing lights change to red, and the drawspan begins to close. If a boat is under, or enters under, the drawspan while it is closing, the boat is automatically detected by an electronic device, and the drawspan stops its downward motion and returns to the open position. After the boat passes, the drawspan closes. When the drawspan is fully closed, the siren stops and channel lights flash red. After the train has passed, the draw opens fully, and the flashing red light changes to steady green. When the bridge is being maintained in the open position and automatically closes for trains, rotating red lights are displayed atop the bridge.

(3) A warning light located on the left bank 1,000 feet upstream of the bridge is tied into the bridge's operating circuits. If water level is high, and bridge has closed for a train, upstream light will show red. If water level is high and bridge is in the open position, upstream light will show green. If water level is at normal pool or lower, bridge will be in the closed position and will also show green.

Date: March 24, 1988.

R. T. Nelson,

Rear Admiral (Lower Half) U.S. Coast Guard, Commander, Second Coast Guard District.

[FR Doc. 88-7655 Filed 4-6-88; 8:45 am]

BILLING CODE 4910-14-M

---

33 CFR Part 117

[CGD 05-88-13]

Drawbridge Operations Regulations; Berkley Bridge, Eastern Branch of the Elizabeth River, Norfolk, VA

AGENCY: Coast Guard, DOT.

ACTION: Notice of proposed rulemaking.

SUMMARY: The Coast Guard is considering a proposal to restrict openings of the Berkley drawbridge during Harborfest 1988, which will be held in Norfolk, Virginia, on June 3, 4, and 5, 1988, and other special marine events that are regulated under 33 CFR 100.501.

DATE: Comments must be received May 9, 1988.

ADDRESSES: Comments should be mailed to Commander (oan), Fifth Coast Guard District, 431 Crawford Street, Portsmouth, Virginia 23704-5004. The comments and other materials referenced in this notice of proposed rulemaking will be available for inspection and copying at the above address, Room 507. Normal office hours are between 8 a.m. and 4:30 p.m., Monday through Friday, except holidays. Comments may also be hand-delivered to this address.

FOR FURTHER INFORMATION CONTACT: Ann B. Deaton, Bridge Administrator, at the above address, or telephone number (804) 398-6222.

SUPPLEMENTARY INFORMATION: Interested persons are invited to participate in this rulemaking by submitting written views, comments, data, or arguments. Persons submitting comments should include their names and addresses, identify this notice (CGD 05-88-13), and give reasons for concurrence with or any recommended change in the proposal. The Commander, Fifth Coast Guard District, will evaluate all communications received and determine a course of final action on this proposal. The proposed regulations may be changed in light of comments received.

Drafting Information

The drafters of this notice are Billy J. Stephenson, project officer, Boating Affairs Branch, Boating Safety Division, Fifth Coast Guard District, and CDR Robert J. Reining, project attorney, Fifth Coast Guard District Legal Staff.

Discussion of Proposed Regulations

The Coast Guard is considering a proposal to restrict openings of the Berkley drawbridge during Harborfest 1988, which will be held in Norfolk, Virginia, on June 3, 4, and 5, 1988, and other special marine events that are regulated under 33 CFR 100.501. The proposal will enhance the Patrol Commander's authority to restrict vessel traffic by limiting access to the regulated area from the Eastern Branch of the Elizabeth River. 33 CFR 100.501 authorizes the Patrol Commander to control vessel traffic in the Waterside area of the Elizabeth River. (The Waterside area of the Elizabeth River includes the waters between Town Point

Park, Norfolk, Virginia; the mouth of the Eastern Branch of the Elizabeth River; and Hospital Point, Portsmouth, Virginia.) The Berkley bridge in the closed position is an effective barrier to larger vessels attempting to enter this area from the Eastern Branch.

The proposal will also help reduce traffic congestion before, during, and after the events by reducing the number of possible bridge openings during the events and within one hour of the start and ending of the events.

Economic Assessment and Certification

The proposed regulations are considered to be non-major under Executive Order 12291 on Federal regulations and non-significant under the Department of Transportation's regulatory policies and procedures (44 FR 11034; February 26, 1979). The economic impact of this proposal is expected to be so minimal that a full regulatory evaluation is unnecessary. The proposed regulation will not affect commercial navigation or industries on the Eastern Branch of the Elizabeth River, since their access between the Elizabeth River and its Eastern Branch will be regulated by the Coast Guard Patrol Commander under 33 CFR 100.501. Generally, commercial vessels will be allowed to pass through the bridge between scheduled events, except at times of peak traffic flows. Since the economic impact of this proposal is expected to be so minimal, the Coast Guard certifies that, if adopted, it will not have a significant economic impact on a substantial number of small entities.

List of Subjects in 33 CFR Part 117

Bridges.

Proposed Regulations

In consideration of the foregoing, the Coast Guard proposes to amend Part 117 of Title 33, Code of Federal Regulations as follows:

PART 117—DRAWBRIDGE OPERATION REGULATIONS

1. However, the authority citation for Part 117 continues to read as follows:

Authority: 33 U.S.C. 499, 49 CFR 1.46; 33 CFR 1.05-1(g).

2. Section 117.1007 is amended by adding paragraph (c) to read as follows:

§ 117.1007 Elizabeth River—Eastern Branch

* * * * *

(c) The draw of the Berkley bridge, mile 0.4 at Norfolk, may not open during or within one hour of an event regulated under § 100.501 of this title unless directed to do so by the Patrol Commander designated under § 100.501.

Dated: March 22, 1988.

A.D. Breed,

Rear Admiral, U. S. Coast Guard, Commander, Fifth Coast Guard District.

[FR Doc. 88-7660 Filed 4-6-88; 8:45 am]

BILLING CODE 4910-14-M

GENERAL SERVICES ADMINISTRATION

41 CFR Part 201-33

Reutilization of Excess and Exchange/Sale Automatic Data Processing Equipment With an Original Acquisition Cost Below $1,000,000

AGENCY: Information Resources Management Service, GSA.

ACTION: Notice of proposed rulemaking.

SUMMARY: This regulation delegates to Federal agencies authority and responsibility for the screening of excess and exchange/sale automatic data processing equipment (ADPE) with an original acquisition cost (OAC) below $1,000,000 on a component basis. A recent analysis of the ADPE reported to GSA for interagency reuse during the last two years revealed that there is a minimal amount of savings to be realized for the reuse of ADPE with an OAC under $1,000,000. Additionally, these savings are further reduced when the costs of nationwide interagency screening are considered. Since all ADPE under $1,000,000 OAC will be screened by the agencies, excess auxiliary or accessorial ADPE with an OAC of $1,500 or less will no longer be reported to the Federal Supply Service (FSS) for interagency screening. Additionally the regulation implements the standard reports numbering system that is essential to electronic reporting.

DATE: Comments are due May 9, 1988.

ADDRESS: Comments should be submitted to the General Services Administration (Project No. 88-05A) Washington, DC 20405.

FOR FURTHER INFORMATION CONTACT: Phillip R. Patton, Regulations Branch, (KMPR), Office of Information Resources Management Policy, (202) 566-0194, or FTS 566-0194. The full text of the proposed rule is available upon telephone request.

SUPPLEMENTARY INFORMATION: (1) The purpose of this amendment is to simplify and streamline the reuse and disposal of excess and exchange/sale ADPE.

(2) Explanation of the changes being made by this issuance are shown below:

In Part 201-33, the following changes will be made.

(a) Wherever the old address, "General Services Administration (KHE), Washington, DC 20405," appears in the part, it will be replaced with the current address, "General Services Administration (WKHE), 4040 North Fairfax Drive, Suite 900, Arlington, VA 22203."

(b) Paragraph (b) of § 201-33.001 will be amended by removing the provision that provides for the separate reporting of auxiliary and accessorial ADPE with an original acquisition cost (OAC) of $1,500 or less. Since all ADPE with an OAC under $1,000,000 will be screened for reuse by agencies and it is not readily apparent what is auxiliary and accessorial ADPE, separate reporting is no longer efficient and effective and will be discontinued.

(c) Section 201-33.002 will be amended by adding a provision requiring agencies to implement screening procedures for excess and exchange/sale ADPE with an original acquisition cost (OAC) under $1,000,000 on a component basis.

(d) Section 201-33.003 will be amended by removing the reference to excess auxiliary and accessorial ADPE with an OAC of $1,500 or less. It will also provide that the availability of ADPE with an OAC under $1,000,000 shall be determined by following agency procedures.

(e) Section 201-33.003-2 will be amended and revised to provide that the availability of ADPE for reuse with an OAC below $1,000,000 shall be determined by following agency procedures. Reference to a sole source finding and determination will also be removed.

(f) Section 201-33.006 will be amended by adding a provision to provide that the holding agency and the requesting agency shall deal directly with each other for the reuse of ADPE with an OAC below $1,000,000. Specifically the SF 122 for transfer of excess and exchange/sale ADPE shall be submitted directly from the requesting agency to the holding agency for transfer approval. It will also remove the reference to excess auxiliary and accessorial ADPE with an OAC of $1,500 or less.

(g) Section 201-33.008 will be recaptioned and revised to require agencies to report ADPE to the Federal Supply Service for surplus disposition in accordance with Subchapter H of the FPMR. The section will continue to require agencies to hold ADPE pending disposition.

(h) Section 201-33.011 will be revised to remove the reference to excess

auxiliary and accessorial ADPE with an OAC of $1,500 or less. It will also establish the new standard reports numbering system that shall be followed in the submission of SF 120s.

(3) The General Services Administration has determined that this rule is not a major rule for the purposes of Executive Order 12291 of February 17, 1981. GSA actions are based on adequate information concerning the need for, and the consequences of the rule. The rule is written to ensure maximum benefits to Federal agencies. This is a Governmentwide regulation that will have little or no net cost effect on society. It is therefore certified this rule will not have a significant impact on a substantial number of small entities under the Regulatory Flexibility Act (5 U.S.C. 601 et seq.).

List of Subjects in 41 CFR Part 201-33

Computer technology, Government property management, Information resources activities.

Dated: January 21, 1988.

Fred L. Sims,

Acting Deputy Commissioner for Federal Information Resources Management.

[FR Doc. 88-7610 Filed 4-6-88; 8:45 am]

BILLING CODE 6820-BR-M

ENVIRONMENTAL PROTECTION AGENCY

48 CFR Parts 1505 and 1506

[FRL-3356-9]

Acquisition Regulation Concerning Expert Services

AGENCY: Environmental Protection Agency.

ACTION: Proposed rule.

SUMMARY: This document proposes a rule change regarding the Environmental Protection Agency's (EPA) procurement procedures when contracting for expert services. The Superfund Amendments and Reauthorization Act of 1986 authorizes the use of other than competitive procedures in acquiring the services of experts. The expert services would be used in preparing or prosecuting a civil or criminal action under the Act. The intended effect of this proposed rule is to implement the provisions of the Act by an amendment to the EPA Acquisition Regulation.

DATES: Comments must be submitted on or before May 9, 1988.

FOR FURTHER INFORMATION CONTACT: Grafton Young, Environmental Protection Agency, Procurement and Contracts Management Division (PM-214F), 410 M Street, SW., Washington, DC 20460, Telephone 202/475-7204.

SUPPLEMENTARY INFORMATION:

A. Background

The Federal Acquisition Regulation (FAR) Subpart 6.1 requires full and open competition, with certain limited exceptions, in soliciting offers and awarding Government contracts.

The Superfund Amendments and Reauthorization Act of 1986 (SARA) section 109(e) authorizes the use of other than competitive procedures, i.e. other than full and open competition, in procuring the services of experts for use in preparing or prosecuting a civil or criminal action under SARA. Section 109(e) reads as follows:

(e) PROCUREMENT PROCEDURES—Notwithstanding any other provision of law, any executive agency may use competitive procedures or procedures other than competitive procedures to procure the services of experts for use in preparing or prosecuting a civil or criminal action under this Act, whether or not the expert is expected to testify at trial. The executive agency need not provide any written justification for the use of procedures other than competitive procedures when procuring such expert services under this Act and need not furnish for publication in the Commerce Business Daily or otherwise any notice of solicitation or synopsis with respect to such procurement.

The purpose of this proposed rule is to recognize the provisions of SARA and provide procedures to be employed when the SARA exception for other than full and open competition applies.

B. Executive Order 12291

OMB Bulletin No. 85-7, dated December 14, 1984, establishes the requirements for OMB review of agency procurement regulations. This regulation does not fall within any of the categories cited in the Bulletin requiring OMB review.

C. Regulatory Flexibility Act

The EPA certifies that this rule does not have a significant impact on a substantial number of small entities. The rule permits the EPA to use other than full and open competition in acquiring the services of experts in preparing or prosecuting a civil or criminal action under the authority of the Superfund Amendments and Reauthorization Act of 1986 (SARA). The method of contracting for such services must necessarily be the same for both small and large entities.

List of Subjects in 48 CFR Parts 1505 and 1506

Government procurement, Publicizing contract actions, Competition requirements.

For the reasons set out in the preamble, Chapter 15 of Title 48, Code of Federal Regulations is proposed to be amended as set forth below:

The authority citation for 48 CFR Parts 1505 and 1506 continues to read as follows:

Authority: Section 205(c), 63 Stat. 390, as amended, 40 U.S.C. 486(c).

PART 1505—[AMENDED]

1. Section 1505.202 is revised to read as follows:

1505.202 Exceptions.

(a) The contracting officer need not submit the notice required by FAR 5.201 when the contracting officer determines in writing that the contract is for the services of experts for use in preparing or prosecuting a civil or criminal action under the Superfund Amendments and Reauthorization Act of 1986.

(b) The Head of the Contracting Activity (HCA) is delegated the authority to make the written determination in FAR 5.202(b).

PART 1506—[AMENDED]

2. Subpart 1506.3 is amended by adding section 1506.302-5 to read as follows:

1506.302-5 Authorized or required by statute.

(a) *Authority.* Section 109(e) of the Superfund Amendments and Reauthorization Act of 1986 (SARA) is cited as authority.

(b) *Application.* (1) The contracting officer may use other than full and open competition to acquire the services of experts for use in preparing or prosecuting a civil or criminal action under SARA whether or not the expert is expected to testify at trial. The contracting officer need not prepare the written justification under FAR 6.303 when acquiring expert services under the authority of section 109(e) of SARA. The contracting officer shall document the official contract file when using this authority.

(2) The contracting officer shall give notice to the Agency's Competition Advocate whenever a contract award is made using other than full and open competition under this authority. The notice shall contain a copy of the contract and the summary of negotiations.

BEST COPY AVAILABLE

Date: March 16, 1988.

John C. Chamberlin,

Director, Office of Administration.

[FR Doc. 88-7638 Filed 4-6-88; 8:45 am]

BILLING CODE 8580-50-M

NATIONAL TRANSPORTATION SAFETY BOARD

49 CFR Part 840

Rules Pertaining to Notification of Railroad Accidents; Proposed Amendment

AGENCY: National Transportation Safety Board.

ACTION: Proposed rule.

SUMMARY: The purpose of the proposed rule is to amend § 840.3 by reducing the time limit for notification of accidents to 4 hours in those instances where a report is required to be made based on a property damage estimate and to 2 hours for all other required reports. This rule would afford Board personnel access to the accident site before initiation of clean-up efforts.

DATES: Interested parties are invited to submit written comments on or before June 6, 1988.

ADDRESSES: Comments should be sent in triplicate to the General Counsel, National Transportation Safety Board, 800 Independence Avenue SW., Washington, DC 20594. Late filed comments will be considered to the extent practicable.

FOR FURTHER INFORMATION CONTACT: Mr. William G. Zielinski, Chief, Railroad Accident Division, 800 Independence Avenue SW., Washington, DC 20594 ((202) 382-6840).

SUPPLEMENTARY INFORMATION: Currently, § 840.3(a) requires notification to the National Transportation Safety Board of certain railroad and rail rapid accidents at the earliest practical time, but in no event later than 6 hours after their occurrence. In order to provide a convenient mechanism for complying with this rule, a toll-free telephone number ((800) 424-0201) is maintained, as prescribed by § 840.3(c), to accept such accident reports. Notwithstanding the 6-hour time limit which has been in effect since 1980, as well as the availability of telephonic reporting, it appears that there are still numerous instances where, for a variety of reasons, reports required to be made pursuant to § 840.3(a) have not been made in a sufficiently expeditious manner to afford Board personnel access to the accident site before the initiation of clean-up efforts. In order to remedy this situation, the Board proposes to amend § 840.3 to require notification within 2 hours after the occurrence of an accident, except in those cases requiring a preliminary monetary estimate of damages. In the latter instances, a 4-hour limit would be placed on the notification time.

Section 840.3(a)(3) presently requires notification of all railroad accidents involving evacuation of a passenger train or at least $25,000 damage thereto. In order to clarify the distinction between the proposed general reporting time limit of 2 hours and the 4-hour limit which would be applicable for accident reports based solely on property damage estimates, the evacuation reporting criterion has been removed from subparagraph (3) and placed in a new subparagraph (4). Previous subparagraphs (4) and (5) have consequently been renumbered as subparagraphs (5) and (6).

Additionally, although virtually all railroad trains and facilities are at present equipped for radio communication, the Board recognizes that in certain extraordinary circumstances, communication from the site of an accident immediately after its occurrence may be problematical. This could be the case in accidents occurring in remote areas where radio transmission is ineffective. In such instances the reporting time limits prescribed in section 840.3(a) would be computed from the time railroad personnel, other than those at the accident site at the time of its occurrence, have received notice thereof. This provision is contained in paragraph (d) of the proposed revised regulation.

Under the criteria of the Regulatory Flexibility Act, this proposed rule, if promulgated, will not have a significant economic impact on a substantial number of small entities because the rule will only require somewhat more expeditious reporting but will not result in any increase in the number of incidents for which notification must be made, and the costs of complying with the rule will not be substantial.

List of Subjects in 49 CFR Part 840

Administrative practice and procedure, Investigations, Hazardous materials transportation, Railroad safety, Reporting and recordkeeping requirements.

PART 840—[AMENDED]

Accordingly, the National Transportation Safety Board proposes to amend Part 840, Chapter VIII, Title 49, Code of Federal Regulations as follows:

1. The authority citation for Part 840 continues to read as follows:

Authority: Sec. 304(a)(1)(C), Independent Safety Board Act of 1984, as amended (49 U.S.C. 1903).

2. Section 840.3 is amended by revising paragraph (a) and adding new paragraph (d) to read as follows:

§ 840.3 Notification of railroad accidents.

(a) A railroad shall notify the Board in a manner prescribed by paragraph (c) of this section at the earliest practicable time after the occurrence of an accident which results in:

(1) A passenger or employee fatality or serious injury to two or more crewmembers or passengers requiring admission to a hospital; or

(2) Damage (based on a preliminary gross estimate) of $150,000 or more for repairs, or the current replacement cost, to railroad and nonrailroad property; or

(3) Damage of $25,000 or more to a passenger train and nonrailroad property; or

(4) The evacuation of a passenger train; or

(5) Damage to a tank car or container resulting in release of hazardous materials or involving evacuation of the general public; or

(6) A fatality at a grade crossing.

Except as provided in paragraph (d) of this section, the notification required by this paragraph shall be made no later than 2 hours after an accident described in paragraphs (a)(1),(4),(5), and (6) of this section or 4 hours after an accident described in paragraphs (a)(2) and (3) of this section.

* * * * *

(d) Where an accident for which notification is required by paragraph (a) of this section occurs in a remote area, the time limits set forth in that paragraph shall commence from the time the first railroad employee who was not at the accident site at the time of its occurrence has received notice thereof.

Signed at Washington, DC on March 31, 1988.

Jim Burnett, Jr.,

Chairman.

[FR Doc. 88-7615 Filed 4-6-88; 8:45 am]

BILLING CODE 7533-01-M

Notices

Federal Register
Vol. 53, No. 67
Thursday, April 7, 1988

This section of the FEDERAL REGISTER contains documents other than rules or proposed rules that are applicable to the public. Notices of hearings and investigations, committee meetings, agency decisions and rulings, delegations of authority, filing of petitions and applications and agency statements of organization and functions are examples of documents appearing in this section.

DEPARTMENT OF AGRICULTURE

Forms Under Review by Office of Management and Budget

April 1, 1988.

The Department of Agriculture has submitted to OMB for review the following proposals for the collection of information under the provisions of the Paperwork Reduction Act (44 U.S.C. Chapter 35) since the last list was published. This list is grouped into new proposals, revisions, extensions, or reinstatements. Each entry contains the folllowing information:

(1) Agency proposing the information collection; (2) Title of the information collection; (3) Form number(s), if applicable; (4) How often the information is requested; (5) Who will be required or asked to report; (6) An estimate of the number of responses; (7) An estimate of the total number of hours needed to provide the information; (8) An indication of whether section 3504(h) of Pub. L. 96-511 applies; (9) Name and telephone number of the agency contact person.

Questions about the items in the listing should be directed to the agency person named at the end of each entry. Copies of the proposed forms and supporting documents may be obtained from: Department Clearance Officer, USDA, OIRM, Room 404-W Admin. Bldg., Washington, DC 20250, (202) 447-2118.

Comments on any of the items listed should be submitted directly to: Office of Information and Regulatory Affairs, Office of Management and Budget, Washington, DC 20503, Attn: Desk Officer for USDA.

If you anticipate commenting on a submission but find that preparation time will prevent you from doing so promptly, you should advise the OMB Desk Officer of your intent as early as possible.

Revision

• Agricultural Stabilization and Conservation Service
Payer's Request for Identifying Number
On occasion
Individuals or households; 3,000 responses; 250 hours; not applicable under 3504(h)
Karl V. Choice (202) 447-8782

• Farmers Home Administration
7 CFR 1951-E, Servicing of Community Programs Loans and Grants
451-33
On occasion
State or local governments; Non-profit institutions; 446 responses; 248 hours; not applicable under 3504(h)
Jack Holston (202) 382-9736

Reinstatement

• Food and Nutrition Service
Sponsor Application for Participation and Site Information
Form FNS 81; Form FNS 81-1
Annually
State or local governments; Federal agencies or employees; Non-profit institutions; 18,910 responses; 62,970 hours; not applicable under 3504(h)
Albert V. Perna (703) 756-3600

New

• Farmers Home Administration
7 CFR 1920-C, Supervised Bank Accounts
FmHA 1902-7
Businesses or other for-profit; Small businesses or organizations; 50 responses; 63 hours; not applicable under 3504(h)
Jack Holston (202) 382-9736

Donald E. Hulcher,
Acting Departmental Clearance Officer.

[FR Doc. 88-7623 Filed 4-6-88; 8:45 am]

BILLING CODE 3410-01-M

Animal and Plant Health Inspection Service

[Docket No. 87-189]

Availability of Environmental Assessment and Finding of No Significant Impact Relative to Issuance of a Permit To Field Test Genetically Engineered Herbicide Tolerant Tomato Plants

AGENCY: Animal and Plant Health Inspection Service, USDA.

ACTION: Notice.

SUMMARY: This document provides notice that an environmental assessment and finding of no significant impact has been prepared by the Animal and Plant Health Inspection Service relative to the issuance of a permit to E.I. du Pont de Nemours & Co., Inc., to allow the field testing of genetically engineered tomato plants, designed to be tolerant to sulfonylurea herbicides. The assessment provides a basis for the conclusion that the field testing of these genetically engineered tomato plants does not present a risk of plant pest introduction or dissemenation and also will not have any significant impact on the quality of the human environment. Based upon this finding of no significant impact, the Animal and Plant Health Inspection Service has determined that an environmental impact statement need not be prepared.

ADDRESS: Copies of the environmental assessment and finding of no significant impact are available for public inspection at the Biotechnology and Environmental Coordination Staff, Animal and Plant Health Inspection Service, U.S. Department of Agriculture, Room 406, Federal Building, 6505 Belcrest Road, Hyattsville, MD 20782.

FOR FURTHER INFORMATION CONTACT: Dr. Quentin B. Kubicek, Staff Biotechnologist, Biological Assessment and Support Staff, Biotechnology Permit Unit, Animal and Plant Health Inspection Service, U.S. Department of Agriculture, Room 625A, Federal Building, 6505 Belcrest Road, Hyattsville, MD 20782, (301) 436-5055. For copies of the environmental assessment call Ms. Mary Petrie at Area Code (301) 436-7472, or write her at this same address. The environmental assessment should be requested under accession number 87-331-01.

SUPPLEMENTARY INFORMATION:

Background

On June 16, 1987, the Animal and Plant Health Inspection Service (APHIS) published a final rule in the Federal Register (52 FR 22898-22915) which established a new Part 340 in Title 7 of the Code of Federal Regulations (7 CFR 340) entitled, "Introduction of Organisms and Products Altered or Produced Through Genetic Engineering Which Are Plant Pests or Which There Is Reason to Believe Are Plant Pests" (hereinafter "the rule"). The rule regulates the

introduction (importation, interstate movement, and release into the environment) of genetically engineered organisms and products which are plant pests or which there is reason to believe are plant pests (regulated articles). The rule sets forth procedures for obtaining a permit for the release into the environment of a regulated article and for obtaining limited permits for the importation or interstate movment of a regulated article. A permit must be obtained before a regulated article can be introduced in the United States.

APHIS has stated that it would prepare environmental assessments and, where necessary, environmental impact statements prior to issuing a permit for the release into the environment of a regulated article (see 52 FR 22906).

E.I. du Pont de Nemours & Co., Inc., of Wilmington, Delaware, has submitted an application for a permit for release into the environment of genetically engineered tomato plants that are designed to be toerant to sulfonylurea herbicides. In the course of reviewing the permit application, APHIS assessed the impact to the environment of releasing the tomato plants under the conditions described in the E.I. du Pont de Nemours & Co., Inc., application. APHIS concluded that the field testing will not present a risk of plant pest introduction or dissemination and will also not have any significant impact on the quality of the human environment.

The environmental assessment and finding of no significant impact which is based on data submitted by E.I. du Pont de Nemours & Co., Inc., as well as a review of other relevant literature, provides the public with documentation of APHIS' review and analysis of the environmental impacts associated with conducting the field testing.

The facts supporting APHIS' finding of no significant impact are summarized below and are contained in the environmental assessment.

1. A gene for herbicide tolerance has been inserted into a tomato chromosome. In nature, genetic material contained in a chromosome can only be transferred to other sexually compatible plants by cross-pollination. In this field test the introduced gene cannot spread to any other sexually compatible plant by cross-pollination, because the field test plot is located a sufficient distance from any sexually compatible plant with which these experimental tomato plants could cross-pollinate.

2. Neither the herbicide tolerance gene itself, nor its gene product, confers on the tomato plants any plant pest characteristic. Traits such as weediness are polygenic and cannot be conferred by adding a single herbicide tolerance gene. These experimental tomato plants remain sensitive to a wide range of other herbicides which could be used to kill these plants.

3. The tobacco cultivar from which the herbicide tolerance gene was obtained is not a plant pest.

4. The herbicide tolerance gene does not provide the transformed tomato plants with any measurable selective advantage over nontransformed tomato plants in its ability to be disseminated or to become established in the environment.

5. The vector used to transfer the herbicide tolerance gene to tomato plants has been evaluated for its use in this specific experiment and does not pose a plant pest risk in this experiment. The vector, although derived from a plasmid with known plant pathogenic potential, has been disarmed; that is, genes that are necessary for tumorogenicity have been removed from the vector. The vector has been tested and shown to be not pathogenic to susceptible plants.

6. The vector agent, the phytopathogenic baterium which was used to deliver the vector DNA with the herbicide tolerance gene into the tomato cells, has been shown to be killed and no longer associated with the regenerated transformed tomato plants.

7. Horizontal movement of the introduced gene is not possible. The vector acts by delivering and inserting the gene into the tomato genome (i.e., Chromosomal DNA). The vector does not survive in or on a transformed plant. No mechanism is known to exist in nature to move an inserted gene from the chromosome of a transformed plant to any other organism.

8. Sulfonylurea herbicides are a new class of herbicides noted for their high herbicidal activity at very low use rates, excellent crop selectivity, and low mammalian toxicity.

9. The size of the enclosed field test trial plot is small (50 feet wide by 72 feet long). The plot has good physical security. Physical isolation will be ensured and incursion by large animals and humans will be prevented by a chain-link fence on three sides of the farm and the Bradenton River on the fourth side. Security guards are also on site.

The environmental assessment and finding of no significant impact has been prepared in accordance with (1) The National Environmental Policy Act of 1969 (NEPA) (42 U.S.C. 4331*et seq.*); (2) Regulations of the Council on Environmental Quality for Implementing the Procedural Provisions of NEPA (Title 40, Code of Federal Regulations (CFR) Parts 1500–1508); (3) USDA regulations implementing NEPA (7 CFR Part 1b); and (4) APHIS guidelines implementing NEPA (44 FR 50381–50384 and 44 FR 51272–71274).

Done at Washington, DC, this 4th day of April, 1988.

James W. Glosser,

Acting Administrator, Animal and Plant Health Inspection Service.

[FR Doc. 88-7614 Filed 4-6-88; 8:45 am]

BILLING CODE 3410-34-M

Forest Service

Black Diamond Mine Project, Angeles National Forest, Los Angeles County, CA; Availability of Draft Environmental Impact Statement

The Department of Agriculture, Forest Service, Angeles National Forest has prepared a Draft Environmental Impact Report for the Black Diamond Mine, which would permit the establishment of a mining operation, in the Sand Canyon Area, approximately 45 miles north of the city of Los Angeles, CA.

United General's plan of operation was submitted pursuant to Forest Service locatable mineral regulations 36 CFR Part 228, Subpart A.

The Environmental Impact Statement considered five (5) alternatives for the project, including a benchmark of "No Action", for analysis.

Government Agencies and the public who may be interested in or affected by the proposal are invited to participate in a public meeting:

Date: May 24, 1988.

Time and Location: 7–10 p.m. Sulphur Springs School, 16628 W. Lost Canyon Rd., Canyon Country, CA 91351.

Type of Meeting: Open to the public. Persons may participate in the meeting as time and space permit.

Comments: The public may file written comments before or after the meeting with the contact person below.

The Draft Environmental Impact Statement will be available at the following locations:

Supervisors Office, Angeles National Forest, 701 N. Santa Anita Ave., Arcadia, CA 91006.

Tujunga Ranger District Office, 12371 N. Little Tujunga Canyon Road, San Fernando, CA 91342.

Questions concerning the proposed action or the Draft Environmental Impact Statement should be directed to Richard Borden, Special Projects Coordinator, Angeles National Forest, telephone (818) 574-5255.

Written comments or input to the Draft Environmental Impact Report should be sent to the Forest Supervisor,

Angeles National Forest, Supervisor's Office, 701 N. Santa Anita Ave., Arcadia, CA 91006.George A. Roby, Forest Supervisor, Angeles National Forest, Arcadia, CA is the responsible official.

George A. Roby,

Forest Supervisor.

Date: March 25, 1988.

[FR Doc. 88-7624 Filed 4-6-88; 8:45 am]

BILLING CODE 3410-11-M

Threemile Timber Sale, Colville National Forest, WA; Cancellation of Environmental Impact Statement

AGENCY: Forest Service, USDA.

ACTION: Notice of Environmental Impact Statement cancellation.

SUMMARY: The Department of Agriculture, Forest Service, has withdrawn its intent to prepare an environmental impact statement (EIS) for the Threemile Timber Sale on the Sullivan Lake Ranger District of the Colville National Forest. As a result of on going planning and environmental analyses for the Forest Land and Resource Management Plan, it was determined that the issues and concerns raised for the Threemile Timber Sale would be more appropriately considered and addressed in the Environmental Impact Statement for the Colville National Forest Land and Resource Management Plan.

The Notice of Intent, published in the **Federal Register** of September 27, 1985, is hereby rescinded (50 FR 39156).

FOR FURTHER INFORMATION CONTACT: Kim Asman, Sale Planner, Sullivan Lake Ranger District, Metaline Falls, Washington 99153 (telephone (509) 446-2681).

Date: March 17, 1988.

Edward L. Shultz,

Forest Supervisor.

[FR Doc. 88-7590 Filed 4-6-88; 8:45 am]

BILLING CODE 3410-11-M

Leola-Sullivan Timber Sale, Metaline Falls, WA; Cancellation of Environmental Impact Statement

AGENCY: Forest Service, USDA.

ACTION: Notice of Environmental Impact Statement cancellation.

SUMMARY: The Department of Agriculture, Forest Service, has withdrawn its intent to prepare an environmental impact statement (EIS) for the Leon-Sullivan Timber Sale on the Sullivan Lake Ranger District of the Colville National Forest: As a result of on going planning and environmental analyses for the Forest Land and Resource Management Plan, it was determined that the issues and concerns raised for the Leola-Sullivan Timber Sale would be more appropriately considered and addressed in the Environmental Impact Statement for the Colville National Forest Land and Resource Management Plan.

The Notice of Intent, published in the **Federal Register** of September 27, 1985, is hereby rescinded (50 FR 39156).

FOR FURTHER INFORMATION CONTACT: Kim Asman, Sale Planner, Sullivan Lake Ranger District, Metaline Falls, Washington 99153 (telephone (509) 446-2681).

Date: March 17, 1988.

Edward L. Schultz,

Forest Supervisor.

[FR Doc. 88-7591 Filed 4-6-88; 8:45 am]

BILLING CODE 3410-11-M

Cuddy Mountain Roadless Area, Payette National Forest, ID; Intent to Prepare Environmental Impact Statement

AGENCY: Forest Service, USDA.

ACTION: Notice of intent to prepare an Environmental Impact Statement.

SUMMARY: The Department of Agriculture, Forest Service will prepare an environmental impact statement for proposed development within the Cuddy Mountain Roadless area which is within the Weiser and Council Ranger Districts, Payette National Forest, Adams County, Idaho. Development is the established direction in the preferred alternative of the Payette Forest Plan. Development alternatives were reviewed by the public earlier in the Payette Draft Forest Plan.

A range of alternatives for this area will be considered. One of these will be nondevelopment of the site. Other alternatives will consider development designs for timber production, wildlife and fishery habitat activities, and recreation opportunities.

Federal, State, and local agencies; potential users of the area; and other individuals or organizations who may be interested in, or affected by, the decision will be invited to participate in the scoping process. This process will include:

1. Identification of potential issues.

2. Identification of issues to be analyzed in depth.

3. Elimination of insignificant issues or those which have been covered by a previous environmental review.

4. Determination of potential cooperating agencies and assignment of responsibilities.

The Fish and Wildlife Service, Department of the Interior, will be invited to participate as a cooperating agency to evaulate potential impacts on threatened and endangered species habitat if any such species are found to exist in the area.

Philip Jahn, Council District Ranger, and Harold Laird, Weiser District Ranger, are the responsible officials.

The anlaysis is expected to take about seven months. The draft environmental impact statement is expected to be filed with the Environmental Protection Agency and to be available for review by June, 1988. At that time EPA will publish a notice of availability of the DEIS in the **Federal Register.** The comment period on the draft environmental impact statement will be 45 days from the date the EPA notice of availability appears in the **Federal Register.** The final environmental impact statement is scheduled to be completed by September, 1988.

DATE: Written comments and suggestions concerning the cope of the analysis should be sent to Veto J. LaSalle, Forest Supervisor, Payette National Forest, P.O. Box 1026, McCall, ID 83638, by May 1, 1988

FOR FURTHER INFORMATION CONTACT: Questions about the proposed action and environmental impact statement should be directed to Phil Gilman, Branch Chief Planning, Programing, and Information, Payette National Forest, phone 208-634-8151.

Date: March 30, 1988.

Phil Gilman,

Branch Chief, Planning, Program, and Information.

[FR Doc. 88-7589 Filed 4-6-88; 8:45 am]

BILLING CODE 3410-11-M

Transfer of Administrative Jurisdiction; Libby Dam and Lake Koocanusa, MT

AGENCY: Forest Service, USDA.

ACTION: Notice of joint interchange of lands.

SUMMARY: On November 23, 1987, and July 22, 1987, the Secretary of the Army and the Secretary of Agriculture respectively signed a joint interchange order agreeing to the transfer of administrative jurisdiction of 219.82 acres, more or less, from the Department of Agriculture to the Department of the Army and 3,062.08 acres of fee lands, more or less, and 20.10 acres, more or

less, of easement from the Department of the Army to the Department of Agriculture within the exterior boundaries of the Kootenai National Forest, Montana. The 45-day Congressional oversight requirement of the Act of July 26, 1956 (70 Stat. 656, 16 U.S.C 505a, 505b) has been met. A copy of the Joint Order, as signed, appears at the end of this notice.

EFFECTIVE DATE: The order is effective April 6, 1988.

FOR FURTHER INFORMATION CONTACT: Kenneth Johnson, Lands Staff, Room 1010–RP–E, Forest Service, USDA, P.O. Box 96090, Washington, DC 20090–6090, Telephone: (703) 235–2406

March 29, 1988.

George M. Leonard,

Associate Chief.

Department of Defense, Department of the Army

[Interchange Order No. 4]

Libby Dam and Lake Koocanusa Project, Montana; Kootenai River; Joint Order Interchanging Administrative Jurisdiction of Department of the Army Lands and National Forest Lands

By virtue of the authority vested in the Secretary of the Army and the Secretary of Agriculture by the Act of July 26, 1956 (70 Stat. 656; 16 U.S.C. 505a, 505b), it is ordered as follows:

(1) The lands under the jurisdiction of the Department of the Army, described in Exhibit A, attached hereto and made a part hereof, are hereby transferred from the jurisdiction of the Secretary of the Army to the jurisdiction of the Secretary of Agriculture. Subject, however, to interest outstanding in third parties; and to continued use by the Corps of Engineers as necessary for the protection and unrestricted operation, maintenance, and administration of the water storage, electrical power generation, and floor control facilities, and functions of the Libby Dam and Lake Koocanusa Project.

(2) The obligation to grant a no-cost right of way easement for relocated State Highway No. 37 across land tranferred to the Secretary of Agriculture is hereby assumed by the Department of Agriculture.

(3) The National Forest lands described in Exhibit B, attached hereto and made a part hereof, which are a part of the Kootenai National Forest, Montana, are hereby transferred from the jurisdiction of the Secretary of Agriculture to the jurisdiction of the Secretary of the Army, subject to interests outstanding in third parties and such rights of access as are mutually determined to be necessary for National Forest purposes.

(4) Pursuant to section 2 of the aforementioned Act of July 26, 1956, the National Forest lands transferred to the Secretary of the Army by this order are hreinafter subject only to laws applicable to Department of the Army lands comprising the Libby Dam and Lake Koocanusa Project. Department of the Army lands transferred to the Secretary of Agriculture by this order are hereinafter subject to the laws applicable to the lands acquired under the Act of March 1, 1911 (36 Stat. 961), as amended.

This order will be effective as of date of publication in the **Federal Register.**

John O. Marsh, Jr.,

Secretary of the Army.

Date: November 23, 1987.

Richard E. Lyng,

Secretary of Agriculture.

Date: July 22, 1987.

Exhibit A—Lands Transferred from the Secretary of the Army to the Secretary of Agriculture

Those lands under the jurisdiction of the Department of the Army, for or in connection with the Libby Dam and Lake Koocanusa Project, Lincoln County, Montana, being more particularly described as follows:

All, or portions thereof, of the following tracts as shown on the indicated map segments.

LIBBY INTERCHANGE NO. 4

Segment No.	Dated	Tract No.	Acreage
1	15 Mar. 1977	101 (part)	26.23
2	do	200 (part)	23.51
		201 (part)	29.32
		Subtotal	52.83
3	do	302 (part)	24.65
4	8 Mar. 1977	405	12.30
5	do	505	136.38
7	do	706	7.38
		707	15.94
		Subtotal	23.32
8	do	808	10.02
9	15 Mar. 1977	917	19.11
11	8 Mar. 1977	1107	8.49
12	do	1201–1	469.76
		1202–2	4.18
		1209	46.26
		Subtotal	520.20
13	do	1307	36.36
		1308–2	4.82
		1310	4.67
		1311	3.58
		1312–1	1.02
		1312–2	0.29
		Subtotal	50.74
14	do	1403	16.07

LIBBY INTERCHANGE NO. 4—Continued

Segment No.	Dated	Tract No.	Acreage
15	do	1504	32.26
16	do	1603	47.00
17	do	1703	13.45
		1704-2	6.43
		1704-3	5.14
		1705	7.58
		1707 (part—see seg. 18)	4.20
		Subtotal	36.80
18	do	1707 (remaidner—see seg. 17)	1.54
		1807	40.68
		1807-C-1	0.01
		1807-C-2	0.01
		1808	1.93
		Subtotal	44.15
20	do	2004	12.30
		2005	12.17
		Subtotal	24.47
21	do	2103	9.00
		2104	11.65
		Subtotal	20.65
22	do	2203	20.79
23	do	2304	25.36
24	do	2404	18.37
		2406	22.18
		Subtotal	40.55
25	do	2503	1.00
27	do	2704	22.62
29	15 Mar. 1977	2907	15.42
30	8 Mar. 1977	3000	19.48
		3001	216.85
		3006	5.39
		Subtotal	241.72
31	15 Mar. 1977	3101-1	30.33
		3101-2	2.50
		3101C	0.01
		3105	5.50
		3132	68.81
		Subtotal	107.55
34	8 Mar. 1977	3409	45.00
		3411-1	0.72
		3411-2 (part—see seg. 36)	1.53
		3414	0.50
		Subtotal	47.75
35	do	3500	72.97
		3511	18.19
		Subtotal	91.16
36	do	3411-2 (remainder—see seg. 34)	0.40
		3620	58.31
		Subtotal	58.71
37	do	3604-2 (part)	4.91
		3704 (part)	9.41
		3707	13.58
		Subtotal	27.90
38	do	3506 (part—see segs. 39&56)	[illegible]
		3802 (part)	77.50
		3805	33.78
		3807	0.54
		3808	0.74
		3809	0.40

LIBBY INTERCHANGE No. 4—Continued

Segment No.	Dated	Tract No.	Acreage
		3810	0.11
		Subtotal	381.88
39	do	3506 (part—see segs. 38&56)	88.69
		3900C	0.01
		3902-1	57.48
		3902-2 (part)	67.66
		3903 (part)	57.30
		3906	3.02
		3913	23.15
		Subtotal	297.31
51	do	5100 (part)	3.09
52	do	5201-2	0.92
		5202 (part)	3.35
		5203-2	5.74
		5207	0.01
		Subtotal	10.02
53	do	5305 (part)	3.19
		5306 (part)	1.56
		Subtotal	4.75
54	do	5403-1 (part)	0.78
55	do	5500-2 (part)	0.54
		5501-3 (part)	0.85
		Subtotal	1.39
56	do	3506 (part—see segs. 38&39)	81.15
		3901-2 (part)	222.97
		5600	140.00
		5601-1	20.00
		5604C-1	0.01
		5604C-2	0.01
		5606 (part)	16.25
		5608	1.17
		Subtotal	481.56
58	do	5802	64.46
		Total *FEE* acreage this interchange	3,062.08
38	do	3811E	3.39
40	do	4005E	1.06
42	do	4202E-1	0.69
43	do	4304E	0.46
44	do	4401E	1.68
45	do	4508E	0.59
46	do	4600E-7	1.41
		4604E	0.66
		Subtotal	2.07
47	do	4702E	0.87
48	do	4802E	1.08
49	do	4902E	4.30
		4902-1	0.52
		4902E-2	0.72
		Subtotal	5.54
52	do	5202E-5	0.03
		5202E-6	0.03
		5208E	0.74
		5209E	0.05
		Subtotal	0.85
53	do	5312E	0.86
55	do	5504E	0.96
		Total *Easement* acreage this interchange	20.10
52	5205L	0.00	

All lands transferred herein consist of 3,082.18 acres, more or less.

Real estate segment maps depicting the location of the transferred tracts and legal descriptions are on file in the Office of the District Engineer, U.S. Army, Corps of Engineers, Seattle, Washington, and the Office of the Forest Supervisor, Kootenai National Forest, Libby, Montana.

Exhibit B—Land Transferred From The Secretary of Agriculture To The Secretary of The Army

Those lands under the jurisdiction of the Secretary of Agriculture, which are a part of the Kootenai National Forest, Montana, being more particularly described as follows:

That portion of the south half of the southwest quarter (S½†SW¼) lying westerly of the westerly margin of the right-of-way for Montana State Highway No. 37 and Government Lot 5, Section 4, Township 30 North, Range 29 West, Principal Meridian Montana; identified as Tract A, as shown on Segment 2 (dated 15 March 1977).

Contains 69.03 acres, more or less.

That portion of the east half of the east half of the southeast quarter (E½†E½†SE¼) lying easterly of the easterly margin of the right-of-way for the Forest Development Road No. 92–7 in Section 32, Township 31 North, Range 29 West, Principal Meridian Montana; identified as Tract A, as shown on Segment 2 (dated 15 March 1977).

Contains 1.29 acres, more or less.

Government Lots 6 and 8, the northwest quarter of the southwest quarter (NW¼†SW¼), the north half of the north half of the northeast quarter of the southwest quarter (N½†N½†NE¼†SW¼), the southeast quarter of the northeast quarter of the northeast quarter of the southwest quarter (SE¼†NE¼†NE¼†SW¼), the east half of the east half of the southeast quarter of the northeast quarter of the southwest quarter (E½†E½†SE¼†NE½†SW¼) and the south 800 feet of the east 700 feet of Government Lot 7, all in Section 28, Township 31 North, Range 29 West, Principal Meridian Montana; identified as Tract A, as shown on Segment 3 (dated 15 March 1977).

Excepting Therefrom all those lands lying westerly and northerly of the easterly and southerly margin of the right-of-way for the Forest Development Road No. 92–7 in said Section 28.

Contains 75.66 acres, more or less.

Government Lots 5 and 9, the northeast quarter of the southeast quarter (NE¼†SE¼) in Section 28, Township 31 North, Range 29 West, Principal Meridian Montana; identified as a part of Tract 300, as shown on Segment 3 (dated 15 March 1977).

Excepting Therefrom the Burlington Northern Railroad Company right-of-way.

Contains 73.84 acres, more or less.

All the lands transferred herein consist of 219.82 acres, more or less.

Real estate segment maps depicting the location of the transferred tracts and legal descriptions are on file in the Office of the District Engineer, U.S. Army, Corps of Engineers, Seattle, Washington, and the Office of the Forest Supervisor, Kootenai National Forest, Libby, Montana.

[FR Doc. 88–7506 Filed 4–6–88; 8:45 am]

BILLING CODE 3410-11-M

Base Indexes for 9 Timber Species

AGENCY: Forest Service, USDA.

ACTION: Notice of intent to adjust indexes; request for comments.

SUMMARY: The Forest Service hereby gives notice of its intent to adjust lumber base price indexes for certain species of western timber. The need for adjustment arises from proposed modifications to index logs released by the Western Wood Products Association. Comment is invited on the proposed base index adjustments which the Agency plans to implement in July 1988.

DATE: Comments must be received in writing by April 30, 1988.

ADDRESSES: Send written comments to F. Dale Robertson, Chief (2420), Forest Service, USDA, P.O. Box 96090, Washington, DC 20090–6090. The public may inspect comments on this proposal in the Office of the Director of the Timber Management Staff, Room 3205, South Building, 12th and Independence Avenue, SW., Washington, DC between the hours of 8:30 a.m. and 4:30 p.m. local time.

FOR FURTHER INFORMATION CONTACT: Jim Pharo, Timber Management Staff, (202) 475–3756.

SUPPLEMENTARY INFORMATION: Each month Western Wood Products Association (WWPA) calculates and publishes lumber price indexes for eight Western Inland and two Pacific Northwest Coast species or species combinations. These indexes, total dollars received for timber products divided by total volume sold by timber species and grade, provide average monthly estimates of sawtimber value according to industry manufacturing practice. Manufacturing practice is reflected through periodic survey of industry sale reports. These reports are used to develop average grade recovery components whose sums are commonly known as "index logs."

As industry production practices change, index logs reflecting that practice also must change. The WWPA monitors index logs by comparing monthly receipts with monthly lumber price indexes. The Forest Service audits WWPA lumber price index procedures to ensure they properly reflect market end product and timber selling prices. Lumber price indexes are used by Government agencies to appraise public timber offered for sale and to adjust prices billed for timber already under contract. Such sales are called "escalated sales." Index log changes require base index adjustments in escalated sales.

This proposal makes public an intent to adjust base indexes for nine species effective July 1, 1988. The basis for these adjustments are recent WWPA grade recovery studies and proposals to change index logs.

The Western Wood Products Association proposes to replace current index logs for Pacific Northwest Douglas Fir and Hem-Fir, Coast Inland North Ponderosa Pine, Rocky Mountain Ponderosa Pine, Idaho White Pine, Sugar Pine, White Fir, Inland Dry Douglas Fir—Larch, and White Woods with new indexes based upon a 1985–1986 product recovery study. When index logs change, new escalated sales are subject to the new base index. However, escalated sales already under contract must have their base indexes adjusted to reflect the new index log. A 24-month transition period for base index adjustments is used as follows. The new 24-month index is subtracted from the old 24-month index. This difference plus the old contract base index is the adjusted base index for escalated sales already under contract.

Tables at the end of this notice provide a review of proposed changes. Table I presents old and new grade recovery, their averages, and differences for the 30-month period from January 1985 through June 1987. Table III displays the base index adjustment factor process that the Forest Service proposes to use.

There may be minor changes to the adjustment factors over the next few

months. These changes, due to grade recovery or transition period changes, will be covered in a final notice prior to implementation. The final notice will consider and address written comments received in the **Federal Register**.

Date: March 28, 1988.

George M. Leonard,

Associate Chief, Forest Service.

Table I—Grade Recovery Comparisons

[Prepared by Western Wood Products Association]

PACIFIC NORTHWEST COAST DOUGLAS FIR INDEX LOGS

Grade Components	Grade Component Percents		
	Old 1978–79	New 1985–86	New–Old Difference
C Select: One inch & Thkr B&Btr, B, C & C&Btr Select	4.88	2.23	−2.65
D Select: One inch & Thkr D&Btr, D, Mldg & Mldg&Btr	3.32	2.14	−1.18
Shop: One Inch and Thkr Shop (inc. Factory, Nos. 1, 2, and 3 Shop)	1.71	1.00	−.71
Common Boards:			
Std & Btr	.80	.58	−.22
Utility & Btr (inc. Utility)	1.40	.66	−.74
Two Inch Dimension:			
No. 1 & Btr (inc. Select Str & No. 1)	8.76	10.53	+1.77
No. 2 & Btr (inc. No. 2)	25.79	33.95	+8.16
Std & Btr (inc. Const & Btr, Const & Std)	9.20	12.28	+3.08
Utility & No. 3	8.37	6.63	−1.74
Studs: All (except economy)	11.03	12.33	+1.30
Three and Four Inch Dimension:			
No. 1 & Btr (inc. Select Str & No. 1)	2.40	2.01	−.39
No. 2 & Btr (inc. No. 2)	5.34	4.20	−1.14
Std & Btr (inc. Const & Btr, Const & Std)	1.93	1.32	−.61
Utility & No. 3	1.74	1.01	−.73
Five Inch and Thicker Dimension:			
No 1 & Btr (inc. Select Str & No. 1)	2.40	2.18	−.22
Utility & Btr & No. 3 & Btr (inc. Utility)	2.57	2.20	−.37
Short Dimension: E & Shop Outs	1.14	1.22	+.08
Economy: All (inc. Dunnage)	7.22	3.53	−3.69
Total	100.00	100.00	0.00

PACIFIC NORTHWEST COAST HEM-FIR INDEX LOGS

Grade Components	Grade Component Percents		
	Old 1978–79	New 1985–86	New–Old Difference
C Select: One inch and Thkr B&Btr, B, C & C&Btr Select	1.47	0.53	−0.94
D Select: One inch and Thkr D&Btr, D, Mldg & Mldg&Btr	2.03	1.93	−0.10
Shop: One inch and Thkr Shop (inc. Factory, Nos. 1, 2, & Shop)	2.53	2.23	−0.30
Common Boards: Utility & Btr (inc. Utility)	1.45	1.04	−0.41
Two inch Dimension:			
No. 1 & Btr (inc. Select Str & No. 1)	5.46	2.62	−2.85
No. 2 & Btr (inc. No. 2)	22.12	27.16	+5.04
Std & Btr (inc. Const & Btr, Const & Std)	12.30	11.07	+1.23
Utility & No. 3	12.87	7.39	−3.48
Studs:			
All (except economy)	19.96	31.50	+11.54
Three Inch and Thicker:			
No. 1 & Btr (inc. Select Str & No. 1)	2.76	0.69	−2.07
No. 2 & Btr (inc. No. 2)	1.48	1.22	−0.26
Std & Btr (inc. Const & Btr, Const & Std)	3.74	3.78	+0.04
Utility & Btr & No. 3 & Btr	1.19	1.72	+0.53
Utility & No. 3	0.77	0.53	−0.24
Short Dimension: E & Shop Outs	0.60	0.71	+0.11
Economy: All (inc. Dunnage)	9.27	5.89	−3.38
Total	100.00	100.00	0.00

COAST-INLAND NORTH PONDEROSA PINE INDEX LOGS

Grade Components	Grade Component Percents		
	Old 1975–76	New 1985–86	New–Old Difference
C Select: 4/4 & Thkr C and C&Btr Select	2.37	1.25	−1.12
D Select:			
4/4 & Thkr Mldg & Btr, D and D&Btr Select	5.87	5.65	−0.22
Moulding Stock	3.18	1.61	−1.57

COAST-INLAND NORTH PONDEROSA PINE INDEX LOGS—Continued

Grade Components	Grade Component Percents		
	Old 1975–76	New 1985–86	New–Old Difference
Stained Select: Short, Pitchy & Aust. Clears	0.35	0.42	+0.07
Shop:			
4/4 Factory Select	1.22	0.59	−0.63
44 Nos. 1 & 2 Shop	2.83	3.09	+0.26
54 & Thkr Factory No. 1 Shop	3.01	2.96	−0.05
5/4 & Thkr No. 2 Shop	12.13	16.64	+4.51
5/4 & Thkr No. 3 Shop (inc. stained)	8.82	14.96	+6.14
Common:			
4/4 & Thkr No. 2 & Btr Common	8.02	12.21	+4.19
4/4 & Thkr No. 3 & Btr Common	19.50	20.39	+0.89
4/4 & Thkr No. 4 and Btr Common	8.67	5.11	−3.56
4/4 & Thkr No. 5 Common and Dunnage	1.05	0.62	−0.43
Short Common: (Inc. Box Lumber, Shop, Short & Rejects, Short Dim and Shop Common)	4.75	4.71	−0.04
Dimension, Timbers and Studs:			
Std & Btr and No. 2 & Btr	11.55	7.57	−3.98
Uty & Btr and No. 3 & Btr	2.38	1.45	−0.93
Economy All	1.43	0.77	−0.66
Studs All (except Economy)	2.87	In Dim	−2.87
Total	100.00	100.00	0.00

ROCKY MOUNTAIN PONDEROSA PINE INDEX LOGS

Grade Components	Grade Component Percents		
	Old 1975–76	New 1985–86	New–Old Difference
C Select: 4/4 & Thkr C & C&Btr Select	0.23	4.36	−3.23
D Select:			
4/4 & Thkr Mldg & Btr, D and D&Btr Select	5.04		
Moulding Stock	2.34		
Shop:			
4/4 Factory Select	0.39	1.49	−1.11
Nos. 1 and 2 Shop	2.21		
5/4 & Thkr Factory Select and No. 1 Shop	0.91	0.78	−0.13
5/4 & Thkr No. 2 Shop	5.02	5.61	+0.59
5/4 & Thkr No. 3 Shop (inc. stained)	8.43	11.41	+2.98
Common:			
4/4 & Thkr No. 2 & Btr Common	2.39	2.95	+0.56
4/4 & Thkr No. 3 & Btr Common	18.09	16.74	−1.35
4/4 & Thkr No. 4 & Btr Common	12.47	8.85	−3.62
4/4 & Thkr No. 5 Common and Dunnage	2.97	1.49	−1.48
Short Common: (Inc. Box Lumber, Shop, Short & Rejects, Short Dim and Shop Common)	2.25	6.35	+4.10
Dimension, Timbers and Studs:			
Std & Btr and No. 2 & Btr	27.37	27.00	−0.37
Uty & Btr and No. 3 & Btr	4.93	7.99	+3.06
Economy All	3.96	3.96	0.00
Total	100.00	100.00	0.00

IDAHO WHITE PINE INDEX LOGS

Grade Components	Grade Component Percents		
	Old 1971	New 1985–86	New–Old Difference
Choice Select: 4/4 & Thkr Choice and Choice & Btr Select	2.16	2.12	−0.04
Quality Select: 4/4 & Thkr Quality, Quality & Btr, Mldg Stock, Stained, Short and Pitchy Select	5.64	6.12	+0.48
Shop:			
4/4 Shop	5.84	3.95	−4.27
5/4 & Thkr Factory, Nos. 1, 2, 3 & Stained	2.38		
Common:			
4/4 Sterling & Btr	24.84	37.83	+12.99
4/4 Std & Btr	33.12	36.63	+3.51
4/4 Utility	19.06	11.08	−7.98
4/4 & Thkr Industrial and Dunnage	1.77	0.50	−1.27
Thick Common (inc. 5/4 & Thkr Commons and Two Inch Dimension)	4.06	([1])	−4.06
5/4 & Thkr Std, Utility, Two inch Dimension Short Common (inc. Box Lumber, Short Shop, and Rejects)	1.13	1.17	+0.64
Total	100.00	100.00	0.00

[1] Spread to Grade.

VOL 53 ISS 67 APR 7 1988 UMI

INLAND SUGAR PINE INDEX LOGS

Grade Components	Grade Component Percents		
	Old 1977–78	New 1985–86	New–Old Difference
C Select: 4/4 & Thkr C and C&Btr Select	3.73	3.30	−0.43
D Select:			
4/4 & Thkr Mldg & Btr, D and D&Btr Select	9.78	8.33	−1.45
Moulding Stock	6.02	3.39	−2.63
Stained Select: Short and Aust. Clears	0.56	0.81	+0.25
Shop:			
4/4 & Thkr Factory and Stained Factory	1.44	1.00	−0.44
4/4 Nos. 1 & 2 Shop	2.76	2.85	+0.09
5/4 & 6/4 No. 1 Shop	5.15	3.92	−1.23
8/4 No. 1 Shop	0.84	0.48	−0.36
5/4 & 6/4 No. 2 Shop	13.75	14.95	+1.20
8/4 No. 2 Shop	3.02	2.41	−0.61
5/4 & 6/4 No. 3 Shop	8.80	13.45	+4.65
8/4 No. 3 Shop	3.10	2.79	−0.31
Common: 4/4 & No. 2 & Btr Common	4.94	9.10	+4.16
(Percentages are applied to a combination of Sugar Pine and Ponderosa Pine for the following grades.)			
4/4 No. 3 & Btr Common	11.62	15.05	+3.43
4/4 No. 4 & Btr Common	7.32	5.61	−1.71
4/4 & Thkr No. 5 Common and Dunnage	1.51	0.92	−0.59
Short Common: Box Lumber, Shop, Short Dimension and Rejects	7.14	6.93	−0.21
Dimension and Studs:			
Std & Btr and No. 2 & Btr	5.60	2.79	−2.81
Uty & Btr and No. 3 & Btr	2.00	1.10	−0.90
Economy	0.92	0.82	−0.10
Total	100.00	100.00	0.00

INLAND WHITE FIR (HEM FIR) INDEX LOGS

Grade Components	Grade Component Percents		
	Old 1971	New 1985–86	New–Old Difference
D & Btr Select: 4/4 & Thkr D, D&Btr, C, and C&Btr mldg & Btr and Moulding Stock	2.71	1.96	−0.75
4/4 & Thkr Shop Factory, Nos. 1, 2 & 3 Shop:	4.72	4.52	−0.20
Common:			
4/4 & Thkr No. 3 & Btr Common	1.98	1.27	−0.71
4/4 & Thkr No. 4 & Btr Common	3.72	0.87	−2.85
4/4 & Thkr No. 5 Common and Dunnage	1.50	(1)	
Short Common (inc. Box Lumber, Shop, Short and Rejects)	0.77	1.80	+1.03
Dimension, Studs, Timbers:			
Std & Btr and No. 2 & Btr	42.38	64.60	+22.22
Uty & Btr and No. 3 & Btr	9.93	10.43	−10.62
Uty and No. 3	11.12		
Economy All	6.56	7.35	−2.71
Studs All (Except Economy)	12.61	7.20	−5.41
Total	100.00	100.00	0.00

[1] To Econ.

DRY DOUGLAS FIR—LARCH INLAND INDEX LOGS

Grade Components	Grade Component Percents		
	Old 1971	New 1985–86	New–Old Difference
D & Btr Select: 4/4 & Thkr D, D&Btr, C, and C&Btr Mldg & Btr and Moulding Stock	4.23	2.00	− 2.23
Shop: 4/4 & Thkr Shop (inc. Factory Nos. 1, 2 and 3 Shop)	3.36	2.42	− 0.94
Common:			
4/4 & Thkr No. 3 & Btr Common	2.22	1.62	− 0.60
4/4 & Thkr No. 4 & Btr Common	2.31	1.31	− 1.00
4/4 &Thkr No. 5 & Btr Common and Dunnage	0.41	(1)	.....
Short Common	0.26	2.93	+ 2.67
Dimension, Studs, Timbers:			
Std & Btr and No. 2 & Btr	44.37	54.94	+ 10.58
Uty & Btr and No. 3 & Btr (inc. Utility)	11.60	7.72	− 3.88
Studs All (except Economy)	20.30	18.58	− 1.72
Timbers	4.56	4.07	− 0.49
Economy All	6.38	4.40	− 2.39
Total	100.00	100.00	0.00

[1] To Econ.

WHITE WOODS INDEX LOGS

Grade Components	Grade Component Percents		
	Old 1974–75	New 1985–86	New–Old Difference
D&Btr Select: 4/4 & Thkr D, Mldg, D&Btr, C and C&Btr	0.57	1.09	+ 0.52
Common:			
3 & Btr Common (inc. 4/4 & Thkr No. 1, 2, 2&Btr, 3 and 3&Btr)	10.76	21.56	+ 10.80
4 & Btr Common (inc. 4/4 & Thkr No. 4 and 4&Btr)	4.44	3.15	− 1.29
Short Common (inc. Box Lumber, Shop, Short and Rejects, Short Dim, Shop Common)	2.04	7.45	+ 5.41
4/4 & Thkr No. 5 Common and Dunnage	(1)	(1)	(1)
Dimension and Timbers:			
Std & Btr and No. 2 & Btr	24.14	17.04	− 7.10
Utility & Btr and No. 3 & Btr	7.60	4.92	− 7.11
Utility and No. 3 (inc. Studs)	4.43		
Studs (Except Utility and Economy)	39.46	38.28	− 1.18
Economy All	6.56	6.51	−0.05
Total	100.00	100.00	0.00

[1] Both in Economy.

Table II—Index Log Comparisons

[Prepared by Western Wood Products Association]

PACIFIC NORTHWEST COAST DOUGLAS FIR

Monthly Indexes	Old 1978–79	New 1985–86	New–Old Differences
January 1985	220.07	210.50	9.57
February	222.36	212.09	10.27
March	224.82	213.49	11.33
(Quarter)	(222.42)	(212.03)	(10.39)
April 1985	222.27	209.97	12.30
May	228.64	217.98	10.66
June	243.31	234.10	9.21
(Quarter)	(231.41)	(220.68)	(10.73)
July 1985	247.99	238.41	9.58
August	233.78	223.51	10.27
September	224.15	211.88	12.27
(Quarter)	(235.31)	(224.60)	(10.71)
October 1985	219.66	207.88	11.78
November	210.46	199.65	10.81
December	213.17	202.09	11.08
(Quarter)	(214.43)	(203.21)	(11.22)
January 1986	217.36	207.09	10.27
February	216.76	205.03	11.73
March	223.26	211.15	12.11
(Quarter)	(219.13)	(207.76)	(11.37)
April 1986	239.00	227.58	11.42
May	237.45	225.31	12.14
June	228.26	215.70	12.56
(Quarter)	(234.90)	(222.86)	(12.04)
July 1986	224.84	211.97	12.87
August	227.56	214.93	12.63
September	233.79	222.78	11.01
(Quarter)	(228.73)	(216.56)	(12.17)
October 1986	232.36	219.78	12.58
November	235.77	223.05	13.72
December	231.30	217.12	14.18
(Quarter)	(233.48)	(219.98)	(13.49)
January 1987	233.31	218.29	15.02
February	240.86	226.08	14.78
March	247.18	231.95	15.23
(Quarter)	(240.45)	(225.44)	(15.01)
April 1987	247.86	232.63	15.23
May	248.37	231.90	16.47
June	246.02	232.38	13.64
(Quarter)	(247.42)	(232.30)	(15.11)

PACIFIC NORTHWEST COAST HEM-FIR

Monthly Indexes	Old 1978–79	New 1985–86	New–Old Differences
January 1985	184.75	187.75	+3.00
February	189.26	191.81	+2.55
March	186.25	189.08	+2.83
(Quarter)	(186.75)	(189.55)	(+2.79)
April	185.34	186.88	+1.54
May	193.26	196.37	+3.11
June	203.01	206.61	+3.60
(Quarter)	(193.87)	(196.62)	(+2.75)
July	207.50	209.75	+2.25
August	199.11	200.35	+1.24
September	192.21	193.19	+0.98
(Quarter)	(199.61)	(201.10)	(+1.49)
October	188.05	188.63	+0.58
November	182.47	183.49	+1.02
December	180.65	181.61	+0.96
(Quarter)	(183.72)	(184.58)	(+0.85)
January 1986	183.68	184.61	+0.93
February	182.20	183.18	+0.98
March	191.37	192.41	+1.04
(Quarter)	(185.75)	(186.73)	(+0.98)
April	207.72	210.49	+2.77
May	207.99	212.46	+4.47
June	203.05	206.00	+2.95
(Quarter)	(206.25)	(209.65)	(+3.40)
July	196.91	198.97	+2.06
August	195.15	197.53	+2.38
September	197.18	199.59	+2.41
(Quarter)	(196.41)	(198.70)	(+2.28)
October	197.50	198.95	+1.45
November	200.64	202.39	+1.75
December	207.33	209.89	+2.56
(Quarter)	(201.82)	(203.74)	(+1.92)
January 1987	201.31	203.26	+1.95
February	211.12	213.60	+2.48
March	217.06	219.91	+2.85
(Quarter)	(209.83)	(212.26)	(+2.43)
April	217.34	220.28	+2.94
May	213.49	215.57	+2.08
June	214.64	216.69	+2.05
(Quarter)	(215.16)	(217.51)	(+2.35)

COAST INLAND NORTH PONDEROSA PINE

Monthly Indexes	Old 1975–76	New 1985–86	New–Old Difference
January 1985	371.59	385.58	+13.99
February	369.00	383.64	+14.64
March	366.46	381.75	+13.29
(Quarter)	(369.68)	(383.66)	(+13.97)
April	358.76	373.15	+14.39
May	353.85	367.86	+14.01
June	360.84	373.34	+12.50
(Quarter)	(357.82)	(371.45)	(+13.63)
July	366.54	380.11	+13.57
August	374.40	385.33	+10.93
September	372.09	384.80	+12.71
(Quarter)	(371.01)	(383.41)	(+12.40)
October	380.14	392.21	+12.07
November	375.89	388.20	+12.31
December	371.08	381.90	+10.82
(Quarter)	(375.70)	(387.44)	(+11.73)
January 1986	371.35	381.70	+10.35
February	376.39	384.56	+8.17
March	378.03	387.38	+9.35
(Quarter)	(375.26)	(384.55)	(+9.29)
April	390.30	397.00	+6.70
May	398.86	407.63	+8.77

COAST INLAND NORTH PONDEROSA PINE—Continued

Monthly Indexes	Old 1975–76	New 1985–86	New–Old Difference
June	404.92	416.85	+11.93
(Quarter)	(398.03)	(407.16)	(+9.13)
July	416.61	434.53	+17.92
August	412.34	434.62	+22.28
September	409.50	432.41	+22.91
(Quarter)	(412.82)	(433.85)	(+21.04)
October	414.30	436.25	+21.95
November	418.11	436.32	+18.21
December	415.84	434.34	+18.50
(Quarter)	(416.08)	(435.64)	(+19.55)
January 1987	417.70	434.20	+16.50
February	418.53	434.04	+15.51
March	434.74	446.86	+12.12
(Quarter)	(423.66)	(438.37)	(+14.71)
April	444.11	456.61	+12.50
May	451.14	467.27	+16.13
June	446.82	463.02	+16.20
(Quarter)	(447.36)	(462.30)	(+14.94)

ROCKY MOUNTAIN PONDEROSA PINE

Monthly Indexes	Old 1975–76	New 1985–86	New–Old Difference
January 1985	283.72	272.35	−11.37
February	286.84	278.23	−8.61
March	281.20	275.55	−5.65
(Quarter)	(283.92)	(275.38)	(−8.54)
April	275.94	272.16	−3.78
May	268.99	262.44	−6.55
June	281.68	273.28	−8.40
(Quarter)	(275.54)	(269.29)	(−6.24)
July	289.05	278.92	−10.13
August	291.66	276.48	−15.18
September	287.26	269.86	−17.40
(Quarter)	(289.32)	(275.09)	(−14.24)
October	283.61	264.88	−18.73
November	289.50	273.13	−16.37
December	279.12	263.01	−16.11
(Quarter)	(284.08)	(267.01)	(−17.07)
January 1986	287.90	270.29	−17.61
February	282.91	263.58	−19.33
March	293.16	274.79	−18.37
(Quarter)	(287.99)	(269.55)	(−18.44)
April	305.09	264.47	−21.62
May	311.53	291.29	−20.24
June	315.32	296.55	−18.77
(Quarter)	(310.98)	(290.77)	(−20.21)
July	316.43	296.89	−19.54
August	316.81	297.18	−19.63
September	314.31	295.60	−18.71
(Quarter)	(315.85)	(296.56)	(−19.29)
October	320.47	305.64	−14.83
November	314.53	295.11	−19.42
December	321.18	302.96	−18.22
(Quarter)	(318.73)	(301.24)	(−17.49)
January 1987	320.80	300.43	−20.37
February	323.10	299.81	−23.38
March	333.75	311.52	−22.23
(Quarter)	(325.91)	(303.92)	(−21.99)
April	342.82	318.49	−24.33
May	340.49	318.16	−22.33
June	344.45	321.61	−22.84
(Quarter)	(342.59)	(319.42)	(−23.17)

IDAHO WHITE PINE

Monthly Indexes	Old 1971	New 1985–86	New–Old Difference
January 1985	376.32	418.71	+42.39
February	374.54	424.23	+49.59
March	378.17	421.31	+43.14
(Quarter)	(376.38)	(421.42)	(+45.04)
April	363.76	410.67	+46.91

IDAHO WHITE PINE—Continued

Monthly Indexes	Old 1971	New 1985-86	New-Old Difference
May	364.84	413.39	+48.55
June	378.28	428.56	+50.28
(Quarter)	(368.96)	(417.54)	(+48.58)
July	399.47	449.49	+50.02
August	396.95	447.22	+50.27
September	385.88	433.06	+47.18
(Quarter)	(394.10)	(443.26)	(+49.16)
October	383.19	432.09	+48.90
November	374.07	424.33	+50.26
December	370.01	409.94	+39.73
(Quarter)	(375.82)	(422.12)	(+46.30)
January 1986	369.70	411.32	+41.62
February	373.86	416.89	+43.03
March	377.51	426.97	+49.46
(Quarter)	(373.69)	(418.39)	(+44.70)
April	400.38	446.83	+46.45
May	402.73	447.29	+44.56
June	403.50	445.56	+42.06
(Quarter)	(402.20)	(446.56)	(+44.36)
July	399.35	444.54	+45.19
August	398.64	445.97	+47.33
September	407.64	450.00	+42.36
(Quarter)	(401.88)	(446.84)	(+44.96)
October	415.37	458.80	+43.43
November	410.47	458.05	+47.58
December	410.14	456.88	+46.74
(Quarter)	(411.99)	(457.91)	(+45.92)
January 1987	397.58	441.83	+44.25
February	396.61	445.94	+49.34
March	404.15	453.12	+48.97
(Quarter)	(399.45)	(446.97)	(+47.52)
April	409.56	456.00	+46.44
May	418.33	467.66	+49.33
June	426.69	469.50	+42.81
(Quarter)	(418.19)	(464.39)	(+46.19)

SUGAR PINE

Monthly Indexes	Old 1977-78	New 1985-86	New-Old Differences
January 1985	486.56	461.92	−24.64
February	474.82	456.83	−17.99
March	474.82	456.31	−18.51
(Quarter)	(478.73)	(458.35)	(−20.38)
April 1985	472.88	455.94	−16.94
May	465.84	447.37	−18.47
June	467.38	447.42	−19.96
(Quarter)	(468.70)	(450.24)	(−18.46)
July 1985	481.27	459.77	−21.50
August	490.36	466.42	−23.94
September	493.39	468.79	−24.60
(Quarter)	(488.34)	(464.99)	(−23.35)
October 1985	491.52	468.40	−23.12
November	491.12	468.12	−23.00
December	476.02	455.62	−20.40
(Quarter)	(486.22)	(464.05)	(−22.17)
January 1986	482.11	460.25	−21.86
February	484.75	463.31	−21.44
March	486.43	462.71	−23.72
(Quarter)	(484.43)	(462.09)	(−22.34)
April 1986	497.00	472.65	−24.35
May	519.41	493.81	−25.60
June	532.76	506.45	−26.31
(Quarter)	(516.39)	(490.97)	(−25.42)
July 1986	555.81	530.44	−25.37
August	553.79	529.66	−24.13
September	545.11	521.41	−23.70
(Quarter)	(551.57)	(527.17)	(−24.40)
October 1986	552.62	527.45	−25.17
November	555.79	526.41	−27.38
December	557.55	528.31	−29.24
(Quarter)	(555.32)	(528.06)	(−27.26)
January 1987	555.97	526.78	−29.19
February	557.84	527.94	−29.90
March	565.98	537.51	−28.47
(Quarter)	(559.93)	(530.74)	(−29.19)

SUGAR PINE—Continued

Monthly Indexes	Old 1977–78	New 1985–86	New–Old Differences
April 1987	580.73	552.56	−28.17
May	594.04	565.19	−28.85
June	601.86	568.83	−33.03
(Quarter	(592.21)	(562.19)	(−30.02)

INLAND WHITE FIR (HEM-FIR)

Monthly Indexes	Old 1971	New 1985–86	New–Old Differences
January 1985	188.20	191.60	+3.40
February	190.45	192.48	+2.03
March	187.90	190.68	+2.78
(Quarter)	(188.85)	(191.59)	(+2.74)
April	184.31	187.07	+2.76
May	190.93	194.25	+3.32
June	205.00	207.71	+2.71
(Quarter)	(193.41)	(196.34)	(+2.93)
July	204.80	208.25	+3.45
August	198.95	201.71	+2.76
September	190.12	192.96	+2.84
(Quarter)	(197.96)	(200.97)	(+3.01)
October	186.31	188.80	+2.49
November	177.40	179.88	+2.48
December	179.26	178.36	−0.90
(Quarter)	(180.99)	(182.35)	(+1.36)
January 1986	180.26	183.14	+2.88
February	182.57	184.85	+2.28
March	186.13	189.16	+3.03
(Quarter)	(182.99)	(185.72)	(+2.73)
April	211.09	211.04	−0.05
May	218.24	216.61	−1.63
June	208.21	209.81	+1.60
(Quarter)	(212.51)	(212.49)	(−0.02)
July	206.73	206.55	−0.18
August	203.52	207.66	+4.14
September	210.13	213.91	+3.78
(Quarter)	(206.79)	(209.37)	(+2.58)
October	208.19	210.89	+2.70
November	207.72	207.57	−0.15
December	207.46	211.32	+3.86
(Quarter)	(207.79)	(209.93)	(+2.14)
January 1987	203.14	206.55	+3.41
February	211.11	212.34	+1.23
March	223.70	225.82	+2.12
(Quarter)	(212.65)	(214.90)	(+2.25)
April	227.38	226.91	−0.47
May	223.96	226.51	+2.55
June	229.08	233.06	+3.98
(Quarter)	(226.81)	(228.83)	(+2.02)

INLAND DOUGLAS FIR—LARCH

Monthly Indexes	Old 1971	New 1985–86	New–Old Differences
January 1985	201.89	198.38	−3.51
February	200.07	197.69	−2.38
March	200.44	196.71	−3.73
(Quarter)	(200.80)	(197.59)	(−3.21)
April	195.08	190.93	−4.15
May	201.56	197.87	−3.69
June	216.59	212.61	−3.98
(Quarter)	(204.41)	(200.47)	(−3.94)
July	221.23	218.37	−2.86
August	214.69	211.82	−2.87
September	205.22	202.15	−3.07
(Quarter)	(213.71)	(210.78)	(−2.93)
October	196.92	193.87	−3.05
November	192.64	187.97	−4.67
December	192.06	187.31	−4.75
(Quarter)	(193.87)	(189.72)	(−4.15)
January 1986	196.36	191.20	−5.18
February	198.18	192.54	−5.64
March	203.96	197.79	−6.17

INLAND DOUGLAS FIR—LARCH—Continued

Monthly Indexes	Old 1971	New 1985–86	New–Old Differences
(Quarter)	(199.51)	(193.84)	(−5.67)
April	225.85	220.02	−5.83
May	228.75	221.19	−7.56
June	218.68	211.01	−7.67
(Quarter)	(224.43)	(217.41)	(−7.02)
July	211.60	204.78	−7.02
August	211.03	205.65	−5.38
September	220.30	216.75	−3.55
(Quarter)	(214.38)	(209.06)	(−5.32)
October	220.25	215.21	−5.04
November	219.48	213.20	−6.28
December	213.79	209.95	−3.84
(Quarter)	(217.84)	(212.79)	(−5.05)
January 1987	211.20	205.75	−5.45
February	217.32	212.68	−4.64
March	227.16	221.70	−5.46
(Quarter)	(218.56)	(213.38)	(−5.18)
April	227.34	221.28	−6.06
May	223.90	218.06	−5.84
June	225.66	220.49	−5.17
(Quarter)	(225.63)	(219.94)	(−5.69)

WHITE WOODS

Monthly Indexes	Old 1974–74	New 1985–86	New–Old Differences
January 1985	185.71	193.71	+8.00
February	189.69	200.34	10.65
March	185.84	195.58	+9.74
(Quarter)	(187.08)	(196.54)	(+9.46)
April	181.09	188.59	+7.50
May	186.74	193.17	+4.43
June	196.09	202.51	+6.42
(Quarter)	(188.64)	(194.76)	(+6.12)
July	194.35	201.45	+7.10
August	191.57	200.79	+9.22
September	188.44	198.43	+9.99
(Quarter)	(191.45)	(200.22)	(+8.77)
October	186.37	198.44	+12.07
November	182.95	193.94	+10.99
December	179.26	188.74	+9.48
(Quarter)	(182.86)	(193.71)	(+10.85)
January 1986	182.27	191.76	+9.49
February	185.72	196.30	+10.58
March	192.15	202.72	+10.57
(Quarter)	(186.71)	(196.93)	(+10.22)
April	211.48	220.75	+9.27
May	211.36	220.91	+9.55
June	202.19	211.84	+9.65
(Quarter)	(208.34)	(217.83)	(+9.49)
July	198.71	208.89	+10.18
August	199.27	208.83	+9.56
September	207.91	218.35	+10.44
(Quarter)	(201.96)	(212.02)	(+10.06)
October	210.14	220.94	+10.80
November	206.64	216.84	+10.20
December	206.44	215.74	+9.28
(Quarter)	(207.74)	(217.83)	(+10.09)
January 1987	203.04	213.11	+10.07
February	209.24	220.48	+11.24
March	216.50	227.53	+11.03
(Quarter)	(209.59)	(220.37)	(+10.78)
April	217.13	229.19	+12.06
May	210.90	222.40	+11.50
June	209.43	218.68	+9.25
(Quarter)	(212.49)	(223.42)	(+10.93)

TABLE III—24-MONTH INDEX ADJUSTMENT FACTORS

[Proposed by USDA, Forest Service]

Species/index log basis/adjustment factor	Thousands of board feet	Value in dollars	Dollars per thousand board feet
Pacific Northwest Douglas Fir:			
1985–86 basis	8,439,360	1,923,278,304	227.89
1978–79 basis	8,439,360	2,034,658,905	−241.09
Adjustment Factor			−13.20
Pacific Northwest Hem-Fir:			
1985–86 basis	2,343,260	493,801,058	210.73
1978–79 basis	2,343,260	489,193,683	−208.77
Adjustment Factor			+1.96
Coast Inland North Ponderosa Pine:			
1985–86 basis	5,122,197	2,236,991,347	436.73
1975–76 basis	4,684,303	1,978,254,402	−422.32
Adjustment Factor			+14.41
Rocky Mountain Ponderosa Pine:			
1985–86 basis	1,302,474	394,946,330	303.23
1975–76 basis	1,142,160	370,043,225	−323.99
Adjustment Factor			−20.76
Idaho White Pine:			
1985–86 basis	209,421	95,176,536	454.48
1971 basis	194,732	79,630,789	−408.93
Adjustment Factor			+45.55
Sugar Pine:			
1985–86 basis	2,580,651	1,370,920,000	531.23
1977–78 basis	2,414,162	1,353,564,967	−560.68
Adjustment Factor			−29.45
White Fir:			
1985–86 basis	3,215,983	696,788,867	217.29
1971 basis	2,532,547	544,543,429	−215.06
Adjustment Factor			+2.23
Indland North Dry Douglas Fir—Larch:			
1985–86 basis	3,421,402	743,708,440	217.37
1971 basis	3,349,241	743,921,517	−222.12
Adjustment Factor			−4.75
White Woods:			
1985–86 basis	2,324,474	508,158,834	218.61
1974–75 basis	2,198,589	458,013,525	−208.32
Adjustment Factor			+10.29

[FR Doc. 88–7507 Filed 4–6–88; 8:45 am]

BILLING CODE 3410-11-M

Soil Conservation Service

Ross County Wildlife Area RC&D Measure, OH; Finding of No Significant Impact

AGENCY: Soil Conservation Service, USDA.

ACTION: Notice of finding of no significant impact.

SUMMARY: Pursuant to section 102(2)(C) of the National Environmental Policy Act of 1969; the Council on Environmental Quality Guidelines (40 CFR Part 1500); and the Soil Conservation Service Guidelines (7 CFR Part 650); the Soil Conservation Service, U.S. Department of Agriculture, gives notice that an environmental impact statement is not being prepared for the Ross County Wildlife Area RC&D Measure, Ross County, Ohio.

FOR FURTHER INFORMATION CONTACT: Roger A. Hansen, Acting State Conservationist, Soil Conservation Service, Federal Building, 200 North High Street, Room 522, Columbus, Ohio 43215, telephone: (614)–469–6962.

SUPPLEMENTARY INFORMATION: The environmental assessment of this federally assisted action indicates that the project will not cause significant local, regional, or national impact on the environment. As a result of these findings, Roger A. Hansen, Acting State Conservationist, has determined that the preparation and review of an environmental impact statement is not needed for this project.

This measure concerns a plan for water-based fish and wildlife development in an area managed for wildlife habitat. Planned works of improvement include the construction of a shallow water pond with a water control structure and two acres of critical area seeding.

The Notice of Finding of No Significant Impact (FONSI) has been forwarded to the Environmental Protection Agency and to various federal, state, and local agencies and interested parties. A limited number of copies of the FONSI are available to fill single copy requests at the above

address. Basic data developed during the environmental assessment are on file and may be reviewed by contacting Roger A. Hansen.

No administrative action on implementation of the proposal will be taken until 30 days after the date of this publication.

(This activity is listed in the Catalog of Federal Domestic Assistance under No. 10.901—Resource Conservation and Development Program—and is subject to the provisions of Executive Order 12372 which requires intergovernmental consultation with state and local officials.)

Roger A. Hansen,

Acting State Conservationist.

March 28, 1988.

[FR Doc. 88-7625 Filed 4-6-88; 8:45 am]

BILLING CODE 3410-16-M

DEPARTMENT OF COMMERCE

Agency Information Collection Under Review by the Office of Management and Budget

DOC has submitted to OMB for clearance the following proposal for collection of information under the provisions of the Paperwork Reduction Act (44 U.S.C. Chapter 35).

Agency: National Oceanic and Atmospheric Administration

Title: Involuntary Child and Spousal Support Allotments of NOAA Corps Officers

Form Number: Agency—N/A; OMB—N/A

Type of Request: New collection

Burden: 1 respondent; 1 reporting hour

Needs and Uses: Active NOAA Corps. officers' spouses, ex-spouses or children seeking financial support may provide notification that an officer has failed to make periodic support payments under a support order. The information is used to provide support through involuntary deductions from the officer's pay.

Affected Public: Individuals

Frequency: On occasion

Respondent's Obligation: Required to obtain or retain a benefit

OMB Desk Officer: John Griffen, 395-7340

Copies of the above information collection proposal can be obtained by calling or writing DOC Clearance Officer, Edward Michals, (202) 377-3271, Department of Commerce, Room 6622, 14th and Constitution Avenue, NW., Washington, DC 20230.

Written comments and recommendations for the proposed information collection should be sent to John Griffen, OMB Desk Officer, Room 3228, New Executive Office Building, Washington, DC 20503.

Dated: March 31, 1988.

Edward Michals,

Departmental Clearance Officer, Office of Management and Organization.

[FR Doc. 88-7586 Filed 4-6-88; 8:45 am]

BILLING CODE 3510-CW-M

Bureau of the Census

Census Advisory Committee (CAC) on the American Indian and Alaska Native Populations for the 1990 Census, the CAC on the Asian and Pacific Islander Populations for the 1990 Census, the CAC on the Black Population for the 1990 Census, and the CAC on the Hispanic Population for the 1990 Census; Public Meeting

Pursuant to the Federal Advisory Committee Act (Pub. L. 92-463 as amended by Pub L. 94-409), we are giving notice of a joint meeting followed by separate and jointly held meetings (described below) of the CAC of the American Indian and Alaska Native Populations for the 1990 Census, the CAC on the Asian and Pacific Islander Populations for the 1990 Census, the CAC on the Black Population for the 1990 Census, and the CAC on the Hispanic Population for the 1990 Census. The joint meeting will convene on April 21 and 22, 1988 at the Ramada Hotel, 6400 Oxon Hill Road, Oxon Hill, Maryland 20745.

Each of these Committees is composed of 12 members appointed by the Secretary of Commerce. They provide an organized and continuing channel of communication between the communities they represent and the Bureau of the Census on the problems and opportunities of the 1990 decennial census.

The Committees will draw on the knowledge and insight of their members to provide advice during the planning of the 1990 Census of Population and Housing on such elements as improving the accuracy of the population count, suggesting areas of research, recommending subject content and tabulations of particular use to the populations they represent, expanding the dissemination of census results among present and potential users of census data in their communities, and generally improving the usefulness of the census product.

The agenda for the April 21 combined meeting that will begin at 8:45 a.m. and end at 2:45 p.m. is: (1) Introductory remarks by the Director, Bureau of the Census; (2) 1990 planning update, which includes dress rehearsal and 1990 census status report, sample size, sample design, and content issue, and disclosure avoidance; (3) undercount behavioral research; (4) processing office sites; (5) recommended 1990 questions on race and Spanish origin; and (6) 1990 promotion update.

The agendas for the four committees in their separate meetings that will begin at 2:45 p.m. and end at 5 p.m. on April 21 are as follows:

The CAC on the American Indian and Alaska Native Populations for the 1990 Census: (1) Activity report—American Indian Liaison; (2) affimative action update and hiring of American Indian and Alaska Native staff in regional offices; and (3) election of chairperson.

The CAC on the Asian and Pacific Islander Populations for the 1990 Census: (1) Race question for the 1990 census, coding of race; (2) status of early alert mailout; and (3) election of chairperson.

The CAC on the Black Population for the 1990 Census: (1) Dress rehearsal public service announcements; (2) consideration of Census Bureau responses to Committee recommendations; and (3) election of chairperson.

The CAC on the Hispanic Population for the 1990 Census: (1) Spanish origin question for the 1990 census; and (2) report on outreach activities with mayors and Roman Catholic Bishops and other Hispanic outreach projects.

On April 21, from 5 p.m. to 7 p.m. the combined meeting agenda will be on focus group study.

The agenda for the April 22 combined meeting that will begin at 8:45 a.m. and end at 11:15 a.m. is regional recruiting plan for the 1990 decennial census.

The agenda for the four committees in their separate meetings that will begin at 11:15 and end at 2:15 on April 22 are as follows:

The CAC on the American Indian and Alaska Native Populations for the 1990 Census: (1) Tribal Liaison Program update, including 1987 census experience; (2) promotion plans for American Indians and Alaska Natives; (3) focus group observation update; (4) consideration of Census Bureau responses to Committee recommendations; (5) focus group study; and (6) development and discussion of recommendations.

The CAC on the Asian and Pacific Islander Populations for the 1990 Census: (1) Affirmative action update and hiring of Asian and Pacific Islander staff in regional offices; (2) status of Committee vacancies; (3) consideration of Census Bureau responses to Committee recommendations; (4) focus

group study; and (5) development and discussion of recommendations.

The CAC on the Black Population for the 1990 Census: (1) Residential Finance Survey update; (2) undercoverage of the Black population; (3) focus group study; and (4) development and discussion of recommendations.

The CAC on the Hispanic Population for the 1990 Census: (1) Affirmative action plan (Hispanics for permanent work force and temporary 1990 work force); (2) active participation and attendance of Committee members; (3) consideration of Census Bureau Responses to Committee recommendations; (4) focus group study; and (5) development and discussion of recommendations.

The agenda for the April 22 combined meeting that will begin at 2:15 p.m. and adjourn at 3 p.m. is (1) Public comments; (2) presentation of recommendations; and (3) plans for the next meeting.

All meetings are open to the public and a brief period is set aside on April 22 for public comment and questions. Those persons with extensive questions or statements must submit them in writing to the Census Bureau official named below at least 3 days before the meeting.

Persons wishing additional information concerning these meetings or who wish to submit written statements may contact Mr. Allan A. Stephenson, Assistant Division Chief for Outreach and Program Information, Decennial Planning Division, Bureau of the Census, Room 3574, Federal Building 3, Suitland, Maryland. (Mailing address: Washington, DC 20233) Telephone: (301) 763-5926.

Date: April 1, 1988.

John G. Keane,

Director, Bureau of the Census.

[FR Doc. 88-7616 Filed 4-6-88; 8:45 am]

BILLING CODE 3510-07-M

Foreign-Trade Zones Board

[Order No. 379]

Resolution and Order Approving the Application of the South Louisiana Port Commission For a Subzone at the TransAmerican Natural Gas Corporation Refinery in Destrehan, LA

Proceedings of the Foreign-Trade Zones Board, Washington, DC.

Resolution and Order

Pursuant to the authority granted in the Foreign-Trade Zones Act of June 18, 1934, as amended (19 U.S.C. 81a-81u), the Foreign-Trade Zones Board has adopted the following Resolution and Order:

The Board, having considered the matter, hereby orders:

After consideration of the application of the South Louisiana Port Commission, grantee of FTZ 124, filed with the Foreign-Trade Zones Board (the Board) on February 21, 1986, requesting special-purpose subzone status for the crude oil refinery of TransAmerican Natural Gas Corporation located in Destrehan, Louisiana, adjacent to the Gramercy Customs port of entry, the Board, finding that the requirements of the Foreign-Trade Zones Act, as amended, and the Board's regulations would be satisfied, and that the proposal would be in the public interest, if approval is subject to certain conditions, approves the application subject to the following conditions:

1. Foreign crude oil used as fuel for the refinery shall be dutiable.

2. TNG shall elect privileged foreign status on foreign crude oil and other foreign merchandise admitted to the subzone.

3. The U.S. Customs Service shall inform the Foreign-Trade Zones Board on or before July 1, 1991, that a satisfactory control system has been implemented so that the revenue can be fully protected; otherwise, the authority under this grant shall expire on that date.

The Secretary of Commerce, as Chairman and Executive Officer of the Board, is hereby authorized to issue a grant of authority and appropriate Board Order.

Grant of Authority To Establish a Foreign-Trade Subzone at the TransAmerican Natural Gas Corporation Refinery in Destrehan, Louisiana

Whereas, by an Act of Congress approved June 18, 1934, an Act "To provide for the establishment, operation, and maintenance of foreign-trade zones in ports of entry of the United States, to expedite and encourage foreign commerce, and for other purposes," as amended (19 U.S.C. 81a-81u) (the Act), the Foreign-Trade Zones Board (the Board) is authorized and empowered to grant to corporations the privilege of establishing, operating, and maintaining foreign-trade zones in or adjacent to ports of entry under the jurisdiction of the United States;

Whereas, the Board's regulations (15 CFR 400.304) provide for the establishment of special-purpose subzones when existing zone facilities cannot serve the specific use involved, and where a significant public benefit will result;

Whereas, the South Louisiana Port Commission, grantee of Foreign-Trade Zone No. 124, has made application (filed February 21, 1986, Docket 7-86, 51 FR 7971) in due and proper form to the Board for authority to establish a special-purpose subzone at the crude oil refinery of TransAmerican Natural Gas Corporation (TNG) located in Destrehan, Lousiana;

Whereas, notice of said application has been given and published, and full opportunity has been afforded all interested parties to be heard; and

Whereas, the Board has found that the requirements of the Act and the Board's regulations would be satisfied and that the proposal would be in the public interest if approval is given, subject to the conditions in the resolution accompanying this action;

Now, Therefore, in accordance with the application filed February 21, 1986, the Board hereby authorizes the establishment of a subzone at the TNG refinery, designated on the records of the Board as Foreign-Trade Subzone No. 124A, at the location mentioned above and more particularly described on the maps and drawings accompanying the application, said grant of authority being subject to the provisions and restrictions of the Act and the regulations, and those stated in the resolution accompanying this action, and also to the following express conditions and limitations:

Activation of the subzone shall be commenced within a reasonable time from the date of issuance of the grant, and prior thereto, any necessary permits shall be obtained from Federal, State, and municipal authorities.

Officers and employees of the United States shall have free and unrestricted access to and throughout the foreign-trade subzone in the performance of their official duties.

The grant shall not be construed to relieve responsible parties from liability for injury or damage to the person or property of others occasioned by the construction, operation, or maintenance of said subzone, and in no event shall the United States be liable therefor.

The grant is further subject to settlement locally by the District Director of Customs and District Army Engineer with the Grantee regarding compliance with their respective requirements for the protection of the revenue of the United States and the installation of suitable facilities.

In witness whereof, the Foreign-Trade Zones Board has caused its name to be signed and its seal to be affixed hereto by its Chairman and Executive Officer or his delegate at Washington, DC, this

BEST COPY AVAILABLE

31st day of March, 1988, pursuant to Order of the Board.

Foreign-Trade Zones Board.

Gilbert B. Kaplan,

Assistant Secretary of Commerce for Import Administration, Chairman, Committee of Alternates.

Attest:

John J. Da Ponte, Jr.,

Executive Secretary.

[FR Doc. 88-7666 Filed 4-6-88; 8:45 am]

BILLING CODE 3510-DS-M

International Trade Administration

Antidumping or Countervailing Duty Order, Finding, or Suspended Investigation; Opportunity to Request Administrative Review

AGENCY: International Trade Administration, Import Administration, Commerce.

ACTION: Notice of opportunity to request administrative reveiw of antidumping or countervailing duty order, finding, or suspended investigation.

Background: Each year during the anniversary month of the publication of an antidumping or countervailing duty order, finding, or suspension of investigation, an interested party as defined in section 771(9) of the Tariff Act of 1930 may request, in accordance with § 353.53a or 355.10 of the Commerce Regulations, that the Department of Commerce ("the Department") conduct an administrative review of that antidumping or countervailing duty order, finding, or suspended investigation.

Opportunity to Request a Review: Not later than April 30, 1988, interested parties may request administrative review of the following ordes, findings, or suspended investigations, with anniversary dates in April for the following periods:

Antidumping Duty Proceeding	*Period*
Calcium Hypochlorite from Japan	04/01/87—03/31/88
Certain Fresh Cut Flowers from Kenya	11/03/86—03/31/88
Certain Fresh Cut Flowers from Mexico	11/03/86—03/31/88
Color Television Receivers from the Republic of Korea	04/01/87—03/31/88
Color Television Receivers, except for Video Monitors from Taiwan	04/01/87—03/31/88
Cyanuric Acid from Japan	04/01/87—03/31/88
Diamond Tips from the United Kingdom	04/01/87—03/31/88
Dichloroisocyanurates from Japan	04/01/87—03/31/88
Roller Chain, other than Bicycle from Japan	04/01/87—03/31/88
Sorbitol from France	04/01/87—03/31/88
Spun Acrylic Yarn from Italy	04/01/87—03/31/88
Spun Acrylic Yarn from Japan	04/01/87—03/31/88
Steel Reinforcing Bars from Canada	04/01/87—03/31/88
Sugar and Syrups from Canada	04/01/87—03/31/88
Trichloro Isocyanuric Acid from Japan	04/01/87—03/31/88
Countervailing Duty Proceeding	
Cold Rolled Steel Sheet from Argentina	01/01/87—12/31/87
Leather Wearing Apparel from Mexico	01/01/87—12/31/87
Pig Iron from Brazil	01/01/87—12/31/87
Pompom Chrysanthemums from Peru	10/27/86—12/31/87
Rice from Thailand	01/01/87—12/31/87
Wool from Argentina	01/01/87—12/31/87
Suspended Investigation	
Leather Wearing Apparel From Colombia	01/01/87—12/31/87

Seven copies of the request should be submitted to the Acting Assistant Secretary for Import Administration, International Trade Administration, Room B-099, U.S. Department of Commerce, Washington, DC 20230.

The Department will publish in the **Federal Register** a notice of "Initiation of Antidumping (Countervailing) Duty Administrative Review," for requests received by April 30, 1988.

If the Department does not receive by April 30, 1988 a request for review of entries covered by an order or finding listed in this notice and for the period identified above, the Department will instruct the Customs Service to assess antidumping or countervailing duties on those entries at a rate equal to the cash deposit of (or bond for) estimated antidumping or countervailing duties required on those entries at the time of entry, or withdrawal from warehouse, for consumption and to continue to collect the cash deposit previously ordered.

This notice is not required by statute, but is published as a service to the international trading community.

Date: March 30, 1988.

Gilbert B. Kaplan,

Acting Assistant Secretary for Import Administration.

[FR Doc. 88-7685 Filed 4-6-88; 8:45 am]

BILLING CODE 3510-DS-M

National Bureau of Standards

Announcing Workshop on Applications Portability Profile

AGENCY: National Bureau of Standards, Commerce.

ACTION: Notice.

SUMMARY: The Institute for Computer Sciences and Technology (ICST) at the National Bureau of Standards (NBS) is sponsoring an open workshop to discuss a proposed Applications Portability Profile. The Applications Portability Profile will provide a common interface to computer systems based on the architecture of the Portable Operating System Interface for Computer Environments (POSIX) standard. The workshop is intended for middle and upper management of government agencies and companies which build systems for the government.

DATE: It will be held on April 25, 1988 at NBS, Gaithersburg, MD.

ADDRESS: To register or to receive a brochure on the workshop contact: APP Workshop, ATTN: Debbie Jackson, National Bureau of Standards, Building 225, Room B266, Gaithersburg, MD 20899, Telephone: (301) 975-3295.

FOR FURTHER INFORMATION CONTACT: James A. Hall, (301) 975-3273.

SUPPLEMENTARY INFORMATION: Attendance at the workshop is limited due to space requirements and the size of the conference facility; therefore, registration is on a first come, first served basis with recommended limitation of two participants per company. A $35 registration fee to help defray the costs of conducting the workshop will be charged. Participants are expected to make their own travel arrangements and accommodations. NBS reserves the right to cancel any part of the workshop.

Date: April 4, 1988.

Ernest Ambler,

Director.

[FR Doc. 88-7647 Filed 4-6-88; 8:45 am]

BILLING CODE 3510-13-M

National Technical Information Service

Government-Owned Inventions; Availability for Licensing

The inventions listed below are owned by agencies of the U.S. Government and are available for licensing in the U.S. in accordance with 35 U.S.C. 207 to achieve expeditious commercialization of results of federally funded research and development.

Foreign patents are filed on selected inventions to extend market coverage for U.S. companies and may also be available for licensing.

Technical and licensing information on specific inventions may be obtained by writing to: Office of Federal Patent Licensing, U.S. Department of Commerce, P.O. Box 1423, Springfield, Virginia 22151.

Please cite the number and title of inventions of interest.

Douglas J. Campion,

Associate Director, Office of Federal Patent Licensing, National Technical Information Service, U.S. Department of Commerce.

Department of Agriculture

SN 6-673,299 (4,720,574)
Antimicrobial Compound Bis(carbomethoxymethyl) Adipate
SN 6-855,857 (4,713,391)
Azabicyloalkane Phenyl Substituted Alkane Carboxylates, their Preparation and Use as Anticholinergic Agents
SN 6-858,809 (4,718,134)
End Plug for Bee Shipping Tubes
SN 7-104,899
Polysaccharide Graft Copolymer-Enzyme Products and Preparation Thereof
SN 7-127,021
Isopotential Available Ion Extractor
SN 7-140,470
Device For Differential Ginning

Department of Army

SN 7-104,464
Remote Angle Measurement—Especially Missile Yaw Measurement
SN 7-138,790
High Accuracy Frequency Standard and Clock System

Department of Commerce

SN 6-834,728 (4,714,339)
Three and Five Axis Laser Tracking Systems

Department of Health and Human Services

SN E-494-87
Polysaccharide-Protein Conjugates
SN 6-421,344 (4,717,548)
Analytically Controlled Blood Perfusion System
SN 6-654,213 (4,722,895)
Synthetic Peptides for the Production of Specific Keratin Protein Antibodies
SN 6-680,992 (4,716,105)
Mini Mu Containing Plasmid and a Method for Rapid DNA Sequencing
SN 6-717,613 (4,722,888)
Cell Line Producing Human Monoclonal Antibody Which Bends to HTLV-I Producing Cells
SN 6-737,458 (4,661,445)
Competitive Elisa For the Detection of HTLV-III Antibodies
SN 6-769,684 (4,722,890)
Quantitative Assay for Human Terminal Complement Cascade Activation
SN 6-867,013 (4,719,349)
Electrochemical Sample Probe for Use in Fast-Atom Bombardment Mass Spectrometry
SN 6-915,797 (4,714,554)
Cross-Axis Synchronous Flow-Through Coil Planet Centrifuge Free of Rotary Seals; Apparatus and Method for Performing Countercurrent Chromatograpy
SN 7-141,090
Cytotoxic T Lymphocyte Activation Assay
SN 7-142,978
Polyacrylamide Gels for Improved Detection of Proteins
SN 7-144,744
Prazosin Analog with Increased Selectivity and Duration of Action
SN 7-148,134
Lassa Fever Vaccine and Diagnostic Reagents
SN 7-159,017
Inhibitors for Replication of Retroviruses and for the Expression of Oncogene Products
SN 7-160,856
Resin-Modified Glass Ionomer Dental Cements
SN 7-160,993
Use of 23Na NMR in the Analysis of Renal Function

[FR Doc. 88-7605 Filed 4-6-88; 8:45 am]

BILLING CODE 3510-04-M

COMMITTEE FOR THE IMPLEMENTATION OF TEXTILE AGREEMENTS

Reduction of an Import Limit for Certain Man-Made Fiber Textile Products Produced or Manufactured in the Socialist Republic of Romania

April 4, 1988.

AGENCY: Committee for the Implementation of Textile Agreements (CITA).

ACTION: Issuing a directive to the Commissioner of Customs amending a restraint limit.

EFFECTIVE DATE: April 12, 1988.

Authority: Effective Order 11651 of March 3, 1972, as amended; section 204 of the Agricultural Act of 1956, as amended (7 U.S.C. 1854)

FOR FURTHER INFORMATION CONTACT: Jerome Turtola, International Trade Specialist, Office of Textiles and Apparel, U.S. Department of Commerce, (202) 377-4212. For information on the quota status of this limit, please refer to the Quota Status Reports posted on the bulletin boards of each Customs port. For information on embargoes and quota re-openings, please call (202) 377-3715.

SUPPLEMENTARY INFORMATION: Under the terms of the Bilateral Textile Agreement, effected by exchange of notes dated November 7 and 16, 1984, as amended, the Governments of the United States and the Socialist Republic of Romania, agreed during consultations to revise the previously established growth rate for Category 604 for the duration of the man-made fiber and wool agreement.

A copy of the current Bilateral Textile Agreement between the Governments of the United States and the Socialist Republic of Romania is available from the Textiles Division, Economic Bureau, U.S. Department of State, (202) 647-1998.

A description of the textile categories in terms of T.S.U.S.A. numbers is available in the correlation: Textile and Apparel Categories with Tariff Schedules of the United States Annotated (see **Federal Register** notice 52 FR 47745, dated December 11, 1987). Also see 53 FR 7783, published in the **Federal Register** on March 10, 1988.

The letter to the Commissioner of Customs and the actions taken pursuant to it are not designed to implement all of the provisions of the agreement, but are designed to assist only in the implementation of certain of its provisions.

James H. Babb,

Chairman, Committee for the Implementation of Textile Agreements.

April 4, 1988

Commissioner of Customs,
Department of the Treasury, Washington, D.C.

Dear Mr Commissioner: This directive amends, but does not cancel, the directive issued to you on March 7, 1988, concerning imports into the United States of certain wool and man/made fiber textile products, produced or manufactured in Romania and exported during the twelve-month period which began on January 1, 1988 and extends through December 31, 1988.

Effective on April 12, 1988, the directive of March 7, 1988 is amended to revise the previously established limit for man-made fiber textile products in Category 604 to 3,250,000 pounds.

The Committee for the Implementation of Textile Agreements has determined that this action falls within the foreign affairs exception to the rulemaking provisions of 5 U.S.C. 553(a)(1).

Sincerely,

James H. Babb,

Chairman, Committee for the Implementation of Textile Agreements.

[FR Doc. 88-7651 Filed 4-6-88; 8:45 am]

BILLING CODE 3510-DR-M

Announcement of Import Limits for Certain Cotton, Man-Made Fiber, Silk Blend and Other Vegetable Fiber Textiles and Textile Products Produced or Manufactured in the Socialist Republic of Romania

April 4, 1988.

AGENCY: Committee for the Implementation of Textile Agreements (CITA).

ACTION: Issuing a directive to the Commissioner of Customs establishing limits.

EFFECTIVE DATE: April 12, 1988.

Authority: Executive Order 11651 of March 3, 1972, as amended; section 204 of the Agricultural Act of 1956, as amended (7 U.S.C. 1854).

FOR FURTHER INFORMATION CONTACT: Jerome Turtola, International Trade Specialist, Office of Textiles and Apparel, U.S. Department of Commerce, (202) 377-4212. For information on the quota status of these limits, please refer to the Quota Status Reports which are posted on the bulletin boards of each Customs port. For information on embargoes and quota re-openings, please call (202) 377-3715.

SUPPLEMENTARY INFORMATION: During consultations held between the Governments of the United States and the Socialist Republic of Romania, agreement was reached to amend and extend their Bilateral Cotton Textile Agreement of January 28 and March 31, 1983 from January 1, 1988 through December 31, 1989.

A copy of the current bilateral agreement is available from the Textiles Division, Economic Bureau, U.S. Department of State, (202) 647-1998.

The letter to the Commissioner of Customs and the actions taken pursuant to it are not designed to implement all of the provisions of the bilateral agreement, but are designed to assist only in the implementation of certain of its provisions.

James H. Babb,

Chairman, Committee for the Implementation of Textile Agreements.

April 4, 1988.

Commissioner of Customs,

Department of the Treasury, Washington, D.C.

Dear Mr. Commissioner: Under the terms of Section 204 of the Agricultural Act of 1956, as amended (7 U.S.C. 1854), and the Arrangement Regarding International Trade in Textiles done at Geneva on December 20, 1973, as futher extended on July 31, 1986; pursuant to the Bilateral Cotton Textile Agreement of January 28 and March 31, 1983, as amended and extended, between the Governments of the United States and the Socialist Republic of Romania; and in accordance with the provisions of Executive Order 11651 of March 3, 1972, as amended, you are directed to prohibit, effective on April 12, 1988, entry into the United States for consumption and withdrawal from warehouse for consumption of cotton, man-made fiber, silk blend and other vegetable fiber textiles and textile products in the following categories, produced or manufactured in Romania and exported during the twelve-month period beginning on January 1, 1988 and extending through December 31, 1988, in excess of the following restraint limits:

Category	12-month restraint limit [1]
200, 201, 218-220, 222-227, 229, 239, 300, 301, 313-315, 317, 326, 330-342, 345, 347-354, 359-363, 369, 800, 810, 831-836, 838-840, 842-847, 850-852, 858, 859, 863, 870, 871 and 899, as a group.	43,000,000 square yards equivalent.
Sublevels within the group	
313	2,000,000 square yards.
314	1,500,000 square yards.
315	1,500,000 square yards.
333/833	75,000 dozen.
334	257,153 dozen of which not more than 36,320 dozen shall be in Category 334pt. (other than knit athletic jackets) in all TSUSA numbers in Category 334 except 381.0211 and 381.3905.
335/835	95,000 dozen.
338/339	410,000 dozen.
340	178,961 dozen.
341/840	75,000 dozen.
347/348	320,000 dozen.
352	181,818 dozen.
359	652,174 pounds.
361	515,000 numbers.
369	652,174 pounds.
810	5,000,000 square yards.
847	75,000 dozen.

[1] The limits have not been adjusted to account for any imports exported after December 31, 1987.

To the extent that trade which now falls in the foregoing categories is within a category limit for the period January 1, 1987 through December 31, 1987, such trade, to the extent of any unfilled balances, shall be charged against the levels of restraint established for that period. In the event the limits established for that period have been exhausted by previous entries, such goods shall be subject to the levels set forth in this directive.

The levels set forth above are subject to adjustment in the future according to the provisions of the Bilateral Cotton Textile Agreement of January 28 and March 31, 1983, as amended and extended, between the Governments of the United States and Romania.

In carrying out the above directions, the Commissioner of Customs should construe entry into the United States for consumption to included entry for consumption into the Commonwealth of Puerto Rico.

The Committee for the Implementation of Textile Agreements has determined that these actions fall within the foreign affairs exception to the rulemaking provisions of 5 U.S.C. 553 (a)(1).

Sincerely,

James H. Babb,

Chairman, Committee for the Implementation of Textile Agreements.

[FR Doc. 88-7652 Filed 4-6-88; 8:45 am]

BILLING CODE 3510-DR-M

COMMITTEE FOR PURCHASE FROM THE BLIND AND OTHER SEVERELY HANDICAPPED

Procurement List 1988; Additions

AGENCY: Committee for Purchase from the Blind and Other Severely Handicapped.

ACTION: Additions to procurement list.

SUMMARY: This action adds to Procurement List 1988 commodities to be produced by workshops for the blind or other severely handicapped.

EFFECTIVE DATE: May 9, 1988.

ADDRESS: Committee for Purchase from the Blind and Other Severely Handicapped, Crystal Square 5, Suite 1107, 1755 Jefferson Davis Highway, Arlington, Virginia 22202-3509.

FOR FURTHER INFORMATION CONTACT: C.W. Fletcher, (703) 557-1145.

SUPPLEMENTARY INFORMATION:

On December 15, 1987 the Committee for Purchase from the Blind and Other Severely Handicapped published a notice (52 FR 47624) of proposed addition to Procurement List 1988, December 10, 1987 (52 FR 46926).

Comments were received from the current contractor for the two steel credenzas. The major issues raised in the comments concerned the workshop's capability to produce the credenzas, the costs of the credenzas, adverse impact on the current contractor, the workshop's compliance with the law and regulations regarding the employment of severely handicapped and the evidentiary basis for the proposal.

Capability of the Workshop to Produce the Credenzas

The commenter questioned the workshop's capability to produce the credenzas. The General Services

Administration (GSA), as the result of an on-site inspection, has determined that the workshop is capable of producing the credenzas in the quantities required by the Government. The workshop has also submitted a bid sample to GSA which has been accepted. Based on the preceding, the Committee has determined that the workshop can produce the credenzas in compliance with the Government's requirements. The commenter also questioned whether the tasks required in manufacturing the credenzas can be performed by severely handicapped persons and whether the handicapped persons proposed to manufacture the credenzas meet the definition of "severely handicapped individuals". The workshop is currently manufacturing two steel bookcases for the Government under the Committee's program requiring most of the same operations as those which would be used in manufacturing the credenzas. In fiscal year 1987, about 90% of the direct labor hours used in the manufacture of the steel bookcases was performed by severely handicapped persons. A member of the Committee staff has conducted an on-site inspection of the workshop and has determined that the workshop maintains records on those persons who were listed as "other severely handicapped" in accordance with 41 CFR 51–4.3(b) and that the persons so listed meet the definition of "other severely handicapped" in 41 U.S.C. 48b(2) and 41 CFR 51–1.2(g).

The commenter quoted from a letter to the Tennessee Department of Mental Health and Mental Retardation from the President of the workshop, dated April 1, 1985 which indicated that the workshop did not have the production capacity to produce the steel credenzas. In April 1985, the workshop was in the start-up phase of producing the steel bookcases, which had been added to the Procurement List in August 1984, just eight months earlier, and its capacity for additional work at that time was undoubtedly limited. However, that is not the situation in March 1988 nearly three years later.

Both the procuring activity (GSA) and the central nonprofit agency, the National Industries for the Severely Handicapped, have verified that the workshop has the capacity to produce the steel credenzas in addition to the steel bookcases.

Costs of the Credenzas

The commenter stated that the costs to the Government have been miscalculated and that the workshop is incapable of producing the credenzas at a fair market price, which the commenter defines as the most recent award price. The Committee has defined the "fair market price" for a commodity on the Procurement List, which has been recently procured by the Government, to be the median of the bids submitted on the most recent solicitation for the commodity which are not more than 35% above the award price, or five percent above the award price, whichever is higher. In this case, four firms submitted bids. After deleting one bid from consideration since it was more than 35% above the award price, the fair market price was determined using the bids of the next-to-the-low bidder.

When the request for fair market price determination was submitted to the Committee, it contained an estimated shipping weight of 65 pounds per credenza. After the workshop had prepared its bid samples, it weighed one of the finished credenzas packed for shipment and determined that the actual shipping weight was 76.13 pounds. The fair market prices were revised to reflect the higher freight costs. The National Industries for the Severely Handicapped has assured the Committee that the workshop has agreed to produce the credenzas at the new fair market price and it is capable of doing so.

The commenter has alleged that the increased costs to the Government over the lowest price bid would exceed the benefits to the handicapped workers. The proposed addition action will create full-time jobs for nearly 16 severely handicapped persons. The fair market price for deliveries in 1988 was determined in accordance with the Committee's pricing policy based on the bids submitted on the most recent solicitation and it 14.7% above the average price awarded in June 1987.

The legislative history of the Act establishing the Committee (Pub. L. 92–28, 41 U.S.C. 46–48c) recognizes that the primary purpose of the Act is to create job opportunities for blind and other severely handicapped individuals and to assist in the rehabilitation of those individuals through work (House Report No. 92–228, May 25, 1971). The Act also assigns to the Committee the responsibility for establishing the fair market price for commodities and services on its Procurement List. If a proposed addition to the Procurement List will create work for blind or other severely handicapped individuals and the proposed price meets the Committee's criteria as a fair market price, there is no requirement for the Committee to try to balance the trade-off between any added cost to the Government against the opportunities for the employment of blind or other severely handicapped persons.

Workshop's Compliance with Law and Regulations

The commenter has cited a number of instances of deficiencies in the workshop's compliance with the laws and regulations regarding the employment of severely handicapped and has charged that it has failed to pay commensurate wages to its severely handicapped employees. The commenter cited the requirement in the Committee's regulations (41 CFR 51–4.3(a)(5)) that the workshop must comply with the applicable compensation, employment and occupational health and safety standards prescribed by the Secretary of Labor. The verification of compliance and the enforcement of those standards are the responsibility of the Secretary of Labor.

When the Committee's regulations were amended in 1983 to include the requirement for compliance with the compensation and employment standards prescribed by the Secretary of Labor, the supplemental information in the notice for the final rule (48 FR 21328, May 12, 1983) contained the following statement in responding to a comment questioning the Committee's authority to require compliance with employment and compensation standards:

> Under the proposed rule, when the Department of Labor notifies the Committee that a workshop is not in compliance with the employment or compensation standards established by the Secretary of Labor, the Committee will have the authority to limit or withdraw that workshop's authorization to produce commodities or provide services under its Act.

In the same notice, in response to an inquiry regarding the Committee's role in enforcement, it was stated:

> The correspondent was informed that the Committee would not be involved in enforcing compensation and employment standards, since, by law, such enforcement is the responsibility of the Secretary of Labor.

The Department of Labor notified the Committee on March 9, 1988 that it had not determined that the workshop was not in compliance with the Fair Labor Standards Act or the Walsh-Healey Public Contracts and the applicable regulations. In view of the above, the Committee has no legal or regulatory basis for determining that the workshop is not in compliance with the applicable laws and regulations governing the pay and employment of its severely handicapped employees and, therefore, has no basis in this regard for

withholding approval of the credenzas for addition to the Procurement List.

Impact on the Current Contractor

The commenter, the current contractor for the steel credenzas, stated that the addition of the credenzas to the Procurement List would have a serious adverse impact on that firm. He stated that the loss of business represents about 5.4% of the firm's average gross sales over the past three years and that prior actions by the Committee in adding to the Procurement List the two steel bookcases and six steel tables for which his firm was the prior contractor, have resulted in cumulative impact of 20.24% on his firm.

A review of the Committee's records show that:

a. When the two steel bookcases were added to the Procurement List in August 1984, the commenter's firm was neither the current nor the prior year contrator for those bookcases.

b. When the six steel tables were added to the Procurement List in September 1977, the commenter's firm was neither the current nor the prior year contractor for those tables.

Thus, the only impact of those actions by the Committee was the loss of the firm's opportunity to bid on those furniture items. The wide variations in the firm's sales to GSA, which peaked in 1986 less than two years after the addition of the two steel bookcases to the Procurement List, do not substantiate the claim that that firm's business has been hurt by the loss of the opportunity to bid on those and other items on the Procurement List. The steel credenzas represent only two of 97 different contemporary and traditional steel office furniture items which were included on the last solicitation covering these items for procurement from commercial sources.

Based on an estimated award value of $547,260 for the current contractor and that firm's estimated annual sales of about $10,500,000, the impact of the loss of business would be 5.2%. This is not considered to be serious adverse impact.

The commenter also stated that the proposed action would result in the loss of an investment of $25,000 to $30,000 in specialized tooling. This is not considered to impact seriously on a firm with a net worth of over $6,000,000.

The commenter indicated that the loss of the business represented by the proposed action will require the lay off of 10 employees. The Committee recognizes that any loss of business may require the lay off or reassignment of the employees of the commercial firm who were formerly producing the commodity. However, in determining the suitability of a proposed addition to the Procurement List, the Committee does not engage in comparing the number of jobs lost with the number of jobs the proposed addition to the Procurement List would create for blind or other severely handicapped workers. The number of jobs lost and gained will be determined by the manufacturing operations and procedures each firm is using and usually would have no bearing on the criteria for suitability contained in the Committee's regulations (41 CFR 51-2.6).

Evidentiary Basis of Proposal

The commenter stated that the information available to the Committee is not sufficient for it to evaluate the current proposal, in that the Committee has not required the workshop to submit information on such matters as the productivity of its severely handicapped workers, their wages, and the workshop's labor, materials, and burden costs to produce the credenzas, and that the lack of this information has impaired the commenter's ability to argue in opposition to the proposed action. He pointed out, that in the past, this information was required to be submitted to the Committee.

The Committee is continuously reviewing the information which it requires from the workshops, or the central nonprofit agencies, on behalf of their workshops, to justify actions which they proposed to the Committee for a decision. As a part of that review it was determined that, when the price for a commodity being proposed for addition to the Procurement List was based on the bids on a recent solicitation for the item, information relating to the workshop's wages and costs was not necessary in the Committee's determination of the suitability of the addition of a commodity to the Procurement List (41 CFR 51-2.6). In those few cases where some additional information may be required, it is obtained on a case-by-case basis. With respect to the steel credenzas, additional information was not required in determining the suitability of these items, particularly in view of the workshop's success in producing the steel bookcases which require many of the same or similar operations. The Committee has made available to the commenter all of the information available to it on the proposed action which it can properly release under statute. The productivity of the workshop's severely handicapped employees, the number of handicapped workers it employs in producing steel bookcases, and the wages of those workers are not pertinent in the Committee's arriving at a decision on the suitability of the addition of the steel credenzas to the Procurement List.

After consideration of the relevant matter presented, the Committee has determined that the commodities listed below are suitable for procurement by the Federal Government under 41 U.S.C. 46-48c, 85 Stat. 77 and 41 CFR 51-2.6.

I certify that the following action will not have a significant impact on a substantial number of small entities. The major factors considered were:

a. The action will not result in any additional reporting, recordkeeping or other compliance requirements.

b. The action will not have a serious economic impact on any contractors for the commodities listed.

c. The action will result in authorizing small entities to produce the commodities procured by the Government.

Accordingly, the following commodities are hereby added to Procurement List 1988:

Credenza, Steel

7110-00-128-0096

7110-00-128-0546

C.W. Fletcher,

Executive Director.

[FR Doc. 88-7653 Filed 4-6-88; 8:45 am]

BILLING CODE 6820-33-M

DEPARTMENT OF DEFENSE

Public Information Collection Requirement Submitted to OMB for Review

ACTION: Notice.

The Department of Defense has submitted to OMB for clearance the following proposal for collection of information under the provisions of the Paperwork Reduction Act (44 U.SC. Chapter 35).

Title, Applicable Form, and Applicable Control Number:

DoD FAR Supplements Part 28, and Related Clauses in Part 52.228; No Forms; and OMB Control Number 0704-0216.

Type of Request: Extension.

Annual Burden Hours: 1,585.

Annual Responses: 1,450.

Needs and Uses: Information concerns certain data required to enable processing and/or monitoring of accident report/insurance claims relating to various insurance provisions including but not limited to war hazard losses, aircraft/missile accidents, and munitions accidents. Report is necessary to permit Government followup action and/or processing of claims.

Affected Public: Business or others for profit/small businesses or organizations.

Frequency: Recordkeeping—On Occasion.

Respondent's Obligation: Mandatory.

OMB Desk Officer: Mr. Edward Springer.

Written comments and recommendations on the proposed information collection should be sent to Mr. Edward Springer at Office of Management and Budget, Desk Officer, Room 3235, New Executive Office Building, Washington, DC 20503.

DOD Clearance Officer: Ms. Pearl Rascoe-Harrison.

A copy of the information collection proposal may be obtained from, Ms. Roscoe-Harrison WHS/DIOR, 1215 Jefferson Davis-Highway, Suite 1204, Arlington, Virginia 22202-4302, telephone (202) 746-0933.

L.M. Bynum,

Alternate OSD Federal Register Liaison Officer, Department of Defense.

April 1, 1988.

[FR Doc. 88-7634 Filed 4-6-88; 8:45 am]

BILLING CODE 3810-01-M

Office of the Secretary

Defense Intelligence Agency Scientific Advisory Committee; Cancellation of Closed Meeting

ACTION: Notice of cancellation of closed meeting.

SUMMARY: Notice is hereby given that the closed meeting of the DIA Scientific Advisory Committee's Tactical Intelligence Information Handling Systems Panel, scheduled for 19 April 1988, that was announced in the **Federal Register** on Wednesday, 24 February 1988 (53 FR, 5443) has been cancelled.

FOR FURTHER INFORMATION CONTACT: Lieutenant Colonel John E. Hatlelid, USAF, Executive Secretary, DIA Scientific Advisory Committee, Washington, DC 20340-1328 (202/373-4930).

L.M. Bynum,

Alternate OSD Federal Register Liaison Officer, Department of Defense.

April 1, 1988.

[FR Doc. 88-7635 Filed 4-6-88; 8:45 am]

BILLING CODE 3810-01-M

Defense Science Board Task Force on Strategic Arms Reduction Treaty (START) Verification Procedures; Meeting

ACTION: Change in date of advisory committee meeting notice.

SUMMARY: The meeting of the Defense Science Board Task Force on Strategic Arms Reduction Treaty (START) Verification Procedures scheduled for April 5-7, 1988 as published in the **Federal Register** (Vol. 53, No. 14, Page 1815, Friday, January 22, 1988, FR Doc. 88-1314) will be held on April 18 and April 25-26, 1988.

Linda M. Bynum,

Alternate OSD Federal Register Liaison Officer, Department of Defense.

April 1, 1988.

[FR Doc. 88-7633 Filed 4-6-88; 8:45 am]

BILLING CODE 3810-01-M

Defense Logistics Agency

Privacy Act of 1974; New Continuing Computer Matching Program Between the Department of Defense and the United States Department of Agriculture

AGENCY: Defense Manpower Data Center (DMDC), Defense Logistics Agency (DLA), Department of Defense (DoD).

ACTION: This action constitutes notice for public information on a proposed new ongoing computer matching program between the Department of Defense (DoD) and various components of the United States Department of Agriculture (USDA) for debt collection purposes under the Debt Collection Act of 1982 (Pub. L. 97-365). The USDA components participating in this proposed action are the Farmers Home Administration (FmHA); the Federal Crop Insurance Corporation (FCIC); and the Agriculture Stabilization and Conservation Service/Commodity Credit Corporation (ASCS/CCC).

SUMMARY: The Department of Defense, under an interagency agreement with the Office of Management and Budget (OMB), Department of the Treasury and the Office of Personnel Management (OPM), announces a proposal to match by computer DoD employment records of active and retired military members, including the Reserve and Guard; the OPM government-wide Federal active and retired civilian records with the records of individuals who are delinquent debtors to the U.S. Government under certain programs administrated by the USDA.

The purpose of the computer match is to identify and locate USDA delinquent debtors who are receiving Federal salary or benefit payments so as to permit the particular component of USDA to pursue and collect the debt by voluntary repayment or by administrative or salary offset procedures against the debtor under the provisions of the Debt Collection Act of 1982 (Pub. L. 97-365).

DATES: This proposed action will be effective immediately on April 7, 1988, unless comments are received which would result in a contrary determination.

ADDRESS: Send any written comments to Mr. Robert J. Brandewie, Deputy Director, Defense Manpower Data Center, Suite 200, 550 Camino El Estero, Monterey, CA 93940-3231. Telephone: (408) 646-4131; Autovon: 878-2951.

FOR FURTHER INFORMATION CONTACT: Mr. Aurelio Nepa, Jr., Staff Director, Defense Privacy Office, Room 205, 400 Army Navy Drive, Arlington, VA 22202-2803. Telephone: (202) 694-3027; Autovon: 224-3027.

SUPPLEMENTARY INFORMATION: This proposed computer matching program is being conducted in order to identify by name and locate by address those individuals Federally employed or retired that are indebted and delinquent in their repayment to the U.S. Government under certain programs administered by the USDA.

The Office of Management and Budget (OMB) has designated the Financial Management Service of the Department of Treasury, as the Lead Agency to coordinate and monitor the implementation of the U.S. Government's Federal Salary Offset Program. An interagency agreement, restricted exclusively to the implementation of the Debt Collection Act of 1982 (Pub. L. 97-365), established an Interagency Working Group to facilitate computer matching and subsequent salary offset procedures throughout the Federal government under the auspices and oversight of the OMB. This Interagency Working Group consists of the Department of the Treasury, Office of Personnel Management and the Department of Defense. As a result, a centralized computer data base for computer matching made up of Department of Defense and Office of Personnel Management records has been established for debt collection purpose in order to have a data bank record of active and retired military members, including the Reserve and Guard, and further including OPM government-wide active and retired civilian personnel that are receiving Federal salaries or other Federal benefit payments. This newly established data bank is being maintained by the Defense Manpower Data Center of the Department of Defense and is available for matching

purposes by any Federal creditor agency.

Set forth below is the information required by the paragraph 5.f.(1) of the Revised Supplemental Guidance for Conducting Computerized Matching Programs issued by the Office of Management and Budget on May 11, 1982 (47 FR 21656, May 19, 1982). A copy of this proposed notice has been provided to the President of the Senate, the Speaker of the House of Representatives and the Administrator, Office of Information and Regulatory Affairs, Office of Management and Budget on March 29, 1988 pursuant to the cited OMB matching guidelines.

L.M. Bynum,

Alternate OSD Federal Register Liaison Officer, Department of Defense.

April 1, 1988.

Report of a Continuing Computer Matching Program Between the Department of Defense (DOD) and the United States Department of Agriculture (USDA)

a. *Authority*: The legal authority under which the computer matching will be conducted is 5 U.S.C. 552a, the Privacy Act of 1974; 5 U.S.C. 5514, Installment deduction of indebtedness; 10 U.S.C. 136, Asst. Secretaries of Defense, appointment, powers and duties; Federal Claims Collection Act of 1966 (Pub. L. 89–508) 31 U.S.C. 952(d); the Debt Collection Act of 1982 (Pub. L. 97–365) 5 U.S.C. 5514, 31 U.S.C. 3711 and 3716–3718; Section 206 of Executive Order 11222; 4 CFR Chapter II, Federal Claims Collection Standards (General Accounting Office—Department of Justice); 5 CFR 550.1101–550.1108, Collection by Offset from Indebted Government Employees—(OPM); 7 CFR Part 3, Debt Management—(Agriculture); Office of Management and Budget, "Revised Supplemental Guidance for Conducting Matching Programs," dated May 11, 1982 (47 FR 21656, May 19, 1982) and "Guidelines on Relationship Between the Privacy Act of 1974 and the Debt Collection Act of 1982," March 30, 1983 (48 FR 15556, April 11, 1983); the Interagency Agreement for Federal Salary Offset Initiative (Office of Management and Budget, Department of the Treasury, Office of Personnel Management and the Department of Defense) signed April 1987, published at 52 FR 37492, October 7, 1987.

b. *Program Description*: The purpose of this computer matching program is to identify and locate those individuals who are receiving Federal salaries or benefit payments that are indebted and delinquent in the their repayment of debts to the U.S. Government under certain programs administered by the USDA in order to collect the debts by voluntary repayment or by administrative or salary offset procedures under the provisions of the Debt Collection Act of 1982.

The particular USDA component, as the source agency, will provide the Defense Manpower Data Center (DMDC) of the DoD, the matching agency, a computer tape of all the individual delinquent debt records of those indebted to the U.S. Government under certain USDA programs.

Upon receipt of the computer tape file of debtor accounts, the DMDC will perform a computer match using all nine digits of social security numbers of delinquents against a DMDC computer data base. The DMDC computer data base, established under an interagency agreement, consists of records of active duty and retired military members, including the Reserve and Guard, and all the OPM Government-wide employed civilian and retired civilian records.

Matching records, "hits" based on the social security number, will be furnished to the particular USDA Component consisting of the member's name, service or agency, category of employee, salary or benefit, and current work or home address from DMDC's data base records. The "hit" information from DMDC will be referred by USDA for action to recover the outstanding debt(s) by salary or administrative offset when other collection actions have been pursued and have been unsatisfactory.

The USDA component will be responsible for reviewing the "hit" records to assure that each individual is positively identified in the match as the debtor; to assure that the debtor is afforded proper due process under GAO regulation (4 CFR Chapter II) "Federal Claims Collection Standards" and that a proper accounting of any further disclosure outside the USDA shall be maintained by in accordance with 5 U.S.C. 552a(c) of the Privacy Act. The USDA will ensure that the debt is valid and the information is accurate, complete, timely and relevant. Hard copy match records will be used by the USDA to determine any continued benefit entitlement level, if any, and to contact the debtor if necessary. The notification to the debtor shall include information concerning the amount to be collected, and may include the amount of the proposed monthly deductions. The debtor shall be given an opportunity to enter into voluntary agreement to repay the debt before any administrative or salary offset measures are initiated. The debtor shall further be given an opportunity to inspect and copy records related to the debt and for review of the decision related to the debt. If no collection action is needed, the DoD record will no be used by the USDA for any other purposes.

c. *Records to the Matched*: The following systems of records, subject to the Privacy Act of 1974 (5 U.S.C. 552a), each containing an appropriate routine use permitting records to be matched, are as follows:

United States Department of Agriculture (Source Agency)

(1) USDA component: Farmers Home Administration (FmHA)
System identification: USDA/FmHA–1
System name: Applicant/Borrower or Grantee File, USDA/FmHA
Federal Register citation: 50 FR 25727, June 21, 1985
Amended: 52 FR 2247, January 21, 1987
Amended: 52 FR 44458, November 19 1987
Amended: 53 FR 5206, February 22, 1988

(2) USDA component: Federal Crop Insurance Corporation (FCIC)
System identification: USDA/FCIC–1
System name: Accounts receivable, USDA/FCIC
Federal Register citation: 52 FR 42467, November 5, 1987

(3) USDA component: Agricultural Stabilization and Conservation Service/Commodity Credit Corporation (ASCS/CCC)
System identification: USDA/ASCS–28
System name: Claims Data Base (Automated) USDA/ASCS
Federal Register citation: 51 FR 46697, December 24, 1986
Amended: 53 FR 2517, January 28, 1988

Department of Defense (Matching Agency)

(1) DoD component: Defense Logistics Agency (DLA)
System identification: S322.10 DLA–LZ
System name: Defense Manpower Data Center Data Base
Federal Register citation: 53 FR 4442, February 16, 1988

(2) DoD component: Defense Logistics Agency (DLA)
Systemn identification: S322.11 DLA–LZ
System name: Federal Creditor Agency Debt Collection Data Base
Federal Register citation: 52 FR 37495, October 7, 1987

(3) Agency: Office of Personnel Management (OPM)
System identification: OPM/GOVT–1

System name: General Personnel Records

Federal Register citation: 49 FR 36954, September 20, 1984

(4) Agency: Office of Personnel Management (OPM)

System identification: OPM/CENTRAL-1

System name: Civil Service Retirement and Insurance Records

Federal Register citation: 49 FR 36950, September 20, 1984

d. *Period of the Match:* The initial match will begin as soon as possible after this public notice is published in the **Federal Register** and then conducted no more often than semiannually thereafter.

e. *Security Safeguards:* Automated records are stored in limited access computer facilities and accessible only by password. Access to the computer center is by key or picture identification. Hard copy records are maintained in Federal office buildings in lockable file cabinets and accessed only by authorized Federal employees on a need-to-know basis.

f. *Retention and Disposition of Records:* Under written Memorandum of Understanding (MOU) agreements between the DoD/DMDC and the USDA components, it is agreed that tapes provided by the USDA component for matches shall be destroyed or returned to the USDA component upon successful completion of each match and shall be used only for debt collection purposes. Non-hit records will not be used for any purposes. Hard copy matched records (hits) will be used by USDA to conduct individual reviews and may be used to contact the debtor for payment pursuant to the Debt Collection Act of 1982. Records relating to "hits" will be retained by USDA until the completion of any necessary administrative collection or legal action and will then be disposed of in accordance with approved records control schedules and/or approved disposition authority from the Archivist of the United States. The USDA will maintain a disclosure accounting record, as required by 5 U.S.C. 552a(c) of the Privacy Act, as a result of the match information received from DMDC when contacting other agencies pursuing individual debtors. If no collection action is needed, the DoD record will not be used for any other purpose. The USDA tape file will be used and accessed only to the match agreed to; it will not be used to extract information concerning "non-hit" individuals for any purpose and it will not be duplicated or disseminated within or outside the DoD matching agency.

[FR Doc. 88-7632 Filed 4-6-88; 8:45 am]

BILLING CODE 3510-01-M

Corps of Engineers, Department of the Army

Intent to Prepare a Draft Supplement to the Final Environmental Impact Statement (EIS) for a Proposed Flood Control Project, Bassett Creek, Hennepin County, MN

AGENCY: U.S. Army Corps of Engineers, St. Paul District, DOD.

ACTION: Notice of intent to prepare a draft supplement to the Final EIS.

SUMMARY: The St. Paul District has implemented a flood control project in the Bassett Creek watershed in Hennepin County, Minnesota. Basset Creek flows through several suburban communities to the edge of downtown Minneapolis where it enters a tunnel that discharges into the Mississippi River above St. Anthony Falls. The flood control plan would provide comprehensive flood control over a wide area. The plan consists of multiple features including: floodplain regulation, flood insurance, floodproofing, flood forecasting and warning, temporary flood storage areas, and a replacement tunnel. Some of these features have already been constructed.

The St. Paul District proposes to change the alignment and method of construciton of the replacement tunnel, eliminate a ponding area at the tunnel inlet, and design a disposal plan for material excavated from the tunnel inlet and channel banks which are in the vicinity of a designated hazardous waste site.

Subsequent to the publication of the Final Environmental Impact Statement, it was determined that the site of a proposed ponding area at the tunnel inlet was formerly used as a landfill and it was later designated by the State of Minnesota as a hazardous waste site. The ponding area was abandoned in favor of increased channel capacity, a larger capacity tunnel, and a disposal plan for the contaminated material that would be excavated.

A new tunnel was to be bored through glacial till from the vicinity of the existing tunnel inlet to a tunnel bored through the St. Peter sandstone bedrock. The bored tunnel would be a cooperative venture with the Minnesota Department of Transportation and would carry the storm water runoff from a portion of Interstate Highway 394, presently under construction, as well as water from Basset Creek. The bored tunnel would be connected to a previously installed "wye" in the existing Interstate Highway 94 storm water tunnel which discharges into the Mississippi River at the downstream end of the St. Anthony Falls lock.

In addition to the increase in the tunnel capacity, the method of construction and alignment of the most upstream reach of the tunnel would be altered for greater economy and efficiency.

A cost-benefit analysis demonstrated that a surface excavated alignment with pre-cast conduits would be more economical and efficient to construct than a tunnel bored through glacial till. The proposed supplement to the EIS would analyze the potential impacts of the channel excavation, installation of the proposed conduits, and disposal of excess excavated material.

The following issues and concerns with the design changes were identified through coordination with the Minnesota Pollution Control Agency and the local sponsor.

1. The history of the use of areas that will be excavated or used for disposal.

2. Sufficient chemical testing would be done so that the entire alignment would have been surveyed.

3. A plan would be developed that satisfactorily addresses excavation, handling, and disposal of material from the project.

4. A plan would be developed to deal with an unexpected discovery of contaminated material during excavation.

No formal scoping meeting is planned for this supplement. However, significant issues and resources to be analyzed in the draft supplement will be identified through coordination with responsible Federal, State; and local agencies, interested private organizations and parties, and affected Indian tribes. Anyone who has an interest in participating in the development of the draft supplement or who wishes to provide information is invited to contact the St. Paul District, Corps of Engineers.

The Final EIS on flood control for Basset Creek, Hennepin County, Minnesota, was made available to the public in July 1978.

The review of the project will be conducted in accordance with the requirements of the National Environmental Policy Act of 1969, Council on Environmental Quality Regulations (40 CFR Parts 1500-1508), Corps of Engineers Regulations (33 CFR Part 230), and all other applicable regulations and guidance.

We estimate that the draft supplement will be available to the public during the third quarter of fiscal year 1988 (April–June 1988).

Questions concerning the proposed action and draft supplement to the EIS can be directed to: Colonel Joseph Briggs, District Engineer, St. Paul District, Corps of Engineers, 1421 U.S. Post Office and Custom House, St. Paul, Minnesota 55101–1479.

Date: March 28, 1988.

Joseph Briggs,

Colonel, Corps of Engineers, District Engineer.

[FR Doc. 88–7602 Filed 4–6–88; 8:45 am]

BILLING CODE 3710-CY-M

Intent To Prepare A Draft Environmental Impact Statement (SEIS) For Section II of the Sandy Hook to Barnegat Inlet Beach Erosion Control Project, Asbury Park to Manasquan, Monmouth County, NJ

AGENCY: U.S. Army Corps of Engineers, DOD.

ACTION: Notice of intent.

SUMMARY: The U.S. Army Corps of Engineers, New York District proposes to place sand along nine miles of Atlantic Ocean shoreline between Asbury Park and Manasquan in Monmouth County, New Jersey, and to periodically place additional sand to maintain project dimensions. The action is necessary because erosion has seriously reduced the width of most beaches in the study area, exposing shorefront structures to damage and limiting the amount of beach available to recreational users. The proposed work will protect shorefront structures in the area and provide sufficient recreational beach area for current and expected future users over the 50-year lifetime of the project.

FOR FURTHER INFORMATION CONTACT: Questions about the proposed action and DEIS can be answered by:

EIS Coordinator: Michele Farmer, ATTN: CENAN–PL–E, Phone: 212–264–4662

Project Manager: Michael Jurist, ATTN: CENAN–PL–FN, Phone: 212–264–9077

U.S. Army Engineering District, New York, 26 Federal Plaza, New York, NY 10278–0090

SUPPLEMENTARY INFORMATION:

1. *Proposed Action.* The proposed action provides for placement of sand to create a beach berm approximately 100 feet wide at 10 feet above mean low water for approximately nine miles of coastline extending from Asbury Park southward to Manasquan, New Jersey. Periodic beach nourishment is also authorized.

2. *Reasonable Alternatives.* In addition to the no-action alternative, reasonable alternatives include: sand berm widths between 50 and 150 feet; various numbers of new and extended groins; and combinations of different project elements.

3. *Scoping Process.* Preliminary coordination has been conducted with Federal and State interests to identify items of significant environmental concern. Views and concerns of public agencies and individuals will also be solicited through a public notice that will describe the project and invite affected Federal, state and local agencies and other interested private organizations and parties to participate in the scoping process. Significant issues to be analyzed in depth in the DEIS include aquatic resource impacts, water quality impacts, archaeological and cultural resource impacts, recreational impacts and impacts on longshore sand transport. Environmental review and consultation will be as outlined in Council on Environmental Quality regulations dated November 29, 1983 (40 CFR Parts 1500–1508) and Corps regulations 33 CFR Parts 230 and 325 dated February 3, 1988.

(Environmental Quality: Procedures for Implementing the National Environmental Policy Act, NEPA)

4. No scoping meeting will be held.

5. Estimated Date of Statement Availability: February 1990.

Date: March 24, 1988.

Samuel P. Tosi, P.E.,

Chief, Planning Division.

[FR Doc. 88–7601 Filed 4–6–88; 8:45 am]

BILLING CODE 3710-08-M

DEPARTMENT OF ENERGY

Economic Regulatory Administration

Stanco Petroleum, Inc.; Proposed Consent Order

AGENCY: Economic Regulatory Administration, DOE.

ACTION: Notice of proposed consent order and opportunity for comment.

SUMMARY: The Economic Regulatory Administration (ERA) of the Department of Energy (DOE) announces a proposed Consent Order with Stanco Petroleum Inc. and provides an opportunity for public comment on the terms and conditions of the proposed Consent Order.

DATES: Comments by May 9, 1988.

ADDRESS: Send comments to: "Stanco Petroleum Consent Order Comments," Office of Enforcement Litigation, Economic Regulatory Administration, U.S. Department of Energy, Room 6H–034, RG–33, 1000 Independence Avenue, SW., Washington, DC 20585.

FOR FURTHER INFORMATION CONTACT: Edward P. Levy, Office of Enforcement Litigation, Economic Regulatory Administration, U.S. Department of Energy, Room 6H–034, RG–33, 1000 Independence Avenue, SW., Washington, DC 20585. Copies of the proposed Consent Order may be obtained free of charge by writing or by calling this office at (202) 586–5417.

SUPPLEMENTARY INFORMATION: On March 24, 1988, the ERA executed a proposed Consent Order with Stanco Petroleum, Inc. Under 10 CFR 205.199J(b), a proposed Consent Order which involves the sum of $500,000 or more, excluding interest and penalties, becomes effective no sooner than thirty (30) days after publication of a notice in the **Federal Register**, requesting comments concerning the proposed Consent Order. Although ERA has signed and tentatively accepted the proposed Consent Order, the ERA may, after consideration of the comments it receives, withdraw its acceptance and, if appropriate, attempt to negotiate a modification of the Consent Order, or issue the Consent Order as signed.

I. Background

During the period when the Mandatory Petroleum Price Regulations were in effect, Stanco Petroleum, Inc. (Stanco) engaged in the production and sale of crude oil from the Enders Field Unit, the Spath Oil Field, the P.C. Hyson Property, and the L.V. Frederick Property, all of which were located in Kimball County, Nebraska. Accordingly, Stanco was a "producer" of crude oil, as defined in 10 CFR 212.31, and was subject to the regulations governing first sales of domestic crude oil in 10 CFR Part 212, Subpart D. ERA conducted an audit of Stanco's sales of crude oil from the above-mentioned properties during the period from September 1973 through July 1976. The audit concluded that these sales were made at prices in excess of the maximum ceiling prices permitted by Subpart D.

On April 4, 1979, DOE issued a Proposed Remedial Order (PRO) to Stanco. The PRO alleged that Satanco caused overcharges in the amount of $1,109,198 during the audit period in its sales from the four Kimball County properties. The firm filed a Statement of Objections to the PRO, ERA responded, and an evidentiary hearing and oral argument were held. Thereafter, on August 25, 1982, the Office of Hearings

and Appeals (OHA) issued a Remedial Order (RO) to Stanco, which, except for certain relatively minor amendments, adopted the PRO. *Stanco Petroleum, Inc.*, 10 DOE § 83,007 (1982). OHA ruled that, during the audit period, Stanco improperly sold crude oil produced from the Enders, Spath, Hyson and Frederick properties at stripper well prices. This determination was based on the conclusion that, except in one instance, Stanco had not met its burden to overcome the findings in the PRO that the average daily production of each of these properties exceeded 10 barrels per well during the applicable qualifying periods for stripper well eligibility.

Stanco then appealed the RO to the Federal Energy Regulatory Commission (FERC). Upon review, the FERC upheld the Remedial Order in all respects.

Throughout the proceedings before OHA and FERC, Stanco has maintained that the four properties mentioned above qualified for stripper well status during the entire audit period. However, the settlement discussions that resulted in the proposed consent Order with Stanco did not focus on the issue of whether Stanco overcharged in its sales of crude oil. Instead, Stanco asserted to the agency that it was financially unable to pay the amount of the RO, and sought to enter into a settlement under which it would pay an amount that reflected its ability to pay. As a result, the Department conducted a detailed examination of Stanco's financial situation.

Stanco is a small, independent crude oil producer. DOE's examination of the firm's records indicated that, during the period of price controls, the firm experienced gradual but steady growth and always had a net profit. However, its net worth was always substantially less than its overcharge liability, and, at best, it would have taken several years for the firm to pay its liability out of its annual income. In 1981, Stanco decided to purchase additional leases and to substantial "workover" on one of its existing properties, and financed these activities by borrowing funds. Consequently, the firm's assets and liabilities increased substantially, and its net worth became slightly negative. During the years that followed, Stanco experienced losses, which were initially substantial but then declined to relatively modest amounts. However, the firm did not again become profitable. Moreover, although the firm's net worth again became positive by 1985, its production revenues were below projected levels and it had been unable to reduce its bank loans sufficiently. Stanco therefore embarked on a program to sell off assets in order to reduce its debt. It should be noted that the firm's net worth remained far smaller than its overcharge obligation. Moreover, Stanco's officers and employees made significant loans to the firm in order to keep it solvent.

During the first half of 1986, Stanco experienced a severe decline in its cash flow. The significant drop in oil prices at that time required the firm to shut in some of its production units and substantially reduce the amount of its production. Consequently, Stanco was not able to meet its obligation to repay its bank loan, either through sales of crude oil or of its assets. In addition, its bank, which holds a security interest, required that all revenue be paid to it, thus effectively controlling Stanco's business. During the second half of 1986 and first part of 1987, the firm's financial problems continued. No salaries were paid to the chief officers of the firm, and Stanco made no further reductions in its debt.

Based on an analysis of Stanco's financial situation, ERA concluded that Stanco could pay only a small proportion of its liability until it again received at least $21 per barrel for its crude oil. The Consent Order provides, therefore, that Stanco will pay DOE $50,000 with interest, over a period of approximately three years. In addition, for every calendar quarter during which the posted price for crude oil sold by Stanco averages $21 or more per barrel during the term of the Consent Order, the firm shall make an additional payment to DOE. The amount of those payments will increase as the posted price increases. Finally, if for any reason Stanco does not meet its payment obligations, then its liability shall be $2,300,000. This represents the approximate amount the DOE believes would be an appropriate settlement of this mattter without regard to inability to pay.

In light of financial data that ERA has reviewed, the nature of the violations, the entire record in this proceeding, the low potential for collecting any amount from the firm absent significant oil price increases, and the expense to the government of any additional litigation, ERA believes that the the Consent Order with Stanco is a satisfactory compromise of the proceedings against the firm.

II. Consent Order

The proposed Consent Order has been entered into in order to resolve all civil and administrative disputes, claims, and causes of action by DOE relating to Stanco's compliance with the federal petroleum price and allocation regulations. Although Stanco contends in all respects that it correctly construed and applied the applicable regulations, it has entered into the proposed Consent Order to avoid the expense of litigation and the disruption of its business. DOE believes that the proposed Consent Order is in the public interest and provides a satifactory resolution of the issues raised by the audit.

III. Refunds

Under the terms of the proposed Consent Order, Stanco will pay to DOE $50,000 in four equal installments, plus interest. The first installment is due within 30 days of the effective date of the Consent Order and the remaining payments are due annually, beginning on September 30, 1988. In addition, for each calendar quarter in which the posted price applicable to Stanco's production averages $21 to $23.49, Stanco will pay an additional $10,000, and the additional amount to be paid increases with each increase of $2.50 in the posted price. The largest additional amount is $140,000, for any calendar quarter in which the posted price applicable to the firm's production is $41 more per barrel. The refund will be deposited in a suitable account for appropriate distribution by DOE.[1]

IV. Submission of Written Comments

Interested persons are invited to submit written comments concerning the terms and conditions of the proposed Consent Order to the address given above. The ERA will consider all comments it receives by 4:30 p.m., local time, on the 30th day after the date of publication of this notice. Any information or data considered confidential by the person submitting it must be identified as such in accordance with the procedures in 10 CFR 205.9(f).

Issued in Washington, DC on the 1st day of April, 1988.

Milton C. Lorenz,

Chief Counsel, Office of Enforcement Litigation, Economic Regulatory Administration.

---

[1] Agreement in principle on the Consent Order was reached in August 1987. Therefore, interest on the $50,000 to be paid by Stanco began to accrue on September 1, 1987. In addition, the first "calendar quarter" for purposes of computing any additional payments began on that date, with the first two "quarters" actually consisting of consecutive two-month periods. The last calendar quarter under the agreement ends on December 31, 1990.

Consent Order with Stanco Petroleum, Inc.

[ERA Case No. 733C00096; FERC Case No. RO82-89-000]

I. Introduction

101. This Consent Order is entered into between Stanco Petroleum, Inc. ("Stanco") and the Department of Energy ("DOE"). Except as specifically excluded herein, this Consent Order settles and finally resolves all civil and administrative claims and disputes, whether or not heretofore asserted, between DOE and Stanco, concerning Stanco's compliance with the regulations governing the production and sale of crude oil, as contained in the federal petroleum price and allocation regulations (as defined herein) administered and enforced by DOE and its predecessor agencies during the period August 19, 1973 through January 27, 1981 ("the matters covered by this Consent Order").

II. Jurisdiction, Regulatory Authority and Definitions

201. This Consent Order is entered into by DOE pursuant to the authority conferred upon it by sections 301 and 503 of the Department of Energy Organization Act (DOE Act), 42 U.S.C. 7151 and 7193; Executive Order 12009, 42 FR 46267 (1977); and Executive Order No. 12038, 43 FR 4957 (1978). This Consent Order is also entered into in accordance with, and subject to, the provisions of 10 CFR 205.199J.

202. In Delegation No. 0204-4, the Secretary of Energy delegated the responsibility for the administration of the Federal petroelum price and allocation regulations, including authority to enter into Consent Orders on behalf of DOE, to the Administrator of the Economic Regulatory Administration ("ERA"), which Administration was created by Section 206 of the DOE Act, 42 U.S.C. 7136. Authority to enter into this Consent Order on behalf of DOE has been delegated by the Administrator of ERA to the Special Counsel, by Delegation Order No. 0204-4A dated December 14, 1981.

203. (a) Reference herein to "DOE" includes the ERA, the Cost of Living Council, the Federal Energy Office, and the Federal Energy Administration or any predecessor agencies. Reference herein to "Stanco" refer to Stanco Petroleum, Inc.

(b) For purposes of this Consent Order,

(1) The phrase "federal petroleum price and allocation regulations" means all pricing and allocation requirements imposed by or under the Economic Stabilization Act of 1970, the Emergency Petroleum Allocation Act of 1973, the Federal Energy Administration Act of 1974, Presidential Proclamation 3279, and all applicable DOE regulations, codified in 6 CFR Part 150, Subpart L, and 10 CFR, Parts 205, 210, 211, 212 and 213, including all rules, rulings, guidelines, interpretations, clarifications, manuals, decisions, orders, forms subpoenas, and reporting and certification requirements regarding such regulations.

(2) "Calendar quarter" refers to the following periods: (A) during 1987 the periods from September 1, 1987, through October 31, 1987, and from November 1, 1987, through December 31, 1987, and (B) during 1988, 1989, and 1990, the periods during each year from January 1 through March 31, from April 1 through June 30, from July 1 through September 30, and from October 1, through December 31.

(3) "Average posted price" means the average daily price, during a calendar quarter, for crude oil of 35 degrees API gravity, specified in (A) the postings pursuant to which Stanco sells crude oil to Union Oil Company, or (B) if Stanco is not selling crude oil to Union, the postings pursuant to which Stanco sells crude oil to Texaco, Inc. or (C) if Stanco sells to neither Union nor Texaco, the postings pursuant to which Stanco sells crude oil to Permian Corporation, or (D) if Stanco sells neither to Union nor Texaco nor Permian, all postings for Western Nebraska sweet crude oil. The average daily price shall be derived by adding the specified price on each day of the calendar quarter, and dividing the total by the number of days during the quarter.

III. Facts and Determinations

301. Stanco engaged in the production and sale of crude oil during the period covered by this Consent Order. Accordingly, Stanco was subject to the price regulations codified in 10 CFR Part 212.

302. DOE conducted an audit to determine Stanco's compliance during the period from September 1973 through July 1976 ("the audit period") with the federal petroleum price and allocation statutes, regulations and requirements referred to in Section 301, *supra*. As a result of this audit, disputes arose between Stanco and DOE concerning Stanco's compliance with applicable federal petroleum price regulations in its sales of crude oil during the audit period. ERA issued a Proposed Remedial Order ("PRO") to Stanco on April 4, 1979, and the PRO was issued as a Remedial Order ("RO") by the Office of Hearings and Appeals on August 25, 1982. The RO was affirmed by the Federal Energy Regulatory Commission on August 23, 1985. Stanco and DOE each maintain that their respective positions on the issue underlying the RO are meritorious. Neither DOE nor Stanco disavows any position it has taken with respect to such issues.

303. Notwithstanding DOE's view as to the proper application of the federal petroleum price and allocation regulations to Stanco's activities, Stanco maintains that it operated in accordance with applicable federal petroleum price regulations. However, and without admitting any violation, in order to avoid any further litigation and disruption of its business functions, Stanco has agreed to enter into this Consent Order. DOE believes it is in the best interest of the government and the general public to resolve the matters covered by this Consent Order by means of this agreement.

IV. Remedial Provisions

401. (a) In settlement of all matters covered by this Consent Order, Stanco agrees to pay DOE $2,300,000, plus interest calculated as provided in paragraph 402.

(b) However, due to representations made to DOE as to the financial position of Stanco, if Stanco makes the payments called for in the following subparagraphs, DOE will accept such payments in full satisfaction of Stanco's obligation under subparagraph 401(a):

(1) Stanco shall pay to DOE $50,000, plus interest calculated as provided in paragraph 402 on any unpaid balance of this amount, in four installments. The first installment shall be paid no later than 30 days after this Consent Order becomes effective pursuant to paragraph 901 below, with subsequent installments to be paid on September 30, 1988, September 30, 1989, and September 30, 1990. Each installment shall be in the amount of $12,500 plus the accrued interest on the outstanding upaid balance of the $50,000. Stanco has the option to prepay all or any part of this outstanding unpaid balance at any time without penalty.

(2) In addition, for any "calendar quarter" during which Stanco's "average posted price" is within a range in Column A immediately following, Stanco shall pay to DOE the amount on that same line in Column B, as follows:

COLUMN A—Average Posted Price	COLUMN B—Payment
At a posted price of $21 to $23.49	Stanco shall pay $10,000.
At a posted price of $23.50 to $25.99	Stanco shall pay $12,500.
At a posted price of $26 to $28.49	Stanco shall pay $30,000.
At a posted price of $28.50 to $30.99	Stanco shall pay $45,000.
At a posted price of $31 to $33.49	Stanco shall pay $60,000.
At a posted price of $33.50 to $35.99	Stanco shall pay $77,500.
At a posted price of $36 to $38.49	Stanco shall pay $95,000.
At a posted price of $38.50 to $40.99	Stanco shall pay $117,500.
At a posted price of $41 or more	Stanco shall pay $140,000.

These payments shall be referred to below as the "variable payments." Each variable payment shall be made within 60 days of the end of the calendar quarter for which it is due, or within 30 days after the effective date of this Consent Order pursuant to paragraph 901, whichever is later. Interest, calculated in accordance with paragraph 402, shall accrue and be payable on any portion of a variable payment that becomes overdue.

402. (a) Interest shall be computed at the rate of 8.25% per annum, compounded quarterly, and shall begin to accrue as of September 1, 1987; provided, however, that interest will begin to accrue with respect to a variable payment only when all or part of the payment becomes overdue. Interest shall accrue on all unpaid amounts until the date of payment.

(b) Except to the extent that paragraph 403 provides otherwise, each payment made the Stanco, including any prepayment made pursuant to subsection 401(b)(1), shall be applied first to pay any interest that has accrued, and any remaining portion of the payment shall be applied to reduce any other amounts owing.

403. (a) If for any reason all or part of any payment required by subparagraph 401(b)(1) has become more than 60 days overdue, or if at any time all or part of two or more payments required by subparagraph 401(b) have become overdue, then, at DOE's option and upon not less than 30 days written notice by DOE to Stanco, the full amount set forth in subparagraph 401(a) shall immediately be due and payable by Stanco to DOE unless Stanco has paid the full amount due under subparagraph 401(b) before the expiration of the 30 day notice period; provided, however, that the amount in subparagraph 401(a) shall be reduced, to give Stanco credit for any payments it has made under this Consent Order, as follows:

(1) Any payment(s) by Stanco of interest due under subparagraph 401(b) shall be treated as having been payment(s) of the interest accruing under subparagraph 401(a), on the date(s) when actually paid.

(2) Any payment(s) of amounts owing under subparagraph 401(b) other than interest shall be treated as having been payments of the principal amount stated in subparagraph 401(a), on the dates when actually paid.

(b) "Written notice" as used in subparagraph 403(a), is defined as including a statement of the date that any overdue payment was due, the amount(s) overdue, and, if apparent to DOE, any computation or other error that caused an underpayment.

(c) If Stanco pays, within the 30 day period specified in subparagraph 403(a), the amount(s) that DOE informs it is (are) overdue, and advises the addressee specified in paragraph 405 that such payment is being made under protest, then the payment shall not be construed as an admission by Stanco that the amount is overdue and Stanco shall be free to pursue whatever rights it has to obtain a refund of such payment.

404. The payments made pursuant to paragraph 401 of this Consent Order shall be by certified or cashier's check, made payable to the Department of Energy, and delivered to the Office of the Controller, Office of Washington Financial Services, Cash Management Division, Post Office Box 500, Germantown, Maryland 20874–0500. The Administrator (or his designee) of ERA, shall direct that these monies be deposited in a suitable account and ERA will petition DOE's Office of Hearings and Appeals to implement special refund procedures pursuant to 10 CFR Part 205, Subpart V to distribute the monies.

405. Concurrent with each payment made pursuant to this Consent Order, Stanco shall send a verification of the payment to: Jay Thompson, Director, Office of Administration and Financial Management, Economic Regulatory Administration, U.S. Department of Energy, 1000 Independence Avenue, SW., Washington, DC 20585.

Along with the verification, Stanco shall provide a statement setting forth the provisions of this Consent Order pursuant to which the payment was made, and, with respect to any payments to which subparagraph 401(b)(2) applies, the information required by subparagraph 602(b) and any other information necessary to show how the payment amount was derived.

V. Issues Resolved

501. Stanco warrants that there is no litigation pending against the DOE initiated or participated in by the firm which in any way relates to or arises out of the matters covered by this Consent Order, or related claims arising under the Freedom of Information Act (5 U.S.C. 552). Stanco hereby agrees to release any and all claims, demands, liabilities, or causes of action that Stanco has asserted or might be able to assert against DOE, and any employee of DOE, in any matter related to the matters covered by this Consent Order.

502. (a) Compliance by Stanco with this Consent Order, including payment pursuant to paragraph 401(b), shall be deemed by DOE to constitute full compliance for civil purpose with regard to the matters covered by this Consent Order. In consideration for performance under this Consent Order by Stanco, DOE will not, except as explicitly provided herein, initiate or prosecute any civil matter against Stanco, or against any officer, employee, director, or shareholder of Stanco in his individual capacity, with respect to the matters covered by this Consent Order, or cause or refer any such matter to be initiated or prosecuted, or directly or indirectly aid in the initiation of any such civil matter.

(b) Nothing contained herein shall preclude DOE from defending the validity of the Federal Petroleum Price and Allocation Regulations. DOE also reserves the right to initiate and prosecute enforcement actions against any party other than Stanco for noncompliance with the Federal Petroleum Price and Allocation Regulations including, for example, suits against operators for overcharges for crude oil when Stanco is a working or royalty interest owner in such crude oil production. Stanco and DOE agree that the amount paid to DOE pursuant to this agreement is not attributable to Stanco's

activities as a working or royalty interest owner or properties on which it is not the operator. Furthermore, Stanco and DOE agree that the Consent Order and the payments hereunder do not resolve, reduce or release the liability of any other party for violations on properties at times during which Stanco is a working or royalty interest owner (and not the operator) or affect any rights or obligations between Stanco and such working or royalty interest owners.

(c) DOE expressly agrees that it will not seek or recommend any criminal fines or penalties based solely on the information and evidence presently in its possession for the matters covered by the Consent Order; provided that nothing in this Consent Order precludes DOE from exercising its obligations under law with regard to forwarding information of possible criminal violations of law to the appropriate authorities. Nothing contained herein any criminal action, or a defense against any criminal action, or against any civil action brought by any purchaser of covered products from Stanco, or against any civil action brought by an agency of the United States other than by DOE under (i) section 210 of the Economic Stabilization Act or (ii) any statue or regualtion other than the Federal Petroleum Price and Allocation Regulations.

503. (a) The parties expressly recognize and agree that the amounts for the variable payments provided for in subparagraph 401(b)(2) are based on the assumption that the exemption of Stanco's stripper well production from excise tax under the Windfall Profits Tax ("the excise tax") and Stanco's treatment as an independent producer subject to lower excise tax rates, will not be changed during the period (through calendar year 1990) when Stanco may be required to make variable payments.

(b) If, as a result of a change in the excise tax, Stanco's cash flow has been or will be altered by more than 10 per cent, then the following provisions shall apply:

(1) The parties, i.e. Stanco and DOE, shall meet upon request by either party to discuss revision of the variable payments specified under subparagraph 401(b)(2).

(2) If 45 days have passed after such a request has been made and the parties have not agreed as to revisions, either party may petition under 10 CFR Part 205, Subpart J, to modify prospectively the variable payment amounts provided for in subparagraph 401(b)(2) based on the changes in the excise tax. If the petition has been filed within 75 days of the most recent request for a meeting provided for in this paragraph, the petition may also seek to modify the amount of any variable payment made or payable for any calendar quarter that ended one year or less prior to that request to discuss revisions, and as to which Stanco's cash flow was affected by more than 10% by the specified changes in the applicable law; provided, however, that the one-year limit on retroactivity shall not apply to a request by DOE to modify payments if Stanco has not provided the notification required by subparagraph 602(a).

(3) If either party files a petition under Subpart J pursuant to this subparagraph, the other party is permitted to oppose the petition only on grounds that the criteria in this subparagraph for filing have not been satisfied, and/or that the amount of the change in Stanco's payment obligation that is sought by the petition is unwarranted by the amount of the change in Stanco's taxes.

(c) Except as specified herein, the provisions of this Consent Order shall not in any way affect the right of either party of file or oppose a petition under Subpart J with regard to this Consent Order.

504. Execution of this Consent Order constitutes neither an admission by Stanco nor a finding by DOE of any violation by Stanco of any statute or of any regulation. DOE has determined that it is not appropriate to seek to impose civil penalties for the matters covered by this Consent Order, and expressly agrees that it will not seek any such civil penalties. None of the payments or expenditures by Stanco made pursuant to this Consent Order are to be considered for any purpose as penalties, fines, or forfeitures or settlements of any potential liability for penalties, fines or forfeitures.

505. Notwithstanding any other provision herein, DOE reserves the right to initiate an enforcement proceeding, including, without limitation, an action for penalties, for any newly discovered regulatory violations committed by Stanco with respect to resales of refined petroleum products during the period covered by this Consent Order, but only if Stanco concealed such violations. DOE also reserves the right to seek appropriate judicial remedies other than full rescission of this Consent Orfer, or to rescind this Consent Order, for any misrepresentation of a material fact made by Stanco during the course of the audit or during the course of the negotiations that preceded this Consent Order.

VI. Reporting, Recordkeeping Requirements

601. Stanco shall maintain such records as are necessary to demonstrate compliance with the terms of this Consent Order. To assist DOE in the distribution of the monies paid pursuant to paragraph 401, Stanco shall also maintain sales volume data and customers' names and addresses regarding its sales of crude oil for the transactions covered by this Consent Order until thirty (30) days after final distribution by DOE of the funds paid pursuant to paragraph 401, *supra*. If requested, Stanco shall make such information available to DOE. Except as otherwise provided in this paragraph, upon completion of its payment obligation under this Consent Order, Stanco is relieved of its obligations to comply with the recordkeeping requirements of the federal petroleum price and allocation regulations relating to matters covered by this Consent Order. 602. Stanco shall provide to the addresses specified in paragraph 405 herein the following:

(a) Within 90 days of the enactment of any change in the excise tax that would appear to alter Stanco's cash flow by more than 10%, notification of the change and an explanation of its expected impact (including dollar amount) on Stanco; and

(b) Within sixty (60) days after the end of each calendar quarter, or, as to any calendar quarter ending more than 30 days before the effective date of this Consent Order, within 30 days after such effective date, a statement of Stanco's average posted price for that calendar quarter, its calculation of the average posted price, and a copy of the applicable posting(s).

603. This Consent Order is subject of disclosure by the DOE pursuant to the requirements of the Freedom of Information Act, as amended, 5 U.S.C. 552 (FOIA). Stanco waives all claims it may have that some or all of the information contained in this Consent Order is exempt from the mandatory public disclosure requirements of the FOIA, as amended, is information referred to in 18 U.S.C. 1905, or is otherwise exempt by law from public disclosure.

VII. Contractual Undertaking

701. It is the understanding and express intention of Stanco and DOE that this Consent Order constitutes a legally enforceable contractual undertaking that is binding on the parties and their successors and assigns. Notwithstanding any other provision

herein, Stanco and DOE each reserves the right to institute a civil action in United States District Court, if necessary, to secure enforcement of the terms of this Consent Order, and DOE also reserves the right to seek appropriate penalties for any failure to comply with the terms of this Consent Order. Consistent with Departmental policy, DOE will undertake the defense of the Consent Order as finalized, in response to any litigation challenging the Consent Order's validity in which the DOE is named as a party. Stanco agrees to cooperate with the DOE in the defense of such challenges.

VIII. Final Order

801. Upon becoming effective, this Consent Order shall be a final order of DOE having the same force and effect as a Remedial Order issued pursuant to section 503 of the DOE Act, 42 U.S.C. 7193, and 10 CFR 205.199B. Stanco hereby waives its right to administrative or judicial appeal from this Order, but Stanco reserves the right to participate in any such review initiated by a third party.

IX. Effective Date

901. This Consent Order shall become effective as a final order of the DOE upon notice to that effect published in the **Federal Register**. Prior to that date, DOE will publish notice of the proposed Consent Order in the **Federal Register** and, in that notice, public to submit comments to DOE. DOE will consider all written comments to determine whether to adopt the Consent Order as a final order, to withdraw agreement to the Consent Order or to attempt to renegotiate the terms of the Consent Order.

902. Until the effective date, DOE reserves the right to withdraw consent to the Consent Order by written notice to Stanco, in which event this Consent Order shall be null and void.

I, the undersigned, a duly authorized representative of Stanco Petroleum Inc. hereby agree to and accept on behalf of Stanco Petroleum Inc. the foregoing Consent Order.

Name: Stanley R. Juelfs,
Title: President.
Dated: February 19, 1988.

I, the undersigned, a duly authorized representative of the Department of Energy, Economic Regulatory Administration, hereby agree to and accept on behalf of said Administration, the foregoing Consent Order.

Name: Milton C. Lorenz,
Title: Chief Counsel.
Dated: March 24, 1988.

[FR Doc. 88-7693 Filed 4-6-88; 8:45 am]

BILLING CODE 6450-01-M

Federal Energy Regulatory Commission

[Docket Nos. ER88-300-000, et al.]

Southern California Edison Co., et al., Electric rate, Small power production, and Interlocking Directorate filings

April 4, 1988.

Take notice that the following filings have been made with the Commission:

1. Southern California Edison Company

[Docket No. ER88-300-000]

Take notice that on March 28, 1988, Southern California Edison Company (Edison) tendered for filing, as an initial rate schedule, the following agreement, along with a Supplemental Letter Agreement for Dismissal of Suppliers Litigation, both of which have been executed by Edison and the Department of Water and Power of the City of Los Angeles, California (Los Angeles):

Los Angeles-Edison Exchange Agreement Between The Department of Water and Power of the City of Los Angeles and Southern California Edison Company

The Los Angeles-Edison Exchange Agreement provides a long-term exchange of entitlements to utilize transmission capacity, generation service, and a settlement of various issues between the Parties. Operations under the Agreement are expected to provide the Parties with improved system reliability and increased power purchase opportunities.

Copies of this filing were served upon the Public Utilities Commission of the State of California and the Department of Water and Power of the City of Los Angeles.

Comment date: April 18, 1988, in accordance with Standard Paragraph E at the end of this notice.

2. Safe Harbor Water Power Corporation

[Docket No. EL88-2-000]

Take notice that on March 28, 1988, Safe Harbor Water Power Corporation tendered for filing pursuant to Commission Order dated February 25, 1988 a Compliance Report showing the refund data as required in the Commission's order.

Copies of this filing were served upon the Pennsylvania Power & Light Company, Baltimore Gas and Electric Company, the Maryland Public Service Commission and the Pennsylvania Public Utility Commission.

Comment date: April 18, 1988, in accordance with Standard Paragraph E at the end of this notice.

3. L'Energia, Inc.

[Docket No. QF87-249-001]

On March 17, 1988, L'Energia, Inc. (Applicant), c/o Bio Development Corp., 3 Executive Park Drive, Bedford, New Hampshire 03102, submitted for filing an application for recertification of a facility as a qualifying cogeneration facility pursuant to § 292.207 of the Commission's regulations. No determination has been made that the submittal constitutes a complete filing.

The topping-cycle cogeneration facility will be located on Andrew Street, Lowell, Massachusetts. The facility will consist of an extraction/condensing turbine generator, a combustion turbine generator, and a heat recovery steam generator. Thermal energy recovered from the facility will be used for food processing and for laundry hot water heating. Primary energy source will be natural gas. The net electric power production capacity of the facility will be 54.5 MW. Startup of the new facility is expected to begin in June 1990.

Comment date: Thirty days from publication in the **Federal Register** in accordance with Standard Paragraph E at the end of this notice.

Standard Paragraphs:

E. Any person desiring to be heard or to protest said filing should file a motion to intervene or protest with the Federal Energy Regulatory Commission, 825 North Capitol Street NE., Washington, DC 20426, in accordance with Rules 211 and 214 of the Commission's Rules of Practice and Procedure (18 CFR 385.211 and 385.214). All such motions or protests should be filed on or before the comment date. Protests will be considered by the Commission in determining the appropriate action to be taken, but will not serve to make protestants parties to the proceeding. Any person wishing to become a party must file a motion to intervene. Copies of this filing are on file with the Commission and are available for public inspection.

Lois D. Cashell,

Acting Secretary.

[FR Doc. 88-7597 Filed 4-6-88; 8:45 am]

BILLING CODE 6717-01-M

[Docket No. G-3894-031 et al.]

ARCO Oil and Gas Co., Division of Atlantic Richfield Co., et al.; Applications for Certificates, Abandonment of Service and to Amend Certificates [1]

April 4, 1988.

Take notice that each of the Applicants listed herein has filed an application pursuant to section 7 of the Natural Gas Act for authorization to sell natural gas in interstate commerce, to abandon service or to amend certificates as described herein, all as more fully described in the respective applications which are on file with the Commission and open to public inspection.

Any person desiring to be heard or to make any protest with reference to said applications should on or before April 18, 1988, file with the Federal Energy Regulatory Commission, Washington, DC 20426, a petition to intervene or a protest in accordance with the requirements of the Commission's Rules of Practice and Procedure (18 CFR 385.211, 385.214). All protests filed with the Commission will be considered by it is determining the appropriate action to be taken but will not serve to make the protestants parties to the proceeding. Any person wishing to become a party in any proceeding herein must file a petition to intervene in accordance with the Commission's rules.

Under the procedures herein provided for, unless otherwise advised, it will be unnecessary for Applicants to appear or to be represented at the hearing.

Lois D. Cashell,

Acting Secretary.

[1] This notice does not provide for consolidation for hearing of the several matters covered herein.

Docket No. and date filed	Applicant	Purchaser and location	Description
G-3894-031, D, Mar. 21, 1988	ARCO Oil and Gas Company, Division of Atlantic Richfield Company, P.O. Box 2819, Dallas, TX 75221.	Arkla Energy Resources, a division of Arkla, Inc., Butler Gas Unit, Ada Field, Webster Parish, Louisiana.	(1)
G-4282-005, D, Mar. 21, 1988	Chevron U.S.A. Inc., P.O. Box 7309, San Francisco, CA 94120-7309.	Natural Gas Pipeline Company of America, Boonesville Field, Jack County, Texas.	(2)
CI65-258-000, D, Mar. 18, 1988	Texaco Producing Inc., P.O. Box 52332, Houston, TX 77052.	Lone Star Gas Company, Sho-Vel-Tum Field, Stephens County, Oklahoma.	(3)
CI67-209-001, D, Mar. 21, 1988	ARCO Oil and Gas Company, a Division of Atlantic Richfield Company.	Arkla Energy Resources, a division of Arkla, Inc., Hartshorne Area, Pittsburg County, Oklahoma.	(4)
CI80-196-001, D, Mar. 21, 1988	do	Arkla Energy Resources, a division of Arkla, Inc., Greenwood Waskom Field, Caddo Parish, Louisiana.	(5)
CI88-330-000 (CI68-1170), D, Feb. 26, 1988.	Mobil Producing, Texas & New Mexico Inc., Nine Greenway Plaza, Suite 2700, Houston, TX 77046.	Transcontinental Gas Pipe Line Corporation, Dilworth, S.E.Field, McMullen County, Texas.	(6)
CI88-331-000, A, Feb. 26, 1988	Exxon Corporation, P.O. Box 2180, Houston, TX 77252-2180.	Columbia Gas Transmission Corporation, Grand Isle Block 18 Field, OCS-G-033, Well No. 4, from the C-6, Y Reservoir, Offshore Louisiana.	(7)
CI88-332-000, A, Feb. 26, 1988	do	Columbia Gas Transmission Corporation, West Delta Block 73 Field, OCS-G-1090, Well No. G-1D, from the I-35, H Reservoir, Offshore Louisiana.	(8)
CI88-333-000 (CI79-280), B, Feb. 26, 1988.	Felmont Oil Corporation, 350 Glenborough, Suite 300, Houston, TX 77067.	Tennessee Gas Pipeline Company, a Division of Tenneco Inc., South March Island 257, Offshore Louisiana.	(9)
CI88-334-000 (G-11911), D, Feb. 29, 1988.	Mobil Producing, Texas & New Mexico Inc.	El Paso Natural Gas Company, Amacker-Tippett Field, Upton County, Texas.	(10)
CI88-335-000 (G-3840, et al.), B, Feb. 29, 1988.	Union Oil Company of California, P.O. Box 7600, Los Angeles, CA 90051.	El Paso Natural Gas Company, Clara Couch Field, Crockett County, Texas.	(11)
CI88-351-000, F, Mar. 7, 1988	Amoco Production Company	Northwest Pipeline Corporation, Basin Dakota Field, Rio Arriba County, New Mexico.	(12)
CI88-355-000, F, Mar. 9, 1988	Tenneco Oil Company, P.O. Box 2511, Houston, TX 77001.	Tennessee Gas Pipeline Company, a Division of Tenneco Inc., High Island A-269/A-270, Offshore Texas.	(13)
CI88-358-000 (G-2588), D, Mar. 11, 1988.	Sohio Petroleum Company, P.O. Box 4587, Houston, TX 77210.	Williston Basin Interstate Pipeline Company, Manderson Field, Big Horn County, Wyoming.	(14)
CI88-359-000 (CI62-596), D, Mar. 11, 1988.	do	Panhandle Eastern Pipeline Company, Mocane-Laverne Field, Beaver County, Oklahoma.	(15)
CI88-360-000 (G-17239), D, Mar. 14, 1988.	Mobil Producing, Texas & New Mexico Inc.	Texas Eastern Transmission Corporation, May Field, Kleberg County, Texas.	(16)
CI88-361-000, F, Mar. 14, 1988	Tenneco Oil Company	Transcontinental Gas Pipe Line Corporation, West Cameron Block 40 Field, Offshore Louisiana.	(17)
CI88-365-000 (CI85-25-000), B, Mar. 17, 1988.	Case-Pomeroy Oil Corporation, 12600 Northborough, Suite 155, Houston, TX 77067.	Natural Gas Pipeline Company of America, West Cameron 81, Offshore Louisiana.	(18)
CI88-369-000 (CI81-272-000), B, Mar. 21, 1988.	Case-Pomeroy Oil Corporation	Transcontinental Gas Pipe Line Corporation, High Island Block 508, Offshore Texas.	(19)
CI88-370-000, B, Mar. 21, 1988	Odeco Oil & Gas Company, et al., P.O. Box 61780, New Orleans, LA 70161.	Transcontinental Gas Pipe Line Corporation, Vermilion Block 101, Offshore Louisiana.	(19)
CI88-372-000 (G-16146), D, Mar. 21, 1988.	CNG Producing Company, Canal Place One, Suite 3100, New Orleans, LA 70130.	Colorado Interstate Gas Company, Certain acreage in Morton County, Kansas.	(21)
CI88-373-000 (G-20146), D, Mar. 21, 1988.	do	do	(22)
CI88-374-000 (CI76-397), D, Mar. 21, 1988.	do	do	(22)
CI88-375-000 (G-19480), D, Mar. 21, 1988.	do	do	(22)
CI88-376-000 (CI-1290), D, Mar. 23, 1988.	ARCO Oil and Gas Company, Division of Atlantic Richfield Company.	Panhandle Eastern Pipe Line Company, Tangier Field, Woodward County, Oklahoma.	(23)
CI88-377-000 (CI61-430), D, Mar. 23, 1988	Mobil Oil Exploration & Producing Southeast Inc.	Natural Gas Pipeline Company of America, West Cameron Block 264, Offshore Louisiana.	(24)

Docket No. and date filed	Applicant	Purchaser and location	Description
CI88-378-000 (CI80-277), D, Mar. 23, 1988.	Mobil Exploration & Producing North America Inc.	do	([25])

[1] Effective 1-7-83, ARCO assigned certain interests to Exxon Corporation, Frank B. Treat Estate and Alice-Sidney Oil Company.
[2] Effective 1-16-88, Chevron partially assigned certain acreage to Wes-Mor Oil & Gas Inc.
[3] Effective 10-1-87, Texaco Producing Inc. assigned to John T. Hull its interest in and to a portion of the McFarland-Baker Lease in Sec. 31-1N-5W, Stephens County, Oklahoma.
[4] By Partial Assignment effective 6-1-85, ARCO assigned certain acreage to Samson Resources Company.
[5] By Partial Assignment effective 4-1-84, ARCO assigned certain acreage to Acadia Refining Company.
[6] Effective 9-1-87, MPTM assigned all of its right, title and interest in and to that certain productive acreage in McMullen County, Texas, identified as Lease No. T-40353, which lease is dated 6-12-47 and is described as the G.L. Hayes, *et al.* lease to Asher Resources.
[7] Applicant is filing under Gas Purchase Contract dated 2-12-88.
[8] Not used.
[9] Ceased production due to depletion.
[10] Effective 7-1-87, MPTM assigned to Southwest Royalties, Inc., all of its right, title and interest in and to that certain productive acreage in Upton County, Texas, identified as Lease Nos. T-27371-A&B, insofar as said leases cover the S/2 of Section 104, Block D, CCSD & RGNG Ry. Co. Survey, Upton County, Texas.
[11] The wells subject to Union's FERC G.R.S. No. 100 have been plugged and abandoned or sold. Last sales to El Paso under Rate Schedule No. 100 were in October 1982.
[12] By Assignment effective 3-1-86, Atlantic Richfield Company assigned to Amoco specified leasehold interests in certain acreage lying in Rio Arriba County, New Mexico.
[13] Effective 1-1-88, Shell Offshore Inc. assigned certain acreage to Tenneco Oil Company.
[14] Sohio Petroleum Company assigned its working interest in the Manderson Unit to Natural Gas Processing Company, effective 1-1-88.
[15] By Farmout Agreement dated 10-1-84, Sohio Petroleum Company assigned its working interest in the McGee Barby Unit, Sec. 2-T5N-R23ECM, to Donald C. Slawson.
[16] All MPTM interest has been assigned effective 9-1-87 to William E. Colson (non-productive acreage) and to Cities Service Oil and Gas Corporation (productive acreage).
[17] Effective 12-31-85, Tenneco Oil Company acquired certain acreage from Chevron U.S.A., Inc., Enstar Corporation, Lannie M. Moses, Lyco Acquisition 1983-I, Ltd., Petro-Lewis Funds, Inc., Texas-Ranger, Inc. and TXP Operating Company.
[18] Production ceased to depletion.
[19] Production ceased, lease expired under its own terms and reverted to the Minerals Management Service on 7-28-87.
[20] Not used.
[21] Effective 11-1-87, CNG Producing Company assigned certain acreage to Coastal Oil & Gas Corporation, Texaco Producing Inc., and Cities Service Oil and Gas Corporation.
[22] Effective 11-1-87, CNG Producing Company assigned certain acreage to Coastal Oil & Gas Corporation.
[23] Effective 1-1-87, ARCO assigned all its interest in Lease No. 16986 to Hondo Oil & Gas Company. The remaining lease, Lease No. 16987, was surrendered January 1971.
[24] Effective 9-28-87, MOEPSI assigned to Conn Energy Inc., certain productive acreage.
[25] Effective 9-28-87, MEPNA assigned to Conn Energy Inc., certain productive acreage.

Filing Code: A—Initial Service; B—Abandonment; C—Amendment to add acreage; D—Amendment to delete acreage; E—Total Succession; F—Partial Succession.

[FR Doc. 88-7596 Filed 4-6-88; 8:45 am]

BILLING CODE 6717-01-M

[Project No. 9390-001]

American Hydro Power Co.; Surrender of Preliminary Permit

March 28, 1988.

Take notice that American Hydro Power Company, Permittee for the Pymatuning Dam Hydro Electric Project No. 9390, has requested that its preliminary permit be terminated. The preliminary permit for Project No. 9390 was issued on January 16, 1986, and would have expired on December 31, 1988. The project would have been located on the Shenango River in Crawford County, Pennsylvania.

The Permittee filed the request on February 19, 1988, and the preliminary permit shall remain in effect through the thirtieth day after issuance of this notice unless that day is a Saturday, Sunday, or holiday as described in 18 CFR 385.2007, in which case the permit shall remain in effect through the first business day following that day. New applications involving this project site, to the extent provided for under 18 CFR Part 4, may be filed on the next business day.

Lois D. Cashell

Acting Secretary.

[FR Doc. 88-7593 Filed 4-6-88; 8:45 am]

BILLING CODE 6717-01-M

[Docket No. GP88-16-000]

Colorado Interstate Gas Co. et al; Complaint

April 1, 1988.

Take notice that on March 15, 1988, Colorado Interstate Gas Company (CIG) filed a complaint pursuant to Rule 206 of the Commission's rules of practice and procedure (18 CFR 385.206) against Chemco, Inc., Robin Investment Company, Inc., R.E. Neher, Dempsey Investment Company, G. Hamilton Neher, Kirchner Farm Associates, and Robert Jones (Respondents). CIG requests that the Commission find that Respondents are charging CIG rates for the sale of natural gas in excess of those set forth in Title I of the Natural Gas Policy Act of 1978 (NGPA).

CIG states that Respondents are seeking to collect from CIG in a Colorado state court action (*Colorado Interstate Gas Company* v. *Chemco, Inc. et al.*, District Court, County of Denver, Case No. 85CV012676) take-or-pay amounts provided in an April 27, 1979 gas purchase agreement between them, and that if CIG is required to pay these amounts, CIG will have paid Respondents for the gas in issue a price in excess of the maximum lawful price (MLP) permitted under the NGPA. CIG states that Respondents have made claims for take-or-pay amounts commencing in 1980 until April 1988, and that Respondents assert that CIG is not entitled to take the gas at a later time despite the existence of a contract provision which grants CIG a five-year make-up period in which to take gas which it has paid for but not yet taken. Moreover, CIG argues that Respondents' take-or-pay claims greatly exceed the value of production from the wells subject to the gas purchase agreement, making recoupment impossible. CIG argues that even if it were able to fully recoup these prepayments, Respondents will have already received additional value from the interest-free use of such monies.

CIG further states that Respondents claim a right to take-or-pay amounts for the period after CIG exercised its contractual right to cease making purchases under a "market-out" clause although Respondents contend that CIG should receive no gas for such payment. CIG asserts that if it is required to

prepay for natural gas which it has not taken and would not receive, such payments are additional compensation to the Respondents for those volumes of gas which were previously sold and delivered to CIG and would cause Respondents to receive an amount in excess of the MLP.

CIG requests the Commission to take jurisdiction of the complaint and find that Respondents' demand for take-or-pay prepayments under the gas purchase agreement at issue constitutes a demand for payments in excess of the MLP established under Title I of the NGPA.

Any person desiring to be heard or to protest CIG's complaint should file a motion to intervene or a protest with the Federal Energy Regulatory Commission, 825 North Capitol Street NE., Washington, DC 20426, in accordance with Rules 214 and 211 of the Commission's rules of practice and procedure. All such motions or protests should be filed within 30 days after publication of this notice in the **Federal Register**. Protests will be considered by the Commission in determining the appropriate action to be taken, but will not serve to make protestants parties to the proceeding. Any person wishing to become a party must file a petition to intervene in accordance with the Commission's rules of practice and procedure. Answers to the complaint shall be made under Rules 206 and 213 of the Commission's rules.

Lois D. Cashell,

Acting Secretary.

[FR Doc. 88-7594 Filed 4-6-88; 8:45 am]

BILLING CODE 6717-01-M

[Docket No. TA88-2-44-000]

Commercial Pipeline Co., Inc.; PGA Filing

April 4, 1988

Take notice that on March 31, 1988, Commercial Pipeline Co., Inc. ("Commercial") tendered for filing its Fifty-third Revised Sheet No. 3A, superseding Alternate Fifty-second Revised Sheet No. 3A reflecting Purchased Gas Adjustment and Total Rate as shown below:

	Current adjustment	Cumulative adjustment	Surcharge adjustment	Total rate
(Base)	.2500	.8717	1.6249	5.0890
(Excess)	.2810	.8832	1.2649	5.2219

Commercial states that this filing reflects adjustments in its purchased gas cost to provide for the tracking of a corresponding PGA adjustment by Commercial's supplier, Williams Natural Gas Company. The filing also reflects surcharge adjustments in accordance with Commercial's PGA.

Commercial also tendered for filing its Second Revised Sheet No. 7C, superseding Alternate First Revised Sheet No. 7C, and Third Revised Sheet No. 10, superseding Second Revised Sheet No. 10. Second Revised Sheet No. 7C removes the incremental pricing tariff language from Commercial's tariff consistent with Order No. 478 in Docket No. RM87-28-000. Third Revised Sheet No. 10 reflects Greeley Gas Company as successor to Commercial's three prior customers.

The effective date of Commercial's filing is May 1, 1988.

Copies of the filings were served on Commercial's FERC jurisdictional customer, the Kansas Corporation Commission and the Missouri Public Service Commission.

Any person desiring to be heard or to protest said filing should file a motion to intervene or protest with the Federal Energy Regulatory Commission, 825 North Capitol Street, NE., Washington, DC 20426, in accordance with Rules 211 and 214 of the Commission's rules of Practice and Procedure (18 CFR 385.211 and 385.214). All such motions or protests should be filed on or before April 11, 1988. Protestants will be considered by the Commission in determining the appropriate action to be taken, but will not serve to make protestants parties to the proceeding. Any person wishing to become a party must file a motion to intervene. Copies of this filing are on file with the commission and are available for public inspection.

Lois D. Cashell,

Acting Secretary.

[FR Doc. 88-7677 Filed 4-6-88; 8:45 am]

BILLING CODE 6717-01-M

[Docket No. GP87-78-000]

Doran & Associates, Inc., FERC JD81-43125 et al.; Petition To Reopen and Vacate Final Well Category Determination

Issued April 4, 1988

On September 17, 1987, Doran & Associates, Inc. (Doran) filed a petition to reopen and vacate final well category determinations made for the Engle-Fleming KA-052, R. Henry No. 4 KA-069, and Robert F. Henry No. 1 KA-065 wells (the wells) pursuant to § 275.205 of the Commission's regulations. 18 CFR § 275.205 (1987). Doran requests the Commission to reopen the well category determination proceedings and vacate the Natural Gas Policy Act (NGPA) section 102(c) determinations for the wells.

On May 4, 1981, June 10, 1981, and June 11, 1981, Doran filed well category determination applications with the Pennsylvania Department of Environmental Resources, Division of Oil and Gas Regulations (Pennsylvania) seeking determinations that the wells qualified as NGPA section 102(c) wells. Subsequently, Pennsylvania approved the applications. The well category determinations became final 45 days after the Commission received notice of Pennsylvania's action.

Doran states that all of the initial filings were made "to the best of Doran's knowledge, information and belief" that the subject wells were more than 2.5 miles from any marker well. However, a marker well was subsequently located within 2.5 miles of the subject wells, thereby disqualifying the wells from receiving an NGPA section 102(c) well category determination. Doran states that for the R. Henry No. 4 KA-069 and Robert F. Henry No. 1 KA-065 wells the marker wells were not mapped at the time of Doran's initial filing and that the wells were reclassified as NGPA section 107(c)(5) wells in 1984. Finally, Doran states that the Engle-Fleming KA-052 well should be reclassified under NGPA section 103 and that it intends to file for such a classification.

Any person desiring to be heard or protest the requested reopenings should file a motion to intervene or protest with the Federal Energy Regulatory Commission, 825 North Capitol Street NE., Washington, DC 20426, in accordance with rules 211 and 214 of the Commission's rules of practice and procedure. 18 CFR § 385.211 and 385.214 (1987). All such motions or protests should be filed within 30 days of publication of this notice in the **Federal Register**. All protests filed will be considered, but will not serve to make the protestant a party to the proceeding. Any person wishing to become a party must file a motion to intervene in accordance with the Commission's rules.

Lois D. Cashell,

Acting Secretary.

[FR Doc. 88-7595 Filed 4-6-88; 8:45 am]

BILLING CODE 6717-01-M

[Docket Nos. RP88-88-000 and RP88-88-001]

Panhandle Eastern Pipe Line Co.; Tariff Filing

April 4, 1988.

Take notice that on March 28, 1988 Panhandle Eastern Pipe Line Company (Panhandle) tendered for filing in Docket No. RP88-88-000 the revised tariff sheets as listed on the attached Appendix A.

On March 30, 1988, Panhandle tendered for filing on Docket No. RP88-88-001 Original Sheet No. 32-BU.2 and First Revised Sheet No. 32-BW, which corrected errors in the March 28, 1988 filing. Panhandle requests these corrected sheets be substituted in place of the corresponding sheets in the March 28, 1988 filing.

Panhandle states that these tariff sheets which reflect certain revisions to Panhandle's Rate Schedule PT-Firm governing firm transportation service are requested to be effective April 1, 1988. These revised tariff sheets clarify procedures attendant to the CD conversion rights afforded to Panhandle's existing sales customers in accordance with § 284.10 of the Commission's Regulations.

Specificially, Panhandle is proposing a new provision in § 6.14(b) of its Rate Schedule PT-Firm. This new provision establishes that certain unfulfilled requests by existing sales customers for CD conversion will create a priority in the transportation queue for new firm transportation capacity on the Panhandle West End System. Panhandle requests that the Commission clarify that the establishment of such priority is a reasonable operating condition as provided for under § 284.8(c) of the Commission's Regulations and that Panhandle can implement the provisions of the proposed § 6.14(b) without being deemed to be in violation of non-discriminatory access as provided under § 284.8(b) of the Commission's Regulations.

Copies of this letter and enclosures are being served on all jurisdictional customers and interested state commissions.

Any person desiring to be heard or to protest said filing should file a motion to intervene or protest with the Federal Energy Regulatory Commission, 825 North Capitol Street NW., Washington, DC 20426, in accordance with Rules 211 and 214 of the Commission's Rules of Practice and Procedure (18 CFR 385.211 and 385.214). All such motions or protests should be filed on or before April 11, 1988. Protests will be considered by the Commission in determining the appropriate action to be taken, but will not serve to make protestants parties to the proceeding. Any perosn wishing to become a party must file a motion to intervene. Copies of this filing are on file with the Commission and are available for public inspection.

Lois D. Cashell,

Acting Secretary.

Appendix A—Panhandle Eastern Pipe Line Company

Proposed Tariff Sheets

First Revised Sheet No. 32-BE
First Revised Sheet No. 32-BH
First Revised Sheet No. 32-BS
  Original Sheet No. 32-BU.1
  Original Sheet No. 32-BU.2
First Revised Sheet No. 32-BW
First Revised Sheet No. 32-CB
First Revised Sheet No. 32-CC

[FR Doc. 88-7678 Filed 4-6-88; 8:45 am]

BILLING CODE 6717-01-M

[Docket No. RP88-96-000]

Southern Natural Gas Co.; Proposed Changes in FERC Gas Tariff

April 4, 1988.

Take notice that on March 31, 1988, Southern Natural Gas Company (Southern) tendered for filing certain tariff sheets to its FERC Gas Tariff, Sixth Revised Volume No. 1 and Original Volume No. 2, to be effective May 1, 1988.

Southern states that the proposed tariff sheets are being filed in order to implement recovery of a portion of $119.5 million in buy-out and buy-down costs incurred by Southern pursuant to the procedures established in the Commission's Order No. 500. Specifically, under those procedures Southern is proposing to absorb 35% of the $119.5 million in buy-out and buy-down costs, to recover through a fixed charge applicable to each of is firm jurisdictional sales customers another 35% of such costs, and recover the remaining 30% of such costs through a volumetric surcharge to be applicable to all of Southern's throughput.

Southern states that copies of the filing were mailed to all of Southern's jurisdictional purchasers, shippers, and interested state commissions, as well as the parties listed on the Commission's official service list complied in Docket Nos. RP86-63-000 and RP86-114-000.

Any person desiring to be heard or to protest said filing should file a motion to intervene or protest with the Federal Energy Regulatory Commission, 825 North Capital Street NE., Washington, DC 20426, in accordance with the Commission's Rules of Practice and Procedure (18 CFR 385.211 or 385.214). All such motions or protests should be filed on or before April 11, 1988. Protests will be considered by the Commission in determining the appropriate action to be taken but will not serve to make protestants parties to the proceeding. Any person wishing to become a party must file a motion to intervene. Copies of this filing are on file with the Commission and are available for public inspection.

Lois D. Cashell,

Acting Secretary.

[FR Doc. 88-7679 Filed 4-6-88; 8:45 am]

BILLING CODE 6717-01-M

[Docket No. TA88-2-18-001]

Texas Gas Transmission Corp.; Filing of Revised Tariff Sheets

April 1, 1988.

Take notice that on March 25, 1988, Texas Gas Transmission Corporation (Texas Gas) tendered for filing Substitute Eleventh Revised Sheet Nos. 10 and 10A to its FERC Gas Tariff, Original Volume No. 1, proposed to be effective February 1, 1988.

The revised tariff sheets are being filed to reflect rate revisions from Texas Eastern Transmission Corporation and Tennessee Gas Pipeline Company, pursuant to the Commission's Letter Order issued January 28, 1988, in Docket No. TA88-2-18.

Copies of the revised tariff sheets are being mailed to Texas Gas's jurisdictional customers and interested state commissions.

Any person desiring to be heard or to protest said filing should file a motion to intervene or protest with the Federal Energy Regulatory Commission, 825 North Capitol Street, NW., Washington, DC 20426, in accordance with Rules 211 and 214 of the Commission's Rules of Practice and Procedures (18 CFR 385.211 and 385.214). All such motions or protests should be filed or or before April 8, 1988. Protests will be considered by the Commission in determining the appropriate action to be taken, but will not serve to make protestants parties to the proceeding. Any person wishing to become a party must file a motion to intervene. Copies of this filing are on file with the Commission and are available for public inspection.

Lois D. Cashell,

Acting Secretary.

[FR Doc. 88-7592 Filed 4-6-88; 8:45 am]

BILLING CODE 6717-01-M

[Docket Nos. RP88-82-000 and RP88-83-001]

Transcontinental Gas Pipe Line Corp.; Filing

April 4, 1988.

Take notice on March 24, 1988, Transcontinental Gas Pipe Line Corporation (Transco) tendered for filing the following tariff sheets as part of its FERC Gas Tariff, Second Revised Volume No. 1, to be effective May 1, 1988:

Original Sheet Nos. 242A through 242D

Original Sheet Nos. 500 through 543

In its filing, Transco states that the purpose for its filing Original Sheet Nos. 242A–242D is to include two new sections to the General Terms and Conditions of its FERC Gas Tariff, Second Revised Volume No. 1, which sections are titled "Maximum Daily Delivery Point Entitlements" and "Maximum Daily Delivery Point Entitlement By Facility Group". In addition, Transco states that Original Sheet Nos. 500–543 include an Index of Delivery Point Entitlements which is incorporated into the General Terms and Conditions of its tariff through the proposed Original Sheet Nos. 242A–242D. Transco states that the proposed tariff sheets are applicable to each buyer for which Transco renders or delivers firm service, other than buyers under Transco's Rate Schedules G and OG.

In addition, Transco states that the proposed tariff sheets formalize operating quidelines which are applicable only to customer takes on a daily basis and establish a base upon which facilities may be designed for incremental service in the future. Under the proposed tariff sheets, in the event that the buyer, without prior authorization by Transco, takes on any day a quantity of gas which is greater than the applicable Delivery Point Entitlement or the daily delivery entitlement applicable to a Facility Group, then the unauthorized daily overrun penalty provisions of the proposed tariff sheets shall apply.

Any person desiring to be heard or to protest said filing should file a motion to intervene or a protest with the Federal Energy Regulatory Commission, 825 North Capitol Street, NE., Washington, DC 20426, in accordance with Rules 214 and 211 of the Commission's Rules of Practice and Procedure (18 CFR 385.214, 385.211 (1987)). All such motions or protests should be filed on or before April 11, 1988. Protests will be considered by the Commission in determining the appropriate action to be taken, but will not serve to make protestants parties to the proceeding. Any person wishing to become a party must file a motion to intervene. Copies of this filing are on file with the Commission and are available for public inspection.

Lois D. Cashell,

Acting Secretary.

[FR Doc. 88-7680 Filed 4-6-88; 8:45 am]

BILLING CODE 6717-01-M

FEDERAL FINANCIAL INSTITUTIONS EXAMINATION COUNCIL

Submission of Bank Call Reports

AGENCY: Federal Financial Institutions Examination Council (FFIEC).

ACTION: Request for Comments.

SUMMARY: The usefulness of bank Call Report data to state and federal supervisory agencies, the banking industry, and to other public sector users depends upon the timeliness with which it is received and processed. The agencies have made and are continuing to make every effort to shorten the time required to process the reports and are now requesting comments on proposals relating to the prompt submission of the Call Report by FDIC-insured commercial banks and by FDIC-insured state-chartered savings banks.

Currently, banks must submit their completed Call Report not later than 30 calendar days after the report date. However, any bank with more than one foreign office (other than a "shell" branch or an International Banking Facility) may take an additional 15 calendar days to submit its Call Report. To date, the term "submit" has not been formally defined. Currently, some institutions interpret the submission date as the date by which completed reports must be mailed while others interpret it as the date by which the reports must be received.

The federal bank supervisory agencies are, therefore, proposing to define the term "submission date" in the Call Report instructions as the date by which a bank's completed Call Report must be received by the banking agencies (or their collection agent if the report is submitted electronically). In order to alleviate concerns about possible delays in mail delivery, the bank would not be considered to have filed its report late, if the report were not received until after the submission deadline, as long as the bank's report has been mailed first class and postmarked not later than the third calendar day before the submission deadline. Should the bank use an overnight delivery service, entry of the bank's Call Report into the delivery system on the day before the submission deadline in sufficient time to allow for next day delivery would constitute timely submission.

In addition, the agencies are proposing to require, in the Call Report instructions, those banks with more than one foreign office that use any of the additional 15 calendar days they are allowed for the completion of their reports to submit their Call Reports electronically via the electronic data transmission system being implemented as of the March 31, 1988 Call Report date.

The effect of these proposals, which would take effect as of September 30, 1988, would be to provide usable data to the agencies' surveillance and monitoring systems on a more timely basis. Their adoption may also allow the Federal Financial Institutions Examination Council (FFIEC) to return reported and edited data to banks in the form of Uniform Bank Performance Reports earlier than is currently possible.

DATE: Comments must be received by June 15, 1988.

ADDRESS: All comments should be sent to Robert J. Lawrence, Executive Secretary, Federal Financial Institutions Examination Council, 1776 G Street, NW., Suite 701, Washington, DC 20006, or delivered to the same address between the hours of 9:00 a.m. and 5:00 p.m. on business days.

FOR FURTHER INFORMATION CONTACT:

OCC: Gary H. Christensen, National Bank Examiner, Supervisory Information, (202/447–1181), Office of the Comptroller of the Currency, 490 L'Enfant Plaza East, SW., Washington, DC 20219.

Board: Rhoger H Pugh, Manager, Division of Banking Supervision and Regulation, (202)/728–5883), Board of Governors of the Federal Reserve System, 20th and Constitution Avenue, NW., Washington, DC 20551.

FDIC: Robert F. Storch, Planning and Program Development Specialist, Division of Bank Supervision, (202)/898–6905), Federal Deposit Insurance Corporation, 550 17th Street, NW., Washington, DC 20429.

Supplementary Information and Background

In recent years, the Office of the Comptroller of the Currency (OCC), the Board of Governors of the Federal Reserve System (FRB), the Federal Deposit Insurance Corporation (FDIC), and state banking authorities have

increased their use of data from the quarterly Reports of Condition and Income (Call Reports) for bank supervisory and surveillance purposes. The greater reliance on these reports as a means of identifying, at an early stage, those banks which are experiencing deterioration in their financial condition has prompted efforts to achieve more timely availability of these data. The usefulness of bank Call Report data to state and federal supervisory agencies, the banking industry, and to other public sector users depends upon the timeliness with which it is received and processed. The agencies have made and are continuing to make every effort to shorten the time required to process the reports and are now requesting comments on proposals relating to the prompt submission of the Call Report by FDIC-insured commercial banks and by FDIC-insured state-chartered savings banks.

As authorized by the Examination Council in August 1987, the banking agency members of the FFIEC's Reports Task Force met with representatives from several banking industry groups in October 1987 to discuss the Call Report submission process. At the meeting, a discussion paper on this subject was distributed to representatives of the American Bankers Association (ABA), Conference of State Bank Supervisors (CSBS), Independent Bankers Association of America (IBAA), and New York Clearing House (NYCH). It was requested that these groups consult with the appropriate committees within their organizations as to the practicability of shortening the Call Report submission period and other alternatives for achieving more timely availability of bank Call Report data. Based on the views expressed by the banking industry groups, the FFIEC decided not to shorten the submission period from its current length of 30 calendar days or 45 calendar days for banks with more than one foreign office.

The views of the industry groups were also solicited on the related issue of the definition of the term "submission date." As mentioned above, since this term is not specifically defined, some institutions have interpreted it to mean the date by which reports must be mailed while others believe it to mean the date by which the reports must be received by the regulators. Currently, many Call Reports are not received until three or more days after the submission date because they are not mailed until the submission date. The industry groups had differing opinions on which interpretation should be formally adopted to clarify the meaning of the term "submission date," in part due to concerns about the uncertainty of mail delivery and the amount of mailing time a bank might need to allow in order to ensure that its completed reports would be received on time.

The agencies are proposing to adopt in the Call Report instructions the date of receipt alternative as the definition of "submission date" as a means of improving the timeliness of the reported data. However, to alleviate concerns about possible delays in mail delivery, a bank's Call Report that is mailed first class will not be considered late, when received after the submission date, provided it has been postmarked no later than the third calendar day before the submission date deadline. In the absence of a postmark, a bank whose Call Report is received late may be called upon to provide proof of timely mailing. (The three-day mailing period was chosen base on the service standards established by the U.S. Postal Service which provide that all zip-coded first class mail being sent within the continental United States should be received by the addressee by the third day after mailing.)

Alternatively, if a bank chooses to incur the cost of overnight mail (or a similar delivery service) and its Call Report enters the delivery system the day before the submission deadline in accordance with the established requirements for next day delivery, the Call Report would be considered to have been received on time. Reports transmitted electronically will be received by the banking agencies' collection agent and, therefore, would be considered submitted on time if the report was transmitted to the collection agent on or prior to the submission date.

The agencies are also proposing to require, in the Call Report instructions, those banks with more than one foreign office that use any of the additional 15 calendar days they are allowed for the completion of their reports to submit their Call Report electronically via the transmission system being implemented as of the March 31, 1988 Call Report date. This proposed measure stemmed from suggestions from the NYCH and the ABA. This requirement would tend to make the Call Report data from these banks, which include the largest banks in the U.S., available for agency use up to six days earlier than is currently possible.

The agencies also propose to adopt both of these measures effective as of the September 30, 1988 report date. Comment is specifically requested on this proposed effective date.

The agencies believe that the propose measures would improve the timeliness of the Call Report and as a result improve its usefulness to the agencies and the banks themselves.

April 4, 1988.

Robert J. Lawrence,

Executive Secretary, Federal Financial Institutions Examination Council.

[FR Doc. 88-7676 Filed 4-6-88; 8:45 am]

BILLING CODE 6210-01-M

FEDERAL MARITIME COMMISSION

Agreement(s) Filed

The Federal Maritime Commission hereby gives notice of the filing of the following agreement(s) pursuant to section 5 of the Shipping Act of 1984.

Interested parties may inspect and obtain a copy of each agreement at the Washington, DC Office of the Federal Maritime Commission, 1100 L Street, NW., Room 10325. Interested parties may submit comments on each agreement to the Secretary, Federal Maritime Commission, Washington, DC 20573, within 10 days after the date of the **Federal Register** in which this notice appears. The requirements for comments are found in § 572.603 of Title 46 of the Code of Federal Regulations. Interested persons should consult this section before communicating with the Commission regarding a pending agreement.

Agreement No.: 232-011184.

Title: Evergreen Marine Corporation (Taiwan) Ltd. and Costa Container Lines SpA. Space Charter and Sailing Agreement in the Mediterranean—U.S. Trades.

Parties:

Evergreen Marine Corporation (Taiwan) Ltd.

Costa Container Lines SpA.

Synopsis: The proposed agreement would permit the parties to charter space from one another and to rationalize their sailings in the trade between U.S. Atlantic ports in the Eastport, Maine/Jacksonville, Florida Range and Mediterranean ports in the Trieste, Italy/Algeciras, Spain Range. The parties will commit up to a total of 10 vessels having a combined capacity of up to 12,000 TEU's to the agreement service.

Agreement No.: 203-011185.

Title: Trinidad Discussion Agreement

Parties:

United States Atlantic and Gulf/ Southeastern Caribbean Conference

Caribbean Shipowners Association

BEST COPY AVAILABLE

Synopsis: The proposed agreement would permit the parties to discuss and agree upon matters of mutual interest, including rates, in the trade between U.S. Atlantic and Gulf ports, and coastal and inland points via such ports and ports and points in Trinidad. Adherence to any agreement reached would be voluntary.

Agreement No.: 212–011186.
Title: SANTA/EMPREMAR Service Agreement
Parties:
Empresa Naviera Santa, S.A.
Empresa Maritima del Estado

Synopsis: The proposed agreement would permit the parties to pool their net freight revenues in the trade between U.S. Atlantic and Gulf ports and ports in Chile, Bolivia, Peru and Ecuador. The Service will begin operations with five vessels committed to the trade. The parties have requested a shortened review period.

By Order of the Federal Maritime Commission.

Joseph C. Polking,
Secretary.

Dated: April 4, 1988.

[FR Doc. 88–7636 Filed 4–6–88; 8:45 am]

BILLING CODE 6730-01-M

FEDERAL RESERVE SYSTEM

Colonial BancGroup, Inc., et al., Applications To Engage de Novo in Permissible Nonbanking Activities

The companies listed in this notice have filed an application under § 225.23(a)(1) of the Board's Regulation Y (12 CFR 225.23(a)(1)) for the Board's approval under section 4(c)(8) of the Bank Holding Company Act (12 U.S.C. 1843(c)(8)) and § 225.21(a) of Regulation Y (12 CFR 225.21(a)) to commence or to engage *de novo,* either directly or through a subsidiary, in a nonbanking activity that is listed in § 225.25 of Regulation Y as closely related to banking and permissible for bank holding companies. Unless otherwise noted, such activities will be conducted throughout the United States.

Each application is available for immediate inspection at the Federal Reserve Bank indicated. Once the application has been accepted for processing, it will also be available for inspection at the offices of the Board of Governors. Interested persons may express their views in writing on the question whether consummation of the proposal can "reasonably be expected to produce benefits to the public, such as greater convenience, increased competition, or gains in efficiency, that outweigh possible adverse effects, such as undue concentration of resources, decreased or unfair competition, conflicts of interests, or unsound banking practices." Any request for a hearing on this question must be accompanied by a statement of the reasons a written presentation would not suffice in lieu of a hearing, identifying specifically any questions of fact that are in dispute, summarizing the evidence that would be presented at a hearing, and indicating how the party commenting would be aggrieved by approval of the proposal.

Unless otherwise noted, comments regarding the applications must be received at the Reserve Bank indicated or the offices of the Board of Governors not later than April 21, 1988.

A. **Federal Reserve Bank of Atlanta** (Robert E. Heck, Vice President) 104 Marietta Street, NW., Atlanta, Georgia 30303:

1. *The Colonial BancGroup, Inc.,* Montgomery, Alabama; to engage *de novo* in performing appraisals of real estate and tangible and intangible personal property, including securities, pursuant to § 225.25(b)(13) of the Board's Regulation Y. These activities will be conducted in the State of Alabama.

B. **Federal Reserve Bank of Chicago** (David S. Epstein, Vice President) 230 South LaSalle Street, Chicago, Illinois 60690:

1. *Illini Community Bancorp, Inc.,* Springfield, Illinois; to engage *de novo* through its subsidiary, Illini Recovery Service, Springfield, Illinois, in operating a collection agency pursuant to § 225.25(b)(23) of the Board's Regulation Y.

C. **Federal Reserve Bank of Kansas City** (Thomas M. Hoenig, Vice President) 925 Grand Avenue, Kansas City, Missouri 64198:

1. *Clayco Bancshares, Inc.,* Kansas City, Missouri; to engage *de novo* through its subsidiary Clayco State Bank, Claycomo, Missouri, in the sale of credit related life, accident and health insurance sold in connection with credit extensions made by its subsidiary bank pursuant to § 225.25(b)(8) of the Board's Regulation Y.

Board of Governors of the Federal Reserve System, April 1, 1988.

James McAfee,
Associate Secretary of the Board.

[FR Doc. 88–7577 Filed 4–6–88; 8:45 am]

BILLING CODE 6210-01-M

MCorp et al.; Acquisitions of Companies Engaged in Permissible Nonbanking Activities

The organizations listed in this notice have applied under § 225.23 (a)(2) or (f) of the Board's Regulation Y (12 CFR 225.23 (a)(2) or (f)) for the Board's approval under section 4(c)(8) of the Bank Holding Company Act (12 U.S.C. 1843(c)(8)) and § 225.21(a) of Regulation Y (12 CFR 225.21(a)) to acquire or control voting securities or assets of a company engaged in a nonbanking activity that is listed in § 225.25 of Regulation Y as closely related to banking and permissible for bank holding companies. Unless otherwise noted, such activities will be conducted throughout the United States.

Each application is available for immediate inspection at the Federal Reserve Bank indicated. Once the application has been accepted for processing, it will also be available for inspection at the offices of the Board of Governors. Interested persons may express their views in writing on the question whether consummation of the proposal can "reasonably be expected to produce benefits to the public, such as greater convenience, increased competition, or gains in efficiency, that outweigh possible adverse effects, such as undue concentration of resources, decreased or unfair competition, conflicts of interest, or unsound banking practices." Any request for a hearing on this question must be accompanied by a statement of the reasons a written presentation would not suffice in lieu of a hearing, identifying specifically any questions of fact that are in dispute, summarizing the evidence that would be presented at a hearing, and indicating how the party commenting would be aggrieved by approval of the proposal.

Unless otherwise noted, comments regarding each of these applications must be received at the Reserve Bank indicated for the application or the offices of the Board of Governors not later than April 29, 1988.

E. **Federal Reserve Bank of Dallas** (W. Arthur Tribble, Vice President) 400 South Akard Street, Dallas, Texas 75222:

1. *MCorp,* Dallas, Texas, and *MCorp Financial, Inc.,* Wilmington, Delaware; to acquire Payment Services Group, Inc., Glastonbury, Connecticut, and thereby engage in providing to others financially related data processing and data transmission services, facilities, and data bases, or access to them, pursuant to § 225.25(b)(7) of the Board's Regulation Y.

Board of Governors of the Federal Reserve System, April 1, 1988.

James McAfee,

Associate Secretary of the Board.

[FR Doc. 88-7578 Filed 4-6-88; 8:45 am]

BILLING CODE 6210-01-M

DEPARTMENT OF HEALTH AND HUMAN SERVICES

Food and Drug Administration

[Docket No. 88D-0087]

Draft GMP Guidelines for the Manufacture of In Vitro Diagnostic Products; Availability

AGENCY: Food and Drug Administration.

ACTION: Notice.

SUMMARY: The Food and Drug Administration (FDA) is announcing the availability for public comment of a draft document entitled "GMP Guidelines for the Manufacture of In Vitro Diagnostic Products" that has been prepared by FDA's Center for Devices and Radiological Health (CDRH). The draft guidelines contain quality assurance and production practices that are acceptable to FDA for ensuring the safety and effectiveness of in vitro diagnostic devices. Elsewhere in this issue of the **Federal Register**, FDA is announcing an open public meeting of FDA's Device Good Manufacturing Practice Advisory Committee. One of the subjects to be discussed at that open advisory committee meeting is the draft guideline document now being made available for comment.

DATE: Comments by June 6, 1988.

ADDRESSES: The draft guidelines are available for public examination at, and written comments may be submitted to, the Dockets Management Branch (HFA-305), Food and Drug Administration, Rm. 4-65, 5600 Fishers Lane, Rockville, MD 20857. Copies of the draft guidelines are available from the Division of Small Manufacturers Assistance (HFZ-220), Center for Devices and Radiological Health, Food and Drug Administration, 5600 Fishers Lane, Rockville, MD 20857, 301-443-6597, or 800-638-2041.

FOR FURTHER INFORMATION CONTACT: Z. Frank Twardochleb, Center for Devices and Radiological Health (HFZ-332), Food and Drug Administration, 8757 Georgia Ave. Silver Spring, MD 20910, 301-427-7984.

SUPPLEMENTARY INFORMATION: FDA often formulates and disseminates guidelines about products subject to regulation under the laws administered by the agency. Accordingly, under 21 CFR 10.90(b) FDA is making available CDRH's draft "GMP Guidelines for the Manufacture of In Vitro Diagnostic Products." The draft guidelines contain production practices which are acceptable to FDA for ensuring the safety and effectiveness of in vitro diagnostic devices but are not legal requirements. These guidelines are intended to advise the in vitro diagnostic industry on practices which, if followed, would be deemed acceptable to FDA. When different procedures are chosen, a person may, but is not required to, discuss the matter in advance with FDA to avoid the expenditure of money and effort on activities that may later be determined to be unacceptable.

These draft guidelines will be a topic of discussion during an open meeting of the Device Good Manufacturing Practice Advisory Committee on May 4 and 5, 1988. Elsewhere in this issue of the **Federal Register**, FDA is announcing the date, time, place, and other details of the meeting. Any comments and recommendations of the committee will be considered in determining whether revisions of the draft guidelines are warranted.

Comments on the draft guidelines received before June 6, 1988 will be considered by FDA during its preparation of a final guideline on this matter.

Interested persons may, on or before June 6, 1988 submit to the Dockets Management Branch (address above) written comments regarding these draft guidelines. Two copies of any comments are to be submitted, except that individuals may submit one copy. Comments are to be identified with the document number found in brackets in the heading of this document. Received comments may be seen in the Dockets Management Branch between 9 a.m. and 4 p.m., Monday through Friday.

Dated: April 1, 1988.

John M. Taylor,

Associate Commissioner for Regulatory Affairs.

[FR Doc. 88-7673 Filed 4-6-88; 8:45 am]

BILLING CODE 4160-01-M

Advisory Committee; Meeting

AGENCY: Food and Drug Administration.

ACTION: Notice.

SUMMARY: This notice announces a forthcoming meeting of a public advisory committee of the Food and Drug Administration (FDA). This notice also summarizes the procedures for the meeting and methods by which interested persons may participate in an open public hearing before one of FDA's advisory committees.

Meeting: The following advisory committee meeting is announced:

Device Good Manufacturing Practice Advisory Committee

Date, time and place. May 4 and 5, 1988, 9 a.m., Conference Rm. G, Parklawn Bldg., 5600 Fishers Lane, Rockville, MD.

Type of meeting and contact person. Open public hearing, May 4, 1988, 9 a.m. to 12 m.; open committee discussion, 1 p.m. to 3:30 p.m.; open committee discussion, May 5, 1988, 9 a.m. to 3:30 p.m.; Sharon M. Kalokerinos, Center for Devices and Radiological Health (HFZ-332), Food and Drug Administration, 8757 Georgia Ave., Silver Spring, MD 20910, 301-427-7984.

General function of the committee. The committee reviews regulations for promulgation regarding current good manufacturing practices governing the methods used in, and the facilities and controls used for, the manufacture, packing, storage, and installation of devices, and makes recommendations regarding the feasibility and reasonableness of those proposed regulations. The committee may also provide advice with regard to any petition submitted by a manufacturer for an exemption of variance from the current good manufacturing practice regulations (21 CFR Part 820).

Agenda—Open public hearing. Interested persons may present data, information, or views, orally or in writing, on issues pending before the committee. Those desiring to make formal presentations should notify the executive secretary before April 18, 1988, and submit a brief statement of the general nature of the evidence or arguments they wish to present, the names and addresses of proposed participants, and an indication of the approximate time required to make their comments.

Open comment discussion. The committee will discuss the draft document entitled "Preproduction Quality Assurance Planning: Recommendation for Medical Device Manufacturers." The availability of this draft document was announced in the **Federal Register** of May 19, 1987 (52 FR 18747). A transcript of the discussion on this matter will become part of the administrative record (87B-0025).

The committee will also discuss a draft document entitled "GMP Guidelines for the Manufacture of In Vitro Diagnostic Products." Elsewhere in this issue of the **Federal Register**, FDA is announcing the availability of this

draft document. Copies of this draft document have also been made available informally through the cooperation of professional organizations associated with the medical device industry and the Division of Small Manufacturers Assistance (HFZ-220), Center for Devices and Radiological Health, Food and Drug Administration, 5600 Fishers Lane, Rockville, MD 20857. A transcript of the discussion on this matter will become part of the administrative record (88C-0087). FDA will consider comments presented at this meeting along with the recommendations of the committee when preparing a final guideline.

Copies of both draft documents are available from the Division of Small Manufacturers Assistance (address above).

FDA public advisory committee meetings may have as many as four separable portions: (1) An open public hearing, (2) an open committee discussion, (3) a closed presentation of data, and (4) a closed committee deliberation. Every advisory committee meeting shall have an open public hearing portion. Whether or not it also includes any of the other three portions will depend upon the specific meeting involved. There are no closed portions for the meeting announced in this notice. The dates and times reserved for the open portions of each committee meeting are listed above.

The open public hearing portion of each meeting shall be at least 1 hour long unless public participation does not last that long. It is emphasized, however, that the 1 hour time limit for an open hearing represents a minimum rather than a maximum time for public participation, and an open public hearing may last for whatever longer period the committee chairperson determines will facilitate the committee's work.

Public hearings are subject to FDA's guideline (Subpart C of 21 CFR Part 10) concerning the policy and procedures for electronic media coverage of FDA's public administrative proceedings, including hearings before public advisory committees under 21 CFR Part 14. Under 21 CFR 10.205, representatives of the electronic media may be permitted, subject to certain limitations, to videotape, film, or otherwise record FDA's public administrative proceedings, including presentations by participants.

Meetings of advisory committees shall be conducted, insofar as is practical, in accordance with the agenda, published in this **Federal Register** notice. Changes in the agenda will be announced at the beginning of the open portion of a meeting.

Any interested person who wishes to be assured of the right to make an oral presentation at the open public hearing portion of a meeting shall inform the contact person listed above, either orally or in writing, prior to the meeting. Any person attending the hearing who does not in advance of the meeting request an opportunity to speak will be allowed to make an oral presentation at the hearing's conclusion, if time permits, at the chairperson's discretion.

Persons interested in specific agenda items to be discussed in open session may ascertain from the contact person the approximate time of discussion.

Details on the agenda, questions to be addressed by the committee, and a current list of committee members are available from the contact person before and after the meeting. Transcripts of the open portion of the meeting will be available from the Freedom of Information Office (HFI-35), Food and Drug Administration, Room 12A-16, 5600 Fishers Lane, Rockville, MD 20857, approximately 15 working days after the meeting, at a cost of 10 cents per page. The transcript may be viewed at the Dockets Management Branch (HFA-305), Food and Drug Administration, Room 4-62, 5600 Fishers Lane, Rockville, MD 20857, approximately 15 working days after the meeting, between the hours of 9 a.m. and 4 p.m., Monday through Friday. Summary minutes of the open portion of the meeting will be available from the Freedom of Information Office (address above) beginning approximately 90 days after the meeting.

This notice is issued under section 10(a) (1) and (2) of the Federal Advisory Committee Act (Pub. L. 92-463, 86 Stat. 770-776 (5 U.S.C. App. I)), and FDA's regulations (21 CFR Part 14) on advisory committees.

Dated: March 31, 1988.

John M. Taylor,

Associate Commissioner for Regulatory Affairs.

[FR Doc. 88-7672 Filed 4-6-88; 8:45 am]

BILLING CODE 4160-01-M

Office of the Assistant Secretary for Health; Intent To Grant an Exclusive Patent License; Robert J. Henkin

Pursuant to § 6.3 of 45 CFR Part 6 and 37 CFR Part 404, notice is hereby given of intent to grant to Dr. Robert J. Henkin an exclusive license to make, use, and sell the invention by Dr. Henkin entitled "Method for Total Protein Fractionation and Analysis of Human Saliva," which is described and claimed in United States Patent No. 4,066,405, issued January 3, 1978. A copy of the patent may be obtained upon written request submitted to Chief, Patent Branch, Department of Health and Human Services, c/o National Institutes of Health, Room 5A-03, Westwood Building, Bethesda, Maryland 20892.

The proposed license will be royalty-free with a duration of five (5) years and will contain other terms and conditions to be negotiated by the parties in accordance with the Department of Health and Human Services Patent Regulations. The Department will grant the license unless, within sixty (60) days of this Notice, the Chief of the Patent Branch receives in writing any of the following, together with supporting documents:

1. A statement from any person setting forth reasons why it would not be in the best interest of the United States to grant the proposed license; or

2. An application for a nonexclusive license to manufacture and/or sell the invention in the United States is submitted in accordance with the provisions of 37 CFR 404.8 and the applicant provides evidence that he has already brought the invention to practical application or is likely to do so expeditiously.

The Assistant Secretary for Health of the Department of Health and Human Services will review all written responses to this Notice.

Authority: 45 CFR 6.3 and 37 404.7.

Dated: March 30, 1988.

Robert E. Windom,

Assistant Secretary for Health.

[FR Doc. 88-7587 Filed 4-6-88; 8:45 am]

BILLING CODE 4115-12-M

Public Health Service

Privacy Act of 1974; Report of Computer Matching Program

AGENCY: Public Health Service, HHS.

ACTION: Notice of computer matching program.

SUMMARY: The Health Resources and Services Administration (HRSA) is providing notice that the Office of the Administrator, Division of Fiscal Services, will conduct ongoing computer matches of records of individuals who have defaulted on student loans with the Internal Revenue Service (IRS) taxpayer records. The purpose of the computer matching program is to obtain current mailing addresses of loan defaulters from IRS taxpayer records. A matching report is set forth below.

DATES: The matching program will commence as early as April 4, 1988, and will be conducted regularly thereafter for information provided on new defaulters and intermittently as updating is required.

ADDRESS: Interested individuals may comment on the proposed matching program by writing to the HRSA Privacy Act Coordinator, Department of Health and Human Services, Room 14A-20, 5600 Fishers Lane, Rockville, Maryland 20857.

FOR FURTHER INFORMATION CONTACT: Mr. Lloyd H. Fagg, Director, Division of Fiscal Services, Health Resources and Services Administration, Room 16-05, 5600 Fishers Lane, Rockville, Maryland 20857, (301) 443-2990. This is not a toll free number.

SUPPLEMENTARY INFORMATION: HRSA conducts loan programs under Subpart II of Part C of Title VII and under Subpart II of Part B of Title VIII of the Public Health Service Act for the purpose of establishing and operating a student loan fund with any public or any other nonprofit health professions or nursing school. The program requires that participating schools collect the loan(s) from the student. If the student fails to repay a borrowed loan, the school follows regulatory procedures to collect the funds.

Section 6103(m)(5)(A) of Title 26, USC authorizes the Secretary of the Treasury, upon written request of the Secretary of Health and Human Services, to disclose the mailing address of any taxpayer who has defaulted on a loan made under these programs. In accordance with 26 U.S.C. 6103(m)(5)(B), the Secretary of Health and Human Services is authorized to disclose the mailing address of any taxpayer who has defaulted on a loan made under the above authorities to schools and eligible lenders for the purpose of locating the student and collecting the loan. HRSA is conducting the computer matching program in accordance with the Office of Management and Budget's (47 FR 21656, May 19, 1982), revised Supplemental Guidance for Conducting Matching Program. A copy of this notice has been provided to both Houses of Congress and the Office of Management and Budget.

Dated: March 30, 1988.

Wilford J. Forbush,

Deputy Assistant Secretary for Health Operations and Director, Office of Management, PHS.

Report of Matching Program: Individuals Who Have Defaulted on Student Loans Administered by the Department of Health and Human Services

A. *Authority.* Debt Collection Act of 1982, Pub. L. 97-365. Authority to disclose the mailing address of any taxpayer who has defaulted on a loan administered by HHS is section 6103(m)(5) of the Internal Revenue Code, as amended by Pub. L. 99-92.

B. *Program Description—Purpose.* This matching program is being conducted to obtain from the Internal Revenue Service (IRS) the current mailing addresses of individuals who received student loans under Subpart II, Part C of Title VII of the Public Health Service Act, or under Subpart II, Part B of Title VIII of such Act, and who have defaulted on repaying their loans under these programs.

Organizations Involved. The Department of the Treasury, Internal Revenue Service, and Health Resources and Services Administration (HRSA).

Procedures. Participating Health Professions/Nursing school will provide HRSA with computer tapes or hard copy lists containing personal data, such as name and last known address, of individuals who have defaulted on student loans. HRSA will submit the data to IRS for electronic comparison with IRS taxpayer records. Successful identification of an individual's address through the match is referred to as a "hit." IRS will generate a list of all "hits" and send it to HRSA together with HRSA's computer tapes.

Follow-up. HRSA will send a hard copy list of the "hits", i.e., current loan defaulters mailing addresses together with the original computer tapes to the schools. Each school will contact the individual(s) identified in the "hits" and apply due diligence in training to collect on the defaulted loan(s), in accordance with the Health Professions/Nursing Student Loans regulatory provisions.

C. *Records to be Matched—Record Source.* The records to be matched are maintained in HRSA 09-15-0045, "Health Resources and Services Administration Loan Repayment/Debt Management Records System, HHS/HRSA/OA," 51 Fr 52519, November 24, 1986, with IRS "Individual Master File; Returns and information Processing System", 24.030, FR 50 29826, July 22, 1985, which includes but is not limited to taxpayers names and addresses.

D. *Date of Matching Program.* The matching program will start as early as April 4, 1988, and will be conducted on an ongoing basis thereafter.

E. *Safeguards.* HRSA: HRSA will select and prepare data for use in the match in such a way as to minimize any risk of possible unauthorized disclosure. Access to the computer files and printed information is restricted to those persons associated with the matching program on a need-to-know basis. The records and tapes are physically secured. Computer tapes are protected by passwords to prohibit unauthorized access. Once the data has been returned to HRSA, it will be treated in the same manner as all information maintained in system of records 09-15-0045.

IRS: IRS will use and access data submitted by HRSA only to the extent necessary to conduct the electronic match. Only those IRS employees who are directly involved in conducting the match will be given access to HRSA records and those generated as a result of the match. These employees will be made explicitly aware of their obligations under the Privacy Act, the requirements of OMB guidelines concerning computer matching programs, and the security safeguards prescribed for records of this type. IRS safeguards require that records be maintained in a secured area and restricted access to information only to persons whose duties and responsibilities require access.

HRSA agrees to comply with all of the safeguard requirements imposed by section 6103(p)(4) of the Internal Revenue Code. HRSA acknowledges the criminal penalties for unauthorized disclosure contained in section 7213(a)(1)-(5) and the civil damage provisions for unauthorized disclosure contained in section 7431(a)-(c). In addition, information provided to participating schools will be controlled and used in compliance with the Privacy Act of 1974, and with HHS and IRS safeguard requirements.

F. *Disposition of Records.* Computer data will be deleted and identified "hits", with computer tapes, will be sent to the respective schools. No records of "hits" will be maintained by HRSA.

[FR Doc. 88-7671 Filed 4-6-88; 8:45 am]

BILLING CODE 4160-15-M

DEPARTMENT OF THE INTERIOR

Bureau of Land Management

[NV-060-4322-02]

Battle Mountain District Grazing Advisory Board Meeting

AGENCY: Bureau of Land Management, Interior.

ACTION: Notice of Grazing Advisory Board Meeting.

SUMMARY: In accordance with Pub. L. 94–579 and Section 3, Executive Order 12548 of February 14, 1986, a meeting of the Battle Mountain District Grazing Advisory Board will be held.

DATE: May 6, 1988, beginning at 9:00 a.m. in the Battle Mountain District Conference Room, N. Second and Scott Streets, Battle Mountain, Nevada.

SUPPLEMENTARY INFORMATION: The agenda for the meeting will include:

(1) Election of Chairperson and Vice Chairperson,

(2) Status of range improvement program,

(3) Allotment management planning and,

(4) The strategy for evaluation of rangeland monitoring data in the Tonopah EIS Planning Area.

The meeting is open to the public. Interested persons may make oral statements to the board between 1:30 and 2:00 p.m. on May 6, 1988, or file written statements for the Board's consideration. Those persons interested in making oral comments should contact Terry L. Plummer by April 29, 1988.

FOR FURTHER INFORMATION CONTACT: Terry L. Plummer, District Manager, P.O. Box 1420, Battle Mountain, Nevada 89820 or phone (702) 635–5181.

(Date: April 1, 1988.

Terry L. Plummer,

District Manager, Battle Mountain, Nevada.

[FR Doc. 88–7609 Filed 4–6–88; 8:45 am]

BILLING CODE 4310-HC-M

[OR-010-08-4322-10; GP8-111]

Advisory Council Meeting

AGENCY: Bureau of Land Management, Interior.

ACTION: Notice of meeting June 1, 1988.

SUMMARY: The agenda will center on the Warner Wetlands project and general update on other programs and topics of interest to the Council. Members of the public who wish to address the Council should notify the Lakeview District by May 27, 1988 so that time can be allotted on the agenda.

FOR FURTHER INFORMATION CONTACT: Dick Harlow, Lakeview District Office, P.O. Box 151, Lakeview, Oregon 97630 (Telephone: 503–947–2177).

Dated: April 1, 1988.

Dick Harlow,

Associate District Manager.

[FR Doc. 88–7611 Filed 4–6–88; 8:45 am]

BILLING CODE 4310-33-M

[OR-010-08-4322-10; GP8-110]

Grazing Advisory Board Tour

AGENCY: Bureau of Land Management, Interior.

ACTION: Notice of tour May 24, 1988.

SUMMARY: The tour will center on the Beattys Butte area range improvements, grazing systems and rangeland monitoring. The tour will begin at the Lakeview District Office at 8:00 a.m. The public is invited to attend the tour. However, due to the terrain to be traversed, special transportation arrangements are needed. Members of the public who wish to attend the tour and/or make a statement to the Advisory Council should notify the District Office by May 20, 1988.

FOR FURTHER INFORMATION CONTACT: Dick Harlow, Lakeview District Office, P.O. Box 151 Lakeview, Oregon 97630 (Telephone: 503–947–2177).

Dated: April 1, 1988.

Dick Harlow,

Associate District Manager.

[FR Doc. 88–7612 Filed 4–6–88; 8:45 am]

BILLING CODE 4310-33-M

[ID-060-08-4212-13; I-25297]

Coeur d'Alene District, ID; Exchange of Public Lands

AGENCY: Bureau of Land Management, Interior.

ACTION: Notice of realty action; exchange of public lands in Shoshone County, Idaho.

SUMMARY: The Notice is to advise the public that the Emerald Empire Resource Area, Coeur d'Alene District, of the Bureau of Land Management and Bunker Limited Partnership are proposing a land exchange. The following described public lands have been determined to be suitable for disposal by exchange under section 206 of the Federal Land Policy and Management Act of 1976, 43 U.S.C. 1716:

Boise Meridian, Idaho

T. 48 N., R. 2 E.,
  Sec. 12: Lot 19.
T. 48 N., R. 3 E.,
  Sec. 7: Lot 4 (a portion), NE¼NE¼, S½NE¼ (a portion) E½SW¼ (a portion), SE½ (a portion);
  Sec. 8: S½ (a portion);
  Sec. 17: Lots 1–8 inclusive (portions thereof);
  Sec. 18: Lot 1 (a portion), Lots 21, 22.

The area described above aggregates approximately 634(±) acres in Shoshone County, Idaho. The specific legal descriptions will be subject to an approved resurvey.

In exchange for these lands, the United States will acquire the following described lands from Bunker Limited Partnership:

Boise Meridian, Idaho

T. 47 N., R. 1 E.,
  Sec. 2: S½SW¼, SW¼SE¼.
T. 48 N., R. 1 E.
  Sec. 24: that portion of patent 1102665 which falls within the section.
T. 48 N., R. 2 E.,
  Sec. 19: that portion of patent 1102665 which falls within the section;
  Sec. 29: E½NW¼, N½SW¼;
  Sec. 30: that portion of patent 1102665 which falls within the section.

The area described above aggregates approximately 315(±) acres in Shoshone County, Idaho.

The purpose of the land exchange is to facilitate the construction of the "Kellogg Gondola" project which was authorized by the Omnibus Budget Reconciliation Act of 1987, Pub. L. 100–203. The public lands to be exchanged are isolated parcels. The private lands being offered have very important values for timber, watershed and wildlife habitat that merit acquisition and public ownership. The exchange is consistent with the Bureau of Land Management land use plans and the public interest will be well served by making this exchange.

The value of the lands to be exchanged is approximately equal, and the acreage will be adjusted to equalize the value upon completion of the final appraisal of the lands.

Lands to be conveyed from the United States will be subject to the following reservations:

1. A reservation to the United States of a right-of-way for ditches or canals constructed by the authority of the United States, Act of August 30, 1890 (43 U.S.C. 945).

2. All other valid existing rights, including but not limited to any right-of-way, easement or lease of record.

The publication of this notice in the **Federal Register** will segregate the public lands described above to the extent that they will not be subject to appropriation under the public land laws, including the mining laws but not from exchange pursuant to section 206 of the Federal Land Policy and Management Act of 1976. As provided by the regulations of 43 CFR 2201.1(b), any subsequently tendered application, allowance of which is discretionary, shall not be accepted, shall not be considered as filed and shall be returned to the applicant. The segregative effect of this Notice will terminate upon issuance of patent or in two years, whichever occurs first.

ADDRESSES: Detailed information concerning the exchange is available for

review at the Coeur d'Alene District Office, 1808 North Third Street, Coeur d'Alene, Idaho 83814.

SUPPLEMENTARY INFORMATION: For a period of 45 days from the date of publication of this notice in the **Federal Register**, interested parties may submit comments to the District Manager at the above address. Objections will be reviewed by the State Director who may sustain, vacate, or modify this realty action. In the absence of any objections, this realty action will become the final determination of the Department of the Interior.

Dated: April 1, 1988.

John B. O'Brien III,
Acting District Manager.

[FR Doc. 88-7620 Filed 4-6-88; 8:45 am]

BILLING CODE 4310-GG-M

[ID-030-08-4212-14]

Realty Action (I-24383); Noncompetitive Sale of Public Lands in Bannock County, ID

AGENCY: Bureau of Land Management, Interior.

ACTION: Noncompetitive sale of public land in Bannock County, Idaho.

The following land has been found suitable for direct sale under section 203 of the Federal Land Policy and Management Act of 1976 (90 Stat. 2750, 43 U.S.C. 1713), at no less than the estimated fair market value of $12,000. The land will not be offered for sale until at least 60 days after the date of this notice.

Boise Meridian

T.7S., R.35E.,
Section 28: W1/2SW1/4, SE1/4SW1/4.
Containing approximately 120 acres.

The land described is hereby segregated from appropriation under the public land laws, including the mining laws, pending disposition of this action or 270 days from the date of publication of this notice, whichever occurs first.

This land is being offered by direct sale of Bannock County. All minerals shall be reserved to the United States, together with the right to prospect for, mine, and remove the minerals.

The patent, when issued, will contain reservations to the United States. Detailed information concerning these reservations, as well as specific conditions of the sale, are available for review at the Idaho Falls District, Bureau of Land Management, 940 Lincoln Road, Idaho Falls, Idaho 83401.

For a period of 45 days from the date of publication of this notice in the **Federal Register**, interested parties may submit comments to the District Manager, Idaho Falls District, at the above address. In the absence of timely objection, this proposal shall be come the final determination of the Department of Interior.

Gary L. Bliss,
Acting District Manager.

[FR Doc. 88-7626 Filed 4-6-88; 8:45 am]

BILLING CODE 4310-GG-M

[ES 37978]

Recordable Disclaimer of Interest; Louisiana

Notice is hereby given that the United States of America, pursuant to the provisions of section 315 of the Federal Land Policy and Management Act of 1976, 43 U.S.C. 1745, does hereby give notice of its intention to disclaim and release all interest to the owner of record for the following described property to-wit: E½SE¼, Section 8, T. 11 N., R. 11 W., Louisiana Meridian, Louisiana.

After review of the official records it is the position of the Bureau of Land Management that these lands so described have been patented by the United States and that a patent in which land is described using legal sub-divisions conveys all the land within the specified limits, regardless of whether or not acreage is correctly stated.

Any person wishing to submit a protest or comments on the above disclaimer should do so in writing before the expiration date of 90 days from the date of publication of this notice. If no protest(s) is received the disclaimer will be effective on the date set out below.

The purpose of this notice is to afford any person or persons having a valid protest to the above action an opportunity to submit such protest to the Bureau of Land Management, 350 South Pickett Street, Alexandria, Virginia 22304, telephone (703) 274-0180 on or before expiration of the 90-day period.

G. Curtis Jones, Jr.,
State Director.

[FR Doc. 88-7600 Filed 4-6-88; 8:45 am]

BILLING CODE 4310-GJ-M

[MT-070-04-4212-13; M-75431]

Realty Action; Exchange in Montana

AGENCY: Bureau of Land Management, Interior.

ACTION: Designation of public lands in Powell County, Montana, for possible transfer out of Federal ownership in exchange for lands owned by Cominco American, Inc.

SUMMARY: BLM proposed to exchange public land to achieve better management through consolidation.

The following public land is being considered for disposal in an equal value exchange pursuant to section 206 of the Federal Land Policy and Mangement Act of October 21, 1976, 43 U.S.C. 1716.

Principle Meridian, Montana

T. 10 N., R. 9 W.,
Section 4, Lots 3, 4, SW¼NW¼, S½, S½, NE¼SE¼;
Section 9, Lot 2;
Section 10, SW¼SW¼;
Section 20, Lot 1, NE¼NW¼.
T. 10 N., R. 10 W.,
Section 4, Lots 1, 2, SE¼NE¼;
Section 10, SW¼NW¼;
Section 24, SE¼.

The lands described above comprise 797 acres, more or less. These lands are segregated from entry under the mining laws, except the mineral leasing laws, effective upon publication of this notice in the **Federal Register**. The segregative effect will terminate upon issuance of patent, upon publication in the **Federal Register** of termination of the segregation, or 2 years from the date of this publication, whichever comes first.

Final determination on disposal will await completion of an environmental assessment. Upon completion of the environmental assessment and land use decision, a Notice of Realty Action shall be published specifying the lands to be exchanged and the lands to be acquired.

DATE: For a period of up to and including May 23, 1988, interested parties may submit comments to the Butte District Manager, P.O. Box 3388, Butte, Montana 59702.

SUPPLEMENTARY INFORMATION: Detailed information concerning the exchange is available at the Butte District Office.

April 1, 1988.

James A. Moorhouse,
District Manager.

[FR Doc. 88-7599 Filed 4-6-88; 8:45 am]

BILLING CODE 4310-DN-M

[AZ-942-08-4520-12]

Arizona; Filing of Plats of Survey

March 30, 1988.

1. The plats of survey of the following described lands were officially filed in the Arizona State Office, Arizona, on the dates indicated:

A plat representing a dependent resurvey of a portion of the subdivisional lines, and a survey of

subdivisions and metes-and-bounds surveys in section 20, Township 2 North, Range 3 East, Gila and Salt River Meridian, Arizona, was accepted March 22, 1988, and was officially filed March 23, 1988.

This plat was prepared at the request of the Director, Bureau of Land Management.

A plat representing a dependent resurvey of a portion of Homestead Entry Survey 53, and the survey of lot 6, section 5, Township 10 North, Range 11 East, Gila and Salt River Meridian, Arizona, was accepted February 11, 1988, and was officially filed February 19, 1988.

This plat was prepared at the request of the U.S. Forest Service, Region Three.

A supplemental plat showing amended lottings in section 25 and 26, Township 6 North, Range 1 West, Gila and Salt River Meridian, Arizona, was accepted February 1, 1988, and was officially filed February 5, 1988.

A supplemental plat showing amended lottings in sections 27, 28, and 33, Township 6 North, Range 1 West, Gila and Salt River Meridian, Arizona, was accepted February 1, 1988, and was officially filed February 5, 1988.

A supplemental plat showing amended lottings in sections 30 and 31, Township 6 North, Range 1 West, Gila and Salt River Meridian, Arizona, was accepted February 1, 1988, and was officially filed February 5, 1988.

A supplemental plat showing amended lottings in sections 25 and 26, Township 6 North, Range 2 West, Gila and Salt River Meridian, Arizona, was accepted February 1, 1988, and was officially filed February 5, 1988.

These plats were prepared at the request of the Bureau of Land Management, Phoenix District Office.

A supplemental plat showing amended lottings created by the segregation of mineral surveys in section 17, Township 19 South, Range 25 East, Gila and Salt River Meridian, Arizona, was accepted February 1, 1988, and was officially filed February 5, 1988.

This plat was prepared at the request of the Bureau of Land Management, Lands and Minerals Operations.

2. These plats will immediately become the basic records for describing the land for all authorized purposes. These plats have been placed in the open files and are available to the public for information only.

3. All inquiries relating to these lands should be sent to the Arizona State Office, Bureau of Land Management, P.O. Box 16563, Phoenix, Arizona 85011.

Jerrold E. Knight,

Acting Chief, Branch of Cadastral Survey.

[FR Doc. 88-7627 Filed 4-6-88; 8:45am]

BILLING CODE 4310-32-M

[CO-942-08-4520-12]

Colorado; Filing of Plats of Survey

March 30, 1988.

The plat of survey of the following described land, will be officially filed in the Colorado State Office, Bureau of Land Management, Lakewood; Colorado, effective 10:00 a.m., March 30, 1988.

The plat representing the dependent resurvey of a portion of Tract 43, now designated as Tract 43A and the metes-and-bounds survey of Tracts 43B and 43C, T. 2 S., R. 86 W., Sixth Principal Meridian, Colorado, Group No. 864, was accepted March 16, 1988.

This survey was executed to meet certain administrative needs of the Forest Service, USDA.

All inquiries about this land should be sent to the Colorado State Office, Bureau of Land Management, 2850 Youngfield Street, Lakewood, Colorado, 80215.

Jack A. Eaves,

Chief, Cadastral Surveyor for Colorado.

[FR Doc. 88-7604 Filed 4-6-88; 8:45 am]

BILLING CODE 4310-JB-M

[CO-010-08-4332-11]

Colorado: Amendment to the Final Intensive Wilderness Inventory; Decision and Commencement of Public Comment Period For Designation of the BLM Platte River Contiguous Wilderness Study Area CO-010-104

I hereby announce my decision to amend the Final Intensive Wilderness Inventory decision published in the **Federal Register**, Vol. 45, No. 222, Friday, November 14, 1980, page 75584 under authority of section 202 and section 603 of the Federal Land Policy and Management Act of 1976 (Pub. L. 94-579) and in accordance with the guidelines in the September 27, 1978, BLM *Wilderness Inventory Handbook* and Organic Act Director No. 78-61, change 3. This notice also announces a public comment and protest period on my decision to amend the final wilderness inventory decision which begins on the date of this announcement and ends 45 days after that date.

The purpose of this amended decision is to designate approximately 30 acres of BLM-administered public land in the Craig District located in T. 12N., R. 80W., Section 27: SE¼NE¼ and NE¼SE¼, 6th Principle Meridian as the Platte River Contiguous Wilderness Study Area (Unit No. CO-010-104). These lands are contiguous with the 23,000 acre Platte River Wilderness in the Medicine Bow and Routt National Forests of Wyoming and Colorado.

Protection of Wilderness resources found to exist on these 30 acres of public lands would improve manageability and would enhance the outstanding opportunities for primitive and unconfined recreation and solitude of the contiguous USFS Platte River Wilderness.

All public comments that are received will be read, recorded, analyzed, evaluated and where appropriate, field checked. These comments will be reviewed before this decision becomes final, however if comments or protests do not support further consideration, this decision shall be final.

This decision established there Platte River Contiguous WSA. The WSA will be studied and considered for inclusion in the National Wilderness Preservation System in the BLM Craig District Wilderness EIS. Notice of availability and announcement of a 90 day public comment period of the Craig District Wilderness Draft EIS will be published in the **Federal Register.**

The final intensive wilderness inventory documentation for the Platte River Contiguous WSA (Unit No. CO-010-104) is contained in permanent documentation files located in the BLM, Colorado State Office, the BLM, Craig District Office, and in the BLM, Kremmling Resource Area Office. A summary report including a map on the final intensive wilderness inventory for the Platte River Contiguous Unit (CO-010-104) is available at no cost upon request from: Wilderness Craig District Office, Bureau of Land Management, 455 Emerson Street, Craig, CO 81625.

Contact person for more information: Eric Finstick, Colorado State Office, 2850 Youngfield, Lakewood, Colorado 80215. Phone: (303) 236-1756.

Dated: March 16, 1988.

Neil Morok,

State Director.

[FR Doc. 88-7688 Filed 4-6-88; 8:45 am]

BILLING CODE 4310-JB-M

Minerals Management Service

Development Operations Coordination; Apache Corp.

AGENCY: Minerals Management Service, Interior.

ACTION: Notice of the Receipt of a Proposed Development Operations Coordination Document (DOCD).

SUMMARY: Notice is hereby given that Apache Corporation has submitted a DOCD describing the activities it proposes to conduct on Lease OCS–G 5001, Block 636, Matagorda Island Area, offshore Texas. Proposed plans for the above area provide for the development and production of hydrocarbons with support activities to be conducted from an existing onshore base located at Port O'Connor, Texas.

DATE: The subject DOCD was deemed submitted on March 30, 1988.

ADDRESS: A copy of the subject DOCD is available for public review at the Public Information Office, Gulf of Mexico OCS Region, Minerals Management Service, 1201 Elmwood Park Boulevard, Room 114, New Orleans, Louisiana (Office Hours: 8 a.m. to 4:30 p.m., Monday through Friday).

FOR FURTHER INFORMATION CONTACT: Mr. Michael D. Joseph: Minerals Management Service, Gulf of Mexico OCS Region, Field Operations, Plans, Platform and Pipeline Section, Exploration/Development Plans Unit; Telephone (504) 736–2875.

SUPPLEMENTARY INFORMATION: The purpose of this Notice is to inform the public, pursuant to Sec. 25 of the OCS Lands Act Amendments of 1978, that the Minerals Management Service is considering approval of the DOCD and that it is available for public review.

Revised rules governing practices and procedures under which the Minerals Management Service makes information contained in DOCDs available to affected States, executives of affected local governments, and other interested parties became effective December 13, 1979 (44 FR 53685). Those practices and procedures are set out in revised § 250.34 of Title 30 of the CFR.

Date: March 31, 1988.

J. Rogers Pearcy,

Regional Director, Gulf of Mexico OCS Region.

[FR Doc. 88–7621 Filed 4–6–88; 8:45 am]

BILLING CODE 4310–MR–M

Development Operations Coordination Document; Chevron U.S.A., Inc.

AGENCY: Minerals Management Service, Interior.

ACTION: Notice of the receipt of a proposed Development Operations Coordination Document (DOCD).

SUMMARY: Notice is hereby given that Chevron U.S.A. Inc. has submitted a DOCD describing the activities it proposes to conduct on Lease OCS–G 1260, Block 177, South Timbalier Area, offshore Louisiana. Proposed plans for the above area provide for the development and production of hydrocarbons with support activities to be conducted from an existing onshore base located at Leeville, Louisiana.

DATE: The subject DOCD was deemed submitted on March 28, 1988.

ADDRESS: A copy of the subject DOCD is available for public review at the Public Information Office, Gulf of Mexico OCS Region, Minerals Management Service, 1201 Elmwood Park Boulevard, Room 114, New Orleans, Louisiana (Office Hours: 8 a.m. to 4:30 p.m. Monday through Friday).

FOR FURTHER INFORMATION CONTACT: Micheal J. Tolbert; Minerals Management Service, Gulf of Mexico OCS Region, Field Operations, Plans, Platform and Pipeline Section, Exploration/Development Plans Unit; Telephone (504) 736–2867.

SUPPLEMENTARY INFORMATION: The purpose of this Notice is to inform the public, pursuant to section 25 of the OCS Land Act Amendments to 1978, that the Minerals Management Service is considering approval of the DOCD and that it is available for public review.

Revised rules governing practices and procedures under which the Minerals Management Service makes information contained in DOCDs available to affected States, executives of affected local governments, and other interested parties became effective December 13, 1979 (44 FR 53685). Those practices and procedures are set out in revised 250.34 of Title 30 of the CFR.

J. Rogers Pearcy,

Regional Director, Gulf of Mexico OCS Region.

[FR Doc. 88–7608 Filed 4–6–88; 8:45 am]

BILLING CODE 4310–MR–M

Development Operations Coordination; Samedan Oil Corp.

AGENCY: Minerals Management Serivce, Interior.

ACTION: Notice of the Receipt of a Proposed Development Operations Coordination Document (DOCD).

SUMMARY: Notice is hereby given that Samedan Oil Corporation has submitted a DOCD describing the activities it proposes to conduct on Lease OCS–G 6087, Block A–65, Brazos Area, offshore Texas. Proposed plans for the above area provide for the development and production of hydrocarbons with support activities to be conducted from an existing onshore base located at Ingleside, Texas.

DATE: The subject DOCD was deemed submitted on March 28, 1988.

ADDRESS: A copy of the subject DOCD is available for public review at the Public Information Office, Gulf of Mexico OCS Region, Minerals Management Service, 1201 Elmwood Park Boulevard, Room 114, New Orleans, Louisiana (Office Hours: 8 a.m. to 4:30 p.m., Monday through Friday).

FOR FURTHER INFORMATION CONTACT: Ms. Angie D. Gobert; Minerals Management Service, Gulf of Mexico OCS Region, Field Operations, Plans, Platform and Pipeline Section, Exploration/Development Plans Unit; Telephone (504) 736–2876.

SUPPLEMENTARY INFORMATION: The purpose of this Notice is to inform the public, pursuant to Sec. 25 of the OCS Lands Act Amendments of 1978, that the Minerals Management Service is considering approval of the DOCD and that it is available for public review.

Revised rules governing practices and procedures under which the Minerals Management Service makes information contained in DOCDs available to affected States, executives of affected local governments, and other interested parties became effective December 13, 1979 (44 FR 53685). Those practices and procedures are set out in revised § 250.34 of Title 30 of the CFR.

Date: March 31, 1988.

J. Rogers Pearcy,

Regional Director, Gulf of Mexico OCS Region.

[FR Doc. 88–7622 Filed 4–6–88; 8:45 am]

BILLING CODE 4310–MR–M

Development Operations Coordination Document; Tenneco Oil Co.

AGENCY: Minerals Management Service, Interior.

ACTION: Notice of the receipt of a proposed Development Operations Coordination Document (DOCD).

SUMMARY: Notice is hereby given that Tenneco Oil Company has submitted a DOCD describing the activities it proposes to conduct on Lease OCS–G 4781, Block 213, East Cameron Area, offshore Louisiana. Proposed plans for the above area provide for the development and production of hydrocarbons with support activities to be conducted from an existing onshore base located at Intracoastal City, Louisiana.

DATE: The subject DOCD was deemed submitted on March 29, 1988. Comments

must be received by April 22, 1988 or 15 days after the Coastal Management Section receives a copy of the plan from the Minerals Management Service.

ADDRESSES: A copy of the subject DOCD is available for public review at the Public Information Office, Gulf of Mexico OCS Region, Minerals Management Service, 1201 Elmwood Park Boulevard, Room 114, New Orleans, Louisiana (Office Hours: 8 a.m. to 4:30 p.m., Monday through Friday). A copy of the DOCD and the accompanying Consistency Certification are also available for public review at the Coastal Management Section Office located on the 10th Floor of the State Lands and Natural Resources Building, 625 North 4th Street, Baton Rouge, Louisiana (Office Hours: 8 a.m. to 4:30 p.m., Monday through Friday). The public may submit comments to the Coastal Management Section, Attention OCS Plans, Post Office Box 44487, Baton Rouge, Louisiana 70805.

FOR FURTHER INFORMATION CONTACT: Mr. Michael D. Joseph; Minerals Management Service, Gulf of Mexico OCS Region, Field Operations, Plans, Platform and Pipeline Section, Exploration/Development Plans Unit; Telephone (504) 736-2875.

SUPPLEMENTARY INFORMATION: The purpose of this Notice is to inform the public, pursuant to section 25 of the OCS Lands Act Amendments of 1978, that the Minerals Management Service is considering approval of the DOCD and that it is available for public review. Additionally, this Notice is to inform the public, pursuant to § 930.61 of Title 15 of the CFR, that the Coastal Management Section/Louisiana Department of Natural Resources is reviewing the DOCD for consistency with the Louisiana Coastal Resources Program.

Revised rules governing practices and procedures under which the Minerals Management Service makes information contained in DOCDs available to affected States, executives of affected local governments, and other interested parties became effective December 13, 1979 (44 FR 53685).

Those practices and procedures are set out in revised § 250.34 of Title 30 of the CFR.

Dated: March 30, 1988.

J. Rogers Pearcy,

Regional Director, Gulf of Mexico OCS Region.

[FR Doc. 88-7603 Filed 4-6-88; 8:45 am]

BILLING CODE 4310-MR-M

Bureau of Reclamation

Intention To Prepare a Draft Environmental Impact Statement/ Environmental Impact Report; Seawater Intrusion Project; California

AGENCY: Bureau of Reclamation, Interior.

ACTION: Notice of Intent to Prepare a Draft Environmental Impact Statement/ Environmental Impact Report (EIS/EIR) for the Seawater Intrusion Project, Monterey County Flood Control and Water Conservation District—Small Reclamation Projects Act (Pub.L. 84-984).

SUMMARY: Pursuant to section 102(2)(C) of the National Environmental Policy Act of 1969 (as amended) and section 21002 of the California Environmental Quality Act, the Bureau of Reclamation and the Monterey County Flood Control and Water Conservation District intend to prepare a joint environmental impact statement/environmental impact report (EIS/EIR). The EIS/EIR will address the impacts from construction and operation of the Seawater Intrusion Project for which a Public Law 84-984 loan application is pending with the Bureau of Reclamation.

A meeting has been scheduled to solicit public input in order to determine alternatives to the proposed project, the scope of the EIS/EIR and to identify the significant issues related to the proposed action.

DATE: The meeting will be held on April 14, 1988, at 7:00 p.m. in Salinas, California.

ADDRESS: Monterey County Courthouse, County Board of Supervisors Chambers, Second Floor of the East Wing, 240 Church Street, Salinas, CA 93901.

FOR FURTHER INFORMATION CONTACT: Mr. Rick Breitenbach, Environmental Specialist, Mid-Pacific Region (MP-750), 2800 Cottage Way, Sacramento, California 95825, telephone (916) 978-5134 and Mr. William Hurst, General Manager, Monterey County Flood Control and Water Conservation District, P.O. Box 930, Salinas, California 93902, telephone (408) 424-0866.

Note: For those disabled persons requiring special services, contact Bureau of Reclamation (Bureau) EEO Officer Curtis Smith at (916) 978-4911. Please notify Mr. Smith as far in advance of the meeting as possible and no later than April 6, 1988, to enable the Bureau to secure the needed services. If a request cannot be honored, the requester will be notified. A telephone device for the hearing impaired (TDD) is not available.

SUPPLEMENTARY INFORMATION: The purpose of the project is to reduce the seawater intrusion in the Castroville and Marina/Fort Ord areas. Supplemental water would be provided to these areas to reduce the current groundwater overdraft which is causing intrusion of seawater into the freshwater aquifers of the Salinas River Basin. This overdraft is caused by agricultural and municipal uses of water in the coastal area of Castroville and Marina/Fort Ord. The proposed project would consist of a 600 foot-long overflow type diversion structure. The diversion would be located in the Salinas River about 2 miles downstream of the Blanco Bridge. The project also includes the construction of a pump station and placement of about 50 miles of buried water transmission pipelines in the Castroville area. For Marina and Fort Ord, a dispersed field of 8-12 water wells would be located in the vicinity of Buena Vista Road between Chular and Spreckles. Water would be pumped from the well field to East Garrison on Fort Ord. The pumped water would be conveyed from the well field to Fort Ord via a 16-mile water transmission pipeline located parallel to Reservation and River Road.

Alternatives presently under consideration include wastewater reclamation, construction of a dam on the Arroyo Seco River for diversion of water, and the drilling of wells along the coast to extract seawater.

Primary impact, which will be evaluated in the EIS/EIR, include effects on water quality, fish and wildlife, floodplains and wetlands, cultural resources, hydraulics and hydrology, and social-economics.

Date: April 1, 1988.

C. Dale Duvall,

Commissioner.

[FR Doc. 88-7583 Filed 4-6-88; 8:45 am]

BILLING CODE 4310-09-M

INTERNATIONAL DEVELOPMENT COOPERATION AGENCY

Agency for International Development

Board for International Food and Agricultural Development; Meeting

Pursuant to the provisions of the Federal Advisory Committee Act, notice is hereby given of the Eighty-Seventh Meeting of the Board for International Food and Agricultural Development (BIFAD) on April 15, 1988.

The purpose of the Meeting is to review the Africa Bureau's Program and this will be done in four or five

components as follows: (a) Overview of the overall program in Sub-Saharan Africa (b) Review of the overall agricultural program in Sub-Saharan Africa (c) Review of African Faculties of Agriculture programs and plans for the future (d) Review of Agricultural Research activities in Sub-Saharan Africa and if time permits, there may be some discussion of Africa Programs and Budget.

The April 15, 1988 Meeting will be held in Room 1105 in the State Department, 2201 C Street, Washington, DC 20523. Any interested person may attend, and may present oral statements in accordance with procedures established by the Board, and the extent the time available for the meeting permits.

Curtis Jackson, Bureau of Science and Technology, Office of University Relations, Agency for International Development is designated as A.I.D. Advisory Committee Representative at this Meeting. It is suggested that those desiring further information write to Dr. Jackson, in care of the Agency for International Development, Rm. 309, Washington, DC 20523, or telephone him on (703) 235–8929.

Date: March 30, 1988.

Lynn Pesson,

Executive Director, BIFAD.

[FR Doc. 88–7609 Filed 4–6–88; 8:45 am]

BILLING CODE 6116–01–M

INTERSTATE COMMERCE COMMISSION

[Finance Docket No. 31196]

John H. Marino, Eric D. Gerst, and Mariner Corp. of Saginaw Valley Railway Co., Inc.; Control Exemption

AGENCY: Interstate Commerce Commission.

ACTION: Notice of exemption.

SUMMARY: The Commission exempts from prior approval under 49 U.S.C. 11343, *et seq.*, the acquisition of control by John M. Marino, Eric D. Gerst, and Mariner Corporation of Saginaw Valley Railway Company, Inc. The exemption is subject to standard labor protection conditions.

DATES: The exemption is effective on May 7, 1988. Petitions for stay must be filed by April 18, 1988, and petitions for reconsideration must be filed by April 27, 1988.

ADDRESSES: Address pleadings referring to Docket No. 31196 to:

(1) Docket No. 31196, Office of the Secretary, Case Control Branch, Interstate Commerce Commission, Washington, DC 20423

(2) Petitioner's representative: Eric D. Gerst, Esq., Gerst, Heffner, & Foldes, Suite 900, 21 South 5th Street, Philadelphia, PA 19106

FOR FURTHER INFORMATION CONTACT: Joseph H. Dettmar (202) 275–7245.

(TDD for hearing impaired (202) 275–1721)

SUPPLEMENTARY INFORMATION: Additional information is contained in the Commission's decision. To purchase a copy of the full decision, write to Dynamic Concepts, Inc., Room 2229, Interstate Commerce Commission Building, Washington, DC 20423, or call (202) 289–4357/4359 (DC Metropolitan area), (assistance for the hearing impaired is available through TDD services (202) 275–1721 or by pickup from Dynamic Concepts, Inc., in Room 2229 at Commission headquarters).

Decided: March 16, 1988.

By the Commission, Chairman Gradison, Vice Chairman Andre, Commissioners Sterrett, Simmons, and Lamboley.

Noreta R. McGee,

Secretary.

[FR Doc. 88–7617 Filed 4–6–88; 8:45 am]

BILLING CODE 7035–01–M

DEPARTMENT OF JUSTICE

Lodging of Amended Consent Decree Pursuant to Clean Air Act; USX Corp.; Correction

In the Notice of Lodging of Amended Consent Decree Pursuant to the Clean Air Act; USX Corp., beginning at 53 FR 5476, the following typographical errors should be corrected:

1. On page 5476, line 51, the phrase "14-year period" should read "4-year period." Thus, the Notice should reflect that USX must "install over a 4-year period new, functional emission controls to replace defective controls for its coke oven pushing operations;"

2. On page 5477, line 16, the word "of" should read "or." Thus, the clause in question should read "with such stipulated penalties to be escrowed until mid-1993 *or* until USX completes installation of the replacement pushing controls, whichever comes first." (Emphasis supplied).

Roger J. Marzulla,

Acting Assistant Attorney General, Land and Natural Resources Division.

[FR Doc. 88–7606 Filed 4–6–88; 8:45 am]

BILLING CODE 4410–01–M

Consent Decree in Action To Enjoin Discharge of Water Pollutants

In accordance with Departmental Policy, 28 CFR 50.7, 38 FR 19029, notice is hereby given that a consent decree in *United States* v. *Sun Metal Finishing, Inc.*, Civil Action No. 85–5734, was lodged with the United States District Court for the District of New Jersey on March 1, 1988. The consent decree establishes a compliance program for the New Jersey plant owned and operated by Sun to bring the plant into compliance with the Clean Water Act, 33 U.S.C. 1251 *et seq.*, and the applicable pretreatment regulations relating to the discharge of pollutants and requires payment of a civil penalty of $30,135.

The Department of Justice will receive for thirty (30) days from the date of publication of this notice, written comments relating to the consent decree. Comments should be addressed to the Assistant Attorney General, Land and Natural Resources Division, Department of Justice, Washington, DC 20530 and should refer to *United States* v. *Sun Metal Finishing, Inc.*, D.J. Ref. No. 90–5–1–1–2467.

The consent decree may be examined at the office of the United States Attorney, District of New Jersey, U.S. Courthouse, 502 Federal Bldg., 970 Broad St., Newark, NJ. 07102; at the Region II office of the Environmental Protection Agency, 27 Federal Plaza, New York, New York 10278; and the Environmental Enforcement Section, Land and Natural Resources Division of the Department of Justice, Washington, DC 20530. In requesting a copy, please enclose a check in the amount of $1.70 (10 cents per page reproduction charge) payable to the Treasurer of the United States.

Roger J. Marzulla,

Acting Assistant Attorney General, Land and Natural Resources Division.

[FR Doc. 88–7607 Filed 4–6–88; 8:45 am]

BILLING CODE 4410–01–M

NATIONAL AERONAUTICS AND SPACE ADMINISTRATION

[Notice 88–34]

NASA Advisory Council (NAC), Aeronautics Advisory Committee (AAC); Meeting

AGENCY: National Aeronautics and Space Administration.

ACTION: Notice of meeting.

SUMMARY: In accordance with the Federal Advisory Committee Act, Pub. L. 92–463, as amended, the National Aeronautics and Space Administration

announces a forthcoming meeting of the NASA Advisory Council, Aeronautics Advisory Committee, Ad Hoc Review Team on Flight Research and Technology.

DATE AND TIME: April 25, 1988, 8 a.m. to 4 p.m. (to be held at Langley Research Center); and April 26, 1988, 8 a.m. to 4 p.m. (to be held at Lewis Research Center).

ADDRESS: National Aeronautics and Space Administration, Langley Research Center, Room 225, Building 1219, Hampton, VA 23665; and National Aeronautics and Space Administration, Lewis Research Center, Room 215, Building 3, 21000 Brookpart Road, Cleveland, OH 44135.

FOR FURTHER INFORMATION CONTACT: Mr. Jack Levine, Office of Aeronautics and Space Technology, National Aeronautics and Space Administration, Washington, DC 20546, 202/453-2835.

SUPPLEMENTARY INFORMATION: The NAC Aeronautics Advisory Committee (AAC) was established to provide overall guidance to the Office of Aeronautics and Space Technology (OAST) on aeronautics research and technology activities.

Special ad hoc review teams are formed to address specific topics. The Ad Hoc Review Team on Flight Research and Technology, chaired by Mr. Joseph T. Gallagher, is comprised of six members. The meeting will be open to the public up to the seating capacity of the room (approximately 20 persons including the team members and other participants).

Type of Meeting: Open.

Agenda

April 25, 1988

8 a.m.—Overview of Langley Flight Research Activities.
9 a.m.—Product of Langley Flight Research Programs.
10 a.m.—Capability of Langley Facilities.
1 p.m.—Tour of Facilities.
3 p.m.—Future Plans.
4 p.m.—Adjourn.

April 26, 1988

8 a.m.—Overview of Lewis Flight Research Programs.
9 a.m.—Product of Lewis Flight Research Programs.
10 a.m.—Capability and Tour of Flight Facilities.
11:45 a.m.—Future Plans.
1 p.m.—Study Team Summary Session.
4 p.m.—Adjourn.

Dated: April 1, 1988.

John F. Duggan,

Director, General Management Division.

[FR Doc. 88-7579 Filed 4-6-88; 8:45 am]

BILLING CODE 7510-01-M

NATIONAL SCIENCE FOUNDATION

Advisory Panel for Archaeology; Meeting

The National Science Foundation announces the following meeting:

Name: Advisory Panel for Archaeology.

Date and Time: April 25, 26 and 27th, 1988, 9:00 a.m.–5:00 p.m. each day.

Place: Arizona State University, Tempe, Arizona.

Type of Meeting: Part Open—Open 4/27—9:00 a.m. to 11:00 a.m. Closed 4/25–26—9:00 a.m. to 5:00 p.m. Closed 4/27—11:00 a.m. to 5:00 p.m.

Contact Person: Dr. John E. Yellen, Program Director, Anthropology Program, Room 320, National Science Foundation, Washington, DC 20550 Telephone (202) 357–7804.

Minutes: May be obtained from contact person listed above.

Purpose of Meeting: To provide advice and recommendations concerning support for research in archaeology.

Agenda: OPEN—General discussion of the current status and future plans of the Anthropology program. CLOSED—To review and evaluate research proposals as part of the selection process for awards.

Reason for Closing: The proposals being reviewed include information of a proprietary or confidential nature, including technical information; financial data, such as salaries; and personal information concerning individuals associated with the proposals. These matters are within exemptions 4 and 6 of the Government in the Sunshine Act.

M. Rebecca Winkler,

Committee Management Officer.

April 4, 1988.

[FR Doc. 88-7661 Filed 4-6-88; 8:45 am]

BILLING CODE 7555-01-M

Advisory Committee for Chemistry; Meeting

The National Science Foundation announces the following meeting:

Name: Advisory Committee for Chemistry.

Date and Time: April 28–29, 1988; 9:00 a.m. to 5:00 p.m. each day.

Place: Room 540, National Science Foundation, 1800 G Street, NW., Washington, DC 20550.

Type of Meeting: Open.

Contact Person: Dr. Kenneth G. Hancock, Acting Director, Division of Chemistry, National Science Foundation, Washington, DC 20550, Telephone (202) 357–7947.

Summary Minutes: May be obtained from Dr. Kenneth G. Hancock.

Purpose of Committee: To provide advice and recommendations concerning NSF support for research in chemistry.

Agenda: Open discussion of the current status and future plans of the Chemistry Division's activities.

M. Rebecca Winkler,

Committee Management Officer.

April 4, 1988.

[FR Doc. 88-7662 Filed 4-6-88; 8:45 am]

BILLING CODE 7555-01-M

Advisory Panel for Decision, Risk, and Management Science Program; Meeting

The National Science Foundation announces the following meeting:

Name: Advisory Panel for Decision, Risk, and Management Science Program.

Date/Time: April 27/28, 1988—9:00 a.m. to 5:00 p.m. each day.

Place: National Science Foundation, Room 643, 1800 G Street, NW., Washington, DC 20550.

Type of Meeting: Closed.

Contact Person: Dr. Arie Y. Lewin (202) 357–7569 or Dr. Robin Gregory (202) 357–7417, Program Directors for Decision, Risk, and Management Science, Room 336, National Science Foundation, Washington, DC 20550.

Summary Minutes: May be obtained from the Contact Person at the above address.

Purpose of Advisory Panel: To provide advice and recommendations concerning support for research in the Decision, Risk, and Management Science Program.

Agenda: To review and evaluate research proposals as part of the selection process for awards.

Reason for Closing: The proposals being reviewed include information of a proprietary or confidential nature, including technical information; financial data, such as salaries; and personal information concerning individuals associated with the proposals. These matters are within exemptions (4) and (6) of 5 U.S.C.

552b(c), Government in the Sunshine Act.

April 4, 1988.

M. Rebecca Winkler,

Committee Management Officer.

[FR Doc. 88-7663 Filed 4-6-88; 8:45 am]

BILLING CODE 7555-01-M

Advisory Panel for Geography and Regional Science; Meeting

The National Science Foundation announces the following meeting:

Name: Advisory Panel for Geography and Regional Science.

Date/Time: April 25, 1988: 8:30 a.m. to 6:00 p.m. April 26, 1988: 8:30 a.m. to 6:00 p.m.

Place: Room 642, National Science Foundation, 1800 G Street, NW., Washington, DC 20550.

Type of Meeting: Closed.

Contact Person: Dr. Ronald F. Abler, Program Director, Geography and Regional Science, National Science Foundation, Washington, DC 20550, Room 336, Telephone (202) 357-7326.

Purpose of Panel: To provide advice and recommendations concerning research in Geography and Regional Science.

Agenda: To review and evaluate research proposals as part of the selection process for awards.

Reason for Closing: The proposals being reviewed include information of a proprietary or confidential nature, including technical information; financial data, such as salaries; and personal information concerning individuals associated with the proposals. These matters are within exemptions (4) and (6) of 5 U.S.C. 552b, Government in the Sunshine Act.

M. Rebecca Winkler,

Committee Management Officer.

April 4, 1988.

[FR Doc. 88-7664 Filed 4-6-88; 8:45 am]

BILLING CODE 7555-01-M

Advisory Panel for Molecular & Cellular Neurobiology Program; Meeting

The National Science Foundation announces the following meeting:

Name: Advisory Panel for Molecular & Cellular Neurobiology Program.

Date & Time: April 25, 26, & 27, 1988; 9:00 a.m.—5:00 p.m.

Place: National Science Foundation, 1800 G St. NW., Washington, DC, Room 540.

Type of Meeting: PART OPEN—Closed 04/25 9:00 a.m. / 5:00 p.m., Closed 04/26 9:00 a.m. / 5:00 p.m., Open 04/27 9:00 a.m. / 12:00 p.m., Closed 04/27 1:00 p.m. / 5:00 p.m.

Contact Person: Dr. Richard D. Broadwell, Program Director, Molecular & Cellular Neurobiology Program, National Science Foundation, Washington, DC, 20550, Room 320.

Minutes: May be obtained from contact person listed above.

Purpose of Meeting: To provide advice and recommendations concerning support for research in Molecular and Cellular Neurobiology.

Agenda: OPEN—General discussion of the current status and future plans of the Molecular and Cellular Neurobiology Program.

CLOSED—To review and evaluate research proposals as part of the selection process for awards.

Reason for Closing: The proposals being reviewed include information of a proprietary or confidential nature, including technical information; financial data, such as salaries; and personal information concerning individuals associated with the proposals. These matters are within exemptions 4 and 6 of the Government Sunshine Act.

M. Rebecca Winkler,

Committee Management Officer.

April 4, 1988.

[FR Doc. 88-7665 Filed 4-6-88; 8:45 am]

BILLING CODE 7555-01-M

Meeting; Advisory Panel for Political Science

The National Science Foundation announces the following meeting:

Name: Advisory Panel for Political Science.

Date/Time: April 28, 1988, 9:00 a.m. to 5:00 p.m., April 29, 1988, 9:00 a.m. to 5:00 p.m.

Place: Room 1242, National Science Foundation, 1800 G Street NW., Washington, DC 20550.

Type of Meeting: Closed.

Contact Person: Dr. Frank P. Scioli, Program Director for Political Science: Telephone (202) 357-9406.

Purpose of panel: To provide advice and recommendation concerning support for research in the Political Science Program.

Agenda: To review and evaluate research proposals and projects as part of the selection process for awards.

Reason for Closing: The proposals being reviewed include information of a proprietary or confidential nature, including technical information; financial data, such as salaries, and personal information concerning individuals associated with the proposals. These matters are within exemptions (4) and (6) of 5 U.S.C. 552b(c), Government in the Sunshine Act.

April 4, 1988.

M. Rebecca Winkler,

Committee Management Officer.

[FR Doc. 88-7666 Filed 4-6-88; 8:45 am]

BILLING CODE 7555-01-M

Advisory Panel for Sociology; Meeting

The National Science Foundation announces the following meeting:

Name: Advisory Panel for Sociology.

Date/Time: April 25 1988, 9:00 a.m. to 5:30 p.m., April 26, 1988, 9:00 a.m. to 5:00 p.m.

Place: National Science Foundation, Room 1243, 1800 G Street, NW., Washington, DC 20550.

Type of Meeting: Closed.

Contact Person: Dr. Stanley Presser, Program Director or Dr. Phyllis Moen, Associate Program Director for Sociology, Room 336, National Science Foundation, Washinghton, DC 20550, Telephone (202) 357-7802.

Summary Minutes: May be obtained from the Contact Persons at the above address.

Purpose of Advisory Panel: To provide advice and recommendations concerning support for research in the Sociology Program.

Agenda: Closed: to review and evaluate research proposals as part of the selection process for awards.

Reason for Closing: The proposals being reviewed include information of a proprietary or confidential nature, including technical information; financial data, such as salaries; and personal information concerning individuals associated with the proposals. These matters are within exemptions (4) and (6) of the 5 U.S.C. 522b(c), Government in the Sunshine Act.

April 4, 1988.

M. Rebecca Winkler,

Committee Management Officer.

[FR Doc. 88-7667 Filed 4-6-88; 8:45 a.m.]

BILLING CODE 7555-01-M

NUCLEAR REGULATORY COMMISSION

Abnormal Occurrences for Third Quarter CY 1987 Dissemination of Information

Section 208 of the Energy Reorganization Act of 1974, as amended requires the NRC to disseminate information on abnormal occurrences (i.e., unscheduled incidents or events

which the Commission determines are significant from the standpoint of public health and safety). The following incidents at NRC licensees were determined to be abnormal occurrences (AOs) using the criteria published in the **Federal Register** on February 24, 1977 (42 FR 10950). These abnormal occurrences are described below, together with the remedial actions taken. These events are also being included in NUREG–0090, Vol. 10, No. 3 ("Report to Congress on Abnormal Occurrences: July–September 1987"). This report will be available in the NRC's Public Document Room, 1717 H Street, NW, Washington, DC about three weeks after the publication date of this **Federal Register** Notice.

Nuclear Power Plants

87–14 Significant Degradation of Plant Safety at Oyster Creek

One of the AO examples notes that personnel error or procedural deficiencies which result in loss of the plant's capability to perform an essential safety function can be considered an abnormal occurrence. In addition, another example notes that a major deficiency in management or procedural controls in major areas can be considered an abnormal occurrence.

Date and Place.—On April 24, 1987, while the reactor was being shut down, personnel errors resulted in a condition which could have resulted in containment failure had a loss of coolant accident (LOCA) occurred. Oyster Creek is a General Electric-designed boiling water reactor operated by General Public Utilities (the licensee) and located in Ocean County, New Jersey.

Nature and Probable Consequences—The plant was being shut down for maintenance with the mode switch in the RUN position; reactor power was approximately 23% at the time of the event. The licensee planned to enter the drywell to repair an acoustic monitor. In order to enter the drywell safely, the containment atmosphere must first be purged to displace the nitrogen atmosphere to ensure proper oxygen levels are present to aid personnel entry. The deinerting commenced on April 23, 1987 at 10:00 p.m. At 3:30 a.m. on April 24, 1987, the group shift supervisor (GSS) authorized the blocking open of the torus-to-drywell vacuum breaker valves to assist the containment deinerting. The GSS believed the deinerting was not progressing as rapidly as it had in the past and elected to initiate a mechanical temporary variation. A safety review for the temporary variation was completed by the operations shift supervisor and reviewed by the shift technical advisor; however, the review did not identify the potential adverse effect on plant safety or the technical specification non-compliance that would exist. (Technical specifications require that all torus-to-drywell vacuum breakers be operable when primary containment integrity is required.)

At approximately 7:00 a.m. on April 24, 1987, operations management questioned plant conditions with the torus-to-drywell vacuum breakers open. The GSS investigated the concern, recognized the mistake, and closed the valves. The plant was at approximately 400 psig and still shutting down when the vacuum breaker valves were finally shut. Primary containment was still required by technical specifications under these plant conditions.

The allowable suppression pool bypass area for the Oyster Creek containment has been established at 10.5 square inches to maintain its capability to mitigate the full spectrum of LOCAs. A bypass area of 500 square inches (with the valves open) rendered the containment vulnerable to steam bypass of the suppression chamber, potentially resulting in containment over-pressurization for small, intermediate, and large LOCAs. Furthermore, blocking open of the suppression chamber-drywell vacuum breakers resulted in the plant being in an unanalyzed condition.

As a result of a special NRC team inspection on April 24–May 6, violations of NRC requirements were identified, and a $205,000 fine was proposed on August 24, 1987. $80,000 of this fine was for the violation described above, which was classified as Severity Level II (where Levels I and V are considered the most and least significant, respectively). In addition, the NRC inspection also determined that since some time in 1977, some of the vacuum breakers between the suppression pool and the reactor building located outside containment had been periodically tied open during certain plant shutdowns. A $75,000 fine was proposed for this violation. Finally, a $50,000 fine was proposed for the failure to properly implement the procedures for performing safety reviews and making temporary variations to the normal configuration of plant equipment. In the August 24, 1987 letter, the NRC noted that the April 24, 1987 event was not an isolated occurrence, demonstrating that management review and oversight of the program for making temporary variations were inadequate, resulting in numerous violations of procedural requirements.

Cause or Causes—The cause of the April 24 event has been determined to be personnel error, due to deficiencies in management and procedural controls. The operations shift supervisor and the shift technical advisor who reviewed the temporary variation should have been cognizant of the technical specification requirement specifying that the torus to drywall vacuum breaker valves must be operable when primary containment is required. A written safety evaluation was not performed.

The cause of the previous blocking of vacuum breaker events and violations of procedural requirements governing safety reviews of temporary variations were caused by inadequate management review and oversight of the program.

Actions Taken to Prevent Recurrence

Licensee—All outstanding temporary variations were reviewed to assure acceptability. Plant procedures have been changed as appropriate and all site individuals have completed a retraining program on safety reviews. All shift technical advisors and group shift supervisors have been reinstructed in proper organizational relationship and the need for independence in overview functions. An incident investigation task force has been established, and the utility's Nuclear Assurance Division will institute increased oversight of temporary variations and safety reviews.

On September 22, 1987, the licensee responded to the NRC enforcement action concurring with the violations and paying the civil penalty in full.

NRC—As previously discussed, a special team inspection was conducted on April 24–May 6, 1987, which identified the violations of NRC requirements. An Enforcement Conference between licensee and NRC personnel was held at the NRC Region I office on June 10, 1987.

The NRC will continue surveillance of licensee operations to assure that the corrective actions have been properly implemented.

87–15 Steam Generator Tube Rupture at North Anna Unit 1

One of the AO examples notes that major degradation of the primary coolant pressure boundary can be considered an abnormal occurrence.

Date and Place—At approximately 6:35 a.m. on July 15, 1987, North Anna Unit 1 was manually tripped from 100 percent power due to indications of a steam generator tube rupture. North Anna Units 1 and 2 are Westinghouse-designed pressurized water reactors and are located in Louisa County, Virginia.

The units are operated by Virginia Electric and Power Company.

Nature and Probable Consequences—Steam generator (S/G) tubes in a pressurized water reactor are an integral part of the reactor coolant pressure boundary. The loss of integrity of S/G tubes results in a breach of the primary-to-secondary system boundary. Steam generator tube rupture is one of the design basis accidents considered in the NRC safety review of nuclear power plants.

Safety-margins ae maintained through conservative design, inservice inspections, and administrative controls during operation such that if a steam generator tube leaks, the leakage can be detected rapidly and the reactor can be shut down safely. Nevertheless, the rupture of a S/G tube can happen, as it did at North Anna 1, and previously at Ginna, Point Beach Unit 1, Surry Unit 2 and Prairie Island Unit 1. Of these, the Ginna event which occurred on January 25, 1982 was the most severe and was consequently evaluated in depth. The Ginna event was reported as abnormal occurrence 82–4 in NUREG–090, Vol. 5, No. 1 ("Report to Congress on Abnormal Occurrences: January–March 1982").

Pressurized water reactor nuclear power plant licensees are required to have operational plans (including procedues, trained operation and support personnel, and other capabilities) to cope with a complete rupture of a S/G tube and mitigate any radiological consequences. The North Anna 1 operating and support staff mitigated the consequences of the July 15, 1987 event such that the radiological consequences were insignificant in terms of risk from any resultant on-site or off-site exposures.

The sequence of events for the S/G tube rupture incident and the associated response actions during the incident are described below.

North Anna 1 returned from a refueling outage on June 29, 1987 and reached 100% power on July 14. Reactor coolant leak rate measurements taken on July 13 indicated less than 0.25 gallons per minute unidentified leakage. Steam jet air ejector radiation monitor 1–RM–SV–121 was inoperable on July 13, became operable on July 14, but operated erratically and was declared inoperable again at 10:28 p.m. on July 14. No other safety-related equipment was out of service.

At approximately 6:30 a.m. on July 15, 1987, with Unit 1 at 100 percent power and Unit 2 at 81 percent power in an end of cycle power coastdown, a high radiation alarm was received on the Unit 1 "C" S/G main steam line radiation monitor. At the same time, pressurized level and pressure began to decrease rapidly.

At 6:35 a.m. with pressurizer level at approximately 45 percent (for 100% power, program level is 65%) and pressurizer pressure at 2100 psig (normal operating pressure is 2235 psig), Unit 1 was manually tripped. Approximately 20 seconds later, an automatic actuation of the safety injection system occcurred due to a low-low pressurizer pressure (less than 1765 psig on 2 out of 3 channels). By 6:48 a.m., the "C" S/G had been identified as having positive indication of a tube rupture and had been isolated.

A Notification of Unusual Event was declared at 6:39 a.m. and the initial notifications to State and local governments were completed by 6:51 a.m. The event was upgraded to an Alert at 6:54 a.m. and the notifications to all off-site agencies and NRC were completed by 7:02 a.m. An orderly cooldown and depressurization of the reactor coolant system to cold shutdown conditions was initiated at 7:18 a.m. and the emergency was terminated at 1:36 p.m.

Several radiological release paths to the environment were present during this event. The condenser air ejector discharged to atmosphere until it was manually diverted to the containment building at 7:56 a.m. The steam drive auxiliary feedwater pump started on the safety injection signal, and its steam supply from the "C" S/G was isolated to the turbine driven auxiliary pump at approximately 6:48 a.m. A minor relief path existed when two relief valves, the "B" main feedwater pump suction and the 2A feedwater heater tube side, lifted and did not reseat when pressure had returned to normal. An operator manually adjusted the relief valve setpoints to allow them to close, and this was completed approximately 30 minutes into the event.

Analysis of the radiological data indicated that a total of 1.56×10^{-1} curies was released, which consisted primarily of radiogases. There was no detectable increase in normal background levels of radioactivity at the site boundary in the affected sector(s). The release was less than 1% of Technical Specification limits.

The primary-to-Secondary leak in this event was estimated to be between 550 to 637 gallons per minute (gpm). The North Anna Updated Final Safety Analysis Report estimated that a double-ended rupture of a single tube at full power would result in a flow rate of 710 gpm. The highest flow rate in the 1982 S/G tube rupture at Ginna was estimated to be 760 gpm.

Cause of Causes—The licensee performed a remote visual examination of the ruptured tube using an endoscope electronic imaging probe and observed that the tube had failed over 360 degrees of the circumference, and the fractured ends were displaced in the axial direction approximately one-half inch. The cold leg side of the tube was removed, and based upon detailed evaluation of the failed tube fracture face, the cause of the failure has been firmly established to be fatigue. The fatigue was induced by fluid elastic excitation mechanism which provided sufficient loadings or alternating stresses to initiate and propagate the crack.

Actions Taken to Prevent Recurrence

Licensee—Corrective actions included modification of the S/Gs (i.e., performing eddy current inspection of all S/Gs; mechanically plugging all required tubes and preventively plugging susceptible tubes; and installing downcomer flow restrictors). In addition, surveillance of primary to secondary leakage was increased by installing new radiation monitors and increasing the surveillance frequency. Procedures were changed for actions to take if a leak rate exceeds certain criteria, for adjusting alarm setpoints, and for handling inoperable leakage monitoring equipment. The licensee is developing a Technical Specification change at the request of NRC.

NRC—An NRC Augmented Inspection Team (AIT) was sent to the site on July 15, 1987 to determine whether the licensee's action in response to the S/G tube failure was adequate to protect the health and safety of the public. In addition, the AIT evaluated the licensee's action associated with determining the cause of the event and their corrective actions to prevent recurrence.

The AIT concluded that the overall results achieved were outstanding in that the operator tripped the plant, isolated the leak and brought the plant to cold shutdown in seven hours without using the S/G power operated relief valves. This contributed to a negligible release to the environment. Therefore, there was no effect on public health and safety.

Four violations of NRC requirements were identified, all classified as Severity Level IV (on a scale in which Severity Levels I and V are considered the most significant and least significant, respectively). These were forwarded to the licensee on October 5, 1987. No civil penalty was imposed.

On October 9, 1987, NRC authorized startup of Unit 1 with operation limited to 50 percent power. On November 5, 1987, NRC authorized operation up to 100 percent power.

Other NRC Licensees

(Industrial Radiographers, Medical Institutions, Industrial Users, etc.)

87-16 Therapeutic Medical Misadministration

The general AO criterion notes that an event involving a moderate or more severe impact on public health or safety can be considered an abnormal occurrence.

Date and Place—On August 24, 1987, the NRC was notified that a 75-year-old patient at Parkview Memorial Hospital, Fort Wayne, Indiana, received two therapeutic radiation exposures to the wrong part of the body.

Nature and Probable Consequences—The patient was scheduled to receive radiation therapy exposures of 250 rads per exposure to the right hip. The treatments were to continue for 12 days for a total of 3000 rads.

During the pretreatment planning, a technologist placed treatment marks on the patient's left hip in error. The patient was then taken to the treatment room where another technologist noted the marking on the left hip and treated the left hip. A second 250 rad exposure was administered on the next day, but prior to the third exposure, the patient informed the technologist that the wrong hip was being treated. The treatments were halted when the error was discovered.

The patient has been examined by a physician and no medical side effects have been noted as a result of the misadministration.

Cause or Causes—The misadministration was caused by the technologist's error in mismarking the treatment area. The second technologist, who administered the radiation therapy, also failed to verify the treatment area by checking the patient's records.

Actions Taken to Prevent Recurrence

Licensee—The hospital agreed to institute a quality assurance program for cobalt-60 teletherapy procedures that included the independent determination of dose calculations by two qualified individuals and other aspects of treatment procedures and planning.

The hospital subsequently decided to terminate its radiation therapy program using a cobalt-60 teletherapy unit. It will continue to utilize a high energy linear accelerator which is not subject to NRC jurisdiction.

NRC—On August 25, 1987, the NRC issued a Confirmatory Action Letter to the hospital documenting its agreement to institute a quality assurance program for cobalt-60 teletherapy procedures. The NRC also retained a medical consultant to evaluate the circumstances and possible effects of the misadministration. The medical consultant concluded that the misadministration would not cause a significant long term biological effect on the patient and would not require modification of the patient's follow-up medical care.

87-17 Failure to report Diagnostic Medical Misadministrations

One of the AO examples notes that serious deficiency in management or procedural controls in major areas can be considered an abnormal occurrence.

Date and Place—On August 24, 1987, the NRC issued an Order to Show Cause Why the license Should Not Be Modified to the Edward Hines, Jr., Veterans Administration Hospital directing that a hospital staff member be removed from NRC-licensed activities, and that the hospital take certain steps to improve its control over its nuclear medicine program. The hospital is located in Hines, Illinois, near Chicago.

Nature and Probable Consequences—An NRC investigation between December 18, 1986, and June 30, 1987, determined that the Assistant Chief Physician of the Hospital's Nuclear Medicine Service failed to ensure that two diagnostic misadministrations of radioactive pharmaceuticals were reported to the NRC, as required. The investigation also determined that the physician made a false statement to a Veterans Administration Investigatory Board and to NRC investigators, destroyed evidence, and attempted to impeed the NRC investigation by influencing the testimony of a witness.

The investigation was made after an August 14, 1986 anonymous allegation was made to the NRC that three misadministrations had occurred at the facility during the week of August 4–8, 1986, and which had not been reported to the NRC.

The investigation showed that while all three misadministrations had taken place, as alleged, one of them was not required to be reported to the NRC since it involved a radioactive material not subject to NRC jurisdiction. The two which were not reported to the NRC, as required, were:

1. On August 4, 1986, a patient who was scheduled for a bone scan was injected with a different radioactive pharmaceutical, which is used for a brain scan.

2. On August 6, 1986, a patient scheduled for a gallium-67 scan, received a different NRC-licensed radiopharmaceutical that was scheduled for another patient.

Because of the small quantities of the radioactive pharmaceuticals involved, no adverse medical reactions would be expected in the patients, although they did receive some unnecessary radiation exposure.

Cause or Causes—The misadministrations were attributed to a lack of communication among the staff members of the Nuclear Medicine Service and the medical staff of the hospital.

The NRC investigation and previous inspections at the hospital determined that the licensee's management and staff had failed to adequately control its program for administration of radiopharmaceuticals to patients. These failures included not properly controlling dose administration records, inadequate training, and not verifying procedure orders.

Actions Taken to Prevent Recurrence

Licensee—The licensee has implemented the terms of the NRC Order and has selected, with NRC concurrence, the outside auditor for its nuclear medicine program. The Assistant Chief Physician has been reassigned to duties that do not involve the use or supervision of the use of NRC-licensed materials.

The Assistant Chief Physician has requested a hearing on the order as it affects him. The proceeding is pending.

NRC—The NRC Order, which was effective immediately, removed the authority of the Assistant Chief Physician in the Nuclear Medicine Service to use or supervise the use of NRC-licensed radioactive materials. In addition, the hosptial was directed to undertake further training for its Nuclear Medicine Service staff; to assure that all prescriptions for nuclear medicine procedures are in writing, reviewed by a nuclear medicine physician, and verified by the technologist; and to maintain a record of dosage measurement and administration. In addition, the hospital was directed to retain an independent organization to perform quarterly audits of the nuclear medicine department.

87-18 Suspension of a Well Logging Company's License

One of the AO examples notes that serious deficiency in management or procedural controls in major areas can be considered an abnormal occurrence.

Date and Place—On September 8, 1987, the NRC issued an immediately

effective order to Log-Tec of Cleveland, Oklahoma, that suspended the NRC license, ordered all byproduct material be placed in locked storage, and ordered the licensee to show cause why the license should not be revoked.

Nature and Probable Consequences—The license, which had been issued on June 14, 1984, authorized the use and possession of sealed radioactive sources to perform well logging. During a routine NRC inspection at Log-Tec facilities on August 19, 1987, eleven apparent violations of NRC requirements were identified. These apparent violations included failure to (a) store radioactive material at an authorized location, (b) survey storage facilities, (c) provide personnel monitoring, (d) maintain utilization records, (e) properly label radioactive shipping packages, (f) perform leak tests on sealed sources, (g) calibrate survey instruments (h) perform job site contamination surveys, (i) perform radiation surveys of vehicles transporting radioactive material, (j) use authorized method of storing radioactive material, and (k) maintain complete personnel monitoring records. When these violations were discussed with the company's sole proprietor, the NRC inspector was told that the sources had not been used since about June 1986.

However, on August 21, 1987, the President of Inland Oil Corporation (IOC) provided a sworn statement that the licensee had conducted well logging operations for IOC on July 9, 1987. According to the President, he and another person witnessed a Log-Tec representative conducting the logging process. IOC also provided NRC with written documentation (i.e., neutron log) received from the licensee that verified the results of the logging process.

On August 21, 1987, an NRC investigator and an NRC inspector interviewed Log-Tec's sole proprietor about his use of radioactive sources. Again, he reiterated that he had done no logging using radioactive sources since June 1986. However, when confronted with the copy of the neutron log received from IOC, the sole proprietor admitted that he had performed this work and had used a radioactive source to do so. Also, he stated that he had no records of his work at IOC. He further stated that he told the NRC inspector that he had not used radioactive sources because he knew his records were not up to date and he was afraid to admit this. He stated that he had none of the records required by NRC and never thought about keeping such records. He stated that his survey equipment was out of calibration because he did not have the money for such maintenance. He also admitted that he had not used film badges in a long time because he could not afford such associated expenses. Also, he admitted that he, doing business as Log-Tec, had conducted licensed well logging activities for other companies (i.e., Continental Oil; JGW Exploration, Inc.; and Covenant Oil) since June 1986 besides that done for IOC. NRC contacted and subsequently obtained from the Covenant Oil Company gamma ray logs that documented Log-Tec's use of radioactive sources for logging operations on September 9, 1986, December 10, 1986, and June 30, 1987.

The action of the sole proprietor of Log-Tec in deceiving the NRC inspector demonstrated that he was not trustworthy and not committed to complying with Commission requirements. Therefore, the NRC did not have the requisite reasonable assurance that the sole proprietor, doing business as Log-Tec, would comply with Commission requirements in the future. Consequently, the license was suspended.

Cause or Cause—The root cause can be attributed to a serious breakdown in the licensee's management controls.

Actions Taken to Prevent Recurrence

Licensee—The licensee has requested that the license be terminated. The licensee has transferred all sealed sources to an authorized recipient.

NRC—The NRC is terminating the license.

87-19 Suspension of an Industrial Radiography Company's License

One of the AO examples notes that a major deficiency in management or procedural controls in major areas can be considered an abnormal occurrence.

Date and Place—On September 21, 1987, the NRC issued an Order Suspending License (effective immediately) to Finlay Testing Laboratories, Inc., Aiea, Hawaii. The Order required the licensee to suspend all activities authorized by the license and to place all byproduct material in the licensee's possession in locked storage.

Nature and Probable Consequences—During inspections and investigations conducted in September 1987 in the state of Hawaii, it was determined that licensee employees had caused the shipment of radiographic exposure devices containing radioactive sources on passenger-carrying aircraft by concealing the nature of the material being offered for transport. NRC and Department of Transportation (DOT) regulations specifically prohibit industrial radiographic sources from being transported aboard passenger-carrying aircraft. It was further noted that licensee personnel failed to make surveys to assure the sources were in their shielded positions, and failed to prepare and use required shipping papers and labels for these shipments.

It was also ascertained by NRC inspectors and investigators that licensee representatives (including the Radiation Safety Officer) had failed to maintain required records of licensed activities.

Cause or Causes—The causes contributing to the violations appear to be a disregard for licensee operating procedures and the NRC license conditions and regulations. However, the case remains under investigation by the NRC Office of Investigations, and a complete understanding of all contributing causes awaits their report.

Actions Taken to Prevent Recurrence

Licensee—The licensee has complied with the Order and has forwarded a written request for an enforcement hearing.

NRC—The NRC Order continues in effect and a decision by the NRC on whether to allow the licensee to resume licensed activities has not been made. The NRC staff is reviewing the licensee's response to the Order at this time.

Dated in Washington, DC., this 4th day of April 1988.

Samuel J. Chilk,

Secretary of the Commission.

[FR Doc. 88-7674 Filed 4-6-88; 8:45 am]

BILLING CODE 7590-01-M

Abnormal Occurrences for Fourth Quarter CY 1987; Dessemination of Information

Section 208 of the Energy Reorganization Act of 1974, as amended requires the NRC to disseminate information on abnormal occurrences (i.e., unscheduled incidents or events which the Commission determines are significant from the standpoint of public health and safety). The following incident at an NRC licensee was determined to be an abnormal occurrence (AO) using the criteria published in the **Federal Register** on February 24, 1977 (42 FR 10950). This abnormal occurrence is described below, together with the remedial actions taken. This event is also being included in NUREG-0090, Vol. 10, No. 4 ("Report to Congress on Abnormal Occurrences: October-December 1987"). This report will be available in the NRC's Public Document Room, 1717 H

Street, NW, Washington, DC about three weeks after the publication date of this **Federal Register** Notice.

Other NRC Licensees

(Industrial Radiographers, Medical Institutions, Industrial Users, etc.)

87-21 Suspension of License of an Oil and Gas Well Tracer Company

On of the general AO criteria notes that major deficiencies in management controls for licensed facilities or material can be considered an abnormal occurrence.

Date and Place—On October 30, 1987, the NRC issued an Order Suspending License (Effective Immediately) and Order to Show Cause why the license should not be revoked to Tracer Profiles, Inc., of Oklahoma City, Oklahoma.

Nature and Probable Consequences—During an NRC inspection at the company of March 5–6, 1987, several violations on NRC requirements were identified.

Prior to and following an enforcement conference held on March 26, 1987 with the Vice President of the company, the licensee agreed to several specific corrective actions which were documented in Confirmatory Action Letters (CALs) dated March 13 and April 22, 1987. Among other actions, these included obtaining the services of a qualified consultant to audit operations, develop management controls to ensure compliance with license requirements, and prepare a report of findings which should be forwarded to the NRC.

On June 8, 1987, a Notice of Violation (NOV) was issued in which the violations were categorized in the aggregate as a Severity Level III (on a scale in which Severity Levels I and V represent the most and least severe, respectively) without the usual proposed imposition of a civil penalty in consideration of the licensee's past good enforcement history and agreement to implement the corrective actions documented in the CALs.

The licensee failed to respond to the CALs and the NOV. Subsequent attempts to contact licensee management were unsuccessful until and advised that he was unaware of the Vice President's whereabouts and the company's commitments to the NRC and the subsequent NOV. The President consequently committed to additional corrective actions, including securing licensed materials in locked storage until NRC approved resumption of licensed activities. (The licensee apparently possessed only short-lived radionuclides, which had decayed to insignificant levels.) The commitments were formalized in a CAL dated July 31, 1987.

However, the NRC did not received a response. In addition, it has been determined that the company vacated its offices and moved to a new and unknown location without notifying the NRC. Consequently, the NRC issued the previously mentioned Order on October 30, 1987.

Cause or Causes—The cause is the licensee's failue to fulfill its commitments to the NRC and its apparent inability and unwillingness to comply with NRC regulatory requirements.

Actions Taken to Prevent Recurrence

Licensee—None

NRC—The NRC is considering action to revoke the license.

Dated in Washington, DC, this 4th day of April 1988.

For the Nuclear Regulatory Commission.

Samuel J. Chilk,

Secretary of the Commission.

[FR Doc. 88-7675 Filed 4-6-88; 8:45 am]

BILLING CODE 7590-01-M

[Docket No. 50-324]

Carolina Power & Light Co.; Environmental Assessment and Finding of No Significant Impact

The U.S. Nuclear Regulatory Commission (the Commission) is considering issuance of an amendment to Facility Operating License No. DPR-62 issued to the Carolina Power & Light Company, (the licensee), for operation of Brunswick Steam Electric Plant, Unit 2, located in Brunswick County, North Carolina.

Environmental Assessment

Identification of Proposed Action:

The proposed action would permit the licensee to implement changes to the Brunswick facility and to Technical Specifications (TS), as described in their letter of September 29, 1987.

The Need for the Proposed Action:

A recirculation pump trip (RPT) system has been provided at Brunswick, Unit 2, to mitigate the consequences of postulated anticipated transients without scram (ATWS) events. The ATWS Rule (10 CFR 50.62) requires the implementation of the RPT, as well as an alternate rod injection (ARI) system, to reduce the likelihood of failure to shut down the reactor following anticipated transients. One of the conditions used to initiate RPT is high reactor vessel pressure. The current Unit 2 ATWS-RPT system uses digital pressure switches to sense reactor vessel pressure and to transmit the signal.

The licensee proposes to replace the digital pressure switches with analog pressure transmitter/master trip units during the current Unit 2 reload outage. The licensee has stated that the analog pressure transmitters and master trip units are more accurate and do not exhibit the calibration drift characteristics inherent in the existing pressure switches. The NRC has found the use of these units to be acceptable for other applications in the staff review of General Electric Licensing Topical Report NEDO-21617-A, "Analog Transmitter/Trip Unit System for Engineered Safeguard Sensor Trip Inputs," dated December 1978. The proposed TS change requires revisions to TS Tables 3.3.6.1-1, 3.3.6.1-2, and 4.3.6.1-1 to be consistent with the proposed trip unit instrument numbers. The proposed amendment would also change TS Section 3/4.3.6 to reflect the use of the new analog pressure transmitter/master trip units.

The proposed TS surveillance requirement frequencies are consistent with those required for other analog configurations. The analog trip units will be tested on the same schedule as the existing digital pressure switches, with the exception of a daily channel check, which is not performed on the existing equipment. A channel calibration will be performed on the analog pressure transmitters each refueling outage.

The licensee also proposes to modify the ATWS-RPT logic. The original BWR/4 design uses a 1 out of 2 logic, such that a single level or pressure instrument can initiate a single recirculation pump trip. Such a design leads to spurious recirculation pump trips upon the malfunction of a single instrument. In addition, the current logic does not initiate a control rod scram coincident with a recirculation pump trip. The proposed ATWS-RPT design uses a 2 out of 2 logic. Under this logic, the ATWS-RPT system consists of two trip systems. Each trip system is comprised of four channels: Two pressure transmitters and two level transmitters. The proposed design will trip both recirculation pumps and scram control rods upon signals from two pressure transmitters or two level transmitters. This RPT design meets the 10 CFR 50.62, paragraph (c)(5) requirement to automatically trip the reactor coolant recirculation pumps. The proposed design increases plant reliability by eliminating the possibility of spurious recirculation pump trips due to the malfunction of a single instrument. It also reduces the

possibility of a recirculation pump trip without a reactor scram. Technical Specification Table 3.3.6.1–1 has been revised to reflect the proposed system logic. This table is consistent with the guidance provided in the GE BWR/4 Standard TS.

The Action Statements for Specification 3.3.6.1 are also being revised to reflect the modified ATWS-RPT logic. Action "a" is unaffected by the ATWS-RPT logic modifications. Actions "b" through "e" have been included to detail the actions to be taken in the event of inoperable channels and/or trip systems of the ATWS-RPT system. These actions clarify what conditions constitute an inoperable trip system. The proposed actions are consistent with the guidance provided in the GE BWR/4 Standared TS.

Environmental Impacts of the Proposed Action:

The proposed improvements in system trip logic will result in fewer challenges to plant safety by decreasing the probability of spurious recirculation pump trips. The addition of an alternate scram signal is expected to reduce the likelihood of failure to scram, thereby decreasing the probability of occurrence of an ATWS event. The proposed changes do not affect other systems required to mitigate the consequences of postulated accidents, nor is there any effect on systems that control radiological plant effluents. Thus, no increase in post-accident or normal radiological effluents is expected. Because the proposed new equipment will permit the monthly channel functional tests to be conducted in the control room rather than at the instrument racks, there will be a decrease in occupational exposure to radiation for these surveillances. This decrease will be offset to some extent by the increased exposure during the 18-month channel calibration which will involve a greater number of instruments. On balance, the proposed change is not expected to involve a net increase in occupational exposure to radiation.

With regard to potential non-radiological impacts, the proposed changes involve systems located within the restricted area, as defined in 10 CFR Part 20. No non-radiological effluents are affected, and no other environmental impact would occur. Therefore, the Commission concludes that there are no significant non-radiological environmental impacts associated with the proposed changes.

Alternatives to the Proposed Action:

Since the Commission has concluded that there is no measurable environmental impact associated with the proposed changes to the TS, any alternative to the amendments will either have no environmental impact or greater environmental impact. The principal alternative would be to deny the requested amendment. This would not reduce environmental impacts of plant operation.

Alternative Use of Resources:

This action does not involve the use of resources not previously considered in the Final Environmental Statement for Brunswick Steam Electic Plan, Unit 2, dated January 1974.

Agencies and Persons Consulted:

The Commission's staff reviewed the licensee's request and did not consult other agencies or persons.

Finding of No Significant Impact

The Commission has determined not to prepare an environmental impact statement for the proposed license amendments.

Based on the foregoing environmental assessment, the Commission concludes that the proposed action will not have significant effect on the quality of the human environment.

For further information with respect to this action, see the application for the amendment dated September 29, 1987, which is available for public inspection at the Commission's Public Document Room, 1717 H Street, NW., Washington, DC 20555 and at the University of North Carolina at Wilmington, William Madison Randall Library, 601 S. College Road, Wilmington, North Carolina 28403–3297.

Dated at Rockville, Maryland this 1st day of April 1988.

For the Nuclear Regulatory Commission

Bart C. Buckley,

Acting Director, Project Directorate II–1, Division of Reactor Projects—I/II.

[FR Doc. 88–7644 Filed 4–6–88; 8:45 am]

BILLING CODE 7590–01–M

[Docket No. 50–397]

Washington Public Power Supply System; Environmental Assessment and Finding of No Significant Impact

The U.S. Nuclear Regulatory Commission (the Commission) is considering issuance of an amendment to Facility Operating License No. NPF–21 issued to Washington Nuclear Project No. 2 (WNP–2), located in Benton County, Washington.

Environmental Assessment

Identification of Proposed Action:

The proposed amendment would revise the provisions in paragraph 4.7.4.e of the Technical Specifications (TS) relating to the snubber functional testing sample plans.

The proposed action is in accordance with the licensee's application for amendment dated December 1, 1987, as supplemented by a letter dated March 18, 1988.

The Need for the Proposed Action:

The proposed change to the TS will reduce the amount of snubber testing required and thus reduce occupational radiation exposure and safety concerns associated with unnecessary functional testing.

Environmental Impacts of the Proposed Action:

The Commission has completed its evaluation of the proposed revisions to the Technical Specifications. The proposed revisions affect the amount of additional sampling to be performed by the licensee for snubbers that fail functional testing. The net effect is a reduction in the number of additional samples which are expected to be taken. The revisions have been found to be acceptable because they will eliminate unnecessary testing of snubbers, resulting in reduced man-rem exposure, without undermining the effectiveness of the overall surveillance program. The proposed changes will also clarify certain functional testing and failure analysis requirements as presently stated in the Technical Specifications. Since the effectiveness of the snubber surveillance program is not affected significantly, the proposed changes do not increase the probability or consequences of an accident. No changes are proposed in the types of any effluents that may be released offsite, and there is no significant increase in the allowable individual or cumulative occupational radiation exposure. In fact, the net reduction in sampling should reduce occupational exposure. Accordingly, the Commission concludes that this proposed action would result in no significant radiological environmental impact.

With regard to potential non-radiological impacts, the proposed amendment to the TS involves surveillance procedures applied to systems located within the restricted area as defined in 10 CFR Part 20. It does not affect non-radiological plant effluents and has no other environmental impact. Therefore, the

Commission concludes that there is no significant non-radiological environmental impact associated with the proposed amendment.

The Notice of Consideration of Issuance of Amendment and Opportunity for Hearing in connection with this action was published in the **Federal Register** on March 7, 1988 (53 FR 7269). No request for hearing or petition for leave to intervene was filed following this notice.

Alternative to the Proposed Action:

Since the Commission concluded that there is no significant environmental effect that would result from the proposed action, alternatives with equal or greater environmental impacts need not be evaluated.

The principal alternative would be to deny the requested amendment. This would not reduce environmental impacts of plant operation and in fact would result in continuing snubber testing and associated occupational radiation exposure and safety concerns.

Alternative Use of Resources:

This action does not involve the use of any resources not previously considered in the Final Environmental Statement Related to the Operation of WPPSS Nuclear Project No. 2, dated December, 1981.

Agencies and Person Consulted:

The NRC staff reviewed the licensee's request and did not consult other agencies or persons.

Finding of No Significant Impact

The Commission has determined not to prepare an environmental impact statement for the proposed license amendment.

Based upon the foregoing environmental assessment, we conclude that the proposed action will not have a significant effect on the quality of the human environment.

For further details with respect to this action, see the application for amendment dated December 1, 1987 and a supplement dated March 18, 1988 which are available for public inspection at the Commission's Public Document Room, 1717 H Street, NW., Washington, DC and at the Richland City Library, Swift and Northgate Streets, Richland, Washington 99352.

Dated at Rockville, Maryland, this 1st day of April, 1988.

For the Nuclear Regulatory Commission.

George W. Knighton,

Director, Project Directorate V, Division of Reactor Projects—III, IV, V and Special Projects, Office of Nuclear Reactor Regulation.

[FR Doc. 88-7645 Filed 4-6-88; 8:45 am]

BILLING CODE 7590-01-M

[Docket No. 50-336]

Northeast Nuclear Energy Co., et al.; Issuance of Amendment to Facility Operating License

The U.S. Nuclear Regulatory Commission (the Commission) has issued Amendment No. 128 to Facility Operating License No. DRP-65, to Northeast Nuclear Energy Company, The Connecticut Light and Power Company, and Western Massachusetts Electric Company, which revised the Technical Specifications for operation of the Millstone Nuclear Power Station, Unit 2, located in the Town of Waterford, Connecticut. The amendment was effective as of the date of its issuance.

The amendment changes Technical Specification 3.9.20, "Spent Fuel Pool", which deletes a footnote which had limited the storage of consolidated spent fuel to five consolidated spent fuel storage canisters.

The application for the amendment complies with the standards and requirements of the Atomic Energy Act of 1954, as amended (the Act), and the Commission's rules and regulations. The Commission has made appropriate findings as required by the Act and the Commission's rules and regulations in 10 CFR Chapter 1, which are set forth in the license amendment.

Notice of Consideration of Issuance of Amendment and Opportunity for Prior Hearing in connection with this action was published in the **Federal Register** on January 4, 1988 (53 FR 87). No request for a hearing or petition for leave to intervene was filed following this notice.

The Commission has prepared an Environmental Assessment and Finding of No Significant Impact related to the action and has concluded that an environmental impact statement is not warranted because there will be no environmental impact attributed to the action beyond that which has been predicted and described in the Commission's Final Environmental Statement for the facility dated June 1973.

For further details with respect to the action, see (1) the application for amendment dated May 21, 1986, as supplemented by letter dated August 11, 1987, (2) Amendment No. 128 to Facility Operating License No. DPR-65, and (3) the Environmental Assessment and Finding of No Significant Impact (53 FR 7065). All of these items are available for public inspection at the Commission's Public Document Room, 1717 H Street, NW., Washington, DC, and at the Waterford Public Library, 49 Rope Ferry Road, Waterford, Connecticut. A copy of items (2) and (3) may be obtained upon request addressed to the U.S. Nuclear Regulatory Commission, Washington, DC 20555, Attention: Director, Division of Reactor Projects I/II.

Dated at Rockville, Maryland this 31st day of March, 1988.

For the Nuclear Regulatory Commission.

David H. Jaffe,

Project Manager, Project Directorate II-2, Division of Reactor Projects-I/II, Office of Nuclear Reactor Regulation.

[FR Doc. 88-7646 Filed 4-6-88; 8:45 am]

BILLING CODE 7590-01-M

SECURITIES AND EXCHANGE COMMISSION

[Release No. 34-25544; File No. SR-NASD-88-5]

Self-Regulatory Organizations; National Association of Securities Dealers, Inc.; Order Approving Proposed Rule Change

The National Association of Securities Dealers, Inc. ("NASD") submitted on February 8, 1988, copies of a proposed rule change pursuant to section 19(b)(1) of the Securities Exchange Act of 1934 ("Act") and Rule 19b-4 thereunder, to raise the limit on the size of claims eligible for simplified arbitration procedures from $5,000 to $10,000, to establish a filing fee of $200 where the case and controversy is between $5,000 and $10,000, to eliminate the requirement for five member panels in claims exceeding $500,000 and to increase administrative fees retained for cases withdrawn or settled prior to their first hearing session.

Notice of the proposed rule change together with the terms of substance of the proposed rule change was given by the issuance of a Commission release (Securities Exchange Act Release No. 25382, February 23, 1988) and by publication in the **Federal Register** (53 FR 6046). All written statements filed with the Commission and all written communications between the Commission and any person relating to the proposed rule change were considered and (with the exception of those statements or communications

that may be withheld from the public in accordance with the provisions of 5 U.S.C. 552) were made available to the public at the Commission's public reference room. The Commission did not receive any written comments on the proposed rule change.

The Commission finds that the proposed rule change is consistent with the requirements of the Act and the rules and regulations thereunder applicable to the NASD, and in particular the requirements of section 15A and the rules and regulation thereunder.

It is Therefore Ordered, pursuant to section 19(b)(2) of the Act, that the above-mentioned rule change be, and hereby is, approved.

For the Commission, by the Division of Market Regulation, pursuant to delegated authority 17 CFR 200.30-3(a)(12).

Dated: April 1, 1988.

Jonathan G. Katz,

Secretary.

[FR Doc. 88-7687 Filed 4-6-88; 8:45 am]

BILLING CODE 8010-01-M

[Release No. 34-25541; File No. SR-NYSE-88-09]

Self-Regulatory Organizations; Filing and Order Granting Accelerated Approval of Proposed Rule Change by New York Stock Exchange, Inc. Relating to the Extension of the Effectiveness of NYSE Rule 103A From March 31, 1988 Until Such Time as the Commission May Act To Approve New Rule 103A

Pursuant to section 19(b)(1) of the Securities Exchange Act of 1934, ("Act"), 15 U.S.C. 78s(b)(1), notice is hereby given that on March 28, 1988, the New York Stock Exchange, Inc. ("NYSE" or "Exchange") filed with the Securities and Exchange Commission ("Commission") the proposed rule change as described in Items I, II, and III below, which Items have been prepared by the self-regulatory organization. The Commission is publishing this notice to solicit comments on the proposed rule change from interested persons.

I. Self-Regulatory Organization's Statement of the Terms of Substance of the Proposed Rule Change

The proposed rule change would extend the effectiveness of NYSE Rule 103A until such time as the Commission may act to approve new Rule 103A as submitted by the Exchange in SR-NYSE-87-25.[1]

The intent of Rule 103A is to encourage a high level of market quality and performance in Exchange listed securities. Rule 103A authorizes the Market Performance Committee of the NYSE to withdraw NYSE approval of a member's registration as specialist in one or more stock(s) if the specialist has consistently received evaluations by Floor brokers on the quarterly Specialist Performance Evaluation Questionnaire which are below a level of acceptable performance as specified in the Rule.

II. Self-Regulatory Organization's Statement of the Purpose of, and Statutory Basis for, the Proposed Rule Change

In its filing with the Commission, the self-regulatory organization included statements concerning the purpose of and basis for the proposed rule change and discussed any comments it received on the proposed rule change. The text of these statements may be examined at the places specified in Item IV below. The self-regulatory organization has prepared summaries, set forth in sections (A), (B), and (C) below, of the most significant aspects of such statements.

A. Self-Regulatory Organization's Statement of the Purpose of, and Statutory Basis for, the Proposed Rule Change

(1) Purpose

The purpose of the proposed rule change is to extend the effectiveness of NYSE Rule 103A until such time as the Commission may act to approve new Rule 103A as submitted by the Exchange in SR-NYSE-87-25 and as described below.

As described in more detail in File No. SR-NYSE-81-11, Rule 103A authorizes the Market Performance Committee of the NYSE to withdraw NYSE approval of a member's registration as specialist in one or more stocks if the specialist has consistently received evaluations by Floor brokers on the quarterly Specialist Performance Evaluation Questionnaire (the "SPEQ") which are below a level of acceptable performance as specified in the Rule.

As described in File No. SR-NYSE-85-14, and File No. SR-NYSE-86-19, the Exchange conducted a pilot program to test revisions to the current Specialist Performance Evaluation Questionnaire and its associated processes.

The Market Performance Committee's Subcommittee on Performance Measures and Procedures (the "Subcommittee") has concluded its analysis of data produced by the revised SPEQ, and has developed additional measures and standards of specialist performance, such as DOT turnaround performance, which were incorporated into revised Rule 103A. The Exchange filed for approval to implement a pilot program to test the revisions to Rule 103A developed by the Subcommittee in SR-NYSE-87-25 which is pending before the Commission.

The Exchange is requesting this extension of current Rule 103A so that the Rule may remain in effect while the Commission considers the proposed revisions to the Rule previously filed. The Exchange continues to view the current Rule as providing a basis for ongoing performance improvement initiatives, such as counseling of specialist units by the Markets Performance Committee, which has proven to be effective in improving both individual and overall specialist performance on the Exchange. The Exchange intends that the Market Performance Committee will continue its counseling procedures during the period of the Commission's consideration of the Exchange's filing requesting approval to implement a pilot program to test the proposed revisions to Rule 103A. Upon Commission approval to implement a pilot program to test revisions to the Rule, the Exchange intends to notify its members that revised Rule 103A is effective and supersedes current Rule 103A.

(2) Basis Under the Act for Proposed Rule Change

The statutory basis for the proposed rule change in section 6(b)(5) of the Act which, among other things, requires Exchange rules to be designed to promote just and equitable principles of trade, to foster cooperation and coordination with persons engaged in regulating, clearing, settling and processing information with respect to and facilitating transactions in securities, to remove impediments to and perfect the mechanism of a free and open market and a national market system, and in general to protect investors and the public interest.

B. Self-Regulatory Organization's Statement on Burden on Competition

The proposed rule change will not impose any burden on competition that is not necessary or appropriate in furtherance of the purposes of the Act.

---

[1] *See,* Securities Exchange Act Rel. No. 24919 (September 15, 1987) 52 FR 35821.

BEST COPY AVAILABLE

C. Self-Regulatory Organization's Statement on Comments on the Proposed Rule Change Received From Members, Participants or Others

The Exchange has neither solicited nor received written comments on the proposed rule change.

III. Date of Effectiveness of the Proposed Rule Change and Timing for Commission Action

The Exchange requests that the proposed rule change be given accelerated effectiveness pursuant to section 19(b)(2) of the Act.

Since Rule 103A has proven to be an effective means of improving specialist performance, thereby adding to the overall quality of the NYSE market, the Exchange requests that the Commission find good cause to approve the proposed rule change on an accelerated basis, and in any event prior to March 31, 1988, the date on which Rule 103A is scheduled to expire.

IV. Solicitation of Comments

Interested persons are invited to submit written data, views and arguments concerning the foregoing. Persons making written submissions should file six copies thereof with the Secretary, Securities and Exchange Commission, 450 Fifth Street, NW., Washington, DC 20549. Copies of the submission, all subsequent amendments, all written statements with respect to the proposed rule change that are filed with the Commission, and all written communications relating to the proposed rule change between the Commission and any person, other than those that may be withheld from the public in accordance with the provisions of 5 U.S.C. 552, will be available for inspection and copying in the Commission's Public Reference Section, 450 Fifth Street, NW., Washington, DC 20549. Copies of such filing will also be available for inspection and copying at the principal office of the NYSE.

All submissions should refer to the file number in the caption above and should be submitted by April 28, 1988.

V. Conclusion

The Commission finds that the proposed rule change is consistent with the requirements of the Act and the rules and regulations thereunder applicable to a national securities exchange, and in particular, the requirements of section 6 and the rules and regulations thereunder, in that it will permit the current Rule 103A pilot program to remain in effect while the Commission considers for approval the NYSE's proposal to commence a two-year pilot program to test revisions to Rule 103A.

The Commission finds good cause for approving the proposed rule change prior to the thirtieth day after date of publication of notice thereof in that it will enable Rule 103A to remain in effect on an uninterrupted basis.

It is Therefore Ordered, pursuant to section 19(b)(1) of the Act, that the proposed rule change be, and hereby is, approved.

For the Commission by the Division of Market Regulation, pursuant to delegated authority.

Dated: March 31, 1988.

Jonathan G. Katz,

Secretary.

[FR Doc. 88-7588 Filed 4-6-88; 8:45 am]

BILLING CODE 8010-01-M

SMALL BUSINESS ADMINISTRATION

Interest Rates; Quarterly Determination

The interest rate on section 7(a) Small Business Administration direct loans (as amended by Pub. L. 97-35) and the SBA share of immediate participation loans is nine and one-quarter (9¼) percent for the fiscal quarter beginning April 1, 1988.

On a quarterly basis, the Small Business Administration also publishes an interest rate called the optional "peg" rate (13 CFR 122.8-4(d)). This rate is a weighted average cost of money to the government for maturities similar to the average SBA loan. This rate may be used as a base rate for guaranteed fluctuating interest rate SBA loans. For the April-June quarter of 1988, this rate wil be eight and-one-half (8½) percent.

Edwin T. Holloway,

Associate Administrator for Finance and Investment.

[FR Doc. 88-7576 Filed 4-6-88; 8:45 am]

BILLING CODE 8025-01-M

OFFICE OF THE UNITED STATES TRADE REPRESENTATIVE

Trade Policy Staff Committee; Generalized System of Preferences (GSP); Deadline for Acceptance of Petitions Requesting Modification of List of Articles Eligible for Duty-Free Treatment Under the GSP and Requests to Review the GSP Status of Beneficiary Developing Countries

Notice is hereby given that, in order to be considered in the 1988 GSP annual review, all petitions to modify the list of articles eligible for duty-free treatment under the Generalized System of Preferences (GSP) and requests to review the GSP status of any beneficiary developing country must be received by the GSP Information Center no later than the close of business, Wednesday, June 1, 1988. The GSP provides for the duty-free importation of qualifying articles when imported from designated beneficiary developing countries. The GSP is authorized by Title V of the Trade Act of 1974, as amended, and has been implemented by Executive Order 11888 of November 24, 1975, and modified by subsequent Executive Orders and Presidential Proclamations.

1988 GSP Annual Review

Interested parties or foreign governments may submit petitions (1) to designate additional articles as eligible for GSP; (2) to withdraw, suspend or limit GPS duty-free treatment accorded either to eligible articles under the GSP or to individual beneficiary developing countries with respect to specific GSP eligible articles; and (3) to otherwise modify GSP coverage. Also, any person may file a request to have the GSP status of any eligible beneficiary developing country reviewed with respect to any of the designation criteria listed in subsections 502(b) or 502(c) of the Act (19 U.S. 2462 (b) and (c)).

Identification of Product Requests With Respect to the Harmonized System Tariff Nomenclature

The Harmonized System tariff nomenclature (HS) is a new international product nomenclature developed under the auspices of the Customs Cooperation Council (CCC) for the purpose of classifying goods in international trade. The HS may be implemented by the United States and internationally on January 1, 1989, and will replace the current Tariff Schedules of the United States (TSUS) nomenclature. Product eligibility under the coverage of the GSP program is currently defined in terms of the five-digit TSUS classifications. However, upon implementation of the HS, the coverage of the GSP program will be defined in terms of the HS. Therefore, all product-related petitions must identify the product(s) of interest in terms of both the current TSUS nomenclature and the proposed HS tariff nomenclature. (See 51 FR 44183 for information on the conversion of the GSP program to the HS).

Submission of Petitions and Requests

Petitions and requests to modify GSP treatment should be addressed to: GSP Subcommittee, Office of the U.S. Trade Representative, 600 17th Street, NW.,

Room 517, Washington, DC 20506. All such submissions must conform with regulations codified in 15 CFR Chapter XX, especially Part 2007. Information submitted will be subject to public inspection by appointment only with the staff of the GSP Information Center, except for information granted "business confidential" status pursuant to 15 CFR 2003.6 and 15 CFR 2006.10. Petitions and requests must be submitted in twenty copies in English. If the petition or request contains business confidential information, twenty copies of a nonconfidential version of the submission along with twelve copies of the confidential version must be submitted. In addition, the submission containing confidential information should be clearly marked "confidential" at the top and bottom of each and every page of the submission. The version that does not contain business confidential information (the public version) should also be clearly marked at the top and bottom of each page (either "public version" or "nonconfidential").

Prospective petitioners and requestors are strongly advised to review the GSP regulations published in the **Federal Register** on Tuesday, February 11, 1986 (51 FR 5035). Prospective petitioners and requestors are reminded that submissions that do not provide all information required by § 2007.1 will be accepted for review except upon a detailed showing in the submission that the petitioner or requestor made a good faith effort to obtain the information required. This requirement will be strictly enforced. Petitions with respect to competitive need waivers must meet the informational requirements for product addition requests in § 2007.1(c). A model petition format is available from the GSP Information Center and is included in the publication "A Guide to the U.S. Generalized System of Preferences." Prospective petitioners are requested to use this model petition format so as to ensure that all informational requirements are met. Furthermore, interested parties submitting petitions that request modifications with respect to specific articles should list on the first page of the petition the following information: (1) The requested action; (2) the classification of the article(s) of interest in the TSUS and the HS; and (3), if applicable, the beneficiary country(s) of interest. Questions about the preparation of petitions and requests should be directed to the staff of the GSP Information Center. The phone number of the center is (202) 395-6971.

Notice of petitions and requests accepted for review will be published in the **Federal Register** on or about Friday, July 15, 1988. The notice will also provide information concerning the opportunity for interested parties to comment on requests accepted for review through public hearings and written submissions. Any modifications to the GSP resulting from the 1988 GSP annual review will be announced on or about April 1, 1989 and will take effect on July 1, 1989.

Donald M. Phillips,

Chairman, Trade Policy Staff Committee.

[FR Doc. 88-7585 Filed 4-6-88; 8:45 am]

BILLING CODE 3190-01-M

Trade Policy Staff Committee; Generalized System of Preferences (GSP) Subcommittee; Notice of Results of Reviews of Petitions Requesting Changes in the List of Countries and Articles Eligible for Duty-Free Treatment Under the 1987 Annual Review of the GSP

This publication contains the dispositions of the petitions accepted for review in the 1987 annual review of the GSP program (52 FR 28896). These petitions requested changes in the list of articles and countries eligible for duty-free treatment under the U.S. Generalized System of Preferences (GSP). The GSP is provided for in the Trade Act of 1974, as amended (19 U.S.C. 2461–2465). The review was conducted pursuant to regulations codified as 15 CFR 2007. These changes will take effect on July 1, 1988. The President's decisions concerning the 1987 annual review have also been reflected in a proclamation and in a recent USTR press release (The press release is available by contacting the USTR Public Affairs Office at (202) 395-3230.). All communications with respect to this notice should be addressed to the Executive Director, Generalized System of Preferences, Room 517, 600 17th Street, NW., Washington, DC 20506.

Please note that the President has also approved a conversion of the changes resulting from petitions into the Harmonized System tariff nomenclature (HS). Parties may contact the GSP Information Center for a copy of the HS conversion concerning the petitions granted by the President.

Numerous petitions were also submitted requesting a review of the beneficiary status of six GSP beneficiary countries based on their practices in the area of internationally recognized worker rights. After reviewing those requests the President determined that Taiwan, the Republic of Korea, Indonesia, Thailand, and Turkey are taking steps to afford internationally recognized workers rights. Another beneficiary, the Central African Republic, will continue to be reviewed as part of the upcoming 1988 annual review.

With respect to a request from two petitioners to review the beneficiary status of Thailand based on that government's practices with respect to intellectual property rights, the President will continue to review this issue until December 15, 1988. Questions may be directed to any member of the GSP Information Center at (202) 395-6971.

Donald M. Phillips,

Chairman, Trade Policy Staff Committee.

Case No.	TSUS or TSUSA*	Article	Petitioner	Action taken
A. Petitions To Add Products to the List of Eligible Articles for the Generalized System of Preferences				
87-1	112.01	Anchovies	Government of Morocco	Petition granted.
87-2	131.27	Flaked oats	Government of Colombia	Do.
87-3	141.15	Pickled beans	Government of Morocco	Do.
87-4	141.83	Corn in airtight containers	Government of Thailand	Do.
87-5	161.08	Capers	Government of Morocco	Petition denied.
87-6	169.13	Rum (in less than 1 gal. containers)	Government of Philippines	Do.
87-7	169.1415	Rum (in greater than 1 gal. containers)	do	Do.
87-8	206.67	Wood shutters	Ohline Corp; Eastman Bell	Do.
87-9	309.20	Strips of artificial straw or yarn (valued less than $1 per lb.).	Government of Mexico; Cordelrias Filamentos y Costales, S.A. de C.V. (COFISCA), Mexico.	Petition granted.
87-10	309.21	Strips of artificial straw or yarn (valued more than $1 per lb.).	do	Do.
87-11	370.8405	Hemmed silk handkerchiefs (more than 70% silk).	Government of Thailand	Do.
87-12	370.8450	Unhemmed silk handkerchiefs (more than 70% silk).	do	Do.
87-13	372.5005	Shawls (more than 70% silk)	do	Do.
87-14	372.5505	Scarves and shawls more than 70% silk)	do	Do.
87-15	389.40 (pt.)	Plastic pot scourers	Government of Mexico; Filtros y Mallas Industriss, S.A.	Do.
87-17	455.04	Pectin	Grinsted de Mexico	Petition denied.
87-18	533.79	Earthenware household items, other	Corning Glassware	Do.
87-19	534.97 (pt.)	Kitchenware with certain temperature resistant characteristics.	do	Petition granted (breakout with 504D waiver).
87-20	606.22	Ferrochromium (more than 3% carbon)	Government of Zimbabwe	Petition denied.
87-21	606.42	Ferrosilicon chromium	do	Do.
87-22	737.24 (pt.)	Dolls over 13" in height, capable of certain electromechanical movement, etc.	Playmates Toys, Inc	Petition granted (breakout with 504D waiver).
87-23	755.15	Fireworks	Government of Colombia	Petition granted
87-24	760.0520	Ball-point pens and pencils	Government of Thailand	Petition denied.

Case No.	TSUS or TSUSA*	Article	Petitioner	Action taken
B. Petitions To Remove Products From the List of Eligible Articles for the Generalized System of Preferences				
87-25	450.2015	Black pepper spice oleoresins	Kalsec, Inc	Petition denied.
87-28	610.74	Malleable cast iron pipe fittings	American Pipe Fittings Association	Petition ganted.
87-29	740.41	Jewelry, other (valued more than $.20 per dozen).	Manufacturing Jewelers and Silversmiths of America.	Petition denied.
87-30	740.50	Rosaries and chaplets	do	Do.
87-31	740.60	Crucifixes and medals, other	do	Do.
87-32	740.75	Other metal chain (valued less than $.30 per yard).	do	Do.
87-33	740.80	Other metal chain (valued more than $.30 per yard).	do	Do.
87-34	745.6740	Other, clasps, handbag, and snap fasteners	do	Do.
C. Petitions To Remove Duty-Free Status From a Beneficiary Developing Country [1] for a Product on the List of Eligible Articles Under the Generalized System of Preferences				
87-35	408.72 (Korea)	ABS Resins	Borg-Warner Chemicals, Inc.; Dow Chemicals, USA.	Graduate Korea.
87-36	423.00 (pt.) (Brazil)	Other oxides, hydroxides and peroxides	Teledyne Industries	Breadkout Colombium oxide and graduate Brazil.
87-37	618.15 (Argentina, Brazil, Mexico, Taiwan, Venezuela).	Wrought aluminum rods	Southwire Co	Graduate Venezuela.
87-38	618.20 (Brazil, Argentina, Venezuela).	Aluminum Wire, not plated or coated with metal	do	Petition denied.
87-39	642.2010 (Korea)	Ropes, cables or cordage fitted with fittings	Domestic Steel Wire Rope and Specialty Steel Manufacturers.	Graduate Korea.
87-40	652.80 (Korea, Mexico)	Expanded metal of base metal	Expanded Metal Fair Trade Coalition	Petition denied.
87-41	682.4130 (Korea, Taiwan)	Polyphase motors between 1 and 20 HP	National Electrical Manufacturers Association	Graduate Taiwan
87-42	682.5010 (Korea, Taiwan)	Electric motors, 200 Horsepower, AC	do	Petition denied.
87-43	682.5030 (Korea, Taiwan)	Electric motors, between 200 and 500 horsepower, AC.	do	Do.
87-44	685.28 (Korea, Taiwan, Hong Kong).	Cordless handset telephones and parts	Motorola, Inc	Graduate Hong Kong, Taiwan, Korea.
87-45	688.20 (Brazil, Korea, Taiwan, Venezuela).	Stranded aluminum cable	Southwire Co	Petition denied.
87-46	735.09 (Korea, Taiwan)	Inflatable balls	Hedstrom Corp	Do.
87-47	735.10 (Korea, Taiwan)	Noninflatable hollow rubber balls	do	Do.
87-48	735.11 (Korea, Taiwan)	Sponge rubber balls	do	Do.
87-49	735.12 (Korea, Taiwan)	Balls, other	do	Do.
87-50	745.32 (Taiwan)	Buttons, of acrylic or polyester resins	Cresthill Industries, Inc.	Graduate Taiwan.
87-51	772.06 (Hong Kong, Korea, Mexico).	Plastic dinnerware	Ullman Co	Petition withdrawn.
87-52	772.09 (Hong Kong, Korea, Mexico).	Plastic trays	do	Do.

Case No.	TSUS or TSUSA*	Article	Petitioner	Action taken
87-38	616.20 (Brazil, Argentina, Venezuela).	Aluminum Wire, not plated or coated with metal	do	Petition denied.
87-39	642.2010 (Korea)	Ropes, cables or cordage fitted with fittings	Domestic Steel Wire Rope and Specialty Steel Manufacturers.	Graduate Korea.
87-40	652.80 (Korea, Mexico)	Expanded metal of base metal	Expanded Metal Fair Trade Coalition	Petition denied.
87-41	682.4130 (Korea, Taiwan)	Polyphase motors between 1 and 20 HP	National Electrical Manufacturers Association	Graduate Taiwan
87-42	682.5010 (Korea, Taiwan)	Electric motors, 200 Horsepower, AC	do	Petition denied.
87-43	682.5030 (Korea, Taiwan)	Electric motors, between 200 and 500 horsepower, AC.	do	Do.
87-44	685.28 (Korea, Taiwan, Hong Kong).	Cordless handset telephones and parts	Motorola, Inc.	Graduate Hong Kong, Taiwan, Korea.
87-45	688.20 (Brazil, Korea, Taiwan, Venezuela).	Stranded aluminum cable	Southwire Co	Petition denied.
87-46	735.09 (Korea, Taiwan)	Inflatable balls	Hedstrom Corp	Do.
87-47	735.10 (Korea, Taiwan)	Noninflatable hollow rubber balls	do	Do.
87-48	735.11 (Korea, Taiwan)	Sponge rubber balls	do	Do.
87-49	735.12 (Korea, Taiwan)	Balls, other	do	Do.
87-50	745.32 (Taiwan)	Buttons, of acrylic or polyester resins	Cresthill Industries, Inc.	Graduate Taiwan.
87-51	772.06 (Hong Kong, Korea, Mexico).	Plastic dinnerware	Ullman Co	Petition withdrawn.
87-52	772.09 (Hong Kong, Korea, Mexico).	Plastic trays	do	Do.
D. Petitions To Waive Competitive Need Limits for a Country [2] for a Product on the List of Eligible Articles for the Generalized System of Preferences				
87-53	547.3720 (Taiwan)	Glass envelopes for cathode-ray tubes	Clinton Electronics Corp	Petition denied.
87-54	657.40 (pt.) (Taiwan)	Luggage frames	Skyway Luggage	Do.
87-55	685.25 (Korea)	Cordless handset telephones	Maxon Electronics, Inc.	Do.
87-56	692.3262 (Mexico)	Brake drums and rotors	Cifunsa, S.A.	Do.
87-57	692.3264 (Mexico)	Brake parts, other	do	Do.
87-58	735.09 (Mexico)	Inflatable balls	Kenner Parker Toys, Inc.; Mattel, Inc.	Petition withdrawn.
87-59	735.10 (Mexico)	Noninflatable hollow balls	do	Do.
87-60	735.11 (Mexico)	Sponge rubber balls	do	Do.
87-61	735.12 (Mexico)	Balls, other	do	Do.
87-62	737.07 (Mexico)	Other models and construction kits or sets	do	Do.
87-63	737.14 (Mexico)	Other construction kits	do	Do.
87-64	737.16 (Mexico)	Other models and construction kits	do	Do.
87-65	737.80 (Mexico)	Toys having a spring mechanism	do	Do.
87-66	737.93 (Mexico)	Toys having an electric motor	do	Do.
87-67	737.96 (Mexico)	Toys wholly or almost wholly of rubber or plastic, noninflatable.	do	Do.
87-68	737.98 (Mexico)	Other toys	do	Do.
87-69	740.14 (Thailand)	Jewelry, other	Government of Thailand	Decision deferred until December 1988.

*Tariff Schedules of the United States annotated (19 U.S.C. 1202).
[1] Countries subject to petition are identified under the TSUS number.
[2] Countries subject to petition are identified under TSUS number.

[FR Doc. 88-7584 Filed 4-6-88; 8:45 am]
BILLING CODE 3190-01-M

DEPARTMENT OF TRANSPORTATION

Coast Guard

[CGD-88-020]

Proposed Construction of Bridge; New Rochelle, NY

AGENCY: Coast Guard, DOT.

ACTION: Notice of Public Hearing.

SUMMARY: Notice is hereby given that the Commandant has authorized a public hearing to be held by the Commander, First Coast Guard District at New Rochelle, New York. The purpose of the hearing is to consider an application by Xanadu Properties Associates for Coast Guard approval of the location and plans of a proposed two-lane private fixed vehicular bridge project across New Rochelle Harbor and a portion of Long Island Sound, mile 0.9, at New Rochelle, New York. This is the second series of Coast Guard public hearings on this proposed action. Previous hearings held February 18 and March 18 and 19, 1987, revealed the need for additional information to fully evaluate the proposed action. The forthcoming hearing will hear comments on the additional information developed since the 1987 hearings.

All interested persons may present data, views and comments, orally or in writing, concerning the impact of the proposed bridge on navigation and the human environment.

DATES: May 10, 1988 from 4:00 p.m. to 12:00 a.m., and May 11, 1988 from 4:00 p.m. until all speakers in attendance wishing to comment have provided comments. Written comments must be submitted by May 31, 1988.

ADDRESSES: The hearing will be held at the auditorium of the Albert Leonard Junior High School, 25 Gerada Lane, New Rochelle, New York, 10804. Written comments and other communications should be sent to the Commander (obr), First Coast Guard District, Bldg. 135A, Governors Island, New York, New York 10004-5073. The public docket may be examined at this address.

FOR FURTHER INFORMATION CONTACT: Mr. Gary Kassof, Supervisory Bridge Management Specialist, First Coast Guard District, Bldg. 135A, Governors Island, New York, New York, 10004-5073, (212) 668-7994.

SUPPLEMENTARY INFORMATION: The proposed fixed bridge will be 3,465 feet in length extending from the Fort Slocum dock area on the mainland to a point 420 feet south of the most northerly point of Davids Island. The proposed bridge will cross two navigational channels; one in New Rochelle Harbor (Lower Harbor) between Neptune Island and Glen Island and the other in Long Island Sound between Glen Island and Davids Island. The Lower Harbor crossing will

be approximately 285 feet north of the existing Glen Island bascule drawbridge and will provide a minimum vertical clearance of 14 feet above Mean High Water and a horizontal clearance of 160 feet between fenders, measured normal to the axis of the channel. The Long Island Sound crossing will provide a minimum vertical clearance of 65 feet above Mean High Water and a horizontal clearance of 250 feet between fenders, measured normal to the axis of the proposed navigational channel.

The purpose of this project is to develop Davids Island, formerly a U.S. Army base called Fort Slocum. The City of New Rochelle, owner of Davids Island, seeks to develop Davids Island as a residential community consistent with New Rochelle's Urban Renewal Plan adopted January 1981. New Rochelle entered into a Land Disposition and Development Agreement on 12 March 1985 with Xanadu Properties Associates, a developer. The development plan proposed by Xanadu consists of creation of a 2,000 unit residential condominium community, construction of an 800 slip marina, breakwater, beach, private sewage treatment plant, and access bridge and approaches linking the New Rochelle mainland with Davids Island.

Because the development of Davids Island including marina, breakwater and treatment plant construction, and beach creation is dependent upon the bridge. the scope of the Coast Guard's review includes the Davids Island development as well as the bridge.

Since deactivation by the Army in 1966, Davids Island's infrastructure has deteriorated and vegetation has overgrown the island. The New Rochelle Urban Renewal Plan specifically includes the development of Davids Island and calls for the elimination of deteriorating and functionally obsolete structures and the creation of a housing community.

The hearing will be informal. A Coast Guard representative will preside at the hearing, make a brief opening statement and announce the procedures to be followed at the hearing. Each person who wishes to make an oral statement should notify the Commander (obr), First Coast Guard District, Governors Island, New York, New York 10004–5073, prior to the hearing date. Such notification should include the approximate time required to make the presentation. Comments previously submitted are a matter of record and need not be resubmitted at the hearing. Speakers are encouraged to provide written copies of their oral statements to the hearing officer at the time of the hearing.

A transcript of the hearing, will be available for public review in the offices of the First Coast Guard District approximately 30 days after the hearing date.

Interested persons who are unable to attend the hearing may also participate in the consideration of the project by submitting their comments at the hearing or by mail to the Commander (obr), First Coast Guard District, by May 31, 1988. Copies of all written communications will be available for examination by interested persons at the Office of the Commander (obr), First Coast Guard District, between 8:30 a.m. and 5:00 p.m., Monday through Friday, except holidays. Each written comment should identify the proposed project, clearly state the reason for any objections, comments or proposed changes to the plans, and include the name and address of the person or organization submitting the comment. All comments received, whether in writing or presented orally at the public hearing, will be fully considered before final agency action is taken on the proposed bridge permit application.

Sec. 502, 60 Stat. 847, as amended; 33 U.S.C. 525, 49 U.S.C. 1655(g)<c>; 49 CFR 1.46(c).

Date March 31, 1988.

A.B. Smith,

Captain, U. S. Coast Guard, Acting Chief, Office of Navigation.

[FR Doc. 88–7656 Filed 4–6–88; 8:45 am]

BILLING CODE 4910-14-M

[CGD 88–021]

Houston/Galveston Navigation Safety Advisory Committee; Inshore Waterway Management Subcommittee Meeting

Pursuant to section 10(a)(2) of the Federal Advisory Committee Act (Pub. L. 92–463; 5 U.S.C. App. I) notice is hereby given of a meeting of the Inshore Waterway Management Subcommittee of the Houston/Galveston Navigation Safety Advisory Committee. The meeting will be held on Thursday, May 12, 1988 at the Houston Yacht Club, 3620 Miramar Drive, LaPorte, Texas. The meeting is scheduled to begin at 9:00 a.m. and end at 10:30 a.m. The agenda for the meeting consists of the following items:

1. Call to Order
2. Discussion of previous recommendations made by the full Advisory Committee and the Inshore Waterway Management Subcommittee
3. Presentation of any additional new items for consideration to the Subcommittee
4. Adjournment

Attendance is open to the public. With advance notice, members of the public may present oral statements at the meeting. Prior to presentation of their oral statements, but no later than the day before the meeting, members of the public shall submit, in writing, to the Executive Secretary of the Houston/Galveston Navigation Safety Advisory Committee, the subject of their comments, a general outline signed by the presenter, and the estimated time required for presentation. Individuals making the presentation shall also provide their name, address, and, if applicable, the organization they are representing. Any member of the public may present a written statement to the Advisory Committee at any time.

Additional information may be obtained from Commander V. O. Eschenburg, USCG, Executive Secretary, Houston/Galveston Navigation Safety Advisory Committee, c/o Commander, Eighth Coast Guard District (m), Room 1341, Hale Boggs Federal Building, 500 Camp Street, New Orleans, LA 70130–3396, telephone number (504) 589–6901.

Dated: March 29, 1988.

Peter J. Rots,

Rear Admiral, U.S. Coast Guard, Commander, Eighth Coast Guard District.

[FR Doc. 88–7657 Filed 4–6–88; 8:45 am]

BILLING CODE 4910-14-M

[CGD1 88-014]

New York Harbor Traffic Management Advisory Committee; Meeting

AGENCY: Coast Guard, DOT.

ACTION: Notice of Meeting.

SUMMARY: Pursuant to section 10(a)(2) of the Federal Advisory Committee Act (Pub. L. 92-463; 5 U.S.C. App. I), notice is hereby given of a meeting of the New York Harbor Traffic Management Advisory Committee to be held on April 28, 1988, in the Conference Room, second floor, U.S. Coast Guard Marine Inspection Office, Battery Park, New York, New York, beginning at 10:00 a.m.

The agenda for this meeting of the New York Harbor Traffic Management Advisory Committee is as follows:

1. Introductions.
2. Vessel Traffic Service New York update.
3. Update Kill Van Kull/Newark Bay Dredging Project.
4. Status of the NY Harbor Traffic Management Advisory Committee.
5. Bridge Administration—Transfer of duties to USACE.
6. Topics from the floor.
7. Review of agenda topics and selection of date for next meeting.

The New York Harbor Traffic Management Advisory Committee has been established by Commander, First Coast Guard District to provide information, consultation, and advice with regard to port development, maritime trade, port traffic, and other maritime interests in the harbor. Members of the Committee serve voluntarily without compensation from the Federal Government.

Attendance is open to the interested public. With advance notice to the Chairperson, members of the public may make oral statements at the meeting. Persons wishing to present oral statements should so notify the Executive Director no later than the day before the meeting. Any member of the public may present a written statement to the Committee at any time.

FOR FURTHER INFORMATION CONTACT: Commander, W. YOUNG, USCG, Executive Secretary, NY Harbor Traffic Management Advisory Committee, New York Vessel Traffic Service, Governors Island, New York, NY 10004; or by calling (212) 668-7954.

Dated: March 25, 1988.

J.N. Faigle,

Captain, U.S. Coast Guard, Acting Commander, First Coast Guard District.

[FR Doc. 88-7658 Filed 4-6-88; 8:45 am]

BILLING CODE 4910-14-M

Research and Special Programs Administration

International Standards on the Transport of Dangerous Goods; Public Meeting

AGENCY: Research and Special Programs Administration (RSPA), DOT.

ACTION: Notice of public meetings.

SUMMARY: This notice is to advise interested persons that RSPA and the International Regulations Committee (INTEREC) of the Hazardous Materials Advisory Council will jointly conduct a public meeting to exchange views on proposals that were considered by the 37th session of the Group of Rapporteurs of the United Nations Committee of Experts on the Transport of Dangerous Goods relating to the development of international standards for the transport of dangerous goods.

DATE: April 20, 1988, 10:00 a.m.

ADDRESS: Room 6332, Nassif Building, 400 Seventh Street SW., Washington, DC 20590.

FOR FURTHER INFORMATION CONTACT: Richard C. Barlow, Acting International Standards Coordinator, Office of Hazardous Materials Transportation, Department of Transportation, Washington, DC 20590 (202) 366-4545.

SUPPLEMENTARY INFORMATION: The principle topics to be reviewed at this meeting are the European counter-proposals to adopt the criteria for classification of gases such as those of the European conventions on the transport of dangerous goods by rail (RID) and road (ADR), the criteria and tests for the classification of division 5.1 substances, and the definition of liquids and solids. In addition, the meeting will review the status of the classification and grouping criteria for mixtures containing division 6.1 substances, as well as the reclassification of selected substances based on inhalation toxicity data. Other topics include a review of the Organization for Economic Cooperation and Development (DECD) and United Nations Environment Program (UNEP) programs for the transfrontier movement of hazardous wastes, and the future work schedule of the United Nations Committee of Experts on the transport of dangerous goods and its subsidiary bodies.

This meeting will be conducted jointly by RSPA and the International Regulations Committee (INTEREC) of the Hazardous Materials Advisory Council. Interested persons are invited to attend and participate in this meeting. Person planning to attend are cautioned that this meeting is intended to exchange views on a number of proposals involving international standards for the transport of dangerous goods. Therefore, it is recommended attendees be familiar with these organizations, their functions and the standards issued by them.

Issued in Washington, DC on April 1, 1988.

Alan I. Roberts,

Director, Office of Hazardous Materials Transportation.

[FR Doc. 88-7684 Filed 4-6-88; 8:45 am]

BILLING CODE 4910-60-M

DEPARTMENT OF THE TREASURY

Public Information Collection Requirements Submitted to OMB for Review

Date: April 1, 1988.

The Department of Treasury has submitted the following public information collection requirement(s) to OMB for review and clearance under the Paperwork Reduction Act of 1980, Pub. L. 96-511. Copies of the submission(s) may be obtained by calling the Treasury Bureau Clearance Officer listed. Comments to the OMB reviewer listed and to the Treasury Department Clearance Officer, Department of the Treasury, Room 2224, 15th and Pennsylvania Avenue NW., Washington, DC 20220.

Bureau of Alcohol, Tobacco and Firearms

OMB Number: 1512-0472
Form Number: ATF F 5630.5
Type of Review: Revision
Title: Special Tax Registration and Return
Description: 26 U.S.C. Chapters 51, 52 and 53 authorize the collection of an occupational tax from persons engaging in certain alcoholic, tobacco or firearms businesses. ATF F 5630.5 is used to both compute and report the tax, and as an application for registry as required by statute. Upon receipt of the tax, a special tax stamp is issued.
Respondents: Individuals or households, Businesses or other for-profit, Small businesses or organizations
Estimated Burden: 345,600 hours

OMB Number: 1512-0483
Form Number: None
Type of Review: Reinstatement
Title: Use of the Word "Light" (Lite) in the Labeling and Advertising of Wine, Distilled Spirits, and Malt Beverages
Description: Use of the words "light" and "lite" have been used to connote products that are low or reduced in calories. Consumers who are

conscious of their caloric intake, in particular, will be able to purchase alcohol beverages in accordance with their needs, and will be able to compare the calories in the "light" (lite) product with that of the producer's or competitor's regular product.

Respondents: Businesses or other for-profit, Small businesses or organizations

Estimated Burden: 1 hour

Clearance Officer: Robert Masarsky (202) 566-7077, Bureau of Alcohol, Tobacco and Firearms, Room 7011, 1200 Pennsylvania Avenue, NW., Washington, DC 20226.

OMB Reviewer: Milo Sunderhauf (202) 395-6880, Office of Management and Budget, Room 3208, New Executive Office Building, Washington, DC 20503.

Lois K. Holland,

Departmental Reports Management Officer.

[FR Doc. 88-7694 Filed 4-6-88; 8:45 am]

BILLING CODE 4810-25-M

Public Information Collection Requirements Submitted to OMB for Review

Date: April 1, 1988.

The Department of the Treasury has submitted the following public information collection requirement(s) to OMB for review and clearance under the Paperwork Reduction Act of 1980, Pub. L. 96-511. Copies of the submission(s) may be obtained by calling the Treasury Bureau Clearance Officer listed. Comments to the OMB reviewer listed and to the Treasury Department Clearance Officer, Department of the Treasury, Room 2224, 15th and Pennsylvania Avenue NW., Washington, DC 20220.

Departmental Offices

OMB Number: 1505-0100

Form Number: None

Type of Review: Extension

Title: Implementing Regulations: Government Securities Act of 1986

Description: The regulations require government securities brokers and dealers to make and keep records concerning their business activities and their holdings of securities, to submit financial reports, and to make certain disclosures to investors. The regulations require depository institutions to keep records concerning non-fiduciary holdings of government securities. The goal is investor protection.

Respondents: Businesses or other-for profit

Estimated Burden: 427,027 hours

Clearance Officer: Dale A. Morgan (202) 343-0263, Departmental Offices, Room 2224, Main Treasury Building, 15th & Pennsylvania Avenue NW., Washington, DC 20220.

OMB Reviewer: Robert Fishman (202) 395-7340, Office of Management and Budget, Room 3228, New Executive Office Building, Washington, DC 20503.

Lois K. Holland,

Departmental Reports Management Officer.

[FR Doc. 88-7695 Filed 4-6-88; 8:45 am]

BILLING CODE 4810-25-M

Public Information Collection Requirements Submitted to OMB for Review

Date: April 1, 1988.

The Department of the Treasury has submitted the following public information collection requirement(s) to OMB for review and clearance under the Paperwork Reduction Act of 1980, Pub. L. 96-511. Copies of the submission(s) may be obtained by calling the Treasury Bureau Clearance Officer listed. Comments to the OMB reviewer listed and to the Treasury Department Clearance Officer, Department of the Treasury, Room 2224, 15th and Pennsylvania Avenue NW., Washington, DC 20220.

Internal Revenue Service

OMB Number: 1545-0188.

Form Number: 4868.

Type of Review: Extension.

Title: Application for Automatic Extension of Time to File U.S. Individual Income Tax Return.

Description: Form 4868 is used by individuals to apply for an automatic four month extension of time to file Form 1040. This form contains data by the Service to determine if a taxpayer qualifies for an automatic four month extension of time to file 1040.

Respondents: Individuals or households.

Estimated Burden: 2,721,822 hours.

Clearance Officer: Garrick Shear (202) 535-4297, Internal Revenue Service, Room 5571, 1111 Constitution Avenue NW., Washington, DC 20224.

OMB Reviewer: Milo Sunderhauf (202) 395-6880, Office of Management and Budget, Room 3208, New Executive Office Building, Washington, DC 20503.

Lois K. Holland,

Departmental Reports Management Officer.

FR Doc. 88-7619 Filed 4-6-88; 8:45 am]

BILLING CODE 4810-25-M

UNITED STATES INFORMATION AGENCY

A Grants Program for Private Not-for-Profit Organizations in Support of International Educational and Cultural Activities

The United States Information Agency (USIA) announces a program of selective assistance and limited grant support to non-profit activities of United States institutions and organizations in the Private Sector. The program is designed to increase mutual understanding between the people of the United States and other countries and to strengthen the ties which unite our societies. The information collection involved in this solicitation is covered by OMB Clearance Number 3116-0175. Entitled "A Grants Program for Private, Non-Profit Organization in Support of International Educational and Cultural Activities," announced in the **Federal Register** June 3, 1987.

Private Sector Organizations interested in working cooperatively with USIA on the following concept are encouraged to so indicate:

The Office of Private Sector Programs will assist in supporting an exchange that will focus on youth and the 1988 presidential election. USIA representatives abroad will select the participants from developing countries in the Middle East and North Africa. The project scheduled for late summer 1988 will be conceived and executed by a U.S. not-for-profit institution with expertise in the field of political or governmental affairs. The project will be bipartisan in nature in accordance with the Fulbright Hays Act. The project design will include discussion of the electoral process, campaign financing, and voter registration. It will also allow the delegation to observe political strategies designed to broaden youth's participation in the political process.

USIA is most interested in working with organizations that show promise for innovative and cost-effective programming; and with organizations that have potential for obtaining private-sector funding in addition to USIA support. Organizations must have the substantive expertise and logistical capability needed to successfully develop and conduct the above project and should also demonstrate a potential for designing programs which will have lasting impact on their participants.

Interested organizations should submit a request for complete application materials—postmarked no later than fifteen days from the date of this notice—to the address listed below. The Office of Private Sector Programs will then forward a set of materials, including proposal guidelines.

Office of Private Sector Programs, Bureau of Educational and Cultural Affairs (ATTN: Initiative Programs), United States Information Agency, 301 4th Street S.W., Washington, DC 20547

Dated: March 31, 1988.

Robert Francis Smith,

Director, Office of Private Sector Programs.

[FR Doc. 88-7643 Filed 4-6-88; 8:45 am]

BILLING CODE 8230-01-M

VOL 53 ISS 67 APR 7 1988 UMI

Sunshine Act Meetings

Federal Register
Vol. 53, No. 67
Thursday, April 7, 1988

This section of the FEDERAL REGISTER contains notices of meetings published under the "Government in the Sunshine Act" (Pub. L. 94-409) 5 U.S.C. 552b(e)(3).

FEDERAL ELECTION COMMISSION

"FEDERAL REGISTER" NO.: 88-7188.

PREVIOUSLY ANNOUNCED DATE AND TIME: Thursday, April 7, 1988, 10:00 a.m.

THE FOLLOWING ITEM WAS ADDED TO THE AGENDA: Late Filing of Reports of Publicly Financed Candidates.

DATE AND TIME: Tuesday, April 12, 1988, 10:00 a.m.

PLACE: 999 E Street, NW., Washington, DC.

STATUS: This meeting will be closed to the public.

ITEMS TO BE DISCUSSED:

Compliance matters pursuant to 2 U.S.C. 437g.
Audits conducted pursuant to 2 U.S.C. 437g, 438(b), and Title 26, U.S.C.
Matters concerning participation in civil actions or proceedings or arbitration.
Internal personnel rules and procedures or matter affecting a particular employee.

DATE AND TIME: Thursday, April 14, 1988, 10:00 a.m.

PLACE: 999 E Street, NW., Washington, DC (Ninth Floor).

STATUS: This meeting will be open to the public.

MATTERS TO BE CONSIDERED:

Setting of Dates for Future Meetings.
Eligibility Report for Candidates to Receive Presidential Primary Matching Funds.
Bank Loans to Candidates and Political Committees.
Status of Presidential Audits.
Draft Advisory Opinion 1988-3—John R. McKay on behalf of The Association and APA PAC.
Draft Advisory Opinion 1988-11—Richard M. Schmidt on behalf of the National Association of Trade and Technical Schools Political Action Committee.
Draft Advisory Opinion 1988-13—Richard Ray, Member of Congress.
Routine Administrative Matters.

PERSON TO CONTACT FOR INFORMATION: Mr. Fred Eiland, Information Officer, Telephone: 202-376-3155.

Marjorie W. Emmons,
Secretary of the Commission.

[FR Doc. 88-7771 Filed 4-5-88; 3:46 pm]

BILLING CODE 6715-01-M

U.S. PAROLE COMMISSION

Record of Vote of Meeting Closure (Pub. L. 94-409) (5 U.S.C. Sec. 552b)

I, Cameron M. Batjer, Vice Chairman of the United States Parole Commission, presided at a meeting of said Commission which started at ten o'clock a.m. on Saturday, March 26, 1988 at the Commission's Central Office, 5550 Friendship Boulevard, Chevy Chase, Maryland 20815. The meeting ended at or about 1:15 p.m. The purpose of the meeting was to decide approximately 13 appeals from National Commissioners' decisions pursuant to 28 CFR 2.27. Eight Commissioners were present, constituting a quorum when the vote to close the meeting was submitted.

Public announcements further describing the subject matter of the meeting and certifications of General Counsel that this meeting may be closed by vote of the Commissioners present were submitted to the Commissioners prior to the conduct of any other business. Upon motion duly made, seconded, and carried, the following Commissioners voted that the meeting be closed: Saundra Brown Armstrong, Cameron M. Batjer, Jasper Clay, Jr., Vincent Fechtel, Jr., Carol Pavilack Getty, Daniel R. Lopez, G. MacKenzie Rast, and Victor M.F. Reyes. The Commissioners and a Parole Analyst attended.

In witness whereof, I make this official record of the vote taken to close this meeting and authorize this record to be made available to the public.

Date: March 31, 1988.

Cameron M. Batjer,
Vice Chairman, U.S. Parole Commission.

[FR Doc. 88-7734 Filed 4-5-88; 1:13 pm]

BILLING CODE 4410-01-M

SECURITIES AND EXCHANGE COMMISSION

Notice is hereby given, pursuant to the provisions of the Government in the Sunshine Act, Pub. L. 94-409, that the Securities and Exchange Commission will hold the following meeting during the week of April 11, 1988:

A closed meeting will be held on Tuesday, April 12, 1988, at 2:00 p.m.

The Commissioners, Counsel to the Commissioners, the Secretary of the Commission, and recording secretaries will attend the closed meeting. Certain staff members who are responsible for the calendared matters may also be present.

The General Counsel of the Commission, or his designee, has certified that, in his opinion, one or more of the exemptions set forth in 5 U.S.C. 552b(c) (4), (8), (9)(A) and (10) and 17 CFR 200.402(a) (4), (8), (9)(i) and (10), permit consideration of the scheduled matters at closed a meeting.

Commissioner Grundfest, as duty officer, voted to consider the items listed for the closed meeting in closed session.

The subject matter of the closed meeting scheduled for Tuesday, April 12, 1988, at 2:00 p.m., will be:

Institution of injunctive actions.
Formal order of investigation.
Institution of administrative proceedings of an enforcement nature.
Settlement of administrative proceeding of an enforcement nature.
Opinion.

At times changes in Commission priorities require alterations in the scheduling of meeting items. For further information and to ascertain what, if any, matters have been added, deleted or postponed, please contact: Amy Kroll at (202) 272-2092.

Jonathan G. Katz,
Secretary.

April 4, 1988.

[FR Doc. 88-7738 Filed 4-5-88; 2:00 pm]

BILLING CODE 8010-01-M

Corrections

Federal Register
Vol. 53, No. 67
Thursday, April 7, 1988

This section of the FEDERAL REGISTER contains editorial corrections of previously published Presidential, Rule, Proposed Rule, and Notice documents and volumes of the Code of Federal Regulations. These corrections are prepared by the Office of the Federal Register. Agency prepared corrections are issued as signed documents and appear in the appropriate document categories elsewhere in the issue.

DEPARTMENT OF AGRICULTURE

Agricultural Marketing Service

7 CFR Part 1064

Milk in the Greater Kansas City Marketing Area; Order Terminating Certain Provisions of the Order

Correction

In rule document 88-7110 appearing on page 10357 in the issue of Thursday, March 31, 1988, make the following correction:

PART 1064—[CORRECTED]

In the third column, in amendatory instruction 4, the second line should read "1064.110 through 1064.122 and the undesignated center heading preceding them are removed.".

BILLING CODE 1505-01-D

DEPARTMENT OF LABOR

Wage and Hour Division

29 CFR Parts 516 and 530

Employment of Homeworkers in Certain Industries; Records To Be Kept By Employers

Correction

In proposed rule document 88-6926 beginning on page 10342 in the issue of Wednesday, March 30, 1988, make the following corrections:

1. On page 10342, in the first column, under "AGENCY", remove "Employment Standards Administration".

2. On the same page, in the same column, under "ACTION", the third line should read "comments on additional enforcement provisions, and other".

3. On the same page, in the second column, under "Background", in the third paragraph, in the second line, "increased 56.2%" should read "increased from 56.2%".

4. On the same page, in the third column, in the second complete paragraph, in the 15th line, "restricted" was misspelled.

5. On page 10343, in the second column, under "Wage-Hour Investigation Procedures", in the ninth line, "further" should read "future".

6. On page 10344, in the first column, under "Denial or Revocation of a Homework Certificate", in the second line, "authorized" should read "authority".

7. On page 10345, in the 1st, 2nd and 3rd columns, the italicized headings, "Civil Money Penalties", "Administrative Procedures" and "Bonding or Security Payments" should have been bold headings.

8. On the same page, in the second column, in the first complete paragraph, in the 19th line "*Bros.*" should read "*Bro.*"; and in the 20th line "(1944)" should read "(1944)].".

9. On the same page, in the same column, in the last paragraph, in the third line "followed" should read "following".

10. On page 10346, in the 1st and 2nd columns, the italicized headings, "Homework in the Jewelry Industry", "Homework in the Women's Apparel Industry" and "Model Garment Programs", should have been bold headings.

11. On the same page, in the first column, in the last paragraph, in the eighth line, "lift that" should read "lift the".

12. On the same page, in the third column, under "Regulatory Flexibility Act", in the third paragraph, in the first line, "Bureau" should read "Bureaus".

§ 530.101 [Corrected]

13. On page 10348, in the second column, in § 530.101, in the fifth line, "to" should read "of".

§ 530.402 [Corrected]

16. On the same page, in the third column, in § 530.402(e), in the fourth line, "Administration" should read "Administrator".

§ 530.411 [Corrected]

17. On page 10351, in the third column, in § 530.411(b), in the first line, "hearing to" should read "hearing pursuant to".

PART 516—[CORRECTED]

18. On page 10352, in the second column, under "Authority", in the second line, insert a period after "29 U.S.C. 211".

§ 516.31 [Corrected]

19. On the same page, in the third column, in § 516.31(c), in the 20th line, "wages be" should read "wages to be".

BILLING CODE 1505-01-D

ENVIRONMENTAL PROTECTION AGENCY

40 CFR Part 60

[AD-FRL-3274-7]

Standards of Performance for New Stationary Sources; Revision of Method 25 of Appendix A

Correction

In rule document 88-2804 beginning on page 4140 in the issue of Friday, February 12, 1988, make the following corrections:

§ 530.205 [Corrected]

14. On page 10349, in the third column, in § 530.205(h), in the ninth line, "homeworkers" should read "homeworker"; and in the 10th line, "certificates" should read "certificate".

§ 530.301 [Corrected]

15. On page 10350, in the second column, in § 530.301, in the third line, "violations" should read "violation".

PART 60—[CORRECTED]

Appendix A—[Corrected]

1. On page 4146, in the second column, the 24th line should read "ρ=Density of liquid injected, g/cc."

2. On the same page, the formulas, appearing after paragraphs 6.4, and 6.8 should appear as follows:

6.4 * * *

$$C_t = \left[\frac{\dfrac{P_{tf}}{T_{tf}}}{\dfrac{P_t}{T_t} - \dfrac{P_{ti}}{T_{ti}}} \right] \left[\frac{1}{r} \sum_{j=1}^{r} C_{tm_j} \right] \qquad \text{Eq. 25-3}$$

* * * * *

6.8 * * *

$$\text{Percent recovery} = 1.604 \frac{M}{L} \frac{V_v}{\rho} \frac{P_f}{T_f} \frac{C_{cm}}{N} \qquad \text{Eq. 25-7}$$

* * * * *

BILLING CODE 1505-01-D

VOL
53

ISS
67

AP
7

1988

UMI

federal register

Thursday
April 7, 1988

Part II

Department of Labor

Office of Worker's Compensation Programs

20 CFR Part 10

Claims for Compensation Under the Federal Employees' Compensation Act; Notice of Interim Final Rulemaking and Notice of Proposed Rulemaking

DEPARTMENT OF LABOR

Office of Worker's Compensation Programs

20 CFR Part 10

Claims for Compensation Under the Federal Employees' Compensation Act

AGENCY: Employment Standards Administration, Office of Worker's Compensation Programs, Labor.

ACTION: Notice of interim final rulemaking.

SUMMARY: The Department of Labor has received challenges to certain provisions of the final rules governing the Federal Employees Compensation Act which were published on April 1, 1987. In response, it has chosen to publish these interim rules which both take the place of the challenged rules and ensure the continuing ability to recoup overpayments of compensation (including forfeited compensation) from on-going benefits. The Department has also (elsewhere in this edition of the **Federal Register**) proposed rules modifying §§ 10.125(b) and 10.321(a) concerning the recoupment of forfeited compensation from continuing benefits.

DATE: These rules are effective April 7, 1988.

FOR FURTHER INFORMATION CONTACT: Thomas M. Markey, Associate Director for Federal Employees' Compensation, Telephone (202) 523-7552.

SUPPLEMENTARY INFORMATION: The Department of Labor published final rules revising the regulations governing the Federal Employees Compensation Act (FECA) on April 1, 1987 (see **Federal Register**, Volume 52 at page 10486, *et seq.*). The promulgation of two subsections (10.125(b) and 10.321(a)) of those rules, which concerned the recoupment of forfeited compensation from 100% of continuing compensation benefits, has been challenged by petitions under the Administrative Procedure Act. To eliminate any question regarding the promulgation and ensure that every possible opportunity for comment has been given interested parties, the Department publishes these interim final rules to take the place of those April 1, 1987, rules. These interim final rules allow the Department to collect overpayments of compensation benefits, including forfeited compensation, using the various ability-to-pay criteria outlined in the publication.

The Department has also republished elsewhere in this edition of the **Federal Register**, proposed rules with a request for comments which in effect reinstate the challenged provisions allowing recoupment of forfeited compensation at the rate of 100% of continuing compensation benefits.

This interim final rule affects only that portion of the final rule published April 1, 1987, which the petitions have challenged. Thus, in § 10.125(b), the second sentence ("The amount deducted shall equal the total compensation payable until the full amount forfeited has been recovered.") has been removed; in § 10.321(a) all but the first part of the first sentence (the clause reading "Except for an overpayment * * *") is republished in these interim final rules.

Publication in Final

The Department of Labor has determined, pursuant to 5 U.S.C. 553(b)(B), that good cause exists for waiving public comment on this procedural amendment to the regulation because such comment has in effect already been provided in the proposed rules published on June 6, 1986.

Effective Date

The Department has determined that good cause exists for waiving the customary requirement for delay in the effective date of a final rule for 30 days following its publication. Therefore, this amendment shall be effective immediately. See 5 U.S.C. 553(d)(3). This finding is made because the existing rules have been challenged; by republishing this interim final rule without the challenged language, it is simply reinstating the status quo ante. Because the public interest requires that the Department have authority to recoup overpayments of benefits, including forfeited compensation, however, the rules so allowing must be effected immediately.

Classification—Executive Order 12291

The Department of Labor does not believe that this regulatory proposal constitutes a "major rule" under Executive Order 12291, because it is not likely to result in: (1) An annual effect on the economy of $100 million or more; (2) A major increase in cost or prices for consumers, individual industries, Federal, state or local government agencies, or geographic regions; or (3) significant adverse effects on competition, employment, investment, productivity, innovation or the ability of United States-based enterprises to compete with foreign-based enterprises in domestic or export markets. Accordingly, no regulatory analysis is required.

Paperwork Reduction Act

The information collection requirements entailed by the proposed regulations will not differ significantly from those currently in effect. No new forms are required.

Regulatory Flexibility Act

The Department believes that the rule will have "no significant economic impact upon a substantial number of small entities" within the meaning of section 3(a) of the Regulatory Flexibility Act. Pub. L. 96-354, 91 Stat. 1164 (5 U.S.C. 605(c)). The proposed regulation applies primarily to Federal agencies and their employees. No additional burdens are being imposed on small entities. The Assistant Secretary has certified to the Chief Counsel for Advocacy of the Small Business Administration to this effect. Accordingly, no regulatory impact analysis is required.

For the reasons set out in the preamble, Title 20, Subchapter B of the Code of Federal Regulations is amended as follows:

PART 10—CLAIMS FOR COMPENSATION UNDER THE FEDERAL EMPLOYEES' COMPENSATION ACT, AS AMENDED

1. The authority citation for Part 10 is revised to read as follows:

Authority: 5 U.S.C. 301; Reorganization Plan No. 6 of 1950, 15 FR 3174, 64 Stat. 1263; 5 U.S.C. 8145, 8149; Secretary's Order 7-87, 52 FR 48466; Employment Standards Order 78-1, 43 FR 51469.

2. In § 10.125, paragraph (b) is revised to read as follows:

§ 10.125 Affidavit or report by employee of employment and earnings.

* * * * *

(b) Where the right to compensation is forfeited, any compensation already paid for the period of forfeiture shall be recovered by deducting the amount from compensation payable in the future. If further compensation is not payable, the compensation already paid may be recovered pursuant to 5 U.S.C. 8129 and the Federal Claims Collection Act (31 U.S.C. 952).

* * * * *

3. § 10.321, paragraph (a) is revised to read as follows:

§ 10.321 Recovery of overpayments.

(a) Whenever an overpayment has been made to an individual who is entitled to further payments, proper adjustment shall be made by decreasing subsequent payments of compensation, having due regard to the probable extent of future payments, the rate of compensation, the financial circumstances of the individual, and any

other relevant factors, so as to minimize any resulting hardship upon such individual. In the event such individual dies before such adjustment has been completed, a similar adjustment shall be made by decreasing subsequent payments, if any, payable under this Act with respect to such individual's death.

* * * * *

Signed at Washington, DC, this 31st day of March, 1988.

Fred W. Alvarez,

Assistant Secretary for Employment Standards.

[FR Doc. 88-7445 Filed 4-6-88; 8:45 am]

BILLING CODE 4510-27-M

DEPARTMENT OF LABOR

Office of Worker's Compensation Programs

20 CFR Part 10

Claims for Compensation Under the Federal Employees' Compensation Act

AGENCY: Employment Standards Administration, Office of Worker's Compensation Program, Labor.

ACTION: Notice of proposed rulemaking; request for comment.

SUMMARY: The Department of Labor proposes to change those provisions of the Federal Employees' Compensation Act regulations which (1) concern the recoupment of forfeited compensation from continuing benefits (section 10.125(b)); and (2) describe the method of collection of overpayments of compensation (section 321(a)). The changes would provide for recoupment of forfeited compensation at the rate of 100% of continuing benefits. The reader may recognize these changes as part of final rules published April 1, 1987. In response to challenges made to the method of publication, however, they are being republished as proposed rules with a request for comments. Appearing elsewhere in this issue of the **Federal Register** are interim final rules dealing with recoupment of forfeited compensation; the provisions of the April 1, 1987 rules which provide for recoupment of forfeited compensation at the rate of 100% of continuing benefits are no longer in effect.

DATE: Written comments must be submitted on or before June 6, 1988.

ADDRESS: Send written comments to Thomas M. Markey, Associate Director for Federal Employees' Compensation, Employment Standards Administration, U.S. Department of Labor, Room S-3229, Francis Perkins Building, 200 Constitution Avenue NW., Washington, DC 20210; Telephone (202) 523-7552.

FOR FURTHER INFORMATION CONTACT: Thomas M. Markey, Associate Director for Federal Employees' Compensation, Telephone (202) 523-7552.

SUPPLEMENTARY INFORMATION:

Background

The Department of Labor published final rules revising the regulations governing the administration of the Federal Employees' Compensation Act (FECA) on April 1, 1987, which were effective June 1, 1987 (see **Federal Register**, Volume 52 at page 10486, *et seq.*). Among the many areas affected by the revisions were §§ 10.125(b) and 10.321(a) dealing with recoupment of compensation benefits forfeited under section 8106 of the FECA. Section 8106 provides that employees receiving compensation under the Act may be required to report earnings and that any employee who knowingly fails to report or misreports earnings shall forfeit the right to compensation for the reporting period. The April 1, 1987, rules, at § 10.125(b), clarified the position of the Department that forfeited compensation was subject to recoupment from continuing benefits in an amount equal to the total (100%) of any ongoing compensation. To § 10.321(a), which details the procedures used to determine recoupment of other overpayments, was added a sentence making clear that those procedures did not apply to recoupment of forfeited compensation.

Two unions representing Federal employees have petitioned the Department under section 553(e) of the Administrative Procedure Act (APA) to repeal the regulations dealing with the recoupment of forfeited compensation. The petitions raised questions about the opportunity provided for notice and comment on the sections calling for recoupment of forfeited compensation at the rate of 100% of continuing compensation. In order to resolve these questions and ensure every opportunity for comment by interested parties, the Department takes the following actions: (1) It has published as interim final rules, revised §§ 10.125(b) and 10.321(a) deleting the references to the 100% rule; and (2) publishes these proposed rules which contain provisions for recouping forfeited compensation at the rate of 100% of continuing benefits. Comments are invited on this proposal.

Other Rules in Effect

Because this republication would not void the challenged rules published April 1, 1987, interim final rules, which do not include the challenged provisions, are being published elsewhere in today's **Federal Register**. The reader should consult these rules, which are effective immediately and explain that the Department will recoup forfeited compensation the same as any other type of overpayment.

Recoupment of Forfeited Compensation

These proposed rules allow the Department to collect forfeited compensation at the rate of 100% of continuing benefits. The provision (§ 10.125(b)) detailing how forfeited compensation is collected is amended to clarify that recoupment will be at 100% of any continuing benefits. Section 10.321(a) which details how other types of overpayments are recouped is amended to distinguish forfeited compensation.

Overpayments can be created in severeal ways, including where compensation has been declared forfeit under section 8106 of the FECA. That section provides that any employee who fails to report income "forfeits his right to compensation" for the reporting period. Forfeited compensation "shall be recovered by a deduction from compensation" under section 8129, which provides that recovery of overpayments of compensation "shall be made under regulations prescribed by the Secretary of Labor by decreasing later payments to which the individual is entitled."

Forfeited compensation constitutes a penalty. Unlike other forms of overpayments, which may result from an inadvertent action by the claimant or even through an error by OWCP, forfeited compensation results from a willful and knowing action to deprive the Department of information about income which is necessary to determine the approrpirate amount of compensation. To use the same ability-to-pay criteria in determining how to recoup the forfeited comensation as is used in other overpayment situations, would in effect void that penalty provision, and severely lessen the administrative incentive to report income accurately and timely. For this reason the Department proposes the 100% rule.

Classification—Executive Order 12291

The Department of Labor does not believe that this regulatory proposal constitutes a "major rule" under Executive Order 12291, because it is not likely to result in: (1) An annual reffect on the economy of $100 million or more: (2) a major increase in cost or prices for consumers, individual industries, Federal, state or local goverment agencies, or geograpic regions; or (3) significant adverse effects on competition, employment, investment productivity, innovation, or the ability of United States-based enterprises to compete with foreign-based enterprises in domestic or export markets. Accordingly. no regulatory analysis is required.

Paperwork Reduction Act

There are no information collection requirements in the proposed regulations. No new forms are required.

Regulatory Flexibility Act

The Department believes that the rule will have "no significant economic

impact upon a substantial number of small entities" within the meaning of section 3(a) of the Regulatory Flexibility Act. Pub. L. 96-354, 91 Stat. 1164(5 U.S.C. 605(b)). The proposed regulation applies primarily to Federal agencies and their employees. No additional burdens are being imposed on small entities. The Assistant Secretary has certified to the Chief Counsel for Advocacy of the Small Business Administration to this effect. Accordingly, no regulatory impact analysis is required.

For the reasons set out in the preamble, Title 20, Subchapter B of the Code of Federal Regulations is proposed to be amended as follows:

PART 10—CLAIMS FOR COMPENSATION UNDER THE FEDERAL EMPLOYEES' COMPENSATION ACT, AS AMENDED

1. The authority citation for Part 10 is revised to read as follows:

Authority: 5 U.S.C. 301; Reorganization Plan No. 6 of 1950, 15 FR 3174, 64 Stat. 1263; 5 U.S.C. 8145, 8149; Secretary's Order 7-87, 52 FR 48466; Employment Standards Order 78-1, 43 FR 51469.

2. In § 10.125, paragraph (b) is revised to read as follows:

§ 10.125 Affidavit or report by employee of employment and earnings.

* * * * *

(b) Where the right to compensation is forfeited, any compensation already paid for the period of forfeiture shall be recovered by deducting the amount from compensation payable in the future. The amount deducted shall equal the total compensation payable until the full amount forfeited has been recovered. If further compensation is not payable, the compensation already paid may be recovered pursuant to 5 U.S.C. 8129 and the Federal Claims Collection Act (31 U.S.C. 952).

* * * * *

3. In § 10.321, paragraph (a) is revised to read as follows:

§ 10.321 Recovery of overpayments.

(a) Except for an overpayment resulting from forfeiture of previously paid compensation, such as provided in § 10.125, whenever an overpayment has been made to an individual who is entitled to further payments, proper adjustment shall be made by decreasing subsequent payments of compensation, having due regard to the probable extent of future payments, the rate of compensation, the financial circumstances of the individual, and any other relevant factors, so as to minimize any resulting hardship upon such individual. In the event such individual dies before such adjustment has been completed, a similar adjustment shall be made by decreasing subsequent payments, if any, payable under this Act with respect to such individual's death.

* * * * *

Signed at Washington, DC, this 31st day of March, 1988.

Fred W. Alvarez,

Assistant Secretary for Employment Standards.

[FR Doc. 88-7446 Filed 4-6-88; 8:45 am]

BILLING CODE 4510-27-M

VOL
53

ISS
67

AP
7

1988

UMI

federal register

Thursday
April 7, 1988

Part III

Department of Transportation

Research and Special Programs Administration

Inconsistency Ruling No. IR-19; Nevada Public Service Commission Regulations Governing Transportation of Hazardous Materials; Decision on Appeal

BEST COPY AVAILABLE

VOL 53 ISS 67 AP 7 1988 UMI

DEPARTMENT OF TRANSPORTATION

[Docket No. IRA-39]

Inconsistency Ruling No. IR-19; Nevada Public Service Commission Regulations Governing Transportation of Hazardous Materials

AGENCY: Research and Special Programs Administration, DOT.

ACTION: Decision on appeal.

SUMMARY: In response to the appeal of the Nevada Public Service Commission from the findings made in Inconsistency Ruling No. IR-19 (52 FR 24404; June 30, 1987), that Inconsistency Ruling is affirmed.

EFFECTIVE DATE: April 1, 1988.

FOR FURTHER INFORMATION CONTACT: Edward H. Bonekemper, III, Senior Attorney, Office of Chief Counsel, Research and Special Programs Administration, 400 Seventh Street SW., Washington, DC 20590. (Tel. 202/366-4400).

SUPPLEMENTARY INFORMATION:

I. Background

Section 112(a) of the Hazardous Materials Transportation Act (HMTA) (49 App. U.S.C. 1811(a)) expressly preempts any requirement of a state or political subdivision thereof, which is inconsistent with any requirement of the HMTA or the Hazardous Materials Regulations (HMR), issued thereunder (49 CFR Parts 171-179). Section 107.209(c) of Title 49, Code of Federal Regulations sets forth the following factors which are considered in determining whether a state or political subdivision requirement is inconsistent:

(1) Whether compliance with both the state or political subdivision requirement and the HMTA and the HMR is possible (the "dual compliance" test); and

(2) The extent to which the state or political subdivision requirement is an obstacle to the accomplishment and execution of the HMTA and the HMR (the "obstacle" test).

Inconsistency rulings and decisions on appeals of such rulings only address preemption issues under the HMTA and the HMR. They do not address issues of preemption arising under other statutes or under the Commerce Clause of the United States Constitution.

On October 21, 1986, Southern Pacific Transportation Company (SP) applied for an administrative ruling on the question of whether §§ 705.310 through 705.380 of the Nevada Administrative Code are inconsistent with, and thus preempted by, the Hazardous Materials Transportation Act (HMTA) (49 App. U.S.C. 1801-1811) and the Hazardous Materials Regulations (HMR) (49 CFR Parts 171-179). The procedural regulations governing issuance of inconsistency rulings are codified in 49 CFR 107.201-107.211.

Inconsistency Ruling 19 (IR-19) was issued in accordance with § 107.209 on June 30, 1987, by the Director of the Office of Hazardous Materials Transportation. That ruling determined that §§ 705.310 through 705.370 of the Nevada Administrative Code were inconsistent with the HMTA and the HMR. In that ruling, it was also determined that § 705.380 was consistent with the HMTA and the HMR and thus not preempted.

II. The Appeal

On July 24, 1987, pursuant to 49 CFR 107.211, an appeal of IR-19 was filed with the Administrator of the Research and Special Programs Administration by the Nevada Public Service Commission (Nevada). The arguments made by the appellant are discussed in the following sections.

Comments opposing the appeal were filed by Southern Pacific Transportation Company, the National Tank Truck Carriers, Inc., Union Pacific System, the Association of American Railroads, and the State of New Jersey. Without exception, those comments urge the affirmation of IR-19 and dispute the contentions of Nevada. On September 4, 1987, Nevada filed rebuttal comments addressing only Southern Pacific's comments opposing the appeal.

III. Decision on Appeal

A. Introduction

I am issuing this decision in my capacity as Administrator of the Research and Special Programs Administration (RSPA). I have thoroughly considered all of the issues raised in the appeal and the discussions of them in the comments and rebuttal comments. All of the issues being appealed were discussed exhaustively by the Director of OHMT in IR-19. I will respond only to the specific issues raised on appeal and generally will not reiterate the Ruling's discussions, with all of which I fully concur.

B. Definitions

Nevada appeals the finding in IR-19 that the definitions of "hazardous material" and "storage" as set forth in § 705.310 of the Nevada Administrative Code are inconsistent with the HMTA and the HMR. Nevada contends that it incorporated the definitions of hazardous materials found in the Code of Federal Regulations (CFR) into its definition of "hazardous material" and therefore does not understand where there is an inconsistency. This contention is incorrect. Nevada's § 705.310 defines "hazardous material" as follows:

> "Hazardous material" means low specific activity material as defined in 49 C.F.R. § 173.403(n) and radioactive material as defined in 49 CFR § 173.403(y) and:
>
> (a) Class A explosives as defined in 49 C.F.R. § 173.53;
>
> (b) Class B explosives and defined in 49 C.F.R. § 173.88;
>
> (c) Poison A as defined in 49 C.F.R. § 173.26; and
>
> (d) Flammable solids (DANGEROUS WHEN WET labels only) as defined in 49 C.F.R. § 173.150, which are subject to the requirements for placards in Table 1 of 49 C.F.R. § 172.504

While this definition of "hazardous material" found in Nevada's § 705.310 cross-references specific sections of the CFR, it contains ambiguities and selectively lists only certain hazardous materials. For those reasons, it undermines RSPA's definition of "hazardous material," the nationally uniform interpretation of which is critical to the effective regulation of hazardous materials transportation.

As stated in IR-19, it is unclear whether the phrase "which are subject to the requirements for placards in Table 1 of 49 CFR 172.504" applies to flammable solids only, to the four (a)-(d) materials, or to all six types of materials referred to in the regulation. The primary problem with the Nevada definition of "hazardous material", however, is that it fails to include many materials which are regulated as "hazardous materials" by the HMR. In essence, Nevada is selectively determining which of DOT's hazardous materials are subject to its regulations. Uniform definition of that term is critical to the efficacy of the entire system of regulating hazardous materials transportation, and thus the Federal role in defining them is exclusive. IR-18 (52 FR 200; Jan. 2, 1987); IR-20 (52 FR 24396; June 30, 1987); IR-21 (52 FR 37072; Oct. 2, 1987); *Missouri Pacific RR Co.* v. *Railroad Commission of Texas*, Civ. No. A-86-CA-569 (W.D. Tex. 1987).

Ambiguity and selectivity in defining hazardous materials create problems. State and local hazardous materials definitions, like Nevada's § 705.310, which result in regulation of either more or fewer materials than those in the HMR, create confusion among the regulated community, are obstacles to unformity in transportation regulation, and thus are inconsistent with the HMR.

Nevada also appeals the finding in IR-19 that its definition of "storage" is inconsistent with 49 CFR 174.14(a). Section 705.310 defines "storage" as "keeping any hazardous material for more than 48 hours." This definition relates to the prohibition in § 705.310 of storage of hazardous materials on railroad property without a permit. Nevada contends that its regulations allow a railroad to store hazardous materials at designated railroad property locations for as long as necessary, and therefore is consistent with Federal regulations allowing storage up to 120 hours.

That contention is not correct. 49 CFR 174.14(a) allows a carrier 48 hours, *excluding* Saturdays, Sundays and holidays, to forward shipments of hazardous materials. This definition permits retention up to 120 hours, whereas the Nevada definition results in a prohibition on retention beyond 48 hours without a permit. Moreover, as fully explained in IR-19, the Federal regulations allow retention for even longer periods where infrequent service is provided and allow indefinite storage at the destination shown on the shipping papers or the final agency station. The effect of Nevada's definition of "storage" is to require a permit for activities which already are deemed legal under Federal regulations in a manner which creates an obstacle to accomplishment and execution of those regulations. For example, when hazardous materials arrive at a storage location on Friday or Saturday, it would be extremely difficult to obtain the required State permit within 48 hours, particularly in light of the permit requirements discussed below.

Therefore, I affirm the findings in IR-19 that Nevada's definitions of "hazardous material" and "storage" are inconsistent with the HMR.

C. Requirements of Issuance of Permit

Nevada appeals the finding in IR-19 on the basis that the activities for which § 705.320 requires a permit are not activities covered by the HMTA and the HMR. Nevada argues that the federal regulations address *how* hazardous materials are to be loaded, unloaded, transferred and stored, whereas the Nevada regulations relate to *where* such activities will take place on the railroad's property.

Therefore, Nevada argues, its regulations do not fail the "dual compliance" test. In short, Nevada contends that DOT's regulations provide standards for the actual loading, unloading, transfer and storage of hazardous materials, and Nevada's regulations deal with the location of such activities. Nevada states that after a railroad receives a permit designating the appropriate locations, the railroad then can perform the activities according to the requirements of the HMR. Nevada further contends that its regulations do not fail the "obstacle" test because simultaneous compliance with the HMR is possible.

Nevada's contention that the Federal regulations address *how* hazardous materials are to be loaded, transferred and stored rather than *where* such activities take place is both erroneous and irrelevant. First, the following sections of the HMR regulate where such activities take place:

(1) Section 174.18 requires certain location-specific unloading from rail cars.

(2) Section 174.700 regulates the loading of radioactive materials onto rail cars and provides distance limitations.

(3) Section 177.841(a) prohibits loading or unloading of poisons from motor vehicles "near or adjacent to any place where there are likely to be * * * assemblages of persons * * * or upon any public highway or in any public place."

The above-listed examples demonstrate potential "dual compliance" difficulties which may arise under Nevada's regulations. In many instances they require or allow loading, unloading or transfers by carriers which the Nevada regulations prohibit without a permit. However, the State's regulations are so discretionary that they authorize Public Service Commission approval of storage prohibited by the HMR and prohibition of storage authorized or required by the HMR. The permit requirements, therefore, are inconsistent with the above-mentioned HMR provisions under the "dual compliance" test.

Second, Nevada's allegation of a "how"/"where" dichotomy fails to raise issues, relevant to the standards for determining consistency. RSPA has established a comprehensive series of regulations concerning the who, what, when, where and how of railroad-related storage of hazardous materials. Nevada also would require a permit, including additional substantive requirements at the discretion of the State, even where a railroad is meeting the plethora of applicable Federal regulations. Such additional requirements constitute an obstacle to accomplishment of the HMR and, therefore, are inconsistent with the HMR under the "obstacle" test. In essence, Nevada is questioning the adequacy of the Federal regulations; those issues are irrelevant in an inconsistency proceeding but may be raised either in a petition for rulemaking under 49 CFR 106.31 or in a request for waiver of preemption under 49 CFR 107.215.

Therefore, I affirm the finding in IR-19 that the permit requirements of § 705.320 are inconsistent with the HMR.

D. Transportation of Radioactive Materials

Nevada appeals the finding in IR-19 that Nevada's permitting system, as applied to the transportation of radioactive materials, is inconsistent with the HMTA and the HMR. Nevada states that this finding is based on IR-15 (49 FR 46660; Nov. 27, 1984; affirmed IR-15 (Appeal), 52 FR 13062; Apr. 20, 1987), which stands for the proposition that states are without authority to establish a permitting system for radioactive materials transportation since the HMTA and the HMR totally occupy that field. Nevada contends that the HMTA does not totally occupy the field of radioactive materials transportation and, further, that the Vermont regulations reviewed in IR-15 are not related to Nevada's regulations. Nevada claims that the HMTA and the HMR together do not constitute a pervasive regulatory scheme for the transportation of radioactive materials because they do not address the locations for the storage of radioactive materials, pending transfers to trucks for ultimate disposal.

As stated in IR-19, state and local regulations requiring approval for the transportation of radioactive materials constitute unauthorized prior restraints on shipments that are presumptively safe based on their compliance with Federal regulations. This is so because the HMTA and the HMR provide a comprehensive scheme of regulation for radioactive materials transportation and thus virtually completely occupy the field of radioactive materials transportation.

As indicated earlier in this decision, the HMR do extensively regulate storage-related activities of railroads. Again, the gist of Nevada's argument is that it believes the Federal regulations are inadequate. Adequacy of the HMR, however, is not a relevant issue in an inconsistency proceeding. That issue may be addressed by Nevada through a petition for rulemaking to amend the HMR or through a request for waiver of preemption.

IR-8 (49 FR 46637; Nov. 27, 1984); IR-15, *supra;* IR-20, *supra;* and IR-21, *supra,* among others, stand for the proposition that state and local governments may not impose their own permitting requirements on radioactive materials transportation. As Nevada has done

here, attempts were made to justify the permitting systems found inconsistent in those other rulings by contending that they were intended to compenstate for the inadequacies of the HMR. The mere fact that Nevada's permitting system is different than those at issue in the earlier rulings does not change the conclusion that it is inconsistent and thus preempted.

Therefore, I affirm the finding in IR-19 that Nevada's permitting system, as applied to the transportation of radioactive materials, is inconsistent with the HMTA and the HMR.

E. Transportation of Nonradioactive Materials

Nevada further contends that its regulations regarding nonradioactive hazadous materials are clear regarding which party is required to obtain a permit. As part of its discussion of the burdensome nature of Nevada's permit requirements, IR-19 stated that the State's § 705.320 literally required any trucking company loading, unloading, or transferring hazardous materials on railroad property to obtain a State permit. Nevada states that once a railroad receives an annual permit designating the locations for loading, unloading, transfer and storage of hazardous materials, *any person* may perform these activities at the authorized locations.

Despite this explanation provided by Nevada, § 705.320 itself does not, in fact, clearly state which party conducting a regulated activity in required to obtain a permit and thus imposes potential civil and criminal liability on anyone who conducts those activities in the absence of a permit—even if those activities are conducted in accordance with, or even mandated by, the HMR. Section 705.320 broadly states: "A person shall not * * * [l]oad or unload * * * [t]ransfer * * * or * * * [s]tore hazardous material * * * without a permit issued by the commission." The actual language of state and local requirements, rather than later statements of intent, are controlling, IR-8(Appeal) (52 FR 13000; Apr. 26, 1987), IR-16 (50 FR 20872; May 20, 1985), unless there is a demonstrated actual practice to the contrary. IR-17 (51 FR 20925; June 9, 1986; *affirmed* IR-17(A), 52 FR 36200; Sept. 25, 1987). In addition, the fact that the permits are issued annually does not eliminate the need for some permit to have been issued with respect to any shipment of hazardous materials.

As discussed in IR-19 and elsewhere in this decision, the burdensome, delay-inducing and discretionary Nevada permitting system constitutes an unauthorized prior restraint on shipments of nonradioactive hazardous materials that are presumptively safe based on their compliance with the HMR. Therefore, I affirm the finding in IR-19 that Nevada's permitting system as applied to the transportation of nonradioactive hazardous materials is an obstacle to accomplishment and execution of the HMTA and the HMR and thus is inconsistent with the HMTA and HMR.

F. Information and Documentation Requirements

Nevada appeals the finding that the HMTA and the HMR provide sufficient information and documentation requirements for the safe transportation of hazardous materials and that the information required by Nevada's regulations to be furnished on an application for a permit constitutes an obstacle to implementation of these Federal regulations and is therefore inconsistent with them. Nevada contends that since U.S District Judge Thompson, in denying a request to enjoin enforcement of the Nevada regulations, stated that an annual permit application could be completed in one day, the information required on a permit application does not constitute a burden on transportation.

Again, Nevada's contentions concerning the sufficiency of the HMR's information and documentation requirements are irrelevant in this proceeding; they may be raised in a petition for rulemaking or in a request for waiver of preemption. In addition, burdens on commerce are a factor specified in 49 App. U.S.C. 1811(b) and 49 CFR 107.215(b)(7) as relevant to waiver of preemption—*not* to inconsistency rulings.

Nevada's information and documentation requirements not only are quite extensive, but they also are open-ended. Section 705.330(l) provides a detailed list of information and documentation to be submitted with an application for a permit. In addition, § 705.340 contains an extensive list of facts which Nevada takes into consideration in evaluating a permit application. Section 705.350 requires the applicant to certify that the information initially provided is accurate. Under § 705.370, Nevada has the authority to dismiss a permit application if there is insufficient information or if the applicant fails to submit additional information required by Nevada. These extensive requirements would take more than one day for a railroad to meet—in fact, Nevada controls the time by being able, without limitation, to require submission of additional information.

As stated in IR-19, RSPA has determined which specific information and documentation requirements are needed for the safe transportation of hazardous materials and state and local requirements going beyond them are obstacles to the accomplishment of the objectives of the HMTA and the HMR and are inconsistent with them. This has been a long-held position of RSPA. IR-2 (44 FR 75568; Dec. 20, 1979); IR-6 (48 FR 760; Jan. 6, 1983); IR-8, *supra;* IR-8 (Appeal), *supra;* IR-15, *supra;* IR-15 (Appeal), *supra;* IR-18, *supra;* IR-21*supra.*

Therefore, I affirm the finding in IR-19 that Nevada's openended and extensive information and documentation requirements constitute such obstacles and are inconsistent with the HMTA and the HMR.

G. Potential for Delay

Nevada appeals the finding in IR-19 that its permitting process creates the potential for delay in the transportation of hazardous materials. Nevada contends that its failure to issue Union Pacific (UP) a permit to transport 7200 tons of radioactive dirt for disposal in Nevada is irrelevant because UP filed its application under Nevada's earlier Emergency Regulation. It also asserts that it failed to issue a permit based on reasons which were not germane to the permitting process. Nevada contends that it failed to issue a permit to UP for public safety reasons, and that UP wanted to transport radioactive soil from New Jersey to a location in Nevada which the State's Department of Human Resources had decided was a public nuisance. Nevada further contends that UP was not harmed by Nevada's failure to allow transportation, as evidenced by UP's failure to commence a legal action against Nevada.

Nevada's admitted earlier use of its permitting authority to deny transportation for reasons not related to the permit requirements set forth in its regulations demonstrates the risks inherent in the discretionary permitting system at issue here. As accurately pointed out by all the commenters opposing Nevada's appeal, under its permitting system, not only can the State delay transportation for any or no reason, but it also can deny or ban transportation-related activities for any or no reason.

Not only the State's past practice, but the provisions of the Nevada Administrative Code at issue here raise issues concerning potential delays in transportation of hazardous materials. Section 705.350 provides for an annual renewable permit and for a temporary

permit which may be issued upon a showing of "compelling need" while an annual application is pending. Section 705.370(l) provides that Nevada will give 30 days' notice of permit applications before taking action on them. Under these two provisions, Nevada can take as much time as it believes is necessary to consider, grant or deny permit applications.

Moreover, it can prolong the permit process by insistence upon compliance with its extensive information and documentation requirements and upon submission of any other "pertinent" information under § 705.340(9). Further, Nevada has considerable discretion concerning whether to act on a permit application as there is no requirement that Nevada even issue a permit when certain conditions have been met by the applicant or determined by Nevada.

Delays and the potential for delay, many of them similar to those present here, consistently have resulted in findings of inconsistency with the HMTA and the HMR. IR-2, *supra;* IR-3 (46 FR 18918; Mar. 26, 1981); IR-6 *supra;* IR-18, *supra;* IR-20, *supra;* IR-21, *supra;* *Missouri Pacific RR Co. v. Railroad Commission of Texas, supra.*

Therefore, I affirm the finding in IR-19 that the entire permitting process contained in the Nevada regulations is likely to cause extensive delays and thus is inconsistent with the HMR.

H. Regulation of Transportation-Related Storage

Nevada appeals the finding in IR-19 that the HMR contains comprehensive regulations dealings with the storage of hazardous materials transported by rail and that Nevada's regulatory scheme for storage of hazardous material transported by rail constitutes an obstacle to the accomplishment of the objectives of the HMTA and the HMR.

Nevada claims that if the HMR provisions relating to storage were as comprehensive as stated in IR-19, then the storage of explosives by Southern Pacific at Hafed certainly would have been in violation of those regulations. This contention is not relevant to the issue of the consistency of Nevada's permit requirement for storage of hazardous materials for more than 48 hours. Once again the State fails to distinguish between it concept of adequacy and the relevant issue of consistency. Issues of adequacy may be properly addressed in petitions for rulemaking and requests for waivers of preemption.

Under Nevada's §§ 705.310 and 705.320, storage of hazardous materials on railroads property is prohibited for more than 48 hours without a permit. However, it is unclear how long and under what conditions Nevada would allow hazardous materials to be stored on railroad properties if and when a permit were issued. IR-19 contains numerous examples of extensive HMR regulations concerning railroad-related storage of hazardous materials. These regulations either authorize or prohibit specific types of hazardous materials storage under specified circumstances. Nevada's regulatory scheme for storage of hazardous materials transported by rail creates the risk of widespread confusion. In essence, Nevada's regulations are so discretionary that they authorize Nevada to approve storage prohibited under Federal regulations or to disapprove storage authorized under Federal regulations. Such potential inconsistencies were manifested in a criminal action instituted against Southern Pacific for holding cars at a siding beyond 48 hours to wait for a weekly train on a branch line (a holding authorized under § 174.14 of the HMR).

Therefore, I affirm the finding in IR-19 that Nevada's regulations relating to storage of rail-transported hazardous materials are inconsistent with the HMTA and the HMR.

III. Conclusion

For the reasons indicated above and for the reasons set forth in IR-19 itself, I affirm the determination by the Director of the Office of Hazardous Materials Transportation in IR-19 that §§ 705.310 through 705.370 of the Nevada Administrative Code are inconsistent with the HMTA and the HMR.

This decision on appeal constitutes the final administrative action in this proceeding.

Issued in Washington, DC on April 1, 1988.

M. Cynthia Douglass,

Administrator, Research and Special Programs Administration.

[FR Doc. 88-7082 Filed 4-6-88; 8:45 am]

BILLING CODE 4910-60-M

VOL
53

ISS
67

AP
7

1988

UMI

federal register

Thursday
April 7, 1988

Part IV

Department of the Interior

Office of Surface Mining Reclamation and Enforcement

30 CFR Part 773

Surface Coal Mining and Reclamation Operations; Requirements for Permits and Permit Processing; Final Rule

VOL 53 ISS 67 AP 7 1988 UMI

DEPARTMENT OF THE INTERIOR

Office of Surface Mining Reclamation and Enforcement

30 CFR Part 773

Surface Coal Mining and Reclamation Operations; Requirements for Permits and Permit Processing

AGENCY: Office of Surface Mining Reclamation and Enforcement, Interior.

ACTION: Final rule.

SUMMARY: The Office of Surface Mining Reclamation and Enforcement (OSMRE) of the Department of the Interior (DOI) is adopting a final rule revising the regulatory prohibition on mining without a permit more than eight months after approval of the State or Federal regulatory program. The grace period will be available only to persons conducting surface coal mining operations under a permit from the State regulatory authority, issued in accordance with the initial regulatory program. This change responds to a decision rendered in Federal district court. The effect of this change is that any existing mining operation that has no permanent program permit and does not qualify for the exception will have to cease operations and remain shut down until a permanent program permit is issued. This change is not intended to affect coal preparation plants separately authorized to operate under 30 CFR 785.21(e).

EFFECTIVE DATE: May 9, 1988.

FOR FURTHER INFORMATION CONTACT: Patrick W. Boyd, Branch of Federal and Indian Programs, OSMRE, 1951 Constitution Avenue NW., Washington, DC 20240; Telephone (202) 343-1864 (FTS or commercial).

SUPPLEMENTARY INFORMATION:

I. Background
II. Discussion of Rule Adopted and Response to Comments
III. Procedural Matters

I. Background

Section 502(d) of the Surface Mining Control and Reclamation Act of 1977 (SMCRA), 30 U.S.C. 1201 *et seq.*, prohibits the conduct of surface coal mining operations without a permanent program permit for more than eight months after approval of the State or Federal regulatory program. All operators who expect to continue to operate eight months after the Secretary of the Interior approves a State regulatory program (primacy) or implements a Federal program must submit a permit application to the regulatory authority within two months following primacy or the implementation of a Federal program. In addition, the regulatory authority must process, and grant or deny, permanent program permits within the eight-month period after primacy or the implementation of a Federal program for the operators who wish to continue to operate beyond that period.

However, section 506(a) of SMCRA recognizes the possibility that this task may be unachievable in some States due to workforce limitations and potential administrative delay in permit processing. As a result, that section provides that certain operators may continue to operate after the eight-month period elapses under their existing permits from the State regulatory authority issued in accordance with the initial regulatory program. Operators holding such permits may continue to operate beyond the eight-month period if they have filed applications, within the two-month deadline, for permanent program permits and no initial administrative decision has been rendered.

On September 18, 1978, OSMRE proposed a rule to implement the section 506(a) exception. See the discussion at 43 FR 41687. The final rule was published on March 13, 1979 as 30 CFR 771.13(b). See 44 FR 15014 for the discussion and 44 FR 15350 for the rule. The final rule provided that an operator holding a permit issued or amended by the regulatory authority in accordance with the requirements of section 502 of SMCRA could continue operating after the eight-month period if a timely and complete permanent program permit application had been filed, no initial administrative decision had been rendered, and the operation was conducted in compliance with 30 CFR Chapter VII, Subchapter B; SMCRA; and applicable State statutes and rules.

On June 25, 1982, OSMRE proposed to revise this rule by providing a second exception to the prohibition on mining without a permit eight months after primacy or the implementation of a Federal program. Under the proposal, in addition to those holding a permit, any person authorized under the initial regulatory program to conduct surface coal mining operations could also continue operations beyond the eight-month period provided certain conditions were met. The purpose of the proposed change was to recognize that some existing operations required to have permits under the permanent regulatory program might not have been required to have permits under the initial regulatory program (47 FR 27694). The final rule, unchanged from the proposed rule, was published on September 28, 1983. Although the rule was adopted unchanged, one commenter did suggest that allowing continued operation of "unpermitted but authorized" mining operations exceeds the requirements of SMCRA. In disagreeing with the commenter, OSMRE stated that it would be "inequitable and contrary to [the intent of SMCRA] to deny some operators the privilege on continuing operations solely because they were not required to have a permit during the initial program." 48 FR 44354.

Subsequently, the regulation was challenged in the U.S. District Court for the District of Columbia. The court concluded that the rule "does not address the plain language of section 506(a) and Congress' express requirement that only permit holders be extended the grace period." It remanded the rule to the Secretary of the Interior. *In Re: Permanent Surface Mining Regulation Litigation (II)*, No. 79-1144, (D.D.C.) July 15, 1985, Slip Op. at 133.

Thus, on November 9, 1987, OSMRE proposed to return to the language of the 1979 regulation, deleting the remanded exception for those who were authorized to conduct surface coal mining operations but who did not have an initial program permit. This action would bring the rule into conformance with the court order.

II. Discussion of Rule Adopted and Response to Comments

Section 506(a) of SMCRA prohibits mining without a permit eight months after the permanent regulatory program has been approved, unless an operator holding a permit from the regulatory authority issued in accordance with section 502 of SMCRA has applied for a permanent program permit but an initial administrative decision has not been rendered before the eight-month period expires. The rule language adopted today is unchanged from the proposal and closely conforms to the statutory language. The remanded exception for those who were authorized to conduct surface coal mining operations but who did not have an initial program permit has been deleted.

The rule is not intended to limit the responsibility of operators for the reclamation of surface coal mining operations. Operators must reclaim all operations that were not required to obtain permits under the initial program and that have ceased or will cease operation rather than obtain a permanent program permit. This rule is not intended to affect coal preparation plants for which a separate interim authorization to operate is found in 30

CFR 785.21(e). To avoid confusion, specific reference is made to the coal preparation plant regulations in the final rule.

Subparagraphs (i), (ii) and (iii) under 30 CFR 773.11(b)(2) remain unchanged. These paragraphs qualify the exception by establishing three requisite conditions. Under the first, the operator must file the permanent program permit application within two months following the effective date of the program. In addition, the regulatory authority must have not yet rendered an initial administrative decision on the application. Also, the surface coal mining operation must be in compliance with all applicable laws, rules and permit terms and conditions.

One commenter indicated that the proposal "appears to bring the OSMRE regulations into compliance with the decision of [the Federal district court]" and noted "the acknowledgment by OSMRE that those operations which were not required to obtain permits under the initial program and which ceased operation rather than obtain a permanent program permit are nevertheless subject to regulation under SMCRA and are required to reclaim all operations pursuant to the initial program procedures."

The commenter also noted that, "By extension, [SMCRA] jurisdiction covers coal preparation plants which operated after the effective date of [SMCRA] and which terminated operations rather than apply for a permanent program permit under 30 CFR 785.12(e)." As stated above in the discussion of the rule adopted, this rule is not intended to affect coal preparation plants that are covered by 30 CFR 785.21(e). The rules governing such coal preparation plants are found in 30 CFR Parts 700, 701, 785, and 827. The commenter will find a thorough discussion of the subject in the May 11, 1987, **Federal Register** (52 FR 17724).

Two commenters pointed out that the proposal erroneously indicated that it would apply to Indian lands. The Indian lands rules specify that 30 CFR 773.11 is not applicable to permitting on Indian lands. See 30 CFR 750.12(c)(2)(ii). The preamble to the final rule has been modified to correct the misstatement.

III. Procedural Matters

Effect in Federal Program States and on Indian Lands

This rule applies through cross-referencing in those States with Federal programs. They are Georgia, Idaho, Massachusetts, Michigan, North Carolina, Oregon, Rhode Island, South Dakota, Tennessee and Washington. The Federal programs for these States appear at 30 CFR Parts 910, 912, 921, 922, 933, 937, 939, 941, 942, and 947 respectively. The rule does not apply to Indian lands pursuant to 30 CFR 750.12(c)(2)(ii). No comments were received concerning unique conditions that exist in any of these States or on Indian lands that would have required changes to the national rule.

Effect on State Programs

Following promulgation of the final rule, OSMRE will evaluate permanent State regulatory programs approved under section 503 of SMCRA to determine whether any changes in these programs will be necessary. If the Director determines that certain State program provisions should be amended in order to be made no less effective than the revised Federal rules, the individual States will be notified in accordance with the provisions of 30 CFR 732.17.

Federal Paperwork Reduction Act

This rule does not contain information collection requirements that require approval by the Office of Management and Budget under 44 U.S.C. 3507.

Executive Order 12291 and Regulatory Flexibility Act

The DOI has determined that this document is not a major rule under the criteria of Executive Order 12291 (February 17, 1981) and certifies that it will not have significant economic effect on a substantial number of small entities under the Regulatory Flexibility Act, 5 U.S.C. 601 *et seq.* This rule affects a relatively small number of surface coal mining operations. The rule does not distinguish between small and large entities. The economic effects of the proposed rules are estimated to be minor and no incremental economic effects are anticipated as a result of the rule.

National Environmental Policy Act

OSMRE has prepared an environmental assessment (EA) and has made a finding that the final rule will not significantly affect the quality of the human environment under section 102(2)(C) of the National Environmental Policy Act of 1969 (NEPA), 42 U.S.C. 4332(2)(C). The EA is on file in the OSMRE Administrative Record, Room 5131, 1100 L Street NW., Washington, DC.

Author

The principal author of this rule is Patrick W. Boyd, Branch of Federal and Indian Programs, OSMRE, 1951 Constitution Avenue NW., Washington, DC 20240; Telephone: (202) 343-1664.

List of Subjects in 30 CFR Part 773

Reporting and recordkeeping requirements, Surface mining, Underground mining.

Accordingly, 30 CFR Part 773 is amended as set forth herein.

Dated: March 4, 1988.

J. Steven Griles,

Assistant Secretary—Land and Minerals Management.

PART 773—REQUIREMENTS FOR PERMITS AND PERMIT PROCESSING

1. The authority citation for Part 773 is revised to read as follows:

Authority: 30 U.S.C. 1201 *et seq.*, 16 U.S.C. 470 *et seq.*, 16 U.S.C. 1531 *et seq.*, 16 U.S.C. 661 *et seq.*, 16 U.S.C. 703 *et seq.*, 16 U.S.C. 668a, 16 U.S.C. 469 *et seq.*, 16 U.S.C. 470aa *et seq.*, and Pub. L. 100-34.

2. The introductory language to paragraph (b)(2) of § 773.11 is revised to read as follows:

§ 773.11 Requirements to obtain permits.

* * * * *

(b) * * *

(2) Except for coal preparation plants separately authorized to operate under 30 CFR 785.21(e), a person conducting surface coal mining operations, under a permit issued or amended by the regulatory authority in accordance with the requirements of section 502 of the Act, may conduct such operations beyond the period prescribed in paragraph (a) of this section if—

* * * * *

[FR Doc. 88-7642 Filed 4-6-88; 8:45 am]

BILLING CODE 4310-05-M

VOL
53

ISS
67

AP
7

1988

UMI

federal register

Thursday
April 7, 1988

Part V

Department of the Interior

Fish and Wildlife Service

50 CFR Part 17

Endangered and Threatened Wildlife and Plants; Palo de Nigua and White-haired Goldenrod; Final Rules

VOL 53 ISS 67 AP 7 1988 UMI

DEPARTMENT OF THE INTERIOR

Fish and Wildlife Service

50 CFR Part 17

Endangered and Threatened Wildlife and Plants; Determination of Endangered Status for Cornutia obovata (Palo de Nigua)

AGENCY: Fish and Wildlife Service, Interior.

ACTION: Final rule.

SUMMARY: The Service determines *Cornutia obovata* (Palo de Nigua) to be an endangered species pursuant to the Endangered Species Act (Act) of 1973, as amended. *Cornutia obovata* is endemic to semievergreen seasonal forests of the limestone hills and lower mountains of northern and central Puerto Rico. The species is threatened by deforestation and extremely low population size. This final rule will implement the Federal protection and recovery provisions afforded by the Act for *Cornutia obovata*.

EFFECTIVE DATE: May 9, 1988.

ADDRESSES: The complete file for this rule is available for inspection, by appointment, during normal business hours at the Caribbean Field Office, U.S. Fish and Wildlife Service, P.O. Box 491, Boqueron, Puerto Rico 00622, and at the Service's Southeast Regional Office, Suite 1282, 75 Spring Street SW., Atlanta, Georgia 30303.

FOR FURTHER INFORMATION CONTACT: Mr. Robert T. Pace at the Caribbean Field Office address (809/851-7297) or Mr. Tommy Turnipseed at the Atlanta Regional Office address (404/331-3583 or FTS 242-3583).

SUPPLEMENTARY INFORMATION:

Background

Cornutia obovata was first collected by Paul Sintenis in 1885 on Monte Torrecilla near Barranquitas in the mountains of central Puerto Rico. The species was known only from the type locality until 1938, when it was discovered in Rio Abajo Commonwealth Forest. Recently, a single tree was found immediately to the west of Rio Abajo near the Arecibo Observatory. However, a small population reported from Susua Commonwealth Forest in southwestern Puerto Rico (Vivaldi and Woodbury 1981) has never been relocated. At present, only seven individuals are known to exist in two widely separated localities.

Cornutia obovata is an evergreen tree reaching 33 feet (10 meters) in height, with a trunk diameter of 6 inches (15 centimeters). The leaves are opposite, obovate, blunt or rounded at the apex, with the lower surface finely hairy. The flowers are terminally clustered, tubular, and purplish in color. The fruits are small, round, and finely hairy. The species is endemic to semievergreen forests on both limestone and volcanic soils from 1,000 to 3,000 feet (300 to 900 meters) in elevation. The two sites where the species is known to occur are widely disjunct: Rio Abajo Commonwealth Forest and its surrounding areas are within the limestone karst region of northern Puerto Rico, while Monte Torrecilla is located in the Central Cordillera, a montane region of volcanic origin.

Although deforestation has undoubtedly caused the loss of many populations or individuals of *Cornutia obovata*, the species has never been found in large numbers. It is known that individual trees have been lost to forest clearing for a variety of land uses.

Cornutia obovata was recommended for Federal listing by the Smithsonian Institution (Ayensu and DeFilipps 1978). The species was included among the plants being considered as endangered or threatened species by the Fish and Wildlife Service, as published in the **Federal Register** (45 FR 82480) dated December 15, 1980. The species was designated category 1 (species for which the Service has substantial information supporting the appropriateness of proposing to list them as endangered or threatened), and was retained in category 1 in the November 28, 1983, update (48 FR 53640) of the 1980 notice, and the September 27, 1985, revised notice (50 FR 39526).

In a notice published in the **Federal Register** on February 15, 1983 (48 FR 6752), the Service reported the earlier acceptance of the new taxa in the Smithsonian's 1978 book as under petition within the context of section 4(b)(3)(A) of the Act, as amended in 1982. The service made subsequent petition findings in October of 1983, 1984, 1985, and 1986 that listing *Cornutia obovata* was warranted but precluded by other pending listing actions, in accordance with section 4(b)(3)(B)(iii) of the Act. The Service proposed listing *Cornutia obovata* on April 24, 1987 (52 FR 13792).

Summary of Comments and Recommendations

In the April 24, 1987, proposed rule and associated notifications, all interested parties were requested to submit factual reports or information that might contribute to the development of a final rule. Appropriate agencies of the Commonwealth of Puerto Rico, municipal governments, Federal agencies, scientific organizations, and other parties were contacted and requested to comment. A newspaper notice inviting general public comment was published in *The San Juan Star* on May 23, 1987. A public hearing was neither requested nor held. Five letters of comment were received from the Secretary of the Puerto Rico Department of Natural Resources, the Forest Supervisor of the Caribbean National Forest (U.S. Forest Service), administrators of the U.S. Environmental Protection Agency and the U.S. Army Corps of Engineers (Jacksonville District Office), and the Natural History Society of Puerto Rico.

The Puerto Rico Department of Natural Resources supported the proposed listing, stating that a management plan for the Rio Abajo Commonwealth Forest is presently being prepared. The Environmental Protection Agency and the Corps of Engineers acknowledged the proposal, noting that they were not aware of any ongoing or proposed actions that would impact the species. The Forest Service acknowledged the proposal but stated that the species does not occur in the Caribbean National Forest. The Puerto Rico Natural History Society supported the proposed listing.

Summary of Factors Affecting the Species

After a thorough review and consideration of all the information available, the Service has determined that *Cornutia obovata* should be classified as endangered. Procedures found at section 4(a)(1) of the Endangered Species Act (16 U.S.C. 1531 *et seq.*) and regulations (50 CFR Part 424) promulgated to implement the listing provisions of the Act were followed. A species may be determined to be an endangered or threatened species due to one or more of the five factors described in section 4(a)(1). These factors and their application to *Cornutia obovata* Urban (Palo de Nigua) are as follows:

A. *The present or threatened destruction, modification, or curtailment of its habitat or range.* Modification of habitat or direct destruction of plants appear to have been significant factors reducing the numbers of *Cornutia obovata* in the past. At present, two of the seven known individuals occur on private land, one near a trail utilized heavily by squatters, and one other near a Commonwealth of Puerto Rico communication facility that receives heavy use. Both of these areas are subject to deforestation for a variety of purposes, and thus this significant

proportion of the remaining plants is at risk. The other five trees are within a unit of the Commonwealth Forest system, and will only be threatened if management policies allowing alteration of vegetation fail to consider them.

B. *Overutilization for commercial, recreational, scientific, or educational purposes.* Taking for these purposes has not been a documented factor in the decline of this species.

C. *Disease or predation.* Disease and predation have not been documented as factors in the decline of this species.

D. *The inadequacy of existing regulatory mechanisms.* The Commonwealth of Puerto Rico has recently adopted a regulation that recognizes and provides protection for certain Commonwealth listed species. However, *Cornutia obovata* is not yet on the Commonwealth list. Federal listing would provide interim protection and, if the species is ultimately placed on the Commonwealth list, enhance its protection and possibilities for funding needed research.

E. *Other natural or manmade factors affecting its continued existence.* With only several plants known to exist, rarity is itself a factor affecting the survival of *Cornutia obovata.* The species has always been found as widely separated individual mature trees, without evidence of regeneration. Although it is unlikely that any single natural event could lead to its extinction, gradual attrition of individuals from a variety of natural causes appears likely. If still undetermined factors are preventing its reproduction by seed or vegetative means, there will be a net decline in its numbers and a loss of genetic diversity.

The Service has carefully assessed the best scientific and commercial information available regarding the past, present, and future threats faced by this species in determining to make this rule final. Based on the evaluation, the preferred action is to list *Cornutia obovata* as endangered. Since there are so few individuals remaining and a continuing risk of damage to the plants and/or their habitat, endangered status seems an accurate assessment of the species' condition. It is not prudent to designate critical habitat because doing so would increase the risk to this species, as detailed below.

Critical Habitat

Section 4(a)(3) of the Act, as amended, requires that to the maximum extent prudent and determinable, the Secretary designate critical habitat at the time the species is determined to be endangered or threatened. The Service finds that designation of critical habitat is not prudent for this species at this time. The number of individuals of *Cornutia obovata* is sufficiently small that collecting or vandalism could seriously affect the survival of the species. Publication of critical habitat descriptions and maps in the **Federal Register** would increase the likelihood of such activities. The Service believes that Federal involvement in the areas where this plant occcurs can be identified without the designation of critical habitat. All involved parties and landowners have or will be notified of the location and importance of protecting this species' habitat. Protection of this species' habitat will also be addressed through the recovery process and through the section 7 jeopardy standard. Therefore, it would not be prudent to determine critical habitat for *Cornutia obovata* at this time.

Available Conservation Measures

Conservation measures provided to species listed as endangered or threatened under the Endangered Species Act include recognition, recovery actions, requirements for Federal protection, and prohibitions against certain practices. Recognition through listing encourages and results in conservation actions by Federal, Commonwealth, and private agencies, groups, and individuals. The Endangered Species Act provides for possible land acquisition and cooperation with the Commonwealth and requires that recovery actions be carried out for all listed species. Such actions are initiated by the Service following listing. The protection required of Federal agencies and the prohibitions against taking are discussed, in part, below.

Section 7(a) of the Act, as amended, requires Federal agencies to evaluate their actions with respect to any species that is listed as endangered or threatened and with respect to its critical habitat, if any is being designated. Regulations implementing this interagency cooperation provision of the Act are codified at 50 CFR Part 402. Section 7(a)(2) requires Federal agencies to ensure that activities they authorize, fund, or carry out are not likely to jeopardize the continued existence of a listed species or to destroy or adversely modify its critical habitat. If a Federal action may affect a listed species or its critical habitat, the responsible Federal agency must enter into formal consultation with the Service. No critical habitat is being designated for *Cornutia obovata,* as discussed above. Federal involvement is not expected where the species is known to occur.

The Act and its implementing regulations found at 50 CFR 17.61, 17.62, and 17.63 set forth a series of general trade prohibitions and exceptions that apply to all endangered plants. All trade prohibitions of section 9(a)(2) of the Act, implemented by 50 CFR 17.61, apply. These prohibitions, in part, make it illegal for any person subject to the jurisdiction of the United States to import or export, transport in interstate or foreign commerce in the course of a commercial activity, sell or offer for sale in interstate or foreign commerce, or to remove and reduce to possession the species from areas under Federal jurisdiction. Certain exceptions can apply to agents of the Service and Commonwealth conservation agencies. The Act and 50 CFR 17.62 and 17.63 also provide for the issuance of permits to carry out otherwise prohibited activities involving endangered species under certain circumstances. It is anticipated that few trade permits for *Cornutia obovata* will ever be sought or issued since the species is not known to be in cultivation and is uncommon in the wild. Requests for copies of the regulations on plants and inquiries regarding them may be addressed to the Office of Management Authority, U.S. Fish and Wildlife Service, P.O. Box 27329, Central Station, Washington, DC 20038–7329 (202/343–4955).

National Environmental Policy Act

The Fish and Wildlife Service has determined that an Environmental Assessment, as defined under the authority of the National Environmental Policy Act of 1969, need not be prepared in connection with regulations adopted pursuant to section 4(a) of the Endangered Species Act of 1973, as amended. A notice outlining the Service's reasons for this determination was published in the **Federal Register** on October 25, 1983 (48 FR 49244).

References Cited

Ayensu, E.S., and R.A. DePilipps. 1978. Endangered and Threatened. Plants of the United States. Smithsonian Institution and World Wildlife Fund, Washington, DC xv + 403 pp.

Vivaldi, J.L., and R.O. Woodbury. 1981. Status report on *Cornutia obovata* Urban. Unpublished status report submitted to the U.S. Fish and Wildlife Service, Atlanta, Georgia. 35 pp.

Author

The primary author of this final rule is Mr. David Densmore, Caribbean Field Office, U.S. Fish and Wildlife Service,

P.O. Box 491, Boqueron, Puerto Rico 00622 (809/851-7297).

List of Subjects in 50 CFR Part 17

Endangered and threatened wildlife, Fish, Marine mammals, Plants (agriculture).

Regulation Promulgation

Accordingly, Part 17, Subchapter B of Chapter I, Title 50 of the Code of Federal Regulations, is amended as set forth below:

PART 17—[AMENDED]

1. The authority citation for Part 17 continues to read as follows:

Authority: Pub. L. 93-205, 87 Stat. 884; Pub. L. 94-359, 90 Stat. 911; Pub. L. 95-632, 92 Stat. 3751; Pub. L. 96-159, 93 Stat. 1225; Pub. L. 97-304, 96 Stat. 1411 (16 U.S.C. 1531 *et seq.*); Pub. L. 99-625, 100 Stat. 3500 (1986), unless otherwise noted.

2. Amend § 17.12(h) by adding the following, in alphabetical order under Verbenaceae, to the List of Endangered and Threatened Plants:

§ 17.12 Endangered and threatened plants.

* * * * *

(h) * * *

Species		Historic range	Status	When listed	Critical habitat	Special rules
Scientific name	Common name					
Verbenaceae—Verbena family:						
*	*	*	*	*	*	
Cornutia obovata	Palo de Nigua	U.S.C. (PR)	E	307	NA	NA
*	*	*	*	*	*	

Dated: March 24, 1988.

Susan Recce,

Assistant Secretary for Fish and Wildlife and Parks.

[FR Doc. 88-7648 Filed 4-6-88; 8:45 am]

BILLING CODE 4310-55-M

---

50 CFR Part 17

Endangered and Threatened Wildlife and Plants; Determination of Threatened Status for Solidago albopilosa (White-haired Goldenrod)

AGENCY: Fish and Wildlife Service, Interior.

ACTION: Final rule.

SUMMARY: The Service determines *Solidago albopilosa* to be a threatened species under authority of the Endangered Species Act of 1973 (Act), as amended. This species is known only from rockhouses and beneath overhanging ledges primarily in the Daniel Boone National Forest, Red River Gorge area of Menifee, Powell, and Wolfe Counties, Kentucky. All known population of the species are threatened by trampling from recreational use of their specific habitat within the National Forest. This action will implement the Federal protection provided by the Act for *Solidago albopilosa*.

EFFECTIVE DATE: May 9, 1988.

ADDRESS: The complete file for this rule is available for inspection, by appointment, during normal business hours at the Asheville Field Office, U.S. Fish and Wildlife Service, 100 Otis Street, Room 224, Asheville, North Carolina 28801.

FOR FURTHER INFORMATION CONTACT: Mr. Robert R. Currie at the above address (704/259-0321 or FTS 672-0321).

SUPPLEMENTARY INFORMATION:

Background

Solidago albopilosa E.L. Braun (white-haired goldenrod) is an upright-to-slightly-arching herbaceous plant that attains a height of 3 to 10 decimeters (12 to 39 inches). Braun (1942) described this species based on specimens discovered in the summer of 1940 in the Red River Gorge area of Menifee and Powell Counties, Kentucky. The leaves of *Solidago albopilosa* are prominently veined with a dark green upper surface and a pale underside. They vary in length from 6 to 10 centimeters (2.5 to 4.0 inches), with the larger leaves closer to the base of the stem. The stem is cylindrical and densely covered with fine white hairs. Clusters of small, yellow flowers begin blooming in late August. Pale brown, pubescent, oblong achenes (dry single-seed fruits) appear in October. *Solidago albopilosa* can be distinguished from its close relative *Solidago flexicaulis* by its generally downy appearance in contrast to the slick, smooth appearance of *S. flexicaulis* (Medley 1980).

The species is endemic to outcroppings of Pottsville sandstone in the Red River Gorge area of Menifee, Powell, and Wolfe Counties, Kentucky. Usually it is found in rockhouses (natural, shallow, cave-like formations) and beneath overhanging ledges. The plants grow behind the dripline in loose sand, on the floor, in crevices, and on ledges along the walls of rockhouses. Associated rockhouse species include round-leaved catchfly (*Silene rotundifolia*) and alumroot (*Heuchera parviflora*). Associated overstory species of the mixed mesophytic forest are oaks (*Querus* spp.), maples (*Acer* spp.), and mountain-laurels (*Kalmia* spp.) (Kral 1983).

Solidago albopilosa is only found within Kentucky's Red River Gorge. Most of this small area is within Daniel Boone National Forest and has been designated a National Geological Area (36 CFR 294.1). The Forest Service is planning to acquire the most significant of the several small, private inholdings within the Gorge in the future. One population segment of *Solidago albopilosa* occurs within one of these private inholdings. The geological features (rockhouses) with which the species is associated are common within the Red River Gorge; however, only a small percentage of these rockhouses currently supports the species (Andreasen and Eshbaugh 1973; Don Figg, Daniel Boone National Forest, personal communication, 1986).

The unique features and habitat of *Solidago albopilosa* have made it an object of great interest to botanists. Thorough searches of suitable habitat in areas adjacent to the Gorge and in other parts of the state have failed to reveal the presence of any additional populations. (Marc Evans, Kentucky Nature Preserves Commission, personal communication, 1986). *Solidago albopilosa's* unique habitat is subject to intensive disturbance by recreational visitors to the Gorge (Medley 1980). Rockhouses, including those that support *Solidago albopilosa*, are very popular destinations or sites for hiking, camping, climbing, picnicking, building campfires, and digging for Indian artifacts. These activities have threatened and continue to threaten *Solidago albopilosa*.

Federal government actions on this species began with section 12 of the Endangered Species Act of 1973, as amended (16 U.S.C. 1531 *et seq.*), which directed the Secretary of the Smithsonian Institution to prepare a report on those plants considered to be endangered, threatened, or extinct. This

report, designated as House Document No. 94–51, was presented to Congress on January 9, 1975. On July 1, 1975, the Service published a notice (40 FR 27823), which formally accepted the Smithsonian report as a petition within the context of section 4(c)(2) (now section 4(b)(3)) of the Act. By accepting this report as a petition the Service also acknowledged its intention to review the status of the plant taxa named within the report. *Solidago albopilosa* was included in the July 1, 1975, notice of review. On June 16, 1976, the Service published a proposed rule (41 FR 24523) to determine approximately 1,700 vascular plant taxa to be endangered species pursuant to section 4 of the Act; *Solidago albopilosa* was included in this proposal.

The 1978 amendments to the Endangered Species Act required that all proposals over two years old be withdrawn. On December 10, 1979 (44 FR 70796), the Service published a notice withdrawing the proposal of June 6, 1976. On December 15, 1980, the Service published a revised notice of review for native plants (45 FR 82480). *Solidago albopilosa* was included in that notice as a Category-1 species. Category-1 species are those species for which the Service has sufficient biological data to propose to list them as endangered or threatened species.

Section 4(b)(3)(B) of the Endangered Species Act, as amended in 1982, requires the Secretary to make certain findings on pending petitions within 12 months of their receipt. Section 2(b)(1) of the 1982 amendments further requires that all petitions pending on October 13, 1982, be treated as having been newly submitted on that date. This was the case for *Solidago albopilosa* because of the acceptance of the 1975 Smithsonian report as a petition. On October 13, 1983; October 12, 1984; October 11, 1985; and October 12, 1986, the Service found that the petitioned listing of *Solidago albopilosa* was warranted but precluded by other pending listing actions, in accordance with section 4(b)(3)(B)(iii) of the Act.

On April 24, 1987, the Service published (52 FR 13797) a proposal to list *Solidago albopilosa* as an endangered species. That proposal constituted the final 1-year finding as required by the 1982 amendments to the Endangered Species Act. The proposal provided information on the species' biology, status, and threats, and the potential implications of listing. The proposal also solicited comments on the status, distribution, and threats to the species.

Summary of Comments and Recommendations

In the April 24, 1987, proposed rule and associated notifications, all interested parties were requested to submit factual reports or information that might contribute to the development of a final rule. Appropriate State agencies, county governments, Federal agencies, scientific organizations, and other interested parties were contacted and requested to comment. Newspaper notices inviting public comment were published in the *Menifee County News* and the *Clay City Times* on May 21, 1987, and in the *Wolfe County News* on May 22, 1987. The Service received five responses to the proposed rule—one from a State commission and four from Federal agencies.

The Kentucky Nature Preserves Commission supported the proposed addition of *Solidago albopilosa* to the Federal threatened and endangered species list.

The U.S. Army Corps of Engineers, Louisville District; the Federal Energy Regulatory Commission; and the Tennessee Valley Authority stated that the addition of this species to the Federal list would not affect any of their projects currently under consideration.

The U.S. Forest Service stated that based upon the current known distribution of the species, the ability of the species to recover from intensive disturbances, and the existence of several remote sites supporting population segments of the plant, that listing the species as threatened rather than endangered should be considered. They further offered their assistance and support to future activities needed to ensure the continued existence of *Solidago albopilosa*.

The Service concurs with the conclusion that *Solidago albopilosa* merits protection under the Act. The Service has reevaluated the available information on the status of, and threats to, this species and believes that threatened, rather than endangered, status is appropriate.

Summary of Factors Affecting the Species

After a thorough review and consideration of all information available, the Service has determined that *Solidago albopilosa* should be classified as a threatened species. Procedures found at section 4(a)(1) of the Act and regulations (50 CFR Part 424) promulgated to implement the listing provisions of the Act were followed. A species may be determined to be an endangered or threatened species due to one or more of the five factors described in section 4(a)(1). These factors and their application to *Solidago albopilosa* E. L. Braun (white-haired goldenrod) are as follows:

A. *The present or threatened destruction, modification, or curtailment of its habitat or range. Solidago albopilosa* is only known from a small number of rockhouses in the Red River Gorge of Menifee, Powell, and Wolfe Counties, Kentucky. The species has been extirpated from some of these sites and is being adversely impacted by human activities at most other sites (Medley 1980). A census taken by Medley (1980) resulted in a population estimate of 10,500 individuals. Field work since that time by Forest Service personnel (B. Knowles, personal communication, 1986) has revealed the presence of several additional population segments. These additional segments are located in the more remote and inaccessible portions of the Gorge. Medley (1980) states that all but two of the sites he visited showed some disturbance by recreational use of the gorge. He further reports that J. Varner, a local botanist who has observed the species over several years, believes that *Solidago albopilosa* has been extirpated from numerous rockhouse sites. Recreational activities that directly impact rockhouses and *Solidago albopilosa* include hiking, picnicking, rappelling, camping, and climbing. The presence of Indian artificats within the area, and the damage caused by collectors pursuing them, subjects even the most remote rockhouses to human disturbance (Marc Evans, Kentucky Nature Preserves Commission, personal communication, 1984; D. Figg, personal communication, 1986). Due to its vulnerable position on the floors and walls, *Solidago albopilosa* is especially susceptible to visitor damage. Recreational use of the Red River Gorge is currently at about 240,000 recreational visitor days per year. Management practices designed to reduce recreational use of the rockhouses are needed to ensure the continued existence of the plant.

Solidago albopilosa would also be affected by the proposed Red River Lake project. Though no longer being pursued as a viable project by the U.S. Army Corps of Engineers, the project, if implemented, could adversely affect the species through associated construction and recreation activities. Although the proposed high water level would not inundate the plant's habitat, the project would need to be planned and completed with the protection of *Solidago albopilosa* being a major consideration.

B. *Overutilization for commercial, recreational, scientific, or educational purposes. Solidago albopilosa* is subject to taking and vandalism due to the accessibility of most of the rockhouses and the high rate of visitor use the gorge and particularly the rockhouses receive.

C. *Disease or predation.* No such threats currently face *Solidago albopilosa.*

D. *The inadequacy of existing regulatory mechanisms.* Endangered, threatened, and unique plants found on National Forest lands are protected from damage and taking by Federal regulation (36 CFR 261.9). However, limited manpower makes enforcement of this regulation difficult. *Solidago albopilosa* is included as an endangered species on the unofficial list of endangered, threatened, and rare species prepared by the Kentucky Academy of Science, but receives no additional protection from this recognition.

E. *Other natural or manmade factors affecting its continued existence.* Due to its unique topographic structure, the Red River Gorge experiences different climatic conditions from those found on the Cumberland plateau and landscapes to the east and west (Martin 1976). *Solidago albopilosa* is adapted to the unique combination of climatic, geologic, and topographic conditions present within the Gorge. Even seemingly minor changes in the surrounding forest could impact this shade-tolerant plant directly through drying and erosion and indirectly by increasing competition with less shade-tolerant species (Kral 1983). While no such changes currently threaten the plant, management planning designed to take into account the requirements of the species is needed to ensure its continued existence.

The Service has carefully assessed the best scientific and commercial information available regarding the past, present, and future threats faced by this species in determining to make this rule final. Based on this evaluation, the preferred action is to list *Solidago albopilosa* as threatened. Threatened status is deemed appropriate for this species because of the Federal ownership of most of the lands on which it occurs and the commitment of the Federal agency responsible for managing these lands to take whatever actions are necessary to ensure the continued existence of *Solidago albopilosa.* Critical habitat is not being proposed for the species for the reasons given below.

Critical Habitat

Section 4(a)(3) of the Act, as amended, requires that, to the maximum extent prudent and determinable, the Secretary designate critical habitat at the time a species is determined to be endangered or threatened. The Service finds that designation of critical habitat is not prudent for this species at this time. *Solidago albopilosa* occurs only in rockhouses, where the species is vulnerable to taking and vandalism. Publication of a critical habitat description and map in the **Federal Register** would draw attention to the remaining populations of *Solidago albopilosa,* making the species more vulnerable and increasing law-enforcement problems. Since almost all of the known plants occur on Federal land, any activity that could affect the continued existence of the species will be brought to the attention of the Service through the section 7 consultation process. The private landowners on whose land the species occurs have been notified of the presence of *Solidago albopilosa* and of the importance of protecting its habitat. Protection of this species' habitat will be addressed through the recovery process and through the section 7 jeopardy standard. Therefore, it would not be prudent to determine critical habitat for *Solidago albopilosa* at this time.

Available Conservation Measures

Conservation measures provided to species listed as endangered or threatened under the Endangered Species Act include recognition, recovery actions, requirements for Federal protection, and prohibitions against certain practices. Recognition through listing encourages and results in conservation actions by Federal, State, and private agencies, groups, and individuals. The Act provides for possible land acquisition and cooperation with the States and requires that recovery actions be carried out for all listed species. Such actions are initiated by the Service following listing. The protection required of Federal agencies and the prohibitions against taking are discussed, in part, below.

Section 7(a) of the Act, as amended, requires Federal agencies to evaluate their actions with respect to any species that is proposed or listed as endangered or threatened and with respect to its critical habitat, if any is being designated. Regulations implementing this interagency cooperation provision of the Act are codified at 50 CFR Part 402. Section 7(a)(4) requires Federal agencies to ensure that activities they authorize, fund, or carry out are not likely to jeopardize the continued existence of such a species or to destroy or adversely modify its critical habitat. If a Federal action may affect a listed species or its critical habitat, the responsible Federal agency must enter into formal consultation with the Service.

Effects upon the U.S. Forest Service will be minimal, consisting of the development and implementation of management practices designed to reduce visitor impacts to the most important rockhouses that support the plant and the careful planning of any future timber removal operations so that the continued existence of *Solidago albopilosa* is ensured. Involvement of the U.S. Army Corps of Engineers will occur only if the suspension of the Red River Lake Project is lifted. Development of plans designed to reduce the impacts of reservoir construction activities and recreational development, the construction of the dam, and the subsequent recreation activity, will be needed if the project is reauthorized in the future. Because of the geological and biological significance of the Red River Gorge and the official objection to the project by the Commonwealth of Kentucky, it is not anticipated that the project will be reauthorized.

The Act and its implementing regulations, found at 50 CFR 17.71 and 17.72, set forth a series of general trade prohibitions and exceptions that apply to all threatened plants. All trade prohibitions of section 9(a)(2) of the Act, implemented by 50 CFR 17.71, will apply. These prohibitions, in part, make it illegal for any person subject to the jurisdiction of the United States to import or export, transport in interstate or foreign commerce in the course of commercial activity, sell, or offer for sale, this species in interstate or foreign commerce, or remove and reduce to possession the species from areas under Federal jurisdiction. Seeds from cultivated specimens of threatened plant species are exempt from these prohibitions provided that a statement of "cultivated origin" appears on their containers. Certain exceptions apply to agents of the Service and State conservation agencies. The Act and 50 CFR 17.72 also provide for the issuance of permits to carry out otherwise prohibited activities involving threatened species under certain circumstances. It is anticipated that few trade permits would ever be sought or issued since the species is not common in the wild or in cultivation. Requests for copies of the regulations on plants and inquiries regarding them may be

addressed to the Office of Management Authority, U.S. Fish and Wildlife Service, P.O. Box 27329, Washington, DC 20038–7329 (202/343–4955).

National Environmental Policy Act

The Fish and Wildlife Service has determined that an environmental assessment, under the authority of the National Environmental Policy Act of 1969, need not be prepared in connection with regulations adopted pursuant to section 4(a) of the Endangered Species Act of 1973, as amended. A notice outlining the Service's reasons for this determination was published in the **Federal Register** on October 25, 1983 (48 FR 49244).

References Cited

Andreasen, M.L., and W.H. Eshbaugh. 1973. *Solidago albopilosa* Braun, a little known goldenrod from Kentucky. Castanea 38(2):117–132.

Braun, E.L. 1942. A new species and a new variety of *Solidago* from Kentucky. Rhodora 44:1–4.

Kral, R. 1983. A report on some rare, threatened, or endangered forest-related vascular plants of the South. Vol. II. Technical Publication R8–TP2. USDA, Forest Service, Atlanta, Georgia. Pp. 1252–1255.

Martin, W.H. 1976. The Red River Gorge controversy in Kentucky: a case study in preserving a natural area. Association of Southeastern Biologists Bulletin 23(3):163–167.

Medley, M.E. 1980. Endangered and threatened plant status surveys. Unpublished report to the Southeastern region of the U.S. Fish and Wildlife Service under Contract No. 14–16–0004–79–105, 24 pp.

Authors

The primary author of this final rule is Robert R. Currie, Asheville Field Office, U.S. Fish and Wildlife Service, 100 Otis Street, Room 224, Asheville, North Carolina 28801 (704/259–0321 or FTS 672–0321).

List of Subjects in 50 CFR Part 17

Endangered and threatened wildlife, Fish, Marine mammals, Plants (agriculture).

Regulation Promulgation

Accordingly, Part 17, Subchapter B of Chapter I, Title 50 of the Code of Federal Regulations, is amended as set forth below:

PART 17—[AMENDED]

1. The authority citation for Part 17 continues to read as follows:

Authority: Pub. L. 93–205, 87 Stat. 884; Pub. L. 94–359, 90 Stat. 911; Pub. L. 95–632, 92 Stat. 3751; Pub. L. 96–159, 93 Stat. 1225; Pub. L. 97–304, 96 Stat. 1411 (16 U.S.C. 1531 *et seq.*); Pub. L. 99–625, 100 Stat. 3500 (1986), unless otherwise noted.

2. Amend § 17.12(h) by adding the following, in alphabetical order under Asteraceae, to the List of Endangered and Threatened Plants:

§ 17.12 Endangered and threatened plants.

* * * * *

(h) * * *

Species		Historic range	Status	When listed	Critical habitat	Special rules
Scientific name	Common name					
Asteraceae—Aster family:						
*	*	*	*	*	*	*
Solidago albopilosa	White-haired goldenrod	U.S.A. (KY)	T	356	NA	NA
*	*	*	*	*	*	*

Dated: March 25, 1988.

Susan Recce,

Assistant Secretary for Fish and Wildlife and Parks.

[FR Doc. 88–7649 Filed 4–6–88; 8:45 am]

BILLING CODE 4310–55–M

VOL
53

ISS
67

AP
7

1988

UMI

federal register

Thursday
April 7, 1988

Part VI

Department of Transportation

Research and Special Programs Administration

49 CFR Part 177

Highway Routing Standards for Hazardous Materials; Advance Notice of Proposed Rulemaking and Notice of Public Hearing

DEPARTMENT OF TRANSPORTATION

Research and Special Programs Administration

49 CFR Part 177

[Docket No. HM-203 Notice No. 88-3]

Highway Routing Standards for Hazardous Materials

AGENCY: Research and Special Programs Administration (RSPA), DOT.

ACTION: Advance Notice of Proposed Rulemaking and Notice of Public Hearing.

SUMMARY: This Notice invites public comment and announces a public hearing concerning the possible need to establish routing criteria, requirements, and methodologies for analyzing alternative routes for the highway transportation of non-radioactive hazardous materials. This inquiry is intended to assist RSPA in deciding what Federal regulatory action, if any, should be undertaken to improve the transportation safety of non-radioactive hazardous materials through highway routing requirements.

DATES: *Comments.* Comments must be submitted on or before October 11, 1988.

Public Hearings. Public hearings will be held on June 14, 1988, from 9:30 a.m. to 5:00 p.m., in Sacramento, California and on Septembr 15, 1988, 9:30 a.m. to 5:00 p.m., in Washington, DC. Hearings may close earlier than 5:00 p.m. upon presentation of oral comments from all persons desiring to comment.

ADDRESSES: *Comments.* Written comments should be submitted to the Dockets Unit (DHM-30), Research and Special Programs Administration, U.S. Department of Transportation, Washington, DC 20590. Comments should identify the docket and notice number and should be submitted in five copies. Persons wishing to receive confirmation of the receipt of their comments should include a self-addressed stamped postcard. The Dockets Unit is located in Room 8426 of the Nassif Building, 400 Seventh Street SW., Washington, DC 20590. Public dockets may be reviewed between the hours of 8:30 a.m. and 5:00 p.m., Monday through Friday, except holidays.

Public hearings. The public hearings will be held at the following locations:

(1) June 14, 1988—Holiday Inn—Capital Plaza, 300 J Street, Sacramento, California 95814. (Telephone: (916) 446-0100)

(2) September 15, 1988—U.S. Department of Transportation, FAA Auditorium, Third Floor, 800 Independence Avenue SW., Washington, DC 20590

Any person wishing to present an oral statement at the public hearings should notify the Dockets Unit, by telephone or in writing, at least two days in advance of the hearing date. Each request must identify the speaker; organization represented, if any; daytime telephone number; and the anticipated length of the presentation, not to exceed ten minutes. Written text of oral statements should be presented to the hearing officer prior to the oral presentation.

FOR FURTHER INFORMATION CONTACT: Joseph Nalevanko, Policy Development and Information Systems Division, (202) 366-4484, or Lee Jackson, Standards Division, (202) 366-4488, Office of Hazardous Materials Transportation, RSPA, Washington, DC 20590.

SUPPLEMENTARY INFORMATION:

Background

As demonstrated by its recent legislative proposal (H.R. 4069), the Department is concerned about the adequacy of present legal requirements concerning the routing of non-radioactive hazardous materials. While Congress explores various legislative improvements, the Department is undertaking an exhaustive consideration of possible regulatory requirements for the routing of non-radioactive materials.

The Hazardous Materials Transportation Act (HMTA: Pub. L. 93-633) (49 App. U.S.C. 1801 *et seq.*) is the basic Federal legislation which addresses the safe transportation of hazardous materials. Under the HMTA, DOT has the authority to regulate, among other things, the routing of hazardous materials (see: 49 App. U.S.C. 1804). The Department can exercise this authority in a variety of ways. It can establish specific routing criteria, such as criteria which require avoidance of highways traversing heavily populated areas or selection of routes least likely to result in the release of a hazardous material. The Department can also establish specific procedural requirements for routing hazardous materials, such as a requirement that routing decisions be based on documentable risk analysis methodology or a requirement that parties affected by routing decisions be included in the decision-making process.

The purpose of this rulemaking is to consider the transportation safety aspects of the highway routing of non-radioactive materials. This will include consideration of routing decisions now being made by carriers and shippers and State and local governments and the methods by which those decisions are made. This rulemaking will also consider the effects, particularly in terms of safety, of existing and possible Federal, State, and local routing actions, including the effects of actions by one State or locality on other jurisdictions.

Previous Routing Regulatory Activity

The Department has previously exercised its routing authority under the HMTA relative to the transportation of radioactive materials by highway under Docket HM-164 (46 FR 5298). Due to the several years of successful routing experience gained in this area, it will be useful to describe this rulemaking in some detail.

As a result of Docket HM-164, § 177.825 of the Hazardous Materials Regulations (HMR) was promulgated and requires that motor carriers, in selecting routes for transporting placarded radioactive materials, consider information such as accident rates, transit time, population density, time of day, and day of week during which transportation will occur.

Additionally, for highway route-controlled quantity (HRCQ) shipments of radioactive materials (e.g., spent nuclear fuel), motor carriers must use "preferred routes." A preferred route is either (1) an Interstate System highway for which an alternative route has not been designated by a State routing agency, or (2) an alternative route designated by a State routing agency in accordance with DOT guidelines or an equivalent routing analysis (see § 171.8, "State Designated Route"). Motor carriers of HRCQ shipments must select preferred routes which minimize transit time for shipments, except that an Interstate System bypass or beltway around a city must be used when available. During the rulemaking process, DOT addressed the risks of using the limited access Interstate System highways versus secondary highway systems for the transportation of radioactive materials. Based on available risk assessments, and the extensive comments received in response to the rulemaking, DOT concluded that the use of Interstate System highways generally would ensure the safe routing of HRCQ shipments of radioactive materials.

In Docket HM-164, DOT recognized the significant concerns and interests that State, regional and local governments have in the highway routing of radioactive materials and the important role which their actions and knowledge of local conditions can have in reaching effective routing decisions. Accordingly, 49 CFR 177.825(b) provides

that a State routing agency may designate an alternative route in place of or in addition to an interstate highway. In designating such routes, States are required to consult and coordinate with affected local jurisdictions and other affected States to ensure consideration of impacts and continuity of designated routes. To assist a State routing agency in determining an acceptable alternative route, DOT developed a guidance document entitled, "Guidelines for Selecting Preferred Highway Routes for Highway Route Controlled Quantity Shipments of Radioactive Materials". It should be emphasized that although this guidance document provides a methodology for analyzing alternative routes, it is not the only methodology which can be used when conducting an analysis of routing alternatives. State routing agencies may use equivalent routing analyses which consider overall risk to the public; thus, they may develop better methods of risk assessment to identify important risk factors peculiar to their own situations. Under Docket HM-164, state governments are given considerable latitude to carry out their highway routing functions. The routing criteria and requirements for the transportation of radioactive materials have been effectively applied by a number of State governments for several years.

Routing of Non-radioactive Materials

The Department is considering the extent to which, if at all, it should exercise its rulemaking authority with respect to the routing of non-radioactive hazardous materials. This is important because, although the current regulations recognize the authority of state and local governments to make routing decisions concerning non-radioactive hazardous materials, the regulations do not provide a framework which ensures that such decisions are consistent, cost-effective and, in fact, conducive to the public safety. Since the publication of the final rule in Docket HM-164, many requests and solicitations have been made to the Department by Congress, by State and local governments, by industry, and by others expressing concern over the further use of the Department's routing authority in its application to hazardous materials, other than radioactive hazardous materials, and of the public safety implications of doing so.

The concern of many sectors of the public and their deep interest in these matters stem from a variety of factors, which are discussed below.

Inconsistent and Ambiguous Federal Regulations

An existing DOT regulation (49 CFR 397.9) currently addresses the highway routing of non-radioactive hazardous materials, including Class A or Class B explosives. Section 397.9, which was issued under statutes that predate the HMTA (18 U.S.C. 834 and 49 U.S.C. 304), states, in part:

Section 397.9 Routes.

(a) Unless there is no practicable alternative, a motor vehicle which contains hazardous materials must be operated over routes which do not go through or near heavily populated areas, places where crowds are assembled, tunnels, narrow streets, or alleys. Operating convenience is not a basis for determining whether it is practicable to operate a motor vehicle in accordance with this paragraph. This paragraph does not apply to radioactive materials (see § 177.825 of this title).

Except for hazardous materials shipments originating from or destined to heavily populated areas, this regulation prohibits motor carriers from operating placarded vehicles containing non-radioactive hazardous materials on routes, including Interstate System highway routes, that pass through heavily populated areas, unless there is no practical alternative. But there are few, if any, heavily populated areas or major cities that are not connected by the Interstate system. In recognition of the fact that accident statistics, both in terms of the frequency and severity of accidents, support the use of Interstate System highways, DOT published an interpretation of 49 CFR 397.9 in the Federal Register on November 23, 1977, (42 FR 60078) which states that when "a vehicle is passing through a populated or congested area, use of a beltway or other bypass would be considered the appropriate route." This interpretation, which itself is somewhat ambiguous and perhaps not widely know, greatly restricts the scope of § 397.9. Also, that section has been determined by the Department's General Counsel not to justify local prohibition of hazardous materials transportation conducted in accordance with the HMR. See Appendix C to Inconsistency Ruling 1, 43 FR 16954 at 16961, published April 20, 1978.

Another DOT regulation (49 CFR 397.3) not issued under the authority of the HMTA, expressly recognizes state and local traffic regulations, and states:

Section 397.3 State and local laws, ordinances, and regulations.

Every motor vehicle containing hazardous materials must be driven and parked in compliance with the laws, ordinances, and regulations of the jurisdiction in which it is being operated, unless they are at variance with specific regulations of the Department of Transportation which are applicable to the operation of that vehicle and which impose a more stringent obligation or restraint.

This regulation sanctions State and local requirements which concern the mechanics of driving and handling vehicles. It might appear that this regulation could also be interpreted to mean that if such requirements include routing restrictions for certain types of non-radioactive materials, then motor carriers are expected to comply with them. However, in a 1976 letter to the Nuclear Regulatory Commission, the Department's General Counsel stated that 49 CFR 397.3 requires compliance only with state or local requirements related to the mechanics of driving and the handling of vehicles of the type contained in Part 397 and that it does not require compliance with state or local restrictions that are tantamount to a ban on hazardous materials transportation. See Appendix C to Inconsistency Ruling 1, 43 FR 16954 at 16961, published April 20, 1978.

Recent Congressional action (the Motor Carrier Safety Act of 1984), when read in the light of Secretarial rulemaking delegations, has in effect transferred at least partial responsibility for these regulations to RSPA. Section 206(b) of the Motor Carrier Safety Act of 1984 states:

The Secretary shall not eliminate or modify any existing motor carrier safety rule pertaining exclusively to the maintenance, equipment, loading or operation (including routing) of vehicles carrying materials found to be hazardous for the purposes of the Hazardous Materials Transportation Act (49 U.S.C. App. 1801-1812) unless and until an equivalent or more stringent regulation has been promulgated under the Hazardous Materials Transportation Act.

This provision includes Part 397 of the Federal Motor Carrier Safety Regulations and, as a result, no portion of Part 397 which pertains to hazardous materials transportation may be modified, unless an equivalent or more stringent regulation is issued under the Hazardous Materials Transportation Act.

Another regulation (49 CFR 177.810) with important routing implications was issued under the HMTA and authorizes restrictions on the transportation of non-radioactive hazardous materials through certain urban tunnels. Section 177.810 states:

Section 177.810 Vehicular tunnels.

Except as regards radioactive materials, nothing contained in Parts 170-189 of this subchapter shall be so construed as to nullify or supersede regulations established and

BEST COPY AVAILABLE

published under authority of State statute or municipal ordinance regarding the kind, character, or quantity of any hazardous material permitted by such regulations to be transported through any urban vehicular tunnel used for mass transportation. For radioactive materials, see § 177.825 of this part.

A fourth regulation (49 CFR 177.853(a)) that could be interpreted as establishing a criterion for the routing of hazardous materials states, in part:

Section 177.853 Transportation and delivery of shipments.

(a) *No unnecessary delay in movement of shipments.* All shipments of hazardous materials shall be transported without unnecessary delay, from and including the time of commencement of the loading of the cargo until its final discharge at destination.

The intent of this section is to prevent hazardous materials shipments from sitting for extended periods of time on loading docks or in idle trucks. However, this section might also be interpreted to mean that hazardous materials should travel via the fastest route available; in other words, it could be interpreted as establishing a routing criterion that the in-transit time of hazardous materials shipments be minimized.

In a recent Congressional report, entitled "Promoting Safer Highway Routing of Ultrahazardous Cargoes: DOT Oversight", it was pointed out that these regulations are in many respects ambiguous and entail potentially conflicting routing criteria. RSPA is seeking suggestions for the elimination or amelioration of these problems.

The Need for Consistent and Cost-effective Routing Standards

There are a variety of other factors that underlie the concerns of many sectors of the public in the routing of hazardous materials and their deep interest in these matters. Currently, there exists a large number of State and local routing requirements and control measures for the transportation of non-radioactive hazardous materials. In some cases, these requirements and control measures (such as speed and time of day restrictions) can serve to impede the free flow of commerce, with little or no demonstrable effect on public safety. In some cases, they merely result in the exportation of risk from one jursidiction to other jurisdictions, which may not be as prepared or as able to deal with such risks.

In cases where reducing population exposure is of primary concern (e.g., 49 CFR 397.9, discussed above). State and local governments have attempted to route hazardous materials shipments via secondary roads, despite the fact that the Interstate System highways generally have the lowest truck accident rate per mile and provide the shortest distance between major cities. In many cases, requirements have been imposed on the basis of rudimentary and incomplete analyses, or by a decision-making process that is essentially subjective and undocumented. While it is difficult to assess the net overall effect of these routing requirements, either in terms of enhancing public safety or of improving national transportation efficiency, it is likely that these requirements have caused confusion and concern and have greatly complicated the logistical network involving both hazardous and non-hazardous materials shipments.

On the other hand, RSPA realizes that virtually every community in the United States is subject to the transportation of hazardous materials, and that the people of these communities have a direct stake and interest in a safe and efficient national system for the transportation of these materials. For example, gasoline and many agricultural chemicals are hazardous materials which are needed in virtually every community; serious economic dislocations and social hardships could occur in these communities, if such materials are effectively banned by neighboring jurisdictions. In fact, the transportation of hazardous materials is vital to the nation's economic well-being, its competitive international standing, and its national security.

In addition, no other industrial activity in the United States as vast and complex as the transportation of hazardous materials has a comparable safety record. The safety record of both radioactive and non-radioactive hazardous materials transportation has been, and continues to be, excellent; and this record, from a highway transportation safety standpoint, can be correlated in large part to the extensive use of the Interstate System highways. This system generally connects heavily populated urban areas. Large volumes of hazardous materials are moved annually into and out of the industrial and commercial zones that surround or are located within such areas. Generally, the population exposed to hazardous materials shipments in such areas cannot be significantly reduced, unless there are significant reductions in the amount of hazardous materials moved into and out of such areas. In particular, the total population exposure to hazardous materials shipments in such areas cannot be significanty reduced by banning or diverting hazardous materials shipments that merely *transit* such areas. Likewise, the magnitude of the task facing emergency response personnel in such areas is not significantly reduced by such bans or reroutings. Such actions, however, can signficantly increase the tasks of emergency response personnel in other areas, often nearby towns and rural communities, who may not be as well trained and equipped as responders in metropolitan areas.

In summary, it is understandable that State and local governments should focus their attention on the routing of hazardous materials. The Department has consistently recognized the significant role of State and local governments in making highway routing decisions. The Department knows that it lacks, and cannot possibly duplicate, their expertise and knowledge concerning local highways, land use patterns, highway geometry, and the emergency response capabilities of their jursidictions. Nevertheless, there appears to be a need for uniform national standards to prevent the widespread proliferation of varying, conflicting, counterproductive, and unduly burdensome hazardous materials routing requirements by State and local governments.

Some Possible Regulatory Routing Options

Three alternatives to existing routing requirements are outlined below to illustrate possible approaches that might be used to regulate the highway routing of non-radioactive hazardous materials. At this time, RSPA is not proposing to adopt any of these alternatives. They are presented merely as illustrations of the type of regulatory authority which RSPA might exercise under the HMTA.

A. *Require compliance with routing standards and an administrative/analytic process similar to those required for radioactive materials.* This option would establish Federal routing standards for certain types of hazardous materials (e.g., materials extremely toxic by inhalation and Class A and B explosives) similar to those which exist for the routing of certain types of radioactive materials. This option might require use of Interstate System highways, unless a State routing authority designates an alternative "preferred" route based on an objective, documentable risk-analysis methodology and full consultation with other affected jurisdictions. In the absence of a State designated "preferred" route, and in place of utilizing Interstate System highways, motor carriers might be required to ensure that any motor vehicle containing non-radioactive hazardous

material for which placarding is required is operated on routes that minimize transportation risk. This would require a risk analysis of one or more alternative routes. The administrative and analytical process to be pursued by states in designating a "preferred" route would be contained in guidelines or a guidance document which would set forth the minimum requirements for conducting a risk assessment of alternative routes. Such a document currently exists and is entitled "Guidelines for Applying Criteria to Designate Routes for Transporting Hazardous Materials." This document is being revised and will be republished by RSPA in the near future.

B. *Require shippers and motor carriers of non-radioactive hazardous materials to conduct risk analyses of highway routes, in accordance with certain Federally prescribed procedures, and to select only the safest routes for the transportation of hazardous materials.* This option follows very closely the recommendations of the recent Congressional report on the routing of certain hazardous materials, noted previously. Under this option, DOT would promulgate by regulation a formula for the risk analyses of highway routes for non-radioactive hazardous materials. The regulation would specify the types of data to be taken into account in such analyses, e.g., demographic data, highway characteristics, location of emergency response resources, accident data per route segment, etc. The regulation would tailor the routing analyses to the particular public health and safety threats posed by hazardous materials, with more stringent analysis standards being applied to the more dangerous types of hazardous materials. Such standards would require the use of alternative-route risk analyses to ascertain routes with the lowest risk. To make enforcement possible, a recordkeepng requirement would be included. The records would contain: the analysis of the routes, alternative routes considered, and a certification that the safest route is taken.

C. *Require each motor carrier of certain types of hazardous materials to be licensed for each non-radioactive hazardous materials route.* This option would require that each motor carrier obtain prior Departmental approval of any route to be used for the transportation of non-radioactive hazardous materials. Motor carriers might be required to file proposed route plans supported by routing analyses, and public comment might be solicited on the routes proposed. If a carrier's route proposal were accepted, RSPA would authorize carrier operation under the plan for a specified period of time, perhaps two years. Plan approval would preempt state and local requirements not consistent with the plan; however, State or local requirements which affect the carrier that are consistent with the plan might be expressly incorporated into the plan by the carrier or RSPA. As with the other options, it would be necessary to establish some general criteria for evaluating route plans. Alternative versions of this option would involve similar licensing programs at the State or local level.

Request for Comments

Comments are solicited concerning the preceding discussion of possible regulatory options and on the following questions. Supporting data and analyses will enhance the value of comments submitted.

1. Should non-radioactive hazardous materials be subjected to any Federal highway routing requirements?

2. If so, what types, quantities, and forms of non-radioactive hazardous materials should be subject to such regulatory requirements?

3. What routing criteria, or combination of criteria (e.g., minimization of the population exposed to such shipments, or of the time people are exposed to such shipments) should be considered for any such routing requirements?

4. Should the risk analysis be based on absolute risk or on relative risk considerations, or on a combination of both?

a. What is an acceptable level of absolute risk, below which alternatives need not be analyzed?

b. When should relative route risk analyses be required?

c. If a relative route risk analysis is performed, should a minimum level of relative risk reduction be required to justify a routing decision?

5. What factors and data should be taken into consideration in alternative-route risk analyses?

6. Who should conduct the analyses: industry (shippers and/or carriers), or the government?

7. To what extent does industry now conduct such analyses?

8. How often should they be conducted?

9. How expensive are such analyses?

10. What are the additional costs and the safety benefits to industry, emergency response personnel, and the public of imposing routing requirements?

11. What are the costs and benefits of imposing routing requirements on hazardous materials shipments that merely transit a city, i.e., that do not originate or terminate in that city?

12. What are the costs of communicating to interested parties (e.g., via road signs, maps) routes that are prohibited from, or restricted to, certain types of hazardous materials?

13. What should be the roles of Federal, State and local governments in the routing of non-radioactive hazardous materials?

14. What role, if any, should carriers and/or shippers play in the routing of non-radioactive hazardous materials?

15. Is a generalized DOT requirement preferable to a procedure that entails an individual DOT examination of some or all routes?

16. To what extent, if at all, should DOT require consultations with or agreements by, all affected jurisdictions, as conditions precedent to the imposition of a routing requirement?

17. What role, if any, should DOT play in arbitrating or resolving interstate or interjurisdictional routing issues?

18. Should there be Federal, State or local licensing of non-radioactive hazardous materials transportation routes?

Commenters are not limited to responding to the questions raised above and may submit any comments and evidence relevant to the highway routing of non-radioactive hazardous materials. In addition, commenters are encouraged to provide comments on "major rule" considerations under the DOT regulatory procedures (44 FR 11034), potential environmental impacts subject to the National Environmental Policy Act, information collection burdens which must be reviewed under the Paperwork Reduction Act, and economic impact on small entities subject to the Regulatory Flexibility Act.

It is likely that any rulemaking issued to implement the concepts discussed in this ANPRM will have sufficient Federalism implications to warrant the preparation of a Federalism Assessment pursuant to Executive Order 12612 ("Federalism") (52 FR 41685, October 30, 1987). Therefore, commenters are requested to address, with respect to each possible regulatory proposal, the following matters:

(1) the extent to which each proposal would impose additional costs or burdens on the States, including the likely source of funding for the States and the ability of the States to fulfill the purposes of that proposal;

(2) the extent to which each proposal would affect the States' ability to discharge traditional state governmental

functions, or other aspects of state sovereignty; and

(3) the extent to which each proposal is consistent with the requirements in Executive Order 12612 that Federal agencies shall: (1) encourage States to develop their own policies to achieve program objectives and to work with appropriate officials in other states; (2) refrain, to the maximum extent possible, from establishing uniform, national standards for programs, and when possible defer to the states to establish standards; and (3) when national standards are required, consult with appropriate officials and organizations representing the states in developing those standards.

Commenters should be aware that section 105(b) of the HMTA requires DOT to consider any relevant suggestions of the Interstate Commerce Commission before issuing any regulation with respect to the routing of hazardous materials.

Issued in Washington, DC on April 1, 1988, under the authority delegated in 49 CFR Part 106, Appendix A.

Alan I. Roberts,

Director, Office of Hazardous Materials Transportation.

[FR Doc. 88-7863 Filed 4-6-88; 8:45 am]

BILLING CODE 4910-60-M

VOL 53 ISS 67 AP 7 1988 UMI

federal register

Thursday
April 7, 1988

Part VII

Department of Transportation

Urban Mass Transportation Administration

Summary of Legal Opinions by the Urban Mass Transportation Administration During Calendar Years 1986 and 1987; Notice

DEPARTMENT OF TRANSPORTATION

Urban Mass Transportation Administration

Summary of Legal Opinions by the Urban Mass Transportation Administration During Calendar Years 1986 and 1987

AGENCY: Urban Mass Transportation Administration, DOT.

ACTION: Notice.

SUMMARY: With this Notice the Urban Mass Transportation Administration (UMTA) is publishing summaries of its legal opinion in the areas of charter bus service, private enterprise participation and bid protests. The publication of these opinions and decisions will help to make UMTA recipients, private transit operators and other interested parties better informed of UMTA's interpretation of the laws and regulations which affect UMTA's programs.

FOR FURTHER INFORMATION CONTACT: Ms. Sharon Zeiter, Procurement Analyst, Urban Mass Transportation Administration, Office of Procurement and Third Party Contract Review, 400 7th Street, SW., Room 7405, Washington, DC 20590 (202) 366-4980.

SUPPLEMENTARY INFORMATION: The United States General Accounting Office (GAO) performed an audit of UMTA's enforcement of the Urban Mass Transportation Act of 1964, as amended (UMT Act), and the implementing regulations. GAO issued its audit report entitled "UMTA Needs Better Assurance that Grantees Comply with Selected Federal Requirements", on February 19, 1985. The GAO found that grant recipients often were not aware of UMTA's interpretations and decisions and, as a result, were not complying with legal and regulatory requirements. Therefore the GAO audit recommended that UMTA circulate its legal opinions more widely to facilitate compliance.

It is UMTA's goal that the following summaries of its legal opinions and administrative decisions issued in 1986 and 1987 will help to better inform the public of UMTA's interpretation of the UMT Act and the relevant regulations. We trust that this will assist our grantees in complying with UMTA's requirements as well as assist interested parties in enforcing these requirements.

Bid Protest Decisions for 1986

Premier Electrical Construction Company (Premier Electrical) vs. Chicago Transit Authority (CTA), 1/31/86

Premier Electrical and supplier alleged that CTA's specifications were restrictive by naming a particular supplier for high-mast poles. CTA's Specification 5128-83, Volume I, Requirements for Bidding and Instructions to Bidders, Section 15, Trade Names clearly indicated that reference to manufacturers names was intended to be descriptive and not restrictive. Other makes would be considered provided the bidder clearly stated on the face of his proposal exactly what the bidder proposed to furnish.

Premier Electrical did not specify in its bid documents or at any time prior to a pre-construction meeting that it intended to provide a substitute product. Premier Electrical and supplier failed to make the approved equal request until nearly five months after bid opening.

UMTA ruled that (1) an approved equal was not requested in conformance with CTA bid documents and (2) the actions of the prime contractor and supplier violated the procedural requirements of UMTA Circular 4220.1A.

The protest was denied.

General Motors Corporation (GMC) vs. Niagara Frontier Transportation Authority (NFTA) 1/9/86

GMC alleged impropiety by the NFTA in its review and bid calculation with respect to the spare parts inventory as part of Life Cycle Cost (LCC) consideration. UMTA cited prior legal opinion that "UMTA's decision to leave great flexibility in its grantees to manage life cycle procurements was necessitated by the very nature of the life cycle cost process with its inherent characteristic for more discretion in evaluation than is usual in a low bid price competition." Accordingly, UMTA ruled thta NFTA's handling of the LCC data under the circumstance of this procurement was not arbitrary or capricious or in violation of applicable federal requirements.

The protest was denied.

Cubic Western Data (CWD) vs. Milwaukee County, Wisconsin (County), 2/12/86

The CWD alleged the County excluded CWD from bidding and established a "de facto sole source procurement" by failing to (1) delete a specification requirement that the revenue transfer process from cashbox to receiver "shall be manual in operation, requiring no electrical devices or components" and (2) amend the time between "Notice to Begin Testing" and equipment installation, from 30 days to 100 days. UMTA concluded that the County's refusal to acquiesce to CWD's request for changes was properly based on the transit system's minimum operation needs. In reaching this conclusion UMTA was mindful that under Circular 4220.1A UMTA is not to substitute its judgment for that of the grantee in situations such as the subject protest where the questioned specification is rooted in the operating efficiency requirements of the grantee. Once having concluded that the grantee had a rational basis for the particular justifications for not granting CWD's requested changes, UMTA's review was complete.

The protest was denied.

Westinghouse Electric Corporation (Westinghouse) vs. Jacksonville Transportation Authority (JTA), 2/6/86

Westinghouse alleged (1) that JTA's consideration of another contractor's (MATRA) proposal was invalid because the proposal allegedly contained an improper Buy America certificate and violated UMTA Buy America regulations and (2) that JTA's requirement for spiral transition track switches constituted an impermissibly discriminatory or exclusionary specification.

UMTA ruled that the MATRA Buy America certificate did not violate applicable UMTA regulations governing certificates of compliance. UMTA also ruled that Westinghouse knew or should have known the effect of the spiral switch requirement on its ability to submit a proposal and should have filed a bid protest within the required time limitations. Instead, Westinghouse delayed approximately two months after bid opening before formally protesting what it perceived to be a fatal defect in the specification.

The protest was denied.

Communications, Inc. (Communications) vs. Sacramento Regional Transit District (Sacramento RTD), 3/11/86

The protestor alleged that the grantee failed to respond to eight allegations of improprieties and errors regarding the solicitation. The allegations were: (1) the use of Requests for Qualifications (RFQ)

was improper for graphics design services procurement; (2) the RFQ discriminated against small businesses; (3) the selection method in the RFQ was not a competitive selection process; (4) the RFQ process was approved by Sacramento RTD based on erroneous advice; (5) additional requirements in the resolicitation discriminated against small businesses; (6) short submission deadlines discriminated against small businesses; (7) the advertising process did not allow sufficient time to respond to the RFQ; and (8) the RFQ contained major discrepancies in the EEO and MBE plans.

UMTA found the protest was largely unsubstantiated. The grantee's competitive negotiation where price need not be treated as a significant evaluation factor, is permitted by UMTA. UMTA took exception to the grantee proposing to negotiate with only the highest ranked firm without justification and requested the grantee to alter its evaluation scheme to include negotiation with all competitors in the competitive range.

The protest was dismissed in part and upheld in part.

Saturn Construction Company (Saturn) vs. Washington Metropolitan Area Transit Authority (WMATA), 3/28/86

Protester, Saturn (1) challenged the grantee's finding that the protester was non-responsive for failure to include disadvantaged business enterprise (DBE) subcontractor price information, and (2) questioned whether the grantee's policy and practice of prohibiting bid shopping among DBE subcontractors required Saturn's bid be found not responsive for failure to provide price information on the schedule.

UMTA found that Saturn's commitment to the DBE goal established for the contract was unambiguous taking the bid documents as a whole and for that reason failure to submit price information was an element of responsibility and not an element of responsiveness. Therefore the WMATA acted unreasonably in finding the protester's bid not responsive.

Protest was upheld.

Brutoco Engineering and Construction Co. vs. City of Oceanside, 3/28/86

Protester alleged that the low bidder, Transco, was proposing to use firms to satisfy the Federally-required DBE/WBE goals which do not qualify under the Federal criteria as women owned or minority owned business enterprises. The protestor alleged that because of this and because Transco did not show good faith efforts, Transco was not eligible to be awarded the contract.

UMTA ruled that the protester's claim that the low bidder failed to meet the goal was without merit.

The protest was denied.

Silverite Construction Co. vs. Metro-North Commuter Railroad, 3/12/86

Protestor, Silverite Construction Co. raised the issues of whether Metro-North acted reasonably in determining that Fischbach & Moore (Fischbach) was a responsible bidder and whether Metro-North violated fundamental principles of Federal procurement policy in its handling the Silverite protest.

UMTA concluded that Metro-North acted arbitrarily and in abuse of its discretion. This decision was based on the fact that Metro-North determined that Fischbach was a responsible bidder, in spite of a GSA debarment and subsequent court actions involving the firm. Fundamental principles of Federal procurement law were violated when Metro-North awarded the contract one day before notifying Silverite of the status of its bid protest, thereby undermining Silverite's right to appeal to UMTA.

Protest was upheld.

Clayton Industries (Clayton) vs. Pioneer Valley Transit Authority (PVTA) 4/23/86

Reconsideration of UMTA's December 27, 1985, denial of a protest submitted by Clayton. This protest concerns the PVTA decision not to accept a Clayton dynamometer and brake analyzer claiming the specifications were restrictive and proprietary.

UMTA concluded that its December 27, 1985, opinion is a correct interpretation of the law and facts in this case. The protester's protest was untimely. Further, the PVTA's determination that Clayton's specified product did not conform to the IFB specifications was ruled not arbitrary and capricious.

The protest was denied.

F&M Global Communications, Inc. vs. San Mateo Transit District (Samtrans) 4/18/86

The protestor alleged that (1) Samtrans improperly changed the method of procurement from competitive bidding to negotiation, (2) the protestor received unequal treatment in the procurement, (3) Samtrans improperly waived certain nonwaivable irregularities, (4) Samtrans failed to evaluate bids pursuant to clearly stated and consistent requirements, (5) award to Motorola, the second low bidder was contrary to state law, and (6) Samtrans conducted negotiations improperly.

UMTA ruled in response to allegation (1) that the specifications explicitly provided for a clarification process, the protestor was bound by the solicitation and could not object to the clarification process. On allegations (2) (3) and (4), UMTA determined the protestor failed to support its claims. Allegations (5) and (6) were not accepted for investigation because allegation (5) was ruled outside UMTA jurisdiction, and alelgation (6) was set aside as resolved by the face of protest.

The protest was denied.

Metro-North Commuter Railroad (Metro-North) vs. Silverite Construction Company (Reconsideration) 5/1/86

Metro-North requests reconsideration of UMTA's bid protest decision dated March 12, 1986. In that decision, UMTA upheld the bid protest filed by the Silverite Construction Co. Firstly, Metro-North disputed as a matter of law UMTA's interpretation of the phrase "Violations of Federal law or regulations * * *"as including fundamental principles of procurement as established by Federal case law. UMTA determined Metro-North provided no basis for its position and granted no reconsideration on this argument. Secondly, Metro-North argued that UMTA erred in its determination that Metro-North failed to distinguish General Services Administration's (GSA) debarment. UMTA determined that where an UMTA recipient examined the underlying facts which led to debarment of a firm by the Federal Government, and that recipient determines the firm to be a responsible bidder, contrary to the Federal position, UMTA considers minimal documentation of the recipient's rationale to be required. Metro-North did not document the basis for its decision to a degree UMTA considers minimally necessary. Reconsideration on the basis of this argument was denied.

UMTA modified its decision as necessary to reflect that the firm of Fischbach amd Moore, Inc. was debarred by the New York City Transit Authority (NYCTA) rather than by the NYCTA's parent organization, the Metropolitan Transit Authority. UMTA carefully reexamined the protest record as supplmented by the additional information. On the basis of that reexamination, UMTA reversed part of its March 12, 1986, decision to the extent that UMTA would participate in funding any aspect of the Metro-North Contract awarded January 8, 1986, which is otherwise eligible for reimbursement under the applicable UMTA grant agreement with Metro-North. UMTA admonished Metro-North of its obligation to maintain adequate records of its third-party contract.

UMTA's decision was upheld in part, modified in part and reversed in part.

Flxible vs. Winston Salem Transit Authority (WSTA), 5/12/86

The protestor alleged that the low bidder, General Motors Corporation, (GMC) did not comply with the requirements of the WSTA specification and should have been disqualified at the time of bid opening.

UMTA found that WSTA failed to clearly define how bids were to be evaluated and the low bid determined. GMC's failure to submit all bid prices was not a minor informality but rendered the bid nonresponsive. Without complete bid prices, WSTA was not in a position to properly compare bids on the optional wheelchair lifts.

The protest was upheld.

Rail-Roadway Constructors/Jim Winston & Sons, J.V. (Roadway) vs. Santa Clara County Transit District (SCCTD), 5/20/86

The protestor alleged (1) SCCTD improperly found Roadway's protest to SCCTD untimely, (2) Award to the second-low bidder, Granite, would violate applicable Federal requirements, with respect to subcontracting to MBE/WBEs, (3) SCCTD failed and refused to properly review Roadway's protest of the proposed award to Granite and in so doing, the SCCTD failed to observe its own procedures. UMTA dismissed Roadway's protest as it found that (1) Roadway's filing of its protest was untimely, (2) Roadway's claim pursuant to the DBE regulation was without merit, (3) Roadway's failure to protest its state debarment meant Roadway could not be considered an interested party in the award. Roadway attempted to displace SCCTD's judgement with its own, rather than show that SCCTD acted unreasonably.

The protest was dismissed.

Saab-Scania of America (Saab) vs. Central New York Regional Transportation Authority (CNYRTA), 5/30/86

The protestor alleged that the awardee, Neoplan, failed to supply the warranties and/or certifications required by Federal law and CNYRTA and that CNYRTA did not have written bid protest procedures leading to unjust discrimination.

UMTA found that CNYRTA had adequate justification and a rational basis to award the contract to Neoplan. CNYRTA's actions relative to its acceptance of Neoplan's certifications after the bid opening date were a valid and permissible exercise of its authority and CNYRTA treated Saab and Neoplan equitably. With regard to Saab's allegation of no written bid protest procedures, CNYRTA's counsel indicated it would use UMTA's guidelines. Saab consented to the procedures and was afforded procedural due process.

The bid protest was denied.

Liebensperger Transportation Sales Inc. (Liebensperger) vs. York Transportation Club (YTC) and Pennsylvania Department of Transportation (PennDOT) 6/23/86

The protestor, Liebensperger, appealed YTC and PennDOT's decisions that a solicitation should be cancelled and readvertised. This decision was based on the premise that Rohrer Bus Sales' bid would have been timely but for ambiguous bid instructions in the original solicitation.

UMTA determined that intervention was warranted because neither YTC or PennDOT included any information concerning the procurement standards or evaluation criteria applied in reaching their decisions. Further, UMTA learned it was PennDOT's policy that late bids would not be accepted under any circumstance.

UMTA held that Rohrer did not allow sufficient time for mailing its bid and the Comptroller General has consistently held that it is the bidder's responsibility to see that its bid is mailed in time for bid opening. The mere existence of a technical deficiency in the solicitation is not, absent a showing of prejudice, a compelling reason to cancel an invitation and readvertise.

UMTA upheld Liebensperger's protest.

Badger Body and Truck Equipment Co. (Badger Body) vs. Iowa Department of Transportation (IDOT), 6/20/86

Badger Body appealed to UMTA from the decision of the IDOT to uphold a protest by Saf-T-Liner Bus Sales Inc. The protester alleges that the low bid is not responsive and the Western Alliance of Regional Transit Systems (WARTS) did not follow procurement procedures in the evaluation of life cycle costs.

UMTA found no evidence of a violation of Federal law or regulations. Determination of a bidder's responsiveness and its responsibility are within the discretionary powers of the grantee and UMTA found that IDOT's decision was not so unreasonable as to constitute an abuse of the grantee's discretion. While there may have been several weaknesses in the solicitation, the mere existence of a technical deficiency in the solicitation is not, absent a showing of prejudice, a compelling reason to cancel an invitation and readvertise.

The protest was denied.

Eagle International, Inc. (Eagle) vs. New Jersey Transit Corporation (NJ Transit), 7/16/86

The protestor alleges that: (1) the IFB imposes extraordinary and unnecessary bonding requirements seriously restricting competition without justification, (2) the Life Cycle Costing (LCC) provisions unduly benefit Motor Coach Industries (MCI) and fail to consider other important LCC factors, (3) the unusual number of sole source restrictions on major components of the coach has added substantial and unnecessary costs to the IFB, and (4) NJ Transit's refusal to stay the entire procurement process until after protests are resolved places bidders in the position of submitting bids based on possibly faulty assumptions about the outcome of the protest process.

UMTA denied the protest in regard to bonding requirements pursuant to locally promulgated regulations allowing such bonding and the fact that historically NJ Transit has required such bonding on all its UMTA funded bus procurements. UMTA upheld the protest of LCC provisions citing that NJ Transit specifications did not identify the evaluation scheme it would use so as to provide all potential bidders with a knowledgeable basis on which to make their bids. UMTA upheld the protest related to sole source restrictions directing NJ Transit to review its specifications and identify the salient characteristics of each brand name listed. UMTA dismissed the protest to stay the bid process since NJ Transit agreed to delay its procurement until the resolution of the protest.

The bid protest was denied in part, upheld in part and dismissed in part.

Atkinson System Technologies Company (Atkinson) vs. City and County of Honolulu (Honolulu), 7/10/86

The protestor claimed that Honolulu violated Disadvantaged Business Enterprise/Women Business Enterprise (DBE/WBE) regulations by the manner in which bidders were evaluated for DBE and WBE goals attainment and good faith efforts.

UMTA took issue with Honolulu's sequence of evaluating DBE/WBE compliance. Honolulu first reduced the quantities offered in each bid to meet the maximum budget and then evaluated DBE/WBE compliance based on the reduced scope. UMTA determined that absent specific information on possible

quantity reductions for the solicitation, bidders did not have notice and thus could not be expected to prepare their bids accordingly. Thus, Honolulu should first apply the DBE evaluation criteria established by the solicitation and then reduce the scope of award to that bidder.

The protest was upheld.

Flxible Corporation (Flxible) vs. South Bend Public Transportation Corporation (SBPTC), 7/29/86

Protestor raises the issues of whether (1) SBPTC improperly applied credits for "corrosion resistance—structural integrity" in evaluating bids, and (2) SBPTC improperly renegotiated prices after bid opening and increased the procurement from 10 to 20 buses in a manner not in accordance with the option pricing requirements of the solicitation.

UMTA found that SBPTC's application of the credit for "corrosion resistance—structural integrity" was so unreasonable as to constitute an abuse of discretion. UMTA further found that SBPTC's attempt to exercise the option for an additional number of vehicles and to renegotiate the price of those vehicles after bid opening is permissible under the terms of the IFB.

The protest was upheld in part and denied in part.

Goodyear Tire & Rubber Company (Goodyear) and Washington Metropolitan Area Transit Authority (WMATA), 8/5/86

The protestor raised the issues of (1) whether UMTA Circular 4220.1A bid protest procedure applies to the subject procurement, (2) whether the Buy America provisions of the Surface Transportation Assistance Act of 1982, apply to the subject procurement, (3) whether WMATA's acceptance of Firestone's Buy America certification submitted with its bid as meeting the requirements of 49 CFR 661 and the IFB constitutes "a violation of federal law or regulation" as that term is used in UMTA Circular 4220.1A, and (4) whether WMATA's treatment of the Buy America provision in the IFB violates the fundamental principle of federal procurement that all suppliers be given a full and fair opportunity to compete on an equal basis.

UMTA determined that (1) UMTA Circular 4220.1A applies to the subject procurement, (2) Buy America provisions apply to the subject procurement, (3) WMATA's acceptance of Firestone's Buy America certification did not constitute a violation of federal law or regulation, and (4) WMATA provided all suppliers a full and fair opportunity to compete on an equal basis.

The protest was upheld in part and denied in part.

Braun Corporation (Braun) vs. Minnesota Department of Transportation (MN–DOT), 8/29/86

The protestor raised the issues of (1) whether MN–DOT acted arbitrarily or capriciously in finding Braun's bid nonresponsive to the solicitation requirement that the wheelchair lift provide for "power-up and power-down" operation, and (2) whether MN–DOT acted arbitrarily or capriciously in finding Braun's bid nonresponsive to the solicitation requirement that the wheelchair lift be powered by a second battery, based upon MN–DOT's interpretation of the "specifications questionnaire" filed by Braun.

UMTA denied the protest on the first issue as it found that MN–DOT could reasonably find the Braun bid nonresponsive on its face. UMTA dismissed the protest on the second issue as it found that post-bid opening submission of the "MN–DOT Specifications questionnaire" to determine bidder responsiveness was a threshold issue which must be addressed at the local level before the second issue would be ripe for UMTA review.

The protest was denied in part and dismissed in part.

Hegenscheidt Corporation (Hegenscheidt) vs. Metropolitan Atlanta Rapid Transit Authority (MARTA), 9/9/86

The protest raised the issues of (1) whether Hegenscheidt's protest should be dismissed as untimely, (2) whether MARTA's specification of the Simmons-Stanray wheel truing machine in its Invitation for Bids (IFB) constitutes a violation of Federal laws or regulations prohibiting the use of exclusionary and discriminatory specifications, and (3) whether MARTA's actions following Hegenscheidt's prebid protest of the wheel truing machine language contained in the IFB evidence a failure to properly review a protest in violation of UMTA Third Party Contracting Guidelines.

UMTA determined that (1) any untimeliness in filing with UMTA was caused by actions of the grantee and is therefore excusable, (2) MARTA's specifications were exclusionary and discriminatory. Further, the use of "brand name or equal" specifications must be accompanied by a listing of the salient characteristics of the product specified and MARTA failed to include any salient characteristics in the IFB, nor did it state the evaluation factors it would use in determining whether a proposed product was "equal", and (3) MARTA violated UMTA's requirement that protests receive proper review at the grantee level.

The protest was upheld on all issues.

VO–ED Services vs. the Alameda-Contra Costa Transit District, 9/16/86

The protestor alleged that the successful firm had less experience and a less educated staff than protestor's firm and that the protestor's costs were lower.

UMTA determined the protestor did not provide concrete evidence that the grantee acted arbitrary or capricious in its evaluation process. Further, in an RFP situation, price is only one factor.

UMTA denied to accept the protest for consideration.

Firestone Tire and Rubber Company (Firestone) vs. Metropolitan Transit Commission (MTC), 9/29/86

The protest raises the issue of whether it was a violation of federal law and/or procurement practices for the MTC to convert the Goodyear price escalation factors, submitted in terms of cents, to dollars, where the IFB required that they be submitted in cents.

UMTA found that converting Goodyear's escalation factors to dollars from cents did not prejudice Goodyear nor violate federal law, since the conversion was necessitated by the failure of Firestone and the Michelin Tire Corporation, the other unsuccessful bidder, to submit their bids in terms of cents as required by the IFB.

The protest was denied.

North Star Contracting Corporation (North Star) vs. New York Transit Authority (NYCTA), 9/10/86

The basis of the protest was that North Star was the lowest responsible bidder on the subject contract and was wrongfully denied award of the contract. Allegedly, its proposal was declared nonresponsive because of its omission of not acknowledging receipt of addendum 5, which should have been treated as a minor informality and rectified prior to award.

UMTA could not conclude that NYCTA acted arbitrarily or capriciously in determining North Star to be nonresponsive. NYCTA determined that waiving the defect was impermissible under state law and would impugn the integrity of the bidding process. NYCTA's actions were consistent with the relevant Federal procurement principles.

The protest was denied.

Motorola vs. Metro Area Transit of Omaha (MAT), 10/23/86

Motorola protested an award to General Railway Signal (GRS) alleging that GRS's bid was nonresponsive as submitted and was made responsive by substantial alteration of the original proposal after bid opening.

UMTA found that the issue raised was clearly within the discretionary powers of the grantee and that the grantee's determination was not so unreasonable as to constitute an abuse of the grantee's discretion. MAT determined that GRS' bid was responsive as submitted and that information sought and received after bid opening was merely to clarify and verify that the equipment bid was acceptable. As Motorola failed to show the grantee abused its discretionary power, UMTA found no basis to review the grantee's determination that GRS submitted a responsive bid.

The protest was dismissed.

SHB and LEBCO vs. the City of Galveston (Galveston), 11/12/86

The protestor alleged that Galveston violated Federal regulations requiring maximum open and free competition and that award must be made to the low responsive, responsible bidder.

UMTA found that Galveston determined the protestor to be nonresponsive and not responsible. Further, UMTA will not substitute its judgment for that of the grantee absent a showing that Galveston was arbitary in determining the protestor was nonresponsive and not responsible.

The protest was dismissed.

The Flxible Corporation vs. Central Ohio Transit Authority (COTA) 11/13/86

The protester raised the issue of whether COTA acted arbitrarily or capriciously in its decision to award the bus contract to GMC in light of Flxible's contention that GMC did not provide sufficient documentation as to crashworthiness testing requirements per the bid specifications.

UMTA found that COTA did not act arbitrarily or capriciously in determining GMC's responsiveness in its bid.

The protest was denied.

Bid Protest Decisions for 1987

Flxible Corporation vs. Chicago Transit Authority (CTA), 1/6/87

Flxible raised the issue of whether it is a violation of Federal law or procurement principles for the CTA to require a performance bond at 50 percent of the contract price "* * * until the end of the specified warranty period, up to maximum of seven years * * *" UMTA found that requiring a 50 percent performance bond for a 7 year period after delivery and acceptance constitutes an unnecessary bonding requirement in violation of OMB Circular A-102 and section 3a(2)(C) of the Urban Mass Transportation Assistance Act of 1964 as amended.

UMTA found that such a requirement was unnecessary and impermissibly exclusionary in light of CTA's requirements of a 100 percent performance bond until delivery and acceptance, and an extended warranty of 12 years or 600,000 miles on the structure of the bus.

The protest was upheld.

Kranco Incorporated vs. New Jersey Transit Corporation (NJ Transit), 1/12/87

The protestor protested award of the contract to Foley Handling Co., Inc. (Foley) and alleged that Foley (1) failed to satisfy the testing requirement of the solicitation, and (2) did not comply with the solicitation's subcontracting percentage limitations. UMTA upheld the protest in that it found NJ Transit did not strictly apply its definitive responsibility criteria as it related to the testing requirement and therefore was in violation of a fundamental principle of procurement. UMTA denied the protest on issue (2) because UMTA found that the protester failed to carry its burden of establishing a clear violation of law.

The protest was upheld in part and denied in part.

Lone Star Industries (Lone Star) vs. Metropolitan Atlanta Rapid Transit Authority (MARTA), 2/3/87

Lone Star protested the award to J.H. Pomeroy (Pomeroy) and raised the following issues, (1) whether MARTA acted arbitrarily or capriciously, in violation of UMTA Circular 4220.1A, in determining that Pomeroy met the good faith efforts requirement with respect to meeting the Minority Disadvantaged Business (MBE) goals, and (2) whether MARTA violated UMTA Circular 4220.1A in its review of the local Lone Star protest.

UMTA found that MARTA acted arbitrarily and capriciously in determining Pomeroy had met the good faith efforts requirements for MBE goals. UMTA determined that there was no reasonable basis for the decision to award to Pomeroy and that Lone Star's local protest was not properly reviewed.

The protest was upheld.

General Farebox Incorporated (GFI) vs. Contra Costa County Transit Authority (CCCTA), 4/10/87

The protest raised several issues pertaining to the procurement and award of the contract to Cubic Western: (1) Whether CCCTA improperly used competitive negotiation rather than sealed bids for the procurement of allegedly standard products; (2) Whether the CCCTA specifications and basic requirements were prejudicially incomplete because they failed to state specifically all important aspects of performance; (3) Whether evaluation of the GFI proposal was based on factors not in the specification and not discussed with GFI, and whether some factors that CCCTA found attractive had nothing to do with quality, performance or reliability; (4) Whether the failure of CCCTA to request "best and final" price proposals unfairly prejudiced GFI; (5) Whether GFI was unfairly prejudiced by CCCTA's apparent lack of a formal means of scoring the proposals; (6) Whether GFI was unfairly prejudiced by CCCTA's alleged failure to investigate and require tests to ascertain facts in the case; and (7) Whether CCCTA's alleged disclosure to GFI of the successful bidder's price information was reason for the procurement to be rescinded.

UMTA ruled that GFI did not show CCCTA had no rational basis for awarding the contract to Cubic Western. In response to each issue UMTA found: (1) CCCTA's reason for employing competitive negotiation to meet "specific and/or unique needs" provided a rational basis; (2) It was not unreasonable for CCCTA to refrain from listing explicitly every detail of performance that CCCTA found attractive. In fact to do so may have resulted in unduly exclusionary or discriminatory specifications; (3) The issue of specificity of evaluation factors was addressed in item (2) above and CCCTA presented a rational basis for award to the proposal that offered the lowest price; (4) It would be inappropriate to call for best and final offers where no negotiations took place or where there was insignificant movement on the part of the proposers positions. This could result in an action which violates the integrity of the procurement process; (5) The protester did not show that CCCTA arbitrarily scored the proposals; (6) Absent explicit proof that CCCTA abused its discretion, the extent of verifying is judged to be a local matter; and (7) GFI did not present evidence that CCCTA disclosed Cubic's price information to GFI.

UMTA denied the protest in its entirety.

Communication Associates (Associates) vs. Sacramento Regional Transit District (SRTD), 5/15/87

The protest raised the issues of: (1) Whether SRTD failed to comply with minority business enterprise (MBE) requirements contained in the SRTD request for proposal and Federal Regulations, (2) Whether SRTD failed to follow the selection process described in the procurement document and failed to document changes in the selection process prior to interview and negotiations, (3) Whether SRTD engaged in irregular undocumented bidding procedures; and (4) Whether the SRTD selection panel's decision reflected improper bias due to conflict of interest by certain panel members.

UMTA found that (1) SRTD was within its discretion in implementing the Federal requirements when it accepted MBE certification information after proposal opening; (2) SRTD made reasonable accommodations to negotiate with several competitors in the competitive range and did not provide a competitive advantage to any proposer or open the process to manipulation; (3) SRTD erroneously disclosed price and cost proposals and the protest was upheld on this issue. However, UMTA found no intent on the part of SRTD to induce impermissible auctioning. Further, SRTD provided the cost data in direct response to Associates request; (4) Associates failed to carry its burden of establishing the existence of any real or apparent conflict of interest which affected the award decision.

The protest was upheld in part and denied in part.

Transcontrol Corporation (Transcontrol) vs. Delaware River Port Authority (DRPA), 5/15/87

The protestor alleged that the DRPA specification was unduly restrictive and exclusionary in that it required all vital relays to be manufactured by the Union Switch and Signal Division of the American Standard Company.

UMTA found that based on supporting facts and figures, DRPA adequately demonstrated that its restrictive need was justified.

The protest was denied.

Lorien Systems (Lorien) vs. Orange County Transit District (OCTD), 7/10/87

The protest raised three issues: (1) Whether OCTD failed to adhere to written procurement procedures in violation of UMTA Circular 4220.1A, (2) Whether undue pressure was placed on OCTD's technical and purchasing staff to award contracts to bidders personally favored by politicians in disregard of the results of technical and financial analysis and UMTA Circular 4220.1A; and (3) Whether OCTD created artificial obstacles to participation by women-owned businesses through a policy and practice of favoring traditionally used vendors.

UMTA upheld protest issue (1) that OCTD violated fundamental principles of procurement because OCTD did not negotiate with each offeror in the competitive range, ask for best and final offers, and evaluate those offers in the manner described in the RFP. Because the procurement did not meet Federal standards, it was not eligible for Federal support. UMTA determined that if, however, OCTD were to negotiate with both Lorien and the other proposer on an even basis, giving each party an opportunity to revise its proposal in light of the clarifications of minimum needs, UMTA funds may be made available. Protest issues (2) and (3) were dismissed. UMTA determined the evidence of favoritism was not unimpeachable and UMTA refrained from making a determination on bid protest issue (2). On bid protest (3) Lorien did not present evidence to support the charge of barriers to women-owned business participation.

The protest was upheld in part and dismissed in part.

Ross and White Company vs. Golden Gate Bridge, Highway and Transportation District (GGBHTD), 8/27/87

Protestor alleged that the GGBHTD specification was not complete, adequate and realistic and did not clearly define the items needed.

UMTA declined to accept the protest for consideration because the protestor provided no evidence to support its allegation that GGBHTD's specification was deficient.

The protest was dismissed.

Herzog Contracting Corporation (Herzog) vs. Metropolitan Transit Development Board (MTDB), 8/25/87

The protest raised the issue of whether the awardee, Comstock Engineering, Inc. (Comstock) had an organizational conflict of interest which resulted in an unfair competitive advantage over other bidders or would impair Comstock's objectivity if a contract were awarded in violation of procurement regulation.

UMTA found that the protestor, Herzog had not demonstrated that the alleged conflict of interest resulted in an unfair competitive advantage to Comstock. Further, UMTA found that MTDB developed an appropriate means for dealing with the issue of potential post-contract award conflict of interest. However, to the extent that MTDB had not yet fully implemented such measures, UMTA directed MTDB to amend Task 3 of the design contract prior to award to avoid any potential for a conflict of interest.

The protest was denied.

Homer J. Olsen, Inc. vs. Bay Area Rapid Transit District (BART) 8/28/87

Protestor requested UMTA to reconsider its decision not to accept Homer J. Olsen's protest challenging the constitutionality of the Department of Transportation Minority Business Enterprise (MBE) regulation and its implementation by BART.

UMTA held that the protestor did not raise any factual issues, instead the protestor presented United States District and Appellate Court cases which are not applicable to UMTA.

In the absence of specified errors of law or information not previously considered, UMTA denied the request for reconsideration.

Aerotron, Inc. (Aerotron) vs. Delaware Administration for Specialized Transportation (DAST), 8/31/87

The protestor alleged that DAST's decision to award to the second low bidder, Motorola, was so unreasonable as to constitute an abuse of discretion.

UMTA found that DAST supported its position and addressed each of Aerotron's objections in a reasonable manner. There was no question but that DAST carefully and thoroughly reviewed the matter. The protestor failed to carry its burden to show that DAST was arbitrary and capricious and abusive of its discretion.

The protest was denied.

Fru-Con Construction Corporation (Fru-Con) vs. Southern California Rapid Transit District (SCRTD), 9/30/87

Protestor raised three issues: (1) Whether SCRTD failed to meaningfully review Fru-Con's protest of the determination that Fru-Con did not satisfy the contract's Disadvantaged Business Enterprise (DBE) and Women-Owned Business Enterprise (WBE) good faith efforts requirements; (2) Whether SCRTD complied with Federal law in rejecting Fru-Con's bid on the grounds that Fru-Con failed to comply with the good faith efforts requirement. Specifically, whether SCRTD incorrectly applied the UMTA requirements that the apparent successful competitor on an UMTA financially assisted contract needs to satisfy the grantee of its good

faith efforts; and (3) Whether SCRTD equitably evaluated all competitors' compliance with DBE/WBE requirements.

UMTA denied the first two issues by finding that (1) since SCRTD had procedures assuring review of Fru-Con's bid protest, followed such procedures, and meaningfully reviewed the protest, the fact that SCRTD's process did not contain certain procedural requirements was nonprejudicial but should be remedied in future procurements; and (2) SCRTD's mechanism to assure DBE/WBE participation and their standards for determining good faith efforts were within the limits of the discretion delegated to recipients by UMTA. UMTA upheld the third issue concluding that SCRTD did not have a reasonable basis for determining that the second low bidder met the contract DBE/WBE requirements.

The protest was denied in part and upheld in part.

Transcontrol Ansaldo Trasporti (Transcontrol) vs. Southeastern Pennsylvania Transportation Authority (SEPTA), 10/26/87

The protest alleged that SEPTA arbitrarily and capriciously found its bid nonresponsive for the reason that Transcontrol's bid specified 3 percent of work would be performed by Transcontrol on site when the contract documents required a minimum of 10 percent. It was argued that the error was immaterial and should have been waived.

UMTA determined that SEPTA was correct in not waiving the mistake as a minor informality. Further, had SEPTA allowed a waiver, it would have allowed Transcontrol an unfair second chance to decide whether it wished to contract and possibly on what terms.

The prostest was denied.

Evergreen Stage Lines, Inc. (Evergreen) vs. C–TRAN, 10/30/87

The protestor objected to the method used by C–TRAN in evaluating Evergreen's operating rights and the particular value assigned to those rights. The protestor also challenged the qualifications of the contractor selected by C–TRAN, claiming the contractor was not reponsible and other unsupported allegations.

UMTA concluded that matters of methods of evaluating transit operating rights and the particular value assigned to certain rights are not governed by Federal law.

UMTA declined to take jurisdiction over the bid protest.

Kingston's Associates (Kingston) vs. Washington Metropolitan Area Transit Authority (WMATA), 12/28/87

Kingston protested award of a contract to Keys and Associates, Inc. (Keys) alleging that Keys did not comply with the WMATA invitation for bids regarding participation of Disadvantaged Business Enterprises (DBE) and Women-owned Business Enterprises (WBE).

UMTA found that WMATA violated both its own solicitation requirements and the applicable federal regulations for DBE/WBE participation when it determined that Keys was a responsive and responsible bidder eligible for award.

The protest was upheld.

Armstrong World Industries (Armstrong) vs. Greater Cleveland Regional Transit Authority (GCRTA), 11/10/87

The protester contended that the awardee, Daleco Holographics (Daleco) was nonresponsive to the solicitation and offered a product which deviated substantially from the material specified.

UMTA found that GCRTA properly recognized that a fair reading of the specification permitted both the product which Daleco bid and the product bid by Armstrong.

The protest was denied.

Firestone Tire and Rubber Company (Firestone) vs. Transit Authority of River City (TARC), 12/11/87

Firestone alleged that TARC's decision regarding Firestone's bid was unreasonable, unduly restrictive, discriminatory, and exclusionary.

UMTA determined that Firestone's protest to UMTA was untimely based on the fact that more than 10 working days transpired between the date Firestone knew local remedies had been exhausted and the date UMTA received Firestone's protest.

The protest was dismissed as untimely.

Motorola, Inc. (Motorola) vs. Mass Transportation Administration in Baltimore, MD (MTA), 12/11/87

The protestor alleged that MTA improperly interpreted its own bid protest procedures. Therefore, MTA improperly denied Motorola's bid protest as untimely and made an award to an allegedly nonresponsive bidder.

UMTA found that the protestor's grievance related entirely to the State's interpretation of its own law and regulations. The MTA's decision to dismiss the protest on the basis of untimeliness, and the Maryland State Board of Contract Appeals' decision to uphold the MTA's decision was not shown to be unreasonable. The State's interpretation and implementation of the requirement in this case was consistent with its interpretations in prior analogous situations.

The protest was denied.

G.E. Johnson Construction Company, Inc. (Johnson) vs. Denver Regional Transportation District (RTD), 12/30/87

The protestor alleged that RTD wrongly declared Johnson's bid as late and therefore to be rejected.

UMTA found that the RTD failed to clearly designate the point of bid delivery or the controlling time clock in violation of fundamental principles of Federal procurement. UMTA further found that the protector's bid was properly delivered to the RTD prior to the established bid opening time. As a result, UMTA determined that the RTD decision to reject Johnson's bid was arbitrary and so unreasonable as to constitute an abuse of the grantee's discretion.

The protest was upheld.

Decisions 1987—Charter Bus Operations (UMT Act Sections 3(f) and 49 CFR 604)

Erin Tours v. *Command Bus Company 9/9/1987*

Erin Tours (Erin) alleged that the Command Bus Company (Command), an UMTA subrecipient, had operated charter service using UMTA-funded equipment which had been deleted from regular service. Specifically, Erin alleged that Command has violated 49 CFR 604.11(b)(1), by operating weekday charters during peak rush hours. UMTA determined that Command's charter activities were in violation of Sections 3(f) and 12(c)(6) of UMT Act, and the implementing regulations in 49 CFR part 604. UMTA found that Command, at least on one occasion, used UMTA funded vehicles during weekday rush hour in non-mass transportation related operations. However, UMTA's revised charter regulation, which came into effect on May 13, 1987, prohibits subrecipients from providing charter service using UMTA-funded equipment. Since the issue of Command's noncompliance with the former charter regulation had become moot at the time of this decision, UMTA held that is was not in the public interest to impose a sanction upon Command.

Syracuse & Oswego Motor Lines, Inc., et al. v. *Central New York Regional Transportation Authority, 10/2/1987*

Syracuse & Oswego Motor Lines (S&O) alleged that the Central New

York Regional Transportation Authority (CNYRTA) violated the charter bus restrictions in the UMT Act, and the implementing regulations, 49 CFR Part 604.1. UMTA determined that the alleged violations regarding the incidential use provisions, operating beyond the urban area, and predatory pricing were not substantiated. However, UMTA found that CNYRTA has not supported its contention that all expenses were properly allocated for charter service, and UMTA could not conclude that charter revenues did exceed charter costs for the years in question. However, since the implementation of UMTA's revised charter regulation on May 13, 1987, CNYRTA is precluded from providing direct charter service. UMTA therefore held that it was not in the public interest to issue an order or guidance to CNYRTA regarding charter operations pre-dating the current regulation.

Kraftours Corporation v. *Harris County Metropolitan Transportation Authority, 8/13/1987*

Kraftours Corporation alleged that National Transit Services (NTS) was operating charter bus service without UMTA authority, while under contract with the Harris County Metropolitan Transportation Authority (MTA), an UMTA grantee. The complaint specifically alleged that NTS has used publicly-funded buses to provide interstate charter service from Houston, Texas, to Red Rock, Oklahoma. UMTA determined that the charter operations performed by NTS were outside the scope of its contract with MTA, and with the exception of signage displayed on NTS vehicles, the charter service in question was not performed using UMTA-funded equipment or operating assistance. UMTA concluded that there was no substantial violation of the charter restrictions in the UMT Act and the implementing regulations, on the part of either NTS or MTA.

Private Enterprise Participation Requirements

(UMT Act Sections 3(e) and 8(e))

Eagle Bus Inc. v. *New York City Transit Authority, 12/28/1987*

Eagle Bus Inc. (Eagle) alleged that the New York City Transit Authority (NYCTA) had violated the provisions of the UMT Act and the implementing policy, in its planning and provision of mass transportation service from Staten island to Manhattan. The focus of Eagle's complaint was that the NYCTA was in the process of planning service over the same routes served by Eagle, and that Eagle had not been given the opportunity to participate in the planning and provision of the service. UMTA determined that NYCTA violated Sections 3(e), 8(e), and 9(f) of the UMT Act and the implementing policy, by failing to involve the private sector in its planning process. However, given the modest level of the service actually implemented by the NYCTA, UMTA did not require the NYCTA to follow a private sector participation process with regard to this service. The NYCTA was nonetheless directed to follow UMTA's privatization guidelines in any future plans to provide new or restructured service.

Hudson Bus Lines, Inc. v. *Massachusetts Bay Transportation Authority, 11/6/87*

Hudson Bus Lines Inc. alleged that the Massachusetts Bay Transportation Authority (MBTA) had violated Section 3(e) of the UMT Act, by operating bus service on Route 326, in competition with Hudson. UMTA determined that Hudson had been adequately involved in the plan to transfer operating responsibilities along Rt. 326, and thus concluded that there was no violation of Section 3(e) with respect to Hudson. However, UMTA found that the MBTA had not followed UMTA Section 3(e) requirements with regard to other private operators. UMTA therefore directed the MBTA to follow its own private sector involvement procedures when planning or implementing new or restructured service.

Durango Transportation Inc. v. *City of Durango, Colorado, 2/24/1987*

Durango Transportation Inc. alleged that the City of Durango (Durango) violated Section 3(e) of the UMT Act, since it had not considered private transportation providers to the maximum extent feasible in the provision of transportation services funded by UMTA, and did not have the legal capacity under Section 3(a)(2)(A)(i) to carry out the financed projects. The service in question included the Opportunity Bus service provided to the elderly and handicapped persons funded under section 18 of the UMT Act, which provides formula grants to non-urbanized areas, and the general mass transit service to and from the La Plata City Airport and the Purgatory Ski Area funded under section 3 of the UMT Act, which provides discretionary capital grants. UMTA determined that Durango did comply with 3(e) of the UMT Act and the implementing policies in its grant applications for Section 18 grants. Further, UMTA found that given the evidence submitted, Durango had legal capacity under Colorado Law.

Issued on April 4, 1988.

Alfred A. DelliBovi,

Administrator.

[FR Doc. 88-7681 Filed 4-6-88; 8:45 am]

BILLING CODE 4910-57-M

VOL
53
ISS
67
AP
7
1988
UMI

Rea

INFORM

Federal

Index, f
Public i
Correcti
Docume
Machine

Code o

Index, f
Printing

Laws

Public L
Additior

Preside

Executiv
Public P
Weekly

The Un

General

Other S

Data ba
Guide to
Legal st
Library
Privacy
Public L
TDD for

FEDERA

10519–10
10869–11
11031–11
11239–11
11487–11

Reader Aids

Federal Register

Vol. 53, No. 67

Thursday, April 7, 1988

INFORMATION AND ASSISTANCE

Federal Register

Index, finding aids & general information	523-5227
Public inspection desk	523-5215
Corrections to published documents	523-5237
Document drafting information	523-5237
Machine readable documents	523-5237

Code of Federal Regulations

Index, finding aids & general information	523-5227
Printing schedules	523-3419

Laws

Public Laws Update Service (numbers, dates, etc.)	523-6641
Additional information	523-5230

Presidential Documents

Executive orders and proclamations	523-5230
Public Papers of the Presidents	523-5230
Weekly Compilation of Presidential Documents	523-5230

The United States Government Manual

General information	523-5230

Other Services

Data base and machine readable specifications	523-3408
Guide to Record Retention Requirements	523-3187
Legal staff	523-4534
Library	523-5240
Privacy Act Compilation	523-3187
Public Laws Update Service (PLUS)	523-6641
TDD for the deaf	523-5229

FEDERAL REGISTER PAGES AND DATES, APRIL

10519-10868 1
10869-11030 4
11031-11238 5
11239-11486 6
11487-11632 7

CFR PARTS AFFECTED DURING APRIL

At the end of each month, the Office of the Federal Register publishes separately a List of CFR Sections Affected (LSA), which lists parts and sections affected by documents published since the revision date of each title.

3 CFR

Proclamations:
5784 10519
5785 10521
5786 10523
5787 11031
5788 11489

Executive Orders:
12634 11041

Administrative Orders:
Memorandums:
Mar. 31, 1988 11039
Presidential Determinations:
No. 88-10 of February 29, 1988 11487

5 CFR

Proposed Rules:
2431 10885

7 CFR

300 10525
400 10526
910 10527
946 11043
1064 11590
1421 11239

Proposed Rules:
6 11091
53 10545
54 10545
449 11299
949 10887
1030 10894
1106 11092
1497 11474
1498 11474
1530 11098
1700 11511
1701 10545

8 CFR

Proposed Rules:
3 11300
208 11300
236 11300
242 11300
253 11300

9 CFR

77 11491
92 11043

10 CFR

430 10869
1010 11240

Proposed Rules:
2 11310
50 11311

12 CFR

202 11044
205 11046
226 ..... 11047, 11055
563 ..... 11242, 11243

14 CFR

Ch. III 11004
39 11246
71 ..... 10528, 11020, 11060, 11061
97 11062

Proposed Rules:
27 ..... 10826, 11162
29 ..... 10826, 11162
71 ..... 10546, 11100, 11101
73 11102

16 CFR

13 11247

17 CFR

30 11491

20 CFR

10 11594

Proposed Rules:
10 11596

21 CFR

184 11247
510 11492
520 11063
522 ..... 11064, 11493
524 11064
540 11492
558 ..... 11065, 11251
800 11251
803 11251
807 11251
808 11251
809 11251
812 11251
813 11251
820 11251
860 11251
861 11251
864 11251
866 11251
876 11251
895 11251
1002 11251
1005 11251
1010 11251
1020 11251
1030 11251
1040 11251
1050 11251
1308 ..... 10834, 10861, 10869

Proposed Rules:
133 11312
175 11402
176 11402
177 11402

178 11402
561 11313

22 CFR

120 11494
121 11494
122 11494
123 11494
124 11494
125 11494
126 11494
127 11494
128 11494
514 10528
602 10529

23 CFR

650 11065
771 11065
1204 11255
1205 11255

24 CFR

50 11224
200 11270
203 10529
221 11224
236 11224
241 11224
248 11224

Proposed Rules:

35 11164
200 11164
510 11164
511 11164
570 11164
882 11164
886 11164
941 11164
965 11164
968 11164

25 CFR

61 11271

26 CFR

1 ..... 11002, 11066, 11162
602 ..... 11066, 11162

Proposed Rules:

1 11103

28 CFR

0 ..... 10870, 10871

29 CFR

102 10872
1910 11414
2610 10530
2622 10530
2644 10531

Proposed Rules:

516 11590
530 11590
1910 11511
1915 11511
1917 11511
1918 11511

30 CFR

75 11395
250 10596
256 10596
773 11606
934 11500

31 CFR

Proposed Rules:

103 11513

32 CFR

388 10876

33 CFR

84 10532
100 11502
117 ..... 10533, 10534

Proposed Rules:

100 11515
110 ..... 11395, 11515
117 ..... 11516, 11517

34 CFR

600 11208
657 10820
668 11208

Proposed Rules:

105 10808

38 CFR

36 11502

40 CFR

52 ..... 11068, 11273
60 11590
180 ..... 11071, 11274

Proposed Rules:

52 11314
180 10895
761 11104
763 10546
796 11104

41 CFR

Proposed Rules:

201-33 11518

42 CFR

405 11504
416 11504
418 11504
442 11504
482 11504

43 CFR

Proposed Rules:

3160 11318

Public Land Order:

6670 10535

44 CFR

67 11510
80 11275
82 11275
83 11275

Proposed Rules:

61 10547

45 CFR

36 11279

Proposed Rules:

606 10896

46 CFR

572 11072

Proposed Rules:

Ch. I 11440

47 CFR

2 10878

Proposed Rules:

Ch. I 10549, 10550
73 10905

48 CFR

15 10828
31 10828
52 10828
215 11073
227 10780
242 11073
252 ..... 10780, 11073

Proposed Rules:

916 11318
931 11318
952 11318
1505 11519
1506 11519

49 CFR

533 11074
571 11280
1160 10536

Proposed Rules:

171 11320
173 11320
177 11618
192 10906
571 11105
840 11520

50 CFR

17 ..... 10879, 11609, 11612
285 11510
301 10536
672 11297

Proposed Rules:

644 11321

LIST OF PUBLIC LAWS

Note: No public bills which have become law were received by the Office of the Federal Register for inclusion in today's **List of Public Laws.**

Last List April 6, 1988

VOL 53 ISS 67 AP 7 1988 UMI

VOL 53 ISS 67 AP 7 1988 UMI

Just Released

Code of Federal Regulations

Revised as of January 1, 1988

Quantity	Volume	Price	Amount
_____	Title 5—Administrative Personnel Parts 1–699 (Stock No. 869–004–00004–9)	$14.00	$_____
_____	Title 7—Agriculture Parts 700–899 (Stock No. 869–004–00015–4)	22.00	_____
_____	Parts 1900–1939 (Stock No. 869–004–00022–7)	11.00	_____
_____	Title 9—Animals and Animal Products Parts 1–199 (Stock No. 869–004–00027–8)	19.00	_____
		Total Order	$_____

A cumulative checklist of CFR issuances appears every Monday in the Federal Register in the Reader Aids section. In addition, a checklist of current CFR volumes, comprising a complete CFR set, appears each month in the LSA (List of CFR Sections Affected).

Please do not detach

Order Form

Mail to: Superintendent of Documents, U.S. Government Printing Office, Washington, D.C. 20402

Enclosed find $_____ Make check or money order payable to Superintendent of Documents. (Please do not send cash or stamps). Include an additional 25% for foreign mailing.

Charge to my Deposit Account No.

☐☐☐☐☐☐☐–☐

Order No._____

VISA

MasterCard

Credit Card Orders Only

Total charges $_____ Fill in the boxes below.

Credit Card No. ☐☐☐☐☐☐☐☐☐☐☐☐☐☐☐☐☐☐☐

Expiration Date Month/Year ☐☐☐☐

Please send me the **Code of Federal Regulations** publications I have selected above.

Name—First, Last

Street address

Company name or additional address line

City State ZIP Code

(or Country)

PLEASE PRINT OR TYPE

For Office Use Only.

	Quantity	Charges
Enclosed		
To be mailed		
Subscriptions		
Postage		
Foreign handling		
MMOB		
OPNR		
UPNS		
Discount		
Refund		

ount

ttach

D.C. 20402

low.

ty	Charges

VOL
53

ISS
67

AP
7

1988

UMI

VOL
53

ISS
68

AP
8

1988

UMI

4-8-88
Vol. 53

United
Gover
Printin
SUPERIN
OF DOCU
Washingt

OFFICIA
Penalty f

4-8-88
Vol. 53 No. 68

federal register

Friday
April 8, 1988

United States
Government
Printing Office
SUPERINTENDENT
OF DOCUMENTS
Washington, DC 20402

OFFICIAL BUSINESS
Penalty for private use, $300

SECOND CLASS NEWSPAPER
Postage and Fees Paid
U.S. Government Printing Office
(ISSN 0097-6326)

**********5-DIGIT 48106
A FR SERIA300S NOV 88 R
SERIALS PROCESSING
UNIV MICROFILMS INTL
300 N ZEEB RD
ANN ARBOR MI 48106

VOL
53

ISS
68

AP
8

1988

UMI

4-8-88
Vol. 53
Pages

4-8-88
Vol. 53 No. 68
Pages 11633-11814

federal register

Friday
April 8, 1988

Briefings on How To Use the Federal Register—
For information on briefings in Washington, DC, and Boston, MA, see announcement on the inside cover of this issue.

BEST COPY AVAILABLE

FEDERAL REGISTER Published daily, Monday through Friday, (not published on Saturdays, Sundays, or on official holidays), by the Office of the Federal Register, National Archives and Records Administration, Washington, DC 20408, under the Federal Register Act (49 Stat. 500, as amended; 44 U.S.C. Ch. 15) and the regulations of the Administrative Committee of the Federal Register (1 CFR Ch. I). Distribution is made only by the Superintendent of Documents, U.S. Government Printing Office, Washington, DC 20402.

The **Federal Register** provides a uniform system for making available to the public regulations and legal notices issued by Federal agencies. These include Presidential proclamations and Executive orders and Federal agency documents having general applicability and legal effect, documents required to be published by act of Congress and other Federal agency documents of public interest. Documents are on file for public inspection in the Office of the Federal Register the day before they are published, unless earlier filing is requested by the issuing agency.

The **Federal Register** will be furnished by mail to subscribers for $340.00 per year, or $170.00 for 6 months in paper form, or $188.00 per year, or $94.00 for six months in microfiche form, payable in advance. The charge for individual copies is $1.50 for each issue, or $1.50 for each group of pages as actually bound. Remit check or money order, made payable to the Superintendent of Documents, U.S. Government Printing Office, Washington, DC 20402, or charge to your GPO Deposit Account or VISA or Mastercard.

There are no restrictions on the republication of material appearing in the **Federal Register**.

How To Cite This Publication: Use the volume number and the page number. Example: 52 FR 12345.

SUBSCRIPTIONS AND COPIES

PUBLIC

Subscriptions:

Paper or fiche	202-783-3238
Magnetic tapes	275-3328
Problems with public subscriptions	275-3054

Single copies/back copies:

Paper or fiche	783-3238
Magnetic tapes	275-3328
Problems with public single copies	275-3050

FEDERAL AGENCIES

Subscriptions:

Paper or fiche	523-5240
Magnetic tapes	275-3328
Problems with Federal agency subscriptions	523-5240

For other telephone numbers, see the Reader Aids section at the end of this issue.

THE FEDERAL REGISTER
WHAT IT IS AND HOW TO USE IT

FOR: Any person who uses the Federal Register and Code of Federal Regulations.

WHO: The Office of the Federal Register.

WHAT: Free public briefings (approximately 3 hours) to present:
1. The regulatory process, with a focus on the Federal Register system and the public's role in the development of regulations.
2. The relationship between the Federal Register and Code of Federal Regulations.
3. The important elements of typical Federal Register documents.
4. An introduction to the finding aids of the FR/CFR system.

WHY: To provide the public with access to information necessary to research Federal agency regulations which directly affect them. There will be no discussion of specific agency regulations.

WASHINGTON, DC

WHEN: April 15; at 9:00 a.m.
WHERE: Office of the Federal Register, First Floor Conference Room, 1100 L Street NW., Washington, DC
RESERVATIONS: Carolyn Payne, 202-523-3187

BOSTON, MA

WHEN: April 19; at 9 a.m.
WHERE: Thomas P. O'Neill, Jr. Federal Building, Auditorium, 10 Causeway Street, Boston, MA.
RESERVATIONS: Call the Boston Federal Information Center, 617-565-8123

Contents

Federal Register
Vol. 53, No. 68
Friday, April 8, 1988

Administrative Conference of the United States
NOTICES
Meetings:
Administration Committee, 11692

Agricultural Marketing Service
RULES
Lemons grown in California and Arizona, 11636
Milk marketing orders:
Southern Illinois, 11637
Texas, 11638
PROPOSED RULES
Pears, plums, and peaches grown in California, 11669

Agriculture Department
See also Agricultural Marketing Service; National Agricultural Statistics Service
RULES
Organization, functions, and authority delegations:
Small Community and Rural Development, Under Secretary, et al.
Correction, 11636

Air Force Department
NOTICES
Environmental statements; availability, etc.:
Vandenberg Air Force Base, CA; Space Launch Complex 7, 11695

Blind and Other Severely Handicapped, Committee for Purchase From
See Committee for Purchase From the Blind and Other Severely Handicapped

Commerce Department
See National Oceanic and Atmospheric Administration

Committee for Purchase From the Blind and Other Severely Handicapped
NOTICES
Procurement list, 1988:
Additions and deletions, 11694
(2 documents)

Committee for the Implementation of Textile Agreements
NOTICES
Cotton, wool, and man-made textiles:
Northern Mariana Islands, 11692
Sri Lanka, 11693
Uruguay, 11693

Defense Department
See also Air Force Department
PROPOSED RULES
Federal Acquisition Regulation (FAR):
Threshold; cost comparison, 11795

Economic Regulatory Administration
NOTICES
Energy Supply and Environmental Coordination Act; prohibition orders, rescissions, etc.:
Iowa Electric Light and Power Co., 11699

Education Department
NOTICES
Agency information collection activities under OMB review, 11695
Grantback arrangements; award of funds:
Florida, 11697
Maryland, 11696
Grants; availability, etc.:
Perkins loan program—
Test case resolution and certification systems list publication; extension of deadline dates, 11699

Employment and Training Administration
NOTICES
Wagner-Peyser Act funds:
Basic labor exchange activities; planning estimates and allotments; 1988 PY, 11715

Employment Standards Administration
NOTICES
Minimum wages for Federal and federally-assisted construction; general wage determination decisions, 11717

Energy Department
See Economic Regulatory Administration; Federal Energy Regulatory Commission

Environmental Protection Agency
RULES
Air quality implementation plans; approval and promulgation; various States:
Kentucky, 11655
PROPOSED RULES
Air quality implementation plans:
Particulate matter (PM 10) emissions from stationary sources; measurement methods, 11688
Air quality implementation plans; approval and promulgation; various States:
Illinois, 11686
Hazardous waste:
Land disposal restrictions—
First third wastes, 11742
NOTICES
Air programs; fuel and fuel additive waivers:
Sun Refining & Marketing Co., 11701
Air programs; fuel and fuel additives:
Gasoline lead content; lead banking penalty and lead usage and reporting policies, 11700
Environmental statements; availability, etc.:
Agency statements—
Comment availability, 11702
Weekly receipts, 11702
Monticello-Leesburg Lignite Mine, TX; wastewater discharge, 11703
Pesticide registration, cancellation, etc.:
Chlordane and heptachlor termiticides, 11798, 11801
(2 documents)
Toxic and hazardous substances:
Premanufacture notices receipts, 11703

Water pollution control:
Clean Water Act Class I and II administrative penalty assessments, 11701

Executive Office of the President
See Presidential Documents

Federal Aviation Administration
RULES
Airworthiness directives:
DeHavilland, 11641
Societe Nationale Industrielle Aerospatiale, 11643
Teledyne Continental Motors, 11642
PROPOSED RULES
Airworthiness directives:
Bell, 11678
Boeing, 11676
Cessna, 11674
Societe Nationale Industrielle Aerospatiale, 11675
NOTICES
Committees; establishment, renewal, termination, etc.:
Air Traffic Procedures Advisory Committee, 11722
Meetings:
Air Traffic Procedures Advisory Committee, 11722

Federal Communications Commission
RULES
Radio stations; table of assignments:
Florida, 11668
Michigan, 11668
Nevada, 11668
PROPOSED RULES
Radio stations; table of assignments:
Arizona, 11690
Minnesota and Iowa, 11690

Federal Deposit Insurance Corporation
NOTICES
Meetings; Sunshine Act, 11730

Federal Energy Regulatory Commission
RULES
Natural gas companies (Natural Gas Act):
Project cost limits under blanket certificates, 11644

Federal Highway Administration
NOTICES
Highway-railroad crossing improvement and maintenance needs study, 11723

Federal Maritime Commission
NOTICES
Agreements filed, etc., 11704

Federal Reserve System
RULES
Organization, functions, and authority delegations:
General Counsel; authority to administer oaths, etc., 11640
NOTICES
Applications, hearings, determinations, etc.:
First National Bancorp, Inc., et al., 11705
Meridian Bancorp., Inc., 11705
Middlefield Banc Corp. et al., 11705

Fish and Wildlife Service
NOTICES
Environmental statements; availability, etc.:
Sea lamprey control in Lake Champlain; lampricides, temporary use, 11713

Food and Drug Administration
RULES
Human drugs:
Stimulant drug products (OTC); final monograph
Correction, 11731
Medical devices:
Clinical chemistry and toxicology devices—
General provisions and classifications; correction, 11645
NOTICES
Food for human consumption:
Identity standard deviation; market testing permits—
Pacific salmon, canned, 11710
Medical devices:
Surgical Simplex P Antibiotic Bone Cement; availability of order, 11711
Meetings:
Advisory committees, panels, etc., 11710
Consumer information exchange, 11712
Shellfish sanitation and shellfish-growing waters; vibrio vulnificus (bacteria) workshop; correction, 11730

General Services Administration
PROPOSED RULES
Federal Acquisition Regulation (FAR):
Threshold; cost comparison, 11795

Health and Human Services Department
See also Food and Drug Administration
RULES
Grants administration:
Block grant programs—
Audits and reporting requirements, etc.; correction, 11656
Program Fraud Civil Remedies Act; implementation, 11656
NOTICES
Agency information collection activities under OMB review, 11706
Privacy Act; systems of records, 11707

Interior Department
See also Fish and Wildlife Service; Land Management Bureau; Minerals Management Service; Surface Mining Reclamation and Enforcement Office
NOTICES
Environmental statements; availability, etc.:
Draft statements for period 1980-1982; withdrawal status, 11712

Internal Revenue Service
RULES
Income taxes:
Passive foreign investment companies; shareholders (elections under 1291, 1294, 1295, 1297)
Correction, 11730
NOTICES
Organization, functions, and authority delegations:
District Directors of Employee Plans and Exempt Organizations Key Districts, 11728

Interstate Commerce Commission
NOTICES
Motor carriers:
Compensated intercorporate hauling operations, 11714

Justice Department
RULES
Program Fraud Civil Remedies Act; implementation, 11645

Labor Department
See also Employment and Training Administration; Employment Standards Administration
NOTICES
Internationally recognized worker rights in foreign countries, status; annual report, 11714

Land Management Bureau
NOTICES
Meetings:
Rawlins District Advisory Council, 11712
Withdrawal and reservation of lands:
Nevada, 11713

Minerals Management Service
NOTICES
Environmental statements; availability, etc.:
Pacific OCS—
Oil and gas operations, 11714

National Aeronautics and Space Administration
PROPOSED RULES
Federal Acquisition Regulation (FAR):
Threshold; cost comparison, 11795

National Agricultural Statistics Service
RULES
Freedom of Information Act; implementation:
Uniform fee schedule and administrative guidelines, 11639

National Credit Union Administration
NOTICES
Meetings; Sunshine Act, 11730

National Highway Traffic Safety Administration
PROPOSED RULES
Alcohol traffic safety programs; incentive grant criteria, 11679

National Labor Relations Board
NOTICES
Meetings; Sunshine Act, 11730

National Oceanic and Atmospheric Administration
NOTICES
Permits:
Marine mammals, 11692

Nuclear Regulatory Commission
NOTICES
Applications, hearings, determinations, etc.:
Dairyland Power Cooperative, 11718

Personnel Management Office
RULES
Retirement:
Federal Employees Retirement System—
Basic annuity; alternative forms of annuity, 11633

Postal Service
PROPOSED RULES
Domestic Mail Manual:
Mail disputes, 11685

Presidential Documents
PROCLAMATIONS
Special observances
Dennis Chavez Day (Proc. 5790), 11813
Productivity Improvement Week, National (Proc. 5791), 11811
Student-Athlete Day, National (Proc. 5789), 11809

Public Health Service
See Food and Drug Administration

Railroad Retirement Board
NOTICES
Agency information collection activities under OMB review, 11719

Securities and Exchange Commission
NOTICES
Agency information collection activities under OMB review, 11719
Self-regulatory organizations; proposed rule changes:
Chicago Board Options Exchange, Inc., 11720
Applications, hearings, determinations, etc.:
American Pain & Stress, Inc., et al., 11719

Statistical Reporting Service
See National Agricultural Statistics Service

Surface Mining Reclamation and Enforcement Office
PROPOSED RULES
Initial and permanent regulatory programs:
Prime farmland, 11685

Textile Agreements Implementation Committee
See Committee for the Implementation of Textile Agreements

Transportation Department
See Federal Aviation Administration; Federal Highway Administration; National Highway Traffic Safety Administration

Treasury Department
See also Internal Revenue Service
NOTICES
Agency information collection activities under OMB review, 11727
(2 documents)
Meetings:
Debt Management Advisory Committee, 11727

Veterans Administration
NOTICES
Agency information collection activities under OMB review, 11728

Separate Parts In This Issue

Part II
Environmental Protection Agency, 11742

Part III
Department of Defense; General Services Administration, and National Aeronautics and Space Administration, 11795

Part IV
Environmental Protection Agency, 11798

Part V
The President, 11809

Reader Aids
Additional information, including a list of public laws, telephone numbers, and finding aids, appears in the Reader Aids section at the end of this issue.

VOL 53 ISS 68 AP 8 1988 UMI

CFR PARTS AFFECTED IN THIS ISSUE

A cumulative list of the parts affected this month can be found in the Reader Aids section at the end of this issue.

3 CFR

Proclamations:

5789 11809
5790 11811
5791 11813

5 CFR

831 11633
842 11633

7 CFR

2 11636
910 11636
1032 11637
1126 11638
3600 11639
3601 11639

Proposed Rules:

917 11669

12 CFR

265 11640

14 CFR

39 (3 documents) 11641–11643

Proposed Rules:

39 (4 documents) 11674–11676, 11678

18 CFR

157 11644

21 CFR

340 11731
862 11645

23 CFR

Proposed Rules:

1309 11679

26 CFR

1 11731
602 11731

28 CFR

0 11645
71 11645

30 CFR

Proposed Rules:

785 11685
823 11685

39 CFR

Proposed Rules:

111 11685

40 CFR

52 11655

Proposed Rules:

52 (2 documents) 11686, 11688
264 11742
265 11742
268 11742
271 11742

45 CFR

79 11656
96 11656

47 CFR

73 (3 documents) 11668

Proposed Rules:

73 (2 documents) 11690

48 CFR

Proposed Rules:

43 11795
47 11795
52 11795

VOL
53
ISS
68
AP
8
1988
UMI

Rule

This sec
contains
general
of which
the Cod
publishe
U.S.C. 1
The Co
by the
Prices o
first FED
week.

**OFFICE
MANAG**

5 CFR P

**Retirem
Annuity**

AGENCY
Manage

ACTION:
commen

SUMMAR
Manage
interim
annuity
commen
are nec
provisio
manner
who ele
under s
United
entitlem
1988, an

DATES:
1988; co
before J

ADDRES
M. Jone
Retirem
Retirem
Box 57,
deliver
Street,

FOR FUR
Robert

SUPPLE
6001 of
Decemb
which t
certain
form of
8343a a
Code. T
amend
Novemb
January

Rules and Regulations

Federal Register
Vol. 53, No. 68
Friday, April 8, 1988

This section of the FEDERAL REGISTER contains regulatory documents having general applicability and legal effect, most of which are keyed to and codified in the Code of Federal Regulations, which is published under 50 titles pursuant to 44 U.S.C. 1510.
The Code of Federal Regulations is sold by the Superintendent of Documents. Prices of new books are listed in the first FEDERAL REGISTER issue of each week.

OFFICE OF PERSONNEL MANAGEMENT

5 CFR Parts 831 and 842

Retirement; Alternative Forms of Annuity

AGENCY: Office of Personnel Management.

ACTION: Interim rule with request for comments.

SUMMARY: The Office of Personnel Management (OPM) is amending its interim rules on alternative forms of annuity and extending the time limit for comment on those rules. Amended rules are necessary to implement a new provision of law that changes the manner of payment to certain retirees who elect an alternative form of annuity under section 8343a or 8420a of title 5, United States Code, and whose annuity entitlement commences after January 3, 1988, and before October 1, 1989.

DATES: Interim rule effective January 4, 1988; comments must be received on or before June 7, 1988.

ADDRESSES: Send comments to Reginald M. Jones, Jr., Assistant Director for Retirement and Insurance Policy, Retirement and Insurance Group, P.O. Box 57, Washington, DC 20044, or deliver to OPM, Room 4351, 1900 E Street, Washington, DC.

FOR FURTHER INFORMATION CONTACT: Robert Rosenblatt, (202) 632-4682.

SUPPLEMENTARY INFORMATION: Section 6001 of Pub. L. 100-203, enacted December 22, 1987, changes the way in which the lump-sum credit is paid to certain retirees who elect the alternative form of annuity provided by section 8343a and 8420a of title 5, United States Code. These interim regulations, which amend OPM's interim rules published November 28, 1986 (51 FR 42987) and January 16, 1987 (52 FR 2064), are required to implement the new provision.

Retirees under both the Civil Service Retirement System (CSRS) and the Federal Employees Retirement System (FERS) whose annuity entitlement begins after January 3, 1988, and before October 1, 1989, and who elect an alternative form of annuity will receive payment of their lump-sum credit in two installments. By law, the first installment, payable at the time of retirement, will be 60 percent of the retiree's lump-sum credit; the second installment, payable one year after the commencing date of annuity, will consist of the remaining 40 percent of the lump-sum credit, plus interest on that amount. The rate of interest payable on the 40-percent portion will be the variable interest rate determined annually by the Department of the Treasury (the rate in effect throughout calendar year 1988 is 8.375%). For example, if an annuitant's commencing date of annuity is May 1, 1988, he or she will receive the interest rate in effect during calendar year 1988 for the 8 months remaining in that year, and the rate in effect during 1989 for 4 months. Since the rate for calendar year 1989 is not yet known it will be impossible to predict, at the time of retirement, the exact amount of that annuitant's final payment.

Sections 831.2207 (a) and (b), and 842.707 (a) and (b) of these rules require that payment of the second installment of the lump-sum credit must be deferred until a year after the annuity commencing date even if the annuitant dies before the second payment is made. That interpretation of the law is consistent with its purpose as a deficit reduction measure in fiscal years 1988 and 1989. Sections 831.2207(b) and 842.707(b) also reaffirm the policy stated in the existing interim rules that an annuitant who dies before the final adjudication of his or her annuity will be deemed to have made an affirmative election.

Sections 831.2207(c) and 842.707(c) establish how OPM intends to administer section 6001(c) of Pub. L. 100-203, providing for exceptions to the deferred payment schedule. Annuitants whose separation from service was involuntary, except for cause on charges of misconduct or delinquency, will not be subject to deferred partial payments of the lump-sum credit. (The exception does not apply to annuitants who retire under an "early out" authority under 5 U.S.C. 8336(d)(2) or 5 U.S.C. 8414(b)(1)(B).)

Annuitants who are suffering from a life-threatening affliction or other critical medical condition as of the date annuity entitlement commences are also exempt from the deferred payment requirement. Consistent with the intent of the latter exemption to permit full payment of lump-sum credit at the time of retirement in those cases in which the annuitant would not likely live long enough to receive the full amount, §§ 831.2207(c) and 842.707(c) include a list of critical medical conditions that are likely to be fatal within one year. Certification by a physician that the annuitant is suffering from any of those conditions will be sufficient to exempt the annuitant from the deferred payment schedule. If a medical condition is claimed other than one of those listed, the employee's physician must certify that the employee has a life-threatening affliction or other critical medical condition that is likely to be fatal within one year. To assure expeditious handling of this type of case, the physician's certification must be submitted either with the employee's application for retirement or with the alternative form of annuity election form.

Finally, these rules include changes in the existing rules that are not specifically related to Pub. L. 100-203. Sections 831.2203(e) and 842.704 have been amended to expand the conditions under which annuitants may elect or revoke an election of an alternative form of annuity. Generally, annuitants will now have until 30 days after the date of their first regular monthly annuity payment to elect or revoke an election of an alternative form of annuity. After OPM has notified the annuitant of the effect of an election of the alternative form of annuity, the annuitant will have one opportunity to either elect the alternative form of annuity or revoke a prior election.

The election can be revoked (up to the time limit) even if the lump-sum credit has already been paid, provided the money is returned with the annuitant's written revocation. Also, §§ 831.2204(b) and 842.705(b) are being amended to clarify that an individual who has taken an alternative form of annuity is not permitted to switch to a disability

annuity under CSRS or FERS. Sections 8343a and 8420a of the CSRS and FERS laws, respectively, do not allow disability annuitants to elect an alternative form of annuity.

Waiver of Notice of Proposed Rulemaking

Under 5 U.S.C. 553(b)(3)(B) and (d)(3), I find that good cause exists for waiving the general notice of proposed rulemaking and for making these regulations effective in less than 30 days. Publication of proposed rulemaking would be impractical. The provisions being implemented were effective January 4, 1988. These regulations are needed immediately to administer the new provisions.

E.O. 12291, Federal Regulation

I have determined that this is not a major rule as defined under section 1(b) of E.O. 12291, Federal Regulation.

Regulatory Flexibility Act

I certify that within the scope of the Regulatory Flexibility Act, these regulations will not have a significant economic impact on a substantial number of small entities because they affect only Federal employees and retirees.

List of Subjects in 5 CFR Parts 831 and 842

Administrative practice and procedure, Air traffic controllers, Claims, Firefighters, Government employees, Law enforcement officers, Pensions, Retirement.

Office of Personnel Management.

Constance Horner,

Director.

For the reasons set out in the preamble, title 5 of the Code of Federal Regulations is amended as set forth below.

PART 831—RETIREMENT

Subpart V—Alternative Forms of Annuities

1. The authority citation for Subpart V of Part 831 is revised to read as follows:

Authority: 5 U.S.C. 8343a; Sec. 6001, Pub. L. 100-203.

2. In § 831.2203, paragraph (e) is revised to read as follows:

§ 831.2203 Eligibility.

* * * * *

(e)(1) After an employee or Member retires, OPM will notify the individual concerning the specific amounts applicable to him or her under §§ 831.2204 through 831.2206.

(2) After an individual has received the notice described in paragraph (e)(1) of this section, he or she may elect an alternative form of annuity or revoke an election made prior to receiving the notice, provided he or she notifies OPM of the election or revocation, in writing, on or before the date of final adjudication.

(3) An election or revocation under paragraph (e)(2) of this section cannot be amended.

(4) Revocation of an election of an alternative form of annuity will not be honored unless full repayment of any portion of the lump-sum credit paid to the individual accompanies the written notice of revocation.

* * * * *

3. In § 831.2204, paragraph (b) is revised to read as follows:

§ 831.2204 Alternative forms of annuities available.

* * * * *

(b) A retired employee or Member who elected an alternative form of annuity is subject to all provisions of subchapter III of chapter 83 of title 5, United States Code, as would otherwise apply to a retired employee or Member who did not elect an alternative form of annuity, except that an individual who elected an alternative form of annuity is not eligible to apply for disability annuity under section 8337 of such subchapter.

4. Section 831.2207 is added to Subpart V to read as follows:

* * * * *

§ 831.2207 Partial deferred payment of the lump-sum credit if annuity commences after January 3, 1988, and before October 1, 1989.

(a) Except as provided in paragraph (c) of this section, if the annuity of an employee or Member commences after January 3, 1988, and before October 1, 1989, the lump-sum credit payable under § 831.2204 is payable to the individual, or his or her survivors, according to the following schedule:

(1) Sixty percent of the lump-sum credit is payable at the time of retirement, and

(2) Forty percent is payable, with interest determined under section 8334(e)(3) of title 5, United States Code, one year after the time of retirement.

(b) If an employee or Member whose annuity commences after January 3, 1988, and before October 1, 1989, dies before the date of final adjudication, that individual is subject to § 831.2203 (f) or (g), but the lump-sum credit will be paid in accordance with the schedule in paragraph (a) of this section.

(c) An annuitant is exempt from the deferred payment schedule under paragraph (a) of this section if the individual—

(1) Separates involuntarily, other than for cause on charges of delinquency or misconduct, or

(2) Has, at the time of retirement, a life-threatening affliction or other critical medical condition.

(3)(i) For the purpose of this section, "life-threatening affliction or other critical medical condition" means a medical condition so severe as to reasonably limit an individual's probable life expectancy to less than one year.

(ii) The existence of one of the following medical conditions is *prima facie* evidence of a life threatening affliction or other critical medical condition:

(A) Metastatic and/or inoperable neoplasms.

(B) Aortic stenosis (moderate—severe).

(C) Class IV cardiac disease with congestive heart failure.

(D) Respiratory failure.

(E) Cor pulmonale with respiratory failure.

(F) Emphysema with respiratory failure.

(G) Ventricular tachycardia.

(H) Severe cardiomyopathy.

(I) Aplastic anemia.

(J) Uncontrolled hypertension with hypertensive encephalopathy.

(K) Cardiac aneurysm.

(L) Agranulocytosis.

(M) Hepatic failure.

(N) Severe Hypoxic brain damage.

(O) Severe portal hypertension with esophageal varices.

(P) AIDS (Active—Not AIDS Related Complex or only seropositivity).

(Q) Life threatening infections (encephalitis, meningitis, rabies, etc.).

(R) Scleroderma with severe esophageal involvement.

(S) Amyotrophic lateral sclerosis (rapidly progressive).

(T) Hemiplegia with life threatening complications.

(U) Quadriplegia with life threatening complications.

(V) Ventricular flutter.

(iii) Evidence of the existence of a life-threatening affliction or other critical medical condition must be certified by a physician and sent to OPM on or before the date the annuitant elects to receive an alternative form of annuity. For the purpose of this section, "physician" has the same meaning given that term in § 339.102 of this chapter.

(iv) If a medical condition other than those listed in paragraph (c)(3)(ii) of this

section is claimed as a basis for exemption from the deferred payment schedule, OPM will review the physician's certification to determine whether the cited condition is life-threatening or critical.

(v) The cost of providing medical documentation under this paragraph rests with the employee or Member, unless OPM exercises its choice of physician.

PART 842—FEDERAL EMPLOYEES RETIREMENT SYSTEM—BASIC ANNUITY

Subpart G—Alternative Forms of Annuities

5. The authority citation for Subpart G of Part 842 is revised to read as follows:

Authority: 5 U.S.C. 8461; Section 6001, Pub. L. 100-203.

§ 842.702 [Amended]

6. Section 842.702 is amended to add, in alphabetical order, a new definition to read as follows:

* * * * *

"Date of final adjudication" means the date 30 days after the date of the first regular monthly payment as defined in § 831.603.

* * * * *

7. Section 842.704 is revised to read as follows:

§ 842.704 Election requirements.

(a) The election of an alternative form of annuity and evidence of spousal consent must be filed on a form prescribed by OPM within the time limit prescribed in paragraph (b)(2) of this section. The form will require that a notary public or other official authorized to administer oaths certify that the current spouse presented identification, gave consent to the specific election as executed by the retiree, signed or marked the form, and acknowledged that the consent was given freely in the notary's or official's presence.

(b) (1) After an employee or Member retires, OPM will notify the individual concerning the specific amounts applicable to him or her under §§ 842.705 and 842.706.

(2) After an individual has received the notice described in paragraph (b)(1) of this section, he or she may elect an alternative form of annuity or revoke an election made prior to receiving the notice, provided he or she notifies OPM of the election or revocation, in writing, on or before the date of final adjudication.

(3) An election or revocation under paragraph (b)(2) of this section cannot be amended.

(4) Revocation of an election of an alternative form of annuity will not be honored unless full repayment of any portion of the lump-sum credit paid to the individual accompanies the written notice of revocation.

(c) Except as provided in paragraph (d), an annuitant who dies before the time limit prescribed in paragraph (b)(2) of this section is deemed to have made an affirmative election under § 842.703(a) with a reduced annuity to provide a current spouse annuity, regardless of any election completed under § 842.606, and the lump-sum credit will be paid in accordance with the order of precedence described in section 8424 of title 5, United States Code.

(d) If an annuitant described in paragraph (c) has completed an election under § 842.604 (a) or (b)—

(1) The lump-sum credit will be paid in accordance with the order of precedence described in section 8424 of title 5, United States Code; and

(2) The election under § 842.604 (a) or (b) will be honored.

8. In § 842.705, paragraph (b) is revised to read as follows:

§ 842.705 Alternative forms of annuities available.

* * * * *

(b) A retired employee or Member who elected an alternative form of annuity is subject to all provisions of subchapters II and IV of chapter 84 of title 5, United States Code, as would otherwise apply to a retired employee or Member who did not elect an alternative form of annuity. An individual who has elected an alternative form of annuity is not eligible to apply for disability annuity under subchapter V of such chapter.

9. Section 842.707 is added to Subpart G to read as follows:

§ 842.707 Partial deferred payment of the lump-sum credit if annuity commences after January 3, 1988, and before October 1, 1989.

(a) Except as provided in paragraph (c) of this section, if the annuity of an employee or Member commences after January 3, 1988, and before October 1, 1989, the lump-sum credit payable under § 842.705 is payable to the individual, or his or her survivors, according to the following schedule:

(1) Sixty percent of the lump-sum credit is payable at the time of retirement, and

(2) Forty percent is payable, with interest determined under section 8334(e)(3) of title 5, United States Code, one year after the time of retirement.

(b) If an employee or Member whose annuity commences after January 3, 1988, and before October 1, 1989, dies before the time limit prescribed in § 842.704(b)(2), that individual is subject to § 842.704 (c) or (d), but the lump-sum credit will be paid in accordance with the schedule in paragraph (a) of this section.

(c) An annuitant is exempt from the deferred payment schedule under paragraph (a) of this section if the individual—

(1) Separates involuntarily, other than for cause on charges of delinquency or misconduct, or

(2) Has, at the time of retirement, a life-threatening affliction or other critical medical condition.

(3)(i) For the purpose of this section, "life-threatening affliction or other critical medical condition" means a medical condition so severe as to reasonably limit an individual's probable life expectancy to less than one year.

(ii) The existence of one of the following medical conditions is *prima facie* evidence of a life-threatening affliction or other critical medical condition:

(A) Metastatic and/or inoperable neoplasms.

(B) Aortic stenosis (moderate—severe).

(C) Class IV cardiac disease with congestive heart failure.

(D) Respiratory failure.

(E) Cor pulmonale with respiratory failure.

(F) Emphysema with respiratory failure.

(G) Ventricular tachycardia.

(H) Severe cardiomyopathy.

(I) Aplastic anemia.

(J) Uncontrolled hypertension with hypertensive encephalopathy.

(K) Cardiac aneurysm.

(L) Agranulocytosis.

(M) Hepatic failure.

(N) Severe hypoxic brain damage.

(O) Severe portal hypertension with esophageal varices.

(P) AIDS (Active—Not AIDS Related Complex or only seropositivity).

(Q) Life-threatening infections (encephalitis, meningitis, rabies, etc.).

(R) Scleroderma with severe esophageal involvement.

(S) Amyotrophic lateral sclerosis (rapidly progressive).

(T) Hemiplegia with life threatening complications.

(U) Quadriplegia with life threatening complications.

(V) Ventricular flutter.

(iii) Evidence of the existence of a life-threatening affliction or other critical medical condition must be certified by a physician and sent to OPM on or before

the date the annuitant elects to receive an alternative form of annuity. For the purpose of this section, "physician" has the same meaning given that term in § 339.102 of this chapter.

(iv) If a medical condition other than those listed in paragraph (c)(3)(ii) of this section is claimed as a basis for exemption from the deferred payment schedule, OPM will review the physician's certification to determine whether the cited condition is life-threatening or critical.

(v) The cost of providing medical documentation under this paragraph rests with the employee or Member, unless OPM exercises its choice of physician.

[FR Doc. 88-7770 Filed 4-7-88; 8:45 am]

BILLING CODE 6325-01-M

DEPARTMENT OF AGRICULTURE

Office of the Secretary

7 CFR Part 2

Revision of Delegations of Authority; Correction

AGENCY: Department of Agriculture.

ACTION: Final rule; correction.

SUMMARY: This document corrects FR Doc. 88-5352 published in the **Federal Register** March 11, 1988 (48 FR 7877) as follows:

§§ 2.23 and 2.70 [Amended]

1. The term "State Agricultural Mediation Programs" is corrected to read: "State Agricultural Loan Mediation Programs" in the preamble, in § 2.23(a)(17) and in § 2.70(a)(32).

2. The authority citation is corrected to read as follows:

Authority: 5 U.S.C. 301 and Reorganization Plan No. 2 of 1953.

§§ 2.23 and 2.70 [Amended]

3. The term "Agriculture Credit Act of 1987" is corrected to read: "Agricultural Credit Act of 1987" in the preamble, in § 2.23(a)(17) and in § 2.70(a)(32).

FOR FURTHER INFORMATION CONTACT: Robert L. Siegler, Deputy Assistant General Counsel, Office of the General Counsel, United States Department of Agriculture, Washington, DC 20250, (202) 447-6035.

Date: April 4, 1988.

Richard E. Lyng

Secretary of Agriculture.

[FR Doc. 88-7780 Filed 4-7-88; 8:45 am]

BILLING CODE 3410-01-M

Agricultural Marketing Service

7 CFR Part 910

[Lemon Reg. 608]

Lemons Grown in California and Arizona; Limitation of Handling

AGENCY: Agricultural Marketing Service, USDA.

ACTION: Final rule.

SUMMARY: Regulation 608 establishes the quantity of fresh California-Arizona lemons that may be shipped to market at 335,000 cartons during the period April 10 through April 16, 1988. Such action is needed to balance the supply of fresh lemons with market demand for the period specified, due to the marketing situation confronting the lemon industry.

DATES: Regulation 608 (§ 910.908) is effective for the period April 10 through April 16, 1988.

FOR FURTHER INFORMATION CONTACT: Raymond C. Martin, Section Head, Volume Control Programs, Marketing Order Administration Branch, F&V, AMS, USDA, Room 2523, South Building, P.O. Box 96456, Washington, DC 20090-6456; telephone: (202) 447-5697.

SUPPLEMENTARY INFORMATION: This final rule has been reviewed under Executive Order 12291 and Departmental Regulation 1512-1 and has been determined to be a "non-major" rule under criteria contained therein.

Pursuant to requirements set forth in the Regulatory Flexibility Act (RFA), the Administrator of the Agricultural Marketing Service has determined that this action will not have a significant economic impact on a substantial number of small entities.

The purpose of the RFA is to fit regulatory action to the scale of business subject to such actions in order that small businesses will not be unduly or disproportionately burdened. Marketing orders issued pursuant to the Agricultural Marketing Agreement Act, and rules issued thereunder, are unique in that they are brought about through group action of essentially small entities acting on their own behalf. Thus, both statutes have small entity orientation and compatibility.

This regulation is issued under Marketing Order No. 910, as amended [7 CFR Part 910] regulating the handling of lemons grown in California and Arizona. The order is effective under the Agricultural Marketing Agreement Act (the "Act," 7 U.S.C. 601-674), as amended. This action is based upon the recommendation and information submitted by the Lemon Administrative Committee and upon other available information. It is found that this action will tend to effectuate the declared policy of the Act.

This regulation is consistent with the marketing policy for 1987-88. The committee met publicly on April 5, 1988, in Los Angeles, California, to consider the current and prospective conditions of supply and demand and recommended, by a 10-1 vote, a quantity of lemons deemed advisable to be handled during the specified week. The committee reports that the market for lemons is good.

Pursuant to 5 U.S.C. 553, it is further found that it is impracticable, unnecessary, and contrary to the public interest to give preliminary notice and engage in further public procedure with respect to this action and that good cause exists for not postponing the effective date of this action until 30 days after publication in the **Federal Register** because of insufficient time between the date when information became available upon which this regulation is based and the effective date necessary to effectuate the declared purposes of the Act. Interested persons were given an opportunity to submit information and views on the regulation at an open meeting. It is necessary, in order to effectuate the declared purposes of the Act, to make these regulatory provisions effective as specified, and handlers have been apprised of such provisions and the effective time.

List of Subjects in 7 CFR Part 910

Marketing agreements and orders, California, Arizona, Lemons.

For the reasons set forth in the preamble, 7 CFR Part 910 is amended as follows:

PART 910—LEMONS GROWN IN CALIFORNIA AND ARIZONA

1. The authority citation for 7 CFR Part 910 continues to read as follows:

Authority: Secs. 1-19, 48 Stat. 31, as amended; 7 U.S.C. 601-674.

2. Section 910.908 is added to read as follows:

Note: This section will not appear in the Code of Federal Regulations.

§ 910.908 Lemon Regulation 608.

The quantity of lemons grown in California and Arizona which may be handled during the period April 10, 1988 through April 16, 1988, is established at 335,000 cartons.

Dated: April 6, 1988.

Robert C. Keeney,

Deputy Director, Fruit and Vegetable Division, Agricultural Marketing Service.

[FR Doc. 88-7849 Filed 4-7-88; 8:45 am]

BILLING CODE 3410-02-M

---

7 CFR Part 1032

Milk in the Southern Illinois Marketing Area; Order Suspending Certain Provisions of the Order

AGENCY: Agricultural Marketing Service, USDA.

ACTION: Suspension of rules.

SUMMARY: This action suspends, for the months of March and April 1988, the limits on the amount of milk that may be delivered directly from the farms of producers to manufacturing plants and still be pooled and priced under the Southern Illinois order. The action was requested by the National Farmers Organization, a cooperative association that represents producers who supply milk for this market. The proponent cooperative recently lost a fluid-use account in the market. This action is necessary to assure that such cooperative's member dairy farmers who have regularly supplied the market's fluid needs will continue to share in the market's Class I sales during March and April 1988.

EFFECTIVE DATE: April 8, 1988, for the months of March and April 1988.

FOR FURTHER INFORMATION CONTACT: John F. Borovies, Marketing Specialist, USDA/AMS/Dairy Division, Order Formulation Branch, Room 2968, South Building, P.O. Box 96456, Washington, DC 20090-6456, (202) 447-2089.

SUPPLEMENTARY INFORMATION: Prior document in this proceeding:

Notice of proposed Suspension: Issued March 2, 1988; published March 7, 1988 (53 FR 7210).

The Administrator of the Agricultural Marketing Service has certified that this action will not have a significant economic impact on a substantial number of small entities. Such action lessens the regulatory impact of the order on certain milk handlers and tends to ensure that dairy farmers who regularly have supplied the market's fluid needs will continue to have their milk pooled and priced under the order during the months of March and April 1988 and thereby receive the benefits that accrue from such pricing. These rules have been reviewed under Executive Order 12291 and Departmental Regulation 1512-1 and they have been determined to be "non-major" rules under the criteria contained therein.

This suspension order is issued pursuant to the provisions of the Agricultural Marketing Agreement Act of 1937, as amended (7 U.S.C. 601-674), and of the order regulating the handling of milk in the Southern Illinois marketing area.

Notice of proposed rulemaking was published in the **Federal Register** on March 7, 1988 (53 FR 7210). Such notice invited comments on a proposal to suspend certain provisions of the Southern Illinois order. Interested persons were given 7 days after the **Federal Register** publication of the notice to comment on the suspension proposal. No opposing views were received.

After consideration of all relevant material, including the proposal set forth in the notice, and other available information, it is hereby found and determined that for the months of March and April 1988 the following provisions of the order do not tend to effectuate the declared policy of the Act:

1. In § 1032.13(b)(2), the words "or an other order plant, on any day during the months of May, June, and July, during the months of August and December for not more than 12 days of production of producer milk by such producer, and in any other month for not more than 8 days of production of producer milk by such producer".

2. In § 1032.13, paragraph (b)(3) in its entirety.

Statement of Consideration

This action suspends, for the months of March and April 1988, the limits on the amount of milk that may be moved directly from producers' farms to nonpool plants. The suspension will allow cooperatives and pool plant operators to divert (move milk to nonpool plants directly from the farms of producers) unlimited quantities of milk to manufacturing plants during such months and remain pooled and priced under the Southern Illinois order.

Under the producer milk provisions of the order not more than eight days of a dairy farmer's milk production may be diverted to unregulated manufacturing plants in each such month. Also, not more days of a dairy farmer's milk production may be diverted to manufacturing plants that are regulated under other Federal orders than is physically received at pool plants from such dairy farmer.

The National Farmers Organization (NFO), a cooperative association that represents dairy farmers who regularly have supplied milk for the market, asked that the limits on the amount of milk that handlers may divert to these two types of nonpool plants be suspended for March and April of this year. During the comment period, Mid-America Dairymen, Inc., a cooperative association that also supplies milk for this market, indicated its support for the suspension. No opposing views were received.

NFO recently lost a Class I outlet it had been supplying with milk. The milk NFO supplied to a pool distributing plant in the St. Louis area has been replaced by receipts from another market supplier. Since NFO's milk now lacks a fluid-use market, the cooperative must move its milk to manufacturing plants for surplus disposal. If the limits on such movements are not suspended, NFO will be unable to qualify for pool participation the milk of producers who have regularly supplied the market's fluid needs.

In view of the foregoing, it is appropriate to suspend the aforesaid provisions for the months of March and April 1988.

It is hereby found and determined that thirty days' notice of the effective date hereof is impratical, unnecessary and contrary to the public interest in that:

(a) The suspension is necessary to reflect current marketing conditions and to assure orderly marketing conditions in the marketing area in that such action ensures that dairy farmers who regularly have supplied the market's fluid requirements will continue to have their milk pooled and priced under the order and thereby receive the benefits that accrue from such pricing;

(b) This suspension does not require of persons affected substantial or extensive preparation prior to the effective date; and

(c) Notice of such proposed rulemaking was given interested parties and they were afforded an opportunity to file written data, views or arguments concerning this suspension. No views opposing the suspension were received.

Therefore, good cause exists for making this order effective upon publication in the **Federal Register** for the months of March and April 1988.

List of Subjects in 7 CFR Part 1032

Milk marketing orders, Milk, Dairy products.

It is therefore ordered, That the following provisions in § 1032.13 (b)(2) and (b)(3) hereby are suspended for the months of March and April 1988.

PART 1032—MILK IN THE SOUTHERN ILLINOIS MARKETING AREA

1. The authority citation for 7 CFR Part 1032 continues to read as follows:

Authority: Secs. 1–19, 48 Stat. 31, as amended; 7 U.S.C. 601–674.

§ 1032.13 [Amended]

2. In § 1032.13(b)(2), the words "or an other order plant, on any day during the months of May, June, and July, during the months of August and December for not more than 12 days of production of producer milk by such producer, and in any other month for not more than 8 days of production of producer milk by such producer" are suspended.

3. In § 1032.13, paragraph (b)(3) is suspended in its entirety.

Signed at Washington, DC, on: April 4, 1988.

Kenneth A. Gilles,

Assistant Secretary for Marketing and Inspection Services.

[FR Doc. 88–7731 Filed 4–7–88; 8:45 am]

BILLING CODE 3410-02-M

---

7 CFR Part 1126

Milk in the Texas Marketing Area; Order Suspending Certain Provisions of the Order

AGENCY: Agricultural Marketing Service, USDA.

ACTION: Suspension of rules.

SUMMARY: This action suspends, for the months of March through July 1988, portions of the pool plant and producer milk definitions of the Texas order. Specifically, for such months the suspension makes inoperative the 60-percent delivery requirement for supply-balancing plants that are pooled and operated by cooperative associations, establishes a cooperative's diversion allowance on the basis of such handler's deliveries to all types of pool plants and allows pool plant operators to move unlimited quantities of milk directly from the farm to manufacturing plants. The provisions that relate to cooperatives were proposed for suspension by Associated Milk Producers, Inc., a cooperative association that operates supply-balancing plants that are pooled under the order and represents dairy farmers who supply milk for this market. The provisions pertaining to pool plant operators were proposed for suspension by The Southland Corporation, which operates distributing plants that are fully regulated under the order. This action is necessary to give handlers the necessary flexibility to dispose of the market's increasing milk supplies without engaging in uneconomic movements of milk solely for the purpose of retaining pool status for the milk of dairy farmers who regularly have supplied the market's fluid requirements.

EFFECTIVE DATE: April 8, 1988, for the months of March–July 1988.

FOR FURTHER INFORMATION CONTACT: John F. Borovies, Marketing Specialist, USDA/AMS/Dairy Division, Order Formulation Branch, Room 2968, South Building, P.O. Box 96456, Washington, DC 20090–6456, (202) 447–2089.

SUPPLEMENTARY INFORMATION: Prior document in this proceeding:

Notice of Proposed Suspension: Issued March 4, 1988; published March 11, 1988 (53 FR 7942).

The Administrator of the Agricultural Marketing Service has certified that this action will not have a significant economic impact on a substantial number of small entities. Such action lessens the regulatory impact of the order on certain milk handlers and tends to ensure that dairy farmers who have supplied the market's fluid needs will continue to have their milk priced under the order and thereby receive the benefits that accrue from such pricing. These rules have been reviewed under Executive Order 12291 and Departmental Regulation 1512–1 and have been determined to be "non-major" rules under the criteria contained therein.

This suspension order is issued pursuant to the provisions of the Agricultural Marketing Agreement Act of 1937, as amended (7 U.S.C. 601 *et seq.*), and of the order regulating the handling of milk in the Texas marketing area.

Notice of proposed rulemaking was published in the **Federal Register** on March 11, 1988 (53 FR 7942). Such notice invited comments on proposals to suspend certain provisions of the Texas order. Interested persons were given seven days after the notice was published in the **Federal Register** to comment on the proposed action. No opposing views were received.

After consideration of all relevant material, including the proposals set forth in the notice and other available information, it is hereby found and determined that for the months of March–July 1988 the following provisions of the order do not tend to effectuate the declared policy of the Act:

1. In § 1126.7(e), the words "and 60 percent or more of the producer milk of members of the cooperative association (excluding such milk that is received at or diverted from pool plants described in paragraphs (b), (c) and (d) of this section) is physically received during the month in the form of a bulk fluid milk product at pool plants described in paragraph (a) of this section either directly from farms or by transfer from plants of the cooperative association for which pool plant status under this paragraph has been requested".

2. In § 1126.13(e)(2), the paragraph references "(a), (b), (c), and (d)".

3. In § 1126.13(e)(3), the sentence "The total quantity of milk so diverted during the month shall not exceed one-third of the producer milk physically received at such pool plant during the month that is eligible to be diverted by the plant operator;"

Statement of Consideration

This action suspends, for the months of March through July 1988, portions of the pool plant and producer milk definitions of the Texas order. Specifically, during such five-month period the 60-percent delivery standard for supply-balancing plants operated by cooperative associations will not apply. Also, a cooperative's diversion allowance (the amount of milk that a cooperative may divert to nonpool manufacturing plants) will be based on the cooperative's deliveries to all types of pool plants (supply-balancing plants in addition to distributing and supply plants). Pool plant operators will be permitted to divert unlimited amounts of milk to nonpool manufacturing plants.

Under the current order provisions, a supply-balancing plant operated by a cooperative association and located in the marketing area is a pool plant if at least 60 percent of the producer milk of members of the cooperative association is physically received at pool distributing plants during the month. Also, a cooperative association may divert to nonpool plants up to one-third of the amount of milk that the cooperative causes to be physically received at pool distributing and supply plants. The operator of a pool plant may divert not more than one-third of the milk that is physically received during the month at the handler's pool plant.

The provisions that relate to cooperative associations were proposed for suspension by Associated Milk Producers, Inc. (AMPI), a cooperative association that operates supply-balancing plants that are pooled under the order and represents a substantial number of producers who supply milk for the market. Suspension of the diversion limits for pool plant operators was proposed by The Southland Corporation (Southland), which operates distributing plants that are fully regulated under the Texas order.

AMPI requested that the provisions affecting cooperatives be suspended for the months of March-July 1988 and Southland asked that the provisions for pool plant operators be suspended for the months of March-June. During the comment period, Southland supported AMPI's proposal to include July in the suspension period if the diversion provisions are relaxed for pool plant operators in that month also. In that regard, Southland revised its suspension proposal and asked that the one-third limit not apply on diversions by pool plant operators for the months of March-July 1988.

The increasing volume of producer milk for this market cannot be qualified for pooling efficiently during the months of March-July this year under the order's current pool plant standards and diversion limitations. If the suspension is not granted, uneconomic movements of milk will have to be made by regulated handlers solely to qualify for pooling the increasing production of dairy farmers who regularly have supplied the market's fluid milk needs.

In view of the foregoing, it is appropriate to suspend the aforementioned provisions of the Texas order for the months of March-July 1988.

It is hereby found and determined that thirty days' notice of the effective date hereof is impractical, unnecessary and contrary to the public interest in that:

(a) This suspension is necessary to reflect current marketing conditions and to maintain orderly marketing in the marketing area in that such action will eliminate unnecessary milk movements and ensure that dairy farmers who have been supplying the market's fluid requirements will continue to have their milk priced under the order and thereby receive the benefits that accrue from such pricing.

(b) This suspension does not require of persons affected substantial or extensive preparation prior to the effective date; and

(c) Notice of proposed rulemaking was given interested parties and they were afforded an opportunity to file written data, views or arguments concerning the proposed action. No opposing views were received.

Therefore, good cause exists for making this order effective upon publication of this document in the **Federal Register** for the months of March-July 1988.

List of Subjects in 7 CFR Part 1126

Milk marketing orders, Milk, Dairy products.

It is therefore ordered, That the following provisions of the Texas order are hereby suspended for the months of March-July 1988.

PART 1126—MILK IN THE TEXAS MARKETING AREA

1. The authority citation for 7 CFR Part 1126 continues to read as follows:

Authority: Secs. 1–19, 48 Stat. 31, as amended; 7 U.S.C. 601–674.

§ 1126.7 [Temporarily suspended in part]

2. In § 1126.7(e), the words "and 60 percent or more of the producer milk of members of the cooperative association (excluding such milk that is received at or diverted from pool plants described in paragraphs (b), (c) and (d) of this section) is physically received during the month in the form of a bulk fluid milk product at pool plants described in paragraph (a) of this section either directly from farms or by transfer from plants of the cooperative association for which pool plant status under this paragraph has been requested" are suspended.

§ 1126.13 [Temporarily suspended in part]

3. In § 1126.13(e)(2), the paragraph references "(a), (b), (c), and (d)" are suspended.

4. In § 1126.13(e)(3), the sentence "The total quantity of milk so diverted during the month shall not exceed one-third of the producer milk physically received at such pool plant during the month that is eligible to be diverted by the plant operator;" is suspended.

Signed at Washington, DC, on: April 5, 1988.

Karen K. Darling,

Deputy Assistant Secretary, Marketing and Inspection Services.

[FR Doc. 88–7777 Filed 4–7–88; 8:45 am]

BILLING CODE 3410-02-M

National Agricultural Statistics Service

7 CFR Parts 3600 and 3601

Amendment of Freedom of Information Act Implementing Regulations

AGENCY: National Agricultural Statistics Service, USDA.

ACTION: Final rule.

SUMMARY: This final rule amends the National Agricultural Statistics Service's regulations implementing the Freedom of Information Act (FOIA) to conform to the Department of Agriculture's revised FOIA regulations (7 CFR Part 1, Subpart A), which were published in the **Federal Register** on December 31, 1987 (52 FR 49383). The rule also corrects typographical errors and makes a nomenclature change in the title "Statistician in Charge" to "State Statistician" to better reflect the responsibilities of the position.

EFFECTIVE DATE: April 8, 1988.

FOR FURTHER INFORMATION CONTACT: Laura B. Snow, Economics Agencies FOIA Officer, Economics Management Staff, USDA, Room 4310, South Building, 12th and Independence Avenue SW., Washington, DC 20250. Telephone (202) 447–7590.

SUPPLEMENTARY INFORMATION: This rule relates to internal agency management. Therefore, pursuant to 5 U.S.C. 553, notice of proposed rulemaking and opportunity for comment are not required and this rule may be made effective in less than 30 days after publication in the **Federal Register.** Further, since this rule relates to internal agency management, it is exempt from the provisions of Executive Order 12291. Also, this action is not a rule as defined by Pub. L. 96–354, the Regulatory Flexibility Act, and thus is exempt from the provisions of that Act.

List of Subjects

7 CFR Part 3600

Organization and functions (Government agencies).

7 CFR Part 3601

Freedom of information.

Accordingly, Parts 3600 and 3601, Chapter XXXVI, of Title 7, Code of Federal Regulations, are amended as set forth below.

PART 3600—[AMENDED]

1. The authority citation for Part 3600 is revised to read as follows:

Authority: 5 U.S.C. 301 and 552; and 7 CFR 2.85.

§ 3600.2 [Amended]

2. Section 3600.2 is amended by removing the words "Statistician in Charge" in the last line and inserting in their pace the words "State Statistician" and by redesignating the subparagraphs as paragraphs (a), (b), (c), (d), and (e).

§ 3600.3 [Amended]

3. Section 3600.3 is amended by redesignating the subparagraphs in paragraph (c)(4) as paragraphs (i), (ii), and (iii) and by redesignating the subparagraphs in paragraph (d)(1) as paragraphs (i), (ii), (iii), (iv), and (v).

4. Section 3600.3 is further amended by removing the word "survery" in paragraph (c)(4)(i) and inserting in its place the word "survey"; by removing the word "relating" in paragraph

(f)(1)(iv) and inserting in its place the word "related"; and by removing the period following the word "Part" in the introductory text of paragraph (g) and inserting a period following the closing parenthesis in that line.

Appendix A to Part 3600 [Amended]

5. Section 1 of Appendix A to 7 CFR Part 3600 is amended by removing the words "Statistician in Charge" and inserting in their place the words "State Statistician".

6. Section 2 of Appendix A to 7 CFR Part 3600 is amended by removing the word "ARKANSA" and inserting in its place the word "ARKANSAS" and by inserting the abbreviation "AR" before the ZIP Code "72201"; by inserting the word "of" between the words "Dept." and "Agriculture" in Hawaii; by inserting a comma after the number "398" in Montana; and by inserting the word "Rm." before the number "273" in Nebraska.

PART 3601—[AMENDED]

7. The authority citation for Part 3601 is revised to read as follows:

Authority: 5 U.S.C. 301 and 552; 7 CFR 1.1–1.23 and Appendix A.

§ 3601.1 [Amended]

8. Section 3601.1 is amended by removing the citation "§§ 1.1 through 1.19" and adding in lieu thereof the citation "§§ 1.1 through 1.23".

§ 3601.3 [Amended]

9. Section 3601.3 is amended by removing the citation "§ 1.3(b)" and adding in lieu thereof the citation "§ 1.3(a)(3)".

§ 3601.4 [Amended]

10. Section 3601.4 is amended by removing the citation "§ 1.7(a)" and adding in lieu thereof the citation "§ 1.8(a)".

§ 3601.6 [Amended]

11. Section 3601.6 is amended by adding the word "Washington" and a comma before the abbreviation "DC" in the first sentence; and by removing the words "Statistician in Charge" in the second sentence and inserting in their place the words "State Statistician".

Done at Washington, DC, this 22nd day of March, 1988.

Charles E. Caudill,

Administrator, National Agricultural Statistics Service.

[FR Doc. 88-7732 Filed 4-7-88; 8:45 am]

BILLING CODE 3410-20-M

FEDERAL RESERVE SYSTEM

12 CFR Part 265

[Docket No. R-0629]

Delegation of Authority to General Counsel

AGENCY: Board of Governors of the Federal Reserve System.

ACTION: Final rule.

SUMMARY: The Board is adding a new subparagraph (12) to § 265.2(b) of its Rules Regarding Delegation of Authority (12 CFR 265.2(b)) to delegate to the General Counsel (with the concurrence of the Staff Director of the Division of Banking Supervision and Regulation) the authority, in connection with any proceeding under section 8 of the Federal Deposit Insurance Act, as amended (12 U.S.C. 1818), any examination or investigtion under section 10(c) of the Federal Deposit Insurance Act, as amended (12 U.S.C. 1820(c)), or any application, examination, investigation or other proceeding under the provisions of the Bank Holding Company Act of 1956, as amended (12 U.S.C. 1841 *et seq.*), to administer oaths and affirmations, to take or cause to be taken depositions, and to issue, revoke, quash, or modify subpoenas and subpoenas duces tecum and to exercise such other powers as are permitted by law in matters involving the conduct of the affairs of State member banks, bank holding companies and persons associated with them and to designate representatives to undertake such actions pursuant to 12 U.S.C. 1818(n), 1820(c) and 1844(f). It is expected that this delegation of authority will relieve the Board from having to act on matters that are more efficiently and effectively handled by Board staff.

EFFECTIVE DATE: April 7, 1988.

FOR FURTHER INFORMATION CONTACT: J. Virgil Mattingly, Deputy General Counsel, Office of the General Counsel (202) 452-3420, or Herbert A. Biern, Assistant Director, Enforcement Section, Division of Banking Supervision and Regulation (202) 452-2620, Board of Governors of the Federal Reserve System, Washington, DC 20551.

SUPPLEMENTARY INFORMATION: Pursuant to sections 8(n) and 10(c) of the Federal Deposit Insurance Act, as amended (12 U.S.C. 1818(n) and 1820(c)), and section 5(f) of the Bank Holding Company Act of 1956, as amended (12 U.S.C. 1844(f)), the Board may authorize the initiation of an examination or investigation of a State member bank, a bank holding company and an individual connected with either of them in order to determine whether they complied with applicable laws and regulations. In connection with such proceedings, the Board or its designees may issue subpoenas to take testimony under oath and to obtain documents in order to gather information that usually is not obtainable during the routine bank examination and bank holding company inspection process. The ultimate purpose of the proceedings is to uncover facts that could, if warranted, support the use of the Board's other enforcement tools, such as cease and desist, removal, prohibition or civil money penalty actions. They, thus, represent the type of supervisory function that can be delegated to the staffs of the Federal Reserve Banks and the Board subject to the approval of the Board's General Counsel, acting with the concurrence of the Staff Director of the Division of Banking Supervision and Regulation.

In the past, Board staff has requested the initiation of special examinations and investigations in order to supplement the findings of the Systems's examiners, and the Board has approved all of its staff's requests. Since the Board expects that the number of staff requests for the initiation of such proceedings to increase due to the general increase in the number of complex enforcement cases involving insider abuse and misconduct, the Board decided to delegate to its General Counsel the authority to initiate special examinations and investigations, under 12 U.S.C. 1818(n), 1820(c) or 1844(f), when the General Counsel has the concurrence of the Staff Director of the Division of Banking Supervision and Regulation. By delegating this authority, Board staff will be able to expedite significantly the initiation of the investigatory stages of those supervisory matters that warrant additional discovery and fact gathering (through, *inter alia*, the subpoena process) prior to the presentation of the problem to the Board for appropriate follow-up enforcement action.

Regulatory Flexibility Act Analysis

Pursuant to section 605(b) of the Regulatory Flexibility Act (Pub. L. 96-354, 5 U.S.C. 601 *et seq.*), the Board certifies that the proposed amendment will not have a significant economic impact on a substantial number of small entities. The proposed amendment does

not have particular effect on small entities.

Public Comment

The provisions of section 553 of title 5, United States Code, relating to notice, public participation, and deferred effective date have not been followed in connection with the adoption of this amendment because the change to be effected is procedural in nature and does not constitute a substantive rule subject to the requirements of that section. The Board's expanded rule making procedures have not been followed for the same reason.

List of Subjects in 12 CFR Part 265

Authority, Delegations (Government agencies), Banks, Banking, Federal Reserve System.

For the reasons set forth above, 12 CFR Part 265 is amended as follows:

PART 265—RULES REGARDING DELEGATION OF AUTHORITY

1. The authority citation for Part 265 continues to read as follows:

Authority: Section 11(k), 38 Stat. 261 and 80 Stat. 1314; 12 U.S.C. 248(k).

2. Section 265.2 is amended by adding new paragraph (b)(12) to read as follows:

§ 265.2 Specific functions delegated to Board employees and to Federal Reserve Banks.

* * * * *

(b) * * *

(12) With the concurrence of the Staff Director of the Division of Banking Supervision and Regulation to take, or to authorize other designated persons to take, such actions as are permitted pursuant to sections 8(n) and 10(c) of the Federal Deposit Insurance Act, as amended (12 U.S.C. 1818(n) and 1820(c)), and section 5(f) of the Bank Holding Company Act of 1956, as amended (12 U.S.C. 1844(f)), including administering oaths and affirmations, taking depositions, and issuing, revoking, quashing or modifying subpoenas and subpoenas duces tecum.

* * * * *

By order of the Board of Governors of the Federal Reserve System, March 31, 1988.

William W. Wiles,

Secretary of the Board.

[FR Doc. 88-7717 Filed 4-7-88; 8:45 am]

BILLING CODE 6210-01-M

DEPARTMENT OF TRANSPORTATION

Federal Aviation Administration

14 CFR Part 39

[Docket No. 87-CE-33-AD; Amendment 39-5889]

Airworthiness Directives; de Havilland Models DHC-2 Mk. I (L-20A, YL-20, U-6, and U-6A) and DHC-2 Mk. III Airplanes

AGENCY: Federal Aviation Administration (FAA), DOT.

ACTION: Final rule.

SUMMARY: This amendment adopts a new Airworthiness Directive (AD), applicable to de Havilland Models DHC-2 Mk. I (L-20A, YL-20, U-6, and U-6A) and DHC-2 Mk. III airplanes, which supersedes AD 87-01-04, Amendment 39-5488 (51 FR 45306; December 18, 1986). The superseded AD required initial and repetitive dye penetrant inspections for cracks in the lugs of the lower attachment fork fitting of certain wing lift strut assemblies and strut serial numbers (S/N). Subsequent to the issuance of AD 87-01-04, de Havilland received a report of stress corrosion cracking in a part not within the strut S/N range specified in that AD. This AD extends the required inspection to additional strut assemblies and all S/N struts, and requires replacement of these strut assemblies, if cracked.

EFFECTIVE DATE: May 11, 1988.

Compliance: As prescribed in the body of the AD.

ADDRESSES: de Havilland Service Bulletin (S/B) No. 2/41, Revision A, dated August 14, 1987, applicable to this AD, may be obtained from the de Havilland Aircraft Company of Canada, a Division of Boeing of Canada, Ltd., Garratt Boulevard, Downsview, Ontario, Canada M3K 1Y5; Telephone (416) 633-7310. This information may be examined at the Rules Docket, FAA, Office of the Regional Counsel, Room 1558, 601 East 12th Street, Kansas City, Missouri 64106.

FOR FURTHER INFORMATION CONTACT: Mr. Lester Lipsius, Airframe Branch, ANE-172, New York Aircraft Certification Office, FAA, New England Region, 181 South Franklin Avenue, Valley Stream, New York 11581; Telephone (516) 791-6220.

SUPPLEMENTARY INFORMATION: A proposal to amend Part 39 of the Federal Aviation Regulations by superseding AD 87-01-04, Amendment 39-5488 (51 FR 45306; December 18, 1986) to extend the required inspection to additional strut assemblies including all serial number struts and require replacement of these strut assemblies, if cracked, on all de Havilland Model DHC-2 Mk. I and DHC-2 Mk. III airplanes, was published in the **Federal Register** on December 1, 1987 (52 FR 45642). This proposal resulted from a report received of stress corrosion cracking in the lower attachment fitting of a strut whose S/N was not within the number range referenced in AD 87-01-04. Consequently, de Havilland issued S/B No. 2/41, Revision A, dated August 14, 1987, which recommends inspection of all strut assemblies C2W1103, C2W1103A, C2W1104, and C2W1104A, and all strut S/N's and replacement of cracked assemblies with strut assemblies C2W1115-1 and C2W1115-2 having steel end fittings. de Havilland states that strut assemblies C2W1103 and C2W1103A are identical, and C2W1104 and C2W1104A are identical. Transport Canada, who has responsibility and authority to maintain the continuing airworthiness of these airplanes in Canada, has issued AD CF-85-08, but has not revised their AD in accordance with S/B No. 2/41, Revision A. The FAA relies upon the certification of Transport Canada combined with FAA review of pertinent documentation in finding compliance of the design of these airplanes with the applicable United States airworthiness requirements and the airworthiness and conformity of products of this design certificated for operation in the United States. The FAA has examined the available information related to the issuance of S/B No. 2/41, Revision A, and believes that the condition addressed by this bulletin is an unsafe condition that may exist on other products of this type design certificated for operation in the United States. Therefore, an AD superseding AD 87-01-04 is being issued on de Havilland Model DHC-2 Mk. I (L-20A, YL-20, U-6, and U-6A) and DHC-2 Mk. III airplanes to extend the effectivity of the required inspection to additional strut assemblies, including all strut serial numbers, and require replacement of these strut assemblies, if cracked.

Interested persons have been afforded an opportunity to comment on the proposal. No comments or objections were received on the proposal or the FAA determination of the related cost to the public. Accordingly, the proposal is adopted without change except for minor editorial corrections.

The FAA has determined that this regulation involves approximately 385 Model DHC-2 Mk. I and DHC-2 Mk. III airplanes in United States registry at an approximate annual cost of $240 for inspection of each airplane. The total cost for each inspection of the fleet is estimated to be $92,400 to the private

sector. The cost of compliance with the AD is so small that the expense of compliance will not be a significant financial impact on any small entities operating these airplanes.

Therefore, I certify that this action: (1) Is not a "major rule" under Executive Order 12291: (2) is not a "significant rule" under DOT Regulatory Policies and Procedures (44 FR 11034; February 26, 1979); and (3) will not have a significant economic impact, positive or negative, on a substantial number of small entities under the criteria of the Regulatory Flexibility Act. A copy of the final evaluation prepared for this action is contained in the regulatory docket. A copy of it may be obtained by contacting the Rules Docket at the location provided under the caption "ADDRESSES".

List of Subjects in 14 CFR Part 39

Air transportation, Aviation safety, Aircraft, Safety

Adoption of the Amendment

Accordingly, pursuant to the authority delegated to me by the Administrator, the Federal Aviation Administration amends § 39.13 of Part 39 of the FAR as follows:

PART 39—[AMENDED]

1. The authority citation for Part 39 continues to read as follows:

Authority: 49 U.S.C. 1354(a), 1421 and 1423; 49 U.S.C. 106(g) (Revised Pub. L. 97-449, January 12, 1983); and 14 CFR 11.89.

§ 39.13 [Amended]

2. By superseding AD 87-01-04, Amendment 39-5488 (51 FR 45306, December 18, 1986) with the following new airworthiness directive:

De Havilland: Applies to all Model DHC-2 Mk. I (including L-20A, YL-20, U-6, and U-6A) and DHC-Mk. III (Turbo Beaver) (all serial numbers) airplanes with wing strut assemblies C2W1103, C2W1103A, C2W1104 and C2W1104A, certificated in any category.

Compliance: Required as indicated after the effective date of this AD, unless already accomplished.

To detect cracks due to stress corrosion in wing life strut assemblies, accomplish the following:

(a) Within 100 hours time-in-service (TIS), or one month, whichever occurs first after the effective date of this AD, and thereafter at intervals not to exceed 500 hours TIS, or 12 calendar months, whichever occurs first:

(1) Remove wing strut assemblies C2W1103 or C2W1103A and C2W1104 or C2W1104A, from the airplane and prepare the assemblies for inspection as described in the "ACCOMPLISHMENT INSTRUCTIONS" section of de Havilland Service Bulletin (S/B) No. 2/41, Revision A, dated August 14, 1967.

(2) Conduct a dye penetrant inspection with a 10-power glass for cracks in the lugs of the lower attachment clevis fitting.

(3) If cracks are found, prior to further flight replace the complete strut assembly with a strut assembly of the same part number that has had the lower clevis fitting inspection using the dye penetrant procedure and has been found free of cracks, or strut assembly C2W1115-1 or C2W1115-2, as appropriate.

(4) If no cracks are found, clean the lower clevis fitting and reinstall the wing strut assembly.

(5) If wing strut assembly C2W1115-1 or C2W1115-2 is installed, the recurring visual inspection specified in Paragraph (a) of this AD is no longer required.

(b) The airplane may be flown in accordance with FAR 21.197 to a location where the requirements of this AD may be accomplished.

(c) Upon submission of substantiating data by owner or operator through an FAA Maintenance Inspector, the Manager, New York Aircraft Certification Office, FAA, New England Region, may adjust the repetitive inspection intervals specified in this AD.

(d) An equivalent means of compliance with this AD may be used if approved by the Manager, New York Aircraft Certification Office, FAA, New England Region.

All persons affected by this directive may obtain copies of the document referred to herein upon request to the de Havilland Aircraft Company of Canada, a Division of Boeing of Canada, Ltd., Garratt Boulevard, Downsview, Ontario, Canada, M3K 1Y5; Telephone: (416) 633-7310, or these documents may be examined at the FAA, Office of the Regional Counsel, Room 1558, 601 East 12th Street, Kansas City, Missouri 64106.

This AD supersedes AD 87-01-04, Amendment 39-5488 (51 FR 45306; December 18, 1986).

This amendment becomes effective on May 11, 1988.

Issued in Kansas City, Missouri, on March 25, 1988.

Jerold M. Chavkin,

Acting Director, Central Region.

[FR Doc. 88-7702 Filed 4-7-88; 8:45 am]

BILLING CODE 4910-13-M

---

14 CFR Part 39

[Docket No. 88-ANE-09; Amdt. 39-5888]

Airworthiness Directives; Teledyne Continental Motors IO-360, TSIO-360, O-470, IO-470, TSIO-470, IO-520, TSIO-520, GTSIO-520, and IO-550 Series Engines Equipped With Oil Filters

AGENCY: Federal Aviation Administration (FAA), DOT.

ACTION: Final rule.

SUMMARY: This action publishes in the **Federal Register** and makes effective as to all persons an amendment adopting a new airworthiness directive (AD) which was previously made effective as to all known U.S. owners and opertors of certain Teledyne Continental Motors IO-360, TSIO-360, O-470, IO-470, TSIO-470, IO-520, TSIO-520, GTSIO-520, and IO-550, series engines by individual priority letter. The AD requires replacement of Teledyne Continental Motors oil filters, P/N's 649309 and 649310, with a serviceable part. The AD is needed to prevent possible loss of engine oil which could result in engine failure.

DATES: Effective—April 15, 1988, as to all persons except those persons to whom it was made immediately effective by individual priority letter AD 88-03-06, issued Febeuary 5, 1988, which contained this amendment.

Compliance as required in the body of the AD.

ADDRESSES: The applicable Service Bulletin may be obtained from Teledyne Continental Motors, P.O. Box 90, Mobile, AL 36601.

A copy of the Service Bulletin is contained in the Rules Docket, Docket Number 88-ANE-09, Office of the Regional Counsel, Federal Aviation Administration, New England Region, 12 New England Executive Park, Burlington, MA 01803, and may be examined between the hours of 8:00 a.m. and 4:30 p.m., Monday through Friday, except federal holidays.

FOR FURTHER INFORMATION CONTACT: Jerry Robinetts, Aerospace Engineer, Propulsion Branch, ACE-140A, Atlanta Aircraft Certification Office, Federal Aviation Administration, 1669 Phoenix Parkway, Suite 210C, Atlanta, GA 30349; telephone (404) 991-3810.

SUPPLEMENTARY INFORMATION: On February 5, 1988, priority letter AD 88-03-06 was issued made effective immediately as to all known U.S. owners and operators of certain Teledyne Continental Motors IO-360, TSIO-360, O-470, IO-470, TSIO-470, IO-520, TSIO-520, GTSIO-520, and IO-550 series engines. The AD requires replacement of Teledyne Continental Motors oil filter, P/N's 649309 and 649310, with a servicable part. There have been seven failures of these oil filters, which resulted in substantial loss (in one case, 7 quarts in 1.5 hours) of engine oil. AD action was necessary to prevent possible loss of engine oil and subsequent engine failure.

Since it was found that immediate corrective action was required, notice and public procedure thereon were impracticable and contrary to public interest, and good cause existed to make the AD effective immediately by

individual priority letter AD 88-03-06, issued February 5, 1988, as to all known U.S. owners and operators of certain Teledyne Continental Motors IO-360, TSIO-360, O-470, IO-470, TSIO-470, IO-520, TSIO-520, GTSIO-520, and IO-550 series engines. These conditions still exist, and the AD is hereby published in the **Federal Register** as an amendment to § 39.13 of Part 39 of the Federal Aviation Regulations to make it effective as to all persons.

Conclusion: The FAA has determined that this regulation is an emergency regulation that is not considered to be major under Executive Order 12291. It is impracticable for the agency to follow the procedures of Executive Order 12291 with respect to this rule since the rule must be issued immediately to correct an unsafe condition in aircraft. It has been further determined that this action involves an emergency regulation under DOT Regulatory Policies and Procedures (44 FR 11034; February 26, 1979). If this action is subsequently determined to involve a significant/major regulation, a final regulatory evaluation or analysis, as appropriate, will be prepared and placed in the regulatory docket (otherwise, an evaluation or analysis is not required). A copy of it, when filed, may be obtained by contacting the person identified under the caption "**FOR FURTHER INFORMATION CONTACT**".

List of Subjects in 14 CFR Part 39

Engines, Air Transportation, Aircraft, Aviation Safety.

Adoption of the Amendment

Accordingly, pursuant to the authority delegated to me, the Federal Aviation Administration (FAA) amends Part 39 of the Federal Aviation Regulations (FAR) as follows:

PART 39—[AMENDED]

1. The authority citation for Part 39 continues to read as follows:

Authority: 49 U.S.C. 1354(a), 1421, and 1423; 49 U.S.C. 106(g) (Revised, Pub. L. 97-449, January 12, 1983); and 14 CFR 11.89.

§ 39.13 [Amended]

2. By adding to § 39.13 the following new airworthiness directive (AD):

Teledyne Continental Motors (TCM): Applies to IO-360, TSIO-360, O-470, IO-470, TSIO-470, IO-520, TSIO-520, GTSIO-520, and IO-550 series engines equipped with oil filters.

Compliance is required at the next oil change or within 10 flight hours, whichever occurs first, unless already accomplished.

To prevent possible loss of engine oil and subsequent engine failure, accomplish the following:

(a) Determine if oil filter TCM P/N 649309 or 649310 is installed.

(1) If neither filter is installed, proceed to paragraph (b).

(2) If P/N 649309 is installed, replace with P/N 649923 or equivalent Parts Manufacturer Approval (PMA) product.

(3) If P/N 649310 is installed, replace with P/N 649922 or equivalent PMA Product.

(b) Make appropriate log book entry showing compliance with this AD.

(c) Aircraft may be ferried in accordance with the provisions of Federal Aviation Regulations 21.197 and 21.199 to a base where this Ad can be accomplished.

(d) Upon request, an equivalent means of compliance with the requirements of this Ad may be approved by the Manager, Atlanta Aircraft Certification Office, Federal Aviation Administration, 1669 Phoenix Parkway, Suite 210C, Atlanta, Georgia 30349.

(e) Upon submission of substantiating data by an owner or operator, through an FAA maintenance inspector, the Manager, Atlanta Aircraft Certification Office, may adjust the compliance time specified in this AD.

Notes: (1) TCM Service Bulletin No. M88-4, dated January 15, 1988 refers to this subject.

(2) TCM oil filter P/N's 649309 and 649310, in inventory, should be returned to TCM in accordance with TCM Service Bulletin referenced in Note 1.

This amendment becomes effective April 15, 1988, as to all persons except those persons to whom it was made immediately effective by individual priority letter AD 88-03-06, issued February 5, 1988, which contained this amendment.

Issued in Burlington, Massachusetts, on March 25, 1988.

Jack A. Sain,

Acting Director, New England Region.

[FR Doc. 88-7700, Filed 4-7-88; 8:45 am]

BILLING CODE 4910-13-M

14 CFR Part 39

[Docket No. 87-ASW-60, Amdt. 39-5886]

Airworthiness Directives; Societe Nationale Industrielle Aerospatiale (SNIAS) Model SA 365N Series Helicopters

AGENCY: Federal Aviation Administration (FAA), DOT.

ACTION: Final rule.

SUMMARY: This amendment adopts a new airworthiness directive (AD) which reduces the service life of Part Number (P/N) 365A31-1898-20 attachment bolts for the spherical thrust bearing on Aerospatiale Model SA 365N series helicopters. The AD is needed to prevent failure of a spherical thrust bearing attachment bolt which could result in loss of control of the helicopter.

EFFECTIVE DATE: April 29, 1988.

Compliance: As indicated in the body of the AD.

ADDRESSES: The applicable service documents may be obtained from Aerospatiale Helicopter Corporation, 2701 Forum Drive, Grand Prairie, Texas 75051, ATTN: Customer Support.

A copy of each of the service documents is contained in the Rules Docket, Office of the Regional Counsel, FAA, Southwest Region, 4400 Blue Mound Road, Fort Worth, Texas.

FOR FURTHER INFORMATION CONTACT: John Varoli, Manager, Aircraft Certification Office, FAA, Europe, Africa, and Middle East Office, c/o American Embassy, Brussels, Belgium, APO NY 09667, telephone 513.38.30, or R.T. Weaver, Rotorcraft Standards Staff, ASW-110, Federal Aviation Administration, Fort Worth, Texas 76193-0111, telephone (817) 624-5122.

SUPPLEMENTARY INFORMATION: The Director Generale de l'Aviation Civile (DGAC), in accordance with existing provisions of the bilateral airworthiness agreement, has notified the FAA of an unsafe condition on certain Aerospatiale Model SA 365N series helicopters. It has been determined that the service life of attachment bolts for spherical thrust bearings has been reduced.

Aerospatiale has issued Service Bulletin No. 01.20, dated October 31, 1986, which reduces the service life of spherical thrust bearing attachment bolts, P/N 365A31-1898-20, from 4,800 to 1,000 hours. The DGAC has classified this bulletin as mandatory.

The Model SA 365N series helicopter is manufactured in France and type certificated in the United States under the provisions of Section 21.29 of the Federal Aviation Regulations (FAR).

Since this condition is likely to exist or develop on other helicopters of the same type design registered in the United States, an airworthiness directive is being issued which requires reduction of the service life of the attachment bolts from spherical thrust bearings on Aerospatiale Model SA 365N series helicopters.

Since a situation exists that requires the immediate adoption of this regulation, it is found that notice and public procedure hereon are impracticable and good cause exists for making this amendment effective in less than 30 days.

The FAA has determined that this regulation is an emergency regulation that is not considered to be major under Executive Order 12291. It is impracticable for the agency to follow the procedures of Executive Order 12291 with respect to this rule since the rule must be issued immediately to correct an unsafe condition in aircraft. It has

been further determined that this action involves an emergency regulation under DOT Regulatory Policies and Procedures (44 FR 11034; February 26, 1979). If this action is subsequently determined to involve a significant/major regulation, a final regulatory evaluation or analysis, as appropriate, will be prepared and placed in the regulatory docket (otherwise, an evaluation or analysis is not required). A copy of it, when filed, may be obtained from the Regional Rules Docket.

List of Subjects in 14 CFR Part 39

Air transportation, Aircraft, Aviation safety, Safety.

Adoption of the Amendment

Accordingly, pursuant to the authority delegated to me by the Administrator, the Federal Aviation Administration amends § 39.13 of Part 39 of the FAR as follows:

PART 39—AIRWORTHINESS DIRECTIVES

1. The authority citation for Part 39 continues to read as follows:

Authority: 49 U.S.C. 1354(a), 1421, and 1423; 49 U.S.C. 106(g) (Revised Pub. L. 97-449, January 12, 1983); and 14 CFR 11.89.

§ 39.13 [Amended]

2. By adding the following new AD:

Societe Nationale Industrielle Aerospatiale (SNIAS): Applies to all Aerospatiale Model SA 365N series helicopters certificated in all categories.

Compliance is required as indicated (unless already accomplished).

To prevent failure of the attachment bolts of the spherical thrust bearings, accomplish the following:

(a) Replace attachment beam bolts (P/N 365A31-1898-20) for the spherical thrust bearings as follows—

(1) For bolts which have 900 or more hours' time in service on the effective date of this AD, replace the bolts within the next 100 hours' time in service; and

(2) For bolts which have less than 900 hours' time in service on the effective date of this AD, replace the bolts before they reach 1,000 hours' time in service.

(b) An alternate method of compliance with this AD, which provides an equivalent level of safety, may be used when approved by the Manager, Aircraft Certification Division, Federal Aviation Administration, Fort Worth, Texas 76193-0100, or by the Manager, Aircraft Certification Office, AEU-100, FAA, Europe, Africa, and Middle East Office, c/o American Embassy, Brussels, Belgium.

(c) In accordance with FAR §§ 21.197 and 21.199, flight is permitted to a base where the maintenance required by this AD may be accomplished.

Note.—Aerospatiale Service Bulletin No. 01.20 pertains to this subject.

This amendment becomes effective April 29, 1988.

Issued in Fort Worth, Texas, on March 22, 1988.

C.R. Melugin, Jr.,

Director, Southwest Region.

[FR Doc. 88-7689 Filed 4-7-88; 8:45 am]

BILLING CODE 4910-13-M

DEPARTMENT OF ENERGY

Federal Energy Regulatory Commission

18 CFR Part 157

[Docket No. RM81-19]

Project Cost Limits Under Blanket Certificates

AGENCY: Federal Energy Regulatory Commission, DOE.

ACTION: Order of the Director, OPPR.

SUMMARY: Pursuant to the authority delegated by 18 CFR 375.307(s), the Director of the Office of Pipeline and Producer Regulation computes and publishes the project cost and annual limits specified in Table I of § 157.208(d) and Table II of § 157.215(a) for each calendar year.

EFFECTIVE DATE: January 1, 1988.

FOR FURTHER INFORMATION CONTACT: Richard P. O'Neill, Director, OPPR (202) 357-8500.

SUPPLEMENTARY INFORMATION:

Issued February 5, 1988.

Order of The Director, OPPR

Section 157.208(d) of the Commission's Regulations provides for project cost limits applicable to construction, acquisition, operation and miscellaneous rearrangement of facilities (Table I) authorized under the blanket certificate procedure (Order No. 234, 19 FERC ¶ 61,216). Section 157.215(a) specifies the calendar year dollar limit which may be expended on underground storage testing and development (Table II) authorized under the blanket certificate. Section 157.208(d) requires that the "limits specified in Tables I and II shall be adjusted each calendar year to reflect the 'GNP implicit price deflator' published by the Department of Commerce for the previous calendar year."

Pursuant to § 375.307(s) of the Commission's Regulations, the authority for the publication of such cost limits, as adjusted for inflation, is delegated to the Director of the Office of Pipeline and Producer Regulation. The cost limits for calendar years 1982 through 1988, as published in Table I of § 157.208(d) and Table II of § 157.215(a), are hereby issued.

List of Subjects in 18 CFR Part 157

Natural gas.

Richard P. O'Neill,

Director, Office of Pipeline and Producer Regulation.

Accordingly, 18 CFR Part 157 is amended as follows:

PART 157—[AMENDED]

1. The authority citation for Part 157 continues to read as follows:

Authority: Natural Gas Act, 15 U.S.C. 717-717w (1982); Department of Energy Organization Act, 42 U.S.C. 7101-7352 (1982); E.O. 12009, 3 CFR 142 (1978); Natural Gas Policy Act of 1978, 15 U.S.C. 3301-3432 (1982), unless otherwise noted.

§ 157.208 [Amended]

2. Table I in § 157.208(d) is revised to read as follows:

TABLE I

Year	Limit	
	Auto. proj. cost limit (col. 1)	Prior notice proj. cost limit (col. 2)
1982	$4,200,000	$12,000,000
1983	4,500,000	12,800,000
1984	4,700,000	13,300,000
1985	4,900,000	13,800,000
1986	5,100,000	14,300,000
1987	5,200,000	14,700,000
1988	5,400,000	15,100,000

§ 157.215 [Amended]

3. Table II in § 157.215(a) is revised to read as follows:

Table II

Year	Limit
1982	$2,700,000
1983	$2,900,000
1984	$3,000,000
1985	$3,100,000
1986	$3,200,000
1987	$3,300,000
1988	$3,400,000

[FR Doc. 88-7247 Filed 4-7-88; 8:45 am]

BILLING CODE 6717-01-M

DEPARTMENT OF HEALTH AND HUMAN SERVICES

Food and Drug Administration

21 CFR Part 862

[Docket No. 78N-2285]

Clinical Chemistry and Clinical Toxicology Devices; Correction

AGENCY: Food and Drug Administration.

ACTION: Final rule; correction.

SUMMARY: In the Federal Register of May 1, 1987 (52 FR 16102), the Food and Drug Administration (FDA) published a final rule classifying preamendments clinical chemistry and clinical toxicology devices under the Medical Device Amendments of 1976. The final rule inadvertently stated that 3 of the 220 devices were in a class, other than the one the agency intended. In addition, the rule inappropriately repeated information on 3 sections and did not remove a reference to "general controls" in a section. This document corrects those errors.

FOR FURTHER INFORMATION CONTACT: Joseph M. Sheehan, Center for Devices and Radiological Health (HFZ-84), Food and Drug Administration, 5600 Fishers Lane, Rockville, MD 20857, 301-443-4874.

SUPPLEMENTARY INFORMATION: In FR Doc. 87-9858, appearing at page 16102 in the Federal Register of Friday, May 1, 1987, the following corrections are made:

§ 862.1190 [Corrected]

1. On page 16126, first column, in paragraph (b) of § 862.1190 *Copper test system,* "Class II" should be corrected to read "Class I".

§ 862.1295 [Corrected]

2. On page 16127, second column, in paragraph (b) of § 862.1295 *Folic acid test system,* "Class I" should be corrected to read "Class II".

§ 862.1680 [Corrected]

3. On page 16132, first column, in paragraph (b) of § 862.1680 *Testosterone test system,* "(general controls)" should be removed.

§ 862.1700 [Corrected]

4. On page 16132, the redundant printing of § 862.1695 *Free thyroxine test system,* § 862.1700 *Total thyroxine test system,* and § 862.1705 *Triglyceride test system,* at the bottom of the second and top of the third columns, should be removed.

§ 862.1720 [Corrected]

5. On page 16133, first column, in paragraph (b) of § 862.1720 *Triose phosphate isomerase test system,* "Class II" should be corrected to read "Class I".

Dated: April 1, 1988.

John M. Taylor,

Associate Commissioner for Regulatory Affairs.

[FR Doc. 88-7749 Filed 4-7-88; 8:45 am]

BILLING CODE 4160-01-M

DEPARTMENT OF JUSTICE

Office of the Attorney General

28 CFR Parts 0 and 71

[Order No. 1258-88]

Implementation of the Program Fraud Civil Remedies Act of 1986

AGENCY: Department of Justice.

ACTION: Final rule.

SUMMARY: The Department of Justice hereby adopts rules implementing the Program Fraud Civil Remedies Act of 1986. With respect to actions initiated by the Department of Justice, the rules establish administrative procedures for imposing the statutorily authorized civil penalties against any person who makes, submits, or presents a false, fictitious, or fraudulent claim or written statement to the Department. With respect to actions initiated by other agencies, the rules assign officials within the Department of Justice responsibilities regarding approval of agency requests to initiate actions, stays of agency proceedings at the request of the Department, and collection and compromise of liabilities imposed by the agencies.

EFFECTIVE DATE: April 8, 1988.

FOR FURTHER INFORMATION CONTACT: Janis A. Sposato, General Counsel, Justice Management Division. Telephone: (202) 633-3452. (Part 71, Subpart A); Michael F. Hertz, Director, Commercial Litigation Branch, Civil Division, Department of Justice, Washington, DC 20530. Telephone: (202) 724-7179. (Part 71, Subpart B).

SUPPLEMENTARY INFORMATION: In October 1986, Congress enacted the Program Fraud Civil Remedies Act, Pub. L. 99-509, to establish a new administrative procedure as a remedy against those who knowingly make false claims or statements. The statute requires specified Federal agencies to follow certain procedures to recover penalties and assessments against persons who file false claims or statements. The statute provides for designated investigative and reviewing officials, an administrative hearing process, and an agency appeal procedure with limited judicial review. To facilitate the new process and promote uniformity in the Government, the President's Council on Integrity and Efficiency distributed draft model regulations to its membership. In Subpart A of these regulations, the Department of Justice, with minor variations, has adopted the model regulations set forth in the Council's final draft. In keeping with the statute's requirements, the agency's regulations provide that the Counsel, Office of Professional Responsibility or a designee will act as the Investigating Official; the Associate Attorney General will serve as Reviewing Official; the General Counsel, Justice Management Division and bureau officials with similar responsibility will act for the Associate Attorney General in prosecuting claims; an administrative law judge will be the presiding official; and the Deputy Attorney General or his designee will act as Authority Head on appeals. The new administrative process should enhance the Department's ability to deter fraud in those cases where the costs of litigation in the past have exceeded the amount of recovery, thus making it uneconomical to pursue such claims. The statute provides for a jurisdictional limit of $150,000 and a maximum penalty of $5,000 for each false claim or statement. The regulations should provide the Department with an effective remedy against a person alleged to have submitted false claims or statements while providing due process to that person.

In Subpart B of these regulations, the Assistant Attorney General, Civil Division, has been assigned the responsibility for the approval and disapproval of requests by other agencies to initiate administrative actions under the Program Fraud Civil Remedies Act of 1986. The regulations also designate the Assistant Attorneys General for the litigating divisions (Antitrust, Civil, Civil Rights, Criminal, Land and Natural Resources, and Tax) to make the determinations called for by the Act in connection with a proceeding conducted by another agency when such proceeding may adversely affect pending or potential criminal or civil action under the responsibility of the litigating division. Finally, they designate the Assistant Attorney General, Civil Division, as the official responsible for decisions to initiate civil actions to collect or enforce any civil penalty or assessment imposed by an agency under the Act, and to defend in litigation and/or to settle or compromise such liabilities at any time subsequent

BEST COPY AVAILABLE

to the filing of a petition for judicial review by the person upon whom the liability was imposed.

Under the terms of the Act, these designations may not be further delegated below the level of the Assistant Attorney General; they may, of course, be made by persons acting as Assistant Attorney General during the absence of the incumbent or while the position is vacant. Similarly, while the decision to initiate or compromise a collection action is reserved to the Assistant Attorney General for the Civil Division, the conduct of such litigation and negotiation of settlement proposals shall be handled by Division attorneys or Assistant United States Attorneys subject to the Assistant Attorney General's supervision.

These rules were published for comment at 53 FR 4034 on February 11, 1988. No comments were received. The rules, as proposed, are hereby adopted.

These rules do not constitute "major rules" within the meaning of Executive Order 12291, section 1(a). Nor do the requirements of the Regulatory Flexibility Act, 5 U.S.C. 605(b), apply. These rules contain no information collection or recordkeeping requirements as defined by the Paperwork Reduction Act of 1978, and fall within the exceptions to coverage.

List of Subjects

28 CFR Part 0

Claims, Fraud, Organization and function (government agencies).

28 CFR Part 71

Claims, Fraud, Organization and function (government agencies), Penalties.

By virtue of the authority vested in me as Attorney General by 5 U.S.C. 301 and 28 U.S.C. 509 and 510, Title 28 of the Code of Federal Regulations is hereby amended as follows:

PART 0—[AMENDED]

1. The authority citation for Part 0 continues to read as follows:

Authority: 5 U.S.C. 301, 2303; 8 U.S.C. 1103, 1427(g); 15 U.S.C. 644(k); 18 U.S.C. 2254, 4001, 4041, 4042, 4044, 4082, 4201 *et seq.*, 6003(b); 21 U.S.C. 871, 881(d), 904; 22 U.S.C. 263a, 1621–1645o, 1622 note; 28 U.S.C. 509, 510, 515, 524, 542, 543, 552, 552a, 569; 31 U.S.C. 1108, 3801 *et seq.*; 50 U.S.C. App. 2001–2017p; Pub. L. 91–513, sec. 501; EO 11916; EO 11267; EO 11300.

§ 0.45 [Amended]

2. Section 0.45, paragraph (d) is amended by inserting, "the Program Fraud Civil Remedies Act of 1986," in the present text directly following the words "False Claims Act,"

3. Part 71 is added to read as follows:

PART 71—IMPLEMENTATION OF THE PROVISIONS OF THE PROGRAM FRAUD CIVIL REMEDIES ACT OF 1986

Subpart A—Implementation for Actions Initiated by the Department of Justice

Sec.
71.1 Purpose.
71.2 Definitions.
71.3 Basis for civil penalties and assessments.
71.4 Investigation.
71.5 Review by the reviewing official.
71.6 Prerequisites for issuing a complaint.
71.7 Complaint.
71.8 Service of complaint.
71.9 Answer.
71.10 Default upon failure to file an answer.
71.11 Referral of complaint and answer to the ALJ.
71.12 Notice of hearing.
71.13 Parties to the hearing.
71.14 Separation of functions.
71.15 Ex parte contacts.
71.16 Disqualification of reviewing official or ALJ.
71.17 Rights of parties.
71.18 Authority of the ALJ.
71.19 Prehearing conferences.
71.20 Disclosure of documents.
71.21 Discovery.
71.22 Exchange of witness lists, statements, and exhibits.
71.23 Subpoenas for attendance at hearing.
71.24 Protective order.
71.25 Fees.
71.26 Form, filing and service of papers.
71.27 Computation of time.
71.28 Motions.
71.29 Sanctions.
71.30 The hearing and burden of proof.
71.31 Determining the amount of penalties and assessments.
71.32 Location of hearing.
71.33 Witnesses.
71.34 Evidence.
71.35 The record.
71.36 Post-hearing briefs.
71.37 Initial decision.
71.38 Reconsideration of initial decision.
71.39 Appeal to authority head.
71.40 Stays ordered by the Department of Justice.
71.41 Stay pending appeal.
71.42 Judicial review.
71.43 Collection of civil penalties and assessments.
71.44 Right to administrative offset.
71.45 Deposit in Treasury of United States.
71.46 Compromise or settlement.
71.47 Limitations.
71.48–71.50 [Reserved]

Subpart B—Assignment of Responsibilities Regarding Actions by Other Agencies

Sec.
71.51 Purpose.
71.52 Approval of Agency requests to initiate a proceeding.
71.53 Stays of Agency proceedings at the request of the Department.
71.54 Collection and compromise of liabilities imposed by Agency.

Authority: 5 U.S.C. 301; 28 U.S.C. 509, 510; 31 U.S.C. 3801–3812.

Subpart A—Implementation for Actions Initiated by the Department of Justice

§ 71.1 Purpose.

This subpart implements the Program Fraud Civil Remedies Act of 1986, Pub. L. 99–509, 6101–6104, 100 Stat. 1874 (October 21, 1986), to be codified at 31 U.S.C. 3801–3812. 31 U.S.C. 3809 of the statute requires each authority head to promulgate regulations necessary to implement the provisions of the statute. The subpart establishes administrative procedures for imposing civil penalties and assessments against persons who make, submit, or present, or cause to be made, submitted, or presented, false, fictitious, or fraudulent claims or written statements to authorities or to their agents, and specifies the hearing and appeal rights of persons subject to allegations of liability for such penalties and assessments.

§ 71.2 Definitions.

"ALJ" means an Administrative Law Judge in the authority appointed pursuant to 5 U.S.C. 3105 or detailed to the authority pursuant to 5 U.S.C. 3344.

"Authority" means the United States Department of Justice, including all offices, boards, divisions and bureaus.

"Authority head" means the Attorney General or his designee. For purposes of these regulations, the Deputy Attorney General is designated to act on behalf of the Attorney General.

"Benefit" means in the context of "statement", anything of value, including but not limited to any advantage, preference, privilege, license, permit, favorable decision, ruling, status or loan guarantee.

"Claim" means any request, demand, or submission—

(a) Made to the authority for property, services, or money (including money representing grants, loans or insurance);

(b) Made to a recipient of property, services, or money from the authority or to a party to a contract with the authority

(1) For property or services if the United States

(i) Provided such property or services;

(ii) Provided any portion of the funds for the purchase of such property or services; or

(iii) Will reimburse such recipient or party for the purchase of such property or services; or

(2) For the payment of money (including money representing grants, loans, insurance, or benefits) if the United States

(i) Provided any portion of the money requested or demanded; or

(ii) Will reimburse such recipient or party for any portion of the money paid on such request or demand; or

(c) Made to the authority which has the effect of decreasing an obligation to pay or account for property, services, or money.

"Complaint" means the administrative complaint served by the rviewing official on the defendant under § 71.7.

"Defendant" means any person alleged in a complaint under § 71.7 to be liable for a civil penalty or assessment under § 71.3.

"Government" means the United States Government.

"Individual" means a natural person.

"Initial decision" means the written decision of the ALJ required by § 71.10 or § 71.37, and includes a revised initial decision issued following a remand or a motion for reconsideration.

"Investigating Official" means the Counsel, Office of Professional Responsibility (OPR) of the Department of Justice. The Counsel, OPR, may delegate his responsibility with respect to investigations in a bureau to an appropriate bureau official, providing that such official is serving in a position for which the rate of basic pay is not less than the minimum rate of basic pay for grade GS-16 under the General Schedule. (Actual investigations may be performed by individuals reporting to the investigating official or his designee, who shall retain investigative responsibility.)

"Knows or has reason to know" means that a person, with respect to a claim or statement

(a) Has actual knowledge that the claim or statement is false, fictitious, or fraudulent;

(b) Acts in deliberate ignorance of the truth or falsity of the claim or statement; or

(c) Acts in reckless disregard of the truth or falsity of the claim or statement.

"Makes" shall include the terms presents, submits, and causes to be made, presented, or submitted. As the context requires, *making* or *made*, shall likewise include the corresponding forms of such terms.

"Person" means any individual, partnership, corporation, association, or private organization, and includes the plural of that term.

"Representative" means an attorney who is in good standing of the bar of any State, Territory, or possession of the United States or of the District of Columbia or the Commonwealth of Puerto Rico.

"Reviewing official" means the Associate Attorney General. For purposes of § 71.5 of these rules, the Associate Attorney General, personally or through his immediate staff, shall perform the functions of the reviewing official provided that such person is serving in a position for which the rate of basic pay is not less than the minimum rate of basic pay for grade GS-16 under the General Schedule. All other functions of the reviewing official, including administrative prosecution under these rules, shall be performed with respect to the components listed below by the individuals listed below acting on behalf of the Associate Attorney General:

(a) For the offices, boards, divisions and any other components not covered below, the General Counsel, Justice Management Division;

(b) For the Bureau of Prisons (BOP), the General Counsel, BOP;

(c) For the Drug Enforcement Administration (DEA), the Chief Counsel, DEA;

(d) For the Federal Bureau of Investigation (FBI), the Assistant Director, Legal Counsel Division;

(e) For the Immigration and Naturalization Service (INS), the General Counsel, INS; and

(f) For the United States Marshals Service (USMS), the Associate Director for Administration.

"Statement" means any representation, certification, affirmation, document, record, or accounting or bookkeeping entry made

(a) With respect to a claim or to obtain the approval or payment of a claim (including relating to eligibility to make a claim); or

(b) With respect to (including relating to eligibility for)

(1) A contract with, or a bid or proposal for a contract with; or

(2) A grant, loan, or benefit from, the authority, or any State, political subdivision of a State, or other party, if the United States Government provides any portion of the money or property under such contract or for such grant, loan, or benefit, or if the Government will reimburse such State, political subdivision, or party for any portion of the money or property under such contract or for such grant, loan, or benefit.

§ 71.3 Basis for civil penalties and assessments.

(a) Any person who makes a claim that the person knows or has reason to know:

(1) Is false, fictitious, or fraudulent;

(2) Includes, or is supported by, any written statement which asserts a material fact which is false, fictitious, or fraudulent;

(3) Includes, or is supported by, any written statement that

(i) Omits a material fact;

(ii) Is false, fictitious, or fraudulent as a result of such omission; and

(iii) Is a statement in which the person making such statement has a duty to include such material fact; or

(4) Is for payment for the provision of property or services which the person has not provided as claimed,

shall be subject, in addition to any other remedy that may be prescribed by law, to a civil penalty of not more than $5,000 for each such claim.

(b) Each voucher, invoice, claim form, or other individual request or demand for property, services, or money constitutes a separate claim.

(c) A claim shall be considered made to the authority, recipient, or party when such claim is actually made to an agent, fiscal intermediary, or other entity, including any State or political subdivision thereof, acting for or on behalf of the authority, recipient, or party.

(d) Each claim for property, services, or money is subject to a civil penalty regardless of whether such property, services, or money is actually delivered or paid.

(e) If the Government has made any payment (including transferred property or provided services) on a claim, a person subject to a civil penalty under paragraph (a)(1) of this section shall also be subject to an assessment of not more than twice the amount of such claim or that portion thereof that is determined to be in violation of paragraph (a)(1) of this section. Such assessment shall be in lieu of damages sustained by the Government because of such claim.

(f) Any person who makes a written statement that

(1) The person knows or has reason to know

(i) Asserts a material fact which is false, fictitious, or fraudulent; or

(ii) Is false, fictitious, or fraudulent because it omits a material fact that the person making the statement has a duty to include in such statement; and

(2) Contains, or is accompanied by, an express certification or affirmation of the truthfulness and accuracy of the contents of the statement.

shall be subject, in addition to any other remedy that may be prescribed by law, to a civil penalty of not more than $5,000 for each such statement.

(g) Each written representation, certification, or affirmation constitutes a separate statement.

(h) A statement shall be considered made to the authority when such statement is actually made to an agent, fiscal intermediary, or other entity, including any State or political subdivision thereof, acting for or on behalf of the authority.

(i) No proof of specific intent to defraud is required to establish liability under this section.

(j) In any case in which it is determined that more than one person is liable for making a claim or statement under this section, each such person may be held liable for a civil penalty under this section.

(k) In any case in which it is determined that more than one person is liable for making a claim under this section on which the Government has made payment (including transferred property or provided services), an assessment may be imposed against any such person or jointly and severally against any combination of such persons.

§ 71.4 Investigation.

(a) If an investigating official concludes that a subpoena pursuant to the authority conferred by 31 U.S.C. 3804(a) is warranted, he may issue a subpoena.

(1) The subpoena so issued shall notify the person to whom it is addressed of the authority under which the subpoena is issued and shall identify the records or documents sought;

(2) The investigating official may designate a person to act on his or her behalf to receive the documents sought; and

(3) The person receiving such subpoena shall be required to tender to the investigating official, or the person designated to receive the documents, a certification that

(i) The documents sought have been produced;

(ii) Such documents are not available and the reasons therefor; or

(iii) Such documents, suitably identified, have been withheld based upon the assertion of an identified privilege.

(b) If the investigating official concludes that an action under the Program Fraud Civil Remedies Act may be warranted, the investigating official shall submit a report containing the findings and conclusions of such investigation to the reviewing official.

(c) Nothing in this section shall preclude or limit an investigating official's discretion to refer allegations within the Department of Justice for suit under the False Claims Act or other civil relief, or to defer or postpone a report or referral to the reviewing official to avoid interference with a criminal investigation or prosecution.

(d) Nothing in this section modifies any responsibility of an investigating official to report violations of criminal law to the appropriate component of the Department.

§ 71.5 Review by the reviewing official.

(a) If, based on the report of the investigating official under § 71.4(b), the reviewing official determines that there is adequate evidence to believe that a person is liable under § 71.3, the reviewing official shall transmit to the Assistant Attorney General, Civil Division, a written notice of the reviewing official's intention to have a complaint issued under § 71.7. Such notice shall include

(1) A statement of the reviewing official's reasons for issuing a complaint;

(2) A statement specifying the evidence that support the allegations of liability;

(3) A description of the claims or statements upon which the allegations of liability are based;

(4) An estimate of the amount of money, or the value of property, services, or other benefits, requested or demanded in violation of § 71.3 of this part;

(5) A statement of any exculpatory or mitigating circumstances that may relate to the claims or statements known by the reviewing official or the investigating official; and

(6) A statement that there is a reasonable prospect of collecting an appropriate amount of penalties and assessments.

§ 71.6 Prerequisites for issuing a complaint.

(a) The reviewing official may issue a complaint under § 71.7 only if

(1) The Assistant Attorney General, Civil Division, approves the issuance of a complaint in a written statement described in 31 U.S.C. 3803(b)(1), and

(2) In the case of allegations of liability under § 71.3(a) with respect to a claim, the reviewing official determines that, with respect to such claim or a group of related claims submitted at the same time such claim is submitted (as defined in paragraph (b) of this section), the amount of money, or the value of property or services, demanded or requested in violation of § 71.3(a) does not exceed $150,000.

(b) For the purposes of this section, a related group of claims submitted at the same time shall include only those claims arising from the same transaction (e.g., grant, loan, application, or contract) that are submitted simultaneously as part of a single request, demand, or submission.

(c) Nothing in this section shall be construed to limit the reviewing official's authority to join in a single complaint against a person claims that are unrelated or were not submitted simultaneously, regardless of the amount of money, or the value of property or services, demanded or requested.

§ 71.7 Complaint.

(a) On or after the date the Assistant Attorney General, Civil Division, approves the issuance of a complaint in accordance with 31 U.S.C. 3803(b)(1), the reviewing official may serve a complaint on the defendant, as provided in § 71.8.

(b) The complaint shall state the following:

(1) The allegations of liability against the defendant, including the statutory basis for liability, an identification of the claims or statements that are the basis for the alleged liability, and the reasons why liability allegedly arises from such claims or statements;

(2) The maximum amount of penalties and assessments for which the defendant may be held liable;

(3) Instructions for filing an answer to request a hearing, including a specific statement of the defendant's right to request a hearing by filing an answer and to be represented by a representative; and

(4) The fact that failure to file an answer within 30 days of service of the complaint will result in the imposition of the maximum amount of penalties and assessments without right to appeal, as provided in § 71.10.

(c) At the same time the reviewing official serves the complaint, he or she shall serve the defendant with a copy of these regulations.

§ 71.8 Service of complaint.

(a) Service of a complaint must be made by certified or registered mail or by delivery in any manner authorized by Rule 4(d) of the Federal Rules of Civil Procedure. Service is complete upon receipt.

(b) Proof of service, stating the name and address of the person on whom the complaint was served, and the manner and date of service, may be made by

(1) Affidavit of the individual serving the complaint by delivery;

(2) A United States Postal Service return receipt card acknowledging receipt; or

(3) Written acknowledgment of receipt by the defendant or his or her representative.

§ 71.9 Answer.

(a) The defendant may request a hearing by filing an answer with the reviewing official within 30 days of service of the complaint. An answer shall be deemed to be a request for hearing.

(b) In the answer, the defendant

(1) Shall admit or deny each of the allegations of liability made in the complaint;

(2) Shall state any defense on which the defendant intends to rely;

(3) May state any reasons why the defendant contends that the penalties and assessments should be less than the statutory maximum; and

(4) Shall state the name, address, and telephone number of the person authorized by the defendant to act as defendant's representative, if any.

(c) If the defendant is unable to file an answer meeting the requirements of paragraph (b) of this section within the time provided, the defendant may, before the expiration of 30 days from service of the complaint, file with the reviewing official a general answer denying liability and requesting a hearing, and a request for an extension of time within which to file an answer meeting the requirements of paragraph (b) of this section. The reviewing official shall file promptly with the ALJ the complaint, the general answer denying liability, and the request for an extension of time as provided in § 71.11. For good cause shown, the ALJ may grant the defendant up to 30 additional days within which to file an answer meeting the requirements of paragraph (b) of this section.

§ 71.10 Default upon failure to file an answer.

(a) If the defendant does not file an answer within the time prescribed in § 71.9(a), the reviewing official may refer the complaint to the ALJ.

(b) Upon the referral of the complaint, the ALJ shall promptly serve on the defendant in the manner prescribed in § 71.8, a notice that an initial decision will be issued under this section.

(c) The ALJ shall assume the facts alleged in the complaint to be true and, if such facts establish liability under § 71.3, the ALJ shall issue an initial decision imposing the maximum amount of penalties and assessments allowed under the statute.

(d) Except as otherwise provided in this section, by failing to file a timely answer the defendant waives any right to further review of the penalties and assessments imposed under paragraph (c) of this section and the initial decision shall become final and binding upon the parties 30 days after it is issued.

(e) If, before such an initial decision becomes final, the defendant files a motion with the ALJ seeking to reopen on the grounds that extraordinary circumstances prevented the defendant from filing an answer, the initial decision shall be stayed pending the ALJ's decision on the motion.

(f) If, on such motion, the defendant can demonstrate extraordinary circumstances excusing the failure to file a timely answer, the ALJ shall withdraw the initial decision in paragraph (c) of this section, if such a decision has been issued, and shall grant the defendant an opportunity to answer the complaint.

(g) A decision of the ALJ denying a defendant's motion under paragraph (e) of this section is not subject to reconsideration under § 71.38.

(h) The defendant may appeal to the authority head the decision denying a motion to reopen by filing a notice of appeal with the authority head within 15 days after the ALJ denies the motion. The timely filing of a notice of appeal shall stay the initial decision until the authority head decides the issue.

(i) If the defendant files a timely notice of appeal with the authority head, the ALJ shall forward the record of the proceeding to the authority head.

(j) The authority head shall decide expeditiously whether extraordinary circumstances excuse the defendant's failure to file a timely answer based solely on the record before the ALJ.

(k) If the authority head decides that extraordinary circumstances excused the defendant's failure to file a timely answer, the authority head shall remand the case to the ALJ with instructions to grant the defendant an opportunity to answer.

(l) If the authority head decides that the defendant's failure to file a timely answer is not excused, the authority head shall reinstate the initial decision of the ALJ, which shall become final and binding upon the parties 30 days after the authority head issues such decision.

§ 71.11 Referral of complaint and answer to the ALJ.

Upon receipt of an answer, the reviewing official shall file the complaint and answer with the ALJ.

§ 71.12 Notice of hearing.

(a) When the ALJ receives the complaint and answer, the ALJ shall promptly serve a notice of hearing upon the defendant in the manner prescribed by § 71.8. At the same time, the ALJ shall send a copy of such notice to the reviewing official or his designee.

(b) Such notice shall include

(1) The tentative time and place, and the nature of the hearing;

(2) The legal authority and jurisdiction under which the hearing is to be held;

(3) The matters of fact and law to be asserted;

(4) A description of the procedures for the conduct of the hearing;

(5) The name, address, and telephone number of the representative of the Government and of the defendant, if any; and

(6) Such other matters as the ALJ deems appropriate.

§ 71.13 Parties to the hearing.

(a) The parties to the hearing shall be the defendant and the authority.

(b) Pursuant to 31 U.S.C. 3730(c)(5), a private plaintiff under the False Claims Act may participate in these proceedings to the extent authorized by the provisions of that Act.

§ 71.14 Separation of functions.

(a) The investigating official, the reviewing official, and any employee or agent of the authority who takes part in investigating, preparing, or presenting a particular case may not, in such case or a factually related case.

(1) Participate in the hearing as the ALJ;

(2) Participate or advise in the initial decision or the review of the initial decision by the authority head, except as a witness or a representative in public proceedings; or

(3) Make the collection of penalties and assessments under 31 U.S.C. 3806.

(b) The ALJ shall not be responsible to or subject to the supervision or direction of the investigating official or the reviewing official.

§ 71.15 Ex parte contacts.

No party or person (except employees of the ALJ's office) shall communicate in any way with the ALJ on any matter at issue in a case, unless on notice and opportunity for all parties to participate. This provision does not prohibit a person or party from inquiring about the status of a case or asking routine questions concerning administrative functions or procedures.

§ 71.16 Disqualification of reviewing official or ALJ.

(a) A reviewing official or ALJ in a particular case may disqualify himself or herself at any time.

(b) A party may file with the ALJ a motion for disqualification of a reviewing official or an ALJ. Such motion shall be accompanied by an affidavit alleging personal bias or other reason for disqualification.

(c) Such motion and affidavit shall be filed promptly upon the party's discovery of reasons requiring

disqualification, or such objections shall be deemed waived.

(d) Such affidavit shall state specific facts that support the party's belief that personal bias or other reason for disqualification exists and the time and circumstances of the party's discovery of such facts. It shall be accompanied by a certificate of the representative of record that it is made in good faith.

(e) Upon the filing of such a motion and affidavit, the ALJ shall proceed no further in the case until he or she resolves the matter of disqualification in accordance with this section.

(1) If the ALJ determines that a reviewing official is disqualified, the ALJ shall dismiss the complaint without prejudice.

(2) If the ALJ disqualifies himself or herself, the case shall be reassigned promptly to another ALJ.

(3) If the ALJ denies a motion to disqualify, the authority head may determine the matter only as part of his or her review of the initial decision upon appeal, if any.

§ 71.17 Rights of parties.

Except as otherwise limited by this part, all parties may

(a) Be accompanied, represented, and advised by a representative;

(b) Participate in any conference held by the ALJ;

(c) Conduct discovery;

(d) Agree to stipulations of fact or law, which shall be made part of the record;

(e) Present evidence relevant to the issues at the hearing;

(f) Present and cross-examine witnesses;

(g) Present oral arguments at the hearing as permitted by the ALJ; and

(h) Submit written briefs and proposed findings of fact and conclusions of law after the hearing.

§ 71.18 Authority of the ALJ.

(a) The ALJ shall conduct a fair and impartial hearing, avoid delay, maintain order, and assure that a record of the proceeding is made.

(b) The ALJ has the authority to

(1) Set and change the date, time, and place of the hearing upon reasonable notice to the parties;

(2) Continue or recess the hearing in whole or in part for a reasonable period of time;

(3) Hold conferences to identify or simplify the issues, or to consider other matters that may aid in the expeditious disposition of the proceeding;

(4) Administer oaths and affirmations;

(5) Issue subpoenas requiring the attendance of witnesses and the production of documents at depositions or at hearings;

(6) Rule on motions and other procedural matters;

(7) Regulate the scope and timing of discovery;

(8) Regulate the course of the hearing and the conduct of representatives and parties;

(9) Examine witnesses;

(10) Receive, rule on, exclude, or limit evidence;

(11) Upon motion of a party, take official notice of facts;

(12) Upon motion of a party, decide cases, in whole or in part, by summary judgment where there is no disputed issue of material fact;

(13) Conduct any conference, argument, or hearing on motions in person or by telephone; and

(14) Exercise such other authority as is necessary to carry out the responsibilities of the ALJ under this part.

(c) The ALJ does not have the authority to find Federal statutes or regulations invalid.

§ 71.19 Prehearing conferences.

(a) The ALJ may schedule prehearing conferences as appropriate.

(b) Upon the motion of any party, the ALJ shall schedule at least one prehearing conference at a reasonable time in advance of the hearing.

(c) The ALJ may use prehearing conferences to discuss the following:

(1) Simplification of the issues;

(2) The necessity or desirability of amendments to the pleadings, including the need for a more definite statement;

(3) Stipulations and admissions of fact or as to the contents and authenticity of documents;

(4) Whether the parties can agree to submission of the case on a stipulated record;

(5) Whether a party chooses to waive appearance at an oral hearing and to submit only documentary evidence (subject to the objection of other parties) and written argument;

(6) Limitation of the number of witnesses;

(7) Scheduling dates for the exchange of witness lists and of proposed exhibits;

(8) Discovery;

(9) The time and place for the hearing; and

(10) Such other matters as may tend to expedite the fair and just disposition of the proceedings.

(d) The ALJ may issue an order containing all matters agreed upon by the parties or ordered by the ALJ at a prehearing conference.

§ 71.20 Disclosure of documents.

(a) Upon written request to the reviewing official, the defendant may review any relevant and material documents, transcripts, records, and other materials that relate to the allegations set out in the complaint and upon which the findings and conclusions of the investigating official under § 71.4(b) are based, unless such documents are subject to a privilege under Federal law. Upon payment of fees for duplication, the defendant may obtain copies of such documents.

(b) Upon written request to the reviewing official, the defendant also may obtain a copy of all exculpatory information in the possession of the reviewing official or investigating official relating to the allegations in the complaint, even if it is contained in a document that would otherwise be privileged. If the document would otherwise be privileged, only that portion containing exculpatory information must be disclosed.

(c) The notice sent to the Assistant Attorney General, Civil Division, from the reviewing official as described in § 71.5 is not discoverable under any circumstances.

(d) The defendant may file a motion to compel disclosure of the documents subject to the provisions of this section. Such a motion may only be filed with the ALJ following the filing of an answer pursuant to § 71.9.

§ 71.21 Discovery.

(a) The following types of discovery are authorized:

(1) Requests for production of documents for inspection and copying;

(2) Requests for admissions of the authenticity of any relevant document or of the truth of any relevant fact;

(3) Written interrogatories; and

(4) Depositions.

(b) For the purpose of this section and §§ 71.22 and 71.23, the term "documents" includes information, documents, reports, answers, records, accounts, papers, and other data and documentary evidence. Nothing contained herein shall be interpreted to require the creation of a document.

(c) Unless mutually agreed to by the parties, discovery is available only as ordered by the ALJ. The ALJ shall regulate the timing of discovery.

(d) Motions for discovery are to be handled according to the following procedures:

(1) A party seeking discovery may file a motion with the ALJ. Such a motion shall be accompanied by a copy of the requested discovery, or in the case of

depositions, a summary of the scope of the proposed deposition.

(2) Within ten days of service, a party may file an opposition to the motion and/or a motion for protective order as provided in § 71.24.

(3) The ALJ may grant a motion for discovery only if he or she finds that the discovery sought

(i) Is necessary for the expeditious, fair, and reasonable consideration of the issues;

(ii) Is not unduly costly or burdensome;

(iii) Will not unduly delay the proceeding; and

(iv) Does not seek privileged information.

(4) The burden of showing that discovery should be allowed is on the party seeking discovery.

(5) The ALJ may grant discovery subject to a protective order under § 71.24.

(e) Depositions are to be handled in the following manner:

(1) If a motion for deposition is granted, the ALJ shall issue a subpoena for the deponent, which may require the deponent to produce documents. The subpoena shall specify the time and place at which the deposition will be held.

(2) The party seeking to depose shall serve the subpoena in the manner prescribed in § 71.8.

(3) The deponent may file with the ALJ within ten days of service a motion to quash the subpoena or a motion for a protective order.

(4) The party seeking to depose shall provide for the taking of a verbatim transcript of the deposition, which it shall make available to all other parties for inspection and copying.

(f) Each party shall bear its own costs of discovery.

§ 71.22 Exchange of witness lists, statements and exhibits.

(a) At least 15 days before the hearing or at such other time as may be ordered by the ALJ, the parties shall exchange witness lists, copies of prior statements of proposed witnesses, and copies of proposed hearing exhibits, including copies of any written statements that the party intends to offer in lieu of live testimony in accordance with § 71.33(b). At the time the above documents are exchanged, any party that intends to rely on the transcript of deposition testimony in lieu of live testimony at the hearing, if permitted by the ALJ, shall provide each party with a copy of the specific pages of the transcript it intends to introduce into evidence.

(b) If a party objects, the ALJ may not admit into evidence the testimony of any witness whose name does not appear on the witness list or any exhibit not provided to the opposing party as provided above unless the ALJ finds good cause for the failure or that there is no prejudice to the objecting party.

(c) Unless another party objects within the time set by the ALJ, documents exchanged in accordance with paragaraph (a) of this section shall be deemed to be authentic for the purpose of admissibility at the hearing.

§ 71.23 Subpoenas for attendance at hearing.

(a) A party wishing to procure the appearance and testimony of any individual at the hearing may request that the ALJ issue a subpoena.

(b) A subpoena requiring the attendance and testimony of an individual may also require the individual to produce documents at the hearing.

(c) A party seeking a subpoena shall file a written request therefor not less than 15 days before the date fixed for the hearing unless otherwise allowed by the ALJ upon a showing of good cause. Such request shall specify any documents to be produced and shall designate the witnesses and describe the address and location thereof with sufficient particularity to permit such witnesses to be found.

(d) The subpoena shall specify the time and place at which the witness is to appear and any documents the witness is to produce.

(e) The party seeking the subpoena shall serve it in the manner prescribed in § 71.8. A subpoena on a party or upon an individual under the control of a party may be served by first class mail.

(f) A party or the individual to whom the subpoena is directed may file with the ALJ a motion to quash the subpoena within ten days after service or on or before the time specified in the subpoena for compliance if it is less than ten days after service.

§ 71.24 Protective order.

(a) A party or a prospective witness or deponent may file a motion for a protective order with respect to discovery sought by an opposing party or with respect to the hearing, seeking to limit the availability or disclosure of evidence.

(b) In issuing a protective order, the ALJ may make any order which justice requires to protect a party or person from annoyance, embarrassment, oppression, or undue burden or expense, including one or more of the following:

(1) That the discovery not be had;

(2) That the discovery may be had only on specified terms and conditions, including a designation of the time or place;

(3) That the discovery may be had only through a method of discovery other than that requested;

(4) That certain matters not be the subject of inquiry, or that the scope of discovery be limited to certain matters;

(5) That discovery be conducted with no one present except persons designated by the ALJ;

(6) That the contents of discovery or evidence be sealed;

(7) That a sealed deposition be opened only by order of the ALJ;

(8) That a trade secret or other confidential research, development, commercial information, or facts pertaining to any criminal investigation, proceeding, or other administrative investigation not be disclosed or be disclosed only in a designated way; or

(9) That the parties simultaneously file specified documents or information enclosed in sealed envelopes to be opened as directed by the ALJ.

§ 71.25 Fees.

The party requesting a subpoena shall pay the cost of the fees and mileage of any witness subpoenaed in the amounts that would be payable to a witness in a proceeding in United States District Court. A check for witness fees and mileage shall accompany the subpoena when served, except that when a subpoena is issued on behalf of the authority, a check for witness fees and mileage need not accompany the subpoena.

§ 71.26 Form, filing and service of papers.

(a) *Form.* Documents filed with the ALJ shall include an original and two copies. Every pleading and paper filed in the proceeding shall contain a caption setting forth the title of the action, the case number assigned by the ALJ, and a designation of the paper (e.g., motion to quash subpoena). Every pleading and paper shall be signed by, and shall contain the address and telephone number of the party or the person on whose behalf the paper was filed, or his or her representative.

(b) *Filing.* Papers are considered filed when they are mailed. Date of mailing may be established by a certificate from the party or its representative or by proof that the document was sent by certified or registered mail.

(c) *Service.* A party filing a document with the ALJ shall, at the time of filing, serve a copy of such document on every other party. Service upon any party of any document other than those required to be served as prescribed in § 71.8 shall be made by delivering a copy or by

placing a copy of the document in the United States mail, postage prepaid and addressed, to the party's last known address. When a party is represented by a representative, service shall be made upon such representative in lieu of the actual party.

(d) *Proof of service.* A certificate of the individual serving the document by personal delivery or by mail, setting forth the manner of service, shall be proof of service.

§ 71.27 Computation of time.

(a) In computing any period of time under this part or in an order issued thereunder, the time begins with the day following the act, event, or default, and includes the last day of the period, unless it is a Saturday, Sunday, or legal holiday observed by the Federal government, in which event it includes the next business day.

(b) When the period of time allowed is less than seven days, intermediate Saturdays, Sundays, and legal holidays observed by the Federal government shall be excluded from the computation.

(c) Where a document has been served or issued by placing it in the mail, an additional five days will be added to the time permitted for any response.

§ 71.28 Motions.

(a) Any application to the ALJ for an order or ruling shall be by motion. Motions shall state the relief sought, the authority relied upon, and the facts alleged, and shall be filed with the ALJ and served on all other parties.

(b) Except for motions made during a prehearing conference or at the hearing, all motions shall be in writing. The ALJ may require that oral motions be reduced to writing.

(c) Within 15 days after a written motion is served, or such other time as may be fixed by the ALJ, any party may file a response to such motion.

(d) The ALJ may not grant a written motion before the time for filing responses thereto has expired, except upon consent of the parties or following a hearing on the motion, but may overrule or deny such motion without awaiting a response.

(e) The ALJ shall make a reasonable effort to dispose of all outstanding motions prior to the beginning of the hearing.

§ 71.29 Sanctions.

(a) The ALJ may sanction a person, including any party or representative, for the following reasons:

(1) Failure to comply with an order, rule, or procedure governing the proceeding;

(2) Failure to prosecute or defend an action; or

(3) Engaging in other misconduct that interferes with the speedy, orderly, or fair conduct of the proceeding.

(b) Any such sanction, including but not limited to those listed in paragraphs (c), (d), and (e) of this section, shall reasonably relate to the severity and nature of the failure or misconduct.

(c) When a party fails to comply with an order, including an order for taking a deposition, the production of evidence within the party's control, or a request for admission, the ALJ may

(1) Draw an inference in favor of the requesting party with regard to the information sought;

(2) In the case of requests for admission, deem each matter of which an admission is requested to be admitted;

(3) Prohibit the party failing to comply with such order from introducing evidence concerning, or otherwise relying upon, testimony relating to the information sought; and

(4) Strike any part of the pleadings or other submissions of the party failing to comply with such request.

(d) If a party fails to prosecute or defend an action under this part commenced by service of a notice of hearing, the ALJ may dismiss the action or may issue an initial decision imposing penalties and assessments.

(e) The ALJ may refuse to consider any motion, request, response, brief or other document which is not filed in a timely fashion.

§ 71.30 The hearing and burden of proof.

(a) The ALJ shall conduct a hearing on the record in order to determine whether the defendant is liable for a civil penalty or assessment under § 71.3 and, if so, the appropriate amount of any such civil penalty or assessment considering any aggravating or mitigating factors.

(b) The authority shall prove defendant's liability and any aggravating factors by a preponderance of the evidence.

(c) The defendant shall prove any affirmative defenses and any mitigating factors by a preponderance of the evidence.

(d) The hearing shall be open to the public unless otherwise closed by the ALJ for good cause shown.

§ 71.31 Determining the amount of penalties and assessments.

(a) In determining an appropriate amount of civil penalties and assessments, the ALJ and the authority head, upon appeal, should evaluate any circumstances that mitigate or aggravate the violation and should articulate in their opinions the reasons that support the penalties and assessments they impose. Because of the intangible costs of fraud, the expense of investigating such conduct, and the need to deter others who might be similarly tempted, double damages and a significant civil penalty ordinarily should be imposed.

(b) Although not exhaustive, the following factors are among those that may influence the ALJ and the authority head in determining the amount of penalties and assessments to impose with respect to the misconduct (i.e., the false, fictitious, or fraudulent claims or statements) charged in the complaint:

(1) The number of false, fictitious, or fraudulent claims or statements;

(2) The time period over which such claims or statements were made;

(3) The degree of the defendant's culpability with respect to the misconduct;

(4) The amount of money or the value of the property, services, or benefit falsely claimed;

(5) The value of the Government's actual loss as a result of the misconduct, including foreseeable consequential damages and the costs of investigation;

(6) The relationship of the amount imposed as civil penalties to the amount of the Government's loss;

(7) The potential or actual impact of the misconduct upon public confidence in the management of Government programs and operations;

(8) Whether the defendant has engaged in a pattern of the same or similar misconduct;

(9) Whether the defendant attempted to conceal the misconduct;

(10) The degree to which the defendant has involved others in the misconduct or in concealing it;

(11) Where the misconduct of employees or agents is imputed to the defendant, the extent to which the defendant's practices fostered or attempted to preclude such misconduct;

(12) Whether the defendant cooperated in or obstructed an investigation of the misconduct;

(13) Whether the defendant assisted in identifying and prosecuting other wrongdoers;

(14) The complexity of the program or transaction, and the degree of the defendant's sophistication with respect to it, including the extent of the defendant's prior participation in the program or in similar transactions;

(15) Whether the defendant has been found, in any criminal, civil, or administrative proceeding to have engaged in similar misconduct or to have dealt dishonestly with the

Government of the United States or of a State, directly or indirectly; and

(16) The need to deter the defendant and others from engaging in the same or similar misconduct.

(c) Nothing in this section shall be construed to limit the ALJ or the authority head from considering any other factors that in any given case may mitigate or aggravate the offense for which penalties and assessments are imposed.

§ 71.32 Location of hearing.

(a) The hearing may be held:

(1) In any judicial district of the United States in which the defendant resides or transacts business;

(2) In any judicial district of the United States in which the claim or statement in issue was made; or

(3) In such other place as may be agreed upon by the defendant and the ALJ.

(b) Each party shall have the opportunity to present argument with respect to the location of the hearing.

(c) The hearing shall be held at the place and at the time ordered by the ALJ.

§ 71.33 Witnesses.

(a) Except as provided in paragraph (b) of this section, testimony at the hearing shall be given orally by witnesses under oath or affirmation.

(b) At the discretion of the ALJ, testimony may be admitted in the form of a writtten statement or deposition. Any such written statement must be provided to all other parties along with the last known address of such witness, in a manner which allows sufficient time for other parties to subpoena such witness for cross-examination at the hearing. Prior written statements of witnesses proposed to testify at the hearing and deposition transcripts shall be exchanged as provided in § 71.22(a).

(c) The ALJ shall exercise reasonable control over the mode and order of interrogating witnesses and presenting evidence so as to—

(1) Make the interrogation and presentation effective for the ascertainment of the truth;

(2) Avoid needless consumption of time, and

(3) Protect witnesses from harassment or undue embarrassment.

(d) The ALJ shall permit the parties to conduct such cross-examination as may be required for a full and true disclosure of the facts.

(e) At the discretion of the ALJ, a witness may be cross-examined on matters relevant to the proceeding without regard to the scope of his or her direct examination. To the extent permitted by the ALJ, cross-examination on matters outside the scope of direct examination shall be conducted in the manner of direct examination and may proceed by leading questions only if the witness is a hostile witness, an adverse party, or a witness identified with an adverse party.

(f) Upon motion of any party, the ALJ shall order witnesses excluded so that they cannot hear the testimony of other witnesses. This rule does not authorize exclusion of the following:

(1) A party who is an individual;

(2) In the case of a party that is not an individual, an officer or employee of the party designated by the party's representative; or

(3) An individual whose presence is shown by a party to be essential to the presentation of its case, including an individual employed by the Government engaged in assisting the representative for the Government.

§ 71.34 Evidence.

(a) The ALJ shall determine the admissibility of evidence.

(b) Except as provided in this part, the ALJ shall not be bound by the Federal Rules of Evidence. However, the ALJ may apply the Federal Rules of Evidence where appropriate, e.g., to exclude unreliable evidence.

(c) The ALJ shall exclude irrelevant and immaterial evidence.

(d) Although relevant, evidence may be excluded if its probative value is substantially outweighed by the danger of unfair prejudice, confusion of the issues, or by considerations of undue delay or needless presentation of cumulative evidence.

(e) Although relevant, evidence may be excluded if it is privileged under Federal law.

(f) Evidence concerning offers of compromise or settlement shall be inadmissible to the extent provided in Rule 408 of the Federal Rules of Evidence.

(g) The ALJ shall permit the parties to introduce rebuttal witnesses and evidence.

(h) All documents and other evidence offered or taken for the record shall be open to examination by all parties, unless otherwise ordered by the ALJ pursuant to § 71.24.

§ 71.35 The record.

(a) The hearing will be recorded and transcribed. Transcripts may be obtained following the hearing from the ALJ at a cost not to exceed the actual cost of duplication.

(b) The transcript of testimony, exhibits and other evidence admitted at the hearing, and all papers and requests filed in the proceeding constitute the record for the decision by the ALJ and the authority head.

(c) The record may be inspected and copied (upon payment of a reasonable fee) by anyone, unless otherwise ordered by the ALJ pursuant to § 71.24.

§ 71.36 Post-hearing briefs.

ALJ may require the parties to file post-hearing briefs. In any event, any party may file a post-hearing brief. The ALJ shall fix the time for filing such briefs, not to exceed 60 days from the date the parties receive the transcript of the hearing or, if applicable, the stipulated record. Such briefs may be accompanied by proposed findings of fact and conclusions of law. The ALJ may permit the parties to file reply briefs.

§ 71.37 Initial decision.

(a) The ALJ shall issue an initial decision based only on the record, which shall contain findings of fact, conclusions of law, and the amount of any penalties and assessments imposed.

(b) The findings of fact shall include a finding on each of the following issues:

(1) Whether the claims or statements identified in the complaint, or any portions thereof, violate § 71.3; and

(2) If the person is liable for penalties or assessments, the appropriate amount of any such penalties or assessments considering any mitigating or aggravating factors that he or she finds in the case, such as those described in § 71.31.

(c) The ALJ shall promptly serve the intial decision on all parties within 90 days after the time for submission of post-hearing briefs and reply briefs (if permitted) has expired. The ALJ shall at the same time serve all parties with a statement describing the right of any defendant determined to be liable for a civil penalty or assessment to file a motion for reconsideration with the ALJ or a notice of appeal with the authority head. If the ALJ fails to meet the deadline contained in this paragraph, he or she shall notify the parties of the reason for the delay and shall set a new deadline.

(d) Unless the initial decision of the ALJ is timely appealed to the authority head, or a motion for reconsideration of the initial decision is timely filed, the initial decision shall constitute the final decision of the authority head and shall be final and binding on the parties 30 days after it is issued by the ALJ.

§ 71.38 Reconsideration of initial decision.

(a) Except as provided in paragraph (d) of this section, any party may file a

motion for reconsideration of the initial decision within 20 days of receipt of the initial decision. If service was made by mail, receipt will be presumed to be five days from the date of mailing in the absence of contrary proof.

(b) Every such motion must set forth the matters claimed to have been erroneously decided and the nature of the alleged errors. Such motion shall be accompanied by a supporting brief.

(c) Responses to such motions shall be allowed only upon request of the ALJ.

(d) No party may file a motion for reconsideration of an initial decision that has been revised in response to a previous motion for reconsideration.

(e) The ALJ may dispose of a motion for reconsideration by denying it or by issuing a revised initial decision.

(f) If the ALJ denies a motion for reconsideration, the initial decision shall constitute the final decision of the authority head and shall be final and binding on all parties 30 days after the ALJ denies the motion, unless the initial decision is timely appealed to the authority head in accordance with § 71.39.

(g) If the ALJ issues a revised initial decision, that decision shall constitute the final decision of the authority head and shall be final and binding on the parties 30 days after it is issued, unless it is timely appealed to the authority head in accordance with § 71.39.

§ 71.39 Appeal to authority head.

(a) Any defendant who has filed a timely answer and who is determined in an initial decision to be liable for a civil penalty or assessment may appeal such decision to the authority head by filing a notice of appeal with the authority head in accordance with this section.

(1) A notice of appeal may be filed at any time within 30 days after the ALJ issues an initial decision. However, if another party files a motion for reconsideration under § 71.38, consideration of the appeal shall be stayed automatically pending resolution of the motion for reconsideration.

(2) If a motion for reconsideration is timely filed, a notice of appeal may be filed within 30 days after the ALJ denies the motion or issues a revised initial decision, whichever applies.

(3) The authority head may extend the initial 30 day period for an additional 30 days if the defendant files with the authority head a request for an extension within the initial 30 day period and shows good cause.

(b) If the defendant files a timely notice of appeal with the authority head and the time for filing motions for reconsideration under § 71.38 has expired, the ALJ shall forward the record of the proceeding to the authority head.

(c) A notice of appeal shall be accompanied by a written brief specifying exceptions to the initial decision and reasons supporting the exceptions.

(d) The representative for the Government may file a brief in opposition to exceptions within 30 days of receiving the notice of appeal and accompanying brief.

(e) There is no right to appear personally before the authority head.

(f) There is no right to appeal any interlocutory ruling by the ALJ.

(g) In reviewing the initial decision, the authority head shall not consider any objection that was not raised before the ALJ unless the objecting party can demonstrate extraordinary circumstances causing the failure to raise the objection.

(h) If any party demonstrates to the satisfaction of the authority head that additional evidence not presented at such hearing is material and that there was reasonable grounds for the failure to present such evidence at such hearing, the authority head shall remand the matter to the ALJ for consideration of such additional evidence.

(i) The authority head may affirm, reduce, reverse, compromise, remand, or settle any penalty or assessment, determined by the ALJ in any initial decision.

(j) The authority head shall promptly serve each party to the appeal with a copy of the decision of the authority head and a statement describing the right of any person determined to be liable for a penalty or assessment to seek judicial review.

(k) Unless a petition for review is filed as provided in 31 U.S.C. 3805 after a defendant has exhausted all administrative remedies under this part and within 60 days after the date on which the authority head serves the defendant with a copy of the authority head's decision, a determination that a defendant is liable under § 71.3 is final and not subject to judicial review.

§ 71.40 Stays ordered by the Department of Justice.

If at any time an Assistant Attorney General designated by the Attorney General transmits to the authority head a written finding that continuation of the administrative process described in this part with respect to a claim or statement may adversely affect any pending or potential criminal or civil action related to such claim or statement, the authority head shall stay the process immediately. The authority head may order the process resumed only upon receipt of the written authorization of the Assistant Attorney General who ordered the stay.

§ 71.41 Stay pending appeal.

(a) An initial decision is stayed automatically pending disposition of a motion for reconsideration or of an appeal to the authority head.

(b) No administrative stay is available following a final decision of the authority head.

§ 71.42 Judicial review.

Section 3805 of title 31, United States Code, authorizes judicial review by an appropriate United States District Court of a final decision of the authority head imposing penalties or assessments under this part and specifies the procedures for such review.

§ 71.43 Collection of civil penalties and assessments.

Sections 3806 and 3808(b) of title 31, United States Code, authorize actions for collection of civil penalties and assessments imposed under this part and specify the procedures for such actions.

§ 71.44 Right to administrative offset.

The amount of any penalty or assessment which has become final, or for which a judgment has been entered under § 71.42 or § 71.43, or any amount agreed upon in a compromise or settlement under § 71.46, may be collected by administrative offset under 31 U.S.C. 3716, except that an administrative offset may not be made under this subsection against a refund of an overpayment of Federal taxes, then or later owing by the United States to the defendant.

§ 71.45 Deposit in Treasury of the United States.

All amounts collected pursuant to this part shall be deposited as miscellaneous receipts in the Treasury of the United States, except as provided in 31 U.S.C. 3806(g).

§ 71.46 Compromise or settlement.

(a) Parties may make offers of compromise or settlement at any time.

(b) The reviewing official has the exclusive authority to compromise or settle a case under this part at any time after the date on which the reviewing official is permitted to issue a complaint and before the date on which the ALJ issues an initial decision.

(c) The authority head has exclusive authority to compromise or settle a case under this part at any time after the date on which the ALJ issues an initial decision, except during the pendency of

any review under § 71.42 or during the pendency of any action to collect penalties and assessments under § 71.43.

(d) The Attorney General has exclusive authority to compromise or settle a case under this part during the pendency of any review under § 71.42 or of any action to recover penalties and assessments under 31 U.S.C. 3806.

(e) The investigating official may recommend settlement terms to the reviewing official, the authority head, or the Attorney General, as appropriate. The reviewing official may recommend settlement terms to the authority head, or the Attorney General, as appropriate.

(f) Any compromise or settlement must be in writing.

§ 71.47 Limitations.

(a) The notice of hearing with respect to a claim or statement must be served in the manner specified in § 71.8 within 6 years after the date on which such claim or statement is made.

(b) If the defendant fails to file a timely answer, service of a notice under § 71.10(b) shall be deemed a notice of hearing for purposes of this section.

(c) The statute of limitations may be extended by written agreement of the parties.

§§ 71.48–71.50 [Reserved]

Subpart B—Assignment of Responsibilities Regarding Actions by Other Agencies

§ 71.51 Purpose.

This subpart further implements the Program Fraud Civil Remedies Act of 1986. The Act authorizes the Attorney General, or certain officials whom the Attorney General may designate, to make determinations or otherwise act with respect to another agency's exercise of the provisions of the Program Fraud Civil Remedies Act. See, *e.g.*, 31 U.S.C. 3803(a)(2), 3803(b), 3805. This subpart designates officials within the Department of Justice who are authorized to exercise the authorities conferred upon the Attorney General by the Program Fraud Civil Remedies Act with respect to cases brought or proposed to be brought under it.

§ 71.52 Approval of Agency requests to initiate a proceeding.

(a) The Assistant Attorney General of the Civil Division is authorized to act on notices by an agency submitted to the Department of Justice pursuant to 31 U.S.C. 3803(a)(2) and, pursuant to the provisions of section 3803(b), to approve or disapprove the referral to an agency's presiding officer of the allegations of liability stated in such notice.

(b) The Assistant Attorney General of the Civil Division may

(1) Require additional information prior to acting as set forth above, in which case the 90 day period shall be extended by the time necessary to obtain such additional information; and

(2) Impose limitations and conditions upon such approval or disapproval as may be warranted in his or her judgment.

§ 71.53 Stays of Agency proceedings at the request of the Department

With respect to matters assigned to their divisions, the Assistant Attorneys General of the litigating divisions are authorized to determine that the continuation of any hearing under 31 U.S.C. 3803(b)(3) with respect to a claim or statement may adversely affect any pending or potential criminal or civil action related to such claim or statement, and to so notify the authority head of this determination and thereafter to determine when such hearing may resume.

§ 71.54 Collection and compromise of liabilities imposed by Agency.

The Assistant Attorney General of the Civil Division is authorized to initiate actions to collect assessments and civil penalties imposed under the Program Fraud Civil Remedies Act of 1986, and, subsequent to the filing of a petition for judicial review pursuant to section 3805 of the Act, to defend such actions and/or to approve settlements and compromises of such liability.

April 5, 1988.

Edwin Meese III,

Attorney General.

[FR Doc. 88-7730 Filed 4-7-88; 8:45 am]

BILLING CODE 4410-01-M

ENVIRONMENTAL PROTECTION AGENCY

40 CFR Part 52

[FRL-3359-7; KY-045]

Approval and Promulgation of Implementation Plans, Kentucky; Documents Incorporated by Reference

AGENCY: Environmental Protection Agency (EPA).

ACTION: Final rule.

SUMMARY: EPA today approves revisions to 401 KAR 50:015, Documents incorporated by reference, submitted by the Commonwealth of Kentucky on March 23, 1987. Regulation 401 KAR 50:015 incorporates by reference the methods required to demonstrate compliance with the regulations adopted by the Kentucky Division of Air Pollution Control. Several amendments being approved today adopt reference methods incorporated in 40 CFR Parts 60 and 61 that are used to demonstrate compliance with federal regulations which Kentucky has adopted or is adopting by reference. One amendment approved in this notice adopts EPA's revised "Guideline on Air Quality Models (Revised)", EPA-450/2-78-027R, OAQPS No. 1.2-080R, July 1986.

EFFECTIVE DATE: This rule will become effective on May 9, 1988.

ADDRESSES: Copies of the documents relevant to this action are available for public inspection during normal business hours at the following locations:

U.S. Environmental Protection Agency, Region IV, Air Programs Branch, 345 Courtland Street NE., Atlanta, Georgia 30365

Kentucky Natural Resources and Environmental Protection Cabinet, Department for Environmental Protection, 18 Reilly Road, Frankfort Office Park, Frankfort, Kentucky 40601

Public Information Reference Unit, Environmental Protection Agency, 401 M Street, SW., Washington, DC 20460

FOR FURTHER INFORMATION CONTACT: Pamela E. Adams of the EPA Air Programs Branch at the above address, telephone (404) 347-2864 or FTS 257-2564.

SUPPLEMENTARY INFORMATION: On January 27, 1987, the Kentucky Natural Resources and Environmental Protection Cabinet conducted a public hearing in Frankfort, Kentucky to receive comments on revisions to Kentucky regulation 401 KAR 50:015, Documents incorporated by reference. These revisions incorporate several reference methods required in the federal New Source Performance Standards (NSPS) and National Emission Standards for Hazardous Air Pollutants (NESHAP) which Kentucky has adopted, or will soon be adopting, by reference. In addition, EPA's "Guideline on Air Quality Models (Revised)," EPA-450/2-78-027R, OAQPS 1.2-080R, July 1986, was added under Section 5, entitled Environmental Protection Agency, of 401 KAR 50:015. Since no adverse comments regarding these amendments were received at the State's public hearing, the amended version of 401 KAR 50:015 became effective for the Commonwealth of Kentucky, as proposed, on February 10, 1987. After a thorough review of the March 23, 1987, submittal of these amendments to EPA, the Agency proposed to approve the revised version

of 401 KAR 50:015 on October 16, 1987 (52 FR 38481).

The following reference methods from 40 CFR Part 60, Standards of Performance for New Stationary Sources, were incorporated into the Kentucky regulation 401 KAR 50:015 being approved today: Methods 3A, Determination of oxygen and carbon dioxide concentrations in emissions from stationary sources (instrumental analyzer procedure); Method 6C, Determination of sulfur dioxide emissions from stationary sources (instrumental analyzer procedure); and Method 7E, Determination of nitrogen oxides emissions from stationary sources (instrumental analyzer procedure). In addition, the following test methods from 40 CFR Part 61, National Emission Standards for Hazardous Air Pollutants, were also incorporated into 401 KAR 50:015 by the amendments being approved today: Method 108, Determination of particulate and gaseous arsenic emissions; Method 108A, determination of arsenic content in ore samples from nonferrous smelters; and Method 111, Determination of polonium-210 emissions from stationary sources. An updated version of one of the documents on air quality models published by EPA and recently revised, the "Guideline on Air Quality Models (Revised)," EPA-450/2-78-027R, OAQPS 1.2-080R, July 1986, was incorporated under section 5, entitled Environmental Protection Agency, of the amended version of 401 KAR 50:015 being approved today.

Kentucky regulation 401 KAR 50:015, in the amended version being approved today, merely incorporates the methods for determining compliance which are required by federal regulations which Kentucky has already adopted or is adopting by reference. Therefore, the amendments being approved today simply render Kentucky's compliance requirements in 401 KAR 50:015 the same as the federal compliance requirements. Simply incorporating these compliance methods does not affect any sources or other entities. Any impact would occur in the individual regulation where the methods are required.

EPA proposed approval of this regulation on October 16, 1987 (52 FR 38481). No comments were received in response to that proposal. For this reason and the reasons discussed in the preceding paragraph, EPA is today finalizing approval of the version of 401 KAR 50:015 currently effective in Kentucky.

Final Action

EPA is today finalizing approval of revisions to Kentucky regulation 401 KAR 50:015, Documents incorporated by reference. These revisions simply adopt reference methods that are used to demonstrate compliance with federal regulations. Another amendment also being approved in this notice adopts EPA's "Guideline on Air Quality Models (Revised)," EPA-450/2-78-027R, OAQPS No. 1.2-080R, July 1986.

The Office of Management and Budget has exempted this rule from the requirements of section 3 of Executive Order 12291.

Under section 307(b)(1) of the Act, petitions for judicial review of this action must be filed in the United States Court of Appeals for the appropriate circuit by June 7, 1988. This action may not be challenged later in proceedings to enforce its requirements. (See § 307(b)(2).)

List of Subjects in 40 CFR Part 52

Air pollution control, Incorporation by reference, Intergovernmental relations.,

Note: Incorporation by reference of the State Implementation Plan for the State of Kentucky was approved by the Director of the Federal Register on July 1, 1982.

Date: March 24, 1988.

Lee M. Thomas,

Administrator.

Part 52 of Chapter I, Title 40, Code of Federal Regulations, is amended as follows:

PART 52—[AMENDED]

Subpart S—Kentucky

1. The authority citation for Part 52 continues to read as follows:

Authority: 42 U.S.C. 7401-7642

2. Section 52.920 is amended by adding paragraph (c)(53) as follows:

§ 52.920 Identification of plan.

* * * * *

(c) * * *

(53) Revisions to Kentucky regulation 401 KAR 50:015, Documents incorporated by reference, submitted by the Kentucky Natural Resources and Environmental Protection Cabinet on March 23, 1987.

(i) Incorporation by reference.

(A) Revisions to Kentucky regulation 401 KAR 50:015, Documents incorporated by reference which became State-effective on February 10, 1987.

(B) Letter of March 23, 1987, from the Kentucky Natural Resources and Environmental Protection Cabinet transmitting the foregoing revisions.

(ii) Additional material—none.

[FR Doc. 88-7166 Filed 4-7-88; 8:45 am]

BILLING CODE 6560-50-M

DEPARTMENT OF HEALTH AND HUMAN SERVICES

Office of the Secretary

45 CFR Part 96

Block Grant Programs; Correction

AGENCY: Office of the Secretary, HHS.

ACTION: Final rule: Correction.

SUMMARY: This notice corrects the numbering of three sections of 45 CFR Part 96, the regulation governing the Department's block grant programs.

FOR FURTHER INFORMATION CONTACT: Bob Raymond, 202-245-7316.

In FR Doc. 87-23550, published in the Federal Register of Tuesday, October 13, 1987, on page 37957, the following corrections are made:

1. On page 37966, in column 2, instruction number 7 is amended by adding at the end the following:

7. * * *, and by redesignating the internal designations (1) and (2) in the remaining paragraph to read (a) and (b), respectively.

§§ 96.110 amd 96.111 [Redesignated as §§ 96.120 and 96.121]

2. On page 37966, in column 1, § 96.110 is redesignated as § 96.120 and § 96.111 is redesignated as § 96.121.

Date: March 31, 1988.

James F. Trickett,

Deputy Assistant Secretary for Administrative and Management Services.

[FR Doc. 88-7722 Filed 4-7-88; 8:45 am]

BILLING CODE 4150-04-M

---

45 CFR Part 79

Program Fraud Civil Remedies

AGENCY: Office of the Secretary, HHS, Office of Inspector General (OIG).

ACTION: Final rule.

SUMMARY: This final rule implements the Program Fraud Civil Remedies Act of 1986 (PFCRA), which authorizes the Department of Health and Human Services (and certain other federal agencies) to impose through administrative adjudication civil penalties and assessments against persons making false claims or statements to it.

EFFECTIVE DATE: These regulations are effective on April 8, 1988.

FOR FURTHER INFORMATION CONTACT: D. McCarty Thornton, Office of the General Counsel, (202) 245-6306.

SUPPLEMENTARY INFORMATION:

I. Background

The Program Fraud Civil Remedies Act (the Act), enacted on October 21, 1986 as sections 6103 and 6104 of the Omnibus Budget Reconciliation Act of 1986 (Pub. L. 99-509), and codified at 31 U.S.C. 3801 through 3812, establishes an administrative remedy against any person who makes a false claim or written statement to any of certain Federal agencies, including the Department of Health and Human Services (the Department). In brief, any person who makes a claim or written statement to an affected agency knowing, or with reason to know, that it is false, fictitious, or fraudulent may be held liable in an administrative proceeding for a penalty of up to $5,000 per claim or statement and, in addition, with respect to claims, for an assessment of up to double the amount falsely claimed.

Since 1981, the Department has had similar authority to impose civil monetary penalties and assessments on those who present or cause to be presented false claims in the Medicare, Medicaid, and Maternal and Child Health Block Grant programs (42 U.S.C. 1320a-7a; 42 CFR Part 1003). The Program Fraud Civil Remedies Act (PFCRA) does not abrogate or modify this authority. Whenever a person may be liable under either the PFCRA or the Civil Monetary Penalty law, the Department may elect to pursue either remedy.

The Act requires each affected Federal agency to promulgate rules and regulations necessary to implement the provisions of the statute.

PCIE Model Regulations

In keeping with the Senate Governmental Affairs Committee's stated desire that "the regulations would be substantially uniform throughout government" (S. Rep. No. 99-212, 99th Cong., 1st Sess. 12 (1985)), the President's Council on Integrity and Efficiency (PCIE) requested this Department to form a task force to develop model regulations by which all affected Federal agencies could implement the Act. The task force completed a set of model regulations in March 1986, and the PCIE recommended that all affected agencies adopt them.

Shortly thereafter, several Federal agencies, including the Veterans Administration (VA) and the General Services Administration (GSA), published proposed regulations closely following the PCIE model. The Department of Health and Human Services published its notice of proposed rulemaking on July 21, 1987 (52 FR 27423).

The Department received comments from a law firm representing 13 States. In addition, while not filing comments with this Department, the Public Contract Law Section of the American Bar Association (ABA) filed virtually identical comments with both the VA and GSA. In response to these comments, the task force made changes to the model regulations, which the PCIE distributed to affected agencies on September 18, 1987.

Based on the comments received, the Department is now adopting the final model regulations recommended by the PCIE, incorporating, where appropriate, definitions specific to the Department's organization.

II. Response to Comments and Summary of Revisions

1. Major actors in bringing cases

The Act prescribes roles for four major actors within the Department in bringing cases under the Act: the investigating official, the reviewing official, the presiding official, and the authority head. The proposed regulations named the Department's Inspector General, or a designee within the OIG compensated at or above the basic rate of pay for grade GS-16 under the General Schedule, as the investigating official. The General Counsel, or a designee within the Office of the General Counsel also compensated at or above that rate, is to act as the reviewing official. Under the proposed rule, Administrative Law Judges (ALJs) would be the presiding officers, and the Secretary or the Under Secretary of the Department was to function as the authority head.

Upon reconsideration, we have revised the regulations to designate the Departmental Grant Appeals Board (DGAB) as the authority head to hear appeals from ALJ initial decisions in PFCRA cases, and to affirm, reduce, reverse, compromise, remand, or settle any penalty or assessment imposed under this provision. The Secretary customarily relies on this body to resolve a wide range of disputes between components of the Department and their grantees or participants in cooperative agreements. (See 45 CFR Part 16, Appendix A.) As the administrative tribunal of last resort for such disputes since 1981, the DGAB has developed considerable experience as an appellate body having a body of accessible case law and a strong support staff. In addition, its members are isolated from the political pressures that might otherwise be brought to bear on the Secretary or Under Secretary if they were to retain this authority.

Furthermore, the ALJ who hears cases brought under the Civil Money Penalty Law, 42 U.S.C. 1320a-7a, is assigned to the DGAB, and the DGAB is scheduled to take over final review responsibilities from the Appeals Council of the Social Security Administration in all cases involving OIG-initiated sanctions of health care providers and practitioners under 42 U.S.C. 1320a-7 and 1320-7a. The determinations that the DGAB will be making under this new delegation are similar to those under PFCRA. Hence, we believe that the DGAB is best suited to exercise review authority under PFCRA economically, efficiently, and fairly.

2. Definition of "benefit"

The ABA Public Contract Law Section objected to the definition of the term "benefit" in the model regulations and in § 79.2 of our proposed regulations, arguing that the definition went beyond Congress' intent to confine it as a subclass of "money."

The statute uses the term "benefit" in three different places: (a) in the definition of "claim," (b) in the definition of "statement," and (c) in section 3803(c)(2), where it is defined narrowly to refer to benefits under specific governmental assistance programs to individuals. Only in the definition of "claim" is the term referred to parenthetically as a subclass of "money." No such restriction applies when "benefits" is used in the definition of "statement." In that context, we believe that Congress intended the term to be defined broadly to suit the remedial purposes of the statute. We believe that by providing a remedy against making false statements, as well as against false claims, Congress intended the Act to cover material false statements in obtaining preferences, licenses, permits, certificates, employment, and other advantages from the authority—although such things of value might not be characterized as "money" in common parlance. To make our intention clear, we have amended the definition of "benefit" in § 79.2 to restrict it to application within the context of "statement."

3. Definition of "person"

Thirteen States objected that the statute does not permit the Department to include States and their political subdivisions in the definition of

"person," as originally proposed in § 79.2. As a result, we have revised the definition of "person" to reiterate the statutory definition in 31 U.S.C. 3801(a).

4. Review by the reviewing official

31 U.S.C. 3809 requires the reviewing official to determine that there is a reasonable prospect of collecting the amount of penalties and assessments for which a person may be liable. Section 79.5 of the regulations reflects our belief that this does not require the reviewing official to determine that a defendant could pay the statutory maximum, but rather that the defendant could pay an "appropriate amount."

Because we believe that Congress inserted 31 U.S.C. 3809(2) to ensure that the limited enforcement resources of the authority and the Department of Justice (DoJ) be used most efficiently, we have deleted the final sentence in § 79.5(b)(6) of the proposed regulations. The final regulation leaves the issue of what will constitute sufficient support for the reviewing official's statement on collectability to the Department and DoJ.

5. Service of a complaint

Consistent with 31 U.S.C. 3803(d)(1), § 79.8 of the regulations provides that the reviewing official may serve the complaint by delivering it or by mailing it by registered or certified mail.

We have modified the language in the regulations to make it clear (a) that service upon a defendant is complete when he or she receives it, (b) that service by delivery may be effected as provided under Rule 4(d) of the Federal Rules of Civil Procedure, and (c) what will constitute proof of service.

In addition, § 79.26(b) has been revised slightly to make it clear that, except where the regulations provide for service as specified in § 79.8, service is complete upon placing a copy of the document in the United States mail addressed to the party or the party's representative.

6. Filing an answer

Consistent with Congress' conception of the notice of allegations of liability as a "complaint" (S. Rep. No. 99-212, 99th Cong., 1st Sess. 14 (1985)), § 79.9 of the proposed regulations provided that the defendant request a hearing by filing an answer. In the answer, the defendant is to admit or deny each of the allegations in the complaint and to state any defenses upon which he or she intends to rely. In response to the model regulations, the ABA Public Contract Law Section specifically objected that the statute does not require a potential defendant to answer, but only to request a hearing within 30 days. Moreover, they believed that 30 days might be too short a time to formulate an appropriate answer.

We reject the notion that there is no authority to compel an answer. Focusing of issues in advance of litigation is as essential in administrative litigation as it is in the courts, serving the interests of all parties and the trier of fact. Congress clearly envisioned some early narrowing of the issues to enable the presiding officer to schedule the hearing, as required by 31 U.S.C. 3803(d)(2).

To the objection that the defendant has only 30 days to respond, it should be noted that persons are required to answer a summons and complaint within 20 days under Rule 12(a) of the Federal Rules of Civil Procedures. However, we have amended the regulations to provide that a defendant may file within 30 days of receipt of the complaint a request for hearing and a request for an extension of time for up to an additional 30 days to file a complete answer in accordance with § 79.9 of the regulations.

7. Reconsideration and appeal to authority head

The Act expressly authorizes appeal of the ALJ's initial decision to the authority head by a defendant found to be liable for penalties and assessments. Section 79.38 permits any party to file with the ALJ a motion to the ALJ for reconsideration of the initial decision, allowing the primary decision-maker an opportunity to correct any errors in it.

Section 79.39 of the regulations establishes procedures for a defendant found liable in an initial decision to appeal that decision to the authority head, as guaranteed by 31 U.S.C. 3803(i)(2). A commenter objected that by allowing reconsideration the proposed regulation limited the liable defendant's right to file an appeal any time within 30 days.

In response to this comment, we have amended § 79.39(b) to permit the defendant to file an appeal any time during that period. However, that section also provides that the authority head's consideration of the appeal will be stayed automatically if a party files a timely motion for reconsideration.

III. Regulatory Impact Analysis

A. Executive Order 12291

We have determined that this rule is not a "major rule" under Executive Order 12291 because it is not likely to result in (1) an annual effect in the economy of $100 million or more; (2) a major increase in costs or prices for consumers, individual industries, Federal, State, or local government agencies, or geographic regions; or (3) significant adverse effects on competition, employment, investment, productivity, innovation, or on the ability of United States-based enterprises to compete with foreign-based enterprises in domestic or foreign markets. As we have indicated, this rule establishes procedures governing the scope and conduct of administrative adjudications to impose civil penalties and assessments upon persons who submit or make false claims or statements to the Department. As such, this rule has no direct effect on the economy or on Federal or State expenditures. Accordingly, we have concluded that no regulatory impact analysis is required.

B. Regulatory Flexibility Analysis

Consistent with the Regulatory Flexibility Act of 1980 (Pub. L. 96-354, 5 U.S.C. 604(a)), we prepare and publish a regulatory flexibility analysis for each regulation unless the Secretary certifies that a regulation will not have a significant economic impact on a substantial number of small business entities. The analysis is intended to explain what effect the regulatory action by the agency will have on small businesses and other small entities and to develop lower cost or burden alternatives. As indicated above, these final regulations will not have a significant economic impact. While some of the penalties and assessments the Department could impose as a result of these regulations might have an impact on small entities, we do not anticipate that a substantial number of these small entities will be significantly affected by this rulemaking. Therefore, the Secretary certifies that this final regulation will not have a significant economic impact on a substantial number of small entities.

C. Paperwork Reduction Act

These regulations are not subject to section 3504(h) of the Paperwork Reduction Act (44 U.S.C. 3501) since they do not contain information collection or recordkeeping requirements as defined by that Act.

List of Subjects in 45 CFR Part 79

Administrative practice and procedure, Fraud, Investigations, Organizations and functions (Governmental agencies), Penalties.

Title 45, Subtitle A of the Code of Federal Regulations is amended as follows:

I. In Title 42 of the Code of Federal Regulations, a new Part 79, Program

Fraud Civil Remedies, is added to read as follows:

PART 79—PROGRAM FRAUD CIVIL REMEDIES

Sec.

79.1 Basis and purpose.
79.2 Definitions.
79.3 Basis for civil penalties and assessments.
79.4 Investigation.
79.5 Review by the reviewing official.
79.6 Prerequisites for issuing a complaint.
79.7 Complaint.
79.8 Service of complaint.
79.9 Answer.
79.10 Default upon failure to file an answer.
79.11 Referral of complaint and answer to the ALJ.
79.12 Notice of hearing.
79.13 Parties to the hearing.
79.14 Separation of functions.
79.15 Ex parte contacts.
79.16 Disqualification of reviewing official or ALJ.
79.17 Rights of parties.
79.18 Authority of the ALJ.
79.19 Prehearing conferences.
79.20 Disclosure of documents.
79.21 Discovery.
79.22 Exchange of witness lists, statements, and exhibits.
79.23 Subpoenas for attendance at hearing.
79.24 Protective order.
79.25 Fees.
79.26 Form, filing and service of papers.
79.27 Computation of time.
79.28 Motions.
79.29 Sanctions.
79.30 The hearing and burden of proof.
79.31 Determining the amount of penalties and assessments.
79.32 Location of hearing.
79.33 Witnesses.
79.34 Evidence.
79.35 The record.
79.36 Post-hearing briefs.
79.37 Initial decision.
79.38 Reconsideration of initial decision.
79.39 Appeal to authority head.
79.40 Stays ordered by the Department of Justice.
79.41 Stay pending appeal.
79.42 Judicial review.
79.43 Collection of civil penalties and assessments.
79.44 Right to administrative offset.
79.45 Deposit in Treasury of United States.
79.46 Compromise or settlement.
79.47 Limitations.

Authority: Secs. 6101–6104, Pub. L. 99–509, 100 Stat. 1874 (31 U.S.C. 3801–3812).

§ 79.1 Basis and purpose.

(a) *Basis.* This part implements the Program Fraud Civil Remedies Act of 1986, Pub. L. 99–509, §§ 6101–6104, 100 Stat. 1874 (October 21, 1986), to be codified at 31 U.S.C. 3801–3812. 31 U.S.C. 3809 of the statute requires each authority head to promulgate regulations necessary to implement the provisions of the statute.

(b) *Purpose.* This part (1) establishes administrative procedures for imposing civil penalties and assessments against persons who make, submit, or present, or cause to be made, submitted, or presented, false, fictitious, or fraudulent claims or written statements to authorities or to their agents, and (2) specifies the hearing and appeal rights of persons subject to allegations of liability for such penalties and assessments.

§ 79.2 Definitions.

ALJ means an Administrative Law Judge in the authority appointed pursuant to 5 U.S.C. 3105 or detailed to the authority pursuant to 5 U.S.C. 3344.

Authority means the Department of Health and Human Services.

Authority head means the Departmental Grant Appeals Board of the Department of Health and Human Services.

Benefit means, in the context of "statement," anything of value, including but not limited to any advantage, preference, privilege, license, permit, favorable decision, ruling, status, or loan guarantee.

Claim means any request, demand, or submission—

(a) Made to the authority for property, services, or money (including money representing grants, loans, insurance, or benefits);

(b) Made to a recipient of property, services, or money from the authority or to a party to a contract with the authority—

(1) For property or services if the United States—

(i) Provided such property or services;

(ii) Provided any portion of the funds for the purchase of such property or services; or

(iii) Will reimburse such recipient or party for the purchase of such property or services; or

(2) For the payment of money (including money representing grants, loans, insurance, or benefits) if the United States—

(i) Provided any portion of the money requested or demanded; or

(ii) Will reimburse such recipient or party for any portion of the money paid on such request or demand: or

(c) Made to the authority which has the effect of decreasing an obligation to pay or account for property, services, or money.

Complaint means the administrative complaint served by the reviewing official on the defendant under § 79.7.

Defendant means any person alleged in a complaint under § 79.7 to be liable for a civil penalty or assessment under § 79.3.

Department means the Department of Health and Human Services.

Government means the United States Government.

Individual means a natural person.

Initial decision means the written decision of the ALJ required by §§ 79.10 or 79.37, and includes a revised initial decision issued following a remand or a motion for reconsideration.

Investigating official means the Inspector General of the Department of Health and Human Services or an officer or employee of the Office of the Inspector General designated by the Inspector General and serving in a position for which the rate of basic pay is not less than the minimum rate of basic pay for grade GS–16 under the General Schedule.

Knows or has reason to know, means that a person, with respect to a claim or statement—

(a) Has actual knowledge that the claim or statement is false, fictitious, or fraudulent;

(b) Acts in deliberate ignorance of the truth or falsity of the claim or statement; or

(c) Acts in reckless disregard of the truth or falsity of the claim or statement.

Makes, wherever it appears, shall include the terms presents, submits, and causes to be made, presented, or submitted. As the context requires, *making* or *made,* shall likewise include the corresponding forms of such terms.

Person means any individual, partnership, corporation, association or private organization, and includes the plural of that term.

Representative means an attorney who is a member in good standing of the bar of any State, Territory, or possession of the United States or of the District of Columbia or the Commonwealth of Puerto Rico.

Reviewing official means the General Counsel of the Department or his or her designee who is—

(a) Not subject to supervision by, or required to report to, the investigating official;

(b) Not employed in the organizational unit of the authority in which the investigating official is employed; and

(c) Serving in a position for which the rate of basic pay is not less than the minimum rate of basic pay for grade GS–16 under the General Schedule.

Statement means any representation, certification, affirmation, document, record, or accounting or bookkeeping entry made—

(a) With respect to a claim or to obtain the approval or payment of a claim (including relating to eligibility to make a claim); or

(b) With respect to (including relating to eligibility for)—

(1) A contract with, or a bid or proposal for a contract with; or

(2) A grant, loan, or benefit from, the authority, or any State, political subdivision of a State, or other party, if the United States Government provides any portion of the money or property under such contract or for such grant, loan, or benefit, or if the Government will reimburse such State, political subdivision, or party for any portion of the money or property under such contract or for such grant, loan, or benefit,

§ 79.3 Basis for civil penalties and assessments.

(a) *Claims.* (1) Except as provided in paragraph (c) of this section, any person who makes a claim that the person knows or has reason to know—

(i) Is false, fictitious, or fraudulent;

(ii) Includes, or is supported by, any written statement which asserts a material fact which is false, fictitious, or fraudulent;

(iii) Includes, or is supported by, any written statement that—

(A) Omits a material fact;

(B) Is false, fictitious, or fraudulent as a result of such omission; and

(C) Is a statement in which the person making such statement has a duty to include such material fact; or

(iv) Is for payment for the provision of property or services which the person has not provided as claimed, shall be subject, in addition to any other remedy that may be prescribed by law, to a civil penalty of not more than $5,000 for each such claim.

(2) Each voucher, invoice, claim form, or other individual request or demand for property, services, or money constitutes a separate claim.

(3) A claim shall be considered made to the authority, recipient, or party when such claim is actually made to an agent, fiscal intermediary, or other entity, including any State or political subdivision thereof, acting for or on behalf of the authority, recipient, or party.

(4) Each claim for property, services, or money is subject to a civil penalty regardless of whether such property, services, or money is actually delivered or paid.

(5) If the Government has made any payment (including transferred property or provided services) on a claim, a person subject to a civil penalty under paragraph (a)(1) of this section shall also be subject to an assessment of not more than twice the amount of such claim or that portion thereof that is determined to be in violation of paragraph (a)(1). Such assessment shall be in lieu of damages sustained by the Government because of such claim.

(b) *Statements.* (1) Except as provided in paragraph (c) of this section, any person who makes a written statement that—

(i) The person knows or has reason to know—

(A) Asserts a material fact which is false, fictitious, or fraudulent; or

(B) Is false, fictitious, or fraudulent because it omits a material fact that the person making the statement has a duty to include in such statement; and

(ii) Contains, or is accompanied by, an express certification or affirmation of the truthfulness and accuracy of the contents of the statement,

shall be subject, in addition to any other remedy that may be prescribed by law, to a civil penalty of not more than $5,000 fo reach such statement.

(2) Each written representation, certification, or affirmation constitutes a separate statement.

(3) A statement shall be considered made to the authority when such statement is actually made to an agent, fiscal intermediary, or other entity, including any State or political subdivision thereof, acting for or on behalf of the authority.

(c) *Applications for certain benefits.* (1) In the case of any claim or statement made by any individual relating to any of the benefits listed in paragraph (c)(2) of this section received by such individual, such individual may be held liable for penalties and assessments under this section only if such claim or statement is made by such individual in making application for such benefits with respect to such individual's eligibility to receive such benefits.

(2) For purposes of paragraph (c) of this section, the term "benefits" means—

(i) Benefits under the supplemental security income program under title XVI of the Social Security Act;

(ii) Old age, survivors, and disability insurance benefits under title II of the Social Security Act;

(iii) Benefits under title XVIII of the Social Security Act;

(iv) Aid to families with dependent children under a State plan approved under section 402(a) of the Social Security Act;

(v) Medical assistance under a State plan approved under section 1902(a) of the Social Security Act;

(vi) Benefits under title XX of the Social Security Act;

(vii) Benefits under section 336 of the Older Americans Act; or,

(viii) Benefits under the Low-Income Home Energy Assistance Act of 1981, which are intended for the personal use of the individual who receives the benefits or for a member of the individual's family.

(d) No proof of specific intent to defraud is required to establish liability under this section.

(e) In any case in which it is determined that more than one person is liable for making a claim or statement under this section, each such person may be held liable for a civil penalty.

(f) In any case in which it is determined that more than one person is liable for making a claim under this section on which the Government has made payment (including transferred property or provided services), an assessment may be imposed against any such person or jointly and severally against any combination of such persons.

§ 79.4 Investigation.

(a) If an investigating official concludes that a subpoena pursuant to the authority conferred by 31 U.S.C. 3804(a) is warranted—

(1) The subpoena so issued shall notify the person to whom it is addressed of the authority under which the subpoena is issued and shall identify the records or documents sought;

(2) The investigating official may designate a person to act on his or her behalf to receive the documents sought; and

(3) The person receiving such subpoena shall be required to tender to the investigating official, or the person designated to receive the documents, a certification that—

(i) The documents sought have been produced;

(ii) Such documents are not available and the reasons therefor; or

(iii) Such documents suitably identified, have been withheld based upon the assertion of an identified privilege.

(b) If the investigating official concludes that an action under the Program Fraud Civil Remedies Act may be warranted, the investigating official shall submit a report containing the findings and conclusions of such investigation to the reviewing official.

(c) Nothing in this section shall preclude or limit an investigating official's discretion to refer allegations directly to the Department of Justice for suit under the False Claims Act or other civil relief, or to defer or postpone a report or referral to the reviewing official to avoid interference with a criminal investigation or prosecution.

(d) Nothing in this section modifies any responsibility of an investigating

official to report violations of criminal law to the Attorney General.

§ 79.5 Review by the reviewing official.

(a) If, based on the report of the investigating official under § 79.4(b), the reviewing official determines that there is adequate evidence to believe that a person is liable under § 79.3, the reviewing official shall transmit to the Attorney General a written notice of the reviewing official's attention to issue a complaint under § 79.7.

(b) Such notice shall include—

(1) A statement of the reviewing official's reasons for issuing a complaint;

(2) A statement specifying the evidence that supports the allegations of liability;

(3) A description of the claims or statements upon which the allegations of liability are based;

(4) An estimate of the amount of money, or the value of property, services, or other benefits, requested or demanded in violation of § 79.3 of this part;

(5) A statement of any exculpatory or mitigating circumstances that may relate to the claims or statements known by the reviewing official or the investigating official; and

(6) A statement that there is a reasonable prospect of collecting an appropriate amount of penalties and assessments.

§ 79.6 Prerequisites for issuing a complaint.

(a) The reviewing official may issue a complaint under § 79.7 only if—

(1) The Department of Justice approves the issuance of a complaint in a written statement described in 31 U.S.C. 3803(b)(1), and

(2) In the case of allegations of liability under § 79.3(a) with respect to a claim, the reviewing official determines that, with respect to such claim or a group of related claims submitted at the same time such claim is submitted (as defined in paragraph (b) of this section), the amount of money, or the value of property or services, demanded or requested in violation of § 79.3(a) does not exceed $150,000.

(b) For the purposes of this section, a related group of claims submitted at the same time shall include only those claims arising from the same transaction (e.g., grant, loan, application, or contract) that are submitted simultaneously as part of a single request, demand, or submission.

(c) Nothing in this section shall be construed to limit the reviewing official's authority to join in a single complaint against a person claims that are unrelated or were not submitted simultaneously, regardless of the amount of money, or the value of property or services, demanded or requested.

§ 79.7 Complaint.

(a) On or after the date the Department of Justice approves the issuance of a complaint in accordance with 31 U.S.C. 3803(b)(1), the reviewing official may serve a complaint on the defendant, as provided in § 79.8.

(b) The complaint shall state—

(1) The allegations of liability against the defendant, including the statutory basis for liability, an identification of the claims or statements that are the basis for the alleged liability, and the reasons why liability allegedly arises from such claims or statements;

(2) The maximum amount of penalties and assessments for which the defendant may be held liable;

(3) Instructions for filing an answer to request a hearing, including a specific statement of the defendant's right to request a hearing by filing an answer and to be represented by a representative; and

(4) That failure to file an answer as set forth in § 79.9 will result in the imposition of the maximum amount of penalties and assessments without right to appeal, as provided in § 79.10.

(c) At the same time the reviewing official serves the complaint, he or she shall serve the defendant with a copy of these regulations.

§ 79.8 Service of complaint.

(a) Service of a complaint must be made by certified or registered mail or by delivery in any manner authorized by Rule 4(d) of the Federal Rules of Civil Procedure. Service is complete upon receipt.

(b) Proof of service, stating the name and address of the person on whom the complaint was served, and the manner and date of service, may be made by—

(1) Affidavit of the individual serving the complaint by delivery;

(2) A United States Postal Service return receipt card acknowledging receipt; or

(3) Written acknowledgment of receipt by the defendant or his or her representative.

§ 79.9 Answer.

(a) The defendant may request a hearing by filing an answer with the reviewing official within 30 days of service of the complaint. An answer shall be deemed to be a request for hearing.

(b) In the answer, the defendant—

(1) Shall admit or deny each of the allegations of liability made in the complaint;

(2) Shall state any defense on which the defendant intends to rely;

(3) May state any reasons why the defendant contends that the penalties and assessments should be less than the statutory maximum; and

(4) Shall state the name, address, and telephone number of the person authorized by the defendant to act as defendant's representative, if any.

(c) If the defendant is unable to file an answer meeting the requirements of paragraph (b) of this section within the time provided, the defendant, before that time expires, may file with the reviewing official a general answer denying liability and requesting a hearing, and a request for an extension of time within which to file an answer meeting the requirements of paragraph (b) of this section. As provided in § 79.11, the reviewing official shall file promptly with the ALJ the complaint, the general answer denying liability, and the request for an extension of time. For good cause shown, the ALJ may grant the defendant up to 30 additional days within which to file an answer meeting the requirements of paragraph (b) of this section.

§ 79.10 Default upon failure to file an answer.

(a) If the defendant does not file an answer within the time prescribed in § 79.9(a), the reviewing official may refer the complaint to the ALJ.

(b) Upon the referral of the complaint, the ALJ shall promptly serve on the defendant in the manner prescribed in § 79.8, a notice that an initial decision will be issued under this section.

(c) The ALJ shall assume the facts alleged in the complaint to be true and, if such facts establish liability under § 79.3, the ALJ shall issue an initial decision imposing the maximum amount of penalties and assessments allowed under the statute.

(d) Except as otherwise provided in this section, by failing to file a timely answer, the defendant waives any right to further review of the penalties and assessments imposed under paragraph (c) of this section, and the initial decision shall become final and binding upon the parties 30 days after it is issued.

(e) If, before such an initial decision becomes final, the defendant files a motion with the ALJ seeking to reopen on the grounds that extraordinary circumstances prevented the defendant from filing an answer, the initial

decision shall be stayed pending the ALJ's decision on the motion.

(f) If, on such motion, the defendant can demonstrate extraordinary circumstances excusing the failure to file a timely answer, the ALJ shall withdraw the initial decision in paragraph (c) of this section, if such a decision has been issued, and shall grant the defendant an opportunity to answer the complaint.

(g) A decision of the ALJ denying a defendant's motion under paragraph (e) of this section is not subject to reconsideration under § 79.38.

(h) The defendant may appeal to the authority head the decision denying a motion to reopen by filing a notice of appeal with the authority head within 15 days after the ALJ denies the motion. The timely filing of a notice of appeal shall stay the initial decision until the authority head decides the issue.

(i) If the defendant files a timely notice of appeal with the authority head, the ALJ shall forward the record of the proceeding to the authority head.

(j) The authority head shall decide expeditiously whether extraordinary circumstances excuse the defendant's failure to file a timely answer based solely on the record before the ALJ.

(k) If the authority head decides that extraordinary circumstances excuse the defendant's failure to file a timely answer, the authority head shall remand the case to the ALJ with instructions to grant the defendant an opportunity to answer.

(l) If the authority head decides that the defendant's failure to file a timely answer is not excused, the authority head shall reinstate the initial decision of the ALJ, which shall become final and binding upon the parties 30 days after the authority head issues such decision.

§ 79.11 Referral of complaint and answer to the ALJ.

Upon receipt of an answer, the reviewing official shall file the complaint and answer with the ALJ.

§ 79.12 Notice of hearing.

(a) When the ALJ receives the complaint and answer, the ALJ shall promptly serve a notice of hearing upon the defendant in the manner prescribed by § 79.8. At the same time, the ALJ shall send a copy of such notice to the representative for the Government.

(b) Such notice shall include—

(1) The tentative time and place, and the nature of the hearing;

(2) The legal authority and jurisdiction under which the hearing is to be held;

(3) The matters of fact and law to be asserted;

(4) A description of the procedures for the conduct of the hearing;

(5) The name, address, and telephone number of the representative of the Government and of the defendant, if any; and

(6) Such other matters as the ALJ deems appropriate.

§ 79.13 Parties to the hearing.

(a) The parities to the hearing shall be the defendant and the authority.

(b) Pursuant to 31 U.S.C. 3730(c)(5), a private plaintiff under the False Claims Act may participate in these proceedings to the extent authorized by the provisions of that Act.

§ 79.14 Separation of functions.

(a) The investigating official, the reviewing official, and any employee or agent of the authority who takes part in investigating, preparing, or presenting a particular case may not, in such case or a factually related case—

(1) Participate in the hearing as the ALJ;

(2) Participate or advise in the initial decision or the review of the initial decision by the authority head, except as a witness or a representative in public proceedings; or

(3) Make the collection of penalties and assessments under 31 U.S.C. 3806.

(b) The ALJ shall not be responsible to, or subject to the supervision or direction of, the investigating official or the reviewing official.

(c) Except as provided in paragraph (a) of this section, the representative for the Government may be employed anywhere in the authority, including in the offices of either the investigating official or the reviewing official.

§ 79.15 Ex parte contacts.

No party or person (except employees of the ALJ's office) shall communciate in any way with the ALJ on any matter at issue in a case, unless on notice and opportunity for all parties to participate. This provision does not prohibit a person or party from inquiring about the status of a case or asking routine questions concerning administrative functions or procedures.

§ 79.16 Disqualification of reviewing official or ALJ.

(a) A reviewing official or ALJ in a particular case may disqualify himself or herself at any time.

(b) A party may file with the ALJ a motion for disqualification of a reviewing official or an ALJ. Such motion shall be accompanied by an affidavit alleging personal bias or other reason for disqualification.

(c) Such motion and affidavit shall be filed promptly upon the party's discovery of reasons requiring disqualification, or such objections shall be deemed waived.

(d) Such affidavit shall state specific facts that support the party's belief that personal bias or other reason for disqualification exists and the time and circumstances of the party's discovery of such facts. It shall be accompanied by a certificate of the representative of record that it is made in good faith.

(e) Upon the filing of such a motion and affidavit, the ALJ shall proceed no further in the case until he or she resolves the matter of disqualification in accordance with paragraph (f) of this section.

(f)(1) If the ALJ determines that a reviewing official is disqualified, the ALJ shall dismiss the complaint without prejudice.

(2) If the ALJ disqualifies himself or herself, the case shall be reassigned promptly to another ALJ.

(3) If the ALJ denies a motion to disqualify, the authority head may determine the matter only as part of his or her review of the initial decision upon appeal, if any.

§ 79.17 Rights of parties.

Except as otherwise limited by this part, all parties may—

(a) Be accompanied, represented, and advised by a representative;

(b) Participate in any conference held by the ALJ;

(c) Conduct discovery;

(d) Agree to stipulations of fact or law, which shall be made part of the record;

(e) Present evidence relevant to the issues at the hearing;

(f) Present and cross-examine witnesses;

(g) Present oral arguments at the hearing as permitted by the ALJ; and

(h) Submit written briefs and proposed findings of fact and conclusions of law after the hearing.

§ 79.18 Authority of the ALJ.

(a) The ALJ shall conduct a fair and impartial hearing, avoid delay, maintain order, and assure that a record of the proceeding is made.

(b) The ALJ has the authority to—

(1) Set and change the date, time, and place of the hearing upon reasonable notice to the parties;

(2) Continue or recess the hearing in whole or in part for a reasonable period of time;

(3) Hold conferences to identify or simplify the issues, or to consider other matters that may aid in the expeditious disposition of the proceeding;

(4) Administer oaths and affirmations;

(5) Issue subpoenas requiring the attendance of witnesses and the production of documents at depositions or at hearings;

(6) Rule on motions and other procedural matters;

(7) Regulate the scope and timing of discovery;

(8) Regulate the course of the hearing and the conduct of representatives and parties;

(9) Examine witnesses;

(10) Receive, rule on, exclude, or limit evidence;

(11) Upon motion of a party, take official notice of facts;

(12) Upon motion of a party, decide cases, in whole or in part, by summary judgment where there is no disputed issue of material fact;

(13) Conduct any conference, argument, or hearing on motions in person or by telephone; and

(14) Exercise such other authority as is necessary to carry out the responsibilities of the ALJ under this part.

(c) The ALJ does not have the authority to find Federal statutes or regulations invalid.

§ 79.19 Prehearing conferences.

(a) The ALJ may schedule prehearing conferences as appropriate.

(b) Upon the motion of any party, the ALJ shall schedule at least one prehearing conference at a reasonable time in advance of the hearing.

(c) The ALJ may use prehearing conferences to discuss the following:

(1) Simplication of the issues;

(2) The necessity or desirability of amendments to the pleadings, including the need for a more definite statement;

(3) Stipulations and admissions of fact——, or as to the contents and authenticity of documents;

(4) Whether the parties can agree to submission of the case on a stipulated record;

(5) Whether a party chooses to waive appearance at an oral hearing and to submit only documentary evidence (subject to the objection of other parties) and written argument;

(6) Limitation of the number of witnesses;

(7) Scheduling dates for the exchange of witness lists and of proposed exhibits;

(8) Discovery;

(9) The time and place for the hearing; and

(10) Such other matters as may tend to expedite the fair and just disposition of the proceedings.

(d) The ALJ may issue an order containing all matters agreed upon by the parties or ordered by the ALJ at a prehearing conference.

§ 79.20 Disclosure of documents.

(a) Upon written request to the reviewing official, the defendant may review any relevant and material documents, transcripts, records, and other materials that relate to the allegations set out in the complaint and upon which the findings and conclusions of the investigating official under § 79.4(b) are based, unless such documents are subject to a privilege under Federal law. Upon payment of fees for duplication, the defendant may obtain copies of such documents.

(b) Upon written request to the reviewing official, the defendant also may obtain a copy of all exculpatory information in the possession of the reviewing official or investigating official relating to the allegations in the complaint, even if it is contained in a document that would otherwise be privileged. If the document would otherwise be privileged, only that portion containing exculpatory information must be disclosed.

(c) The notice sent to the Attorney General from the reviewing official as described in § 79.5 is not discoverable under any circumstances.

(d) The defendant may file a motion to compel disclosure of the documents subject to the provisions of this section. Such a motion may only be filed with the ALJ following the filing of an answer pursuant to § 79.9.

§ 79.21 Discovery.

(a) The following types of discovery are authorized:

(1) Requests for production of documents for inspection and copying;

(2) Requests for admission of the contents or authenticity of any relevant document or of the truth of any revelant fact;

(3) Written interrogatories; and

(4) Depositions.

(b) For the purpose of this section and §§ 79.22 and 79.23, the term "documents" includes information, documents, reports, answers, records, accounts, papers, and other data and documentary evidence. Nothing contained herein shall be interpreted to require the creation of a document.

(c) Unless mutually agreed to by the parties, discovery is available only as ordered by the ALJ. The ALJ shall regulate the timing of discovery.

(d) *Motions for discovery.* (1) A party seeking discovery may file a motion with the ALJ. Such a motion shall be accompanied by a copy of the requested discovery, or in the case of depositions, a summary of the scope of the proposed deposition.

(2) Within ten days of service, a party may file an opposition to the motion and/or a motion for protective order as provided in § 79.24.

(3) The ALJ may grant a motion for discovery only if he or she finds that the discovery sought—

(i) Is necessary for the expeditious, fair, and reasonable consideration of the issues;

(ii) Is not unduly costly or burdensome;

(iii) Will not unduly delay the proceeding; and

(iv) Does not seek privileged information.

(4) The burden of showing that discovery should be allowed is on the party seeking discovery.

(5) The ALJ may grant discovery subject to a protective order under § 79.24.

(e) *Depositions.* (1) If a motion for deposition is granted, the ALJ shall issue a subpoena for the deponent, which may require the deponent to produce documents. The subpoena shall specify the time and place at which the deposition will be held.

(2) The party seeking to depose shall serve the subpoena in the manner prescribed in § 79.8.

(3) The deponent may file with the ALJ a motion to quash the subpoena or a motion for a protective order within ten days of service.

(4) The party seeking to depose shall provide for the taking of a verbatim transcript of the deposition, which it shall make available to all other parties for inspection and copying.

(f) Each party shall bear its own costs of discovery.

§ 79.22 Exchange of witness lists, statements and exhibits.

(a) At least 15 days before the hearing or at such other time as may be ordered by the ALJ, the parties shall exchange witness lists, copies of prior statements of proposed witnesses, and copies of proposed hearing exhibits, including copies of any written statements that the party intends to offer in lieu of live testimony in accordance with § 79.33(b). At the time the above documents are exchanged, any party that intends to rely on the transcript of deposition testimony in lieu of live testimony at the hearing, if permitted by the ALJ, shall provide each party with a copy of the specific pages of the transcript it intends to introduce into evidence.

(b) If a party objects, the ALJ shall not admit into evidence the testimony of any witness whose name does not

appear on the witness list or any exhibit not provided to the opposing party as provided above unless the ALJ finds good cause for the failure or that there is no prejudice to the objecting party.

(c) Unless another party objects within the time set by the ALJ, documents exchanged in accordance with paragraph (a) of this section shall be deemed to be authentic for the purpose of admissibility at the hearing.

§ 79.23 Subpoenas for attendance at hearing.

(a) A party wishing to procure the appearance and testimony of any individual at the hearing may request that the ALJ issue a subpoena.

(b) A subpoena requiring the attendance and testimony of an individual may also require the individual to produce documents at the hearing.

(c) A party seeking a subpoena shall file a written request therefor not less than 15 days before the date fixed for the hearing unless otherwise allowed by the ALJ for good cause shown. Such request shall specify any documents to be produced and shall designate the witnesses and describe the address and location thereof with sufficient particularity to permit such witnesses to be found.

(d) The subpoena shall specify the time and place at which the wintess is to appear and any documents the witness is to produce.

(e) The party seeking the subpoena shall serve it in the manner prescribed in § 79.8, except that a subpoena on a party or upon an individual under the control of a party may be served as prescribed in § 79.26(b).

(f) A party or the individual to whom the subpoena is directed may file with the ALJ a motion to quash the subpoena within ten days after service or on or before the time specified in the subpoena for compliance if it is less than ten days after service.

§ 79.24 Protective order.

(a) A party or a prospective witness or deponent may file a motion for a protective order with respect to discovery sought by an opposing party or with repect to the hearing, seeking to limit the availability or disclosure of evidence.

(b) In issuing a protective order, the ALJ may make any order which justice requires to protect a party or person from annoyance, embarrassment, oppression, or undue burden or expense, including one or more of the following:

(1) That the discovery not be had;

(2) That the discovery may be had only on specified terms and conditions, including a designation of the time or place;

(3) That the discovery may be had only through a method of discovery other than that requested:

(4) That certain matters not be inquired into, or that the scope of discovery be limited to certain matters;

(5) That discovery be conducted with no one present except persons designated by the ALJ;

(6) That the contents of discovery or evidence be sealed;

(7) That a deposition after being sealed be opened only by order of the ALJ;

(8) That a trade secret or other confidential research, development, commercial information, or facts pertaining to any criminal investigation, proceeding, or other administrative investigation not be disclosed or be disclosed only in a designated way; or

(9) That the parties simultaneously file specified documents or information enclosed in sealed envelopes to be opened as directed by the ALJ.

§ 79.25 Fees.

The party requesting a subpoena shall pay the cost of the fees and mileage of any witness subpoenaed in the amounts that would be payable to a witness in a proceeding in United States District Court. A check for witness fees and mileage shall accompany the subpoena when served, except that when a subpoena is issued on behalf of the authority, a check for witness fees and mileage need not accompany the subpoena.

§ 79.26 Form, filing and service of papers.

(a) *Form.* (1) Documents filed with the ALJ shall include an original and two copies.

(2) Every pleading and paper filed in the proceeding shall contain a caption setting forth the title of the action, the case number assigned by the ALJ, and a designation of the paper (*e.g.*, motion to quash subpoena).

(3) Every pleading and paper shall be signed by, and shall contain the address and telephone number of, the party or the person on whose behalf the paper was filed, or his or her representative.

(4) Papers are considered filed when they are mailed. Date of mailing may be established by a certificate from the party or its representative or by proof that the document was sent by certified or registered mail.

(b) *Service.* A party filed a document with the ALJ shall, at the time of filing, serve a copy of such document on every other party. Service upon any party of any document other than those required to be served as prescribed in § 79.8 shall be made by delivering a copy or by placing a copy of the document in the United States mail, postage prepaid, and addressed to the party's last known address. When a party is represented by a representative, service shall be made upon such representative in lieu of the actual party.

(c) *Proof of service.* A certificate of the individual serving the document by personal delivery or by mail, setting forth the manner of service, shall be proof of service.

§ 79.27 Computation of time.

(a) In computing any period of time under this part or in an order issued thereunder, the time begins with the day following the act, event, or default, and includes the last day of the period, unless it is a Saturday, Sunday, or legal holiday observed by the Federal government, in which event it includes the next business day.

(b) Except as provided in paragraph (c) of this section, when the period of time allowed is less than seven days, intermediate Saturdays, Sundays, and legal holidays observed by the Federal government shall be excluded from the computation.

(c) Where a document has been served or issued by placing it in the mail, an additional five calendar days will be added to the time permitted for any response.

§ 79.28 Motions.

(a) Any application to the ALJ for an order or ruling shall be by motion. Motions shall state the relief sought, the authority relied upon, and the facts alleged, and shall be filed with the ALJ and served on all other parties.

(b) Except for motions made during a prehearing conference or at the hearing, all motions shall be in writing. The ALJ may require that oral motions be reduced to writing.

(c) Within 15 days after a written motion is served, or such other time as may be fixed by the ALJ, any party may file a response to such motion.

(d) The ALJ may not grant a written motion before the time for filing responses thereto has expired, except upon consent of the parties or following a hearing on the motion, but may overrule or deny such motion without awaiting a response.

(e) The ALJ shall make a reasonable effort to dispose of all outstanding motions prior to the beginning of the hearing.

§ 79.29 Sanctions.

(a) The ALJ may sanction a person, including any party or representative, for—

(1) Failing to comply with an order, rule, or procedure governing the proceeding;

(2) Failing to prosecute or defend an action; or

(3) Engaging in other misconduct that interferes with the speedy, orderly, or fair conduct of the hearing.

(b) Any such sanction, including but not limited to those listed in paragraphs (c), (d), and (e) of this section, shall reasonably relate to the severity and nature of the failure or misconduct.

(c) When a party fails to comply with an order, including an order for taking a deposition, the production of evidence within the party's control, or a request for admission, the ALJ may—

(1) Draw an inference in favor of the requesting party with regard to the information sought;

(2) In the case of requests for admission, deem each matter of which an admission is requested to be admitted;

(3) Prohibit the party failing to comply with such order from introducing evidence concerning, or otherwise relying upon, testimony relating to the information sought; and

(4) Strike any part of the pleadings or other submissions of the party failing to comply with such request.

(d) If a party fails to prosecute or defend an action under this part commenced by service of a notice of hearing, the ALJ may dismiss the action or may issue an initial decision imposing penalties and assessments.

(e) The ALJ may refuse to consider any motion, request, response, brief or other document which is not filed in a timely fashion.

§ 79.30 The hearing and burden of proof.

(a) The ALJ shall conduct a hearing on the record in order to determine whether the defendant is liable for a civil penalty or assessment under § 79.3 and, if so, the appropriate amount of any such civil penalty or assessment considering any aggravating or mitigating factors.

(b) The authority shall prove defendant's liability and any aggravating factors by a preponderance of the evidence.

(c) The defendant shall prove any affirmative defenses and any mitigating factors by a preponderance of the evidence.

(d) The hearing shall be open to the public unless otherwise ordered by the ALJ for good cause shown.

§ 79.31 Determining the amount of penalties and assessments.

(a) In determining an appropriate amount of civil penalties and assessments, the ALJ and the authority head, upon appeal, should evaluate any circumstances that mitigate or aggravate the violation and should articulate in their opinions the reasons that support the penalties and assessments they impose. Because of the intangible costs of fraud, the expense of investigating such conduct, and the need to deter others who might be similarly tempted, ordinarily double damages and a significant civil penalty should be imposed.

(b) Although not exhaustive, the following factors are among those that may influence the ALJ and the authority head in determining the amount of penalties and assessments to impose with respect to the misconduct (i.e., the false, fictitious, or fraudulent claims or statements) charged in the complaint:

(1) The number of false, fictitious, or fraudulent claims or statements;

(2) The time period over which such claims or statements were made;

(3) The degree of the defendant's culpability with respect to the misconduct;

(4) The amount of money or the value of the property, services, or benefit falsely claimed;

(5) The value of the Government's actual loss as a result of the misconduct, including foreseeable consequential damages and the costs of investigation;

(6) The relationship of the amount imposed as civil penalties to the amount of the Government's loss;

(7) The potential or actual impact of the misconduct upon national defense, public health or safety, or public confidence in the management of Government programs and operations, including particularly the impact on the intended beneficiaries of such programs;

(8) Whether the defendant has engaged in a pattern of the same or similar misconduct;

(9) Whether the defendant attempted to conceal the misconduct;

(10) The degree to which the defendant has involved others in the misconduct or in concealing it;

(11) Where the misconduct of employees or agents is imputed to the defendant, the extent to which the defendant's practices fostered or attempted to preclude such misconduct;

(12) Whether the defendant cooperated in or obstructed an investigation of the misconduct;

(13) Whether the defendant assisted in identifying and prosecuting other wrongdoers;

(14) The complexity of the program or transaction, and the degree of the defendant's sophistication with respect to it, including the extent of the defendant's prior participation in the program or in similar transactions;

(15) Whether the defendant has been found, in any criminal, civil, or administrative proceeding, to have engaged in similar misconduct or to have dealt dishonestly with the Government of the United States or of a State, directly or indirectly; and

(16) The need to deter the defendant and others from engaging in the same or similar misconduct.

(c) Nothing in this section shall be construed to limit the ALJ or the authority head from considering any other factors that in any given case may mitigate or aggravate the offense for which penalties and assessments are imposed.

§ 79.32 Location of hearing.

(a) The hearing may be held—

(1) In any judicial district of the United States in which the defendant resides or transacts business;

(2) In any judicial district of the United States in which the claim or statement in issue was made; or

(3) In such other place as may be agreed upon by the defendant and the ALJ.

(b) Each party shall have the opportunity to present argument with respect to the location of the hearing.

(c) The hearing shall be held at the place and at the time ordered by the ALJ.

§ 79.33 Witnesses.

(a) Except as provided in paragraph (b) of this section, testimony at the hearing shall be given orally by witnesses under oath or affirmation.

(b) At the discretion of the ALJ, testimony may be admitted in the form of a written statement or deposition. Any such written statement must be provided to all other parties along with the last known address of such witness, in a manner which allows sufficient time for other parties to subpoena such witness for cross-examination at the hearing. Prior written statements of witnesses proposed to testify at the hearing and deposition transcripts shall be exchanged as provided in § 79.22(a).

(c) The ALJ shall exercise reasonable control over the mode and order of interrogating witnesses and presenting evidence so as to (1) make the interrogation and presentation effective for the ascertainment of the truth, (2) avoid needless consumption of time, and

BEST COPY AVAILABLE

(3) protect witnesses from harassment or undue embarrassment.

(d) The ALJ shall permit the parties to conduct such cross-examination as may be required for a full and true disclosure of the facts.

(e) At the discretion of the ALJ, a witness may be cross-examined on matters relevant to the proceeding without regard to the scope of his or her direct examination. To the extent permitted by the ALJ, cross-examination on matters outside the scope of direct examination shall be conducted in the manner of direct examination and may proceed by leading questions only if the witness is a hostile witness, an adverse party, or a witness identified with an adverse party.

(f) Upon motion of any party, the ALJ shall order witnesses excluded so that they cannot hear the testimony of other witnesses. This rule does not authorize exclusion of—

(1) A party who is an individual;

(2) In the case of a party that is not an individual, an officer or employee of the party appearing for the entity pro se or designated by the party's representative; or

(3) An individual whose presence is shown by a party to be essential to the presentation of its case, including an individual employed by the Government engaged in assisting the representative for the Government.

§ 79.34 Evidence.

(a) The ALJ shall determine the admissibility of evidence.

(b) Except as provided in this part, the ALJ shall not be bound by the Federal Rules of Evidence. However, the ALJ may apply the Federal Rules of Evidence where appropriate, *e.g.*, to exclude unreliable evidence.

(c) The ALJ shall exclude irrelevant and immaterial evidence.

(d) Although relevant, evidence may be excluded if its probative value is substantially outweighed by the danger of unfair prejudice, confusion of the issues, or by considerations of undue delay or needless presentation of cumulative evidence.

(e) Although relevant, evidence may be excluded if it is privileged under Federal law.

(f) Evidence concerning offers of compromise or settlement shall be inadmissible to the extent provided in Rule 408 of the Federal Rules of Evidence.

(g) The ALJ shall permit the parties to introduce rebuttal witnesses and evidence.

(h) All documents and other evidence offered or taken for the record shall be open to examination by all parties, unless otherwise ordered by the ALJ pursuant to § 79.24.

§ 79.35 The record.

(a) The hearing will be recorded and transcribed. Transcripts may be obtained following the hearing from the ALJ at a cost not to exceed the actual cost of duplication.

(b) The transcript of testimony, exhibits and other evidence admitted at the hearing, and all papers and requests filed in the proceeding constitute the record for the decision by the ALJ and the authority head.

(c) The record may be inspected and copied (upon payment of a reasonable fee) by anyone, unless otherwise ordered by the ALJ pursuant to § 79.24.

§ 79.36 Post-hearing briefs.

The ALJ may require the parties to file post-hearing briefs. In any event, any party may file a post-hearing brief. The ALJ shall fix the time for filing such briefs, not to exceed 60 days from the date the party receives the transcript of the hearing or, if applicable, the stipulated record. Such briefs may be accompanied by proposed findings of fact and conclusions of law. The ALJ may permit the parties to file reply briefs.

§ 79.36 Initial decision.

(a) The ALJ shall issue an initial decision based only on the record, which shall contain findings of fact, conclusions of law, and the amount of any penalties and assessments imposed.

(b) The findings of fact shall include a finding on each of the following issues:

(1) Whether the claims or statements identified in the complaint, or any portions thereof, violate § 79.3;

(2) If the person is liable for penalties or assessments, the appropriate amount of any such penalties or assessments considering any mitigating or aggravating factors that he or she finds in the case, such as those described in § 79.31.

(c) The ALJ shall promptly serve the initial decision on all parties within 90 days after the time for submission of post-hearing briefs and reply briefs (if permitted) has expired. The ALJ shall at the same time serve all parties with a statement describing the right of any defendant determined to be liable for a civil penalty or assessment to file a motion for reconsideration with the ALJ or a notice of appeal with the authority head. If the ALJ fails to meet the deadline contained in this paragraph, he or she shall notify the parties of the reason for the delay and shall set a new deadline.

(d) Unless the initial decision of the ALJ is timely appealed to the authority head, or a motion for reconsideration of the initial decision is timely filed, the initial decision shall constitute the final decision of the authority head and shall be final and binding on the parties 30 days after it is issued by the ALJ.

§ 79.38 Reconsideration of initial decision.

(a) Except as provided in paragraph (d) of this section, any party may file a motion for reconsideration of the initial decision within 20 days of receipt of the initial decision. If service was made by mail, receipt will be presumed to be five days from the date of mailing in the absence of contrary proof.

(b) Every such motion must set forth the matters claimed to have been erroneously decided and the nature of the alleged errors. Such motion shall be accompanied by a supporting brief.

(c) Responses to such motions shall be allowed only upon request of the ALJ.

(d) No party may file a motion for reconsideration of an initial decision that has been revised in response to a previous motion for reconsideration.

(e) The ALJ may dispose of a motion for reconsideration by denying it or by issuing a revised initial decision.

(f) If the ALJ denies a motion for reconsideration, the initial decision shall constitute the final decision of the authority head and shall be final and binding on the parties 30 days after the ALJ denies the motion, unless the initial decision is timely appealed to the authority head in accordance with § 79.39.

(g) If the ALJ issues a revised initial decision, that decision shall constitute the final decision of the authority head and shall be final and binding on the parties 30 days after it is issued, unless it is timely appealed to the authority head in accordance with § 79.39.

§ 79.39 Appeal to authority head.

(a) Any defendant who has filed a timely answer and who is determined in an initial decision to be liable for a civil penalty or assessment may appeal such decision to the authority head by filing a notice of appeal with the authority head in accordance with this section.

(b)(1) A notice of appeal may be filed at any time within 30 days after the ALJ issues an initial decision. However, if another party files a motion for reconsideration under § 79.38, consideration of the appeal shall be stayed automatically pending resolution of the motion for reconsideration.

(2) If a motion for reconsideration is timely filed, a notice of appeal must be filed within 30 days after the ALJ denies

the motion or issues a revised initial decision, whichever applies.

(3) If no motion for reconsideration is timely filed, a notice of appeal must be filed within 30 days after the ALJ issues the initial decision.

(4) The authority head may extend the initial 30-day period for an additional 30-days if the defendant files with the authority head a request for an extension within the initial 30 day period and shows good cause.

(c) If the defendant files a timely notice of appeal with the authority head, and the time for filing motions for reconsideration under § 79.38 has expired, the ALJ shall forward the record of the proceeding to the authority head.

(d) A notice of appeal shall be accompanied by a written brief specifying exceptions to the initial decision and reasons supporting the exceptions.

(e) The representative for the Government may file a brief in opposition to exceptions within 30 days of receiving the notice of appeal and accompanying brief.

(f) There is no right to appear personally before the authority head.

(g) There is no right to appeal any interlocutory ruling by the ALJ.

(h) In reviewing the initial decision, the authority head shall not consider any objection that was not raised before the ALJ unless a demonstration is made of extraordinary circumstances causing the failure to raise the objection.

(i) If any party demonstrates to the satisfaction of the authority head that additional evidence not presented at such hearing is material and that there were reasonable grounds for the failure to present such evidence at such hearing, the authority head shall remand the matter to the ALJ for consideration of such additional evidence.

(j) The authority head may affirm, reduce, reverse, compromise, remand, or settle any penalty or assessment determined by the ALJ in any initial decision.

(k) The authority head shall promptly serve each party to the appeal with a copy of the decision of the authority head and a statement describing the right of any person determined to be liable for a penalty or assessment to seek judicial review.

(l) Unless a petition for review is filed as provided in 31 U.S.C. 3805 after a defendant has exhausted all administrative remedies under this part and within 60 days after the date on which the authority head serves the defendant with a copy of the authority head's decision, a determination that a defendant is liable under § 79.3 is final and is not subject to judicial review.

§ 79.40 Stays ordered by the Department of Justice.

If at any time the Attorney General or an Assistant Attorney General designated by the Attorney General transmits to the authority head a written finding that continuation of the administrative process described in this part with respect to a claim or statement may adversely affect any pending or potential criminal or civil action related to such claim or statement, the authority head shall stay the process immediately. The authority head may order the process resumed only upon receipt of the written authorization of the Attorney General.

§ 79.41 Stay pending appeal.

(a) An initial decision is stayed automatically pending disposition of a motion for reconsideration or of an appeal to the authority head.

(b) No administrative stay is available following a final decision of the authority head.

§ 79.42 Judicial review.

Section 3805 of title 31, United States Code, authorizes judicial review by an appropriate United States District Court of a final decision of the authority head imposing penalties or assessments under this part and specifies the procedures for such review.

§ 79.43 Collection of civil penalties and assessments.

Sections 3806 and 3808(b) of title 31, United States Code, authorize actions for collection of civil penalties and assessments imposed under this part and specify the procedures for such actions.

§ 79.44 Right to administrative offset.

The amount of any penalty or assessment which has become final, or for which a judgment has been entered under § 79.42 or § 79.43, or any amount agreed upon in a compromise or settlement under § 79.46, may be collected by administrative offset under 31 U.S.C. 3716, except that an administrative offset may not be made under this subsection against a refund of an overpayment of Federal taxes, then or later owing by the United States to the defendant.

§ 79.45 Deposit in Treasury of United States.

All amounts collected pursuant to this part shall be deposited as miscellaneous receipts in the Treasury of the United States, except as provided in 31 U.S.C. 3806(g).

§ 79.46 Compromise or settlement.

(a) Parties may make offers of compromise or settlement at any time.

(b) The reviewing official has the exclusive authority to compromise or settle a case under this part at any time after the date on which the reviewing official is permitted to issue a complaint and before the date on which the ALJ issues an initial decision.

(c) The authority head has exclusive authority to compromise or settle a case under this part at any time after the date on which the ALJ issues an initial decision, except during the pendency of any review under § 79.42 or during the pendency of any action to collect penalties and assessments under § 79.43.

(d) The Attorney General has exclusive authority to compromise or settle a case under this part during the pendency of any review under § 79.42 or of any action to recover penalties and assessments under 31 U.S.C. 3806.

(e) The investigating official may recommend settlement terms to the reviewing official, the authority head, or the Attorney General, as appropriate. The reviewing official may recommend settlement terms to the authority head, or the Attorney General, as appropriate.

(f) Any compromise or settlement must be in writing.

§ 79.47 Limitations.

(a) The notice of hearing with respect to a claim or statement must be served in the manner specified in § 79.8 within 6 years after the date on which such claim or statement is made.

(b) If the defendant fails to file a timely answer, service of a notice under § 79.10(b) shall be deemed a notice of hearing for purposes of this section.

(c) The statute of limitations may be extended by agreement of the parties.

Dated: January 21, 1988.

Richard P. Kusserow,

Inspector General, Department of Health and Human Services.

Approved: March 14, 1988.

Otis R. Bowen,

Secretary.

[FR Doc. 88-7489 Filed 4-7-88; 8:45 am]

BILLING CODE 4150-04-M

FEDERAL COMMUNICATIONS COMMISSION

47 CFR Part 73

[MM Docket No. 86-507; RM-5501]

Radio Broadcasting Services; Cape Coral, FL

AGENCY: Federal Communications Commission.

ACTION: Final rule.

SUMMARY: This document substitutes Channel 279C2 for Channel 280A at Cape Coral, Florida, and modifies the Class A license for Station WRCC(FM) to specify Channel 279C2, at the request of the licensee Radio Cape Coral, Inc. With this action, this proceeding is terminated.

EFFECTIVE DATE: May 16, 1988.

FOR FURTHER INFORMATION CONTACT: Montrose H. Tyree, Mass Media Bureau, (202) 634-6530.

SUPPLEMENTARY INFORMATION: This is a summary of the Commission's Report and Order, MM Docket No. 86-507, adopted March 4, 1988, and released April 1, 1988. The full text of this Commission decision is available for inspection and copying during normal business hours in the FCC Dockets Branch (Room 230), 1919 M Street NW., Washington, DC. The complete text of this decision may also be purchased from the Commission's copy contractors, International Transcription Service, (202) 857-3800, 2100 M Street NW., Suite 140, Washington, DC 20037.

List of Subjects in 47 CFR Part 73

Radio broadcasting.

PART 73—[AMENDED]

1. The authority citation for Part 73 continues to read as follows:

Authority: 47 U.S.C. 154, 303.

§ 73.202 [Amended]

2. Section 73.202(b), the Table of FM Allotments is amended for Cape Coral, Florida by adding Channel 279C2 and removing Channel 280A.

Federal Communications Commission.

Steve Kaminer,

Deputy Chief, Policy and Rules Division, Mass Media Bureau.

[FR Doc. 88-7758 Filed 4-7-88; 8:45 am]

BILLING CODE 6712-01-M

47 CFR Part 73

[MM Docket No. 87-262; RM-5727]

Radio Broadcasting Services; Newberry, MI

AGENCY: Federal Communications Commission.

ACTION: Final rule.

SUMMARY: This document substitutes FM Channel 229C2 for Channel 228A at Newberry, Michigan, as that community's second wide coverage are broadcast service, in response to a petition filed by Jack St. Andre. We have also authorized the modification of Station WNBY's license to specify Channel 229C2 in lieu of Channel 228A. Concurrence of the Canadian government has been obtained for the allotment of Channel 229C2 at Newberry. With this action, this proceeding is terminated.

EFFECTIVE DATE: May 16, 1988.

FOR FURTHER INFORMATION CONTACT: Kathleen Scheuerle, Mass Media Bureau, (202) 634-6530.

SUPPLEMENTARY INFORMATION: This is a summary of the Commission's Report and Order, MM Docket No. 87-262, adopted March 4, 1988, and released April 1, 1988. The full text of this Commission decision is available for inspection and copying during normal business hours in the FCC Dockets Branch (Room 230), 1919 M Street NW., Washington, DC. The complete text of this decision may also be purchased from the Commission's copy contractors, International Transcription Service, (202) 857-3800, 2100 M Street NW., Suite 140, Washington, DC 20037.

List of Subjects in 47 CFR Part 73

Radio broadcasting.

PART 73—[AMENDED]

1. The authority citation for Part 73 continues to read as follows:

Authority: 47 U.S.C. 154, 303.

§ 73.202 [Amended]

2. In § 73.202(b), the Table of FM Allotments is amended under Michigan by removing Channel 228A at Newberry and adding Channel 229C2.

Federal Communications Commission.

Steve Kaminer,

Deputy Chief, Policy and Rules Division, Mass Media Bureau.

[FR Doc. 88-7759 Filed 4-7-88; 8:45 am]

BILLING CODE 6712-01-M

47 CFR Part 73

[MM Docket No. 87-94; RM-5584]

Radio Broadcasting Services; Mesquite, NV

AGENCY: Federal Communications Commission.

ACTION: Final rule.

SUMMARY: The Commission, at the request of Dale G. Gardner, allocates Channel 248C1 to Mesquite, NV, as the community's first local FR service. Channel 248C1 can be allocated to Mesquite in compliance with the Commission's minimum distance separation requirements without the imposition of a site restriction. With this action, this proceeding is terminated.

DATES: Effective May 16, 1988. The window period for filing applications will open on May 17, 1988, and close on June 1, 1988.

FOR FURTHER INFORMATION CONTACT: Leslie K. Shapiro, Mass Media Bureau, (202) 634-6530.

SUPPLEMENTARY INFORMATION: This is a summary of the Commission's Memorandum Opinion and Order, MM Docket No. 87-94, adopted March 4, 1988, and released April 1, 1988. The full text of this Commission decision is available for inspection and copying during normal business hours in the FCC Dockets Branch (Room 230), 1919 M Street NW., Washington, DC. The complete text of this decision may also be purchased from the Commission's copy contractor, International Transcription Service, (202) 857-3800, 2100 M Street NW., Suite 140, Washington, DC 20037.

List of Subjects in 47 CFR Part 73

Radio broadcasting.

PART 73—[AMENDED]

1. The authority citation for Part 73 continues to read as follows:

Authority: 47 U.S.C. 154, 303.

§ 73.202 [Amended]

2. Section 73.202(b), the FM Table of Allotments for Nevada is amended by adding the entry for Mesquite, Channel 248C1.

Federal Communications Commission.

Steve Kaminer,

Deputy Chief, Policy and Rules Division, Mass Media Bureau.

[FR Doc. 88-7760 Filed 4-7-88; 8:45 am]

BILLING CODE 6712-01-M

Proposed Rules

Federal Register
Vol. 53, No. 68
Friday, April 8, 1988

This section of the FEDERAL REGISTER contains notices to the public of the proposed issuance of rules and regulations. The purpose of these notices is to give interested persons an opportunity to participate in the rule making prior to the adoption of the final rules.

DEPARTMENT OF AGRICULTURE

Agricultural Marketing Service

7 CFR Part 917

Fresh Pears, Plums, and Peaches Grown in the State of California; Proposed Increase in Size Requirements and Clarification of Maturity Regulations for Plums

AGENCY: Agricultural Marketing Service, USDA.

ACTION: Proposed rule.

SUMMARY: This proposed rule invites comments on several proposed changes to the size and maturity regulations established for California plums. The minimum size requirements for numerous plum varieties subject to variety-specific size requirements would be revised by decreasing the number of plums allowed in an eight-pound sample. The Plum Commodity Committee established under the marketing order has proposed the change to make plums more marketable and to give retailers and consumers a better product. This proposal also would add seven new varieties of plums to the variety-specific size list and remove one from the variety-specific list. The proposal, in addition, would clarify the regulations by specifying the current maturity requirements in greater detail and would simplify the maturity determination system currently used by the plum industry.

DATE: Comments must be received by April 25, 1988.

ADDRESS: Interested persons are invited to submit written comments concerning this proposal. Comments must be sent to the Docket Clerk, Fruit and Vegetable Division, AMS, USDA, P.O. Box 96456, Room 2085-S, Washington, DC 20090-6456. Three copies of the written material shall be submitted, and they will be made available for public inspection in the office of the Docket Clerk during regular business hours. The comments should reference the date and page number of this issue of the **Federal Register**.

FOR FURTHER INFORMATION CONTACT: Jerry N. Brown, Marketing Order Administration Branch, Fruit and Vegetable Division, AMS, USDA, P.O. Box 96456, Rom 2525-S, Washington, DC 20090-6456; telephone 202-475-5464.

SUPPLEMENTARY INFORMATION: This rule is proposed under Marketing Order No. 917 [7 CFR Part 917], regulating the handling of fresh pears, plums, and peaches grown in California. This order is effective under the Agricultural Marketing Agreement Act of 1937, as amended [7 U.S.C. 601-674], hereinafter referred to as the Act.

This rule has been reviewed under Executive Order 12291 and Departmental Regulation 1512-1 and has been determined to be a "non-major" rule under criteria contained therein.

Pursuant to requirements set forth in the Regulatory Flexibility Act (RFA), the Administrator of the Agricultural Marketing Service (AMS) has considered the economic impact of this proposal on small entities.

The purpose of the RFA is to fit regulatory actions to the scale of business subject to such actions in order that small businesses will not be unduly or disproportionately burdened. Marketing orders issued pursuant to the Act, and rules issued thereunder, are unique in that they are brought about through group action of essentially small entities acting on their own behalf. Thus, both statutes have small entity orientation and compatibility.

There are approximately 650 handlers of plums, peaches, and nectarines subject to regulation under marketing orders [7 CFR Parts 916 and 917], and there are approximately 2,030 producers of these commodities in the regulated area. Small agricultural producers have been defined by the Small Business Administration [13 CFR 121.2] as those having gross annual revenues for the last three years of less than $500,000, and small agricultural service firms are defined as those whose gross annual receipts are less than $3,500,000. The majority of handlers and producers of such fruit may be classified as small entities.

Shipments of California plums are regulated by grade, maturity, and size under Plum Regulation 19 [7 CFR 917.460, as amended and published in the **Federal Register** on April 29, 1987, 52 FR 15488]. Most of the proposed changes to § 917.460 were recommended by the Plum Commodity Committee, which works with the Department in administering the marketing order for fresh California pears, plums, and peaches. This proposed rule is based upon the plum committee's recommendation, information submitted by the committee, and other available information. The proposed changes reflect crop and market conditions experienced last season and expected conditions in 1988.

Inspected shipments, in packages, of California plums for the 1987 season totalled 17,399,500 and they were primarily marketed in the fresh market. In 1987, the total production value of California plums was about $75,361,000. Although this proposed rule would impose requirements on plums, exemptions from the inspection and certification requirements would continue. These exemptions include provisions for the shipment of minimum quantities of the fruit.

Variety-specific size regulations for plums are implemented when the plum variety is produced in commercially significant quantities; i.e., shipments in excess of 10,000 packages during a season. When varieties are no longer produced in significant quantities (less than 5,000 packages during the previous season), they are removed from the variety-specific size requirements, but are subject to minimum size requirements established for non-listed varieties. The quantities used in making these determinations are the same as those used in prior seasons. These requirements are specified in paragraphs (b) and (c) of § 917.460.

To implement the plum committee's size recommendations, paragraphs (b) and (c) of § 917.460 would be revised to increase the size requirements for 47 varieties of plums and decrease the size requirement for the Sharron's Plum variety of plums. This would be accomplished by decreasing the number of plums allowed in an eight-pound sample (count per pound requirements) for 47 varieties and by increasing the number of plums allowed in an eight-pound sample for the Sharron's Plum variety of plums from 61 to 63. In addition, four-basket crate equivalents for each listed count per pound size requirement would be specified. The proposal would not subject plums that

are packed in four-basket crates to the eight-pound sample test. When plums are packed in four-basket crates the proposed four-basket crate requirements would be used. When these requirements are compared to the current requirements, 30 varieties of plums would be subject to increased size requirements. The current minimum size regulations do not specify four-basket crate equivalents for each count per pound size requirement. When plums are packed in four-basket crates, the size is indicated by the arrangement of the fruit in the top layer. For example, the term "4 × 4" means that the top layer contains four rows with four pieces of fruit in each row and the term "4 × 5" means four rows with five pieces of fruit in each row. The term "3 × 4 × 5" means that the top layer contains five rows of fruit with alternating rows containing 3 and 4 pieces of fruit.

As indicated earlier, the count per pound requirements for many commercially significant varieties would be increased and the shipment of the "4 × 4," "3 × 4 × 5," and "4 × 5" sizes for many varieties would be curtailed. The size predominantly affected would be "4 × 5." For example, the Andy's Pride variety of plums (a listed variety), would be subject to a maximum limit of 66 plums per eight-pound sample, as compared to the present maximum limit of 69 plums per eight-pound sample, if packed in any authorized container other than a four-basket crate. However, if the handler packed these plums in a four-basket crate, then the plums would be subject to a four-basket crate-based minimum size limit of "3 × 4 × 5" instead of "4 × 5," which is equivalent to 60 plums per eight-pound sample. The minimum size for non-listed varieties would continue to be 139 plums per eight-pound sample or "6 × 6" when packed in four-basket crates.

The recommended size changes would help the California plum industry sell more fruit and encourage repeat purchases. According to the committee, much of the 1987 crop was dumped or sold at discounted prices because smaller sized plums are not as desirable in the marketplace and consumers reject them, and small size plums were the reason for product backup at shipping point and retail in 1987.

Early season purchases of small-sized plums have a negative impact on total plum sales because consumers do not make repeat purchases after being dissatisfied with their original purchases. The committee reports increased size requirements are needed to make plums more marketable and would improve consumer satisfaction which is needed to maintain current markets and to build new markets.

The elimination of small-sized plums would respond to consumer demands for larger fruit and benefit the consumer and the entire plum industry. A consumer research study conducted and paid for by the plum committee in 1984 indicated that the basic problem hurting plum sales was small size and the corresponding high pit to flesh ratio. In 1986, "4 × 5" size Red Beaut variety plums were initially quoted at $12 per box, but were subsequently sold for $4 to $5. According to the committee this is evidence of a firm rejection of small size Red Beaut plums. Because of all the reported young plum acreage and the cultural practices (e.g., proper thinning) growers can take to increase plum size and yields, no shortage is expected as a result of the recommended size changes, but rather more healthy market conditions for California plums.

Subsequent to the committee's meeting on December 9, 1987, on this proposal, the Department has received a number of letters from interested persons both in support of the size increases and opposed to them. The views of those in favor of the size increases generally reflect the rationale of the committee in recommending the proposed regulation. On the other hand, those opposed to the size increases, including some growers and packers from the early production areas of Kern and southern Tulare counties, contend that they have consistently found markets for smaller sized plums, the sale of which has been profitable. Others contend that the difficulties in sales of smaller sized plums experienced in 1984 and 1987 resulted from oversupply of these plums, not because small plums were undesirable. Many expressed concern that if shipments of smaller sized plums were eliminated, they would suffer severe economic hardship especially in the early production areas.

In addition, the proposal would establish variety-specific size requirements for plum varieties now produced in commercially significant quantities and remove one variety no longer produced in significant quantities from variety-specific size requirements. Specifically, the Ambra, Black Ace, Black Giant, Black Gold, Royal Diamond, Royal Garnet, and Shayna varieties of plums would be added to the variety-specific size requirements in paragraph (b) of § 917.460. The Bee Gee variety of plums would be removed from the variety-specific size requirements. Shipments of the varieties that would be individually regulated exceeded 10,000 packages during the 1987 season. Shipments of the variety that would be removed from the variety-specific size requirements fell below 5,000 packages during the 1987 season.

Further, the proposal would revise paragraph (a) of § 917.460 to clarify the plum maturity requirements and simplify the maturity determination system currently used by the plum industry. Among other things, the revision of paragraph (a) would specify that no handler can ship plums unless they are at least "well-matured," as defined in paragraph (d) and would specify the role of Federal or Federal-State inspectors in making "well-matured" determinations.

Currently the first sentence of paragraph (a) states that: "No handler shall ship any lot of packages or containers of any plums unless such plums grade at least U.S. No. 1, except that maturity shall be determined by the application of color standards by variety or such other tests as determined to be proper by the Federal or Federal-State Inspection Service."

It is proposed that this statement be revised to read: "No handler shall ship any lot of packages or containers of any plums unless such plums grade at least U.S. No. 1, except that the plums shall be 'well-matured,' rather than 'mature,' but not over-ripe or shriveled." This change would clarify the fact that all plums marketed under this program must be "well-matured," rather than "mature" as defined in the U.S. grade standards for plums. Since May 19, 1980 [45 FR 33596; May 20, 1980] plums have been required to be "well-matured" rather than "mature," and this requirement has been implemented by the Federal-State Inspection Service since that time.

In addition to specifying that plums must be "well-matured," the proposed change would define "well-matured." It would read as follows: " 'Well-matured' means a condition distinctly more advanced than 'mature.' " "Mature" is defined in the U.S. grade standards as follows: " 'Mature' means that the fruit has reached the stage of maturity which will insure a proper completion of the ripening process." This is a minimum standard of maturity which was in effect before the more recent advances in handling and distribution techniques and does not preclude inspecting to a higher degree of maturity. In 1980, in fact, it was determined that plums picked and packed at this minimum maturity level were poorly received by consumers because they lacked flavor and were too hard. The "well-matured" requirement has resulted in more

consumer acceptance and expansion of markets for California plums.

The proposal would also simplify the current maturity determination procedures. To ascertain compliance with "well-matured" standard with regard to each variety of plums, various tests are used. Since 1980, the Federal-State Inspection Service, based on its expertise, has been primarily responsible for determining which specific test or tests should be used for each variety of plums and which test level (e.g. particular percent of color or particular color chip) is appropriate for each variety. When the Federal-State Inspection Service has sufficient experience with a variety to determine that a particular test or tests and a particular test level should normally be appropriate for the entire production area for every year, it has advised the Plum Commodity Committee of that determination. The Plum Commodity Committee has then ratified that determination, publishing it in their annual bulletin. After such a determination for a particular variety has been published, variances during the season or permanent changes between seasons have been made by the Committee or its Maturity Subcommittee. The Committee and its Staff have provided advice to the Federal-State Inspection Service in making its maturity determinations, and likewise the Federal-State Inspection Service and the Committee Staff have advised the Committee and its Maturity Subcommittee in making variances and changes.

Over the years, these procedures have provided fair and equitable treatment to producers and handlers. The Federal-State Inspection Service is the recognized authority on matters relating to grading and inspection. The Committee Staff have backgrounds in inspection and packing and have a vast amount of concentrated hands-on experience with plums. The members of the Committee are all growers and often handlers of plums who are nominated by their peers in each production district. They have practical business experience in the plum industry, as well as enjoying the confidence of their peers with regard to their expertise and integrity.

The current procedures have, however, at times created logistical problems, particularly with regard to variances during the season. Requests for variances require prompt consideration and action. Committee members are dispersed over a wide geographical area and have daily responsibilities with regard to their own businesses. While most Committee members have been extremely giving of their time with regard to their variance duties, the demands of such duties have imposed a hardship on the members.

It is, therefore, proposed that the responsibility for variances during the season and changes between the seasons be given to the Federal or Federal-State Inspection Service. This change would simplify the procedures by assigning all maturity determinations and the application of those determinations to one group. In making this proposal it is intended that the Federal or the Federal-State Inspection Service, while considering variances and changes, will seek the advice of the Committee and its Staff in order to draw upon their wealth of expertise. It is also intended that any changes and any variances would be applicable to all growers and handlers of the particular variety. Finally, it is intended that any changes and variances will be made at the supervisory level of the Federal or the Federal-State Inspection Service, rather than by the particular packing-house inspector. This will ensure that these decisions are made by those who have the greatest background and expertise and who are in a position to be knowledgeable concerning current conditions throughout the entire production area. It is expected that this change in procedure will have very negligible substantive effect. The experience of the last eight seasons indicates that almost invariably there has been a concurrence of opnion regarding the proper decision among the Federal-State Inspection Service, the Committee Staff and the Committee or Subcommittee.

Further, a table would be added to paragraph (a) of § 917.460 which would specify color chips and other maturity guides which the Federal or the Federal-State Inspection Service intends to use for the specified varieties of plums.

For these varieties, not less than 90 percent of any lot shall meet the surface color, flesh color, or spring requirements established for the variety, or not less than 90 percent of any lot shall meet the ground color standard established for that variety.

The varieties listed in the table are those described above where the inspection service has sufficient experience to determine a generally appropriate test or tests and test levels. The Federal or the Federal-State Inspection Service will have the authority to make variances from the guides in the table during the season for any variety to reflect changes in crop and weather conditions that would make the guide an inappropriate measure of "well-matured." For varieties not listed in the table, the Federal or Federal-State Inspection Service would use such tests as they deem appropriate. Single sets of the color chip guides used by the Federal or Federal-State Inspection Service may be obtained from the Plum Commodity Committee at: 701 Fulton Avenue, Sacramento, California 95865 or can be inspected at such location during regular business hours. The committee's telephone number is 916-483-9261.

There are several changes in the table from the list in the 1987 Plum Bulletin. The maturity guide for Roysum plums would be changed by adding "green streaking" as a maturity indicator with regard to ground color. This is intended to help make maturity determinations for this variety of plums more accurate. The "well-matured" guide for fresh prune/plums would be revised by changing the basis used in determining the soluble solids average from a base which requires the consideration of varying amounts of the least mature appearing fruits to one which only requires a representative sample. Expereince has indicated that the current procedure is overly restrictive. Also, the soluble solids percentage for fresh French Prunes used as a guide by the Federal or Federal-State Inspection Service would be reduced from 19 percent to 18 percent. The French Prune has been developed for a one-pick harvest and some handlers have had difficulty meeting the 19 percent requirement in past seasons. French Prunes should still be able to meet the well matured standard at 18 percent. "Soluble solids" percentages are highly correlated with the sweetness of the fruit juices.

It is the Department's view that the proposed change to add several new varieties of plums now produced in commercially significant quantities to the variety-specific (named-variety) size requirements and to delete one variety no longer produced in commercially significant quantities from those requirements would not be detrimental to small entities. These changes are expected to improve the quality of plums in the fresh market which would be beneficial in maintaining current markets and developing new ones. The proposd change to clarify the maturity requirements for plums is intended to foster and facilitate a greater understanding of these requirements within the plum industry and, as such, would not result in additional costs. The proposed change to the well matured

guides for French Prunes would relax present requirments.

The committee is of the view that the higher size requirements are necessary to provide consumers and retailers better sized plums. Industry surveys and questionnaires conducted during past seasons indicate that consumers prefer larger sized well-matured fruit. The industry has been gradually adjusting its size requirements to accommodate the wishes of the consumers and the trade to maintain the industry's good quality image.

According to the committee, the proposed changes are necessary to remove from the market those sizes of fruit which are not being well received by consumers. These actions are intended to foster repeat purchases and maintain consumer satisfaction.

Based on the above, the Administrator of AMS has determined that the changes proposed above would not have a significant economic impact on a substantial number of small entities.

The committee's recommendation, other information, and all written comments timely received in response to this request for comments will be considered before a final determination is made on this proposal. Commenters are encouraged to submit the reasons in support of or in opposition to this proposed rule. Any pertinent data to support their views and comments should also be submitted.

A comment period of less than 30 days is deemed appropriate for this proposal. The harvest and shipment of the 1988 plum crop is expected to start May 10, 1988, and growers and handlers should be given as much notice as possible of any changes, if adopted to permit the industry to plan accordingly. Moreover, the Department already has received numerous letters in support of and in opposition to the proposed plum size changes indicating that the industry is very much aware of the committee's recommendation.

List of Subjects in 7 CFR Part 917

Marketing agreements and orders, pears, plums, peaches, California.

For the resons set forth in the preamble, 7 CFR Part 917 is proposed to be amended as follows:

PART 917—FRESH PEARS, PLUMS, AND PEACHES GROWN IN CALIFORNIA

1. The authority citation for 7 CFR Part 917 continues to read as follows:

Authority: Secs. 1–19, 48 Stat. 31, as amended; 7 U.S.C. 601–674.

2. Section 917.460 is revised to read as follows:

§ 917.460 Plum Regulation 19.

(a)(1) No handler shall ship any lot of packages or containers of any plums unless such plans grade at least U.S. No. 1, except that the plums shall be "well-matured," rather than "mature" but not over-ripe or shriveled. Conformity with the well-matured requirement shall be determined by the Federal or Federal-State Inspection Service by the application of color guides or other tests as it deems proper for each variety. Internal discoloration not considered serious damage and healed growth cracks emanating from the stem end which do not cause serious damage shall be permitted. In addition to the above, any lot of Tragedy or Kelsey plums shall be permitted an additional 10 percent tolerance for defects not considered serious damage.

(2) During the 1988 and subsequent seasons, the Federal or the Federal-State Inspection Service intends to use the maturity guides listed in Table I in making maturity determinations for the specified varieties. For these varieties, not less than 90 percent of any lot shall meet the surface color, flesh color or "spring" requirements established for the variety or not less than 90 percent of any lot shall meet the ground color standard established for the variety except that for the Ebony variety, an additional lot tolerance of 17 percent shall be permitted for fruit not meeting the "spring" requirement. For varieties not listed, the Federal or the Federal-State Inspection Service will use such tests as it deems proper. The Federal or the Federal-State Inspection Service has the authority to make variances for any variety from any guide or tests, including those in Table I, during the season to reflect changes in crop or weather conditions that would make the existent guide an inappropriate measure of "well-matured".

TABLE I

Column A, variety	Column B, maturity guides
Ace	1/2 of surface mottled red color characteristic of the variety, or 3/4 red or light amber flesh color.
Amazon	1/2 of surface red with "spring."
Ambra	Full surface dark red color with "spring."
Andy's Pride	Some of surface mottled red with remainder good yellow color. *G color.*
Angeo	That portion of the surface not distinct red color shall be light yellow color. *I color.*
Angeleno	Full surface dark purple or 3/4 dark purple with remainder light greenish yellow. *B color.*
Armelita	Full surface dark red color with "spring."

TABLE I—Continued

Column A, variety	Column B, maturity guides
Ashag	90 percent of surface dark red with "spring."
August Rosa	2/3 of surface red or full yellow color. *I color.*
Autumn Rose	1/2 of surface red color or full light yellow color. *F color.*
Beauty	85 percent of surface yellowish green or trace of red. *A color.*
Bee-Gee	3/4 of surface red color with "spring."
Bella-Rosa	3/4 of surface red color, remainder yellow color. *C color.*
Berry Red	Full surface red color.
Blackamber	Full surface red color with "spring."
Black Beaut	Full surface distinct red color with "spring," or supervisor discretion.
Black Giant	3/4 of surface red color with remainder yellow color. *H color.*
Black Jewel	Full surface dark red color with "spring."
Black Knight	Smooth shoulders. 3/4 of surface dark red color or full distinct red.
Burgandy	Full dark red surface color or full distinct red flesh color.
Burmosa	1/2 of surface red color or full yellowish green color. *A color.*
Carolyn Harris	1/2 of surface mottled red characteristic of the variety or 3/4 red or light amber flesh color.
Casselman	Not less than 95 percent of the surface shall be distinct red color or full yellow color. *I color.*
Catalina	Full surface red color with "spring."
Durado	1/2 of surface red (any degree), with remainder yellowish green. Smooth shoulders. *A color.* Note: This plum must be considered on individual field basis.
Early Beaut	3/4 of surface distinct red color or full light greenish yellow color. *F color.*
Early Ann	"Spring." 3/4 of surface dark purplish blue with Hawaiian remainder yellow color.
Early Simka	Dark red color, remainder full light yellow color. *F color.*
Ebony	Full surface dark red with "spring." Additional lot tolerance of 17 percent for fruit not meeting the spring requirement.
El Dorado	"Spring." Full dark red surface color or part red with remainder yellow color, except stem cavity. *D color.*
Eldorosa	1/2 of surface red color or full light greenish yellow color. *D color.*
Elephant Heart	1/2 of surface mottled red color characteristic of the variety, or 3/4 red or light amber flesh color.
Emily	1/2 of surface red color or full light greenish yellow color. *B color.*
Empress	Full surface dark purplish blue or 3/4 dark purplish blue, remainder light greenish yellow color. *B color.*
Frank Ann	Full surface yellow color. *D color.*
Freedom	3/4 of surface dark red with remainder full light greenish yellow color. *C color.*
Fresno Black	90 percent of surface dark red with "spring."
Fresno Rosa	That portion of the surface not distinct red color shall be full yellow color. *I color.*
Friar	Full surface red color with "spring."

TABLE I—Continued

Column A, variety	Column B, maturity guides
Frontier	1/2 of surface mottled red color characteristic of the variety, or 2/3 red or light amber flesh color.
Gar-Rosa	1/2 of surface red color or full light greenish yellow color. *C color.*
Gavora	3/4 of surface red color or light greenish yellow color. *B color.*
Grand Rosa	3/4 of surface red color or full light greenish yellow color. *C color.*
Hiland Rosa	1/2 of surface red color or yellowish green color. *B color.*
Honey Gold	85 percent of surface distinct red color or full light yellow color, light green streaking permitted. *F color.*
Improved Late Santa Rosa.	85 percent of surface distinct red color or full light yellow color, light green streaking permitted. *F color.*
July Red	3/4 of surface red color.
July Santa Rosa.	3/4 of surface red color or full greenish yellow color. *C color.*
June Beaut	Full surface red with "spring."
Kelsey	Shoulders and surface smooth with "spring."
King David	3/4 of surface red color with remainder light greenish yellow color. *D color.*
King Richard	Full surface red color or light greenish yellow. *D color.*
King's Black	3/4 of surface red with remainder light yellow color, *F color.*
King's Red	Full surface red color or full light yellow color. *H color.*
Laroda	Full surface dark red or dark red color at blossom end and remainder of surface full light yellow color, with a surface tolerance of 5 percent for fruit not meeting the yellow surface requirement. *F color.*
Late Duarte	1/2 of surface mottled red color characteristic of the variety, or 2/3 red or light amber flesh color.
Late Santa Rosa.	85 percent of surface distinct red color or full light yellow color, light green streaking permitted. *F color.*
Linda Rosa	That portion of the surface not distinct red color shall be full yellow color. *I color.*
Mariposa	1/2 of surface mottled red color characteristic of the variety, or 3/4 red or light amber flesh color.
May Rosa	2/3 of surface red color or full light greenish yellow. *C color.*
Midsummer	Full surface dark red.
Milwaukee	3/4 of surface red color with "spring."
Nubiana	"Spring." Full surface dark purplish blue or 3/4 surface dark purplish blue with remainder light amber color characteristic of the variety.
Padre	1/4of surface red color or full light greenish yellow color. *B color.*
Premier	1/2 of surface red color with remainder light greenish yellow color. *B color.*
Prima Rosa	3/4 of surface distinct red color or full light greenish yellow color. *F color.*

TABLE I—Continued

Column A, variety	Column B, maturity guides
President	3/4 of surface reddish purple color with remainder light yellowish green color. *A color,* or full light greenish yellow color. *B color.*
Fresh Prune/Plums.	That portion of the surface not red color shall be changing in color from dark green to light green. In addition, for all varieties of prune/plums shipped fresh, the soluble solids shall average 19 percent: *Provided,* That for French Prunes the soluble solids shall average 18 percent: *Provided Further,* That Moyer Prunes shall average 16 percent soluble solids.
Queen Ann	"Spring." Full surface dark purple color or some purple color with remainder of surface light greenish yellow color. *B color.*
Queen Rosa	"Spring." 1/2 of surface red or yellowish green color. *B color.*
Red Beaut	3/4 of surface distinct red color or full light greenish yellow color. *F color.*
Red Glow	1/2 of surface red, remainder full light greenish yellow color. *F color.*
Red Heart	1/2 of surface mottled red color characteristic of the variety, or 3/4 red or light amber flesh color.
Red Rosa	85 percent of surface distinct red color or full light yellow color. Light green streaking permitted. *F color.*
Redroy	3/4 of surface red color or 10 percent of surface red color with remainder light yellow color. *F color.*
Rich Red	3/4 of surface distinct red color or full light greenish yellow color. *F color.*
Rosa Ann	3/4 of surface distinct red color or full light yellow color. *F color.*
Rosa Grande	3/4 of surface red color or greenish yellow color. *B color.*
Rose Ann	3/4 of surface distinct red color or full light yellow color. *F color.*
Rosemary	3/4 of surface red, remainder full light greenish yellow color. *F color.*
Royal Beaut	3/4 of surface red color or full light greenish yellow. *D color.*
Royal Diamond.	Full surface red color with "spring."
Royal Garnet	Full surface red color or full light greenish yellow color. *G color.*
Royal Red	Full surface distinct red color or 1/2 of surface red color, remainder light yellow color. *C color.*
Royal Zee	2/3 of surface red color or full light greenish yellow color. *F color.*
Roysum	3/4 of surface distinct red color or full light yellow color with green streaking. *F color.*
Santa Rosa	2/3 of surface red color or full light greenish yellow color. *C color.*
Shayna	Full surface red color or full light yellow color. *F color.*
Shiro	Full surface greenish yellow color or trace of red color. *B color.*

TABLE I—Continued

Column A, variety	Column B, maturity guides
Simka, New Yorker.	Full surface dark red color or dark red color with remainder of surface full light yellow color. *F color.*
Spring Beaut	3/4 of surface distinct red or full light greenish yellow color. *F color.*
Standard	2/3 of surface purple color or full surface light greenish yellow color. *B color.*
Swall Rosa	That portion of the surface not distinct red color shall be full yellow color. *I color.*
Tragedy	30 percent of surface purple color or full light greenish yellow color. *B color.*
Valentine	1/2 of surface mottled red color characteristic of the variety, or 3/4 of the surface red or light amber flesh color.
Wickson	Shoulders and surface smooth with "spring."

Note: Consult with the Federal or Federal-State Inspection Service Supervisor for the maturity guides applicable to the varieties not listed above.

(b) No handler shall ship any package or other container of any variety of plums listed in Column A of the following Table II unless such plums are of a size that an eight-pound sample, representative of the sizes of the plums in the package or container, contains not more than the number of plums listed for the variety in Column B of said table, or unless such plums are packed in a four-basket crate and are of a size equal to or larger than the size designation in Column C of said table:

TABLE II

Column A, variety	Column B, plums per sample	Column C, min. 4 basket crate size
Ambra	67	4×5
Andys Pride	66	3×4×5
Angeleno	54	4×4
Angee	63	3×4×5
Autumn Rosa	66	4×5
Black Ace	58	3×4×5
Blackamber	51	3×4×4
Black Beaut	62	3×4×5
Black Diamond	51	3×4×4
Black Giant	53	4×4
Black Gold	60	3×4×5
Black Knight	50	4×4
Carolyn Harris	61	3×4×5
Casselman	60	3×4×5
Cataline	51	3×4×4
Durado	69	4×5
Early Hawaiian Ann	58	3×4×5
Ebony	64	3×4×5
El Dorado	62	4×4
Empress	55	3×4×5

TABLE II—Continued

Column A, variety	Column B, plums per sample	Column C, min. 4 basket crate size
Freedom	50	3×4×4
Friar	51	3×4×4
Frontier	58	3×4×5
Gar Rosa	69	4×5
Grand Rose	52	4×4
July Red	60	3×4×5
July Santa Rosa	65	4×5
Kelsey	47	4×4
King David	50	4×4
King Richard	54	4×4
King's Black	50	4×4
Laroda	52	4×4
Late Santa Rosa	60	3×4×5
Linda Rosa	63	3×4×5
Mariposa	61	3×4×5
Midsummer	58	3×4×5
Nubiana	56	4×4
President	55	3×4×5
Prima Black	62	3×4×5
Queen Ann	48	4×4
Queen Rosa	50	3×4×4
Red Beaut	69	4×5
Red Rosa	60	3×4×5
Redroy	55	3×4×5
Rich Red	69	4×5
Rosa Ann	65	4×5
Rosemary	48	4×4
Rose Ann	60	3×4×5
Royal Diamond	51	3×4×4
Royal Garnet	69	4×5
Royal Red	69	4×5
Roysum	69	4×5
Santa Rosa	65	4×5
Sharron's Plum	63	3×4×5
Shayna	52	4×4
Simka	48	4×4
Spring Beaut	69	4×5
Standard	83	5×5
Wickson	51	4×4

(c) No handler shall ship any package or container of any variety of plums not specifically named in paragraph (b) of this section, unless such plums are of a size that an eight-pound sample representative of the sizes of the plums in the packge or container contains not more than 139 plums, or unless such plums are packed in a four-basket crate and are of a size equal to or larger than the 6×6 size designation.

(d) *Definitions.* As used herein, "U.S. No. 1," "mature," and "serious damage" mean the same as defined in the United States Standards for Grades of Fresh Plums and Prunes [7 CFR 51.1520 through 51.1538]. "Well-matured" means a condition distinctly more advanced than "mature."

Dated: April 5, 1988.

Robert C. Keeney,

Deputy Director, Fruit and Vegetable Division, Agricultural Marketing Service.

[FR Doc. 88-7778 Filed 4-7-88; 8:45 am]

BILLING CODE 3410-02-M

DEPARTMENT OF TRANSPORTATION

Federal Aviation Administration

14 CFR Part 39

[Docket No. 88-CE-08-AD]

Airworthiness Directives; Cessna Models 402B, 402C, 404, F406, 421C, 441 Airplanes

AGENCY: Federal Aviation Administration (FAA), DOT.

ACTION: Notice of proposed rulemaking (NPRM).

SUMMARY: This Notice proposes to adopt a new Airworthiness Directive (AD) applicable to Cessna Models 402B, 402C, 404, F406, 421C and 441 airplanes, which would require structural reinforcement of Enviroform type passenger seats. Reports have been received of seats separating from the seat base. The proposed action would reinforce this interface and preclude failure of the seats and prevent severe injury, or fatalities, to the occupants in the event of a minor crash.

DATES: Comments must be received on or before July 1, 1988.

ADDRESSES: Cessna Service Bulletin CAB87-16 and CQB87-5, both dated December 4, 1987, and MEB 87-9, Rev. 1, dated February 19, 1988, applicable to this AD may be obtained from Cessna Aircraft Company, P.O. Box 7704, Wichita, Kansas 67277, or may be examined at the Rules Docket at the address below. Send comments on the proposal in triplicate to Federal Aviation Administration, Central Region, Office of the Regional Counsel, Attention: Rules Docket No. 88-CE-08-AD, Room 1558, 601 East 12th Street, Kansas City, Missouri 64106. Comments may be inspected at this location between 8 a.m. an 4 p.m., Monday through Friday, holidays excepted.

FOR FURTHER INFORMATION CONTACT: Lawrence S. Abbott, Wichita Aircraft Certification Office, FAA, Central Region, ACE-120W, 1801 Airport Road, Room 100, Wichita, Kansas 67209; Telephone (316) 946-4409.

SUPPLEMENTARY INFORMATION:

Comments Invited

Interested persons are invited to participate in the making of the proposed rule by submitting such written data, views or arguments as they may desire. Communications should identify the regulatory docket or notice number and be submitted in triplicate to the address specified above. All communications received on or before the closing date for comments specified above will be considered by the Director before taking action on the proposed rule. The proposals contained in this notice may be changed in the light of comments received. Comments are specifically invited on the overall regulatory, economic, environmental and energy aspects of the propsoed rule. All comments submitted will be available both before and after the closing date for comments in the Rules Docket for examination by interested persons. A report summarizing each FAA public contact concerned with the substance of this proposal will be filed in the Rules Docket.

Availability of NPRMs

Any person may obtain a copy of this Notice of Proposed Rulemaking (NPRM) by submitting a request to the Federal Aviation Administration, General Region, Office of the Regional Counsel, Attention: Rules Docket No. 88-CE-08-AD, Room 1558, 601 East 12th Street, Kansas City, Missouri 64106.

Discussion

The Enviroform type passenger seats used in certain 400 Series Cessna airplanes are constructed from two parts of molded composite; consisting of the seat, back and bottom, and the pedestal bonded together at their interface. A failure of the bond causes separation of the seat and pedestal. Such failures resulted in Cessna issuing Service Letter ME77-30, and Service Kits SK 421-72 and SK 421-78, that provided fasteners and a doubler to reinforce the bond. AD 78-06-03, Amendment 39-3162, (43 FR 11969, March 23, 1978) was in-turn issued to require compliance with the Cessna Service Instructions as applicable to those Models 402B, 421B, and 421C airplanes equipped for air taxi operation. Cessna did not incorporate the reinforcement in new production seats because the bonding process and acceptance tests had been altered to correct the previous discrepancies. Subsequently, Cessna began production of the Models 402C, 404, F406, and 441 airplanes. These airplanes were not covered by AD 78-06-03. The FAA has learned that there have been three seat failures on the models not covered by AD 78-06-03, all of which were on seats that did not have the interface fasteners. These failures have been attibuted in part to tandem mounting which imposes loads on the pedestal-seat interface that are not provided for in Airworthiness Standards. Since failure of these seats can cause severe or even fatal injury to the occupant, Cessna responded by issuing Service Bulletins CAB87-16 and CQB87-5, both dated December 4, 1987,

and MEB87-9, Rev. 1, dated February 19, 1988, which provide instructions for the installation of Service Kit SK 421-135 on Enviroform seats. Since the condition described is likely to exist or develop in other Models 402B, 402C, 404, F406, 421C, and 441 airplanes of the same design, the AD would require modification of the seat per the above applicable service bulletins.

The FAA has determined there are approximately 771 airplanes (approximately 5400 seats) affected by the proposed AD. The cost of modifying these seats as required by the proposed Ad is estimated to be $929.60 per airplane. The total cost is estimated to be $716,200 to the private sector. Few, if any, small entities own more than 5 affected airplanes; therefore, the total cost of this inspection is less than the threshold for a significant economic impact.

Therefore, I certify that this action (1) is not a "major rule" under the provisions of Executive Order 12291, (2) is not a "significant rule" under DOT Regulatory Policies and Procedures (44 FR 11034; February 26, 1979) and (3) if promulgated, will not have a significant economic impact, positive or negative, on a substantial number of small entities under the criteria of the Regulatory Flexibility Act. A copy of the draft regulatory evaluation has been prepared for this action and has been placed in the public docket. A copy of it may be obtained by contacting the Rules Docket at the location provided under the caption "**ADDRESSES**".

List of Subjects in 14 CFR Part 39

Air transportation, Aviation safety, Aircraft, Safety.

The Proposed Amendment

Accordingly, pursuant to the authority delegated to me by the Administrator, the Federal Aviation Administration proposes to amend § 39.13 of Part 39 of the FAR as follows:

PART 39—[AMENDED]

1. The authority citation for Part 39 continues to read as follows:

Authority: 49 U.S.C. 1354(a), 1421 and 1423; 49 U.S.C. 106(g) (Revised, Pub. L. 97-449, January 12, 1983); and 14 CFR 11.89.

§ 39.13 [Amended]

2. By adding the following new AD:

Cessna: Applies to the following models and serial numbered airplanes certified in any category:

Model	Serial Numbers
402	402B1047 thru 402C1020.
404	404-0001 thru 404-0659.
F406	F406-0001 thru F406-0021.
421	421C0055 thru 421C1807.
441	441-0001 thru 441-0362.

Compliance: Required within the next 100 hours time-in-service after the effective date of this AD unless already accomplished.

To assure structural integrity of the bond between the seat and seat back assembly (upper part) to the seat pedestal assembly (bottom part) of Enviroform type passenger seats, accomplish the following:

(a) Install the structural reinforcement provided with Cessna Service Kit SK 421-135, dated December 4, 1987, on each Enviroform type passenger seat in accordance with the applicable Cessna Service Bulletin CAB87-16 or CQB87-5, both dated December 4, 1987, or MEB87-9, Rev. 1, dated February 19, 1988.

(b) The 100 hour compliance time for paragraph (a) of this AD may be extended up to an additional 10 hours time-in-service to allow compliance at previously scheduled maintenance periods.

(c) Aircraft may be flown in accordance with Federal Aviation Regulation 21.197 to a location where this AD can be accomplished.

(d) An equivalent method of compliance with this AD may be used if approved by the Manager, Wichita Aircraft Certification Office, FAA, 1801 Airport Road, Room 100, Mid-Continent Airport, Wichita, Kansas 67209.

All persons affected by this directive may obtain copies of the document(s) referred to herein upon request to Cessna Aircraft Company, P.O. Box 7704, Wichita, Kansas 67277; or may examine these documents at the FAA, Office of the Regional Counsel, Room 1558, 601 East 12th Street, Kansas City, Missouri 64106.

Issued in Kansas City, Missouri, on March 18, 1988.

Paul K. Bohr,

Director, Central Region.

[FR Doc. 88-7701 Filed 4-7-88; 8:45 am]

BILLING CODE 4910-13-M

---

14 CFR Part 39

[Docket No. 87-ASW-62]

Airworthiness Directives; Societe Nationale Industrielle Aerospatiale Model AS355E, AS355F, and AS355F1 Helicopters

AGENCY: Federal Aviation Administration (FAA), DOT.

ACTION: Notice of proposed rulemaking (NPRM).

SUMMARY: This notice proposes to adopt an airworthiness directive (AD) that would require installation of an automatic reignition system for the Allison 250C-20F engine (which corresponds to Aerospatiale modifications AMS 350A07-1823, AMS 350A07-1856, AMS 350A07-1905, AMS 350A07-1910, and AMS 350A07-1920), and is covered by Service Bulletins No. 01.18 and No. 80.02 on Societe Nationale Industrielle Aerospatiale (SNIAS) Model AS355E, AS355F, and AS355F1 helicopters. The proposed AD is needed to prevent engine flameout (power loss) due to engine inlet icing associated with flight into certain ambient atmospheric conditions. Engine flameout could result in a subsequent emergency landing which could be hazardous.

DATES: Comments must be received on or before May 31, 1988.

ADDRESSES: Comments on the proposal may be mailed in duplicate to: Federal Aviation Administration, Southwest Region, Office of the Regional Counsel, Attn: Rules Docket, Fort Worth, Texas 76193-0007, or delivered in duplicate to: Office of the Regional Counsel, FAA, Building 3B, Room 158, Fort Worth, Texas. Comments must be marked: Docket No. 87-ASW-62. Comments may be inspected at the above location between 8 a.m. and 4 p.m. weekdays, except Federal holidays.

The applicable service bulletin may be obtained from Aerospatiale Helicopter Corporation, 2701 Forum Drive, Grand Prairie, Texas 75053-4005, or may be examined in the Regional Rules Docket.

FOR FURTHER INFORMATION CONTACT: Mr. Mike Mathias, FAA, Southwest Region, Rotorcraft Standards Staff, Fort Worth, Texas 76193-0111, telephone (817) 624-5123.

SUPPLEMENTARY INFORMATION: Interested persons are invited to participate in the making of the proposed rule by submitting such written data, views, or arguments as they may desire. Communications should identify the regulatory docket number and be submitted in duplicate to the address specified above. All communications received on or before the closing date for comments will be considered by the Director before taking action on the proposed rule. The proposal contained in this notice may be changed in light of comments.

Comments are specifically invited on the overall regulatory, economic, environmental, and energy aspects of the proposed rule. All comments submitted will be available, both before and after the closing date for comments, in the Rules Docket, Office of the Regional Counsel, Southwest Region, for examination by interested persons. A report summarizing each FAA-public

contact, concerned with the substance of the proposed AD, will be filed in the Rules Docket.

Commenters wishing the FAA to acknowledge receipt of their comments submitted in response to this notice must submit a self-addressed, stamped postcard on which the following statement is made: "Comments to Docket Number 87-ASW-62." The postcard will be date/time stamped and returned to the commenter.

Priority Letter AD 86-24-02, issued on November 21, 1986, originally required in part, instrument panel placard operating limitations to advise the flightcrew to avoid operating conditions where visible atmospheric moisture ingestion into the engines could result in ice formations which cause engine flameout. This priority letter was subsequently published as a final rule in the **Federal Register** on December 11, 1987 (52 FR 46985). The final rule version recognizes the eligibility of the Aerospatiale-developed automatic engine reignition system, proposed by this NPRM, as an equivalent means of compliance and, accordingly, omits helicopters so configured by serial number limitation in the applicability statement.

Certain other continuous ignition systems have been approved as equivalent means of compliance with AD 86-24-02. These approvals would be accepted as equivalent means of compliance with this proposed AD.

The SNIAS Model AS 355E, AS 355F and AS 355F1 helicopters not equipped with automatic or FAA-approved continuous engine reignition systems are susceptible to moisture-induced engine flameout which could result in a hazardous emergency landing. Since this condition is likely to exist or develop on other helicopters of the same design, the proposed AD would require installation of an automatic engine reignition system per SNIAS modifications AMS 350A07-1823, AMS 350A07-1856, AMS 350A07-1905, AMS 350A07-1910, or AMS 350A07-1920 in conjunction with corresponding SNIAS Service Bulletins No. 01.18 and No. 80.02 along with the incorporation of the associated flight manual and instrument flight manual changes on SNIAS Model AS 355E, AS 355F and AS 355F1 helicopters, as listed in the applicability section of the proposed AD.

The FAA has determined that this proposed regulation only involves 155 rotorcraft, which are estimated to be operated by a total of 100 operators. Certain operators may already be in compliance with the AD by previously incorporating the SNIAS autoignition system or by installing a specifically approved continuous ignition equivalent method of compliance. It is estimated that the remaining operators will incur a total cost of only $1,376 per aircraft.

Therefore, I certify this action (1) is not a "major rule" under Executive Order 12291; (2) is not a "significant rule" under DOT Regulatory Policies and Procedures (44 FR 11034; February 26, 1979); (3) does not warrant preparation of a regulatory evaluation as the anticipated impact, positive or negative, is minimal; and (4) if promulgated, would not have a significant economic impact on a substantial number of small entities under the criteria of the Regulatory Flexibility Act. A copy of the draft evaluation prepared for this action is contained in the regulatory docket. A copy of it may be obtained from the Regional Rules Docket.

List of Subjects in 14 CFR Part 39

Air transportation, Aircraft, Aviation safety, Safety.

The Proposed Amendment

Accordingly, pursuant to the authority delegated to me by the Administrator, the Federal Aviation Administration proposes to amend § 39.13 of Part 39 of the Federal Aviation Regulations (FAR) as follows:

PART 39—AIRWORTHINESS DIRECTIVES

1. The authority citation for Part 39 continues to read as follows:

Authority: 49 U.S.C. 1354(a), 1421, and 1423; 49 U.S.C. 106(g) (Revised Pub. L. 97-449, January 12, 1983); and 14 CFR 11.85.

§ 39.13 [Amended]

2. By adding the following new AD:

Societe Nationale Industrielle Aerospatiale (SNIAS): Applies to all SNIAS Model AS355E, AS355F, and AS355F1 helicopters (serial numbers before 5362) fitted with debris guards, Part Numbers (P/N) 355A58-0519-0201 and 355A58-0519-0391, certificated in any category, except those helicopters previously equipped with this identical modification.

Compliance is required within the next 200 hours' time in service, unless already accomplished.

To prevent engine failure (flameout) resulting from ingestion of atmosphere moisture in engine inlets, accomplish the following:

(a) Install an engine automatic relight system in accordance with SNIAS Service Bulletins AS 355 No. 01.18, Revision 2, approved October 5, 1987, and No. 80.02, Revision 2, approved July 8, 1987 (SB No. 80.02 corresponds to SNIAS Modification AMS 350A07-1823, IFR-VFR versions; AMS 350A07-1856, IFR versions; AMS 350A07-1905, IFR-VFR versions; AMS 350A07-1910, IFR-VFR versions; AMS 350A07-1920, IFR-VFR versions). Installation of the SNIAS relighting kit requires exclusive utilization of Champion or Auburn igniter P/N 6877518 or Champion igniter P/N 23006266 and limits the service life of each newly installed igniter to 1,200 hours' time in service. Any of the required Champion or Auburn igniters already installed and having 1,000 or more hours' time in service must be replaced with new Champion or Auburn P/N 6877518 igniters or Champion P/N 2300266 igniters.

(b) Incorporate into the applicable RFM the basic flight manual revisions and instrument flight rules (IFR) flight manual supplements (if IFR equipped), or later FAA-approved flight manual revisions, as follows:

(1) For the Model AS355E, basic rotorcraft flight manual, Revision 4, Code Date 87-10.

(2) For the Model AS355F, basic rotorcraft flight manual, Revision 3, Code Date 87-10 and IFR rotorcraft flight manual supplement 11.4, Revision 3, Code Date 87-12.

(3) For the Model AS355F1, basic rotorcraft flight manual, Revision 2, Code Date 87-10, and IFR rotorcraft flight manual supplement 11.4, Revision 1, Code Date 87-12.

(c) To ensure the limited service life of the igniters defined in paragraph (a) above is properly identified and adhered to, the following updates (or future revisions thereto) should be incorporated in the Master Servicing Recommendations—Chapter 5-99 (Airworthiness Limitations):

(1) AS355E, Revision 15, Page 21.

(2) AS355F, Revision 15, Page 23.

(3) AS355F1, Revision 15, Page 23.

(d) Upon accomplishing the requirements of paragraphs (a), (b), and (c) above, the placard required by paragraph (a) of AD 86-24-02 may be removed.

(e) Upon request, an alternate means of compliance which provides an equivalent level of safety with the requirements of this AD may be used when approved by the Manager, Aircraft Certification Division, ASW-100, FAA, Fort Worth, Texas 76193-0100.

(f) Continuous ignition systems previously found to be equivalent methods of compliance with priority letter AD 86-24-02, dated November 21, 1986; or with Amdt. 39-5796 (52 FR 46985; December 11, 1987) effective January 27, 1988, are approved as equivalent methods of compliance to this AD.

Issued in Fort Worth, Texas, on March 25, 1988.

L.B. Andriesen,

Acting Director, Southwest Region.

[FR Doc. 88-7703 Filed 4-7-88; 8:45 am]

BILLING CODE 4910-13-M

---

14 CFR Part 39

[Docket No. 88-NM-23-AD]

Airworthiness Directives; Boeing Model 747 and Model 767 Series Airplanes

AGENCY: Federal Aviation Administration (FAA), DOT.

ACTION: Notice of Proposed Rulemaking (NPRM).

SUMMARY: The notice proposes a new airworthiness directive (AD), applicable to Boeing Model 747 series airplanes, equipped with the two piece off-wing escape ramp and slide, and to all Model 767 series airplanes, which would require modification of the Model 747 door opening thrusters and Model 767 off-wing escape slide door opening/snubbing actuators by replacing certain O-rings. This proposal is prompted by reports of actuator and thruster malfunctions that resulted in non-deployment of the slides. The malfunctions were the result of insufficient oil in the thruster or actuator due to leakage past defective or contaminated O-rings. This condition, if not corrected, could lead to failure of the escape slide to deploy, thus delaying and possibly jeopardizing successful emergency evacuation of an airplane.

DATES: Comments must be received no later than May 31, 1988.

ADDRESSES: Send comments on the proposal in duplicate to Federal Aviation Administration, Northwest Mountain Region, Office of the Regional Counsel (Attn: ANM-103), Attention: Airworthiness Rules Docket No. 88-NM-23-AD, 17900 Pacific Highway South, C-68966, Seattle, Washington 98168. The applicable service information may be obtained from OEA Corporation P.O. Box 10488, Denver, Colorado 80210. This information may be examined at the FAA, Northwest Mountain Region, 17900 Pacific Highway South, Seattle, Washington, or Seattle Aircraft Certification Office, FAA, Northwest Mountain Region, 9010 East Marginal Way South, Seattle, Washington.

FOR FURTHER INFORMATION CONTACT: Mr. Roger S. Young, Airframe Branch, ANM-120S; telephone (206) 431-1929. Mailing address: FAA, Northwest Mountain Region, 17900 Pacific Highway South, C-68966, Seattle, Washington 98168.

SUPPLEMENTARY INFORMATION:

Comments Invited

Interested persons are invited to participate in the making of the proposed rule by submitting such written data, views, or arguments as they may desire. Communications should identify the regulatory docket number and be submitted in duplicate to the address specified above. All communications received on or before the closing date for comments specified above will be consider by the Administrator before taking action on the proposed rule. The proposals contained in this Notice may be changed in light of the comments received. All comments submitted will be available, both before and after the closing date for comments, in the Rules Docket for examination by interested persons. A report summarizing each FAA/public contact concerned with the substance of this proposal will be filed in the Rules Docket.

Availability of NPRM

Any person may obtain a copy of this Notice of Proposed Rulemaking (NPRM) by submitting a request to the FAA, Northwest Mountain Region, Office of the Regional Counsel (Attn: ANM-103), Attention: Airworthiness Rules Docket No. 88-NM-23-AD, 17900 Pacific Highway South, C-68966, Seattle, Washington 98168. DISCUSSION: The Boeing Model 747 and Model 767 off-wing escape slides are installed in a compartment in the wing-to-body fairing. The Model 747 off-wing compartment door opening thrusters and the Model 767 off-wing compartment door opening/snubbing actuators are used to open the compartment door, thus deploying the off-wing escape slide. These devices perform a similar function on both airplanes, operate in a similar manner, and are activated when the exit is opened in an emergency.

Defective or contaminated O-rings intsalled in these thrusters and actuators have resulted in loss of oil. The loss of oil has resulted in malfunction of the thruster or actuator, and failure of the off-wing escape slide to deploy.

There are two of the Model 747 thrusters (or Model 767 actuators) installed on each compartment door and the system was designed to operate when only one of the thrusters or actuators performs as intended.

Within the past year, there have been five reported incidents of non-deployment of the Model 767 off-wing slide that have been attributed to the failure of the actuators. There are also nine other actuator problems that were probably caused by O-ring damage or contamination. In addition, several Model 747 operators have reported finding low oil levels in the thrusters, and one operator reported a malfunction of a thruster. There have been no reported Model 747 incidents that resulted in non-deployment of the escape slide; however, if only one actuator malfunctioned and the escape slide deployed, this malfunction may not have been detected. It is apparent that the majority of the problems are associated with contaminated O-rings.

The FAA has reviewed and approved OEA Service Bulletin 2174200-25-012, dated December 23, 1987, for the Model 747, and OEA Service Bulletin 3092100-25-001, dated December 23, 1987, for the Model 767, which contain instructions for the replacement of the existing O-rings with special quality O-rings. (OEA Corporation is the manufacturer of the Model 747 thruster and Model 767 actuator.) This replacement must be accomplished in a clean area and the modified actuators leak-checked and radiographed to assure proper assembly.

Since this condition is likely to exist or develop on other airplanes of this same type design, an AD is proposed which would require replacement of the O-rings and inspection of the Model 767 actuators and Model 747 thrusters in accordance with the service bulletins previously mentioned. In addition, the Boeing Commerical Airplane Company has notified the FAA that it is preparing two service bulletins for issuance in the near future, which will incorporate the instructions of the accomplishment of the proposed modifications currently in the OEA bulletins. The FAA may consider referencing these service bulletins in the final rule as an approved method of compliance.

It is estimated that 150 airplanes of U.S. registry would be affected by this AD, that it would take approximately 10 manhours per airplane to accomplish the required actions, and that the average labor cost would be $40 per manhour. Based on these figures, the total cost impact of the AD on U.S. operators is estimated to be $60,000.

For these reasons, the FAA has determined that this document (1) involves a proposed regulation which is not major under Executive Order 12291 and (2) is not a significant rule pursuant to the Department of Transportation Regulatory Policies and Procedures (44 FR 11034; February 26, 1979); and it is further certified under the criteria of the Regulatory Flexibility Act that this proposed rule, if promulgated, will not have a significant economic impact, positive or negative, on a substantial number of small entities because few, if any, Model 747 or Model 767 airplanes are operated by small entities. A copy of a draft regulatory evaluation prepared for this action is contained in the regulatory docket.

List of Subjects in 14 CFR Part 39

Aviation safety, Aircraft.

The Proposed Amendment

Accordingly, pursuant to the authority delegated to me by the Administrator, the Federal Aviation Administration proposes to amend § 39.13 of Part 39 of the Federal Aviation Regulations (14 CFR 39.13) as follows:

PART 39—[AMENDED]

1. The authority citation for Part 39 continues to read as follows:

Authority: 49 U.S.C. 1354(a), 1421 and 1423; 49 U.S.C. 106(g) (Revised Pub. L. 97-449, January 12, 1983); and 14 CFR 11.89.

§ 39.13 [Amended]

2. By adding the following new airworthiness directive:

Boeing: Applies to all Model 767 series airplanes and to Model 747 series airplanes equipped with the two piece off-wing escape ramp and slide, certificated in any category. Compliance required within 15 months after the effective date of this AD, unless previously accomplished.

To ensure that the off-wing escape slide does not malfunction due to leaking actuators or thrusters, accomplish the following:

A. Replace the O-rings in accordance with the following service bulletins, as applicable. Replacement must be accomplished in a clean area, and a radiographic inspection and leak check inspection of the modified units must also be performed.

1. Model 747 door opening thrusters identified in OEA Service Bulletin 2174200-25-012, dated December 23, 1987, or later FAA-approved revisions.

2. Model 767 door opening/snubbing actuators identified in OEA Service Bulletin 3092100-25-001 dated December 23, 1987, or later FAA-approved revisions.

B. An alternate means of compliance or adjustment of the compliance time, which provides an acceptable level of safety and which has the concurrence of an FAA Principal Maintenance Inspector, may be used when approved by the Manager, Seattle Aircraft Certification Office, FAA, Northwest Mountain Region.

C. Special flight permits may be issued in accordance with FAR 21.197 and 21.199 to operate airplanes to a base in order to comply with the requirements of this AD.

All persons affected by this directive who have not already received the appropriate service documents from the manufacturer may obtain copies upon request to OEA Corporation, P.O. Box 10486, Denver, Colorado 80210. These documents may be examined at the FAA, Northwest Mountain Region, 17900 Pacific Highway South, Seattle, Washington, or Seattle Aircraft Certification Office, FAA, Northwest Mountain Region, 9010 East Marginal Way South, Seattle, Washington.

Issued in Seattle, Washington, on March 31, 1988.

Frederick M. Isaac,

Acting Director, Northwest Mountain Region.

[FR Doc. 88-7688 Filed 4-7-88; 8:45 am]

BILLING CODE 4910-13-M

14 CFR Part 39

[Docket No. 87-ASW-63]

Airworthiness Directives; Bell Helicopter Textron, Inc. (BHTI), Model 204B, 205A, 205A-1, and 212 Helicopters

AGENCY: Federal Aviation Administration (FAA), DOT.

ACTION: Notice of proposed rulemaking (NPRM).

SUMMARY: This notice proposes to adopt an airworthiness directive (AD) that would establish a mandatory fatigue retirement life limit on main rotor masts and trunnions used on the Bell Model 204B, 205A, 205A-1, and 212 helicopters. The proposed AD is needed to prevent main rotor mast and trunnion fatigue failures which could result in a catastrophic failure of the main rotor system and subsequent loss of the helicopter.

DATES: Comments must be received on or before June 3, 1988.

ADDRESSES: Comments on the proposal may be mailed in duplicate to: Office of the Regional Counsel, FAA, Southwest Region, Fort Worth, Texas 76193-0007, or delivered in duplicate to: Office of the Regional Counsel, FAA, Southwest Region, Room 158, Building 3B, 4400 Blue Mound Road, Fort Worth, Texas. Comments must be marked: Docket No. 87-ASW-63.

Comments may be inspected in Regional Rules Docket, Room 158, Building 3B, Office of the Regional Counsel, Southwest Region, between 8 a.m. and 4 p.m., weekdays, except Federal holidays.

The applicable service bulletins may be obtained from Bell Helicopter Textron, Inc., P.O. Box 482, Fort Worth, Texas 76101, or may be examined in the Regional Rules Docket, FAA, Southwest Region, 4400 Blue Mound Road, Fort Worth, Texas.

FOR FURTHER INFORMATION CONTACT: Mr. Tyrone D. Millard, Helicopter Certification Branch, ASW-170, Federal Aviation Administration, Fort Worth, Texas 76193-0170, telephone (817) 624-5177.

SUPPLEMENTARY INFORMATION: Interested persons are invited to participate in the making of the proposed rule by submitting such written data, views, or arguments as they may desire. Communications should identify the regulatory docket number and be submitted in duplicate to the address specified above. All communications received on or before the closing date for comments will be considered by the Director before taking action on the proposed rule. The proposal contained in this notice may be changed in light of comments.

Comments are specifically invited on the overall regulatory, economic, environmental, and energy aspects of the proposed rule. All comments submitted will be available, both before and after the closing date for comments, in the Regional Rules Docket, Office of the Regional Counsel, 4400 Blue Mound Road, Fort Worth, Texas, for examination by interested persons. A report summarizing each FAA-public contact, concerned with the substance of the proposed AD, will be filed in the Rules Docket.

Commenters wishing the FAA to acknowledge receipt of their comments submitted in response to this notice must submit a self-addressed, stamped postcard on which the following statement is made: Comments to Docket No. 87-ASW-63. The postcard will be date/time stamped and returned to the commenters.

Based on the recent manufacturer's fatigue stress tests and fatigue analysis of main rotor masts and trunnions under ground-air-ground (GAG) loading conditions, the FAA has determined that these components can no longer be operated with an unlimited service life and must be removed after a specified time in service.

Since this condition is likely to exist or develop on helicopters of the same type design, the proposed AD would establish a mandatory retirement life for the main rotor mast and trunnion installed on Bell Model 204B, 205A, 205A-1, and 212 helicopters.

The FAA has determined that this proposed regulation involves 821 aircraft. It is anticipated that 5 helicopters per year will require replacement of the main rotor mast and trunnion at an annual cost of approximately $51,250 for five helicopters. Therefore, I certify that this action (1) is not a "major rule" under Executive Order 12291; (2) is not a "significant rule" under DOT Regulatory Policies and Procedures (44 FR 11034; February 26, 1979); (3) does not warrant preparation of a regulatory evaluation as the anticipated impact is so minimal; and (4) if promulgated, will not have a significant economic impact, positive or negative, on a substantial number of small entities under the criteria of the Regulatory Flexibility Act.

List of Subjects in 14 CFR Part 39

Air transportation, Aircraft, Aviation safety, Safety.

The Proposed Amendment

Accordingly, pursuant to the authority delegated to me by the Administrator, the Federal Aviation Administration proposes to amend § 39.13 of Part 39 of the Federal Aviation Regulations as follows:

PART 39—[AMENDED]

1. The authority citation for Part 39 continues to read as follows:

Authority: 49 U.S.C. 1354(a), 1421 and 1423; 49 U.S.C. 106(g) (Revised Pub. L. 97-449, January 12, 1983); and 14 CFR 11.85.

§ 39.13 [Amended]

2. By adding the following new airworthiness directive:

Bell Helicopter Textron, Inc. (BHTI): Applies to Model 204B, 205A, 205A-1, and 212 helicopters certificated in any category. (Airworthiness Docket No. 87-ASW-63)

Compliance is required as indicated, unless already accomplished.

To prevent possible fatigue failure of the main rotor mast, P/N 204-011-105-450 (all dash numbers), and main rotor trunnion, P/N 204-011-450 (all dash numbers), and main rotor trunnion, P/N 204-011-105-001, which could result in a catastrophic failure of the main rotor system and subsequent loss of the helicopter, accomplish the following:

(a) Within 10 days after the effective date of this AD, create a historical service record for the main rotor mast, P/N 204-011-105-001, and record the time in service accumulated on the main rotor mast and trunnion. If the time in service cannot be determined, enter 900 hours for each year from the date the mast and trunnion were installed.

(b) For masts and trunnions with more than 14,000 hours' time in service on the effective date of this AD, remove the masts and trunnions from service within the next 100 hours' time in service.

(c) For masts and trunnions with less than 14,900 hours' time in service on the effective date of this AD, remove the masts and trunnions from service at 15,000 hours' time in service.

(d) If the mast and trunnion are installed on the Model 205A or 205A-1 and used for high frequency external load operations, the time in service must be determined as follows:

(1) For 1 to 20 external load lift events per hour, 1 hour time in service must be entered on the historical service record.

(2) For 21 or more external load lift events per hour, 2 hours' time in service must be entered on the historical service record.

(e) If the mast and trunnion are installed on the Model 212 and used for high frequency external load operations, the time in service must be determined as follows:

(1) For 1 to 9 external load lift events per hour, 2 hours' time in service must be entered on the historical service record.

(2) For 10 to 17 external load lift events per hour, 3 hours' time in service must be entered on the historical service record.

(3) For 18 or more external load lift events per hour, 5 hours' time in service must be entered on the historical service record.

(f) Compliance with Bell Helicopter Textron, Inc., Alert Service Bulletin 204-87-15, Rev. A, dated 8/21/87; 205-87-26, Rev. A, dated 8/21/87; or 212-87-44, Rev. A, dated 8/21/87, as applicable, is an acceptable means of compliance with this AD.

(g) An alternate method of compliance which provides an equivalent level of safety with this AD may be used when approved by the Manager, Helicopter Certification Branch, Federal Aviation Administration, Fort Worth, Texas 76193-0170.

Issued in Fort Worth, Texas, on March 18, 1988.

C.R. Melugin, Jr.,

Director, Southwest Region.

[FR Doc. 88-7697 Filed 4-7-88; 8:45 am]

BILLING CODE 4910-13-M

National Highway Traffic Safety Administration

23 CFR Part 1309

[Docket No. 82-18; Notice 11]

Incentive Grant Criteria for Alcohol Traffic Safety Programs

AGENCY: National Highway Traffic Safety Administration (NHTSA), DOT.

ACTION: Notice of Proposed rulemaking.

SUMMARY: This Notice of Proposed Rulemaking (NPRM) proposes revisions to the agency's regulation implementing section 408 of the Highway Safety Act of 1966, relating to the criteria States must meet to be eligible for alcohol incentive grants. The agency believes some portions of the regulation are unnecessarily restrictive in defining the manner in which a State may demonstrate compliance with the statutory criteria. This action is intended to increase flexibility for the States, by establishing alternative methods of demonstrating compliance with the section 408 criteria to qualify for alcohol incentive grant funds. The agency requests comments on the proposed changes discussed in this notice.

DATES: Comments must be received by May 9, 1988. The rule will be effective upon publication of the final rule in the **Federal Register.**

ADDRESS: Written comments should refer to the docket number and the number of this notice and be submitted (preferably in ten copies) to: Docket Section, National Highway Traffic Safety Administration, Room 5109, Nassif Building, 400 Seventh Street, SW., Washington, DC 20590. (Docket hours are from 8 a.m. to 4 p.m.).

FOR FURTHER INFORMATION CONTACT: Mr. George Reagle, Associate Administrator for Traffic Safety Programs, NTS-01, National Highway Traffic Safety Administration, 400 Seventh Street, SW., Washington, DC 20590, telephone (202) 366-1755; or Ms Heidi L. Coleman, Office of Chief Counsel, National Highway Traffic Safety Administration, telephone (202) 366-1834.

SUPPLEMENTARY INFORMATION: The 408 program was enacted in 1982, under 23 U.S.C. 408 (Pub. L. 97-364), as a two-tier grant program, providing Federal funds (basic and supplemental grants) to States that qualify by implementing certain programs designed to reduce the drunk driving problem. The amount received as a basic grant equals 30 percent of the State's FY 1983 highway safety grant (section 402) apportionment. The amount received as a supplemental grant may not exceed 20 percent of the State's FY 1983 section 402 apportionment. Section 402 apportionments are made to the States under a grant program established by the Highway Safety Act of 1966, 23 U.S.C. 402, to aid the States in conducting highway safety programs.

In 1984, section 408 was amended, Pub. L. 98-363, to expand the scope of the 408 program to include programs to combat drugged driving as well as drunk driving and to establish a third grant for which States may qualify (special grants) to encourage the States to enact tough minimum sentencing standards. The amount received as a special grant may not exceed 5 percent of the State's FY 1984 sections 402 and 408 apportionments.

Under the 1982 Act, States could receive section 408 incentive grants in no more than three fiscal years. (The 1984 amendment did not affect this period.) Section 203 of the Surface Transportation and Uniform Relocation Assistance Act of 1987, Pub. L. 100-17, amended section 408 by extending from three to five, the number of fiscal years in which a State may receive section 408 incentive grants.

Section 408 Criteria

To be eligible for funding under section 408 of the Act, each State must meet certain requirements. The statutory criteria include, for basic grants, that the State provide "for the prompt suspension, for a period not less than ninety days in the case of a first offender and not less than one year in the case of any repeat offender of the

driver's license of any individual who a law enforcement officer has probable cause under State law to believe has committee an alcohol-related traffic offense, and (i) to whom is administered one or more chemical tests to determine whether the individual was intoxicated while operating the motor vehicle and who is determined, as a result of such tests, to be intoxicated, or (ii) who refuses to submit to such a test as proposed by the officer."

The State must also provide that: Repeat offenders receive a mandatory sentence of 48 consecutive hours imprisonment or 10 days of community service; a BAC of 0.10% is established as illegal per se; and increased efforts or resources are dedicated to the enforcement of alcohol-related laws and increased efforts are used to inform the public of this enforcement.

Under the statute, a State is not eligible for a supplemental grant unless it is first eligible for a basic grant, and in addition provides for some or all of the criteria established by the Secretary of Transportation. By regulation, a total of twenty-two supplemental criteria have been promulgated.

To be eligible for a special grant, section 408 of the Act requires that a State must enact a statute which provides for specific minimum sentencing requirements with regard to both license suspensions and terms of imprisonment or community service.

The agency has promulgated regulations, which are codified in 23 CFR Part 1309, to define the statutory criteria and to specify how States are to demonstrate compliance with the criteria.

The section 408 program has had a significant impact on the legislative and operational progress in State programs. Through their efforts to qualify for section 408 funding and the activities funded with alcohol incentive grants, States have made progress in terms of both program improvements and reductions in the proportion of fatalities that involve intoxicated drivers. No State has been able to qualify for funding under the section 408 program, however, since November 1985. While many States have faced difficulties in qualifying for section 408 grants due to the stringency of the statutory criteria, others have had difficulties with the details of the regulatory criteria for demonstrating compliance.

We are not authorized to modify the statutory requirements. The agency can, however, consider amending certain requirements that have been established by regulation.

For example, as noted above, section 408 of the Act requires that, to be eligible for a basic grant, each State must provide, among other things, for the prompt suspension for a period of not less than 90 days of the driver's license of any first offender who refuses to submit to a chemical test to determine whether the individual was intoxicated while operating a motor vehicle. These individuals are known as "first refusers," in order to distinguish them from other first offenders who submit to, and fail, a chemical test for alcohol. The regulation states that, to demonstrate compliance, a State must submit both a copy of the law or regulation implementing this requirement and a statistically valid sample providing certain necessary data. A number of States that have made significant improvements in their programs to combat drunk and other drug impaired driving have failed to qualify for section 408 grant funding. For example, notwithstanding general agreement that Illinois has an outstanding drunk and other drugged driving program, the agency determined that the State does not qualify for section 408 grant funds because it has been unable to demonstrate compliance with this criterion in accordance with the regulation. In response to the agency's determination, the State of Illinois suggested that we should allow States to demonstrate compliance with this requirement by showing that first refusers receive a hard driver's license suspension for an *average* of 90 days.

The agency has decided to begin this rulemaking as a result of the Illinois application for section 408 funding and subsequent correspondence with the agency. We intend to review not only the portion of our regulation which Illinois has highlighted, but also other aspects of the rule, seeking to provide as much flexibility to the States as the statute permits, while maintaining the statutory criteria to ensure that States that qualify under the section 408 program have effective programs to reduce traffic safety problems resulting from persons driving while under the influence of alcohol or a controlled substance. In particular, we believe that we can provide significant flexibility by providing alternative methods for States to demonstrate compliance with the Section 408 criteria. This proposal to add alternative compliance schemes, the agency believes, will go a long way toward easing the qualification difficulties faced by many States. We are indebted to the State of Illinois for bringing this problem to our attention, and we will welcome comments from all interested parties. We are particularly interested in hearing from States that are currently participating in, or that believe they may be able to become qualified for funding under, the section 408 program.

In this proposal, the agency will explore ways in which we propose to relax the regulatory conditions, while continuing to remain within the statutory framework. The agency invites all interested parties to comment on the proposals set forth below.

It would be particularly helpful for the agency to receive comments from States interested in qualifying for section 408 funds, regarding whether the changes being proposed would in fact help them to qualify. We are also interested in receiving comments from interested parties regarding whether it is believed the proposed changes would affect the effectiveness of States' programs to reduce drunk and other drug impaired driving. If the agency determines that any of these proposed changes could adversely affect the effectiveness of State programs, we may decide at the final rule stage, not to adopt some or all of the changes proposed in this notice. Alternatively, we may adopt requirements which are less stringent than those which are currently in our regulation, but which are stricter than those now being proposed.

The agency would also consider making changes which have not been specifically proposed in this notice, in response to suggestions received in the comments. We encourage respondents to examine the agency's regulation to determine whether the amendment of other sections would assist States in qualifying for section 408 grants. For example, we request comments regarding the definition of "prompt," the certification requirements, and the requirements to qualify for a special grant. In addressing the possibility of making other amendments, commenters should keep in mind that the agency can not consider amending portions of the regulation which reflect statutory requirements, and that we must continue to qualify only States that have effective programs to reduce traffic safety problems resulting from persons driving while under the influence of alcohol or a controlled substance.

Proposed Regulatory Changes

(1) Definition of Imprisonment

States have, on a number of occasions in the past, requested clarification regarding the definition of the term "imprisonment" in § 1309.3(c) of the regulation. This section currently defines the term to mean "confinement in a jail, minimum security facility or in-patient rehabilitation or treatment

center." The agency recognizes that some States are faced with serious problems involving overcrowded prisons. To address these problems, some States resort to using somewhat unconventional quarters, such as community corrections facilities, hotels or other buildings, as minimum security facilities. As long as individuals are in fact detained in them for the requisite period of time, the agency agrees that confinement in these quarters meets the definition of "imprisonment." We propose to amend the definition of the term to clarify its meaning. States should note, however, that the agency does not consider time spent at work under a work release program, to constitute detention or confinement. In other words, an individual must serve 48 consecutive hours within the confines of the work release center, to meet the requirement that the State provide that persons convicted of driving while intoxicated more than once in any five year period, who are sentenced to imprisonment (rather than community service), must be *confined* for a 48 *consecutive* hour period.

We invite comments on whether "house arrest", or at home detention, by electronic or other means should constitute imprisonment under the agency's regulation. It would assist the agency for comments to include information on the types of house arrest systems currently in place, the manner in which they are operated, technical or other problems experienced with these systems and any techniques discovered for overcoming these problems, the approximate number of offenders in each house arrest program and the approximate period of time offenders are detained in this manner.

(2) Use of a Restricted, Provisional or Conditional License

Under the definition of the terms "suspension" or "revocation" in the agency's regulation, 23 CFR 1309.3(f), a first offender's 90 day suspension may include "a minimum of 60 days of a restricted, provisional or conditional license" as long as the offender is temporarily debarred of all driving privileges for a minimum of the first 30 days. No period of the 90 day license suspension for a first refuser, or of the one year license suspension for repeat offenders or repeat refusers may be subject to a restricted, provisional or conditional license.

The regulation limits the purposes for which a restricted, provisional or conditional license may be issued to first offenders. For example, a conditional license may be issued for individuals to drive between their residence and place of employment, but may not be issued for individuals to drive between their residence and place of study. The agency believes that this condition may be unnecessary, and proposes to eliminate the the limitation. To ensure that the availability of restricted, provisional or conditional licenses does not undermine license suspension requirements in a State, however, we propose to retain the condition that these licenses can only be issued in accordance with Statewide published guidelines developed by the State, and in exceptional circumstances specific to the offender. The agency proposes also to amend this section to clarify that guidelines need not be published where the State has a law, regulation or binding policy directive establishing the conditions under which a restricted, provisional or conditional license may be issued.

(3) Certification Requirements

The agency proposes to eliminate two procedural barriers which were established by regulation. Specifically, we propose to strike from § 1309.4(a)(2)(i), the requirement that States must provide information showing active implementation of criteria during the four years prior to applying for a grant when the certification is based upon prior adoption of a criterion. The agency also proposes to delete the word "existing" from § 1309.4(a)(2)(iii), thereby permitting States to maintain aggregate expenditures, in accordance with the statute, based not only on existing alcohol traffic safety programs, but also on innovative activities. Neither of these requirements was created by statute, and the agency does not believe they contribute meaningfully to the purpose of the 408 program.

The agency also proposes to amend § 1309.4(a)(2) to reflect that State certifications are to be submitted to NHTSA. We will take responsibility for directing certifications to the appropriate office within the agency.

(4) Demonstrating Compliance With the Prompt Suspension Requirement

Section 408 of the Act requires that, to be eligible for a basic grant, each State must provide, among other things, for the prompt suspension of the driver's license of any person who commits an alcohol-related offense, including the refusal to submit to a chemical test. The license suspension must be for a period of not less than 90 days for first offenders. First offenders include both individuals who are determined to be intoxicated while operating a motor vehicle as a result of a chemical test and those who refuse to submit to a chemical test. The suspension must not be less than one year for repeat offenses (including both repeat failures and repeat refusals). The agency's regulation implementing this requirement provides in § 1309.3(f) that, for first offenses (other than refusals), the first 30 of the 90 days must be a "hard" suspension, under which no conditional license may be made available; for first refusals, all of the 90 days must be a "hard" suspension. Section 1309.5(a)(2) of the regulation provides that, to demonstrate compliance, a State must submit both a copy of the law or regulation implementing this requirement and a statistically valid sample providing certain necessary data.

As explained earlier in this notice, the State of Illinois has suggested that the agency should allow States to demonstate compliance with this requirement by showing that first refusers receive a hard driver's license suspension for an *average* of 90 days. The agency proposes to amend the regulation to make the change which Illinois requests. In addition, we believe other changes may assist additional States to demonstrate compliance with the section 408 criteria, while remaining within the statutory framework.

The agency proposes to adopt a new format for demonstrating compliance with this criterion, which would allow each State to choose whether to base its application on either the text of a complying law (including a regulation or binding policy directive) or on data demonstrating that the State in fact complies with the prompt suspension criterion. The amount of information would also depend upon whether the State is applying for first or subsequent year funding.

Under this proposed format, the agency would consider a State to be a "Law" State if the terms of the State's statutes or regulations, on their face, meet each element of the prompt license suspension criterion. We would also accept a binding policy directive implementing or interpreting existing laws or regulations which, on its face, meets each element of this criterion.

To comply with this criterion in the first year it receives a basic grant, a "Law" State would be required to submit only the law, regulation or binding policy directive itself; the State would not be required to submit any data in that year. To comply with this criterion in subsequent years, the State would be required to submit data demonstrating that the average time from arrest to suspension of a driver's license either does not exceed 45 days

or that it does not exceed 90 days and the State would need to submit a plan showing how it intends to achieve a 45 day average. In subsequent years, the State would also be required to submit data on the actual license suspension terms (specifically, the duration of court ordered suspensions), but the agency would accept data showing that the State meets an average of these terms, or a plan to achieve these averages.

For example, with regard to a first offender (other than a refuser), the State would need to show that all driving privileges are temporarily debarred for an average term of 90 days, or for an average term of 30 days followed immediately by the use of a restricted, provisional or conditional license for an average term of 60 days (or the State would need to submit a plan showing how it intends to achieve these averages). In addition, the State would need to show that the average time from arrest to suspension does not exceed an average of 45 days (or does not exceed an average of 90 days, and the State would need to submit a plan showing how it intends to achieve a 45 day average). Data showing the average license suspension terms must include only the period of time actually ordered by the State. For example, the data must not reflect the period of time during which an individual is eligible to reapply for a driver's license, but simply fails to do so. In addition, the data must include license suspension terms only to the extent they are actually completed. The State would be permitted to submit data based on a representative sample. By representative sample, the agency means that data should be obtained from all communities in the State or from a sample of communities representative of the State as a whole.

States that do not qualify as "Law" States will be called "Data" States. To comply with this criterion, these States would be required to submit data both in the first and in subsequent years. The State would be required to submit data demonstrating that the average time from arrest to suspension of a driver's license either does not exceed 45 days or that it does not exceed 90 days and the State would need to submit a plan showing how it intends to achieve a 45 day average. The State would also be required to submit data on the license suspension terms. The agency would accept data showing that the State meets an average of the terms. A Data State would not have the option of submitting a plan showing how it intends to achieve these averages. Data showing the average license suspension terms must include only the period of time actually ordered by the State. The data must include license suspension terms only to the extent they are actually completed. The State would be permitted to submit data based on a representative sample.

Every element of the prompt suspension requirement must be met on the face of the State's law, regulation or binding policy directive, if it is to be considered a "Law" State. If the law, regulation or binding policy directive which qualified a State as a "Law" State in a previous year is changed, repealed or otherwise made no longer binding, so that any element of this requirement is no longer being met, the State will be treated as a "Data" State in subsequent years. Until the law, regulation or policy directive is reinstated, the State would no longer have the option of submitting a plan to achieve an average of license suspension terms to demonstrate compliance with the prompt suspension requirement for subsequent year basic grants.

Since the agency is providing increased flexibility by permitting States to show compliance through averages, we will be able to accept absolutely no deviations from States that qualify based on data. For example, to demonstrate compliance with the 90 day license suspension term for first offenders (including both failures and refusers), a State submitting data which shows an 89 day average would not be eligible for funding. The agency believes this is consistent with section 408 of the Act. We recognize that to meet the averages strictly, some offenders may have to receive a suspension term longer than is prescribed in the Federal statute.

We believe this new format would provide increased flexibility to assist States in qualifying for section 408 grant funds, while continuing to ensure that only States with effective programs to reduce drunk and other drug impaired driving are accepted. It would also provide an incentive to States to adopt the requirements of this criterion in either their laws, regulations or binding policy directives, by requiring less data of such States.

The changes proposed in this discussion would require amendments to §§ 1309.3(d), 1309.3(f) and 1309.5(a).

(5) Demonstrating Compliance With the Mandatory Sentence Requirement

Section 408 of the Act requires that, to be eligible for a basic grant, each State must provide, among other things, for a mandatory sentence, which shall not be subject to suspension or probation, of any person convicted of driving while intoxicated more than once in any five year period. The mandatory sentence must consist of either imprisonment for not less than 48 consecutive hours or not less than ten days of community service. The agency's regulation implementing this requirement provides in § 1309.5(b)(2) that, to demonstrate compliance, a State must submit both a copy of the law implementing this requirement and a statistically valid sample providing certain necessary data.

The agency proposes to adopt an approach for demonstrating compliance with this criterion, similar to the one described above with regard to the prompt suspension criterion. We propose to allow each State to choose whether to base its application on either the text of a complying law (including a regulation or binding policy directive) alone or on a combination of the State's law and data demonstrating that the State in fact complies with certain aspects of the mandatory sentence criterion. However, since the statute requires specifically that States shall provide for mandatory sentences which are not subject to suspension or probation, the agency does not believe it has the discretion to permit States to demonstrate compliance with this criterion by means of overall averages.

As we described under the prompt suspension criterion, the agency would consider a State to be a "Law" State under this criterion if the terms of the State's statutes or regulations, on their face, meet each element of the mandatory sentence criterion. We would also accept a binding policy directive implementing or interpreting existing laws or regulations which, on its face, meets each element of this criterion. In particular, the law, regulations or binding policy directives must provide specifically that 48 hours of the term of imprisonment must be served consecutively. Alternatively, a State could provide that all persons covered by this criterion are subject to not less than ten days of community service.

To comply with this criterion both in the first and in subsequent years it receives a basic grant, a "Law" States would be required to submit only the law, regulation or binding policy directive itself; the State would not be required to submit any data.

To comply with this criterion, States that do not qualify as "Law" States ("Data" States) would also be required to have a law, regulation or binding policy directive which meets each element of the mandatory sentence criterion, with one exception: it would not need to provide specifically that the 48 hour term of imprisonment must be

served consecutively. In addition, these States would be required to submit data both in the first and in subsequent years, demonstrating substantial compliance with the consecutiveness requirement. The agency would accept data based on a representative sample. By representative sample, the agency means that data should be obtained from all communities in the State or from a sample of communities representative of the State as a whole.

The consecutiveness element of the imprisonment requirement and all other elements of the mandatory sentence criterion must be met explicitly in a State's law, regulation or binding policy directive, if it is to be considered a "Law" State. If the law, regulation or binding policy directive which contains the consecutiveness element is changed, repealed or otherwise made no longer binding, causing that element to no longer be met, the State will be treated as a "Data" State in subsequent years. Until the law, regulation or policy directive containing that element is reinstated, the State would be required to submit data demonstrating compliance with the consecutiveness requirement, in addition to its law, regulation or binding policy directive containing the other elements of this criterion, for subsequent year basic grants. If the law, regulation or binding policy directive which contains the other elements of this criterion is changed, repealed or otherwise made no longer binding, causing any of these elements to no longer be met, the State will become ineligible for section 408 funds under this criterion.

We believe this new approach would provide increased flexibility to assist States in qualifying for section 408 grant funds, while continuing to ensure that only States with effective programs to reduce drunk and other drug impaired driving are accepted. It would also provide an incentive to States to adopt the requirements of this criterion in either their laws, regulations or binding policy directives, by permitting States that do so to avoid submitting data in order to qualify for first and for subsequent year basic grants, under this criterion.

(8) Promptness Requirement for Supplemental Grants

To demonstrate that its license suspensions occur "promptly" under the first criterion for a basic grant, States must show, in accordance with § 1309.(d) of the agency's regulation, that "the overall average time from arrest to suspension of a driver's license either cannot exceed an average of 45 days or cannot exceed an average of 90 days and a State must submit a plan showing how it intends to achieve a 45 day average." (Elsewhere in this notice, we propose to change this language. However, its meaning would be retained in §§ 1309.3(d), 1309.5 (a)(2)(ii) and (a)(3)(i).) The regulation, however, in § 1309.6 (a) and (c)(1), creates a more stringent promptness standard in order for States to qualify for supplemental grants. These subsections require the State to have an average time from date of arrest to suspension of a license which does not exceed 45 days.

This criterion goes beyond what is required by statute. In this regard, section 408 of the Act requires only that the State "is eligible for a basic grant." Accordingly, the agency proposes to remove this more stringent requirement regarding promptness.

(7) Miscellaneous Amendments

The agency also proposes two miscellaneous amendments to correct typographical errors which currently appear in the regulation.

Comments

Interested persons are invited to comment on this proposal. All comments must be limited to 15 pages in length. Necessary attachments may be appended to those submissions without regard to the 15 page limit. (49 CFR 553.21.) This limitation is intended to encourage commenters to detail their primary arguments in a concise fashion.

Written comments to the public docket must be received by May 9, 1988. The agency has not provided a longer comment period because it wishes to make these less stringent requirements available to the States before the end of the current fiscal year. In order to expedite the submission of comments, simultaneous with the issuance of this notice NHTSA will mail copies to all Governors and Governors' Representatives for Highway Safety.

All comments received before the close of business on the comment closing date, will be considered and will be available for examination in the docket at the above address before and after that date. To the extent possible, comments filed after the closing date will also be considered. However, the rulemaking action may proceed at any time after that date. NHTSA will continue to file relevant material in the docket as it becomes available after the closing date, and it is recommended that interested persons continue to examine the docket for new material.

Those persons desiring to be notified upon receipt of their comments in the docket should enclose, in the envelope with their comments, a self-addressed stamped postcard. Upon receiving the comments, the docket supervisor will return the postcard by mail.

Copies of all comments will be placed in Docket 82-18; Notice 11 of the NHTSA Docket Section in Room 5109, Nassif Building, 400 Seventh Street, SW., Washington, DC 20590.

Federalism Assessment

The agency has considered whether this action would have any federalism implications. We have determined that this proposal would further the principles of federalism established by the Framers of the Constitution while striking an appropriate balance between increased State flexibility and an appropriate level of Federal involvement as required by the enabling legislation for this grant program. The involvement of alcohol and controlled substances in our motor vehicle fatalities does constitute a problem of national scope, and for this reason, Congress directed the agency to make grants to those States which adopt and implement effective programs to reduce traffic safety problems resulting from persons driving while under the influence of alcohol or a controlled substance. In this NPRM, we propose to provide more flexibility to the States, by removing some of the procedural barriers to their qualification for incentive grant funds which were established by regulation, while retaining the requirements and the purpose of the section 408 statute.

Economic and Other Effects

NHTSA has analyzed the effect of this section and has determined that it is not "major" within the meaning of Executive Order 12291 or "significant" within the meaning of Department of Transportation regulatory policies and procedures. State participation in the 408 program is voluntary. Accordingly, neither a draft Regulatory Analysis nor a Preliminary Evaluation is required.

When the agency promulgated regulations to implement the section 408 program on February 7, 1983 (48 FR 5545), it determined that the rulemaking should be classified as significant under the Department's regulatory policies and procedures. A regulatory evaluation was prepared at that time and placed in the public docket (Docket No. 82-18; Notice 5). Persons interested in in reviewing this document, should request it from the docket section.

In compliance with the Regulatory Flexibility Act, the agency has evaluated the effects of this rule on small entities. Based on the evaluation, I certify that this rule will not have a significant economic impact on a

substantial number of small entities. States will be recipients of any funds awarded under the regulation and, accordingly, the preparation of an Initial Regulatory Flexibility Analysis is unnecessary.

The requirements in this proposal that States retain and report to the Federal government information which demonstrates compliance with alcohol incentive grant criteria, are considered to be information collection requirements as that term is defined by the Office of Management and Budget (OMB) in 5 CFR Part 1320. Accordingly, these proposed requirements have been submitted to and approved by OMB, pursuant to the Paperwork Reduction Act (44 U.S.C. 3501 *et seq.*). These requirements have been approved through April 30, 1990; OMB No. 2127–0501.

The agency has also analyzed this action for the purpose of the National Environmental Policy Act. The agency has determined that this action will not have any effect on the human environment.

List of Subjects in 23 CFR Part 1309

Alcohol, Drugs, Grant programs, Transportation, Highway safety.

In accordance with the foregoing, NHTSA proposes the amendment of Part 1309 of Title 23 of the Code of Federal Regulations as follows:

PART 1039—[AMENDED]

1. The authority citation for Part 1309 would continue to read as follows:

Authority: 23 U.S.C. 408; delegation of authority at 49 CFR 1.50.

§ 1309.3 [Amended]

2. Section 1309.3(c) would be revised to read as follows:

(c) "Imprisonment" means confinement in a jail, minimum security facility, community corrections facility, in-patient rehabilitation or treatment center, or other facility, provided the individual under confinement is in fact being detained.

3. Section 1309.3(d) would be revised to read as follows:

(d) "Prompt" means that the period of time from arrest to suspension of a driver's license does not exceed 45 days.

4. Section 1309.3(f)(1) would be revised to read as follows:

(f) * * *

(1) For first offenses (other than refusals), the temporary debarring of all driving privileges for a term of not less than 90 days, or not less than 30 days followed immediately by a term of not less than 60 days of a restricted, provisional or conditional license. A restricted, provisional or conditional license may be issued only in accordance with a State law, regulation or binding policy directive establishing the conditions under which a restricted, provisional or conditional license may be issued or with Statewide published guidelines and in exceptional circumstances specific to the offender.

5. Section 1309.3(f)(2) would be revised to read as follows:

(f) * * *

(2) For refusal to take a chemical test for first offenses, the temporary debarring of all driving privileges for a term of not less than 90 days.

6. Section 1309.3(f)(3) would be revised to read as follows:

(f) * * *

(3) For second and subsequent offenses, including the refusal to take a chemical test, the temporary debarring of all driving privileges for a term of not less than one year or longer, subject to the requirements of § 1309.5, or § 1309.7 as appropriate.

§ 1309.4 [Amended]

7. Section 1309.4(a)(2) introductory text would be amended by removing the phrase "Office of Alcohol and State Programs, NTS–20," which appears before the word "NHTSA". Paragraph (a)(2)(i) of that section would be amended by removing the period at the end of the first sentence, and in its place inserting a comma, and by removing in its entirety the second sentence which begins "If the certification" and ends with the words "application for a grant,". Paragraph (a)(2)(iii) of that section would be amended by removing the word "existing" which appears prior to the phrase "alcohol traffic safety programs".

§ 1309.5 [Amended]

8. Section 1309.3(a)(2) would be revised to read as follows:

(a) * * *

(2)(i) To demonstrate compliance in the first fiscal year the State receives a basic grant, a Law State shall submit a copy of the law, regulation or binding policy directive implementing or interpreting the law or regulation, which provides for each element of the prompt license suspension requirement.

(ii) To demonstrate compliance in subsequent fiscal years the State receives a basic grant, a Law State shall submit, in addition to the information identified in § 1309.5(a)(2)(i), data showing the number of licenses suspended, that the average length of the suspension terms for first-time and repeat offenders (including those who refuse to submit to a chemical test) meets the terms defined in § 1309.3(f) and that the average number of days it took to suspend the licenses from date of arrest meets the definition for promptness in § 1309.3(d). The State can provide the necessary data based on a representative sample. Data on the average length of the suspension term must not include license suspension periods which exceed the terms actually prescribed by the State, and must reflect terms only to the extent that they are actually completed. If the State's data do not meet the average license suspension terms defined in § 1309.3(f), the State can demonstrate compliance with this element by submitting a plan showing how it intends to achieve these averages. If the State's data do not meet the average promptness requirement defined in § 1309.3(d), the State can demonstrate compliance with this element by submitting data showing that the average time from arrest to suspension of a driver's license does not exceed 90 days and a plan showing how it intends to achieve a 45 day average.

(iii) For the purpose of this paragraph (a), "Law State" means a State that has a law, regulation or binding policy directive implementing or interpreting an existing law or regulation which provides for each element of the prompt license suspension criterion.

9. A new § 1309.5(a)(3) would be added to read as follows:

(3)(i) To demonstrate compliance in the first and in subsequent fiscal years the State receives a basic grant, a Data State shall submit data showing the number of licenses suspended, that the average length of the suspension terms for first-time and repeat offenders (including those who refuse to submit to a chemical test) meets the terms defined in § 1309.3(f) and that the average number of days it took to suspend the licenses from date of arrest meets the definition for promptness in § 1309.3(d). The State can provide the necessary data based on a representative sample. Data on the average length of the suspension term must not reflect license suspension periods which exceed the terms actually prescribed by the State, and must only reflect terms to the extent that they are actually completed. If the State's data do not meet the average promptness requirement defined in § 1309.3(d), the State can demonstrate compliance with this element by submitting data showing that the average time from arrest to suspension of a driver's license does not exceed 90 days and a plan showing how it intends to achieve a 45 day average.

(ii) For the purpose of this paragraph (a), "Data State" means a State that

does not meet the definition of "Law State" in § 1309.5(a)(2)(iii).

10. Section 1309.5(b)(2) would be revised to read as follows:

(b) * * *

(2)(i) To demonstate compliance in the first and in subsequent fiscal years the State receives a basic grant, a Law State shall submit a copy of the law, regulation or binding policy directive implementing or interpreting the law or regulations, which provides for each element of the mandatory sentence criterion.

(ii) For the purpose of this paragraph (b), "Law State" means that the State has a law, regulation or binding policy directive implementing or interpreting an existing law or regulation which provides for each element of the mandatory sentence criterion, including the requirement that the 48 hour term of imprisonment must be served consecutively.

11. A new § 1309.5(b)(3) would be added to read as follows:

(b) * * *

(3)(i) To demonstate compliance in the first and in subsequent fiscal years the State receives a basic grant, a Data State shall submit, in addition to the information identified in § 1309.5(b)(2)(i), data showing that it substantially complies with the consecutiveness requirement. The State can provide the necessary data based on a representative sample.

(ii) For the purpose of this paragraph (b), "Data State" means a State that has a law, regulation or biding policy directive implementing or interpreting an existing law or regulation which provides for each element of the mandatory sentence criterion, except that it need not specifically provide that the 48 hour term of imprisonment must be served consecutively.

12. Section 1309.5(b)(1) would be amended by removing the word "or" the second place it appears, and by inserting in its place the word "of".

§ 1309.6 [Amended]

13. Sections 1309.6(a) and 1309.6(c)(1) would be amended by removing the words which appear in each paragraph following the phrase "license suspension system", and by inserting in their place the words "which meets the requirements of § 1309.5, and".

14. Section 1309.6(b) introductory text would be amended by removing the word "a" which appears after the phrase "Have in place", and by inserting in its place the word "and".

Issued on April 4, 1988.

Diane K. Steed,

National Highway Traffic Safety Administrator.

[FR Doc. 88-7650 Filed 4-7-88; 8:45 am]

BILLING CODE 4910-59-M

DEPARTMENT OF THE INTERIOR

Office of Surface Mining Reclamation and Enforcement

30 CFR Parts 785 and 823

Surface Coal Mining and Reclamation Operations; Permanent Regulatory Program; Prime Farmland

AGENCY: Office of Surface Mining Reclamation and Enforcement, Interior.

ACTION: Proposed rule; notice of extension of public comment period.

SUMMARY: The Office of Surface Mining Reclamation and Enforcement (OSMRE) of the United States Department of the Interior (DOI), is extending the comment period it reopened on March 23, 1988 (53 FR 9453) on the issue of allowing the creation of water bodies within permit areas containing prime farmland.

DATE: Written Comments; OSMRE will accept written comments on the proposed rule until 5 p.m., Eastern time, on May 12, 1988.

ADDRESSES: Written comments may be mailed to the Office of Surface Mining Reclamation and Enforcement, Administrative Record, Room 5131-L, 1951 Constitution Avenue NW., Washington, DC 20240; or hand-delivered to the Office of Surface Mining Reclamation and Enforcement, Administrative Record, Room 5131, 1100 L Street NW., Washington, DC.

FOR FURTHER INFORMATION CONTACT: Dermot M. Winters, Office of Surface Mining Reclamation and Enforcement, U.S. Department of the Interior, 1951 Constitution Avenue NW., Washington, DC 20240; Telephone: 202-343-1928 (Commercial or FTS).

SUPPLEMENTARY INFORMATION: On March 25, 1987 (52 FR 9644), OSMRE issued a proposed rulemaking which included an 'exemption' for water bodies created on permit areas containing prime farmland. That proposed rulemaking provided an exemption from the prime farmland standards for water bodies where the total acreage of prime farmland would not be decreased in the permit area. Under that proposed rule, but subject to the approval of the regulatory authority, an operator would be able to install a water body on an area that prior to mining contained prime farmland soil. This would only apply where the prime farmland soils obtained from the excavation of the water body were utilized to reconstruct an equal amount of prime farmland on areas which were not prime farmland areas prior to mining.

On March 23, 1988 (53 FR 9453) the public comment period on the water bodies issue was reopened for 30 days. In announcing the reopening, OSMRE stated it no longer believed that an exemption to the prime farmland rules was necessary to allow operators to create water bodies within permit areas containing prime farmland so long as the aggregate premining prime farmland acreage within the permit area is retained. The shifting of prime farmland soils from a premining location to a post-reclamation location within the permit area is currently authorized and could properly be considered part of normal practice in restoring prime farmland.

A written request from the American Mining Congress to extend the reopened comment period on the water bodies issue in order to afford its members additional time to prepare their comments has been received by OSMRE. As a result, OSMRE is extending the comment period until May 12, 1988, and will accept written comments on the water bodies issue from all interested parties until 5 p.m. Eastern time on that date.

All comment responses should be sent to the OSMRE Administrative Record at the location specified above under "ADDRESSES".

List of Subjects in CFR 30 Part 702

Administrative practice and procedures, Surface mining, Underground mining.

Date: April 5, 1988.

Richard O. Miller,

Acting Director, Office of Surface Mining Reclamation and Enforcement.

[FR Doc. 88-7752 Filed 4-7-88; 8:45 am]

BILLING CODE 4310-05-M

POSTAL SERVICE

39 CFR PART 111

Mail Disputes

AGENCY: Postal Service.

ACTION: Proposed rule.

SUMMARY: This proposal would remove an ambiguity in postal regulations concerning the disposition of mail while claimed by two or more parties. During

BEST COPY AVAILABLE

proceedings to resolve the dispute, the mail is to be held by the postmaster.

DATE: Comments must be received on or before May 9, 1988.

ADDRESS: Written comments should be mailed or delivered to the Associate General Counsel, Office of Field Legal Services, Law Department, U.S. Postal Service, 475 L'Enfant Plaza W., SW, Washington, D.C. 20260-1125. Copies of all written comments will be available for inspection and photocopying between 9:00 a.m. and 4:00 p.m., Monday through Friday, in Room 6015, at the above address.

FOR FURTHER INFORMATION CONTACT: William P. Bennett, (202) 268-2966.

SUPPLEMENTARY INFORMATION: On August 5, 1987, the Postal Service published in the **Federal Register** (52 FR 29011) a final rule amending the Domestic Mail Manual, section 153.72, to provide for final disposition of mail disputes by the Judicial Officer Department of the Postal Service in cases where neither the postmaster nor regional counsel is able to resolve the matter by less formal means. These regulations provide that when disputants cannot agree as to which one should receive delivery of the mail or who should act as a receiver, the postmaster shall resolve the dispute based upon the evidence supplied by the parties. If the postmaster is unable to make such a determination, the matter is forwarded to the regional counsel for informal resolution. If the regional counsel, after five working days or such additional time as may be agreed to by all parties, is unable to reach an informal resolution, and has not ordered the mail returned to sender, then the matter is forwarded to the Judicial Officer Department for decision in accordance with the rules of procedure of that department.

Currently, there is no explicit direction to postmasters as to the disposition of disputed mail while the matter is pending before the Judicial Officer Department. This lack of direction has led to uncertainty among postmasters. The Postal Service accordingly proposes to amend the Domestic Mail Manual to state that the disputed mail would be held by the postmaster until such time as notice of final disposition is received from the Judicial Officer Department. A new sentence would be added at the end of DMM 153.72, stating specifically that a postmaster must hold the disputed mail in such circumstances until the Judicial Officer's decision appears.

Although exempt by 30 U.S.C. 410(a) from the provisions of the Administrative Procedure Act regarding proposed rulemaking, 5 U.S.C. 553 (b), (c), the Postal Service invites public comments on the following proposed revisions of part 153 of the Domestic Mail Manual which is incorporated by reference in the Code of Federal Regulations. *See* 39 CFR 111.1.

PART 111—[AMENDED]

1. The authority citation for Part 111 continues to read as follows:

Authority: 5 U.S.C. 552(a); 39 U.S.C. 101, 401, 403, 404, 3001-3011, 3201-3219, 3403-3406, 3621, 5001.

PART 153—CONDITIONS OF DELIVERY

2. In 153.7, revise .72 to read as follows:

153.7 Conflicting Orders by Two or More Parties for Delivery of Same Mail.

* * * * *

.72 Reference to Regional Counsel or Judicial Officer Department. Where the disputing parties are unable to select a receiver, they shall furnish to the postmaster all available evidence on which they rely to exercise control over the disputed mail. If after receipt of such evidence, the postmaster is still in doubt as to who should receive the mail, the postmaster will submit the case to the regional counsel for informal resolution. If after five working days, or such additional time as may be agreed to by all parties, no informal resolution is achieved and no order has been made by regional counsel to return the mail to sender, then regional counsel shall forward the case file to the Judicial Officer Department for decision in accordance with the rules of procedure of that department. If a dispute is referred to the Judicial Officer Department, the postmaster shall hold the disputed mail until such time as notice of final disposition is received from the Judicial Officer.

An appropriate amendment to 39 CFR 111.3 to reflect these changes will be published if the proposal is adopted.

Fred Eggleston,

Assistant General Counsel, Legislative Division.

[FR Doc. 88-7735 Filed 4-7-88; 8:45 am]

BILLING CODE 7710-12-M

ENVIRONMENTAL PROTECTION AGENCY

40 CFR Part 52

[FRL-3362-5]

Approval and Promulgation of Implementation Plans; Illinois

AGENCY: U.S. Environmental Protection Agency (USEPA).

ACTION: Proposed rulemaking.

SUMMARY: USEPA is proposing to approve a revision to the Illinois State Implementation Plan (SIP) for Ozone. The revision pertains to control of volatile organic compound (VOC) emissions from large petroleum dry cleaners in the Illinois portions of ozone attainment demonstration areas for Chicago and St. Louis, Missouri. USEPA's action is based upon a revision request which was submitted by the State to satisfy the requirements of Part D of the Clean Air Act (Act).

DATE: Comments on this revision and on the proposed USEPA action must be received by May 9, 1988.

ADDRESSES: Copies of the SIP revision are available at the following addresses for review: (It is recommended that you telephone Randolph O. Cano, at (312) 886-6036, before visiting the Region V office.)

U.S. Environmental Protection Agency, Region V, Air and Radiation Branch (5AR-26), 230 South Dearborn Street, Chicago, Illinois 60604.

Illinois Environmental Protection Agency, Division of Air Pollution Control, 2200 Churchill Road, Springfield, Illinois 62706.

Comments on this proposed rule should be addressed to:

Gary Gulezian, Chief, Regulatory Analysis Section, Air and Radiation Branch (5AR-26), U.S. Environmental Protection Agency, Region V, 230 South Dearborn Street, Chicago, Illinois 60604.

FOR FURTHER INFORMATION CONTACT: Randolph O. Cano, Air and Radiation Branch (5AR-26), U.S. Environmental Protection Agency, Region V, Chicago, Illinois 60604, (312) 886-6036.

SUPPLEMENTARY INFORMATION: On June 25, 1987, the State of Illinois submitted a regulation to control VOC emissions from large petroleum dry cleaners located in the Illinois ozone demonstration areas.

This regulation is applicable to sources located in the following Illinois counties: Cook, DuPage, Kane, Lake, Macoupin, Madison, McHenry, Monroe, St. Clair, and Will. What follows is a summary of the provisions of the regulation, including USEPA's evaluation of each provision, and USEPA's proposed approval and solicitation of public comment.

Review of Illinois' Large Petroleum Dry Cleaning Regulation

A. Section 215.607—Standards for Petroleum Solvent Dry Cleaners

(a) The owner or operator of a petroleum solvent dry cleaning dryer shall either:

(1) Limit emissions of volatile organic material to the atmosphere to an average of 3.5 kilograms of volatile organic material per 100 kilograms dry weight of articles dry cleaned, or

(2) Install and operate a solvent recovery dryer in a manner such that the dryer remains closed and the recovery phase continues until a final solvent flow rate of 50 milliliters per minute is attained.

(b) The owner or operator of a petroleum solvent filtration system shall either:

(1) Reduce the volatile organic material content in all filtration wastes to 1.0 kilogram or less per 100 kilograms dry weight of articles dry cleaned, before disposal, and exposure to the atmosphere, or

(2) Install and operate a cartridge filtration system, and drain the filter cartridges in their sealed housings for 8 hours or more before their removal.

Evaluation

The two alternative dryer limits above are both consistent with the model regulation in Appendix E of the September 1982 Control Technique Guideline (CTG) document titled "Control of Volatile Organic Compound Emissions from Large Petroleum Dry Cleaners". These dryer limits are, therefore, approvable. The two solvent filtration system control alternatives are also equivalent to those in the CTG. These control alternatives are, therefore, approvable.

B. Section 215.608—Operating Practices for Petroleum Solvent Dry Cleaners

In order to minimize fugitive solvent emissions, the owner or operator of a petroleum solvent dry cleaning facility shall employ good housekeeping practices including the following:

(a) General Housekeeping Requirements.

(1) Equipment containing solvent (washers, dryers, extractors and filters) shall remain closed at all times except during load transfer and maintenance. Lint filter and button trap covers shall remain closed except when solvent-laden material is being removed.

(2) Cans, buckets, barrels and other containers of solvent or of solvent-laden material shall be covered except when in use.

(3) Solvent-laden material shall be exposed to the atmosphere only for the minimum time necessary for load transfer.

(b) Installation and Operation of Equipment.

(1) All cartridge filters shall be installed and operated in accordance with the procedures and specifications recommended by the manufacturer for the cartridge filter. After installation, the cartridges shall be inspected, monitored and maintained in accordance with the manufacturer's recommendation; and

(2) Vents on containers for new solvent and for solvent-containing waste shall be constructed and maintained so as to minimize solvent vapor emissions. Criteria for the minimization of solvent vapor emissions include the elimination of solvent buckets and barrels standing open to the atmosphere, and the repair of gaskets and seals that expose solvent-rich environments to the atmosphere, to be determined through visual inspection.

Evaluation

These operating practices constitute prudent measures which will reduce VOC emissions. These operating practices go beyond the requirements in the CTG and are, therefore, approvable.

C. Section 215.609—Program for Inspection and Repair of Leaks

(a) The owner or operator of a petroleum solvent dry cleaning facility shall conduct the following visual inspection on a weekly basis:

(1) Washers, dryers, solvent filters, settling tanks, vacuum stills and conveyors of petroleum solvent shall be inspected for visible leaks of solvent liquid.

(2) Pipes, hoses and fittings shall be inspected for active dripping or dampness.

(3) Pumps and filters shall be inspected for leaks around seals and access covers.

(4) Gaskets and seals shall be inspected for wear and defects.

(b) Leaks of petroleum solvent liquid and vapors shall be repaired within three working days of detection, unless necessary replacement parts are not on site.

(1) If necessary, repair parts shall be ordered within three working days of detection of the leak.

(2) The leak shall be repaired within three days of delivery of necessary parts.

Evaluation

Illinois' leak detection and repair program is very similar to the requirements in the CTG and is, therefore, approvable.

D. Section 215.610—Testing and Monitoring

(a) Compliance with §§ 215.607(b)(2), 215.608 and 215.609 shall be determined by visual inspection; and

(b) Compliance with §§ 215.607 (a)(2) and (b)(1) shall be determined by methods described in EPA-450/3-82-009 (1982) and does not include any later amendments or editions.

(c) If a control device is used to comply with § 215.607(a)(1), then compliance shall be determined using 40 CFR Part 60, Appendix A, Method 25 (1984) and does not include any later amendments or editions.

Evaluation

These test methods are consistent with the methods, for large petroleum dry cleaners, specified in the September 14, 1986, memorandum entitled "Volatile Organic Compound (VOC) Test Methods or Procedures for Source Categories in Groups I, II, and III Control Techniques Guidelines (CTG's)". This memorandum contains USEPA's recommended VOC test methods. Therefore, the testing and monitoring methods listed in Illinois' § 215.610 are approvable.

E. Section 215.611—Exemption for Petroleum Solvent Dry Cleaners

This rule is only applicable to sources with potential VOC emissions in excess of 100 tons per year. Sources whose operating permit conditions limit potential VOC emissions to 100 tons per year are exempt from these regulations.

Evaluation

This section is approvable because it is consistent with the CTG and USEPA guidance. It should be noted that Illinois requires petroleum solvent dry cleaners to obtain operating permits. The permit process is used to determine which sources are exempt from the requirements of this regulation.

F. Section 215.612—Compliance Dates and Geographical Areas

Sources in Cook, DuPage, Kane, Lake, Macoupin, Madison, McHenry, Monroe, St. Clair, and will Countries are required to achieve compliance no later than December 31, 1987.

Evaluation

This section is approved because it includes all of Illinois' ozone non-attainment areas, and it allows less than a year for sources to achieve final compliance and is, therefore, expeditious.

G. Section 215.613—Compliance Plan

This section requires sources subject to § 215.610(c) to submit compliance plans by May 31, 1987.

Evaluation

This section is approvable, as it will assist Illinois in the administration of this rule.

Proposed Rulemaking Action

USEPA's Evaluation finds that this regulation is consistent with the Large Petroleum Dry Cleaning CTG, as well as the revelant USEPA guidance on test methods and expeditiousness. USEPA, therefore, proposes to approve the incorporation of this regulation in the Illinois Ozone SIP.

Public comment is solicited on the proposed SIP revision and on USEPA's proposed approval of it. Public comments received by the date indicated above will be considered by USEPA in the development of its final rulemaking action.

Under 5 U.S.C. 605(b), the Administrator has certified that SIP approvals do not have a significant economic impact on a substantial number of small entities. (See 46 FR 8709.)

The Office of Management and Budget has exempted this rule from the requirements of section 3 of Executive Order 12291.

List of Subjects in 40 CFR Part 52

Air pollution control, Hydrocarbons, Incorporated by reference, Intergovernmental relations, Ozone.

Authority: 42 U.S.C. 7401–7642.

Dated: December 30, 1987.

Frank M. Covington,

Acting Regional Administrator.

[FR Doc. 88–7725 Filed 4–7–88; 8:45 am]

BILLING CODE 6560-50-M

---

40 CFR Part 52

[AD-FRL-3362-6]

Approval and Promulgation of Implementation Plans; Appendix F, Addition of Methods for Measurement of PM_{10}; Emissions From Stationary Sources

AGENCY: Environmental Protection Agency (EPA).

ACTION: Advance Notice of Proposed Rulemaking (ANPR).

SUMMARY: The EPA is planning to propose a test method for the determination of particulate matter (PM) with an aerodynamic diameter of 10 μm or less (PM_{10}) from stationary sources in a new Appendix F in 40 CFR Part 52. The publication of this method will provide a test procedure that EPA may use, if necessary, to enforce PM_{10} emission limits and will also provide States with an acceptable procedure for PM_{10} that States may choose to use in their State Implementation Plans (SIP's). The publication of the method is not intended to prescribe what PM_{10} test method a State must use, nor imply that a State must write emission limits specific to PM_{10} emissions.

The purpose of this ANPR is (1) to assist EPA in deciding which one of several methods under consideration is most acceptable for publication in the **Federal Register**, and (2) to solicit comments on the most acceptable approach to the measurement of condensible emissions, since available PM_{10} procedures do not measure condensibles.

DATE: Comments should be submitted on or before May 9, 1988.

ADDRESSES: *Comments.* Comments should be submitted (in duplicate if possible) to: Central Docket Section (LE–131), Attention: Docket Number A–88–08, U.S. Environmental Protection Agency, South Conference Center, Room 4, 401 M Street, SW., Washington, D.C. 20460.

Docket. Docket No. A–88–08, containing materials relevant to this notice, is available for public inspection and copying between 8:00 a.m. and 4:00 p.m., Monday through Friday, at EPA's Central Docket Section, South Conference Center, Room 4, 401 M Street, SW., Washington, DC 20460. A reasonable fee may be charged for copying.

FOR FURTHER INFORMATION CONTACT: Roy Huntley or Roger Shigehara, Emission Measurement Branch, Technical Support Division (MD–19), telephone number (919) 541–2237, or Joseph J. Sableski, Air Quality Management Division (MD–15), U.S. Environmental Protection Agency, Research Triangle Park, North Carolina 27711, telephone number (919) 541–5697.

SUPPLEMENTARY INFORMATION: When EPA promulgated the PM_{10} National Ambient Air Quality Standard (NAAQS), "total suspended particulate matter" was replaced by PM_{10} as the basis for PM standards. Section 110 of the Clean Air Act, as amended (42 U.S.C. 7410), specifies that States are to submit plans for EPA approval that provide for the attainment and maintenance of such standards through control programs directed at sources of the pollutants involved. In some cases, States may need to make provisions in their SIP's for a method that will measure specifically the emissions of PM_{10} from stationary sources.

Before the promulgation of the NAAQS for PM_{10}, when SIP's did not contain a stack test method for PM, EPA would use the appropriate method from Appendix A of 40 CFR Part 60 to determine emissions for compliance purposes. On August 29, 1986 (51 FR 31076), EPA proposed to amend 40 CFR 52.12(c) to allow EPA to use methods in Part 52 as well as Part 60 to measure emissions when the applicable SIP contains no suitable test methods.

The EPA is now considering proposing a method for measuring PM_{10} emissions in a new Appendix F to 40 CFR Part 52. There are three candidates under consideration: The first, Method F–2 [known as the Exhaust Gas Recycle (EGR) Procedure], uses a recycle loop to maintain a constant flow rate through a sizing device while maintaining isokinetic flow conditions. The second, Method F–2A [previously known as SIM–5 and called the Constant Flow Rate (CFR) Procedure in this notice], is similar to the interim method published in Appendix C of the PM_{10} SIP Development Guideline, EPA–450/2–86–001, June 1987. A third approach is the calculation of PM_{10} emissions from Method 5 or 17 data and a measured or assumed ratio of PM_{10} to total PM. For copies of both the EGR and the CFR Procedures, contact Roy Huntley, telephone number (919) 541–1060, Emission Measurement Branch, Technical Support Division (MD–19), U.S. Environmental Protection Agency, Research Triangle Park, North Carolina 27711.

One purpose of this notice is to solicit comments from interested persons as to which of the approaches should be published in the **Federal Register** as:

1. A method that EPA would use in those cases where the SIP contains a PM_{10} based emission standard and an approved method is not included in the SIP; and

2. An approved method that States could include in their SIP's if a PM_{10} method is needed.

As can be seen from the summaries of the methods, emission rates are measured at stack conditions or at 120 °C (248 °F), depending on the specific procedure. In some cases, significant amounts of PM_{10} may be in the gaseous

state at these temperatures, but condense to become PM when discharged and cooled in the ambient air. It is the consensus that these condensible emissions are in the PM_{10} size range and, therefore, are potential candidates for PM_{10} control.

A second purpose of this notice is to solicit comments from interested persons as to acceptable approaches to the measurement of condensible emissions.

Technical Problems in PM_{10} Source Emission Measurement

The PM_{10} standard is based on the aerodynamic behavior of particles. Therefore, the two types of inertial separators—cascade impactors and cyclones—are most appropriate. Although similar principles are involved, each has advantages and disadvantages.

Cascade impactors are best suited for determining multiple cut fractions of PM. Their technology is developed to the point that their performance can be predicted accurately from geometrical and flow considerations. However, each stage can collect only a few milligrams of PM before particle bounce adversely affects its performance. Because of the effect of particle bounce, the sampling time is relatively short.

Cyclones perform well as single stage collectors, do not suffer from problems due to particle bounce, and have the potential of collecting PM mass in the order of grams. However, current theories on cyclone operation are rudimentary and cannot predict accurately cyclone performance from geometrical and flow considerations. Therefore, cyclones must be calibrated empirically to determine the particle cut size (the aerodynamic particle diameter that has a 50 percent probability of penetration through the sizing device, also called D_{50}). Cyclones capable of collecting PM_{10} with acceptable sharpness of cut have been developed and are available for both the EGR and CFR procedures.

Sampling from stacks presents challenges when using inertial sizing devices. For example, the cut size is a function of the flow rate and viscosity of the gas flowing through the sizing device. Therefore, the flow rate through the sizing device must be kept at a constant, discrete value to maintain the cut size at 10 μm while extracting the sample isokinetically at each traverse point. The two PM_{10} methods offer different solutions to this problem.

The EGR Procedure

The EGR train samples isokinetically at the nozzle tip and recycles a filtered, dried portion of the exhaust sample gas back thrugh a single stage cyclone to maintain the constant flow rate required for a cut size of 10 μm. Isokinetic sampling is maintained by changing the recycle and sample flow rates. For example, if the stack gas velocity increases, the tester can increase the nozzle velocity to match the stack velocity by increasing the sample flow rate while simultaneously decreasing the recycle flow rate so that the total flow rate through the cyclone remains the same. Thus, the recycle capability of the EGR procedure permits the tester to sample isokinetically in the presence of variable stack gas velocities while maintaining a constant cut size of 10 μm in the cyclone.

The EGR sampling train includes a meter and flow control console to monitor and control the sample, recycle, and total flow rates throughout the sampling train. The nozzle is constructed to allow for the addition of recycle exhaust gas. The sampling protocol is similar to Method 5, 40 CFR Part 60, except that the required maximum number of points sampled in a stack is 12. Also, a total PM catch can be calculated by summing the PM_{10} catch and the cyclone catch.

The EGR sampling train is available commercially. However, only one company manufactures the train. The cost of the EGR train is approximately $10,000.

The CFR Procedure

The CFR procedure is similar to the interim PM_{10} method in the PM_{10} SIP Development Guideline. The only difference is that the sampling protocol of the interim method requires only four sampling points, while the CFR procedure requires an expanded number of sampling traverse points (8 to 12).

The CFR sizing device can be either a cyclone or a cascade impactor. In this procedure, a constant flow rate required for a 10 μm cut size is maintained throughout the sample traverse. The anisokinetic errors are kept within acceptable limits by specifying a permissible range of velocities for each sampling probe nozzle. The nozzle is selected such that its maximum velocity values bracket all of the actual sampling point velocities. Often only one nozzle is required to complete a sample run, but if the sampling point velocities vary beyond the specified range of any single nozzle, two or more nozzles and sampling trains would be required. A large selection of nozzles with small incremental differences in nozzle diameter increases the likelihood that the sample run can be completed with one nozzle and sampling train.

To add practicality to the procedure, the criteria for accepting the results in terms of isokinetic variation are more liberal than for the EGR procedure. Rather than the 10 percent allowed for the EGR procedure, an isokinetic variation of ±20 percent with all of the sampling points within the nozzle velocity limits or ±10 percent with no more than one sampling point outside the nozzle velocity limits are used. Because the inertial effects on the particles of interest are less than that on particles greater than PM_{10}, the effect of anisokineticity will be only slight for PM_{10}, but the total PM catch will not be as accurate as the EGR procedure.

The CFR procedure uses a standard Method 5 sampling train, two glass fiber filters, and an inertial sizing device (either a cyclone or a cascade impactor). The cascade impactors will have to be calibrated extensively for this procedure. The approximate cost of a calibrated impactor, precollector, and 11 nozzles is $8,000.

To account for one of the effects of sampling anisokinetically, the sampling time at each point is adjusted to be proportional to the velocity at that point to provide a velocity weighted sample.

Description of Possible Approaches to Measurement of PM_{10} Emissions

Consider Solids Only

Both Methods F-2 and F-2A use in-stack sizing devices and filters. Therefore, both methods determine PM_{10} as it occurs at stack temperatures. If stack temperatures are variable, condensible PM may cause the PM_{10} results to vary with temperature.

Include as PM_{10} Condensible Matter at a Reference Temperature

Both Methods F-2 and F-2A are written to include out-of-stack filters directly behind the probe maintained at a constant temperature of 120±14 °C (248±25 °F). The out-of-stack filters are included not as a recommendation, but to illustrate how the methods would appear if EPA were to choose to use such a requirement based on comments received from the ANPR. The temperature of 120±14°C (248±25 °F) is used to be consistent with the filter temperature requirement of Method 5. Of course, other reference temperatures may be selected. The rationale for the collection of PM at a given temperature is that since PM measurements can vary with temperature, PM measurements should be made at a reference temperature.

In both PM_{10} methods, the in-stack and out-of-stack filters are used rather

than using a single out-of-stack filter. The PM_{10} concentrations at many sources can be very low, and the recovery of small amounts of PM_{10} over a large surface area, such as the interior surfaces of a long probe, is difficult. In both methods, the PM_{10} is the sum of the PM recovered on both filters and on all of the surfaces from the sizing device to the front half of the out-of-stack filter.

Use Method 5 and PM_{10} Ratios

A third approach to measuring PM_{10} is to use Method 5 and PM_{10} ratios to estimate PM_{10} emission rates. There are two problems with this approach. First, the available particle size data was measured at stack conditions. Because PM is a function of temperature, this data may not correlate well with actual PM_{10} emissions. Second, such ratios would be determined from present data for each source and would represent averages, and, while adequate for emission inventory, would not be adequate as a compliance method.

Possible Approaches to Measurement of Condensible Emissions

This section discusses the possible approaches to the measurement of condensible matter after the solid PM is separated from the gas stream.

Use the Impinger Catch

One approach to the measurement of condensible PM is to use impingers or condensers to collect the material at an ice bath temperature. The ice bath provides an easy means of maintaining the temperature at a constant level. The impinger solution is then evaporated to dryness and the residue weighed to determine the amount of condensible matter.

A disadvantage to this approach is that noncondensible gases can react with other gases or condensibles in the impinger solution to form PM that would not have otherwise formed. A nitrogen purge of the impinger solution immediately after the test run is said to minimize the amount of reaction products; the effectiveness of the procedure, however, has not been documented.

Use a Series of Procedures for Different Sources

A second approach is to develop special procedures aimed at "different" condensibles and sources. For example, if it is determined that sulfur trioxide is the only condensible matter emitted by a particular source, the procedure would be designed to collect and analyze sulfur trioxide. If the condensible gas is determined to be only organic matter, then another procedure would be developed to collect and analyze organic matter; e.g., extraction of organic compounds from the impinger solution.

Use Dilution and Filter

A third approach would be to dilute and cool the sample gas with conditioned ambient air to below the moisture dew point of the sample gas. This approach simulates conditions at the stack exit. The sample is then collected entirely on a filter where such processes as compound formation and loss of volatile organic compounds might be similar to those which take place in ambient air reference method sampling. A modification would be to remove the particles greater than 10 μm only before dilution of the sample gas. The PM_{10} particles that remain would act as condensation nuclei.

Research has been completed on this approach. However, equipment for diluting the sample gas while determining an accurate sample volume has not yet been developed to the extent that it can be used as a compliance method.

Responses on any issue raised by this notice will be appreciated. Of particular use to the Agency will be responses to the following questions. Which PM_{10} method is the most desirable, which PM_{10} method is the least desirable, and why? What approach to condensibles should be used? Are there procedures we have not considered?

Date: April 4, 1988.

J. Craig Potter,

Assistant Administrator for Air and Radiation.

[FR Doc. 88-7724 Filed 4-7-88; 8:45 am]

BILLING CODE 6560-50-M

FEDERAL COMMUNICATIONS COMMISSION

47 CFR Part 73

[BC Docket No. 82-664; RM-4181]

Radio Broadcasting Services; Bisbee, AZ

AGENCY: Federal Communications Commission.

ACTION: Proposed rule; dismissal of proposal.

SUMMARY: This document dismisses a proposal to allot Channel 217A to Bisbee, Arizona, as requested by Lee M. Spinks, on behalf of Tea Multimedia, based on the Commission's recent amendment of its Rules to provide for a "demand" system for NCE-FM services located within 199 miles of the United States-Mexico border area. As a result, the Bisbee proposal may be considered in the application context rather than the rule making process. With this action, the proceeding is terminated.

ADDRESS: Federal Communications Commission, Washington, DC 20554.

FOR FURTHER INFORMATION CONTACT: Nancy V. Joyner, Mass Media Bureau, (292) 634-6530. Questions related to the application filing process should be addressed to the Audio Services Division, FM Branch, Mass Media Bureau, (202) 632-0394.

SUPPLEMENTARY INFORMATION: This is a summary of the Commission's Report and Order, BC Docket No. 82-664, adopted March 4, 1988, and released April 1, 1988. The full text of this Commission decision is available for inspection and copying during normal business hours in the FCC Dockets Branch (Room 230), 1919 M Street NW., Washington, DC. The complete test of this decision may also be purchased from the Commission's copy contractors, International Transcription Service, (202) 857-3800, 2100 M Street NW., Suite 140, Washington, DC 20037.

List of Subjects in 47 CFR Part 73

Radio broadcasting.

Federal Communications Commission.

Steve Kaminer,

Deputy Chief, Policy and Rules Division, Mass Media Bureau.

[FR Doc. 88-7761 Filed 4-7-88; 8:45 am]

BILLING CODE 6712-01-M

---

47 CFR Part 73

[MM Docket No. 88-141, RM-6030]

Radio Broadcasting Services; Spring Grove, MN, and Mason City, IA

AGENCY: Federal Communications Commission.

ACTION: Proposed rule.

SUMMARY: This document requests comments on a petition filed by Sun Communications, Inc., proposing the substitution of FM Channel 252C2 for 252A at Spring Grove, Minnesota, and modification of its license for Station KQYB to specify operation on Channel 252C2. To accommodate Channel 252C2 at Spring Grove, an additional channel substitution would be necessary. Channel 250A must be substituted for Channel 252A at Mason City, Iowa. Channel 252A is licensed to Station KCMR, Mason City, and Channel 250A can be substituted at KCMR's site coordinates. The coordinates used for this proposal are as follows: Spring

Grove, Minnesota 43-40-37; 91-44-14
Mason City, Iowa 43-07-18; 93-11-32.

DATES: Comments must be filed on or before May 23, 1988, and reply comments on or before June 6, 1988.

ADDRESS: Federal Communications Commission, Washington, DC 20554. In addition to filing comments with the FCC, interested parties should serve the petitioner, or its counsel or consultant, as follows: Samuel Miller, Miller and Fields, P.C., P.O. Box 3303, Washington, DC 20033 (Counsel for the petitioner).

FOR FURTHER INFORMATION CONTACT: Kathleen Scheuerle, Mass Media Bureau, (202) 634-6530.

SUPPLEMENTARY INFORMATION: This is a summary of the Commission's Notice of Proposed Rule Making, MM Docket No. 88-141, adopted March 16, 1988, and released April 1, 1988. The full text of this Commission decision is available for inspection and copying during normal business hours in the FCC Dockets Branch (Room 230), 1919 M Street, NW., Washington, DC. The complete text of this decision may also be purchased from the Commission's copy contractors, International Transcription Service, (202) 857-3800, 2100 M Street, NW., Suite 140, Washington, DC 20037.

Provisions of the Regulatory Flexibility Act of 1980 do not apply to this proceeding.

Members of the public should note that from the time a Notice of Proposed Rule Making is issued until the matter is no longer subject to Commission consideration or court review, all *ex parte* contacts are prohibited in Commission proceedings, such as this one, which involve channel allotments. See 47 CFR 1.1231 for rules governing permissible *ex parte* contact.

For information regarding proper filing procedures for comments, See 47 CFR 1.415 and 1.420.

List of Subjects in 47 CFR Part 73

Radio broadcasting.

Federal Communications Commission.

Steve Kaminer,

Deputy Chief, Policy and Rules Division, Mass Media Bureau.

[FR Doc. 88-7762 Filed 4-7-88; 8:45 am]

BILLING CODE 6712-01-M

Notices

Federal Register
Vol. 53, No. 68
Friday, April 8, 1988

This section of the FEDERAL REGISTER contains documents other than rules or proposed rules that are applicable to the public. Notices of hearings and investigations, committee meetings, agency decisions and rulings, delegations of authority, filing of petitions and applications and agency statements of organization and functions are examples of documents appearing in this section.

ADMINISTRATIVE CONFERENCE OF THE UNITED STATES

Committee on Administration; Public Meeting

Summary: Pursuant to the Federal Advisory Committee Act (Pub. L. No. 92–463), notice is hereby given of a meeting of the Committee on Administration of the Administrative Conference of the United States. The Committee has scheduled this meeting to discuss (1) Daniel Joseph's study and draft recommendations on use of settlement judges, (2) Marianne Smythe's study and draft statement on the CFTC's reparations process, and (3) research into dispute resolution in government contract disputes by Crowell and Moring.

Date: Monday, April 18, 1988 at 10:00 a.m.

Location: Administrative Conference of the United States, 2120 L Street, NW., Suite 500, Washington, DC 20037.

Public Participation: Committee meetings are open to the interested public, but limited to the space available. Persons wishing to attend should notify the contact person at least two days prior to the meeting. The committee chairman may permit members of the public to present oral statements at the meetings. Any member of the public may file a written statement with the committee before, during, or after the meeting. Minutes of the meeting will be available on request.

For Further Information Contact: Charles Pou, Jr., Office of the Chairman, Administrative Conference of the United States, 2120 L Street NW., Suite 500, (202) 254–7020.

Jeffrey S. Lubbers,

Research Director.

April 5, 1988.

[FR Doc. 88–7776 Filed 4–7–88; 8:45 am]

BILLING CODE 6110-01-M

DEPARTMENT OF COMMERCE

National Oceanic and Atmospheric Administration

Application for Marine Mammals Permits; John G. Shedd Aquarium (P396B)

Notice is hereby given that the Applicant has applied in due form for a Permit to take marine mammals as authorized by the Marine Mammal Protection Act of 1972 (16 U.S.C. 1361–1407), and the Regulations Governing the Taking and Importing of Marine Mammals (50 CFR Part 216).

1. *Applicant:* John G. Shedd Aquarium 1200 South Lakeshore Drive, Chicago, Illinois 60605
2. *Type of Permit:* Public Display
3. *Name and Number of Marine Mammals:* False Killer Whale (*Pseudorca crassidens*) 6
4. *Type of Take:* Live import
5. *Location of Activity:* Japan
6. *Period of Activity:* 5 years.

The arrangements and facilities for transporting and maintaining the marine mammals requested in the above described application have been inspected by a licensed veterinarian, who has certified that such arrangements and facilities are adequate to provide for the well-being of the marine mammals involved.

Concurrent with the publication of this notice in the **Federal Register**, the Secretary of Commerce is forwarding copies of this application to the Marine Mammal Commission and the Committee of Scientific Advisors.

Written data or views, or requests for a public hearing on this application should be submitted to the Assistant Administrator for Fisheries, National Marine Fisheries Service, U.S. Department of Commerce, Washington, DC 20235, within 30 days of the publication of this notice. Those individuals requesting a hearing should set forth the specific reasons why a hearing on this particular application would be appropriate. The holding of such hearing is at the discretion of the Assistant Administrator for Fisheries.

All statements and opinions contained in this application are summaries of those of the Applicant and do not necessarily reflect the views of the National Marine Fisheries Service.

Documents submitted in connection with the above application are available for review by interested persons in the following offices:

Office of Protected Resources and Habitat Programs, National Marine Fisheries Service, 1825 Connecticut Avenue NW., Rm. 805, Washington, DC;

Director, Northeast Region, National Marine Fisheries Service, 14 Elm Street, Federal Building, Gloucester, Massachusetts 01930; and

Director, Southeast Region, National Marine Fisheries Service, 9440 Koger Boulevard, St. Petersburg, Florida 33720.

Date: April 5, 1988.

Nancy Foster,

Director, Office of Protected Resources and Habitat Programs, National Marine Fisheries Service.

[FR Doc. 88–7774 Filed 4–7–88; 8:45 am]

BILLING CODE 3510-22-M

COMMITTEE FOR THE IMPLEMENTATION OF TEXTILE AGREEMENTS

Reduction of an Import Limit for Certain Cotton, Wool and Man-Made Fiber Sweaters Assembled in the Northern Mariana Islands (CNMI) From Imported Parts

April 5, 1988.

The chairman of the Committee for the Implementation of Textile Agreements (CITA), under the authority contained in E.O. 11651 of March 3, 1972, as amended, has issued the directive published below to the Commissioner of Customs to be effective on April 13, 1988. For further information contact Anne Novak, International Trade Specialist, Office of Textiles and Apparel, U.S. Department of Commerce, (202) 377–4212. For information on the quota status of this limit, please refer to the Quota Status Reports which are posted on the bulletin boards of each Customs port. For information on embargoes and quota reopenings, please call (202) 377–3715.

Background

On November 2, 1987, a notice was published in the **Federal Register** (52 FR 42032) which continued the limit for cotton, wool and man-made fiber

sweaters in Categories 345, 445, 446, 645 and 646, which were determined by the U.S. Customs Service to be products of foreign countries or foreign territories and exported from the Commonwealth of the Northern Mariana Islands (CNMI) during the period which began on November 1, 1987 and extends through October 31, 1988. The continuation of this limit was based upon certification by the United States that 40 percent of the employees are citizens or nationals of the Marshall Islands, the Federated States of Micronesia, the Republic of Palau, or the United States.

The purpose of this notice is to advise the public that this requirement has not been fulfilled. Consequently, the limit for cotton, wool and man-made fiber sweaters in Categories 345, 445, 446, 645 and 646, exported from the CNMI during the period November 1, 1987 through October 31, 1988, is being reduced from 100,000 dozens to 82,585 dozens, according to the provisions of our administrative arrangement.

A description of the textile categories in terms of T.S.U.S.A. numbers is available in the CORRELATION: Textile and Apparel Categories with Tariff Schedules of the United States Annotated (see **Federal Register** notice 52 FR 47745, dated December 11, 1987).

James H. Babb,

Chairman, Committee for the Implementation of Textile Agreements.

Committee for the Implementation of Textile Agreements

April 5, 1988.

Commissioner of Customs,
Department of the Treasury, Washington, D.C. 20229.

Dear Mr. Commissioner: This directive amends, but does not cancel, the directive of October 27, 1987 issued to you by the Chairman of the Committee for the Implementation of Textile Agreements concerning imports of cotton, wool and man-made fiber sweaters in Categories 345, 445, 446, 645 and 646, assembled in the Commonwealth of the Northern Mariana Islands from foreign parts and exported to the United States during the twelve-month period which began on November 1, 1987 and extends through October 31, 1988.

Effective on April 13, 1988, the directive of October 27, 1987 is hereby amended to reduce the limit for cotton, wool and man-made fiber sweaters in Categories 345, 445, 446, 645 and 646 to a level of 82,585 dozens. The wool sublevel for Categories 445 and 446 is reduced to a level not to exceed 12,388 dozens.

In carrying out the above directions, the Commissioner of Customs should construe entry into the United States for consumption to include entry for consumption into the Commonwealth of Puerto Rico.

The Committee for the Implementation of Textile Agreements has determined that these actions fall within the foreign affairs exception to the rulemaking provisions of 5 U.S.C. 553(a)(1).

Sincerely,

James H. Babb,

Chairman, Committee for the Implementation of Textile Agreements.

[FR Doc. 88-7742 Filed 4-7-88; 8:45 am]

BILLING CODE 3510-DR-M

Adjustment of Import Limits for Certain Cotton, Wool and Man-Made Fiber Textile Products Produced or Manufactured in Sri Lanka

April 5, 1988.

AGENCY: Committee for the Implementation of Textile Agreements (CITA).

ACTION: Adjusting limits for carryover.

FOR FURTHER INFORMATION CONTACT: Kimbang Pham, International Trade Specialist, Office of Textiles and Apparel, U.S. Department of Commerce, (202) 377-4212.

SUPPLEMENTARY INFORMATION: The limits for certain cotton, wool and man-made fiber textile products exported from Sri Lanka during the periods which began on June 1, 1987 through December 31, 1987 and January 1, 1988 through May 31, 1988 were adjusted, effective on March 8, 1988, for carryover between the two periods. Published below is a copy of the directive to the U.S. Customs Service adjusting the limits for the June 1, 1987 through December 31, 1987 period.

A description of the textile categories in terms of T.S.U.S.A. numbers is available in the CORRELATION: Textile and Apparel Categories with Tariff Schedules of the United States Annotated (see **Federal Register** notice 52 FR 47745, dated December 11, 1987). Also see 52 FR 18413, published on May 15, 1987; 53 FR 52 and 53 FR 53, published on January 4, 1988; and 53 FR 7225, published on March 7, 1988.

James H. Babb,

Chairman, Committee for the Implementation of Textile Agreements.

March 2, 1988.

Committee for the Implementation of Textile Agreements

Commissioner of Customs,
Department of the Treasury, Washington, D.C. 20229

Dear Mr. Commissioner: To facilitate implementation of the Bilateral Cotton, Wool and Man-Made Fiber Textile Agreement of May 10, 1983, as amended, between the Governments of the United States and Sri Lanka, I request that, effective on March 8, 1988, you adjust the restraint limits established in the directive of December 30, 1987 for cotton, wool, man-made fiber, silk blend and other vegetable fiber textiles and textile products, produced or manufactured in Sri Lanka and exported during the seven-month period which began on June 1, 1987 and extended through December 31, 1987.

Category	Adjusted 7-mo. limit [1]
331	606, 428 dozen pairs.
333/633	1 dozen.
334	101,018 dozen.
337	12,618 dozen.
338	145,510 dozen.
340	271,774 dozen.
341	273,430 dozen.
350	14,629 dozen.
351	46,092 dozen.
359-C/659-C [2]	72,767 pounds.
363	2,609,640 numbers.
442	2,743 dozen.
445/446	26,240 dozen.
631	38,441 dozen pairs.
634	39,413 dozen.
635	109,383 dozen.
636/836	65,133 dozen.
640	22,248 dozen.
641	271,387 dozen.
642/842	75,871 dozen.
644	12,069 numbers.
645/646	42,193 dozen of which not more than 25, 567 dozen shall be in Category 646.
647	165,544 dozen.
648	76,747 dozen.

[1] The limits have not been adjusted to account for any imports exported after May 31, 1987.

[2] In Category 359-C, only TSUSA numbers 381.0822, 381.6510, 384.0928 and 384.5222. In Category 659-C, only TSUSA numbers 381.3325, 381.9805, 384.2205, 384.2530, 384.8606, 384.8607 and 384.9310.

This letter will not be published in the **Federal Register**.

Sincerely,

James H. Babb,

Chairman, Committee for the Implementation of Textile Agreements.

[FR Doc. 88-7743 Filed 4-7-88; 8:45 am]

BILLING CODE 3510-DR-M

Adjustment of an Import Limit for Certain Cotton Textile Products Produced or Manufactured in Uruguay

April 5, 1988.

AGENCY: Committee for the Implementation of Textile Agreements (CITA).

ACTION: Issuing a directive to the Commissioner of Customs adjusting a limit.

EFFECTIVE DATE: April 13, 1988.

Authority: Executive Order 11651 of March 3, 1972, as amended; section 204 of the Agricultural Act of 1956, as amended (7 U.S.C. 1854).

FOR FURTHER INFORMATION CONTACT: Naomi Freeman, International Trade Specialist, Office of Textiles and Apparel, U.S. Department of Commerce, (202) 377-4212. For information on the

quota status of this limit, refer to the Quota Status Reports posted on the bulletin boards of each Customs port. For information on embargoes and quota re-openings, call (202) 377-3715.

SUPPLEMENTARY INFORMATION: Under the terms of the Bilateral Textile Agreement of December 30, 1983 and January 23, 1984 between the Governments of the United States and Uruguay, the current limit for Category 335 is being reduced for carryforward used in the July 1, 1987 through December 31, 1987 period.

A description of the textile categories in terms of T.S.U.S.A. numbers is available in the CORRELATION: Textile and Apparel Categories with Tariff Schedules of the United States Annotated (see **Federal Register** notice 52 FR 47745, dated December 11, 1987). Also see 52 FR 48855, published in the **Federal Register** on December 28, 1987.

The letter to the Commissioner of Customs and the actions taken pursuant to it are not designed to implement all of the provisions of the bilateral agreement, but are designed to assist only in the implementation of certain of its provisions.

James H. Babb,

Chairman, Committee for the Implementation of Textile Agreements.

Committee for the Implementation of Textile Agreements

April 5, 1988.

Commissioner of Customs,
Department of the Treasury, Washington, D.C. 20229

Dear Mr. Commissioner: This directive amends, but does not cancel, the directive of December 28, 1987 concerning imports of certain cotton and wool apparel, produced or manufactured in Uruguay and exported during the six-month period which began on January 1, 1988 and extends through June 30, 1988.

Effective on April 13, 1988, the directive of December 28, 1987 is hereby amended to reduce the import restraint limit for Category 335 to 29,498 dozen [1], under the terms of the bilateral agreement, effected by exchange of notes dated December 30, 1983 and January 23, 1984, as amended.

The Committee for the Implementation of Textile Agreements has determined that this action falls within the foreign affairs exception to the rulemaking provisions of 5 U.S.C. 553(a)(1).

Sincerely,

James H. Babb,

Chairman, Committee for the Implementation of Textile Agreements.

[FR Doc. 88-7744 Filed 4-7-88; 8:45 am]

BILLING CODE 3510-DR-M

[1] The limit has not been adjusted to account for any imports exported after December 31, 1987.

COMMITTEE FOR PURCHASE FROM THE BLIND AND OTHER SEVERELY HANDICAPPED

Procurement List 1988, Proposed Additions

AGENCY: Committee for Purchase from the Blind and Other Severely Handicapped.

ACTION: Proposed additions to procurement list.

SUMMARY: The Committee has received proposals to add to Procurement List 1988 commodities to be produced and a service to be provided by workshops for the blind or other severely handicapped.

Comments Must be Received on or Before: May 9, 1988.

ADDRESS: Committee for Purchase from the Blind and Other Severely Handicapped, Crystal Square 5, Suite 1107, 1755 Jefferson Davis Highway, Arlington, Virginia 22202-3509.

FOR FURTHER INFORMATION CONTACT: C. W. Fletcher, (703) 557-1145.

SUPPLEMENTARY INFORMATION: This notice is published pursuant to 41 U.S.C. 47(a)(2), 85 Stat. 77 and 41 CFR 51-2.6. Its purpose is to provide interested persons an opportunity to submit comments on the possible impact of the proposed actions.

Additions

If the Committee approves the proposed additions, all entities of the Federal Government will be required to procure the commodities and service listed below from workshops for the blind or other severely handicapped.

It is proposed to add the following commodities and service to Procurement List 1988, December 10, 1987 (52 FR 46926).

Commodities

Cover, Mattress, Plastic
7210-00-082-5739

Enamel, Aerosol
8010-01-060-6461
8010-00-935-7156
8010-00-159-4919
8010-00-159-4520
8010-00-159-4521
8010-00-159-4522

Lacquer, Aerosol
8010-00-598-5455
8010-00-936-8369
8010-00-936-8371

Service

Unpackaging
Corpus Christi Army Depot
Corpus Christi, Texas

C. W. Fletcher,

Executive Director.

[FR Doc. 88-7747 Filed 4-7-88; 8:45 am]

BILLING CODE 6820-33-M

Procurement List 1988, Additions

AGENCY: Committee for Purchase from the Blind and Other Severely Handicapped.

ACTION: Additions to procurement list.

SUMMARY: This action adds to Procurement List 1988 services to be provided by workshops for the blind or other severely handicapped.

EFFECTIVE DATE: May 9, 1988.

ADDRESS: Committee for Purchase from the Blind and Other Severely Handicapped, Crystal Square 5, Suite 1107, 1755 Jefferson Davis Highway, Arlington, Virginia 22202-3509.

FOR FURTHER INFORMATION CONTACT: C.W. Fletcher, (703) 557-1145.

SUPPLEMENTARY INFORMATION: On July 24, 1987, January 29, and February 12, 1988, the Committee for Purchase from the Blind and Other Severely Handicapped published a notice (52 FR 27842, 53 FR 2622 and 4200) of proposed additions to Procurement List 1988, December 10, 1987 (52 FR 46926).

Additions

After consideration of the relevant matter presented, the Committee has determined that the services listed below are suitable for procurement by the Federal Government under 41 U.S.C. 46-48c, 85 Stat. 77 and 41 CFR 51-2.6.

I certify that the following actions will not have a significant impact on a substantial number of small entities. The major factors considered were:

a. The actions will not result in any additional reporting, recordkeeping or other compliance requirements.

b. The actions will not have a serious economic impact on any contractors for the services listed.

c. The actions will result in authorizing small entities to provide the services procured by the Government.

Accordingly, the following services are hereby added to Procurement List 1988:

Commissary Wareouse Service
Shaw Air Force Base, South Carolina

Janitorial Service
Prince Georges County Memorial, USAR Center
6600 Baltimore Avenue
Riverdale, Maryland
Southern Maryland Memorial, USAR Center

Dower House Road
Washington, DC
Janitorial Service
The Rexnord Building
4277 Poche Court West
New Orleans, Louisiana

C.W. Fletcher,
Executive Director.

[FR Doc. 88-7748 Filed 4-7-88; 8:45 am]

BILLING CODE 6820-33-M

DEPARTMENT OF DEFENSE

Department of the Air Force

Intent (NOI) To Prepare an Environmental Impact Statement for the Proposed Construction and Operation of Space Launch Complex 7 at Vandenberg Air Force Base (AFB), California

The Department of the Air Force is proposing to construct and operate Space Launch Complex 7 (SLC-7) at Vandenberg AFB to launch Department of Defense satellites beginning in 1994 into polar orbit aboard Titan Centaur expendable space launch vehicles. The proposed location of SLC-7 is near Cypress Ridge on South Vandenberg, approximately one mile south of SLC-6, the Vandenberg AFB launch site for the Space Shuttle. The proposed action includes the construction of the launch complex and support facilities, the extension of roads and utilities on Vandenberg AFB, and the launching of the Titan Centaur. In addition, existing launch support facilities constructed for other space launch systems at Vandenberg AFB (i.e., Space Shuttle) are proposed to be used and/or modified as required to support the new launch complex. The satellites proposed to launch aboard the Titan Centaur from SLC-7 require polar orbits. Vandenberg AFB is the only existing U.S. government launch site that can launch satellites into polar orbits without over flying populated land masses. Therefore, Vandenberg AFB is the only feasible location for the proposed SLC-7. Alternative sites on Vandenberg AFB are being evaluated for SLC-7 including a coastal terrace near Point Arguello, and an upland terrace approximately one miles south of the proposed Cypress Ridge site.

The Department of the Air Force will hold two public scoping meetings to solicit inputs on significant environmental issues associated with the construction and operation of SLC-7 at Vandenberg AFB. These scoping meetings are scheduled for May 3, 1988 at the Lompoc Civic Auditorium, 217 South "L" Street, Lompoc, CA from 7:00—10:00 pm; and May 5, 1988 at the Goleta Valley Community Center, 5679 Hollister Avenue, Goleta, CA from 7:00—10:00 pm. In addition to these two scoping meetings, written inputs to the scoping process are solicited. Comments in response to this NOI or as part of the scoping process are requested in writing within 30 calendar days from publication of this notice in the **Federal Register**.

Questions concerning the proposed action or the NEPA process for the action, comments on this NOI, or written inputs to the scoping process should be mailed to Mr. Robert Mason, Department of the Air Force, Headquarters Space Division/DEV, P.O. Box 92960, Los Angeles, CA 90009-2960. Telephone inquiries should be directed to Mr. Mason at (213) 643-1409.

Patsy J. Conner,
Air Force Federal Register Liaison Officer.

[FR Doc. 88-7710 Filed 4-7-88; 8:45 am]

BILLING CODE 3910-01-M

DEPARTMENT OF EDUCATION

Proposed Information Collection Requests

AGENCY: Department of Education.

ACTION: Notice of proposed information collection requests.

SUMMARY: The Director, Information Technology Services, invites comments on the proposed information collection requests as required by the Paperwork Reduction Act of 1980.

DATE: Interested persons are invited to submit comments on or before May 9, 1988.

ADDRESSES: Written comments should be addressed to the Office of Information and Regulatory Affairs, Attention: Jim Houser, Desk Officer, Department of Education, Office of Management and Budget, 726 Jackson Place, NW., Room 3208, New Executive Office Building, Washington, DC 20503. Requests for copies of the proposed information collection requests should be addressed to Margaret B. Webster, Department of Education, 400 Maryland Avenue, SW., Room 5624, Regional Office Building 3, Washington, DC 20202.

FOR FURTHER INFORMATION CONTACT: Margaret B. Webster, (202) 732-3915.

SUPPLEMENTARY INFORMATION: Section 3517 of the Paperwork Reduction Act of 1980 (44 U.S.C. Chapter 35) requires that the Office of Management and Budget (OMB) provide interested Federal agencies and the public an early opportunity to comment on information collection requests. OMB may amend or waive the requirement for public consultation to the extent that public participation in the approval process would defeat the purpose of the information collection, violate State or Federal law, or substantially interfere with any agency's ability to perform its statutory obligations.

The Director, Information Technology Services, publishes this notice containing proposed information collection requests prior to submission of these requests to OMB. Each proposed information collection, grouped by office, contains the following: (1) Type of review requested, e.g., new, revision, extension, existing or reinstatement; (2) Title; (3) Frequency of collection; (4) The affected public; (5) Reporting burden; and/or (6) Recordkeeping burden; and (7) Abstract. OMB invites public comment at the address specified above. Copies of the requests are available from Margaret Webster at the address specified above.

Dated: April 4, 1988.

Carlos U. Rice,
Director for Information Technology Services.

Office of Planning, Budget, and Evaluation

Type of Review: New
Title: Administrative Cost Study of the College Cost Containment Project
Frequency: One time only
Affected Public: Businesses or other for-profit, non-profit institutions
Reporting Burden:
Responses: 600
Burden Hours: 900
Recordkeeping:
Recordkeepers: 0
Burden Hours: 0

Abstract: This study will collect information from postsecondary institutions that have participated in the College Cost Containment Project. The Department will use the data to analyze and test cost reduction methods.

Office of Special Education and Rehabilitation Services

Type of Review: New
Title: Evaluation of State Vocational Agency Costs
Frequency: One time only
Affected Public: State or local governments
Reporting Burden:
Responses: 40
Burden Hours: 920
Recordkeeping:
Recordkeepers: 0
Burden Hours: 0

Abstract: This study will collect information on Vocational

Rehabilitation agency costs from State Vocational agencies. The Department uses the information to assess direct and indirect costs rates, and to prepare a report to Congress.

Office of Postsecondary Education

Type of Review: Reinstatement
Title: Application for Grants for Supplemental Funds under the Cooperative Education Program
Frequency: Annually
Affected Public: Non-profit institutions
Reporting Burden:
Responses: 590
Burden Hours: 885
Recordkeeping:
Recordkeepers: 0
Burden Hours: 0

Abstract: This form will be used by postsecondary institutions to apply for supplemental funds under the Cooperative Education Program. The Department uses the information to make grant awards.

Office of Planning, Budget and Evaluation

Type of Review: New
Title: Case Studies of Effective Migrant Education Projects
Frequency: One time only
Affected Public: Individuals or households; State or local governments
Reporting Burden:
Responses: 663
Burden Hours: 179
Recordkeeping:
Recordkeepers: 0
Burden Hours: 0

Abstract: This study will collect and identify information on effective migrant education practices from State and local educators and individuals. The Department will use the information to assess migrant education projects and to prepare a handbook on effective practices for State and local migrant educators.

[FR Doc. 88-7765 Filed 4-7-88; 8:45 am]
BILLING CODE 4000-01-M

Intent To Repay to the Maryland State Department of Education Funds Recovered as a Result of Final Audit Determinations

AGENCY: Department of Education.

ACTION: Notice of intent to award grantback funds.

SUMMARY: Under section 456 of the General Education Provisions Act (GEPA), the U.S. Secretary of Education (Secretary) intends to repay to the Maryland State Department of Education, the State educational agency (SEA), an amount equal to 75 percent of the funds recovered by the U.S. Department of Education as a result of final audit determinations. This notice describes the SEA's plan, submitted on behalf of the Baltimore City Public Schools (BCPS), for the use of the repaid funds and the terms and conditions under which the Secretary intends to make those funds available. The notice invites comments on the proposed grantback.

DATE: All comments must be received on or before May 9, 1988.

ADDRESS: All comments should be addressed to Dr. James Spillane, Director, Division of Program Support, Compensatory Education Programs, U.S. Department of Education, 400 Maryland Avenue, SW. (Room 2043, MS-6276), Washington, DC 20202.

FOR FURTHER INFORMATION CONTACT: Dr. James Spillane. Telephone: (202) 732-4694.

SUPPLEMENTARY INFORMATION:

A. Background

The U.S. Department of Education has recovered $2,500,000, plus accrued interest, from the Maryland Department of Education (SEA) in partial satisfaction of claims arising from two audits covering fiscal years (FYs) 1974 through 1978. An additional payment of $1,250,000, plus accrued interest, will be made to the Department by the SEA no later than July 15, 1988.

The claims involved the SEA's administration of Title I of the Elementary and Secondary Education Act of 1965 (Title I), a program that addressed the special educational needs of educationally deprived children in areas with high concentrations of children from low-income families. Specifically, the Department's first final audit determination found Title I funds had been spent in BCPS in violation of (a) the general aid prohibition set forth in 20 U.S.C. 241e(a)(1)(B) and 45 CFR 116a.22(b)(6); (b) the requirements in 20 U.S.C. 1225(b) and 45 CFR 100b.55, which required that Title I funds be obligated and expended within one fiscal year after the fiscal year in which such funds became available; (c) the requirements in 20 U.S.C. 241e(a)(3)(B) and 45 CFR 116.40, which required that Title I funds supplement State and local funds; (d) the requirements in 45 CFR 116a.20, which required that Title I funds be spent in eligible school attendance areas; and (e) the requirements in 20 U.S.C. 1232c(a) and 45 CFR 100b.477, which required that adequate records be kept to reflect time and effort of Title I employees assigned to programs in addition to Title I.

In another final audit determination, the Department found BCPS failed to satisfy Title I comparability requirements in 20 U.S.C. 241e(a)(3)(C) and 45 CFR 116.26 (for the period July 1, 1974 through November 20, 1976) and 45 CFR 116a.26 (for the period November 21, 1976 through June 30, 1978). Those requirements provided that a local educational agency (LEA) could receive Title I funds only if it used its State and local funds in each Title I area to provide services that "taken as a whole, [were] at least comparable to services being provided in [non-Title I] areas."

B. Authority for Awarding a Grantback

Section 456(a) of GEPA, 20 U.S.C. 1234e(a), provides that whenever the Secretary has recovered funds following a final audit determination with respect to an applicable program, the Secretary may consider those funds to be additional funds available for the program and may arrange to repay to the SEA or LEA affected by that determination an amount not to exceed 75 percent of the recovered funds. The Secretary may enter into this "grantback" arrangement if the Secretary determines that the—

(1) Practices and procedures of the SEA or LEA that resulted in the audit determination have been corrected, and the SEA or LEA is, in all other respects, in compliance with the requirements of the applicable program;

(2) SEA has submitted to the Secretary a plan for the use of the funds to be awarded under the grantback arrangement which meets the requirements of the program, and, to the extent possible, benefits the population that was affected by the failure to comply or by the misexpenditures that resulted in the audit exception; and

(3) Use of funds to be awarded under the grantback arrangement in accordance with the SEA's plan would serve to achieve the purposes of the program under which the funds were originally granted.

C. Plan for Use of Funds Awarded Under a Grantback Arrangement

Pursuant to section 456(a)(2) of GEPA, the SEA has applied for a grantback of $2,812,000 and has submitted a plan on behalf of BCPS for use of the grantback funds to meet the special educational needs of educationally deprived children in programs administered under Chapter 1 of the Education Consolidation and Improvement Act of 1981. 20 U.S.C. 3801 *et seq.* The final audit determinations against the SEA resulted from improper expenditures of Title I funds. However, since Chapter 1

has superseded Title I, the SEA's proposal reflects the requirements in Chapter 1—a program, similar to Title I, designed to serve educationally deprived children in low-income areas.

The SEA's plan proposes that the BCPS will use the grantback funds to provide summer school programs in 1988 and 1989 and to provide activities to enhance components of the regular Chapter 1 program during school year 1988–89.

The objective of the summer school programs will be to improve Chapter 1 students' performance in reading and mathematics. Services will be provided at 14 school sites to approximately 2,800 children in grades 1–4 from 115 public schools and 22 nonpublic schools. At each site, there will be a project facilitator, secretary, and 15 teachers.

The program will be operative for four weeks during the month of July 1988 and July 1989. Students in the program will receive 90 minutes of instruction in reading and/or mathematics and will be assigned to groups according to their diagnosed skill need and/or grade level. The instructional program will be an extension of the regular school year Chapter 1 program. However, unlike the regular school year program, the teacher will be assigned students for whom a tailored individual instructional plan has been developed.

Staff orientation and parent training will be provided prior to the beginning of the program. The program will have a strong parental involvement component. There will be reinforcement activities that are to be done at home with the involvement of the family. Strategies for assisting students with reinforcement activities will be disseminated to parents through a series of workshops to be held prior to, and concurrent with, the summer program. Parents will also be encouraged to participate in cultural experiences with the children that relate to the reading instruction, that is to be centered around thematic units, such as marine life, space, etc.

During school year 1988–89, grantback funds will be used for staff development, parent involvement activities, and the integration of cultural experiences into the regular Chapter 1 reading instructional program.

Staff development will focus on improving teachers' competence with the diagnostic/prescriptive and thematic unit approaches that are used in Chapter 1 programs to improve student performance. The grantback funds will provide the resources for intensive training for Chapter 1 teachers. Support teachers and administrators will continue to monitor the Chapter 1 programs to ensure that the strategies gained through the staff development efforts are applied in the classroom setting.

In an effort to involve more parents in the Chapter 1 reading and mathematics instructional program and maintain continuity from the 1988 summer program, parental involvement will be a major focus during the 1988–89 school year. Grantback funds will be used to provide activities for parents and teachers to get acquainted, provide opportunities for parents to attend workshops and conferences relating to Chapter 1, and to train parents to continue the home reinforcement activity concept from the summer program.

During school year 1988–89, grantback funds will also be used for cultural enrichment activities as an enhancement to the Chapter 1 instructional program. Two cultural experiences that are incorporated into the thematic units of instruction will be provided to children at each Chapter 1 school site. Chapter 1 reading and mathematics teachers will collaborate on the type of experiences to be scheduled.

D. The Secretary's Determinations

The Secretary has carefully reviewed the plan submitted by the SEA. Based upon that review, the Secretary has determined that the conditions under section 456 of GEPA have been met.

These determinations are based upon the best information available to the Secretary at the present time. If this information is not accurate or complete, the Secretary is not precluded from taking appropriate administrative action.

E. Notice of the Secretary's Intent To Enter Into a Grantback Arrangement

Section 456(d) of GEPA requires that, at least 30 days before entering into an arrangement to award funds under a grantback, the Secretary must publish in the **Federal Register** a notice of intent to do so, and the terms and conditions under which the payment will be made.

In accordance with section 456(d) of GEPA, notice is hereby given that the Secretary intends to make funds available to the Maryland SEA under a grantback arrangement. The grantback award would be in the amount of $1,875,000, which is 75 percent—the maximum percentage authorized by the statute—of the funds recovered to date by the Department as a result of the audits. An additional payment of $937,500 will be made when the SEA submits the third installment of $1,250,000, plus accrued interest, which is due in July 1988 in accordance with the audit settlement agreement.

F. Terms and Conditions Under Which Payments Under a Grantback Arrangement Would Be Made

The SEA and LEA agree to comply with the following terms and conditions under which payment under a grantback arrangement would be made:

(1) The funds awarded under the grantback must be sent in accordance with—

(a) All applicable statutory and regulatory requirements;

(b) The plan that the SEA submitted and any amendments to that plan that are approved in advance by the Secretary; and

(c) The budget that was submitted with the plan and any amendments to the budget that are approved in advance by the Secretary.

(2) All funds received under the grantback arrangement must be obligated by September 30, 1989, in accordance with section 456(c) of GEPA and the SEA's plan.

(3) The SEA, on behalf of the LEA, will, not later than January 1, 1989 and January 1, 1990, submit reports to the Secretary which—

(a) Indicate that the funds awarded under the grantback have been spent in accordance with the proposed plan and approved budget, and

(b) Describe the results and effectiveness of the project for which the funds were spent.

(4) Separate accounting records must be maintained documenting the expenditures of funds awarded under the grantback arrangement.

(Catalog of Federal Domestic Assistance Number 84.010, Educationally Deprived Children—Local Educational Agencies)

Dated: April 4, 1988.

William J. Bennett,

Secretary of Education.

[FR Doc. 88–7786 Filed 4–7–88; 8:45 am]

BILLING CODE 4000-01-M

Office of Elementary and Secondary Education

Intent To Repay to the Florida State Department of Education Funds Recovered as a Result of a Final Audit Determination; Intent To Award Grantback Funds

AGENCY: Department of Education.

ACTION: Intent to award grantback funds.

SUMMARY: Under section 456 of the General Education Provisions Act

(GEPA), the U.S. Secretary of Education (Secretary) intends to repay to the Florida State Department of Education, the State educational agency (SEA), an amount equal to approximately 68 percent of the funds recovered by the U.S. Department of Education (Department) as a result of a final audit determination. This notice describes the SEA's plan, submitted on behalf of the Duval County and Gadsden County local educational agencies (LEAs), for the use of the repaid funds and the terms and conditions under which the Secretary intends to make those funds available. The notice invites comments on the proposed grantback.

DATE: All written comments must be received on or before May 9, 1988.

ADDRESS: All written comments should be submitted to Dr. James Spillane, Director, Division of Program Support, Compensatory Education Programs, U.S. Department of Education, 400 Maryland Avenue SW., (Room 2043, MS-6276), Washington, DC 20202.

FOR FURTHER INFORMATION CONTACT: Dr. James Spillane, Telephone: (202) 732-4694.

SUPPLEMENTARY INFORMATION:

A. Background

In February 1986, the Department recovered $483,517.01 from the Florida SEA in satisfaction of claims arising from an audit covering fiscal year 1974. The claims involved the SEA's administration of Title I of the Elementary and Secondary Education Act of 1965, a program that addressed the special educational needs of educational deprived children in areas with high concentrations of children from low-income families. Specifically, three LEAs—namely, Duval County, Gadsden County, and Orange County—were not in compliance with Title I comparability requirements. Those requirements provided that an LEA could receive Title I funds only if it used its State and local funds in each Title I area to provide services that "taken as a whole, [were] at least comparable to services being provided in [non-Title I] areas * * *." 20 U.S.C. 241e(a)(3)(C) (1976). The amounts of misspent funds in the LEAs were $98,022.00, $34,028.10, and $45,466.91, respectively.

B. Authority for Awarding a Grantback

Section 456(a) of GEPA, 20 U.S.C. 1234e(a), provides that whenever the Secretary has recovered funds following a final audit determination with respect to an applicable program, the Secretary may consider those funds to be additional funds available for the program and may arrange to repay to the SEA or LEA affected by that determination an amount not to exceed 75 percent of the recovered funds. The Secretary may enter into this "grantback" arrangement if the Secretary determines that the—

(1) Practices and procedures of the SEA or LEA that resulted in the audit determination have been corrected, and the SEA or LEA is, in all other respects, in compliance with the requirements of the applicable program;

(2) SEA has submitted to the Secretary a plan for the use of the funds to be awarded under the grantback arrangement that meets the requirements of the program, and, to the extent possible, benefits the population that was affected by the failure to comply or by the misexpenditures that resulted in the audit exception; and

(3) Use of the funds to be awarded under the grantback arrangement in accordance with the SEA's plan would serve to achieve the purposes of the program under which the funds were originally granted.

C. Plan for Use of Funds Awarded Under a Grantback Arrangement

Pursuant to section 456(a)(2) of GEPA, the SEA has applied for a grantback of $328,537 and has submitted a plan on behalf of Duval County and Gadsden County LEAs for use of the grantback funds to meet the special educational needs of educationally deprived children in programs administered under Chapter 1 of the Education Consolidation and Improvement Act of 1981. 20 U.S.C. 3801 *et seq.* The SEA's request did not include Orange County because that LEA chose not to participate. The final audit determination against the SEA resulted from improper expenditures of Title I funds. However, since Chapter 1 has superseded Title I, the SEA's proposal reflects the requirements in Chapter 1—a program, similar to Title I that is designed to serve educationally deprived children in low-income areas.

Under the SEA's plan, additional benefits would be provided with the grantback funds for eligible Chapter 1 children. In Duval County, grantback funds in the amount of $73,516 would be used to provide inservice training to regular first grade teachers who have eligible Chapter 1 children in their classes. This training is necessary to assist the regular classroom teachers in better meeting the special needs of the Chapter 1 children in their classrooms. Many Chapter 1 children have language and auditory deficiencies and need a broad-based language approach to reading instruction in primary grades to prepare them for the varied reading tasks ahead in elementary school. Yet, Chapter 1 students are with Chapter 1 teachers for only thirty minutes each day for small group instruction, while the regular classroom teachers provide instruction for the remainder of the school day. Under the SEA's plan, regular first grade teachers would receive three days of teaching strategies using instructional materials emphasizing language and auditory skills development that have been successful in delivering instruction to educationally disadvantaged children. The training would be directly related to the teachers' needs to develop competencies to be more effective in meeting the special needs of children served in the Chapter 1 project.

Gadsden County would use $255,021 in grantback funds to provide a six-week reading and math summer school program for approximately 825 children who are eligible for Chapter 1 services. The services would be provided to children in grades Pre K-6 in six elementary schools for four days per week, four hours per day. Fifty-five teachers, 55 teacher aides, and 7 media specialists would provide the instructional services. The summer school teachers would identify the reading and math skills needing instructional reinforcement and write prescriptions for each student. An aide would assist each teacher in the classroom and, at a scheduled time, the teacher or aide would take the children to the media center for special instruction.

Equitable services to those provided to eligible children in public schools in both LEAs would be made available to eligible children who attend private schools.

D. The Secretary's Determination

The Secretary has carefully reviewed the plan submitted by the SEA. Based upon that review, the Secretary has determined that the conditions under section 456 of GEPA have been met.

These determinations are based upon the best information available to the Secretary at the present time. If this information is not accurate or complete, the Secretary is not precluded from taking appropriate administrative action.

E. Notice of the Secretary's Intent to Enter Into a Grantback Arrangement

Section 456(d) of GEPA requires that, at least 30 days before entering into an arrangement to award funds under a grantback, the Secretary must publish in the **Federal Register** a notice of intent to

do so, and the terms and conditions under which the payment will be made.

In accordance with section 456(d) of GEPA, notice is hereby given that the Secretary intends to make funds available to the Florida SEA under a grantback arrangement. The grantback would be in the amount of $328,537, which is approximately 68 percent of the funds recovered by the Department as a result of the final audit determination.

F. Terms and Conditions Under Which Payments Under a Grantback Arrangement Would Be Made

The SEA and LEAs agree to comply with the following terms and conditions under which payment under a grantback arrangement would be made:

(1) The funds awarded under the grantback must be spent in accordance with—

(a) All applicable statutory and regulatory requirements;

(b) The plan that the SEA submitted and any amendments to that plan that are approved in advance by the Secretary; and

(c) The budget that was submitted with the plan and any amendments to the budget that are approved in advance by the Secretary.

(2) All funds received under the grantback arrangement must be obligated by September 30, 1988, in accordance with section 456(c) of GEPA and the SEA's plan.

(3) The SEA, on behalf of the LEAs, will, not later than January 1, 1989, submit a report to the Secretary which—

(a) Indicates that the funds awarded under the grantback have been spent in accordance with the proposed plan and approved budget, and

(b) Describes the results and effectiveness of the project for which the funds were spent.

(4) Separate accounting records must be maintained documenting the expenditures of funds awarded under the grantback arrangement.

Dated: April 4, 1988.

William J. Bennett,

Secretary of Education.

(Catalog of Federal Domestic Assistance Number 84.010, Educationally Deprived Children—Local Educational Agencies)

[FR Doc. 88-7767 Filed 4-7-88; 8:45 am]

BILLING CODE 4000-01-M

Perkins Loan (Formerly National Direct Student Loan), College Work-Study, Supplemental Educational Opportunity Grant and Guaranteed Student Loan Programs

AGENCY: Department of Education.

ACTION: Extension of deadline dates to resolve test case results and to publish list of certified systems.

The Secretary extends the deadline date to resolve test case results from March 15, 1988 to April 29, 1988. In addition, the Secretary extends the March 1988 date for publishing a final notice listing certified systems to May 1988.

On September 23, 1987 (52 FR 35902–35904), the Secretary published a notice of procedures for certification of need analysis services' systems. Detailed information concerning these procedures was included in that notice. The purpose of this notice is to extend the closing date for resolving test cases. The extension is necessary because of the unanticipated need for extensive technical assistance to servicers regarding the resolution of test cases. The delay in resolving test cases also results in the delay of publishing the list of certified need analysis servicers' systems.

FOR FURTHER INFORMATION CONTACT: Margaret O. Henry or Richard P. Coppage, Division of Policy and Program Development, Office of Student Financial Assistance, 400 Maryland Avenue SW., Room 4018, ROB-3, Washington, DC 20202, Telephone (202) 732-4490.

Dated: April 4, 1988.

Kenneth D. Whitehead,

Acting Assistant Secretary for Postsecondary Education.

(Catalog of Federal Domestic Assistance No. 84.038, National Direct Student Loan Program; 84.033, College Work-Study Program; 84.007, Supplemental Educational Opportunity Grant Program; and 84.032, Guaranteed Student Loan Program)

[FR Doc. 88-7768 Filed 4-7-88; 8:45 am]

BILLING CODE 4000-01-M

DEPARTMENT OF ENERGY

Economic Regulatory Administration

[Docket Nos. OFU- 002, 003, 004]

Acceptance of Application for Rescission of a Prohibition Order Submitted by Iowa Electric Light and Power Co. for a Certain Prohibition Order Issued Pursuant to the Energy Supply and Environmental Coordination Act of 1974

AGENCY: Economic Regulatory Administration, DOE.

ACTION: Notice of acceptance.

SUMMARY: The Economic Regulatory Administration (ERA) of the Department of Energy (DOE)[1] hereby gives notice that acting under the authority granted to it in section 2(f) of the Energy Supply and Environmental Coordination Act of 1974 (ESECA), as amended by (15 U.S.C. 792(f) and implemented by 10 CFR 303.130(b)), it has accepted and is considering a request by the Iowa Electric Light and Power Company to rescind the Prohibition Order issued on June 30, 1975, to the following powerplant:

[1] Effective October 1, 1977, the responsibility for implementing ESECA was transferred by Executive Order 12009 from the Federal Energy Administration (FEA) to the Department of Energy pursuant to the Department of Energy Organization Act (42 U.S.C. 7101 *et seq.*).

Owner	Docket No.	Generating station	Unit No.	Location
Iowa Electric Light & Power Co	OFU-002	Sutherland	1	Marshalltown, Iowa.
	OFU-003		2	
	OFU-004		3	

ERA is taking this action in accordance with the provisions of 10 CFR Part 303, subpart J ("Modification of Rescission of Prohibition Orders and Construction Orders") of the ESECA regulations. Detailed information for the proceeding is provided in the **SUPPLEMENTARY INFORMATION** section below.

The public file containing a copy of the Application for Rescission and other documents and supporting materials on this proceeding is available upon request from DOE, Freedom of Information Reading Room, 1000 Independence Avenue, SW., Room 1E-190, Washington, DC 10585, Monday through Friday, 9:00 a.m. to 4:00 p.m.

DATES: Comments on DOE's intention to consider the requested rescission of the

above listed Prohibition Order is invited. Written comments are due on or before May 23, 1988. A request for public hearing must also be made within this 45-day public comment period. In making its decision regarding the requested recission action, DOE will consider all relevant information submitted or otherwise available to it.

Any information considered to be confidential by the person furnishing it must be so identified at the time of submission in accordance with 10 CFR 303.9(f). DOE reserves the right to determine the confidential status of the information and to treat it in accordance with that determination.

ADDRESSES: Fifteen copies of written comments or a request for a public hearing should be submitted to the Department of Energy, Economic Regulatory Administration, Office of Fuels Programs Case Control Unit, Room GA-093, 1000 Independence Avenue, SW., Washington, DC 20585.

Docket Nos. OFU-002, OFU-003, OFU-004 should be printed on the outside of the envelope and the document contained therein.

FOR FURTHER INFORMATION CONTACT:

Xavier Puslowski, Office of Fuels Progams, Economic Regulatory Administration, 1000 Independence Avenue, SW., Room GA-093, Washington, DC 20585, Telephone (202) 586-4708.

Steven E. Ferguson, Esq., Office of General Counsel, Department of Energy, 1000 Independence Avenue, SW., Room GA-113, Washington, DC 20585, Telephone (202) 586-6947.

SUPPLEMENTARY INFORMATION: On June 30, 1975, in accordance with the Energy Supply and Environmental Coordination Act, the Federal Energy Administration issued a Prohibition Order to Iowa Electric Light and Power Company prohibiting the burning of natural gas as a primary energy source in Sutherland Generating Station Units 1, 2 and 3. Subsequent Notice of Effectiveness (January 17, 1978) and Amended Notice of Effectiveness (December 21, 1978) were issued for these units.

Pursuant to 10 CFR 303.130 *et seq.*, Iowa Electric Light and Power Company is filing its Application for Rescission of Prohibition Orders due to a substantial change in the facts or circumstances upon which the Prohibition Order was originally issued. Since the issuance of the Prohibition Order and the Notice of Effectiveness, the United States Congress has passed legislation making adequate supplies of natural gas available to the interstate market for end users consumption generally without curtailment.

Iowa Electric Light and Power Company believes it would be advantageous to be able to use natural gas as a primary energy source in its Sutherland generating units when such an opportunity exists. With the Prohibition Orders now in effect, the Company does not have this operational flexibility.

Issued in Washington, DC, on March 30, 1988.

Robert L. Davies,

Director, Office of Fuels Programs, Economic Regulatory Administration.

[FR Doc. 88-7783 Filed 4-7-88; 8:45 am]

BILLING CODE 6450-01-M

ENVIRONMENTAL PROTECTION AGENCY

[FRL-3362-3]

Regulation of Fuels and Fuel Additives; Lead Banking Penalty Policy and Revision of Lead Usage and Reporting Policy

AGENCY: Environmental Protection Agency (EPA).

ACTION: Notice of penalty policy guidelines.

SUMMARY: This action announces the modification of the penalty policy guidelines for lead usage and lead reporting violations of the lead phasedown regulations, 40 CFR 80.20(e). The lead usage enforcement policy initially was published at 44 FR 58954 (October 12, 1979), and was previously amended at 51 FR 25253 (July 11, 1986).

FOR FURTHER INFORMATION CONTACT: Kathy M. Clark Field Operations and Support Division (EN-397F), U.S. Environmental Protection Agency, 401 M Street, SW., Washington, DC 20460. Telephone: (202) 475-7208.

SUPPLEMENTARY INFORMATION: The current penalty policy for assessing and mitigating civil penalties under section 211(d) of the Clean Air Act for violations of the lead phasedown regulations is being revised for usage and reporting violations, and a corresponding penalty policy is being established for banking violations. Two major changes to these policies are the manner by which penalties are calculated and also the economic value ascribed to a gram of lead rights, either for usage or banking purposes. The economic value of a gram of lead his risen steadily in terms of EPA compliance-enforcement costs. Therefore, the value of lead rights for all usage violations will be $.05 per gram of lead for all violations discovered after the date of publication of this notice, regardless of the quarter in which the violation may have occurred. The same value of $.05 per gram of lead will apply to all lead phasedown banking violation penalty calculations.

The method of calculating the proposed penalty for both usage and banking violations will be identical. In the past, the economic benefit component was calculated using an appropriate value of a gram of lead and added to a gravity component (deterrent factor) of $50,000 in order to arrive at the proposed penalty amount for a usage violation. In some cases, where the violator gained a substantial economic benefit, the $50,000 deterrent factor was considered as a "business expense", rather than serving as an actual deterrent. The gravity component has been changed so that it reflects the extent of the violation more accurately. Under this new policy, the economic benefit component will be calculated at $.05 per gram and the gravity component will be equal to the economic benefit component. The sum of these two will equal the proposed penalty for both banking and usage violations. Cases which involve a prior history of violation of the lead phasedown regulations will have an increase gravity component calculated.

As with other enforcement policies, EPA may exercise its enforcement discretion by attempting to resolve some minor violations without issuing a formal Notice of Violation. Moreover, the policies discussed in this notice are intended solely for the guidance of government personnel. They are not intended to create any rights or obligations, substantive or procedural, enforceable by any party. The Agency reserves the right to act at variance with these policies and procedures in any given case and to change these policies and procedures at any time without prior notice.

Copies of the policy announced in this action are available from Kathy M. Clark at the address in the Further Informaiton section of this notice.

Dated: April 4, 1988.

Don R. Clay,

Acting Assistant Administrator for Air and Radiation.

[FR Doc. 88-7726 Filed 4-7-88; 8:45 am]

BILLING CODE 6560-50-M

[FRL-33624]

Fuels and Fuel Additives; Waiver Application

AGENCY: Environmental Protection Agency (EPA).

ACTION: Notice.

SUMMARY: On March 14, 1988, Sun Refining and Marketing Company (Sun) submitted an application for a waiver of the prohibition against introduction into commerce of certain fuels and fuel additives set forth in section 211(f) of the Clean Air Act (Act). This application seeks a waiver for an ether-gasoline fuel blend containing up to 15 percent by volume methyl tertiary butyl ether (MTBE). The Administrator of EPA has until September 12, 1988 to grant or deny this application (The statutory deadline of 180 days ends on September 10, 1988, which is a Saturday. Therefore, the deadline is the next regular working day, September 12, 1988.) If not denied by that date, it will be deemed to be granted, under section 211(f)(4).

DATE: Comments should be submitted on or before May 9, 1988.

ADDRESS: Copies of the information relative to this application are available for inspection in public docket EN-88-02 at the Central Docket Section (LE-131) of the EPA, South Conference Center, Room 4, 401 M Street, SW., Washington, DC 20460, (202) 382-7548, between the hours of 8:00 a.m. and 3:00 p.m. Any comments from interested parties should be addressed to this docket with a copy forwarded to Richard G. Kozlowski, Director, Field Operations and Support Division (EN-397F), U.S. Environmental Protection Agency, 401 M Street, SW., Washington, DC 20460. As provided in 40 CFR Part 2, a reasonable fee may be charged for copying services.

FOR FURTHER INFORMATION CONTACT: David J. Kortum, Environmental Engineer, Field Operations and Support Division (EN-397F), U.S. Environmental Protection Agency, 401 M Street, SW., Washington, DC 20460 (202) 475-8841.

SUPPLEMENTARY INFORMATION: Section 211(f)(1) of the Act makes it unlawful, effective March 31, 1977, for any manufacturer of a fuel or fuel additive to first introduce into commerce, or to increase the concentration in use of, any fuel or fuel additive for use in light duty motor vehicles manufactured after model year 1974 which is not substantially similar to any fuel or fuel additive utilized in the certification of any model year 1975, or subsequent model year, vehicle or engine under section 206 of the Act. EPA has defined "substantially similar" at 46 FR 38582 (July 28, 1981).

Section 211(f)(4) of the Act provides that upon application by any fuel or fuel additive manufacturer the Administrator of EPA may waive the prohibitions of section 211(f)(1) if the Administrator determines that the applicant has established that such fuel or fuel additive will not cause or contribute to a failure of any emission control device or system (over the useful life of any vehicle in which such device or system is used) to achieve compliance by the vehicle with the emissions standards to which it has been certified pursuant to section 206 of the Act. If the Administrator does not act to grant or deny a waiver within 180 days of receipt of the application (in this case, by September 12, 1988), the statute provides that the waiver shall be treated as granted.

Methyl tertiary butyl ether (MTBE) is already permitted in gasoline in volumes up to approximately 11 percent under EPA's substantially similar interpretive rule (46 FR 38582, July 28, 1981). Sun Refining and Marketing Company (Sun) is requesting that EPA grant a waiver for introduction into commerce of an ether-gasoline fuel blend containing up to 15 percent MTBE by volume as measured by gas chromatograph or equivalent techniques. The waiver application specifies that the ether-gasoline blend must conform with the requirements of ASTM D-2 Proposal P-176, "Proposed Specification for Automotive Spark Ignitioin Engine Fuel", and/or as adopted as an ASTM standard, and the fuel manufacturer must take all reasonable precautions, including identification and description of the product on shipping manifests, to ensure that the finished fuel is not used as a base gasoline to which other oxygenated materials are added, according to EPA limitations and guidelines. The application states that handling situations with marketing of 15 percent MTBE would be the same as current marketing with other MTBE concentrations up to 11 percent.

EPA invites comments on whether the Administrator should grant or deny this waiver application.

Dated: April 4, 1988.

Don R. Clay,

Acting Assistant Administrator for Air and Radiation.

[FR Doc. 88-7727 Filed 4-7-88; 8:45 am]

BILLING CODE 6560-50-M

[FRL 3362-7]

Clean Water Act Class II; Proposed Administrative Penalty Assessment and Opportunity To Comment for Star-Brite, Inc., Joplin, MO

AGENCY: Environmental Protection Agency (EPA).

ACTION: Proposed penalty assessment.

SUMAMRY: EPA is providing notice of a proposed Administrative Penalty Assessment for an alleged violation of the Clean Water Act. EPA is also providing notice of opportunity to comment on the proposed assessment.

Under 33 U.S.C. 1319(g), EPA is authorized to issue orders assessing civil penalties for various violations of the Act. EPA may issue Class I or Class II penalty proceeding. EPA provides public notice of the Proposed Assessment of Civil Penalty Pursuant to 33 U.S.C. 1319(g)(4)(a).

Class II proceedings are conducted under EPA's Consolidated Rules of Practice governing the Administrative Assessment of Civil Penalties and the Revocation and Suspension of Permits, 40 CRF Part 22. The procedures through which the public may submit written comment on a proposed Class II Order or participate in a Class II proceeding, and the procedures by which a respondent may request a hearing, are set forth in the Consolidated Rules. The deadline for submitting public comment on a proposed Class II Order is thirty days after issuance of public notice. On the date identified below, EPA commenced the following Class II proceeding for the assessment of penalties. In the Matter of Star-Brite, Inc., 510 Tyler, Joplin Missouri, 64801; EPA Docket No. VII-88-W-0001.

Findings of Violation, Notice of Proposed Assessment of a Civil Penalty, and Notice of Opportunity to Request a Hearing, Thereon was filed on March 7, 1988 with Regional Hearing Clerk, Linda McKenzie, U.S. EPA, Region VII, 726 Minnesota Avenue, Kansas City, Kansas 66101, 913/236-2811, FTS 757-2811. EPA proposed a penalty of up to $125,000 for discharging process wastewater into the publicly owned treatment works of the City of Joplin in violation of the applicable pretreatment standard (40 CFR Part 413 Subpart A Electroplating of Common Metals Sub-category). Star-Brite, Inc., is a non-integrated metal finishing facility.

FOR FURTHER INFORMATION: Persons wishing to receive a copy of EPA's

Consolidated Rules, review the Complaint or other documents filed in these proceedings, comment upon a proposed assessment, or otherwise participate in any of the proceedings should contact the Regional Hearing Clerk identified above. The administrative record for the proceeding is located in the EPA Regional Office identified above, and the file will be open for public inspection during normal business hours. All information submitted by Star-Brite, Inc., the respondent, is available as part of the administrative record, subject to provisions of law restricting public disclosure of confidential iformation. In order to provide opportunity for public comment, EPA will issue no final order assessing a penalty in these proceedings prior to thirty days from date of this publication in the **Federal Register**.

Date: March 31, 1988.

Morris Kay,

Regional Administrator.

[FR Doc. 88-7723 Filed 4-7-88; 8:45 am]

BILLING CODE 6560-50-M

[ER-FRL-3363-1]

Environmental Impact Statements and Regulations; Availability of EPA Comments

Availability of EPA comments prepared March 21, 1988 through March 25, 1988 pursuant to the Environmental Review Process (ERP), under section 309 of the Clean Air Act and section 102(2)(c) of the National Environmental Policy Act as amended. Requests for copies of EPA comments can be directed to the Office of Federal Activities at (202) 382-5074/75. An explanation of the ratings assigned to draft environmental impact statements (EISs) was published in the **Federal Register** dated April 24, 1987 (52 FR 13749).

Draft EISs

ERP No. DS-DOI-A90065-00, Rating EC2, Undeveloped Coastal Barriers, Coastal Barrier Resources System Proposed Changes, Implementation, ME, MA, RI, CT, NY, MS, AL, TX, LA, DE, VA, NC, SC, GA and FL. SUMMARY: EPA noted environmental concerns with the preferred alternative which could result in a lack of federal regulatory consistency with the Coastal Barriers Resources Act. EPA also noted concern regarding the justification for deletions from the Coastal Barriers Resources System as well as proposed boundary delineations for aquatic habitat associated with land parcels included in the System.

Final EIS

ERP No. F-BLM-K61072-CA, Red Mountain Wilderness Study Area, Wilderness Recommendation, Designation or Nondesignation, Arcata Resource Area, Ukiah District, Mendocino County, CA. SUMMARY: EPA requested that BLM coordinate non-point source water pollution planning with the State of California pursuant to section 319 of the U.S. Clean Water Act.

ERP No. F-BLM-K61060-CA, Arcata Resource Area Wilderness Study Areas (WSAs) Wilderness Recommendations, Designation or Nondesignation, King Range and Chemise Mountain WSAs, Ukiah District, Humboldt and Mendocino Counties, CA. SUMMARY: EPA requested that BLM coordinate non-point source water pollution planning with the State of California pursuant to section 319 of the U.S. Clean Water Act.

ERP No. FS-COE-E35080-AL, Mallard-Fox Creek Area, Morgan County Port Access Channel and Dredged Material Disposal, Development and Use, Morgan County, AL. SUMMARY: EPA expressed concerns regarding mitigation for habitat lost by filling the embayment contained in site 1.

ERP No. FC-COE-K35012-CA, Sacramento River Bank Protection, Erosion Control, Collinsville to Chico Landing, River Mile 0 to 194, Updated Information, Solano, Sacramento, Sutter, Colusa, Glenn, Yolo and Butte Counties, CA. SUMMARY: EPA is concerned about the adequacy of mitigation measures planned to compensate for riparian habitat losses caused by the project. EPA requested an explanation of project compliance with section 404 of the Clean Water Act, and a presentation of cumulative impact analyses.

ERP No. F-FHW-E40706-GA, Mansell Road/GA-400 Interchange Extension, Mansell Road and Old Roswell Road Intersection to Old Alabama Road/Turner Road, Funding and 404 Permit, Fulton County, GA. SUMMARY: EPA has concerns with potential water quality and wetland impacts associated with this highway project and the lack of detailed mitigation plans to offset or minimize these impacts.

Dated: April 5, 1988.

William D. Dickerson,

Deputy Director, Office of Federal Activities.

[FR Doc. 88-7756 Filed 4-7-88; 8:45 am]

BILLING CODE 6560-50-M

[ER-FRL-3362-8]

Environmental Impact Statements; Availability

Responsible Agency: Office of Federal Activities, General Information (202) 382-5075 or (202) 382-5074.

Availability of Environmental Impact Statements Filed March 28, 1988 Through April 1, 1988 Pursuant to 40 CFR 1506.9.

EIS No. 880100, DSuppl, FHW, MD, Relocated MD-32 Improvements, MD-108 to Pindell School Road, Project Location Reevaluation, Funding and 404 Permits, Howard County, MD, Due: May 23, 1988, Contact: Edward Terry (301) 962-4010.

EIS No. 880101, Draft, NPS, AK, Lake Clark National Park and Preserve, Wilderness Recommendations, Designation or Nondesignation, AK, Due: July 7, 1988, Contact: Linda Nebel (907) 257-2654.

EIS No. 880102, Draft, AFS, CA, Black Diamond Mine Development, Plan of Operations Approval, Angeles National Forest, Tujanga Ranger District, Los Angeles County, CA, Due: June 27, 1988, Contact: Richard Borden (818) 574-5255.

EIS No. 880103, Final, COE, NY, Cazenovia Creek Flood Damage Reduction Plan, Implementation, Town of West Seneca, Erie County, NY, Due: May 9, 1988, Contact: Tod Smith (716) 876-5454.

EIS No. 880104, Draft, FHW, OR, Mill Creek/West Sixth Street Bridge Replacement, Funding, The Dalles, Wasco County, OR, Due: June 2, 1988, Contact: Dale Wilken (503) 399-5749.

EIS No. 880105, DSuppl, CGD, NY, Davids Island Residential Development, Marina and Bridge Access Roads from New Rochelle Mainland and Davis Island Construction, Updated Information and Design Modifications, Bridge and 404 Permits, City of New Rochelle, Long Island Sound, Westchester County, NY, Due: May 31, 1988, Contact: Gary Kassof (212) 668-7994.

Amended Notices

EIS No. 880046, Draft, FHW, CA, Twin Bridge Replacement across Chorro Creek, South Bay Boulevard, Funding and 404 Permit, City of Morro Bay, San Luis Obispo County, CA, Due: April 28, 1988, Contact: Glenn Clinton (916) 551-1310. Published FR 2-26-88—Review period extended.

Dated: April 5, 1988.

William D. Dickerson,

Deputy Director, Office of Federal Activities.

[FR Doc. 88-7755 Filed 4-7-88; 8:45 am]

BILLING CODE 6560-50-M

[ER-FRL-3362-9]

Intent To Prepare an Environmental Impact Statement on Monticello-Leesburg Lignite Mine

AGENCY: Environmental Protection Agency (EPA).

ACTION: Issuance of a new source National Pollutant Discharge Elimination System (NPDES) permit to the Texas Utilities Mining Company (TUMCO) for discharge of wastewater from the Monticello-Leesburg Surface Lignite Mine in Camp County, Texas.

Purpose: To meet National Environment Policy Act (NEPA) and Clean Water Act (CWA) requirements for consideration of impacts on the environment (e.g. water, air, land use, biology, socio-economics, etc.) which may result from issuance of the requested permit.

For Further Information and to be Placed on Project Mailing List: Contact: Norm Thomas, Chief, Federal Activities Branch, U.S. EPA Region VI (6E-F), Dallas, Texas 75202-2733, (214) 655-2260 or (FTS) 255-2260.

Summary: TUMCO proposes two expansions of the existing 20,000 acre Monticello Surface Lignite Mine. The first of these expansions is an additional 25,000 acres near Leesburg, Texas. EPA and TUMCO have entered into a Memorandum of Understanding (MOU) for a third party EIS on this proposed Monticello-Leesburg Mine area. The second proposed expansion (i.e. the B-2 area; approximately 17,000 acres located north of Mount Pleasant, Texas) will be covered by a separate MOU and EIS in the near future.

Alternatives: EPA may issue a NPDES permit for the project proposed or with modifications, or deny this permit. TUMCO may operate the project with a NPDES permit as proposed; with modifications to reduce adverse impact; or take no action.

Scoping: The public is invited to identify issues that should be addressed in the EIS. A public meeting will be held in the district Courtroom on the third floor of the County Courthouse in Pittsburg, Texas at 7:00 p.m. on May 17, 1988.

Estimated Date of EIS Release: November, 1988.

Responsible Official: Robert E. Layton Jr., P.E., Regional Administrator.

Richard Sanderson,

Director, Office of Federal Activities.

[FR Doc. 88-7754 Filed 4-7-88; 8:45 am]

BILLING CODE 6560-50-M

[OPTS-59842; FRL-3362-1]

Certain Chemicals Premanufacture Notices

AGENCY: Environmental Protection Agency (EPA).

ACTION: Notice.

SUMMARY: Section 5(a)(1) of the Toxic Substances Control Act (TSCA) requires any person who intends to manufacture or import a new chemical substance to submit a premanufacture notice (PMN) to EPA at least 90 days before manufacture or import commences. Statutory requirements for section 5(a)(1) premanufacture notices are discussed in EPA statements of the final rule published in the **Federal Register** of May 13, 1983 (48 FR 21722). In the **Federal Register** of November 11, 1984 (49 FR 46066 (40 CFR 723.250), EPA published a rule which granted a limited exemption from certain PMN requirements for certain types of polymers. Notices for such polymers are reviewed by EPA within 21 days of receipt. This notice announces receipt of twenty-six such PMNs and provides a summary of each.

DATES: Close of Review Periods:

Y 88-0114—February 28, 1988.

Y 88-0118, 88-0119, 88-0120, 88-0121, and 88-0122—March 9, 1988.

Y 88-0123—March 9, 1988.

Y 88-0124, 88-0125, and 88-0126—March 13, 1988.

Y 88-0127—March 14, 1988.

Y 88-0128—March 15, 1988.

Y 88-0129 and 88-0130—March 17, 1988.

Y 88-0131, 88-0132, and 88-0133—March 21, 1988.

Y 88-0134, 88-0135, and 88-0136—March 23, 1988.

Y 88-0137—March 24, 1988.

Y 88-0138, 88-0139, 88-0140, and 88-0141—March 27, 1988.

Y 88-0142—March 28, 1988.

FOR FURTHER INFORMATION CONTACT: Stephanie Roan, Premanufacture Notice Management Branch, Chemical Control Division (TS-794), Office of Toxic Substances, Environmental Protection Agency, Rm. E-611, 401 M Street, SW., Washington, DC 20460, (202) 382-3725.

SUPPLEMENTARY INFORMATION: The following notice contains information extracted from the nonconfidential version of the submission provided by the manufacturer on the PMNs received by EPA. The complete nonconfidential document is available in the Public Reading Room NE-G004 at the above address between 8 a.m. and 4 p.m., Monday through Friday, excluding legal holidays.

Y 88-0114

Importer. UNI-NTF, Inc.

Chemical. (S) Toluenediisocyanate, polybutylene glycol, trimethylolpropane polymer blocked with -caprolactam.

Use/Import. (S) Resin in understudy auto coating. Import range: 24,000 kg/yr.

Y 88-0118

Importer. Confidential.

Chemical. (G) Unsaturated polyester ether.

Use/Production. (S) Component of industrial glass binder. Prod. range: 306,000 kg/yr.

Y 88-0119

Importer. Goldschmidt Chemical Corporation.

Chemical. (G) Polyether polysiloxane.

Use/Import. (G) Open, nondispersive. Import range: Confidential.

Y 88-0120

Importer. Goldschmidt Chemical Corporation.

Chemical. (G) Polyoxyalkylene polyester.

Use/Import. (G) Open, nondispersive. Import range: Confidential.

Y 88-0121

Importer. Plymouth Chemical Company, Inc.

Chemical. (G) Crosslinked, polyacrylic homopolymer.

Use/Production. (S) Water absorbing polymer. Prod. range: Confidential.

Y 88-0122

Importer. Plymouth Chemical Company, Inc.

Chemical. (G) Crosslinked, polyacrylic homopolymer.

Use/Production. (S) Water absorbing polymer. Prod. range: Confidential.

Y 88-0123

Importer. DSM RIM Nylon, Inc.

Chemical. (G) Polyoxypropylene polyoxyethylene block copolymer ester acyl caprolactam.

Use/Import. (S) Plastic parts. Import range: Confidential.

Toxicity Data. Acute oral toxicity: LD50 >500 mg/kg, species (Rat).

Acute dermal toxicity: LD50 >2,000 mg/kg, species (Rabbit).

Eye irritation: slight, species (Rabbit).

Skin irritation: negligible, species (Rabbit).

Y 88-0124

Manufacturer. Adhesives Research, Inc.

Chemical. (S) 2,5-Furandione ethene nitrile, 1,4-dimethyl, 2,2'-azo 1-azobis 2,5-diterbutylhydroquinone.

Use/Production. (S) Adhesives. Prod. range: 15,000 kg/yr.

Y 88-0125

Manufacturer. Confidential.

Chemical. (G) Aliphatic polyurethane.

Use/Production. (G) Polymeric Plastics. Prod. range: Confidential.

Y 88-0126

Manufacturer. Confidential.

Chemical. (G) Aliphatic polyurethane.

Use/Production. (G) Coating or film. Prod. range: Confidential.

Y 88-0127

Manufacturer. Confidential.

Chemical. (G) Copolymer of acrylic esters.

Use/Production. (S) Coating: Coating modifier. Prod. range: Confidential.

Y 88-0128

Manufacturer. Alco Chemical Corporation.

Chemical. (S) Polyacrylic acid, partial sodium salt; modified polyacrylic acid.

Use/Production. (S) Industrial water treatment. Prod. range: 500,000–2,000,000 kg/yr.

Y 88-0129

Manufacturer. Koppers Co., Inc.

Chemical. (S) Polymer of: oxybis(propanol); 2,2'-oxybis(ethanol); 1,2-propandiol; 1,4-benzenedicarboxylic acid; 1,3-dibenzofurandione; 2,5-furandione.

Use/Production. (S) Bulk molding compound. Prod. range: Confidential.

Y 88-0130

Importer. Dynamit Nobel Chemicals.

Chemical. (S) Saturated Polyester Resin of Aryl dicarboxylic acids and alkyl diols.

Use/Import. (S) Paint additive. Import range: Confidential.

Toxicity Data.

Acute oral toxicity: LD50 >5 g/kg, species (Rat).

Acute dermal toxicity: LD50 3.16 g/kg, species (Rabbit).

Y 88-0131

Importer. Reichhold Chemicals, Inc.

Chemical. (G) Urethane modified alkyd resin.

Use/Import. (S) Paint component. Import range: Confidential.

Y 88-0132

Manufacturer. General Electric Company.

Chemical. (G) Poly (ethersulfoneamide acid) resin.

Use/Production. (S) Engineering Thermoplastic Composites. Prod. range: Confidential.

Y 88-0133

Manufacturer. Quantum Emery Division.

Chemical. (G) Adipic acid-neopentyl glycol, 1,2-propandiol copolymer isodecyl ester.

Use/Production. (S) PVC resin plasticizer. Prod. range: 720,000 kg/yr.

Y 88-0134

Importer. Shell Oil Company.

Chemical. (G) Terpolymer with polyolefin and carbon monoxide.

Use/Import. (G) Engineering thermoplastic. Import range: 33,000 kg/yr.

Toxicity data.

Acute oral toxicity: LD50 1,000 mg/kg, species (Rat).

Acute dermal toxicity: LD50 >2,000 mg/kg, species (Rabbit).

Eye irritation: none, species (Rabbit).

Skin irritation: negligible, species (Rabbit).

Y 88-0135

Importer. Confidential.

Chemical. (G) Resin modified phenolic resin.

Use/Import. (G) Polymer binder for printing ink. Import range: Confidential.

Y 88-0136

Importer. Confidential.

Chemical. (G) Resin modified phenolic resin.

Use/Import. (G) Polymer binder in printing ink. Import range: Confidential.

Y 88-0137

Manufacturer. Confidential.

Chemical. (G) Alkyd resin.

Use/Production. (S) Alkyd Resin for coatings. Prod. range: 110,000 kg/yr.

Y 88-0138

Manufacturer. Aristech Chemicals Corp.

Chemical. (G) Unsaturated polyester resin thermosetting polyester resin.

Use/Production. (G) Open, nondispersive. Prod. range: Confidential.

Y 88-0139

Manufacturer. Confidential.

Chemical. (G) Polymer of aromatic diacid, alkanediol and branched alkanediol.

Use/Production. (G) Polymer for coating application. Prod. range: Confidential.

Y 88-0140

Manufacturer. Confidential.

Chemical. (G) Aliphatic polyester urethane.

Use/Production. (G) Coating. Prod. range: Confidential.

Y 88-0141

Manufacturer. Confidential.

Chemical. (G) Polymer of acrylic acid esters, an acid monomer and a vinyl monomer.

Use/Production. (G) Pressure sensitive adhesive. Prod. range: Confidential.

Y 88-0142

Manufacturer. Aristech Chemical Corp.

Chemical. (G) Unsaturated polyester resin; thermosetting polyester resin.

Use/Production. (G) Thermosetting polyester Resin. Prod. range: Confidential.

Date: March 30, 1988.

Steve W. Newburg-Rinn,

Acting Director, Information Management Division, Office of Toxic Substances.

[FR Doc. 88-7641 Filed 4-7-88; 8:45 am]

BILLING CODE 6560-50-M

FEDERAL MARITIME COMMISSION

Notice of Agreement(s) Filed

The Federal Maritime Commission hereby gives notice of the filing of the following agreement(s) pursuant to section 5 of the Shipping Act of 1984.

Interested parties may inspect and obtain a copy of each agreement at the Washington, DC Office of the Federal Maritime Commission, 1100 L Street, NW., Room 10325. Interested parties may submit comments on each agreement to the Secretary, Federal Maritime Commission, Washington, DC 20573, within 10 days after the date of the **Federal Register** in which this notice appears. The requirements for comments are found in § 572.603 of Title 46 of the Code of Federal Regulations. Interested persons should consult this section before communicating with the Commission regarding a pending agreement.

Agreement No: 224-010951-001.

Title: Port of Baltimore Terminal Agreement.

Parties:

Maryland Port Administration (MPA)

Polish Ocean Lines, Inc. (POL).

Synopsis: The proposed agreement amends Agreement No. 224-010951 to reflect that MPA will discount billings for port charges for loaded containers moved by POL into and out of the Port of Baltimore (Port) and drayed to railheads in the Port.

Agreement No: 224-011049-002.

Title: Tampa Port Terminal Agreement.

Parties:

Tampa Port Authority
Seagull Terminal and Stevedoring Company.

Synopsis: The proposed agreement (1) extends the term of the basic lease through July 31, 1988, and (2) increases the lease premises to approximately 31,360 square feet.

By Order of the Federal Maritime Commission.

Dated: April 5, 1988.

Joseph C. Polking,

Secretary,

[FR Doc. 88-7716 Filed 4-7-88; 8:45 am]

BILLING CODE 6730-01-M

FEDERAL RESERVE SYSTEM

First National Bancorp, Inc., et al.; Applications To Engage de Novo in Permissible Nonbanking Activities

The companies listed in this notice have filed an application under § 225.23(a)(1) of the Board's Regulation Y (12 CFR 225.23(a)(1)) for the Board's approval under section 4(c)(8) of the Bank Holding Company Act (12 USC 1843(c)(8)) and § 225.21(a) of Regulation Y (12 CFR 225.21(a)) to commence or to engage *de novo*, either directly or through a subsidiary, in a nonbanking activity that is listed in § 225.25 of Regulation Y as closely related to banking and permissible for bank holding companies. Unless otherwise noted, such activities will be conducted throughout the United States.

Each application is available for immediate inspection at the Federal Reserve Bank indicated. Once the application has been accepted for processing, it will also be available for inspection at the offices of the Board of Governors. Interested persons may express their views in writing on the question whether consummation of the proposal can "reasonably be expected to produce benefits to the public, such as greater convenience, increased competition, or gains in efficiency, that outweigh possible adverse effects, such as undue concentration of resources, decreased or unfair competition, conflicts of interests, or unsound banking practices." Any request for a hearing on this question must be accompanied by a statement of the reasons a written presentation would not suffice in lieu of a hearing, identifying specifically any questions of fact that are in dispute, summarizing the evidence that would be presented at a hearing, and indicating how the party commenting would be aggrieved by approval of the proposal.

Unless otherwise noted, comments regarding the applications must be received at the Reserve Bank indicated or the offices of the Board of Governors not later than April 29, 1988.

A. Federal Reserve Bank of Philadelphia (Thomas K. Desch, Vice President) 100 North 6th Street, Philadelphia, Pennsylvania 19105:

1. *First National Bancorp, Inc.*, Centre Hall, Pennsylvania; to engage *de novo* through its subsidiary, Centre Hall Life Insurance Company, Centre Hall, Pennsylvania, in the business of life and disability insurance as a domestic life and disability reinsurer pursuant to § 225.25(b)(8)(i) of the Board's Regulation Y.

B. Federal Reserve Bank of Cleveland (John J. Wixted, Jr., Vice President) 1455 East Sixth Street, Cleveland, Ohio 44101:

1. *Union National Corporation*, Cleveland, Ohio; to engage *de novo* through its subsidiary, Union National Life Insurance Company, Phoenix, Arizona, in reinsuring credit life and disability insurance on the sum of payments issued in connection with lease transactions made by Union National Corporation's Bank subsidiaries pursuant to § 225.25(b)(8) of the Board's Regulation Y. The lease transactions involved are nonoperating and full payout leases.

Board of Governors of the Federal Reserve System, April 4, 1988.

James McAfee,

Associate Secretary of the Board.

[FR Doc. 88-7706 Filed 4-7-88; 8:45 am]

BILLING CODE 6210-01-M

Meridian Bancorp., Inc.; Acquisition of Company Engaged in Permissible Nonbanking Activities

The organization listed in this notice has applied under § 225.23(a)(2) or (f) of the Board's Regulation Y (12 CFR 225.23(a)(2) or (f)) for the Board's approval under section 4(c)(8) of the Bank Holding Company Act (12 U.S.C. 1843(c)(8)) and § 225.21(a) of Regulation Y (12 CFR 225.21(a)) to acquire or control voting securities or assets of a company engaged in a nonbanking activity that is listed in § 225.25 of Regulation Y as closely related to banking and permissible for bank holding companies. Unless otherwise noted, such activities will be conducted throughout the United States.

The application is available for immediate inspection at the Federal Reserve Bank indicated. Once the application has been accepted for processing, it will also be available for inspection at the offices of the Board of Governors. Interested persons may express their views in writing on the question whether consummation of the proposal can "reasonably be expected to produce benefits to the public, such as greater convenience, increased competition, or gains in efficiency, that outweigh possible adverse effects, such as undue concentration of resources, decreased or unfair competition, conflicts of interests, or unsound banking practices." Any request for a hearing on this question must be accompanied by a statement of the reasons a written presentation would not suffice in lieu of a hearing, identifying specifically any questions of fact that are in dispute, summarizing the evidence that would be presented at a hearing, and indicating how the party commenting would be aggrieved by approval of the proposal.

Comments regarding the application must be received at the Reserve Bank indicated or the offices of the Board of Governors not later than May 2, 1988.

A. Federal Reserve Bank of Philadelphia (Thomas K. Desch, Vice President) 100 North 6th Street, Philadelphia, Pennsylvania 19105:

1. *Meridian Bancorp., Inc.*, Reading, Pennsylvania; to acquire Atlantic Equipment Leasing Co., Inc., Wyomissing, Pennsylvania, and thereby engage in equipment leasing pursuant to § 225.25(b)(5) of the Board's Regulation Y.

Board of Governors of the Federal Reserve System, April 4, 1988.

James McAfee,

Associate Secretary of the Board.

[FR Doc. 88-7707 Filed 4-7-88; 8:45 am]

BILLING CODE 6210-01-M

The Middlefield Banc Corp. et al.; Formations of; Acquisitions by; and Mergers of Bank Holding Companies

The companies listed in this notice have applied for the Board's approval under section 3 of the Bank Holding Company Act (12 U.S.C. 1842) and § 225.14 of the Board's Regulation Y (12 CFR 225.14) to become a bank holding company or to acquire a bank or bank holding company. The factors that are considered in acting on the applications

BEST COPY AVAILABLE

are set forth in section 3(c) of the Act (12 U.S.C. 1842(c)).

Each application is available for immediate inspection at the Federal Reserve Bank indicated. Once the application has been accepted for processing, it will also be available for inspection at the offices of the Board of Governors. Interested persons may express their views in writing to the Reserve Bank or to the offices of the Board of Governors. Any comment on an application that requests a hearing must include a statement of why a written presentation would not suffice in lieu of a hearing, identifying specifically any questions of fact that are in dispute and summarizing the evidence that would be presented at a hearing.

Unless otherwise noted, comments regarding each of these applications must be received not later than April 29, 1988.

A. **Federal Reserve Bank of Cleveland** (John J. Wixted, Jr., Vice President) 1455 East Sixth Street, Cleveland, Ohio 44101:

1. *The Middlefield Banc Corporation*, Middlefield, Ohio; to become a bank holding company by acquiring 100 percent of the voting shares of The Middlefield Banking Company, Middlefield, Ohio.

B. **Federal Reserve Bank of Chicago** (David S. Epstein, Vice President) 230 South LaSalle Street, Chicago, Illinois 60690:

1. *Illini Community Bancorp, Inc.*, Springfield, Illinois; to acquire 100 percent of the voting shares of Elkhart Banc Shares, Inc., Elkhart, Illinois, and thereby indirectly acquire Elkhart Community Bank, Elkhart, Illinois.

2. *Illini Community Bancorp, Inc.*, Springfield, Illinois; to acquire 51 percent of the voting shares of SBV Bancshares, Inc., Virden, Illinois, and thereby indirectly acquire State Bank of Virden, Virden, Illinois.

Board of Governors of the Federal Reserve System, April 4, 1988.

James McAfee,

Associate Secretary of the Board.

[FR Doc. 88-7708 Filed 4-7-88; 8:45 am]

BILLING CODE 6210-01-M

DEPARTMENT OF HEALTH AND HUMAN SERVICES

Office of the Secretary

Agency Forms Submitted to the Office of Management and Budget for Clearance

Each Friday the Department of Health and Human Services (HHS) publishes a list of information collection packages it has submitted to the Office of Management and Budget (OMB) for clearance in compliance with the Paperwork Reduction Act (44 U.S.C. Chapter 35). The following are those packages submitted to OMB since the last list was published on April 1, 1988.

Health Care Financing Administration

(Call Reports Clearance Officer on 301-594-1238 for copies of package)

1. Evaluation of Minnesota Medicaid Capitated Health Alternatives—NEW—Follow up survey to evaluate the effectiveness of a Medicaid capitated health demonstration. Respondents: Individuals or households. Number of Respondents: 1,360; Frequency of Response: One-time; Estimated Annual Burden: 898 hours.

2. ESRD Death Notification—0938-0448—This form is completed by all Medicare approved ESRD facilities upon the death of an ESRD patient. It's primary purpose is to collect fact of death and cause of death. Respondents: Businesses or other for-profit. Number of Respondents: 1,701; Frequency of Response: Occasionally; Estimated Annual Burden: 3,759 hours.

3. Supplemental Survey Mechanism—NEW—This mechanism establishes procedures whereby State survey agencies inspecting Home Health Agencies (HHA) will contact beneficiaries to obtain information on services provided by the HHA. Respondents: Individuals or households. Number of Respondents: 3,900; Frequency of Response: Single-time; Estimated Annual Burden: 5,850 hours.

OMB Desk Officer: Allison Herron.

Office of Human Development Services

(Call Reports Clearance Officer on 202-472-4415 for copies of package)

1. A National Evaluation of Title IV-E Foster Care Independent Living Programs for Youth—NEW—To assess the influence of Pub. L. 99-272 on State and local foster care agencies and their allocation of resources, and the impact of the new legislation on programs, services and adolescents (aged 16 years and older) served by Title IV-E foster care program. Respondents: State or local governments. Number of Respondents: 500; Frequency of Response: One-time; Estimated Annual Burden: 500 hours.

OMB Desk Officer: Shannah Koss-McCallum.

Family Support Administration

(Call Reports Clearance Officer on 202-245-0652 for copies of package)

1. Quality Control Negative Case Action Worksheet/Review Schedule—0970-0006—The form FSA-6401 (QC negative case action Worksheet/Review Schedule) records the results of State agencies quality control reviews of negative case actions. The negative case action review performed by States is a mandatory part of the AFDC quality control program. The negative case action review promotes proper State administration of the AFDC and adult assistance programs by assessing the appropriations of State performance in the denial or termination of benefits. Respondents: State or local governments. Number of Respondents: 20,057; Frequency of Response: Annual; Estimated Annual Burden: 20,114 hours.

OMB Desk Officer: Elaina Norden

Public Health Services

(Call Reports Clearance Officer on 202-245-2100 for copies of package)

Centers for Disease Control

1. Feasibility Study/Teratogenicity of High-Dose Vitamin A Supplements—NEW—The purpose of this study is to compare the rates of major abnormalities among infants of women who took high-dose vitamin A supplements during pregnancy with rates among infants of women who took multi- or prenatal vitamins. This feasibility study will estimate the number of exposed infants that may be identified in a full study. Respondents: Individuals or households. Number of Respondents: 6,667; Frequency of Response: One-time; Estimated Annual Burden: 556 hours.

Food and Drug Administration

1. Labeling for Weight Control Foods—0910-0218—Provides for labeling to enable those who need to control their weight to identify and evaluate foods which may help them to identify and evaluate foods and attain/maintain desired weight using a balanced and nutritious diet program. Respondents: Businesses or other for-profit. Number of for-profit. Number of Respondents: 82; Frequency of Response: Other; Estimated Annual Burden: 300,025 hours.

OMB Desk Officer: Shannah Koss-McCallum.

As mentioned above, copies of the information collection clearance packages can be obtained by calling the Reports Clearance Officer, on one of the following numbers:

PHS: 202-245-2100
HCFA: 301-594-1238
FSA: 202-245-0652
OHDS: 202-472-4415

Written comments and recommendations for the proposed information collections should be sent directly to the appropriate OMB Desk

Officer designated above at the following address: OMB Reports Management Branch, New Executive Office Building, Room 3208, Washington, DC 20503, Attn: (name of OMB Desk Officer).

Dated: April 4, 1988.

James F. Trickett,

Deputy Assistant Secretary, Administrative and Management Services

[FR Doc. 88-7719 Filed 4-7-88; 8:45 am]

BILLING CODE 4150-04-M

Privacy Act of 1974; Amendment of System Notice

AGENCY: Office of the Assistant Secretary for Management and Budget, Office of the Secretary, HHS.

ACTION: Notice of amendment to existing system of records.

SUMMARY: The Department of Health and Human Services (DHHS) is amending the system notice for its system #09-90-0024. This system was formerly called "Accounting Records of Payments to and Collections from Individuals from Operating Division, Agency, and Regional Finance Management and Disbursing Offices." We are renaming it the "Financial Transactions of HHS Accounting and Finance Offices." The amendments would do the following: (1) Add a new routine use allowing disclosure of credit card numbers to banks in order to collect payments on debts, (2) amend the routine use for litigation-related disclosures, and (3) make other minor changes.

EFFECTIVE DATE: The new and revised routine uses will take effect without further notice May 9, 1988, unless comments received on or before that date cause a contrary decision.

ADDRESS: Please address comments to: Deputy Assistant Secretary, Finance, Room 743-H, Hubert Humphrey Building, 200 Independence Avenue SW., Washington, D.C. 20201.

FOR FURTHER INFORMATION CONTACT: Sue Mundstuk, DASF Privacy Act Coordinator, telephone (202) 245-6841.

SUPPLEMENTARY INFORMATION: The system notice was last published at 49 FR 30124 (1984). The proposed new routine use for credit card transactions would allow HHS to transmit credit card numbers, provided voluntarily by debtors, to banks designated by the Treasury Department as collecting agents. This will enable persons owing HHS money to use credit cards to pay their debts, and will thus improve our debt collection activity.

We are revising our litigation routine use to more completely cover the litigation-related disclosures that are necessary.

We are revising the description of the categories of individuals covered by the system. The system was originally intended to include all persons who receive payment from, or owe money to, HHS finance offices. The categories that have been listed in the notice were originally intended to be exemplary rather than exhaustive. We are revising the notice to make this intent clear. We are making minor changes in Appendices 1 and 2 of the system notice, to update it.

These actions do not require a report of altered system under 5 U.S.C. 552a(o).

The complete system notice is below.

Dated: March 28, 1988.

Dennis J. Fischer,

Deputy Assistant Secretary, Finance.

09-90-0024

SYSTEM NAME:

Financial Transactions of HHS Accounting and Finance Offices.

SECURITY CLASSIFICATION:

None.

SYSTEM LOCATION:

See Appendix 1.

Memoranda copy of claims submitted for reimbursement of travel and other expenditures while on official business may also be maintained at the administrative office of the HHS employee. Records concerning delinquent debts may also be maintained at the program office or by designated claims officers apart from the finance office.

CATEGORIES OF INDIVIDUALS COVERED BY THE SYSTEM:

All persons who receive a payment from OPDIV/Agency/Regional finance offices and all person owing monies to these HHS offices. Person receiving payments include, but are not limited to, travelers on official business, grantees, contractors, consultants, and recipients of loans and scholarships. Persons owing monies include, but are not limited to, persons who have been overpaid and who owe HHS a refund and persons who have received from HHS goods or services for which there is a charge or fee (e.g., Freedom of Information Act requesters).

The following systems of records contain similar payment and collection transaction records, some, but not all, of which duplicate records in this system:

Alcohol, Drug Abuse, and Mental Health Administration.

09-30-0023—Records of Contracts Awarded to Individuals, HHS/ADAMHA/OA.

09-30-0027—Grants and Cooperative Agreements: Research, Research Training, Research Scientist Development, Education, Demonstration, Fellowships, Clinical Training, Community Service, HHS/ADAMHA/OA.

Health Resources and Services Administration

09-15-0044—Health Education Assistance Loan (HEAL) Program Loan Control Master File, HHS/HRSA/BHPR.

09-15-0045—HRSA Loan Repayment/Debt Management Record System, HHS/HRSA/OA.

CATEGORIES OF RECORDS IN THE SYSTEM:

Name, identification number, address, purpose of payment, accounting classification and amount paid.

Also, in the event of an overpayment and for delinquent loans, grants or scholarships, the amount of the indebtedness, the repayment status and the amount to be collected.

AUTHORITY FOR MAINTENANCE OF THE SYSTEM:

Budget and Accounting Act of 1950 (Pub. L. 81-784). Debt Collection Act of 1982 (Pub. L. 97-365).

PURPOSE(S):

These records are an integral part of the accounting systems at principal operating component, agency, regional office and specific area locations. The records are used to keep track of all payments to individuals, exclusive of salaries and wages, based upon prior entry into the systems of the official commitment and obligation of government funds. When an individual is to repay funds advanced as a loan or scholarship, etc., the records will be used to establish a receivable record and to track repayment status. In the event of an overpayment to an individual, the record is used to establish a receivable record for recovery of the amount claimed. The records are also used internally to develop reports to the Internal Revenue Service and applicable state and local taxing officials of taxable income. This is a Department-wide notice of payment and collection activities at all locations listed in Appendix 1.

ROUTINE USES OF RECORDS MAINTAINED IN THE SYSTEM, INCLUDING CATEGORIES OF USERS AND THE PURPOSES OF SUCH USES:

1. Records will be routinely disclosed to the Treasury Department for check preparation.

2. Records may be disclosed to members of Congress concerning a Federal financial assistance program.

Also, disclosure may be made to a congressional office from an individual's record in response to an inquiry from the congressional office made at the request of that individual.

3. In the event the Department deems it desirable or necessary, in determining whether particular records are required to be disclosed under the Freedom of Information Act, disclosure may be made to the Department of Justice for the purpose of obtaining its advice.

4. A record from this system of records may be disclosed as a "routine use" to a Federal, State or local agency maintaining civil, criminal or other relevant enforcement records or other pertinent records, such as current licenses, if necessary to obtain a record relevant to an agency decision concerning the hiring or retention of an employee, the issuance of a security clearance, the letting of a contract or the issuance of a license, grant or other benefit.

5. A record from this system of records may be disclosed to a Federal agency, in response to its request, in connection with the hiring or retention of an employee the issuance of a security clearance, the reporting of an investigation of an employee, the letting of a contract or the issuance of a license, grant, or other benefit by the requesting agency, to the extent that the record is relevant and necessary to the requesting agency's decision on the matter.

6. Where Federal agencies having the power to subpoena other Federal agencies' records, such as the Internal Revenue Service or the Civil Rights Commission, issue a subpoena to the Department for records in this system of records, the Department will make such records available.

7. Where a contract between a component of the Department and a labor organization recognized under E.O. 11491 provides that the agency will disclose personal records relevant to the organization's mission, records in this system of records may be disclosed to such organization.

8. A record may be disclosed to the Department of Justice, to a court, or other tribunal, or to another party before such tribunal, when

(1) HHS, or any component thereof; or

(2) Any HHS employee in his or her official capacity; or

(3) Any HHS employee in his or her individual capacity where the Department of Justice (or HHS, where it is authorized to do so) has agreed to represent the employee; or

(4) The United States or any agency thereof where HHS determines that the litigation is likely to affect HHS or any of its components,

is a party to litigation or has an interest in such litigation, and HHS determines that the use of such records by the Department of Justice, the tribunal, or the other party is relevant and necessary to the litigation and would help in the effective representation of the governmental party, provided however, that in each case, HHS determines that such disclosure is compatible with the purpose for which the records were collected.

9. A record about a loan applicant or potential contractor or grantee may be disclosed to credit reporting agencies to obtain a credit report in order to determine his/her creditworthiness.

10. When an individual applies for a loan under a loan program as to which the OMB has made a determination under I.R.C. 6103(a)(3), a record about his/her application may be disclosed to the Treasury Department to find out whether he/she has a delinquent tax account, for the sole purpose of determining his/her creditworthiness.

11. A record from this system may be disclosed to the following entities in order to help collect a debt owed the United States:

a. To another Federal agency so that agency can effect a salary offset;

b. To another Federal agency so that agency can effect an administrative offset under common law or under 31 U.S.C. 3716 (withholding from money payable to, or held on behalf of, the individual);

c. To the Treasury Department to request his/her mailing address under I.R.C. 6103(m)(2) in order to locate him/her or in order to have a credit report prepared;

d. To agents of the Department and to other third parties, including credit reporting agencies, to help locate him/her or to obtain a credit report on him/her, in order to help collect or compromise a debt;

e. To debt collection agents under 31 U.S.C. 3718 or under common law to help collect a debt; and

f. To the Justice Department for litigation for further administrative action.

Disclosure under part (d) of this use is limited to the individual's name, address, Social Security number, and other information necessary to identify him/her. Disclosure under parts (a)–(c) and (e) is limited to those items; the amount, status, and history of the claim; and the agency or program under which the claim arose. An address obtained from IRS may be disclosed to a credit reporting agency under part (d) only for purposes of preparing a commercial credit report on the individual. Part (a) applies to claims or debts arising or payable under the Social Security Act if and only if the employee consents in writing to the offset.

12. A record from this system may be disclosed to another Federal agency that has asked the Department to effect an administrative offset under common law or under 31 U.S.C. 3716 to help collect a debt owed the United States. Disclosure under this routine use is limited to: Name, address, Social Security number, and other information necessary to identify the individual, information about the money payable to or held for the individual, and other information concerning the administrative offset.

13. Disclosures with regard to claims or debts arising under or payble under the Social Security Act may be made from this system to "consumer reporting agencies" as defined in the Fair Credit Reporting Act (15 U.S.C. 1681a(f)) or the Federal Claims Collection Act of 1966 (31 U.S.C. 3701(a)(3)). However, this disclosure will not be made with regard to debts from overpayments to beneficiaries under Title II (Old-Age, Survivors, and Disability Insurance) and Title XVI (Supplementary Security Income) of this Act. The purpose of this disclosure is to aid in the collection of outstanding debts owed the Federal Government. Disclosure of records is limited to the individual's name, address, Social Security number, and other information necessary to establish the individual's identity; the amount, status, and history of the claim; and the agency or program under which the claim arose.

14. Information in this system of records is used to prepare W–2 and 1099 Forms to submit to the Internal Revenue Service and applicable state and local governments items considered to be included as income to an individual: certain travel related payments to employees, all payments made to persons not treated as employees (e.g. fees to consultants and experts), and amounts written-off as legally or administratively uncollectable, in whole or in part.

15. A record may be disclosed to banks enrolled in the Treasury Credit Card Network to collect a payment or debt when the individual has given his/her credit card number for this purpose.

DISCLOSURE TO CONSUMER REPORTING AGENCIES:

Disclosure pursuant to 5 U.S.C. 552a(b)(12): Disclosure may be made from this system to "consumer reporting agencies" as defined in the Fair Credit Reporting Act (15 U.S.C. 1681a(f)) or the Federal Claims Collection Act of 1966 (31 U.S.C. 3701(a)(3)). The purpose of

this disclosure is to aid in the collection of outstanding debts owed to the Federal Government, typically, to provide an incentive for debtors to repay delinquent Federal Government debts by making these debts part of their credit records. Disclosure of records is limited to the individual's name, address, Social Security number, and other information necessary to establish the individual's identity; the amount, status, and history of the claim; and the agency or program under which the claim arose. The disclosure will be made only after the procedural requirements of 31 U.S.C. 3711(f) have been followed.

POLICIES AND PRACTICES FOR STORING, RETRIEVING, ACCESSING, RETAINING, AND DISPOSING OF RECORDS IN THE SYSTEM:

STORAGE:

Hard copy documents are manually filed at agency and regional office sites; and on disc pack and magnetic tape at central computer sites.

RETRIEVABILITY:

This varies according to the particular operating accounting system within the Operating Division, Agency and Regional Office. Usually the hard copy document is filed by name within accounting classification. Computer records may be indexed by social security number and voucher number. Intra-departmental uses and transfers concern the validation and certification for payment, and for HHS internal audits.

SAFEGUARDS:

1. *Authorized Users:* Employees and officials directly responsible for programmatic or fiscal activity, including administrative and staff personnel, financial management personnel, computer personnel, and managers who have responsibilities for implementing HHS funded programs.

2. *Physical Safeguards:* File folders, reports and other forms of personnel data, and electronic diskettes are stored in areas where fire and life safety codes are strictly enforced. All documents and diskettes are protected during lunch hours and nonworking hours in locked file cabinets or locked storage areas. Magnetic tapes and computer matching tapes are locked in a computer room and tape vault.

3. *Procedural Safeguards:* Password protection of automated records is provided. All authorized users protect information from public view and from unauthorized personnel entering an office.

The safeguards described above were established in accordance with HHS Chapter 45-13 of the General Administration Manual; and the HHS ADP Systems Manual Part 6, "ADP Systems Security."

RETENTION AND DISPOSAL:

Records are purged from automated files once the accounting purpose has been served; printed copy and manual documents are retained and disposed of in accord with General Accounting Office principles and standards as authorized by the National Archives and Records Service.

SYSTEM MANAGER(S) AND ADDRESS:

See Appendix 2.

NOTIFICATION PROCEDURE:

Inquiries are to be made, either in writing or in person, to the organizations listed under "Location" in appendix 1, with the exception of Food and Drug Administration contact:

FDA Privacy Act Coordinator (HFW-30) Food and Drug Administration, 5600 Fishers Lane, Rockville, MD 20857.

Give name and social security number, purpose of payment or collection (travel, grant, etc.) and, if possible, the agency accounting classification.

RECORD ACCESS PROCEDURE:

Same as notification procedures. Requesters should also clearly specify the record contents being sought, and may include an accounting of disclosures that have been made of their records, if any. (These access procedures are in accordance with Department Regulations [45 CFR 5b.5(a)(2)) Federal Register, October 8, 1975, page 47410.)

CONTESTING RECORD PROCEDURES:

Contact the official at the address specified under notification procedures above, and reasonably identify the record and specify the information being contested, the corrective action sought, and the reasons for requesting the correction, along with supporting information to show how the record is inaccurate, incomplete, untimely or irrelevant.

RECORD SOURCE CATEGORIES:

Travel vouchers submitted by the individual; grant, contract and loan award document; delinquent loan, grant and scholarship record; consultant invoice of services rendered; and application for travel advance.

SYSTEMS EXEMPTED FROM CERTAIN PROVISIONS OF THE ACT:

None.

Appendix 1

Location

Payments to and Collections from individuals records are located at the following HHS Regional Offices:

Regional Office 01, John F. Kennedy Federal Bldg., Government Center, Boston, MA 02203.

Regional Office 02, 26 Federal Plaza, New York, NY 10007.

Regional Office 03, 3535 Market Street, P.O. Box 13716, Philadelphia, PA 19101.

Regional Office 04, 101 Marietta Tower, Atlanta, GA 30323.

Regional Office 05, 300 South Wacker Drive, Chicago, IL 60606.

Regional Office 06, 1200 Maine Tower, Dallas, TX 75202.

Regional Office 07, Federal Office Bldg., 601 East 12th Street, Kansas City, MO 64106.

Regional Office 08, 19th and Stout Streets, Denver, CO 80294.

Regional Office 09, Federal Office Buildings, 50 United Nations Plaza, San Francisco, CA 94102.

Regional Office 010, Arcade Plaza Bldg., 1319 Second Avenue, Seattle, WA 98101.

Payments to and Collections from individuals records are located at the following HHS Operating Division and Agency Headquarters and Field Offices:

Office of the Secretary (to include Office of Human Development Services records), Hubert H. Humphrey Bldg., 200 Independence Ave., SW., Div. of Accounting Operations, Washington, DC 20201.

Indian Health Service, Headquarters, 5600 Fishers Lane, Room 6A-30, Rockville, MD 20857.

Aberdeen Area Office, Indian Health Service, Federal Building, 115 4th Avenue SE., Aberdeen, SD 57401.

Alaska Native Health Service, 250 Gambell Street, Anchorage, AK 99501.

Albuquerque Area Office, Indian Health Service, 505 Marquette NW., Suite 1502, Albuquerque, NM 87102-2162.

Albuquerque IHS Headquarters West Office, Indian Health Service, 2401 12th Street, NW. RM3N, Albuquerque, NM 87102.

Bemidji Area Office, Indian Health Service, 203 Federal Building, Bemidji, MN 56601.

Billings Area Office, Indian Health Service, Post Office Box 2143, 711 Central Avenue, Billings, MT 59103.

California Area Office, Indian Health Service, 2999 Fulton Avenue, Sacramento, CA 95821.

Nashville Area Office, Indian Health Service, 1101 Kermit Drive, Suite 810, Nashville, TN 37217-2191.

Navajo Area Office, Indian Health Service, P.O. Box G, Window Rock, AZ 86515-0190.

Oklahoma Area Office, Indian Health Service, 215 Dean A. McGee Street NW., Room 409, Oklahoma City, OK 73102.

Phoenix Area Office, Indian Health Service, 3738 North 16th Street, Suite A, Phoenix, AZ 85016-5981.

Portland Area Office, Indian Health Service, 1220 SW Third Avenue, Room 476, Portland, OR 97204.

Tucson Area Office, Indian Health Service, 7900 South J.J. Stock Road, Tucson, AZ 85746.

Public Health Service, Centers for Disease Control, Financial Management Office, 1600 Clifton Road, Atlanta, GA 30333.

Public Health Service, Centers for Disease Control, CDC/NIOSH Accounting Branch, Robert A. Taft Laboratories, Room 116, 4676 Columbia Parkway, Cincinnati OH 45226.

Food and Drug Adm., HFA-120, 5600 Fishers Lane, Rockville, MD 20857.

Food and Drug Adm., 880 W. Peachtree St., NW., Atlanta, GA 30309.

Food and Drug Adm., 585 Commercial Street, Boston, MA 02109.

Food and Drug Adm., 599 Delaware Avenue, Buffalo, NY 14202.

Food and Drug Adm., Room 700—Federal Office Bldg., 850 3rd Avenue (at 30th Street), Brooklyn, NY 11232.

Food and Drug Adm., 20 Evergreen Pl., East Orange, NJ 07018.

Food and Drug Adm., Room 1204, U.S. Customhouse, 2nd and Chestnut Streets, Philadelphia, PA 19106.

Food and Drug Adm., 900 Madison Avenue, Baltimore, MD 21201.

Food and Drug Adm., P.O. Box S-4427, San Juan, PR 00905.

Food and Drug Adm., Room 1222, Main Post Office Bldg., 433 West Van Buren Street, Chicago, IL 60607.

Food and Drug Adm., 1560 East Jefferson Avenue, Detroit, MI 48207.

Food and Drug Adm., 1141 Central Parkway, Cincinnati, OH 45202.

Food and Drug Adm., 240 Hennepin Avenue, Minneapolis, MN 55401.

Food and Drug Adm., 3032 Bryan Street, Dallas TX 75204.

Food and Drug Adm., Room 222, U.S. Customhouse Building, 423 Canal Street, New Orleans, LA 70130.

Food and Drug Adm., National Center for Toxicological Research, Jefferson, AR 72079.

Food and Drug Adm., 1009 Cherry Street, Kansas City, MO 64106.

Food and Drug Adm., Room 1002, U.S. Courthouse and Courthouse Building, 1114 Market Street, St. Louis, MO 63101.

Food and Drug Adm., Room 573, New Customhouse Building, 721 19th Street, Denver, CO 80202.

Food and Drug Adm., Room 518, Federal Office Building, 50 Fulton Street, San Francisco, CA 94102.

Food and Drug Adm., 1521 West Pico Boulevard, Los Angeles, CA 90015.

Food and Drug Adm., Federal Office Bldg., 909 First Avenue, Seattle, WA 98174.

National Institutes of Health, Operations Accounting Branch, Bldg. 31, Room B1B07, 9000 Rockville Pike, Bethesda, MD 20014.

National Institutes of Health, Rocky Mountain Laboratory, Hamilton, MT 59840.

Alcohol, Drug Abuse, and Mental Health Administration, Saint Elizabeths Hospital, Finance Office, Administration Bldg., Washington, DC 20032.

Social Security Administration, Program and Fiscal Operations Office, Post Office Box 47, Baltimore, MD 21203.

Social Security Administration, Bureau of Supplemental Income, 4-M-5 Annex Bldg., Baltimore, MD 21235.

Social Security Administration, Bureau of Disability Payments, 1508 Woodlawn Drive, 1J2, Baltimore MD 21241.

Social Security Administration, Northeastern Program Center, 9805 Horace Harding Expressway, Flushing, NY 11368.

Social Security Administration, Midatlantic Program Center, 401 North Broad Street, Philadelphia, PA 19108.

Social Security Administration, Southeastern Program Centr. 225 Third Avenue North, Birmingham, AL 35285.

Social Security Administration, Great Lakes Program Center, 165 North Canal Street, Chicago, IL 60606.

Social Security Administration, MidAmerica Program Center, 601 East 12th Street, Kansas City, MO 64106.

Social Security Administration, Western Program Center, Post Office Box 100, San Francisco, CA 94101.

Health Care Financing Administration, Gwynn Oak Building, 1710 Gwynn Oak Avenue, Baltimore, MD 21235.

For Payments to and Collections from individuals records at the following central payments office for grants and contracts:

Office of the Secretary, Federal Assistance Financing Branch, Box 6021, Rockville, MD 20857.

Appendix 2

System Manager, Departmental principles and standards concerning the system of records are the responsibility of:

Department of Health, and Human Services, Assistant Secretary for Management and Budget. Office of the Secretary, Room 510A, Humphrey Building, Washington, DC 20201.

Operational responsibilities are as follows:

For Payments and Collections from individual records at Department and Regional Office:

HHS, Office of Secretary and Regional Office, Office of Secretary, Deputy Assistant Secretary, Finance, Room 70D1, Humphrey Building, Washington, DC 20201.

For Payments and Collections from individuals records at Principal Operating Component Offices:

Health (CDC, FDA, NIH, ADAMHA, HRSA, ASH, IHS)

Public Health Service, Director, Division of Financial Management, Room 16-17, Parklawn Building, 5600 Fishers Lane, Rockville, MD 20857.

Social Security Administration, Director, Office of Financial Management, Room 840 Annex Social Bldg., Baltimore, MD 21235.

Office of Human Development, Services Director, Office of Management Services, Room 309D, HHH Building, 200 Independence Ave., SW., Washington, DC 20201.

Family Support Administration, Associate Administrator, Office of Financial Management, HHS Wilber Cohen Building, Room 5611, 300 Independence Avenue SW., Washington, DC 20201.

Health Care Financing Administration Director, Office of Management and Budget, Room G-P-4, East High Rise Building, 6401 Security Blvd., Baltimore, MD 21235 or Room 538.H1, Hubert H. Humphrey Building, 200 Independence Avenue SW., Washington, DC 20201.

[FR Doc. 88-7718 Filed 4-7-88; 8:45 am]

BILLING CODE 4150-04-M

Food and Drug Administration

[Docket No. 87P-0207]

Canned Pacific Salmon Deviating From Identity Standard; Amendment of Temporary Marketing Permit; Bumble Bee Seafoods, Inc.

AGENCY: Food and Drug Administration.

ACTION: Notice.

SUMMARY: The Food and Drug Administration (FDA) is announcing that a temporary permit to market test canned skinless and boneless chunk salmon packed in water and containing sodium tripolyphosphate to inhibit protein curd formation during retorting is being amended to reflect that the test product is to be manufactured at one additional plant. This amendment will provide a broader base for the collection of data on consumer acceptance of the test product.

FOR FURTHER INFORMATION CONTACT: Catharine R. Calvert, Center for Food Safety and Applied Nutrition (HFF-414), Food and Drug Administration, 200 C Street, SW., Washington, DC 20204, 202-485-0121.

SUPPLEMENTARY INFORMATION: A temporary permit was issued under the provisions of 21 CFR 130.17 to Bumble Bee Seafoods, Inc., 5775 Roscoe Ct., San Diego, CA 92123, to market test canned skinless and boneless chunk salmon packed in water and containing added sodium tripolyphosphate, in order to measure consumer acceptance of the new food. The test product deviates from the requirements of the standard of identity for canned Pacific salmon (21 CFR 161.170) that was promulgated under section 401 of the Federal Food, Drug, and Cosmetic Act (21 U.S.C. 341). Notice of issuance of the temporary permit to Bumble Bee Seafoods, Inc., was published in the **Federal Register** of July 13, 1987 (52 FR 26186). The expiration date of the permit is December 12, 1988.

Bumble Bee Seafoods, Inc., has requested that the temporary permit be amended to permit the test product to be manufactured at an additional plant at Chugach Alaska Fisheries, Inc., Ocean Dock Rd., Cordova, AK 99574.

Accordingly, under the provisions of 21 CFR 130.17(f), FDA is amending the temporary permit to indicate that, in addition to the Petersburg Fisheries' plant in Petersburgh, AK 99833, the test product is to be manufactured at Chugach Alaska Fisheries, Inc., Ocean Dock Rd., Cordova, AK 99574. All other terms and conditions of this permit remain unchanged.

Dated: March 31, 1988.

Richard J. Ronk,

Acting Director, Center for Food Safety and Applied Nutrition.

[FR Doc. 88-7751 Filed 4-7-88; 8:45am]

BILLING CODE 4160-01-M

[Docket No. 84P-0346]

Surgical Simplex™ P Antibiotic Bone Cement; Availability of Commissioner's Order Following a Hearing Before an Ad Hoc Advisory Committee

AGENCY: Food and Drug Administration.

ACTION: Notice.

SUMMARY: The Food and Drug Administration (FDA) is announcing the availability of the Commissioner of Food and Drugs' order on a petition for reconsideration of the agency's denial of premarket approval for Howmedica, Inc.'s Surgical Simplex™ P Antibiotic Bone Cement. The Commissioner's order, which follows receipt of the report and recommendation of the Ad Hoc Public Advisory Committee to Review the Denial of Premarket Approval for Surgical Simplex™ P Antibiotic Bone Cement, affirms the Center for Devices and Radiological Health's (CDRH) denial of approval for the device. This notice also announces the availability of the advisory committee's report and recommendation in the proceeding.

ADDRESS: Requests for single copies of the documents may be submitted to the Dockets Management Branch (HFA-305), Food and Drug Administration, Rm. 4-62, 5600 Fishers Lane, Rockville, MD 20857. (Send two self-addressed adhesive labels to assist the Branch in processing your requests.).

FOR FURTHER INFORMATION CONTACT: Tenny P. Neprud, Jr., Division of Regulations Policy (HFC-220), Food and Drug Administration, 5600 Fishers Lane, Rockville, MD 20857, 301-443-3480.

SUPPLEMENTARY INFORMATION: By order dated June 29, 1984, the Director of the Office of Device Evaluation of FDA's CDRH denied approval of a premarket approval application (PMA) for the Surgical Simplex™ P Antibiotic Bone Cement filed by Howmedica, Inc., 235 East 42d St., New York, NY 10017. This device, a polymethylmethacrylate cement, that includes two antibiotics, erythromycin and colistin, is intended for use in attaching prostheses to living bone in orthopedic surgical procedures and in pathological fractures. The addition of the antibiotics to the bone cement is proposed to help reduce the risk of localized infection during the intraoperative and postoperative period. CDRH's denial was based on the applicant's failure to satisfy the safety and effectiveness requirements of section 515(d)(2) (A) and (B) of the Federal Food, Drug, and Cosmetic Act (the act) (21 U.S.C. 360e(d)(2) (A) and (B)).

In response to CDRH's order, the applicant filed a petition, under section 515(g) of the act, for administrative review of the decision. The petitioner requested that the Commissioner refer CDRH's denial of approval of the PMA to an advisory committee of experts established under section 515(g)(2)(B) of the act, for its independent review of the denial in accordance with section 515(g)(2)(A) of the act.

Accordingly, in the **Federal Register** of May 30, 1986 (51 FR 19610), FDA announced that it intended to establish such an advisory committee and defined the scope of its review by listing seven questions that the committee would consider (51 FR 19611). In subsequent notices the agency announced establishment of the committee (February 6, 1987; 52 FR 3865) and announced its membership and summarized the procedures to be followed at the hearing (April 1, 1987; 52 FR 10413).

The hearing was held on April 27, 1987, in Rockville, MD. Following the hearing, the advisory committee, after independent study of the data and information provided to it, including the testimony presented at the hearing, submitted to FDA its report and recommendation in accordance with section 515(g)(2)(A) of the act.

The Commissioner has issued his order in the matter in accordance with section 515(g)(2)(C) of the act. On the basis of the Commissioner's review of all the evidence in the proceeding, including the PMA, the advisory committee's report and recommendation, the comments of the parties, and all other parts of the record, the Commissioner found that, in the circumstances of this case, a well-controlled clinical investigation in humans is necessary to demonstrate a reasonable assurance that the device is safe and effective as labeled.

Accordingly, the Commissioner affirmed CDRH's order of June 29, 1984, denying approval of the PMA for Surgical Simplex™ P Anatibiotic Bone Cement on the ground that the PMA does not provide a reasonable assurance, as required by section 515(d)(2) (A) and (B) of the act, that the device is safe and effective under the conditions of use prescribed, recommended, or suggested in the device's proposed labeling. Because the committee was given selected portions of the PMA to review in making its report and recommendation to FDA, to comply with section 520(h)(2) of the act (21 U.S.C. 360j(h)(2)), the Commissioner also directed CDRH to make a summary of the safety and effectiveness data on Surgical Simplex™ P Antibiotic Bone Cement available to the public at the earliest possible date.

A copy of the advisory committee's report and recommendation and a copy of the Commissioner's order have been included in the administrative record for this proceeding under Docket No. 84P-0346 and are available for public review in the Dockets Management Branch (address above) between 9 a.m. and 4 p.m., Monday through Friday. FDA will include in the administrative record the summary of safety and effectiveness data on the device that CDRH prepares and will publish a notice of its availability in a future issue of the **Federal Register**.

Dated: April 1, 1988.

John M. Taylor,

Associate Commissioner for Regulatory Affairs.

[FR Doc. 88-7705 Filed 4-7-88; 8:45 am]

BILLING CODE 4160-01-M

Advisory Committee meeting; Amendment of Notice

AGENCY: Food and Drug Administration.

ACTION: Notice.

SUMMARY: The Food and Drug Administration (FDA) is amending a public advisory committee meeting notice of the Pulmonary-Allergy Drugs Advisory Committee on April 28 and 29, 1988. The amendment reflects a revision of the agendas for the open committee discussion on April 28 and April 29, 1988. Notice of the April 28 and 29, 1988, meeting was published in the **Federal Register** of March 21, 1988 (53 FR 9148).

SUPPLEMENTARY INFORMATION: In FR Doc. 88-6059, appearing at page 9148 in the **Federal Register** of March 21, 1988, the following corrections are made under the heading "Pulmonary-Allergy Drugs Advisory Committee":

On page 9148, third column, lines 1-8 of the *Open committee discussion* paragraph, the agendas scheduled for the April 28 and April 29, 1988, meeting are revised to read as follows:

Open committee discussion. On April 28, 1988, the committee will discuss (1) The new drug evaluation review process, and (2) data supporting pediatric use of inhaled albuterol. On April 29, the committee will discuss (1) the guidelines for testing of

bronchodilators, and (2) the use of caffeine for apnea of prematurity.

Dated: April 1, 1988.

John M. Taylor,

Associate Commissioner for Regulatory Affairs.

[FR Doc. 88-7750 Filed 4-7-88; 8:45 am]

BILLING CODE 4160-01-M

Consumer Participation; Open Meetings

AGENCY: Food and Drug Administration.

ACTION: Notice.

SUMMARY: The Food and Drug Administration (FDA) is announcing the following consumer exchange meetings: Cincinnati District Office, chaired by James C. Simmons, District Director. The topics to be discussed are FDA's role in protecting Americans from the acquired immunodeficiency syndrome (AIDS) virus and the question of how FDA should set priorities for activities relating to AIDS.

DATE: Tuesday, April 26, 1988, 10 a.m.

ADDRESS: John Weld Peck Federal Bldg., 550 Main St., Rm. 5411, Cincinnati, OH 45202.

FOR FURTHER INFORMATION CONTACT: Theresa C. Hoog, Consumer Affairs Officer, Food and Drug Administration, 1141 Central Parkway, Cincinnati, OH 45202, 513-684-3501.

Minneapolis District Office, chaired by James I. Roberts, District Director. The topic to be discussed is food labeling issues—health claims, irradiation, and cholesterol.

DATE: Wednesday, April 27, 1988, 1:30 to 3:30 p.m.

ADDRESS: County Courthouse, 400 North 4th St., LaCrosse, WI 54601.

FOR FURTHER INFORMATION CONTACT: Donald W. Aird, Consumer Affairs Officer, Food and Drug Administration, 240 Hennepin Ave., Minneapolis, MN 55401, 612-334-4100.

SUPPLEMENTARY INFORMATION: The purpose of these meetings is to encourage dialogue between consumers and FDA officials, to identify and set priorities for current and future health concerns, to enhance relationships between local consumers and FDA's District Offices, and to contribute to the agency's policymaking decisions on vital issues.

Dated: April 1, 1988.

John M. Taylor,

Associate Commissioner for Regulatory Affairs.

[FR Doc. 88-7704 Filed 4-7-88; 8:45 am]

BILLING CODE 4160-01-M

DEPARTMENT OF THE INTERIOR

Office of the Secretary

National Environmental Policy Act; Withdrawal of Draft Environmental Impact Statement

AGENCY: Department of the Interior.

ACTION: Notice of withdrawal of Draft Environmental Impact Statement.

SUMMARY: This notice announces the status of withdrawal of draft environmental impact statements (EIS) that were issued during the period 1980-1982.

DATE: Effective March 31, 1988.

FOR FURTHER INFORMATION CONTACT: Bruce Blanchard, Director of Environmental Project Review, Office of the Secretary, Room 4239, Department of the Interior, Washington, DC 20240. Telephone (202) 343-3891.

SUPPLEMENTARY INFORMATION: Pursuant to the National Environmental Policy Act of 1969 (NEPA) during calendar years 1980, 1981 and 1982, the Department of the Interior prepared 208 draft EISs including supplemental draft EISs. Of these, 186 went directly to final EISs, 5 were superceded by revised draft EIS, 2 were superceded by notices of intent to prepare new DEISs, and 14 were closed without a final EIS for various reasons (e.g., proposal dropped, modified, enacted by Congress, etc.).

The remaining draft EIS (#81-42) was prepared by the National Park Service for the Chattahoochee River National Recreation Area General Management Plan in Georgia. This notice announces its withdrawal effective March 31, 1988. This draft EIS is 6 years old and policies, proposals, and environments have changed. Moreover, and possibly more important, comments received from reviewers are out of date and may not reflect current positions. If further Departmental action is necessary for this proposal, the NEPA process will be reinitiated.

This notice continues the Department's policy to ensure that its NEPA process is current. On December 31, 1982 all outstanding draft EISs released during calendar years 1970-1976 were withdrawn (48 FR 66). Similar withdrawals occurred on September 30, 1983 for 1977-1978 (48 FR 44114) and February 29, 1984 for 1979 (49 FR 10166). The 1977 withdrawal retained one draft EIS because it was involved in litigation (DES 77-18, Lower Truckee/Carson Rivers Operating Criteria, Nevada). This draft EIS was subsequently withdrawn by the Bureau of Reclamation on May 31, 1985 by a notice of intent to prepare a new EIS for the operating criteria (50 FR 23201).

Date: April 4, 1988.

Martin L. Smith,

Deputy Assistant Secretary of the Interior.

[FR Doc. 88-7746 Filed 4-7-88; 8:45 am]

BILLING CODE 4310-10-M

Bureau of Land Management

[WY-030-08-4111-01]

Rawlins District Advisory Council; Meeting

AGENCY: Bureau of Land Management, Interior.

ACTION: Notice of Meeting of the Rawlins District Advisory Council.

SUMMARY: Notice is hereby given in accordance with Public Law 94-579 that a meeting of the Rawlins District Advisory Council will be held. The meeting will consist of a field trip/tour of Amoco's Bairoil CO^2 Cycling Facility and the Wertz and Lost Soldier oil fields.

DATE: May 11, 1988.

ADDRESS: Amoco's Bairoil CO^2 Cycling Facility, 2 Miles West of Lamont on Highway 73. Bairoil, Wyoming.

FOR FURTHER INFORMATION CONTACT: Carol Moore, ext. 345, or Dick Bastin, District Manager, Rawlins District, Bureau of Land Management, P.O. Box 670, Rawlins, Wyoming 82301, (307) 324-7171.

SUPPLEMENTARY INFORMATION: The meeting will begin at 10:00 a.m. in the conference room of the Main Office Building of Amoco's Bairoil CO^2 Cycling Facility. New members will be introduced. A public comment period will be held at 10:30 a.m. with a tour of the Cycling Facility and adjacent areas to follow. Lunch will be catered at the Amoco Office. A tour of the field operations at the Wertz and Lost Soldier oil fields will continue in the afternoon.

The meeting is open to the public. Anyone interested in attending the meeting and/or making an oral statement should notify the District Manager by May 4, 1988. Written statements also may be filed before the meeting for the Board's consideration.

Summary minutes will be available for review within 30 days after the meeting at the Rawlins District Office. Copies of the minutes may be obtained for the cost of duplication.

Richard Bastin,

District Manager.

[FR Doc. 88-7711 Filed 4-7-88; 8:45 am]

BILLING CODE 4310-22-M

[(AA-320-08-4220-10)]

Proposed Withdrawal; Nevada.

AGENCY: Bureau of Land Management, Interior.

ACTION: Notice.

SUMMARY: The Bureau of Land Management proposes to withdraw approximately 52,840 acres of public lands in Clark, Lincoln, and Mineral Counties, Nevada. These lands are scheduled to be exchanged in accordance with the terms of the Nevada-Florida Land Exchange Authorization Act of 1988 or, as appropriate, S. 854, 100th Congress. This notice closes the lands for up to 2 years from surface entry and mining. The lands will remain open to mineral leasing.

FOR FURTHER INFORMATION CONTACT: Vienna Wolder, BLM Nevada State Office, P.O. Box 12000, Reno, Nevada 89520, 702-784-5481.

SUPPLEMENTARY INFORMATION: On April 5, 1988, a petition was approved allowing the Bureau of Land Management to file an application to withdraw the following described public land from settlement, sale, location, or entry under the general land laws, including the mining laws, subject to valid existing rights:

Mount Diablo Base and Meridian

T. 11 S., R. 63 E.,
Sec. 13, S½;
Sec. 19, that part lying east of U.S. Highway 93 centerline;
Secs. 20 to 29, inclusive;
Secs. 30 and 31 inclusive, that part lying east of U.S. Highway 93 centerline;
Secs. 32 to 35, inclusive;
Sec. 36, W½.
T. 12 S., R. 63 E.,
Sec. 1, W½;
Secs. 2 to 5, inclusive;
Sec. 6 and 7, that part lying east of U.S. Highway 93 centerline;
Secs. 8 to 11, inclusive;
Sec. 12, W½W½;
Sec. 13, W½;
Secs. 14 to 17, inclusive;
Sec. 18, that part lying east of U.S. Highway 93 centerline;
Sec. 19, that part lying east of U.S. Highway 93 centerline;
Secs. 20 to 23, inclusive;
Sec. 24, W½;
Secs. 25 to 28, inclusive;
Secs. 29, that part lying east of U.S. Highway 93 centerline;
Sec. 30, that part lying east of U.S. Highway 93 centerline;
Sec. 32, that part lying east of U.S. Highway 93 centerline;
Secs. 33 to 36, inclusive;
T. 12 S., R. 64 E.,
Sec. 31, W½SW¼, unsurveyed.
T. 13 S., R. 63 E.,
Secs. 1 to 4, inclusive;
Sec. 5, that part lying east of U.S. Highway 93 centerline;
Sec. 8, that part lying east of U.S. Highway 93 centerline;
Secs. 9 to 16, inclusive;
Sec. 17, that part lying east of U.S. Highway 93 centerline;
Sec. 20, that part lying east of U.S. Highway 93 centerline and north of State Highway 168 centerline;
Secs. 21 to 23, inclusive, that part lying north of State Highway 168 centerline;
Sec. 24;
Sec. 25, that part lying north of State Highway 168 centerline;
Sec. 26, that part lying north of State Highway 168 centerline;
T. 13 S., R. 64 E.,
Sec. 6, W½, unsurveyed;
Sec. 7, W½ and W½SE¼, unsurveyed;
Secs. 18 and 19, unsurveyed;
Sec. 30, unsurveyed, that part lying north of State Highway 168 centerline;
T. 6 N., R. 33 E.;
Secs. 10 to 13, inclusive;
Sec. 14, E½;
Sec. 15, W½;
Sec. 21;
Sec. 22, W½ and S½SE¼;
Sec. 23, E½ and S½SW¼;
Sec. 24, E½, W½NW¼, NE¼NW¼, N½SE¼NW¼, SE¼SE¼NW¼, and SW¼;
Sec. 25;
Sec. 26, NE¼, W½, N¼SE¼, and W½SE¼;
Sec. 27;
Sec. 34;
Sec. 35, NE¼NE¼, W½, W½SE¼, and SE¼SE¼;
Sec. 36.

The lands described aggregate approximately 51,710 acres in Clark, Lincoln, and Mineral Counties.

The segregation applies to Federal mineral estate for the following described lands:

Mount Diablo Base and Meridian

6N., R. 33 E.,
Sec. 14, W½;
Sec. 15, E½;
Sec. 22, NE¼ and N½SE¼;
Sec. 23, NW¼ and N½SW¼;
Sec. 24, SW¼SE¼NW¼.

The lands described aggregate approximately 1,130 acres in Mineral County.

The purpose of the proposed withdrawal is to maintain the status quo pending completion of the exchange provided for in the Nevada-Florida Land Exchange Authorization Act of 1988 or, as appropriate, S. 854, 100th Congress. Until a withdrawal application is filed, no further action will be taken on this proposal.

For a period of 2 years from the date of publication of this notice in the **Federal Register**, the lands will be segregated as specified above unless the application is canceled or a withdrawal is approved prior to that date. The temporary uses which may be permitted during this segregative period are those uses compatible with the purpose of the proposed withdrawal and legislation.

April 5, 1988.

Dean Stepanek,

Assistant Director, Land and Renewable Resources.

[FR Doc. 88-7788 Filed 4-7-88; 8:45 am]

BILLING CODE 4310-HC-M

Fish and Wildlife Service

Sea Lamprey Control in Lake Champlain; Extension of Review period for Draft Environmental Impact Statement on Use of Lampricides

AGENCY: Fish and Wildlife Service, Interior.

ACTION: Notice.

SUMMARY: This notice advises the public that the review comment period has been extended for the DEIS on the Use of Lampricides in a Temporary Program of Sea Lamprey Control in Lake Champlain with an Assessment of Effects on Certain Fish Populations and Sportfisheries. The comment period has been extended from March 31, 1988 to October 1, 1988.

DATES: The written comment period has been further extended by the Fish and Wildlife Service to October 1, 1988. A Notice of Availability was published on October 22, 1987 (52 FR 39570). At that time it was announced that written comments were due on March 31, 1988.

ADDRESS: Comments should be addressed to: Howard N. Larsen, Regional Director, Region 5, U.S. Fish and Wildlife Service, One Gateway Center, Suite 700, Newton Corner, Massachusetts 02158.

FOR FURTHER INFORMATION CONTACT: Mr. Ralph Abele, U.S. Fish and Wildlife Service, One Gateway Center, Suite 700, Newton Corner, Massachusetts 02158, (617) 965-5100,X298. Individuals wishing copies of this Draft EIS for review should immediately contact the above individual. Copies have been sent to all agencies, organizations and individuals who participated in the review process to date.

William C. Ashe,

Acting Regional Director.

[FR Doc. 88-7733 Filed 4-7-88; 8:45 am]

BILLING CODE 4130-55-M

Minerals Management Service

Environmental Document Prepared for Proposed Oil and Gas Operations on the Pacific Outer Continental Shelf (OCS)

AGENCY: Minerals Management Service (MMS), U.S. Department of the Interior.

ACTION: Notice of the Availability of Environmental Documents Prepared for OCS Plans of Exploration on the Pacific OCS.

SUMMARY: The MMS, in accordance with Federal regulations (40 CFR Section 1501.4 and Section 1506.6) that implement the National Environmental Policy Act (NEPA), announces the availability of two NEPA-related Environmental Assessments (EAs) and Findings of No Significant Impact (FONSIs), prepared by the MMS for the following proposed oil and gas exploration activities on the Pacific OCS.

Activity/operator	Location	Date
Conoco, Inc., OCS-P 0522, Map 68 (Block 49N 66W).	Eastern Santa Barbara Channel.	March 3, 1988.
Chevron U.S.A., Inc., OCS-P 0525, Map 68 (Block 48N 64W).	....do....	March 31, 1988.

Persons interested in reviewing the environmental documents for the proposals listed above or obtaining information about EAs and FONSIs prepared for acitivities on the Pacific OCS are encouraged to contact the MMS office in the Pacific OCS Region.

FOR FURTHER INFORMATION CONTACT: Regional Supervisor, Office of Leasing and Environment, Pacific OCS Region, Minerals Management Service, 1340 West Sixth Street, Mail Stop 300, Los Angeles, CA, 90017-1297, telephone (213) 894-6775.

SUPPLEMENTAL INFORMATION: The MMS prepares EAs and FONSIs for proposals which relate to exploration for and the development/production of oil and gas resources on the Pacific OCS. The EAs examine the potential environmental effects of activities described in the proposals and present MMS conclusions regarding the significance of those effects. The EA is used as a basis for determining whether or not approval of the proposal constitutes major Federal actions that significantly affect the quality of the human environment in the sense of NEPA 102(2)(c). A FONSI is prepared in those instances where the MMS finds that approval will not result in significant effects on the quality of the human environment. The FONSI briefly presents the basis for that finding and includes a summary or copy of the EA.

This Notice constitutes the public Notice of Availability of environmental documents required under the NEPA regulations.

Dated: April 1, 1988.

James W. Sutherland,

Acting Regional Director.

[FR Doc. 88-7712 Filed 4-7-88; 8:45 am]

BILLING CODE 4310-MR-M

INTERSTATE COMMERCE COMMISSION

Notice of Intent To Engage in Compensated Intercorporate Hauling Operations

This is to provide notice as required by 49 U.S.C. 10524(b)(1) that the named corporations intend to provide or use compensated intercorporate hauling operations as authorized in 49 U.S.C. 10524(b).

A. 1. Parent Corporation: Inland Container Corporation I, 151 N. Delaware Street, P.O. Box 925, Indianapolis, IN 46206-0925.

2. Directly or indirectly wholly-owned subsidiaries which will participate in the operations, and state of incorporation:

A. Anderson Box Company, Inc.—Indiana.

B. El Morro Corrugated Box Corporation—Delaware.

C. El Morro Corrugated Box Corporation—de Puerto Rico.

D. Indisc, Inc.—Indiana.

E. Inland Paper Company, Inc.—Indiana.

F. Inland Real Estate Investments, Inc.—Indiana.

G. Inland-Rome Inc.—Delaware.

H. Inland-Orange Inc.—Delaware.

I. Sabine River & Northern Railroad, Inc.—Texas.

J. Inland Container Corporation—Delaware.

B. 1. Parent corporation and address of principal office: Pressure Vessel Service, Inc., d/b/a PVS Chemicals, Inc., 11001 Harper Avenue, Detroit, Michigan 48213.

2. Wholly-owned subsidiaries which will participate in the operations, and states of incorporations:

(i) Bay Chemical Company—Michigan;

(ii) Dynecol, Inc.—Michigan;

(iii) Chemical Transport Services, Inc.—Michigan;

(iv) PVS Chemicals, Inc. (Illinois)—Michigan;

(v) PVS Chemicals, Inc. (New York)—Michigan;

(vi) PVS Chemicals, Inc. (Ohio)—Michigan;

(vii) Fanchem, Ltd.—Ontario, Canada;

(viii) PVS Chemicals, Inc. (Michigan)—Michigan;

(ix) PVS-Nolwood Chemicals—Michigan;

(x) PVS Chemicals, Inc. (Texas) (doing business as "Tulsa Chemical Company")

Noreta R. McGee,

Secretary.

[FR Doc. 88-7736 Filed 4-7-88; 8:45 am]

BILLING CODE 7035-01-M

DEPARTMENT OF LABOR

Bureau of International Labor Affairs

Review of the Annual Reports Submitted to Congress Regarding the Status of Internationally Recognized Worker Rights in Foreign Countries

Notice

The purpose of this notice is to announce that the Secretary of Labor has been requested by the Committee on Appropriations of the Senate in Report 100-189 to conduct an indepth study with a view to improving the breadth, content and utility of the annual reports submitted to the Congress pursuant to section 505(c) of the Trade Act of 1974, as amended, 19 U.S.C. section 2465(c), regarding the status of internationally recognized worker rights in foreign countries. By July 29, 1988, the Secretary will submit a report to the Congress on the findings of this study, including recommendations for upgrading the internal capacity of the U.S. Government to monitor and report on other countries' respect for such rights.

The Department of Labor invites public comment on the annual reports as they pertain to internationally recognized worker rights. In particular, public input would be welcomed on:

1. The extent to which the reports cover the worker rights issues (the right of association; the right to organize and bargain collectively; the prohibition of forced or compulsory labor; a minimum age for the employment of children; and acceptable conditions of work with regard to minimum wages, hours of work and occupational safety and health);

2. The completeness of the reports in addressing worker rights issues in various counties, including those with labor conditions which have been the

subject of adverse comment by other organizations;

3. The consistency of the reports in their treatment of worker rights issues when compared to the treatment given these issues by other organizations;

4. Recommendations for improving the coverage of worker rights in the annual reports.

In order for the Department of Labor to complete its study on time, public comments must be received no later than April 29, 1988. All communications should be addressed to: Mr. William Brumfield, Bureau of International Labor Affairs, U.S. Department of Labor, Room S-5006, 200 Constitution Ave., NW., Washington, DC 20210. Telephone: (202) 523-6234.

Signed at Washington, DC, this 4th day of April, 1988.

Eugene K. Lawson,

Deputy Under Secretary, International Affairs.

[FR Doc. 88-7720 Filed 4-7-88; 8:45 am]

BILLING CODE 4510-28-M

Employment and Training Administration

Final Planning Estimates for Program Year (PY) 1988 Basic Labor Exchange Activities Authorized Under the Wagner-Peyser Act

AGENCY: Employment and Training Administration, Labor.

ACTION: Notice.

SUMMARY: This notice announces the final planning estimates for Program Year (PY) 1988 [July 1, 1988 through June 30, 1989] for basic labor exchange activities provided under the Wagner-Peyser Act.

FOR FURTHER INFORMATION CONTACT: Robert A. Schaerfl, Director, U.S. Employment Service, 200 Constitution Avenue NW., Room N-4470, Washington , DC 20210. Telephone: (202) 535-0157.

SUPPLEMENTARY INFORMATION: In accord with Section 6(b)(5) of the Wagner-Peyser Act, the Employment and Training Administration is publishing final estimates for each State's projected allotment for PY 1988.

Preliminary planning estimates were published in the **Federal Register** on February 12, 1988 (53 FR 4234). The total amount of funds currently available for distribution to States for public employment service activities is $723,029,000 less $14,600,000, which will be withheld to finance postage costs associated with the conduct of employment service business. This represents a $600,000 increase over postage costs published with the preliminary planning estimates due to a postal rate increase scheduled for April 1988. Funds will be distributed in accord with formula criteria established in Section 6(a) and (b) of the Wagner-Peyser Act. Civilian labor force (CLF) and unemployment data for Calendar Year 1987 were used in making the formula calculations. The Secretary of Labor set aside 3 percent of the total available funds, as authorized under Section 6(b)(4), to assure that each State will have sufficient resources to maintain statewide employment services. In accordance with this provision, $21,252,870 has been set aside for administrative formula distribution. These set-aside funds are included in the total planning estimate. Set-aside funds are distributed in two steps to States which have lost in relative share of resources from the prior year. In step one, States which have a CLF below one million and are below the median CLF density are maintained at 100 percent of their relative share of prior year resources. The remainder is distributed in step two to all other States losing in relative share of resources from the prior year but which do not meet the size and density criteria for step one.

Signed at Washington, DC, this 29th day of March 1988.

Roberts T. Jones,

Acting Assistant Secretary of Labor.

BILLING CODE 4510-30-M

U.S. DEPARTMENT OF LABOR--EMPLOYMENT AND TRAINING ADMINISTRATION
FINAL PY 1988 WAGNER-PEYSER ALLOTMENTS TO STATES
03-11-1988

	BASIC FORMULA	3% DISTRIBUTION STEP 1*	STEP 2**	TOTAL	TOTAL ALLOTMENT***
Alabama	10,889,925	0	327,741	327,741	11,217,666
Alaska	6,722,432	978,531	0	978,531	7,700,963
Arizona	8,604,829	0	0	0	8,604,829
Arkansas	6,364,287	0	602,048	602,048	6,966,335
California	71,382,852	0	0	0	71,382,852
Colorado	9,712,650	0	0	0	9,712,650
Connecticut	7,897,474	0	0	0	7,897,474
Delaware	1,919,258	0	59,508	59,508	1,978,766
District of Columbia	4,619,531	0	578,309	578,309	5,197,840
Florida	29,748,814	0	0	0	29,748,814
Georgia	15,604,562	0	0	0	15,604,562
Hawaii	2,471,802	0	309,440	309,440	2,781,242
Idaho	5,600,981	815,290	0	815,290	6,416,271
Illinois	32,431,825	0	0	0	32,431,825
Indiana	14,746,229	0	0	0	14,746,229
Iowa	7,888,297	0	987,519	987,519	8,875,816
Kansas	6,271,755	0	0	0	6,271,755
Kentucky	10,176,296	0	0	0	10,176,296
Louisiana	13,543,464	0	0	0	13,543,464
Maine	3,330,851	484,845	0	484,845	3,815,696
Maryland	11,455,779	0	0	0	11,455,779
Massachusetts	13,822,361	0	0	0	13,822,361
Michigan	26,516,201	0	0	0	26,516,201
Minnesota	11,502,431	0	0	0	11,502,431
Mississippi	7,393,294	0	261,555	261,555	7,654,849
Missouri	13,858,444	0	0	0	13,858,444
Montana	4,577,152	666,259	0	666,259	5,243,411
Nebraska	5,500,835	800,713	0	800,713	6,301,548
Nevada	4,449,473	647,674	0	647,674	5,097,147
New Hampshire	2,525,716	0	0	0	2,525,716
New Jersey	18,679,745	0	0	0	18,679,745
New Mexico	5,136,368	747,660	0	747,660	5,884,028
New York	47,599,335	0	5,958,861	5,958,861	53,558,196
North Carolina	15,816,562	0	0	0	15,816,562
North Dakota	4,660,908	678,451	0	678,451	5,339,359
Ohio	29,057,612	0	0	0	29,057,612
Oklahoma	10,883,227	0	1,362,449	1,362,449	12,245,676
Oregon	7,617,806	0	953,657	953,657	8,571,463
Pennsylvania	29,177,080	0	407,865	407,865	29,584,945
Puerto Rico	8,429,565	0	0	0	8,429,565
Rhode Island	2,418,261	0	144,456	144,456	2,562,717
South Carolina	8,389,840	0	0	0	8,389,840
South Dakota	4,307,751	627,045	0	627,045	4,934,796
Tennessee	12,672,600	0	0	0	12,672,600
Texas	49,088,632	0	0	0	49,088,632
Utah	9,421,576	1,371,423	0	1,371,423	10,792,999
Vermont	2,017,998	293,744	0	293,744	2,311,742
Virginia	14,229,439	0	0	0	14,229,439
Washington	12,853,942	0	0	0	12,853,942
West Virginia	4,947,026	701,336	0	701,336	5,648,362
Wisconsin	13,171,991	0	0	0	13,171,991
Wyoming	3,342,162	486,491	0	486,491	3,828,653
FORMULA TOTAL	685,449,226	9,299,462	11,953,408	21,252,870	706,702,096
Guam	331,490	0	0	0	331,490
Virgin Islands	1,395,414	0	0	0	1,395,414
Indicia Postage	14,600,000	0	0	0	14,600,000
NATIONAL TOTAL	701,776,130	9,299,462	11,953,408	21,252,870	723,029,000

* - FUNDS ARE ALLOCATED TO THE 13 STATES WHOSE RELATIVE SHARE DECREASED FROM PY 1987 TO THE PY 1988 BASIC FORMULA AMOUNT AND WHICH HAVE A CIVILIAN LABOR FORCE (CLF) BELOW ONE MILLION AND ARE BELOW THE MEDIAN CLF DENSITY. THESE STATES ARE HELD HARMLESS AT 100% OF THEIR PY 1987 RELATIVE SHARE.

** - THE BALANCE OF THE 3% FUNDS ARE DISTRIBUTED TO THE REMAINING 12 STATES LOSING IN RELATIVE SHARE FROM PY 1987 TO THE PY 1988 BASIC FORMULA AMOUNT.

*** - HOLD HARMLESS PROVISIONS REQUIRED UNDER SECTION 6(B) OF THE WAGNER-PEYSER ACT, AS AMENDED, ARE MAINTAINED AT THE REVISED ALLOTMENT LEVEL.

[FR Doc. 88-7721 Filed 4-7-88; 8:45 am]

BILLING CODE 4510-30-C

Employment Standards Administration, Wage and Hour Division

Minimum Wages for Federal and Federally Assisted Construction; General Wage Determination Decisions

General wage determination decisions of the Secretary of Labor are issued in accordance with applicable law and are based on the information obtained by the Department of Labor from its study of local wage conditions and data made available from other sources. They specify the basic hourly wage rates and fringe benefits which are determined to be prevailing for the described classes of laborers and mechanics employed on construction projects of a similar character and in the localities specified therein.

The determinations in these decisions of prevailing rates and fringe benefits have been made in accordance with 29 CFR Part 1, by authority of the Secretary of Labor pursuant to the provisions of the Davis-Bacon Act of March 3, 1931, as amended (46 Stat. 1494, as amended, 40 U.S.C. 276a) and of other Federal statutes referred to in 29 CFR Part 1, Appendix, as well as such additional statutes as may from time to time be enacted containing provisions for the payment of wages determined to be prevailing by the Secretary of Labor in accordance with the Davis-Bacon Act. The prevailing rates and fringe benefits determined in these decisions shall, in accordance with the provisions of the foregoing statutes, constitute the minimum wages payable on Federal and federally assisted construction projects to laborers and mechanics of the specified classes engaged on contract work of the character and in the localities described therein.

Good cause is hereby found for not utilizing notice and public comment procedure thereon prior to the issuance of these determinations as prescribed in 5 U.S.C. 553 and not providing for delay in the effective date as prescribed in that section, because the necessity to issue current construction industry wage determinations frequently and in large volume causes procedures to be impractical and contrary to the public interest.

General wage determination decisions, and modifications and supersedeas decisions thereto, contain no expiration dates and are effective from their date of notice in the **Federal Register**, or on the date written notice is received by the agency, whichever is earlier. These decisions are to be used in accordance with the provisions of 29 CFR Parts 1 and 5. Accordingly, the applicable decision, together with any modifications issued, must be made a part of every contract for performance of the described work within the geographic area indicated as required by an applicable Federal prevailing wage law and 29 CFR Part 5. The wage rates and fringe benefits, notice of which is published herein, and which are contained in the Government Printing Office (GPO) document entitled "General Wage Determinations Issued Under The Davis-Bacon And Related Acts," shall be the minimum paid by contractors and subcontractors to laborers and mechanics.

Any person, organization, or governmental agency having an interest in the rates determined as prevailing is encouraged to submit wage rate and fringe benefit information for consideration by the Department. Further information and self-explanatory forms for the purpose of submitting this data may be obtained by writing to the U.S. Department of Labor, Employment Standards Administration, Wage and Hour Division, Division of Wage Determinations, 200 Constitution Avenue, NW., Room S-3504, Washington, DC 20210.

New General Wage Determination Decisions

The numbers of the decisions being added to the Government Printing Office document entitled "General Wage Determinations Issued Under the Davis-Bacon and Related Acts" are listed by Volume, State, and page number(s).

Volume I

Maryland:
MD88-16 ..... pp. 456a–456b.
MD88-17 ..... pp. 456c–456d.

Volume II:

Iowa:
IA88-13 ..... pp. 66a–66b.

Modifications to General Wage Determination Decisions

The numbers of the decisions listed in the Government Printing Office document entitled "General Wage Determinations Issued Under the Davis-Bacon and Related Acts" being modified are listed by Volume, State, and page number(s). Dates of publication in the **Federal Register** are in parentheses following the decisions being modified.

Volume I

District of Columbia:
DC88-1 (JAN. 8, 1988) ..... p. 77.
DC88-2 (JAN. 8, 1988) ..... p. 90.
Massachusetts:
MA88-3 (JAN. 8, 1988) ..... pp. 406, 408.
Maryland:
MD88-5 (JAN. 8, 1988) ..... pp. 431–432.
New York:
NY88-11 (JAN. 8, 1988) ..... pp. 782–784.
NY88-12 (JAN. 8, 1988) ..... pp. 792–795.
NY88-15 (JAN. 8, 1988) ..... pp. 814–816.
NY88-17 (JAN. 8, 1988) ..... pp. 820–822.
NY88-18 (JAN. 8, 1988) ..... pp. 830–832.
Listing by Location (index) ..... p. xxix.
Listing by Decision (index) ..... pp. liii–liv.

Volume II

Iowa:
IA88-5 (JAN. 8, 1988) ..... pp. 42–47.
Illinois:
IL88-19 (JAN. 8, 1988) ..... p. 232.
Indiana:
IN88-1 (JAN. 8, 1988) ..... pp. 234–246b.
IN88-2 (JAN. 8, 1988) ..... pp. 248–249.
IN88-3 (JAN. 8, 1988) ..... p. 267.
IN88-6 (JAN. 8, 1988) ..... pp. 300–302, 304.
Kansas:
KS88-6 (JAN. 8, 1988) ..... p. 346.
Missouri:
MO88-2 (JAN. 8, 1988) ..... p. 606.
MO88-10 (JAN. 8, 1988) ..... p. 656.
Listing by Location (index) ..... p. xxv.
Listing by Decision (index) ..... p. liii.

Volume III

Utah:
UT88-1 (JAN. 8, 1988) ..... pp. 336, 338.

General Wage Determination Publication

General wage determinations issued under the Davis-Bacon and related Acts, including those noted above, may be found in the Government Printing Office (GPO) document entitled "General Wage Determinations Issued Under The Davis-Bacon And Related Acts". This publication is available at each of the 50 Regional Government Depository Libraries and many of the 1,400 Government Depository Libraries across the country. Subscriptions may be purchased from: Superintendent of Documents, U.S. Government Printing Office, Washington, DC 20402 (202) 783-3238.

When ordering subscription(s), be sure to specify the State(s) of interest, since subscriptions may be ordered for any or all of the three separate volumes, arranged by State. Subscriptions include an annual edition (issued on or about January 1) which includes all current general wage determinations for the States covered by each volume. Throughout the remainder of the year, regular weekly updates will be distributed to subscribers.

Signed at Washington, DC this 1 day of April 1988.

ALAN L. MOS

Director, Division of Wage Determinations.

[FR Doc. 88-7541 Filed 4-7-88; 8:45am]

BILLING CODE 4510-27-M

NUCLEAR REGULATORY COMMISSION

Dairyland Power Cooperative; Notice of Consideration of Issuance of Amendment to Facility License and Opportunity for Hearing

[Docket No. 50-409]

The United States Nuclear Regulatory Commission (the Commission) is considering issuance of an amendment to Provisional License No. DPR-45, issued to Dairyland Power Cooperative (the licensee), for the LaCrosse Boiling Water Reactor (LACBWR) located in Vernon County, Wisconsin. The amendment would involve approval of the LACBWR Decommissioning plan and associated Technical Specifications (TS) and an extension of Provisional License No. DPR-45.

On April 30, 1987 LACBWR was permanently shutdown. All spent fuel has been transferred from the reactor to the Spent Fuel Storage Well and License No. DPR-45 amended to possess-but-not-operate status. This amendment would accomplish the following:

(1) Approval of the licensee's Decommissioning Plan which involves 30-50 years of on-site storage of residual radioactivity followed by its removal (SAFSTOR). The licensee also proposes to retain spent fuel onsite in the Fuel Element Storage Well until a Federal repository is available for spent fuel disposal. The Decommissioning Plan analyzes the proposed monitoring, maintenance and operation of the spent fuel pool and the monitoring and maintenance of the remainder of the facility. The Plan also analyzes potential accidents at the facility and the controls established for radiation protection and the prevention of the release of radioactivity from the site. A supplement to the LACBWR Environmental Report submitted with the Decommissioning Plan analyzes the environmental impacts of the SAFSTOR decommissioning option;

(2) Revision of the TS to reflect the long term storage of fuel and residual radioactivity onsite. The TS requirements would be revised to reflect the SAFSTOR status such as requirements for radiation monitoring, facility maintenance and Fuel Element Storage Well operations.

(3) Extension of License No. DPR-45 for 40 additional years to be consistent with 10 CFR 50.51 which restricts the period of time of a license extension to 40 years from the date of issuance and also consistent with the licensee's Decommissioning Plan which requests approval of a 30 to 50 year SAFSTOR period followed by facility dismantling.

Prior to issuance of the proposed license amendment, the Commission will have made findings required by the Atomic Energy Act of 1954, as amended (the Act) and the Commission's regulations.

By May 9, 1988, the licensee may file a request for a hearing with respect to issuance of the amendment to the subject facility license and any person whose interest may be affected by this proceeding and who wishes to participate as a party in the proceeding must file a written request for hearing and a petition for leave to intervene. Requests for a hearing and petitions for leave to intervene shall be filed in accordance with the Commission's "Rules of Practice for Domestic Licensing Proceedings" in 10 CFR Part 2. If a request for a hearing or petition for leave to intervene is filed by the above date, the Commission or an Atomic Safety and Licensing Board, designated by the Commission or by the Chairman of the Atomic Safety and Licensing Board Panel, will rule on the request and/or petition, and the Secretary or the designated Atomic Safety and Licensing Board will issue a notice of hearing or an appropriate order.

As required by 10 CFR 2.714, a petition for leave to intervene shall set forth with particularity the interest of the petition in the proceeding, and how that interest may be affected by the results of the proceeding. The petition should specifically explain the reasons why intervention should be permitted with particular reference to the following factors: (1) the nature of the petitioner's right under the Act to be made a party to the proceeding; (2) the nature and extent of the petitioner's property, financial, or other interest in the proceeding; and (3) the possible effect of any order which may be entered in the proceeding on the petitioner's interest. The petition should also identify the specific aspect(s) of the subject matter of the proceeding as to which petitioner wishes to intervene. Any person who has filed a petition for leave to intervene or who has been admitted as a party may amend the petition without requesting leave of the Board up to fifteen (15) days prior to the first prehearing conference scheduled in the proceeding, but such an amended petition must satisfy the specificity requirements described above.

Not later than fifteen (15) days prior to the first prehearing conference scheduled in the proceeding, a petitioner shall file a supplement to the petition to intervene which must include a list of the contentions which are sought to be litigated in the matter, and the bases for each contention set forth with reasonable specificity. Contentions shall be limited to matters within the scope of the amendment under consideration. A petitioner who fails to file such a supplement which satisfies these requirements with respect to at least one contention will not be permitted to participate as a party.

Those permitted to intervene becomes parties to the proceeding, subject to any limitations in the order granting leave to intervene, and have the opportunity to participate fully in the conduct of the hearing, including the opportunity to present evidence and cross-examine witnesses.

A request for a hearing or a petition for leave to intervene shall be filed with the Secretary of the Commission, United States Nuclear Regulatory Commission, Washington, DC 20555, Attention: Docketing and Service Branch, or may be delivered to the Commission's Public Document Room, 1717 H Street, NW., Washington, DC, by the above date. Where petitions are filed during the last ten (10) days of the notice period, it is requested that the petitioner or representative for the petitioner promptly so inform the Commission by a toll-free telephone call to Western Union at 1-800-325-6000 [in Missouri 1-800-342-6700]. The Western Union operator should be given Datagram Identification Number 3737 and the following message addressed to Lester S. Rubenstein: petitioner's name and telephone number; date Petition was mailed; plant name; and publication date and page number of this **Federal Register** notice. A copy of the petition should also be sent to the Office of the General Counsel, U.S. Nuclear Regulatory Commission, Washington, D.C. 20555, and to Kevin P. Gallen, Esq., Newman and Holtzinger, P.C., 1615 L Street NW., Washington, DC 20036, attorney for the licensee.

Nontimely filings of petitions for leave to intervene, amended petitions, supplementary petitions and/or requests for hearing will not be entertained absent a determination by the Commission, the presiding officer or the presiding Atomic Safey and Licensing Board, that the petition and/or request should be granted based upon a balancing of the factors specified in 10 CFR 2.714(a)(1)(i)-(v) and 2.714(d).

If a request for hearing is received, the Commission's staff may issue the amendment after it completes its technical review and prior to the completion of any required hearing if it publishes a further notice for public comment of its proposed findings of no significant hazards consideration in accordance with 10 CFR 50.91 and 50.92.

For further details with respect to this action, see the application for amendment dated December 21, 1987 as revised February 22, 1988 which is available for public inspection at the Commission's Public Document Room, 1717 H Street, NW., Washington, DC, and at the LaCrosse Public Library, 800 Main Street, LaCrosse, Wisconsin 54601.

Dated at Rockville, Maryland, this 1st day of April, 1988.

For the Nuclear Regulatory Commission.

Peter B. Erickson,

Project Manager, Standardization and Non-Power Reactor Project Directorate, Division of Reactor Projects III, IV, V and Special Projects, Office of Nuclear Reactor Regulation.

[FR Doc. 88-7737 Filed 4-7-88; 8:45am]

BILLING CODE 7590-01-M

RAILROAD RETIREMENT BOARD

Agency Forms Submitted for OMB Review

AGENCY: Railroad Retirement Board.

ACTION: In accordance with the Paperwork Reduction Act of 1980 (44 U.S.C. Chapter 35), the Board has submitted the following proposal(s) for the collection of information to the Office of Management and Budget for review and approval.

Summary of Proposal(s):

(1) Collection title: Placement Questionnaire.

(2) Form(s) submitted: ES-24.

(3) Type of request: New collection.

(4) Frequency of use: On occasion.

(5) Respondents: Individuals or households, businesses or other for-profit.

(6) Annual responses: 3,365.

(7) Annual reporting hours: 316.

(8) Collection description: Under Sections 12(i) and 12(l) of the Railroad Unemployment Insurance Act (RUIA), the Railroad Retirement Board is authorized to establish, maintain and operate free employment offices to provide claimants for unemployment benefits with job placement services. The collection obtains information to improve and evaluate the effectiveness of the Board's employment services program.

Additional Information or Comments: Copies of the proposed forms and supporting documents may be obtained from Pauline Lohens, the agency clearance officer (312-751-4692). Comments regarding the information collection should be addressed to Pauline Lohens, Railroad Retirement Board, 844 Rush Street, Chicago, Illinois 60611 and the OMB reviewer, Elaina Norden (202-395-7316), Office of Management and Budget, Room 3002, New Executive Office Building, Washington, DC 20503.

Pauline Lohens,

Director of Information Resources Management.

[FR Doc. 88-7713 Filed 4-7-88; 8:45 am]

BILLING CODE 7905-01-M

SECURITIES AND EXCHANGE COMMISSION

Forms Under Review by Office of Management and Budget

Agency Clearance Officer: Kenneth A. Fogash, (202) 272-2142.

Upon Written Request, Copy Available From: Securities and Exchange Commission, Office of Consumer Affairs, 450 Fifth Street NW., Washington, DC 20549.

Extension: Rule 22d-1, File No. 270-275; Form N-14, File No. 270-297.

Notice is hereby given that pursuant to the Paperwork Reduction Act of 1980 (44 U.S.C. 3501 *et seq*), the Securities and Exchange Commission has submitted for extension of OMB approval Rule 22d-1 under the Investment Company Act of 1940 [17 CFR 270.22d-1] and Form N-14 under the Securities Act of 1933 [17 CFR 239.23]

Rule 22d-1 provides registered investment companies that issue redeemable securities, their principal underwriters and dealers in their shares with an exemption from the uniform sales load provision of Section 22(d) of the Investment Company Act of 1940 to permit the sale of redeemable securities at varying sales loads. The rule imposes a burden of about 15 minutes annually, per respondent.

Form N-14 is used for registration under the Securities Act of 1933 of securities issued in business combination transactions by registered investment companies and business development companies. The form imposes a burden of about 2500 hours per response.

Comments should be submitted to OMB Desk Officer: Robert Neal, Office of Information and Regulatory Affairs, Office of Management and Budget, Room 3228 NEOB, Washington, DC 20503.

Date: March 30, 1988.

Jonathan G. Katz,

Secretary.

[FR Doc. 88-7739 Filed 4-7-88; 8:45 am]

BILLING CODE 8010-01-M

[File No. 500-1]

American Pain & Stress, Inc., et al.; Order of Suspension of Trading

April 5, 1988.

It appears to the Securities and Exchange Commission that there is a lack of adequate current information concerning the securities of American Pain & Stress, Inc., Associated Systems Interntional, Inc., A.S.T.I. Corp., Inc., Brew Makers, Inc., Chevlon Industries, Inc., Dayton Filmcorp, Equifirst, Inc., Es-Tech International, Inc., Far East Trading, Co., Fortune Five-O Real Estate Corp., Foster Technology, Inc., ICEM Systems, Inc., International Chem-Pro Industries, Inc., Inter-Med International, Inc., James H. Fors & Associates, Inc., Land & Sea Resources, Inc., Lourdex Corp., Lutech International, Ltd., MedGroup, Inc., Micro-Books International, Inc., Naja-International, Inc., National Integrated Systems, Inc., Northridge/America Corp., Oroco, Inc., Oxygenetics, Inc., Pacific Biosystems, Inc., Pacific Composites, Inc., Pacific Western Corp., Precision Imaging Corp., Professional Dental Technologies, Inc., Protecto Industries, Inc., Public Service Corp., Renaissance Entertainment, Inc., Rio-Tek, Inc., Sea-Land Treasures, Inc., Seva Resorts, Inc., Southco Communications Corp., Stereo Vision 3-D Corp., Stowe Standardbred Breeders, Inc., Superior Resources, Inc., Totem Pole Gardens, Inc., Trivest International, Inc., Viral Research Technologies, Walsh Communications Group, Inc., Wellington Group, Ltd. and that the Commission has information that gives it reason to believe that false statements have been made concerning, among other things, claims for exemption from the registration provisions of the Securities Act of 1933 made by these companies and pursuant to which their securities are trading, and the corporate history, stock ownership and financial condition of these companies. The Commission is of the opinion that the public interest and the protection of investors require a suspension of trading in the securities of the above-listed companies.

Therefore, it is ordered, pursuant to section 12(k) of the Securities Exchange Act of 1934, that trading in the above-

listed companies, over-the-counter or otherwise, is suspended for the period from 9:30 a.m. EDT, April 5, 1988 through 11:59 p.m. EDT, on April 14, 1988.

By the Commission.

Shirley E. Hollis,

Assistant Secretary.

[FR Doc. 88-7741 Filed 4-7-88; 8:45 am]

BILLING CODE 8010-01-M

[Release No. 34-25545; File No. SR-CBOE-88-05]

Self-Regulatory Organizations; Chicago Board Options Exchange, Inc.; Notice and Order Granting Partial Accelerated Approval to Proposed Rule Change

Pursuant to section 19(b)(1) of the Securities Exchange Act of 1934, 15 U.S.C. 78s(b)(1), notice is hereby given that on March 25, 1988, the Chicago Board Options Exchange, Incorporated, filed with the Securities and Exchange Commission the proposed rule change as described in Items I, II and III below, which Items have been prepared by the self-regulatory organization. The Commission is publishing this notice to solicit comments on the proposed rule change from interested persons.

I. Self-Regulatory Organization's Statement of the Terms of Substance of the Proposed Rule Change

Rule 6.2. Trading Rotations. No change.

Interpretations and Policies:

.01 Trading rotations shall be employed at the opening of the Exchange each business day. For each class of option contracts that has been approved for trading, the opening rotation shall be conducted by the Board Broker or Order Book Official acting in such class of options.

The opening rotation in each class of options shall be held promptly following the opening transaction in the underlying security on the principal exchange where it is traded. As a rule, a Board Broker or Order Book Official acting in more than one class of options should open them in the same order in which opening transactions are reported in the underlying securities. In conducting each such opening rotation, the Board Broker or Order Book Official should ordinarily first open the one or more series of options of a given class having the nearest expiration, then proceed to the series of options having the next most distant expiration, and so forth, until all series have been opened. If both puts and calls covering the same underlying security are traded, the Board Broker or Order Book Official shall determine which type of option *will* [would] open first, and shall alternate the opening of put series and call series. A Board Broker or Order Book Official may conduct the opening rotation in another manner only with the approval of two Floor Officials or at the direction of the Floor Procedure Committee. *A modified opening rotation such as that described in Interpretation .02 to Rule 24.13 may be conducted for certain index options classes.*

In the event an opening transaction in the underlying security has not been reported within a reasonable time after 8:30 a.m. (Chicago time), the Board Broker or Order Book Official acting in option contracts on such security shall report the delay to a Floor Official and an inquiry shall be made to determine the cause of the delay. The opening rotation for option contracts in such security shall be delayed until an opening transaction is reported in the underlying security unless two Floor Officials determine that the interests of a fair and orderly market are best served by opening trading in the option contracts.

.02 and .03 No change.

Rule 7.4 Obligation for Orders. (a) through (e)(3) No change.

(e)(4) The provisions of paragraph (e) of this rule shall not apply to matching certain opening buy and sell orders in S&P 100 options. The procedures for such orders are set forth in Interpretation .02 to Rule 24.13.

(f) No change.

Interpretations and Policies:

.01 No change.

.02 Board Brokers and Order Book Officials shall accept orders, including cancels and changes, at the opening on the same time sequence basis as pertains during the balance of the day. However, a Board Broker or Order Book Official shall not be held for orders accepted during a time interval from five (5) minutes prior to the report of a transaction in an underlying security through the end of the opening rotation in that class of option contracts for execution of such orders at the opening. *In the case of the S&P 100 options, an Order Book Official shall not be held for orders accepted during a time interval from ten (10) minutes prior to the opening of trading through the end of opening rotation for execution of such orders at the opening.*

.03 through .06 No change.

Rule 8.15. Lead Market-Makers and Supplemental Market-Makers. The Market Performance Committee may appoint one or more market-makers in good standing with an appointment in the S&P 100 options as Lead Market-Makers ("LMMs") and Supplemental Market-Makers ("SMMs") to participate in the modified opening rotation described in Interpretation .02 to Rule 24.13

(a) *LMMs and SMMs shall be appointed on the first day following an expiration for a period of one month ("expiration month") and shall be assigned to a zone with one more LMMs and SMMs. The Committee shall select the series to be included in a zone.*

1. Factors to be considered by the Committee in selecting LMMs and SMMs include: adequacy of capital, experience in trading index options, presence in the S&P trading crowd, adherence to Exchange rules and ability to meet the obligations specified below. An indivual may be appointed as an LMM in only one zone for an expiration month but may also be appointed as an SMM in other zones. An individual may be appointed to be an SMM in more than one zone. When individual members are associated with one or more other members, only one member may receive an LMM appointment.

2. Removal of one or all LMMs and SMMs in a zone may be effected by the Committee on the basis of the failure of one or more LMMs or SMMs assigned to the zone to meet the obligations set forth in paragraphs b and c below, or any other applicable Exchange rule. An LMM or SMM removed under this Rule may seek review of that decision under Chapter XIX of the Rules.

3. If one or more LMMs are removed or if for any reason an LMM shall no longer be eligible for or shall resign his appointment or shall fail to perform his duties, the Committee may appoint an interim LMM to complete the monthly obligations of the former LMM.

4. The Committee shall review and evaluate the conduct of LMMs and SMMs, including but not limited to compliance with Rules 8.1, 8.2, 8.3, and 8.7 and may hold all LMMs and SMMs in a zone responsible for the performance of each LMM and SMM in the zone.

(b) The obligations of an LMM are as follows:

1. To quote a firm two-sided market of sufficient size to accommodate a relatively active opening within the bid/ask differentials permitted by Rule 8.7 in all option series assigned to the zone;

2. To facilitate any imbalances of customer orders in all series assigned to the zone;

3. To assist LMMs in other zones to facilitate excessive imbalances;

4. To perform the above obligations for a period of one expiration month commencing on the first day following an expiration. Failure to perform such

obligations for such time may result in suspension of up to three months from trading in all series of the S&P 100 option.

(c) The obligations of an SMM are as follows:

1. To accept the previously agreed to portion of opening order imbalances; and

2. To participate with the LMM in the modified trading rotation for a period of one calendar week. Failure to perform such obligations for such time may result in suspension of up to three months from participation as an LMM or SMM.

Rule 24.13 Trading Rotations. No Change.

Interpretation .01 No Change.

.02 Modified Opening Rotation—In conducting the opening rotation in S&P 100 options, certain option series having the nearest expiration may be opened as described in Interpretation .01 to rule 6.2 ("main rotation"). The remaining series having the nearest expiration and other series having more distant expirations may be divided into one or more zones and be opened simultaneously with the main rotation by an Order Book Official in the following manner. One or more Lead Market Makers (LMM) in each zone shall be responsible for quoting a two-sided market in each of the series assigned to the zone. The markets will generally be set without prior indication of the imbalances to be facilitated. Only in the case of extreme market conditions or an extremely large imbalance of opening orders may the Order Book Official indicate the direction or size of the order imbalance. Upon receiving the LMM market, the Order Book Official will state the net imbalance in each series to the LMM who shall buy or sell it.

Upon conclusion of the main rotation, the Order Book Official conducting the main rotation will declare open trading in all series. Such declaration shall apply to the main rotation and to all zones which have completed opening rotation. Open trading in the series assigned to the zones shall not commence before the Order Book Official conducting the main rotation has made such declaration.

Market-Makers who wish to participate in the opening of series in which they do not hold LMM or SMM appointments may transmit written non-cancellable proprietary and market maker orders to the LMM in that zone ten minutes prior to the opening of trading. The minimum participation shall not be less than the participation of a Supplemental Market-Maker ("SMM") in that zone.

II. Self-Regulatory Organization's Statement of the Purpose of, and Statutory Basis for, the Proposed Rule Change

In its filing with the Commission, the self-regulatory organization included statements concerning the purpose of and basis for the proposed rule change and discussed any comments it received on the proposed rule change. The text of these statements may be examined at the places specified in Item IV below and is set forth in sections (A), (B), and (C) below.

(A) Self-Regulatory Organization's Statement of the Purpose of, and the Statutory Basis for, the Proposed Rule Change

A modified rotation process has been developed to provide for a more rapid opening for S&P 100 Index Options ("OEX"). The rotation evolved out of pilot programs using simultaneous rotations for series in the more distant expirations. However, the proposed modified OEX rotation is new in that it provides for several sub-crowds or zones. At this time, it is contemplated that there will be six zones. A Lead Market-Maker (LMM), with assistance from other LMMs and from Supplemental Market-Makers ("SMM"), will be responsible for facilitating order imbalances in series assigned to each zone, simultaneously with the main rotation. The main rotation will be limited to selected front month series and all members of the trading crowd may participate.

The Exchange believes this procedure is sufficiently different from the procedures piloted under the general authority of Exchange Rule 24.13 that it is filing a proposed new interpretation to Rule 24.13 and a new Rule 8.15 as rule changes under section 19(b) before implementation of the new rotation procedure. Any restrictions on participation inherent in the new procedure are outweighed by the benefits to market-makers and the investing public of a faster opening.

The proposed procedure should reduce the average time for opening rotations to approximately 10 minutes, even under extreme market conditions such as those experienced in October. The Exchange is requesting accelerated approval of the proposed rule changes in order to implement the OEX modified rotation on Monday, March 28. The rule changes necessary to complement the proposed modified opening rotation are described below.

Rule 7.4 has been modified to make clear that only orders received ten minutes before the opening of the S&P options will be entitled to participate in the opening. This will help ensure that the opening rotation in all series commences at 8:30 a.m. (Chicago time) and ends as close to the target time of 8:40 a.m. as possible.

Rule 8.15 is new and sets forth selection and removal criteria for LMMs and SMMs to be used by the Market Performance Committee. It is contemplated that a subcommittee of the Committee will accept applications for LMMs and SMMs up to and including the Monday of the week ending with expiration. On Thursday of that week, the series included in each zone and the names of the LMMs and SMMs selected for the expiration will be announced by the Committee. The rule describes the factors to be considered by the Committee in making its selections. If there are more qualified LMM and SMM applicants than zone appointments available, the Committee may determine to rotate LMMs and SMMs on a monthly or weekly basis, respectively.

While there may be more than one LMM in each zone, only one LMM may speak for and commit all participants of the zone. A number of series may be assigned to each zone. LMMs and SMMs in a zone may agree as to the percentage participation of each LMM and SMM in the opening imbalance. The obligations of LMMs and SMMs and their joint responsibility for the zone opening are also set forth in the Rule.

Interpretation .02 to Rule 24.13 is new and describes the modified rotation. It sets forth the way in which the OBO communicates and the LMM facilitates customer order imbalances on the book subject to Rule 7.5. It also provides the method by which non-participating marker-maker and proprietary orders may participate in the opening. Finally, it makes clear that open trading commences only upon completion of the traditional main rotation in which all market makers may participate.

(B) Self-Regulatory Organization's Statement on Burden on Competition

This proposed rule change will not impose a burden on competition.

(C) Self-Regulatory Organization's Statement on Comments on the Proposed Rule Change Received from Members, Participants or Other

Comments were neither solicited nor received.

III. Date of Effectiveness of the Proposed Rule Change and Timing for Commission Action

The Chicago Board Options Exchange, Inc., has requested that the proposed

rule change be given accelerated effectiveness pursuant to section 19(b)(2) of the Act, because the Exchange would like to implement the OEX modified rotation as soon as possible. The Exchange has stated that immediate implementation of these procedures will reduce the average time for OEX opening rotations to approximately ten minues, even under extreme market conditions such as those experienced in October.

The Commission finds good cause for approving the proposed rule change as it relates to modification of Interpretation .02 to Rule 7.4 and adoption of certain portions of Interpretation .02 to Rule 24.13, prior to the thirtieth day after the date of publication of the proposal in the **Federal Register**. The modification of Interpretation .02 to Rule 7.4 relieves an OEX Order Book Official ("OBO") from executing, at the opening, orders accepted between ten minutes prior to the opening of trading and the end of the opening rotation. The portions of Interpretation .02 to Rule 24.13 that the Commission will accelerate approval (1) provides for certain option series in the OEX opening rotation having the nearest expiration to be opened as described in Interpretation .01 to Rule 6.2 ("main rotation") and remaining near and far term series to be divided into one or more zones and opened simultaneously with the main rotation, and (2) provides that upon conclusion of the main rotation, the OBO conducting the main rotation will declare open trading in all series. Such declaration shall apply to the main rotation and to all zones which have completed opening rotation. Open trading in the series assigned to the zones shall not commence before the OBO conducting the main rotation has made such declaration. The Commission believes that the proposed changes will expedite the completion of the opening rotation by providing an earlier identification of order imbalances, thus providing the OBO an opportunity to facilitate such imbalances as soon as possible. Faster opening rotations will reduce the problems associated with delayed open trading, especially during extreme market conditions as witnessed during the October 1987 market decline.[1]

The Commission finds good cause for approving the proposed rule change prior to the thirtieth day after the date of publication of the proposal in the **Federal Register** in that the proposed change relieving the OEX OBO from executing, at the opening, orders accepted between ten minutes prior to the opening of trading and the end of the opening rotation does not significantly alter existing rules since existing rules presently relieve the OBO from executing at the opening orders accepted five minutes prior to the opening of trading. As to the modification to certain portions of Interpretation .02 to Rule 24.13, a modified opening rotation in the OEX, based on dividing the OEX rotation into sections depending upon series, was implemented on an experimental basis by the exchange in January, 1988, and has run smoothly since its inception.

IV. Solicitation of Comments

Interested persons are invited to submit written data, views and arguments concerning the foregoing. Persons making written submission should file six copies thereof with the Secretary, Securities and Exchange Commission, 450 Fifth Street, NW., Washington, DC 20549. Copies of the submission, all subsequent amendments, all written statements with respect to the proposed rule change that are filed with the Commission, and all written statements with respect to the proposed rule change that are filed with the Commission, and all written communications relating to the proposed rule change between the Commission and any persons, other than those that may be withheld from the public in accordance with the provisions of 5 U.S.C. 552, will be available for inspection and copying in the Commission's Public Reference Section, 450 Fifth Street, NW., Washington, DC. Copies of such filing will also be available for inspection and copying at the principal office of the above-mentioned self-regulatory organization. All submissions should refer to the file number in the caption above and should be submitted by April 29, 1988.

It is therefore ordered, pursuant to section 19(b)(2) of the Act,[2] that the proposed rule change referenced above be, and hereby is, approved, as it relates to modification of Interpretation .02 to Rule 7.4 and adoption of the specified portions of Interpretation .02 to Rule 24.13.

For the Commission by the Division of Market Regulation, pursuant to delegated authority.[3]

Jonathan G. Katz,

Secretary.

[FR Doc. 88-7740 Filed 4-7-88; 8:45 am]

BILLING CODE 8010-01-M

[1] *See* Securities Exchange Commission, "A Report by the Division of Market Regulation on The October 1987 Market Break," February, 1988, p. 8-6.

[2] 15 U.S.C. 78s(b)(2) (1982).

[3] 17 CFR 200.30-3(a)(12) (1988).

DEPARTMENT OF TRANSPORTATION

Federal Aviation Administration

Reestablishment of the FAA Air Traffic Procedures Advisory Committee

AGENCY: Federal Aviation Administration (FAA), DOT.

ACTION: Notice of Reestablishment of the FAA Air Traffic Procedures Advisory Committee.

Announcement. Notice is given of the reestablishment of the Federal Aviation Administration (FAA) Air Traffic Procedures Advisory Committee. This advisory committee was established on the recommendation of a task group that was formed by the Secretary of Transportation on January 28, 1975. The task group's recommendation called for the establishment of a standing group to review all air traffic control procedures and practices. The Administrator of the FAA is the sponsor of the committee. The membership will include experts from the Government, the aviation industry, and those representing the viewpoints of other elements of the aviation community. Non-Federal members of the committee do not become Government employees. They serve without compensation and at their own expense. The committee will make recommendations for standardizing, clarifying, and upgrading present air traffic control procedures and practices and recommend new or revised procedures necessary to accommodate new air traffic control concepts.

Public Interest. The Secretary of Transportation has determined that the reestablishment and continued use of the committee is necessary in the public interest in connection with performance of duties imposed on the FAA by law. Meetings of the committee will be open to the public except as provided for in section 10(d) of the Advisory Committee Act.

Issued in Washington, DC, on March 31, 1988.

Walter H. Mitchell,

Executive Director, Air Traffic Procedure Advisory Committee.

[FR Doc. 88-7729 Filed 4-7-88; 8:45 am]

BILLING CODE 4910-13-M

Air Traffic Procedures Advisory Committee Meeting

AGENCY: Federal Aviation Administration (FAA), DOT.

ACTION: Notice of Air Traffic Procedures Advisory Committee meeting.

SUMMARY: The FAA is issuing this notice to advise the public that a meeting of the Federal Aviation Administration Air Traffic Procedures Advisory Committee (ATPAC) will be held from April 18 through April 22, 1988. Attendance is open to the public, but will be limited to the space available.

FOR FURTHER INFORMATION CONTACT: Mr. Walter H. Mitchell, Executive Director, ATPAC, Air Traffic Operations Service, 800 Independence Avenue, SW., Washington, DC 20591, telephone (202) 267-3725.

SUPPLEMENTARY INFORMATION: Pursuant to section 10(a)(2) of the Federal Advisory Committee Act (Pub. L. 92-463; 5 U.S.C. App. 1), notice is hereby given of a meeting of the ATPAC to be held from April 18, at 9 a.m., through April 22, 1988, at 11:30 a.m., at the Federal Aviation Administration headquarters, Washington, DC. The meeting will be held in the MOC room (10th floor) on April 18; conference room 8AB on April 19; and the Administrator's Round Room (10th floor) on April 20-22. The agenda for this meeting is as follows: a continuation of the Committee's review of present air traffic control procedures and practices for standardization, clarification, and upgrading of terminology and procedures. It will also include:

1. Approval of minutes.
2. Discussion of agenda items.
3. Discussion of urgent priority items.
4. Report from Executive Director.
5. Old Business.
6. New Business.
7. Discussion and agreement of location and dates for subsequent meetings.

Attendance is open to the interested public not limited to the space available. With the approval of the Chairperson, members of the public may present oral statements at the meeting. Persons desiring to attend and persons desiring to present oral statements should notify the person listed above not later than April 15, 1988. The next quarterly meeting of the FAA ATPAC is planned to be held from July 11 through July 15, 1988, in Denver, Colorado. Any member of the public may present a written statement to the Committee at any time.

Issued in Washington, DC, on March 31, 1988.

Walter H. Mitchell,

Executive Director, Air Traffic Procedures Advisory Committee.

[FR Doc. 88-7728 Filed 4-7-88; 8:45 am]

BILLING CODE 4910-13-M

Federal Highway Administration

[FHWA Docket No. 87-12, Notice No. 2]

Rail-Highway Crossing Study; Summary of Comments

AGENCY: Federal Highway Administration (FHWA), DOT.

ACTION: Supplemental information.

SUMMARY: This notice summarizes the responses received to the request for comments on national highway-railroad crossing improvement and maintenance needs published in the **Federal Register** on August 21, 1987 (52 FR 31688). It also describes how these comments will be considered in the studies and report to Congress required by Section 159 of the Surface Transportation and Uniform Relocation Assistance Act of 1987 (STURAA).

FOR FURTHER INFORMATION CONTACT: Mr. Howard C. Hanna, Program Development Division, Office of Highway Safety, (202) 366-2131; or Mr. Paul L. Brennan, Office of Chief Counsel, (202) 366-0834, Federal Highway Administration, 400 Seventh Street SW., Washington, DC 20590. Office hours are from 7:45 a.m. to 4:15 p.m., ET. Monday through Friday, except legal holidays.

SUPPLEMENTARY INFORMATION:

Background

Section 159 of the STURAA (Pub. L. 100-17, 101 Stat. 132) directs the Secretary of Transportation to conduct a study of national highway-railroad crossing improvement and maintenance needs, and how these crossing needs can be addressed in a cost-effective manner. A final report is to be submitted to the Congress by April 2, 1989.

On August 21, 1987, the FHWA published a notice and request for comments in the **Federal Register** (52 FR 31688), announcing initiation of the study and inviting comments on overall scope and conduct of the study, issues to be addressed, and pertinent information and research that would be helpful in assessing crossing needs and trends. The notice also indicated the FHWA intends to use the national rail-highway crossing inventory maintained by the Federal Railroad Administration (FRA) as a base for information collection, and encouraged States and railroads to review and update where necessary the information concerning crossings under their jurisdictions or responsibility.

Summary of Comments

A total of 61 responses have been received to date in reply to the August 21, 1987 notice. Of these, 37 commented on various aspects of the study, the remaining 24 were requests to be included in the agency mailing list being developed. The 37 submitting comments included one Federal agency, ten State highway or transportation agencies, three State commissions, five city and/or county agencies, five national associations or organizations, three railroads, and ten others, including universities, consulting firms, corporations and individuals.

All submissions addressed one or more of the nine issues listed in the legislation initiating the study. These included comments affirming the significance of the issue in addressing highway-railroad crossing needs, recommendations on scope and items to be considered under a particular issue, and information offered to assist in the needs assessment. Many of these comments identified particular countermeasures, devices or practices believed to be either already demonstrated or candidate cost-effective methods of protecting the public at crossings.

Several comments were considered recommendations of additional issues to study, either as extensions to the mandated items or as additional concerns. Others discussed overall study approach, use of the national inventory, benefits of uniform national criteria, State/local flexibility, and other particulars that did not appear to apply to only one issue. Where possible, these are summarized later under separate headings.

No responses objected to the study, or believed it was unnecessary or untimely.

Mandated Study Issues

Section 159 of the STURAA directs that the issues addressed by the study include, but not be limited to, the following:

1. An examination of any correlation which may exist between existing conditions at highway-railroad crossings and accident data at such crossings.

2. An examination of existing hazards to motorists and railroad personnel and community impacts resulting from mobility and capacity constraints at such crossings, including delays of police, fire, and emergency medical services.

3. An analysis of the most cost-effective methods of protecting the public at crossings including a review of the impact of Federal funds expended at crossings; division of cost of improvements and maintenance between Federal, State and local government and railroads; cost

effectiveness of the railroad relocation demonstration program conducted under section 163 of the Federal-Aid Highway Act of 1973 (Pub. L. 93-87, 87 Stat. 250, 280) as compared to the railroad-highway crossing program conducted under section 130 of Title 23, United States Code; and the cost of upgrading existing equipment at crossings to the latest technology.

4. An examination of driver behavior at such crossings and what technologies are most effective in changing behavior and preventing accidents.

5. An examination of what effect the shift in rail traffic patterns, including abandonments, mergers, and increased demand in certain corridors, has on railroad-highway crossing needs.

6. A review of any other potential costs associated with such crossings, including accident liability, increased truck size and weight, and maintenance responsibilities.

7. An examination of railroad and highway needs relating to crossing safety, capacity, and mobility and the needs of communities affected by railroad-highway crossings.

8. An examination of the feasibility of addressing these needs on a corridor or system basis.

9. An examination of the responsibility of rail and highway authorities in addressing these needs.

The following discussion summarizes for each of these nine items the concerns and recommendations most frequently mentioned in the comments received, and present plans for addressing the points raised during the study.

1. Correlation of Accidents

Most of the comments on this issue addressed problems that may be encountered, based on past analysis efforts or the limitations in data sources available. Good correlations require data not only on individual accident characteristics but also the physical, operational and environmental conditions that existed at the crossing. Major problems identified were differences in reporting among available databases, inability to link accident and condition data, and limitations in those large databases that can be correlated, such as the national inventory compiled by the FRA from crossing data submitted by the States and railroads. The two crossing characteristics most often mentioned as potential contributors to accidents but not in the national inventory were available sight distance, and crossing surface characteristics and conditions.

Because of time and resource limitations, development of a new, nationally applicable database for this study that adequately addresses these problems is not considered feasible. Significant effort will be put to the reexamination and better use of existing data sources, however, while clearly indicating their limitations.

2. Community Hazards and Impacts

Comments on this issue focused on how community impacts would be surveyed and measured, examples of specific crossing features or operating characteristics that create hazards and delays, and ways of providing proper protection at crossings within communities without impeding vital services or increasing driver frustration and noncompliance. Comments concerning the impacts of decreased community mobility and safety were about equally divided between those brought about by changes in railroad operations, and those brought about by community growth and highway traffic increases.

Community impacts will be analyzed principally through an examination of case studies, and simulation of crossing hazards and delays under varying conditions.

3. Cost Effective Methods

This issue elicited the most comments, with many respondents identifying countermeasures, devices or practices believed to have already demonstrated their cost effectiveness in protecting the public at crossings, or should be examined in further depth. Comments concerning the overall effectiveness of the existing Federal-aid grade crossing program under section 130 of Title 23, United States Code, were very positive, although some cautioned against expecting similar accident reductions in the future through physical improvements alone. It was recommended that the costs of delay (motorist and train) and non-train accidents be included, as well as train-vehicle accident costs, in determining the cost effectiveness of various countermeasures and in resource allocation decisions. Some comments indicated that the potential for unusually severe or catastrophic consequences, even when of low probability, should also be considered.

The most common candidates recommended for further analysis of their impact on crossing safety were specific crossing improvements such as sight distance clearance, special or supplemental signing, crossing surfaces, upgrading existing devices to current technology, new technology to supplement or replace existing devices, and grade separation structures. A few were train related (visible markings, speed controls, etc.), while some others were program related (simplified project procedures, construction practices, etc.) aimed at reducing costs.

A significant group of comments identified what could be called nonphysical improvements or off-site methods as potentially most effective, such as driver education, public information, traffic law enforcement, and project selection procedures. As these types of programs are not specifically mentioned in the nine basic study issues, these comments are considered under the section on Additional Study Areas.

All candidate methods identified in the responses will be considered in the study. Where data availability permits a determination of effectiveness considered generally applicable over a wide range of conditions, these estimates will be reported. The potential of other suggested methods for improving public safety at crossings must necessarily be assessed by alternate means.

Several comments referred to escalating or excessive costs for active warning device installations as a detriment to greater program effectiveness. Suggestions included alternate contracting procedures and less costly active devices (more than a crossbuck, less than flashing lights with gates) as resulting in greater benefits overall. If possible, cost-cutting measures that can be identified will also be evaluated.

4. Driver Behavior

Respondents agreed that a better understanding of driver reaction and behavior at grade crossings could be a key element in increased crossing safety. Potential study areas suggested include identification of over-represented crossing accident types, drug and alcohol involvement, driver reaction times, motorist recognition and understanding of existing warning systems, relationship between delay and compliance, and techniques for behavior adjustment. Technological changes suggested varied from small alterations to existing devices to developing a completely new approach to driver warning and control systems at crossings.

The comments on this issue suggested several potential underlying causes for poor driver performance at grade crossings which will be considered during the study. One is driver understanding and attitudes toward existing systems, potentially addressed through education and enforcement. A second is the warning system used,

where technological improvements can provide better recognition of hazards, achieve better compliance by being more responsive to driver needs, or even physically prohibit unsafe movements. Another underlying problem is the rail-highway grade crossing environment in general, where the infrequent but high-risk demands placed on the highway user by current systems may exceed the capabilities of many drivers.

5. Rail Traffic Patterns

Many respondents suggested that not only shifts in rail traffic, but shifts in railroad ownership as well, have or could have a significant effect on crossing needs. The recent conversion of significant rail mileage to numerous short lines and regional railroads, and the consolidation of heavy traffic on the remaining main lines in many areas, was the most frequently mentioned cause. Significant changes in train volumes and operating characteristics were reported for both main and branch line operations, with the upgrading or downgrading of existing warning systems in response to these changes creating reported administrative, financial and political problems. Longstanding State-railroad practices for identifying needs, financing improvements, and maintaining crossings and equipment were also cited as having been disrupted by these railroad industry changes.

Consultation with regional railroad and short line associations, as well as the Association of American Railroads, is anticipated during the course of the study, and analysis results and needs estimates will be subdivided by railroad classification where applicable.

6. Other Associated Costs

Most respondents affirmed the need to consider accident liability, increased truck size and weight, and maintenance as costs associated with safe crossing operation, and provided numerous examples of specific items to consider within these categories. Some responses included recommendations for additional costs to consider, and they are included in the section on Additional Study Areas or described below.

Other significant costs identified were vehicular delays during both normal and emergency situations, nontrain accidents at grade crossings and separation structures, emergency response costs for accidents involving property, people or the environment, and added access costs for land and businesses caused by crossing locations. The first three of these supplemental areas have been added to the study plan, but the fourth presents formidable difficulties.

7. Crossing Needs

Comments received on the overall approach to needs, rather than the inclusion or exclusion of specific items discussed under other headings, are summarized here. In collecting needs data, several warned that this could not be done adequately without State and railroad involvement. Reservations were expressed about extensive requests for new data, suggesting instead drawing upon earlier studies to the extent possible. Needs should anticipate future as well as present conditions and objectives. Testing of alternatives was also suggested, by applying different criteria to a network or groupings of crossings to estimate the costs and effects.

Several responses expressed concern with needs reported in absolute or finite numbers, as safety needs are never really met until all preventable accidents are eliminated, and even then needs remain to maintain that level. Some also felt this would lead to the merging of crossing needs with other highway program needs, although their objectives are very different. One expressed the belief that basing needs on minimum thresholds or criteria would penalize States that have done or want to do a better than average job of providing safer crossings, if resource allocation decisions are later based on needs.

A large number of responses, however, recommended that the study establish uniform national criteria or standards in one or more areas for priority setting, accident prediction, installation or removal of various devices, grade separations, maintenance, and others. For many of these recommendations it was unclear if they were meant as input to the needs process (to generate consistent estimates), or suggested end product of the study (establishing future program direction). To prevent misinterpretation, comments received both for and opposed to specific national criteria are summarized later under a separate heading.

Comments on the needs of communities affected by crossings suggested a cyclic and dynamic process, with changing crossing use (highway or rail) impacting community development and safety, but community changes continually altering crossing needs too. Local community needs were described as the weakest link in the current program, where lack of expertise and matching funds, plus local pressures, inhibited the identification or implementation of needed crossing safety improvements.

In reporting needs, the study will rely heavily on improvement and rehabilitation program estimates provided through the State and railroad associations, plus historic costs and projections for other needs. Arrangements with the American Association of State Highway and Transportation Officials and the Association of American Railroads are now underway, with contacts with additional affected groups planned. The concept of developing needs primarily by application of uniform criteria to a consistent national data base was considered but not adopted. Such an effort involves extensive on-site surveys for which resources are not available, and requires advance definition of uniform criteria for estimate purposes in areas where little or no basis now exists. Complete consistency in results will be lost by the selected method, for the opportunity to provide more complete coverage of needs as perceived by program participants. These estimates will be supplemented by several "what if" alternatives developed by applying candidate criteria to selected networks or classes of crossings identified in the national inventory.

Current plans envision needs matrices for crossings (improvements, rehabilitation, maintenance, etc.), for other associated activities (inventories, operations, public information, etc.) and for special initiatives (systems, corridors, communities, etc.).

8. Corridor or Systems Approach

Responses to this issue generally agreed with the feasibility of addressing crossing needs on a corridor or system basis. The system approach was recommend for examining the special needs of crossings on core national rail systems, or to develop a classification of crossing types identifiable as the most dangerous by group. The corridor approach was recommended to expedite paperwork, handle changes in crossing requirements brought about by abandonments or other operational and ownership changes, examine high density lines through communities, and to promptly adjust warning device activation settings where significant changes in train speeds occur over a section of track. One response cautioned, however, that too much concentration on specific rail corridors may diminish Statewide or areawide support for a crossing improvement program.

BEST COPY AVAILABLE

As indicated in the previous section, the study will specifically look at system and corridor needs as alternatives. Case studies of successful programs and projects using this approach will also be examined.

9. Responsibilities

Responses included numerous recommendations on what should be the financial and legal responsibilities of rail and highway authorities. These varied from interpretations applicable only to specific situations, to complete policy statements on the range of public vs. railroad responsibilties. Comments addressed such areas as crossing improvements, structure rehabilitation, maintenance, enforcement and education. The recommended basis for determining responsibilities included current practice (what works), legal or legislative precedent, traditional governmental functions, and relative benefits of the activity to the railroads and public.

The study will review existing divisions of responsibility, including variations and conflicts within and between jurisdictions, in financing and practices. Affirmation of or changes to what exists now, however, are considered potential study recommendations that can only be evaluated after completion of other study tasks. All suggestions made will be considered, but have not been summarized on details to avoid the implication of prejudgment or preference as to final report output.

Additional Study Areas

Several responses were believed to address study areas beyond those expressed in or inferred from the legislation, that will also be incorporated in the study.

Many comments identified the needs of public information and driver awareness programs, as essential complements to engineering and operational improvements. This was most frequently exemplified by the past successes of the Operation Lifesaver activities carried out or underway in most States and localities. The study will specifically include an examination of the effectiveness and needs of such programs.

Another area frequently cited was traffic law enforcement programs, as a potentially effective countermeasure to increase driver compliance. Although not as susceptible to numeric evaluation as some other areas, the study will look at consistency in laws and how better compliance with crossing warning devices can be achieved.

The impact of other supporting or off-site activities, such as data maintenance and analysis, programming, diagnostic teams, research, etc. will also be assessed.

A review of the basis for allocating available funding was suggested, to determine if limited resources could be distributed in a more optimum manner. Where future program alternatives involve Federal funding options, distribution methods and formulas will be included in the factors considered.

Needs of the general public do not specifically consider the problems of private crossings, significant in number but outside the purview of normal highway agency activities. In consultations with railroad and public agencies, and when compiling and reporting crossing characteristics, private crossings will be identified as a distinct issue.

Use of National Inventory Data

In the August 21, 1987 notice, the FHWA announced its intention to use the national rail-highway crossing inventory, compiled by the FRA from data submitted by the States and railroads, as a basis for collecting and summarizing study data. Several responses expressed reservations with this proposal, questioning the use of the national inventory for needs formulation, suggesting that additional updating and verification was necessary to insure its accuracy and reliability, or recommending improvements or expansions of the current inventory be undertaken as part of this study. Other comments suggested areas where further analysis of the national inventory data could enhance the understanding of crossing problems.

The FHWA recognizes the limitations inherent in the current national inventory, and that its accuracy is dependent on the degree to which individual States and railroads submit updating information. Despite these limitations the national inventory, and train-related crossing accidents reported through the FRA's accident/incident reporting system, remain the only consistent national data source of accidents and conditions at rail-highway crossings. To redo or significantly revise this base within the study period was considered impractical, and offered no concrete assurance of greater utility and accuracy for needs estimating. Although the information at specific crossings, or for particular routes or States, may not be precise enough to use for project decisions or State priority setting, the data in total are considered adequate to perform national level testing of alternatives, determination of trends and magnitudes, and selected correlations.

To clarify the FHWA's intent, the national inventory alone will not be used to determine needs. The inventory does provide a convenient framework, however, on which to assemble information from other sources on needs, conditions, hazards, etc. in an identifiable manner. As mentioned previously, it will also be used, in conjunction with accident data, as a basic resource for several supplemental studies.

Efforts have been and will continue to be made to use the most current information available in these studies. To date, updated information has been received for 56,231 crossings in the inventory since a request was made last fall to review the status.

Uniform National Criteria vs. State and Local Priorities

A large number of comments could be interpreted as advocating that uniform national standards should or should not be established for the rail-highway crossing program, either for calculating needs or as a recommendation of the study. Proposals for uniformity varied from national criteria for selecting and funding crossing improvements, to warrants for where and if specific improvement types should be installed. Advantages cited for national standards were consistency in application, greater safety, and most effective use of available funding. Those advocating greater flexibility referred to paperwork reduction, significant differences in motorist expectations and public policies between regions, and insensitivity to local conditions as reasons against national program or project standards.

Application of uniform procedures or standards will not be a study requirement for estimating crossing needs. Neither the data nor consensus necessary to prescribe such uniformity currently exist in most needs categories, such as maintenance, rehabilitation, public information, etc. To evaluate cost impacts and alternatives, uniform levels of warning device installation, annual costs, etc. may be applied to nationwide groupings of crossings, without implying these should be the "standard" solution.

The potential remains that recommendations for national guidelines or warrants in certain crossing program areas could result from the study findings. Where questions such as safety and cost effectiveness, consistency in results, and national applicability can be answered affirmatively, the pros and cons of

national guidelines or warrants in that area will be assessed.

Additional Information

The above summary of comments is necessarily brief and only highlights the responses received. All comments received are available for examination in the FHWA Docket No. 87-12, Room 4232, 400 7th Street, SW., Washington, DC, between 8:30 a.m. and 3:30 p.m. ET, Monday through Friday, except legal holidays. The FHWA continues to encourage public input to the study on national highway-railroad crossing improvement and maintenance needs, and how these needs can be addressed in a cost effective manner. Therefore the docket will remain open for receipt of comments and suggestions throughout the study period (through March, 1989).

At the present time the FHWA and the FRA are conducting internal studies for several of the identified study elements. Coordination is also underway to obtain information to address specific elements of the study dealing with State and railroad activities. Contract services will be utilized to address specific study elements as needed. As this work progresses, the FHWA expects to provide additional opportunities for public input and viewpoints at various stages of study completion.

Issued on April 4, 1988.

Robert E. Farris,

Deputy Administrator.

[FR Doc. 88-7785 Filed 4-7-88; 8:45 am]

BILLING CODE 4910-22-M

DEPARTMENT OF THE TREASURY

Public Information Collection Requirements Submitted to OMB for Review

Date: April 4, 1988.

The Department of Treasury has submitted the following public information collection requirement(s) to OMB for review and clearance under the Paperwork Reduction Act of 1980, Pub. L. 96-511. Copies of the submission(s) may be obtained by calling the Treasury Bureau Clearance Officer listed. Comments to the OMB reviewer listed and to the Treasury Department Clearance Officer, Department of the Treasury, Room 2224, 15th and Pennsylvania Avenue NW., Washington, DC 20220.

Bureau of Alcohol, Tobacco and Firearms

OMB Number: 1512-0215

Form Number: ATF REC 5110/10-ATF F 510.75

Type of Review: Extension

Title: Alcohol Fuel Plants (ATF) Records, Reports and Notices

Description: Data is necessary (1) to determine that persons are qualified to produce alcohol for fuel purposes and to identify such persons, (2) to account for distilled spirits produced and verify proper disposition and (3) to keep registrations current and evaluate permissible variations from prescribed procedures.

Respondents: Individuals or households, State or local governments, Farms, Businesses or other for-profit, Small businesses or organizations.

Estimated Burden: 4,500 hours

Clearance Officer: Robert Masarsky (202) 566-7077, Bureau of Alcohol, Tobacco and Firearms, Room 7011, 1200 Pennsylvania Avenue NW., Washington, DC 20226.

OMB Reviewer: Milo Sunderhauf (202) 395-6880, Office of Management and Budget, Room 3208, New Executive Office Building, Washington, DC 20503.

Lois K. Holland,

Departmental Reports Management Officer.

[FR Doc. 88-7714 Filed 4-7-88; 8:45 am]

BILLING CODE 4810-25-M

Public Information Collection Requirements Submitted to OMB for Review

Date: April 1, 1988.

The Department of Treasury has submitted the following public information collection requirement(s) to OMB for review and clearance under the Paperwork Reduction Act of 1980, Pub. L. 96-511. Copies of the submission(s) may be obtained by calling the Treasury Bureau Clearance Officer listed. Comments to the OMB reviewer listed and to the Treasury Department Clearance Officer, Department of the Treasury, Room 2224, 15th and Pennsylvania Avenue NW., Washington, DC 20220.

Bureau of Alcohol, Tobacco and Firearms

OMB Number: 1512-0018.

Form Number: ATF F 6 Part II (5330.3B).

Type of Review: Extension.

Title: Application and Permit for Importation of Firearms, Ammunition and Implements of War.

Description: This information collection is needed to determine whether firearms, ammunition and implements of war are eligible for importation into the United States. The information is used to secure authorization to import such articles. Forms are used by all persons who are members of the United States Armed Forces.

Respondents: Individuals or households.

Estimated Burden: 4,500 hours.

Clearance Officer: Robert Masarsky, (202) 566-7077, Bureau of Alcohol, Tobacco and Firearms, Room 7011, 1200 Pennsylvania Avenue NW., Washington, DC 20226.

OMB Reviewer: Milo Sunderhauf, (202) 395-6880, Office of Management and Budget, Room 3208, New Executive Office Building, Washington, DC 20503.

Lois K. Holland,

Departmental Reports Management Officer.

[FR Doc. 88-7763 Filed 4-7-88; 8:45 am]

BILLING CODE 4810-25-M

Debt Management Advisory Committee; Closed Meeting

Notice is hereby given, pursuant to section 10 of Pub. L. 92-463, that a meeting will be held at the U.S. Treasury Department in Washington, DC on May 3 and 4, 1988 of the following debt management advisory committee: Public Securities Association, U.S. Government and Federal Agencies Securities Committee

The agenda for the Public Securities Association, U.S. Government and Federal Agencies Securities Committee meeting provides for a working session on May 3 and the preparation of a written report to the Secretary of the Treasury on May 4, 1988.

Pursuant to the authority placed in Heads of Departments by section 10(d) of Pub. L. 92-463, and vested in me by Treasury Department Order 101-05, I hereby determine that this meeting is concerned with information exempt from disclosure under section 552b(c)(4) and (9)(A) of Title 5 of the United States Code, and that the public interest requires that such meetings be closed to the public.

My reasons for this determination are as follows: The Treasury Department requires frank and full advice from representatives of the financial community prior to making its final decision on major financing operations. Historically, this advice has been offered by debt management advisory committees established by the several major segments of the financial community, which committees have been utilized by the Department at meetings called by representatives of the Secretary. When so utilized, such a committee is recognized to be an

advisory committee under Pub. L. 92–463. The advice provided consists of commercial and financial information given and received in confidence. As such debt management advisory committee activities concern matters which fall within the exemption covered by section 552b(c)(4) of Title 5 of the United States Code for matters which are "trade secrets and commercial or financial information obtained from a person and privileged or confidential."

Although the Treasury's final announcement of financing plans may not reflect the recommendations provided in reports of an advisory committee, premature disclosure of these reports would lead to significant financial speculation in the securities market. Thus, these meetings also fall within the exemption covered by section 552b(c)(9)(A) of Title 5 of the United States Code.

The Assistant Secretary (Domestic Finance) shall be responsible for maintaining records of debt management advisory committee meetings and for providing annual reports setting forth a summary of committee activities and such other matters as may be informative to the public consistent with the policy of section 552b of Title 5 of the United States Code.

Charles O. Sethness,

Assistant Secretary (Domestic Finance).

Date: April 5, 1988.

[FR Doc. 88–7715 Filed 4–7–88; 8:45 am]

BILLING CODE 4810-25-M

Internal Revenue Service

[Delegation Order No. 183 (Rev. 3)]

Delegation of Authority

AGENCY: Internal Revenue Service.

ACTION: Delegation of Authroity.

SUMMARY: Delegation Order No. 183 is revised to add the District Directors of Employee Plans and Exempt Organizations key districts to the officials authorized to grant a reasonable extension of time for making an election or application for relief in respect of tax under Subtitle A of the Internal Revenue Code. The revision also allows these District Directors to redelegate this authority. The complete text of the delegation order appears below.

EFFECTIVE DATE: March 22, 1988.

FOR FURTHER INFORMATION CONTACT: Thomas W. Lewald, 1111 Constitution Avenue NW., Room 2237, Washington, DC 20224, Telephone No. (202) 566–6222 (not a toll free telephone number).

Lary Scollick,

Acting Chief, Employee Plans and Exempt Organizations Determinations Branch.

Order No. 183 (Rev. 3)

Effective date: 3–22–88

Extension of Time for Making Certain Elections

1. Pursuant to authority granted to the Commissioner of Internal Revenue by 26 CFR 1.9100–1, the Associate Chief Counsel (Technical and International) and the Assistant Commissioner (Employee Plans and Exempt Organizations) are authorized to grant a reasonable extension of time fixed by regulations for making an election or application for relief in respect of tax under Subtitle A of the Code, subject to the requirements of 26 CFR 1.9100–1.

2. Pursuant to authority granted to the Commissioner of Internal Revenue by 26 CFR 1.9100, the District Directors of Employee Plans and Exempt Organizations Key Districts are authorized to grant, for IRC 505(c) and 508 matters, a reasonable extension of time fixed by regulations for making an election or application for relief in respect of tax under Subtitle A of the Code, subject to the requirements of 26 CFR 1.9100–1.

3. The § 1.9100 authority described in section 1 may be redelegated as follows:

a. For matters under the jurisdiction of the Assistant Commissioner (Employee Plans and Exempt Organizations) to the Director, Exempt Organizations Technical Division. This authority may be further redelegated but not below Branch Chiefs, Exempt Organizations Technical Division.

b. For matters under the jurisdiction of the Associate Chief Counsel (Technical and International) to Directors of the Corporation Tax Division, the Employee Benefits and Exempt Organizations Division, and the Individual Tax Division, and to Branch Chiefs under the supervision of the Deputy Associate Chief Counsel (International). However, in the case of granting extension of time for filing applications for change in accounting method and accounting period not involving precedent issues this authority may be redelegated to the Associate Director, Corporate Tax 4, Corporate Tax Division.

4. The § 1.9100 authority delegated in section 2 may be redelgated no lower than Chief, Technical/Review Staff in EP/EO Key Districts.

5. Delegation Order No. 183 (Rev. 2) effective October 31, 1987, is superseded.

Approved:

Charles H. Brennan,

Deputy Commissionr (Operations).

Date: March 10, 1988.

[FR Doc. 88–7773 Filed 4–7–88; 8:45 am]

BILLING CODE 4830-01-M

VETERANS ADMINISTRATION

Agency Form Under OMB Review

AGENCY: Veterans Administration.

ACTION: Notice.

The Veterans Administration has submitted to OMB for review the following proposal for the collection of information under the provisions of the Paperwork Reduction Act (44 U.S.C. Chapter 35). This document lists the following information: (1) The department or staff office issuing the form, (2) the title of the form, (3) the agency form number, if applicable, (4) a description of the need and its use, (5) how often the form must be filled out, (6) who will be required or asked to report, (7) an estimate of the number of responses, (8) an estimate of the total number of hours needed to fill out the form, and (9) an indication of whether section 3504(h) of Pub. L. 96–511 applies.

ADDRESSES: Copies of the forms and supporting documents may be obtained from John Turner, Department of Veterans Benefits (203C), Veterans Administration, 810 Vermont Avenue NW., Washington, DC 20420, (202) 233–2744. Comments and questions about the items on the list should be directed to the VA's OMB Desk Officer, Joseph Lackey, Office of Management and Budget, 726 Jackson Place NW., Washington, DC 20503, (202) 395–7316.

DATES: Comments on the information collection should be directed to the OMB Desk Officer within 30 days of this notice.

Dated: March 28, 1988.

By direction of the Administrator.

Frank E. Lalley,

Director, Information Management and Statistics.

March 28, 1988.

Extension

1. Department of Veterans Benefits.
2. Veterans Mortgage Life Insurance Statement.
3. VA Form 29-8636.
4. This form is used by the veterans who have received specially adapted housing grants to provide information upon which insurance premiums can be determined or to decline the insurance.
5. On occasion.
6. Individuals or households.
7. 448 responses.
8. 112 hours.
9. Not applicable.

[FR Doc. 88-7769 Filed 4-7-88; 8:45 am]

BILLING CODE 8320-01-M

Sunshine Act Meetings

Federal Register
Vol. 53, No. 68
Friday, April 8, 1988

This section of the FEDERAL REGISTER contains notices of meetings published under the "Government in the Sunshine Act" (Pub. L. 94-409) 5 U.S.C. 552b(e)(3).

FEDERAL DEPOSIT INSURANCE CORPORATION

Notice of Agency Meeting

Pursuant to the provisions of the "Government in the Sunshine Act" (5 U.S.C. 552b), notice is hereby given that at 2:02 p.m. on Tuesday, April 5, 1988, the Board of Directors of the Federal Deposit Insurance Corporation met in closed session, by telephone conference call, to consider the following matters:

Application of United Savings Bank, Salem, Oregon, an insured stock savings bank, for consent to purchase certain assets of and to assume the liability to pay deposits made in Tualatin Valley Bank, Hillsboro, Oregon, and for consent to establish the existing office of Tualatin Valley Bank as a branch of United Savings Bank;

Matters relating to the possible closing of certain insured banks;

Requests for financial assistance pursuant to section 13(c) of the Federal Deposit Insurance Act; and

A personnel matter.

In calling the meeting, the Board determined, on motion of Director C.C. Hope, Jr. (Appointive), seconded by Chairman L. William Seidman, concurred in by Mr. Robert J. Herrmann, acting in the place and stead of Director Robert L. Clarke (Comptroller of the Currency), that Corporation business required its consideration of the matters on less than seven days' notice to the public; that no earlier notice of the meeting was practicable; that the public interest did not require consideration of the matters in a meeting open to public observation; and that the matters could be considered in a closed meeting pursuant to subsections (c)(4), (c)(6), (c)(8), (c)(9)(A)(ii), and (c)(9)(B) of the "Government in the Sunshine Act" (5 U.S.C. 552b(c)(4), (c)(6), (c)(8), (c)(9)(A)(ii), and (c)(9)(B)).

Dated: April 6, 1988.

Federal Deposit Insurance Corporation.

Robert E. Feldman,

Assistant Executive Secretary (Operations).

[FR Doc. 88-7828 Filed 3-6-88; 12.10 pm]

BILLING CODE 6714-01-M

NATIONAL CREDIT UNION ADMINISTRATION

TIME AND DATE: 9:30 a.m., Thursday, April 14, 1988.

PLACE: Filene Board Room, 7th Floor, 1776 G Street, NW., Washington, DC 20456, (202) 357-1100.

STATUS: Open.

MATTERS TO BE CONSIDERED:

1. Approval of Minutes of Previous Open Meeting.
2. Economic Commentary.
3. Request to Defer Further Action on the Definition of Risk Assets.
4. Central Liquidity Facility Report and Review of CLF Lending Rate.
5. Insurance Fund Report.
6. Request by Frankfort Arsenal Community Federal Credit Union to Expand its Communits Field of Membership.
7. Request by State of California for Exemption from NCUA Lending Rules.
8. Appeal of Non-standard Bylaw Amendment Denial by MacDill Federal Credit Union.
9. Final Amendments: NCUA Employee Responsibility and Conduct.

RECESS: 12 noon.

TIME AND PLACE: 1:00 p.m., Thursday, April 14, 1988.

PLACE: Filene Board Room, 7th Floor, 1776 G Street, NW., Washington, DC 20456, (202) 357-1100.

MATTERS TO BE CONSIDERED:

1. Approval of Minutes of Previous Closed Meeting.
2. Budget Reprogramming. Closed pursuant to exemptions (2) and (9)(B).
3. Proposed Purchase of Central Office PBX System. Closed pursuant to exemptions (2) and (9)(B).
4. Board Briefing: Review of Status of ADP Oversight Committee. Closed pursuant to exemption (2).

FOR MORE INFORMATION CONTACT: Becky Baker, Secretary of the Board, telephone (202) 357-1100.

Becky Baker,

Secretary of the Board.

[FR Doc. 88-7841 Filed 4-6-88; 2:04 pm]

BILLING CODE 7535-01-M

NATIONAL LABOR RELATIONS BOARD

TIME AND DATE: 9:30 a.m., Friday, April 1, 1988.

PLACE: Board Conference Room, Sixth Floor, 1717 Pennsylvania Avenue, NW.

STATUS: Closed to public observation pursuant to 5 U.S.C. section 552b(c)(2) (internal personnel rules and practices)

MATTERS CONSIDERED: Administrative Housekeeping matters in respect to rulemaking in the Health Care Industry.

CONTACT PERSON FOR MORE INFORMATION: John C. Truesdale, Executive Secretary, Washington, DC 20570, Telephone: (202) 254-9430.

Dated, Washington, DC, April 5, 1988.

By direction of the Board:

John C. Truesdale,

Executive Secretary, National Labor Relations Board.

[FR Doc. 88-7781 Filed 4-5-88; 4:27 pm]

BILLING CODE 7545-01-M

Corrections

Federal Register
Vol. 53, No. 68
Friday, April 8, 1988

This section of the FEDERAL REGISTER contains editorial corrections of previously published Presidential, Rule, Proposed Rule, and Notice documents and volumes of the Code of Federal Regulations. These corrections are prepared by the Office of the Federal Register. Agency prepared corrections are issued as signed documents and appear in the appropriate document categories elsewhere in the issue.

DEPARTMENT OF HEALTH AND HUMAN SERVICES

Food and Drug Administration

21 CFR Part 340

[Docket No. 75N-0244]

Stimulant Drug Products for Over-the-Counter Human Use; Final Monograph

Correction

In rule document 88-4190 beginning on page 6100 in the issue of Monday, February 29, 1988, make the following corrections:

1. On page 6100, in the third column, in the first complete paragraph, in the 12th line, after "whether" insert "further".

2. On page 6101, in the third column, in the 11th line from the bottom, "Lastest" should read "Latest".

3. On page 6102, in the first column, in reference (4), in the first line, "Lastest" should read "Latest".

4. On the same page, in the second column, in the second complete paragraph, in the fifth line, "and need" should read "the need".

5. On page 6104, in the third column, in the first complete paragraph, in the 19th line, "310(p)" should read "201(p)".

6. On page 6105, in the first column, in the **Authority**, in the fourth line, "335" should read "355".

BILLING CODE 1505-01-D

DEPARTMENT OF HEALTH AND HUMAN SERVICES

Food and Drug Administration

[Docket No. 88N-0046]

Vibrio Vulnificus as Related to Shellfish Sanitation and Shellfish-Growing Waters; Workshop

Correction

In notice document 88-4102 beginning on page 5836 in the issue of Friday, February 26, 1988, make the following corrections:

1. On page 5836, in the third column, in the third line, "federal" should read "fecal".

2. On the same page, in the same column, in the third complete paragraph, in the sixth line, "date" should read "data".

BILLING CODE 1505-01-D

DEPARTMENT OF THE TREASURY

Internal Revenue Service

26 CFR Parts 1 and 602

[T.D. 8178]

Income Taxes; Passive Foreign Investment Companies

Correction

In rule document 88-4446 beginning on page 6770 in the issue of Wednesday, March 2, 1988, make the following corrections:

1. On page 6772, in the first column, under "*Election to Extend Time for Payment of Tax*", in the first paragraph, in the 19th line, "or" should read "of".

2. On the same page, in the third column, the sixth line should read: "Par. 2. New § § 1.1291-0T, 1.1291-10T,".

§ 1.1297-3T [Corrected]

3. On page 6773, in the first column, in § 1.1297-3T, the first paragraph should read:

"(a) In general".

§ 1.1291-10T [Corrected]

4. On the same page, in the third column, in § 1.1291-10T(d)(2)(vii), the section designation should read "§ 1.1295-1T(b)(5);".

§ 1.1294-1T [Corrected]

5. On the same page, in the same column, in § 1.1294-1T, in paragraph (a), in the 17th line "income" was misspelled; and the 23rd line should read "shareholder's share of the earnings shall be included in the shareholder's taxable year in which or".

6. On page 6774, in the first column, in the same section, in paragraph (b)(3)(ii), *Example (1)*(i), in the ninth line, "in includible in" should read "is includible in".

7. On the same page, in the third column, in the same section and paragraph, in *Example (2)*, paragraph (ii), in the fourth line from the bottom of that paragraph, "liability of" should read "liability on".

BILLING CODE 1505-01-D

VOL
53

ISS
68

AP
8

1988

UMI

federal register

Friday
April 8, 1988

Part II

Environmental Protection Agency

40 CFR Parts 264, 265, 268, and 271
Land Disposal Restrictions for First Third of Scheduled Wastes; Proposed Rule

ENVIRONMENTAL PROTECTION AGENCY

40 CFR Parts 264, 265, 268, and 271

[OSW-FR-88-005; FRL-3300-2]

Land Disposal Restrictions for Restrictions for First Third of Scheduled Wastes

AGENCY: Environmental Protection Agency (EPA).

ACTION: Proposed rule.

SUMMARY: The Environmental Protection Agency (EPA) is today proposing its approach to implementing the congressionally mandated prohibitions on land disposal of hazardous wastes listed in 40 CFR 268.10. These actions are responsive to amendments to the Resource Conservation and Recovery Act (RCRA), enacted in the Hazardous and Solid Waste Amendments (HSWA) of 1984.

Today's notice proposes specific treatment standards and effective dates for some of the so-called "First Third" wastes. Additionally, the Agency is proposing its approach to implementing the land disposal restrictions provisions for those First Third wastes for which a treatment standard is not set. Also addressed in today's notice are the Agency's proposed modifications to the "no migration" petition process.

DATE: Comments on this proposed rule must be submitted on or before May 23, 1988.

ADDRESSES: The public must send an original and two copies of their comments to EPA RCRA Docket (S-212) (WH-562), U.S. Environmental Protection Agency, 401 M Street SW., Washington, DC 20460. Place the Docket Number F-88-LDR7-FFFFF on your comments. The OSW docket is located in the EPA RCRA Docket Room (sub-basement), 401 M Street SW., Washington, DC 20460. The docket is open from 9:00 to 4:00, Monday through Friday, except for public holidays. To review docket materials, the public must make an appointment by calling (202) 475-9327. The public may copy a maximum of 50 pages from any regulatory document at no cost. Additional copies cost $.20 per page.

FOR FURTHER INFORMATION CONTACT: For general information, contact Stephen Weil, or Mitch Kidwell, Office of Solid Waste (WH-562B), U.S. Environmental Protection Agency, 401 M Street SW., Washington, DC 20460, (202) 382-4770. For specific information on BDAT/treatment standards, contact Jim Berlow, Office of Solid Waste (WH-565), U.S. Environmental Protection Agency, 401 M Street SW., Washington, DC 20460, (202) 382-7917. For specific information on capacity determinations/national variances, contact Jo-Ann Bassi, or Linda Malcolm, Office of Solid Waste (WH-565), U.S. Environmental Protection Agency, 401 M Street SW., Washington, DC 20460, (202) 382-7917.

SUPPLEMENTARY INFORMATION:

Outline

I. Background
- A. Brief Summary of the Hazardous and Solid Waste Amendments of 1984 (HSWA)
  - 1. Solvents and Dioxins
  - 2. California List Wastes
  - 3. Scheduled Wastes
  - 4. Newly Identified and Listed Wastes
- B. Summary of the Land Disposal Restrictions Framework
  - 1. Regulatory Framework
  - 2. Applicability
  - 3. Development of § 3004(m) Treatment Standards
  - 4. Application of the Toxicity Characteristic Leaching Procedures (TCLP)
  - 5. Determination of Alternative Capacity and Ban Effective Dates
    - a. Effective Dates Based on National Capacity Determinations
    - b. Case-by-Case Extensions
  - 6. Exemption for Treatment in Surface Impoundments
  - 7. Dilution Prohibition
  - 8. Storage Prohibition
  - 9. Variance from the Treatment Standard
  - 10. "No Migration" Exemption
  - 11. Permit Modifications and Changes During Interim Status
  - 12. Treatment Standards and Effective Dates for Restricted Wastes
  - 13. The California List

II. Summary of Today's Proposal
- A. Proposed Approach
- B. Best Demonstrated Available Technologies (BDAT)
- C. Waste Analysis Requirements
- D. Nationwide Variances from the Effective Date
- E. "Soft Hammer" Requirements
- F. "No Migration" Petition

III. Regulatory Approach for the First Third Wastes
- A. Determination of Treatability Groups and Development of BDAT Treatment Standards
  - 1. Waste Treatability Groups
  - 2. Demonstrated Treatment Technologies
  - 3. Selection of Facilities for Engineering Visits and Sampling
  - 4. Hazardous Constituents Considered and Selected for Regulation (BDAT List)
  - 5. Compliance with Performance Standards
  - 6. Identification of BDAT
  - 7. BDAT Treatment Standards for "Derived-From" and "Mixed" Wastes
    - a. Applicability of BDAT to "Derived-From" Wastes From Treatment Trains Generating Multiple Residues
    - b. Applicability of BDAT to Mixtures and Other Derived-From Residues
  - 8. Transfer of Treatment Standards
  - 9. "No Land Disposal" as the Treatment Standard
  - 10. Waste-Specific Treatment Standards
    - a. K061—Emission Control Dust/Sludge from the Primary Production of Steel in Electric Furnaces
    - b. K062—Spent Pickle Liquor Generated by Steel Finishing Operations of Facilities Within the Iron and Steel Industry (SIC Codes 331 and 332)
    - c. K016—Heavy Ends or Distillation Residues from the Production of Carbon Tetrachloride
      - K018—Heavy Ends from the Fractionation in Ethyl Chloride Produciton
      - K019—Heavy Ends from the Distillation of Ethylene Dichloride Production
      - K020—Heavy Ends from the Distillation of Vinyl Chloride in Vinyl Chloride Monomer Produciton
      - K030—Column Bottoms or Heavy Ends from the Combined Production of Trichloroethylene and Perchloroethylene
    - d. K024—Distillation Bottoms from the Production of Phthalic Anhydride from Naphthalene
    - e. K103—Process Residues from Aniline Extraction from the Production of Aniline
      - K104—Combined Wastewater Streams Generated from Nitrobenzene/Aniline Production
    - f. K071—Brine Purification Muds from the Mercury Cell Process in Chlorine Production, where Separately Prepurified Brine is Not Used
    - g. K048—Dissolved Air Flotation (DAF) Float from the Petroleum Refining Industry
      - K049—Slop Oil Emulsion Solids from the Petroleum Refining Industry
      - K050—Heat Exchanger Bundle Cleaning Sludge from the Petroleum Refining Industry
      - K051—API Separator Sludge from the Petroleum Refining Industry

K052—Tank Bottoms (Leaded) from the Petroleum Refining Industry
h. K069—Emission Control Dust/Sludge from Secondary Lead Smelting
i. K015—Still Bottoms from the Distillation of Benzyl Chloride
j. K037—Wastewater Treatment Sludges from the Production of Disulfoton
k. K004—Wastewater Treatment Sludge from the Production of Zinc Yellow Pigments
K006—Oven Residue from the Production of Chrome Oxide Green Pigments
K036—Still Bottoms from Toluene Reclamation Distillation in the Production of Disulfoton
K073—Chlorinated Hydrocarbon Waste from the Purification Step of the Diaphragm Cell Process Using Graphite Anodes in Chlorine Produciton
K100—Waste Leaching Solution from Acid Leaching of Emission Control Dust/Sludge from Secondary Lead Smelting
B. Testing and Recordkeeping
1. Waste Analysis
2. Notification Requirements
3. Recordkeeping Requirements for Storage Facilities
C. "Soft Hammer" Provisions
1. Applicability
2. Interpretation of Specific Terms
a. "Treatment"
b. "Facility"
c. "Certification by Owners or Operators as well as Generators"
3. Certification Requirements
4. Treatment of "Soft Hammer" Wastes in Surface Impoundments
5. Retrofitting Variances
D. Disposal of Restricted Wastes Subject to an Extension of the Effective Date
E. Relationship to California List Prohibitions
F. Determination as to the Availability of the Two-Year Nationwide Variance for Solvent Wastes Which Contain Less Than 1% Total F001–F005 Solvent Constituents
G. Storage Prohibition
H. Petitions to Allow Land Disposal of Prohibited Wastes
1. Overview
2. Requirements of "No Migration" Petitions in the November 7, 1986 Final Rule
3. Regulatory Requirements of RCRA Sections 3004(f) and (g) November 7, 1986 Final Rule
4. Additional Requirements for "No Migration" Petitions for Surface Units
I. Proposed Approach To Comparative Risk Assessment
J. Determination of Alternative Capacity and Effective Dates for the First Third Wastes
1. Quantities of Wastes Land Disposed
2. Required Alternative Capacity
3. Capacity Currently Available and Effective Dates
4. Capacity Variances for "Derived-From" and "Mixed" Wastes
5. Capacity Variances for "Soft Hammer" Wastes
IV. Modifications to the Land Disposal Restrictions Framework
A. General Waste Analysis (§ 264.13 and § 265.13)
B. Operating Record (§ 264.73 and § 265.73)
C. Purpose, Scope, and Applicability (§ 268.1)
D. Treatment in Surface Impoundment Exemption (§ 268.4)
E. Case-by-Case Extensions (§ 268.5)
F. "No Migration" Petitions (§ 268.6)
G. Testing and Recordkeeping (§ 268.7)
H. Landfill and Surface Impoundment Restrictions (§ 268.8)
I. Waste Specific Prohibitions—First Third Wastes (§ 268.33)
J. Treatment Standards (§ 268.40, § 268.41, and § 268.43)
K. Storage Prohibition (§ 268.50)
V. State Authority
A. Applicability of Rules in Authorized States
B. Effect on State Authorizations
C. State Implementation
VI. Effects of the Land Disposal Restrictions Program on Other Environmental Programs
A. Discharges Regulated Under the Clean Water Act
B. Discharges Regulated Under the Marine Protection, Research, and Sanctuaries Act (MPRSA)
C. Air Emissions Regulated Under the Clean Air Act
VII. Regulatory Analyses
A. Regulatory Impact Analysis
1. Purpose
2. Executive Order No. 12291
3. Basic Approach/Regulatory Alternatives
4. Methodology
5. Results
B. Regulatory Flexibility Act
C. Paperwork Reduction Act
D. Review of Supporting Documents
VIII. Implementation of the Part 268 Land Disposal Restrictions Program
IX. References
X. List of Subjects in 40 CFR Parts 264, 265, 268, and 271

I. Background

A. Brief Summary of the Hazardous and Solid Waste Amendments of 1984 (HSWA)

The Hazardous and Solid Waste Amendments (HSWA), enacted on November 8, 1984, require the Agency to promulgate regulations that restrict the land disposal of hazardous wastes. Specifically, the amendments specify dates when particular groups of hazardous wastes are prohibited from land disposal unless "it has been demonstrated to the Administrator, to a reasonable degree of certainty, that there will be no migration of hazardous constituents from the disposal unit or injection zone for as long as the wastes remain hazardous" (RCRA sections 3004 (d)(1), (e)(1), (g)(5), 42 U.S.C. 6924 (d)(1), (e)(1), (g)(5)). Congress established a separate schedule for restricting the disposal by underground injection into deep injection wells of solvent- and dioxin-containing hazardous wastes and wastes referred to collectively as California list hazardous wastes (RCRA section 3004(f)(2), 42 U.S.C. 6924(f)(2)).

The amendments also require the Agency to set "levels or methods of treatment, if any, which substantially diminish the toxicity of the waste or substantially reduce the likelihood of migration of hazardous constituents from the waste so that short-term and long-term threats to human health and the environment are minimized" (RCRA section 3004(m)(1), 42 U.S.C. 6924(m)(1)). Wastes that meet treatment standards established by EPA are not prohibited and may be land disposed. The Agency can also grant a variance from a treatment by revising the treatment standard for a waste through rulemaking procedures. In addition, a hazardous waste that does not meet the treatment standard may be land disposed provided the "no migration" demonstration specified in sections 3004 (d)(1), (e)(1), and (g)(5) is made.

For the purposes of the restrictions, HSWA defines land disposal "to include, but not be limited to, any placement of * * * hazardous waste in a landfill, surface impoundment, waste pile, injection well, land treatment facility, salt dome formation, salt bed formation, or underground mine or cave" (RCRA section 3004(k), 42 U.S.C. 6924(k)).

Although HSWA defines land disposal to include injection wells, such disposal of solvents, dioxins, and the California list wastes is covered on a separate schedule. The disposal of such wastes in deep-wells is subject to the land disposal restrictions by August 8, 1988.

The land disposal restrictions are effective when promulgated unless the Administrator grants a national variance from the statutory date and establishes a different date (not to exceed two years beyond the statutory deadline) based on "the earliest date on which adequate alternative treatment, recovery, or disposal capacity which

protects human health and the environment will be available" (RCRA section 3004(h)(2), 42 U.S.C. 6924(h)(2)). In addition, the Administrator may grant a case-by-case extension of the statutory deadline for up to one year, renewable once for up to one additional year, when an applicant "demonstrates that there is a binding contractual commitment to construct or otherwise provide such alternative capacity but due to circumstances beyond the control of such applicant such alternative capacity cannot reasonably be made available by such effective date" (RCRA section 3004(h)(3), 42 U.S.C. 6924(h)(3)).

The statute also allows treatment of hazardous wastes in surface impoundments that meet certain minimum technological requirements (certain exceptions are allowed). Treatment in surface impoundments is permissible provided the treatment residues that do not meet the treatment standard(s) (or applicable statutory prohibition levels where no treatment standards have been established) are "removed for subsequent management within one year of the entry of the waste into the surface impoundment" (RCRA section 3005(j)(11)(B), 42 U.S.C. 6925(j)(11)(B)).

In addition to prohibiting the land disposal of hazardous wastes, Congress also prohibited the storage of restricted wastes unless "such storage is solely for the purpose of the accumulation of such quantities of hazardous waste as are necessary to facilitate proper recovery, treatment or disposal" (RCRA section 3004(j), 42 U.S.C. 6924(j).

1. Solvents and Dioxins

As of November 8, 1986, HSWA prohibits the land disposal (except by underground injection into deep wells) of the following wastes: dioxin-containing hazardous wastes numbered F020, F021, F022, and F023; and solvent-containing hazardous wastes numbered F001, F002, F003, F004, and F005 in 40 CFR 261.31 (RCRA sections 3004(e)(1), (e)(2), 42 U.S.C. 6924 (e)(1), (e)(2)). Effective August 8, 1988, the disposal of these wastes into deep injection wells is prohibited (RCRA sections 3004 (f)(2), (f)(3), 42 U.S.C. 6924 (f)(2), (f)(3)). During the period ending November 8, 1988, this prohibition does not apply to disposal of solvent- and dioxin-contaminated soil or debris resulting from a response action taken under section 104 or 106 of the Comprehensive Environmental Response, Compensation, and Liability Act of 1980 (CERCLA) or a corrective action taken under Subtitle C of RCRA (RCRA section 3004(e)(3), 42 U.S.C. 6924(e)(3)).

2. California List Wastes

As of July 8, 1987, the statute prohibits further land disposal (except by deep well injection) of the following wastes listed or identifed under section 3001 of RCRA.

(A) Liquid hazardous wastes, including free liquids associated with any solid or sludge, containing free cyanides at concentrations greater than or equal to 1,000 mg/1.

(B) Liquid hazardous wastes, including free liquids associated with any solid or sludge, containing the following metals (or elements) or compounds of these metals (or elements) at concentrations greater than or equal to those specified below:

(i) arsenic and/or compounds (as As) 500 mg/1;
(ii) cadmium and/or compounds (as Cd) 100 mg/1;
(iii) chromium (VI and/or compounds (as Cr VI)) 500 mg/1;
(iv) lead and/or compounds (as Pb) 500 mg/1;
(v) mercury and/or compounds (as Hg) 20 mg/1;
(vi) nickel and/or compounds (as Ni) 134 mg/1;
(vii) selenium and/or compounds (as Se) 100 mg/1; and
(viii) thallium and/or compounds (as Tl) 130 mg/1.

(C) Liquid hazardous waste having a pH less than or equal to two (2.0).

(D) Liquid hazardous wastes containing polychlorinated biphenyls at concentrations greater than or equal to 50 ppm.

(E) Hazardous wastes containing halogenated organic compounds in total concentration greater than or equal to 1,000 mg/kg.

(RCRA sections 3004 (d)(1), (d)(2), 42 U.S.C. 6924 (d)(1), (d)(2)). Effective August 8, 1988, the underground injection into deep wells of these wastes is prohibited (RCRA sections 3004 (f)(2), (f)(3), 42 U.S.C. 6924 (f)(2), (f)(3)). During the period ending November 8, 1988, there is no prohibition on the land disposal of California list wastes that are contaminated soil or debris resulting from a response action taken under section 104 or 106 of CERCLA or a corrective action taken under Subtitle C of RCRA (RCRA section 3004(e)(3), 42 U.S.C. 6924(e)(3)).

3. Scheduled Wastes

The amendments required the Agency to prepare a schedule, by November 8, 1986, for restricting the land disposal of all hazardous wastes listed or identified as of November 8, 1984 in 40 CFR Part 261, excluding solvent- and dioxin-containing wastes and California list wastes covered under the schedule set by Congress. The schedule, based on a ranking of the listed wastes that considers their intrinsic hazard and their volume, is to ensure that prohibitions and treatment standards are promulgated first for high volume hazardous wastes with high intrinsic hazard before standards are set for low volume wastes with low intrinsic hazard. The statute further requires that these determinations be made by the following deadlines:

(A) At least one-third of all listed hazardous wastes by August 8, 1988.

(B) At least two-thirds of all listed hazardous wastes by June 8, 1989.

(C) All remaining listed hazardous wastes and all hazardous wastes identified as of November 8, 1984 by one or more of the characteristics defined in 40 CFR Part 261 by May 8, 1990.

If EPA fails to set a treatment standard by the statutory deadline for any hazardous waste in the first-third or second-third of the schedule, the waste may be disposed in a landfill or surface impoundment provided the unit is in compliance with the minimum technological requirements specified in section 3004(o) of RCRA. In addition, prior to disposal, the generator must certify to the Administrator that he has investigated the availability of treatment capacity and has determined that disposal in such landfill or surface impoundment is the only practical alternative to treatment currently available to the generator. This restriction on the use of landfills and surface impoundments applies until EPA sets a treatment standard for the waste. The use of other forms of land disposal is not similarly restricted, and may continue to be used for disposal of untreated wastes until EPA promulgates treatment standards, or until May 8, 1990, whichever is sooner. If the Agency fails to set a treatment standard for any ranked hazardous waste by May 8, 1990, the waste is automatically prohibited from land disposal unless the waste is the subject of a successful "no migration" demonstration (RCRA section 3004(g), 42 U.S.C. 6924(g)). In a May 28, 1986 final rule (51 FR 19300), EPA published the schedule for setting treatment standards for the listed hazardous wastes, with all wastes that are identified as hazardous by characteristic being ranked in the third-third. This schedule is incorporated in 40 CFR 268.10, 268.11, and 268.12.

4. Newly Identified and Listed Wastes

RCRA requires the Agency to set a treatment standard for any hazardous waste that is newly identified or listed in 40 CFR Part 261 after November 8, 1984 within six months of the date of identification or listing (RCRA section

3004(g)(4), 42 U.S.C. 6924(g)(4)). However, the statute does not provide for an automatic prohibition on the land disposal of such wastes if EPA fails to establish treatment standards within the six-month period.

B. Summary of the Land Disposal Restrictions Framework

In this section EPA describes, for the readers' convenience, the existing land disposal regulations under 40 CFR Part 268. EPA, however, is not reopening any of these existing rules for public comment unless it explicitly says so elsewhere in the preamble.

1. Regulatory Framework

On November 7, 1986, EPA promulgated a final rule (51 FR 40572) establishing the regulatory framework for implementing the land disposal restrictions. Corrections to the November 7, 1986 final rule were included in a June 4, 1987 **Federal Register** notice (52 FR 21010) to clarify the Agency's approach to regulating restricted wastes. Some changes to the framework were made in the July 8, 1987 rulemaking that prohibited certain California list wastes (52 FR 25760). By each statutory deadline, and in accordance with the schedule promulgated on May 28, 1986 (51 FR 19300), the Agency must promulgate the applicable treatment standards under Part 268 Subpart D for each hazardous waste. Once the treatment standards are effective, restricted wastes may be land disposed in a Subtitle C hazardous waste facility if they meet the applicable treatment standards. However, if treatment standards are not promulgated by the statutory and scheduled deadlines, such wastes are prohibited from land disposal unless certain demonstrations are made by those who wish to continue land disposal. Such demonstrations are allowed only until May 8, 1990 (when wastes are automatically prohibited by statute), or until EPA promulgates treatment standards, whichever is sooner.

After the effective dates of the prohibitions, wastes that do not comply with the applicable treatment standards will be prohibited from continued placement in land disposal units unless a petition has been approved under § 268.6 demonstrating that there will be no migration of hazardous constituents from the land disposal unit or injection zone for as long as the waste remains hazardous. Also, EPA may grant an extension to the effective date under § 268.5 on a case-by-case basis.

2. Applicability

The land disposal restrictions apply prospectively to the affected wastes. In other words, hazardous wastes land disposed after the effective date are subject to the restrictions, but wastes land disposed prior to the applicable effective date are not required to be removed or exhumed for treatment. Similarly, the restrictions on storage of affected hazardous wastes apply only to wastes placed in storage after the effective date of an applicable land disposal restriction. If, however, wastes subject to the land disposal restrictions are removed from storage or land disposal after the effective date, such wastes would be subject to the restrictions and treatment standards.

The provisions of the land disposal restrictions apply to wastes produced by generators of 100 to 1,000 kilograms of hazardous waste (or greater than 1 kg of acute hazardous waste) in a calendar month. However, wastes produced by generators of less than 100 kilograms of hazardous waste (or less than 1 kg of acute hazardous waste) per calendar month are conditionally exempt from RCRA regulation, including the land disposal restrictions.

The land disposal restrictions apply to both interim status and permitted facilities, as well as those not regulated under RCRA. All permitted facilities are subject to the restrictions, regardless of existing permit conditions. The land disposal restrictions supersede 40 CFR 270.4(a), which currently provides that compliance with a RCRA permit constitutes compliance with Subtitle C.

3. Development of § 300 4(m) Treatment Standards

In the November 7, 1986 rulemaking, EPA promulgated a technology-based approach to establishing treatment standards under section 3004(m). These treatment standards are generally based on the performance of the best demonstrated available technology (BDAT) identified for the hazadous constitutents.

In developing the treatment standards, EPA characterizes the wastes and establishes treatability groups for wastes having similar physical and chemical properties and, thus, similar treatability characteristics. Once the treatability groups are established, EPA collects and analyzes data on identified technologies used to treat the wastes in each treatability group.

EPA identifies those technologies that are "demonstrated" by full-scale operations. The demonstrated technologies are then evaluated to determine whether they may be considered "available". To be considered "available," the Agency determines whether the demonstrated technologies (1) are commercially available, (2) do not present a clear increase in risk to human health and the environment when compared to land disposal of the untreated wastes, and (3) substantially diminish the toxicity of the waste or substantially reduce the likelihood of migration of hazardous constituents from the waste.

The performance data on the demonstrated available technologies are then evaluated to determine whether the data is representative of well-designed and well-operated treatment systems. Only data from well designed and operated systems are included in determining BDAT. The performance data on well-designed and well-operated demonstrated available technologies are then statistically analyzed to determine the performance level representative of treatment by BDAT.

EPA may establish treatment standards as either a specific technology, or as a performance level of treatment monitored by measuring the concentration level of the hazardous constituents in the waste or treatment residual or an extract of the waste or treatment residual. When possible, EPA prefers to establish treatment standards as performance levels, allowing the regulated community greatest flexibility in meeting the treatment standard. When treatment standards are set as performance levels, the regulated community may use any technology (not otherwise prohibited, e.g., impermissible dilution) to treat the waste to meet the treatment standard and is not limited to only those technologies considered in determining BDAT. However, when treatment standards are expressed as specific treatment methods, such methods must be employed.

4. Application of the Toxicity Characteristic Leaching Procedure (TCLP)

In the November 7, 1986 final rule, EPA promulgated regulations requiring the regulated community to use the Toxicity Characteristic Leaching Procedure (TCLP) (Part 268 Appendix I) when developing an extract from a restricted solvent or dioxin-containing waste or treatment residual. This extract must be analyzed to determine whether the concentrations of hazardous constituents meet the applicable treatment standards (which are expressed in Table CCWE at § 268.41 as constituent levels in the TCLP extract). EPA notes that the TCLP has only been

BEST COPY AVAILABLE

promulgated for monitoring compliance with the treatment standards established for the F001–F005 spent solvent wastes and the F020–F023 and F026–F028 dioxin-contaminated wastes. The TCLP was not promulgated for monitoring compliance with the California list restrictions.

5. Determination of Alternative Capacity and Ban Effective Dates

a. Effective Dates Based on National Capacity Determinations. The Agency has the authority to grant national variances (not to exceed two years) to the statutory effective date based upon a lack of adequate alternative treatment, recovery or disposal capacity. To make this determination, EPA considers, on a nationwide basis, both the capacity of alternative treatment technologies (permitted and interim status facilities that will be on-line by the effective date) and the quantity of restricted wastes generated. If adequate capacity is available, the restriction on land disposal of that waste goes into effect by the statutory deadline. If there is a significant shortage of national capacity, EPA may establish an alternative effective date based on the earliest date on which adequate capacity for treatment, recovery or disposal that is protective of human health and the environment will be available.

During the period of the national variance, the waste is not subject to the land disposal prohibitions. However, if the waste is land disposed, it must be disposed in facilities in compliance with the minimum technological requirements of RCRA section 3004(o) (42 U.S.C. 6924(o)). (Note: EPA is proposing in today's notice to amend this provision to require that where such waste is disposed in a landfill or surface impoundment unit, the *unit* must be in compliance with the minimum technological requirements.)

b. *Case-by-Case Extensions.* The Agency will consider granting up to a 1-year extension (renewable only once) of a ban effective date on a case-by-case basis. The applicant must demonstrate (among other things stated in § 268.5) that a good faith effort has been made to locate and contract with treatment, recovery, or disposal facilities nationwide to manage his wastes, and that he has entered into a binding contractual commitment to construct or otherwise provide alternative capacity that cannot reasonably be made available by the applicable effective date due to circumstances beyond his control. During the period of the extension, the waste is not subject to the land disposal prohibitions. However, if the waste is land disposed, it must be disposed in units in compliance with the minimum technological requirements of RCRA section 3004(o) (42 U.S.C. 6924(o)). (Note: EPA is proposing in today's notice to amend this provision to require that where such waste is disposed in a landfill or surface impoundment unit, the *unit* must be in compliance with the minimum technological requirements.)

6. Exemption for Treatment in Surface Impoundments

Wastes that would otherwise be prohibited from one or more methods of land disposal may be treated in a surface impoundment that meets certain technological requirements (§ 268.4(a)(3)) as long as treatment residuals that do not meet the applicable treatment standard (or statutory prohibition levels where no treatment standards are established) are removed within one year of entry into the impoundment and are not placed into any other surface impoundment for subsequent management. The owner or operator of such an impoundment must certify to the Regional Administrator that the technical requirements have been met and must also submit a copy of the waste analysis plan that has been modified to provide for testing treatment residuals in accordance with § 268.4 requirements.

As promulgated in the July 8, 1987 California list final rule (52 FR 25760), evaporation of hazardous constituents as the principal means of treatment is not considered treatment for the purposes of this exemption (§ 268.4(b)).

7. Dilution Prohibition

As established in the November 7, 1986 rule, and slightly modified in the July 8, 1987 rule, dilution is prohibited as a substitute for adequate treatment in complying with the land disposal restrictions. This includes dilution in lieu of adequate treatment to meet established treatment standards, as well as dilution to circumvent the effective date of a prohibition, or dilution to otherwise avoid a prohibition (§ 268.3). However, dilution is permitted as a necessary part of the treatment process.

8. Storage Prohibition

Storage of restricted wastes is prohibited except where storage is solely for the purpose of accumulating such quantities of wastes as are necessary to facilitate proper treatment, recovery, or disposal (§ 268.50). Treatment, storage, and disposal facilities may store restricted wastes for as long as needed, provided such storage is solely for this purpose. However, if the facility stores a restricted waste for more than one year, it bears the burden of proof that such storage was solely for this purpose (no notification of storage exceeding one year is required). For storage of less than one year, EPA bears the burden of proof that such storage was not for the sole purpose of accumulating such quantities of wastes as are necessary to facilitate proper treatment, recovery, or disposal. The prohibition on storage does not apply to wastes which meet the treatment standard, wastes which have been granted an extension to the effective date, and wastes which are the subject of a "no migration" exemption under § 268.6.

9. Variance From the Treatment Standard

EPA established the variance from the treatment standard to account for those wastes which are unable to be treated to meet the applicable treatment standards, even if well-designed and well-operated BDAT treatment systems are used (§ 268.44). Petitions must demonstrate (among other things) that the waste is significantly different from the wastes evaluated by EPA in establishing the treatment standard and that the waste cannot be treated in compliance with the applicable treatment standard. This variance procedure could result in the establishment of a new waste treatability group and corresponding treatment standard that would apply to all wastes meeting the criteria of the new waste treatability group.

10. "No Migration" Exemption

EPA will consider allowing the land disposal of a specific untreated restricted waste at a specific site if the Agency determines that the applicable land disposal method is protective of human health and the environment (§ 268.6). For the Agency to make this determination, a petitioner must demonstrate (among other things) that such disposal will not allow the migration of hazardous constituents from the disposal unit or injection zone for as long as the waste remains hazardous. (RCRA section 3004(d), 42 U.S.C. 2964(d)(1)). Today's notice includes the Agency's proposed amendments to the "no migration" petition requirements under § 268.6.

11. Permit Modifications and Changes During Interim Status

To facilitate the implementation of the land disposal restrictions, § 270.42 was modified in the November 7, 1986 rule to allow permitted treatment facilities more flexibility to treat restricted

wastes not previously specified in their permit Upon Federal or State approval of a minor permit modification (under § 270.42), treatment facilities may treat wastes prohibited from one or more methods of land disposal provided that treatment is in accordance with established treatment standards, that handling and treatment of the restricted wastes will not present substantially different risks from those wastes listed in the permit, and that no changes in the treatment process or physical equipment are made to accommodate these wastes.

The July 8, 1987 California list final rule allowed permitted facilities to use the minor modification process, under certain conditions, to obtain approval to change their facilities to treat or store restricted wastes in tanks and containers as necessary to comply with the land disposal restrictions. This rule also allowed interim status facilities to expand their operations by more than 50 percent, in terms of capital expenditures, to treat or store restricted wastes in tanks or containers as necessary to comply with the land disposal restrictions.

12. Treatment Standards and Effective Dates for Restricted Wastes

Treatment standards and effective dates for restricted wastes are discussed in detail in the November 7, 1986 rule on solvents and dioxins, and in the July 8, 1987 final rule on California list wastes. The applicable effective dates for restricted wastes are found at 40 CFR Part 268 Subpart C. The applicable treatment standards for restricted wastes are found at 40 CFR Part 268 Subpart D.

13. The California List

EPA promulgated the land disposal restrictions final rule for some California list wastes on July 8, 1987 (52 FR 25760). This rule promulgated treatment standards and corresponding effective dates for the California list hazardous wastes containing polychlorinated biphenyls (PCBs) and most of the California list wastes containing halogenated organic compounds (HOCs), and codified the statutory prohibition for certain corrosive wastes. This rule also established methods for determining compliance with the prohibitions and made some modifications (as discussed previously) to the land disposal restrictions framework promulgated November 7, 1986 (51 FR 40572).

No prohibition levels or treatment standards were established for the California list hazardous wastes containing metals or free cyanides. However, the statutory prohibitions took effect on July 8, 1987 by operation of the "hammer provision" in RCRA section 3004(d). A notice of data availability and request for comment, which outlines the Agency's findings with respect to establishing more stringent prohibition levels for the metal and cyanide wastes, was published on August 12, 1987 (52 FR 29992). A final rule establishing prohibitions for these wastes may be forthcoming.

The California list final rule requires that the Paint Filter Liquids Test (PFLT) be used to determine whether a waste, including a free cyanide or metal-bearing waste, is considered to be a liquid for purposes of the California list land disposal restrictions. This procedure is method 9095 in EPA Publication No. SW-846, "Test Methods for Evaluating Solid Waste."

To determine compliance with the statutory prohibition levels for the metal and free cyanide wastes, EPA will evaluate whether the PLFT filtrate contains the prohibited constituents in concentrations exceeding the specified levels. However, compliance with the HOC, PCB, and corrosive waste prohibitions requires the analysis of the entire waste, not a PFLT-generated filtrate.

The California list final rule integrated a number of TSCA PCB requirements into the RCRA framework. This ensures that where inconsistencies exist between TSCA and RCRA standards, the more stringent regulations govern.

The July 8, 1987 final rule established treatment standards as specified technologies for California list PCB and HOC wastes (except dilute HOC wastewaters). All liquid and nonliquid hazardous wastes containing HOCs (listed in Appendix III of Part 268) in total concentration greater than or equal to 1,000 mg/kg, except dilute HOC wastewaters (i.e., primarily water mixtures containing HOCs in concentrations greater than or equal to 1,000 mg/l but less than 10,000 mg/l), must be incinerated in accordance with the requirements of Part 264 Subpart O or Part 265 Subpart O. However, EPA determined that there is a nationwide lack of incineration capacity for these HOC wastes requiring incineration and, therefore, granted a 2-year variance from the treatment standard.

Treatment standards were not established for dilute HOS wastewaters. Dilute HOC wastewaters need not be incinerated, but they must be treated to below the 1,000 mg/l prohibition level. Dilute HOC wastewaters were not granted a variance and were prohibited from land disposal as of July 8, 1987.

Liquid hazardous wastes containing PCBs at concentrations greater than or equal to 50 ppm must be treated in accordance with existing TSCA thermal treatment regulations at 40 CFR Part 761. For PCB concentrations greater than or equal to 50 ppm but less than 500 ppm, incineration in accordance with the technical requirements of 40 CFR 761.70 or burning in high efficiency boilers in accordance with the technical requirements of 40 CFR 761.60 is required. For PCB concentrations greater than or equal to 500 ppm, incineration in accordance with the technical requirements of 40 CFR 761.70 is required. Thermal treatment for PCBs must also be in compliance with applicable regulations in Parts, 264, 265, and 266. No extension to the effective date was granted.

Wastes which are contaminated soil and debris resulting from response actions taken under sections 104 and 106 of CERCLA or corrective actions taken under Subtitle C of RCRA are not subject to these restrictions until November 8, 1988.

II. Summary of Today's Proposal

A. Proposed Approach

Today's notice describes the Agency's proposed approach to implementing the requirements of RCRA section 3004(g) with respect to certain of the listed hazardous wastes included in § 268.10, as promulgated on May 28, 1986 (51 FR 19300). Pursuant to RCRA, the Agency is required to promulgate regulations establishing conditions under which these so-called "First Third" wastes may be land disposed by the statutory deadline of August 8, 1988. August 8, 1988 is also the date by which the Agency must make determinations regarding the conditions under which the F001–F005 solvents and F020–F023 and F026–F028 dioxin-containing wastes (see 51 FR 40572), California list wastes (see 52 FR 25760), and First Third wastes may be land disposed by deep-well injection. The Agency's proposed approach to restricting the disposal of these wastes by deep-well injection will be addressed in a separate notice.

EPA is proposing treatment standards for only some of the First Third wastes in today's proposal. The Agency will continue to analyze treatment data on additional First Third wastes and will publish a supplementary proposal of treatment standards for these wastes in the near future. However, due to the lack of available data and the time constraints of the statutory schedule, EPA does not expect to promulgate treatment standards for all of the First Third wastes by August 8, 1988. Therefore, in accordance with the

provisions of section 3004(g)(6), the Agency is proposing regulations which allow continued land disposal of First Third wastes for which treatment standards or extensions to the effective date have not been established. These so-called "soft hammer" provisions (discussed in further detail in Section III. C. of today's proposal) will apply until May 8, 1990 or until treatment standards or extensions to the effective date are promulgated, whichever is sooner. On May 8, 1990, there is an automatic prohibition on land disposal of hazardous wastes listed or identified prior to the enactment of HSWA. Effective May 8, 1990, these wastes may be land disposed only if the waste; (a) Meets the applicable treatment standards; (b) is the subject of an extension to the effective date; or (c) is the subject of an approved "no migration" petition.

B. Best Demonstrated Available Technologies (BDAT)

In today's notice, the Agency defines the waste treatability groups by waste codes and identifies the Best Demonstrated Available Technology (BDAT) for each waste code (see Section III. A.). Treatment standards applicable to the specific waste code are based on the performance levels achievable by the corresponding BDAT identified for each waste code. However, any technology not otherwise prohibited (i.e., impermissible dilution) may be used to meet the concentration-based treatment standards.

Incineration is identified as BDAT for waste codes K015, K016, K018, K019, K020, K024, K030, K037, and K048–K052. Chromium reduction, chemical precipitation, and vacuum filtration is identified as BDAT for K062. Solvent extraction followed by incineration of the extract and followed by steam stripping and activated carbon adsorption is BDAT for K103 and K104. High temperature metals recovery is BDAT for K061. For K071, acid leaching and chemical oxidation is BDAT for nonwastewaters, and sulfide precipitation and filtration is BDAT for wastewaters. Total recycle is identified as BDAT for K069 wastes. Also, EPA has determined that the wastes K004, K008, K036, K073, and K100 are no longer being generated and disposed, and therefore, has not identified BDAT for these wastes.

C. Waste Analysis Requirements

Treatment standards for organic wastes and wastes for which destruction technologies are appropriate, are based on total constituent analysis. For those wastes for which stabilization or fixation is appropriate, treatment standards are based on concentrations in an extract developed by the Toxicity Characteristic Leaching Procedure (TCLP) (see Part 268 Appendix I).

D. Nationwide Variances From the Effective Date

Due to lack of sufficient alternative capacity to treat the wastes to the applicable treatment standards, a national capacity variance is proposed for several of the waste codes covered by today's notice. This determination is based on a comparison of the volumes of wastes requiring treatment to the amount of treatment capacity available for such treatment. Although EPA does not require BDAT technologies be used to meet the applicable treatment standards, capacity figures are derived based on technologies identified as BDAT, to ensure that adequate treatment is available to meet the treatment standards.

The Agency is proposing to grant a two-year national variance for the following waste codes: K016, K018, K019, K020, K024, K030, K037, K048–K052, K061, K071, K103, and K104. No variance is proposed for other wastes. A more detailed discussion is found in Section III. J. [Note: EPA has recently conducted a survey of treatment, storage, and disposal facilities. Capacity determinations based on this new data will be proposed and available for use in the final rule.]

E. "Soft Hammer" Requirements

Section III. C. 3. of this notice presents a more detailed discussion of the certification and demonstrations a generator (or owner or operator) is required to make to dispose of "soft hammer" wastes in landfills and surface impoundments. Generally, the generator (or owner or operator) must certify that there is no treatment that meaningfully reduces toxicity or mobility of the waste practically available, and that, therefore, disposal of these wastes in a landfill or surface impoundment unit that meets the minimum technological requirements of 3004(o) (double liner, leachate collection system, and ground water monitoring) is the only practical alternative. This certification also applies to those "soft hammer" wastes which have been treated to reduce toxicity or mobility and for which no further treatment is practically available, and thus, disposal of the treatment residuals in a landfill or surface impoundment unit that meets the minimum technological requirements is the only alternative.

F. "No Migration" Petition

Today's notice also proposes amendments to 40 CFR 268.6, the "no migration" petition process (see Section III. H.). These amendments to § 268.6 cover the demonstrations required in the petition and certain other requirements on the owner or operator of a waste management unit that is subject to a "no migration" exemption.

III. Regulatory Approach for the First Third Wastes

A. Determination of Treatability Groups and Development of BDAT Treatment Standards

1. Waste Treatability Groups

For the First Third wastes, EPA used the individual listed waste codes as the starting point for developing treatability waste groups. In cases where EPA believed that wastes represented by different codes could be treated to similar concentrations using identical technologies, the Agency combined the codes into one treatability group. EPA based its initial treatability group decisions primarily on whether the waste codes were generated by the same or similar industries from similar processes. EPA believes that such groupings can be made even with limited data because of the high likelihood that characteristics affecting treatment performance will be similar for these different waste codes. For example, the five waste codes pertaining to wastes produced by petroleum refining (K048–K052) were combined into a single treatability group. This analysis resulted in 15 treatability groups covering 24 waste codes that are the subject of today's proposed rulemaking.

2. Demonstrated Treatment Technologies

As discussed in EPA's promulgated methodology for BDAT (see November 7, 1986, 51 FR 40572), a technology is considered to be demonstrated for a particular waste if the technology currently is in commercial operation for treatment of that waste or a similar waste. For most of the First Third waste codes covered by today's proposal, EPA identified demonstrated technologies either through review of literature discussing current waste treatment practices or on the basis of information provided by specific facilities currently treating the waste or similar wastes.

In cases where the Agency did not identify any facilities currently treating wastes represented by a particular waste code, EPA identified demonstrated technologies in the

following manner. The Agency first characterized the parameters affecting treatment selection for the waste of interest. EPA then compared these parameters to other wastes for which treatment technologies are demonstrated; if the parameters were similar, the Agency considered the treatment technology also to be demonstrated for the waste of interest. For example, EPA considers rotary kiln incineration a demonstrated technology for many waste codes containing hazardous organic constituents, high total organic content and high filterable solids regardless of whether any facility is currently treating these wastes. The basis for this determination is data found in literature as well as data generated by EPA confirming the use of rotary kiln incineration on wastes having the above characteristics. EPA's rationale for determining demonstrated technologies for each of the waste treatability groups can be found in Section III. A. 10. (in the subsections for each specific treatability group).

3. Selection of Facilities for Engineering Visits and Sampling

In those instances where additional data were needed to supplement the Agency's current knowledge of treatment performance for the demonstrated technologies, EPA arranged engineering visits to facilities that treat wastes with a demonstrated technology that potentially could be the basis for the treatment standards. The purpose of the engineering visits was to confirm that candidates for sampling, in fact, met EPA's criteria of being well-designed facilities and that the necessary sampling points could be accessed. During the visit, EPA also confirmed that the facility appeared to be well operated, although the actual operation that occurs during sampling is the basis for EPA's decisions regarding proper operation of the treatment unit.

In general, the Agency considers a well-designed facility as one that contains all the unit operations necessary to treat the various hazardous constituents of the waste and any other nonhazardous materials in the waste that may affect treatment performance. For example, a waste containing hazardous metals and a high concentration of oil and grease would require removal of potentially nonhazardous oil and grease in order to facilitate the subsequent removal of the hazardous metals by precipitation. EPA also places considerable emphasis on the levels of performance the system is designed to achieve in determining whether to sample a particular treatment facility, since the facility will seldom exceed the goals of its original design.

In addition to ensuring that a system is reasonably well-designed, the engineering visit examines whether the facility appears to be well-operated and, just as importantly, has a measurable way of describing the operation of the treatment system during the time the waste is being treated. For example, EPA may choose not to sample a continuous treatment system for which an important design parameter cannot be continuously recorded through the use of a strip chart. In continuous systems, such instrumentation is important in determining whether the treatment system was operating within design requirements during the period when the waste was being treated.

In addition to the design and operation of the treatment system, EPA also bases its decision to sample a facility on whether the piping layout is such that all samples necessary to evaluate treatment performance can be collected. If piping is not suitable or cannot be easily modified, EPA would not perform a sampling visit.

In order to select potential sites for sampling, EPA has established a hierarchy for conducting its engineering visits. The hierarchy is (1) generators treating single wastes on site; (2) generators treating multiple wastes together on site; (3) comercial TSDFs; and (4) EPA in-house treatment. The basis of this hierarchy is founded on two concepts; (1) EPA believes, to the extent possible, that it should try to develop treatment standards from data produced by treatment facilities handling only a single waste, and (2) facilities that routinely treat a specific waste have had the best opportunity to optimize design parameters. Although excellent treatment can occur at many facilities that are not high in this hierarchy, EPA has adopted this approach to avoid, when possible, ambiguities related to the mixing of wastes. Therefore, EPA prefers on-site treatment facilities where the waste of interest is treated alone or as a major component of the waste handled. If well-designed generator facilities that meet EPA criteria are not available, the Agency then looks to commercial treatment facilities where mixing of many wastes is generally practiced but where extensive optimization of treatment may have still occurred. If no suitable TSDF facilities are identified, EPA then conducts in-house tests and optimizes the process itself on a more limited basis.

EPA used a number of data bases to determine if any generators were treating specific wastes on site or if there were any commercial TSDFs treating this waste. EPA's documentation for locating on-site generating facilities and/or commercial TSDFs for each waste can be found in the Docket for today's rulemaking. Although EPA's data bases provided potential sites of treatment of individual wastes, the data bases provided no data that would preferentially support the selection of one facility for sampling over another. In cases where several treatment sites appear to fall into the same level of the hierarchy, EPA selected sites for visits strictly on the basis of what facility could most expeditiously be visited and later sampled if justified by the engineering visit.

A secondary consideration involved with the selection of technologies for testing was the need to develop data within an ambitious statutory deadline. When selecting technologies to test for performance, these deadlines required that EPA, in some cases, select demonstrated technologies for performance tests based on its technical judgment. This judgment considered the underlying principles of operation of the various technologies and any available data pertaining to the performance of these technologies on specific types of wastes. EPA's rationale for selecting a given demonstrated technology is presented by a treatability group in Section III. A. 10. of the preamble.

4. Hazardous Constituents Considered and Selected for Regulation (BDAT List)

The target list of hazardous constituents to be regulated for all waste codes covered by today's rule is referred to by the Agency as the BDAT List. This list is derived from a composite of 396 compounds and/or classes of compounds that are presented in 40 CFR Part 261, Appendix VII and Appendix VIII. This composite number includes compounds selected by EPA as representatives of some of the classes. EPA then identified 175 of these 396 for which EPA could not perform an analysis of treatment performance due to one of three reasons: (1) EPA does not presently have an analytical method for such constituents; (2) there are no analytical standards available for calibrating the test instruments; or (3) the analytical method requires the use of an extraction solvent in which the compound would quickly dissociate. The remaining 221 compounds comprise the BDAT List.

For certain waste codes, the BDAT List was then shortened because it was unlikely that particular constituents would be present. EPA's rationale for

shortening the BDAT List for a given waste code or waste treatability group is presented in the Sampling and Analysis Plan (SAP) developed for each Agency sampling visit. The SAP for each tested waste code can be found in the On-Site Engineering Reports in the Docket for today's rulemaking.

The specific constituents that the Agency selected for regulation in each treatability group were, in general, those found in the untreated wastes at significant (i.e., treatable) concentrations. EPA does not propose to regulate constituents where data show that they would be effectively managed by regulation of other constituents (i.e., treatment of the regulated constituents naturally results in the treatment of other constituents). EPA's rationale for the selection of regulated constituents can be found in the BDAT background document for the treatability group in question.

5. Compliance with Performance Standards

All the treatment standards proposed in today's rule reflect performance achieved by the Best Demonstrated Available Technology (BDAT). As such, compliance with these standards only requires that the treatment value be achieved prior to land disposal; it does not require the use of any particular treatment technology. While dilution of the waste as a means to comply with the standard is prohibited, wastes that are generated in such a way as to naturally meet the standard can be land disposed without treatment. With the exception of treatment standards that prohibit any land disposal, all treatment standards proposed today are expressed as a concentration level.

In today's rulemaking, EPA has used both total constituent concentration and TCLP analyses of the treated waste as a measure of technology performance. EPA's rationale for when each of these analytical tests is used is explained below.

For all hazardous organic constituents, EPA is basing the treatment standards on the total constituent concentration found in the treated waste. EPA based its decision on the fact that technologies exist to destroy the various organic compounds. Accordingly, the best measure of performance would be the extent to which the various organic compounds have been destroyed or the total amount of constituent remaining after treatment. [NOTE: EPA's land disposal regulation for F001–F005 spent solvents (51 FR 40572) uses the TCLP value as a measure of performance. At the time that EPA promulgated the treatment standards for F001–F005, useful data were not available on total constituent concentrations in treated residuals and, as a result, the TCLP data was considered to be the best measure of performance.]

For metal constituents, EPA is using both total constituent concentration and/or the TCLP as the basis for treatment standards. The total constituent concentration is being used when the technology basis includes a metal recovery operation. The underlying principle of metal recovery is the reduction of the amount of metal in a waste by separating the metal for recovery; therefore, total constituent concentration in the treated residual is an important measure of performance for this technology. Additionally, EPA also believes it important that any remaining metal in a treated residual waste not be in a state that is easily leachable; accordingly, EPA is also using the TCLP as a measure of performance. It is important to note then for wastes where treatment standards are based on a metal recovery process, the facility has to comply with both the total constituent concentration and the TCLP prior to land disposal.

In cases where treatment standards for metals are not based on recovery techniques but rather on stabilization, EPA is using the TCLP as a measure of performance. The Agency's rationale is that stabilization is not meant to reduce the concentration of metal in a waste but only chemically minimize the ability of the metal to leach.

6. Identification of BDAT

A detailed discussion of the Agency's general methodology for establishing BDAT standards is provided in EPA's land disposal restrictions rule of November 7, 1986, 51 FR 40572. This section discusses the specific application of the methodology to the First Third wastes, and, provides a summary of some of the principal elements of the BDAT methodology.

As a first step in the development of BDAT-based treatment standards, EPA screened the available treatment data for a particular treatability group with regard to the availability of information describing the design and operation of the system, the quality assurance/quality control analyses of the data, and the specific analytical tests used to assess treatment performance. This screening step is consistent with EPA's promulgated approach in the November 7, 1986 rulemaking for F001–F005 solvents. Also, this screening step recognizes the fact that different performance measures may be appropriate depending on the technology used (i.e., total constituent analysis for incineration vs. TCLP for stabilization) as discussed earlier. In contrast to the F001–F005 spent solvent rule, EPA was able to place a greater emphasis on the design and operation of the treatment system for the First Third wastes because its field tests have been modified to gather more detailed data to support these analyses. As discussed earlier, the EPA field tests include data describing the operating conditions of the treatment unit during the time that treatment samples were collected.

After the initial screening test, EPA adjusted all treated data values based on the analytical recovery values in order to take into account analytical interferences associated with the chemical make-up of the treated sample. For example, a treated residual data point of 0.2 mg/kg with a recovery value of 50% would be adjusted to 0.4 mg/kg. In developing recovery data (also referred to as accuracy data), EPA would first analyze a waste for a constituent and then add a known amount of the same constituent (i.e., spike) to the waste material. The total amount recovered after spiking minus the initial concentration in the sample divided by the amount added is the recovery value.

After adjusting the data, EPA then averaged the performance values for the various treatment operations and compared the mean values using the analysis of variance test (ANOVA), as described in the November 7, 1986 preamble (see 51 FR 40591), to determine if one technology performed significantly better. EPA's decisions regarding selection of one technology over another that resulted from this methodology can be found in the "Identification of BDAT" sections that follow for each treatability group.

7. BDAT Treatment Standards for "Derived-From" and "Mixed" Wastes

a. Applicability of BDAT to "Derived-From" Wastes From Treatment Trains Generating Multiple Residues. In a number of instances in this proposal, the proposed BDAT consists of a series of operations, each of which generates a waste residue. For example, the identified BDAT for wastes K103 and K104 is solvent extraction, steam stripping and activated carbon adsorption. Each of these treatment steps generates a waste requiring treatment, namely a solvent-containing stream from solvent extraction, a stripper overhead, and spent activated carbon. Treatment of these wastes may generate further residues: for instance, spent activated carbon (if not

regenerated) could be incinerated, generating an ash and possibly a scrubber water waste. Ultimately, additional wastes are generated that may require land disposal. With respect to these wastes, the Agency wishes to emphasize the following points:

1. All of the residues from treating the original listed waste are likewise considered to be the listed waste by virtue of the derived-from rule contained in 40 CFR 261.3(c)(2). Consequently, all of the wastes generated in the course of treatment would be prohibited from land disposal unless they satisfy the treatment standard or meet one of the exceptions to the prohibition.

2. The Agency's proposed treatment standards generally contain a concentration level for wastewaters and a concentration level for nonwastewaters. These treatment standards apply to all of the wastes generated in treating the original prohibited waste. Thus, all solids generated from treating K103 and K104 would have to meet the treatment standard for nonwastewaters. All derived-from wastes meeting the Agency definition of wastewater for this rule (i.e., less than 1% total organic carbon (TOC) and less than 1% total solids) would have to meet the treatment standard for wastewaters. EPA wishes to make clear that this approach is not meant to allow partial treatment only to change the applicable treatment standard. Therefore, treatment of wastes with greater than 1% TOC (and less than 1% solids) to less than 1% TOC does not necessarily make the wastewater treatment standard applicable.

The Agency has not performed tests, in all cases, on every waste that can result from every part of the treatment train. However, the Agency's treatability levels generally are based on treatment of the most concentrated form of the waste identified. Consequently, the Agency believes that the less concentrated wastes generated in the course of treatment also will be able to be treated to meet this level.

b. Applicability of BDAT to Mixtures and Other Derived-From Residues. There is a further question as to the applicability of the BDAT treatment levels to residues generated not from treating the waste (as discussed above), but generated instead from other types of management. Examples are contaminated soil or leachate that is derived from managing the waste. In these cases, the mixture is still deemed to be the listed waste, either because of the derived-from rule, the mixture rule (§ 261.3(a)(2)(iv)), or because the listed waste is contained in the matrix (see, e.g., § 261.33(d)). The prohibition for the particular listed waste consequently applies to this type of waste.

The Agency believes that the majority of these types of residues can meet the treatment standards for the underlying listed wastes (with the possible exception of contaminated soil and debris for which the Agency is currently investigating whether it is appropriate to establish a separate treatability subcategorization). For the most part, these residues will be less concentrated than the original listed waste. The Agency's treatability levels also make a generous allowance for process variability by assuming that all treatability values used to establish the standard are lognormally distributed (see 51 FR 40590–91, November 7, 1986). The waste also might be amendable to a relatively nonvariable form of treatment technology such as incineration. Finally, and perhaps most importantly, the rules contain a treatability variance which allows a petitioner to demonstrate that his waste cannot be treated to the level specified in the rule (see § 268.44). This provision provides a safety valve that allows persons with unusual waste matrices to demonstrate the appropriateness of a different standard. The Agency notes that to date, it has not received any petitions under this provision (for example, for residues contaminated with a prohibited solvent waste), indicating, in the Agency's view, that the existing standards are generally achievable.

8. Transfer of Treatment Standards

In today's notice, EPA is proposing some treatment standards that are not based on testing of the treatment technology of the specific waste subject to the treatment standard. Instead, the Agency determined that the constituents present in the waste can be treated to the same performance levels as observed in other wastes for which EPA has previously developed treatment data. As stated in previous BDAT rulemakings, EPA believes transferring treatment performance for use in establishing treatment standards for untested wastes is valid technically in cases where the untested wastes are generated from similar industries or from similar processing steps. As explained earlier in this preamble, transfer of treatment standards to wastes from similar processing steps requires little formal analysis because of the likelihood that similar production processes will produce a waste matrix with similar characteristics. However, in the case where only the industry is similar, EPA more closely examines the waste characteristics prior to concluding that the untested waste constituents can be treated to levels associated with tested wastes. The Agency's method for conducting this analysis is discussed below.

EPA's undertakes a two-step analysis when determining whether wastes generated by different processes within a single industry can be treated to the same level of performance. First, EPA reviews the available data on those parameters which are expected to affect treatment selection. EPA has identified some of the most important constituents and other parameters needed to select the treatment technology appropriate for a given waste. A detailed discussion of each analysis, including how each parameter was selected for each waste, can be found in the background document for each waste.

Second, when an individual analysis suggests that an untested waste can be treated with the same technology as a waste for which treatment performance data are already available, EPA then analyzes a more detailed list of constituents that represent some of the most important waste characteristics which the Agency believes will affect the performance of the technology. By examining and comparing these characteristics, the Agency determines whether the untested wastes will achieve the same level of treatment as the tested waste. Where the Agency determines that the untested waste can be treated as well as the tested waste, the treatment standards can be transferred. A detailed discussion of this transfer process for each waste can be found in the BDAT background document for each waste or waste treatability group.

9. "No Land Disposal" as the Treatment Standard

EPA is proposing "No Land Disposal" as the treatment standard for several of the First Third wastes. This standard is analogous to the no discharge standard established as BAT (best available treatment) under the Clean Water Act's effluent guideline program. It indicates that after examining available data, the Agency has identified that: (1) The waste can be totally recycled (i.e., on-site closed-loop recycling); (2) the waste is not currently being land disposed; or (3) the waste is no longer being generated.

An alternative to establishing "No Land Disposal" as the treatment standard would be to indicate that "0" is the BDAT treatment standard (i.e., concentration level) for hazardous constituents. This appears to the Agency to be a less desirable way to proceed,

given that the analytical limit of detection is always greater than zero. Because technologies exist that make land disposal for some wastes unnecessary, and because "0" really means the analytic detection limit and not truly zero, EPA believes that specifying "No Land Disposal" as the treatment standard is a better way of expressing its intention.

The Agency notes further that it could simply allow the statutory prohibition to take effect to achieve the intended result of no land disposal. The drawback with this approach is that it allows no possibility of granting a variance from a treatment standard for those wastes that might not be amenable to the BDAT treatment. (In the absence of a treatment standard, a person would have to initially petition the Agency to establish a treatment standard for the waste, a more cumbersome and time-consuming process than applying for a variance under § 268.44.) Accordingly, the Agency believes the best way to proceed is to establish "No Land Disposal" as the treatment standard where a no discharge treatment technology is identified as BDAT.

10. Waste-Specific Treatment Standards

This section describes the development of BDAT treatment standards for all of the First Third treatability groups covered by today's rule. It includes tables showing the specific constituents regulated, as well as the treatment standards.

a. K061—Emission Control Dust/Sludge from the Primary Production of Steel in Electric Furnaces

1. Industry Affected and Waste Description. The listed waste K061 is generated in the primary production of steel in electric furnaces. The Agency estimates that approximately 85 plants produce steel in electric furnaces. These facilities are primarily located in the Eastern and North Central parts of the United States.

The primary production of steel in electric furnaces results in the generation of particulate emissions which contain hazardous constituents present in the feed materials. The particulates captured by air pollution control devices constitute the listed K061 waste.

2. Demonstrated Treatment Technologies. K061 waste consists principally of iron and zinc. In addition to zinc, other BDAT list metals of concern include lead of approximately two percent and chromium ranging from 500 ppm to 10% (by weight). The water content of the waste is approximately 10% except where wet scrubbers are used to generate this waste. The demonstrated technologies that the Agency has identified for treatment of this waste are high temperature metals recovery and stabilization. High temperature metals recovery is currently used to recover metals such as zinc and chromium from the waste for reuse; this technology also results in the formation of a treated residual (i.e., slag) which was analyzed to determine the performance of this technology. Stabilization also is used directly to reduce the leachability of the metals in the K061 waste that has not been processed by metals recovery technology. EPA tested both of these technologies as part of the development of treatment standards for K061.

3. Data Base. The Agency has 55 data points for treatment of K061 wastes. Fifteen data points are from four facilities using high temperature metals recovery, seven of which were collected by EPA. Forty (40) data points represent the use of stabilization by two facilities, nine of which were collected by EPA.

EPA's screening of the data with regard to the design and operation of the treatment unit resulted in the deletion of twelve of the fifteen data points for high temperature metals recovery. Thirty-one of the stabilization data values were rejected because these data did not reflect testing by the TCLP procedure; the remaining nine were obtained using the TCLP and represent proper design and operation. Accordingly, these twelve data points were considered in the development of the treatment standards for K061.

4. Identification of BDAT. BDAT for K061 was determined to be high temperature metals recovery. As a result, EPA is proposing treatment standards for this waste based on the treatment residual (i.e., slag) generated by this technology.

The Agency performed an analysis of variance test for TCLP performance levels achieved by high temperature metals recovery and by stabilization. The results show that high temperature metals recovery provides significantly better reduction of lead and zinc than does stabilization, and equivalent reductions of cadmium, chromium, and mercury in the TCLP's leachate. The Agency believes that establishing high temperature metals recovery as BDAT is consistent with the national policy identified in HSWA to reduce the amount of hazardous waste generated.

The Agency is aware of at least four facilities in the United States and ten in foreign countries that use high temperature metals recovery to treat K061 waste. Therefore, EPA believes that high temperature metals recovery is demonstrated to treat K061. High temperature metals recovery is judged to be available to treat K061 waste because (1) this treatment technology is commercially available or can be purchased from the proprietor; and (2) high temperature metals recovery provides a substantial reduction in the level of regulated constituents described above.

The question of identifying BDAT for K061 also requires some discussion of several other sets of EPA regulations relating specifically to burning hazardous wastes for materials recovery in industrial furnaces, and relating more generally to the issue of when secondary materials are RCRA solid wastes under such circumstances. The most significant issue presented is whether EPA may permissibly establish a BDAT treatment standard for the slag which results from high temperature metal recovery of this waste.

The initial question is whether electric arc steel dust is a RCRA solid and hazardous waste when it is sent to an industrial furnace for high temperature metals recovery. Under the Agency's existing regulations, this activity is classified as the type of recycling known as "reclamation" because it involves recovery of metals contained in the electric arc furnace dust (see 40 CFR 261.1(c)(4)). Because the material is a listed sludge, it is therefore defined as a solid waste under § 261.2(c)(3).

The Agency believes that this is an appropriate classification because there is a strong element of waste treatment characterizing this recycling activity: these electric arc dusts are typically landfilled, and they are not reclaimed in continuous, on-going processes, but rather in processes different from steel production (most often primary zinc smelting or some type of secondary metal recovery). Storage practices preceding reclamation of this waste also can involve direct placement on the land (for instance, in open waste piles), another indication that the electric arc dust is a waste. For a more detailed discussion, see 50 FR 641 (January 4, 1985) which presents the decision factors to determine whether sludges and byproducts should be designated as solid wastes when they are to be reclaimed. EPA has recently proposed to codify these factors, with some modifications, in its regulations (53 FR 519 and 529, January 8, 1988).

The recent opinion of the District of Columbia Circuit Court of Appeals in *American Mining Congress v. EPA* (824 F. 2d 1177) does not change this analysis. The court stated that when a generator has a secondary material of no further use to him which he discards

by giving to another person for recycling, the material is a "discarded material" within the meaning of RCRA section 1004(27). An example, as used in the opinion, is used oil given by the original generator to a second person for recycling (824 F. 2d at n. 14). The electric arc furnace dust is similarly discarded by the generator when it is no longer useful to the original generator, is given to another entity for recycling, and is not recycled in the original process or even in another steel process. Thus, it is not the type of in-process, undiscarded material used in on-going, continuous processes found in the *American Mining Congress* case to be an undiscarded material (see generally, 53 FR 519, 520–521, and 522–523, January 8, 1988).

It should be noted that even if the K061 waste were not deemed to be a waste when it is reclaimed in processes unrelated to steel production, EPA still could establish BDAT standards for K061 that is being disposed, or otherwise ensure that the waste is recycled by high temperature metals recovery rather than by being land disposed. For example, the Agency could simply prohibit land disposal of the waste and indicate that high temperature metals recovery is BDAT. The Agency also could let the statutory prohibition for the waste take effect, which (as a practical matter) would have the same result.

Since the Agency can require recycling as a BDAT standard, it must consider whether it has authority to set treatment standards for the slag that results from high temperature metals recovery. The fact that K061 electric arc dust is a solid and hazardous waste when it it sent for high temperature metals recovery does not end the inquiry. The Agency has discussed in a number of preambles the question of whether a waste destined for material recovery in an industrial furnace continues to be a waste when it is actually fed into the furnace. The issue arises because industrial furnaces are normally used as essential components of industrial processes, and when they are actually burning secondary materials for material recovery can be involved in the very act of production, an activity normally beyond the Agency's RCRA authority (see 50 FR 630, January 4, 1985; 50 FR 49167, November 24, 1985: and 52 FR 16989–990, May 6, 1987). Accordingly, the Agency has stated that, even when secondary materials sent to be reclaimed in these devices are wastes before they are reclaimed; they cease to be wastes when they are actually placed in the industrial furnace for materials recovery. To retain authority over industrial furnaces where waste treatment is a driving element of the reclamation activity, however, the Agency has further stated that the secondary material being reclaimed in the industrial furnace must be "indigenous" to that furnace for it to cease being a waste. The Agency has proposed to define "indigenous" to be any material generated by the same type of furnace in which it will be reclaimed (see the proposed § 266.30(a), 52 FR 17034, May 6, 1987). The Agency suggested other possible alternatives in the May 6 proposal, and commenters suggested additional possibilities which the Agency is now considering.

The K061 electric arc furnace dust would be considered to be indigenous, under the May 6 proposal described above, to the high temperature metals recovery furnaces used as the basis for the proposed treatment standard. This is because the metals recovery furnaces are smelting furnaces, and the electric arc furnace is also a type of smelting furnace. Consequently, the K061 dust would cease to be a solid waste when it is resmelted were the Agency to finalize the propsoed definition of "indigenous". This would mean that the slag produced in the metals recovery furnace during the resmelting of the dust would no longer automatically be deemed to be a hazardous waste by virtue of the "derived-from" rule in 40 CFR 261.2(c), because it would no longer derive from treatment of a listed hazardous waste (the K061 waste would no longer be a hazardous waste at the moment of burning). Thus, the slag would be a hazardous waste only if it exhibited a characteristic of hazardous waste. (Depending upon the type of device doing the smelting, and the feed materials to that device, the slag might also presently be excluded from regulation as a waste from the mining, beneficiation or processing of an ore or mineral (see 52 FR 17012, May 6, 1987).) Under these circumstances, the Agency probably could not set treatment standards for the slag which does not exhibit a characteristic of hazardous waste (which would be the case for all of the slags the Agency sampled in evaluating BDAT for this waste), since the land disposal prohibitions apply only to "hazardous wastes". In addition, any prohibition for slag exhibiting a characteristic of hazardous waste would take effect on May 8, 1990, as a Third Third waste.

Thus, although the Agency has proposed treatment standards based on total and leachable metal concentrations in the slag, EPA solicits comment on these issues with the view that EPA will likely establish either "total recycle" or "no land disposal" as the treatment standard for K061 should it determine not to set treatment standards for the slag.

There is one further issue relating to this waste. Electric arc furnace dust is frequently recycled by being used as an ingredient in fertilizers, the end result being that the dust is placed directly on the land when the fertilizer is applied. Under the Agency's rules, both the electric arc furnace dust and the resulting waste-derived fertilizer are hazardous wastes (see 40 CFR 261.2(c)(1)). The recycling activity is an example of the "use constituting disposal" category of recycling. The *American Mining Congress* opinion does not affect the material's status as a solid waste because the recycling activity contains an element of discard: it is like a form of land disposal. The court in fact characterized a "use constituting disposal" recycling situation (direct reuse of a pesticide drum as a trash can) as a type of disposal involving solid waste (see 53 FR 521–522, January 8, 1988).

EPA's rules presently exempt the K061-derived fertilizer from substantive regulation. Because this exemption is contained in Part 261, K061 waste that is recycled in this way is also exempt from the land disposal prohibitions (see 40 CFR 268.1). The Agency solicits comment whether these fertilizers should be exempt from the land disposal prohibitions program. In choosing to exempt the fertilizers from regulation, the Agency indicated it was doing so only until it could determine an appropriate regulatory regime for the fertilizers (50 FR 647, January 4, 1985). Since the fertilizers could contain high concentrations of mobile toxic metals (materials in the record of the solid waste definition rulemaking now incorporated into the record for this proposed rule show high concentration levels of lead and cadmium in some of these waste-derived fertilizers), EPA was certainly not crafting an exemption based on an Agency determination that there would be no risk from applying these fertilizers. Consequently, the issue now facing the Agency is whether to continue the exemption which would allow this waste to be recycled in a manner arguably at odds with the statutory land disposal prohibitions provisions, by allowing continued placement of untreated hazardous waste on the land. Furthermore, the Agency has identified another type of recycling of this waste which does not involve placement of the waste on the land as

the basis for BDAT, so that any regulations which discourage use of the electric arc furnace dust in fertilizer would channel the waste to a (at least arguably) more environmentally beneficial type of recycling. The Agency consequently solicits comment on whether these waste-derived fertilizers should be subject to the land disposal restrictions and to the treatment standards, effective on the same date as all other prohibitions applicable to K061.

5. *Regulated Constituents and Treatment Standards.* The proposed regulated constituents for K061 are listed below. The Agency is proposing that facilities must comply with both the composition and TCLP values of slag resulting from high temperature metals recovery. EPA believes that both measures of performance are necessary to adequately reflect BDAT-type treatment because available data show that facilities could achieve the total constituent concentration in the slag and still have a high leachate value because of poor operation of the treatment system. The Agency is aware that requiring the waste to meet both measures will eliminate the possibility of using stabilization alone to meet the treatment standard in most, if not all, cases. The Agency is specifically asking for comment on the use of both measures (as opposed to only one). (As discussed above, however, the Agency also is soliciting comment on whether it should set treatment standards for the slag, or find an alternative regulatory means of ensuring that treatment residues achieve total concentration and leachable metal concentrations achievable by high temperature metals recovery.)

EPA is proposing "No Land Disposal" as the treatment standard for K061 wastewaters because the Agency is not aware of any such waste being generated. The establishment of such a "treatment standard" results in the same effect as a prohibition, only it allows for the possibility of a variance from this treatment standard in case such a waste is generated.

For K061 nonwastewaters, EPA proposes the following treatment standards:

BDAT TREATMENT STANDARDS FOR K061

(Nonwastewater)

Constituent	Maximum for any single grab sample	
	Total composition (mg/kg)	TCLP (mg/l)
Cadmium	44.0	0.19
Total chromium	1730.0	0.33

BDAT TREATMENT STANDARDS FOR K061—Continued

(Nonwastewater)

Constituent	Maximum for any single grab sample	
	Total composition (mg/kg)	TCLP (mg/l)
Lead	20,300.0	0.09
Mercury	0.28	0.02
Zinc	24,100.0	0.50

b. K062—Spent Pickle Liquor Generated by Steel Finishing Operations of Facilities Within the Iron and Steel Industry (SIC Codes 331 and 332)

1. *Industries Affected and Waste Description.* The listed waste K062 is generated by the iron and steel industry (SIC Codes 331 and 332) from steel finishing operations. The Agency estimates that 978 facilities have steel finishing operations that may be generating the listed waste K062. These facilities are primarily located in the Eastern and North Central portions of the U.S.

In steel finishing operations, oxide scale on steel products is removed with a heated solution of concentrated acid or acids in a process called pickling. When the acid solution (called pickle liquor) loses its effectiveness through use, it is referred to as "spent". This is the listed K062 waste.

2. *Demonstrated Treatment Technologies.* K062 waste contains 4 BDAT metals at significant concentrations, has a dissolved solids of approximately 12 percent, and a water content of approximately 85 percent. The BDAT metals are chromium, nickel, copper, and lead with approximate respective concentrations of 7000, 3000, 400, and 200 ppm. The technology that the Agency has identified to treat this waste consists of a preliminary step for reduction of hexavalent chromium followed by chemical precipitation and some form of solids removal and dewatering, which may include settling and/or mechanical operations such as vacuum filtration. The metals in the precipitated solids may be treated by stabilization to reduce their leachability or high temperature metals recovery.

A comment received on the August 12, 1987 Notice of Data Availability and Request for Comments (52 FR 29992) suggested that K062 can be treated by high temperature metals recovery. The Agency, therefore, is including high temperature metals recovery as a demonstrated technology for K062 wastewaters and nonwastewaters. EPA requests comment on the types and quantities of K062 wastes treated by recovery technologies, and specifically asks for data describing the performance achievable by metals recovery. Upon review of those data, the Agency may promulgate final standards based on metals recovery.

The specific technology that the Agency tested for K062 consisted of chromium reduction, chemical precipitation with lime and sulfide and vacuum filtration.

3. *Data Base. (i) Wastewaters.* The Agency has collected 11 data points from one facility using the treatment system noted above. All 11 data points represent a well-designed and well-operated treatment system and were used in the development of treatment standards. The Agency has extensive data on wastewaters that would be classified as K062 under the "derived from" rule, but these data were not used. EPA determined that these untreated waste concentrations were considerably lower than K062 as generated, and therefore, not fully representative of K062. That is, treatment standards based on treating these unconcentrated residues might not be achievable for the more concentrated K062, as generated.

(ii) Nonwastewaters. The Agency has 11 TCLP data points for nonwastewaters (dewatered sludges) generated at the same facility where the wastewater test was conducted. The sludges were generated by lime and sulfide precipitation and dewatering the sludge with vacuum filtration. Because all 11 data points appear to represent well-designed and well-operated treatment, none of the points were excluded from the development of the treatment standards.

4. *Identification of BDAT.* BDAT for K062 was determined to be chromium reduction followed by chemical precipitation and vacuum filtration. This technology is a well demonstrated wastewater treatment technology that is used at numerous facilities throughout the country. Therefore, EPA believes that this technology is demonstrated to treat K062 waste. The Agency has no data for treatment of this waste using any other technology.

This treatment technology is judged to be available to treat K062 waste because (1) this treatment technology is commercially available or can be purchased from the proprietor; and (2) this treatment technology provides a substantial reduction of hazardous constituents.

5. *Regulated Constituents and Treatment Standards.* The regulated constituents for K062 and the treatment standards for wastewater and nonwastewater are listed below. EPA's

rationale for selection of the regulated constituents is presented in the *BDAT Background Document for First Third Wastes—K062*. For reasons presented in Section III. A. 7., the standards shown below apply to all K062 wastewaters and nonwastewaters with the following exception. Under 40 CFR 261.3(c)(2)(ii), residues generated as a result of lime ($Ca(OH)_2$) treatment are not hazardous wastes and, therefore, any such dewatered residues would not have to comply with the treatment standards. The treatment standards do apply, however, to residues generated by other than lime precipitation.

BDAT TREATMENT STANDARDS FOR K062 (NONWASTEWATER)

Constituent	Maximum for any single grab sample	
	Total composition (mg/kg)	TCLP (mg/l)
Metals:		
Total chromium	[1]	0.094
Lead	[1]	0.37

[1] Not applicable.

BDAT TREATMENT STANDARDS FOR K062 (WASTEWATER)

Constituent	Maximum for any single grab sample	
	Total composition (mg/l)	TCLP (mg/l)
Metals		
Total chromium	0.32	[1]
Copper	0.42	[1]
Nickel	0.44	[1]
Lead	0.04	[1]

[1] Not applicable.

c. K016—Heavy Ends or Distillation Residues from the Production of Carbon Tetrachloride
K018—Heavy Ends from the Fractionation in Ethyl Chloride Production
K019—Heavy Ends from the Distillation of Ethylene Dichloride Production
K020—Heavy Ends from the Distillation of Vinyl Chloride in Vinyl Chloride Monomer Production
K030—Column Bottoms or Heavy Ends from the Combined Production of Trichloroethylene and Perchloroethylene

1. Industries Affected and Waste Descriptions. These five listed hazardous wastes are generated in the production of chlorinated chemicals in the organic chemical industry. The Agency estimates that there are 52 plants which may produce the listed wastes. These facilities are located primarily in the south central portion of the United States. Brief descriptions of processes which may generate each of the listed wastes are given below.

Carbon tetrachloride is produced commercially via the chlorination of hydrocarbon and/or chlorocarbon feedstocks, methane, or carbon disulfide. The distillation of the crude carbon tetrachloride results in distillation residues (heavy ends). These distillation residues are the listed waste K016.

Ethyl chloride is produced commercially by the catalytic hydrochlorination of ethylene. Crude ethyl chloride is further refined by fractionation. The heavy ends from the fractionation column composes the listed waste K018.

Ethylene dichloride is produced separately or by a combined process involving the chlorination of ethylene and the oxychlorination of ethylene via hydrogen chloride. The process includes the distillation of the crude ethylene dichloride which results in distillation bottoms (heavy ends) which contain treatable quantities of organic constituents. These distillation bottoms are the listed waste K019. It should not noted that the May 28, 1986 schedule for restricting the listed hazardous wastes from land disposal (51 FR 1900) lists K019 in the second third of listed wastes. Therefore, K019 was not originally scheduled for regulation under 40 CFR Part 268 until June 8, 1989. However, due to the similarity between K019 and the other wastes in this treatability group, the Agency has chosen to accelerate the schedule for this waste, and will address K019 in this proposed rulemaking.

Vinyl chloride monomer is produced by the thermal cracking of ethylene dichloride or the hydrochlorination of acetylene. The process includes the purification of crude vinyl chloride monomers via distillation which results in heavy ends. The heavy ends compose the listed waste K020.

The combined production of perchlorethylene and trichloroethylene is accomplished by the direct chlorination or oxychlorination of ethylene dichloride or other chlorinated ethane or ethylene feedstocks. The listed waste K030 is generated when recycled streams from the chlorination or oxychlorination processes become contaminated and must be removed and disposed.

2. Demonstrated Treatment Technologies. The K016, K018–K020, K030 waste group generally contains 5 percent water, 5 percent chlorinated organic constituents and 90 percent other nonchlorinated organic constituents. These wastes generally contain high levels of filterable solids. The technologies that the Agency has identified for treatment of these wastes are (1) incineration technologies including rotary kiln and fluidized bed incineration and (2) solvent extraction followed by stabilization or high temperature metal recovery for metals. Fluidized bed incineration or rotary kiln incineration is a destruction technology applicable to organic bearing wastes with solids concentrations that prevent use of liquid injection incineration. Solvent extraction removes organic constituents from a waste by exploiting the relatively high solubilities of the waste constituents in a particular solvent.

The Agency tested rotary kiln incineration for treatment of this treatability group. The Agency also considered testing fluidized bed incineration of this waste; however, EPA was unable to identify any facilities that were incinerating these wastes in a fluidized bed incinerator.

3. Data Base—i. Nonwastewaters. For waste code K019, the Agency has six untreated and treated data points from one plant. These data sets include both total constituent concentration and TCLP leachate values. All data sets were used in the development of the treatment satndards because data show that the unit was properly operated during the time the waste was treated.

For K016, K018, K020, and K030, the Agency has data characterizing the constituents for each waste code from sampling and analysis conducted by EPA's hazardous waste listing program. Due to the physical and chemical similarity between these wastes and K019, treatment standards from waste code K019 are being transferred to waste codes K016, K018, K020, and K030. (EPA's analysis regarding the transfer of treatment standards can be found in the *BDAT Background Document for Chlorinated Organics*, Volume III. There is also a discussion in Section III. A. 8. in this preamble.)

ii. Wastewaters Generated from Incineration. The Agency has six scrubber water data points which represent destruction of BDAT organic compounds in the afterburner of the rotary kiln incinerator. The data reflect total constituent analyses; all data were used in the development of treatment standards because data collected by EPA during treatment showed that the afterburner was properly operated during the treatment test.

4. Identification of BDAT. BDAT for waste group K016, K018–K020, K030 was determined to be rotary kiln incineration. This technology was the only technology for which the Agency has treatment data as noted in the previous subsection (Data Base). The Agency believes, however, that a well designed and operate fluidized bed incineration wil meet the BDAT standards. While a rotary kiln incinerator generally operates at higher temperatures and longer residence times, the increased turbulence (mixing) of a fluidized bed incinerator should allow this technology to achieve the same results. Accordingly, EPA will include fluidized bed incineration in its capacity estimates for K016, K018–K020, and K030.

Incineration is demonstrated at over 250 facilities and the Agency is aware of two facilities that use rotary kiln incineration to treat K019 waste. Therefore, the Agency believes incineration is demonstrated to treat K019. The Agency also believes this technology is available because (1) incineration technologies are commercially available or can be purchased from a proprietor; and (2) incineration provides substantial reduction of the concentration of organic hazardous constituents. For a detailed description of the reductions exhibited by treatment of these wastes, refer to the *BDAT Background Document for First Third Wastes—K016, K018–K020, K030.*

5. Regulated Constituents and Treatment Standards. Below are listed the regulated constituents for K016, K018–K020, K030 and the treatment standards for wastewaters and nonwastewaters. For reasons discussed earlier in this preamble, the treatment standards apply to all wastewaters and nonwastwaters classified as K016, K018, K019, K020, and/or K030.

BDAT TREATMENT STANDARDS FOR K016

(Nonwastewater)

Constituent	Maximum for any single grab sample	
	Total composition (mg/kg)	TCLP (mg/l)
Tetrachloroethene	5.96	(1)
Hexachlorobenzene	27.2	(1)
Hexachlorobutadiene	5.44	(1)
Hexachlorocyclopentadiene	5.44	(1)
Hexachloroethane	27.2	(1)

1 Not applicable

BDAT TREATMENT STANDARDS FOR K016

(Wastewater)

Constituent	Maximum for any single grab sample	
	Total composition (mg/kg)	TCLP (mg/l)
Tetrachloroethene	0.007	(1)
Hexachlorobenzene	0.033	(1)
Hexachlorobutadiene	0.007	(1)
Hexachlorocyclopentadiene	0.007	(1)
Hexachloroethane	0.007	(1)

1 Not applicable.

BDAT TREATMENT STANDARDS FOR K018

(Nonwastewater)

Constituent	Maximum for any single grab sample	
	Total composition (mg/kg)	TCLP (mg/l)
Chloroethane	5.96	(1)
1,1-Dichloroethane	5.96	(1)
1,2-Dichloroethane	5.96	(1)
1,1,1-Trichloroethane	5.96	(1)
Hexachlorobenzene	27.2	(1)
Hexachloroethane	27.2	(1)
Hexachlorobutadiene	5.44	(1)
Pentachloroethane	5.44	(1)

1 Not applicable.

BDAT TREATMENT STANDARDS FOR K018

(Wastewater)

Constituent	Maximum for any single grab sample	
	Total composition (mg/l)	TCLP (mg/l)
Chloroethane	0.007	(1)
Chloromethane	0.007	(1)
1,1-Dichloroethane	0.007	(1)
1,2-Dichloroethane	0.007	(1)
1,1,1-Trichloroethane	0.007	(1)
Hexachlorobenzene	0.033	(1)
Hexachlorobutadiene	0.007	(1)
Pentachloroethane	0.007	(1)

1 Not applicable.

BDAT TREATMENT STANDARDS FOR K019

(Nonwastewater)

Constituent	Maximum for any single grab sample	
	Total composition (mg/kg)	TCLP (mg/l)
Chloroform	5.96	(1)
1,2-Dichloroethane	5.96	(1)
Tetrachloroethane	5.96	(1)
1,1,1-Trichloroethane	5.96	(1)
Bis(2-chloroethyl)ether	5.44	(1)
Hexachloroethane	27.2	(1)
Naphthalene	5.44	(1)
Phenanthrene	5.44	(1)
1,2,4-Trichlorobenzene	18.7	(1)

1 Not applicable.

BDAT TREATMENT STANDARDS FOR K019

(Wastewater)

Constituent	Maximum for any single grab sample	
	Total composition (mg/l)	TCLP (mg/l)
Chlorobenzene	0.008	(1)
Chloroform	0.007	(1)
1,2-Dichloroethane	0.007	(1)
Tetrachloroethane	0.007	(1)
1,1,1-Trichloroethane	0.007	(1)
Bis(2-chloroethyl)ether	0.007	(1)
p-Dichlorobenzene	0.008	(1)
Hexachloroethane	0.033	(1)
Naphthalene	0.007	(1)
1,2,4,5-Tetrachlorobenzene	0.017	(1)
1,2,4-Trichlorobenzene	0.023	(1)
Fluorene	0.007	(1)
Phenanthrene	0.007	(1)

1 Not applicable.

BDAT TREATMENT STANDARDS FOR K020

(Nonwastewater)

Constituent	Maximum for any single grab sample	
	Total composition (mg/kg)	TCLP (mg/l)
1,2-Dichloroethane	5.96	(1)
1,1,2,2-Tetrachloroethane	5.44	(1)
Tetrachloroethane	5.96	(1)

1 Not applicable.

BDAT TREATMENT STANDARDS FOR K020

(Wastewater)

Constituent	Maximum for any single grab sample	
	Total composition (mg/l)	TCLP (mg/l)
1,2-Dichloroethane	0.007	(1)
1,1,2,2-Tetrachloroethane	0.007	(1)
Tetrachloroethene	0.007	(1)

1 Not applicable.

BDAT TREATMENT STANDARDS FOR K030

(Nonwastewater)

Constituent	Maximum for any single grab sample	
	Total composition (mg/kg)	TCLP (mg/l)
Tetrachloroethene	5.96	(1)
Hexachlorobutadiene	5.44	(1)
Hexachloroethane	27.2	(1)
Hexachlonopropene	18.7	(1)
Pentachlorobenzene	27.2	(1)
Pentachloroethane	5.44	(1)
1,2,4,5-Tetrachlorobenzene	13.6	(1)
1,2,4-Trichlorobenzene	18.7	(1)

1 Not applicable.

BDAT TREATMENT STANDARDS FOR K030

(Wastewater)

Constituent	Maximum for any single grab sample	
	Total composition (mg/l)	TCLP (mg/l)
Tetrachloroethene	0.007	(1)
Hexachlorobutadiene	0.007	(1)
Hexachloroethane	0.033	(1)
Pentachloroethane	0.007	(1)
1,2,4,5-Tetrachlorobenzene	0.017	(1)
1,2,4-Trichlorobenzene	0.023	(1)
o-Dichlorobenzene	0.006	(1)
p-Dichlorobenzene	0.006	(1)

[1] Not applicable.

d. K024—Distillation Bottoms from the Production of Phthalic Anhydride from Naphthalene

1. Industries Affected and Waste Description. The listed waste K024 is generated in the production of phthalic anhydride from naphthalene in the organic chemical industry. The Agency believes that only one facility produces phthalic anhydride using naphthalene as a feed stock.

The manufacturing process includes the distillation of crude phthalic anhydride which results in distillation bottoms (heavy ends) which contain treatable levels of organic constituents. The distillation bottoms are the listed waste K024.

2. Demonstrated Treatment Technologies. The listed waste K024 has a high organic solids concentration with phthalic anhydride as the principal BDAT constituent. The demonstrated technologies that the Agency has identified for treatment of this waste are incineration technologies including fluidized bed and rotary kiln incineration. Fluidized bed incineration and rotary kiln incineration are destruction technologies demonstrated for organic bearing wastes with solids concentrations that prevent liquid injection incineration.

The Agency tested rotary kiln incineration for K024. EPA did not locate any facilities using fluidized bed incineration for K024.

3. Data Base. i. Nonwastewaters. For waste code K024 the Agency has treatment data from one plant. At this plant, the Agency has 6 data points representing residual concentrations found in the ash from rotary kiln incineration. These data reflect composition and TCLP analysis of organics.

ii. Wastewaters Generated from Incinerator. The Agency has six scrubber water data points which represent destruction of BDAT organic compounds in the afterburner of the rotary kiln incinerator. These data reflect total constituent analyses.

4. Identification of BDAT. BDAT for K024 waste was determined to be rotary kiln incineration. This technology was the only technology for which the Agency has treatment data as noted in the previous section (Data Base).

Rotary kiln incineration is demonstrated at over 50 facilities. The Agency is not aware of any generator or TSDF facilities currently using rotary kiln incineration for treatment of K024. However, EPA believes rotary kiln incineration is demonstrated for K024 in that it is being used to treat wastes similar to K024 with regard to parameters affecting treatment selection for K024, including low water content and high organic solids concentration. EPA has confirmed this judgement by demonstrating the actual performance achievable when K024 was incinerated in EPA's own in-house rotary kiln.

Rotary kiln incineration is judged to be available to treat K024 because (1) this technology is commercially available and (2) rotary kiln incineration provides a substantial reduction in the concentration of BDAT organic constituents present in K024. For a detailed description of the reductions exhibited by treatment of these wastes, refer to the *BDAT Background Document for First Third Wastes—K024.*

While EPA does not have performance data for technologies other than rotary kiln incineration, the Agency believes that a well designed and operated fluidized bed incinerator will also achieve the treatment standards. For the reasons presented in the discussion of the K016, K018–K020, and K030 treatability group, EPA will consider fluidized bed incineration in its capacity determinations.

5. Regulated Constituents and Treatment Standards. As noted below, EPA is regulating phthalic acid for K024. This constituent, although not listed as a hazardous constituent in Part 261 Appendix VIII, is being regulated as a surrogate for phthalic anhydride. Phthalic anhydride is a hazardous constituent; however, it cannot be easily analyzed, in that, the analytical method readily hydrolyzes the compound to phthalic acid. The treatment standards for all K024 wastewaters and nonwastewaters are presented below.

BDAT TREATMENT STANDARDS FOR K024

[Nonwastewater]

Constituent	Maximum for any single grab sample	
	Total composition (mg/kg)	TCLP (mg/1)
Phthalic acid	6.0	(1)

[1] Not applicable.

BDAT TREATMENT STANDARDS FOR K024

[Wastewater]

Constituent	Maximum for any single grab sample	
	Total composition (mg/1)	TCLP (mg/1)
Phthalic acid	0.06	(1)

[1] Not applicable.

e. K103—Process Residues from Aniline Extraction from the Production of Aniline

K104—Combined Wastewater Streams Generated from Nitrobenzene/Aniline Production

1. Industries Affected and Waste Description. The listed wastes K103 and K104 are generated by production of aniline and from the combined production of aniline/nitrobenzene, respectively. The Agency estimates that six facilities in the central and eastern states are actively involved in aniline production which could generate K103. Four of these facilities are actively co-producing aniline and nitrobenzene, which also could result in the generation of K104 waste.

2. Demonstrated Treatment Technology. The K103 wastewater primarily consists of water (94.7 percent) and aniline (4.3 percent). The K104 wastewater principally consists of water (98.7 percent), nitrobenzene (0.3 percent), and small amounts of cyanides. For both K103 and K104 wastewater the Agency believes the following treatment technology train is demonstrated; solvent extraction, which separates the organic components from the aqueous components by exploiting the relatively high solubilities of the organic constituents in the particular solvent; steam stripping, which further

removes organics from the liquid phase through volatilization; and activated carbon adsorption, which uses carbon granules to remove contaminants. The solvent-containing stream from solvent extraction potentially can be recycled to recover nitrobenzene and aniline, or incinerated. The steam stripper overheads are condensed and decanted with the organic constituents recycled back to the process. The spent carbon from the activated carbon adsorption column is sent off-site for thermal regeneration. While the incineration component of this technology is not demonstrated for K103 and K104, available information shows that it is demonstrated on wastes similar to the contaminated solvent stream from extraction. Because the solvent-contaminated stream potentially contains a significant amount of an explosive compound (picric acid), EPA is concerned that it may not be possible to safely use incineration. Accordingly, the Agency seeks comment regarding its determination that the incineration component of BDAT for K103 and K104 is demonstrated.

Other treatment technologies which may be applicable to K103 and K104 are steam stripping followed by activated carbon adsorption, and steam stripping followed by biological treatment which involves the use of microorganisms to degrade organic compounds.

The technology tested by the Agency was the system consisting of solvent extraction followed by steam stripping and activated carbon adsorption. The three-step treatment train was chosen over applicable two-step treatment processes because the incremental solvent extraction step provides additional reduction in the level of organics.

3. Data Base. The Agency has 5 data points for treated and untreated K103 and K104 wastes from one facility. Data collected during the test show that one of the 5 data points did not reflect proper operation; therefore, this value was not included in the calculation of the treatment standards.

4. Identification of BDAT. BDAT for K103 and K104 wastes was determined to be solvent extraction followed by steam stripping and activated carbon adsorption. Additionally, BDAT includes incineration of the solvent-contaminated stream from the extraction component of the treatment train. The Agency is aware of at least one facility that has used the wastewater technology train to treat K103 and K104. Therefore, EPA believes that solvent extraction, followed by steam stripping and activated carbon adsorption is demonstrated on K103 and K104. Additionally, these units are widely used to treat wastes having similar parameters affecting treatment selection.

This three-step treatment system is judged to be available to treat K103 and K104 because (1) the treatment system is commercially available; and (2) the system provides a substantial reduction in the K103 and K104 constituents described above.

5. Regulated Constituents and Treatment Standards. Below are listed the regulated constituents for K103 and K104. The following treatment standards apply to all wastewaters and nonwastewaters. In the case of K103 and K104 nonwastewaters, the treatment standards have been transferred as discussed in Section III. A. 8. of this preamble.

BDAT TREATMENT STANDARDS FOR K103 AND K104

[Nonwastewater]

Constituent	Maximum for any single grab sample	
	Total composition (mg/kg)	TCLP(mg/1)
Aniline	5.44	(1)
Benzene	5.96	
2,3-Dinitrophenol	5.44	
Nitrobenzene	5.44	
Phenol	5.44	
Total cyanides (for K104 only)	1.48	

[1] Not applicable.

BDAT TREATMENT STANDARDS FOR K103 AND K104

[Wastewater]

Constituent	Maximum for any single grab sample	
	Total composition (mg/l)	TCLP (mg/l)
Benzene	0.147	(1)
Aniline	4.450	
2,3-Dinitrophenol	0.613	
Nitrobenzene	0.073	
Phenol	1.391	
Total Cyanides (for K104 only)	2.683	

[1] Not applicable.

f. K071—Brine Purification Muds from the Mercury Cell Process in Chlorine Production, where Separately Prepurified Brine is Not Used

1. Industries Affected and Waste Description. The listed waste K071 is generated in chlorine production by the mercury cell process where prepurified brine is not used. The Agency estimates that there are 14 facilities that use this process and do not use prepurified brine as a raw material. These facilities are distributed throughout the country, with 50 percent being located in the Southeast.

Chlorine is produced by the electrolytic decomposition of a saturated sodium chloride brine solution. The principal raw material is the rock salt that contains impurities that dissolve in the brine. Treatment of the saturated brine to remove these impurities results in a treatment residual, which is listed as K071.

2. Demonstrated Treatment Technologies. K071 waste consists primarily of sodium chloride, calcium sulfate, and calcium carbonate; the principal BDAT constituent of this waste being mercury. The water content of the waste is over 60 percent and the filterable solids content is 20–35 percent (for a detailed analysis of this waste stream, see the *BDAT Background Document for First Third Wastes—K071).* The demonstrated technologies that the Agency has identified to treat K071 nonwastewaters are (1) a treatment train consisting of acid leaching followed by chemical oxidation followed by a washing and dewatering step for solids, (2) water washing followed by a dewatering step, and (3) stabilization for nonwastewaters. For wastewaters, EPA has identified chemical precipitation followed by filtration. Acid leaching followed by chemical oxidation converts the mercury present in the waste to a soluble form, which is separated from the solid portion of the waste by washing and dewatering. The solid portion is regulated under this rule as a treated K071 waste. The filtrate is then treated by chemical precipitation and filtration to remove the mercury solubilized in the leaching and oxidation steps; the filtrate from this step is regulated under this rule as a treated K071 waste. The precipitated residue, however, is another listed waste, K106.

Of the technologies described above, the Agency tested acid leaching and chemical oxidation followed by dewatering and washing, followed by sulfide precipitation and filtration. The Agency did not test stabilization because it does not reduce the total concentration of the mercury as does acid leaching and chemical oxidation.

3. Data Base. i. Wastewaters. The Agency has three data points from one facility on treated wastewaters. This facility was tested by EPA and the treatment consisted of sulfide precipitation followed by filtration. Data collected during treatment show that all treated data represent proper operation;

accordingly, all data were used in the development of the standards.

ii. Nonwastewaters. The Agency has 44 data points from 3 facilities representing total constituent concentration of the treated K071 nonwastewater, 10 data points from 2 facilities representing mercury concentrations found in the TCLP leachate of the treated K071 nonwastewater, and 268 data points from 3 facilities representing mercury concentrations in the leachate from the Extraction Procedure (EP) test. The Agency has 44 data points from 3 facilities providing total mercury concentration values for treated K071 nonwastewaters. Of these 44, seven were generated by EPA testing acid leaching followed by chemical oxidation and a washing and dewatering step. EPA also generated one data point using a technology consisting of a one-step acid leaching process. This technology was used to treat a waste defined as K071, but significantly less contaminated with mercury and also having larger particle sizes. The 36 data points submitted by two facilities represent treatment using a water wash/dewatering process.

Of the 10 data points reflecting TCLP analysis, eight were generated by EPA using the treatment technologies described above. The remaining two data points representing TCLP analysis were submitted by one of the facilities using the water wash/dewatering process mentioned above.

The 268 EP leachate data points were submitted to EPA by three facilities using the water wash/dewatering process. Two of the three facilities are the same companies that supplied the total mercury concentration and TCLP values for the treated K071.

EPA did not use the 268 EP data points in the development of the treatment standards because data reflecting performance as measured by the TCLP are available. The TCLP is a better measure of evaluating BDAT in this case because it is a more aggressive leachate test than the EP (Extraction Procedure). All remaining data were consisdered using the Agency's statistical test (ANOVA) for comparing different treatment technologies.

4. Identification of BDAT. BDAT for K071 was identified as acid leaching and chemical oxidation followed by washing/dewatering for nonwastewaters and sulfide precipitation followed by filtration for wastewaters. For nonwastewaters, EPA compared the mean value of the data representing acid leaching and chemical oxidation and washing/dewatering to the mean value of the treatment data from the water washing process. This comparison was done using the analysis of variance test for both the total constituent and TCLP data. In both instances, the acid leaching/chemical oxidation process was shown to provide significantly better treatment.

The BDAT treatment train for nonwastewaters is demonstrated at two facilities; additionally the various treatment components are well-demonstrated on wastes similar to K071 with regard to parameters used to select treatment. The Agency believes that this technology is available to treat K071 wastes because (1) this technology is commercially available, and (2) this technology provides substantial reduction of hazardous constituent concentrations.

5. Regulated Constituents and Treatment Standards. Below are listed the regulated constituents and associated treatment standards for K071 wastewater and nonwastewater. Facilities that land dispose of nonwastewaters have to comply with both the total concentration and the TCLP value.

BDAT TREATMENT STANDARDS FOR K071

[Nonwastewater]

Constituent	Maximum for any single grab sample	
	Total composition (mg/kg)	TCLP (mg/l)
Mercury	4.6	0.0025

BDAT TREATMENT STANDARDS FOR K071

[Wastewater]

Constituent	Maximum for any single grab sample	
	Total composition (mg/l)	TCLP (mg/l)
Mercury	0.030	[1]

[1] Not applicable.

g. K048—Dissolved Air Flotation (DAF) Float from the Petroleum Refining Industry

K049—Slop Oil Emulsion Solids from the Petroleum Refining Industry

K050—Heat Exchanger Bundle Cleaning Sludge from the Petroleum Refining Industry

K051—API Separator Sludge from the Petroleum Refining Industry

K052—Tank Bottoms (Leaded) from the Petroleum Refining Industry

1. Industries Affected and Waste Descriptions. The above five listed hazardous wastes are generated by the petroleum refining industry. The Agency estimates that there are 200 refineries which may produce the listed wastes K048 through K052. Many of these facilities are located in the South Central and Pacific areas of the United States.

Petroleum refining consists of many unit operations, the configuration of which depends on the refinery and the desired finished products. Many sources of waste exist throughout the refining process. Treatment of these wastes in a centralized wastewater treatment system and other unit operations result in the generation of the K048–K052 waste as described below:

Dissolved air flotation (DAF) is used by petroleum refineries for separating suspended and colloidal materials from process wastewater, including suspended solids and insoluble oily wastes. The material skimmed from the surface of a DAF unit is the listed waste K048.

Process wastewater from refining operations is in many cases treated in an oil/water/solids separator where the waste separates by gravity into a multiphase mixture. The skimmings from the separator are collected in a "slop oil system," where the three phases, water, oil, and an emulsified layer, are separated. The emulsified layer is the listed waste K049.

Heat exchanger bundles (tubes) from petroleum refining operations are periodically cleaned to remove deposits of scale and sludge. The solids resulting from this cleaning operation are listed as K050.

API separators are used in petroleum refining operations to remove floating oil and suspended solids from the wastewater. Solids that settle out of the water are the listed waste K051.

Storage tanks which have contained leaded petroleum products are periodically cleaned to remove deposits. The solids resulting from this cleaning operation are listed as K052.

2. Demonstrated Treatment Technologies. The K048–K052 waste group generally contains high percentages of water, oil, and sand and

other solids; the concentration ranges of these constituents vary considerably, depending upon the particular waste. BDAT organic and metal constituents generally comprise less than one percent of the waste stream. For a detailed analysis of these wastes see the *BDAT Background Document for First Third Wastes—K048–K052*. The demonstrated technologies that the Agency has identified for treatment of these wastes are: incineration technologies including fluidized bed and rotary kiln incineration; solvent extraction followed by recovery or incineration of the contaminated solvent; thermal drying; and pressure filtration followed by oil recovery from the filtrate. These technologies provide varying degrees of treatment of the organic constituents present in the waste.

Fluidized bed incineration or rotary kiln incineration are destruction technologies which destroy the organic components in the waste feed. Solvent extraction removes organic constituents from a waste by exploiting the relatively high solubilities of the waste constituents in a particular solvent. Thermal drying removes water and volatile organics through the application of heat. Pressure filtration mechanically separates solids from liquids allowing the oils in the liquid phase to be recovered; further treatment being required for the wastewater stream.

All of the organic treatment technologies generate both nonwastewater and wastewater residuals that require treatment for metals. For metals in the nonwastewater residuals, EPA has determined stabilization to be demonstrated. Stabilization immobilizes the metal constituents to minimize migration.

For metals in the wastewater residuals, EPA has identified chromium reduction followed by chemical precipitation and, finally, stabilization of the precipitated residuals as demonstrated technologies. These technologies are commonly employed for metal-containing wastewaters. Chromium reduction reduces hexavalent chromium to the less toxic trivalent form. Chemical precipitation transfers metals from the wastewater to a sludge form suitable for stabilization.

The Agency tested fluidized bed incineration for the K048–K052 waste group. Additionally, stabilization of the residual ash was selected for testing because metal stabilization forms chemical bonds or a lattice structure that minimizes the ability of a metal to leach. Stabilization testing was performed at an EPA test facility since no commercial facilities were identified performing stabilization of these wastes.

Rotary kiln incineration was considered for testing; however, the Agency was not aware of any generator facilities treating these K048–K052 wastes using a rotary kiln incinerator. The other technologies applicable to these wastes were not selected for testing for the following reasons. Solvent extraction was not tested because it results in a residual that may subsequently require incineration to reduce the levels of organics in the waste to be disposed. Even though thermal drying operates on the same principle as incineration (the application of energy in the form of heat to volatilize organic constituents from the waste), it would not be expected to perform better than fluidized bed incineration since it is operated at significantly lower temperatures (250–550 °F versus 1200–1400 °F). Therefore, thermal drying was not selected for testing. Pressure filtration physically separates solids and liquids and would provide for the removal of the organics in the liquid portion of the waste but would not remove organics present in the solids. Therefore, pressure filtration would not be expected to perform better than fluidized bed incineration. Metals recovery technologies were not tested because the Agency was not aware at the time of any facilities performing metals recovery on these wastes.

3. Data Base. For wastes K048 and K051, the Agency collected data from one facility. These data consist of six untreated and treated data points representing fluidized bed incineration. Operating data collected during the testing of the incinerator show that the technologies were properly operated; accordingly, all of the above described data were used in the development of the treatment standards.

For wastes K048, K049, K051, and K052 the Agency also has substantial treatment data from industry. Most of the data addressing BDAT organic constituents reflect performance as measured in the leachate from the TCLP; EPA did not evaluate these data because the Agency is proposing treatment standards based on the total constituent concentration. These data represent a range of demonstrated treatment systems including solvent extraction, thermal drying, and pressure filtration. To the extent that total composition data become available, EPA will evaluate these systems prior to promulgation.

EPA also received total composition data from one facility representing 10 data points for residuals from solvent extraction. EPA compared these data to treatment data obtained by fluidized bed incineration and found that fluidized bed incineration provided significantly better treatment for most of the constituents.

For wastes K049 and K052 the Agency has data characterizing the constituents of these wastes from one plant. Using these data, EPA confirmed its judgement that these wastes were similar to the treated waste (because of similar generation processes) through use of the analyses described earlier in this section of the preamble.

For K050 waste, the Agency does not have data that represents an analysis of all BDAT organic and metal constituents. However, the Agency does have a limited analysis of BDAT organics and metals from one facility. Based on these data and information regarding the generation of this waste, EPA believes it would be similar in composition to wastes K048 and K051, and therefore, EPA transferred treatment standards to this waste.

For metals in the incinerator ash, the Agency has 9 treated data points representing the amount of metals found in the TCLP leachate after stabilization from one facility. Operating data collected during this testing show that the technology was properly operated; accordingly, all of the data were used in the development of the treatment standards.

EPA received 10 data points from industry representing metals stabilization. EPA did not use these data in the development of treatment standards for the BDAT metals because the TCLP values in the untreated and treated waste did not show treatment to occur (i.e., there was no indication of reductions in the leachate concentrations).

Fluidized bed incineration also generates a scrubber water stream. EPA currently has no data on BDAT list organics in this residual that specifically reflects treatment of K048–K052 wastes. The Agency does have six scrubber water residual data points generated from incineration of wastes that EPA believes are similar to K048–K052 relative to the level of performance that can be achieved. Operating data collected during this testing show that the technology was properly operated; accordingly, all of the data were used in the development and transfer of treatment standards.

EPA does not have data that specifically reflect metal wastewater treatment of K048–K052. The Agency does have performance data, however, on wastes that it believes are sufficiently similar to K048–K052 such that the level of performance can be transferred. These data consist of 11

untreated and treated analyses for each of the following metals: chromium, lead, and zinc. The data were collected by EPA from one facility using chromium reduction followed by lime and sulfide precipitation and, finally, vacuum filtration. Operational data collected during this treatment testing indicate that the technology was properly operated; accordingly, all of the data were used in the development and transfer of treatment standards.

The Agency has recently collected six scrubber water residual samples generated from incineration of K048 waste and is currently analyzing these samples to determine the level of performance achieved. Depending on the results of these analyses, the Agency may adjust the wastewater standards for BDAT organics and metals before the promulgation of this rule.

4. Identification of BDAT. EPA has determined that for BDAT organics in the K048–K052 wastes, fluidized bed incineration achieves a level of performance that represents treatment by BDAT. While BDAT is not identified as rotary kiln incineration, EPA believes that a well-designed and well-operated rotary kiln incinerator will achieve the applicable treatment standards for K048–K052. Accordingly, EPA will use rotary kiln incineration in its estimates of available treatment capacity.

For metals in the incinerator ash, EPA has determined that stabilization using a lime/flyash binder achieves a level of performance that represents BDAT. Other binders tested were cement and kiln dust; EPA determined that use of both of these binders resulted in less effective treatment than the use of the lime/flyash binder. (EPA's analysis of these data can be found in BDAT background document for K048–K052.)

For BDAT list metals in the wastewater, EPA has identified chromium reduction followed by chemical precipitation and vacuum filtration as BDAT for metals.

Incineration followed by metal stabilization for the nonwastewater K048–K052 and chromium reduction followed by chemical precipitation and filtration for the wastewater K048–K052 are judged to be available to treat K048–K052 because (1) these technologies are commercially available, and (2) these technologies provide substantial reduction of both organic and metal hazardous constituents. For a detailed description of the reductions exhibited by treatment of these wastes, refer to the *BDAT Background Document for First Third Wastes—K048–K052.*

5. Regulated Constituents and Treatment Standards. Below are listed the regulated constituents for K048–K052 and the associated treatment standards. For organic constituents, the standards are expressed as total constituent concentration, and for the metals, the standards reflect concentrations in the leachate developed by using the TCLP.

BDAT TREATMENT STANDARDS FOR K048

[Nonwastewater]

Constituent	Maximum for any single grab sample	
	Total Composition (mg/kg)	TCLP (mg/l)
Bis(2-ethylhexyl)phthalate	4.18	(1)
Toluene	3.93	(1)
Chrysene	0.84	(1)
Xylene	0.54	(1)
Di-n-butyl phthalate	4.18	(1)
Naphthalene	0.84	(1)
Phenanthrene	0.84	(1)
Phenol	0.84	(1)
Cyanide	1.48	(1)
Total chromium	(1)	1.68
Arsenic	(1)	0.006
Copper	(1)	0.013
Nickel	(1)	0.048
Selenium	(1)	0.025
Vanadium	(1)	0.18
Zinc	(1)	0.141

[1] Not applicable.

BDAT TREATMENT STANDARDS FOR K048

[Wastewater]

Constituent	Maximum for any single grab sample	
	Total Composition (mg/kg)	TCLP (mg/l)
Phenol	0.007	(1)
Fluorene	0.007	
Toluene	0.007	
Xylene	0.007	
Naphthalene	0.007	
Phenanthrene	0.007	
Total chromium	0.20	
Lead	0.037	
Zinc	0.40	

[1] Not applicable.

BDAT TREATMENT STANDARDS FOR K049

[Nonwastewater]

Constituent	Maximum for any single grab sample	
	Total Composition (mg/kg)	TCLP (mg/l)
Benzene	3.93	(1)
Chrysene	0.84	(1)
Xylene	0.54	(1)
Toluene	3.93	(1)
Naphthalene	0.84	(1)
Phenanthrene	0.84	(1)
Phenol	0.84	(1)
Pyrene	1.06	(1)
Cyanide	1.48	(1)
Total chromium	(1)	1.68
Arsenic	(1)	0.006

BDAT TREATMENT STANDARDS FOR K049—Continued

[Nonwastewater]

Constituent	Maximum for any single grab sample	
	Total Composition (mg/kg)	TCLP (mg/l)
Copper	(1)	0.013
Nickel	(1)	0.048
Selenium	(1)	0.025
Vanadium	(1)	0.18
Zinc	(1)	0.141

[1] Not applicable.

BDAT TREATMENT STANDARDS FOR K049

[Wastewater]

Constituent	Maximum for any single grab sample	
	Total Composition (mg/kg)	TCLP (mg/l)
Anthracene	0.007	(1)
Xylene	0.007	
2,4-Dimethylphenol	0.007	
Benzene	0.023	
Toluene	0.007	
Naphthalene	0.007	
Phenanthrene	0.007	
Phenol	0.007	
Total chromium	0.20	
Lead	0.037	
Zinc	0.40	

[1] Not applicable.

BDAT TREATMENT STANDARDS FOR K050

[Nonwastewater]

Constituent	Maximum for any single grab sample	
	Total composition (mg/kg)	TCLP (mg/l)
Benzo(a)pyrene	0.84	(1)
Phenol	0.84	(1)
Cyanide	1.48	(1)
Total chromium	(1)	1.68
Arsenic	(1)	0.006
Copper	(1)	0.013
Nickel	(1)	0.048
Selenium	(1)	0.025
Vanadium	(1)	0.18
Zinc	(1)	0.141

(1) Not applicable.

BDAT TREATMENT STANDARDS FOR K050

[Wastewater]

Constituent	Maximum for any single grab sample	
	Total composition (mg/kg)	TCLP (mg/l)
Phenol	0.007	(1)
Total chromium	0.20	
Lead	0.037	

BDAT TREATMENT STANDARDS FOR K050—Continued

[Wastewater]

Constituent	Maximum for any single grab sample	
	Total composition (mg/kg)	TCLP (mg/l)
Zinc	0.40	

(1) Not applicable.

BDAT TREATMENT STANDARDS FOR K050

[Nonwastewater]

Constituent	Maximum for any single grab sample	
	Total composition (mg/kg)	TCLP (mg/l)
Toluene	3.93	(1)
Chrysene	0.84	(1)
Xylene	8.54	(1)
Di-n-butyl phthalate	4.18	(1)
Naphthalene	0.84	(1)
Phenanthrene	0.84	(1)
Phenol	0.84	(1)
Pyrene	1.06	(1)
Cyanide	1.48	(1)
Total chromium	(1)	1.68
Arsenic	(1)	0.006
Copper	(1)	0.013
Nickel	(1)	0.048
Selenium	(1)	0.025
Vanadium	(1)	0.18
Zinc	(1)	0.141

(1) Not applicable.

BDAT TREATMENT STANDARDS FOR K050

[Wastewater]

Constituent	Maximum for any single grab sample	
	Total composition (mg/kg)	TCLP (mg/l)
Fluorene	0.007	(1)
Acenaphthene	0.007	(1)
Toluene	0.007	(1)
Xylene	0.007	(1)
Naphthalene	0.007	(1)
Phenanthrene	0.007	(1)
Phenol	0.007	(1)
Total chromium	0.20	(1)
Lead	0.037	(1)
Zinc	0.40	(1)

(1) Not applicable.

BDAT TREATMENT STANDARDS FOR K052

[Nonwastewater]

Constituent	Maximum for any single grab sample	
	Total composition (mg/kg)	TCLP (mg/l)
Toluene	3.93	(1)
Xylene	8.54	(1)
o-Cresol	0.84	(1)

BDAT TREATMENT STANDARDS FOR K052—Continued

[Nonwastewater]

Constituent	Maximum for any single grab sample	
	Total composition (mg/kg)	TCLP (mg/l)
p-Cresol	0.84	(1)
Naphthalene	0.84	(1)
Phenanthrene	0.84	(1)
Phenol	0.84	(1)
Cyanide	1.48	(1)
Total chromium	(1)	1.68
Arsenic	(1)	0.006
Copper	(1)	0.013
Nickel	(1)	0.048
Selenium	(1)	0.025
Vanadium	(1)	0.18
Zinc	(1)	0.141

[1] Not applicable.

BDAT TREATMENT STANDARDS FOR K052

[Wastewater]

Constituent	Maximum for any single grab sample	
	Total composition (mg/kg)	TCLP (mg/l)
Phenanthrene	0.007	(1)
2,4-Dimethylphenol	0.007	(1)
Benzene	0.023	(1)
Xylene	0.007	(1)
o-Cresol	0.007	(1)
p-Cresol	0.007	(1)
Naphthalene	0.007	(1)
Phenol	0.007	(1)
Total chromium	0.20	(1)
Lead	0.037	(1)
Zinc	0.40	(1)

[1] Not applicable.

h. K069—Emission Control Dust/Sludge from Secondary Lead Smelting

1. Industries Affected and Waste Description. The listed waste K069 is generated in the secondary lead smelting process. The Agency estimates that 69 facilities are secondary lead smelters. Most of these facilities are located in the South Central and Midwest parts of the United States. Secondary lead smelting generates particulate emissions which contain hazardous constituents present in feed materials. Metals are entrained in furnace fumes and are collected by air pollution control devices. The emission control dust generated is the listed waste K069.

2. Demonstrated Treatment Technologies. K069 waste principally consists of lead, cadmium, and chromium. The Agency is aware of three technologies applicable to the treatment of K069 waste: Total recycling, high temperature metals recovery, and stabilization. Because the waste contains recoverable quantities of lead, it can be totally recycled as a feedstock for resmelting. High temperature metals recovery can be applied to recover metal constituents from the waste. Stabilization treatment reduces the leachability of the metals in the waste slag that results from resmelting.

EPA verified the use of recycling through information requests under RCRA section 3007. EPA did not test other applicable technologies because they generated residuals that still contain some level of contamination.

3. Data Base. The Agency has data from 7 facilities stating that total recycling of K069 is practiced and that K069 is not land disposed. Of nine RCRA section 3007 letters sent to generators at 13 plants, seven responded confirming the fact that total recycling is used. Of the two others, one exports the waste to be recycled and the other company did not respond. A letter was also received from the Secondary Lead Smelters Association which stated that total recycling of the baghouse dust is practiced throughout the industry and that land disposal of K069 does not occur.

4. Identification of BDAT. BDAT for K069 is total recycling. Total recycling is demonstrated at more than 10 facilities and confirmed by the Secondary Lead Smelters Association as the waste management technique practiced throughout the industry.

Total recycling is judged to be available to treat K069 waste because (1) the Agency does not have information showing that recycling poses a greater total risk to human health and the environment than land disposal; (2) it is commercially available; and (3) this treatment technology provided a substantial reduction of hazardous constituents because it eliminates the need for land disposal of K069.

Designating a form of recycling technology as the basis for BDAT raises issues analogous to those involving K061 waste. EPA will summarize its conclusions here, subject to public comment:

- EPA may prohibit land disposal of K069 waste, whether or not it would be a solid waste when recycled;
- Even under the *American Mining Congress* opinion, the K069 being reclaimed could be viewed as a solid waste, because it derives from treatment of discarded materials (scrap lead, discarded batteries and the like) (see, e.g., 824 F. 2d at 1188);
- Under the Agency's May 6, 1987 proposal, K069 waste, however, would be considered to be indigenous to the

secondary lead smelting process and therefore would cease being a waste at the moment it is reintroduced to the smelting furnace; and therefore,

• Any slag resulting from high temperature metals recovery of this waste (in a secondary lead smelter) would not automatically be a hazardous waste (i.e., the "derived from" rule would not apply), and would be hazardous only if it exhibits a characteristic of hazardous waste (assuming the Agency does not alter its proposal with regard to indigenous wastes). The Agency consequently is not proposing a treatment standard for the slag at this time, nor would a prohibition necessarily apply (assuming the slag is hazardous) until the "Final Third" prohibition date of May 8, 1990.

The proposed treatment standard for K069 is "No Land Disposal" (see discussion of the significance of this treatment standard in Section A. 9. above). Rather than simply prohibiting the waste from land disposal, setting this "treatment standard" achieves the Agency's intent to prohibit the land disposal of these wastes, while at the same time allows for the possibility of a variance from the treatment standard. Should a waste be generated that is unable to be totally recycled (e.g., such as a waste generated at a CERCLA site) such a waste may be eligible for a variance from the treatment standard. A waste is not eligible for a variance from the treatment standard if no treatment standard has been established. An interested party would have to petition the Agency for a treatment standard, a more cumbersome and time-consuming process.

i. K015—Still Bottoms From the Distillation of Benzyl Chloride

1. Industries Affected and Waste Description. The Agency estimates that three facilities produce the listed waste K015. These facilities are located in New Jersey and Tennessee.

Benzyl chloride is produced by the chlorination of toluene in a reactor (or series of reactors). Unreacted toluene is recycled back to the reactor, while the reaction products containing crude benzyl chloride are distilled. The still bottoms are the listed waste K015.

2. Demonstrated Treatment Technologies. K015 waste generally contains greater than 88 percent benzal chloride, less than 12 percent benzotrichloride and other chlorinated benzenes, less than 5 percent benzyl chloride, less than 1 percent toluene, less than 1 percent other BDAT constituents, and less than 1 percent water. The demonstrated technologies that the Agency has identified for treatment of K015 waste are liquid injection incineration, fuel substitution, and recovery.

The Agency tested liquid injection incineration of K015. EPA did not locate any facilities using fuel substitution, and data on recovery were not available.

3. Data Base. Wastewaters Generated From Incineration. For K015 waste, the Agency has data from one facility. EPA has three scrubber water data points which represent destruction of BDAT organic compounds by liquid injection incineration. The data reflect total constituent analyses; all data were used in the development of treatment standards because EPA collected data showing that the incinerator was properly operated during the treatment tests.

4. Identification of BDAT. BDAT for K015 waste is identified as liquid injection incineration. This technology is the only technology for which the Agency has treatment data, as noted above. Although only liquid injection incineration was tested, EPA believes that well designed and operated fuel substitution systems can achieve the treatment standards. Accordingly, EPA is considering these technologies in its capacity determinations.

Liquid injection incineration is demonstrated at approximately 250 facilities. The Agency is not aware of any generator or TSD facility currently using liquid injection incineration for treatment of K015; however, EPA believes liquid injection incineration is demonstrated for K015 in that the technology is being used to treat wastes similar to K015 with regard to parameters affecting treatment selection including: BTU content, filterable solids, total organic carbon, viscosity, and water content. EPA has confirmed its judgment by demonstrating achievable performance in a test burn. The Agency also believes this technology is available because (1) incineration technologies are commercially available or can be purchased from a proprietor, and (2) incineration provides substantial reduction of the concentration of organic hazardous constituents. For a detailed description of the reductions exhibited by treatment of these wastes, refer to the *BDAT Background Document for First Third Wastes—K015.*

5. Regulated Constituents and Treatment Standards. EPA is proposing "No Land Disposal" as the treatment standard for K015 nonwastewaters because the Agency is unaware of any nonwastewater residuals from the treatment of K015. (EPA solicits comment to the contrary.) Should such a waste be generated in the future, such waste may be eligible for a variance from this tratment standard.

Below are listed the regulated constituents for K015 and the treatment standards for wastewater.

BDAT TREATMENT STANDARDS FOR K015

[Wastewater]

Constituent	Maximum for any single grab sample	
	Total composition (mg/l)	TCLP (mg/l)
Anthracene	1.02	(1)
Benzal chloride	0.28	
Benzo (b and/or k) fluoranthene	0.29	
Phenanthrene	0.27	
Toluene	1.00	
Total chromium	0.30	
Nickel	0.44	

[1] Not applicable.

j. K037—Wastewater Treatment Sludges from the Production of Disulfoton

1. Industry Affected and Waste Description. The listed waste K037 is defined as wastewater treatment sludge from the production of disulfoton. The Agency estimates that one facility produces disulfoton and produces K037 waste.

2. Demonstrated Treatment Technologies. The K037 waste generally contains less than 5 percent water, 20 percent disulfoton, 75 percent solids and 0.2 percent toluene. The waste contains high levels of filterable solids. The Agency has identified and tested rotary kiln incineration for treatment of this waste. Rotary kiln incineration is a destruction technology applicable to organic bearing wastes with solids concentrations that prevent the use of liquid injection incineration.

3. Data Base. i. Non wastewaters. For K037, the Agency has six untreated and treated data points from one plant. These data sets include both total constituent concentration and TCLP leachate values. All data sets were used in development of treatment standards because data show that the unit was properly operated during the time the waste was treated.

ii. Wastewaters Generated from Incineration. The Agency has six scrubber water data points which represent destruction of BDAT compounds in the afterburner of the rotary kiln incinerator. The data reflect total constituent analyses; all data were used in the development of treatment standards because data show that the afterburner was properly operated during the treatment test.

4. Identification of BDAT. BDAT for waste K037 was determined to be rotary kiln incineration. This technology was the only technology for which the Agency has treatment data, as noted in the previous subsection (Data Base).

EPA is not aware of any generator or TSDFs currently using rotary kiln incineration for treatment of K037. However, EPA believes rotary kiln incineration is demonstrated to treat K037 in that it is being used to treat wastes similar to K037 with regard to parameters affecting treatment selection, including low water content and high solids concentration. EPA has confirmed this judgement by demonstrating the actual performance achievability when K037 was incinerated in EPA's in-house rotary kiln incinerator.

Rotary kiln incineration is judged to be available to treat K037 because (1) this technology is commercially available or can be purchased from a proprietor, and (2) incineration provides substantial reduction of the concentration of organic hazardous constituents. For a detailed discussion of the reductions exhibited by treatment of this waste, refer to the *BDAT Background Document for First Third Wastes—K037.*

5. Regulated Constituents and Treatment Standards. The regulated constituents for K037 and the treatment standards for wastewaters and nonwastewaters are listed below.

BDAT TREATMENT STANDARDS FOR K037 (NONWASTEWATER)

Constituent	Maximum for any single grab sample	
	Total composition (mg/kg)	TCLP (mg/l)
Disulfoton	0.1	(1)
Toluene	28.0	

1 Not applicable.

BDAT TREATMENT STANDARDS FOR K037 (WASTEWATER)

Constituent	Maximum for any single grab sample	
	Total composition (mg/1)	TCLP (mg/1)
Disulfoton	0.003	(1)
Toluene	0.028	

1 Not applicable.

k. K004—Wastewater Treatment Sludge from the Production of Zinc Yellow Pigments

K008—Oven Residue from the Production of Chrome Oxide Green Pigments

K036—Still Bottoms from Toluene Reclamation Distillation in the Production of Disulfoton

K073—Chlorinated Hydrocarbon Waste from the Purification Step of the Diaphragm Cell Process Using Graphite Anodes in Chlorine Production

K100—Waste Leaching Solution from Acid Leaching of Emission Control Dust/Sludge from Secondary Lead Smelting

Based on available information, the Agency believes that these wastes are no longer generated, and therefore, not currently land disposed. (EPA solicits comment to the contrary.) The Agency is prohibiting land disposal of these wastes. This approach ensures that these wastes will not be land disposed in the future.

The proposed treatment standard for these wastes is "No Land Disposal", allowing for the possibility that these wastes may be generated at a CERCLA site and may require a variance from the treatment standard. For a more detailed discussion on the significance of this treatment standard, see Section III. A. 9.

It should also be noted that the May 28, 1986 schedule for restricting the listed hazardous wastes from land disposal (51 FR 19300) lists K100 in the final third. Therefore, K100 was not originally scheduled for regulation under 40 CFR Part 268 until May 8, 1990. However, because EPA has determined that this waste is no longer generated, the Agency has decided to accelerate the schedule for this waste and proposes to set the "No Land Disposal" treatment standard for this waste by August 8, 1988.

B. Testing and Recordkeeping

1. Waste Analysis

The treatment standards proposed in today's notice are expressed as either (1) concentration levels in an extract developed by use of the Toxicity Characteristic Leaching Procedure (TCLP); (2) a total composition waste analysis; or (3) both. How these treatment standards are measured depends upon the technology (or combination of technologies) identified as BDAT for the specific waste.

Basically, for destruction (for organics) or removal (for metals) technologies, the Agency believes that a total composition analysis is designed to provide an accurate measure of the performance of the technology identified as BDAT. Congress in fact expected that treatment would destroy organic constituents in hazardous wastes [Vol. 130, Cong. Rec. S 9179 (daily ed. July 25, 1984)], and the logical way to measure destruction is to analyze total concentration of waste constituents. Conversely, where stabilization or fixation technologies (i.e., technologies which decrease waste constituent mobility) are identified as BDAT, the TCLP is a better measure of performance because it is designed to measure the mobility of hazardous constituents from a waste matrix.

In cases where the combination of both destruction or removal technologies, and stabilization or fixation technologies is identified as BDAT, both analyses must be employed to monitor compliance with the treatment standards. In such cases, neither test alone is designed to ensure that the treatment standard has been met. For example, where a waste contains organic constituents amenable to destruction and metals amenable to fixation, the total composition analysis may demonstrate that the organics have been treated to the applicable concentration level; however, reduction in the mobility of metals must also be ensured. Likewise, use of the TCLP may demonstrate that the metals have been treated to the applicable concentration levels in the extract, yet does not indicate whether the organics have been destroyed in compliance with the applicable treatment standard. Both tests must be used to ensure that the "dual" treatment standard has been met.

The Agency considered the use of only the TCLP where BDAT includes a stabilization or fixation technology. It appears more logical to the Agency that because the TCLP is not designed to evaluate destruction, total waste analysis be used if part of the BDAT treatment train includes destruction (or removal) technologies. However, EPA is soliciting comment on this approach.

2. Notification Requirements

Today's proposal extends the existing notification requirements in § 268.7—which create tracking, certification, and recordkeeping requirements for managers of restricted wastes—to apply to First Third wastes, whether or not treatment standards have been established. For First Third wastes where EPA has established a treatment standard or effective date, the requirements are the same as for other restricted wastes and, therefore, no additional language is needed. Because the statutory waste management requirements applicable to "soft hammer" wastes are somewhat different than existing requirements for other

restricted wastes (namely, a RCRA section 3004(g)(6) certification to EPA is not required for these wastes when land disposed in units other than landfills or surface impoundments), the Agency is proposing new requirements in § 268.7 to account for these differences.

The basic difference between the notification applicable to the "soft hammer" wastes and the notification applicable to other restricted wastes is that rather than requiring notice of the applicable treatment standard or applicable prohibition (see existing § 268.7(a)(1) [the generator notifies the treatment facility of the applicable prohibitions and treatment standards for restricted wastes sent to the treatment facility]), the notice for "soft hammer" wastes would require the generator to notify the receiving facility of the "soft hammer" prohibitions codified in § 268.33 (i.e., that such wastes are prohibited from land disposal in landfill and surface impoundment units unless accompanied by a valid certification (and demonstration, if applicable) in accordance with the requirements of § 268.8, relating to the practical unavailability of treatment technologies). The EPA Hazardous Waste Number, the manifest number associated with the waste shipment, and any available waste analysis data must also be included in this "soft hammer" notice.

The Agency believes such notification is necessary because of the importance of having a consistent tracking and identification mechanism for all restricted wastes. The notification thus informs treatment facilities (and other handlers) of the obligation to treat "soft hammer" wastes destined for disposal in landfill or surface impoundment units (to the extent treatment is practically available). Notification also informs managers of these wastes that the storage prohibition in § 268.50 is applicable to the waste.

3. Recordkeeping Requirements for Storage Facilities

The Agency is also proposing today to correct an unintended oversight in the recordkeeping regulations of § 268.7 to indicate that the section applies to facilities that store prohibited wastes. As currently drafted, the provision applies to generators, treatment facilities, and land disposal facilities but omits another possible actor in the chain, the facility that simply stores prohibited wastes without treating them. There is no reason for such facilities not to be covered by the provision, which is intended to track prohibited wastes from cradle to grave, and to ensure that all facilities receiving such wastes be on notice that the waste is prohibited and what the applicable treatment standard (or applicable prohibition) for the waste is. These purposes are thwarted if storage facilities are not covered by the provision. Consequently, the Agency is proposing today to remedy this deficiency by including storage facilities under the recordkeeping requirements of § 268.7. This requirement would apply to all prohibited wastes, not only to those affected by today's proposal.

In addition to the "generator-to-storage" scenario discussed above, this notice also proposes to apply the notification requirement to a treatment, storage or disposal facility that sends a restricted waste (or treatment residue) off-site to another treatment or storage facility. The Agency believes this change will adequately track all restricted waste from cradle to grave.

Another change to the current regulatory language to facilitate the "cradle-to-grave" tracking system is an amendment of section 268.7(a)(3). This provision of the regulation concerns the case where a generator determines that his restricted waste is eligible for land disposal because it is subject to an extension of the effective date or a "no migration" exemption (i.e., the waste may be land disposed, but not because the waste meets the applicable treatment standards). In this case, the generator would be required to notify the disposal facility of the status of his waste. Here again, the Agency overlooked the possibility that the waste may not be sent directly to the land disposal facility, and may in fact be going to treatment or storage. Therefore, to avoid any confusion, EPA proposes to amend § 268.7(a)(3) to require that the notice be sent with each shipment of waste to the receiving facility.

C. "Soft Hammer" Provisions

1. Applicability

RCRA section 3004(g)(6) (42 U.S.C. 6924(g)(6)) provides that if EPA fails to set treatment standards for any hazardous waste included in the schedule promulgated on May 28, 1986 (51 FR 19300) by the statutory deadline, such waste may be land disposed in a landfill or surface impoundment only if:

(i) such facility is in compliance with the requirements of subsection (o) which are applicable to new facilities (relating to minimum technological requirements); and

(ii) prior to such disposal, the generator has certified to the Administrator that such generator has investigated the availability of treatment capacity and has determined that the use of such landfill or surface impoundment is the only practical alternative to treatment currently available to the generator. (RCRA section 3004(g)(6)(A))

This so-called "soft hammer" applies until May 8, 1940, at which time such wastes will automatically be prohibited from all methods of land disposal that are not otherwise determined to be protective through the "no migration" petition process (§ 268.6).

As a preliminary matter, it is important to note that these "soft hammer" provisions, including the demonstrations, certifications, notifications, and treatment requirements are only applicable to First Third wastes for which treatment standards have not been established, and are only applicable until May 8, 1990. During the period of the "soft hammer" provision, those wastes which are currently subject to the California list restrictions would remain so, and thus might be prohibited from land disposal even though they are also a "soft hammer" waste. This result is consistent with statements in previous preambles. The Agency indicated that waste-specific prohibitions, treatment standards, and effective dates would supersede California list prohibitions, treatment standards, and effective dates (52 FR 25773, 25776, and § 268.32(h), July 8, 1987). This is because where the Agency has made a waste-specific determination, it is likely to be a more accurate and a more considered regulatory judgment than for the generically designated California list wastes. The Agency has made no such considered judgment with respect to "soft hammer" wastes, however. In the absence of any such specific regulatory determination, it makes sense that these wastes be treated at least to the extent necessary to comply with the California list prohibitions and treatment standards (where applicable). California list capacity determinations likewise would supersede the "soft hammer" provisions, since these capacity determinations are tied directly to the specific treatment standards, and represent a specific Agency determination.

2. Interpretation of Specific Terms

Because EPA does not expect to establish treatment standards for all of the First Third wastes, the Agency is proposing the regulatory framework for management of these "soft hammer" wastes until May 8, 1990, or until treatment standards are promulgated, whichever is sooner. To facilitate the implementation of these provisions, the Agency is discussing its interpretation of the terms "treatment" and "facility" as stated in section 3004(g)(6), and requesting comment on these interpretations.

BEST COPY AVAILABLE

a. "Treatment" For the purposes of the "soft hammer" provision, the Agency is interpreting "treatment" to mean processing which reduces a waste's toxicity or which reduces the likelihood of migration of hazardous constituents from the waste. By not quantifying the term, the Agency thus would require that "soft hammer" wastes be treated by any current treatment methods which are practically available and which achieve meaningful (i.e., environmentally beneficial) reductions of waste constituent toxicity and/or mobility. Treatment would continue so long as further meaningful reductions in toxicity and/or mobility can be achieved (again assuming that treatment alternatives are practically available). Where the "best" treatment is not currently available, the "next best" treatment will be required. Thus, even if a waste has been treated, the requirement to treat to reduce the toxicity of the waste or the likelihood of migration of hazardous constituents from the waste would still apply. Further treatment that achieves meaningful reductions, is practically available, would have to be employed.

Congress clearly wished to require treatment prior to disposal of section 3004(g) wastes in impoundments and landfills—two forms of surface disposal singled out for special mandated minimum technological requirements. By taking a relatively stringent view of what constitutes treatment, the Agency is furthering this congressional purpose. In addition, the Agency believes that Congress intended that, during the period of the "soft hammer", only wastes treated to the most protective levels achievable by practically available technologies may go to land disposal in landfills or surface impoundments. Therefore, the Agency believes that defining "treatment" for the purposes of the "soft hammer" provision as a reduction of toxicity or likelihood of migration of hazardous constituents is consistent with the intent of Congress.

The Agency realizes that this approach could be interpreted to imply that residuals from treatment would have to be continually treated by the same process, or past the point where meaningful reductions can occur. This is not the Agency's intention (i.e., the Agency does not intend to require solely for the sake of treatment). EPA solicits suggestions as to the best means of expressing the intention that treatment achieve some meaningful degree of environmental benefit to avoid requiring sequential treatment that achieves only minimal reductions. EPA could limit such treatment by requiring that a single process be used only once. Another approach to limiting treatment is to set a performance limit by which treatment would be defined. For example, treatment could be defined by limiting the scope of available technologies to those technologies that yield a reduction of 20% in concentration or mobility of toxic constituents (or another designated percentage of reduction). Those technologies that do not yield at least a 20% reduction in toxicity of the waste or likelihood of migration of hazardous constituents from the waste would not be considered to be practically available "treatment" for this purpose. (Were the Agency to adopt this approach, such a standard would not imply that EPA would be setting a surrogate treatment standard of 20% reduction. The level of treatment would not be a 20% reduction, but rather the performance level achievable by the treatment technology used.)

The Agency's chief objective in interpreting the statutory reference to treatment is to prohibit certifications for "soft hammer" wastes that have only been treated minimally when meaningful reductions can be achieved by a practically available treatment technology. The Agency therefore solicits comment on an approach that would address this problem directly by requiring that "soft hammer" wastes be treated so as to achieve meaningful reductions of wastes' toxicity or mobility (the statutory section 3004(m)(1) standard) and by stating that sham or *de minimus* treatment cannot give rise to a valid certification (assuming legitimate treatment is practically available at the time of certification). An example of sham treatment would be adding dirt to a waste to reduce its mobility.

This approach would differ from the one proposed by not necessarily requiring sequential treatment to reduce further increments of wastes' toxicity or mobility. It could have a practical advantage of removing one complicated feature from the rule, since the regulated community and EPA officials would no longer need to struggle to determine how much treatment is needed. It would also focus regulatory efforts on the problem of sham treatment, rather than diffusing such efforts over issues of further incremental reductions.

The Agency solicits comment on these alternatives, and, in general, on its interpretation of "treatment", as it applies to the "soft hammer" provision in § 268.8.

b. "Facility". Section 3004(g)(6) states that "soft hammer" wastes may be disposed in surface impoundments and landfills "only if such facility is in compliance with the requirements of section (o) which are applicable to new facilities." EPA is interpreting "facility" in section 3004(g)(6) to refer to the individual landfill or surface impoundment "unit". EPA is persuaded that this is the best reading of the provision based on the language of the statute, and on evident congressional policy reflected in the statutory language and in the legislative history.

First, the reference in the provision to facilities appears to be linked directly to landfills and surface impoundments. Thus, the statutory reference to "*such* facility" (emphasis added) refers to the landfill or surface impoundment units mentioned immediately previously.

Second, and even more importantly, the statute requires that "such facility" be in compliance with the minimum technological requirements "which are applicable to new facilities." New landfills and surface impoundments, or new landfill and surface impoundment units at existing facilities, however, must have double liners, leachate collection systems, and groundwater monitoring. Congress thus appears to be saying that if landfills and surface impoundments are to receive "soft hammer" wastes, then they must meet the minimum technological requirements that would apply if they were new.

This reading seems to the Agency to be most in accord with the intent of the provision. If the Agency fails to establish a treatment standard for a section 3004(g) waste, and these wastes are destined for disposal in units about which Congress had particular concerns, then, at the least, these units should meet the minimum technological requirements. The alternative is to sanction disposal of untreated wastes (assuming there is no practically available treatment technology) in landfills and impoundments not meeting minimum technological requirements, a result EPA does not believe Congress intended. In this regard, the legislative history indicates that Congress intended that landfills and impoundments receiving prohibited wastes for which the Agency failed to establish treatment standards meet the minimum technological requirements:

> Only after a generator certifies to EPA that such generator has investigated the availability of treatment capacity and determined that the use of a landfill or surface impoundment is the only practical alternative to treatment currently available may such waste be placed in a landfill or surface impoundment. *A further limitation is the condition that such landfill or surface*

impoundment must satisfy the minimum technological requirements for new facilities. [S. Rep. No. 284, 98th Cong., 1st Sess. 21 (1983), (emphasis added) (explaining language later adopted in section 3004(g)(6))]

It also bears mention that the language in section 3004(o) does not refer to new *facilities*, but rather, it addresses new, replacement, or lateral expansion landfill or surface impoundment *units* at an existing facility. This language likewise suggests that Congress meant section 3004(g)(6) to apply to units rather than facilities; otherwise, section 3004(g)(6) would have no meaning at all.

An alternative interpretation of the statutory language is that the reference to "* * * requirements * * * applicable to new facilities * * *" would apply to the entire facility. This would give the term "facility" its literal meaning, but does not appear to reflect congressional intent. Under this interpretation, each unit as a facility would have to be in compliance with the minimum technological requirements of section 3004(o) since those are the requirements that would be applicable to a new, or "green-field", facility. EPA does not consider this to be a viable option because there are very few, if any, such facilities. Thus, this interpretation of the "soft hammer" provision could result in a "hard hammer", which the Agency does not believe was the intent of Congress in providing for section 3004(g)(6). If Congress had intended to prohibit land disposal of these wastes in landfills or impoundments, it could have said so directly as it did in section 3004(g)(6)(C).

A third option would be to interpret section 3004(g)(6) the same way as the Agency previously interpreted section 3004(b)(4) (see existing § 268.5(h)) (i.e., the facility as a whole must be in compliance with the requirements of section 3004(o), meaning that all new, replacement, or lateral expansion landfill or surface impoundment units must meet the minimum technological requirements, but that the waste could go into any unit at such a facility, e.g., existing units not meeting the minimum technological requirements). While this would be consistent with the Agency's current interpretation of "facility" in section 3004(h)(4)—which concerns the disposal of wastes subject to an extension of the effective date—it would ignore the additional language in section 3004(g)(6) (i.e., "* * * requirements * * * which are applicable to new facilities * * *", rather than "requirements of subsection (o)"). In addition, this would allow untreated "soft hammer" wastes with a valid certification to be disposed in the same types of units as those First Third wastes which meet the applicable treatment standards. EPA does not believe that this is what Congress intended; however, the Agency is requesting comment on this interpretation. Also, as discussed in greater detail in Section III. D., the Agency has reconsidered its interpretation of section 3004(h)(4) and is proposing to require wastes which are subject to an extension to the effective date to be disposed in landfills and surface impoundments only if such *units* are in compliance with the minimum technological requirements of section 3004(o).

c. *Certification by Owners or Operators as Well as Generators.* The statute provides that generators of "soft hammer" wastes certify to the Agency that disposal in a landfill or impoundment is the only practical alternative to treatment currently available. This language raises two potential problems: (1) Are generators the only entity that can certify; and (2) can a certification be filed for land disposal of *treated* "soft hammer" wastes.

With respect to the first problem, the Agency sees no reason to restrict certification to generators. There are situations where owners and operators of a treatment or storage facility may be more knowledgeable as to what treatment is available, or may otherwise be more sophisticated in the nuances of administrative recordkeeping than a generator. The Agency does not believe that the underlying policy of the "soft hammer" provision would be subverted by allowing these entities the option of submitting a certification.

With respect to the second problem, although the statute does not address the issue of certification for treatment residuals, the Agency is of the view that the certification provisions would apply. This reading is necessary to avoid the anomalous result of "soft hammer" waste treatment residues being prohibited from land disposal but untreated wastes being land disposed in impoundments and landfills after filing a certification. Congress could not have intended this result. Consequently, the Agency is proposing that the "soft hammer" certification apply to both untreated wastes and treatment residuals. A certification for a treatment residue would also state that there is no treatment practically available to achieve meaningful reductions in toxicity or mobility at the time of certification.

3. Certification Requirements

EPA believes the intent of Congress was to ensure that wastes for which treatment standards or extensions to the effective date were not established would nevertheless be treated to reduce the toxicity or mobility of the hazardous constituents by practically available treatment technologies prior to disposal in landfill or surface impoundment units that meet the minimum technological requirements. As stated earlier, EPA interprets this to mean that where the "best" demonstrated treatment is not currently available, the "next best" demonstrated treatment is required, so long as meaningful reductions can be achieved. The Agency also interprets this to mean that this requirement is not necessarily fulfilled by a single treatment step. Because a waste has been treated does not mean that further meaningful reduction of toxicity or mobility is not available. Before a treated "soft hammer" waste may be disposed in a landfill or surface impoundment, the generator or owner or operator thus must still certify that there is no practically available treatment that meaningfully reduces the toxicity or mobility of the hazardous constituents.

The Agency is also proposing to require generators or owners or operators to certify that they have utilized the practically available "treatment" (or train of treatment) that *most* reduces the toxicity or mobility of the hazardous constituents. Therefore, where more than one treatment technology is available, the treatment which provides the most meaningful reduction in toxicity or mobility is required. This interpretation precludes some forms of treatment where "better" treatment is available. For example, a waste may be amenable to meaningful treatment by two available technologies, incineration and stabilization, where incineration yields the greater reduction in toxicity or mobility. If incinerated, the residuals may still require further treatment by stabilization before they are eligible for disposal in a landfill or surface impoundment unit. However, if the waste is first stabilized, incineration may no longer be available for the residual. Such stabilization as the initial treatment would not provide the most meaningful reduction in toxicity or mobility, and the Agency thus would not accept a certification to this effect, assuming incineration remains practically available. EPA is soliciting comments on this interpretation.

The Agency thus is proposing in § 268.8 that the following requirements be met before a "soft hammer" waste is

eligible for land disposal in a landfill or surface impoundment unit:

(1) The generator has made a good faith effort to locate and contract with treatment or recovery facilities which can meaningfully reduce the toxicity or mobility of hazardous constituents in the waste.

(2) If the waste has been treated, the generator or owner or operator demonstrates that no treatment is practically available to provide further meaningful reductions in the toxicity or mobility of hazardous constituents in the residual at the time of certification.

(3) The generator or owner or operator certifies that the above conditions have been met and sends the Regional Administrator the certification and supporting documentation, and keeps the same documentation on-site.

(4) Following certification to the Regional Administrator, the generator or owner or operator must send a copy of the certification and supporting documentation to the disposal facility with the initial waste shipment, and continue to send the certification itself with each shipment of waste thereafter.

(5) The owner or operator of the disposal facility must

(a) keep all information and documentation received with the waste in the operating record, and

(b) ensure that such waste is only placed in a landfill or surface impoundment unit that meets the minimum technological requirements of RCRA section 3004(o) (i.e., double liner, leachate collection system, and ground-water monitoring or compliance with a statutory variance from these requirements).

4. Treatment of "Soft Hammer" Wastes in Surface Impoundments.

Under § 268.4 (which implements RCRA section 3005(j)(11)), restricted wastes may be treated in surface impoundments that meet the section 3004(o) minimum technological requirements provided that, among other things, residuals not meeting the applicable treatment standards (or statutory prohibition levels where treatment standards are not established) are removed within one year of placement in the impoundment. Because no treatment standards have been set for "soft hammer" wastes, removal of these residuals would seemingly be required.

There is an anomaly with this result, however. Were the owner or operator to consider the unit to be a disposal impoundment he could certify that no practical alternative to disposal exists and dispose of them in the same impoundment. Or, he could remove the residues, and, making the same certification, put them back. Provided that no further treatment is practically available, these residuals would be eligible for disposal in the same surface impoundment unit from which they were removed (since the minimum technological requirements for disposal of "soft hammer" wastes in a surface impoundment and for treatment of restricted wastes in a surface impoundment are identical).

The Agency believes that requiring such removal of treatment residuals of "soft hammer" wastes (which may then be eligible for *disposal* in the same type of unit, or indeed, the very same unit) would simply impose costs with no environmental benefit. In such cases, therefore, the Agency is proposing that the certification required for disposal may be made without removal of the residuals provided that no treatment to further meaningfully reduce the toxicity or mobility of hazardous constituents is practically available. This certification may be made by the generator or owner or operator at the time of placement in the impoundment for treatment.

5. Retrofitting Variances

There is one final interpretive issue regarding the "soft hammer" provision on which the Agency solicits comment. The question is whether surface impoundments that do not meet minimum technological requirements (MTRs) applicable to new facilities, but which do satisfy one (or more) of the variances for impoundment retrofitting in section in 3005(j) can nevertheless receive "soft hammer" wastes. The Agency believes that this is a complicated question, but that the best reading is the following.

First, under section 3004(g)(6), landfills or impoundments that receive "soft hammer" wastes must be in compliance with the MTRs for new facilities. These require either double liners and leachate collection systems, or, as provided in section 3004(o)(2), alternative design and operating practices and location characteristics that prevent migration of hazardous constituents at least as effectively as double liners and a leachate collection system.

Interim status surface impoundments in existence on November 7, 1984 may receive a waiver from retrofitting the units to meet the same MTRs, but for different reasons. Thus, the following types of impoundments need not retrofit: single-lined interim status units located no closer than one-quarter mile from an underground source of drinking water, which are in compliance with applicable groundwater monitoring requirements (section 3005(j)(2)); aggressive biological treatment facilities in compliance with applicable Clean Water Act permit requirements and groundwater monitoring requirements (section 3005(j)(3)); units that are designed, operated, and located to prevent migration of hazardous constituents to groundwater or surface water (section 3005(j)(4)); or units operating pursuant to a consent decree providing equivalent environmental protection as MTRs (section 3005(j)(13)).

These section 3005 variances may or may not be equivalent to the MTR variance standard in section 3004(o)(2). "no migration" impoundments in section 3005(j)(4), for example, would almost certainly satisfy the 3004(o)(2) standard; aggressive biological treatment impounds operating without liners might not. For this reason, the Agency does not believe that the statute automatically allows placement of "soft hammer" wastes into these types of impoundments. They do not necessarily meet the MTRs for new landfills and surface impoundments, as required by section 3004(g)(6).

Second, the Agency believes that if any section 3005(j) impoundment would actually make the demonstration called for in section 3004(o)(2), it could then receive "soft hammer" wastes. In this case, the impoundment would be satisfying the MTR applicable to new surface impoundments and should not be prohibited from receiving "soft hammer" wastes.

Third, section 3005(j)(11) provides that otherwise prohibited wastes can be placed in surface impoundments for treatment provided, among other conditions, that the impoundment either meets MTRs or satisfies the conditions of section 3005(j)(2) or (4) (single liner, one-quarter mile from an underground drinking waster source, or "no migration" to groundwater or surface water). The Agency reads this provision as allowing continued receipt of "soft hammer" wastes in such impoundments; there is no apparent reason that solvent, dioxin, and California list wastes can be placed in such impoundments, but not "soft hammer" wastes. A consequence of this rewarding would be that treatment impoundments satisfying section 3005(j)(2) or (4), but not MTRs, and not making the MTR equivalence demonstration would be able to continue receiving "soft hammer" wastes. Section 3005(j)(3) and (13) treatment impoundments, however, would remain ineligible because these impoundments are excluded from section 3005(j)(11) eligibility. This reading is consistent with the Agency's general interpretation of section 3005(j)(11) to exclude section 3005(j)(3) and (13) impoundments. (See 51 FR 1609, January 14, 1986).

D. Disposal of Restricted Wastes Subject to an Extension of the Effective Date

RCRA section 3004(h)(4) states that a restricted waste subject to an extension of the effective date "* * * may be disposed of in a landfill or surface impoundment only if such *facility* is in compliance with the requirements of subsection (o)." [Emphasis added]. Section 3004(o) refers only to new, replacement, or lateral expansion landfill or surface impoundment units.

In the November 7, 1986 rulemaking (51 FR 40572), EPA interpreted the word "facility" to refer to the facility as a whole. This interpretation allows for the disposal of such wastes in landfill and surface impoundment units that do not meet the minimum technological requirements provided that all new, replacement, or lateral expansion units at the facility (if any) are in compliance with the minimum technological requirements of RCRA section 3004(o).

EPA has reevaluated its original interpretation, and now believes that Congress intended the term "facility" to refer to "unit", which is consistent with the Agency's interpretation of "facility" in section 3004(g)(6), which refers to the disposal of First Third wastes for which no treatment standards have been established. Although section 3004(g)(6) is linguistically distinguishable (since it refers to the minimum technological requirements applicable to new facilities), the Agency's initial reaction is that Congress did not intend a different result for restricted wastes subject to capacity variance and "soft hammer" provisions. Both provisions, for example, deal with the same type of situation where treatment capacity is unavailable and restricted wastes are being disposed in a type of unit for which Congress showed particular concern. In addition, section 3004(h)(4) also refers to "such faciliti[es]" immediately after mentioning landfills and surface impoundments, thus indicating that the reference to facility was intended to apply to the specific unit. Furthermore, EPA believes it is the intent of Congress to require untreated wastes to be disposed in landfill and surface impoundment units that are presumably more protective than units that do not meet the minimum technological requirements. Legislative history to section 3004(h)(4) in fact states that Congress meant to prohibit disposal of restricted wastes subject to a capacity variance in all surface impoundments or landfills except those meeting minimum technological requirements applicable to new facilities—the same language as used in section 3004(g)(6) which the Agency views as clearly requiring the landfill and impoundment units to meet the minimum technological requirements. (See H.R. Conf. Rep. No. 1133, 98th Cong., 2d Sess., 87)(This passage in the Conference report actually refers to disposal of waste subject to a one-year case-by-case capacity variance under section 3004(h)(3), but the Agency sees no basis for not applying it to section 3004(h)(2) as well.

In justifying its original interpretation in the November 7, 1986 final rule, EPA expressed concern with the inconsistency of requiring wastes which have been granted an extension to the effective date due to a lack of sufficient treatment capacity, to go to units that were considered in determining whether treatment capacity was available, namely treatment surface impoundments required by section 3005(j)(11) to meet minimum technological requirements. This inconsistency no longer exists because the retrofitting requirements for surface impoundments become effective in November 1988. These requirements are the same whether the unit is used for disposal or treatment. Also, as old landfills (or old cells at landfills) are closed, new landfills (or new cells) will meet the minimum technological requirements. Thus, the number of units available that do not meet the minimum technological requirements has diminished and will continue to do so. Therefore, the Agency is proposing that all restricted wastes subject to an extension of the effective date be disposed of in landfills and surface impoundments only when such units meet the minimum technological requirements.

E. Relationship to California List Prohibitions

As discussed in the July 8, 1987 California list final rule preamble (52 FR 25773), and as reflected in § 268.32(h) (i.e., the overlap of the HOCs and other prohibited wastes), where the Agency makes a waste-specific determination that is more specific than the California list determination, such determinations will supersede the California list treatment standards and effective dates. The Agency intends this principle to apply to the restrictions on the land disposal of First Third wastes. While it is clear that Agency-established treatment standards or effective dates for First Third wastes are more specific than California list determinations, there is some ambiguity surrounding the applicability of the California list restrictions to "soft hammer" wastes.

Until promulgation of the restrictions on land disposal of First Third wastes, many of these wastes are subject to the California list restrictions. Once treatment standards and effective dates have been promulgated for such wastes, the California list restrictions clearly will be superseded. However, no treatment standards will have been promulgated for "soft hammer" wastes. EPA is therefore proposing that "soft hammer" wastes which are otherwise subject to the California list restrictions remain subject to the California list treatment standards and effective dates. It should be noted that if a national capacity variance has been granted for a "soft hammer" waste under the California list final rule, such a waste would remain subject to the demonstration and certification requirements of § 268.8 (as discussed in Section III. C.). This approach not only recognizes that the California list treatment standards are not actually effective for such a waste (due to the national capacity variance), but also remains consistent with the Agency's intent that where more than one regulatory requirement applies, the more stringent requirement will apply. The Agency solicits comment on its approach to the applicability of the California list prohibitions to "soft hammer" wastes.

EPA is also considering a change in the approach on the applicability of California list restrictions to wastes for which a more specific determination has been made. For First Third wastes for which treatment standards have been established, but for which the Agency has granted a national capacity variance due to inadequate capacity to treat the waste to the treatment standard, the Agency is considering an approach where such First Third wastes would remain subject to the California list prohibitions during the period of the national variance. For example, assume that a liquid metal-containing First Third waste (otherwise subject to the California list restrictions) has been granted a national capacity variance because of inadequate capacity to treat the waste to the treatment standard, yet was not granted a variance under the less stringent (in terms of concentration levels of the metal) California list prohibitions that are in effect at this time. The Agency would determine that, because capacity exists to treat the "California list" waste to allow for land disposal, the California list prohibitions still apply and the "First Third" waste would be required to comply with the California list prohibitions. The First Third treatment standard would then be

applicable on the First Third effective date.

Granting a national variance for the First Third waste in the above example based on inadequate treatment capacity could allow the land disposal of untreated wastes which may have metal concentrations exceeding that of the otherwise applicable California list prohibition levels, for which the Agency has determined that treatment to meet at least California list prohibitions is available. This approach would vitiate the measure of environmental protection achieved by treating the waste to below California list levels (or rendering the waste non-liquid). Similarly, if the Agency were to establish treatment standards for California list metals and cyanides and promulgated capacity variances because of a lack of sufficient treatment capacity to meet these standards, the wastes would still be required to be treated to meet the California list statutory prohibitions (see generally 52 FR 29992, August 12, 1987). However, EPA realizes that this constitutes a change in approach from that stated in the California list final rule (52 FR 25773) and therefore solicits comment.

F. Determination as to the Availability of the Two-Year Nationwide Variance for Solvent Wastes Which Contain Less Than 1 percent Total F001–F005 Solvent Constituents

In a June 4, 1987 technical correction notice (52 FR 21010) to the November 7, 1986 final rule prohibiting land disposal of certain spent solvent and dioxin-containing hazardous wastes, EPA promulgated an amendment to § 268.30(a)(3) reclarifying that solvent wastes that are prohibited in the hands of their initial generator—i.e., that are not subject to any applicable variance—cannot be permissibly land disposed until treated to meet the § 268.41 treatment standards. This principle applies to all residues from treatment (unless they are part of a different treatability group for which EPA has determined that no treatment capacity exists). (See 52 FR 21012, June 4, 1987 and also 52 FR 22356–22357, June 11, 1987.) Because questions have been raised regarding the policy basis for the action, and because the underlying principle is an important one which warrants the fullest consideration, EPA has decided to seek further comment on this issue, and (if comment warrants) to revise its current approach accordingly.

The Agency has stated many times that a determination as to whether a waste is restricted from land disposal is to be determined at the initial point of generation in order to avoid compromising the integrity of the Part 268 Subpart D treatment standards (see 51 FR 41620, November 7, 1986 and 52 FR 25765, July 8, 1987). Determining the applicability of a prohibition at any later point could result in the treatment standard being supplanted.

In the case of the prohibited solvent wastes, EPA established an effective date of November 8, 1988 for restricted solvent wastes containing less than 1% total restricted solvent constituents (40 CFR 268.30(a)(3)). The determination should be made by the initial generator at the point of generation so that the § 268.41 treatment standards—which are based on data showing that these solvents' mobility can be very significantly reduced with proper treatment normally involving incineration—not be supplanted by the 1% national capacity variance level. This could occur if solvent treatment residues treated to 1% solvent constituents then became eligible for a national capacity variance; the 1% level would become a *de facto* treatment level, whereas the true, achievable treatment level would, in most cases, be orders of magnitude lower. Where capacity exists to treat the residues, this result is simply at odds with the statutory scheme embodied in section 3004(m). (See 51 FR 44620, November 7, 1986.)

There would be no reason for treatment facilities to continue treating restricted solvent wastes below the 1% level. For instance, the Agency noted that the BDAT treatment train for many restricted solvent wastes involves distillation of the solvents followed by incineration of the still bottoms from distillation. The residues of incineration should then meet the Subpart D treatment standards (assuming that incineration is conducted properly). (See 51 FR 1727, January 14, 1986.) Were the prohibition point to be determined anywhere but the point of generation of the spent solvent, there would be no reason to continue treating solvent still bottoms that contain less than 1% of the restricted solvents, even though the still bottoms are amenable to further treatment and the Subpart D treatment standards are based on further treatment.

The Agency also has indicated that where it has determined that no treatment capacity exists to treat a particular residue from treatment, then the capacity variance would apply to the residue from treatment. This could occur most normally when treatment generates a residue which belongs in a new treatability group for which the Agency has determined that there is no existing treatment capacity (see 52 FR 22357, June 11, 1987). The Agency continues to believe that this is a sound principle.

With respect to solvent distillation bottoms, however, EPA's data indicate that a capacity variance is unwarranted. Since the initial January 14, 1986 proposal, the Agency has stated that distillation bottoms have to be treated further before they could be land disposed (see 51 FR 1724). The Agency also has found that incineration treatment capacity exists for these residues from solvent distillation. (See 51 FR 1724, 1727, and 1729, January 14, 1986; 51 FR 40615, November 7, 1986; and Capacity Background Document for November 7, 1986, Solvent Rule, pp. 63–64, 66.)

These passages all indicate that the Agency assessed the volume of distillation bottoms resulting from distillation of restricted solvent wastes and determined that there was adequate incineration capacity to treat them. These conclusions were not challenged during the solvent land disposal prohibition rulemaking, but the Agency again solicits comment, in light of operating experience since promulgation of the November 7, 1986 rule, as to whether there is adequate treatment capacity to treat residues from treatment of restricted solvent wastes where such residues contain less than 1% total solvent constituents but do not meet the applicable Subpart D treatment standards. If commenters believe that this may be the case (based on appropriate data), the Agency solicits further comment as to whether there is any basis for considering these residues to be a different treatability group.

In proposing regulatory language and soliciting comment on this issue, the Agency is not withdrawing its existing regulation. The Agency notes, however, that its earlier actions on this issue were prospective only. (See 52 FR 21010, stating that the revisions are effective on June 4, 1987.) Thus, the June 4, 1987 revisions to § 268.30(a)(3) have no applicability to any certifications made before that date or to any treatment residues land disposed before that date. (See 52 FR 21012, June 4, 1987 (item #16); *id.* at 21017 (item #62).)

G. Storage Prohibition

The storage prohibition in § 268.50 is applicable to all First Third wastes, including those wastes for which treatment standards have not been established (i.e., "soft hammer" wastes). The statutory language in RCRA section 3004(j) states that:

In the case of any hazardous waste which is prohibited from one or more methods of land disposal under this section (or under regulations promulgated by the Administrator under any provision of this section) the storage of such hazardous waste is prohibited unless such storage is solely for the purpose of the accumulation of such quantities of hazardous waste as are necessary to facilitate proper recovery, treatment or disposal.

Under RCRA section 3004(g)(6), "soft hammer" wastes are prohibited from disposal in landfills and surface impoundments unless the generator certifies that such disposal is the only practical alternative to treatment available to the generator. Therefore, "soft hammer" wastes are prohibited from "one or more methods of land disposal", and are subject to the storage prohibition.

EPA does not believe that Congress intended the storage prohibition to apply to wastes which are no longer prohibited from "one or more methods of land disposal". Should a "soft hammer" waste be subject to the certification set forth in § 268.8, this waste would no longer be prohibited from any form of land disposal. The Agency is proposing that the storage prohibition would no longer be applicable, and § 268.50 would be amended to reflect this interpretation. This is consistent with the Agency's approach to wastes which are subject to an extension of the effective date, which are also not subject to the storage prohibition.

H. Petitions To Allow Land Disposal of Prohibited Wastes

1. Overview

The statutory language of RCRA 3004 (d), (e), and (g) includes provisions allowing an interested party to petition to dispose of prohibited wastes in land disposal units, including deep injection wells, provided that the petitioner demonstrates to the Administrator "to a reasonable degree of certainty that there will be no migration of hazardous constituents from the disposal unit or injection zone for as long as the wastes remain hazardous." Land disposal of otherwise prohibited hazardous wastes may be allowed only where it can be demonstrated, to a reasonable degree of certainty, that the statutory standard will be met.

On November 7, 1986, EPA promulgated regulations (51 FR 40572) that provided procedures for submittal of petitions to allow land disposal of a waste prohibited under Subpart C of Part 268. The regulation (40 CFR 268.6) included the information that must be provided in a "no migration" demonstration, the criteria the demonstration must meet, and the Agency's review and approval procedures.

Since promulgation of the November 7, 1986 final rule, the Agency has had several inquiries regarding the appropriate content of "no migration" petitions. In response to these questions, EPA is proposing additional requirements in today's rule. This rule does not, however, present the Agency's interpretation of the statutory "no migration" language of RCRA 3004 (d), (e), and (g). The Agency hopes to further address this question at a later date.

Today's notice discusses additional requirements relating to:

(1) Other applicable laws;
(2) Monitoring plans;
(3) Variance departures; and
(4) Detection of hazardous constituent migration.

A detailed discussion of these requirements is provided in Section 4.

2. Requirements for "No Migration" Petitions in the November 7, 1986 Final Rule

In the final rule published on November 7, 1986, the Agency promulgated procedures and criteria for "no migration" petitions for surface disposal units. As codified in 40 CFR 268.6 (d) through (j), EPA requires all "no migration" petitions to be submitted to the Administrator containing information that describes: (1) specific wastes and specific unit(s) involved, (2) chemical and physical characteristics of the wastes, and (3) comprehensive characterization of the disposal unit and environment.

A successful petition must meet the following criteria that form the basis for the Agency's evaluation of the demonstration for compliance with the statutory language:

(1) Waste and environmental sampling, testing, and analysis data are accurate and reproducible;

(2) Sampling, testing, and estimation methods for determining chemical and physical properties of wastes and environmental parameters are explained;

(3) Simulation models used in the demonstration must be calibrated for specific waste and site conditions;

(4) Quality assurance and quality control plan must be submitted that addresses all aspects of the demonstration;

(5) An analysis must be performed to identify and quantify any aspects of the demonstration that contribute significantly to uncertainty. This analysis must include an evaluation of the consequences of predictable future events, including, but not limited to, earthquakes, floods, severe storm events, droughts, or other natural phenomena; and

(6) A statement must be prepared and signed that verifies the petitioner's familiarity with all information in the petition and that the data and information is true, accurate and complete to the extent possible.

In addition to these requirements, the following provisions are applicable to units that have received a variance from the land disposal prohibitions;

(1) The petition will apply only to land disposal of specific restricted wastes at that disposal unit;

(2) The effective period of the petition can be no longer than the term of the RCRA permit if the unit is operating under a RCRA permit, or up to a maximum of 10 years from the date of approval if the unit is operating under interim status. Terms of the petition in either case will expire upon termination or denial of a RCRA permit, or upon the termination of interim status (except when interim status is terminated by the issuance of a permit), or when the waste volume limit of the disposal unit during the effective period of the petition is reached; and

(3) The petition does not relieve the petitioner of his responsibilities in the management of hazardous waste under 40 CFR Parts 260 through 271.

The applicants are required to comply with all restrictions on land disposal that are in effect during the time period in which the petition is being prepared, submitted, and reviewed until a final decision by the Administrator is made. The Administrator may request additional information as needed to evaluate the demonstration. After completing review of the application, the Administrator will announce to the public and solicit comments on his intent to approve or deny the petition in the **Federal Register**. After review of public comments, he will then publish his final decision on the petition in the **Federal Register**.

3. Regulatory Requirements of RCRA Sections 3004 (f) and (g) November 7, 1986 Final Rule

The Agency recently proposed rules to implement the land disposal restrictions of section 3004 (f) and (g) of RCRA for waste disposal in deep injection wells (52 FR 32446, August 27, 1987). While the standards applied to owners or operators of deep injection wells in these proposed rules are the same as those in today's proposal, the criteria, content, and procedures are different in that they specifically pertain to unique

technological and hydrogeologic conditions associated with injection. The reader should refer to these August 27, 1987 proposed rules for complete discussion of how the Agency intends to apply the "no migration" standards in deep injection wells.

4. Additional Requirements for "No Migration" Petitions for Surface Units

Based on review of the inquiries and comments received on the subject of "no migration" petitions, the Agency is proposing additional requirements to be effective on the date of promulgation. These requirements would be added to those already codified in 40 CFR Part 268 for "no migration" petitions for surface disposal units. Today's proposed rule provides further procedural and informational requirements applicable to those surface disposal units for which a variance from the land disposal restrictions is being sought, and does not interpret the statutory language of RCRA sections 3004 (d), (e) and (g) regarding "no migration" demonstrations. Specific information and procedural requirements of today's proposal are discussed below.

(1) Other Applicable Laws: EPA is proposing to require the petitioner to provide sufficient information in the petition demonstration to assure the Administrator that land disposal of the prohibited waste(s) (in the petition) will comply with other applicable Federal, State, and local laws (Section 268.6(d)(1)). The petitioner must review Federal, State and local laws to determine if stricter regulations must be applied to the unit for which the petition is submitted. This review is necessary to reveal environmentally sensitive areas and endangered species which must be protected. The review of Federal laws should include, but not be limited to, the Clean Air Act; the Clean Water Act; the Safe Drinking Water Act; the Endangered Species Act; the National Historic Preservation Act; the Wild and Scenic Rivers Act; the Coastal Zone Management Act; the Fish and Wildlife Coordination Act; the Atomic Energy Act; and the Marine Protection, Research, and Sanctuary Act. The review of State and local laws must be determined on a case-by-case basis. Under 40 CFR 270.3, an owner or operator seeking a RCRA permit for a unit must demonstrate compliance with several Federal laws, including some of those listed above. The Agency does not foresee that an owner or operator satisfactorily making a timely demonstration for those laws covered under § 270.3 in order to obtain a permit, will have to make another demonstration of compliance with those same laws for the purposes of obtaining a "no migration" variance.

(2) Monitoring Plan: Under Section 268.6(d)(2) of today's proposal, EPA is proposing that petitioners submit a monitoring plan to the Administrator that describes the monitoring program installed at and/or around the unit to verify continued compliance with conditions of the variance.

This monitoring plan must be submitted as part of the "no migration" petition and must provide information on the monitoring of the unit and/or the appropriate environment around the unit, or, if monitoring the unit or the environment around the unit is either technically infeasible or impracticable, the rationale supporting the determination of infeasibility or impracticability. If the petitioner asserts that monitoring is impractical or infeasible, no monitoring plan (for the unit or environment as appropriate) need be submitted. However, the Administrator will decide if monitoring of the unit itself or monitoring of the environment around the unit, or both, is required, based on the factors supporting the variance and other information provided. If EPA decides that such a plan is necessary, the petitioner will be required to submit a plan before the final decision on the petition will be made.

If a monitoring plan is required, the petitioner must submit as part of that plan the following information:

a. The media monitored, in cases where monitoring of the environment around the unit is required;

b. The type of monitoring conducted at the unit, in the cases where monitoring of the unit is required;

c. The location of the monitoring stations;

d. The monitoring interval (frequency of monitoring at each station);

e. The specific hazardous constituents to be monitored;

f. The implementation schedule for the monitoring program;

g. The equipment used at the monitoring stations;

h. Sampling and analytical techniques employed;

i. Data recording/reporting procedures.

The plan must include discussion of the rationale for the design of the monitoring program and demonstrate that monitoring will be positioned so as to detect migration from the unit at the earliest practicable time. Specifically, the plan must provide discussion of the monitoring program with respect to the following points

a. Mobility and persistence of hazardous waste constituents managed in the unit;

b. Possible migration pathways from the unit, both during the active life of the facility and through the post-closure care period;

c. Operations at the unit;

d. Strength of engineered and natural material components of the unit and any weak points in the unit design.

e. Optimum location of the monitoring stations to detect any migration of hazardous constituents at the earliest practicable time.

The Agency believes that monitoring programs, either for the unit itself or the environment around the unit, or both will be required in most cases. Only in a very few instances does the Agency feel that monitoring of the unit itself or the environment around the unit may not be appropriate or technically feasible. One such case may be hazardous waste repositories in geologic formations that are so extensive that installation of monitoring wells around the formation itself may not allow detection of migration at the earliest time, and installation of monitoring wells in the formation may damage the integrity of the formation. Monitoring the repository itself (e.g., pressure monitoring of fluids between well-casings in solution-mined caverns, or leachate sumps and pumps in room-and-pillar mines) may be suitable in this case.

A monitoring program should include monitoring the behavior of wastes in the unit to detect any changes in the waste that may affect the potential for migration of hazardous constituents over time. Examples of this type of monitoring include periodic testing of the waste in a unit; leachate collection systems in surface impoundments, landfills, and room-and-pillar mines; and fluid or gas pressure monitoring in well casings above solution-mined caverns in salt domes. To avoid monitoring systems within the unit, the petitioner must show that the available technology for monitoring the unit would adversely affect the structural integrity or the waste isolation capability of the unit.

The locations of the monitoring stations in the different media outside of the unit (if applicable) and/or within the unit itself (if applicable) must be specified in the monitoring plan. Selection of the monitoring points in the media around the unit and within the unit should be based on an assessment of pollutant fate and transport and should provide for detection of releases of hazardous constituents at the earliest practicable time.

Groundwater monitoring systems must consist of a sufficient number of wells installed at appropriate locations and depths to detect migration to the ground water at the earliest practicable time. The groundwater monitoring program for conventional land disposal units, such as surface impoundments and land treatment units, should comply with 40 CFR Parts 264 and 265 standards and requirements as well as technical guidance issued by EPA to properly locate, design, drill, develop, and operate groundwater monitoring wells. Monitoring systems must consist of a sufficient number of devices located so as to detect migration of hazardous constituents from the unit at the earliest practicable time. All monitoring systems and their capabilities must be specified in the monitoring plan of the petition and approved by the Administrator.

A petitioner may be able to incorporate into his monitoring plan part or all or a groundwater monitoring program established for the purpose of complying with 40 CFR Parts 264 and 265 Subpart F. For example, a petitioner may be able to use all or some of his monitoring wells if they will detect migration at the earliest practicable time, and may only have to increase the frequency of monitoring.

The monitoring interval specified in the monitoring plan (§ 268.6(d)(2)) must provide detection of migration of hazardous constituents at the earliest practicable time. The owner or operator must submit a suggested monitoring interval for all monitoring stations and demonstrate that the frequency of monitoring at that station is adequate to detect releases of hazardous constituents at the earliest practicable time. The demonstration may be based on computer simulations or other assessments of pollutant fate and transport in the particular media. The Administrator will determine if the suggested interval is appropriate based on the evaluation of the demonstration. The monitoring interval will vary depending on the media being monitored and other site-specific factors. These factors may include climatology, environmental setting, unit design characteristics, and waste characteristics.

The Appendix VIII constituents to be monitored must be specified in the monitoring plan (§ 268.6(d)(2)). The constituents to be monitored in the unit should be determined based on knowledge of waste composition and mobility of waste components. For groundwater, the constituents to be monitored may be analogous to those monitored under Parts 264 and 265 Subpart F. Under Subpart F, depending on whether the monitoring program is in a detection, compliance, or corrective action monitoring phase, an owner or operator may be monitoring for indicator parameters, all Appendix IX constituents, or specific waste constituents. A monitoring program undertaken to demonstrate "no migration" may be able to make use of Subpart F monitoring data. Although monitoring indicator parameters under Subpart F may be helpful to demonstrate "no migration", the actual constituents to be monitored must be determined based on an analysis of the waste.

Monitoring outside the unit in the different media should include, but is not necessarily limited to, the most mobile constituents for the particular media.

Where applicable, the monitoring program described in the petition monitoring plan must be in place for a period of time specified by the Administrator prior to receipt of waste at the unit (§ 268.6(e)) or as indicated in an alternative schedule as approved by the Administrator. The monitoring program must be implemented during the time which the unit is receiving restricted waste which does not meet the treatment standards under 3004(m) and may also be necessary, in part or in total, during the post-closure care period. Although the approved petition is valid for only as long as the owner's and operator's operating permit (10 years maximum), the monitoring of media to which the wastes could potentially migrate may continue for as long as the waste remains hazardous. The objective of a monitoring program for "no migration" variances is to allow detection of migration of hazardous constituents at the earliest practicable time. During the operating life of the unit, such a detection of migration will prevent the unit from continuing to receive waste not meeting standards under 3004(m) (see discussion below). During the post-closure care period, however, the unit is no longer receiving restricted untreated waste, and the objective of *any* monitoring is to detect the need for corrective action. Thus, in most cases, groundwater monitoring other than that already required for post-closure care under §§ 264.117 and 265.117 will not be necessary. Monitoring of additional media may be necessary during the post-closure care period if the activities conducted under post-closure do not adequately protect against migration. However, the Agency does not envision that a disposal unit which has been properly closed will pose a threat of migration through other media.

Monitoring of unit parameters, such as temperature or pressure, will not be required after closure if the monitoring activities would compromise the isolation capability of a disposal unit or would not provide data of significance to assess the unit's integrity after closure.

The monitoring program must meet the criteria in § 268.6(f):

a. All testing, sampling and analytical techniques must be conducted according to methods contained in EPA Publication SW-846 Solid Waste Testing Methods or must be approved by the Administrator, and all data must be accurate and reproducible;

b. Sampling, testing, estimation and modeling techniques must be provided and approved by the Administrator; and

c. A Quality Assurance and Quality Control plan must be approved by the Administrator.

The Agency believes that the reporting of monitoring data should occur regularly, but that frequent reporting of monitoring data imposes a significant administrative burden on the owner or operator and the petition reviewer. The Agency believes that monitoring data which is collected for the purposes of demonstrating compliance with the variance and which does not reveal migration or significant changes to the site, should be reported annually to the Administrator. A schedule for reporting the data should be proposed in the petition and approved by the Administrator. The Agency is requesting comment on whether data should be reported annually, or more frequently. The Agency further believes that monitoring data may be reported to the Administrator or kept on-site as part of the operating log. The Agency is soliciting comment as to whether the monitoring data should be reported to the Administrator, kept in the operating log on-site, or both.

(3) Changes from Conditions of the Variance: Under 268.6(1) of this proposal, if there is a change from the reported conditions at or around the unit or any change affecting the unit or the area around the unit for which the petition has been granted, this change must be reported to the Administrator at the earliest practicable time. The Agency believes that any changes made at the facility that may affect any part of the unit must be reported. For example, if the owner/operator proposes to make engineering changes at the unit, these must be reported to the Administrator at least 30 days prior to the change being

made. If the monitoring plan for the unit needs to be changed or upgraded to better reflect actual conditions at the site, it must be reported to the Administrator at least 30 days prior to this proposed change. If site conditions change (i.e., environmental changes), the Administrator must also be notified of this change. The Agency realizes that some petitions will be submitted and approved prior to a unit being built. As such, the Agency believes that it is necessary to provide flexibility to change some conditions of the petition if necessary to protect against migration, or to adequately detect a release.

The Agency also realizes that conditions upon which the "no migration" variance has been granted may prove to be different once the unit is operating. For example, a petitioner may predict, based on modeling, that leachate concentration will be at a certain level and the petition was approved conditional upon that concentration. However, actual monitoring of the leachate after the unit receives restricted waste may show that levels are above those predicted. Such a change in the conditions of the variance should be reported to the Administrator. The Agency realizes that some changes may not be significant enough to warrant action, but believes that *all* changes to the unit or area around the unit, or changes that may affect unit or area around the unit must be reported, both for pending petitions and facilities already granted waivers. The Administrator will determine if such changes warrant actions such as submittal of a new petition, modifications to the variance, revocation of the variance, or no changes to the variance, among others. At this time, the Agency is unable to delineate changes which would be considered minor in their effect on the variance. As such, the Agency proposes requiring notification of *all* changes. The Agency is soliciting comment on what changes should or should not be reported. The Agency is also soliciting comment as to whether all changes or some changes need to be reported immediately or can be submitted as part of the reporting requirements for monitoring.

(4) Detection of Hazardous Constituent Migration: Under proposed § 268.6(m), if the owner or operator determines that there is a migration of hazardous constituents from the unit, the owner or operator must immediately suspend receipt of restricted wastes at the unit and notify the Administrator, in writing, within 10 days of the determination. EPA believes that ten days is a reasonable time period for notifying the Administrator of a migration of hazardous constituents. The Agency, however, is interested in receiving comments from the public on the appropriate time period for the notification of the Administrator. EPA also believes that immediate suspension of receipt of restricted wastes is necessary in order not to compound the problem of migration.

In the notification of migration (applying to all media), the owner/operator must provide analytical data on the constituents, and an initial assessment of the cause of migration. The notification may include the owner or operator's planned response to the release. The planned response may include additional monitoring, corrective actions to remediate the release, and design or operating modifications to prevent a recurrence of the release. The notification may also suggest what response by the Agency would be appropriate.

A brief summary of the information required in a notification is provided below:

a. The analytical data to be provided must include but is not necessarily limited to the following: (1) the owner or operator must provide the constituents detected and the concentrations at which they were detected; and (2) the owner or operator must provide modeling data (if applicable) that estimates the levels of hazardous constituent migrating from the unit.

b. The notification must provide an initial assessment of possible causes of the migration. This assessment may include an evaluation of engineered components (i.e., deterioration, construction deficiencies, etc.), changes in environmental factors (i.e., climate, groundwater fluctuation, etc.), and other appropriate factors.

Following receipt of the owner or operators' notification of migration, the Administrator will determine the actions to be taken within 60 days of receiving the notification. The Administrator will make this decision based upon information provided in the monitoring plan, the "no migration" petition, and the notification. Possible responses to the notification may include revoking the owner or operator's variance, partial closing of the unit, additional monitoring, operational changes, or other appropriate responses. A petitioner would then be afforded further opportunity to comment on the Agency's decision. However, EPA believes that the Agency's (and public's) interest in having only treated wastes disposed in surface disposal units other than "no migration" units appears to outweigh any private interest in continued land disposal of untreated wastes, and thus, justifies immediate Agency action without further right to comment before the decision.

If a final decision cannot be reached by the Agency within 60 days, the Administrator will issue a draft decision specifying temporary measures to be in effect until a final decision is reached. Temporary measures that may be specified by the Administrator include, but are not limited to, restrictions on waste types or quantities placed in the unit, additional monitoring, or unrestricted continued operations.

I. Proposed Approach to Comparative Risk Assessment

Within the regulatory framework established for implementing the land disposal restrictions, EPA included certain criteria in the determination of "available" treatment technologies. One criterion required that treatment technologies not present greater total risks than land disposal waste management practices. Although the Agency utilized comparative risk assessments in the development of regulations prohibiting land disposal of certain solvent-containing and dioxin-containing hazardous wastes (November 7, 1986 final rule) and California list wastes (July 8, 1987 final rule), the analysis did not affect the determinations that treatment was available.

Upon further consideration of the existing comparative risk analysis, the Agency believes that the approach in which the risks of land disposal are compared to the risks from alternative treatment technologies is flawed. In cases where the land disposal practice could be found to be less risky than any of the treatment alternatives, the analysis could lead to anomalous results. For example, in a situation where the comparative risk analysis indicated that land disposal was the least risky alternative available, there would be no specified treatment technology for the wastes. At the same time, land disposal would be prohibited by statute. Thus, the generator could not land dispose the wastes, even though treatment could be conducted pursuant to other regulatory standards that assure protection of human health and the environment.

A second anomaly is that unless EPA actually specifies a treatment method as the treatment standard—normally an undesirable option (see 51 FR 44725, December 11, 1986)—the regulated community may still use treatment technologies identified as riskier than land disposal to comply with the treatment standards. In this respect, the

comparative risk assessments would not deter the use of treatment found to present greater total risk.

In light of these legal and practical considerations, EPA does not believe the existing comparative risk assessment approach is warranted as a decision tool for this rulemaking in the determination of "available" treatment technologies. In the future the Agency may conduct risk analyses to distinguish between the overall degree of risk posed by alternative treatment technologies and to make determinations concerning the "best" technology based on net risk posed by the alternative practices. The Agency solicits comment on this new approach.

J. Determination of Alternative Capacity and Effective Dates for First Third Wastes

1. Quantities of Wastes Land Disposed

EPA has estimated the total quantities of First Third wastes land disposed annually based on the results of the OSW RIA Mail Survey of Treatment, Storage, and Disposal Facilities regulated in 1981. The Agency acknowledges that data from this survey are not current and may limit the accuracy of capacity analyses, but believes that this database is the only comprehensive information currently available that is specific enough to allow EPA to determine required alternative treatment capacity. EPA is developing a new database that will be used for capacity determinations. The new database will be comprised of information taken from responses to a 1987 survey of treatment, storage, disposal, and recycling facilities. Since this new capacity database will not be available until early in 1988, the capacity analyses for this propsoed rule are based on the 1981 survey data. When the 1987 survey data become available EPA will reassess capacity.

Four methods of land disposal are included in the table below: Disposal in landfills; storage in waste piles; disposal by land application; and treatment, storage, and disposal in surface impoundments. Deep well injection, another method of land disposal, will be addressed in a separate **Federal Register** notice. Other methods of land disposal that are affected by today's proposal (utilization of salt dome and salt bed formations and underground mines and caves) are not addressed in the capacity analyses because of insufficient data. Similarly, there is not enough data to estimate the capacity requirements for land disposed First Third wastes generated by Small Quantity Generators (SQGs) and form CERCLA response actions and RCRA corrective actions.

TOTAL VOLUME OF FIRST THIRD WASTES LAND DISPOSED EXCLUDING DEEP WELL INJECTED WASTES (MILLION GALLONS/YEAR)

Disposal method	Volume
Landfill	600
Land application	100
Storage in waste piles	70
Surface impoundments:	
Storage only	990
Treatment only	1130
Storage and treatment	300
Disposal	250
Total	3440

About 250 million gallons of First Third wastes are disposed in surface impoundments annually. Ultimately, all of this waste will require alternative treatment capacity.

Approximately 990 million gallons of First Third wastes are stored in surface impoundments annually. Since storage implies a temporary containment of waste, EPA has assumed that stored wastes are eventually treated, recycled or permanently disposed of in other units. To avoid double-counting of such wastes, the volumes of wastes reported as being stored in surface impoundments were not included in the estimates of volumes requiring alternative treatment capacity. However, the Agency recognizes that, because of the restrictions on placement of wastes into surface impoundments, these wastes will eventually require alternative storage capacity.

In addition to the wastes stored, about 1.4 billion gallons for First Third wastes are treated or treated and stored concurrently in surface impoundments annually. These wastes may still be treated this way, provided that the impoundments meet the minimum technological requirements under RCRA by November 1988. However, while there are not data available to estimate the quantity of waste treated in impoundments that meet the minimum technological requirements, EPA believes that the volume is relatively small. Therefore, EPA has assumed that all First Third wastes being treated or treated and stored simultaneously in surface impoundments will require alternative treatment and storage capacity, usually in the form of either retrofitted impoundments or new tank treatment systems.

2. Required Alternative Capacity

In order to assess the requirements for alternative treatment capacity that will result from the restrictions of today's proposed rule, the Agency first characterized the volume of First Third wastes that require alternative treatment capacity on the basis of land disposal method, waste code, and physical/chemical form. Using this information, it was then possible to determine which treatment technologies are applicable to the waste volumes and to determine the volume of alternative treatment capacity that will be required when owners/operators comply with the land disposal restrictions being proposed today.

Due to time constraints, as explained previously, Best Demonstrated Available Technology (BDAT) analyses have not been completed for all of the scheduled First Third wastes. Capacity analyses have not been performed for "soft hammer" wastes (P and U waste codes) or First Third E and K wastes for which treatment standards are not being proposed today. Furthermore, the Agency has determined that generators of the waste K069 are able to totally recycle the waste volumes generated and that the First Third wastes K004, K008, K036, K073 and K100 are no longer being generated. Since the treatment standard is set as "No Land Disposal" for wastes that are no longer generated or are totally recycled, no capacity analyses were necessary for these wastes. The table below lists the amount of waste land disposed for those First Third wastes for which treatment standards are being proposed today.

VOLUME OF FIRST THIRD WASTES, EXCLUDING DEEP WELL INJECTED WASTES, AFFECTED BY THE PROPOSED RULE (MILLION GALLONS/YEAR)

Disposal method	Volume
Landfill	220
Land application	90
Storage in waste piles	50
Surface impoundments:	
Storage only	50
Treatment only	55
Storage and treatment	30
Disposal	85
Total	580
Total (excluding Storage only)	530

Based on our analysis, EPA estimates that today's proposed rule would potentially affect about 530 million gallons of First Third wastes that are land disposed annually that will require treatment capacity.

As explained elsewhere in this preamble, EPA today is proposing treatment standards that are expressed as concentration limits and is identifying

the technology basis of the standards. EPA is not requiring that the specified treatment technologies be used to comply with standards. However, in order to evaluate the treatment capacity required for First Third wastes, EPA is assuming that the entire volume of waste estimated for each waste code will be treated using the same type of technology that forms the basis of the proposed treatment standards.

The treatment technologies used to establish proposed treatment standards fall under six categories: fluidized bed or rotary kiln incineration for K016, K018–K020, K024, K030, K037, and K048–K052, liquid injection incineration for K015, wastewater treatment for K062, wastewater treatment and incineration for K103 and K104, chemical treatment for K071 and high temperature metals recovery for K061. The volumes of First Third wastes that will require alternative treatment capacity are listed for each category in the table below.

REQUIRED TREATMENT CAPACITY FOR FIRST THIRD WASTES AFFECTED BY THE PROPOSED RULE (MILLION GALLONS/YEAR)

Technology	Required treatment capacity
Fluidized Bed or Rotary Kiln Incineration	170
Liquid Injection Incineration	<1
Wastewater Treatment for K062	230
Wastewater Treatment and Incineration for K103 and K104	30
Chemical Treatment	10
High Temperature Metals Recovery	90
Total	530

3. Capacity Currently Available and Effective Dates

Fluidized Bed, Rotary Kiln and Liquid Injection Incineration

EPA estimates that about 170 million gallons per year of First Third wastes will require fluidized bed or rotary kiln incineration capacity as a result of today's proposed standards.

EPA has identified rotary kiln incineration as BDAT for the wastes: K016, K018, K019, K020, K024, K030 and K037. While the treatment standards for these wastes are based on rotary kiln incineration, the Agency believes that a well-designed and well-operated fluidized bed incinerator will also achieve the treatment standards. Therefore, fluidized bed incineration capacity was included in the estimates of treatment capacity.

EPA has identified fluidized bed incineration followed by stabilization of metals in the ash as BDAT for the K048, K049, K050, K051, and K052 wastes. While the treatment standards for these wastes are not based on rotary kiln incineration, EPA believes that rotary kiln incineration in a well-designed and well-operated unit followed by stabilization of metals in the ash will also achieve the treatment standards. Therefore, rotary kiln incineration capacity was included in the estimates of treatment capacity.

Liquid injection incineration was used to establish the treatment standard for K015. While BDAT is identified as liquid injection incineration, the Agency believes that incineration in a well-designed and well-operated industrial furnace (e.g., a cement kiln) will also achieve the treatment standard. Therefore, industrial furnace capacity was included in the estimate of treatment capacity for this waste.

As the Agency determined for the Solvents and Dioxins Rule (51 FR 40572), there is not enough commercial fluidized bed or rotary kiln incineration capacity for wastes requiring these technologies and EPA lacks the information necessary for estimating on-site incineration capacity at facilities that generate these wastes. Therefore, EPA assumes that capacity is inadequate and proposes to grant a two-year national capacity variance from the effective date for the following wastes: K016, K018, K019, K020, K024, K030, K037, K048, K049, K050, K051, and K052. It should be noted that capacity analyses will be reviewed when the new data become available.

The Agency has determined that there is adequate liquid injection incineration capacity (including cement kilns) commercially available to treat K015 wastes. Therefore, EPA does not propose to grant a capacity variance for this waste.

Wastewater Treatment for K062

EPA estimates that about 230 million gallons per year of the First Third waste K062 would require wastewater treatment as a result of today's proposed rule. BDAT for K062 is identified as chromium reduction, chemical precipitation and vacuum filtration. The Agency believes that this treatment is generally available on-site and has determined for previous rules (51 FR 40572 and 52 FR 25760) that some available commercial capacity exists. Furthermore, approximately 42 percent of the K062 waste is currently being managed in surface impoundments that are subject to the minimum technological requirements under RCRA. The Agency believes that some of these impoundments may either be retrofitted to meet the minimum technological requirements or may be replaced by newly-installed tank treatment systems. Consequently, EPA believes that adequate capacity for K062 exists or will exist prior to promulgation of the final rule. Therefore, no variance is proposed for K062.

Wastewater Treatment and Incineration for K103 and K104

EPA estimates that approximately 30 million gallons per year of the First Third wastes K103 and K104 would require wastewater treatment and incineration as a result of today's proposed rule. BDAT for these wastes is solvent extraction followed by incineration of the solvent contaminated extract and followed by steam stripping and carbon adsorption of the wastewater. The Agency estimates that about four million gallons per year (approximately 13 percent of the original volume) of solvent contaminated extract will require incineration and that the entire volume of waste will require solvent extraction followed by steam stripping and carbon adsorption.

The Agency has determined that there is adequate incineration capacity commercially available to treat the volumes of K103 and K104 generated (this includes industrial kiln capacity as well as liquid injection incineration capacity). However, EPA has determined that there is not enough solvent extraction/steam stripping/carbon adsorption capacity commercially available to treat the volumes of K103 and K104. Therefore, even though incineration capacity is available, these wastes cannot be treated to the treatment standards. Since capacity for some treatment steps is inadequate, EPA proposes to grant a two-year national capacity variance from the prohibition effective date for K103 and K104.

High Temperature Metals Recovery for K061

EPA estimates that approximately 90 million gallons of the First Third waste K061 will require high temperature metals recovery capacity annually (even though K061 is a dust, the volume is given in gallons because all volumes were reported as gallons in the RIA Mail Survey). Available data indicate that generators are not equipped to treat K061 on-site and that there is not enough commercial capacity available to treat the amount generated. Therefore, EPA proposes to grant a two-year national

capacity variance from the prohibition effective date for K061.

Chemical Treatment for K071

EPA estimates that about 10 million gallons of the First Third waste K071 would require chemical treatment annually as a result of today's proposed rule. BDAT for K071 is acid leaching and chemical oxidation for nonwastewaters and sulfide precipitation followed by filtration for wastewaters. The available data indicate that there are no commercial treatment facilities that manage this waste and that most generators are not equipped to treat K071 on-site. Therefore, EPA proposes to grant a two-year national capacity variance from the prohibition effective date for K071.

4. Capacity Variances for "Derived-From" and "Mixed" Wastes

In developing estimates of the quantity of a waste that requires treatment as a result of the land disposal restrictions, EPA attempts to define all such wastes including "derived-from" and "mixed" wastes. However, EPA's estimates of treatment capacity usually assume that all waste is treated using the same type of treatment technology that is determined to be the basis for the BDAT treatment standards.

As explained earlier in this preamble, EPA's treatment standards will apply to a range of wastes with physical and/or chemical characteristics potentially different from the waste tested. In cases where the facility believes that the appropriate treatment technology is different from the technology determined to be BDAT or that the associated effective date is inappropriate, the facility can petition for either a variance from the treatment standard or a case-by-case capacity extension. (A case-by-case extension could be granted even if a variance from the treatment standard was not requested or was denied.)

5. Capacity Variances for "Soft Hammer" Wastes

The Agency is not barred from granting capacity variances for "soft hammer" wastes, i.e. First Third wastes for which there is no treatment standard (52 FR 25774–775, July 8, 1987). The Agency, however, has discretion as to whether or not to grant such variances. [See RCRA section 3004(h)(2) ("The Administrator *may* establish an effective date different from the effective date which would otherwise apply * * *" (emphasis added)).] The Agency believes it inappropriate to consider capacity variances for "soft hammer" wastes because section 3004(g)(6) functions as an individualized capacity determination. Generators of wastes destined for disposal in landfills or impoundments, in effect, must make their own search of practically available treatment and certify the results. The Agency thus believes it would be an inefficient use of its own resources (and possibly an undermining of the "soft hammer" scheme) if it were to undertake its own independent capacity determination for "soft hammer" wastes.

IV. Modifications to the Land Disposal Restrictions Framework

Today's proposal does two things. First, it proposes the Agency's approach to restricting the land disposal of First Third wastes, presenting the conditions under which land disposal of these wastes may be continued. Second, it proposes modifications to the existing framework of the Land Disposal Restrictions Program, as first promulgated on November 7, 1986 (51 FR 40572) and subsequently modified in the July 8, 1987 California list final rule (52 FR 25760). Unless otherwise specified, these proposed modifications will apply to all other restricted wastes. This section of today's proposal summarizes these modifications and refers to more detailed discussions in other sections of this preamble.

A. General Waste Analysis (§§ 264.14 and 265.13)

The Agency has proposed modifications to §§ 264.13 and 265.13 to reflect provisions for the treatment of "soft hammer" wastes in surface impoundments. The framework promulgated November 7, 1986 provided for an exemption allowing treatment of restricted wastes in surface impoundments meeting the minimum technological requirements (i.e., double liner, leachate collection system, and groundwater monitoring), provided that residuals that do not meet the treatment standard are removed annually. As discussed in Section III. C. 3., this exemption is extended to allow for wastes subject to the "soft hammer" provision (i.e., wastes for which no treatment standard has been established). Nonsubstantive modifications are also proposed to make these sections more readable.

B. Operating Record (§ 264.73 and § 265.73)

The Agency is proposing to modify § 264.73 and § 265.73 to require retention of the § 268.8 certification, i.e. the certification applicable to "soft hammer" wastes. EPA is also proposing to require that facilities retain the new tracking notice required under § 268.7 for generators sending "soft hammer" wastes to receiving facilities, and for treatment facilities sending "soft hammer" wastes to a disposal facility. The proposed notice and certification is discussed further in Sections III. B. 2. and III. C. 2. respectively.

C. Purpose, Scope, and Applicability (§ 268.1)

The Agency is proposing to modify § 268.1 only to include the "soft hammer" wastes in the applicability of the land disposal restrictions, and to allow the disposal of such wastes in landfill and surface impoundment units meeting the minimum technological requirements provided such wastes are the subject of a valid certification under § 268.8.

D. Treatment in Surface Impoundment Exemption (§ 268.4)

The proposed modifications to the requirements of § 268.4 reflect the special conditions for allowing this exemption to apply to First Third wastes for which no treatment standards have been established. Certain nonsubstantive modifications have also been proposed to improve the readability of the section. The conditions relating to the disposal of "soft hammer" wastes are discussed in Section III. C. 3.

E. Case-by-Case Extensions (§ 268.5)

The modification to § 268.5 reflects the Agency's new interpretation of RCRA section 3004(h)(4), that wastes subject to a case-by-case extension of the effective date, if disposed in a landfill or surface impoundment, must be disposed in a *unit* that meets the minimum technological requirements. EPA's earlier interpretation was that Congress intended such wastes to be disposed in a *facility* that meets the minimum technological requirements. The discussion for this proposed change is found in Section III. D.

F. "No Migration" Petitions (§ 268.6)

As discussed in Section III. H., the Agency is proposing modifications to the existing requirements for petitioning EPA for a "no migration" exemption under § 268.6.

G. Testing and Recordkeeping (§ 268.7)

The proposed modifications to § 268.7 extend the notification and certification requirements to include the First Third wastes. EPA is also proposing to apply the recordkeeping requirements of this section to treatment and storage

facilities not already included in the "cradle-to-grave" paper trail, including an additional change addressing wastes that may be land disposed under an extension, exemption, or variance. Also, a new notification is proposed for "soft hammer" wastes. The discussion for these proposed modifications is found in Section III. B.

Testing requirements for wastes in § 268.43 (i.e., wastes for which the treatment standards are expressed as concentration levels in the waste, rather than in the waste extract) have been proposed. And finally, other nonsubstantive modifications are being proposed to improve the readability of this section.

H. Landfill and Surface Impoundment Disposal Restrictions (§ 268.8)

The Agency is proposing a new § 268.8 which addresses the prohibition on disposal of First Third wastes for which treatment standards have not been established. An extensive discussion in Section III. C. presents the Agency's interpretation of RCRA section 3004(g)(6)(A), which is applicable to the disposal of such wastes in landfills and surface impoundments, and also proposes EPA's approach to the type of information which must be supplied and certified to prior to such disposal.

I. Waste Specific Prohibitions—First Third Wastes (§ 268.33)

Section 268.33 proposes the actual prohibitions on the land disposal of First Third wastes (wastes listed in § 268.10) for which EPA has proposed treatment standards, and also proposes effective dates based on the availability of capacity to treat these wastes. Section III. A. describes the development of these proposed treatment standards, and Section III. J. presents the capacity data and assumptions on which the proposed effective dates are based. Section 268.33(e) proposes the prohibitions placed on "soft hammer" wastes, as discussed in Section III. C.

It should be noted that the schedule for waste K019 (a Second Third waste listed in § 268.11) has been accelerated to include this waste in the First Third. K100 (a Third Third waste listed in § 268.12) is also included in the First Third.

J. Treatment Standards (§ 268.40, § 268.41, and § 268.43)

Proposed treatment standards, expressed as concentration levels in both the waste (§ 268.43, as expressed in a new Table CCW) and in a waste extract developed by using the TCLP, are presented in proposed amendments to Subpart D. The treatment standards are discussed in Section III. A.

K. Storage Prohibition (§ 268.50)

Only a slight modification to the existing storage prohibition in § 268.50 is proposed to account for the Agency's interpretation of RCRA section 3004(j), as applicable to "soft hammer" wastes which are the subject of a certification under § 268.8. This interpretation is presented in Section III. G. of this notice.

V. State Authority

A. Applicability of Rules in Authorized States

Under section 3006 of RCRA, EPA may authorize qualified States to administer and enforce the RCRA program within the State. Following authorization, EPA retains enforcement authority under sections 3008, 3013, and 7003 of RCRA, although authorized States have primary enforcement responsibility. The standards and requirements for authorization are found in 40 CFR Part 271.

Prior to HSWA, a State with final authorization administered its hazardous waste program in lieu of EPA administering the Federal program in that State. The Federal requirements no longer applied in the authorized State, and EPA could not issue permits for any facilities that the State was authorized to permit. When new, more stringent Federal requirements were promulgated or enacted, the State was obliged to enact equivalent authority within specified time frames. New Federal requirements did not take effect in an authorized State until the State adopted the requirements as State law.

In contrast, under RCRA section 3006(g) (42 U.S.C. 6926(g)), new requirements and prohibitions imposed by HSWA take effect in authorized States at the same time that they take effect in nonauthorized States. EPA is directed to carry out these requirements and prohibitions in authorized States, including the issuance of permits, until the State is granted authorization to do so. While States must still adopt HSWA-related provisions as State law to retain final authorization, HSWA applies in authorized States in the interim.

Today's rule is proposed pursuant to sections 3004(d) through (k), and (m), of RCRA (42 U.S.C. 6924). Therefore, it will be added to Table 1 in 40 CFR 271.1(j), which identifies the Federal program requirements that are promulgated pursuant to HSWA and take effect in all States, regardless of their authorization status. States may apply for either interim or final authorization for the HSWA provisions in Table 1, as discussed in the following section. When this rule is promulgated, Table 2 in 40 CFR 271.1(j) will be modified also to indicate that this rule is a self-implementing provision of HSWA.

B. Effects on State Authorizations

As noted above, EPA will implement today's proposal in authorized States until their programs are modified to adopt these rules and the modification is approved by EPA. Because the rule is promulgated pursuant to HSWA, a State submitting a program modification may apply to receive either interim or final authorization under RCRA section 3006(g)(2) or 3006(b), respectively, on the basis of requirements that are substantially equivalent or equivalent to EPA's. The procedures and schedule for State program modifications for either interim or final authorization are described in 40 CFR 271.21. It should be noted that HSWA interim authorization will expire on January 1, 1993 [see 40 CFR 271.24(c)].

Section 271.21(e)(2) requires that States that have final authorization must modify their programs to reflect Federal program changes, and must subsequently submit the modification to EPA for approval. The deadline for the State to modify its program for this proposed regulation will be determined by the date on which this regulation is promulgated in final form. Since final rule promulgation will be after July 1, 1987, State program modifications must be made by July 1, 1991, if only regulatory changes are necessary or July 1, 1992, if statutory changes are necessary. These deadlines can be extended in exceptional cases (see § 271.21(e)(3)).

States with authorized RCRA programs may have requirements similar to those in today's proposal. These State regulations have not been assessed against the Federal regulations being proposed today to determine whether they meet the tests for authorization. Thus, a State is not authorized to implement these requirements in lieu of EPA until the State program modification is approved. Of course, States with existing standards may continue to administer and enforce their standards as a matter of State law. In implementing the Federal program, EPA will work with States under agreements to minimize duplication of efforts. In many cases, EPA will be able to defer to the States in their efforts to implement their programs rather than take separate actions under Federal authority.

States that submit official applications for final authorization less than 12 months after the effective date of these regulations may be approved without including equivalent standards. However, once authorized, a State must modify its program to include standards substantially equivalent or equivalent to EPA's within the time periods discussed above.

The amendments being proposed today need not effect the State's Underground Injection Control (UIC) primacy status. A State currently authorized to administer the UIC program under the Safe Drinking Water Act (SDWA) could continue to do so without seeking authority to administer these amendments. However, a State which wished to implement Part 148 and receive authorization to grant exemptions from land disposal would have to demonstrate that it had the requisite authority to administer sections 3004 (f) and (g) of RCRA. The conditions under which such an authorization may take place are summarized above, and are discussed in 50 FR 28728, et seq., July 15, 1985.

C. State Implementation

There are three unique aspects of today's proposal which affect State implementation and impact State actions on the regulated community:

1. Under Part 268, Subpart C, EPA is proposing land disposal restrictions for all generators and disposers of certain types of hazardous waste. In order to retain authorization, States must adopt the regulations under this Subpart since State requirements can be no less stringent than Federal requirements.

2. Also under Part 268, EPA may grant a national variance from the effective date of land disposal prohibitions for up to two years if it is found that there is insufficient alternative treatment capacity. Under § 268.5, case-by-case extensions of up to one year (renewable for one additional year) may be granted for specific applicants lacking adequate capacity.

The Administrator of EPA is solely responsible for granting variances to the effective date because these determinations must be made on a national basis. In addition, it is clear that RCRA section 3004(h)(3) intends for the Administrator to grant case-by-case extensions after consulting the affected States, on the basis of national concerns which only the Administrator can evaluate. Therefore, States cannot be authorized for this aspect of the program.

3. Under § 268.44, the Agency may grant a waste-specific variance from a treatment standard in cases where it can be demonstrated that the physical or chemical properties of the waste differ significantly from wastes analyzed in developing the treatment standard, and, the waste cannot be treated to specified levels or treated by specified methods.

The Agency is solely responsible for granting such variances since the result of such an action will be the establishment of a new waste treatability group. All wastes meeting the criteria of this new waste treatability group will also be subject to the variance, and thus, granting such a variance has national impacts. Therefore, this aspect of the program is not delegated to the States.

4. Under § 268.6, EPA may grant petitions of specific duration to allow land disposal of certain hazardous waste where it can be demonstrated that there will be no migration of hazardous constituents for as long as the waste remains hazardous.

States which have the authority to impose bans may be authorized under RCRA section 3006 to grant petitions for exemptions from bans. Decisions on site-specific petitions do not require the national perspective required to ban waste or grant extensions. However, the Agency expects few "no migration" petitions and so will be handling them at Headquarters, though the States may be authorized to grant these petitions in the future. The Agency expects to gain valuable experience and information from review of "no migration" petitions which may affect future land disposal restrictions rulemakings. In accordance with RCRA section 3004(i), EPA will publish notice of the State's final decision on petitions in the **Federal Register**.

States are free to impose their own disposal bans if such actions are more stringent or broader in scope than Federal programs (RCRA section 3009 and 40 CFR 271.1(i)). Where States impose such prohibitions, the broader and more stringent State ban governs.

VI. Effects of the Land Disposal Restrictions Program on Other Environmental Programs

A. Discharges Regulated Under the Clean Water Act

As a result of the land disposal restrictions program, the regulated community might switch from treatment (BDAT) and land disposal for some restricted First Third wastes to discharge to publicly owned treatment works (POTWs); this switch would be based on waste management costs and treatment availability after the land disposal restrictions took effect. In shifting from treatment and land disposal to discharge to POTWs, an increase in human and environmental risks could occur. Also as a result of the land disposal restrictions, hazardous waste generators could illegally discharge their wastes to surface water without treatment, which could cause damage to the local ecosystem.

Some generators might treat their wastes prior to discharging to a POTW, but the treatment step itself could increase risks to the environment. For example, if incineration were the pretreatment step, metals and other hazardous constituents present in air scrubber waters could be discharged to surface water. However, the amount of First Third waste shifted to POTWs would be limited by such factors as the physical form of the waste, the degree of pretreatment required prior to discharge, and State and local regulations.

B. Discharges Regulated Under the Marine Protection, Research, and Sanctuaries Act (MPRSA)

Management of some First Third wastes could be shifted from treatment (BDAT) and land disposal to ocean dumping and ocean-based incineration. If the cost of ocean-based disposal plus transportation were lower than the cost of land-based treatment, disposal, and transportation, this option could become an attractive alternative. In addition, ocean-based disposal could become attractive to the regulated community if land-based treatment capacity were not available.

An increase in ocean-based disposal could lead to an increase in risk to the marine environment. For example, ocean dumping of toxic hazardous wastes could cause increased risks for sensitive marine organisms. Stack emissions from ocean-based incinerators might contain metals and persistent organic chemicals that could be deposited in the ocean and have potentially toxic effects on marine life. In addition, accidental spills and releases in the ocean could have severe effects on coastal and marine resources.

Management of restricted First Third wastes could not be automatically shifted to ocean dumping and ocean-based incineration based on costs alone. Both technologies require permits, which could be issued only if technical requirements (e.g., physical form and heating value) and MPRSA environmental criteria (e.g., constituent concentrations, toxicity, solubility, density, and persistence) were met. MPRSA requires that nine specific factors, including the availability and impacts of land-based disposal

alternatives, be considered before permits can be issued for ocean disposal.

C. Air Emissions Regulated Under the Clean Air Act

Some treatment technologies applicable to First Third wastes could result in cross-media transfer of hazardous constituents to air. For example, incineration of metal-bearing wastes could result in metal emissions to air. Some constituents, such as chromium, can be more toxic if inhaled than if ingested. As a result, it might be necessary to issue regulatory controls for some technologies to ensure they are operated properly.

The Agency has taken several steps to address this issue. EPA has initiated a program to address metal emissions from incinerators. It has also initiated two programs under section 3004(n) to address air emissions from other sources. The first program will address fugitive emissions from equipment such as pumps, valves, and vents from units processing concentrated organic waste streams. The second program will address other sources of air emissions, such as tanks and waste transfer and handling.

VII. Regulatory Analyses

A. Regulatory Impact Analysis

1. Purpose

The Agency estimated the costs, benefits, and economic impacts of today's proposed rule. These analyses are required for "major" regulations as defined by Executive Order No. 12291. The Agency is also required under the Regulatory Flexibility Act to assess small business impacts resulting from the proposed rule. The cost and economic impact analyses serve, additionally, as a measure of the practical capability of facilities to comply with the proposed rule.

The results indicate that today's rule is a major rule. This section of the preamble discusses the results of the analyses of the proposed rule as detailed in the draft Regulatory Impact Analysis (RIA) for the proposed rule. The draft RIA is available in the public docket for this proposal.

The analyses presented in this section and in the draft RIA do not fully reflect the current status of the proposed rule. Certain wastes were included in the RIA, but, due to the additional time required to set treatment standards for the wastes, were not part of the proposed rule. Treatment standards were set in the proposed rule for other wastes which did not appear in the database used for the RIA. In addition, for a few wastes, the treatment standards presented in the proposed rule differ, in varying degrees, from those assumed initially in the RIA. These discrepancies will be addressed in the RIA for a subsequent First Third proposed rule.

2. Executive Order No. 12291

Executive Order No. 12291 requires EPA to assess the effect of proposed Agency actions and alternatives during the development regulations. Such an assessment consists of a quantification of the potential benefits and costs of the rule, as well as a description of any beneficial or adverse effects that cannot be quantified in monetary terms. In addition, Executive Order No. 12291 requires that regulatory agencies prepare a Regulatory Impact Analysis (RIA) for major rules. Major rules are defined as those likely to result in:

- An annual cost to the economy of $100 million or more; or
- A major increase in costs or prices for consumers or individual industries; or
- Significant adverse effects on competition, employment, investment, innovation, or international trade.

The Agency has prepared an RIA which compares the proposed rule with a regulatory alternative, as discussed in the following sections. Based on this analysis, the Agency has concluded that this proposed regulation is a major rule with an annual cost to the economy ranging from $661–696 million per year.

3. Basic Approach/Regulatory Alternatives

EPA is proposing to set treatment standards for a subset of the First Third K wastes and to let "soft hammers" fall on all First Third P and U wastes. As indicated earlier in the preamble, the Agency will continue to analyze treatment data for additional First Third F and K wastes and will publish a supplemental proposal. When the proposal is published, the impacts of meeting the land disposal restrictions requirements for these wastes will be identified.

The "soft hammers" place restrictions on the land disposal of First Third wastes for which no treatment standards have been set by August 8, 1988. The "soft hammer" provisions would be in effect until "hard hammers" fell (on May 8, 1990) or for an even shorter period if treatment standards or extensions of the effective date were promulgated. The effect of "hard hammers" falling on wastes and of extensions of the effective date were not examined as part of this analysis. The "soft hammers", as well as the proposed rule as a whole, are discussed in greater detail in Section III of this preamble.

EPA estimated the costs, benefits, and potential economic impacts of the proposed rule and of a major regulatory alternative to it. However, only the impacts of the proposed rule are presented here. Results for the regulatory alternative are discussed in the RIA.

Provisions of the proposed rule, as analyzed in the RIA, are as follows:

Proposed Rule:

- Treatment standards are established for 30 F and K wastes, and
- "Soft hammers" are allowed to fall on P and U wastes.

The costs and benefits of two "soft hammer" scenarios were examined:

Scenario 1:

- "Soft hammers" fall on P and U wastes and treatment capacity is assumed not to exist;
- Therefore, P and U wastes may continue to be land disposed in units meeting minimum technological requirements.

Scenario 2:

- "Soft hammers" fall on P and U wastes and treatment capacity is assumed to exist;
- Therefore, P and U wastes must meet "approximate treatment standards" (treatment that will reduce the mobility and toxicity of hazardous consituents).

It was assumed that the "soft hammers" would apply to wastes disposed of in landfills, surface impoundments, waste piles, and land farms. While neither scenario corresponds exactly to the proposed rule, it was assumed that the two scenarios would establish upper and lower bounds on the effects of the proposed rule. The scenarios were also used to explore some of the implications of varying "soft hammer" requirements.

The effects of the proposed rule (with "soft hammer" scenarios) were estimated by comparison of post-regulatory costs, benefits, and economic impacts with those resulting under baseline conditions. The baseline is continued land disposal of wastes in units meeting minimum technological requirements.

4. Methodology

a. Determination of Affected Population and Waste Management Practices. The first step in determining the populations of affected wastes and facilities was to characterize waste streams based on available characterization reports and professional judgment. (See Section D for references.) This characterization

data was matched with information on waste quantities and management practices from the 1981 RIA Mail Survey and the 1984 Small Quantity Generator Survey to determine the waste streams and facilities potentially affected by the proposed rule. Waste quantities and numbers of facilities from each survey were scaled up, by means of weighting factors, to represent the national population of wastes and facilities.

Next, it was necessary to adjust the affected waste and facility populations by considering the cost of compliance with regulations which have taken effect since the 1981 RIA Mail Survey was conducted. In particular, EPA adjusted reported waste management practices to reflect compliance with the provisions of 40 CFR Part 264, which apply to permitted treatment, storage, and disposal facilities. In making this adjustment, the Agency assumed the facilities would elect the least costly methods of compliance.

This adjustment defines not only baseline management practices and costs associated with them, but also the number of facilities and waste streams in the affected population. For example, for some facilities, the costs of land disposing of certain wastes may have been driven so high by the minimum technological requirements that other management modes became less expensive, EPA assumes that these facilities no longer land dispose of these wastes and that these wastes are no longer part of the population of waste streams that may be affected by any restrictions on land disposal.

Finally, it was necessary to consider the overlap between First Third wastes and California list, solvent, and dioxin wastes. A number of First Third wastes are California list wastes, and a few First Third mixed wastes contain solvents and dioxins. To isolate the impacts of this proposed rule, it was necessary to "net out" the costs, economic impacts, and benefits stemming from treatment standards established under other rules; in some cases this resulted in waste streams and facilities being dropped from the affected population for this rule.

The logic used to net out overlapping costs, economic impacts, and benefits is illustrated for First Third wastes which are also California list wastes:

If:	Then:
The First Third treatment for the waste tream is the same as the California list treatment.	Drop the waste stream from the analysis (since there would be no incremental impacts due to the First Third proposed rule).
The First Third treatment adds one or more steps to the California list treatment.	Include the waste in the analysis; estimate the incremental costs; economic impacts, and benefits due to the added treatment step(s).
The First Third treatment differs substantially from the California list treatment.	Include the waste in the analysis; estimate the incremental costs, economic impacts, and benefits due to the new treatment.

The population of wastes which would be affected by the proposed rule may include some wastes from CERCLA responses or RCRA corrective actions. However, there are insufficient data at present to estimate these quantities. Underground injected wastes were excluded from this analysis; these wastes will be dealt with in the RIA for a separate rule.

The population of affected facilities includes:

- Commercial hazardous waste treatment, storage, and disposal facilities (commercial TSDFs), which charge a fee for hazardous waste disposal;
- Non-commercial TSDFs, which provide disposal services for wastes generated on-site or off-site by their parent firms;
- generators, which send their waste off-site to commercial TSDFs for disposal; and
- small quantity generators (SOGs), which send their waste off-site to commercial TSDF.

b. Cost Methodology. Once waste quantity, type and method of treatment were known for the affected population, EPA developed estimates of costs of compliance for individual facilities. The analysis detailed in this section is based on cost estimates for surveyed facilities representing the affected population. EPA estimated baseline and compliance waste management costs using engineering judgment. Wastes amenable to similar types of treatment were grouped to identify economies of scale available through co-treatment and disposal.

Facilities face several possible options if they may no longer land dispose of their wastes. EPA applied the same rationale in predicting facility choice among these options as it did in establishing the affected population: facilities were assumed to elect the least costly method of complying with the requirements of this rule. Costs of compliance were derived by predicting the minimum-cost method of compliance with land disposal restrictions for each facility and calculating the increment between that and baseline disposal costs. As in the analysis of baseline costs, economies of scale in waste management were considered. Shipping costs for wastes sent off-site for management were also considered.

EPA developed facility-specific compliance costs in two components, which were weighted and then summed to estimate total national costs of the rule. The first component of the total compliance cost is incurred annually for operation and maintenance (O&M) of alternative modes of waste treatment and disposal. The second component of the compliance cost is a capital cost, which is an initial outlay incurred for construction and depreciable assets. Capital costs were restated as annual values by using a capital recovery factor based on a nominal interest rate of 9 percent. These annualized capital costs were then added to yearly O&M costs to derive an annual compliance cost.

c. Economic Impact Methodology. (1) Non-Commercial TSDFs and SQGs. EPA assessed economic impacts on non-commercial TSDFs and SQGs in several steps. First, the Agency employed a general screening analysis to compare facility-specific incremental costs to financial information about firms, disaggregated by Standard Industrial Classification (SIC) and number of employees per facility. (See Section D for references.) This comparison was based on two ratios, which were used to identify facilities likely to experience adverse economic effects. The first is a ratio of individual facility compliance costs to costs of production. This ratio represents the percent product price increase for facility output that occurs if the entire compliance cost—accompanied by facility profit—is passed through to customers in the form of higher prices. A change exceeding five percent is considered to imply a substantial adverse economic effect on a facility. The second is a coverage ratio cash from operations to costs of compliance. This ratio represents the number of times that facility gross margin covers the regulatory compliance cost if the facility fully absorbs the cost. For this ratio, a value of less than 20 is considered to represent a significant adverse effect. The coverage ratio is the more stringent of the two ratios, but exceeding the critical level in either one suggests that a facility is likely to be significantly affected. These ratios bound possible effects on individual firms. This analysis considers only pre-tax costs, because Census data are stated in pre-tax terms.

Once facilities experiencing adverse economic effects were identified using

the two screening ratios, a more detailed financial analysis was performed to verify the results and to focus more closely on affected facilities. For this subset of facilities, the coverage ratio was adjusted by allowing a portion of costs to be passed through. Economic effects on individual facilities were examined assuming that product price increases of one and five percent were possible. Those facilities for which the coverage ratio was less than two were considered likely to close.

(2) Commercial TSDFs. For this group of facilities, there exists no Census SIC from which to draw financial information. Two SICs which might be used as proxies, 4953 and 4959, do not distinguish between financial data for hazardous waste treatment firms and for firms managing municipal and solid wastes. Consequently, the analysis of economic effects on commercial facilities was qualitative. This analysis included an examination of the quantity of waste each facility received from the waste group restricted by today's rule. EPA also examined the ability of each facility to provide the additional treatment required once these restrictions were promulgated, and thus to retain or expand that portion of its business generated by restricted wastes.

(3) Generators. EPA's analysis of the economic effects of this rule on generators disposing of large quantities of affected wastes off-site assumed that commercial facilities could entirely pass on to them the costs of compliance with this regulation in the form of higher prices for waste management services. Because of data limitations in the RIA Mail Survey, EPA did not develop plant-specific waste characterization, treatment methods, and compliance costs for generators, as it did for TSDFs. The analysis of the economic effects of today's proposed rule on this group used RIA Mail Survey data to develop model plants generating average waste quantities. This allowed EPA to assess possible effects on generating plants.

d. Benefits Methodology. The benefits of today's proposed rule were evaluated by considering the reduction in human health risk that results from using alternative treatment for First Third wastes rather than employing baseline management practices. Human health risk is defined herein as the probability of injury, disease, or death over a given time (70 years) due to responses to doses of disease causing agents. Due to time and budget constraints, risk results were obtained for only selected, potentially high-risk waste streams, which were selected based on previous analyses and professional judgment.

The human health risk posed by a waste management practice is a function of the toxicity of the chemical constituents in the waste stream and the extent of human exposure to the constituents. The likelihood of exposure is dictated by hydrogeologic and climatic settings at land disposal units and the fate and transport of chemical constituents in environmental media.

EPA estimated human health risk in four steps. The first step was to estimate the concentrations of each of the hazardous constituents of the waste stream in each of the three media (air, surface water, ground water) into which they might be released by a certain waste management technology. These estimates depend on the steady-state (i.e., continuous) release rates calculated for each technology, and on environmental fate and transport characteristics for constituents.

The next step was to estimate the total human intake, or dose, of each of the chemicals through inhalation of air and ingestion of ground water, surface water, and contaminated fish. A 65 kilogram person was assumed to be continuously exposed to contaminated media over a 70-year lifetime.

The Agency next calculated the risk to an individual from the dose derived in the previous step. EPA estimated the relationship of dose to effect (using a "dose-response" curve developed based on toxicity data) and weighted the effect according to severity.

Finally, EPA estimated the population risk by multiplying the average individual risk by the number of people in a given environment. The whole process described above was repeated 2,000 times, using different population sizes and environmental settings drawn from representative distributions, to generate a population risk distribution for each waste-technology combination. The mean of the distribution for the baseline disposal technology was compared with the mean of the distribution for an alternative treatment technology to derive the net benefit of the land disposal restrictions for that waste stream. Risks were not discounted.

Benefits other than reduction in human health risk—such as resource damage avoided and corrective action costs avoided—were not quantified. As a result, the benefits of the land disposal restrictions for First Third wastes are likely to be understated. (Other benefits measures will be addressed in RIAs for subsequent rules.)

5. Results

a. Affected Population. The number of affected facilities is shown in Table 1.

TABLE 1.—NUMBER OF AFFECTED FACILITIES

	Proposed rule	
	Scenario 1	Scenario 2
Commercial TSDFs	84	84
Non-Commercial TSDFs	260	253
Generators	2,47	2,443
SQGs	1,320	1,320
Total	4,111	4,100

b. Costs. The costs of the proposed rule are summarized in Table 2.

TABLE 2.—COSTS OF THE PROPOSED RULE (ANNUALIZED INCREMENTAL COST IN MILLIONS OF 1987 DOLLARS)

	Proposed rule	
	Scenario 1	Scenario 2
Treatment of F and K Wastes	681	681
Soft Hammers on P and U Wastes	0	15
Total	681	696

As shown, the proposed rule is a major rule, with costs of $681–696 million per year. Nearly all of the costs of the proposed rule are due to the treatment of F and K wastes. The F and K wastes are high-volume wastes; large portions of the wastes go to incineration, high temperature metals recovery, and stabilization under the proposed rule. The residuals from the wastes which are incinerated often require solidification due to the metal content of the ash.

The P and U wastes, on the other hand, are generated in relatively small quantities. Their management under the proposed rule depends on which scenario is considered. Under Scenario 1, the wastes continue to be land disposed in units meeting minimum technological requirements. Under Scenario 2, the wastes are mostly incinerated; however, since the P and U wastes are primarily organic with little metal content, the ash from incineration generally does not require solidification.

Under the proposed rule, the two "soft hammer" scenarios result in relatively little difference in cost. Scenario 1—continued land disposal of P and U wastes—results in zero incremental cost over the baseline. Scenario 2—treatment of P and U wastes under "approximate treatment standards"—results in low costs due to the small volume of waste going to treatment. The costs associated with "soft hammers" would be incurred for less than two years, i.e., until "hard hammers" fell, treatment standards

were established, or extensions to the effective date were granted. Since P and U wastes result from spills or are off-spec chemical products, the assumption that quantities reported in EPA's surveys represent annual values may overstate the costs if production occurs sporadically.

Large volumes of wastes stored in surface impoundments dropped out of the analysis because storage in tanks was found to be less expensive than storage in surface impoundments in the baseline. As a result, the costs of the rule associated with treatment of residuals from storage surface impoundments were quite small. Large volumes of wastes treated in surface impoundments remained in the analysis. However, the small quantity of dredged material from these impoundments requiring treatment caused these costs to be low as well.

Most of the costs of the rule are borne by generators and noncommercial TSDFs; generators account for approximately three quarters of compliance costs and non-commercial TSDFs for approximately a quarter. SQGs account for less than one percent of total compliance costs.

c. Economic Impacts. The economic impacts of the proposed rule are summarized in Table 3.

TABLE 3.—NUMBER OF SIGNIFICANTLY IMPACTED FACILITIES

	Proposed rule	
	Scenario 1	Scenario 2
Commercial TSDFs	(1)	(1)
Non-Commercial TSDFs	68	72
Generators	1,040	1,049
SQGs	441	673
Total	1,549	1,794

[1] Commercial TSDFs were assumed to pass all compliance costs through to generators; therefore, the number of significantly affected facilities was not calculated.

Most of the significantly impacted non-commercial TSDFs are from the petroleum refining and primary metals industries (SICs 29 and 33, respectively). Significantly impacted generators are mostly from Primary Metals and Fabricated Metals (SICs 33 and 34, respectively). Commercial TSDFs fall primarily into Electric, Gas, and Sanitary Services (SIC 49); those facilities specializing in land disposal services could be adversely affected. The most significant difference between Scenarios 1 and 2 is in the number of significantly affected SQGs. As discussed above, impacts due to "soft hammer" provisions would be of less than two years duration.

d. Benefits. Table 4 summarizes the estimated benefits of the proposed rule. The annual values were obtained by dividing the total benefit estimates (corresponding to a 70 year lifetime) by 70.

TABLE 4.—BENEFITS OF THE PROPOSED RULE (NUMBER OF ADVERSE HEALTH EFFECTS AVOIDED PER YEAR)

	Proposed rule	
	Scenario 1	Scenario 2
Treatment of F and K Wastes	130	130
Soft Hammers on P and U Wastes	0	78
Total	130	208

The results above are driven primarily by two waste codes; K061 and P070. K061 is emission control dust/sludge from the primary production of steel in electric furnaces; it contains a number of metals. It is mostly landfilled in the baseline and goes to high temperature metals recovery under the proposed rule. P070 is Aldicarb, a pesticide which is land applied in the baseline and incinerated under the proposed rule.

As shown, there is a substantial difference in benefits between Scenarios 1 and 2 under the proposed rule due primarily to the management of P070. Most of the risk associated with land application in the baseline is due to exposure via air. It is likely, in actual practice, that air exposures would be reduced through the use of protective gear by persons involved in land application and the restriction of access by other persons to the site; therefore the difference in benefits between the two scenarios may be overstated. The difference may also be overstated to the extent that the P and U wastes are generated sporadically, rather than annually as reported in the RIA Mail Survey. The benefits under Scenario 2 would be of less than two years duration; i.e., they would continue until "hard hammers" fell, treatment standards were set, or extensions to the effective date were granted.

e. Cost Effectiveness. The cost effectiveness of the proposed rule is illustrated in Table 5. Compliance costs for the regulated community and human health risk reduction are the basis for the comparison; other potentially significant costs (e.g., Agency implementation costs) and benefits (e.g., natural resource damage avoided) were not estimated.

TABLE 5—COST EFFECTIVENESS OF PROPOSED RULE.

	Proposed rule	
	Scenario 1	Scenario 2
Costs (Millions of 1987 Dollars per year)	681	696
Benefits (Adverse Health Effects Avoided per Year)	130	208
Cost Effectiveness (Millions of Dollars per Case Avoided)	5.2	3.3

B. Regulatory Flexibility Act

Pursuant to the Regulatory Flexibilty Act, 5 U.S.C. 601 *et seq.*, whenever an agency is required to publish a notice of rulemaking for any proposed or final rule, it must prepare and make available for public comment a regulatory flexibility analysis that describes the effect of the rule on small entities (i.e., small businesses, small organizations, and small governmental jurisdictions). This analysis is unnecessary, however, if the Agency's administrator certifies that the rule will not have a significant economic effect on a substantial number of small entities.

EPA evaluated the economic effect of the rule on small entities, here defined as concerns employing fewer than 50 people. Because of data limitations, this small business analysis excluded generators of large quantities of First Third wastes. The small business population therefore included only two groups: All non-commercial treatment, storage and disposal facilities employing fewer than 50 persons, and all small quantity generators which were also small businesses.

According to EPA's guidelines for conducting Regulatory Flexibility Analysis, if over 20% of the population of small businesses is likley to experience financial distress based on the costs of a rule, then the Agency is required to consider that the rule will have a significant effect on a substantial number of small entities and to perform a formal Regulatory Flexibility Analysis. EPA has examined the rule's potential effects on small businesses as required by the Regulatory Flexibility Act and has concluded that today's final rule will not have a significant economic effect on a substantial number of small entities. As a result of this finding, EPA has not prepared a formal Regulatory Flexibility Analysis document in support of this rule. More detailed information on small business impacts is available

in technical background documents prepared in support of this rulemaking.

C. Paperwork Reduction Act

The information collection requirements in this proposed rule have been submitted for approval to the Office of Management and Budget (OMB) under the *Paperwork Reduction Act*, 44 U.S.C. 3501 *et seq.* An Information Collection Request document has been prepared by EPA (ICR No. 1436) and a copy may be obtained from Rick Westlund, Information Policy Branch; EPA; 401 M Street SW. (RM-223); Washington, DC 20460 or by calling (202) 382–2745. Submit comments on these requirements to EPA and: Office of Information and Regulatory Affairs; OMB; 726 Jackson Place NW.; Washington DC 20503 marked "Attention: Desk Officer for EPA." The final rule will respond to any OMB or public comments in the information collection requirements.

D. Review of Supporting Documents

The primary source of information on current land disposal practices and industries affected by this rule was EPA's "National Survey of Hazardous Waste Generators and Treatment, Storage and Disposal Facilities Regulated Under RCRA in 1981" (RIA Mail Survey) (April 1984). EPA's "National Small Quantity Hazardous Waste Generator Survey" (February 1985) was the major source of data on small quantity generators.

Waste stream characterization data and engineering costs of waste management were based on the following EPA documents:

- "Characterization of Waste Streams Listed in 40 CFR Section 261 Waste Profiles," Vols. I and II (August 1985);
- "Characterization of Constituents from Selected Waste Streams Listed in 40 CFR Section 261," Vols. I and II (August 1985);
- RCRA Background and Listing Documents for 40 CFR Section 261;
- RCRA Section 3007 Industry Studies;
- "RCRA Risk-Cost Analysis Model, Appendix A: Waste Stream Data Base" (March 1984); and
- Source Assessment Documents for various industries.

For financial and value of shipment information for the general screening analysis, 1982 Census data were used, adjusted by 1984 Annual Survey of Manufacturers data. Producer price indices were also used to restate 1984 dollars in 1987 terms.

VIII. Implementation of the Part 268 Land Disposal Restrictions Program

As a result of the regulations being proposed under Part 268, several options will be available to the generator or owner or operator of a treatment, storage, and disposal facility for the management of restricted hazardous wastes. This section helps the regulated community determine the appropriate waste management procedures. It provides references to the applicable 40 CFR Parts 264 and 265 requirements as well as Part 268 requirements for implementation of the various waste management options.

All the sequences in the generator's decision-making process must commence with a determination as to whether the hazardous waste is listed in Part 268 Subpart C. If the hazardous waste is not a restricted waste, it is not subject to the land disposal restrictions of Part 268. It must nevertheless be managed in accordance with Parts 264 and 265.

The generator of a restricted waste must determine the appropriate treatment standards (if any) under Part 268 Subpart D. The applicable treatment standards must be determined at the point of initial generation prior to any treatment. At this time, he must determine the effective date of the applicable treatment standard. EPA has the authority to delay the effective dates of the Part 268 treatment standards based on the unavailability of adequate national treatment capacity. Determinations as to the adequacy of treatment capacity are based on the quantity of waste generated and the availability of alternative treatment, recovery or disposal technologies. For those wastes where EPA has determined that alternative capacity is adequate, the treatment standards take effect immediately upon promulgation. The generator must use analysis of his waste (or waste extract, when applicable) or knowledge of his waste (data supporting such knowledge must be kept on-site) to make determinations as to whether his waste may go directly to land disposal or first must be treated.

If the concentrations of the hazardous constituents in the waste (or waste extract, when applicable) are in compliance with the applicable treatment standards, the waste may go directly to land disposal. The generator must submit a notice and certification statement to the land disposal facility as required under § 268.7. The land disposal facility must verify the records of the generator in accordance with the facility's waste analysis plan. A generator that operates an on-site land disposal facility must put the information contained in the notice (except for the manifest number) in the operating record of the land disposal facility.

If the concentrations of the hazardous constituents in the waste (or waste extract, when applicable) exceeds the treatment standards, placement of the waste in land disposal units as of the effective date specified in Part 268 Subpart C is prohibited (unless the waste is subject to a case-by-case extension under § 268.5, or a "no migration" exemption under § 268.6). The generator must treat the prohibited waste in either an on-site or off-site treatment facility with interim status or a RCRA permit that is allowed to accept the waste.

An off-site treatment facility must obtain a notice from the generator as required in § 268.7. This notice must be placed in the operating record. Generators that are also treatment facilities must keep the information contained in the notice (except for the manifest number) in the facility's operating record.

When shipping the treatment residual to an interim status or RCRA permitted land disposal facility, the treatment facility must certify in accordance with § 268.7 that the treatment residue meets the applicable treatment standards and must also send a notice (§ 268.7) to the land disposal facility.

If the generator's waste is a restricted waste listed in § 268.10 (i.e., a First Third waste) where treatment standards have not been set, and such waste is land disposed off-site by methods other than landfills or surface impoundments, the generator must provide a notice in accordance with § 268.7. The off-site disposal facility is required to keep the generator's notice in its operating record, and is responsible for ensuring that the waste is not disposed in a landfill or surface impoundment. If the generator disposes on-site, the information contained in the notice (except for the manifest number) must be kept in the facility's operating record, and the generator must ensure that such waste is not disposed in a landfill or surface impoundment.

If the generator's waste is a restricted waste listed in § 268.10, where treatment standards have not been set, and are disposed in a landfill or surface impoundment, such waste may only be disposed in landfill or surface impoundment units that meet the minimum technological requirements of RCRA section 3004(o) (double liner, leachate collection system, and groundwater monitoring). Prior to

disposal, the generator must certify in accordance with § 268.8. For off-site disposal, the demonstration and certification required in § 268.8, as well as the notice required in § 268.7 must be provided with the initial waste shipment. The § 268.8 demonstration need not be provided again as long as the conditions of the demonstration have not changed. Thereafter, only the notice required in § 268.7 and the certification required in § 268.8, must be provided with each waste shipment. If such waste is disposed on-site, the demonstration and certification required in § 268.8, as well as the notice (expect for the manifest number) required in § 268.7 must be kept in the operating record.

If the generator's waste is a restricted waste listed in § 268.10 where no treatment standard has been set, and the waste goes off-site for treatment, the generator must send a notice as required in § 268.7. The treatment facility must keep a copy of the notice in its operating record. If treated on-site, the information contained in the notice (except for the manifest number) must be kept in the facility's operating record. After treatment, and no further treatment is practically available (if further treatment is available, the recordkeeping requirements that apply are the same as for the original treatment), the requirements are the same that apply for the generator. If the waste is disposed in a landfill or surface impoundment (which must meet the minimum technological requirements, see section 3004(g)(6)(A)(i)), the original generator or the owner/operator may supply the demonstration and certification required by § 268.8. The generator may supply this information when the waste is sent to the treatment facility, certifying that no further treatment is practically available and therefore, placement in the landfill or surface impoundment is the only practical alternative.

IX. References

Background Documents

(1) U.S. EPA, "Background Document for First Third Wastes to Support 40 CFR Part 268 Land Disposal Restrictions Proposed Rule First-Third Waste Volume, Characteristics, and Required and Available Treatment Capacity." U.S. EPA, OSW Washington, DC, 1987.

(2) U.S. EPA. "Best Demonstrated Available Technology (BDAT) Background Document for First Third Waste Codes." U.S. EPA, OSW, Washington, DC, 1987.

Regulatory Impact Analysis

(3) U.S. EPA. "Regulatory Impact Analysis of Proposed Restrictions on Land Disposal of First Third Wastes." U.S. EPA, OSW, Washington, DC, 1987.

List of Subjects in 40 CFR Parts 264, 265, 268, and 271

Administrative practice and procedure, Confidential business information, Environmental protection, Hazardous materials, Hazardous materials transportation, Hazardous waste, Imports, Indian lands, Insurance, Intergovernmental relations, Labeling, Packaging and container, Penalties, Recycling, Reporting and recordkeeping requirements, Security measures, Surety bonds, Surety measures, Waste treatment and disposal, Water pollution control, Water supply.

Dated: March 28, 1988.

Lee M. Thomas,

Administrator.

For reasons set out in the preamble, it is proposed that Chapter I of Title 40 be amended as follows:

PART 264—STANDARDS FOR OWNERS AND OPERATORS OF HAZARDOUS WASTE TREATMENT, STORAGE, AND DISPOSAL FACILITIES

I. In Part 264:

1. The authority citation for Part 264 is revised to read as follows:

Authority: 42 U.S.C. 6905, 6912(a), 6924, and 6925.

Subpart B—General Facility Standards

2. Section 264.13 is amended by revising paragraph (b)(7)(iii) to read as follows:

§ 264.13 General waste analysis.

* * * * *

(b) * * *

(7) * * *

(iii) The annual removal of residues which are not delisted under § 260.22 of this chapter or which exhibit a characteristic of hazardous waste and either:

(A) Do not meet applicable treatment standards of Part 268 Subpart D; or

(B) Where no treatment standards have been established:

(1) Such residues do not meet the applicable prohibition levels in § 268.32 or RCRA section 3004(d); or

(2) Such residues are prohibited from land disposal under § 268.33(e).

* * * * *

Subpart E—Manifest System, Recordkeeping, and Reporting

3. Section 264.73 is amended by revising paragraphs (b)(10), (b)(13), and (b)(14) to read as follows:

§ 264.73 Operating record.

* * * * *

(b) * * *

(10) Records of the quantities (and date of placement) for each shipment of hazardous waste placed in land disposal units under an extension to the effective date of any land disposal restriction granted pursuant to § 268.5, a petition pursuant to § 268.6, or a certification under § 268.8, and the applicable notice required by a generator under § 268.7(a);

* * * * *

(13) For an off-site land disposal facility, a copy of the notice and certification (and demonstration, if applicable) required by the generator or the owner or operator of a treatment facility under §§ 268.7 and 268.8, whichever is applicable; and

(14) For an on-site land disposal facility, the information contained in the notice required by the generator or owner or operator of a treatment facility under § 268.7, except for the manifest number, and the certification (and demonstration, if applicable) required under § 268.8, whichever is applicable.

* * * * *

PART 265—INTERIM STATUS STANDARDS FOR OWNERS AND OPERATORS OF HAZARDOUS WASTE TREATMENT, STORAGE, AND DISPOSAL FACILITIES

II. In Part 265:

The authority citation for Part 265 is revised to read as follows:

Authority: 42 U.S.C. 6905, 6912(a), 6924, 6925, and 6935.

Subpart B—General Facility Standards

2. Section 265.13 is amended by revising paragraph (b)(7)(iii) to read as follows:

§ 265.13 General waste analysis.

* * * * *

(b) * * *

(7) * * *

(iii) The annual removal of residues which are not delisted under § 260.22 of this chapter or which exhibit a characteristic of hazardous waste and either:

(A) Do not meet applicable treatment standards of Part 268 Subpart D; or

(B) Where no treatment standards have been established:

(1) Such residues do not meet the applicable prohibition levels in § 268.32 or RCRA section 3004(d); or

(2) Such residues are prohibited from land disposal under § 268.33(e).

* * * * *

BEST COPY AVAILABLE

Subpart E—Manifest System, Recordkeeping, and Reporting

3. Section 265.73 is amended by revising paragraphs (b)(8), (b)(11), and (b)(12) to read as follows:

§ 265.73 Operating record.

* * * * *

(b) * * *

(8) Records of the quantities (and date of placement) for each shipment of hazardous waste placed in land disposal units under an extension to the effective date of any land disposal restriction granted pursuant to § 268.5, a petition pursuant to § 268.6, or a certification under § 268.8, and the applicable notice required by a generator under § 268.7(a);

* * * * *

(11) For an off-site land disposal facility, a copy of the notice and certification (and demonstration, if applicable) required by the generator or the owner or operator of a treatment facility under § 268.7 and § 268.8, whichever is applicable; and

(12) For an on-site land disposal facility, the information contained in the notice required by the generator or the owner or operator of a treatment facility under § 268.7, except for the manifest number, and the certification (and demonstration, if applicable) required under § 268.8, whichever is applicable.

* * * * *

PART 268—LAND DISPOSAL RESTRICTIONS

III. In Part 268:

1. The authority citation for Part 268 is revised to read as follows:

Authority: 42 U.S.C. 6905, 6912(a), 6921, and 6924.

Subpart A—General

2. Section 268.1 is amended by adding paragraph (c)(6) to read as follows:

§ 268.1 Purpose, scope and applicability.

* * * * *

(c) * * *

(6) Prior to May 8, 1990, in a landfill or surface impoundment unit where all applicable persons are in compliance with the requirements of § 268.8, with respect to wastes that are not subject to Subpart D treatment standards and not subject to the prohibitions in § 268.32 or RCRA section 3004(d).

3. Section 268.4 is amended by revising paragraph (a)(2) to read as follows:

§ 268.4 Treatment surface impoundment exemption.

(a) * * *

(2) The following conditions are met:

(i) *Sampling and testing.* For wastes with treatment standards in Subpart D of this part and/or prohibition levels in Subpart C of this part or RCRA section 3004(d), the residues of the treatment are analyzed, as specified in § 268.7 or § 268.32, to determine if they meet the applicable treatment standards or, where no treatment standards have been established for the waste, the applicable prohibition levels. The sampling method, specified in the waste analysis plan under § 264.13 or § 265.13, must be designed such that representative samples of the sludge and the supernatant are tested separately rather than mixed to form homogeneous samples.

(ii) *Removal.* The following treatment residues (including any liquid waste) must be removed at least annually: residues which do not meet the treatment standards promulgated under Subpart D of this part; residues which do not meet the prohibition levels established under Subpart C of this part or imposed by statute (where no treatment standards have been established); residues which are from the treatment of wastes prohibited from land disposal under Subpart C of this part (where no treatment standards have been established and no prohibition levels apply); or residues from managing listed wastes which are not delisted under § 260.22 of this chapter. However, residues which are the subject of a valid certification under § 268.8 made no later than a year after placement of the wastes in an impoundment are not required to be removed annually. If the volume of liquid flowing through the impoundment or series of impoundments annually is greater than the volume of the impoundment or impoundments, this flow-through constitutes removal of the supernatant for the purpose of this requirement.

(iii) *Subsequent management.* Treatment residues may not be placed in any other surface impoundment for subsequent management unless the residues are the subject of a valid certification under § 268.8 which allows disposal in surface impoundments meeting the requirements of § 268.8(a).

(iv) *Recordkeeping.* The procedures and schedule for the sampling of impoundment contents, the analysis of test data, and the annual removal of residues which do not meet the treatment standards, or prohibition levels (where no treatment standards have been established), or which are from the treatment of wastes prohibited from land disposal under Subpart C (where no treatment standards have been established and no prohibition levels apply), must be specified in the facility's waste analysis plan as required under § 264.13 or § 265.13 of this chapter.

* * * * *

4. Section 268.5 is amended by revising paragraph (h)(2) introductory text to read as follows:

§ 268.5 Procedures for case-by-case extensions to an effective date.

* * * * *

(h) * * *

(2) Such hazardous waste may be disposed of in a landfill or surface impoundment unit only if the unit is in compliance with the following requirements:

* * * * *

5. Section 268.6 is amended by revising paragraph (a)(3) and adding new paragraphs (a)(4) and (a)(5), and revising paragraphs (c), (e) and (f) to read as follows:

§ 268.6 Petitions to allow land disposal of a waste prohibited under Subpart C of Part 268.

(a) * * *

(3) A comprehensive characterization of the disposal unit site including an analysis of background air, soil, and water quality.

(4) A monitoring plan which will detect migration at the earliest practicable time;

(5) Sufficient information to assure the Administrator that land disposal of the restricted waste(s) will comply with other applicable Federal, State, and local laws.

* * * * *

(c) Each petition referred to in paragraph (a) of this section must include the following:

(1) A monitoring plan that describes the monitoring program installed at and/or around the unit to verify continued compliance with the conditions of the variance. This monitoring plan must provide information on the monitoring of the unit and/or the environment around the unit, or if monitoring the unit or environment around the unit is technically infeasible or impractical, the rationale supporting the determination of infeasibility or impracticality. The following specific information must be included in the plan:

(i) The media monitored in the cases where monitoring of the environment around the unit is required;

(ii) The type of monitoring conducted at the unit, in the cases where monitoring of the unit is required;

(iii) The location of the monitoring stations;

(iv) The monitoring interval (frequency of monitoring at each station);

(v) The specific hazardous constituents to be monitored;

(vi) The implementation schedule for the monitoring program;

(vii) The equipment used at the monitoring stations;

(viii) The sampling and analytical techniques employed; and

(ix) The data recording/reporting procedures.

(2) Where applicable, the monitoring program described in paragraph (c)(1) must be in place for a period of time specified by the Administrator prior to receipt of restricted waste at the unit, unless an alternate schedule is approved by the Administrator.

(3) The monitoring data collected according to the monitoring plan specified under paragraph (c)(1) of this section must be sent to the Administrator according to a format and schedule specified and approved in the monitoring plan, and

(4) A copy of the monitoring data collected under the monitoring plan specified under paragraph (c)(1) of this section must be kept on-site at the facility in the operating record.

(5) The monitoring program specified under paragraph (c)(1) of this section meet the following criteria:

(i) All sampling, testing, and analytical data must be approved by the Administrator and must provide data that is accurate and reproducible.

(ii) All estimation and modeling techniques must be approved by the Administrator.

(iii) A quality assurance and quality control plan addressing all aspects of the monitoring program must be provided to and approved by the Administrator.

* * * * *

(e) After a petition has been approved, the owner or operator must report any changes in conditions at the unit and/or the environment around the unit that may affect requirements upon which the petition was approved.

(1) If the owner or operator desires to make changes to the unit such as the engineering design, or the compliance monitoring system such a change must be proposed, in writing, and the owner or operator must submit a demonstration to the Administrator at least 30 days prior to making the change. The Administrator will determine whether the proposed change invalidates the terms of the petition and will determine the appropriate response. Any change must be approved by the Administrator prior to being made.

(2) If the owner or operator discovers that a condition at the site which was modeled or predicted in the petition does not occur as predicted, this change must be reported, in writing, to the Administrator within 10 days of discovering the change. The Administrator will determine whether the reported change from the terms of the petition requires further action, which may include revocation of the petition, petition modifications, or other responses.

(f) If the owner or operator determines that there is migration of hazardous constituent(s) from the unit, the owner or operator must:

(1) Immediately suspend receipt of restricted wastes at the unit, and

(2) Notify the Administrator, in writing, within 10 days of the determination that a release has occurred.

(3) Following receipt of the notification the Administrator will determine within 60 days of receiving notification the appropriate response actions that the owner or operator must take to prevent further migration of hazardous constituents out of the unit.

* * * * *

6. Section 268.7 is amended by revising the introductory texts of paragraphs (a)(1) and (a)(2), and by revising (a)(3), by redesignating paragraph (a)(4) as (a)(5), by adding the new paragraph (a)(4), by revising paragraph (b) introductory text, by redesignating paragraph (b)(1) as (b)(4) and (b)(2) as (b)(5), by adding new paragraphs (b)(1), (b)(2), (b)(3), (b)(6), and (b)(7), and by revising paragraph (c) to read as follows:

§ 268.7 Waste analysis.

(a) Except as specified in § 268.32 or § 268.43 of this part, the generator must test his waste, or test an extract developed using the test method described in Appendix I of this part, or use knowledge of the waste, to determine if the waste is restricted from land disposal under this part.

(1) If a generator determines that he is managing a restricted waste under this part and the waste does not meet the applicable treatment standards, or where the waste does not comply with the applicable prohibitions set forth in § 268.32 of this part or RCRA section 3004(d), with each shipment of waste the generator must notify the treatment or storage facility in writing of the appropriate treatment standards set forth in Subpart D of this part and any applicable prohibitions set forth in § 268.32 of this part or RCRA section 3004(d). The notice must include the following information:

* * * * *

(2) If a generator determines that he is managing a restricted waste under this part, and determines that the waste can be land disposed without further treatment, with each shipment of waste he must submit, to the treatment, storage, or land disposal facility, a notice and a certification stating that the waste meets the applicable treatment standards set forth in Subpart D of this part and the applicable prohibitions set forth in § 268.32 of this part of RCRA section 3004(d).

* * * * *

(3) If a generator's waste is subject to a case-by-case extension under § 268.5, an exemption under § 268.6, an extension under § 268.1(c)(3), or a nationwide variance under Subpart C, with each shipment of waste, he must submit a notice to the facility receiving his waste stating that the waste is not prohibited from land disposal.

(4) If a generator determines that he is managing a waste that is subject to the prohibitions under § 268.33(e) of this part and is not subject to the prohibitions set forth in § 268.32 of this part, with each shipment of waste the generator must notify the treatment, storage, or disposal facility, in writing, of any applicable prohibitions set forth in § 268.33(e). The notice must include the following information:

(i) EPA Hazardous Waste Number;

(ii) The applicable prohibitions set forth in § 268.33(e);

(iii) The manifest number associated with the shipment of waste; and

(iv) Waste analysis data where available.

* * * * *

(b) Treatment facilities must test their wastes according to the frequency specified in their waste analysis plans as required by § 264.13 or § 265.13. Such testing must be performed as provided in paragraphs (b)(1), (b)(2) and (b)(3) of this section.

(1) For wastes with treatment standards expressed as concentrations in the waste extract (§ 268.41), the owner or operator of the treatment facility must test the treatment residues, or an extract of such residues developed using the test method described in Appendix I of this part, to assure that the treatment residues or extract meet the applicable treatment standards.

(2) For wastes that are prohibited under § 268.32 of this part or RCRA section 3004(d) but not subject to any treatment standards under Subpart D of this part, the owner or operator of the

treatment facility must test the treatment residues according to the generator testing requirements specified in § 268.32 to assure that the treatment residues comply with the applicable prohibitions.

(3) For wastes with treatment standards expressed as concentrations in the waste (§ 268.43), the owner or operator of the treatment facility must test the treatment residues (not an extract of such residues) to assure that the treatment residues meet the applicable treatment standards.

* * * * *

(6) If the waste or treatment residue will be further managed at a different treatment or storage facility, the treatment, storage or disposal facility sending the waste or treatment residue off-site must comply with the notice requirements applicable to generators in paragraph (a)(1) of this section.

(7) For wastes that are subject to the prohibitions under § 268.33(e) of this part and are not subject to the prohibitions set forth in § 268.32 of this part, with each shipment of such waste the owner or operator must notify any subsequent treatment, storage, or disposal facility, in writing, of any applicable prohibitions set forth in § 268.33(e). The notice must include the following information:

(i) EPA Hazardous Waste Number;

(ii) The applicable prohibitions set forth in § 268.33(e);

(iii) The manifest number associated with the shipment of waste; and

(iv) Waste analysis data, where available.

(c) The owner or operator of any land disposal facility disposing any waste subject to restrictions under this part must:

(1) Have records of the notice and certifications specified in paragraph (a) or (b) of this section, and the certification specified in § 268.8 if applicable.

(2) Test the waste, or an extract of the waste or treatment residue developed using the test method described in Appendix I of this part or using any methods required by generators under § 268.32 of this part, to assure that the wastes or treatment residues are in compliance with the applicable treatment standards set forth in Subpart D of this part and all applicable prohibitions set forth in § 268.32 of this part or in RCRA section 3004(d). Such testing must be performed according to the frequency specified in the facility's waste analysis plan as required by § 264.13 or § 265.13.

(3) Where the owner or operator is disposing of any waste that is subject to the prohibitions under § 268.33(e) of this part but not subject to the prohibitions set forth in § 268.32, he must ensure that such waste is the subject of a valid certification according to the requirements of § 268.8 prior to disposal in a landfill or surface impoundment unit, and that such disposal is in accordance with the requirments of § 268.5(h)(2).

7. Section 268.8 is added to read as follows:

§ 268.8 Landfill and surface impoundment disposal restrictions.

(a) Prior to May 8, 1990, wastes which are otherwise prohibited from land disposal under § 268.33(e) of this part may be disposed in a landfill or surface impoundment which is in compliance with the requirements of § 268.5(h)(2) provided that the requirements of this section are met.

(1) Prior to such disposal, the person seeking to dispose such wastes (i.e., the generator or owner or operator) has made a good faith effort to locate and contract with treatment and recovery facilities currently available.

(2) Such generator or owner or operator submits to the Regional Administrator a demonstration and certification that the requirements of paragraph (a)(1) of this section have been met. The demonstration must include a list of facilities and facility officials contacted, addresses, telephone numbers, contact dates, and an explanation of why no treatment is practically available. The following certification is required.

I certify under penalty of law that the requirements of 40 CFR 268.8(a)(1) have been met and that disposal in a landfill or surface impoundment is the only practical alternative to treatment currently available. I believe that the information submitted is true, accurate, and complete. I am aware that there are significant penalties for submitting false informations, including the possibility of fine and imprisonment.

(3) With the initial shipment of waste, such generator or owner or operator must submit a copy of the demonstration and the certification required in paragraph (a)(2) of this section to the land disposal facility. For each subsequent waste shipment, only the certification is rquired to be submitted provided that the conditions being certified remain unchanged. Such generator or owner or operator must keep copies of the demonstration (if applicable) and certification required for each waste shipment on-site.

(b) After receiving the demonstration and certification, the Regional Administrator may request any additional information which he deems necessary to evaluate the certification.

(1) Any person who has submitted a certification under this section must immediately notify the Regional Administrator when he has knowledge of any change in the conditions which formed the basis of his certification.

(2) If, after review of the certification, the Regional Administrator determines that treatment (or further treatment) that yields reductions in toxicity is practically and currently available, or that some other method of treatment yields greater reductions in toxicity of the waste or residual or greater reductions in the likelihood of migration of hazardous constituents from the waste or residual, the Regional Administrator may invalidate the certification and require such additional treatment.

(c) Once the certification is made, wastes may be disposed in a landfill or surface impoundment unless otherwise prohibited by the Regional Administrator.

Subpart C—Prohibition on Land Disposal

8. Section 268.33 is added to read as follows:

§ 268.33 Waste specific prohibitions—First Third wastes.

(a) Effective August 8, 1988, the wastes specified in 40 CFR 261.32 as EPA Hazardous Waste Nos. K004, K008, K015, K036, K062, K069, K073, and K100 are prohibited from land disposal.

(b) Effective August 8, 1990, the wastes specified in 40 CFR 261.32 as EPA Hazardous Waste Nos. K016, K018, K019, K020, K024, K030, K037, K048, K049, K050, K051, K052, K061, K071, K103, and K014 are prohibited from land disposal.

(c) Between August 8, 1988, and May 8, 1990, for wastes described in paragraph (b) of this section, disposal in a landfill or surface impoundment is allowed only if the unit is in compliance with the requirements specified in § 268.5(h)(2).

(d) The requirements of paragraph (a), (b), and (c) of this section do not apply if:

(1) The wastes meet the applicable standards specified in Subpart D of this part; or

(2) Persons have been granted an exemption from a prohibition pursuant to a petition under § 268.6, with respect to those wastes and units covered by the petition; or

(3) Persons have been granted an extension to the effective date of a prohibition pursuant to § 268.5, with

respect to those wastes covered by the extension.

(e) Between August 8, 1988, and May 8, 1990, the wastes specified in § 268.10 for which treatment standards under Subpart D of this part or prohibitions in § 268.32 or in RCRA section 3004(d) are not applicable are prohibited from disposal in a landfill or surface impoundment unless the wastes are the subject of a valid demonstration and certification pursuant to § 268.8.

(f) To determine whether a hazardous waste listed in § 268.10 exceeds the applicable treatment standards specified in § 268.43, the initial generator must test a representative sample of the entire waste (not a leach extract). If the waste contains constituents in excess of the applicable Subpart D levels, the waste is prohibited from land disposal and all requirements of Part 268 are applicable, except as otherwise specified in this section.

Subpart D—Treatment Standards

9. Section 268.40 is amended by revising paragraph (a) and adding a new paragraph (c) to read as follows:

§ 268.40 Applicability of treatment standards.

(a) A restricted waste identified in § 268.41 may be land disposed only if an extract of the waste or of the treatment residue of the waste developed using the test method in Appendix I of this part does not exceed the value shown in Table CCWE of § 268.41 for any hazardous constituent listed in Table CCWE for that waste.

* * * * *

(c) A restricted waste identified in § 268.43 may be land disposed only if the constituent concentrations in the waste or treatment residue of the waste do not exceed the value shown in Table CCWE of § 268.43 for any hazardous constituent listed in Table CCWE for that waste.

10. Section 268.41(a) is amended by adding the following subtables to Table CCWE in alphabetical and numerical order by EPA Hazardous Waste Number:

§ 268.41 Treatment standards expressed as concentrations in waste extract.

(a) * * *

Table CCWE—Constituent Concentrations in Waste Extract

* * * * *

K061 nonwastewater (see also table CCW in § 268.43)	Concentration (in mg/l)
Cadmium	0.19
Chromium (total)	0.33
Lead	0.09
Mercury	0.02
Zinc	0.50

K062 nonwastewater (see also table CCW in § 268.43)	Concentration (in mg/l)
Chromium (total)	0.094
Lead	0.37

K071 nonwastewater (see also table CCW in § 268.43)	Concentration (in mg/l)
Mercury	0.0025

K048, K049, K050, K051, K052 nonwastewater (see also table CCW in § 268.43)	Concentration (in mg/l)
Arsenic	0.006
Chromium (total)	1.88
Copper	0.013
Nickel	0.046
Selenium	0.025
Vanadium	0.16
Zinc	0.141

* * * * *

11. Section 268.43 is amended by adding paragraphs (a) and (b) and Table CCW to read as follows:

§ 268.43 Treatment standards expressed as waste concentrations.

(a) Table CCW identifies the restricted wastes and the concentrations of their associated hazardous constituents which may not be exceeded by the waste or treatment residual (not an extract of such waste or residual) for the allowable land disposal of such waste or residual.

TABLE CCW—CONSTITUENT CONCENTRATIONS IN WASTES

K061 nonwastewater (see also table CCWE in § 268.41)	Concentration (in mg/kg)
Cadmium	44.0
Chromium	1730.0
Lead	20,300.0
Mercury	0.26
Zinc	24,100.0

K062 wastewater (see also table CCWE in § 268.41)	Concentration (in mg/l)
Chromium (total)	0.32
Copper	0.42
Nickel	0.44

K062 wastewater (see also table CCWE in § 268.41)	Concentration (in mg/l)
Lead	0.04

K016 nonwastewater	Concentration (in mg/kg)
Tetrachloroethene	5.96
Hexachlorobenzene	27.2
Hexachlorobutadiene	5.44
Hexachlorocyclopentadiene	5.44
Hexachloroethane	27.2

K016 nonwastewater	Concentration (in mg/l)
Tetrachloroethene	0.007
Hexachlorobenzene	0.033
Hexachlorobutadiene	0.007
Hexachlorocyclopentadiene	0.007
Hexachloroethane	0.033

K018 nonwastewater	Concentration (in mg/kg)
Chloroethane	5.96
1,1-Dichloroethane	5.96
1,2-Dichloroethane	5.96
1,1,1-Trichloroethane	5.96
Hexachlorobenzene	27.2
Hexachloroethane	27.2
Hexachlorobutadiene	5.44
Pentachloroethane	5.44

K018 nonwastewater	Concentration (in mg/l)
Chloroethane	0.007
Chloromethane	0.007
1,1-Dichloroethane	0.007
1,2-Dichloroethane	0.007
1,1,1-Trichloroethane	0.007
Hexachlorobenzene	0.033
Hexachlorobutadiene	0.007
Pentachloroethane	0.007

K019 nonwastewater	Concentration (in mg/kg)
Chloroform	5.96
1,2-Dichloroethane	5.96
Tetrachloroethene	5.96
1,1,1-Trichloroethane	5.96
Bis(2-chloroethyl)ether	5.44
Chlorobenzene	5.68
Hexachloroethane	27.2
Naphthalene	5.44
Phenanthrene	5.44
1,2,4-Trichlorobenzene	18.7

K019 wastewater	Concentration (in mg/l)
Chlorobenzene	0.008
Chloroform	0.007
1,2-Dichloroethane	0.007

K019 wastewater	Concentration (in mg/l)
Tetrachloroethene	0.007
1,1,1-Trichloroethane	0.007
Bis(2-chloroethyl)ether	0.007
p-Dichlorobenzene	0.006
Hexachloroethane	0.033
Naphthalene	0.007
1,2,4,5-Tetrachlorobenzene	0.017
1,2,4-Trichlorobenzene	0.023
Fluorene	0.007
Phenanthrene	0.007

K020 nonwastewater	Concentration (in mg/kg)
1,2-Dichloroethane	5.96
1,1,2,2-Tetrachloroethane	5.44
Tetrachloroethene	5.96

K020 wastewater	Concentration (in mg/l)
1,2-Dichloroethane	0.007
1,1,2,2-Tetrachloroethane	0.007
Tetrachloroethene	0.007

K030 nonwastewater	Concentration (in mg/kg)
Hexachlorobutadiene	5.44
Hexachloroethane	27.2
Hexachloropropene	18.7
Pentachlorobenzene	27.2
Pentachloroethane	5.44
1,2,4,5-Tetrachlorobenzene	13.6
Tetrachloroethene	5.96
1,2,4-Trichlorobenzene	18.7

K030 wastewater	Concentration (in mg/l)
Tetrachloroethene	0.007
Hexachlorobutadiene	0.007
Hexachloroethane	0.007
Pentachloroethane	0.007
1,2,4,5-Tetrachlorobenzene	0.017
1,2,4-Trichlorobenzene	0.023
o-Dichlorobenzene	0.006
p-Dichlorobenzene	0.006

K024 nonwastewater	Concentration (in mg/kg)
Phthalic acid	6.0

K024 wastewater	Concentration (in mg/l)
Phthalic acid	0.08

K103 and K104 nonwastewater	Concentration (in mg/kg)
Aniline	27.2
Benzene	5.96
2,3-Dinitrophenol	5.44
Nitrobenzene	18.7
Phenol	27.2
Total Cyanides (for K104 only)	1.48

K103 and K104 wastewater	Concentration (in mg/l)
Aniline	4.450
Benzene	0.147
2,3-Dinitrophenol	0.613
Nitrobenzene	0.073
Phenol	1.391
Total Cyanides (for K104 only)	2.583

K071 nonwastewater (see also table CCWE in § 268.41)	Concentration (in mg/kg)
Mercury	4.6

K071 wastewater	Concentration (in mg/l)
Mercury	0.030

K048 nonwastewater (see also table CCWE in § 268.41)	Concentration (in mg/kg)
Bis(2-ethylhexyl)phthalate	4.18
Toluene	3.93
Chrysene	0.84
Xylene	8.54
Di-n-butyl phthalate	4.18
Naphthalene	0.84
Phenanthrene	0.84
Phenol	0.84
Cyanide	1.48

K048 wastewater	Concentration (in mg/l)
Phenol	0.007
Fluorene	0.007
Toluene	0.007
Xylene	0.007
Naphthalene	0.007
Phenanthrene	0.007
Chromium (total)	0.20
Lead	0.037
Zinc	0.40

K049 nonwastewater (see also table CCWE in § 268.41)	Concentration (in mg/kg)
Chrysene	0.84
Xylene	8.54
Benzene	3.93
Toluene	3.93

K049 nonwastewater (see also table CCWE in § 268.41)	Concentration (in mg/kg)
Naphthalene	0.84
Phenanthrene	0.84
Phenol	0.84
Pyrene	1.06
Cyanide	1.48

K049 wastewater	Concentration (in mg/l)
Anthracene	0.007
Xylene	0.007
2,4-Dimethylphenol	0.007
Benzene	0.023
Toluene	0.007
Naphthalene	0.007
Phenanthrene	0.007
Phenol	0.007
Chromium (total)	0.20
Lead	0.037
Zinc	0.40

K050 nonwastewater (see also table CCWE in § 268.41)	Concentration (in mg/kg)
Benzo(a)pyrene	0.84
Phenol	0.84
Cyanide	1.48

K050 wastewater	Concentration (in mg/l)
Phenol	0.007
Chromium (total)	0.20
Lead	0.037
Zinc	0.40

K051 nonwastewater (see also table CCWE in § 268.41)	Concentration (in mg/kg)
Toluene	3.93
Chrysene	0.84
Xylene	8.54
Di-n-butyl phthalate	4.18
Naphthalene	0.84
Phenanthrene	0.84
Phenol	0.84
Pyrene	1.06
Cyanide	1.48

K051 wastewater	Concentration (in mg/l)
Fluorene	0.007
Acenaphthene	0.007
Toluene	0.007
Xylene	0.007
Naphthalene	0.007
Phenanthrene	0.007
Phenol	0.007
Chromium (total)	0.20
Lead	0.037
Zinc	0.40

K052 nonwastewater (see also table CCWE in § 268.41)	Concentration (in mg/kg)
Toluene	3.93
Xylene	8.54
o-Cresol	0.84
p-Cresol	0.84
Naphthalene	0.84
Phenanthrene	0.84
Phenol	0.84
Cyanide	1.48

K052 wastewater	Concentration (in mg/l)
Phenanthrene	0.007
2,4-Dimethylphenol	0.007
Benzene	0.023
Xylene	0.007
o-Cresol	0.007
p-Cresol	0.007
Naphthalene	0.007
Phenol	0.007
Chromium (total)	0.20
Lead	0.037
Zinc	0.40

K015 wastewater	Concentration (in mg/l)
Anthracene	1.02
Benzal chloride	0.28
Benzo(b and/or k) fluoranthene	0.29
Phenanthrene	0.27
Toluene	1.00
Chromium (total)	0.30
Nickel	0.44

K037 nonwastewater	Concentration (in mg/kg)
Disulfoton	0.1
Toluene	28.0

K037 wastewater	Concentration (in mg/l)
Disulfoton	0.003
Toluene	0.028

No Land Disposal for:

K004
K008
K015 nonwastewater
K036
K061 wastewater
K069
K073
K100

(b) When wastes with differing treatment standards for a constituent of concern are combined for purposes of treatment, the treatment residue must meet the lowest treatment standard for the constituent of concern.

Subpart E—Prohibitions on Storage

12. Section 268.50 is amended by revising paragraph (d) to read as follows:

§ 268.50 Prohibitions on storage of restricted wastes.

* * * * *

(d) The prohibition in paragraph (a) of this section does not apply to wastes which are the subject of an approved petition under § 268.6, a nationwide variance under Subpart C of this part, an approved case-by-case extension under § 268.5, or a valid certification under § 268.8.

* * * * *

PART 271—REQUIREMENTS FOR AUTHORIZATION OF STATE HAZARDOUS WASTE PROGRAMS

IV. In Part 271:

1. The authority citation for Part 271 is revised to read as follows:

Authority: 42 U.S.C. 6905, 6912(a), and 6926.

Subpart A—Requirements for Final Authorization

2. Section 271.1(j) is amended by adding the following entry to Table 1 in chronological order by date of publication in the **Federal Register**:

§ 271.1 Purpose and scope.

* * * * *

(j) * * *

TABLE 1.—REGULATIONS IMPLEMENTING THE HAZARDOUS AND SOLID WASTE AMENDMENTS OF 1984

Promulgation date	Title of regulation	FEDERAL REGISTER reference	Effective date
* * * * *			
[Insert date of publication of final rule in the FEDERAL REGISTER].	Land disposal restrictions for First Third wastes	53 FR [insert FEDERAL REGISTER page numbers]	Aug. 8, 1988.
* * * * *			

3. Section 271.1(j) is amended by adding the date of publication and the **Federal Register** page numbers to the following entry in Table 2.

§ 271.1 Purpose and scope.

* * * * *

(j) * * *

TABLE 2.—SELF-IMPLEMENTING PROVISIONS OF THE HAZARDOUS AND SOLID WASTE AMENDMENTS OF 1984

Effective date	Self-implementing provision	RCRA citation	FEDERAL REGISTER reference
* * * * *			
Aug. 8, 1988	Land disposal restrictions on First Third of listed wastes	3004(g)	[Insert date of publication], 53 FR [insert FEDERAL REGISTER page numbers].
* * * * *			

[FR Doc. 88-7379 Filed 4-7-88; 8:45 am]
BILLING CODE 6560-50-M

VOL
53

ISS
68

AP
8

1988

UMI

federal register

Friday
April 8, 1988

Part III

Department of Defense

General Services Administration

National Aeronautics and Space Administration

48 CFR Parts 43, 47, and 52

Federal Acquisition Regulation (FAR); Threshold; Cost Comparison; Proposed Rule

VOL
53

ISS
68

AP
8

1988

UMI

DEPA

GENE
ADMI

NATIO
SPAC

48 CF

Feder
Thres

AGENC
(DoD),
(GSA)
Space

ACTIO

SUMMA
Acqui
Acqui
consid
Acqui
the cla
Affect
prescr
option
Limita
prescr

DATES
to the
shown
to be c
final r

ADDRE
submit
Servic
Secret
Room
Please
corresp

FOR FU
Marga
Room
DC 204

SUPPLE

A. Bac

The
clause
by this
FAR C
for a c
the ap
limitat

DEPARTMENT OF DEFENSE

GENERAL SERVICES ADMINISTRATION

NATIONAL AERONAUTICS AND SPACE ADMINISTRATION

48 CFR Parts 43, 47, and 52

Federal Acquisition Regulation (FAR); Threshold; Cost Comparison

AGENCIES: Department of Defense (DoD), General Services Administration (GSA), and National Aeronautics and Space Administration (NASA).

ACTION: Proposed rule.

SUMMARY: The Civilian Agency Acquisition Council and the Defense Acquisition Regulatory Council are considering changes to the Federal Acquisition Regulation (FAR) to delete the clause at 52.247-27, Contract Not Affected by Oral Agreement, and its prescription at 47.207-8(b); and to add optional clause 52.243-8, Authorities and Limitations, and its corresponding prescription at 43.106(b).

DATES: Comments should be submitted to the FAR Secretariat at the address shown below on or before June 7, 1988, to be considered in the formulation of a final rule.

ADDRESS: Interested parties should submit written comments to: General Services Administration, FAR Secretariat (VRS), 18th & F Streets NW., Room 4041, Washington, DC 20405. Please cite FAR Case 88-21 in all correspondence related to this issue.

FOR FURTHER INFORMATION CONTACT: Margaret A. Willis, FAR Secretariat, Room 4041, GS Building, Washington, DC 20405, telephone 523-4755.

SUPPLEMENTARY INFORMATION:

A. Background.

The Authorities and Limitations clause that is introduced into the FAR by this revision was developed by the FAR Councils in recognition of a need for a contract clause that (1) sets forth the appropriate authorities and limitations regarding contract modifications; (2) has a more universal applicability than the clause at FAR 52.247-27, Contract Not Affected by Oral Agreement, which is prescribed for use only in contracts for transportation and transportation related services; and (3) may be used in contracting situations that are less complex than those in which the clause at FAR 52.243-7, Notification of Changes, is appropriate.

B. Regulatory Flexibility Act.

The proposed rule is not expected to have a significant economic impact on a substantial number of small entities within the meaning of the Regulatory Flexibility Act (5 U.S.C. 601, et seq.) because the proposed revisions are merely an administratively less burdensome alternative than the "notification of changes" clause at 52.243-7. Therefore, an initial regulatory flexibility analysis has not been performed. Comments are invited from small businesses and other interested parties.

Comments from small entities concerning the affected FAR subparts will also be considered in accordance with Section 610 of the Act. Such comments must be submitted separately and cite FAR Case 88-610 in correspondence.

C. Paperwork Reduction Act

The Paperwork Reduction Act (Pub. L. 96-511) does not apply because the proposed rule does not impose information collection requirements within the meaning of the Paperwork Reduction Act, 44 U.S.C. 3501, et seq., and OMB approval is not required pursuant to 5 CFR Part 1320, et seq.

List of Subjects in 48 CFR Parts 43, 47, and 52

Government procurement.

Dated: March 28, 1988.

Harry S. Rosinski,

Acting Director, Office of Federal Acquisition and Regulatory Policy.

Therefore, it is proposed that 48 CFR Parts 43, 47, and 52 be amended as set forth below:

1. The authority citation for Parts 43, 47, and 52 continues to read as follows:

Authority: 40 U.S.C. 486(c); 10 U.S.C. Chapter 137; and 42 U.S.C. 2473(c).

PART 43—CONTRACT MODIFICATIONS

2. Section 43.106 is amended by adding paragraph (b) to read as follows:

43.106 Contract clause.

* * * * *

(b) The Contracting officer may insert the clause at 52.243-8, Authorities and Limitations, in solicitations and contracts other than small purchases, when inclusion of the clause at 52.243-7 is not appropriate.

PART 47—TRANSPORTATION

47.207-8 [Amended]

3. Section 47.207-8 is amended by removing and reserving paragraph (b).a

PART 52—SOLICITATION PROVISIONS AND CONTRACT CLAUSES

4. Section 52.243-8 is added to read as follows:

52.243-8 Authorities and Limitations.

As prescribed in 43.106(b), insert the following clause:

Authorities and Limitations (Mar 1988)

(a) Authority to modify this contract on behalf of the Government is expressly limited to authorized persons (see section 43.102 of the Federal Acquisition Regulation (FAR)) who are properly designated as Contracting Officers in accordance with FAR Subpart 1.6.

(b) Except as otherwise may be expressly provided in this contract, the Contractor assumes all risks, liabilities, and consequences of performing this contract in accordance with any written or oral order (including, but not limited to, direction, instruction, interpretation, or determination) of a person not authorized in writing to issue such an order.

52.247-27 [Removed and reserved]

5. Section 52.247-27 is removed and reserved.

[FR Doc. 88-7698 Filed 4-7-88; 8:45 am]

BILLING CODE 6820-61-M

VOL
53

ISS
68

AP
8

1988

UMI

federal register

Friday
April 8, 1988

Part IV

Environmental Protection Agency

Chlordane/Heptachlor Termiticides; Notice of Cancellation and Existing Stocks Determination and Notice of Intent To Suspend

ENVIRONMENTAL PROTECTION AGENCY

[OPP-66137; FRL-3363-5]

Chlordane/Heptachlor Termiticides; Notification of Cancellation and Amendment of Existing Stocks Determination

AGENCY: Environmental Protection Agency (EPA).

ACTION: Notice of cancellation and existing stocks determination.

SUMMARY: This Notice announces the cancellation of various chlordane/heptachlor termiticide product registrations and establishes certain limitations on the sale and use of existing stocks of such products. Most of the product registrations affected by this Notice were voluntarily cancelled in 1987. At the time of cancellation, the Agency established certain provisions for the continued sale and use of existing stocks. The United States District Court for the District of Columbia issued a ruling on February 23, 1988, ordering the Agency to take "whatever action is necessary * * * so that on and after April 15, 1988, sales, commercial use and commercial application of existing stocks of chlordane and heptachlor which have been the subject of voluntary cancellations shall cease * * *" This Notice describes the Agency's implementation of the Court's ruling and provides a mechanism for holders of existing stocks to challenge the existing stocks limitations set forth herein.

DATE: All comments on or challenges to the existing stocks limitations described in this Notice must be received on or before May 9, 1988.

ADDRESS: Submit three copies of written comments, identified with the document control number "OPP 66137," by mail to: Information Services Section, Program Management and Support Division (TS-757C), Environmental Protection Agency, 401 M St., SW., Washington, DC 20460. In person, deliver comments to: Rm. 236, CM#2, 1921 Jefferson Davis Highway, Arlington, VA.

Information submitted in any comment concerning this Notice may be claimed "Confidential Business Information" (CBI). Information so marked will not be disclosed except in accordance with procedures set forth in 40 CFR Part 2. A copy of the comment that does not contain CBI must be submitted for inclusion in the public record. Information not marked confidential may be disclosed publicly by EPA without prior notice to the submitter. All written comments submitted in response to this Notice will be available for public inspection in Rm. 236 at the address given above, from 8 a.m. to 4 p.m., Monday through Friday except legal holidays.

FOR FURTHER INFORMATION CONTACT: George LaRocca, Registration Division (TS-767C), Office of Pesticide Programs, Environmental Protection Agency, 401 M St., SW., Washington, DC, 20460, (703-557-2400).

SUPPLEMENTARY INFORMATION: This Notice is organized in three units. Unit I is the notification of the voluntary cancellation actions and the modified existing stocks determination. Unit II provides a list of product registrations to which the Notification and Existing Stocks Determination apply. Unit III is a copy of the District Court's February 23rd Judgment and Order which provides the basis for the modification of existing stocks determination.

I. Notification of Cancellation of Various Chlordane/Heptachlor Termiticide Registrations and Existing Stocks Determination

In December 1986, EPA issued two documents entitled "Guidance for the Reregistration of Pesticide Products Containing Chlordane [or Heptachlor] as the Active Ingredient." Among other things, these documents identified various scientific studies which EPA required registrants to submit to the Agency under FIFRA section 3(c)(2)(B) in order to support continued registration of their chlordane and heptachlor products. Since the issuance of these documents, a number of registrants holding registrations for chlordane and/or heptachlor termiticide products requested cancellation of their registrations. A list of such product registrations to which this Notification and Existing Stocks Determination applies is provided in Unit II of this Notice. EPA accepted these voluntary cancellations, and in return allowed the registrants to continue to distribute the cancelled products for 12 months after cancellation and placed no limitations upon distribution or use of the products outside of the registants' control (except that all such distribution and use was required to comply with the approved labels for the products).

On February 23, 1988, in the case of *National Coalition Against the Misuse of Pesticides* v. *EPA*, the United States District Court for the District of Columbia ruled that EPA had not acted in accordance with section 6(a)(1) of FIFRA in granting authorization to distribute and use existing stocks of cancelled pesticide products without first determining that such sale and use would not have unreasonable adverse effects on the environment. The Court therefore ruled that the Agency's allowance of continued sale and use of cancelled chlordane products was void, and ordered EPA to take "whatever action is necessary * * * so that on and after April 15, 1988, sales, commercial use and commercial application of existing stocks of chlordane and heptachlor which have been the subject of voluntary cancellations shall cease * * *." The Court's decision is reprinted in Unit III of this Notice.

In order to implement the Court's ruling, EPA is issuing this Notification of Cancellation and Existing Stocks Determination. Pursuant to the Court's ruling, EPA hereby serves notice that the registrations for the products listed in Unit II of this Notice are cancelled, and that pursuant to section 6(a)(1) of FIFRA, 7 U.S.C. 136d(a)(1), it shall be unlawful for any person to distribute, sell, offer for sale, hold for sale, deliver for shipment, or receive (and having so received) deliver or offer to deliver to any person, or to make commercial use or commercial application of such products, after April 14, 1988. Any of the foregoing listed actions involving the cancelled registrations listed in Unit II of this Notice after April 14, 1988 shall be a violatioin of FIFRA section 12(a)(2)(k) which states:

> It shall be unlawful for any person to violate any cancellation of registration of a pesticide under section 6, except as provided in section 6(a)(1).

The prohibition on sale and commercial use of chlordane/heptachlor products affected by the determinations set forth in this Notice is intended to apply to all sale of such products in any situation, and to all use and application of such products with the exception of use and application in accordance with label directions by individuals (as opposed to organizations, government agencies, corporations, etc.) on property owned by those individuals. However, this exception for individuals shall not apply to use or application by individuals on property which is owned by them but which is rented or leased to others and is occupied or intended to be occupied by human beings, nor to use on new structures intended for human occupation which are under construction for sale or lease.

As noted earlier, the basis for the Court's ruling was the Court's determination that EPA had not made the finding required by FIFRA section 6(a)(1) in order to allow continued sale or use of the cancelled chlordane/heptachlor products. The Court ruled

that the finding the Agency had made with respect to the cancelled stocks was not the finding required by the statute, and that in the absence of the proper finding, no further sale or use could lawfully be permitted. This proper finding, according to the Court, must be "* * * a reasoned finding, supported by evidence, as to whether the continued sale and use of existing stocks of non-Velsicol registered, reformulated chlordane and heptachlor 'is not inconsistent with the purposes of [FIFRA] and will not have unreasonable adverse effects on the environment'* * *."

The Agency has not made the finding the Court ruled was required to support continued sale and use of existing stocks. In the absence of the finding called for the Court's Order, no further sale or commercial use will be allowed. However, the Agency believes it is appropriate under all the facts of this case to provide any person adversely affected by this Notification and Existing Stocks Determination an opportunity to provide the Agency with evidence that would support a finding that continued sale and commercial use of the products listed in Unit II of this Notice would not be inconsistent with the purposes of FIFRA and would not have unreasonable adverse effects on the environment.

Accordingly, any person adversely affected by this Notification and Existing Stocks Determination may petition the Agency on or before May 9, 1988 to make a finding pursuant to section 6(a)(1) that would permit continued sale or commercial use of the listed cancelled products. Such a petition must include sufficient evidence to support the finding urged by the petitioner. If the Agency determines that a properly supported petition has been submitted and that an affirmative finding pursuant to section 6(a)(1) should be made, the Agency will petition the District Court for modification of its February 23rd Order in accordance with its findings.

Any disposal of products of cancelled registrations subject to this Notification and Existing Stocks Determination must be in accordance with the requirements of applicable Federal, state, and local laws and regulations, including the Resource Conservation and Recovery Act.

II. List of Voluntarily Cancelled Registrations of Chlordane and Heptachlor Termiticides

Below are listed, in order of EPA Registration numbers, the voluntarily cancelled registrations for chlordane and heptachlor termiticide products to which this Notice applies. The names of the companies to which these registrations are assigned to EPA's files, and the effective dates of cancellation are also provided. Product names are not listed since these are often changed and no listing would be complete.

Chlordane and heptachlor products registered to Velsicol Chemical Corporation are not affected by the present Notice, but rather by the Agency's Order of October 1, 1987, published in the **Federal Register** of November 3, 1987 (52 FR 42145). However, since the sale, distribution and use of Velsicol's voluntarily cancelled products also terminate on April 15, 1988, these registrations are included in the following list for the convenience of all interested parties.

Chlordane Cancellations

Company	EPA Registration No.	Effective Date
Bonide Chemical	4-96	3/17/88
	4-218	3/17/88
	4-274	3/17/88
	4-275	3/17/88
	4-287	3/17/88
Dragon Chemical Corp.	16-96	4/27/87
	16-116	4/27/87
	16-122	4/27/87
	16-124	4/27/87
Rigo Company IncD70-119	4/27/87	
Thompson-Hayward Chemical Co	148-27	6/01/87
	148-139	6/01/87
Dexol Industries	192-42	3/30/88
	192-43	3/30/88
	192-132	3/30/88
	192-133	3/30/88
Tobacco States Chemical Co	226-177	4/27/87
	226-184	4/27/87
Chevron Chemical Co	239-478	3/25/87
	239-1232	3/25/87
FMC Corp	279-383	3/07/87
	279-538	11/01/86
C.J. Martin Co	299-171	3/25/87
Residex Corp	373-26	3/25/87
Imperial Inc	407-269	3/25/87
	407-400	3/25/87
Boyle-Midway Inc	475-192	3/25/87
Rockland Chemical Company Inc	572-65	3/25/87
Haviland Agricultural Chemical Co	595-129	3/25/87
	595-321	3/25/87
Federal Chemical Company Inc	654-12	6/01/87
	654-19	7/01/87
	654-87	7/01/87
	654-110	6/01/87
Prentiss Drug and Chemical Co	655-516	3/25/87
Park Products and Chemical Co	690-53	7/01/87
Southland Pearson and Co	728-45	3/24/88
	728-47	3/24/88
MFA Oil Co	746-58	3/25/87
	746-76	3/25/87
	746-119	3/25/87
Security Lawn and Garden Products Co	769-90	3/25/87

Chlordane Cancellations—Continued

Company	EPA Registration No.	Effective Date
	769-511	3/25/87
Faesy & Besthoff Inc	779-82	8/02/87
Chas. H. Lilly Co	802-71	9/11/87
Green Light Co	869-14	3/25/87
	869-168	3/25/87
Velsicol Chemical Co	876-83	11/04/87
	876-86	3/25/87
	876-100	3/25/87
	876-104	11/04/87
	876-233	11/04/87
	876-281	9/28/87
	876-303	9/28/87
	876-304	9/28/87
	876-305	9/28/87
	876-306	9/28/87
	876-308	9/28/87
	876-309	4/28/87
	876-310	4/27/87
Miller Chemical and Fertilizer Corp	904-135	3/25/87
	904-223	3/25/87
Cre-O-Tox Chemical Products Co	1066-26	7/01/87
	1066-28	7/01/87
	1066-29	3/19/88
Seacoast Laboratories Inc	1159-102	7/01/87
	1159-178	7/01/87
Cotton States Chemical Co	1339-74	8/20/87
	1339-87	8/20/87
Land O'Lakes	1381-51	3/25/87
	1381-83	3/25/87
Universal Cooperatives Inc	1386-25	3/25/87
	1386-324	8/20/87
	1386-353	8/20/87
Dettlebach Chemical Corp	1421-23	3/21/88
FCX, Inc	1598-145	4/27/87
	1598-244	4/27/87
Griffin Corp	1812-242	7/01/87
	1812-243	7/01/87
Triangle Chemical Co	1842-41	5/14/87
	1842-42	5/14/87
Terminix Division of Cook Industries Inc	1927-5	2/19/87
	1927-20	2/19/87
	1927-21	2/19/87
	1927-49	2/19/87
ELCO Manufacturing Co	1941-66	7/01/87
Farmland Industries Inc	1990-178	3/25/87
	1990-179	3/25/87
W.R. Grace and Co	2124-742	3/28/88
PBI-Gordon Corp	2217-34	5/01/87
	2217-90	5/01/87
Hopkins Agricultural Chemical	2393-350	3/25/87
Colonial Products Inc	3314-73	7/01/87
	3314-74	7/01/87
LaRoche Industries	3442-747	3/25/87
	3442-816	3/25/87
	3442-846	3/25/87
	3442-847	3/25/87
Earl May Seed and Nursery L.P	3772-8	3/25/87
Stephenson Chemical Company Inc	4887-19	3/22/88
	4887-48	3/22/88
	4887-183	3/22/88
Redwood Chemical Inc	4981-5	6/29/87
	4981-6	6/29/87
Coastal Chemical Corp	5549-41	3/17/88
Chacon Chemical Corp	5719-24	7/01/87
GRO Chemical Co	5778-33	6/11/87
Helena Chemical Co	5905-97	3/25/87

CHLORDANE CANCELLATIONS—Continued

Company	EPA Registration No.	Effective Date
	5905-102	3/25/87
Octagon Process Inc.	6820-15	7/01/87
ArChem Corp	7122-3	3/17/88
	7122-34	3/17/88
	7122-121	3/17/88
Forshaw Chemical Co.	7234-5	3/17/88
	7234-6	3/17/88
	7234-10	3/18/88
	7234-100	3/17/88
	7234-101	3/17/88
	7234-20	3/18/88
Voluntary Purchasing Group, Inc	7401-78	5/18/87
	7401-348	5/18/87
B and G Co	8512-86	3/21/88
Sunniland Corp	9404-6	3/23/88
Nationwide Chemical Products, Inc	9591-6	10/01/87
	9591-7	10/01/87
Ross-Daniels, Inc.	9649-2	6/12/87
Combelt Chemical Co.	10107-7	3/21/88
	10107-8	3/21/88
Ford's Chemical and Service Inc	10370-40	3/28/88
	10370-116	3/28/88
	10370-144	3/28/88
	10370-145	3/28/88
Hacienda Enterprises	11037-7	4/27/87
Puma Chemical Company	11611-4	7/17/87
Drexel Chemical Company	19713-214	3/24/88
	19713-215	3/24/88
Platte Chemical Co.	34704-1	4/27/87
Falls Chemical Co	40831-5	3/24/88
	40831-24	3/24/88
Kaw Valley, Inc	44215-7	9/08/87
	44215-20	12/12/87
Wilson Laboratories	50383-20	3/24/88
	50383-29	3/24/88
Cameron M. Baird	50415-27	7/01/87
Micro-Flo Co.	51036-30	11/13/87
	51036-31	11/13/87
Garden Care by Farmingdale, Ltd	53127-1	3/22/88
	53127-10	3/22/87

HEPTACHLOR CANCELLATIONS

COMPANY	EPA REGISTRATION NO.	EFFECTIVE DATE
Thompson-Hayward Chemical Co.	148-964	6/01/87
Velsicol Chemical Corp.	876-101	4/27/87
	876-85	9/28/87
	876-233	11/04/87
	876-308	9/28/87
	876-309	4/27/87
	876-310	4/27/87
Cre-O-Tox Chemical Products Co.	1066-28	7/01/87
	1066-29	3/19/88
	1066-30	7/01/87
Griffin Corp.	1812-77	7/01/87
Triangle Chemical Co.	1642-163	5/14/87
Terminix Division of Cook Industries, Inc.	1927-50	4/21/87
Stephenson Chemical Company Inc.	4887-59	3/22/88
	4887-85	3/22/88
Redwood Chemical, Inc.	4981-17	7/08/83

HEPTACHLOR CANCELLATIONS—Continued

COMPANY	EPA REGISTRATION NO.	EFFECTIVE DATE
Red Wing Chemical Co.	6723-8	6/07/84
ArChem Corp.	7122-6	3/17/88
Forshaw Chemical Co.	7234-27	3/18/88
	7234-31	3/18/88
	7234-89	3/18/88
Chem-Nut, Inc.	37686-27	5/08/87
Farmco Industries Inc.	46776-1	5/12/87
Micro-Flo Co.	51036-50	4/27/87

III. Judgment and Order of the United States District Court for the District of Columbia

On February 23, 1988, Judge Louis F. Oberdorfer of the United States District Court for the District of Columbia issued the following Judgment and Order in the case of National Coalition Against the Misuse of Pesticides, *et al.* plaintiffs, v. United States Environmental Protection Agency, *et al.* defendants, (Civil Action No. 87-2089-LFO).

Judgment and Order

On October 1, 1987, the United States Environmental Protection Agency ("EPA") entered into a supplemental agreement with Velsicol Chemical Corporation ("Velsicol"), the sole manufacturer of chlordane and heptachlor, providing that sale and use of existing stocks of those products registered to Velsicol will cease on or before April 15, 1988. The October 1 agreement did not address existing stocks of Velsicol manufactured chlordane and heptachlor that was registered to others. On January 11, 1988, this Court granted in part plaintiffs' motion for summary judgment, ruling that "EPA's policy of exchanging use authorization on existing stocks for voluntary cancellations from non-Velsicol reformulator registrants does not satisfy the agency's obligation under 7 U.S.C. sec. 136d(a)(1)." Memorandum of January 11, 1988 at 6. The Court ordered EPA to

> make and submit to the Court a reasoned finding, supported by evidence, as to whether the continued sale and use of existing stocks of non-Velsicol registered, reformulated chlordane and heptachlor is not inconsistent with the purposes of [FIFRA] and will not have unreasonable adverse effects on the environment, pursuant to 7 U.S.C. sec. 136d(a)(1) * * *.

Order of January 11, 1988 at 1. Defendant subsequently submitted a response to that Order, plaintiffs responded to defendants' response, and further oral argument was held on February 12, 1988.

The Court has considered the briefs and oral argument of the parties and has reviewed and considered the other submissions of the parties including the administrative record and affidavit testimony. There is no genuine issue of material fact so that plaintiffs are entitled to summary judgment as a matter of law on the issue of the continued sale and use of existing stocks of chlordane and heptachlor termiticide products, which are the subject of voluntary cancellations.

In connection with cancellations of one or more uses of a pesticide, including voluntary cancellations, section 6(a)(1) of the Federal Insecticide, Fungicide and Rodenticide Act ("FIFRA"), 7 U.S.C. 136d(a)(1), requires EPA to permit continued sale or use of existing stocks only "to such extent, under such conditions, and for such uses" which the Administrator determines are "not inconsistent with the purposes of [FIFRA] and will not have unreasonable adverse effects on the environment." FIFRA defines "unreasonable adverse effects on the environment" to mean "any unreasonable risk to man or the environment, taking into account the economic, social, and environmental costs and benefits of the use of any pesticide." FIFRA sec. 2(bb), 7 U.S.C. 136(bb).

An adequate sec.5(a)(1) determination must analyze the risks and benefits from the sale and use of existing stocks and determine whether or not such sale and use would be consistent with FIFRA and whether or not such sale and use would pose any unreasonable risk to man or the environment. *See* 7 U.S.C. 136(bb). Instead, defendants found only that the settlement agreement permitting the use of existing stocks would result in less use (and therefore less risk) than would a proceeding to cancel the pesticide's registration without a suspension of the registration during the proceeding.[1] This finding does not meet the requirements of sec. 6(a)(1).

What the defendants have done here is indistinguishable in principal from the action of the Secretary of Commerce, recently condemned by our Court of Appeals in *Kokechik Fishermen's Association v. Secretary of Commerce*, No. 87-5239, slip op. (D.C. Cir. Feb. 16, 1988). There, the Secretary issued a permit to Japanese fishermen to take northern fur seals even though he could not make, or had not made, a finding, required by statute, as to whether the particular seal population was within its optimum sustainable level. *Id.* at 12-13. Nonetheless, the Secretary "issued the permit taking the position that as long as it did not *authorize* the taking of

[1] The defendants determined that a suspension was not justified.

northern fur seals he had complied with the [relevant statute]." *Id.* at 13 (emphasis added). Said the Court of Appeals, however, "[t]he result was, in effect, that the permit allowed the Federation to take protected marine mammals for a price—the civil penalties imposed for such takings * * * This is a result that the [relevant statute] does not countenance." *Id.*

So here defendants, without making a required finding that sale and use of existing chlordane stocks will not unreasonably endanger man or the environment, have allowed the continued sale and current use of those stocks for a price—i.e., conditional suspension of production and suspension of some prospective distribution from existing stocks by chlordane registrants. This, FIFRA does not countenance.

Furthermore, defendants have not addressed the appropriate relevant factors, and have not adequately supported or rationally justified a determination that the continued sale or use of existing stocks permitted in the October 1, 1987 Order and the other chlordane and heptachlor voluntary cancellations is consistent with the purposes of FIFRA and would not have unreasonable adverse effects on man or the environment, within the meaning of FIFRA.

The Court has not overlooked EPA's expressed concern about the "possibility" that invalidation of the existing stocks concession for chlordane registrants "could constitute a basis on the part of Velsicol and the other registrants to void the August agreement as well as the voluntary cancellations." Defendants' Response to Plaintiffs' Revised Proposed Judgment and Order (filed Feb. 23, 1988) at 3 n.1. There will be time enough to deal with such a hypothetical situation when, and if, it materializes.

Accordingly, it is this 23rd day of February, 1988, hereby

Adjudged and Declared: That defendants' decision to permit continued sale and use of existing chlordane and heptachlor stocks which are the subject of voluntary cancellation in the absence of the finding required by sec. 6(a)(1) is arbitrary, capricious, and an abuse of discretion; and it is further

Adjudged and Declared: That the provisions of any agreement entered into by defendants (and only such provisions) permitting the continued sale and use of existing chlordane and heptachlor stocks which are the subject of voluntary cancellations including, but not limited to, the provisions of the October 1, 1987 "Order Accepting Voluntary Cancellations and Authorizing Use of Existing Stocks with Limitations," made in accordance with the Supplemental Memorandum of Understanding with Velsicol Chemical Corporation, are contrary to law; and it is further

Adjudged and Declared: That the defendants' decision to permit sale or commerical use and commercial application (as distinguished from household and homeowner use and application) of existing stocks which have been the subject of voluntary cancellations is contrary to law; and it is further

Ordered and Adjudged: That the defendants shall, on or before April 15, 1988, take whatever action is necessary to conform to, and to enforce, the requirements of the law as declared in this Judgment and Order so that on and after April 15, 1988, sales, commercial use and commercial application of existing stocks of chlordane and heptachlor which have been the subject of voluntary cancellations shall cease; and it is further

Ordered: That plaintiffs' motion for partial summary judgment is, to the extent theretofore stated, *Granted;* and it is further

Ordered: That defendants' motion for summary judgment is *Denied;* and it is further

Ordered: That there being no just reason for delay in the entry of this Order as a Judgment, and in order to permit its review by the Court of Appeals, the Clerk of Court shall, pursuant to F.R. Civ. P. 54(b), enter this Judgment and Order forthwith in favor of plaintiffs; and it is further

Ordered: That on March 21, 1988, at 9:00 a.m., there will be a status call to schedule further proceedings on unresolved issues, including the disposition of existing stocks derived from suspended, as distinguished from voluntarily cancelled, registrations.

Louis F. Oberdorfer,

United States District Judge.

The list of voluntarily cancelled registrations in Unit II of this Notice may be incomplete due to additional voluntary cancellations received after the publications of this Notice. Persons who wish to check the status of a particular registration not listed in Unit II of this Notice, should contact Mr. George LaRocca, the designated information contact for this action, at the address and phone number provided at the beginning of this Notice.

Dated: April 5, 1988.

John A. Moore,

Assistant Administrator for Pesticides and Toxic Substances.

[FR Doc. 88-7790 Filed 4-6-88; 10:51 am]

BILLING CODE 6560-50-M

[OPP-38508; FRL 3363-4]

Chlordane/Heptachlor Termiticides; Intent to Suspend Registration and to Place Limitations on Sale and Use of Existing Stocks

AGENCY: Environmental Protection Agency (EPA).

ACTION: Notice of intent to suspend.

SUMMARY: EPA is issuing a Notice of Intent to Suspend various chlordane/heptachlor termiticide product registrations and to place limitations on the sale, distribution, and use of existing stocks of suspended products. All of the products affected by this Notice have previously been suspended for failure to commit to comply with the terms of data-call-in requirements contained in guidance documents published on December 31, 1986. There were no prohibitions placed on the sale and use of existing stocks of suspended products by persons other than the registrant. On February 23, 1988, the United States District Court for the District of Columbia issued a ruling ordering the Agency to place certain limitations on the sale and use of existing stocks of voluntarily cancelled chlordane/heptachlor termiticide products by April 15, 1988. Any suspensions which result from this Notice of Intent to Suspend will include prohibitions on the sale and use of existing stocks of the suspended pesticides similar to the prohibitions imposed by the United States District Court on existing stocks of voluntarily cancelled termiticides.

DATE: Requests for hearings by persons adversely affected by this Notice must be received by the Agency on or before May 9, 1988.

ADDRESS: Three copies of any request for a hearing must be submitted to: Hearing Clerk (A-110), Environmental Protection Agency, 401 M Street SW., Washington, DC 20460.

FOR FURTHER INFORMATION CONTACT: Mr. George LaRocca, Registration Division (TS-767C), Office of Pesticide Programs, Environmental Protection Agency, 401 M Street SW., Washington, DC 20460, (703-557-2400).

SUPPLEMENTARY INFORMATION: This Notice is organized in three units. Unit I is the Notice of Intent to Suspend various chlordane/heptachlor

termiticide product registrations pursuant to FIFRA section 3(c)(2)(B). Unit II provides a list of the product registrations to which the Notice of Intent to Suspend applies. Unit III is a reprint of the District Court's February 23, 1988 Judgment and Order which serves as the basis for the existing stocks determination contained in this Notice.

I. Notice of Intent to Suspend Pursuant to FIFRA Section 3(c)(2)(B) Various Chlordane/Heptachlor Termiticide Registrations and to Place Limitations on the Sale and Use of Existing Stocks of Suspended Products

The chlordane/heptachlor termiticide product registrations listed in Unit II of this Notice are currently under suspension pursuant to section 3(c)(2)(B) of the Federal Insecticide, Fungicide and Rodenticide Act ("FIFRA") for failure to commit to provide data in response to the Agency's request for data contained either in the "Guidance Document for the Reregistration of Pesticide Products Containing Chlordane" dated December 31, 1986, or in the "Guidance Document for the Reregistration of Pesticide Products Containing Heptachlor" also dated December 31, 1986. After the registrants failed to commit to comply with the requirements for data generation set forth in the relevant guidance documents, the Agency provided registrants with a Notice of Intent to Suspend the affected registrations pursuant to section 3(c)(2)(B) and informed the registrants in the notice that registrants would not be allowed to sell or distribute any suspended product after the suspension became effective. The Agency, at that time, did not indicate that it would place any restrictions on the sale or use of suspended products outside of the registrants' control. No registrant contested the Notice of Intent to Suspend, and the suspensions became effective on the dates listed in Unit II of this Notice.

The registrants holding the product registrations listed in Unit II of this Notice have continued to fail to take appropriate steps to submit the data/information required by the relevant guidance documents in the time periods established in those documents. Thus, the basis for this Notice of Intent to Suspend is the failure of the listed registrants to take appropriate steps to submit the data/information required by the chlordane and heptachlor guidance documents dated December 31, 1986 in the time periods called for in those documents.

Under section 3(c)(2)(B), the Agency "may include in the Notice of Intent to Suspend such provisions as [the Agency] deems appropriate concerning the continued sale and use of existing stocks of [the suspended] pesticide." At the time the previous Notices of Intent to Suspend the product registrations listed in Unit II were issued, the Agency did not find it appropriate to place any restrictions on the existing stocks outside of the registrants' control. In this regard, the existing stocks of the suspended registrations were treated in a manner similar to the stocks of chlordane/heptachlor termiticide registrations that were voluntarily cancelled by registrants; the Agency placed no restrictions on the sale and use of cancelled products outside the registrants' control.

On February 23, 1988, in the case of *National Coalition Against the Misuse of Pesticides* v. *EPA*, the United States District Court for the District of Columbia ruled that EPA had not acted in accordance with section 6(a)(1) of FIFRA in granting authorization to distribute and use existing stocks of the cancelled chlordane/heptachlor termiticide products without first determining that such continued sale and use would not have unreasonable adverse effects on the environment. The Court therefore ruled that the Agency's allowance of continued sale and use of cancelled chlordane/heptachlor products was void, and ordered EPA to take "whatever action is necessary * * * so that on and after April 15, 1988, sales, commercial use, and commercial application of existing stocks of chlordane and heptachlor which have been the subject of voluntary cancellations shall cease * * *" The Court's decision is reprinted in Unit III of this Notice.

The Agency has taken action today to implement the Court's ruling as it affects the voluntarily cancelled chlordane and heptachlor products. The Agency believes it is inequitable to allow greater use of stocks of chlordane/heptachlor termiticide products suspended under section 3(c)(2)(B) than of similar cancelled products. In addition, the Agency believes that implementation of the Court's order will be made more difficult if existing stocks of the suspended products are treated differently than existing stocks of the cancelled products. Accordingly, the Agency finds it appropriate to apply the same standard to continued sale and use of existing stocks of the suspended products as the District Court applied to the cancelled products.

Pursuant to section 3(c)(2)(B), the Agency may include in a Notice of Intent to Suspend such provisions as it deems appropiate concerning the continued sale and use of existing stocks. The Agency hereby provides notice that, unless and until it is demonstrated that continued sale and commerical use and application of chlordane/heptachlor termiticides is consistent with the purposes of FIFRA and will not have unreasonable adverse effects on the environment, the Agency considers it inappropriate to allow any continued sale, commercial use, or commercial application of existing stocks of chlordane/heptachlor termiticide products suspended pursuant to this Notice of Intent to Suspend. Unless it is demonstrated that continued sale, distribution and commercial use and application of suspended chlordane/heptachlor termiticides meets the standard set forth in this paragraph, the Agency will not permit any person to distribute, sell, offer for sale, hold for sale, ship, deliver for shipment, or receive and (having so received) deliver or offer to deliver, to any person, or permit any person to make a commercial application of existing stocks of chlordane/heptachlor termiticide products suspended pursuant to this Notice after this Notice of Intent to Suspend becomes final and effective.

The prohibition on sale and commercial use of chlordane and heptachlor products subject to the determination set forth in this Notice is intended to apply to all sale of such products in any situation, and to all use and application of such products, with the exception of use and application in accordance with label directions by individuals (as opposed to organizations, government agencies, corporations, etc.) on property owned by those individuals. However, this exception for individuals shall not apply to use or application by individuals on property which is owned by them but which is rented or leased to others and is occupied or intended to be occupied by human beings, nor to use on new structures intended for human occupation which are under construction for sale or lease.

Pursuant to section 3(c)(2)(B), a copy of this Notice is being sent to every registrant identified in Unit II of this Notice. The terms of suspension announced in this Notice shall become final and effective with respect to a product registration listed in Unit II of this Notice within 30 days of the registrant's receipt of this Notice, unless during that time a request for a hearing is made by a person adversely affected by this Notice or the registrant satisfies the Agency that it has complied fully with the data requirements contained in

the guidance documents for chlordane and heptachlor published on December 31, 1986 that serve as the basis for this Notice of Intent to Suspend. Copies of this Notice are being mailed in order to be received by the registrants as close as possible to the publication date of this Notice.

If a registrant or any other person adversely affected by this Notice wishes the Agency to determine that the registrant has complied with the requirements that provide the bases for this Notice, he/she should supply information supporting such a determination to the Agency as quickly as possible for there to be any chance the Agency will be able to make the necessary determination before this Notice otherwise becomes final and effective. If a product registration is suspended pursuant to this Notice, the suspension will not be rescinded until the Agency determines that the registrant has complied fully with the requirements which serve as the basis for this Notice and has so notified the registrant in writing.

Any hearing requested pursuant to this Notice will be conducted in accordance with the requirements of FIFRA section 6(d) and the Agency's procedural regulations set forth in 40 CFR Part 164. Pursuant to section 3(c)(2)(B), the only matters for resolution at such a hearing shall be whether the registrant has failed to take the action that serves as the basis for the Notice of Intent to Suspend and whether the determination with respect to existing stocks is consistent with the Act. In that regard, it should be noted that the basis for this suspension action is the listed registrants' failure to take appropriate steps to comply with the data requirements contained in the guidance documents. This failure includes, *inter alia*, the failure to submit data, progress reports, and protocols as required by the request for data contained in the guidance documents. As to existing stocks, any person requesting a hearing on this issue should take into account the Agency's determination that no person may distribute, sell, offer for sale, hold for sale, ship, deliver for shipment, or receive (and having so received) deliver or offer to deliver to any person, or make any commercial application of suspended chlordane/heptachlor products unless it is demonstrated that such actions will not have unreasonable adverse effects on the environment. In order to challenge the existing stocks provisions of this Notice, a party requesting a hearing must demonstrate with evidence that continued sale, distribution and commercial use of the affected product will be consistent with the purposes of FIFRA and will not have unreasonable adverse effects on the environment.

Any request for a hearing must (1) state which allowable issues are to be heard at the hearing, (2) identify the registrations for which a hearing is requested, and (3) set forth all necessary supporting facts pertaining to the allowable issues for which a hearing is requested. Three copies of the request must be submitted to the Hearing Clerk, as stated at the beginning of this Notice under the heading ADDRESS.

In order to be legally effective, hearing requests must be received by the Hearing Clerk within 30 days of the registrants' receipt of this Notice. The 30-day time limit can not be extended. The terms of suspension set forth in this Notice shall become final and effective if no request for a hearing is filed within the required time period unless the Agency determines, prior to the expiration of the 30-day period, that a registrant has taken appropriate steps to comply with the data requirements set forth in the guidance documents in the time periods called for in those documents.

In the event of a hearing request, the Agency's rules of practice forbid anyone who may take part in deciding the case, at any stage of the proceeding, from discussing the merits of the proceeding *ex parte* with any party or with any person who has been connected with the preparation or presentation of the proceeding as an advocate or in any investigative or expert capacity, or with any of his/her representatives (40 CFR 164.7).

Accordingly, the following EPA offices, and the staffs thereof, are designated as the judicial staff of the Agency in any administrative hearing on this Notice of Intent to Suspend: The Office of the Administrative Law Judge, the Office of the Judicial Officer, the Deputy Administrator and the members of the staff in the immediate office of the Administrator. None of the persons designated as the judicial staff may have any *ex parte* communication with the trial staff or any other interested person not employed by EPA on the merits of any of the issues involved in these proceedings, without fully complying with the applicable regulations.

Finally, it should be noted that this Notice of Intent to Suspend in no way affects other suspension actions that have already been taken against the registrations subject to this Notice. All terms of this Notice of Intent to Suspend are in addition to any previous conditions from existing suspensions.

Any disposal of chlordane/heptachlor termiticide products subject to this Notice of Intent to Suspend must be in accordance with the requirements of applicable Federal, state, and local laws and regulations, including the Resource Conservation and Recovery Act.

Any questions about the requirements and procedures set forth in this Notice or in the request for data contained in the guidance documents should be directed to the Product Manager, Mr. George LaRocca, at the address and telephone number provided earlier in this Notice.

II. List of Suspended Termiticide Registrations Containing Chlordane and Heptachlor

Below are listed suspended registrations of chlordane/heptachlor products affected by this Notice. The listed registrations were in suspended status as of March 30, 1988. Registrations are listed in order of their EPA Registration Numbers and the name of the company to which the registration is assigned in EPA's files; the date on which suspension became effective is also provided. Product names are not given, because such label names are often changed by registrants, and any listing would be incomplete.

CHLORDANE SUSPENSIONS

Company	EPA Registration No.	Effective Date
Van Waters & Rogers, Inc.	550-106	7/18/87
	550-107	7/18/87
Chapman Chemical Company.	1022-502	7/15/87
Vaccinel Chemical Company Incorporated.	1353-4	7/15/87
AMVAC Chemical Corporation.	5481-223	7/17/87
	5481-226	7/17/87
	5481-50	7/17/87
	5481-315	7/17/87
Carolina Chemical Corporation.	5797-88	7/15/87
Black Leaf Products Company.	5887-67	7/16/87
	5887-127	7/16/87
U.S. Marketing Distributors.	6409-13	10/21/87
Southern Mill Creek Products Company.	6720-2	7/15/87
	6720-71	7/15/87
	6720-138	7/15/87
	6720-176	7/15/87
	6720-260	7/15/87
	6720-361	7/15/87
	6720-363	7/15/87
Dettlebach Pesticide Corporation.	6754-9	7/15/87
	6754-11	7/15/87
	6754-40	7/15/87
	6754-64	7/15/87

CHLORDANE SUSPENSIONS—Continued

Company	EPA Registration No.	Effective Date
Mystic Chemical Products.	36272-3	7/15/87

HEPTACHLOR SUSPENSIONS

Company	EPA Registration No.	Effective Date
Southern Mill Creek Products Company.	6720-279	7/12/87
Dettlebach Pesticide Corporation.	6754-5	7/15/87
	6754-40	7/15/87
	6754-54	7/15/87
	6754-64	7/15/87

III. Judgment and Order of the United States District Court for the District of Columbia

On February 23, 1988, Judge Louis F. Oberdorfer of the United States District Court for the District of Columbia issued the following Judgment and Order in the case of National Coalition Against the Misuse of Pesticides, *et al.*, plaintiffs, v. United States Environmental Protection Agency, *et al.*, defendants, (Civil Action No. 87-2089-LFO).

Judgment and Order

On October 1, 1987, the United States Environmental Protection Agency ("EPA") entered into a supplemental agreement with Velsicol Chemical Corporation ("Velsicol"), the sole manufacturer of chlordane and heptachlor, providing that sale and use of existing stocks of those products registered to Velsicol will cease on or before April 15, 1988. The October 1 agreement did not address existing stocks of Velsicol manufactured chlordane and heptachlor that was registered to others. On January 11, 1988, this court granted in part plaintiffs' motion for summary judgment, ruling that "EPA" policy of exchanging use authorization on existing stocks for voluntary cancellations from non-Velsicol reformulator registrants does not satisfy the agency's obligation under 7 U.S.C. 136d(a)(1)." Memorandum of January 11, 1988 at 6. The Court ordered EPA to make and submit to the Court a reasoned finding, supported by evidence, as to whether the continued sale and use of existing stocks of non-Velsicol registered, reformulated chlordane and heptachlor is not inconsistent with the purposes of [FIFRA] and will not have unreasonable adverse effects on the environment,' pursuant to 7 U.S.C. 136d(a)(1) * * *.

Order of January 11, 1988 at 1. Defendant subsequently submitted a response to that Order, plaintiffs responded to defendants' response, and further oral argument was held on February 12, 1988.

The Court has considered the briefs and oral argument of the parties and has reviewed and considered the other submissions of the parties including the administrative record and affidavit testimony. There is no genuine issue of material fact so that plaintiffs are entitled to summary judgment as a matter of law on the issue of the continued sale and use of existing stocks of chlordane and heptachlor termiticide products, which are the subject of voluntary cancellations.

In connection with cancellations of one or more uses of pesticide, including voluntary cancellations, section 6(a)(1) of the Federal Insecticide, Fungicide and Rodenticide Act ("FIFRA"), 7 U.S.C. 136d(a)(1), requires EPA to permit continued sale or use of existing stocks only "to such extent, under such conditions, and for such uses" which the Administrator determines are "not inconsistent with the purposes of [FIFRA] and will not have unreasonable adverse effects on the environment." FIFRA defines "unreasonable adverse effects on the environment" to mean "any unreasonable risk to man or the environment, taking into account the economic, social, and environmental costs and benefits of the use of any pesticide." FIFRA sec. 2(bb), 7 U.S.C. 136(bb).

An adequate sec. 6(a)(1) determination must analyze the risks and benefits from the sale and use of existing stocks and determine whether or not such sale and use would be consistent with FIFRA and whether or not such sale and use would pose any unreasonable risk to man or the environment. *See* 7 U.S.C. 136(bb). Instead, defendants found only that the settlement agreement permitting the use of existing stocks would result in less use (and therefore less risk) than would a proceeding to cancel the pesticide's registration without a suspension of the registration during the proceeding.[1] This finding does not meet the requirements of sec. 6(a)(1).

What the defendants have done here is indistinguishable in principle from the action of the Secretary of Commerce, recently condemned by our Court of Appeals in *Kokechik Fishermen's Association v. Secretary of Commerce*, No. 87-5239, slip op. (D.C. Cir. Feb. 16, 1988). There, the Secretary issued a permit to Japanese fishermen to take northern fur seals even though he could not make, or had not made, a finding, required by statute, as to whether the particular seal population was within its optimum sustainable level. *Id.* at 12-13. Nonetheless, the Secretary "issued the permit taking the position that as long as it did not *authorize* the taking of northern fur seals he had complied with the [relevant statute]." *Id.* at 13 (emphasis added). Said the Court of Appeals, however, "[t]he result was, in effect, that the permit allowed the Federation to take protected marine mammals for a price—the civil penalties imposed for such takings * * * This is a result that the [relevant statute] does not countenance." *Id.*

So here defendants, without making a required finding that sale and use of existing chlordane stocks will not unreasonably endanger man or the environment, have allowed the continued sale and current use of these stocks for a price—i.e., conditional suspension of production and suspension of some prospective distribution from existing stocks by chlordane registrants. This, FIFRA does not countenance.

Furthermore, defendants have not addressed the appropriate relevant factors, and have not adequately supported or rationally justified a determination that the continued sale or use of existing stocks permitted in the October 1, 1987 and the other chlordane and heptachlor voluntary cancellations is consistent with the purposes of FIFRA and would not have unreasonable adverse effects on man or the environment, within the meaning of FIFRA.

The Court has not overlooked EPA's expressed concern about the "possibility" that invalidation of the existing stocks concession for chlordane registrants "could constitute a basis on the part of Velsicol and the other registrants to void the August agreement as well as the voluntary cancellations." Defendants' Response to Plaintiffs' Revised Proposed Judgment and Order (filed Feb. 23, 1988) at 3 n.l. There will be time enough to deal with such a hypothetical situation when, and if, it materializes.

Accordingly, it is this 23rd day of February, 1988, hereby:

Adjudged and Declared: That defendants' decision to permit continued sale and use of existing chlordane and heptachlor stocks which are the subject of voluntary cancellation in the absence

[1] The defendants determined that a suspension was not justified.

of the finding required by sec. 6(a)(1) is arbitrary, capricious, and an abuse of discretion; and it is further;

Adjudged and Declared: That the provisions of any agreement entered into by defendants (and only such provisions) permitting the continued sale and use of existing chlordane and heptachlor stocks which are the subject of voluntary cancellations including, but not limited to, the provisions of the October 1, 1987 "Order Accepting Voluntary Cancellation and Authorizing Use of Existing Stocks with Limitations," made in accordance with the Supplemental Memorandum of Understanding with Velsicol Chemicals Corporation, are contrary to law; and it is further;

Adjudged and Declared: That the defendants' decision to permit sale or commercial use and commercial application (as distinguished from household and homeowner use and application) of existing stocks which have been the subject of voluntary cancellations is contrary to law; and it is further;

Ordered and Adjudged: That the defendants shall; on or before April 15, 1988, take whatever action is necessary to conform to, and to enforce, the requirements of the law as declared in this Judgment and Order so that on and after April 15, 1988, sales, commercial use and commercial application of existing stocks of chlordane and heptachlor which have been the subject of voluntary cancellations shall cease; and it is further;

Ordered: That plaintiffs' motion for partial summary judgment is, to the extent theretofore stated, *Granted;* and it is further;

Ordered: That defendants' motion for summary judgment is *Denied;* and it is further;

Ordered: That there being no just reason for delay in the entry of this Order as a Judgment, and in order to permit its review by the Court of Appeals, the Clerk of Court shall, pursuant to F.R. Civ. P. 54(b), enter this Judgment and Order forthwith in favor of plantiffs; and it is further;

Ordered: That on March 21, 1988, at 9:00 a.m., there will be a status call to schedule further proceedings on unresolved issues, including the disposition of existing stocks derived from suspended, as distinguished from voluntarily cancelled, registrations.

Louis F. Oberdorfer,

United States District Judge.

Some of the registrations listed in Unit II of this Notice may be voluntarily cancelled subsequent to publication of this Notice in the **Federal Register**. The status of these registrations can be checked by contacting Mr. George LaRocca, the information contact person for this action, at the address and telephone number provided at the outset of this Notice.

Dated: April 5, 1988.

John A. Moore,

Assistant Administrator for Pesticides and Toxic Substances.

[FR Doc. 88-7800 Filed 4-6-88; 10:51 am]

BILLING CODE 6560-50-M

BEST COPY AVAILABLE

VOL
53

ISS
68

AP
8

1988

UMI

federal register

Friday
April 8, 1988

Part V

The President

Proclamation 5789—National Student-Athlete Day, 1988

Proclamation 5790—Dennis Chavez Day, 1988

Proclamation 5791—National Productivity Improvement Week, 1988

VOL
53

ISS
68

AP
8

1988

UMI

Federal
Vol. 53,
Friday, A

Title 3-

The P

[FR Doc. 8
Filed 4-7-
Billing cod

Federal Register
Vol. 53, No. 68
Friday, April 8, 1988

Presidential Documents

Title 3—

The President

Proclamation 5789 of April 6, 1988

National Student-Athlete Day, 1988

By the President of the United States of America

A Proclamation

The American people in recent years have recognized the need for a return to solid educational achievement in our schools and colleges. Parents, educators, and students realize the lasting value of an education that imparts thorough skills in reading comprehension, composition, and mathematics and that provides a fundamental understanding of our country's heritage of liberty and of the entire body of wisdom and knowledge to which our civilization is heir. One of the many beneficial results of this focus on sound education is a reemphasis on the role of academic life for our Nation's student athletes.

For decades, we have cheered our high school and college athletes as they have played the sports our country loves. Sometimes lost in "the tumult and the shouting," however, is the realization that, of every 10,000 student athletes, only one ever becomes a professional athlete; that the one who does so can expect a professional career of less than 4 years; and that the other 9,999 must rely for a living not on their athletic skills but on their educational background and a truly worthwhile academic degree.

We rightly support and salute our student athletes for their accomplishments on the diamond, the gridiron, the hardwood, the track, and every sort of playing field; but we must also do the same for athletes and all students for what they accomplish in the classroom as well. Parents, teachers, and coaches fulfill their obligations to student athletes by expecting and by fostering the high academic performance that is everyone's key to a bright, rather than a blighted, future. That is something for all of us to remember and to act upon, on National Student-Athlete Day and always.

The Congress, by House Joint Resolution 513, has designated April 6, 1988, as "National Student-Athlete Day" and authorized and requested the President to issue a proclamation in observance of this event.

NOW, THEREFORE, I, RONALD REAGAN, President of the United States of America, do hereby proclaim April 6, 1988, National Student-Athlete Day, and I call upon the people of the United States to observe this day with appropriate programs, ceremonies, and activities.

IN WITNESS WHEREOF, I have hereunto set my hand this sixth day of April, in the year of our Lord nineteen hundred and eighty-eight, and of the Independence of the United States of America the two hundred and twelfth.

Ronald Reagan

[FR Doc. 88-7908
Filed 4-7-88; 11:21 am]
Billing code 3195-01-M

VOL
53

ISS
68

AP
8

1988

UMI

[FR Doc. 8
Filed 4-7-
Billing cod

Presidential Documents

Proclamation 5790 of April 6, 1988

Dennis Chavez Day, 1988

By the President of the United States of America

A Proclamation

April 8, 1988, is the Centennial Anniversary of the birth of New Mexico's Dennis Chavez, the first native-born Hispanic elected to the United States Senate and for many years the highest-ranking Hispanic in the Federal government. All Americans join the people of the Land of Enchantment and Hispanic Americans throughout our country in saluting the memory of this public servant, who left school as a child to help support his family and went on to become a lawyer, State Representative, U.S. Representative, and U.S. Senator.

Without a high school education, Dennis Chavez served as an interpreter of Spanish during Senator A. A. Jones's successful Senatorial campaign and in 1918 became a Senate clerk. He passed a special entrance examination for Georgetown University Law School and returned to New Mexico to practice law after earning his law degree in 1920. He was a New Mexico State Representative in 1923–24. In 1930 he won a seat in the U.S. House of Representatives, and in 1935 he was appointed to fill a vacancy in the United States Senate. He won election in his own right the next year and was reelected four times; he died in office on November 18, 1962.

As a Senator, Dennis Chavez chaired the Committee on Public Works and served on the Defense Appropriations Subcommittee. He sought the well-being of every American and displayed lasting concern for those in need. Dennis Chavez truly exemplified the dedication of the public servant and won distinction in the service of New Mexico and of his Nation; to this day, his life and career symbolize the countless achievements of Hispanic Americans and demonstrate the opportunity America offers.

The Congress, by Senate Joint Resolution 206, has designated April 8, 1988, as "Dennis Chavez Day" and authorized and requested the President to issue a proclamation in observance of this event.

NOW, THEREFORE, I, RONALD REAGAN, President of the United States of America, do hereby proclaim April 8, 1988, as Dennis Chavez Day. I urge Government agencies and the people of the United States to observe this day with appropriate programs, ceremonies, and activities.

IN WITNESS WHEREOF, I have hereunto set my hand this sixth day of April, in the year of our Lord nineteen hundred and eighty-eight, and of the Independence of the United States of America the two hundred and twelfth.

Ronald Reagan

[FR Doc. 88-7909
Filed 4-7-88; 11:22 am]
Billing code 3195-01-M

VOL
53

ISS
68

AP
8

1988

UMI

Presidential Documents

Proclamation 5791 of April 6, 1988

National Productivity Improvement Week, 1988

By the President of the United States of America

A Proclamation

Our Nation has long enjoyed a high standard of living, thanks especially to our high productivity, which has accounted for about half our economic growth over the last century. Productivity affects our total output of goods and services, helps keep inflation low, and is vital to our ability to compete in U.S. and foreign markets.

Until the mid-1960s, overall U.S. labor productivity grew at a commendable average rate of 3.2 percent each year. But it slowed to under 2 percent in the 1970s, and last year increased by just under 1 percent. Fortunately, productivity in manufacturing continued at a robust rate and increased by 3.3 percent in 1987. However, the rate of growth in the service sector, which accounts for more than 70 percent of U.S. employment, was less than 1 percent in 1987.

We must accelerate productivity growth in the service and other sectors. Good performance in productivity is especially necessary now that we are in world markets for most goods and services, and because many of our foreign competitors can target the U.S. market using state-of-the-art technology.

Government's job is to create a healthy climate in which private sector productivity growth can flourish. We have done this. We have adopted sound policies to reform internal laws, to encourage inventors to create better products and processes, to reduce burdensome regulations, to stimulate investment in research and development, and to strengthen private sector access to federally funded science and technology. These achievements provide a solid foundation for the private sector to build upon.

Our businesses and their individual leaders must continue their efforts to increase productivity by adopting new technologies and management innovations and by better strategic planning in the increasingly competitive international context.

Productivity is now intertwined with quality. To encourage U.S. companies to strengthen their quality, I have endorsed a major initiative, the Malcolm Baldrige National Quality Award, that will honor U.S. manufacturing firms, service companies, and small businesses for improving their goods and services. This initiative pays fitting tribute to a great Secretary of Commerce who fostered improvement during every assignment he took on.

To encourage Americans to understand the importance of productivity growth to their economic welfare, the Congress, by Senate Joint Resolution 223, has designated the week of April 10 through April 16, 1988, as National Productivity Improvement Week and authorized and requested the President to issue a proclamation in observance of this event.

NOW, THEREFORE, I, RONALD REAGAN, President of the United States of America, do hereby proclaim the week of April 10 through April 16, 1988, as National Productivity Improvement Week. I call upon the people of the United States and especially our business leaders, educators, workers, and public officials to observe this week with appropriate ceremonies and activities in a spirit of rededication to improving our Nation's productivity.

IN WITNESS WHEREOF, I have hereunto set my hand this sixth day of April, in the year of our Lord nineteen hundred and eighty-eight, and of the Independence of the United States of America the two hundred and twelfth.

Ronald Reagan

[FR Doc. 88-7910
Filed 4-7-88; 11:23 am]
Billing code 3195-01-M

VOL 53 ISS 68 AP 8 1988 UMI

Rea
INFORM
Federal
Index, f
Public i
Correcti
Docume
Machine
Code o
Index, f
Printing
Laws
Public L
Addition
Preside
Executiv
Public P
Weekly
The Uni
General
Other S
Data ba
Guide to
Legal st
Library
Privacy
Public L
TDD for
FEDERA
10519-10
10869-11
11031-11
11239-11
11487-11
11633-11

Reader Aids

Federal Register
Vol. 53, No. 68
Friday, April 8, 1988

INFORMATION AND ASSISTANCE

Federal Register

Index, finding aids & general information	523-5227
Public inspection desk	523-5215
Corrections to published documents	523-5237
Document drafting information	523-5237
Machine readable documents	523-5237

Code of Federal Regulations

Index, finding aids & general information	523-5227
Printing schedules	523-3419

Laws

Public Laws Update Service (numbers, dates, etc.)	523-6641
Additional information	523-5230

Presidential Documents

Executive orders and proclamations	523-5230
Public Papers of the Presidents	523-5230
Weekly Compilation of Presidential Documents	523-5230

The United States Government Manual

General information	523-5230

Other Services

Data base and machine readable specifications	523-3408
Guide to Record Retention Requirements	523-3187
Legal staff	523-4534
Library	523-5240
Privacy Act Compilation	523-3187
Public Laws Update Service (PLUS)	523-6641
TDD for the deaf	523-5229

FEDERAL REGISTER PAGES AND DATES, APRIL

10519-10868 1
10869-11030 4
11031-11238 5
11239-11486 6
11487-11632 7
11633-11814 8

CFR PARTS AFFECTED DURING APRIL

At the end of each month, the Office of the Federal Register publishes separately a List of CFR Sections Affected (LSA), which lists parts and sections affected by documents published since the revision date of each title.

3 CFR

Proclamations:
5784 10519
5785 10521
5786 10523
5787 11031
5788 11489
5789 11809
5790 11811
5791 11813

Executive Orders:
12634 11041

Administrative Orders:

Memorandums:
Mar. 31, 1988 11039

Presidential Determinations:
No. 88-10 of February 29, 1988 11487

5 CFR

831 11633
842 11633

Proposed Rules:
2431 10885

7 CFR

2 11636
300 10525
400 10526
910 ..... 10527, 11636
946 11043
1032 11637
1064 11590
1126 11638
1421 11239
3600 11639
3601 11639

Proposed Rules:
6 11091
53 10545
54 10545
449 11299
917 11669
949 10887
1030 10894
1106 11092
1497 11474
1498 11474
1530 11098
1700 11511
1701 10545

8 CFR

Proposed Rules:
3 11300
208 11300
236 11300
242 11300
253 11300

9 CFR

77 11491
92 11043

10 CFR

430 10869
1010 11240

Proposed Rules:
2 11310
50 11311

12 CFR

202 11044
205 11046
226 ..... 11047, 11055
265 11640
563 ..... 11242, 11243

14 CFR

Ch. III 11004
39 ..... 11246, 11641-11643
71 ..... 10528, 11020, 11060, 11061
97 11062

Proposed Rules:
27 ..... 10826, 11162
29 ..... 10826, 11162
39 ..... 11674-11676, 11678
71 ..... 10546, 11100, 11101
73 11102

16 CFR

13 11247

17 CFR

30 11491

18 CFR

157 11644

20 CFR

10 11594

Proposed Rules:
10 11596

21 CFR

184 11247
340 11731
510 11492
520 11063
522 ..... 11064, 11493
524 11064
540 11492
558 ..... 11065, 11251
800 11251
803 11251
807 11251
808 11251
809 11251
812 11251
813 11251
820 11251
860 11251

861 ... 11251
862 ... 11645
864 ... 11251
866 ... 11251
876 ... 11251
895 ... 11251
1002 ... 11251
1005 ... 11251
1010 ... 11251
1020 ... 11251
1030 ... 11251
1040 ... 11251
1050 ... 11251
1308 ... 10834, 10861, 10869

Proposed Rules:
133 ... 11312
175 ... 11402
176 ... 11402
177 ... 11402
178 ... 11402
561 ... 11313

22 CFR
120 ... 11494
121 ... 11494
122 ... 11494
123 ... 11494
124 ... 11494
125 ... 11494
126 ... 11494
127 ... 11494
128 ... 11494
514 ... 10528
602 ... 10529

23 CFR
650 ... 11065
771 ... 11065
1204 ... 11255
1205 ... 11255

Proposed Rules:
1309 ... 11679

24 CFR
50 ... 11224
200 ... 11270
203 ... 10529
221 ... 11224
236 ... 11224
241 ... 11224
248 ... 11224

Proposed Rules:
35 ... 11164
200 ... 11164
510 ... 11164
511 ... 11164
570 ... 11164
882 ... 11164
886 ... 11164
941 ... 11164
965 ... 11164
968 ... 11164

25 CFR
61 ... 11271

26 CFR
1 ... 11002, 11066, 11162, 11731
602 ... 11066, 11162, 11731

Proposed Rules:
1 ... 11103

28 CFR
0 ... 10870, 10871, 11645
71 ... 11645

29 CFR
102 ... 10872
1910 ... 11414
2610 ... 10530
2622 ... 10530
2644 ... 10531

Proposed Rules:
516 ... 11590
530 ... 11590
1910 ... 11511
1915 ... 11511
1917 ... 11511
1918 ... 11511

30 CFR
75 ... 11395
250 ... 10596
256 ... 10596
773 ... 11606
934 ... 11500

Proposed Rules:
785 ... 11685
823 ... 11685

31 CFR

Proposed Rules:
103 ... 11513

32 CFR
388 ... 10876

33 CFR
84 ... 10532
100 ... 11502
117 ... 10533, 10534

Proposed Rules:
100 ... 11515
110 ... 11395, 11515
117 ... 11516, 11517

34 CFR
600 ... 11208
657 ... 10820
668 ... 11208

Proposed Rules:
105 ... 10808

38 CFR
36 ... 11502

39 CFR

Proposed Rules:
111 ... 11685

40 CFR
52 ... 11068, 11273, 11655
60 ... 11590
180 ... 11071, 11274

Proposed Rules:
52 ... 11314, 11686, 11688
180 ... 10895
264 ... 11742
265 ... 11742
268 ... 11742
271 ... 11742
761 ... 11104
763 ... 10546
796 ... 11104

41 CFR

Proposed Rules:
201-33 ... 11518

42 CFR
405 ... 11504
416 ... 11504
418 ... 11504
442 ... 11504
482 ... 11504

43 CFR

Proposed Rules:
3160 ... 11318

Public Land Order:
6670 ... 10535

44 CFR
67 ... 11510
80 ... 11275
82 ... 11275
83 ... 11275

Proposed Rules:
61 ... 10547

45 CFR
36 ... 11279
79 ... 11656
96 ... 11656

Proposed Rules:
606 ... 10896

46 CFR
572 ... 11072

Proposed Rules:
Ch. I ... 11440

47 CFR
2 ... 10878
73 ... 11668

Proposed Rules:
Ch. I ... 10549, 10550
73 ... 10905, 11690

48 CFR
15 ... 10828
31 ... 10828
52 ... 10828
215 ... 11073
227 ... 10780
242 ... 11073
252 ... 10780, 11073

Proposed Rules:
43 ... 11795
47 ... 11795
52 ... 11795
916 ... 11318
931 ... 11318
952 ... 11318
1505 ... 11519
1506 ... 11519

49 CFR
533 ... 11074
571 ... 11280
1160 ... 10536

Proposed Rules:
171 ... 11320
173 ... 11320
177 ... 11618
192 ... 10906
571 ... 11105
840 ... 11520

50 CFR
17 ... 10879, 11609, 11612
285 ... 11510
301 ... 10536
672 ... 11297

Proposed Rules:
644 ... 11321

LIST OF PUBLIC LAWS

Note: No public bills which have become law were received by the Office of the Federal Register for inclusion in today's **List of Public Laws**.

Last List April 6, 1988

VOL 53 ISS 68 APR 8 1988 UMI

..... 11297

..... 11321

LAWS

which
ore
e of the
inclusion
blic

ss

VOL
53
ISS
68
AP
8
1988
UMI

VOL
53

ISS
69

AP
11

1988

UMI

4-11-8
Vol. 53

United
Govern
Printing
SUPERINT
OF DOCU
Washingto

OFFICIAL
Penalty for

4-11-88
Vol. 53 No. 69

federal register

Monday
April 11, 1988

United States
Government
Printing Office
SUPERINTENDENT
OF DOCUMENTS
Washington, DC 20402

OFFICIAL BUSINESS
Penalty for private use, $300

**********5-DIGIT 48106

A FR SERIA300S NOV 88 R
SERIALS PROCESSING
UNIV MICROFILMS INTL
300 N ZEEB RD
ANN ARBOR MI 48106

SECOND CLASS NEWSPAPER
Postage and Fees Paid
U.S. Government Printing Office
(ISSN 0097-6326)

VOL
53

ISS
69

AP
11

1988

UMI

4-11-
Vol. 5
Pages

4-11-88
Vol. 53 No. 69
Pages 11815-11990

federal register

Monday
April 11, 1988

Briefings on How To Use the Federal Register—
For information on briefings in Washington, DC, and Boston, MA, see announcement on the inside cover of this issue.

BEST COPY AVAILABLE

FEDERAL REGISTER Published daily, Monday through Friday, (not published on Saturdays, Sundays, or on official holidays), by the Office of the Federal Register, National Archives and Records Administration, Washington, DC 20408, under the Federal Register Act (49 Stat. 500, as amended; 44 U.S.C. Ch. 15) and the regulations of the Administrative Committee of the Federal Register (1 CFR Ch. I). Distribution is made only by the Superintendent of Documents, U.S. Government Printing Office, Washington, DC 20402.

The **Federal Register** provides a uniform system for making available to the public regulations and legal notices issued by Federal agencies. These include Presidential proclamations and Executive orders and Federal agency documents having general applicability and legal effect, documents required to be published by act of Congress and other Federal agency documents of public interest. Documents are on file for public inspection in the Office of the Federal Register the day before they are published, unless earlier filing is requested by the issuing agency.

The **Federal Register** will be furnished by mail to subscribers for $340.00 per year, or $170.00 for 6 months in paper form, or $188.00 per year, or $94.00 for six months in microfiche form, payable in advance. The charge for individual copies is $1.50 for each issue, or $1.50 for each group of pages as actually bound. Remit check or money order, made payable to the Superintendent of Documents, U.S. Government Printing Office, Washington, DC 20402, or charge to your GPO Deposit Account or VISA or Mastercard.

There are no restrictions on the republication of material appearing in the **Federal Register**.

How To Cite This Publication: Use the volume number and the page number. Example: 52 FR 12345.

SUBSCRIPTIONS AND COPIES

PUBLIC

Subscriptions:

Paper or fiche	202-783-3238
Magnetic tapes	275-3328
Problems with public subscriptions	275-3054

Single copies/back copies:

Paper or fiche	783-3238
Magnetic tapes	275-3328
Problems with public single copies	275-3050

FEDERAL AGENCIES

Subscriptions:

Paper or fiche	523-5240
Magnetic tapes	275-3328
Problems with Federal agency subscriptions	523-5240

For other telephone numbers, see the Reader Aids section at the end of this issue.

THE FEDERAL REGISTER
WHAT IT IS AND HOW TO USE IT

FOR: Any person who uses the Federal Register and Code of Federal Regulations.

WHO: The Office of the Federal Register.

WHAT: Free public briefings (approximately 3 hours) to present:
1. The regulatory process, with a focus on the Federal Register system and the public's role in the development of regulations.
2. The relationship between the Federal Register and Code of Federal Regulations.
3. The important elements of typical Federal Register documents.
4. An introduction to the finding aids of the FR/CFR system.

WHY: To provide the public with access to information necessary to research Federal agency regulations which directly affect them. There will be no discussion of specific agency regulations.

WASHINGTON, DC

WHEN: April 15; at 9:00 a.m.
WHERE: Office of the Federal Register, First Floor Conference Room, 1100 L Street NW., Washington, DC
RESERVATIONS: Carolyn Payne, 202-523-3187

BOSTON, MA

WHEN: April 19; at 9 a.m.
WHERE: Thomas P. O'Neill, Jr. Federal Building, Auditorium, 10 Causeway Street, Boston, MA.
RESERVATIONS: Call the Boston Federal Information Center, 617-565-8123

Contents

Federal Register
Vol. 53, No. 69
Monday, April 11, 1988

Administrative Conference of the United States
NOTICES
Meetings:
Ethics in Government Special Committee and Rulemaking Committee, 11892

Agency for International Development
PROPOSED RULES
Housing guaranty standard terms and conditions, 11872

Agricultural Marketing Service
RULES
Limes grown in Florida, 11830
Pears, plums, and peaches grown in California, 11832
PROPOSED RULES
Peaches grown in Georgia, 11867

Agriculture Department
See Agricultural Marketing Service; Animal and Plant Health Inspection Service

Alcohol, Drug Abuse, and Mental Health Administration
NOTICES
Federal workplace drug testing programs; mandatory guidelines, 11970

Animal and Plant Health Inspection Service
RULES
Plant-related quarantine, domestic:
Varroa mite, 11825

Army Department
See Engineers Corps

Arts and Humanities, National Foundation
See National Foundation on the Arts and the Humanities

Civil Rights Commission
NOTICES
Meetings; State advisory committees:
New York, 11892
Washington, 11892

Commerce Department
See Minority Business Development Agency; National Oceanic and Atmospheric Administration

Committee for the Implementation of Textile Agreements
NOTICES
Cotton, wool, and man-made textiles:
Sri Lanka, 11895

Copyright Royalty Tribunal
NOTICES
Cable royalty fees:
Distribution proceedings, 11895

Defense Department
See also Defense Logistics Agency; Engineers Corps
NOTICES
Agency information collection activities under OMB review, 11896
(3 documents)
Military family housing pilot program, 11897

Defense Logistics Agency
NOTICES
Privacy Act:
Computer matching program, 11898

Drug Enforcement Administration
NOTICES
Applications, hearings, determinations, etc.:
Applied Science Laboratories, 11918
Arenol Chemical Corp., 11919
(2 documents)
Watts, Bobby, M.D., 11919

Education Department
RULES
Family educational rights and privacy, 11942

Employment and Training Administration
NOTICES
Adjustment assistance:
Murata Erie North America, Inc., et al., 11920
Sealed Power Corp., 11921

Energy Department
See also Federal Energy Regulatory Commission
NOTICES
Atomic energy agreements; subsequent arrangements, 11900, 11901
(2 documents)
Environmental statements; availability, etc.:
Tonawanda and Albany, NY, 11901

Engineers Corps
NOTICES
Environmental statements; availability, etc.:
Mississippi River-Gulf Outlet new lock and connecting channels, LA, 11900

Environmental Protection Agency
RULES
Air quality implementation plans; approval and promulgation; various States:
Connecticut, 11847
PROPOSED RULES
Pesticides; tolerances in food, animal feeds, and raw agricultural commodities:
(2-Chloroethyl)trimethylammonium chloride, etc.
Correction, 11938
3,5,-Dichloro-N-(1, 1-dimethyl-2-propynyl)benzamide
Correction, 11938
Ethephon
Correction, 11938
Superfund program:
Hazardous substances; reportable quantity adjustments, 11890
Hazardous substances; reportable quantity adjustments and delisting, 11889

NOTICES
Pesticide programs:
Special review—
Alachlor; correction, 11938
Pesticides; emergency exemptions, etc.:
Dinoseb; correction, 11938
Thiophanate-methyl; correction, 11938
Pesticides; receipts of State registration; correction, 11938
Toxic and hazardous substances control:
Premanufacture notices receipts; correction, 11939

Equal Employment Opportunity Commission
NOTICES
Minorities and women in corporate America; hearings, 11907

Executive Office of the President
See Trade Representative, Office of United States

Federal Aviation Administration
RULES
Airworthiness directives:
Beech, 11837
Textron Lycoming, 11838
Control zones, 11839
Transition areas; correction, 11840, 11841
(2 documents)
PROPOSED RULES
Airworthiness directives:
British Aerospace, 11871
Special conditions-
Fairchild Models SA 227-CC, SA 227-DC, and SA 228-AE airplanes, 11869
Rulemaking petitions; summary and dispostion, 11868
NOTICES
Exemption petitions; summary and disposition, 11929
Organization, functions, and authority delegations:
LaCrosse, WI, 11929
Zanesville, OH, 11929

Federal Communications Commission
RULES
Communications equipment:
Radio frequency devices; control and security alarm devices, 11861
Practice and procedure:
Common carriers—
Formal complaint procedures, 11851
Radio services, special:
Private operational-fixed microwave service—
Multiple address system operations, 11855
Public safety services, national plan; frequencies assignment, regional public safety plans development, etc., 11849
Television stations; table of assignments:
California, 11863

Federal Deposit Insurance Corporation
NOTICES
Meetings; Sunshine Act, 11936
(3 documents)

Federal Emergency Management Agency
NOTICES
Agency information collection activities under OMB review, 11908
(2 documents)

Federal Energy Regulatory Commission
RULES
Natural gas companies (Natural Gas Act):
Sales and purchases abandonment under expired, terminated, or modified contracts; rehearing granted, 11845
NOTICES
Electric rate, small power production, and interlocking directorate filings, etc.:
Niagara Mohawk Power Corp. et al., 11904
Environmental statements; availability, etc.:
Independent power producers, etc., and scoping sessions, 11906
Natural gas certificate filings:
Southern Natural Gas Co. et al., 11906

Federal Highway Administration
PROPOSED RULES
Engineering and traffic operations:
Highways; pavement policy, 11875

Federal Home Loan Bank Board
NOTICES
Self-regulatory organizations; unlisted trading privileges:
Cincinnati Stock Exchange, 11908
Midwest Stock Exchange, Inc., 11909
Philadelphia Stock Exchange, 11909
Applications, hearings, determinations, etc.:
Central Savings & Loan Association, 11910
Cherokee Federal Savings Bank, 11910

Federal Maritime Commission
NOTICES
Agreements filed, etc., 11910
Freight forwarder licenses:
Bernard Lang & Co., Inc., et al., 11910
Willis, Lana Davault, et al., 11910

Federal Reserve System
RULES
Availability of funds and collection of checks (Regulation CC):
Expedited Funds Availability Act; implementation, 11832
NOTICES
Expedited Funds Availability Act; implementation:
Federal Reserve bank services for check collection and return, 11960
Federal Reserve Bank services; fee schedules and pricing principles:
Private sector presentment, 11911

Federal Retirement Thrift Investment Board
RULES
Conflict of interests, 11815
PROPOSED RULES
Sunshine Act; implementation, 11864

Financial Management Service
See Fiscal Service

Fiscal Service
NOTICES
Surety companies acceptable on Federal bonds:
American Surety Co., 11935

VOL 53 ISS 69 APR 11 1988 UMI

Fish and Wildlife Service
NOTICES
Comprehensive conservation plan/environmental statements; availability, etc.:
Alaska Maritime Wildlife Refuge, AK, 11914
Endangered and threatened species permit applications, 11915
(2 documents)

Food and Drug Administration
NOTICES
Medical devices; premarket approval:
MicroScan Rapid Panels, 11914
Meetings:
Consumer information exchange; correction, 11939

General Services Administration
RULES
Federal property management:
Supply and procurement—
Miscellaneous amendments, 11847
Transportation and traffic management—
Carrier contractors use for express small package transportation, 11849

Health and Human Services Department
See Alcohol, Drug Abuse, and Mental Health Administration; Food and Drug Administration

Interior Department
See Fish and Wildlife Service; Land Management Bureau; National Park Service; Surface Mining Reclamation and Enforcement Office

Internal Revenue Service
PROPOSED RULES
Income taxes:
Employee pension benefit plans; continued accruals beyond normal retirement age, 11876

International Development Cooperation Agency
See Agency for International Development

International Trade Commission
NOTICES
Import investigations:
Antifriction bearings (other than tapered roller bearings) and parts from West Germany, France, Italy, Japan, Romania, Singapore, Sweden, Thailand, and the United Kingdom, 11917

Interstate Commerce Commission
NOTICES
Railroad services abandonment:
CSX Transportation, Inc., 11918
Southern Railway Co., 11918

Justice Department
See Drug Enforcement Administration

Labor Department
See Employment and Training Administration; Pension and Welfare Benefits Administration

Land Management Bureau
NOTICES
Realty actions; sales, leases, etc.:
Idaho, 11915

Libraries and Information Science, National Commission
NOTICES
Meetings; Sunshine Act, 11937

Minority Business Development Agency
NOTICES
Business development center program applications:
Virginia, 11892

National Commission on Libraries and Information Science
See Libraries and Information Science, National Commission

National Foundation on the Arts and the Humanities
NOTICES
Meetings:
Arts and Artifacts Indemnity Panel, 11922
Music Advisory Panel, 11922

National Oceanic and Atmospheric Administration
NOTICES
Coastal zone management programs and estuarine sanctuaries:
State programs—
New York, 11893, 11894
(2 documents)
Puerto Rico, 11893
Permits:
Marine mammals, 11894

National Park Service
NOTICES
Agency information collection activities under OMB review, 11916
Environmental statements; availability, etc.:
Gates of the Arctic National Park and Preserve, AK, 11916

Nuclear Regulatory Commission
NOTICES
Environmental statements; availability, etc.:
Commonwealth Edison Co., 11922
Wisconsin Electric Power Co., 11923
Reports; availability, etc.:
Naturally occurring and accelerator-produced radioactive materials; 1987 review, 11923

Office of United States Trade Representative
See Trade Representative, Office of United States

Peace Corps
NOTICES
Agency information collection activities under OMB review, 11924

Pension and Welfare Benefits Administration
PROPOSED RULES
Employee benefit plans:
Broker-dealers and investment advisors; bonding requirements exemption, 11886
Employee Retirement Income Security Act; fiduciary responsibility:
Loans; plan participants and beneficiaries who are parties in interest, 11886

NOTICES
Meetings:
Employee Welfare and Pension Benefits Plans Advisory Council, 11921

Public Health Service
See Alcohol, Drug Abuse, and Mental Health Administration; Food and Drug Administration

Research and Special Programs Administration
NOTICES
Hazardous materials:
Applications; exemptions, renewals, etc., 11930

Securities and Exchange Commission
RULES
Securities:
Prospectus delivery for aftermarket transactions, 11841
NOTICES
Applications, hearings, determinations, etc.:
United Services Life Insurance Co., 11925

Small Business Administration
NOTICES
Meetings:
Presidential Advisory Committee on Small and Minority Business Ownership, 11928
Applications, hearings, determinations, etc.:
First New England Capital L.P., 11928

State Department
NOTICES
Meetings:
Shipping Coordinating Committee, 11928

Surface Mining Reclamation and Enforcement Office
PROPOSED RULES
Permanent program and abandoned mine land reclamation plan submissions:
Ohio, 11887
West Virginia, 11888

Textile Agreements Implementation Committee
See Committee for the Implementation of Textile Agreements

Trade Representative, Office of United States
NOTICES
Committees; establishment, renewal, termination, etc.:
Intergovernmental Policy Advisory Committee, 11924
Investment Policy Advisory Committee, 11924

Transportation Department
See Federal Aviation Administration; Federal Highway Administration; Research and Special Programs Administration

Treasury Department
See Fiscal Service; Internal Revenue Service

United States Information Agency
NOTICES
Meetings:
Public Diplomacy, U.S. Advisory Commission, 11935

Separate Parts in This Issue

Part II
Department of Education, 11942

Part III
Federal Reserve System, 11960

Part IV
Department of Health and Human Services, Alcohol, Drug Abuse, and Mental Health Administration, 11970

Reader Aids
Additional information, including a list of public laws, telephone numbers, and finding aids, appears in the Reader Aids section at the end of this issue.

VOL 53 ISS 69 AP 11 1988 UMI

CFR PARTS AFFECTED IN THIS ISSUE

A cumulative list of the parts affected this month can be found in the Reader Aids section at the end of this issue.

5 CFR
1633 11815
Proposed Rules:
1632 11864

7 CFR
301 11825
911 11830
917 11832
Proposed Rules:
918 11867

12 CFR
229 11832

14 CFR
39 (2 documents) 11837, 11838
71 (3 documents) 11839–11841
Proposed Rules:
Ch. I 11868
21 11869
23 11869
39 11871

17 CFR
230 11841
240 11841

18 CFR
157 11845

21 CFR
561 11938
Proposed Rules:
193 11938

22 CFR
Proposed Rules:
204 11872

23 CFR
Proposed Rules:
625 11875
626 11875

26 CFR
Proposed Rules:
1 11876

29 CFR
Proposed Rules:
2550 11886
2580 11886

30 CFR
Proposed Rules:
935 11887
948 11888

34 CFR
99 11942

40 CFR
52 11847
180 11938
Proposed Rules:
116 11889
117 11889
302 (2 documents) 11889, 11890

41 CFR
101-25 11847
101-40 11849

47 CFR
0 11849
1 11851
2 11855
15 11861
22 11855
73 11863
90 11849
94 11855

VOL
53

ISS
69

AP
11

1988

UMI

Rul

This se
contains
general
of which
the Cod
publishe
U.S.C. 1
The Co
by the
Prices o
first FE
week.

FEDER
INVEST

5 CFR

Standa

AGENCY
Investm

ACTION
commen

SUMMA
Federal
Board (
1633 int
employ
These r
pursuan
May 8, 1
in Gove

DATES:
1988; co
before J

ADDRES
John J. C
Thrift In
St. NW.

FOR FUR
John J. C

SUPPLE
The F
Investm
Pub. L. 9
Employ
1986 (co
8401–84
509, the
Act of 1
Employ
Technic
the Fede
System
1987, to
Plan for
of the B
CFR, Ch
Board's
Part 163
honesty

Rules and Regulations

Federal Register
Vol. 53, No. 69
Monday, April 11, 1988

This section of the FEDERAL REGISTER contains regulatory documents having general applicability and legal effect, most of which are keyed to and codified in the Code of Federal Regulations, which is published under 50 titles pursuant to 44 U.S.C. 1510.
The Code of Federal Regulations is sold by the Superintendent of Documents. Prices of new books are listed in the first FEDERAL REGISTER issue of each week.

FEDERAL RETIREMENT THRIFT INVESTMENT BOARD

5 CFR Part 1633

Standards of Conduct

AGENCY: Federal Retirement Thrift Investment Board.

ACTION: Interim rule with request for comments.

SUMMARY: The Executive Director of the Federal Retirement Thrift Investment Board (the Board) is publishing in Part 1633 interim regulations governing employee responsibilities and conduct. These regulations are being issued pursuant to Executive Order 11222 of May 8, 1965, as amended, and the Ethics in Government Act of 1978, as amended.

DATES: Interim rules effective April 11, 1988; comments must be received on or before June 10, 1988.

ADDRESS: Comments may be sent to John J. O'Meara, Federal Retirement Thrift Investment Board, 805 Fifteenth St. NW., Washington, DC 20005.

FOR FURTHER INFORMATION CONTACT: John J. O'Meara, (202) 523-6367.

SUPPLEMENTARY INFORMATION:

The Federal Retirement Thrift Investment Board was established by Pub. L. 99-335 (June 6, 1986), the Federal Employees' Retirement System Act of 1986 (codified principally at 5 U.S.C. 8401-8479), as amended by Pub. L. 99-509, the Omnibus Budget Reconciliation Act of 1986, Pub. L. 99-556, the Federal Employees' Retirement System Technical Corrections Act of 1986, and the Federal Employees' Retirement System Technical Corrections Act of 1987, to administer the Thrift Savings Plan for federal employees. Regulations of the Board are contained in Title 5, CFR, Chapter VI, Parts 1600-1699. The Board's regulations published in this Part 1633 govern the standards of honesty, integrity, impartiality, and conduct of government employees and special government employees who are employed by the Board.

Regulatory Flexibility Act

I certify that these regulations will not have a significant economic impact on a substantial number of small entities. They will affect only persons who work for the Board as government employees and special government employees.

Paperwork Reduction Act

I certify that these regulations do not require additional reporting under the criteria of the Paperwork Reduction Act of 1980.

Waiver of Notice of Proposed Rulemaking and 30-day Delay of Effective Date

Under 5 U.S.C. 553 (b)(B) and (d)(3), I find that good cause exists for waiving the general notice of proposed rulemaking and for making these regulations effective in less than 30 days. The Board, as a new agency, has begun operations and it is necessary for these standards of conduct to be in place for the direction and guidance of its employees.

List of Subjects in 5 CFR Part 1633

Conflicts of interest, Ethical conduct, Financial disclosure, Government employees, Political activities.

Federal Retirement Thrift Investment Board.

Francis X. Cavanaugh,

Executive Director.

Title 5 of the Code of Federal Regulations is amended to add Part 1633 to Chapter VI to read as follows:

PART 1633—STANDARDS OF CONDUCT

Subpart A—Regular Employees

General Provisions

Sec.
1633.1 Purpose.
1633.2 Scope.
1633.3 Policy.
1633.4 Definitions.
1633.5 Assignment of responsibilities.
1633.6 Executive Director.
1633.7 The General Counsel.
1633.8 Role of personnel officer.
1633.9 Supervisor.
1633.10 Employees.

Conflicts of Interest

1633.20 General.
1633.21 Summary of provisions of crimal code.

Rules of Conduct

1633.30 Proscribed actions.
1633.31 Political activity.
1633.32 Gifts of gratuities from Government employees.
1633.33 Gifts or gratuities from outside sources.
1633.34 Gifts or gratuities from foreign governments.
1633.35 Outside financial interests.
1633.36 Using official designation.
1633.37 Outside employment and other outside activities.
1633.38 Teaching, writing, lecturing, and speechmaking.
1633.39 Gambling, betting, and lotteries.
1633.40 Use of intoxicants.
1633.41 Indebtedness.
1633.42 Lending or borrowing money.
1633.43 Use of Federal property.
1633.44 Care of documents.
1633.45 Use of Government cars.
1633.46 Disclosure of information to the public.
1633.47 Personal communications.
1633.48 Soliciting, selling and canvassing.
1633.49 Influencing legislation or petitioning Congress.
1633.50 Civil Service examination processes.
1633.51 Falsification of official records.
1633.52 Miscellaneous statutory provisions.
1633.53 General conduct prejudicial to the Government.
1633.54 Insurrection.
1633.55 Strikes.
1633.56 Purchase of Government property.

Statements of Employment and Financial Interests

1633.70 Employees required to submit statements.
1633.71 Employee's complaint on filing requirement.
1633.72 Exceptions.
1633.73 Form and content of statements.
1633.74 Time and place for submission of employees' statements.
1633.75 Supplementary statements.
1633.76 Interests of employees' relatives.
1633.77 Information not known by employees.
1633.78 Information excluded.
1633.79 Review of statements.
1633.80 Confidentiality of employees' statements.
1633.81 Effect of employees' statements on other requirements.

Listing of Employees Who Must File Statements

1633.100 Listing of employees.

Sec.
Subpart B—Preventing Conflicts of Interest on the Part of Special Government Employees of the Board

General Provisions

1633.200 Purpose.
1633.201 Scope.
1633.202 Policy.

General Rules of Conduct Applicable to Special Government Employees

1633.203 Applicability of Subpart A of this part.
1633.204 Use of Government employment.
1633.205 Use of inside information.
1633.206 Teaching, lecturing, and writing.
1633.207 Coercion.
1633.208 Gifts, entertainment, and favors.
1633.209 Miscellaneous statutory provisions.

Conflict of Interest Statutes

1633.210 Applicability of 18 U.S.C. 203 and 205.
1633.211 Applicability of 18 U.S.C. 207.
1633.212 Applicability of 18 U.S.C. 208.

Consultants and Advisers

1633.220 Advice on rules of conduct and conflict of interest statutes.
1633.221 Responsibility of the individual special Government employee.

Procedures To Be Followed Within the Board

1633.230 Information and assistance to special Government employees and their supervisors.
1633.231 Disclosure of financial interests.
1633.232 Service with other Federal agencies.
1633.233 Resolution of cases involving a conflict or apparent conflict of interest.
1633.234 Disciplinary and other remedial action.
1633.235 Legal interpretation.
1633.236 Safeguard of information.

Apendix A to Part 1633—Financial Disclosure

Authority: 5 U.S.C. 8474; 5 U.S.C. App. 4.

Subpart A—Regular Employees

General Provisions

§ 1633.1 Purpose.

This part describes the standards of conduct required of all employees of the Federal Retirement Thrift Investment Board but not Board Members, who are governed by a separate set of regulations found at Part 1634. The regulations in this part implement Office of Personnel Management regulations at 5 CFR Parts 735 and 737. The standards of conduct in this part are not to be considered all-inclusive and may be supplemented to meet specific needs. The absence of a specific published standard of conduct covering an act tending to discredit an employee or the Board does not mean that such an act is condoned, is permissible, or would not call for and result in corrective or disciplinary action.

§ 1633.2 Scope.

This part covers two general types of employment situations as follows:

(a) Subpart A of this part sets the general policy and defines rules of conduct and procedures for all regular employees excluding Board Members.

(b) Subpart B of this part applies to special Government employees, primarily advisers and consultants, excluding Board Members.

§ 1633.3 Policy.

(a) Executive Order 11222 of May 8, 1965, 18 U.S.C. 201 note, states the basic philosophy of conduct for those who carry out the public business:

> Where government is based on the consent of the governed, every citizen is entitled to have complete confidence in the integrity of his government. Each individual officer, employee, or adviser of Government must help to earn and must honor that trust by his own integrity and conduct in all official actions.

(b) Personnel of the Federal Retirement Thrift Investment Board are expected to adhere to the above stated principles and to standards of behavior that will reflect credit on the Government. The Board's position is that of having confidence in its employees and of taking a positive and reasonable approach to the matter of maintaining the high standards of conduct necessary in the transaction of Board activities. A violation of the laws or the rules or regulations on conduct in this part may subject the employee to discipline, or advice regarding other remedial action, in accordance with the gravity of the violation.

(c) Disciplinary action may be in addition to any penalty prescribed by law. Such action may be taken only after consideration of any explanation offered by the employee.

(d)(1) In addition to disciplinary action, remedial action may include, but is not limited to:

(i) Recusal,

(ii) Divestiture, resignation, or reassignment,

(iii) A Qualified Trust established in consultation with the Office of Government Ethics, pursuant to Subpart D of 5 CFR Part 734.

(2) An employee may avoid a violation of 18 U.S.C. 208(a) if he or she receives a waiver pursuant to 18 U.S.C. 208(b).

(e) Remedial action, whether disciplinary or otherwise, shall be effected in accordance with any applicable laws, Executive Orders, and regulations.

§ 1633.4 Definitions.

In this part:

(a) "Board" means the Federal Retirement Thrift Investment Board.

(b) "Executive Director" means the Executive Director of the Federal Retirement Thrift Investment Board, as defined in 5 U.S.C. 8401(13) and as further described in 5 U.S.C. 8474.

(c) "Regular employee" or "employee" means an employee of the Board, but does not include a special Government employee.

(d) "Special Government employee" means an employee of the Board who is retained, designated, appointed, or employed to perform, with or without compensation, temporary duties either on a full-time or intermittent basis, for not more than 130 days during any period of 365 consecutive days.

(e) "Person" means an individual, a corporation, a company, an association, a firm, a partnership, a society, a joint stock company, or any other organization or institution.

(f) "Ethics Officer" means the Assistant Counsel for Administration.

§ 1633.5 Assignment of responsibilities.

The assignment of responsibilities to carry out the provisions of this part is described below in §§ 1633.6 to 1633.10 of this part.

§ 1633.6 Executive Director.

The Executive Director's responsibilities are to (a) issue policy and basic standards of conduct applicable to all Board employees, (b) periodically review the basic standards issued and to review initially and periodically those additional standards issued by the Board, (c) set requirements to ensure that supervisors and employees are aware of the standards of conduct, of their responsibilities in maintaining and adhering to those standards, and of the fact that disciplinary action will be taken in cases of failure to maintain or adhere to them; and (d) establish procedures for furnishing advice to management and to employees on the application of standards of conduct.

§ 1633.7 The General Counsel.

The General Counsel has been designated by the Executive Director as the counselor for the Board on matters covered by the regulations in this part. The General Counsel is responsible for coordination of the counseling service within the Board and for interpretations on questions of conflicts of interest and other matters under this part.

§ 1633.8 Role of personnel officer.

The Board's personnel officer is responsible for providing general guidance and assistance to supervisors

and employees in implementing and adhering to the provisions of the regulations in this part. Where questions arise or where advice is sought by either supervisors or employees which involve either advice or interpretation which is legal in nature, the personnel officer will be responsible for seeing that the advice or interpretation is sought or obtained from the General Counsel or the Ethics Officer, as appropriate.

§ 1633.9 Supervisor.

It is the responsibility of each supervisor to:

(a) Know the standards of conduct,

(b) Advise the employees under his or her supervision or help them obtain advice on the application of the standards of conduct,

(c) Adhere to them,

(d) See that the employees under his or her supervision know and adhere to them also, and

(e) Take or recommend disciplinary action when appropriate in cases where the employees under his or her supervision violate the standards or the principles upon which they are based.

§ 1633.10 Employees.

Each employee of the Board is required to:

(a) Know the standards of conduct and their application in his or her case,

(b) Seek information from his or her supervisor in case of doubt or misunderstanding on the application of the standards of conduct,

(c) Adhere to the standards of conduct, and

(d) Be aware of the consequences of violation of the laws, rules and regulations regarding conduct.

Conflicts of Interest

§ 1633.20 General.

The elimination of conflicts of interest in the Federal service is one of the most important objectives in establishing general standards of conduct. A conflict of interest situation may be defined as one in which a Federal employee's private interest, usually of an economic nature, conflicts or raises a reasonable question of conflict with his public duties and responsibilities. The potential conflict is of concern whether it is actual or only apparent. The rules of the Board concerning conflicts of interest appear in §§ 1633.33–1633.38.

§ 1633.21 Summary of provisions of criminal code.

The following is a brief summary of the provisions of the criminal conflict of interest statutes at Title 18 of the United States Code that define the conflicts of interest subject to fines and imprisonment. It should be noted that in some situations, different restrictions may apply to special Government employees than to regular employees, as discussed in more detail in Subpart B of this part.

(a) *18 U.S.C. 203.* Section 203 prohibits an employee from receiving, agreeing to receive, or asking for (directly or indirectly) any compensation for services, otherwise than as provided by law for the proper discharge of official duties, rendered by the employee or another in relation to any matter in which the United States is a party or has a direct and substantial interest before any department or agency.

(b) *18 U.S.C. 205.* Section 205 prohibits an employee from acting as an agent or attorney in prosecuting any claim against the United States or receiving any share of interest in such claim for assistance in its prosecution, or acting as agent or attorney for anyone before any department or agency in connection with any particular matter in which the United States is a party or has a direct and substantial interest. Sections 203 and 205 do not prohibit a regular Government employee from acting with official approval and with or without compensation as agent or attorney for his parents, spouse, or child, or for any estate for which he is serving as guardian or other fiduciary, with certain exceptions set forth in that section. Section 205 does not prevent an employee, if not inconsistent with the faithful performance of his duties, from acting without compensation as agent or attorney for any person who is the subject of disciplinary, loyalty, or other personnel administration proceeding in connection with such proceeding.

(c) *18 U.S.C. 207(a).* Section 207(a) prohibits a former employee, after his employment has ceased, from knowingly acting as agent or attorney for anyone other than the United States in connection with any particular matter involving a specific party or parties in which the United States has a direct and substantial interest and in which he participated personally and substantially as an employee for the lifetime of the matter.

(d) *18 U.S.C. 207(b).* Section 207(b)(i) prohibits any such former Government employee within two years after the termination of his employment or the termination of his responsibility in a particular area (if the two events do not occur simultaneously) from appearing personally before any court, department, or agency as agent or attorney for anyone other than the United States in connection with any particular matter involving a specific party or parties in which the United States is a party directly and substantially interested and which was under his official responsibility within 1 year prior to the termination of such responsibility.

(e) *18 U.S.C. 208.* Section 208 prohibits any employee from participating personally and substantially as a Government employee through decision, approval, disapproval, recommendation, the rendering of advice, investigation, or otherwise, in a judicial proceeding, application, request for a ruling or other determination, contract, claim, controversy, charge, accusation, arrest, or other particular matter, including general rulemaking, in which, to his knowledge, he, his spouse, minor child, partner, or organization in which he is serving as officer, director, trustee, partner or employee or any person or organization with whom he is negotiating or has any arrangement concerning prospective employment or has a financial interest. An employee may be exonerated from the provisions of this section if he makes full disclosure of the financial interest to the official responsible for his appointment and receives in advance a written determination by that official that the interest is not so substantial as to be likely to affect the integrity of his service.

(f) *18 U.S.C. 209.* Section 209 prohibits any employee from receiving any salary or any contribution to or supplementation of his salary as compensation for his services as an employee from any source other than the Government. This section does not apply to a special Government employee, and does not prevent participation in any bona fide pension, retirement, profit sharing, or other welfare or benefit plan maintained by a former employer. This section also does not prohibit payment or acceptance of certain contributions, awards, or expenses in connection with Government employee training programs or attendance at meetings authorized under 5 U.S.C. 4111.

Rules of Conduct

§ 1633.30 Proscribed actions.

An employee shall avoid any action, whether or not specifically prohibited by this part, which might result in, or create the appearance of:

(a) Using public office for private gain,

(b) Giving preferential treatment to any person,

(c) Impeding Government efficiency or economy,

(d) Losing complete independence or impartiality,

(e) Making a Government decision outside official channels, or

(f) Affecting adversely the confidence of the public in the integrity of the Government.

§ 1633.31 Political activity.

Employees have the right to vote as they may choose and to express their opinions on all political subjects and candidates, but are forbidden to take active part in political management or campaigns (Hatch Act, 5 U.S.C. 7324). Political activity in some local elections is permissible; but before employees engage in such activity, they should familiarize themselves with statutory provisions and the Office of Personnel Management's regulations on this subject (5 U.S.C. 7324–4347 and 5 CFR Part 733). It is unlawful for employees to solicit, receive, or to be concerned with political assessments, subscriptions, or contributions for any political purpose whatever from other employees. (18 U.S.C. 602, 603, 606, 607.) Employees may make voluntary contributions to a regularly constituted political organization for its general expenditures subject to the limitations set forth in 18 U.S.C. 608.

§ 1633.32 Gifts or gratuities from Government employees.

Employees of the Federal Government are prohibited from soliciting contributions from other employees or from making a donation for gifts or presents to persons in superior official positions. Neither may such superiors receive any gift or present offered to them from employees in the Government receiving less salary than themselves (5 U.S.C. 7351). A voluntary gift of nominal value or a donation in a nominal amount may be made for nominal gifts upon retirement or resignation or for expressing condolences in cases of illness or death. Solicitations for such gifts should be limited to employees in the immediate office of the employee concerned and a few close associates with whom he or she has worked. Gifts to recipients should not be in cash, except that small amounts (e.g. under $10) remaining after the purchase of a gift may be included with the gift. Within the foregoing limitations, a cash gift may be made to an employee, with the approval of his/her supervisor, to assist in a catastrophic illness or disaster, provided that these collections are limited to co-workers of approximately equal status to the recipient employee, and to his immediate supervisors.

§ 1633.33 Gifts or gratuities from outside sources.

(a) Except as provided in paragraphs (b) and (c) of this section, an employee shall not solicit or accept, directly or indirectly, any gift, gratuity, favor, entertainment, loan, or any other thing of monetary value from a person who:

(1) Has, or is seeking to obtain, contractual or other business or financial relations with the Board,

(2) Conducts operations or activities that are regulated by the Board, or

(3) Has interests that may be substantially affected by the performance or non-performance of the employee's official duty.

(b) General exceptions to the rule in paragraph (a) of this section are as follows unless otherwise precluded by the Board:

(1) Acceptance of gifts, entertainment, and food is acceptable when the circumstances make it clear that obvious family or personal relationships (such as those between the parents, children or spouse of the employee and the employee) rather than the business of the persons concerned are the motivating factors.

(2) Acceptance of food and refreshments of nominal value on infrequent occasions is permitted when such action occurs in the ordinary course of a luncheon or dinner meeting or other meeting or on an inspection tour when an employee may properly be in attendance.

(3) Acceptance of food and refreshments at widely-attended functions to the extent that:

(i) It is in the Board's interest that the employee attend the event;

(ii) Consideration is given to the timing of the event, the reason for the event, and the individual or entity sponsoring the event in order to ensure that attendance will not create an appearance of impropriety;

(iii) The event is a widely-attended gathering of mutual interest to the government and private sector such as a reception, seminar, conference or training session;

(iv) The food and refreshments offered in conjunction with this event are not excessive;

(v) Approval to attend the event is obtained from the Executive Director (or his designee) after consultation with the Board's Ethics Officer.

(4) Employees may accept loans from banks or other financial institutions on customary terms to finance proper and usual activities of employees, such as home mortgage loans, except where prohibited by law.

(5) Employees may accept unsolicited advertising or promotional material, such as pens, pencils, note pads, calendars, and other items of nominal intrinsic value.

(c) The receipt of payment or reimbursement, by outside sources, for the expenses of travel and subsistence for activities related to Government employment is permitted only in accordance with § 1633.38(c) (2) and (3) of this part.

§ 1633.34 Gifts or gratuities from foreign governments.

The Constitution prohibits employees from accepting from foreign governments, except with the consent of the Congress, presents, emoluments, offices, or titles. The Congress has given its consent in 5 U.S.C. 7342 to the acceptance of certain specified gifts and decorations.

§ 1633.35 Outside financial interests.

An employee shall not participate on a private basis, directly or indirectly, in any financial transaction as a result of, or primarily relying on, confidential information obtained through his employment with the Board. An employee shall not have a direct or indirect financial interest that conflicts substantially, or appears to conflict substantially, with his Government duties and responsibilities.

§ 1633.36 Using official designation.

Employees shall not permit their official position, status, or designation to be used in a manner that is intended to further, or gives the appearance of furthering, the private business interests of the user or any other private interest. See also § 1633.30(a) of this part.

§ 1633.37 Outside employment and other outside activities.

(a) No employee shall engage in any outside employment or other outside activity, with or without compensation, which would be incompatible with Government employment because it would impair the employee's mental or physical capacity and thereby interfere with his or her efficient performance of Government duties, might bring discredit on or cause unfavorable and justifiable criticism of the Government, or might otherwise result in a conflict of interest, or an appearance of conflict of interest, with official duties and responsibilities; nor may an employee accept a fee, compensation or a gift or any other thing of monetary value in circumstances in which acceptance might result in, or create the appearance of, a conflict of interest. Before engaging in outside employment or in an outside

activity, employees shall submit a written request for approval, through any intermediate supervisors, to the appropriate Office Director or, in the case of persons assigned to the General Counsel's Office, to the General Counsel. The written request shall identify the organization, duties, hours of work, and remuneration pertaining to the outside employment or activity. Other restrictions on misuse of Government property, Government title, and official information are found at §§ 1633.36, 1633.43, and 1633.46.

(b) Employees shall not solicit financial aid from or sell tickets to persons outside the Federal government for the benefit of any organization or association comprised of Board employees. No publication of any such organization shall contain any commercial advertising, and the costs of such publications must be wholly paid by the organization or association. Employee organizations and associations may, however, accept financial aid for convention purposes from Boards of Trade, Chambers of Commerce, Convention Bureaus, and other such organizations which hold conventions.

§ 1633.38 Teaching, writing, lecturing, and speechmaking.

(a) Employees may teach, write, lecture, or deliver speeches providing such action is not prohibited by law, E.O. 11222, 5 CFR Part 735, or the regulations in this part. The requirements prescribed in § 1633.37 of this part also apply to engagements to teach, write, lecture, or deliver speeches. However, an employee shall not, either with or without compensation, engage in teaching, writing, lecturing, or speechmaking (including teaching, writing, lecturing, or speechmaking, for the purpose of the special preparation of a person or class of persons for an examination of the Office of personnel Management or Board of Examiners for the Foreign Service) that depends on information obtained as a result of Government employment, except when the information has been made available on request, or when the Ethics Officer gives written authorization for use of nonpublic information on the basis that the use is in the public interest.

(b) A formal speech, a lecture, or an article relating to Board business shall, prior to its release to the public, be submitted to the Executive Director (or to the person designated by the Executive Director).

(c)(1) *Determinations by the Executive Director.* If the subject matter of any teaching, writing, lecturing, or speechmaking activity is devoted to the responsibilities, programs, or activities of the Board or draws upon official data or ideas which have not been made public, the Executive Director (or designee), after requestor consults with the Ethics Officer, will determine whether the activity may be undertaken, and if so, whether as official duty or in a private capacity. In determining whether the activity is an official duty or private undertaking, the Executive Director will consider, among other factors, whether the activity will be performed during official hours, whether Government time or facilities will be utilized, whether the official title of the employee will be used, and whether the activity would justify the expenditure of public funds.

(2) *Activities undertaken as an official duty.* If the activity is undertaken as an official duty, all expenses will be borne by the Board and the employee may not accept any honorarium or other compensation or permit payment of his or her expenses. However, under 5 U.S.C. 4111 and 5 CFR 410.701–410.706, an employee on official duty may accept reimbursement for actual travel and reasonable lodging and subsistence expenses from organizations determined by the Secretary of the Treasury to be tax exempt, as described in 26 U.S.C. 501(c)(3), if no Government payment or reimbursement is made for the expense, and the acceptance of the payment is consistent with the Board policy of eliminating any conflict of interest or appearance of a conflict of interest with his or her official duties and responsibilities.

(3) *Activities undertaken in a private capacity.* (i) The Board discourages employees from receiving honoraria or other compensation for teaching, writing, lecturing, or speechmaking on matters relating to Board business, even though the activity is not performed as an offical duty. An employee may not receive any such compensation unless, before engaging in the activity, a written request is submitted to and approved by the Executive Director (or designee), after the requestor consults with the Ethics Officer. The request should set forth the facts relating to the amount of compensation, its reasonableness (taking into account the amount of compensation paid to others under similar circumstances), and also indicate why its acceptance would be consistent with the Board's policy to eliminate any conflict of interest or appearance of a conflict of interest with the employee's official duties and responsibilities.

(ii) Pursuant to paragraph (c)(3)(i) of this section, employees may accept payment for travel, lodging, and subsistence expenses actually incurred from the person or group sponsoring an activity which was determined not to be an official duty, if the payment is reasonable in amount and is otherwise consistent with the Board's policy to eliminate any conflict of interest or appearance of a conflict of interest with the official duties and responsibilities of the employee.

(4) *Reporting requirements.* All employees receiving compensation or reimbursement for expenses for teaching, writing, lecturing, or speechmaking devoted to the responsibilities, programs of activities of the Board or drawing upon official data or ideas which have not been made public, shall immediately submit a written report to the Executive Director stating the amounts paid and by whom, unless this information was previously provided to that official. In addition, the employee may be required by the Executive Director to furnish other relevant information concerning these payments.

(5) *Other restrictions.* (i) Under 46 Comp. Gen. 689 (1967), no reimbursement or donation may be made to the Board to cover the expenses of travel and subsistence of an employee on official business, unless specifically authorized by law.

(ii) Under 2 U.S.C. 441i, appointed officials are prohibited from receiving honorariums of more than $2,000 for any appearance, speech, or article, and from receiving honorariums aggregating more than $25,000 in any calendar year.

(d) Board employees are prohibited from official attendance at segregated meetings. They should not participate in conferences or speak before audiences where any racial group has been segregated or excluded from the meeting, any of the facilities, the conferences, or from membership in the group.

§ 1633.39 Gambling, betting and lotteries.

While on Government-owned or leased property or while on duty for the Government, an employee shall not participate in any form of gambling, betting, lotteries, or the sending of chain letters, even if such activities are in support of a worthy cause.

§ 1633.40 Use of intoxicants.

Employees must refrain from using intoxicants habitually to excess or in any way which adversely affects their work performance (5 U.S.C. 7352).

VOL 53 ISS 69 AP 11 1988 UMI

§ 1633.41 Indebtedness.

An employee shall pay each just financial obligation in a proper and timely manner, especially one imposed by law such as Federal, State, or local taxes. A "just financial obligation," as used in this section, means one acknowledged by the employee; reduced to judgment by a court; or, in case of taxes, a final administrative determination confirmed by notice of a tax lien issued by a governmental agency, Federal, State, or local. "In a proper and timely manner," as used in this section, means in a manner which the Board determines does not, under the circumstances, reflect adversely on the Board as his employer. In the event of dispute between an employee and an alleged creditor, this section does not require the Board to determine the validity or amount of the disputed debt.

§ 1633.42 Lending or borrowing money.

Employees shall neither directly nor indirectly, lend to or borrow from other employees substantial sums of money. In negotiating loans from authorized sources, such as credit unions, welfare associations, commercial or private banking institutions, etc., if the transaction involves the signature of one or more endorsers or comakers, the borrower must not in any instance solicit, or permit to be affixed to any instrument as endorser or comaker, the signature of any Board employee who is under his or her supervision.

§ 1633.43 Use of Federal property.

Employees may not directly or indirectly use or allow the use of Federal property of any kind for other than officially approved activities. They also have a positive responsibility to protect and conserve all Federal property, including equipment and supplies, which is entrusted or issued to them.

§ 1633.44 Care of documents.

The care of Government documents is a Federal requirement which is regulated by legislation. All records and documents in the custody of employees are in their custody for official purposes only. It is unlawful to remove or conceal, alter, mutilate, obliterate, or destroy records or documents or to remove or attempt to remove them from official custody with the intent of performing any of the above actions (18 U.S.C. 2071). Employees must not remove records and documents from official files without approval from proper authority. Working papers, copies of reports and other official records and documents shall be promptly disposed of when no longer needed for official purposes. Disposal or destruction of records and documents is to be made in accordance with established requirements.

§ 1633.45 Use of Government cars.

Employees are prohibited from using Government cars for other than official purposes. Use of such cars for transportation of employees between their domiciles and places of employment can only be justified where affirmatively authorized by statute, as in 31 U.S.C. 1343 and 1344.

§ 1633.46 Disclosure of information to the public.

Employees may not disclose official information which has not been made available to the general public without either appropriate general or specific authority.

§ 1633.47 Personal communications.

Employees may not conduct personal business while on official duty. Personal use of telephones is restricted to reasonable need. See 41 CFR Part 201–38. Employees who receive personal mail at their office will advise addressors to stop sending such mail to the Board's address.

§ 1633.48 Soliciting, selling, and canvassing.

Except when authorized by the Board, and except as provided by § 1633.33 of this part, employees are prohibited from soliciting, from making collections, from canvassing for the sale of any article, or from distributing literature or advertising matter in any space occupied by the Board.

§ 1633.49 Influencing legislation or petitioning Congress.

Employees are prohibited from using Government time, money, or property (as, for example, through sending telegrams, or letters) to influence a Member of Congress to favor or oppose any legislation. This prohibition does not apply to the official handling through proper channels of matters relating to legislation affecting the Board (18 U.S.C. 1913), or to the rights of employees in their private capacities to petition Members of Congress either individually or collectively or to furnish information to any committee or member of either House of Congress (5 U.S.C. 7102).

§ 1633.50 Civil Service examination processes.

Appointment and future advancement in the Federal career service are based on the important principle of individual merit and qualifications. The selection and merit competitive processes are protected by the Civil Service statutory provisions, 5 U.S.C. Chapter 33 and the Office of Personnel Management (OPM) regulations. Employees shall not, either directly or indirectly:

(a) Intentionally make a false statement or practice any deception or fraud in examination or appointment,

(b) Induce persons to withdraw from competition for competitive service positions,

(c) Engage in any improper activity with respect to the taking of Civil Service examinations and examination ratings, or

(d) Obstruct the right of any person to take examinations according to OPM rules and regulations. See 18 U.S.C. 1917 and 5 CFR 735.210(j).

§ 1633.51 Falsification of official records.

Employees shall avoid making false, misleading, or ambiguous statements, deliberately or willfully, whether verbal or written, in connection with any matter of official interest. Some of these matters of official interest are: Transactions with the public, other Federal agencies or fellow employees; application forms and other forms which serve as a basis for appointment, reassignment, promotion or other personnel actions; vouchers; leave records; work reports of any nature or accounts of any kind; affidavits, entry or record of any matter relating to or connected with the employee's duties; and report of any moneys or securities received, held or paid to, for or on behalf of the United States. See 18 U.S.C. 1001 and 5 CFR 735.210(k).

§ 1633.52 Miscellaneous statutory provisions.

The attention of every employee is directed to the statutes relating to conduct listed below:

(a) The prohibitions against (1) embezzlement of Government money or property (18 U.S.C. 641); (2) failing to account for public money (18 U.S.C. 643) and (3) embezzlement of the money or property of another person in the possession of an employee by reason of his employment (18 U.S.C. 654).

(b) House Concurrent Resolution 175, 85th Congress, 2d Session, 72 Stat. B12, the "Code of Ethics for Government Service" (5 U.S.C. 7301 note).

(c) Section 8477 of Title 5, U.S.C. which describes fiduciary responsibilities, liability, and penalties.

(d) Chapter 11 of Title 18, U.S.C. relating to bribery, graft, and conflicts of interest as appropriate to the employees concerned.

(e) The prohibition against the misuse of the franking privilege (18 U.S.C. 1719).

(f) The prohibition against counterfeiting and forging transportation requests (18 U.S.C. 508).

(g) The prohibition against unauthorized use of documents relating to claims from or by the Government (18 U.S.C. 285).

(h) The prohibitions against the employment of a member of a Communist organization (50 U.S.C. 784).

(i) The prohibition against an employee acting as the agent of a foreign principal registered under the Foreign Agents Registration Act (18 U.S.C. 219).

(j) The prohibition against Federal employment of any person convicted of a felony in furtherance of, or while participating in, a riot or civil disorder (5 U.S.C. 7313).

(k) The tax imposed on certain employees (e.g., Presidential appointees, employees excepted under Schedule C, employees whose compensation is equal to or greater than that for GS–16, or executive assistants or secretaries to any of the foregoing) who knowingly engage in self-dealing with a private foundation (26 U.S.C. 4941, 4946). "Self-dealing" is defined in the statute to include certain transactions involving an employee's receipt of compensation or other benefits such as a loan, or reimbursement for travel or other expenses from, or his sale to or purchase of property from a private foundation.

(l) The prohibition against a public official appointing or promoting a relative, or advocating such an appointment or promotion (5 U.S.C. 3110).

§ 1633.53 General conduct prejudicial to the Government.

An employee shall not engage in criminal, infamous, dishonest, immoral, or notoriously disgraceful conduct, or other conduct prejudicial to the government.

§ 1633.54 Insurrection.

Employees may be disqualified for employment for knowingly supporting or advocating the violent overthrow of our constitutional form of government.

§ 1633.55 Strikes.

Employees shall not strike against the Government (5 U.S.C. 7311).

§ 1633.56 Purchase of Government property.

Employees are prohibited from either directly or indirectly, bidding or purchasing at any sale of Government property under the direction or incident to the functions of the Board. Government property under the control of the Board shall not be sold to a Government employee, either directly or indirectly, unless a properly authorized representative of the office disposing of the property has determined that the sale is in the best interest of the Government. Before purchasing any Government property from any agency of the Government, either directly or indirectly, employees of the Board shall make known to the disposing agency that they are such employees and shall be governed by the disposing agency's rules relating to sales to Government employees.

Statement of Employment and Financial Interests

§ 1633.70 Employees required to submit statements.

Except as provided in § 1633.72, statements of employment and financial interests will be filed by the following employees:

(a) Those paid at a level of the Executive Schedule in Subchapter II of Chapter 53 of Title 5, United States Code.

(b) Those classified at GS–13 or above under 5 U.S.C. 5332, or at a comparable pay level under another authority, who are in positions, specifically identified in Appendix A to this Part, the incumbents of which are responsible for making a Government decision or taking a Government action in regard to:

(1) Contracting or procurement;

(2) Regulating or auditing private or other non-Federal enterprise; or

(3) Other activities where the decision or action has an economic impact on the interests of any non-Federal enterprise.

(c) Those classified at GS–13 or above under 5 U.S.C. 5332, or at a comparable pay level under another authority, who are in positions, specifically identified in Appendix A to this part, which the Executive Director has determined to have duties and responsibilities which require the incumbent to report employment and financial interests in order to avoid involvement in a possible conflict of interest situation and carry out the purpose of law, executive order, 5 CFR Part 735, and this part.

(d) Those classified below GS–13 under 5 U.S.C. 5332, or at a comparable pay level under other authority, who are in positions which otherwise meet the criteria in paragraphs (b) and (c) of this section, but only when the inclusion of the positions in Appendix A to this part has been specifically justified by the Executive Director in writing to the Office of Personnel Management as an exception that is essential to protect the integrity of the Government and avoid employee involvement in a possible conflict of interest situation.

(e) Alterations to, deletions from, and other amendments of the list of positions in Appendix A to this part may be made under the criteria in paragraphs (b) through (d) of this section and are effective upon approval by the Executive Director and actual notification to the incumbents. Amendments to the list in Appendix A of this part shall be submitted annually for publication in the **Federal Register**.

§ 1633.71 Employee's complaint on filing requirement.

An employee shall have, in conformity with the grievance procedures prescribed by the Board, an opportunity for review of a complaint that his or her position has been improperly included in Appendix A of this part as one requiring the submission of a statement of employment and financial interests.

§ 1633.72 Exceptions.

(a) Employees in positions that meet the criteria in paragraph (b) of § 1633.70 may be excluded from the reporting requirement when the Executive Director determines that:

(1) The duties of a position are such that the likelihood of the incumbent's involvement in a conflict of interest situation is remote; or

(2) The duties of a position are at such a level of responsibility that the submission of a statement of employment and financial interests is not necessary because of the degree of supervision and review over the incumbent, or the inconsequential effect on the integrity of the Government.

(b) A statement of employment and financial interests is not required by this part when the employee is required to file a report pursuant to 5 CFR Part 734.

§ 1633.73 Form and content of statements.

The statements of employment and financial interests required under this subpart for use by employees and special Government employees shall contain, as a minimum, the information required by the formats prescribed by the Office of Personnel Management (OPM). Such Board forms shall not include questions that go beyond, or are in greater detail than, those included in OPM formats without the approval of OPM.

§ 1633.74 Time and place for submission of employees' statements.

Each employee required to submit a statement of employment and financial interests shall submit that statement to the official designated by the Executive Director not later than:

(a) Thirty days after the effective date of the regulations in this part if employed on or before that effective date; or

(b) Thirty days after entrance on duty.

§ 1633.75 Supplementary statements.

Changes in, or additions to, the information contained in an employee's statement of employment and financial interests shall be reported in a supplementary statement as of May 15 each year, except when OPM authorizes a different date. Complete updated statements will be filed annually; reporting a negative or "no change" statement is not allowed. Notwithstanding the filing of the annual report required by this section, each employee shall at all times avoid acquiring a financial interest that could result, or taking an action that would result, in a violation of the conflict of interest provisions of 18 U.S.C. 208, or Subpart B of 5 CFR Part 735 or this part.

§ 1633.76 Interests of employees' relatives.

For purposes of completing the statements of employment and financial interests, the interests of a spouse and dependent children are to be considered interests of the employee.

§ 1633.77 Information not known by employees.

If any information required to be included in a statement of employment and financial interests or a supplementary statement including holdings placed in trust is not known to the employee but is known to another person, the employee shall request that other person to submit the information on his or her behalf, unless the trust is a Qualified Trust meeting the requirements of Subpart D of 5 CFR Part 734. If the trust is a Qualified Trust pursuant to Subpart D of 5 CFR Part 734, then those regulations control as to what information must be submitted by the trustee.

§ 1633.78 Information excluded.

The regulations in this part do not require an employee to submit on a statement of employment and financial interests or supplementary statement any information relating to the employee's connection with, or interest in, a professional society or a charitable, religious, social, fraternal, recreational, public service, civic, or political organization or a similar organization not conducted as a business enterprise. For the purposes of the regulations in this part, educational and other institutions doing research and development or related work involving grants of money from or contracts with the Government are deemed "business enterprises" and are required to be included in an employee's statement of employment and financial interests.

§ 1633.79 Review of statements.

Board members and employees will file their statements with the Board's Ethics Officer for his review. The Ethics Officer will file with the Executive Director his statement, which will be reviewed by the Executive Director or his designee. The system of review shall be designed to disclose conflicts of interest or apparent conflicts of interest on the part of employees. If information from the statements submitted or from other sources indicates a conflict of interest or an apparent conflict of interest, the employee concerned shall be given an opportunity to explain the conflict or apparent conflict. The Ethics Officer shall report all cases to the Executive Director for decision.

§ 1633.80 Confidentiality of employees' statements.

(a) Statements of employment and financial interests, and supplementary statements coverd by §§ 1633.70 through 1633.79 are confidential except as to appropriate reviewing officials. Employees reviewing statements in connection with their official duties are responsible for maintaining the statements in confidence and shall not allow access to, or allow information to be disclosed from, a statement except to carry out the purpose of this part. Information from a statement may not be disclosed except as OPM or the Board may determine for good cause shown.

(b) Statements submitted under 5 U.S.C. App. 4 201 and 5 CFR Part 734 are, unlike those covered by §§ 1633.70 through 1633.79, not confidential.

§ 1633.81 Effect of employees' statements on other requirements.

The statements of employment and financial interests and supplementary statements required of employees under the regulations in this part are in addition to, and not in substitution for, or in derogation of, any similar requirement imposed by law, order, or regulation. The submission of a statement or supplementary statement by an employee does not permit the employee or any other person to participate in the matter in which the employee's or the other person's participation is prohibited by law, order, or regulation.

Listing of Employees Who Must File Statements

§ 1633.100 Listing of employees.

Appendix A to this part is a listing of specific positions whose incumbents must file statements. The Executive Director shall review the list of positions in Appendix A to this part annually and submit changes as appropriate. The effective date of any change is set by § 1633.70(e).

Subpart B—Preventing Conflicts of Interest on the Part of Special Government Employees of the Board

General Provisions

§ 1633.200 Purpose.

This subpart implements the provisions of Executive Order 11222 dated May 8, 1965, relating to special Government employees of the Board.

§ 1633.201 Scope.

This subpart relates basically to special Government employees who are consultants and advisers, including experts. Submission of financial statements by special Government employees other than advisers, consultants, and experts is waived except where statements would otherwise be required under § 1633.70; nevertheless, such special Government employees are subject to the substantive standards of conduct of this Subpart B. Employees who are employed for more than 130 days are treated as regular employees and are subject to the provisions of Subpart A of this part.

§ 1633.202 Policy.

It is the Board's policy in issuing the instructions in this part to adhere rigidly to the policy that every citizen is entitled to have complete confidence in the integrity of his Government and that each individual officer, employee, or adviser of the Government must help to earn and must honor that trust by the individual's own integrity and conduct in all official actions.

General Rules of Conduct Applicable to Special Government Employees

§ 1633.203 Applicability of Subpart A of this part.

In addition to complying with §§ 1633.204 through 1633.209, special Government employees shall familiarize themselves with the rules of conduct contained in Subpart A of this part so they can be guided by the principles contained in those rules insofar as their employment with the Board is concerned.

VOL 53 ISS 69 AP 11 1988 UMI

§ 1633.204 Use of Government employment.

A special Government employee shall not use his Government employment for a purpose that is, or gives the appearance of being, motivated by the desire for private gain for himself or another person, particularly one with whom he has family, business, or financial ties.

§ 1633.205 Use of inside information.

A special Government employee shall not use inside information obtained as a result of his Government employment for private gain for himself or another person either by direct action on his part or by counsel, recommendation, or suggestion to another person, particularly one with whom he has family, business, or financial ties. "Inside information" as used in this section means information obtained under Government authority which has not become part of the body of public information.

§ 1633.206 Teaching, lecturing, and writing.

Special Government employees may teach, lecture, or write providing such action is not prohibited by law, E.O. 11222, or the regulations in this part. However, a special Government employee shall not, either with or without compensation, engage in teaching, lecturing, or writing that depends upon information obtained as a result of his employment with the Board, except when that information has been made available to the general public or will be made available on request, or when the official to whom he or she reports receives written authorization from the Executive Director for the use of non-public information on the basis that the use is in the public interest.

§ 1633.207 Coercion.

A special Government employee shall not use his or her Government employment to coerce, or give the appearance of coercing, a person to provide financial benefit to himself or another person, particularly one with whom he or she has family, business or financial ties.

§ 1633.208 Gifts, entertainment, and favors.

A special Government employee, while so employed or in connection with employment, shall not receive or solicit from a person having business with the Board anything of value as a gift, gratuity, loan, entertainment, or favor, personally or for another person, particularly one with whom the employee has family, business or financial ties. Exceptions to this are the same exceptions contained in Subpart A of this part for regular employees of the Board.

§ 1633.209 Miscellaneous statutory provisions.

The statutory provisions relating to Board employees referred to in §§ 1633.31, 1633.32, 1633.34, 1633.40, 1633.44, 1633.45, 1633.48, 1633.51, 1633.52, 1633.53, and 1633.55 apply to special Government employees when serving in their official capacities with the Board.

Conflict of Interest Statutes

§ 1633.210 Applicability of 18 U.S.C. 203 and 205.

(a) The prohibitions in 18 U.S.C. 203 and 205 applicable to special Government employees are less stringent than those which affect regular employees, i.e., those who are appointed for more than 130 days a year. These two sections in general operate to preclude a regular Government employee, except in the discharge of his or her official duties, from representing another person before a Department, agency or court, whether with or without compensation, in a matter in which the United States is a party or has a direct and substantial interest. However, the same two sections impose only the following major restrictions upon a special Government employee:

(1) The employee may not, except in the discharge of official duties, represent anyone else before a court or Government agency in a matter involving a specific party or parties in which the United States is a party or has a direct and substantial interest and in which the employee has at any time participated personally and substantially in the course of Government employment.

(2) The employee may not, except in the discharge of official duties, represent anyone else in a matter involving a specific party or parties in which the United States is a party or has a direct and substantial interest and which is pending before the agency he or she serves. However, this restraint is not applicable if the employee has served the agency no more than 60 days during the past 365. The employee is bound by the restraint, if applicable, regardless of whether the matter is one in which he or she has ever participated personally and substantially.

(b) These restrictions prohibit both paid and unpaid representation and apply to a special Government employee on the days when the employee does not serve the Government as well as on the days when the employee does.

(c) The rules to be followed by the Board to determine the duration of employment of special Government employees and other temporary employees in order to ascertain the application of these statutes are set forth in the Federal Personnel Manual.

(d) An employee who undertakes service with the Board and another department or agency shall inform each of the arrangements with the other.

(e) There may be situations where a consultant or adviser has a responsible position with a regular employer which requires personal participation in contract negotiations with the Board. In this situation, the consultant or adviser should participate in the negotiations for the employer only with the knowledge of a responsible Board official, i.e., the full-time official to whom the consultant or adviser reports. Prior to permitting such participation, the responsible Board official shall obtain the approval in writing of the Executive Director. See also paragraph (f)(1) of this section.

(f) Section 205 of title 18 of the United States Code, contains two exemptive provisions, which apply under section 203 as well.

(1) The first of these deals with a similar situation which may arise after a Government grant or contract has been negotiated. This provision in certain cases permits both the Government and the private employer of a special Government employee to benefit from performance of work under a grant or contract for which the employee would otherwise be disqualified because of participation in the matter for the Government or it is pending in an agency the employee has served more than 60 days in the past year. More particularly, the provision gives the head of a department or agency the power, notwithstanding any prohibition in either section 203 or 205 of title 18 of the United States Code, to allow a special Government employee to represent before such department or agency the regular employer or another person or organization in the performance of work under a grant or contract, if the national interest so requires. A written certification by the head of a department or agency concerned with the grant or contract to exempt the employee must be submitted for publication in the **Federal Register**. Where the Board is the agency concerned with the grant or contract, such written certification will be forwarded, through the General Counsel, to the Executive Director for the latter's signature. The exemption will not take effect until the certification is published in the **Federal Register**.

(2) The other exemptive provision requiring action permits a special

Government employee to represent, with or without compensation, a parent, spouse, child, or person or estate for whom or which the employee serves as a fiduciary, but only with the approval of the official responsible for appointments to his or her position and only if the matter involved is neither one in which the employee has participated personally or substantially nor one under the employee's official responsibility. The term "official responsibility" is defined in 18 U.S.C. 202 to mean, in substance, the direct administrative or operating authority to control Government action. For the Board, the "official responsible for appointments" for these purposes will be the Executive Director.

§ 1633.211 Applicability of 18 U.S.C. 207.

(a) Section 207 of Title 18 of the United States Code applies to individuals who have left Government service, including former special Government employees. Section 207(a) prevents a former employee or special Government employee from representing another person in connection with certain matters in which the employee participated personally and substantially on behalf of the Government. The matters are those particular matters involving a specific party or parties in which the United States is also a party or has a direct and substantial interest. In addition, section 207(b)(i) prevents a former employee or special Government employee, for a period of two years after employment has ceased, or responsibility in a particular area has ceased (if the two do not occur simultaneously) from appearing personally on behalf of another person in such matters before a court, department, or agency of the United States or the District of Columbia. If the matters were within the area of his official responsibility at any time during the last year of Government service. Section 207(b)(ii) prevents a former employee who occupied a position designated as a Senior Employee (a position which involves significant decision making or supervisory responsibility) for a period of two years after his or her employment has ceased from appearing personally on behalf of another person before a court, department or agency of the United States or the District of Columbia in any matter that was pending under his official responsibility within a one year period prior to the termination of such responsibility or as to which he or she participated personally and substantially as an officer or employee. Section 207(c) prevents a former employee, who served more than sixty days in a given calendar year, and who occupied a position designated as a Senior employee within one year after such employment has ceased, from acting as agent or attorney for anyone in any appearance or in any written communication before the agency in which he served as an officer or employee in connection with any proceeding pending before such agency. It should be noted that a consultant or adviser usually does not have "official responsibility."

(b) For the purposes of section 207 of title 18 of the United States Code, the employment of a special Government employee ceases on the day the employee's appointment expires or is otherwise terminated, as distinguished from the day on which he or she last performs service. Accordingly, the appointment of an adviser or consultant should be terminated promptly as soon as it is determined that the services are no longer required. (See Appendix C of Chapter 735 of the Federal Personnel Manual.)

§ 1633.212 Applicability of 18 U.S.C. 208.

(a) Section 208 of title 18 of the United States Code, bears on the activities of Government personnel, including special Government employees, in the course of their official duties. In general, it prevents an employee or special Government employee from participating as such in a particular matter in which, to his or her knowledge, the employee's spouse, minor child, partner, or a profit or nonprofit enterprise with which the employee is connected has a financial interest. However, section 208(b)(1) permits such an employee's agency to grant an ad hoc exemption if the interest is not so substantial as to affect the integrity of services. Insignificant interests may also be waived by a general rule or regulation (18 U.S.C. 208(b)(2)).

(b) The matters in which special Government employees are disqualified by section 208 of title 18 of the United States Code, are not limited to those involving a specific party or parties in which the United States is a party or has an interest, as in the case of sections 203, 205, and 207 of title 18, of the United States Code. Section 208, therefore, undoubtedly extends to matters in addition to contracts, grants, judicial and quasi-judicial proceedings, and other matters of an adversary nature. Accordingly, a special Government employee should in general be disqualified from participating as such in a matter of any type the outcome of which will have a direct and predictable effect upon the financial interests covered by section 208. However, the power of exemption may be exercised in this situation if the special Government employee renders advice of a general nature from which no preference or advantage over others might be gained by any particular person or organization. The power of exemption may, of course, be exercised also where the financial interests involved are minimal in value.

(c) Exemptions under section 208 of title 18, of the United States Code may be made by general rule or regulation by the Executive Director.

Consultants and Advisers

§ 1633.220 Advice on rules of conduct and conflict of interest statutes.

If a special Government employee who is a consultant or adviser has doubt as to the ethics of any conduct falling within the standards of conduct and conflict of interest statutes, the employee should confer with the Ethics Officer of the Board.

§ 1633.221 Responsibility of the individual special Government employee.

Each person appointed as a special Government employee with the Board is responsible for:

(a) Becoming familiar with the contents of this part and the applicability of the conflict of interest statutes in the employee's particular case.

(b) Seeking advice and assistance in interpreting the laws and instructions in case of questions concerning them.

(c) Being alert to the possibility of conflicts of interest.

(d) Furnishing the Board with information concerning financial interests and keeping this information current.

Procedures To Be Followed Within the Board

§ 1633.230 Information and assistance to special Government employees and their supervisors.

Each special Government employee and each supervisor of a special Government employee will be given a copy of this part and will be required to become familiar with the conflict of interest laws and the provisions of the instructions applicable to him or her. If a

special Government employee or prospective special Government employee or a supervisor desires assistance in interpreting the instructions or laws, the employee will be referred to the General Counsel.

§ 1633.231 Disclosure of financial interests.

(a) In order to carry out its responsibility to avoid the use of the services of special Government employees in situations in which violations of the conflict of interest laws or of the regulations in this part may occur, prior to initial employment and each reappointment thereafter, each special Government employee who is a consultant or adviser will be required to supply a statement of all other employment and the financial interests of the special Government employee which the Executive Director determines are relevant in the light of the duties the employee is to perform, including, but not limited to, the name of companies in which he or she has a significant financial interest, and the nature of such financial interest. Each statement of financial interests will be forwarded to the Board's Ethics Officer along with a statement of the duties which the proposed special Government employee will be assigned.

(b) The Board's Ethics Officer will review the statement of employment and financial interests in relationship to the duties to be performed and initially determine whether a conflict of interest exists. Accordingly, such statements must be kept current during the period the special Government employee is on the Government rolls. In any event, special Government employees who are employed intermittently for more than one calendar year shall file the statement on May 15 of each year of such employment.

§ 1633.232 Service with other Federal agencies.

If a special Government employee is serving in other Federal agencies, he or she will be required to inform the Board and each of the agencies of his or her arrangements with the others so that appropriate administrative measures may be effected. Information of service with other Federal agencies will be submitted along with the statement of employment and financial interests and must be kept current while employed with the Board.

§ 1633.233 Resolution of cases involving a conflict or apparent conflict of interest.

When a situation arises which indicates a conflict of interest or apparent conflict of interest and the matter is not resolved, information about the situation will be reported by the Ethics Officer to the Executive Director. In any such situation, the special Government employee shall be provided an opportunity to explain the conflict or appearance of conflict.

§ 1633.234 Disciplinary and other remedial action.

A violation of the regulations in this part may be cause for appropriate disciplinary action, which may be in addition to any penalty prescribed by law, or other remedial action. In addition to disciplinary action, remedial action may include, but is not limited to:

(a) Recusal,

(b) Divestiture, resignation, or reassignment,

(c) A Qualified Trust established pursuant to Subpart D of 5 CFR Part 734. A special Government employee may avoid a violation of 18 U.S.C. 208(a) if he or she receives an advance written waiver pursuant to 18 U.S.C. 208(b).

§ 1633.235 Legal interpretation.

Whenever the Ethics Officer believes that a substantial legal question is raised by the employment of a particular special Government employee as a consultant or adviser, the Ethics Officer will consult with the Office of Government Ethics and the General Counsel, Office of Personnel Management, and will refer cases of potential criminal violations to the Department of Justice, Criminal Division, Office of Public Integrity, in order to ensure a consistent and authoritative interpretation of the law.

§ 1633.236 Safeguard of information.

Statements of employment and financial interests, and supplementary statements shall be held in confidence. Employees responsible for maintaining or reviewing the statements shall not allow access to, or allow information to be disclosed from, a statement except to carry out the purpose of this part. Information from a statement may not be disclosed except as OPM or the Executive Director may determine for good cause shown.

Appendix A to Part 1633—Financial Disclosure

Identification of Positions the Incumbents of which Must File Confidential Financial Statements: All employees in grade GS-13 and above.

[FR Doc. 88-7866 Filed 4-8-88; 8:45 am]

BILLING CODE 6760-01-M

DEPARTMENT OF AGRICULTURE

Animal and Plant Health Inspection Service

7 CFR Part 301

[Docket No. 87-140]

Varroa Mite

AGENCY: Animal and Plant Health Inspection Service, USDA.

ACTION: Interim rule.

SUMMARY: We are amending the "Domestic Quarantine Notices" by adding a new subpart captioned "Varroa Mite." Discovery of the Varroa mite in Florida, Illinois, Maine, Michigan, Mississippi, Nebraska, New York, Ohio, Pennsylvania, South Carolina, South Dakota, Washington, and Wisconsin makes it necessary for us to quarantine these states, and to restrict the interstate movement of regulated articles from the quarantined areas. We must take this action on an emergency basis to contain the interstate spread of the Varroa mite.

DATES: Interim rule effective April 6, 1988. Consideration will be given only to comments postmarked or received on or before June 10, 1988.

ADDRESSES: Send an original and three copies of written comments to APHIS, USDA, Room 1143, South Building, P.O. Box 96464, Washington, DC 20090-6464. Specifically refer to Docket No. 87-140. The public may review comments received on this and other dockets in Room 1141 of the South Building, 14th Street at Independence Ave., SW., Washington, DC, between 8 a.m. and 4:30 p.m., Monday through Friday, except holidays.

FOR FURTHER INFORMATION CONTACT: Eddie W. Elder, Chief Operations Officer, Domestic and Emergency Operations, Plant Protection and Quarantine, APHIS, USDA, Room 660, Federal Building, 6505 Belcrest Road, Hyattsville, MD 20782, 301-436-6365.

SUPPLEMENTARY INFORMATION: We are amending 7 CFR Part 301, by adding to "Domestic Quarantine Notices" a subpart with Varroa Mite regulations (§§ 301.92 through 301.92-10; referred to below as the regulations). These regulations quarantine the states of Florida, Illinois, Maine, Michigan, Mississippi, Nebraska, New York, Ohio, Pennsylvania, South Carolina, South Dakota, Washington, and Wisconsin because of the Varroa mite infestations found in those states. The regulations restrict the interstate movement of regulated articles from the quarantined

areas to prevent the interstate spread of the Varroa mite.

The Varroa mite *Varroa jacobsoni* (Oudemans), is a parasite of honeybees. Varroa mites invade hives, weakening the honey bees in the colonies they infest and reducing their ability to pollinate plants and produce honey. Varroa mites can multiply quickly without attracting a beekeeper's attention until serious damage has been done. The current Varroa mite infestations would, if not controlled, cause serious economic losses throughout the agricultural sector. If the honey bee population were devastated by Varroa mites, every U.S. crop dependent upon honey bees for pollination would be affected. Honey production, too, would drop substantially.

Until September 1987, the Varroa mite had not been found in the United States.

On September 25, 1987, the first Varroa mite infestation in the United States was reported in an apiary in Ozaukee County, Wisconsin. On September 29, 1987, after the Agricultural Research Service, United States Department of Agriculture, confirmed the preliminary identification of the Varroa mite, all colonies in the infested apiary were voluntarily destroyed by their owner.

On October 5, 1987, plant regulatory officials in Florida confirmed the presence of the Varroa mite in that state. Since then, infestations have been confirmed in another 11 states. As a result, the number of states with confirmed Varroa mite infestations now stands at 13.

Varroa mites can be spread by the movement of bee hives; live and dead honey bees; pollen for bee food; combs with brood cells; and the equipment, vehicles, storage and shipping containers used in apiaries. Officials of Plant Protection and Quarantine (PPQ), United States Department of Agriculture, have been working with state regulatory officials to determine whether the Varroa mite has spread into areas outside those known to be infested. We will add the "quarantined areas" listed in § 301.92–3 if federal and state surveys completed after publication of this document show this to be necessary.

Data collected in Germany, France, and Israel, countries where Varroa mite control programs have been operating for several years and where conditions are roughly comparable to those in the United States, make the current regulations possible. Experimental use of chemicals to treat mite-infested bees abroad enabled the United States Department of Agriculture to benefit from the experience of others, and to consider chemical treatment of honey bees as viable response to the U.S. Varroa mite emergency.

The decision to proceed with a program of chemical treatment of honey bees in infested areas—areas identified as "quarantined areas" in these regulations—required that tests be conducted in the United States before the Agricultural Research Service could recommend treatments suitable for honey bees. Treatments recommended by foreign experts would, we knew, require some degree of modification and adaptation: While Germany, France, and Israel all recommended treatment with fluvalinate strips on the basis of experience, and while conditions in each of those countries are roughly comparable to U.S. conditions, they are not identical. The Agricultural Research Service's preliminary tests confirmed the need for environmentally conditioned research before we could support regulatory treatments for U.S. honeybees. Available in November 1987, data from that first set of tests revealed and unacceptably high mortality rate for bees. Tests conducted during the late fall and early winter reduced that mortality rate to the point that Departmental scientists support the regulatory treatments contained in § 301–92–10. The goal of this interim rule is to contain the spread of the Varroa mite without needlessly preventing honeybees from being moved out of infested areas. For these reasons, we are establishing federal regulations, described below by section.

Restrictions (Section 301.92)

Interstate movement of regulated articles from quarantined areas may occur only in accordance with the regulations.

Definitions (Section 301.92–1)

To present the regulations in terms precisley expressing their intended meaning, we include a list of definitions in § 301.92–1.

Regulated Articles (Section 301.92–2)

The regulations impose conditions on the interstate movement of those articles and means of conveyance that present a significant risk of spreading the Varroa mite if moved without restriction from quarantined areas. These articles and means of conveyance, designated "regulated articles," are prohibited from moving interstate from quarantined areas except in accordance with conditions specified in §§ 301.92–4 through 301.92–10.

Articles that, on the basis of research and experience, we consider likely to cause the spread of the Varroa mite comprise the list of regulated articles in § 301.92–2(a)–(e).

Quarantined Areas (Section 301.92–3)

To contain the spread of the Varroa mite, we are quarantining states in which a Varroa mite infestation exists.

Less than an entire state will be quarantined if we determine that: (1) The state-imposed restrictions on intrastate movement of regulated articles are equivalent to those that our regulations impose on the interstate movement of regulated articles; and (2) a limited quarantine, which, based on the foraging range of honey bees, is the 100 square miles surrounding each infested apiary, will suffice to prevent the interstate spread of the Varroa mite. The Administrator may establish boundaries encompassing more or less than a 100-square-mile area upon determining that this is necessary to establish readily identifiable boundaries.

Specific geographic boundaries of quarantined areas appear in § 301.92–3 of the regulations.

Further, § 301.92–3(b) provides for the temporary quarantining of an area without publication in the **Federal Register** when immediate, emergency action is warranted under § 301.92–3(a). Otherwise, the spread of the Varroa mite could occur before publication in the **Federal Register** of a document adding that area to the list of quarantined areas.

Conditions Governing the Interstate Movement of Regulated Articles From Quarantined Areas (Sections 301.92–4 Through 301.92–10)

Section 301.92–4(a) requires regulated articles moved interstate from quarantined areas to be accompanied by a certificate of limited permit, issued and attached in accordance with §§ 301.92–5 and 301.92–8. Section 301.92–4(b) prescribes conditions under which we will waive the requirement that regulated articles comply with § 301.92–4(a). That is, we will allow a regulated article to move interstate without a certificate or limited permit if the article originates outside a quarantined area; if it is moved through the quarantined area without stopping, except for refueling or traffic conditions, such as traffic lights, rest stops, emergency repairs, and stop signs; if it is shipped in an enclosed vehicle or is completely covered in a mesh impermeable to honey bees; and if the accompanying waybill indicates the regulated article's point of origin. We will also allow the United States Department of Agriculture to move

regulated articles interstate without a certificate or limited permit, under § 301.92–4(c), for experimental or scientific purposes; in those cases, they must be moved in accordance with a Department permit issued by the Administrator.

Section 301.92–5 prescribes the conditions under which certificates and limited permits will be issued. A certificate is issued when a regulated article, other than a hive, presents no pest risk before interstate movement. A limited permit is issued when a hive presents a risk of spread of Varroa mite but can be safely moved interstate under certain conditions which are set forth on the limited permit. Because research conducted by the Agricultural Research Service can confirm the 100 percent effectiveness of treatments for all regulated articles but hives, we will issue certificates for all regulated articles, except hives; because of the risk associated with hives, we will only issue a limited permit for hives.

Section 301.92–5(a) specifies the conditions under which we will issue certificates. The inspector will issue a certificate upon determining that a regulated article, other than a hive, has been treated in accordance with the regulations. Sections 301.92–5(b) specifies the conditions under which we will issue limited permits. The inspector will issue limited permits upon determining that a hive has been treated and will be moved to specified destinations in accordance with these regulations. The footnote in this section provides information on contacting inspectors.

Section 301.92–5(c) and (d) allows any person, known as a complier, who has entered into and is operating under a compliance agreement with us, to issue a certificate or limited permit for the interstate movement of a regulated article after the complier has determined its eligibility for movement in accordance with the same conditions as in § 301.92–5(a) or (b). By signing the compliance agreement, compliers acknowledge that they are both knowledgeable about the requirements of these regulations and are committed to complying with them. Compliers are authorized to issue certificates or limited permits (see § 301.92–6).

Section 301.92–5(e) provides for the withdrawal of a certificate or limited permit by an inspector who finds that the person to whom the document is issued has not complied with the regulations. It also contains provisions for notifying the person whose certificate or limited permit is withdrawn, of the reasons for the withdrawal, for appealing the inspector's decision, and for holding a hearing over any conflict about a material fact.

Section 301.92–6 provides for the issuance and cancellation of compliance agreements. We enter into compliance agreements, because of limited governmental resources, with persons who are able to treat regulated articles in accordance with the regulations, and who can be relied upon to consistently comply with the regulations.

An inspector supervising enforcement of a compliance agreement, finding that a complier has violated any provision of the regulations, may cancel the agreement. The inspector will, in that case, notify the complier of the reasons for the cancellation, and offer an opportunity for a hearing to resolve any conflicts of material fact.

Persons interested in entering into compliance agreements may contact a Plant Protection and Quarantine office.

Section 301.92–7 provides that any person, other than a complier, preparing to move regulated articles interstate should request the services of an inspector for issuance of a certificate of limited permit. The inspector's services should be requested as soon as possible before the planned movement, to allow for the required treatment. The treatment for queens and packaged honey bees requires the inspector's services at least 5 days before the planned movement; for colonies, at least 21 days. For all other regulated articles, the inspector's services are required for treatment at least 7 days before the planned movement. The regulated article must be assembled wherever and in whatever way the inspector designates as necessary to comply with the regulations.

Inspectors may be contacted at Plant Protection and Quarantine offices.

These provisions are necessary to ensure that persons desiring inspection services can obtain them before the intended movement date.

Section 301.92–8 requires that the certificate or limited permit issued for the movement of the regulated article be attached to the regulated article, to the container of the regulated article, or to the accompanying waybill. The certificate or limited permit must remain attached to the regulated article, container, or document from the time it is shipped until it reaches its specified destination; it cannot be removed at any point during the interstate movement. The carrier must give the certificate or limited permit to the consignee at the destination point; the consignee must keep the waybill and certificate or limited permit for one year. The requirement that the consignee keep the shipping documents available for inspection for one year is necessary for traceback and enforcement purposes.

Section 301.92–9 states that, as a matter of policy, we provide the services of an inspector without charge to the public during normal business hours, that is, between 8 a.m. and 4:30 p.m., Monday through Friday, except holidays. However, we will not be responsible for any other costs or charges (such as overtime costs for inspections conducted outside normal business hours).

Section 301.92–10 sets forth the treatments required before regulated articles can be moved interstate. We have based these treatments on research conducted by the Agricultural Research Service, which has shown that, used as directed, fluvalinate is effective in destroying Varroa mites. We will allow regulated articles to move interestate from quarantined areas only after they have been treated in accordance with § 301.92–10, except as provided in § 301.92–5(a)(1).

The Acting Administrator of the Animal and Plant Health inspection Service has determined that an emergency situation exists, which warrants publication of this interim rule without prior notice and opportunity for public comment. Because the Varroa mite could spread to noninfested areas of the United States, it is necessary to act immediately to prevent a nationwide infestation.

Since prior notice and other public procedures with respect to this interim rule are impracticable and contrary to the public interest under these emergency conditions, there is good cause under 5 U.S.C. 553 for making this interim rule effective upon signature. We will consider comments postmarked or received within 60 days of publication of this interim rule in the **Federal Register**. Any amendments we make to this interim rule as a result of these comments will be published in the **Federal Register** as soon as possible after the close of the comment period.

Executive Order 12291 and Regulatory Flexibility Act

An emergency situation makes it impracticable for the Animal and Plant Health Inspection Service to follow the procedures of Executive Order 12291 for this interim rule. We need to take immediate action to prevent the spread of the Varroa mite from quarantined areas into areas of the United States not now infested.

This emergency situation also makes compliance with section 603 and timely compliance with section 604 of the

BEST COPY AVAILABLE

Regulatory Flexibility Act (5 U.S.C. 603 and 604) impracticable. This rule may have a significant economic impact on a substantial number of small entities. If we determine this is so, then we will discuss the issues raised by section 604 of the Regulatory Flexibility Act in our Final Regulatory Impact Analysis.

For this action, the Office of Management and Budget has waived the review process required by Executive Order 12291.

Paperwork Reduction Act

In accordance with the Paperwork Reduction Act of 1980 (44 U.S.C. 3501 *et seq.*), we have submitted the information collection provisions in thin interim rule to the Office of Management and Budget (OMB) for approval. You may send written comments on these provisions to the Office of Management and Budget (OMB) for approval. You may send written comments on these provisions to the Office of Information and Regulatory Affairs, OMB, Attention: Desk Officer for APHIS, Washington, DC 20503. Please send a copy of your comments to APHIS, USDA, Room 1143, South Building, P.O. Box 96464, Washington, DC 20090-6464.

Executive Order 12372

This program/activity is listed in the Catalog of Federal Domestic Assistance under No. 10.025 and is subject to the provisions of Executive Order 12372, which requires intergovernmental consultation with state and local officials. (See 7 CFR Part 3015, Subpart V.)

List of Subjects in 7 CFR Part 301

Argicultural commodities, Honeybees, Plant diseases, Plant pests, Plants (Agriculture), Quarantine, Transportation, Varroa mite.

Accordingly, 7 CFR Part 301 is amended as follows:

PART 301—DOMESTIC QUARANTINE NOTICES

1. The authority citation for Part 301 is revised to read as follows:

Authority: 7 U.S.C. 150bb, 150dd, 150ee, 150ff; 161, 162, 164–167, and 2260, 7 CFR 2.17, 2.51, and 371.2(c).

2. Part 301 is amended by adding a new "Subpart—Varroa Mite" to read as follows:

Subpart—Varroa Mite

Sec.
301.92 Restrictions on interstate movement of regulated articles.
301.92–1 Definitions.
301.92–2 Regulated articles.
301.92–3 Quarantined areas.
301.92–4 Conditions governing the interestate movement of regulated articles from quarantined areas.
301.92–5 Issuance and cancellation of certificates and limited permits.
301.92–6 Compliance agreement and cancellation.
301.92–7 Assembly and inspection of regulated articles.
301.92–8 Attachment and disposition of certificates and limited permits.
301.92–9 Costs and charges.
301.92–10 Treatments.

* * * * *

Subpart—Varroa Mite

§ 301.92 Restrictions on interstate movement of regulated articles.

No person may move interstate from any quarantined area any regulated article except in accordance with this subpart.

§ 301.92–1 Definitions.

Administrator. The Administrator of the Animal and Plant Health Inspection Service or any employee of the United States Department of Agriculture to whom the Administrator has delegated authority to act in his/her stead.

Certificate. A document in which an inspector affirms that the regulated article identified on the document is eligible to move interstate in accordance with § 301.92–5(a) of this subpart or a complier affirms that the regulated article identified on the document is eligible to move interstate in accordance with § 301.92–5(c) of this subpart.

Compliance agreement. A written agreement between Plant Protection and Quarantine and a person who moves regulated articles interstate, in which that person agrees to comply with this subpart.

Complier. A person with whom Plant Protection and Quarantine has entered into a compliance agreement.

Departmental permit. A document issued by the Administrator, in which he/she affirms the interstate movement of the regulated article identified in the document is for scientific or experimental purposes, and that the regulated article is eligible for interstate movement in accordance with § 301.92–4(c) of this subpart.

Infestation. The presence of one or more Varroa mites.

Inspector. Any employee of Plant Protection and Quarantine or other person authorized by the Administrator to enforce this subpart.

Limited permit. A document in which an inspector or complier affirms that the regulated article identified on the document is eligible to move interstate to a specified destination, in accordance with § 301.92–5(b) of this subpart or a complier affirms that the regulated article identified on the document is eligible to be moved interstate to a specified destination, in accordance with § 301.92–5(d) of this subpart.

Movement. The act of shipping, transporting, delivering, or receiving for movement, or otherwise aiding, abetting, inducing or causing to be moved.

Person. Any association, company, corporation, firm, individual, joint stock company, partnership, society, or any other legal entity.

Plant Protection and Quarantine. Plant Protection and Quarantine, Animal and Plant Health Inspection Service, United States Department of Agriculture.

Quarantined area. Any state or portion of a state listed in § 301.92–3(c) of this subpart, or designated as a quarantined area in accordance with § 301.92–3(b) of this subpart.

Regulated article. Any article listed in § 301.92–2 (a) through (e) of this subpart or any article or means of conveyance designated as a regulated article in accordance with § 301.92–2(f) of this subpart.

State. The District of Columbia, Puerto Rico, the Northern Mariana Islands, or any state, territory, or possession of the United States.

Varroa mite. A parasite of honeybees, the arachnid scientifically identified as *Varroa jacobsoni* (Oudemans), commonly called the "Varroa mite"; also known as the "Asian mite."

§ 301.92–2 Regulated articles.

The following are regulated articles:

(a) Varroa mites.

(b) All honeybees, live and dead.

(c) Hives and the hive equipment, shipping and storage containers (cages), and vehicles used at apiaries.

(d) Combs with brood cells.

(e) Pollen for bee food.

(f) Any article or means of conveyance not listed in paragraph (a), (b), (c), (d), or (e) of this section, that presents a risk of spreading the Varroa mite, when the person in possession of the article or means of conveyance is notified that it is subject to this subpart.

§ 301.92–3 Quarantined areas.

(a) Except as provided in paragraph (b) of this section, the Administrator will list as a quarantined area in paragraph (c) of this section each state in which a Varroa mite infestation exists, or each Varroa mite-infested apiary and a specified area, approximately 100 square miles, surrounding it. The Administrator may establish boundaries encompassing more or less than a 100-

square-mile area upon determining that this is necessary to establish readily identifiable boundaries. The Administrator will list less than an entire state as a quarantined area only upon determining that:

(1) The state has adopted and is enforcing restrictions on intrastate movement of regulated articles that are equivalent to this subpart's restrictions on interstate movement of regulated articles; and

(2) The quarantining of less than an entire state will prevent the interstate spread of the Varroa mite.

(b) The Administrator may designate any nonquarantined area as a quarantined area in accordance with the criteria specified in paragraph (a) of this section. The Administrator will give written notice of this designation to the owner or person in possession of the nonquarantined area. As soon as practicable, this area will be added to the list in paragraph (c) of this section, or the Administrator will terminate the designation.

(c) The following are quarantined areas:

Florida, Illinois, Maine, Michigan, Mississippi, Nebraska, New York, Ohio, Pennsylvania, South Carolina, South Dakota, Washington, and Wisconsin.

§ 301.92-4 Conditions governing the interstate movement of regulated articles from quarantined areas.

Any regulated article may be moved interstate from a quarantined area only if moved under the following conditions:

(a) With a certificate or limited permit issued and attached in accordance with §§ 301.92-5 and 301.92-8 of this subpart.

(b) Without a certificate or limited permit if:

(1) The regulated article originated outside a quarantined area;

(2) The regulated article is moved through the quarantined area, either in an enclosed vehicle or completely screened in mesh impermeable to bees, with no stops except those necessary under normal driving conditions, such as traffic lights, rest stops, and stop signs. (If mechanical failure prolongs the stop by more than one day, the local office of Plant Protection and Quarantine must be contacted [1]); and

(3) The point of origin of the regulated article is indicated on the accompanying waybill.

(c) Without a certificate or limited permit, if moved:

(1) By the United States Department of Agriculture for scientific or experimental purposes;

(2) Under the conditions specified on the Departmental permit; and

(3) With a tag or label bearing the number of the Departmental permit issued for the regulated article, attached to the outside of the regulated article's container or to the regulated article itself, if not in a container.

§ 301.92-5 Issuance and cancellation of certificates and limited permits.

(a) An inspector [2] will issue a certificate for the interstate movement of a regulated article, other than a hive, upon determining that:

(1) The regulated article has been treated under the supervision of an inspector, who must be present during the treatment, in accordance with § 301.92-10(a), (b), or (d) of this subpart; and

(2) The regulated article is to be moved in compliance with any additional emergency conditions the Administrator may impose under 7 U.S.C. 150dd to prevent the spread of the Varroa mite [3]

(b) An inspector [2] will issue a limited permit for the interstate movement of any hive upon determining that:

(1) The hive has been treated under the supervision of an inspector, who must be present during the treatment, in accordance with § 301.92-10(c) of this subpart and is to be moved to a specified destination for specified handling, utilization, or processing (the limited permit will specify destination and conditions);

(2) The hive is to be moved in compliance with any additional emergency conditions the Administrator may impose under 7 U.S.C. 150dd to prevent the spread of the Varroa mite.[3]

(c) A complier may issue a certificate for the interstate movement of a regulated article, other than a hive, upon determining that:

(1) The regulated article has been treated in his/her presence, in accordance with § 301.92-10(a), (b), or (d) of this subpart; and

(2) The regulated article is to be moved in compliance with any additional emergency conditions the Administrator may impose under 7 U.S.C. 150dd to prevent the spread of Varroa mite.[3]

(d) A complier may issue a limited permit for the interstate movement of any hive upon determining that:

(1) The hive has been treated in his/her presence in accordance with § 301.92-10(c) of this subpart and is to be moved to a specified destination for specific handling, utilization, or processing (the limited permit will specify destination and conditions);

(2) The hive is to be moved in compliance with any additional emergency conditions the Administrator may impose under 7 U.S.C. 150dd to prevent the spread of Varroa mite.[3]

(e) An inspector may, orally or in writing, withdraw a certificate or limited permit if the person to whom the document is issued has not complied with this subpart. Written confirmation of an oral withdrawal, including both the decision and the reason for it, will follow within 20 days of the oral notification. Any person whose certificate or limited permit has been withdrawn may appeal the decision by writing to the Administrator within 10 days of receiving written notification of the withdrawal. In the appeal, the person must state all of the facts and reasons for challenging the inspector's action. A person who appeals the withdrawal will be given an opportunity for a hearing to resolve any conflict as to any material fact. Within 60 days of the appeal and any procedures adopted regarding the appeal, the Administrator will, in writing, uphold or deny the appeal, stating the reasons for his/her decision. The Administrator will adopt rules of practice for the proceeding.

§ 301.92-6 Compliance agreement and cancellation.

(a) Any person who moves regulated articles interstate may enter into a compliance agreement [4] if an inspector determines that this person is able to treat regulated articles in accordance with this subpart and that this person can be relied upon to comply with this subpart. This person, known as a complier, agrees in writing to comply with this subpart.

---

[1] Services of an inspector may be requested by contacting local offices of Plant Protection and Quarantine, which are listed in telephone directories. The addresses and telephone numbers of local offices of Plant Protection and Quarantine may also be obtained from National Programs, Plant Protection and Quarantine, Animal and Plant Health Inspection Service, Federal Building, 6505 Belcrest Road, Hyattsville, MD 20782.

[2] See footnote 1 to § 301.92-4(b)(2).

[3] Title 7 U.S.C. 150dd provides that the Secretary of Agriculture, or his/her delegates, may, under certain conditions, seize, quarantine, treat, destroy, or apply other remedial measures to articles that he/she has reason to believe are infested or infected by, or contain, plant pests.

[4] Compliance agreements may be arranged by contacting a local office of Plant Protection and Quarantine, which are listed in telephone directories. The addresses and telephone numbers of local offices of Plant Protection and Quarantine may also be obtained from National Programs, Plant Protection and Quarantine, Animal and Plant Health Inspection Service, Federal Building, 6505 Belcrest Road, Hyattsville, MD 20782.

(b) The inspector supervising enforcement of a compliance agreement may cancel it, orally or in writing, upon finding that the complier has failed to comply with this subpart. Written confirmation of an oral withdrawal, including both the decision and the reason for it, will follow within 20 days of the oral notification. Any complier whose compliance agreement has been canceled may appeal the decision by writing to the Administrator within 10 days of receiving written notification of the cancellation. In the appeal, the person must state all of the facts and reasons for challenging the inspector's action. A complier who appeals the cancellation will be given an opportunity for a hearing to resolve any conflict as to any material fact. Within 60 days of the appeal and any procedure adopted regarding the appeal the Administrator will, in writing, uphold or deny the appeal, stating the reasons for his/her decision. The Administrator will adopt rules of practice for the proceeding.

§ 301.92-7 Assembly and inspection of regulated articles.

(a) Any person, other than a complier, who desires to move a regulated article interstate, must arrange for an inspector's services [5] sufficiently in advance of the planned movement to allow for the treatment required before the regulated article can move. The nature of the regulated article will determine the date by which the inspector's services must be requested. The treatment for queens and packaged honey bees requires the inspector's services at least 5 days before the planned movement. The treatment for colonies of honey bees requires the inspector's services at least 21 days before the planned movement. Treatment for all other regulated articles requires the inspector's services at least 7 days before the planned movement.

(b) Assembly of the regulated article must occur in the place and manner the inspector designates as necessary to comply with this subpart.

§ 301.92-8 Attachment and disposition of certificates and limited permits.

(a) The certificate or limited permit required for the interstate movement of a regulated article must, at all times during the interstate movement, be attached to the outside of the regulated article's container or to the regulated article itself, if not in a container. Alternatively, the certificate or limited permit may be attached to the consignee's copy of the accompanying waybill, provided that the description of the regulated article on the waybill is sufficient to identify the regulated article.

(b) The carrier must furnish to the consignee at the destination of the regulated article the certificate or limited permit authorizing its interstate movement.

(c) The consignee must keep the waybill and certificate or limited permit available for inspection by an inspector for at least one year.

§ 301.92-9 Costs and charges.

Between 8 a.m. and 4:30 p.m., Monday through Friday, except holidays, the services of an inspector will be furnished without charge to persons requiring them. The United States Department of Agriculture will not be responsible for any other costs or charges.

§ 301.92-10 Treatments.

Regulated articles must be treated as follows:

(a) Queen honey bee cages:

(1) Place a 1" x ½" tab of 1% fluvalinate strip in the bottom of the empty cage.

(2) Record the starting date of treatment on the back of the cage.

(3) Put the queen and her attendants into the cage.

(4) Three days (72 hours) after putting the queen and her attendants into the cage, remove the fluvalinate strip.

(5) Protect the queen cages from reinfestation through contact with untreated regulated articles and ship within 48 hours of the fluvalinate strip's removal.

(b) Packaged honey bees (2–3 pound packages):

(1) Using a wire or staple, suspend a 2½% fluvalinate strip, 5" x 1", in an empty shipping cage. Position the strip near the feeder. If the package is to include a queen cage, the queen cage must be treated in accordance with paragraph (a) of this section.

(2) Put the honey bees into the cage.

(3) Five days (120 hours) after putting the honey bees into the cage, remove the fluvalinate strip.

(4) Protect the packaged honey bees from reinfestation through contact with untreated regulated articles and ship within 48 hours of the fluvalinate strip's removal.

(c) Hives:

(1) Remove supers.

(2) Use two 10% fluvalinate strips, 10" each, per hive.

(3) Put a nail through the top of each strip so that the strip can hang between frames.

(4) Remove the cover of the hive.

(5) Place 2 strips into the hive.

(6) Close the hive.

(7) Twenty-one days (504 hours) after their insertion into the hive, remove the fluvalinate strips.

(8) Protect the hive from reinfestation through contact with untreated regulated articles and ship within 48 hours of the fluvalinate strip's removal.

(d) Other regulated articles:

(1) Hold and protect from reinfestation through contact with untreated regulated articles for 7 days; or

(2) Apply steam to all surface areas of the regulated article. The steam must remove all debris. Protect from reinfestation through contact with untreated regulated articles and ship within 48 hours of treatment.

Done in Washington, DC, this 6th day of April 1988.

Larry B. Slagle,

Acting Administrator, Animal and Plant Health Inspection Service.

[FR Doc. 88-7840 Filed 4-8-88; 8:45 am]

BILLING CODE 3410-34-M

[5] See footnote 1 to § 301.92-4(b)(2).

Agricultural Marketing Service

7 CFR Part 911

Limes Grown in Florida; Revision of Container Requirements

AGENCY: Agricultural Marketing Service, USDA.

ACTION: Interim final rule and opportunity to file comments.

SUMMARY: This action continues to relax container requirements for Florida limes by extending indefinitely a provision which by interim final rule published January 7, 1988 temporarily reduced the minimum net weight of limes which must be packed in a currently authorized master container from 38 to 35 pounds when that container is used for bagged limes and the container is marked "Master Container." The reduced minimum weight requirement permits the packing of bagged limes in the container without distorting it or damaging the fruit. This action was recommended by the Florida Lime Administrative Committee, which works with the Department in administering the Florida lime marketing order.

DATES: This interim final rule becomes effective April 1, 1988. Comments which are received by May 11, 1988, will be considered prior to issuance of the final rule.

ADDRESSES: Interested persons are invited to submit written comments concerning this interim rule. Comments

should be sent to: Docket Clerk, Fruit and Vegetable Division, AMS, USDA, P.O. Box 96456, Room 2085–S, Washington, DC 20090–6456. Three copies of all written material shall be submitted, and they will be made available for public inspection at the office of the Docket Clerk during regular business hours. The written comments should reference the date and page number of this issue of the **Federal Register**.

FOR FURTHER INFORMATION CONTACT: Gary D. Rasmussen, Marketing Order Administration Branch, Fruit and Vegetable Division, AMS, USDA, P.O. Box 96456, Room 2525–S, Washington, DC 20090–6456; telephone (202) 475–3918.

SUPPLEMENTARY INFORMATION: This rule is issued under Marketing Order No. 911, as amended [7 CFR Part 911], regulating the handling of limes grown in Florida. This order is effective under the Agricultural Marketing Agreement Act of 1937, as amended [7 U.S.C. 601–674], hereinafter referred to as the Act.

This rule has been reviewed under Executive Order 12291 and Departmental Regulation 1512–1 and has been determined to be a "non-major" rule under criteria contained therein.

Pursuant to requirements set forth in the Regulatory Flexibility Act (RFA), the Administrator of the Agricultural Marketing Service (AMS) has considered the economic impact of this action on small entities.

The purpose of the RFA is to fit regulatory actions to the scale of business subject to such actions in order that small businesses will not be unduly or disproportionately burdened. Marketing orders issued pursuant to the Act and rules issued thereunder are unique in that they are brought about through group action of essentially small entities acting on their own behalf. Thus, both statutes have small entity orientation and compatibility.

There are approximately 26 handlers of Florida limes subject to regulation under the Florida lime marketing order, and approximately 260 lime producers in Florida. Small agricultural producers have been defined by the Small Business Administration [13 CFR 121.2] as those having annual gross revenues for the last three years of less than $500,000, and small agricultural service firms are defined as those whose gross annual receipts are less than $3,500,000. The majority of the handlers and producers may be classified as small entities.

Sections 911.329 and 911.311 were amended by an interim final rule issued December 31, 1987, and published in the **Federal Register** [53 FR 402, January 7, 1988]. Interested persons were invited to submit written comments on the rule until February 8, 1988. No comments were submitted during the specified time. However, the committee subsequently requested that the temporarily relaxed weight requirements specified in the rule for bagged limes packed in a master container be extended indefinitely, based on the unanimous recommendation of the committee at its meeting of March 9, 1988.

Container requirements for Florida limes are prescribed in § 911.329 in terms of inside dimensions and net weight capacity which handlers must meet when they ship limes grown within the production area outside that area. Paragraph (a)(2)(v) of that section prescribes the specifications of one of the containers handlers may use for such shipments. That container has inside dimensions of 12¾ x 15¼ x 10¾ inches and is required to contain not less than 38 pounds nor more than 42 pounds net weight of limes. The minimum net weight requirement for this container was reduced to 35 pounds for bagged limes for the period January 7–March 31, 1988, by the interim final rule issued December 31, 1987.

The interim final rule was issued based on the committee's report that handlers had been using this container as a master shipping container for bagged limes, but that the container was too small to comfortably hold the 38-pound minimum net weight. This resulted in container distortion and damage to the fruit. Reducing the minimum net weight of the contents of this container to 35 pounds when it was used for bagged limes was designed to alleviate this problem, and ensure that limes free from damage due to packing reach the consumer. The committee now indicates that reducing the minimum net weight requirement of the container for bagged limes has proved successful, and it requests that 35-pound minimum net weight be made a permanent part of the lime container requirements.

Such containers are required to be marked "Master Container" when they contain bagged limes. This is designed to differentiate such containers from containers containing loose limes for which the minimum weight will continue to be 38 pounds. A conforming change is also being made to § 911.311.

Therefore, the Department's view is that the impact of the relaxed container requirements upon producers and handlers will be beneficial and have a positive effect on industry operations. The application of a less restrictive minimum weight for the specified container will help continue to ensure that limes free from packing damage reach the consumer.

The container specified in paragraph (a)(2)(ix) of § 911.329 authorized by the interim final rule published on January 7, 1988 remains in effect unchanged.

Based on the above, the Administrator of the AMS has determined that this action will not have a significant economic impact on a substantial number of small entities.

After consideration of the information and recommendations submitted by the committee, and other available information, it is found that the rule as hereinafter set forth will tend to effectuate the declared policy of the Act.

Pursuant to 5 U.S.C. 553, it is also found and determined that it is impracticable, unnecessary, and contrary to the public interest to give preliminary notice prior to putting this amended rule into effect, and that good cause exists for not postponing the effective date of this action until 30 days after publication in the **Federal Register** because: (1) This action continues relaxed requirements which expired March 31, 1988; (2) shipment of the Florida lime crop is in progress; (3) this action is based upon the unanimous recommendation of the committee considered at a public meeting; (4) handlers are prepared to continue conducting their operations in accordance with the relaxed requirement specified in the interim rule; and (5) the amended rule provides a 30-day comment period, and any comments received will be considered prior to issuance of a final rule.

List of Subjects in 7 CFR Part 911

Marketing agreements and orders, Limes, Florida.

For the reasons set forth in the preamble, 7 CFR Part 911 is amended to read as follows:

PART 911—LIMES GROWN IN FLORIDA

1. The authority citation for 7 CFR Part 911 continues to read as follows:

Authority: Secs. 1–19, 48 Stat. 31, as amended; 7 U.S.C. 601–674.

2. Section 911.329 [7 CFR Part 911; 53 FR 402] is amended by republishing the introductory text of paragraph (a)(2) and revising paragraph (a)(2)(v) to read as follows (This section will appear in the Code of Federal Regulations):

§ 911.329 Lime Regulation 27.

(a) * * *

(2) No handler shall handle between the production area and any point

outside thereof any variety of limes, grown in the production area, in containers having a capacity of more than 4 pounds of limes unless such limes are handled in containers meeting the following specifications and conform to all other applicable requirements of this section:

* * * * *

(v) Containers with inside dimensions of 12¾ x 15¼ x 10¾ inches: *Provided*, That any such container shall contain not less than 38 pounds nor more than 42 pounds net weight of limes; *Provided further*, That when this container is used as a master container for bagged limes, the minimum net weight of limes shall be 35 pounds, provided the container is marked "Master Container."

* * * * *

3. Section 911.311 is amended by revising paragraph (a)(4) to read as follows (This section will appear in the Code of Federal Regulations):

§ 911.311 Lime Pack Regulation 9.

(a) * * *

(4) The provisions of paragraphs (a)(2) and (a)(3) of this section shall not apply to individual packages of limes not exceeding 4 pounds, net weight, that are within master containers except that if such packages are individual bags either such bags or the master containers thereof shall be marked or labeled in accordance with the requirements of paragraph (a)(2) of this section and master containers shall be marked or labeled in accordance with the requirements of paragraph (a)(3) of this section, and § 911.329 (a)(2)(v).

* * * * *

Dated: April 1, 1988.

Charles R. Brader,

Director, Fruit and Vegetable Division, Agricultural Marketing Service.

[FR Doc. 88-7839 Filed 4-8-88; 8:45 am]

BILLING CODE 3410-02-M

---

7 CFR Part 917

Pears, Plums, and Peaches Grown in California; Increase in Expenses for 1987-88 Fiscal Period

AGENCY: Agricultural Marketing Service, USDA.

ACTION: Final rule.

SUMMARY: This final rule authorizes an increase in expenditures for the Pear Commodity Committee established under Marketing Order 917 for the 1987-88 fiscal year. The expenses are increased from $899,551 to $910,111. The designated increase reflects higher than estimated costs for market development and promotion activities undertaken by the pear committee in marketing the 1987 crop.

EFFECTIVE DATES: March 1, 1987, through February 29, 1988 (§ 917.249).

FOR FURTHER INFORMATION CONTACT: Jerry Brown, Marketing Order Administration Branch, Fruit and Vegetable Division, AMS, USDA, P.O. Box 96456, Room 2525-S, Washington, DC 20090-6456; telephone 202-475-5464.

SUPPLEMENTARY INFORMATION: This final rule is issued under Marketing Order No. 917 (7 CFR Part 917) regulating the handling of fresh pears, plums, and peaches grown in California. The order is effective under the Agricultural Marketing Agreement Act of 1937, as amended (7 U.S.C. 601-674), hereinafter referred to as the "Act.".

This final rule has been reviewed under Executive Order 12291 and Departmental Regulation 1512-1 and has been determined to be a "non-major" rule under criteria contained therein.

Pursuant to requirements set forth in the Regulatory Flexibility Act (RFA), the Administrator of the Agricultural Marketing Service (AMS) has considered the economic impact of this final rule on small entities.

A final rule establishing expenses in the amount of $899,551 for the Pear Commodity Committee for the fiscal period ending February 29, 1988, was published in the **Federal Register** on August 20, 1987 (52 FR 31375). That action also fixed the assessment rate to be levied on pear handlers during the 1987-88 fiscal period. At a meeting held on January 27, 1988, the Pear Commodity Committee voted unanimously to increase its budget of expenses from $899,551 to $910,111.

A proposed rule inviting comments on this $10,560 increase was issued on March 10, 1988, and published in the **Federal Register** on March 15, 1988 (53 FR 8460). The comment period ended March 25, 1988. No comments were received.

The committee incurred higher than expected market development and promotion costs in marketing the 1987 pear crop. The increase is needed to cover these expenses.

Adequate funds are available to cover the increased expenses. Hence, no change in the assessment rate is necessary because of this increase.

Therefore, the Administrator of AMS has determined that this action will not have a significant economic impact on a substantial number of small entities.

It is found that the increased expenses are reasonable, and that such expenses will tend to effectuate the declared policy of the Act.

Approval of the increased expenses must be expedited because the committee needs to have authority to pay its expenses which were incurred during the 1987-88 fiscal period. That period ended February 29, 1988. Therefore, the Secretary also finds that good cause exists for not postponing the effective date of this action until 30 days after publication in the **Federal Register** (5 U.S.C. 553).

List of Subjects in 7 CFR Part 917

Marketing agreement and order, Pears, Plums, Peaches, California.

For the reasons set forth in the preamble, § 917.249 is amended as follows:

PART 917—FRESH PEARS, PLUMS, AND PEACHES GROWN IN CALIFORNIA

1. The authority citation for 7 CFR Part 917 continues to read as follows:

Authority: Secs. 1-19, 48 Stat. 31, as amended; 7 U.S.C. 601-674.

2. Section 917.249 is amended as follows: (This section will not be published in the Code of Federal Regulations).

§ 917.249 [Amended]

Section 917.249 is amended by changing "$899,551" to "$910,111."

Dated: April 6, 1988.

Robert C. Keeney,

Deputy Director, Fruit and Vegetable Division, Agricultural Marketing Service.

[FR Doc. 88-7874 Filed 4-8-88; 8:45 am]

BILLING CODE 3410-02-M

FEDERAL RESERVE SYSTEM

[Docket No. R-0620]

12 CFR Part 229

Availability of Funds and Collection of Checks (Regulation CC)

AGENCY: Board of Governors of the Federal Reserve System.

ACTION: Final rule.

SUMMARY: The Board has adopted a standard form of endorsement for use by banks (defined in the proposed regulation to include all depository institutions as well as branches of foreign banks in the United States) when endorsing checks during the collection and return process. The new standard is designed to provide for clear and uniform endorsements for all collecting and returning banks, plus a unique standard for depositary bank endorsements. The standard will

facilitate the identification of the depositary bank and the prompt return of unpaid checks. This standard will be part of Regulation CC—Availability of Funds and Collection of Checks (12 CFR Part 229) which the Board proposed for comment in December 1987. The Board expects to act on the remainder of Regulation CC in May 1988; it has adopted the endorsement standard now to give banks and equipment vendors additional time to comply with the standard.

EFFECTIVE DATE: September 1, 1988.

FOR FURTHER INFORMATION CONTACT: Louise L. Roseman, Assistant Director (202/452-2789) or Gayle Thompson, Program Leader (202/452-2934), Division of Federal Reserve Bank Operations; or Joseph R. Alexander, Senior Attorney (202/452-2489), Legal Division; for the hearing impaired *only*: Telecommunications Device for the Deaf, Earnestine Hill or Dorothea Thompson (202/452-3254).

SUPPLEMENTARY INFORMATION:

Background

On December 3, 1987, the Board issued for comment a proposed new regulation to carry out provisions of the Expedited Funds Availability Act, Title VI of Pub. L. 100-86 (the Act). 52 FR 47112 (Dec. 11, 1987). The proposed Regulation CC (12 CFR Part 229) includes rules to improve the check collection system, particularly the slow and labor intensive check return process. One of the obstacles to efficient processing of checks being returned is the lack of uniformity in depositary banks' [1] endorsements. Today, bank clerks processing checks being returned often have difficulty determining the bank to which a check should be returned. The endorsements on the back of the check are often faint, blurred, incomplete, and overlapping. Most importantly, many endorsements do not contain the nine-digit routing number often required for identification of the depositary bank. Under the proposed new rules to expedite the processing of checks being returned, this difficulty would increase because many checks will not be returned through the same banks that handled the checks during forward collection process. See proposed Subpart C of 12 CFR Part 229, 52 FR at 47156 *et seq.* The identification of a remote depositary bank would often be difficult if the depositary bank's endorsement were not readily distinguishable from the other endorsements on the check. Accordingly, the proposal included a mandatory endorsement standard based on work done by the American National Standards Institute (ANSI).

After reviewing the comments received on the proposed standard, the Board is adopting a final endorsement standard that requires the depositary bank or its agent to provide specific information in its endorsement, including its nine-digit routing number. In addition, the depositary bank's endorsement must be readily identifiable by placing the endorsement in a specified area on the back of the check and by using only purple or black ink to apply the endorsement. Subsequent endorsements may not be in purple ink or be placed in the same location as the endorsement of the depositary bank.

Discussion

The comment period for the proposed Regulation CC expired on February 8, 1988. Over 950 comments were received. Many of the commenters stated that the Board should provide as much lead time as possible before implementation of the endorsement standard as required by § 229.35 of the proposed Regulation CC and described in Appendix D of the proposed regulation. In order to accommodate these concerns, the Board has determined to adopt the endorsement standard now, with final action on the remaining portion of Regulation CC expected to take place in May 1988.

Most commenters agreed that an endorsement standard is necessary to expedite the return process; however, commenters expressed concern that the standard as proposed was too rigid. Commenters indicated that it would be difficult to implement the proposed standard by September 1, 1988, due to the extensive equipment changes required to comply with the technical requirements of the proposed standard. In addition, commenters indicated that the technical modifications required by the proposed endorsement standard were unnecessarily burdensome and would be expensive for the banking industry to implement.

In response to these comments, the Board has adopted modifications to the proposed endorsement standard to make the standard more flexible and to minimize both the operational and cost effects of the technical requirements of the standard. In making these modifications, Board staff consulted with banks, equipment manufacturers, and check printers to ensure that the modifications adequately address the specific concerns raised by the commenters.

Location

One of the primary concerns raised by the commenters was the requirement to place the depositary bank's endorsement in a specific location on the back of the check. The proposed standard indicated that the depositary bank endorsement should be wholly contained in an area on the back of the check from 3.0 inches to 4.5 inches from the leading edge of the check.[2] Commenters indicated that certain types of check encoding equipment used to apply endorsements do not measure from the leading edge of the check, but from the opposite or trailing edge. Because checks are of different lengths, it would be impossible to use such equipment to meet the proposed standard. Therefore, the Board has modified the standard with regard to location for the depositary bank endorsement to allow measurement from either the leading edge or the trailing edge. Thus, under the endorsement standard as adopted, the depositary bank endorsement area is 3.0 inches from the leading edge to 1.5 inches from the trailing edge.

In addition, commenters indicated that plates or stamps used to apply impact endorsements are often wider than the one and one-half inch area specified in the proposal for depositary bank endorsements. Thus, the Board has eliminated the requirement that the entire endorsement be wholly contained within the area specified for the depositary bank endorsements. The standard does require, however, that the nine-digit routing number be wholly contained within the depositary bank endorsement area. Other information may extend outside the depositary bank endorsement area; nonetheless, depositary banks should place as much information as possible within the designated area in order to ensure that the information is protected from being overstamped by subsequent bank endorsements.

The change in location requirements for the depositary bank endorsement affects the available locations for endorsements by banks that handle a check for collection after it has been handled by the depositary bank ("subsequent collecting banks").[3] The

[1] A "depositary bank" is defined in the proposed regulation as the first bank to which a check is transferred even though it is also the paying bank or the payee. See proposed 12 CFR 229.2, 52 FR at 47150.

[2] The leading edge is defined as the right side of the check looking at it from the front. See American National Standards Committee on Financial Services, *Specification for the Placement and Location of MICR Printing*, X 9.13.

[3] The proposal only referred to subsequent bank endorsements. This reference included

Continued

proposed standard only prohibited placing the subsequent collecting bank endorsement in the area specified for the depositary bank endorsement, thus allowing subsequent collecting banks to place endorsements on either side of the area reserved for the depositary bank. The change to the depositary bank endorsement area makes it difficult for subsequent collecting banks to endorse checks in the area closest to the trailing edge of the check on business checks. This area is commonly used for the payee's endorsement. In general practice, however, the payee endorsement area is not used by banks. Current convention places subsequent collecting bank endorsements in the area closest to the leading edge of the check. The major equipment vendors are able to place subsequent collecting bank endorsements in this area. Therefore, the Board has modified the location requirement for subsequent collecting bank endorsements in order to limit such endorsements to the area on the back of the check from the leading edge to 3.0 inches from the leading edge of the check.

Color

Commenters expressed significant concern about the color requirements of the proposed standard. The proposed standard specified purple ink for the depositary bank endorsement and a dark color other than purple for subsequent collecting bank endorsements. Comments focused on the difficulty of complying with this requirement when a bank uses the same equipment to endorse checks both as depositary bank and subsequent collecting bank. In many cases, banks use the same equipment for applying both endorsements, and this equipment typically has only one source of ink. Vendors have indicated that modifying equipment to accept two sources of ink would be costly. Accordingly, the Board has adopted a standard which allows depositary banks to use either purple or black ink. The Board encourages depositary banks to endorse checks in purple ink where possible, because use of a unique color ink will facilitate the speedy identification of the depositary bank. Black ink, however, may be used when use of purple ink is not feasible.

Content

Commenters raised a number of issues concerning the content requirements of the proposed standard endorsement. The proposed standard required the depositary bank's endorsement to include its nine-digit routing number set off by arrows, the bank's name/location, and the endorsement date, and permitted the endorsement to include other identifying information. Commenters indicated that the inclusion of arrows in the depositary bank endorsement that point to the nine-digit routing number may be unnecessary. Some commenters stated that color and location requirements were sufficient to identify the endorsement of the depositary bank. As the Board has eliminated the requirement that the depositary bank's endorsement be in a unique color, it is retaining the requirement for arrows in the depositary bank's endorsement. Because most banks will be required to obtain new endorsement plates or stamps or re-program endorsements applied by ink-jet printers to comply with the other content requirements of the standard, the cost of including arrows should not be significant.

Commenters also pointed out several pieces of information that are currently used by banks in their indorsements, but are not part of the standard. These include "P.E.G." ("prior endorsements guaranteed") and "pay any bank." Under present law, a specific guarantee of prior indorsements is not necessary, see U.C.C. sections 3–417(1)(a) and 4–207(1), and the Board sees no reason to require this guarantee in the standard indorsement. The use of the guarantee language in indorsements is discouraged for depositary banks and prohibited for subsequent collecting banks.

The "pay any bank" language is intended to limit the transfer of a check to banking channels unless it is returned to the original depositor or a bank takes specific action to transfer the check to a nonbank. This restriction is thought desirable to protect the interests of the depositor or any collecting bank that has a security interest in the check in case the check is lost or stolen and transferred to an innocent party who becomes a holder in due course. In these cases, the restrictive indorsement "pay any bank" gives notice to third parties of potential adverse claims against the check. While the limitation on transfer to banking channels may be desirable, there does not appear to be any need to rely on specific words to accomplish this result. Since banks routinely place restrictive indorsements on the checks they handle, the Board intends that the final Regulation CC will provide that any bank indorsement would be considered restrictive unless a bank takes specific action otherwise. Thus, third parties would be placed on notice of potential adverse claims by the bank indorsement itself without additional language. Accordingly, "pay any bank" has not been made part of the standard, and the use of this language in indorsements will be discouraged for depositary banks and prohibited for subsequent collecting banks.

In addition, commenters suggested that the information requirements be modified to include the fractional routing number currently used by many banks in their indorsements. The Board has determined not to include the fractional routing number in the standard; however, a bank may include its fractional routing number or repeat its nine-digit routing number in its indorsement. The Board encourages despositary banks to include their routing numbers in their indorsement more than once to aid paying banks in the identification of depositary banks.

Commenters also suggested that a depositary bank should include the telephone number where it would receive notifications of large-dollar returns in its indorsement. Because telephone numbers frequently change, the Board has not required their inclusion, although it is not prohibited.

Commenters also questioned the requirement to place information about the location of the depositary bank in the indorsement. Specifically, commenters were unsure whether the requirement to include the bank's "location" in the indorsement referred only to the city and state in which the bank was located or whether a street address was required. A depositary bank is not required to place a street address in its indorsement; however, a bank may want to do so in order to limit the number of locations at which it must accept returned checks under § 229.32 of the proposed Regulation CC. Banks should note, however, that § 229.32 of proposed Regulation CC also requires depositary banks to accept returned checks at the location(s) it accepts forward collection items, and the Board expects that a similar requirement will be included in the final rule.

Returning Bank Indorsements

The proposed indorsement standard included specifications for each subsequent collecting bank indorsement. Commenters pointed out, however, that the proposed indorsement standard did not specify a separate standard for returning banks. It appears that, at least initially, returning bank indorsements may differ from collecting bank indorsements. The development of various methods to process returns using a variety of equipment may also

endorsements by subsequent collecting banks and by returning banks. Returning banks endorsements are discussed in another section *infra*.

cause returning bank indorsements to vary substantially in form, content, and placement on the check. To impose a rigid standard at this time would be unduly burdensome to the banking industry. Therefore, the Board has determined to require a returning bank to apply an indorsement that avoids the area on the back of the check from 3.0 inches from the leading edge of the check to the trailing edge—the area reserved for the payee and depositary bank indorsements. Thus a returning bank indorsement may be on the face of the check as well as the back of the check. This indorsement may not be in purple ink. No content requirements have been adopted for the returning bank indorsement at this time. The Board will continue to review the issue of the returning bank indorsement with the industry and the ANSI working group on indorsement standards, and will propose such a standard if it is found that a further standardization of indorsements for returning banks is necessary for the efficient operation of the payment system.

Necessary Indorsements

Commenters raised a variety of issues with regard to who must indorse the checks. Several commenters questioned whether small banks (particularly credit unions) must indorse checks at the depositary bank. They suggested that a small bank be permitted to act as a corporate depositor and agree with its correspondent to have the correspondent place the correspondent's indorsement on the back of the check as the depositary bank indorsement. This approach could be beneficial to both the depositary bank and returning banks, particularly if the depositary bank wants its returned checks to be delivered to the correspondent. Similar comments were raised with regard to bank holding companies that want the returns destined to their subsidiary banks to go to one location rather than to each subsidiary. This issue also arises in the context of nonproprietary ATMs or lockbox arrangements whose operators process checks for which they are not the bank of account. [4]

Because the endorsement standard is being proposed to expedite the return process, the Board believes that the endorsement placed on the check as the depositary bank endorsement should reflect the location where the returned checks and notices of nonpayment under § 229.33 should be directed. If the bank of account agrees with another bank (a correspondent, ATM operator, or lockbox operator) to have the other bank accept returns and notices of nonpayment for the bank of account, the endorsement placed on the check as the depositary bank endorsement may be the endorsement of the bank that acts as correspondent, ATM operator, or lockbox operator. Thus, the paying or returning bank delivering returns or notices of nonpayment to the correspondent, ATM operator, or lockbox operator within the time frames specified in the regulation will have complied with its expeditious return and notification responsibilities. The bank of account that handles the check but agrees to the placement of another bank's endorsement as the depositary bank may physically endorse the check in an ink color other than purple outside of the area designated for the depositary bank. Otherwise, the bank of account and the bank endorsing as the depositary bank may agree that the bank of account makes a contract of an endorser without requiring the bank of account to place an endorsement on the check itself.[5]

Carbon Band Checks

The proposed standard was modeled after the standard currently under review by ANSI, which provides that the depositary bank endorsements must avoid the carbon band area.[6] The Board had specifically requested comment on restricting endorsement in the carbon band area, including the possibility of requiring paying banks not to issue carbon band checks. Generally, banks and equipment vendors were opposed to any requirement to avoid the carbon band area. Avoidance of the carbon band area has the effect of limiting the vertical space of the endorsement to a maximum of .875 inches, smaller than many endorsement stamps. These commenters viewed carbon band checks as a small proportion of all checks, and indicated that to design a standard to accommodate a small number of checks was inappropriate.

A number of commenters recommended that the Board prohibit the use of carbon band checks. On the other hand, manufacturers of carbon band checks and small businesses that use such checks indicated that these checks are an efficient method of keeping accurate payment records and that their efficiency should be taken into account when designing a standard so as not to make such checks more difficult to use.

The Board believes the issues raised concerning carbon band checks extend beyond carbon bands, and cover all markings placed on the backs of checks by parties other than banks, including both check issuers and check depositors. The backs of many checks bear pre-printed information or blacked out areas for various reasons. For example, contract or loan agreements are printed on certain checks. Other checks that are mailed to recipients may contain areas on the back that are blacked out so that they may not be read through the mailer. Users of these checks believe that blacking out the back of a check reduces the chance that a check may be stolen while being mailed. On the deposit side, the payee of the check may place its endorsement or information identifying the drawer of the check in the area specified for the depositary bank endorsement, thus making the depositary bank endorsement unreadable.

The Board has decide not to prohibit the use of carbon band checks, and to change the endorsement standard to delete any reference to restricting endorsements from the carbon band area. The removal of this restriction should ease the burden imposed on banks and equipment manufacturers in complying with the endorsement standard. Nevertheless, depositary banks are encouraged to design endorsement stamps so that the nine-digit routing number avoids the carbon band area. Endorsing parties other than banks, e.g., corporations, are also encouraged to protect the identifiability and legibility of the depositary bank endorsement by staying clear of the area reserved for the depositary bank endorsement. The Board encourages all depositary banks to work with corporate endorsers to arrange that the corporate payee endorsements include the name and nine-digit routing number of the bank in which they are depositing the check and the corporation's account number at that bank.

Liabilities

The proposed regulation excused a paying or returning bank's delay in return if the delay was due to the failure of the depositary bank to use the required endorsement standard. Some commenters indicated that the Board should place the liability for unreadable endorsements on the party that obliterated the depositary bank's endorsement or interfered with the area

[4] I.e., the bank that has the account into which the account holder is depositing the check.

[5] See U.C.C. sections 4–206 and 4–207(3).

[6] Some checks are printed with a carbon strip across the back that allows the transfer of information from the check to a ledger with one writing. This strip is typically located in the area (the "carbon band area") extending the length of the check, in a line between 1.4 inches and 1.9 inches above the bottom of the check (behind the payee line).

reserved for the depositary bank's endorsement. The Board expects that the final regulation and commentary will be expanded to clarify the liabilities associated with losses for returned checks that are delayed due to endorsements that are unreadable because of material on the back of the check. Liabilities may be allocated so that the depositary bank is liable for a loss on a returned check due to a delay in return caused by actions of its customer that made the depositary bank's endorsement illegible. The paying bank may be liable for a loss on a returned check due to delay in return caused by endorsements that are not readable because of other material on the back of the check at the time that it was issued. Those banks could then shift the risk to their customers by agreement.

Paying Bank Endorsement

The proposed regulation indicated that paying banks were not required to endorse the check. Some commenters expressed confusion on this point. The Board does not believe it is necessary to require the paying bank to endorse the check. Currently most paying banks endorse their checks when posting to the customers' accounts and cancel this endorsement when deciding to return a check. In the event that the paying bank does not endorse the check and the depositary bank wants to file a claim for a late return, it should be able to determine the presentment date from the surrounding endorsements or by tracing the check through the collection process. Consequently, the Board has made no modification to the standard regarding the paying bank endorsement.

Variation by Agreement

Section 229.35 of proposed Regulation CC requires that all banks, other than a paying bank, that handle a check during forward collection or a returned check, shall endorse the check in accordance with the endorsement standard. The Board expects that the final rule will provide flexibility by allowing the need for, or form of, endorsements to be varied by agreement of the affected parties.

Final Regulatory Flexibility Analysis

Of the items required to be contained in the final regulatory flexibility analysis by 5 U.S.C. 604(a), the first (a statement of the need for and objectives of the rule) and second (a summary of the issues raised by the commenters, the Board's assessment of the issues, and the changes made to the proposed rule in response to the comments) are contained elsewhere in this preamble.

When the proposed rule was published in December, the Board noted in the initial regulatory flexibility analysis that it had considered exempting very small banks from the rule's requirements, but that an exception for small banks from the requirements for expeditious return found in Subpart C of the proposed rule would mean that a significant number of checks payable by small banks would continue to be returned by the current, inefficient manual processing of returns, thereby leading to increased losses for banks that accept for deposit checks drawn on small banks. Hence, the availability schedules and expeditious returns could work only in an environment where all banks were subjected to the same rules.

Although the Board did not specifically mention the endorsement standard in the initial regulatory flexibility analysis, the discussion in that analysis and elsewhere in the **Federal Register** notice clearly implied that there would be no special alternatives for small banks—the rule was clear that all collecting banks would be required to follow the endorsement standards established in § 229.35 and Appendix D. If small banks were not subject to the endorsement standard, the likelihood that their returns would be untimely would increase, thus increasing risk to these small banks from the requirement of making funds available more promptly.

In response to the comments, the Board has made a number of changes to the endorsement standard, outlined previously in this preamble, that will lessen the burden on banks, especially small banks. Depositary banks (small banks are more likely to be depositary banks and less likely to be subsequent collecting banks) have been given greater flexibility in the choice of ink color and in the location of their endorsements. In addition, small banks have been given the option of arranging with a correspondent to have the correspondent place its endorsement on checks as that of the depositary bank, thus relieving small banks of making special endorsements at all. The Board believes that these modifications provide greater flexibility for all banks, and that these provide substantial relief for small banks.

As noted earlier in the preamble, the endorsement standard proposed in December provided that the depositary bank endorsement was not to be placed in the carbon band location. The Board also requested comment on an alternative that would shift the responsibility for an illegible depositary bank endorsement if the paying bank's customer used checks with a carbon band. Under this approach, the paying bank might find it advantageous to restrict its customers' use of carbon band checks or require them to select a carbon band technique that would interfere with reading the depositary bank's endorsement. A large number of commenters responding to this question favored explicitly banning the use of carbon checks. On the other hand, a number of important issues were raised by other commenters regarding the manufacture and use of carbon band checks.

Reliable estimates of the number of users of carbon band checks, what percentage of these users are small businesses (e.g., less than 20 employees), what percentage of small businesses use carbon band checks, and the volume (both in terms of dollars and number of checks issued) of carbon band checks, are not readily available. It is clear, however, that carbon band checks enjoy significant use among certain segments of small businesses. It has been suggested, for example, that businesses that write more than 15 but fewer than 40 checks per day and those that must issue checks outside of their offices are the most likely users of carbon band checks. Commenters also pointed out that many small businesses find that carbon band checks are a convenient manner of keeping accounts. Prohibiting carbon band checks, without a usable alternative, could force businesses using carbon band checks to change accounting systems, at significant inconvenience and some expense. Commenters have not provided the Board with information on completely satisfactory alternatives to the use of carbon band checks, and manufacturers of these check systems assert that at present no satisfactory substitute exists, although it appears that alternatives are being developed that could replace the carbon band in the future.

Given these circumstances, the Board, as noted earlier, has determined not to ban carbon band checks or to take any action to mandate that users of carbon band checks undergo costly changes of accounting systems. Nevertheless, the Board is concerned that carbon bands and other markings could interfere with the expeditious return of unpaid checks to depositary banks, increasing the risk that unpaid checks would be returned after the depositary bank would have been required to make the funds available to its depositor. The Board believes, however, that the solution it has adopted represents a market-based

solution that provides the most flexibility to all affected parties. While the Board anticipates that losses due to markings on backs of checks will not be large, it believes that the solution adopted will result in the fairest and most efficient allocation of those losses that do occur.

List of Subjects in 12 CFR Part 229

Banks, Banking, Federal Reserve System.

For the reasons set out in the preamble, Title 12, Chapter II of the Code of Federal Regulations is amended by adding Part 229 to read as follows:

PART 229—AVAILABILITY OF FUNDS AND COLLECTION OF CHECKS

Subparts A—C [Reserved]

Appendixes A—C [Reserved]

Appendix D—Indorsement Standards

Authority: Title VI of Pub. L. 100-86, 101 Stat. 552, 635, 12 U.S.C. 4001 *et seq.*

Subarts A—C [Reserved]

Appendixes A—C [Reserved]

Appendix D—Indorsement Standards

1. The depositary bank shall indorse a check according to the following specifications:

• The indorsement shall contain—
—The bank's nine-digit routing number, set off by arrows at each end of the number and pointing toward the number;
—The bank's name/location; the indorsement date.

• The indorsement may also contain—
—An optional branch identification;
—An optional trace/sequence number;
—An optional telephone number for receipt of notification of large-dollar returned checks; and
—Other optional information provided that the inclusion of such information does not interfere with the readability of the indorsement.

• The indorsement shall be written in dark purple or black ink.

• The indorsement shall be placed on the back of the check in the following location:
—The indorsement shall be placed so that the routing number is wholly contained in the area 3.0 inches from the leading edge of the check to 1.5 inches from the trailing edge of the check.[1]
—The indorsement shall not be placed in the MICR clear band, extending along the bottom edge of the check to a height of 0.625 inches.

2. Each subsequent collecting bank indorser shall protect the identifiability and legibility of the depositary bank indorsement by:

• Including *only* its nine-digit routing number (without arrows), the indorsement date, and an optional trace/sequence number;
• Using an ink color other than purple;
• Indorsing in the area on the back of the check from 0.0 inches to 3.0 inches from the leading edge of the check.

3. Each returning bank indorser shall protect the identifiability and legibility of the depositary bank indorsement by:

• Using an ink color other than purple;
• Staying clear of the area on the back of the check from 3.0 inches from the leading edge of the check to the trailing edge of the check.

By order of the Board of Governors of the Federal Reserve System, April 5, 1988.

William W. Wiles,

Secretary of the Board.

[FR Doc. 88-7792 Filed 4-8-88; 8:45 am]

BILLING CODE 6210-01-M

[1] The leading edge is defined as the right side of the check looking at it from the front. The trailing edge is defined as the left side of the check looking at it from the front. See American National Standards Committee on Financial Services *Specification for the Placement and Location of MICR Printing*, X 9.13.

DEPARTMENT OF TRANSPORTATION

Federal Aviation Administration

14 CFR Part 39

[Docket No. 88-CE-09-AD; Amdt. 39-5892]

Airworthiness Directives; Beech Models 65, A65, A65-8200, 70, 65-80, 65-A80, 65-A80-8800, 65-B80, 65-88, 65-90, 65-A90, B90, C90, E90, 99, 99A, A99A, B99, 100, A100, B100 Airplanes

AGENCY: Federal Aviation Administration (FAA), DOT.

ACTION: Final rule.

SUMMARY: This amendment adopts a new Airworthiness Directive (AD), AD 88-04-07, applicable to certain Beech Models 65, A65, A65-8200, 70, 65-80, 65-A80, 65-A80-8800, 65-B80, 65-88, 65-90, 65-A90, B90, C90, C90A, E90, 99, 99A, A99A, B99, 100, A100, B100 airplanes, and codifies the corresponding emergency AD letter dated February 24, 1988, into the **Federal Register**. This AD requires inspection and replacement, if necessary, of Inconel nuts in the wing spar lower forward attachments. This AD is necessary because of the discovery of four Inconel nuts that were cracked. These nuts are critical to flight safety.

DATES:

Effective Date: April 18, 1988, to all persons except those to whom it has already been made effective by priority letter from the FAA dated February 24, 1988.

Compliance: As prescribed in the body of the AD.

ADDRESSES: Service Bulletin No. 2248, dated February, 1988, applicable to this AD, may be obtained from Beech Aircraft Corporation, Commercial Service, Department 52, P.O. Box 85, Wichita, Kansas 67201-0085. This information may be examined at the Rules Docket, FAA Office of the Regional Counsel, Room 1558, 601 East 12th Street, Kansas City, Missouri 64106.

FOR FURTHER INFORMATION CONTACT: Mr. Larry Engler, FAA Wichita Aircraft Certification Office, ACE-120W, 1801 Airport Road, Room 100, Mid-Continent Airport, Wichita, Kansas 67209; telephone (316) 946-4409.

SUPPLEMENTARY INFORMATION: The FAA has received reports of cracked Inconel nuts in the lower forward wing spar attachments of separate Beech 65, 70, 90, 99 and 100 Series airplanes. This defect is believed to be a result of the manufacturing process of the nuts. These nuts, located at the attachment of the lower forward wing spar, are critical to flight safety. Failure of such a nut may cause separation of the outboard wing from the center section, and consequently, the loss of the airplane.

The FAA determined that this was an unsafe condition that may exist in other airplanes of the same type design, thereby necessitating an AD. It was also determined that an emergency condition existed, that immediate corresponding action was required, and that notice and public procedure thereon were impracticable and contrary to the public interest. Accordingly, the FAA notified all known registered owners of the airplanes affected by this AD by priority mail letter dated February 24, 1988. The AD became effective immediately as to these individuals upon receipt of that letter, and is identified as AD 88-04-07. This AD requires inspection and replacement, if necessary, of each Inconel nut in the lower forward spar attachments.

Since the unsafe condition described therein may still exist on other Beech 65, 70, 90, 99 and 100 Series airplanes, the AD is being published in the **Federal Register** as an amendment to Part 39 of the Federal Aviation Regulations (14 CFR Part 39) to make it effective to all persons who did not receive the letter notification. Because a situation still exists that requires the immediate adoption of this regulation, it is found that notice and public procedure hereon are impracticable and contrary to the public interest, and good cause exists for making this amendment effective in less than 30 days.

The FAA has determined that this regulation is an emergency regulation that is not major under Executive Order 12291. It is impracticable for the agency

to follow the procedures of Order 12291 with respect to this rule since the rule must be issued immediately to correct an unsafe condition in aircraft. It has been further determined that this action involves an emergency regulation under DOT Regulatory Policies and Procedures (44 FR 11034; February 26, 1979). If this action is subsequently determined to involve a significant regulation, a final regulatory evaluation or analysis, as appropriate, will be prepared and placed in the regulatory docket (otherwise, an evaluation is not required). A copy of it, when filed, may be obtained by contacting the Rules Docket at the location under the caption "ADDRESSES."

List of Subjects in 14 CFR Part 39

Air transportation, Aviation safety, Aircraft, Safety.

Adoption of the Amendment

Accordingly, pursuant to the authority delegated to me by the Administrator, the Federal Aviation Administration amends § 39.13 of Part 39 of the FAR as follows:

PART 39—[AMENDED]

1. The authority citation for Part 39 continues to read as follows:

Authority: 49 U.S.C. 1354(a), 1421 and 1423; 49 U.S.C. 106(g) (Revised, Pub. L. 97-449, January 12, 1983); and 14 CFR 11.89.

§ 39.13 [Amended]

2. By adding the following new AD:

Beech: Applies to the following Models and serial numbered airplanes, certificated in any category, equipped with Inconel bolts and nuts in the wing lower forward spar attachments, and which have not installed Integral Fitting Spar Kit No. 90-4077-1S or 99-4023-1S or 100-4007-1S.

Models	Serial Nos.
65, A65, A65-8200	L-1, L-2, L-6, LF-7, LF-8 and LC-1 through LC-335.
70	LB-1 through LB-35.
65-80, 65-A80, 65-A80-8800, and 65-B80.	LD-1 through LD-511.
65-88	LP-1 through LP-47.
65-90, 65-A90, B90, and C90	LJ-1 through LJ-1087 (except LJ-1085).
E90	LW-1 through LW-347.
99, 99A, A99A, and B99	U-1 through U-164 (except U-50).
100, A100	B-1 through B-247.
B100	BE-2 through BE-137.

Note: Queen Air Model 65, 70, 80, and 88 airplanes were not factory approved for field installation of Inconel wing attachment hardware, however, some of these airplanes may have had Inconel hardware installed by field approval.

Compliance: Required prior to further flight after receipt of this AD unless already accomplished.

To prevent possible failure of the wing lower forward spar attachment, accomplish the following:

(a) Visually inspect each Inconel nut in the lower forward wing spar attachments in accordance with the instructions in Beech Service Bulletin No. 2248, dated February 1988. If no cracks are found, return the airplane to service.

(b) If a crack in any nut is found, prior to further flight replace the nut with a specially marked Part No. 81790-1414 nut per Figure 2 of the above referenced Service Bulletin.

(c) This AD does not apply if each affected nut has been replaced by a specially marked Part No. 81790-1414 nut per Figure 2 of the above referenced Service Bulletin.

(d) Return cracked nuts to Beech Aircraft Corporation, Commercial Service, Department 52, P.O. Box 85, Wichita, Kansas 67201-0085.

(e) Airplanes may be flown in accordance with FAR 21.197 to a location where this AD can be accomplished.

(f) An equivalent method of compliance with this AD, if used, must be approved by the Manager, Wichita Aircraft Certification Office, FAA, 1801 Airport Road, Room 100, Wichita, Kansas 67209; telephone (316) 946-4400.

All persons affected by this directive may obtain copies of the documents referred to herein upon request to Beech Aircraft Corporation, Commercial Service, Department 52, Wichita, Kansas 67201-0085, or these documents may be examined at the FAA, Office of the Regional Counsel, Room 1558, 601 East 12th Street, Kansas City, Missouri 64106.

This amendment becomes effective on April 18, 1988, to all persons except those to whom it has already been made effective by priority letter from the FAA dated February 24, 1988, and is identified as AD 88-04-07.

Issued in Kansas City, Missouri, on April 1, 1988.

Paul K. Bohr,

Director, Central Region.

[FR Doc. 88-7888 Filed 4-8-88; 8:45 am]

BILLING CODE 4910-13-M

14 CFR Part 39

[Docket No. 88-ANE-16; Amdt. 39-5893]

Airworthiness Directives; Textron Lycoming Model O-320-H Series, O-360-E Series, LO-360-E Series, TO-360-E Series, and LTO-360-E Series Engines [All Serial Numbers and Hydraulic Lifter (Tappet) Configurations]

AGENCY: Federal Aviation Administration (FAA), DOT.

ACTION: Final rule; request for comments.

SUMMARY: This amendment amends an existing airworthiness directive (AD) 80-04-03 Amendment 39-3692, as amended by Amendment 39-3977, which became effective on November 24, 1980. This amendment provides an administrative change to the reporting requirements of paragraph (b)(3) and the approving office of the FAA in paragraphs (c) and (d). The change in reporting requirements will limit the need to report contaminants found only in the affected model engines that incorporate the larger diameter hydraulic lifters (tappets), also known as the "T mod" modification.

DATES: *Effective:* April 25, 1988.

Compliance: Required after the effective date of this AD amendment.

Comments for inclusion in the docket must be received on or before June 25, 1988.

ADDRESSES: Comments on the amendment may be mailed in duplicate to: Federal Aviation Administration, New England Region, Office of the Regional Counsel, Attention: Rules Docket Number 88-ANE-16, 12 New England Executive Park, Burlington, Massachusetts 01803, or delivered in duplicate to Room 311 at the above address.

Comments delivered must be marked: "Rules Docket Number 88-ANE-16".

Comments may be inspected at the New England Region, Office of the Regional Counsel, Room 311, between the hours of 8:00 a.m. and 4:30 p.m., Monday through Friday, except Federal holidays.

Textron Lycoming Service Instruction (SI) No. 1406B may be obtained from Textron Lycoming, Williamsport Plant, 652 Oliver Street, Williamsport, Pennsylvania 17701.

A copy of the SI is contained in Rules Docket Number 88-ANE-16, in the Office of the Regional Counsel, Federal Aviation Administration, New England Region, 12 New England Executive Park, Burlington, Massachusetts 01803, and

may be examined between the hours of 8:00 a.m. and 4:30 p.m., Monday through Friday, except federal holidays.

FOR FURTHER INFORMATION CONTACT: Roy Hettenbach, Propulsion Branch, ANE-174, New York Aircraft Certification Office, Aircraft Certification Division, New England Region, Federal Aviation Administration, 181 South Franklin Avenue, Room 202, Valley Stream, New York 11581, telephone (516) 791-7421.

SUPPLEMENTARY INFORMATION: The FAA has determined that the reporting requirement, which has been in effect since 1980, has produced sufficient data base on the affected Textron Lycoming engine models with the original cam and hydraulic lifter design. However, the data base for the affected engine models that incorporate the improved cam and hydraulic lifter design, known as the "T mod" and described in Textron Lycoming Service Instruction No. 1406B, must still be established. The "T mod" is identified by the letter "T" stamped as a suffix to the engine serial number which appears on the engine name plate (e.g., L-6005-767). Therefore, by this amendment, an administrative change has been made to the reporting requirements of paragraph (b)(3) of AD 80-04-03 R1, reducing the need to report on all affected engine models, to reporting only on the affected engine models that incorporate the "T mod".

Paragraphs (c) and (d) have been revised to indicate the new FAA office location and name, resulting from the geographical change from the Eastern Region to the New England Region.

Since this amendment is only administrative in nature, it is found that notice and public procedure hereon are not necessary and good cause exists for making this amendment effective within 30 days.

Although this action is in the form of a final rule which involves administrative changes only, and thus, was not preceded by notice and public procedure, comments are invited on the rule. Interested persons are invited to comment on this rule by submitting such written data, views, or arguments as they may desire. Communications should identify the regulatory docket number and be submitted in duplicate to the address specified above.

All communications received on or before the closing date for comments will be considered by the Director. This rule may be amended in light of comments received. Comments that provide a factual basis supporting the views and suggestions presented are particularly helpful in evaluating the effectiveness of the AD and determining whether additional rulemaking is needed.

Comments are specifically invited on the overall regulatory and economic aspects of the rule that might suggest a need to modify the rule. All comments submitted will be available, both before and after the closing date for comments, in the Rules Docket, at the address given above, for examination by interested persons. A report summarizing each FAA-public contact, concerned with the substance of this AD, will be filed in the Rules Docket.

Commenters wishing the FAA to acknowledge receipt of their comments submitted in response to this notice must submit a self-addressed, stamped postcard on which the following statement is made:
"Comments to Rules Docket Number 88-ANE-16". The postcard will be date/time stamped and returned to the commenter.

Conclusion

The FAA has determined that this amendment is administrative in nature, and that the change in reporting requirements is minor, therefore, the amendment is not considered to be (1) A major rule under Executive Order 12291; (2) a significant rule under DOT Regulatory Policies and Procedures (44 FR 11034; February 26, 1979); and (3) does not warrant preparation of a regulatory evaluation as the anticipated impact is minimal. It is certified that this AD amendment will not have a significant economic impact on a substantial number of small entities under the criteria of the Regulatory Flexibility Act.

List of Subjects in 14 CFR Part 39

Engines, Aircraft, Aviation safety, Air transportation.

Adoption of the Amendment

Accordingly, pursuant to the authority delegated to me, the Federal Aviation Administration (FAA) amends Part 39 of the Federal Aviation Regulations (FAR) as follows:

PART 39—[AMENDED]

1. The authority citation for Part 39 continues to read as follows:

Authority: 49 U.S.C. 1354(a), 1421, and 1423; 49 U.S.C. 106(g) (Revised Pub. L. 97-449, January 12, 1983); and 14 CFR 11.89.

§ 39.13 [Amended]

2. By amending § 39.13, Amendment 39-3977, (45 FR 77413; November 24, 1980) Airworthiness Directive (AD) 80-04-03 R1 as follows:

(a) By revising paragraph (b)(3) to read as follows: "If contaminants are detected, engine maintenance entries shall be made. If the engine is one of the affected Textron Lycoming engine models with the 'T mod' modification (larger diameter hydraulic lifters), notification in writing must be sent to the Manager, New York Aircraft Certification Office, 181 South Franklin Avenue, Room 202, Valley Stream, New York 11581, specifying the following information:

1. Engine Model and Serial Number.
2. Total time and time since overhaul.
3. Total time on cam and hydraulic lifters.
4. Total time since oil additive first used.
5. Visual condition of cam lobe and lifter contact surfaces.

(Information collection requirements contained in this regulation (§ 39.13) have been approved by the Office of Management and Budget under the provisions of the Paperwork Reduction Act of 1980 (Pub. L. 96-511) and have been assigned OMB control number 2120-0056)

Note: The 'T mod' is the latest design crankcase that incorporates large diameter hydraulic lifters and wide lobe camshafts and is described in Textron Lycoming Service Instruction No. 1406B. Engines incorporating this configuration are identified by the letter 'T' stamped as a suffix to the engine serial number which appears on the engine nameplate for overhaul modified, remanufactured, and new production engines (e.g., L-6005-767)."

(b) By revising paragraph (c) to read as follows: "Equivalent methods of compliance may be approved by the Manager, New York Aircraft Certification Office, FAA, New England Region."

(c) By revising paragraph (d) to read as follows: "Upon submission of substantiating data by an owner or operator through an FAA Maintenance Inspector, the Manager, New York Aircraft Certification Office, FAA, may adjust the compliance time specified in this AD."

Amendment 39-3692 was effective February 8, 1980.

Amendment 39-3977 was effective November 24, 1980.

This amendment becomes effective on April 25, 1988.

Issued in Burlington, Massachusetts, on April 1, 1988.

Timothy P. Forte',

Acting Director, New England Region.

[FR Doc. 88-7887 Filed 4-8-88; 8:45 am]

BILLING CODE 4910-13-M

---

14 CFR Part 71

[Airspace Docket No. 87-ASO-20]

Designation of Control Zone, Ft. Pierce, FL

AGENCY: Federal Aviation Administration (FAA), DOT.

ACTION: Final rule.

SUMMARY: This amendment designates a control zone to encompass the airspace

surrounding the Ft. Pierce/St. Lucie County International Airport with an extension to contain an instrument approach procedure. Airspace affected by designation of the control zone extends upward from the surface within a 5-mile radius of the airport with an extension to contain IFR arrival operations. This control zone will be effective on a part-time basis corresponding to the hours the Airport Traffic Control is in operation.

EFFECTIVE DATE: 0901 UTC, May 15, 1988.

FOR FURTHER INFORMATION CONTACT: James G. Walters, Airspace Section, Airspace and Procedures Branch, Air Traffic Division, Federal Aviation Administration, P.O. Box 20636, Atlanta, Georgia 30320; telephone: (404) 763-7646.

SUPPLEMENTARY INFORMATION:

History

On December 28, 1987, the FAA proposed to amend Part 71 of the Federal Aviation Regulations (14 CFR Part 71) by designating the Ft. Pierce, Florida, control zone (53 FR 1375). This action will lower the base of controlled airspace from 700' above the surface down to the surface. The additional controlled airspace will provide an increased level of safety to aircraft executing instrument operations at the airport. The airport averages approximately 500 commercial IFR operations per month. Additionally, the airport serves as a principle customs and immigration Port of Entry for general aviation aircraft entering the U.S. from the Bahamas and the Caribbean. Ft. Pierce/St. Lucie County International Airport is served by non-federal control tower which, in addition to providing ATC Communications, will provide weather observation and reporting service during the hours the control zone is effective. Interested parties were invited to participate in this rulemaking proceeding by submitting written comments on the proposal to the FAA. No comments objecting to the proposal were received. This amendment is the same as that proposed in the notice. Section 71.171 of Part 71 of the Federal Aviation Regulations was republished in FAA Handbook 7400.6C dated January 2, 1987.

The Rule

This amendment to Part 71 of the Federal Aviation Regulations designates the Ft. Pierce Control Zone and lowers the base of controlled airspace in the vicinity of the Ft. Pierce/St. Lucie County International Airport from 700' above the surface down to the surface.

The Rule

The FAA has determined that this regulation only involves an established body of technical regulations for which frequent and routine amendments are necessary to keep them operationally current. It, therefore, (1) is not a "major rule" under Executive Order 12291; (2) is not a "significant rule" under DOT Regulatory Policies and Procedures (44 FR 11034; February 26, 1979); and (3) does not warrant preparation of a regulatory evaluation as the anticipated impact is so minimal. Since this is a routine matter that will only affect air traffic procedures and air navigation, it is certified that this rule, when promulgated, will not have a significant economic impact on a substantial number of small entities under the criteria of the Regulatory Flexibility Act.

List of Subjects in 14 CFR Part 71

Aviation safety, Control zone.

Adoption of The Amendment

Accordingly, pursuant to the authority delegated to me, Part 71 of the Federal Aviation Regulations (14 CFR Part 71) is amended, as follows:

PART 71—[AMENDED]

1. The authority citation for Part 71 continues to read as follows:

Authority: 49 U.S.C. 1348(a), 1354(a), 1510; E.O. 10854; 49 U.S.C. 106(g) (Revised Pub. L. 97-449, January 12, 1983); 14 CFR 11.69.

§ 71.171 [Amended]

2. Section 71.171 is amended as follows:

Ft. Pierce, Florida [New]

Within a 5-mile radius of Ft. Pierce/St. Lucie County International Airport (Lat. 27°29'37"N., Long. 80°22'01"W.); within 2 miles each side of the Vero Beach VORTAC (Lat. 27°40'41"N., Long. 80°29'23"W.) 151° radial extending from the 5-mile radius area to 8 miles southeast of the Vero Beach VORTAC, excluding that portion within the Vero Beach, Florida, control zone. This control zone is effective during the specific dates and times established in advance by Notice to Airman. The effective date and time will thereafter be continuously published in the Airport/Facility Directory.

Issued in East Point, Georgia, on March 29, 1988.

William D. Wood,

Acting Manager, Air Traffic Division, Southern Region.

[FR Doc. 88-7886 Filed 4-8-88; 8:45 am]

BILLING CODE 4910-13-M

14 CFR Part 71

[Airspace Docket No. 87-ANM-11]

Alteration of Transition Area, Missoula, MT; Correction

AGENCY: Federal Aviation Administration (FAA), DOT.

ACTION: Correction to final rule.

SUMMARY: This action corrects **Federal Register** Document 88-835. The transition area description for Missoula, Montana, as published in the final rule, contained two incorrect sets of coordinates. This action corrects the description.

EFFECTIVE DATE: 0901 UTC, May 5, 1988.

FOR FURTHER INFORMATION CONTACT: Robert L. Brown, ANM-535, Federal Aviation Administration, Docket No. 87-ANM-11, 17900 Pacific Highway South, C-68966, Seattle, Washington 98168, Telephone: (206) 431-2535.

SUPPLEMENTARY INFORMATION:

History

Federal Register Document 88-835, was published on January 19, 1988, Volume 53, Page 1336, established additional controlled airspace in the vicinity of Missoula, Montana. The description of the new controlled airspace, contained two sets of incorrect coordinates.

This revision to the 1,200 foot transition area provided users with the benefit of radar vectors at altitudes compatible with the instrument approach procedures in the Missoula area.

The FAA has determined that this regulation only involves an established body of technical regulations for which frequent and routine amendments are necessary to keep them operationally current. It, therefore—(1) is not a "major rule" under Executive Order 12291; (2) is not a "significant rule" under DOT Regulatory Policies and Procedures (44 FR 11034; February 26, 1979); and (3) does not warrant preparation of a regulatory evaluation as the anticipated impact is so minimal. Since this is a routine matter that will only affect air traffic procedures and air navigation, it is certified that this rule will not have a significant economic impact on a substantial number of small entities under the criteria of the Regulatory Flexibility Act.

List of Subjects in 14 CFR Part 71

Aviation safety, Transition areas.

Adoption of the Correction

Accordingly, pursuant to the authority delegated to me, **Federal Register** Document 88-835, as published in the **Federal Register** on January 19, 1988, (53 FR 1336) is corrected as follows:

PART 71—[AMENDED]

§ 71.181 [Amended]

Missoula, Montana (Revised)

That airspace extending upward 700 feet above the surface within a 23.5 mile radius of the Missoula VORTAC (lat. 46°54'29" N, long. 114°04'56" W) extending from the Missoula VORTAC 190° radial clockwise to the 209° radial; within 9.5 miles southwest and 5.5 miles northwest of the Missoula VORTAC 312° redial extending from the VORTAC to 38 miles northwest of the VORTAC; within 3 miles each side of the Missoula VORTAC 172° radial extending from the VORTAC to 19.5 miles southwest; and the airspace extending upward from 1,200 feet above the surface bounded by a line beginning at lat. 47°30'00" N, long. 115°15'00" W to lat. 47°30'00" N, long. 112°40'00" W to lat. 46°53'00" N, long. 112°19'00" W to lat. 46°44'00" N, long. 112°19'00" W to lat. 46°44'00" N, long. 112°54'00" W to lat. 46°33'00" N, long. 113°05'00" W to lat. 46°00'00" N, long. 113°05'00" W to lat. 46°00'00" N, long. 115°15'00" W to point of beginning and excluding the portion within the Great Falls, Montana; Helena, Montana; and Coppertown, Montana, 1,200 foot transition areas.

(Secs. 307(a) and 313(a), Federal Aviation Act of 1958 (49 U.S.C. 1348(a) and 1354(a)); (49 U.S.C. 106(g) (Revised Pub. L. 97-449, January 12, 1983)); and 14 CFR 11.69)

Issued in Seattle, Washington, on March 29, 1988.

Temple H. Johnson, Jr.,

Manager, Air Traffic Division, Northwest Mountain Region.

[FR Doc. 88-7685 Filed 4-8-88; 8:45 am]

BILLING CODE 4910-13-M

---

14 CFR Part 71

[Airspace Docket No. 87-ANM-7]

Alteration of Transition Area, Rock Springs, WY; Correction

AGENCY: Federal Aviation Administration (FAA), DOT.

ACTION: Correction to final rule.

SUMMARY: This action corrects **Federal Register** Document 87-19991 due to several incorrect VORTAC radials which were published in the final rule description of the Rock Springs transition area effective November 19, 1987.

EFFECTIVE DATE: 0901 UTC, May 5, 1988.

FOR FURTHER INFORMATION CONTACT: Robert L. Brown, ANM-535, Federal Aviation Administration, Docket No. 87-ANM-7, 17900 Pacific Highway South, C-68966, Seattle, Washington 98168, Telephone: (206) 431-2535.

SUPPLEMENTARY INFORMATION:

History

Federal Register Document 87-19993, published on September 1, 1987, Volume 52, Page 32915 altered the Rock Springs 1200-foot transition area to provide additional controlled airspace east of Rock Springs, Wyoming. The description of the transition area contained several incorrect VORTAC radials.

The FAA has determined that this regulation only involves an established body of technical regulations for which frequent and routine amendments are necessary to keep them operationally current. It, therefore—(1) is not a "major rule" under Executive Order 12291; (2) is not a "significant rule" under DOT Regulatory Policies and Procedures (44 FR 11034; February 26, 1979); and (3) does not warrant preparation of a regulatory evaluation as the anticipated impact is so minimal. Since this is a routine matter that will only affect air traffic procedures and air navigation, it is certified that this rule will not have a significant economic impact on a substantial number of small entities under the criteria of the Regulatory Flexibility Act.

List of Subjects in 14 CFR Part 71

Aviation safety, transition areas.

Adoption of the Correction

Accordingly, pursuant to the authority delegated to me, **Federal Register** Document 87-19991, as published in the **Federal Register** on September 1, 1987 (52 FR 32915) is corrected as follows:

PART 71—[AMENDED]

§ 71.181 [Amended]

Rock Springs, Wyoming, Transition Area (Amended)

Change 1200-foot transition area to read as follows: * * * to 19 miles east of the VORTAC; and that airspace extending upward from 1,200 feet above the surface within a 23-mile radius of the Rock Springs VORTAC, including that airspace bounded by 4.5 miles south of the Rock Springs 129° radial between 23 miles and 43.5 miles, and 4.5 miles east of the Cherokee VORTAC 225° radial between the VORTAC and 56.5 miles, and 4.5 miles northwest of the Rock Springs 061° radial between 23 miles and the Cherokee VORTAC, excluding that airspace included in the Rawlins, Wyoming, transition area.

(Secs. 307(a) and 313(a), Federal Aviation Act of 1958 (49 U.S.C. 1348(a) and 1354(a)) (49 U.S.C. 106(g) (Revised, Pub. L. 97-449, January 12, 1983)); and 14 CFR 11.69)

Issued in Seattle, Washington, on March 28, 1988.

Temple H. Johnson, Jr.,

Manager, Air Traffic Division, Northwest Mountain Region.

[FR Doc. 88-7684 Filed 4-8-88; 8:45 am]

BILLING CODE 4910-13-M

SECURITIES AND EXCHANGE COMMISSION

17 CFR Parts 230 and 240

[Release No. 33-6763, 34-25546; File No. S7-31-86]

Prospectus Delivery for Aftermarket Transactions

AGENCY: Securities and Exchange Commission.

ACTION: Final rules.

SUMMARY: The Securities and Exchange Commission ("Commission") has adopted an amendment to Rule 174 governing a dealer's obligation to deliver prospectuses after a registered offering during the 40 or 90 day period specified in section 4(3) of the Securities Act of 1933. This amendment reduces the aftermarket prospectus delivery period with respect to offerings by issuers that were not reporting companies before filing their registration statements to 25 calendar days after the offering of securities that are either listed on a national securities exchange or authorized for inclusion in an electronic inter-dealer quotation system of a registered securities association (e.g., NASDAQ, the quotation system sponsored and governed by the National Association of Securities Dealers, Inc.). In addition, the Commission has adopted a corresponding amendment to Rule 15c2-8 under the Securities Exchange Act of 1934.

EFFECTIVE DATE: These amendments are effective for public offerings commencing after April 11, 1988.

FOR FURTHER INFORMATION CONTACT: Prior to the effective date, Larisa E. Dobriansky (202) 272-2589, Office of Disclosure Policy, Division of Corporation Finance, Securities and Exchange Commission, 450 Fifth St., NW., Washington, DC 20549. After the effective date, contact Anne Krauskopf, (202) 272-2573, Office of the Chief Counsel, Division of Corporation Finance.

SUPPLEMENTARY INFORMATION: The Commission today announced the adoption of revisions to Rule 174[1] under the Securities Act of 1933 ("Securities Act")[2] and a corresponding amendment to Rule 15c2–8[3] under the Securities Exchange Act of 1934 ("Exchange Act").[4]

The Commission reminds all securities professionals that the prospectus delivery requirement of section 4(3),[5] as modified by Rule 174, applies to all dealers effecting transactions in the registered securities, whether or not they participate in the distribution of the securities, and that failure to comply with those requirements, as amended today, may result in appropriate Commission enforcement action.

I. Discussion

A. Alternative Proposals to Reduce Prospectus Delivery Period

In December, 1986, the Commission proposed alternative amendments to Rule 174[6] to reduce or, in some cases, eliminate the 40 or 90 day prospectus delivery period specified in section 4(3) of the Securities Act ("prospectus delivery period"). During the applicable period,[7] dealers[8] must deliver a Section 10(a)[9] prospectus (final prospectus) in connection with most secondary market transactions[10] in securities that are the subject of a registration statement filed under the Securities Act. The aftermarket prospectus delivery requirement applies to all dealers effecting transactions in the registered securities, whether or not they participate in the distribution of the securities. That requirement is in addition to the obligation of dealers to deliver a prospectus when acting as underwriters and with respect to their unsold allotments or subscriptions.

The prospectus delivery period and associated "quiet period"[11] run from the later of the effective date of the registration statement or the first date on which the securities were bona fide offered to the public. Rule 174 provides, with respect to either the 40 or 90 day period, that a prospectus need not be delivered for aftermarket transactions in the securities of an issuer that was a reporting company under the Exchange Act prior to filing the Securities Act registration statement covering such securities.

Two approaches to amending Rule 174 were proposed. Both would have provided relief, under certain circumstances, for transactions in the securities of issuers not subject to the reporting requirements of section 13 or 15(d)[12] of the Exchange Act immediately prior to filing their registration statements ("non-reporting companies"). In this regard, comment was solicited on whether developments that have occurred in the trading markets justify a reduction in the prospectus delivery period for offerings by non-reporting companies ("initial public offerings") of securities meeting the conditions of either proposal. In particular, comment was requested on whether current trading requirements, market processes, and issuer standards assure the availability and timely dissemination of material information and minimize the potential for market manipulation and other hot issue abuses. The Commission asked commentators to furnish empirical data supporting their views.

Proposal I would have reduced the prospectus delivery period to 25 days following a public offering for transactions in listed equity[13] or NASDAQ[14] securities for which real-time transaction reporting[15] is required by an effective transaction reporting plan[16] ("transaction-reported securities"). Exchange Act Rule 11Aa2–1 designates for trading in the National Market System ("NMS") any transaction-reported security.[17]

In addition to reducing the prospectus delivery period for transaction-reported securities, Proposal I would have eliminated the prospectus delivery requirement for aftermarket transactions in transaction-reported common stock sold in a firm commitment underwriting if the registrant satisfied criteria relating to the company's size, public float and operating history. Those transactions would have been afforded the same relief currently provided under Rule 174 to transactions in securities of reporting companies.

The alternative rule proposed for comment, Proposal II, was based on the recommendations contained in a rulemaking petition filed by the Securities Industry Association ("SIA").[18] It would have reduced the prospectus delivery period to 25 days for dealers trading in securities listed on a national securities exchange or authorized for inclusion in the NASDAQ system, whether or not subject to transaction reporting.

B. Comments on Proposed Amendments

Of the seven commentators on the rule proposals, six endorsed the Commission's objective of further reducing the regulatory burdens imposed upon dealers under section 4(3) of the Securities Act without compromising investor protection.[19] However, none of the commentators supported the elimination of the delivery period under Proposal I. Doubts were expressed about whether, immediately after completion of an initial public offering, information concerning the issuer will have been disseminated as

---

[1] 17 CFR 230.174.

[2] 15 U.S.C. 77a–77aa (1982).

[3] 17 CFR 240.15c2–8.

[4] 15 U.S.C. 78a–78kk (1982).

[5] 15 U.S.C. 77d(3).

[6] Release No. 33–6682 (December 18, 1986) [51 FR 46974] ("Proposing Release").

[7] If securities of the issuer have not been sold previously pursuant to an earlier effective registration statement, the applicable period specified in section 4(3)(B) [15 U.S.C. 77d(3)(B)] is 90 days; otherwise, the designated period is 40 days. In both cases, the Securities Act authorizes the Commission to specify a shorter period.

[8] Under section 2(12) of the Securities Act [15 U.S.C. 77b(12)], and as used throughout this Release, the term "dealer" includes a "broker."

[9] 15 U.S.C. 77j(a).

[10] Section 4(4) of the Securities Act (15 U.S.C. 77d(4)) exempts transactions executed by brokers on exchanges or in the over-the-counter markets pursuant to unsolicited customers' orders.

[11] Sections 5(b)(1) [15 U.S.C. 77e(b)(1)] and 2(10) [15 U.S.C. 77b(10)] of the Securities Act, taken together, require that, during the prospectus delivery period, a prospectus meeting the requirements of section 10(a) of the Act accompany or precede any communication that would be deemed to be a prospectus and does not itself meet the section 10(a) requirements. As a result of such restrictions, the prospectus delivery period frequently is referred to as a "quiet period."

[12] 15 U.S.C. 78m 78o(d).

[13] The term "listed equity security" means any equity security which is listed on a national securities exchange.

[14] The term "NASDAQ security" means an equity security for which quotation information is disseminated in the National Association of Securities Dealers Automated Quotations ("NASDAQ") system.

[15] Real-time transaction reporting is the disseminating, within 90 seconds of a transaction, of the price and volume data associated with the transaction.

[16] Rule 11Aa3–1 under the Exchange Act ("transaction reporting rule") [17 CFR 240.11Aa3–1] defines an "effective transaction reporting plan" as a plan for collecting, processing and disseminating transaction reports with respect to transactions in reported securities that has been approved by the Commission.

[17] Rule 11Aa2–1 [17 CFR 240.11Aa2–1] ("NMS securities rule"). *See* Release No. 34–24635 (June 23, 1987) [52 FR 24149].

[18] The SIA is a trade association representing over 500 securities firms in the United States and Canada, which collectively account for approximately 90% of the securities business transacted in North America. The SIA petition was submitted on April 1, 1985 pursuant to Rule 4(a) of the Commission's Rules of Practice [17 CFR 201.4(a)]. This petition is available for public inspection and copying in the Commission's Public Reference Room (*see* File No. S7–31–86).

[19] The comment letters are available for public inspection and copying at the Commission's Public Reference Room (*see* File No. S7–31–86).

broadly as information relating to comparable companies having a reporting history under the Exchange Act.

Of the commentators favoring a reduction in the prospectus delivery period, four commentators specifically addressed the appropriate time period,[20] but only one commentator provided empirical data to support its position.[21] Those commentators believed that 25 calendar days should provide adequate time for the establishment of an orderly trading market for securities covered by either Proposal I or II.

Five of the commentators supporting changes to Rule 174 preferred the approach of Proposal II. They believed that it would be sufficient to rely upon listing standards, filing and disclosure requirements, and available market information about exchange-traded or NASDAQ securities to curb the potential for abuse associated with hot issues. Four of those commentators stated their belief that the distinctions between NASDAQ/NMS and NASDAQ-only securities do not justify limiting relief to NASDAQ/NMS securities. Only one commentator supported transaction reporting as a condition for relief under Rule 174. In that commentator's view, the qualification criteria for transaction reporting minimize the risk of abuse.

C. Analysis of Trading Volume and Price Data by the Directorate of Economic and Policy Analysis

The Commission's Directorate of Economic and Policy Analysis ("DEPA") [22] analyzed aftermarket trading behavior of transaction-reported common stocks and non-NMS/NASDAQ common stocks issued in initial offerings between March 1985 and February 1986 ("DEPA Analysis").[23] The analysis focused on daily volume and relative price changes occurring with respect to aftermarket transactions in 96 such securities during the first 90 and 150 trading days, respectively, following registration effectiveness. The total sample consisted of 33 transaction-reported stocks and 63 non-NMS/NASDAQ stocks.

The volume data indicated that abnormal volume subsided well before 90 calendar days for both transaction-reported and non-NMS/NASDAQ securities.[24] The volume and price data did not support the zero-day exemption contained in Proposal I. The data indicated that abnormal volume and price behavior subsidied no more quickly for those securities that would have qualified for the zero-day exemption than for the other securities in the total sample.[25]

II. Amendment of Rule 174

The Commission has determined to reduce the prospectus delivery period based on Proposal II. The amendment to Rule 174 is intended to reduce unnecessary regulatory burdens and compliance costs imposed upon dealers in the aftermarket by section 4(3), consistent with investor protection.

The revised rule preserves an aftermarket prospectus delivery period and associated "quiet period" [26] to ensure that investors obtain full and fair disclosure concerning non-reporting issuers. Because of the importance of the aftermarket prospectus delivery period and the "quiet period" to investor protection, the Commission intends to institute appropriate action for failure to comply with the requirements of section 4(3) as modified by Rule 174 as amended.

The amendment to Rule 174 [27] reduces the 40 or 90 day prospectus delivery period after a registered offering of securities by a non-reporting company, if, as of the "offering date," the securities are either listed on a national securities exchange or authorized for inclusion in an electronic inter-dealer quotation system sponsored and governed by the rules of a registered securities association.[28] For purposes of this provision, the term "offering date" refers to the later of the effective date of the registration statement or the first date on which the security was bona fide offered to the public. Under the Rule as revised, a dealer's prospectus delivery obligation with respect to the offerings described above will cease 25 calendar days after the offering date.

Under Proposal II, the prospectus delivery period would have run solely from the date of effectiveness. As adopted, Rule 174(d) establishes a trigger date that conforms to the provisions of section 4(3)(B) of the Securities Act. The statutory trigger date has been retained because the need for prospectus delivery does not arise until the bona fide commencement of a public offering, which may be later than the date on which a registration statement becomes effective.[29]

In response to the Commission's question in the Proposing Release, commentators stated their belief that a reduced prospectus delivery period of 25 calendar days should provide a reasonable time for the secondary market to assimilate available information and to stabilize.[30] The DEPA analysis indicated that abnormal trading volume for the transaction-reported and NASDAQ-only securities tested was 80% dissipated by the 16th trading day (23rd calendar day).[31]

The delivery period is expressed in terms of calendar rather than trading days in order to simplify compliance and to make the calculation under Item 502(e) of Regulation S-K [32] easier. Under item 502(e), the registrant is required to insert into the prospectus legend the expiration date of the section 4(3) delivery period. That legend indicates that all dealers, whether or not participating in the distribution of securities that are the subject of a Securities Act registration statement, may be required to deliver a prospectus for the applicable delivery period. As is currently the case, the registrant, through its managing underwriter, will be in a position to know when the offering will commence and therefore able to calculate the corre ct date for the prospectus legend.

The Rule 174 amendment covers registered offerings of all exchange listed and NASDAQ securities by previously non-reporting companies. It does not apply to offerings of over-the-counter securities for which transaction quotations are solely listed by the

[20] The SIA addressed this issue in its rulemaking petition.

[21] That commentator presented aftermarket price and volume data for the first 10, 25, 40 and 90 days of trading in securities that were issued in various initial public offerings it underwrote. The data indicated that the heaviest trading volume generally occurred within the first 10 trading days and, after 25 trading days, the average volume leveled off substantially. The commentator supplying the data favored the adoption of Proposal II.

[22] DEPA was merged with the Office of the Chief Economist in January 1988, to create the Office of Economic Analysis.

[23] DEPA's analysis is available for public inspection and copying at the Commission's Public Reference Room (*see* File No. S7-31-86).

[24] The analysis notes that, while choosing the point when the level of trading volume becomes normal is judgmental, abnormal trading volume for both groups of stocks was 80% dissipated by the 16th day of trading (23rd calendar day) and virtually non-existent by about the 38th trading day (56th calendar day). DEPA Analysis at 6.

[25] DEPA Analysis at 6, 14.

[26] *See* n. 11, *supra*.

[27] *See* new paragraph (d) of Rule 174. Subsequent paragraphs of Rule 174 have been redesignated.

[28] Currently, NASDAQ is the only such quotation system.

[29] For example, this could occur where a registrant relies upon Securities Act Rule 430A [17 CFR 230.430A] or Rule 415 [17 CFR 230.415].

[30] *See* n. 21, *supra*.

[31] *See* n. 24, *supra*.

[32] 17 CFR 229.502(e).

National Quotation Bureau in the "pink sheets."[33]

The existence of regulatory requirements applicable to exchange-listed and NASDAQ securities and market processes provide adequate investor protection to permit relaxation of the prospectus delivery requirements. Listing standards, filing and disclosue requirements, and market information requirements assure the availability and timely dissemination of material information.

In admitting securities for trading, the exchanges and the National Association of Securities Dealers ("NASD") impose qualification criteria on issuers.[34] These criteria specify minimum standards for an issuer's financial characteristics, public distribution of a security and market activity of a security.[35] They also require issuers to comply with continuing filing and disclosure obligations.[36] These requirements are intended to assure that information about qualifying issuers is available to the marketplace and is updated on a timely basis.[37]

To quality for the 25-day prospectus delivery period, the applicable Exchange or NASDAQ standards must be satisfied as of the offering date under new Rule 174(d). For the shortened delivery period to apply where an issuer undertakes a unit offering, or more than one class of securities is covered by a prospectus, each security comprising a unit or offered by means of the prospectus must be so qualified.

Trade and quotation reporting requirements applicable to exchange-listed and NASDAQ securities help investors, self-regulatory organizations, and the Commission to monitor and surveil aftermarket transactions. Securities that have been designated for trading in the National Market System are subject to both continuous firm quotation [38] and real-time last sale repoting requirements.[39] NASDAQ-only securities and regional exchange-listed securities that are not transaction-reported also are subject to continuous firm quotation requirements.[40]

Consistent with Proposal II, Rule 174, as amended, retains the section 4(3) delivery periods for secondary market transactions in the securities of non-reporting companies where the securities (or any of the securities comprising a unit) are neither exchange-listed nor NASDAQ securities. The amendment to Rule 174 also preserves the prospectus delivery requirement for a dealer acting as an underwriter or effecting transactions in an unsold allotment or subscription of securities.[41] Finally, this amendment does not alter a dealer's prospectus delivery obligations under Exchange Act Rule 15c2–8.[42]

In the Proposing Release, the Commission requested comment on whether to exclude from relief under the proposed Rule 174 amendment "blank check" offerings by companies with minimal operating assets. These offerings involve "shell" companies going public by means of registration statements that do not specify business or investment plans at the time of effectiveness. Instead of creating an exclusion from the amendment to Rule 174 for such "blank check" offerings, the Commission has determined to rely upon the issuer financial and trading criteria for exchange listing or NASDAQ authorization to screen out offerings that are most susceptible to abuse.

III. Cost-Benefit Analysis

To evaluate fully the benefits and costs associated with the proposed amendment to Rule 174, the Commission requested commentators to provide views and data as to the costs and benefits associated with the amendment to reduce the 40 or 90 day aftermarket prospectus delivery periods specified in section 4(3) of the Securities Act. In this regard, the Commission noted that the amendment would reduce unnecessary costs and regulatory burdens imposed by section 4(3) and Rule 174 thereunder. The commentators on the rule proposals did not quantify the costs of the section 4(3) prospectus delivery requirements nor the cost savings under the respective proposals. Commentators that addressed the issue of benefits pointed out that the relief provided by Proposal II would apply to a broader class of securities offerings.

IV. Final Regulatory Flexibility Analysis

This final regulatory flexibility analysis concerns amendments to Securities Act Rule 174 and Exchange Act Rule 15c2–8, and has been prepared in accordance with 5 U.S.C. 604. A summary of the Initial Regulatory Flexibility Analysis was included in the Proposing Release.

Reasons For and Objectives of Amendments

The objective of the amendment to Rule 174 is to reduce the aftermarket prospectus delivery periods specified in section 4(3) of the Securities Act where current trading requirements, issuer standards and market processes assure the availability and timely dissemination of material information and minimize the potential for abuse. By relaxing the aftermarket prospectus delivery obligation through a reduction of the time period, this amendment reduces unnecessary costs imposed by the prospectus delivery requirements of section 4(3) and Rule 174 thereunder. The change achieves these purposes while preserving adequate disclosure of information to investors and investor protection under the Federal securities laws.

---

[33] The NASD has submitted to the Commission a rule filing that would establish a Non-NASDAQ Reporting System: An electronic price and volume reporting system for non-NASDAQ securities. *See* SR–NASD–87–55. Approval by the Commission of the rule filing would not cause "pink sheet" securities to be subject to the reduced prospectus delivery period now set out in Rule 174.

[34] *See, e.g.*, New York Stock Exchange ("NYSE") Listed Company Manual, reprinted in NYSE Guide (CCH) ¶ 2501 at 4225–28; American Stock Exchange ("Amex") Guide (CCH) ¶ 10,001–10,005; Philadelphia Stock Exchange Guide (CCH) ¶ 2803 at 2301, Rule 803(a); Pacific Stock Exchange Guide (CCH) ¶ 3025 at 3053–54, Rule I Section 3(b); Midwest Stock Exchange Guide (CCH) ¶ 1897, Article XXVIII, Rule 7; Boston Stock Exchange Guide (CCH) ¶ 2280, Chapter XXVII, Section 1; NASD Manual (CCH) ¶ 1754 at 1571, Schedule D to the By-Laws, Part VI, Sections 2 (a) and (b).

[35] For example, these standards may specify: (1) That there be a minimum number of shares of the issuer's security in the hands of a minimum number of public shareholders; (2) that the issuer meet minimum asset, capital and surplus, or income requirements; (3) that the issuer have a certain operating history; (4) that the public float have a certain market value. *See* standards for listing and quotation cited in n. 34, *supra*. For initial inclusion in NASDAQ, a security must have two registered and active market makers, and each market maker must be willing to buy and sell the security for its own account on a continuous basis and must enter and maintain firm two-sided quotations in the NASDAQ system. NASD Manual (CCH) ¶ 1754 at 1565, 1571, Schedule D to the By-Laws, Part II, Section 1(c)(1) and Part VI, Sections 2 (a) and (b).

[36] *See* n. 34 *supra*. *E.g.*, NYSE Guide ¶ 2507; Amex Guide ¶ 10,030; NASD Manual ¶ 1754; Philadelphia Stock Exchange Guide ¶ 2805; Midwest Stock Exchange Guide ¶ 1898; Boston Stock Exchange Guide ¶ 2267.

[37] Issuers seeking to have their securities listed on an exchange or reported under the NASD's Transaction Reporting Plan must register their securities immediately under section 12(b) or 12(g) of the Echange Act [15 U.S.C. 78*l* (b), (g)]. A NASDAQ-only issuer need not register its securities under section 12(g) of the Exchange act until 120 days after the last day of the issuer's fiscal year during which the registration statement became effective. NASD Manual (CCH) ¶ 1754 at 1565, Schedule D to the By-Laws, Part II, sections 1(b) (1) and (2). However, upon effectiveness of the registration statement, the registrant will be subject to the reporting requirements of Exchange Act section 15(d).

[38] Exchange Act Rule 11Ac1-1 [17 CFR 240.11Ac1-1] ("the firm quotation rule").

[39] *See* n. 15 *supra*.

[40] The firm quotation rule; NASD Manual, (CCH) ¶ 1754 at 1561, Schedule D to the By-Laws, Part VI, sections 2(a) and (b).

[41] *See* current Rule 174(e) [17 CFR 230.174(e)], redesignated as Rule 174(f).

[42] The Commission is adopting a technical amendment to Rule 15c2-8(d) [17 CFR 240.15c2-8(d)] to reflect the fact that the obligation to deliver prospectuses under that rule is unaffected by this amendment to Rule 174.

The technical amendment to Rule 15c2–8 reflects the fact that the prospectus delivery requirements under that rule are not affected by the Rule 174 amendment.

Public Comment

No commentators responded to the Commission's request for comments on the Initial Regulatory Flexibility Analysis.

Significant Alternatives

Pursuant to section 604 of the Regulatory Flexibility Act, the following types of alternatives were considered:

(1) The establishment of differing compliance or reporting requirements or timetables that take into account the resources available to small entities; and

(2) The clarification, consolidation or simplification of compliance and reporting requirements under the rules for such small entities.

The scope of the relief provided under Rule 174, as amended herein, is based on investor protection concerns. Hot issue abuses and investor protection concerns arise with respect to the securities offerings of small entities as well as those of larger companies. The relief provided herein reduces unnecessary regulatory burdens and compliance costs imposed by section 4(3) to the extent consistent with investor protection.

(3) The use of performance rather than design standards. With respect to Rule 174, as amended herein, performance standards are not consistent with this agency's statutory mandate to provide adequate disclosure to investors.

(4) An exemption from coverage of the rules, or any part thereof, for small entities. Rule 174, as amended herein, provides relief from the prospectus delivery requirements of section 4(3) to the extent consistent with investor protection. Extending an exemption to or providing different prospectus delivery requirements for small entities for transactions subject to the Securities Act would not be warranted in light of the Commission's statutory mandate.

As more fully discussed in the text of the release, the Commission evaluated the alternative rule proposals and determined to provide relief under Rule 174 based on Proposal II for transactions in exchange-listed and NASDAQ securities.

V. Statutory Basis

Rule 174 is being amended by the Commission pursuant to sections 4 and 19 of the Securities Act. Rule 15c2–8 is being amended pursuant to sections 2, 15(c) and 23(a) of the Exchange Act. Because these rule changes are intended to relieve existing regulatory restrictions within the meaning of section 553(d)(1) of the Administrative Procedure Act (5 U.S.C. 553(d)(1)), the Commission has determined to make them effective immediately upon publication in the **Federal Register**.

List of Subjects in 17 CFR Parts 230 and 240

Reporting and recordkeeping requirements, Securities.

VI. Text of Amendments

In accordance with the foregoing, Title 17, Chapter II of the Code of Federal Regulations is to be amended as follows:

PART 230—GENERAL RULES AND REGULATIONS, SECURITIES ACT OF 1933

1. The authority citation for Part 230 continues to read, in part, as follows: (Citations before * * * indicate general rulemaking authority).

Authority: Sec. 19, 48 Stat. 85, as amended: 15 U.S.C. 77s * * * § 230.174 also issued under sec. 4, 48 Stat. 77; 15 U.S.C. 77d.

2. § 230.174 is amended by redesignating paragraphs (d) and (e) as (e) and (f), respectively, and adding new paragraph (d) to § 230.174 to read as follows:

§ 230.174 Delivery of prospectus by dealers; exemptions under Section 4(3) of the Act.

* * * * *

(d) If (1) the registration statement relates to the security of an issuer that is not subject, immediately prior to the time of filing the registration statement, to the reporting requirements of section 13 or 15(d) of the Securities Exchange Act of 1934, and (2) as of the offering date, the security is listed on a registered national securities exchange or authorized for inclusion in an electronic inter-dealer quotation system sponsored and governed by the rules of a registered securities association, no prospectus need be delivered after the expiration of twenty-five calendar days after the offering date. For purposes of this provision, the term "offering date" refers to the later of the effective date of the registration statement or the first date on which the security was bona fide offered to the public.

* * * * *

PART 240—GENERAL RULES AND REGULATIONS, SECURITIES EXCHANGE ACT OF 1934

1. The authority citation for Part 240 continues to read, in part, as follows: (Citations before * * * indicate general rulemaking authority).

Authority: Sec. 23, 48 Stat. 901, as amended: 15 U.S.C. 78w * * * § 240.15c2–8 also issued under sec. 2, 52 Stat. 1075, 15 U.S.C. 78b; 15, 48 Stat. 895, as amended, 15 U.S.C. 78o.

2. The last sentence of paragraph (d) of § 240.15c2–8 is revised to read as follows:

§ 240.15c2–8 Delivery of prospectus.

* * * * *

(d) * * * (The 40-day and 90-day periods referred to above shall be deemed to apply for purposes of this rule irrespective of the provisions of paragraphs (b) and (d) of § 230.174 of this Chapter).

* * * * *

By the Commission.

Jonathan G. Katz,

Secretary.

April 4, 1988.

[FR Doc. 88–7775 Filed 4–8–88; 8:45 am]

BILLING CODE 8010–01–M

DEPARTMENT OF ENERGY

Federal Energy Regulatory Commission

18 CFR Part 157

[Docket No. RM87–16–001]

Abandonment of Sales and Purchases of Natural Gas Under Expired, Terminated, or Modified Contracts

Issued April 4, 1988.

AGENCY: Federal Energy Regulatory Commission, DOE.

ACTION: Order granting rehearing solely for the purpose of further consideration and denying motion for stay of Order No. 490.

SUMMARY: The Federal Energy Regulatory Commission is granting rehearing solely for the purpose of further consideration of Order No. 490 (published February 12, 1988, 53 FR 4121) in order to review more fully the argument raised in the requests for rehearing of the final rule in Order No. 490. The final rule, which is effective April 12, 1988, permits abandonment of certain sales and purchases under the Natural Gas Act. The Commission is also denying a motion to stay the effective date of Order No. 490.

EFFECTIVE DATE: April 4, 1988.

FOR FURTHER INFORMATION CONTACT: Jacob Silverman, Federal Energy Regulatory Commission, 825 North

Capitol Street NE., Washington, DC 20426, (202) 357-8315.

SUPPLEMENTARY INFORMATION:

Order Granting Rehearing Solely for the Purpose of Further Consideration and Denying Motion for Stay of Order No. 490

Before Commissioners: Martha O. Hesse, Chairman; Anthony G. Sousa, Charles G. Stalon, and Charles A. Trabandt.

On February 5, 1988, the Commission issued Order No. 490, Abandonment of Sales and Purchases of Natural Gas Under Expired, Terminated or Modified Contracts, Final Rule.

The Commission has received thirty-six timely requests for rehearing in this proceeding,[1] and one party, American Public Gas Association (APGA) included in its request a motion for stay of Order No. 490 pending judicial review if the Commission did not grant the rehearing.

APGA asserts that its members, as well as others, would suffer irreparable injury during the pendency of judicial review because once the rule became effective producers would commence to exercise their right to unilaterally abandon gas under expired or terminated contracts. It alleges that producers will commence selling such gas to others and that such gas cannot be replaced.

In reviewing a request for a stay, the Commission applies the standard set forth in the Administrative Procedure Act, 5 U.S.C. 705 (1982), i.e., if the Commission finds that "justice so requires," which entails evaluating the movants' claim of imminent, irreparable injury. If this standard is not met, this Commission follows a general policy of denying motions for stays of its orders, based on the need for definitiveness and finality in administrative proceedings.[2]

In this case movant merely asserts that producers may immediately exercise their rights under Order No. 490 and abandon gas that qualifies. Movant has failed to show any irreparable injury. First, the party to whom the gas is now dedicated can purchase it as well as any other party, although possibly at a higher price. Thus at most there may be an economic injury which can be readily remedied. If the current purchaser decides it does want to purchase the gas, it is clearly not subject to any immediate harm. To the extent that the "dedicated" reserves are sold to others and thus is no longer available to the current purchaser, the only harm to the current purchaser would be the need to replace that gas sometime in the future. Movant has not shown that that gas could not be replaced by purchases in the market if needed. If the purchases were made at a higher price, the harm would be economic injury as to which the party can be made whole.

Accordingly, we find that movant has not shown that implementation of the Order No. 490 regulations will cause imminent, irreparable harm to it or will not otherwise be in the public interest in its impact on consumers or the natural gas industry in general.

In light of the foregoing, the Commission finds that justice does not require further postponing the effective date of Order No. 490 and the motion for a stay is denied. However, this denial is without prejudice to the Commission's consideration of the merits of movants' request for rehearing.

In order to review more fully the arguments raised in the requests for rehearing, the Commission grants rehearing of the order solely for the purpose of further consideration. This order is effective on the date of issuance. This action does not constitute a grant or denial of the requests on their merits in whole or in part.

Pursuant to Rule 713(d) of the Commission's Rules of Practice and Procedure (18 CFR 713(d) (1987), no answers to the requests for rehearing will be entertained by the Commission.

By the Commission. Commissioner Trabandt concurred with a separate statement attached.

Lois D. Cashell,

Acting Secretary.

Concurring Opinion of Commissioner Charles A. Trabandt

I do not object to tolling rehearing of the Final Rule in Order No. 490 for the purpose of further consideration of arguments raised in the many requests for rehearing. I am aware of the numerous issues raised by the parties. Also, I invite your attention to my concurring opinion to Order No. 490 issued separately in the same docket for a detailed discussion of the serious legal and policy problems I find in Order No. 490. I do object, however, to the majority's argumentation in denying the motion for stay included in the rehearing request of the American Public Gas Association.

The majority reviews the applicable legal standard for reviewing a request for a stay. The legal standard, "if justice so requires," turns on an analysis of the claimed imminent, irreparable injury. The majority then addresses the facts in this situation and concludes, "if the purchases were made at a higher price, the harm would be economic injury as to which the party can be made whole." I am not persuaded by the discussion to date that parties suffering the loss of dedicated, low-cost old gas reserves under expired or modified contracts can, in fact, be made whole once the dedicated reserves are unilaterally abandoned under Order No. 490, beginning potentially on April 12, 1988. The average price of natural gas under the expired old gas contracts nationwide is $0.90 and the total amount of old gas covered by expired contracts approximately exceeds one-fifth of the nationwide old gas supply. The analysis of economic injury in this order simply does not support the asserted conclusion that "part(ies) can be made whole." In the absence of persuasive support for that conclusion, the Commission should consider a stay until rehearing is complete.

Charles A. Trabandt,

Commissioner.

[FR Doc. 88-7794 Filed 4-8-88; 8:45 am]

BILLING CODE 6717-01-M

[1] Petitions were filed by the following parties: American Public Gas Association; Associated Gas Distributors; American Gas Association; Amoco Production Co.; Anadarko Petroleum Corporation; ANR Pipeline Co. & Colorado Interstate Gas Company; Arkla, Inc.; Columbia Gas Transmission Corp.; El Paso Natural Gas Co.; Enron Interstate Pipeline Group; Indicated Producers; Interstate Natural Gas Assoc. of America; Michcon Michigan Consolidated Gas Company; Minnesota Department of Public Services; State of Michigan and Michigan Public Service Commission; Mountain Fuel Resources; Maryland People's Counsel; National Fuel Gas Supply Corporation; Northern Illinois Gas Company; Peoples Gas Light and Coke Company and North Shore Gas Company; Pacific Gas and Electric Company; Panhandle Eastern Pipe Line Company and Trunkline Gas Company; Process Gas Consumers Group; The Georgia Industrial Group; Am. Iron and Steel Institute; Peoples Natural Gas Company; Public Service Commission of New York; Producer Associations; Southern California Gas Company; Tennessee Gas Pipe Line Company; Texas Gas Transmission Corp.; Transcontinental Gas Pipe Line Corp.; UGI Corporation; United Distribution Companies; United Gas Pipeline Co.; Valero Interstate Transmission Co.; Williams Natural Gas Company; and Williston Basin Interstate Pipeline Company.

[2] *See, e.g.*, Arkansas Louisiana Gas Co., 23 FERC ¶ 61,324 (1983).

ENVIRONMENTAL PROTECTION AGENCY

40 CFR Part 52

[A-1-FRL-3359-2]

Approval and Promulgation of Air Quality Implementation Plans; Connecticut; Reasonably Available Control Technology For Raymark Industries, Inc.

AGENCY: Environmental Protection Agency (EPA).

ACTION: Final Rule.

SUMMARY: EPA is approving a State Implementation Plan (SIP) revision submitted by the State of Connecticut. This revision establishes and requires the use of reasonably available control technology (RACT) to control volatile organic compounds (VOC) emissions by Raymark Industries, Incorporated, a Division of Raymark Corporation in Stratford, Connecticut. The intended effect of this action is to approve a source-specific RACT determination made by the State in accordance with commitments made in its Ozone Attainment Plan which was approved by EPA on March 21, 1984 (49 FR 10542). This action is being taken in accordance with section 110 of the Clean Air Act.

EFFECTIVE DATE: This rule will become effective May 11, 1988.

ADDRESSES: Copies of the documents relevant to this action are available for public inspection during normal business hours at the Air Management Division, U.S. Environmental Protection Agency, Region I, JFK Federal Building, Room 2313, Boston, MA 02203; and the Air Compliance Unit, Department of Environmental Protection, State Office Building, 165 Capitol Avenue, Hartford, CT 06106 and the Environmental Protection Agency, Public Reference Unit, 401 M Street, SW., Washington, DC.

FOR FURTHER INFORMATION CONTACT: David B. Conroy, (617) 565-3252; FTS 835-3252.

SUPPLEMENTARY INFORMATION: On November 4, 1987 (52 42323), EPA published a Notice of Proposed Rulemaking (NPR) for the State of Connecticut. The NPR proposed approval of State Order No. 8013 as a revision to the Connecticut SIP. The final State Order was submitted by Connecticut as a formal SIP revision on October 27, 1987. The provisions of the Connecticut Department of Environmental Protection's (DEP's) State Order define and impose RACT on Raymark Industries, Inc. (Raymark) as required by subsection 22a-174-20(ee), "Reasonably Available Control Technology for Large Sources," of Connecticut's Regulations for the Abatement of Air Pollution.

Under subsection 22a-174-20(ee), the Connecticut DEP determines and imposes RACT on all stationary sources with the potential to emit one hundred tons per year or more of VOC that are not already subject to RACT under Connecticut's regulations developed pursuant to the control techniques guidelines (CTG) documents. EPA approved this regulation on March 21, 1984 (49 FR 10542) as part of Connecticut's 1982 Ozone Attainment Plan. That approval was granted with the agreement that all source-specific RACT determinations made by the DEP would be submitted to EPA as source-specific SIP revisions.

EPA has reviewed State Order No. 8013 and has determined that the level of control required by this Order represents RACT for Raymark. RACT for Raymark consists of specified capture and destruction efficiencies for the control equipment it is operating, and daily, monthly or quarterly limitations on the emissions of VOC for other uncontrolled processes. The controls that Raymark has already installed and is operating are achieving a reduction of approximately 874 tons per year of VOC. VOC emissions from Raymark after control are approximately 68 tons per year. The specific requirements of the State Order and the rationale for EPA's proposed action are explained in the NPR and will not be restated here. No public comments were received on the NPR.

Final Action

EPA is approving Connecticut State Order No. 8013 as a revision to the Connecticut SIP. The provisions of State Order No. 8013 define and impose RACT on Raymark Industries, Incorporated to control VOC emissions as required by subsection 22a-174-20(ee) of Connecticut's regulations.

The Office of Management and Budget has exempted this rule from the requirements of section 3 of Executive Order 12291.

Under section 307(b)(1) of the Clean Air Act, petitions for judicial review of this action must be filed in the United States Court of Appeals for the appropriate circuit by June 10, 1988. This action may not be challenged later in proceedings to enforce its requirements. (See section 307(b)(2).)

List of Subjects in 40 CFR Part 52

Air pollution control, Hydrocarbons, Incorporation by reference, Intergovernmental relations, Ozone, Reporting and recordkeeping requirements.

Note.—Incorporation by reference of the State Implementation Plan for the State of Connecticut was approved by the Director of the Federal Register on July 1, 1982.

Date: March 28, 1988.

Lee M. Thomas,

Administrator.

PART 52—[AMENDED]

Subpart H, Part 52 of Chapter I, Title 40 of the Code of Federal Regulations is amended as follows:

Subpart H—Connecticut

1. The authority citation for Part 52 continues to read as follows:

Authority: 42 U.S.C. 7401-7642.

2. Section 52.370 is amended by adding paragraph (c)(42) to read as follows:

§ 52.370 Identification of plan

* * * * *

(c) * * *

(42) Revisions to the State Implementation Plan submitted by the Connecticut Department of Environmental Protection on October 27, 1987.

(i) Incorporation by reference.

(A) Letter from the Connecticut Department of Environmental Protection dated October 27, 1987 submitting a revision to the Connecticut State Implementation Plan.

(B) State Order No. 8013 and attached Compliance Timetable for Raymark Industries, Incorporated in Stratford, Connecticut effective on September 24, 1987.

(ii) Additional materials.

(A) Technical Support Document prepared by the Connecticut Department of Environmental Protection providing a complete description of the reasonably available control technology determination imposed on the facility.

[FR Doc. 88-7169 Filed 4-8-88; 8:45 am]

BILLING CODE 6560-50-M

GENERAL SERVICES ADMINISTRATION

41 CFR Part 101-25

[FPMR Amdt. E-263]

Miscellaneous Changes

AGENCY: Federal Supply Service, GSA.

ACTION: Final rule.

SUMMARY: This regulation deletes text that is no longer applicable and updates

BEST COPY AVAILABLE

other text to reflect current policies, procedures, and GSA organizational structure. The changes provided in this regulation are necessary to ensure that Part 101-25 is current.

EFFECTIVE DATE: April 11, 1988.

FOR FURTHER INFORMATION CONTACT: Mr. John M. Boughton, Regulations and Policy Division, Washington, DC 20406 (703-557-7525).

SUPPLEMENTARY INFORMATION: GSA has determined that this is not a major rule for the purposes of Executive Order 12291 of February 17, 1981, because it is not likely to result in an annual effect on the economy of $100 million or more; a major increase in costs to consumers or others; or significant adverse effects. GSA has based all administrative decisions underlying this rule on adequate information concerning the need for, and consequences of, this rule; has determined that the potential benefits to society from this rule outweigh the potential costs and has maximized the net benefits; and has chosen the alternative approach involving the least net cost to society.

List of Subjects in 41 CFR Part 101-25

Government property management.

PART 101-25—GENERAL

1. The authority citation for Part 101-25 continues to read as follows:

Authority: Sec. 205(c), 63 Stat. 390; 40 U.S.C. 486(c).

2. The table of contents for Part 101-25 is amended by deleting §§101- 25.4800, 101-25.4801, 101-25.4900, 101-25.4901, 101-25.4902, 101-25.4902-1473, and 101-25.4902-1473-1 and reserving the following entries: 101-25.113 [Reserved].

Subpart 101-25.48 [Reserved]

Subpart 101-25.49 [Reserved]

Subpart 101-25.1—General Policies

3. Section 101-25.110 is revised to read as follows:

§ 101-25.110 Tire identification/registration program.

The regulations issued by the Department of Transportation in 49 CFR Part 574, Tire Identification and Recordkeeping, require that tire manufacturers maintain or have maintained for them the name and address of tire purchasers, the identification number of each tire sold, and the name and address of the tire seller (or other means by which the manufacturer can identify the tire seller). In addition, distributors and dealers are required to furnish such data to manufacturers in connection with purchases made directly from them. GSA provides support to the Federal Government for tires, and therefore has prescribed the following procedures for tires purchased from or through GSA supply sources.

4. Section 101-25.110-2 is revised to read as follows:

§ 101-25.110-2 Tires obtained through Federal Supply Schedules of regional term contracts.

When tire manufacturers ship tires direct against orders placed under Federal Supply Schedules, the tire manufacturer will record the name and address of the purchaser and the identification numbers of the tires involved.

5. Section 101-25.110-4 is revised to read as follows:

§ 101-25.110-4 Recordkeeping responsibilities.

The effectiveness of the tire identification and recordkeeping regulations depends on the active support and cooperation of all agencies to ensure that tires subject to a recall program are not to continue in service thereby endangering the lives of the occupants of the vehicle. Therefore, agencies should establish procedures for promptly identifying and locating all tires whether in storage or on vehicles so that advice from GSA, the tire manufacturer, or the vehicle manufacturer may be acted upon expeditiously.

§ 101-25.113 [Reserved]

6. Section 101-25.113 is removed and reserved.

Subpart 101-25.3—Use Standards

7. Section 101-25.301 is amended by revising paragraph (a) to read as follows:

§ 101-25.301 General.

(a) This subpart prescribes minimum use standards for certain Government-owned personal property which shall be applied by all executive agencies. Additional criteria above these minimum standards should be established by each executive agency, limiting its property to the minimum requirements necessary for the efficient functioning of the particular office concerned. This subpart does not apply to automatic data processing equipment (ADPE) which is covered in the Federal Information Resources Management Regulation (FIRMR) (41 CFR Chapter 201).

* * * * *

8. Section 101-25.302-2 is amended by revising paragraph (a) to read as follows:

§ 101-25.302-2 Filing cabinets.

* * * * *

(a) Disposing of all records that have been authorized for disposition by the Congress or, where such authorization has not been obtained, through the preparation and obtaining of authorized disposal schedules with the assistance of the National Archives and Records Administration.

* * * * *

§ 101-25.302-3 [Amended]

9. Section 101-25.302-3 is amended to remove paragraph (b)(6).

§ 101-25.302-6 [Amended]

10. Section 101-25.302-6 is amended by deleting the note at the end of paragraph (c).

Subpart 101-25.4—Replacement Standards

11. Section 101-25.402 is revised to read as follows:

§ 101-25.402 Motor vehicles.

Replacement of motor vehicles shall be in accordance with the standards prescribed in § 101-38.402.

Subpart 101-25.5—Guidelines For Making Purchase or Lease Determinations

12. Section 101-25.500 is revised to read as follows:

§ 101-25.500 Scope of subpart.

This subpart prescribes guidelines to be used by executive agencies in determining whether acquisition of equipment of the types specified in this subpart should be by purchase or lease. If appropriate, executive agencies should use these guidelines in the determination, allowance, or evaluation of costs under the Federal Acquisition Regulation (FAR) (48 CFR Part 31) to the extent that the guidelines are consistent therewith.

13. Section 101-25.502 is amended by revising paragraph (b) to read as follows:

§ 101-25.502 Methods of acquisition.

* * * * *

(b) Upon request, GSA will assist agencies in making appropriate determinations to lease or purchase equipment by providing the latest information on pending price adjustments to Federal Supply Schedule contracts and other factors such as recent or imminent technological

developments, new techniques, and industry or market trends. Inquiries should be addressed to the General Services Administration (FC), Washington, DC 20406.

14. Section 101-25.503 is amended by revising the introductory paragraph to read as follows:

§ 101-25.503 Telecommunications equipment.

Before any telecommunications equipment is selected, including facsimile equipment, Federal agencies shall forward the information required by FIRMR 201-39 to the General Services Administration (KMA), Washington, DC 20405, or to the appropriate GSA regional office.

* * * * *

§§ 101-25.4800—101-25.4801 (Subpart 101-25.48) [Removed]

15. The text of Subpart 101-25.48 is deleted and the subpart reserved as follows:

Subpart 101-25.48 [Reserved]

§§ 101-25.4900—101-25.4902-1473-1 (Subpart 101-25.49) [Removed]

16. The text of Subpart 101-25.49 is deleted and the subpart reserved as follows:

Subpart 101-25.49 [Reserved]

Dated: March 17, 1988.

Paul Trause,

Acting Administrator of General Services.

[FR Doc. 88-7797 Filed 4-8-88; 8:45 am]

BILLING CODE 6820-24-M

---

41 CFR Part 101-40

[FPMR Temp. Reg. A-23, Supp. 5]

Use of Carrier Contractors For Express Small Package Transportation

AGENCY: Federal Supply Service, GSA.

ACTION: Temporary regulation.

SUMMARY: This supplement updates FPMR Temp. Reg. A-23 and supplement 3 thereto, by eliminating the requirement for the GSA transportation zone offices to notify civil agencies of delinquent DHL accounts.

DATES:

Effective date: April 11, 1988.

Expiration date: September 30, 1988.

FOR FURTHER INFORMATION CONTACT: Charles T. Angelo, Director, Travel and Transportation Management Division (FBT), Washington, DC 20406, telephone FTS 557-1261 or commercial 703-557-1261.

SUPPLEMENTARY INFORMATION: GSA has determined that this rule is not a major rule for the purposes of Executive Order 12291 of February 17, 1981, because it is not likely to result in an annual effect on the economy of $100 million or more, a major increase in costs to consumers or others, or significant adverse effects. GSA has based all administrative decisions underlying this rule on adequate information concerning the need for, and consequences of, this rule; has determined that the potential benefits to society from this rule outweigh the potential costs and has maximized the net benefits; and has chosen the alternative approach involving the least net cost to society.

List of Subjects in 41 CFR Part 101-40

Freight, Government property, Moving of household goods, Office relocations, Transportation.

PART 101-40—[AMENDED]

Authority: Sec. 205(c), 63 Stat. 390; 40 U.S.C. 486(c).

In 41 CFR Chapter 101, the following temporary regulation is added to the appendix at the end of Subchapter A to read as follows:

General Services Administration

Federal Property Management Regulations Temporary Regulation A-23, Supplement 5

March 17, 1988.

To: Heads of Federal agencies.

Subject: Use of carrier contractors for express small package transportation.

1. *Purpose.* This supplement updates FPMR Temp. Reg. A-23 and supplement 3 thereto, by deleting the provision which requires the GSA zone offices to notify delinquent agency accounts in support of the express small package courier collection effort.

2. *Effective date.* This supplement is effective upon publication in the **Federal Register.**

3. *Expiration date.* This supplement expires September 30, 1988.

4. *Explanation of change.* Subparagraph 9-2a of FPMR Temp. Reg. A-23 and supplement 3 is revised to eliminate the requirement for the GSA zone offices to notify civilian agencies of delinquent DHL accounts and reads as follows:

a. Service to any delinquent agency account may be suspended if undisputed amounts are overdue more than 90 calendar days provided the contractor has simultaneously notified the account holder and the appropriate GSA zone office 60 calendar days after the invoice date that amounts are overdue and need to be paid within 30 calendar days of the date of the delinquency notice.

T.C. Golden,

Administrator of General Services.

[FR Doc. 88-7798 Filed 4-8-88; 8:45 am]

BILLING CODE 6820-24-M

FEDERAL COMMUNICATIONS COMMISSION

47 CFR Parts 0 and 90

[General Docket 87-112; FCC 88-132]

Development and Implementation of a Public Safety National Plan

AGENCY: Federal Communications Commission.

ACTION: Final rule.

SUMMARY: The Commission has adopted a Memorandum Opinion and Order granting a request by the National Public Safety Planning Advisory Committee (NPSPAC) that the Commission realign the geographic boundaries of certain public safety planning regions. This action is taken in response to NPSPAC's Petition for Reconsideration of the Commission's Report and Order in Gen. Docket 87-112 establishing service rules and technical standards for use of the 821-824/866-869 MHz bands by the public safety services, 53 FR 1022 (January 15, 1988).

EFFECTIVE DATE: April 11, 1988.

ADDRESS: Federal Communications Commission, 1919 M Street NW., Washington, DC 20554.

FOR FURTHER INFORMATION CONTACT: Marty Liebman, Private Radio Bureau, Land Mobile and Microwave Division, Policy and Planning Branch, (202) 632-6497.

SUPPLEMENTARY INFORMATION:

Memorandum Opinion and Order

Adopted: March 30, 1988.
Released: April 11, 1988.
By the Commission

I. Introduction

1. On December 18, 1987, the Commission released a *Report and Order* [1] in the above-captioned proceeding adopting policies, service rules, and technical standards to govern usage of the 821-824/866-869 MHz public safety spectrum. J. Y. Nasser, past chairman of the National Public Safety Planning Advisory Committee (NPSPAC),[2] has requested

[1] Report and Order, Gen. Docket No. 87-112, 3 FCC Rcd 905 (1988).

[2] Mr. Nasser noted in the petition that the Commission's charter for NPSPAC officially expired

reconsideration of that *Order* to realign the public safety regions to conform more closely with the regional boundaries intended by NPSPAC in its *Final Report* [3] to the Commission.[4]

II. Background

2. The *Report and Order* set forth a plan to ensure that present and future spectrum requirements of the public safety community will be met. The plan provides direction on broad spectrum allocation issues at the national level and focuses on the great diversity of needs that exist at the state and local levels. It offers technical and procedural guidance on the use of the new spectrum by the public safety services and also creates a framework for development of regional plans. As discussed in the *Report and Order*, regional planning will be accomplished through the preparation of written plans by Regional Planning Committees (RPCs) composed of representatives of the state and local public safety and special emergency community.

3. The Commission, in its *Notice of Proposed Rule Making* [5] in this proceeding, asked that NPSPAC recommend boundaries for the public safety planning regions. In their *Final Report*, the Committee proposed the establishment of 54 regions. The Committee did not, however, delineate specific boundaries for proposed regions that included parts of one or more states. In order to define regional boundaries unambiguously and to assure that all of the land area of the 50 states, Puerto Rico, and the Virgin Islands was included, the Commission defined precise boundaries for 48 regions in a manner that we believed closely aligned boundaries in accordance with the NPSPAC recommendations. *Report and Order* at para. 43.

4. While most of the regions established by the Commission were identical to those recommended by NPSPAC, several did not conform exactly to those recommendations. For example, for the State of Texas, the Commission created a single public safety region, while the Committee recommended separate regions centered in six of the state's largest metropolitan areas (Austin, Dallas-Ft. Worth, Houston, Lubbock, El Paso, and San Antonio). Similarly, in the Chicago area, the Committee recommended a four-state region that included parts of Indiana, Illinois, Michigan and Wisconsin, but the Commission chose not to create such an interstate region, stating that "the public safety requirements in border areas of these states [could] best be satisfied through cooperative efforts of the regional planning committees in these states." *Report and Order* at para. 43.

III. Petition for Reconsideration

5. In its petition, NPSPAC requests that the Commission reconfigure the boundaries of several of the public safety planning regions to conform to those intended by NPSPAC in its *Final Report*. It states that the exact delineation of regions in terms of recognized political subdivisions (*e.g.*, counties) was not provided in the *Final Report*. As a result, NPSPAC states, the "Commission, while generally adopting the NPSPAC *Final Report* recommendations, made substantial changes in the configuration of some regions." Petition at 4.

6. NPSPAC is petitioning the Commission to create new Chicago and Buffalo area regions, six new Texas regions, and expanded Philadelphia and New York City area planning regions. *See* Appendix A. In support of its request, NPSPAC asserts that they developed these suggested boundaries based on "historical frequency of interference problems, existing interoperability requirements, existing disaster management support plans, and existing or projected population densities." Petition at 3. NPSPAC states that use of these criteria should promote "a cohesive planning effort within each area, with the added benefit of minimizing necessary inter-region coordination." Petition at 3. NPSPAC also indicates that any delay in resolving disparities in regional boundaries will have a "debilitating effect" on spectrum planning efforts in many areas of the country. NPSPAC, therefore, requests expedited consideration of this matter. Petition at 5. It notes that in certain parts of the country (*e.g.*, New York and Dallas-Fort Worth) planning groups have been in existence for years and have already begun the planning process.

7. We received comments from 22 individuals and organizations, *all* expressing support for the NPSPAC petition. For example, the Port Authority of New York and New Jersey noted that "the Commission should expeditiously grant NPSPAC's petition so that the regional planning process can move forward." Port Authority comments at 3. The Associated Public Safety Communications Officers, Inc. (APCO) further stated that, "For all the reasons set forth in the [NPSPAC] petition, APCO totally supports the requested action." APCO comments at 2.

IV. Decision

8. We have examined the reconfigured regional boundaries as proposed in the petition, and concur with this alignment. The petition has given consideration to local and regional issues and characteristics in making its recommendations. Its use of this approach is in conformance with the regional planning concept outlined in the *Report and Order*, which emphasized that responsiveness to local needs and concerns is critical to the success of the program. *Report and Order* at para. 4. We find, further, that the granting of the petition will serve the public interest by enabling previously established planning groups to continue development of their regional plans. With the unanimous support of the 22 commenters, we, therefore, revise the public safety planning regions as requested and as shown in Appendix A.[6]

V. Conclusion

9. *It is therefore ordered* that the Petition for Reconsideration filed by the National Public Safety Planning Advisory Committee is *granted*.

10. *It is further ordered* that effective immediately upon publication in the **Federal Register**,[7] the boundaries for the public safety planning regions will be as delineated in Appendix A of this *Memorandum Opinion and Order*.

December 31, 1987, but asked that the Commission treat the petition as a NPSPAC document, *nunc pro tunc*. For purposes of determining standing, we have decided to treat this petition as a filing from Mr. Nasser on behalf of interested individuals. For convenience, we refer to the petition throughout this document as the NPSPAC petition.

[3] Final Report of the National Public Safety Planning Advisory Committee to the Federal Communications Commission, Gen. Docket No. 87-112 (September 9, 1987) (*Final Report*).

[4] Petitions for reconsideration were also filed by General Electric Mobile Communications Business; Cellular Telecommunications Industry Association; International Municipal Signal Association and International Association of Fire Chiefs; and New Jersey Division of State Police. We will issue a separate Order dealing with the issues raised in these petitions.

[5] Notice of Proposed Rule Making, Gen. Docket No. 87-112, 2 FCC Rcd 2889 (1987).

[6] In the petition, "Burleson" county was inadvertantly left off the list of counties in the Texas-Austin region. In Appendix A, we have included this county in its proper location.

[7] We find that good cause exists for dispensing with the Administrative Procedure Act's (APA) requirement that publication or service of a substantive rule must take place at least 30 days before its effective date, because the decision is designed to expedite the public safety planning process and causes no adverse impact to any groups or individuals. *See* 5 U.S.C. 553(d).

VOL 53 ISS 69 APR 11 1988 UMI

List of Subjects

47 CFR Part 0

Organization and functions (Government agencies).

47 CFR Part 90

Radio.

Appendix A—Revised Public Safety Regions

1. Alabama
2. Alaska
3. Arizona
4. Arkansas
5. California—South (to the northernmost borders of San Luis Obispo, Kern, and San Bernardino Counties)
6. California—North (that part of California not included in California—South)
7. Colorado
8. New York—Metropolitan (Fairfield, Litchfield, New Haven, and Middlesex, Counties, Connecticut; Bronx, Kings, Nassau, New York, Orange, Putnam, Queens, Richmond, Rockland, Suffolk, Sullivan, Ulster, Dutchess, and Westchester Counties, New York; Bergen, Essex, Hudson, Morris, Passaic, Sussex, Union, Warren, Middlesex, Somerset, Hunterdon, Mercer, and Monmouth Counties, New Jersey)
9. Florida
10. Georgia
11. Hawaii
12. Idaho
13. Illinois (all except area in Region 54)
14. Indiana (all except area in Region 54)
15. Iowa
16. Kansas
17. Kentucky
18. Louisiana
19. Maine; New Hampshire; Vermont; Massachusetts; Rhode Island; Connecticut (except Fairfield, Litchfield, New Haven, and Middlesex Counties)
20. Maryland; Washington, DC; Virginia—Northern (Arlington, Fairfax, Fauquier, Loudoun, Prince William and Stafford Counties; and Alexandria, Fairfax, Falls Church, Manassas and Manassas Park Cities)
21. Michigan (all except area in Region 54)
22. Minnesota
23. Mississippi
24. Missouri
25. Montana
26. Nebraska
27. Nevada
28. New Jersey (except for counties included in the New York—Metropolitan, Region 8, above); Pennsylvania (Bucks, Chester, Montgomery, Philadelphia, Berks, Delaware, Lehigh, Northampton, Bradford, Carbon, Columbia, Dauphin, Lackawanna, Lancaster, Lebanon, Luzerne, Lycoming, Monroe, Montour, Northumberland, Pike, Schuylkill, Sullivan, Susquehanna, Tioga, Wayne, Wyoming and York Counties); Delaware
29. New Mexico
30. New York—Albany (all except area in New York—Metropolitan, Region 8, and New York—Buffalo, Region 55)
31. North Carolina
32. North Dakota
33. Ohio
34. Oklahoma
35. Oregon
36. Pennsylvania (all except area in Region 28, above)
37. South Carolina
38. South Dakota
39. Tennessee
40. Texas—Dallas (including the counties of Cooke, Grayson, Fannin, Lamar, Red River, Bowie, Wise, Denton, Collin, Hunt, Delta, Hopkins, Franklin, Titus, Morris, Cass, Tarrant, Dallas, Palo Pinto, Parker, Rockwall, Kaufman, Rains, VanZandt, Wood, Smith, Camp, Upshur, Gregg, Marion, Harrison, Panola, Rusk, Cherokee, Anderson, Henderson, Navarro, Ellis, Johnson, Hood, Somervell and Erath)
41. Utah
42. Virginia (all except area in Region 20, above)
43. Washington
44. West Virginia
45. Wisconsin (all except area in Region 54)
46. Wyoming
47. Puerto Rico
48. U.S. Virgin Islands
49. Texas—Austin (including the counties of Bosque, Hill, Hamilton, McLennan, Limestone, Freestone, Mills, Coryell, Falls, Robertson, Leon, San Saba, Lampasas, Bell, Milam, Brazos, Madison, Grimes, Llano, Burnet, Williamson, Burleson, Lee, Washington, Blanco, Hays, Travis, Caldwell, Bastrop, and Fayette)
50. Texas—El Paso (including the counties of Knox, Kent, Stonewall, Haskell, Throckmorton, Gaines, Dawson, Borden, Scurry, Fisher, Jones, Shackelford, Stephens, Andrews, Martin, Howard, Mitchell, Nolan, Taylor, Callahan, Eastland, Loving, Winkler, Ector, Midland, Glasscock, Sterling, Coke, Runnels, Coleman, Brown, Comanche, Culberson, Reeves, Ward, Crane, Upton, Reagan, Irion, Tom Green, Concho, McCulloch, Jeff Davis, Hudspeth, El Paso, Pecos, Crockett, Schleicher, Menard, Mason, Presidio, Brewster, Terrell, Sutton, and Kimble)
51. Texas—Houston (including the counties of Shelby, Nacogdoches, San Augustine, Sabine, Houston, Trinity, Angelina, Walker, San Jacinto, Polk, Tyler, Jasper, Newton, Montgomery, Liberty, Hardin, Orange, Waller, Harris, Chambers, Jefferson, Galveston, Brazoria, Fort Bend, Austin, Colorado, Wharton, and Matagorda)
52. Texas—Lubbock (including the counties of Dallam, Sherman, Hansford, Ochiltree, Lipscomb, Hartley, Moore, Hutchinson, Roberts, Hemphill, Oldham, Potter, Carson, Grey, Wheeler, Deaf Smith, Randall, Armstrong, Donley, Collingsworth, Parmer, Castro, Swisher, Briscoe, Hall, Childress, Bailey, Lamb, Hale, Floyd, Motley, Cottle, Hardeman, Foard, Wilbarger, Witchita, Clay, Montague, Jack, Young, Archer, Baylor, King, Dickens, Crosby, Lubbock, Kockley, Cochran, Yoakum, Terry, Lynn, and Garza)
53. Texas—San Antonio (including the counties of Val Verde, Edwards, Kerr, Gillespie, Real, Bandera, Kendall, Kinney, Uvalde, Medina, Bexar, Comal, Guadalupe, Gonzales, Lavaca, Dewitt, Karnes, Wilson, Atascosa, Frio, Zavala, Maverick, Dimmit, LaSalle, McMullen, Live Oak, Bee, Goliad, Victoria, Jackson, Calhoun, Refugio, Aransas, San Patricio, Nueces, Jim Wells, Duval, Webb, Kleberg, Kenedy, Brooks, Jim Hogg, Zapata, Starr, Hidalgo, Willacy, and Cameron)
54. Chicago—Metropolitan (Winnebago, McHenry, Cook, Kane, Kendall, Grundy, Boone, Lake, DuPage, DeKalb, Will, and Kankakee Counties, Illinois; Kenosha, Milwaukee, Washington, Dodge, Walworth, Jefferson, Racine, Ozaukee, Waukesha, Dane, and Rock Counties, Wisconsin; Lake, La Porte, Jasper, Starke, St. Joseph, Porter, Newton, Pulaski, Marshall and Elkart Counties, Indiana; Ottawa, Kent, Van Buren, Kalamazoo, Barry, Muskegon, Allegan, Berrien, Cass, and St. Joseph Counties, Michigan)
55. New York—Buffalo (including the counties of Niagara, Chemung, Schuyler, Seneca, Erie, Chautauqua, Cattaraugus, Allegany, Wyoming, Genesee, Orleans, Monroe, Livingston, Steuben, Ontario, Wayne, and Yates)

Federal Communications Commission.

H. Walker Feaster III,

Acting Secretary.

[FR Doc. 88-7847 Filed 4-8-88; 8:45 am]

BILLING CODE 6712-01-M

---

47 CFR Part 1

[CC Docket No. 86-498; FCC 88-91]

Amendment of Procedures To Be Followed Where Formal Complaints Are Filed Against Common Carriers

AGENCY: Federal Communications Commission (FCC).

ACTION: Final rule.

SUMMARY: This action disposes of a Notice of Proposed Rulemaking which was issued to revise the formal complaint rules to promote a more complete record for disposition of complaints, to improve the speed of resolving such complaints, and to clarify and simplify the rules.

EFFECTIVE DATE: May 13, 1988.

ADDRESS: Federal Communications Commission, 1919 M Street NW., Washington, DC 20554.

FOR FURTHER INFORMATION CONTACT: Deborah Zahrt or Gregory A. Weiss, Enforcement Division, Formal Complaints Branch, (202) 632-4887.

SUPPLEMENTARY INFORMATION: This is a summary of the Commission's Report and Order in CC Docket No. 86-498, Adopted March 1, 1988, and Released March 30, 1988.

The full text of this Commission decision is available for inspection and copying during normal business hours in the FCC Dockets Branch (Room 230), 1919 M Street NW., Washington, DC.

The complete text of this decision may also be purchased from the Commission's copy contractor, International Transcription Service, 2100 M Street NW., Suite 140, Washington, DC 20037, (202) 857-3800.

Summary of Report and Order

1. The Commission has adopted revisions to its formal complaint rules substantially as proposed in the earlier Notice of Proposed Rulemaking in this proceeding, 52 FR 1939 (January 16, 1987), but including some modifications suggested by the commenting parties. The major changes in the rules include provisions for limited forms of discovery, including self-executing discovery in the form of interrogatories, filing of briefs, submission of legal and factual support by the parties, status conferences, and a section detailing general pleading requirements. The revision also includes a reorganization and simplification of the major pleadings in such cases.

Paperwork Reduction Act—Final Analysis

2. As discussed in [the section regarding the Regulatory Flexibility Act], the rules adopted herein have been analyzed with respect to the Paperwork Reduction Act of 1980 and found to contain no new or modified form, information collection and/or record-keeping, labeling, disclosure, or record-retention requirements, nor to increase or decrease burden hours imposed on the public. No comments were filed regarding this analysis. However, because the initial complaint rules were adopted prior to the Act's passage and were, thus, not submitted for approval to the Office of Management and Budget, we will submit these revised rules for approval.

Regulatory Flexibility Act—Final Analysis

3. *Need for Rules and Objective.* We have revised the formal complaint rules to improve efficiency, to facilitate a prompt resolution of such cases, to clarify and improve the rules and present them in a more orderly and understandable fashion, and to promote a well-developed and complete record for disposition of complaints. Our objective is to adopt amendments to the rules which will facilitate the prompt resolution of complaints, improve processing, and promote a fuller and better record in such cases.

4. *Issues Raised by the Public in Response to the Initial Analysis.* We received one comment, by USTA, which disagrees with the Initial Analysis which found that the proposed rules would not have a significant economic impact on small entities because the proposed changes would not alter existing burdens of proof. [Footnote omitted.] While USTA supports our proposal to limit discovery to written interrogatories, USTA asserts that the addition of proposals to permit self-executing discovery procedures will affect the administrative burdens imposed on small carriers, because these carriers will potentially suffer the greatest hardship in complying with extensive discovery requests. It asks the Commission to allow small carriers greater latitude in meeting the requirements imposed by the discovery rules. Regarding USTA's concerns, we noted in the NPRM that, although the earlier formal complaint rules did not expressly provide for discovery, the parties have always been ultimately responsible for proving and supporting their positions and have often been required to provide additional information beyond the initial set of pleadings to prove a point or defend a position. The adoption of a limited vehicle for discovery through interrogatories merely formalizes this tool as a means for achieving an adequate record for disposition. However, we have taken into account USTA's concerns in our deliberations over the rules which we are adopting herein. As a result of its comment, and those of other parties, we have modified our discovery proposal to ensure that it is not burdensome by limiting the number of interrogatories which can be propounded without our approval and by enlarging the time to respond to such questions. We have also reemphasized our commitment to closely monitor this discovery process to prevent abuse or hardship.

5. *Alternatives that would lessen impact.* We initially concluded in the NPRM that there were no satisfactory alternatives which would lessen the impact on small entities, since the alternative would be to take no steps to improve the complaint process. We have reduced these burdens whenever possible, but have retained the rules substantially as proposed in order to provide the least intrusive means for parties to develop an accurate and adequate record for disposition of formal complaints. We will continue to examine alternatives or revisions in the future with the objective of creating the most efficient and least intrusive means for developing a record in formal complaint cases.

Ordering Clauses

6. Authority for this rulemaking is contained in sections 1, 4(i), 208, and 403 of the Communications Act, 47 U.S.C. 151, 154(i), 208, and 403, and section 553 of the Administrative Procedure Act, 5 U.S.C. 553.

7. Accordingly, it is ordered that the Rules and Regulations of the Federal Communications Commission are amended in the manner indicated below, effective May 13, 1988.

8. It is further ordered that this proceeding is terminated.

Federal Communications Commission.

H. Walker Feaster III,

Acting Secretary.

Rules Changes

Part 1 (Practice and Procedure) of Chapter 1 of Title 47 of the Code of Federal Regulations is amended as follows:

PART 1—[AMENDED]

1. The authority citation for Part 1 continues to read as follows:

Authority: Secs. 4, 303, 48 Stat. 1066, 1082, as amended; 47 U.S.C. 154, 303.

§ 1.47 [Amended]

2. Section 1.47(b) is amended to remove the phrase "including supplemental, cross, and amended complaints,".

§ 1.713 [Removed]

3. Section 1.713 is removed.

4. The Table of Contents for Formal Complaints, §§ 1.720–1.734, is revised to read as follows:

Formal Complaints

Sec.
1.720 General pleading requirements.
1.721 Form and content.
1.722 Damages.
1.723 Joinder of complainants and causes of action.
1.724 Answers.
1.725 Cross complaints.
1.726 Replies.
1.727 Motions.
1.728 Formal complaints not stating a cause of action; defective pleadings.
1.729 Interrogatories to parties.
1.730 Other forms of discovery.
1.731 Other required written submissions.
1.732 Status conference.
1.733 Specifications as to pleadings, briefs, and other documents; subscription.
1.734 Copies; service; separate filings against multiple defendants.

5. Section 1.720 is added to read as follows:

§ 1.720 General pleading requirements.

Formal complaint proceedings are generally resolved on a written record consisting of a complaint, answer and reply but may also include other written submissions such as briefs and written

interrogatories. All written submissions, both substantive and procedural, must conform to the following standards:

(a) Pleadings must be clear, concise, and explicit. All matters concerning a claim, defense or requested remedy, including damages, should be pleaded fully and with specificity.

(b) Pleadings must contain facts which, if true, are sufficient to constitute a violation of the Act or Commission order or regulation, or a defense to such alleged violation.

(c) Facts must be supported by relevant documentation or affidavit.

(d) Legal arguments must be supported by appropriate judicial, Commission, or statutory authority.

(e) Opposing authorities must be distinguished.

(f) Copies must be provided of all non-Commission authorities relied upon which are not routinely available in national reporting systems, such as unpublished decisions or slip opinions of courts or administrative agencies.

(g) Parties are responsible for the continuing accuracy and completeness of all information and supporting authority furnished in a pending complaint proceeding. Information submitted, as well as relevant legal authorities, must be current and updated as necessary and in a timely manner at any time before a decision is rendered on the merits of the complaint.

(h) Specific reference must be made to any tariff provision relied on in support of a claim or defense. Parties are encouraged to provide copies of the tariff or relevant portions thereof.

6. Section 1.721 is revised to read as follows:

§ 1.721 Format and content.

(a) A formal complaint shall contain:

(1) The name of each complainant and defendant;

(2) The occupation, address and telephone number of each complainant and, to the extent known, each defendant;

(3) The name, address, and telephone number of complainant's attorney, if represented by counsel;

(4) Citation to the section of the Communications Act and/or order and/or regulation of the Commission alleged to have been violated.

(5) A complete statement of facts which, if proven true, would constitute such a violation;

(6) Complete identification or description, including relevant time period, of the communications, transmissions, services, or other carrier conduct complained of and nature of the injury sustained;

(7) The relief sought, including recovery of damages and the amount of damages claimed, if known; and

(8) Whether suit has been filed in any court or other government agency on the basis of the same cause of action.

(b) The following format may be used in cases to which it is applicable, with such modifications as the circumstances may render necessary:

Before the Federal Communications Commission, Washington, DC 20554

In the matter of

_____

Complainant,

v.

_____

Defendant.

File No. (To be inserted by the Common Carrier Bureau)

Complaint

To: The Commission.

The complainant (here insert full name of each complainant and, if a corporation, the corporate title of such complainant) shows that:

1. (Here state occupation, post office address, and telephone number of each complainant).

2. (Here insert the name, occupation and, to the extent known, address and telephone number of defendants).

3. (Here insert fully and clearly the specific act or thing complained of, together with such facts as are necessary to give a full understanding of the matter, including relevant legal and documentary support).

Wherefore, complainant asks (here state specifically the relief desired).

_____

(Date)

_____

(Name of each complainant)

_____

(Name, address, and telephone number of attorney, if any)

7. Section 1.722 is revised to read as follows:

§ 1.722 Damages.

(a) In case recovery of damages is sought, the complaint shall contain appropriate allegations showing such evidence that will identify, with reasonable certainty, the amount of damages for which recovery is sought.

(b) Damages will not be awarded upon a complaint unless specifically requested. Damages may be awarded, however, upon a supplemental complaint based upon a finding of the Commission in the original proceeding. *Provided that:*

(1) If recovery of damages or overcharges is first sought by supplemental complaint, such supplemental complaint must be filed within, and recovery is limited to, the statutory periods of limitations contained in section 415 of the Communications Act;

(2) A claim for recovery of damages contained in a supplemental complaint based on a finding of the Commission in the original proceeding which meets the requirements of paragraph (a) of this section shall relate back to the filing date of the original formal complaint if:

(i) The original complaint clearly and unequivocally requests the recovery of damages (even if the precise amount and other specific details are unknown), and

(ii) Such supplemental complaint is filed no later than 60 days after public notice (as defiend in § 1.4(b) of the Rules) of a decision on the merits of the original complaint.

8. Section 1.723 is revised to read as follows:

§ 1.723 Joinder of complainants and causes of action.

(a) Two or more complainants may join in one complaint if their respective causes of action are against the same defendant and concern substantially the same facts and alleged violation of the Communications Act.

(b) Two or more grounds of complaint involving the same principle, subject, or statement of facts may be included in one complaint, but should be separately stated and numbered.

9. Section 1.724 is revised to read as follows:

§ 1.724 Answers.

(a) Any carrier upon which a copy of a formal complaint, supplemental complaint, amended complaint, or cross complaint is served under this subpart shall answer within 30 days of service of the pleading to which the answer is made, unless otherwise directed by the Commission.

(b) The answer shall advise the parties and the Commission fully and completely of the nature of any defense and shall respond specifically to all material allegations of the complaint. Collateral or immaterial issues shall be avoided in answers and every effort should be made to narrow the issues. Any party failing to file and serve an answer within the time and in the manner prescribed by these rules may be deemed in default and an order may be entered against defendant in accordance with the allegations contained in the complaint.

(c) A party shall state concisely its defenses to each claim asserted and shall admit or deny the averments on which the adverse party relies. If the party is without knowledge or information sufficient to form a belief as

to the truth of an averment, the party shall so state and this has the effect of a denial. When a pleader intends in good faith to deny only part of an averment, the pleader shall specify so much of it as is true and shall deny only the remainder. The pleader may make its denials as specific denials of designated averments or paragraphs, or may generally deny all the averments except such designated averments or paragraphs as the pleader expressly admits. When the pleader intends to controvert all averments, the pleader may do so by general denial.

(d) Averments in a pleading to which a responsive pleading is required, other than those as to the amount of damages, are deemed to be admitted when not denied in this responsive pleading.

10. Section 1.725 is revised to read as follows:

§ 1.725 Cross complaints.

A cross complaint, seeking any relief within the jurisdiction of the Commission against any carrier which is a party (complainant or defendant) to the proceeding, may be filed by a defendant with its answer. For the purpose of this subpart, the term "cross complaint" shall include counterclaim.

11. Section 1.726 is revised to read as follows:

§ 1.726 Replies.

Within 10 days after service of an answer, a complainant may file and serve a reply which shall be responsive to matters contained in the answer or amended answer and shall not contain new matters. Failure to reply will not be deemed an admission of any allegations contained in the answer, except with respect to any affirmative defenses set forth therein.

12. Section 1.727 is revised to read as follows:

§ 1.727 Motions.

(a) A request to the Commission for an order shall be by written motion, stating with particularly the grounds and authority therefor, and setting forth the relief or order sought.

(b) A motion that the allegations in the complaint be made more definite and certain shall be filed within 15 days after service of a complaint by the Commission.

(c) Where the matter involved in the motion is one of procedure or discovery, the moving party shall provide a proposed order for adoption, which appropriately incorporates the basis therefor.

(d) A party opposing any motion concerning procedure or discovery shall also provide a proposed order for adoption, which appropriately incorporates the basis therefor.

(e) Oppositions and replies to oppositions shall be filed in accordance with the pleading and filing period requirements of § 1.45 (a) and (b).

13. Section 1.728 is revised to read as follows:

§ 1.728 Formal complaints not stating a cause of action; defective pleadings.

(a) Any document purporting to be a formal complaint which does not state a cause of action under the Communications Act will be dismissed. In such case, any amendment or supplement to such document will be considered a new filing which must be made within the statutory periods of limitations of actions contained in section 415 of the Communications Act.

(b) Any other pleading filed in a formal complaint proceeding not in conformity with the requirements of the applicable rules in this part may be deemed defective. In such case the Commission may strike the pleading or request that specified defects be corrected and that proper pleadings be filed with the Commission and served on all parties within a prescribed time as a condition to being made a part of the record in the proceeding.

14. Section 1.729 is revised to read as follows:

§ 1.729 Interrogatories to parties.

(a) During the time period beginning with service of the complaint and ending 30 days after the date a reply is due to be filed, any party may serve any other party written interrogatories, to be answered in writing by the party served or, if the party served is a public or private corporation or partnership or association, by any officer or agent who shall furnish such information as is available to the party. Parties shall propound no more than 30 single interrogatories without prior Commission approval. Subparts of an interrogatory will be counted as separate interrogatories for purposes of compliance with this limit. This procedure may be used for the discovery of any nonprivileged matter which is relevant to the pleadings. Interrogatories may not be employed for the purpose of delay, harassment or to obtain information which is beyond the scope of permissible inquiry relating to the subject matter of the pleadings.

(b) Parties on whom interrogatories are served shall respond without waiting to be ordered to do so by the Commission. Each interrogatory shall be answered separately and fully in writing under oath or affirmation, unless it is objected to, in which event the reasons for objection shall be stated in lieu of an answer. The answers shall be signed by the person making them. The party on whom the interrogatories were served shall serve a copy of the answers and objections, if any, within 30 days after service of the interrogatories, except that a defendant may serve answers or objections within 15 days after filing its answer to the complaint, whichever period is longer. On proper motion being made, the Commission may allow a shorter or longer time for the filing of answers or objections.

(c) Where the responding party has failed to respond, or has objected, to any interrogatory, the party propounding the interrogatories may, within 15 days of the date the response was due if no response is filed or the date of service of the objection, move to compel a response thereto. The motion should state with specificity the relevance of and necessity for the requested information and must also comply with the requirements of § 1.727 hereof, pertaining to motions generally. Alternatively, the party may request that answers to interrogatories be discussed during a status conference, pursuant to § 1.732 hereof.

(d) Interrogatories and responses or objections thereto must be filed with the Commission in accordance with § 1.734.

15. Section 1.730 is revised to read as follows:

§ 1.730 Other forms of discovery.

(a) If a party believes it needs to engage in some form of discovery other than by written interrogatories under § 1.729, including but not limited to the production of documents, the taking of depositions, or the propounding of additional interrogatories, the party may file a motion with the Commission requesting that such discovery be permitted. The motion should state with specificity the type of discovery requested, the information which is expected to be elicited, the relevance of such information to the resolution of the proceeding, and must also comply with the requirements of § 1.727 of this part pertaining to motions generally. Such motions will not be routinely granted except for good cause shown.

(b) The party from whom the discovery is sought may file an opposition to a motion seeking discovery within 10 days after the motion is filed. No reply is permitted.

(c) Motions seeking discovery may be filed only during the period beginning with the filing of the complaint and ending 30 days after the date a reply is due to be filed or 30 days after responses to interrogatories under

§ 1.729 are filed, whichever period is longer, except where the movant demonstrates that the need for such discovery could not, even with due diligence, have been ascertained within this period.

16. Section 1.731 is revised to read as follows:

§ 1.731 Other required written submissions.

(a) The Commission may, in its discretion, require the parties to file briefs summarizing the facts and issues presented in the pleadings and other record evidence. These briefs shall contain the findings of fact and conclusions of law which that party is urging the Commission to adopt, with specific citation to the record, and supported by relevant authority and analysis.

(b) The Commission may require the parties to submit any additional information it deems appropriate for a full, fair, and expeditious resolution of the proceeding, including affidavits and exhibits.

17. Section 1.732 is revised to read as follows:

§ 1.732 Status conference.

(a) In any complaint proceeding, the Commission may in its discretion direct the attorneys and/or the parties to appear before it for a conference to consider:

(1) Simplification or narrowing of the issues;

(2) The necessity for or desirability of amendments to the pleadings, or of additional pleadings or evidentiary submissions;

(3) Obtaining admissions of fact or stipulations between the parties as to any or all of the matters in controversy;

(4) Settlement of the matters in controversy by agreement of the parties;

(5) The necessity for and extent of discovery;

(6) The need and schedule for filing briefs, and the date for further conferences; and

(7) Such other matters that may aid in the disposition of the complaint.

(b) While a conference normally will be scheduled after the reply has been filed, or after the filing date for replies if no reply has been filed, any party may request that a conference be held at any time after the complaint has been filed.

(c) Conferences will be scheduled by the Commission at such time and place as it may designate, to be conducted in person or by telephone conference call.

(d) The failure of any attorney or party, following reasonable notice, to appear at a scheduled conference will be deemed a waiver and will not preclude the Commission from conferring with those parties or counsel present.

18. Section 1.733 is revised to read as follows:

§ 1.733 Specifications as to pleadings, briefs, and other documents; subscription.

(a) All papers filed in any formal complaint proceeding must be drawn in conformity with the requirements of §§ 1.49 and 1.50.

(b) All averments of claims or defenses in complaints and answers shall be made in numbered paragraphs. The contents of each paragraph shall be limited as far as practicable to a statement of a single set of circumstances. Each claim founded on a separate transaction or occurrence and each affirmative defense shall be separately stated to facilitate the clear presentation of the matters set forth.

(c) The original of all pleadings and other submissions filed by any party shall be signed by that party, or by the party's attorney. The signing party shall state his or her address and telephone number and the date on which the document was signed. Copies should be conformed to the original. Except when otherwise specifically provided by rule or statute, pleadings need not be verified. The signature of an attorney or party shall be a certificate that the attorney or party has read the pleading, motion, or other paper; that to the best of his or her knowledge, information, and belief formed after reasonable inquiry, it is well grounded in fact and is warranted by existing law or a good faith argument for the extension, modification, or reversal of existing law; and that it is not interposed for any improper purpose.

19. Section 1.734 is revised to read as follows:

§ 1.734 Copies; service; separate filings against multiple defendants.

(a) Complaints may generally be brought against only one named carrier; such actions may not be brought against multiple defendants unless the defendant carriers are commonly owned or controlled, are alleged to have acted in concert, are alleged to be jointly liable to complainant, or the complaint concerns common questions of law or fact. Complaints may, however, be consolidated by the Commission for disposition.

(b) The complainant must file an original plus three copies of the complaint with the Commission. However, if the complaint is addressed against multiple defendants, complainant shall supply three additional copies of the complaint for each additional defendant.

(c) Generally, a separate file is set up for each defendant. An original plus two copies shall be filed of all pleadings and documents, other than the complaint, for each file number assigned.

(d) The Commission will serve a copy of any formal complaint filed with it on the named defendant, together with a notice of the filing of the complaint. Such notice shall call upon the defendant to satisfy the complaint or to answer the complaint in writing within the time specified in the notice.

(e) All subsequent pleadings and briefs filed in any formal complaint proceeding, including any supplemental, amended, or cross complaint, as well as all letters, documents or other written submissions, shall be served by the filing party on all other parties to the proceeding, together with a proof of such service in accordance with the requirements of § 1.47.

(f) The parties to any complaint proceeding may be required to file additional copies of any or all papers filed in the proceeding.

§ 1.735 [Removed]

20. Section 1.735 is removed.

[FR Doc. 88-7843 Filed 4-8-88; 8:45 am]

BILLING CODE 6712-01-M

---

47 CFR Parts 2, 22, and 94

[PR Docket No. 87-5; FCC 88-58]

Amendment of Use of the 928-960 MHz Band for Point-to-Multipoint Operations

AGENCY: Federal Communications Commission.

ACTION: Final rule.

SUMMARY: This document revises the Commission's Rules and Regulations governing point-to-multipoint operations in the 928-960 MHz band. The action is taken to promote spectrum efficiency, increase flexibility, and aid in the development of new technologies.

EFFECTIVE DATE: May 11, 1988.

ADDRESS: Federal Communications Commission, 1919 M Street, NW., Washington, DC, 20554.

FOR FURTHER INFORMATION CONTACT: Herb Zeiler, Private Radio Bureau (202) 634-2443.

SUPPLEMENTARY INFORMATION: This is a summary of the Commission's Report and Order PR Docket No. 87-5, adopted February 25, 1988, and released March 14, 1988. The full text of this Commission decision is available for inspection and

copying during normal business hours in the FCC Dockets Branch (Room 230), 1919 M Street NW., Washington, DC. The complete text of this decision may also be purchased from the Commission's Copy Contractor, International Transcription Service, 2100 M Street NW., Suite 140, Washington, DC, 20037, telephone (202) 857-3800.

Summary of Report and Order

1. On January 25, 1987, the Commission adopted a Notice of Proposed Rule Making (Notice), PR Docket 87-5, 52 FR 4161, initiating a comprehensive review of the regulations and policies governing 900 MHz multiple address system (MAS) operations. The Notice contained specific proposals to (1) reduce the standard bandwidth to 12.5 kHz; (2) make frequencies allocated to the power pool available to all part 94 eligibles; (3) allow mobile meter reading on unpaired MAS frequencies on a primary basis; (4) allow MAS master stations to communicate with one another; (5) establish a standard co-channel mileage separation for licensing 900 MHz MAS stations; and (6) continue to license one-way systems only on the unpaired frequencies.

2. Based on the record of this proceeding the Commission has adopted the rules as proposed in the Notice with certain modifications. The Commission also made several additional rule modifications and clarifications.

3. By this Report and Order the Commission reduced the standard MAS bandwidth to 12.5 kHz but still provided for up to 50 kHz bandwidths, if needed. In reducing the bandwidth, the Commission also tightened the frequency tolerance requirement for remote stations operating at 12.5 kHz to 1.5 parts per million. The Commission also adopted its proposals to allow remote meter reading on unpaired frequencies on a primary basis and to allow master to master communications. The Commission concluded that such changes would promote spectrum efficiency and aid in the development of new technologies.

4. The Commission modified slightly its proposals regarding spectrum allotment, standard co-channel mileage separation, and mixed operation (one-way and two-way) on the frequency pairs. In regard to spectrum allotment, the Commission decided to maintain the two frequency pool concept. To ensure that frequencies assigned in one pool, however, do not remain unused while the needs of users in the other pool go unmet, the new rules provide for interpool sharing beginning January 1, 1992. The Commission also decided to adopt a co-channel mileage separation of 75 miles rather than the 110-mile separation proposed. As for mixed operation, the Commission decided that paired frequencies should be used primarily for two-way requirements, but that ancillary one-way communications on a frequency pair would be permitted since it furthers the objective of increasing spectrum efficiency. Requests for one-way use on the paired frequencies will be addressed by the Commission on a case-by-case basis. Again, these actions were taken to alleviate frequency congestion and promote greater flexibility.

5. In addition to these changes, the Commission modified the emission standards and clarified the definition of a multiple address system, master station, and a remote station.

Final Regulatory Flexibility Analysis

6. Pursuant to the Regulatory Flexibility Act of 1980, 5 U.S.C. 604, the Commission's final regulatory flexibility analysis has been prepared. It is available for public viewing as part of the full text of this decision, which may be obtained from the Commission or its copy contractor.

Paperwork Reduction

7. The action herein has been analyzed with respect to the Paperwork Reduction Act of 1980, and found to contain no new or modified form, information collection and/or record keeping, labeling, disclosure, or record retention requirements; and will not increase or decrease burden hours imposed on the public.

Ordering Clauses

8. Accordingly, *it is ordered*, that pursuant to sections 4(i) and 303(r) of the Communications Act of 1934, as amended, Parts 2, 22, and 94 of the Commission's Rule are *amended* effective May 11, 1988, as shown at the end of this document.

9. *It is further ordered* that this proceeding is *terminated*.

List of Subjects in 47 CFR Parts 2, 22, and 94

Private microwave systems, Multiple address systems, Radio, Frequency allocations.

47 CFR Parts 2, 22, and 94 of the Commission's Rules are amended as follows:

PART 2—FREQUENCY ALLOCATIONS AND RADIO TREATY MATTERS; GENERAL RULES AND REGULATIONS

1. The authority citation for Part 2 continues to read as follows:

Authority: 47 U.S.C. 154, 303, unless otherwise noted.

2. Section 2.106 is amended by revising footnote NG120 to read as follows:

§ 2.106 Table of frequency allocations.

* * * * *

Non-Government (NG) Footnotes

* * * * *

NG120 Frequencies in the 928-960 MHz band may be assigned for multiple address systems and mobile operations on a primary basis as specified in Part 94 of this chapter.

* * * * *

PART 22—PUBLIC MOBILE SERVICE

1. The authority citation for Part 22 is revised to read as follows:

Authority: 47 U.S.C. 154, 303, unless otherwise noted.

2. Section 22.501 is amended by revising paragraph (g)(2) to read as follows:

§ 22.501 Frequencies.

* * * * *

(g) * * *

(2) Upon an affirmative showing that frequencies shown in § 22.501(g)(1) of this part are not available, frequencies listed in Tables 1 and 2 of § 94.65(a)(1) of this chapter (Private Operational-Fixed Microwave Service) may be authorized for common carrier point-to-multipoint operations. After January 1, 1992, frequencies available in Tables 3 and 4 of § 94.65(a)(1) of this chapter also may be used for such operations. Operations on any of these frequencies shall be subject to the requirements of Part 94 of this chapter.

* * * * *

PART 94—PRIVATE OPERATIONAL-FIXED MICROWAVE SERVICE

1. The authority citation for Part 94 continues to read as follows:

Authority: Secs. 4, 303, 48 Stat., as amended, 1066, 1082, 47 U.S.C. 154, 303, unless otherwise noted.

2. Section 94.3 is amended by revising the definitions of Master station, Multiple address, and Remote station.

§ 94.3 Definitions.

* * * * *

Master station. A station in a multiple address radio system that controls, activates, or interrogates four or more remote stations. Master stations performing such functions may also

receive transmissions from remote stations.

* * * * *

Multiple address system (MAS). A multiple address radio system is a point-to-multipoint communications system, either two-way or one-way, utilizing frequencies listed in § 94.65(a)(1) of this part and serving a minimum of four remote stations. If a master station is part of the multiple address system, the remote stations must be scattered over the service area in such a way that more than two separate point-to-point systems would be needed to serve those remotes.

* * * * *

Remote station. A fixed station in a multiple address radio system that transmits one-way to one or more receive central sites, controls a master station, or is controlled, activated, or interrogated by, and may respond to, a master station.

* * * * *

3. Section 94.15 is amended by revising paragraph (g) to read as follows:

§ 94.15 Policy governing the assignment of frequencies.

* * * * *

(g) Except as provided in paragraph (h) of this section, applicants requiring multiple transmit frequencies employed on separate paths from a single station location will not normally be authorized more than four of the transmit frequencies available in the band. Further, master and remote stations using frequencies listed in § 94.65(a)(1) of this part will not normally be authorized more than four (12.5 KHz) frequencies or frequency pairs.

* * * * *

4. Section 94.25 is amended by revising paragraph (j) to read as follows:

§ 94.25 Filing of applications.

* * * * *

(j) For stations operating on frequencies listed in § 94.65(a)(1) of this part, applications may include any number of remote stations in a single application, but must specify the geographic service area of the applicant in which these remote stations will be located. A separate application must be filed for each fixed master station. Applications for mobile operations or for systems employing only remote stations must designate a reference point (set of coordinates) at or near the center of the area being served.

5. Section 94.31 is amended by adding a new paragraph (k) to read as follows:

§ 94.31 Supplemental information to be submitted with application.

* * * * *

(k) For applications involving fixed multiple address system master stations, the antenna height above average terrain (HAAT). See § 90.309 for determining HAAT.

6. Section 94.63 is amended by revising paragraphs (d)(4)(i) and (d)(5) to read as follows:

§ 94.63 Interference protection criteria for operational fixed stations.

* * * * *

(d) * * *

(4) * * *

(i) For multiple address stations in the 928–960 MHz band a statement that the proposed system complies with the following co-channel separations from all existing stations and pending applications.

Fixed-to-fixed, 120.7 Km (75 miles)
Fixed-to-mobile, 104.6 Km (65 miles)
Mobile-to-mobile, 80.5 Km (50 miles)

Multiple address systems employing only remote stations will be treated as mobile for the purposes of determining the appropriate separation. For mobile operation, the mileage is measured from the reference point specified on the license application.

* * * * *

(5) Multiple address frequencies in the 956 MHz band may be assigned for use by mobile master stations on a primary basis. Multiple address frequencies in the 952 MHz band may be assigned for use by mobile master stations on a case-by-case basis. Mobile operation in the 952 MHz band shall be on a secondary basis to fixed operations.

* * * * *

7. Section 94.65 is amended by revising the heading for paragraph (a) and paragraph (a)(1); redesignating paragraphs (a)(2), (a)(3) and (a)(4) to read (a)(2)(i), (a)(2)(ii), and (a)(2)(iii), respectively and revising the heading for each paragraph and adding a new heading for paragraph (a)(2) to read as follows:

§ 94.65 Frequencies.

* * * * *

(a) *928–960 MHz*—(1) *Multiple Address System frequencies.* Multiple address system (MAS) frequencies are available for the point-to-multipoint transmission of a licensee's products or services, excluding video entertainment material, to a licensee's customer or for its own internal communications. The paired frequencies listed in this section shall be used for two-way interrogate/response communications between a

master station and remote stations. Each master station operating on one of the paired channels is required to serve a minimum of four separate active remote stations. Ancillary one-way communications on paired frequencies are permitted on a case-by-case basis. Ancillary communications between interrelated master stations are permitted on a secondary basis. The normal bandwidth assigned will be 12.5 kHz. Upon adequate justification, however, additional contiguous channels may be authorized to provide up to a 50 kHz bandwidth. Tables 2, 4, and 6 list frequencies with 25 kHz bandwidth. When licensed for a larger bandwidth, the system still is required to use equipment which meets the ±0.00015 percent tolerance requirement. (See § 94.67(a) of this part). Systems licensed as of May 1, 1988, operating on the 25 kHz channels listed in these tables will be grandfathered indefinitely.

(i) *General Access Pool:* Frequencies listed in this paragraph are available to all persons eligible under Part 94 for use in multiple address radio systems. Except as noted, however, the frequencies may be used by eligibles in the Power Radio Service only if the frequencies in § 94.65(a)(1)(ii) of this part are exhausted in the particular geographic area. The frequencies are also available for shared use by Part 22 Public Land Mobile Service users if frequencies listed in § 22.501(g) of this chapter are exhausted in the particular geographic area. Applications for use of these frequencies under Part 22 shall be subject to Part 94 requirements.

TABLE 1.—PAIRED FREQUENCIES (MHZ)

(12.5 kHz bandwidth)

Remote transmit	Master transmit
928.00625	952.00625
928.01875	952.01875
928.03125	952.03125
928.04375	952.04375
928.05625	952.05625
928.06875	952.06875
928.08125	952.08125
928.09375	952.09375
928.10625	952.10625
928.11875	952.11875
928.13125	952.13125
928.14375	952.14375
928.15625	952.15625
928.16875	952.16875
928.18125	952.18125
928.19375	952.19375
928.20625	952.20625
928.21875	952.21875
928.23125	952.23125
928.24375	952.24375
928.25625	952.25625
928.26875	952.26875
928.28125	952.28125
928.29375	952.29375
928.30625	952.30625
928.31875	952.31875
928.33125	952.33125
928.34375	952.34375

UNPAIRED FREQUENCIES (MHZ)[1]

(12.5 kHz bandwidth)

956.25625	956.33125	956.39375
956.26875	956.34375	956.40625
956.28125	956.35625	956.41875
956.29375	956.36875	956.43125
956.30625	956.38125	956.44375
956.31875		

[1] Available to power eligibles regardless of whether frequencies in the power pool are exhausted.

TABLE 2.—PAIRED FREQUENCIES (MHZ)

(25 kHz bandwidth)

Remote transmit	Master transmit
928.0125	952.0125
928.0375	952.0375
928.0625	952.0625
928.0875	952.0875
928.1125	952.1125
928.1375	952.1375
928.1625	952.1625
928.1875	952.1875
928.2125	952.2125
928.2375	952.2375
928.2625	952.2625
928.2875	952.2875
928.3125	952.3125
928.3375	952.3375

UNPAIRED FREQUENCIES (MHZ)[1]

(25 kHz bandwidth)

956.2625	956.3375	956.4125
956.2875	956.3625	956.4375
956.3125	956.3875	

[1] Available to power eligibles regardless of whether frequencies in the power pool are exhausted.

(ii) *Power Pool:* Frequencies listed in this paragraph are available to persons eligible under § 90.63 of this chapter for licensing in the Power Radio Service for use in multiple address radio systems. After January 1, 1992, the frequencies are also available for use by general access pool users and Part 22 Public Land Mobile Service users (§ 22.501(g) of this chapter) provided frequencies listed in their respective pools are exhausted in the particular geographic area. Applications for use of these frequencies under Part 22 of this chapter shall be subject to Part 94 of this chapter requirements.

TABLE 3.—PAIRED FREQUENCIES (MHZ)

(12.5 kHz bandwidth)

Remote transmit	Master transmit
928.35625	952.35625
928.36875	952.36875
928.38125	952.38125
928.39375	952.39375
928.40625	952.40625
928.41875	952.41875
928.43125	952.43125
928.44375	952.44375
928.45625	952.45625
928.46875	952.46875
928.48125	952.48125
928.49375	952.49375
928.50625	952.50625

TABLE 3.—PAIRED FREQUENCIES (MHz)

(12.5 kHz bandwidth)

Remote transmit	Master transmit
928.51875	952.51875
928.53125	952.53125
928.54375	952.54375
928.55625	952.55625
928.56875	952.56875
928.58125	952.58125
928.59375	952.59375
928.60625	952.60625
928.61875	952.61875
928.63125	952.63125
928.64375	952.64375
928.65625	952.65625
928.66875	952.66875
928.68125	952.68125
928.69375	952.69375
928.70625	952.70625
928.71875	952.71875
928.73125	952.73125
928.74375	952.74375
928.75625	952.75625
928.76875	952.76875
928.78125	952.78125
928.79375	952.79375
928.80625	952.80625
928.81875	952.81875
928.83125	952.83125
928.84375	952.84375

TABLE 4.—PAIRED FREQUENCIES (MHz)

(25 kHz BANDWIDTH)

Remote transmit	Master transmit
928.3625	952.3625
928.3875	952.3875
928.4125	952.4125
928.4375	952.4375
928.4625	952.4625
928.4875	952.4875
928.5125	952.5125
928.5375	952.5375
928.5625	952.5625
928.5875	952.5875
928.6125	952.6125
928.6375	952.6375
928.6625	952.6625
928.6875	952.6875
928.7125	952.7125
928.7375	952.7375
928.7625	952.7625
928.7875	952.7875
928.8125	952.8125
928.8375	952.8375

(iii) *Frequencies listed in this paragraph are available for shared use by general access pool users for multiple address operations if frequencies listed in paragraph (a)(1)(i) of this section are exhausted in the particular geographic area:* The frequencies are also available to eligibles in the power pool provided there are no other frequencies available for the type of operation contemplated. The frequencies in this pool may be assigned for paired or unpaired operation. If paired, the corresponding lower frequency shall be for remote unit use. Applications for these frequencies shall be subject to the conditions outlined in § 22.27 of this chapter.

TABLE 5.—PUBLIC MOBILE SERVICE CATEGORY, FREQUENCIES (MHz)

(12.5 kHz BANDWIDTH)

Remote transmit	Master transmit
928.85625	959.85625
928.86875	959.86875
928.88125	959.88125
928.89375	959.89375
928.90625	959.90625
928.91875	959.91875
928.93125	959.93125
928.94375	959.94375
928.95625	959.95625
928.96875	959.96875
928.98125	959.98125
928.99375	959.99375

TABLE 6.—PUBLIC MOBILE SERVICE CATEGORY, FREQUENCIES (MHz)

(25 kHz BANDWIDTH)

Remote transmit	Master transmit
928.8625	959.8625
928.8875	959.8875
928.9125	959.9125
928.9375	959.9375
928.9625	959.9625
928.9875	959.9875

(iv) *Equivalent power and antenna heights for multiple address master stations:*

Antenna height (AAT) in feet	Maximum effective radiated power	
	Watts	dBm
Above 1,000	200	53
901–1,000	250	54
801–900	315	55
701–800	400	56
601–700	500	57
501–600	630	58
500 and below	1,000	60

For mobile operations the maximum ERP is 25 watts (44 dBm).

(2) Fixed point-to-point frequencies.

(i) Table 7 (50 kHz bandwidth).

* * * * *

(ii) Table 8 (100 kHz bandwidth)

* * * * *

(iii) Table 9 (200 kHz bandwidth)

* * * * *

8. Section 94.67 is amended by revising footnote 5 and the entry 928–929 MHz in the table and adding a new footnote 9 to read as follows:

§ 94.67 Frequency tolerance.

* * * * *

Frequency band (MHz)	Tolerance as percentage of assigned frequency
928–929	[5]0.0005

* * * * *

[5] For point-to-point systems, with a channel greater than or equal to 50 kHz bandwidth, .0005; for multiple address master stations, regardless of bandwidth, .00015; for multiple address remote stations with 12.5 kHz bandwidths, .00015; for multiple address remote stations with channels greater than 12.5 kHz bandwidth, .0005.

* * * * *

[6] For remote stations with 12.5 kHz bandwidth, the tolerance is ±.00015.

9. Section 94.71 is amended by revising frequency bands 928–929 and 952–960, and footnotes 6 and 7 in the table of paragraph (b), and paragraph (c)(2)(i); redesignating paragraphs (c) (3) and (4) as (c) (5) and (6); adding new (c) (3) and (4) and revising the introductory text of newly redesignated paragraphs (c) (5) and (6) to read as follows:

§ 94.71 Emission and bandwidth limitations.

* * * * *

(b) * * *

Frequency band (MHz)	Maximum authorized bandwidth
928–929	12.5, 25 kHz [6] [7]
952–960	12.5, 25, 50, 100, 200 kHz [6]
*	* * * *

* * * * *

[6] A 12.5 bandwidth applies only to frequencies listed § 94.65(a)(1).

[7] For frequencies listed in § 94.65(a)(1), consideration will be given on a case-by-case basis to authorizing bandwidths up to 50 kHz.

(c) * * *

(2) * * *

(i) Except as noted in paragraph (c)(3) of this section, for operating frequencies below 15 GHz, in any 4 kHz band, the center frequency of which is removed from the assigned frequency by more than 50 percent up to and including 250 percent of the authorized bandwidth: As specified by the following equation but in no event less than 50 decibels:

$A = 35 + 0.8(P - 50) + 10 \log_{10} B$.

(Attenuation greater than 80 decibels is not required.)

Where:

A = attenuation (in decibels) below the mean output power level

P = percent removed from the carrier frequency

B = authorized bandwidth in MHz.

* * * * *

(3) When using transmissions employing digital modulation techniques on the 900 MHz multiple address frequencies with a 12.5 kHz bandwidth, the power of any emission shall be attenuated below the unmodulated carrier power of the transmitter (P) in accordance with the following schedule:

(i) On any frequency removed from the center of the authorized bandwidth by a displacement frequency (fd in kHz) of more than 2.5 kHz up to and including 6.25 kHz: At least 53 $\log_{10}$ (f_d/2.5) decibels;

(ii) On any frequency removed from the center of the authorized bandwidth by a displacement frequency (f_d in kHz) of more than 6.25 kHz up to and including 9.5 kHz: At least 103 $\log_{10}$ (f_d/3.9) decibels;

(iii) On any frequency removed from the center of the authorized bandwidth by a displacement frequency (f_d in kHz) of more than 9.5 kHz up to and including 15 kHz: At least 157 $\log_{10}$ (f_d/5.3) decibels;

(iv) On any frequency removed from the center of the authorized bandwidth by a displacement frequency greater than 15 kHz: At least 50 plus 10 $\log_{10}$(P) or 70 decibels, whichever is the lesser attenuation.

(4) When using transmissions employing digital modulation techniques on the 900 MHz multiple address frequencies with a bandwidth greater than 12.5 kHz, the power of any emission shall be attenuated below the unmodulated carrier power of the transmitter (P) in accordance with the following schedule;

(i) On any frequency removed from the center of the authorized bandwidth by a displacement frequency (f_d in kHz) of more than 5 kHz up to and including 10 kHz: At least 83 $\log_{10}$ (f_d/5) decibels;

(ii) On any frequency removed from the center of the authorized bandwidth by a displacement frequency (f_d in kHz) of more than 10 kHz up to and including 250 percent of the authorized bandwidth: At least 116 $\log_{10}$ (f_d/6.1) decibels or 50 plus 10$\log_{10}$(P) or 70 decibels, whichever is the lesser attenuation;

(iii) On any frequency removed from the center of the authorized bandwidth by more than 250 percent of the authorized bandwidth: At least 43 plus 10 $\log_{10}$(output power in watts) decibels or 80 decibels, whichever is the lesser attenuation.

(5) For Digital Transmission System channels operating in the 10,550–10,680 MHz band:

* * * * *

(6) For Digital Termination System channels operating in the 17,000–19,700 MHz band:

* * * * *

10. The Table in § 94.73 is amended by revising footnotes 1 and 3 to read as follows:

§ 94.73 Power limitations.

(a) * * *

1 For multiple address operations see § 94.65(a)(1)(iv) of this part.

* * * * *

3 For multiple address operations see § 94.65(a)(1)(iv) of this part. When an omnidirectional transmitting antenna is authorized in the 2150–2160 MHz band, the maximum power shall be 60dBm.

* * * * *

Federal Communications Commission.

H. Walker Feaster III,

Acting Secretary.

[FR Doc. 88-7451 Filed 4-8-88; 8:45 am]

BILLING CODE 6712-01-M

---

47 CFR Part 15

[General Docket No. 86-422; FCC 88-101]

Control and Security Alarm Devices

AGENCY: Federal Communications Commission.

ACTION: Final rule.

SUMMARY: This document adopts the regulations proposed in a Notice of Proposed Rule Making in Gen. Docket No. 86-422 (adopted October 22, 1986, FCC 86-463, 51 FR 46882). The changes to the regulations increase the level of spurious emissions permitted in the restricted frequency bands shown in § 15.205(a) of the regulations; implements a new measurement procedure for determining the average level of emissions from a pulsed system; and adopts a time frame within which all devices must comply with the regulations. This action was initiated by petitions for rule making filed by the Door Operator and Remote Controls Manufacturers Association, the Security Equipment Industry Association, and Transcience Industries.

EFFECTIVE DATE: April 11, 1988.

ADDRESS: Federal Communications Commission, 1919 M Street NW., Washington, DC 20554.

FOR FURTHER INFORMATION CONTACT: John A. Reed, Technical Standards Branch, Office of Engineering and Technology, (202) 653-7313.

SUPPLEMENTARY INFORMATION: This is a summary of the Commission's *Report and Order* in Gen. Docket No. 86-422, FCC 88-101, adopted March 9, 1988, and released March 25, 1988.

The full text of this Commission decision is available for inspection and copying during normal business hours in the FCC Dockets Branch (Room 230) 1919 M Street NW., Washington, DC. The complete text of this decision may also be purchased from the Commission's copy contractor, International Transcription Service, (202) 857-3800, 2100 M Street NW., Suite 140, Washington, DC 20037.

Summary of Report and Order

1. In the Notice of Proposed Rule Making (Gen. Docket No. 86-422, adopted October 22, 1986, FCC 86-463, 51 FR 46882), the Commission proposed to relax the emission limit in the restricted frequency bands above 1000 MHz, as shown in § 15.205(a) of the regulations, from 125 μV/m at 3 meters to 500 μV/m at 3 meters. This rule making also proposed to implement a new measurement method for determining the average level of emissions from a pulsed system and a time frame for deleting the existing stay and waiver provisions (see *Order Granting Partial Stay*, FCC 84-12, adopted January 12, 1984, and *Order Granting Waiver in Part*, FCC 84-18, adopted January 16, 1984).

2. Eleven comments and four reply comments were filed in this proceeding. The Commission also incorporated comments filed by the National Telecommunications and Information Administration, Department of Commerce (NTIA) in this proceeding even though those comments were directed in response to a separate proceeding.

3. The majority of comments supported the Commission's proposals. The National Radio Astronomy Observatory (NRAO) stated that the proposed limit could cause interference to radio astronomy observations at distances of up to 51 km and requested that the emission limit be reduced to 15 μV/m at 3 meters or that the existing limit of 125 μV/m at 3 meters be retained. Pacific Bell and Nevada Bell objected to the proposed emission limit stating that interference to common carrier microwave operations in frequency bands above 1000 MHz could result. Genie Home Products, a division of Philips Home Products, Inc. (Genie), requested that the emission limit in the restricted frequency bands above 1000 MHz be increased to 1000 μV/m at 3 meters and that manufacturers be permitted to continue to manufacture and market replacement devices produced under the stay or waiver provisions for a period of 10 years.

4. The Commission's primary concern is whether or not the proposed emission limit is sufficient to protect the safety and other sensitive radio services authorized to operate in the restricted frequency bands from harmful interference. The comments filed by the NTIA indicate that spurious and receiver emissions should be limited to 500 μV/m at 3 meters at frequencies above 960 MHz. However, emissions in the radio astronomy bands above 1000 MHz should continue to be limited to 125 μV/m at 3 meters.

5. The potential for interference to radio astronomy observations was discussed in the NRAO comments. However, NRAO calculated interference potential based on the interfering signal from a control and security alarm device being contained within the main beamwidth of the radio astronomy antenna. Such antennas have beamwidths on the order of minutes of arc to seconds of arc, making it unlikely that emissions from the Part 15 devices would be detected by the radio astronomy station. Furthermore, emissions at the frequency ranges of concern to NRAO generally are rapidly attenuated by intervening obstructions. Control and security alarm devices normally are located within enclosures that tend to reduce the level of any radiated emissions. No specific instances of interference from control and security alarm devices were identified by any of the commenting parties.

6. The comments filed by the Security Equipment Industry Association and the Door Operator and Remote Controls Manufacturers Association, representing a large portion of the manufacturers of control and security alarm devices, indicated that the proposed limits are technically and economically feasible. Based on the above, we believe that a limit of 500 μV/m at 3 meters is sufficient to protect against interference to operations in the restricted frequency bands.

7. No adverse comments were received on the new measurement method for determining the average level of emissions from a pulsed system. This method of measurement is adopted as proposed.

8. None of the regulations adopted herein would require a manufacturer to change their frequency of operation or to use a different method of modulating the signal. Thus, there is no reason to expect that equipment produced under the standards promulgated in this rule making would not be compatible with existing equipment. Therefore, the Commission finds no basis for adopting Genie's request to permit the continued manufacture of devices not complying with the provisions of this Order. The time frame for deleting the existing stay and waiver provisions is adopted as proposed.

9. Pursuant to the Regulatory Flexibility Act of 1980, 5 U.S.C. 605(b) it is certified that the final rule will not have a significant economic impact on a substantial number of small entities. The adopted regulations relax the emission standards in certain frequency bands above 1000 MHz and delete existing provisions for stay or waiver of the regulations pertaining to these emissions.

10. The proposal contained herein has been analyzed with respect to the Paperwork Reduction Act of 1980 and found to contain no new or modified form, information collection and/or record keeping, labeling, disclosure, or record retention requirements; and will not increase or decrease burden hours imposed on the public.

Ordering Clauses

11. According, *it is ordered* that under the authority contained in sections 4(i), 302, 303(e), 303(f) and 303(r) of the Communications Act of 1934, as amended, that Part 15 of the Commission's Rules and Regulations *are amended* as set forth in the attached Appendix B. These rules and regulations are effective April 11, 1988. *It is further ordered* that the Order Granting Partial Stay, adopted January 12, 1984, and the Order Granting Waiver in Part, adopted January 16, 1984, for control and security alarm devices are rescinded in the following manner: effective April 11, 1990, all requests for equipment authorization for control and security alarm devices submitted to the Commission and, effective October 11, 1990, all control and security alarm devices manufactured or imported for marketing within the U.S. and its possessions must comply with the standards contained in §§ 15.201 through 15.215 of the regulations.

12. *It is further ordered* that this proceeding is terminated.

List of Subjects in 47 CFR Part 15

Communications equipment, Radio, Reporting and recordkeeping requirements, Security measures.

Rule Changes

Part 15 of Title 47 of the Code of Federal Regulations is amended as follows:

PART 15—RADIO FREQUENCY DEVICES

1. The authority citation for Part 15 is revised to read as follows:

Authority: Secs. 4, 302, 303, and 307 of the Communications Act of 1934, as amended; 47 U.S.C. 154, 302, 303, 307.

2. Section 15.122 is amended by revising the Note under paragraph (a) to read as follows:

§ 15.122 Periodic operation in the bands 40.66–40.70 MHz and above 70 MHz.

* * * * *

(a) * * *

Note.—For pulsed operation, the measured field strength shall be determined by averaging over one complete pulse train, including blanking intervals, as long as the pulse train does not exceed 0.1 seconds. As an alternative or in those cases where the pulse train exceeds 0.1 seconds, the measured field strength shall be determined from the averaged absolute voltage during a 0.1 second interval when the field strength is at its maximum value. The exact method of calculating the average field strength shall be submitted with any application for equipment authorization.

* * * * *

3. Section 15.184 is amended by revising the introductory text to read as follows:

§ 15.184 Interim requirements for operation above 70 MHz.

Manufacture and importation of a radio control for a door opener complying with all of the provisions of this section shall cease October 11, 1990. Applications for certification of devices operating under this section will not be accepted by the Commission after April 11, 1990.

* * * * *

§§ 15.201–15.215 [Amended]

4. The authority citation for §§ 15.201–15.215 is removed.

5. Section 15.205 is amended by removing the Note under paragraph (a), revising the introductory text of paragraph (a), adding new paragraphs (a)(1) and (a)(2), revising the Note under paragraph (b), and adding a new paragraph (f), to read as follows:

§ 15.205 Technical standards.

(a) Only spurious emissions shall be permitted within any of the frequency bands listed below. Spurious emissions from the transmitter, as well as radiated emissions from receivers associated with transmitters operating under these provisions, that fall within these frequency bands shall not exceed the designated emission limits.

* * * * *

(1) Emissions in these bands shall not exceed 15 μV/m at 3 meters on frequencies equal to or below 1000 MHz.

(2) Emissions in these bands on frequencies above 1000 MHz shall not exceed 500 μV/m at 3 meters or, based on the fundamental frequency of the transmitter, the spurious emission limits in paragraph (b) of this section, whichever is the lower value. A power density level may be measured to show the equivalent μV/m limit.

(b) * * *

Note.—For pulsed operation, the measured field strength shall be determined by averaging over one complete pulse train, including blanking intervals, as long as the pulse train does not exceed 0.1 seconds. As an alternative or in those cases where the pulse train exceeds 0.1 seconds, the measured field strength shall be determined from the averaged absolute voltage during a 0.1 second interval when the field strength is at its maximum value. The exact method of calculating the average field strength shall be submitted with any application for equipment authorization.

* * * * *

(f) For those devices produced under the provisions of the Commission's Order Granting Partial Stay, adopted January 12, 1984, FCC 84-12, or Order Granting Waiver in Part, adopted January 16, 1984, FCC 84-16, all requests for a grant of equipment authorization received as of April 11, 1990, and all equipment manufactured or imported after October 11, 1990, must comply with the provisions of §§ 15.201-15.215.

Federal Communications Commission.

H. Walker Feaster III,

Acting Secretary.

[FR Doc. 88-7845 Filed 4-8-88; 8:45 am]

BILLING CODE 6712-01-M

---

47 CFR Part 73

[MM Docket No. 85-518; RM-5659]

Television Broadcasting Services;Yosemite Valley, CA

AGENCY: Federal Communications Commission.

ACTION: Final Rule.

SUMMARY: This document allots UHF television Channel 41 to Yosemite Valley, California, as its first local video broadcast service, in response to a petition filed on behalf of Pappas Telecasting Incorporated.

However, this proposal is affected by the Commission's current freeze on allotments, or applications therefor, in certain metropolitan areas, since Yosemite Valley is located within the zone encompassed by Sacramento and Stockton, California, two of the specified communities. Thus, the application process for Channel 41 will be delayed until its availability is announced in a future action by the Commission. With this action, the proceeding is terminated.

EFFECTIVE DATE: May, 16, 1988.

FOR FURTHER INFORMATION CONTACT: Nancy Joyner, Mass Media Bureau, (202) 634-6530. Questions related to the application filing process should be addressed to the Video Services Division, Television Branch, Mass Media Bureau, (202) 632-6357.

SUPPLEMENTARY INFORMATION: This is a summary of the Commission's Report and Order, MM Docket No. 85-518, adopted March 4, 1988, and released April 1,1988. The full text of this Commission decision is available for inspection and copying during normal business hours in the FCC Dockets Branch (Room 230), 1919 M Street NW., Washington, DC. The complete text of this decision may also be purchased from the Commission's copy contractors, International Transcription Service, (202) 857-3800, 2100 M Street NW., Suite 140, Washington, DC 20037.

List of Subjects in 47 CFR Part 73

Television broadcasting.

PART 73—[AMENDED]

1. The authority citation for Part 73 continues to read as follows:

Authority: 47 U.S.C. 154, 303.

§ 73.606 [Amended]

2. Section 73.606(b), the Television Table of Allotments, is amended under California, by adding Yosemite Valley, Channel 41.

Federal Communications Commission.

Steve Kaminer,

Deputy Chief, Policy and Rules Division, Mass Media Bureau.

[FR Doc. 88-7846 Filed 4-8-88; 8:45 am]

BILLING CODE 6712-01-M

Proposed Rules

Federal Register
Vol. 53, No. 69
Monday, April 11, 1988

This section of the FEDERAL REGISTER contains notices to the public of the proposed issuance of rules and regulations. The purpose of these notices is to give interested persons an opportunity to participate in the rule making prior to the adoption of the final rules.

FEDERAL RETIREMENT THRIFT INVESTMENT BOARD

5 CFR Part 1632

Public Observation of Meetings

AGENCY: Federal Retirement Thrift Investment Board.

ACTION: Proposed rule with request for comments.

SUMMARY: The Federal Retirement Thrift Investment Board (the Board) was established by Pub. L. 99–335 (June 6, 1986), to administer the Thrift Savings Plan for Federal employees. Regulations of the Board are contained in Title 5 CFR (Chapter VI) Pars 1600 through 1699. The Executive Director of the Board is publishing in Part 1632 proposed regulations concerning procedures which will govern public meetings of the Board. These regulations implement the Government in the Sunshine Act (5 U.S.C. 552b).

DATE: Comments must be received by May 5, 1988.

ADDRESS: Comments may be sent to: John J. O'Meara, Federal Retirement Thrift Investment Board, 805 Fifteenth Street NW., Washington, DC 20005.

FOR FURTHER INFORMATION CONTACT: John J. O'Meara, (202) 523–6367.

SUPPLEMENTARY INFORMATION: The Federal Employees' Retirement System Act of 1986 established a five member Board which is responsible for policies governing investments and the administration of the Thrift Savings Plan. They are appointed by the President; howeve, the Speaker of the House of Representatives and the Majority Leader of the Senate each recommend one candidate for appointment. Initial appointments were for one-year terms, without the advice and consent of the Senate; however all subsequent appointments, will be made for multi-year terms with the advice and consent of the Senate. The Government in the Sunshine Act applies to any agency which is headed by a collegial body composed of two or more individual members, a majority of whom are appointed by the President with the advice and consent of the Senate. The initial Board members will serve until such time as a majority of the Board is confirmed by the Senate, at which time these regulations will apply to public meetings of the Board.

Regulatory Flexibility Act

I certify that these regulations will not have a significant economic impact on a substantial number of small entities. They will affect only internal government procedures applicable to the public meetings of the Board.

Paperwork Reduction Act

I certify that these regulations do not require additional reporting under the criteria of the Paperwork Reduction Act of 1980.

Waiver of Notice of Proposed Rulemaking and 30-Day Delay of Effective Date.

Pursuant to 5 U.S.C. 553 (b)(B) and (d)(3), I find that good cause exists for waiving the general notice of proposed rulemaking and for making these regulations effective in less than 30 days. These Sunshine Act regulations are being issued as interim regulations because they must be effective before the Board conducts its first meeting that is open to public observation.

List of Subjects in 5 CFR Part 1632

Administrative practice and procedure, Sunshine Act, Information, Public meetings.

Federal Retirement Thrift Investment Board.

Francis, X. Cavanaugh,
Executive Director.

Title 5 of the Code of Federal Regulations is amended to add Part 1632 to Chapter VI to read as follows:

PART 1632—RULES REGARDING PUBLIC OBSERVATION OF MEETINGS

Sec.
1632.1 Purpose of scope.
1632.2 Definitions.
1632.3 Conduct of agency business.
1632.4 Meetings open to public observation.
1632.5 Exemptions.
1632.6 Public announcement of meetings.
1632.7 Meetings closed to public observation.
1632.8 Changes with respect to publicly announced meeting.
1632.9 Certification of General Counsel.
1632.10 Transcripts, recordings, and minutes.
1632.11 Procedures for inspection and obtaining copies of transcriptions and minutes.

Authority: 5 U.S.C. 552b and 5 U.S.C. 8474.

§ 1632.1 Purpose and scope.

This part is issued by the Federal Retirement Thrift Investment Board (Board) under section 552b of Title 5 of the United States Code, the Government in the Sunshine Act, to carry out the policy of the Act that the public is entitled to the fullest practicable information regarding the decision making processes of the Board while at the same time preserving the rights of individuals and the ability of the Board to carry out its responsibilities. These regulations fulfill the requirement of subsection (g) of the Act that each agency subject to the provisions of the Act shall promulgate regulations to implement the open meeting requirements of subsections (b) through (f) of the Act.

§ 1632.2 Definitions.

For purposes of this part, the following definitions shall apply:

(a) The term "Act" means the Government in the Sunshine Act, 5 U.S.C. 552b.

(b) The term "Board" means the Federal Retirement Thrift Investment Board and subdivisions thereof.

(c) The term "meeting" means the deliberations of at least the number of individual agency members required to take action on behalf of the Board where such deliberations determine or result in the joint conduct or disposition of official Board business. However, this term does not include—

(1) Deliberations required or permitted by subsections (d) or (e) of the Act (relating to decisions to close all or a portion of a meeting, or to decisions on the timing or content of an announcement of a meeting), or

(2) The conduct or disposition of official agency business by circulating written material to individual members.

(d) The term "number of individual agency members required to take action on behalf of the agency" means three members.

(e) The term "member" means a member of the Board appointed under section 101 of the Federal Employees' Retirement System Act of 1986, 5 U.S.C. 8472.

(f) The term "public observation" means that the public shall have the right to listen and observe but not the right to participate in the meeting or to record any of the meeting by means of cameras or electronic or other recording devices unless approval in advance is obtained from the Secretary of the Board.

§ 1632.3 Conduct of agency business.

Members shall not jointly conduct or dispose of official Board business other than in accordance with this part.

§ 1632.4. Meetings open to public observation.

(a) Except as provided in § 1632.5 of this part, every portion of every meeting of the agency shall be open to public observation.

(b) The Freedom of Information Act, 5 U.S.C. 552, and the Board's implementing regulations, 5 CFR Part 1611, shall govern the availability to the public of copies of documents considered in connection with the Board's discussion of agenda items for a meeting that is open to public observation.

(c) The Board will maintain mailing lists of names and addresses of all persons who wish to receive copies of agency announcements of meetings open to public observation. Requests for announcements may be made by telephoning or by writing to the Public Affairs Office, Federal Retirement Thrift Investment Board, 805 Fifteenth Street NW., Washington, DC 20005.

§ 1632.5 Exemptions.

(a) Except in a case where the Board finds that the public interest requires otherwise, the Board may close a meeting or a portion or portions of a meeting under the procedures specified in § 1632.7 or § 1632.8 of this part, and withhold information under the provisions of §§ 1632.6, 1632.7, 1632.8, or 1632.11 of this part, where the Board properly determines that such meeting or portion of its meeting or the disclosure of such information is likely to:

(1) Disclose matters that are (i) specifically authorized under criteria established by an Executive order to be kept secret in the interests of national defense or foreign policy, and (ii) in fact properly classified pursuant to such Executive order;

(2) Relate solely to internal personnel rules and practices;

(3) Disclose matters specifically exempted from disclosure by statute (other than section 552 of Title 5 of the United States Code), provided that such statute (i) requires that the matters be withheld from the public in such a manner as to leave no discretion on the issue, or (ii) established particular criteria for withholding or refers to particular types of matters to be withheld;

(4) Disclose trade secrets and commercial or financial information obtained from a person and privileged or confidential;

(5) Involve accusing any person of a crime, or formally censuring any person;

(6) Disclose information of a personal nature where disclosure would constitute a clearly unwarranted invasion of personal privacy;

(7) Disclose investigatory records compiled for law enforcement purposes, or information which if written would be contained in such records, but only to the extent that the production of such records or information would (i) interfere with enforcement proceedings, (ii) deprive a person of a right to a fair trial or an impartial adjudication, (iii) constitute an unwarranted invasion of personal privacy, (iv) disclose the identity of a confidential source and, in the case of a record compiled by a criminal law enforcement authority in the course of a criminal investigation, or by a Federal agency conducting a lawful national security intelligence investigation, confidential information furnished only by the confidential source, (v) disclose investigative techniques and procedures, or (vi) endanger the life or physical safety of law enforcement personnel;

(8) Disclose information contained in or related to examination, operating, or condition reports prepared by, on behalf of, or for the use of the Board or other Federal agency responsible for the regulation or supervision of financial institutions;

(9) Disclose information the premature disclosure of which would:

(i) Be likely to (A) lead to significant speculation in currencies, securities, or commodities, or (B) significantly endanger the stability of any financial institution; or

(ii) Be likely to significantly frustrate implementation of a proposed action, except that paragraph (a)(9)(ii) of this section shall not apply in any instance where the Board has already disclosed to the public the content or nature of its proposed action, or where the Board is required by law to make such disclosure on its own initiative prior to taking final action on such proposal; or

(10) Specifically concern the issuance of a subpoena, participation in a civil action or proceeding, an action in a foreign court or international tribunal, or an arbitration, or the initiation, conduct, or disposition of a particular case of formal agency adjudication pursuant to the procedures in section 554 of Title 5 of the United States Code or otherwise involving a determination on the record after opportunity for a hearing.

§ 1632.6 Public announcement of meetings.

(a) Except as otherwise provided by the Act, public announcement of meetings open to public observation and meetings to be partially or completely closed to public observation pursuant to § 1632.7 of this part will be made at least one week in advance of the meeting. Except to the extent such information is determined to be exempt from disclosure under § 1632.5 of this part, each such public announcement will state the time, place and subject matter of the meeting, whether it is to be open or closed to the public, and the name and phone number of the official designated to respond to requests for information about the meeting.

(b) If a majority of the members of the Board determines by a recorded vote that Board business requires that a meeting covered by paragraph (a) of this section be called at a date earlier than that specified in paragraph (a) of this section, the Board shall make a public announcement of the information specified in paragraph (a) of this section at the earliest practicable time.

(c) Changes in the subject matter of a publicly announced meeting, or in the determination to open or close a publicly announced meeting or any portion of a publicly announced meeting to public observation, or in the time or place of a publicly announced meeting made in accordance with the procedures specified in § 1632.9 of this part will be publicly announced at the earliest practicable time.

(d) Public announcements required by this section will be posted at the Board's External Affairs Office and may be made available by other means or at other locations as may be desirable.

(e) Immediately following each public announcement required by this section, notice of the time, place and subject matter of a meeting, whether the meeting is open or closed, any change in one of the preceding announcements and the name and telephone number of the official designated by the Board to respond to requests about the meeting, shall also be submitted for publication in the **Federal Register**.

§ 1632.7 Meetings closed to public observation.

(a) A meeting or a portion of a meeting will be closed to public observation, or information as to such meeting or portion of a meeting will be withheld, only by recorded vote of a majority of the members of the Board when it is determined that the meeting or the portion of the meeting or the withholding of information qualifies for exemption under § 1632.5. Votes by proxy are not allowed.

(b) Except as provided in paragraph (c) of this section, a separate vote of the members of the Board will be taken with respect to the closing or the withholding of information as to each meeting or portion thereof which is proposed to be closed to public observation or with respect to which information is proposed to be withheld pursuant to this section.

(c) A single vote may be taken with respect to a series of meetings, a portion or portions of which are proposed to be closed to public observation or with respect to any information concerning such series of meetings proposed to be withheld, so long as each meeting or portion thereof in such series involves the same particular matters and is scheduled to be held no more than thirty days after the initial meeting in such series.

(d) Whenever any person's interests may be directly affected by a portion of the meeting for any of the reasons referred to in exemption (a)(5), (a)(6) or (a)(7) of § 1632.5 of this part, such person may request in writing to the Secretary of the Board that such portion of the meeting be closed to public observation. The Secretary, or in his or her absence, the Acting Secretary of the Board, shall transmit the request to the members and upon the request of any one of them a recorded vote shall be taken whether to close such meeting to public observation.

(e) Within one day of any vote taken pursuant to paragraphs (a) through (d) of this section, the agency will make publicly available at the Board's External Affairs Office a written copy of such vote reflecting the vote of each member on the question. If a meeting or a portion of a meeting is to be closed to public observation, the Board, within one day of the vote taken pursuant to paragraphs (a) through (d) of this section, will make publicly available at the Board's External Affairs Office a full written explanation of its action closing the meeting or portion of the meeting together with a list of all persons expected to attend the meeting and their affiliation, except to the extent such information is determined by the Board to be exempt from disclosure under subsection (c) of the Act and § 1632.5 of this part.

(f) Any person may request in writing to the Secretary of the Board that an announced closed meeting, or portion of the meeting, be held open to public observation. The Secretary, or in his or her absence, the Acting Secretary of the Board, will transmit the request to the members of the Board and upon the request of any member a recorded vote will be taken whether to open such meeting to public observation.

§ 1632.8 Changes with respect to publicly announced meetings.

The subject matter of a meeting or the determination to open or close a meeting or a portion of a meeting to public observation may be changed following public announcement under § 1632.6 only if a majority of the members of the Board determines by a recorded vote that agency business so requires and that no earlier announcement of the change was possible. Public announcement of such change and the vote of each member upon such change will be made pursuant to § 1632.6(c). Changes in time, including postponements and cancellations of a publicly announced meeting or portion of a meeting or changes in the place of a publicly announced meeting will be publicly announced pursuant to § 1632.6(c) by the Secretary of the Board or, in the Secretary's absence, the Acting Secretary of the Board.

§ 1632.9. Certification of General Counsel.

Before every meeting or portion of a meeting closed to public observation under § 1632.7 of this part, the General Counsel, or in the General Counsel's absence, the Acting General Counsel, shall publicly certify whether or not in his or her opinion the meeting may be closed to public observation and shall state each relevant exemptive provision. A copy of such certification, together with a statement from the presiding officer of the meeting setting forth the time and place of the meeting and the persons present, will be retained for the time prescribed in § 1632.10(d).

§ 1632.10 Transcripts, recordings, and minutes.

(a) The Board will maintain a complete transcript or electronic recording or transcription thereof adequate to record fully the proceedings of each meeting or portion of a meeting closed to public observation pursuant to exemption (a)(1), (a)(2), (a)(3), (a)(5), (a)(6), (a)(7) or (a)(9)(ii) of § 1632.5 of this part. Transcriptions of recordings will disclose the identity of each speaker.

(b) The Board will maintain either such a transcript, recording or transcription thereof, or a set of minutes that will fully and clearly describe all matters discussed and provide a full and accurate summary of any actions taken and the reasons therefor, including a description of each of the views expressed on any item and the record of any roll call vote (reflecting the vote of each member on the question), for meetings or portions of meetings closed to public observation pursuant to exemptions (a)(8), (a)(9)(A) or (a)(10) of § 1632.5 of this part. The minutes will identify all documents considered in connection with any action taken.

(c) Transcripts, recordings or transcriptions thereof, or minutes will promptly be made available to the public in the External Affairs Office except for such item or items of such discussion or testimony as may be determined to contain information that may be withheld under subsection (c) of the Act and § 1632.5 of this part. These documents, disclosing the identity of each speaker, shall be furnished to any person at the actual cost of duplication or transcription.

(d) A complete verbatim copy of the transcript, a complete copy of the minutes, or a complete electronic recording or verbatim copy of a transcription thereof of each meeting or portion of a meeting closed to public observation will be maintained for a period of at least two years, or one year after the conclusion of any Board proceeding with respect to which the meeting or portion thereof was held, whichever occurs later.

§ 1632.11 Procedures for inspection and obtaining copies of transcriptions and minutes.

(a) Any person may inspect or copy a transcript, a recording or transcription, or minutes described in § 1632.10(c) of this part.

(b) Requests for copies of transcripts, recordings or transcriptions of recordings, or minutes described in § 1632.10(c) of this part shall specify the meeting or the portion of meeting desired and shall be submitted in writing to the Secretary of the Board, Federal Retirement Thrift Investment Board, 805 Fifteenth Street NW., Washington, DC 20005. Copies of documents identified in minutes may be made available to the public upon request under the provisions of 5 CFR Part 1630 (the Board's Freedom of Information Act regulations).

[FR Doc. 88-7865 Filed 4-8-88; 8:45 am]

BILLING CODE 6760-01-M

DEPARTMENT OF AGRICULTURE

Agricultural Marketing Service

7 CFR Part 918

[Docket No. AO-162-A6]

Peaches Grown in Georgia; Hearing on Proposed Amendments of Marketing Agreement and Order No. 918

AGENCY: Agricultural Marketing Service, USDA.

ACTION: Notice of public hearing on proposed rulemaking.

SUMMARY: Notice is hereby given of a public hearing to consider amending Marketing Agreement and Marketing Order No. 918 [7 CFR Part 918]. The marketing order, hereinafter referred to as the "order," regulates the handling of peaches grown in Georgia. The purpose of the hearing is to receive evidence on proposals to amend provisions of the order concerning: (1) Limiting the terms of office of committee members to six consecutive years; (2) changing committee voting procedures on size regulation recommendations by requiring one affirmative vote from each of the three growing districts; (3) authorizing container and pack regulations and container marking regulations; (4) adding authority for positive lot identification procedures for inspected peaches; (5) authorizing production research and marketing research and development projects; (6) requiring a referendum a minimum of every six years to determine if growers are in favor of continuing the marketing order; and (7) adding provisions concerning the confidentiality of information provided by handlers to be protected and specifying that the Secretary and the committee may verify the correctness of reports filed by handlers and compliance with recordkeeping requirements.

These proposals are intended to improve the administration, operation, and functioning of the marketing order.

DATE: The hearing will begin at 9:30 a.m., April 28, 1988.

ADDRESS: The hearing will be held at the U.S.D.A. Southeast Fruit and Tree Nut Laboratory, Georgia Highway 49 and U.S Interstate 75, Byron, Georgia 31008.

FOR FURTHER INFORMATION CONTACT: Copies of this notice of hearing may be obtained from Jerry N. Brown, Marketing Specialist, Marketing Order Administration Branch, Fruit and Vegetable Division, AMS, USDA, P.O. Box 96456, Room 2525-S, Washington, DC 20090-6456, telephone: 202-475-5464, or John R. Toth, Officer-In-Charge, Southeast Marketing Field Office, Florida Citrus Mutual Building, 500 3rd Street NW., P.O. Box 2276, Winter Haven, Florida 33883-2276, telephone: 813-299-4770.

SUPPLEMENTARY INFORMATION: This administrative action is governed by the provisions of sections 556 and 557 of Title 5 of the United States Code and, therefore, is excluding from the requirements of Executive Order 12291 and Departmental Regulation 1512-1.

The Regulatory Flexibility Act (RFA) [5 U.S.C. 601 *et seq.*] seeks to ensure that within the statutory authority of a program, the regulatory and informational requirements are tailored to the size and nature of small businesses. Interested persons are invited to present evidence at the hearing on the possible regulatory and information impact of the proposals on small businesses.

The hearing is called pursuant to the provisions of the Agricultural Marketing Agreement Act of 1937, as amended [7 U.S.C. 601 *et seq.*], governing proceedings to formulate marketing agreements and marketing orders [7 CFR Part 900].

Proposals No. 1 through No. 7 have been submitted by the Georgia Peach Industry Committee. The Fruit and Vegetable Division, Agricultural Marketing Service, U.S. Department of Agriculture submitted Proposals Nos. 8 through 10. These proposals have not received the approval of the Secretary of Agriculture.

The public hearing is for the purpose of: (1) Receiving evidence about the economic and marketing conditions which relate to the proposed amendments of the marketing agreement and order; (2) determining whether there is a need for the proposed amendments to the marketing agreement and order; and (3) determining whether the proposed amendments or appropriate modifications thereof will tend to effectuate the declared policy of the Act.

All persons wishing to submit written materials in evidence at the hearing should be prepared to submit four copies of such material at the hearing and have any prepared testimony available for presentation at the hearing.

From the time this hearing notice is issued and until the issuance of a final decision in this proceeding, Department employees involved in the decisional process are prohibited from discussing the merits of the hearing issues on an exparte basis with any person having an interest in the proceeding. The prohibition applies to employees in the following organizational units:

Office of the Secretary of Agriculture; Office of the Administrator, Agricultural Marketing Service; Office of the General Counsel, except Regional Attorneys; the Fruit and Vegetable Division, Agricultural Marketing Service.

Procedural matters are not subject to the above prohibition and may be discussed at any time.

List of Subjects in 7 CFR Part 918

Marketing agreements and orders, Peaches, Georgia.

1. The authority citation for 7 CFR Part 918 continues to read as follows:

Authority: Secs. 1-19, 48 Stat. 31, as amended; 7 U.S.C. 601-674.

2. Testimony is invited on the following proposals or appropriate alternatives or modifications to such proposals:

PART 918—PEACHES GROWN IN GEORGIA

Proposal No. 1

Amend § 918.26 by adding a proviso to read as follows:

§ 918.26 Term of office.

* * * : *Provided*, That no member shall serve more than six full consecutive terms starting with the term beginning March 1, 1989.

Proposal No. 2

The last sentence of § 918.30(a) is revised to read as follows:

§ 918.30 Procedure.

(a) * * * For any decision of the Industry Committee to be valid, not less than five (5) affirmative votes shall be necessary: *Provided*, That any decision on minimum size regulations also shall require at least one (1) concurring vote from each district.

* * * * *

Proposal No. 3

Add a new § 918.61a to read as follows:

§ 918.61a Container regulation.

Whenever the Industry Committee deems it advisable to establish a container regulation for any variety or varieties of peaches, it shall recommend to the Secretary the size, capacity, weight, marking, or pack of the container, or containers, which may be used in the handling of these peaches. If the Secretary finds upon the basis of such recommendation or other information available that such container regulation would tend to effectuate the declared policy of the Act the Secretary shall establish such

BEST COPY AVAILABLE

regulation. Notice thereof shall be sent by the Industry Committee to all handlers of record.

Proposal No. 4

In connection with Proposal No. 3, the following conforming change is proposed:

§ 918.63 [Amended]

Section 918.63 is amended by changing the words "pursuant to § 918.60 and 918.61," in the first sentence to "pursuant to § 918.60 through 918.61a."

Proposal No. 5

Section 918.64 is amended by designating the current provisions as paragraph (a) and adding a new paragraph (b) to read as follows:

§ 918.64 Inspection.

* * * * *

(b) The Industry Committee may establish with the approval of the Secretary positive lot identification requirements for lots of peaches inspected and certified pursuant to this section. Whenever implemented, such requirements shall at least specify that upon inspection, all peaches shall be identified by tags, stamps, marks, or other means of identification prescribed by the Industry Committee, that such identification shall be affixed to the container by the handler under the supervision of the Industry Committee or designated inspector, and that such identification shall not be altered or removed except as directed by the Industry Committee. For the purposes of this section, lot means the aggregate quantity of peaches of the same variety, in like containers with like identification offered for inspection as a shipping unit.

Proposal No. 6

Insert the undesignated center heading "Research and Development," after § 918.71 and add § 918.72 to read as follows:

Research and Development

§ 918.72 Production research and market research and development.

The Industry Committee, with the approval of the Secretary, may establish or provide for the establishment of projects involving production research and marketing research and development designed to assist, improve or promote the marketing, distribution and consumption of peaches and the efficient production thereof. The expenses of such projects shall be paid from funds collected pursuant to § 918.41, or from any other sources approved by the Secretary.

Proposal No. 7

Amend § 918.81 by redesignating paragraph (d) as paragraph (e) and adding a new paragraph (d) to read as follows:

§ 918.81 Termination.

* * * * *

(d) The Secretary shall conduct a referendum among growers every six years after the efective date of this amended subpart to ascertain whether continuance of this part is favored by growers. However when a continuance referendum is conducted pursuant to paragraph (c) of this section, this referendum shall be conducted six years after the referendum conducted pursuant to paragraph (c). The Secretary may terminate the provisions of this part at the end of any fiscal period in which the Secretary has found that continuance of this part is not favored by producers who, during a representative period determined by the Secretary, have been engaged in the production for market of the fruit in the production area; except that termination of this part shall be effective only if announced on or before the last day of the then current fiscal period.

* * * * *

Proposal No. 8

Add a new § 918.76 to read as follows:

§ 918.76 Confidential information.

All data or other information constituting a trade secret or disclosing a trade position or business condition shall be received by, and kept in the custody of, one or more designated employees of the Industry Committee, and information which would reveal the circumstances of a single handler shall be disclosed to no person other than the Secretary.

Proposal No. 9

Add a new § 918.77 to read as follows:

§ 918.77 Verification of reports and records.

For the purpose of checking compliance with record keeping requirements and verifying reports filed by handlers, the Secretary and the Industry Committee through its duly authorized employees, shall have access to any premises where peaches are held and, at any time during reasonable business hours, shall be permitted to examine any peaches held, and any and all records with respect to matters within the purview of this part. Handlers shall furnish labor necessary to facilitate such examinations at no expense to the Industry Committee. All handlers shall maintain complete records which accurately show the quantity of peaches held, sold, and shipped. The Industry Committee, with the approval of the Secretary, may establish the type of records to be maintained. Such records shall be retained by handlers for not less than two years subsequent to the termination of each fiscal period.

Proposal No. 10

Make such changes as may be necessary to make the marketing agreement and order conform with any amendments thereto that may result from the hearing.

Dated: April 6, 1988.

J. Patrick Boyle,

Administrator, Agricultural Marketing Service.

[FR Doc. 88-7875 Filed 4-8-88; 8:45 am]

BILLING CODE 3410-02-M

DEPARTMENT OF TRANSPORTATION

Federal Aviation Administration

14 CFR Ch. I

[Summary Notice No. PR-88-3]

Petition for Rulemaking; Summary of Petitions Received

AGENCY: Federal Aviation Administration (FAA), DOT.

ACTION: Notice of petitions for rulemaking received and of dispositions of prior petitions.

SUMMARY: Pursuant to FAA's rulemaking provisions governing the application, processing, and disposition of petitions for rulemaking (14 CFR Part 11), this notice contains a summary of certain petitions requesting the initiation of rulemaking procedures for the amendment of specified provisions of the Federal Aviation Regulations and of denials or withdrawals of certain petitions previously received. The purpose of this notice is to improve the public's awareness of, and participation in, this aspect of FAA's regulatory activities. Neither publication of this notice nor the inclusion or omission of information in the summary is intended to affect the legal status of any petition or its final disposition.

DATE: Comments on petitions received must identify the petition docket number involved and must be received on or before June 10, 1988.

ADDRESS: Send comments on any petition in triplicate to: Federal Aviation Administration, Office of the Chief Counsel, Attn: Rules Docket (AGC-204),

Petition Docket No. _____, 800 Independence Avenue, SW., Washington, DC 20591.

FOR FURTHER INFORMATION CONTACT: The petition, any comments received, and a copy of any final disposition are filed in the assigned regulatory docket and are available for examination in the Rules Docket (AGC-204), Room 916, FAA Headquarters Building (FOB 10A), 800 Independence Avenue, SW., Washington, DC 20591; telephone (202) 267-3132.

This notice is published pursuant to paragraphs (b) and (f) of § 11.27 of Part 11 of the Federal Aviation Regulations (14 CFR Part 11).

Issued in Washington, DC, on March 31, 1988.

Denise D. Hall,

Acting Manager, Program Management Staff.

PETITIONS FOR RULEMAKING

Docket No.	Petitioner	Regulations affected	Description of petition
24171	National Rifle Association of America	14 CFR Part 108 § 108.9	To institute rulemaking to require airlines which are mandated to conduct screening under a security program to provide a location at which passengers may check their baggage before undergoing security screening and entering into the sterile area. The rule would ensure uniform procedures for the inspection, detention, and search of persons and property in air transportation

[FR Doc. 88-7881 Filed 4-8-88; 8:45 am]

BILLING CODE 4910-13-M

---

14 CFR Parts 21 and 23

[Docket No. 052CE, Notice No. 23-ACE-40]

Special Conditions; Fairchild Models SA227-CC, SA227-DC, and SA228-AE Airplanes; Emergency Lighting System

AGENCY: Federal Aviation Administration (FAA), DOT.

ACTION: Notice of proposed special conditions.

SUMMARY: This notice proposes special conditions for the Fairchild Aircraft Corporation Models SA227-CC, SA227-DC, and SA228-AE Airplanes incorporating an emergency lighting system as an aid for emergency evacuation. The applicable requirements for these airplanes neither contain a requirement for emergency lighting to aid in emergency evacuation, nor do they contain design standards, if an emergency lighting system is installed. These proposed special conditions contain the additional airworthiness standards which the Administrator finds necessary to establish a level of safety equivalent to the airworthiness standards applicable to these airplanes.

DATE: Comments must be received on or before May 11, 1988.

ADDRESS: Comments on this proposal may be mailed in duplicate to: Federal Aviation Administration, Office of the Regional Counsel, ACE-7, Attention: Rules Docket Clerk, Docket No. 052CE, Room 1558, 601 East 12th Street, Kansas City, Missouri 64106. All comments must be marked: Docket No. 052CE. Comments may be inspected in the Rules Docket weekdays, except Federal holidays, between 7:30 a.m. and 4:00 p.m.

FOR FURTHER INFORMATION CONTACT: Ervin Dvorak, Aerospace Engineer, Standards Office (ACE-110), Aircraft Certification Division, Central Region, Federal Aviation Administration, Room 1656, 601 East 12th Street, Federal Office Building, Kansas City, Missouri 64106; telephone (816) 426-5688.

SUPPLEMENTARY INFORMATION:

Comments Invited

Interested persons are invited to participate in the making of these special conditions by submitting such written data, views, or arguments as they may desire. Communications should identify the regulatory docket or notice number and be submitted in duplicate to the address specified above. All communications received on or before the closing date for comments specified in this notice will be considered by the Administrator before taking further action on these proposals. The proposals contained in this notice may be changed in light of the comments received. All comments received will be available in the rules docket for examination by interested persons both before and after the closing date for submission of comments.

Type Certification Basis

The type certification basis for the Fairchild Aircraft Corporation Models SA227-CC, SA227-DC, and SA228-AE Airplane are as follows: Part 23 of the Federal Aviation Regulations, effective February 1, 1965, as amended by Amendments 23-1 through 23-34; Part 36, effective December 1, 1969, as amended by Amendments 36-1 through 36-13; and SFAR 27, effective January 1, 1964 as amended by Amendments 27-1 through 27-6.

Background

On February 17, 1987, Fairchild Aircraft Corporation, Post Office Box 32486, San Antonio, Texas 78284, made application to the FAA for a type certificate for the Fairchild Aircraft Corporation Model SA227-CC Airplanes which will incorporate an emergency lighting system. Later Fairchild Aircraft Corporation made application for Fairchild Aircraft Corporation Models SA227-DC and SA228-AE Airplanes, which will also incorporate the emergency lighting system and will have the same type certification basis.

Fairchild Aircraft Corporation plans to certify a 19-place commuter category airplane which incorporates three window exits and a main cabin door for egress from the airplane. In addition, they propose to install an emergency lighting system for use during emergency evacuation. The commuter category airplane certification standards require an emergency evacuation demonstration but it does not require an emergency lighting system; therefore, the standards do not contain design criteria should this system be installed.

Past emergency evacuation demonstrations on similar airplanes have shown that the most critical aspects of the emergency evacuation are for the passengers to locate and to open the emergency exits. The passenger cabin length is approximately 25 feet with the entrance door at one end of the cabin and the window exits located about the middle of the cabin.

Discussion

The installation of emergency lighting systems in these airplanes was not envisioned when the applicable requirements for the subject airplanes were promulgated.

Special conditions may be issued and amended, as necessary, as a part of the type certification basis if the Administrator finds that the airworthiness standards designated in accordance with § 21.17(a)(1) or § 21.101(b)(2) do not contain adequate or appropriate safety standards because of the novel and unusual design features of the airplane. Special conditions, as appropriate, are issued in accordance with § 11.49, as required by §§ 11.28 and 11.29(b), effective October 14, 1980, and will become part of the type certification basis, as provided by § 21.17(a)(2) or § 21.101(b)(2).

An emergency evacuation demonstration is required for the affected airplanes. The applicable requirements neither contain a requirement for emergency lighting to aid in emergency evacuation, nor do they include design criteria should the applicant choose to include such features. If Fairchild Aircraft Corporation chooses to install emergency lighting in the Fairchild Models SA227–CC, SA227–DC, and SA228–AE Airplanes in order to improve emergency evacuation, and use such lighting during the required evacuation demonstration, appropriate standards should be adopted.

Emergency lighting system is not required, but when an applicant choses to provide such lighting, the FAA must evaluate such lighting relative to its intended function. If that intended function would affect the showing of compliance with an existing requirement, the FAA must assure that the additional system performs its function when the critical event occurs, in this case, an actual emergency evacuation. The FAA concludes that specific criteria are necessary.

Experience with such systems in others categories of airplanes leads the FAA to conclude that a source of energy for the emergency lighting system may be proposed that is common to the normal airplanes lighting system. Due to the routine use of the normal lighting system, both in flight and on the ground, the source of energy for the emergency lighting system could be depleted if it were available for routine operations. Because the normal electrical system could be deactivated during emergencies, a source of energy for the emergency lighting system must be available that is independent of the source for the normal lighting system.

In a survivable crash, the cockpit crew may be disabled and unable to turn on the emergency lights. Therefore, in addition to having cockpit controls for turning on the lights, a control must also be availalbe in the cockpit to arm the emergency lighting system. To assure activation of the emergency lighting system, automatic activation must occur when the engine-driven electrical generator power is lost or an impact sensor must be provided to turn the armed system on. The impact sensor detects the operational parameters which indicate a crash situation.

The emergency lighting system should only be armed during flight operations. Because crew action is required to arm the system, there must be a caution light to alert the crew if normal electrical power is on in the airplane and the emergency lighting system is not armed.

Emergency evacuation must be demonstrated and accomplished in 90 seconds or less: however, in a survivable crash where injuries occur, significantly longer evacuation times may be necessary. Therefore, the energy supply for the emergency lighting system must be adequate for ten minutes.

Common practices is to use rechargeable batteries, but non-rechargeable batteries may be used. Regardless of which type of battery is used, the design must provide warning of charging circuit faults or inadequate battery charge.

The emergency lighting system must be functional after being subjected to the inertia forces expected in a survivable crash. Those forces are set forth in § 23.561(b).

During a survivable crash, various modes of system damage will occur, up to and including single transverse vertical separation of fuselage. Any such single occurrence must not render the total emergency lighting system inoperative.

The minimum level of illumination is optional because providing any lighting at all is optional. However, the maximum illumination used during the emergency evacuation demonstration must be the minimum available after any single probable failure.

The FAA has considered the factors proposed by Fairchild Aircraft Corporation for the emergency lighting system installation in the Fairchild Models SA227–CC, SA227–DC, and SA228–AE Airplanes and has concluded that, notwithstanding the existing requirements applicable to these airplanes which did not envision the use of such systems, special conditions should be promulgated for such systems, in addition to the applicable requirements.

Conclusion

In view of the design features discussed above, the following special conditions are proposed for the emergency lighting system installation in the Fairchild Aircraft Corporation Model SA227–CC, SA227–DC, and SA228–AE Airplanes under the provisions of § 21.16 to provide a level of safety equivalent to that intended by the regulations incorporated by reference. This action is not a rule of general applicability and affects only the model/series of airplanes identified in these special conditions.

List of Subjects in 14 CFR Parts 21 and 23

Aviation safety, Aircraft, Air transportation, Safety.

PARTS 21 and 23—[AMENDED]

The authority citation for these special conditions is as follows:

Authority: Secs. 313(a), 601, and 603 of the Federal Aviation Act of 1958; as amended (49 U.S.C. 1354(a), 1421, and 1423); 49 U.S.C. 106(g) (Revised Pub. L. 97–449, January 12, 1983); 14 CFR 21.16 and 21.17, and § 21.101; and 14 CFR 11.28 and 11.29(b).

The Proposed Special Conditions

Accordingly, the Federal Aviation Administration proposes the following special conditions as a part of the type certification basis for the Fairchild Aircraft Corporation Models SA227–CC, SA227–DC, and SA228–AE Airplanes when equipped with an emergency lighting system intended for use during emergency evacuation of the affected airplanes

Emergency Lighting

1. If an emergency lighting system is installed and used as an aid in showing compliance with any applicable regulatory requirement, including emergency evacuation demonstrations, the following special conditions apply:

(a) The source of illumination may be common to both the emergency and the main lighting systems if the power supply to the emergency lighting system is independent of the power supply to the main lighting system.

(b) There must be a caution light which illuminates in the cockpit when power is on in the airplane and the

emergency lighting control device is not armed.

(c) The emergency lights must be operable manually from the flightcrew station and be provided with automatic activation. The cockpit control device must have an "on", "off", and "armed" position so that, when armed in the cockpit, the lights will operate by automatic activation. The emergency light must be armed or turned on during taxiing, takeoff, and landing. For automatic activation of the system, the sensor must—

(1) Activate when the airplane's normal electrical power is lost, or

(2) Activate when subjected to impact operational parameters approved by the FAA; and

(3) Regardless of sensor type, must be capable of being reset by the flightcrew if activated by any occurrence other than a survivable crash.

(d) The energy supply to each emergency lighting unit must provide the required level of illumination for at least 10 minutes at the critical ambient condition after emergency landing.

(e) If rechargeable batteries are used as the energy supply for the emergency lighting system, the charging circuit must be designed to preclude inadvertent battery discharge into charging circuit faults. If the emergency lighting system does not include a charging circuit, then battery condidion monitors are required.

(f) Components of the emergency lighting system, including batteries, wiring relays, lamps, and switches must be capable of normal operation after having been subjected to the inertia forces listed in § 23.561(b).

(g) The emergency lighting system must be designed so that a single probable failure, or probable system damage following a survivable crash, will not render the entire emergency lighting system inoperative. Single transverse vertical separation of the fuselage is considered a probable event during a survivable crash.

The minimum emergency illumination, after a single probable failure, must be specified by the applicant. During the emergency evacuation demonstration, the maximum emergency illumination must be equal to or less than the specified minimum emergency illumination level.

Issued in Kansas City, Missouri on March 21, 1988.

Jerold M. Chavkin,

Acting Director, Central Region.

[FR Doc. 88-7889 Filed 4-8-88; 8:45 am]

BILLING CODE 4910-13-M

14 CFR Part 39

[Docket No. 88-CE-10-AD]

Airworthiness Directives; British Aerospace (BAe), PLC, Jetstream Model 3101 (Includes Model 3100) Airplanes

AGENCY: Federal Aviation Administration (FAA), DOT.

ACTION: Notice of proposed rulemaking (NPRM).

SUMMARY: This Notice proposes to adopt a new Airworthiness Directive (AD), applicable to certain BAe Jetstream Model 3101 (Includes Model 3100) airplanes, which would require an initial inspection of the essential busbar to determine if adequate clearance exists to prevent arcing to surrounding structure, and modification to remedy the inadequate clearance. This proposed action is the result of FAA review of a report of arcing and subsequent issuance of a mandatory Alert Service Bulletin by the foreign airworthiness authority. The actions specified in this proposal would prevent arcing, and possible loss of essential bus services during critical phases of flight.

DATES: Comments must be received on or before July 18, 1988.

ADDRESSES: BAe Alert Service Bulletin (ASB) Jetstream 23-A-JM7631, dated September 10, 1987, applicable to this AD may be obtained from British Aerospace, Technical Librarian, Post Office Box 17414, Dulles International Airport, Washington D.C. 20041; Telephone (703) 435-9100. This information may also be examined at the Rules Docket at the address below. Send comments on the proposal in triplicate to Federal Aviation Administration, Central Region, Office of the Regional Counsel, Attention: Rules Docket No. 88-CE-10-AD, Room 1558, 601 East 12th Street, Kansas City, Missouri 64106. Comments may be inspected at this location between 8 a.m. and 4 p.m., Monday through Friday, holidays excepted.

FOR FURTHER INFORMATION CONTACT: Mr. Ted Ebina, Brussels Aircraft Certification Staff, AEU-100, Europe Africa and Middle East Office, FAA, c/o American Embassy, 1000 Brussels, Beligum; Telephone 513.38.30; or Mr. John P. Dow, Sr., FAA, ACE-109, 601 East 12th Street, Kansas City, Missouri 64106; Telephone (816) 426-6932.

SUPPLEMENTARY INFORMATION:

Comments Invited

Interested persons are invited to participate in the making of the proposed rule by submitting such written data, views or arguments as they may desire. Communications should identify the regulatory docket or notice number and be submitted in triplicate to the address specified above. All communications received on or before the closing date for comments specified above will be considered by the Director before taking action on the proposed rule. The proposals contained in this notice may be changed in the light of comments received. Comments are specifically invited on the overall regulatory, economic, environmental and energy aspects of the proposed rule. All comments submitted will be available both before and after the closing date for comments in the Rules Docket for examination by interested persons. A report summarizing each FAA public contact concerned with the substance of this proposal will be filed in the Rules Docket

Availability of NPRMs

Any person may obtain a copy of this Notice of Proposed Rulemaking (NPRM) by submitting a request to the Federal Aviation Administration, Central Region, Office of the Regional Counsel, Attention: Rules Docket No. 88-CE-10-AD, Room 1558, 601 East 12th Street, Kansas City, Missouri 64106.

Discussion

A Jetstream Series 3100 airplane operator has reported an incident of arcing between the terminal of a cable and an adjacent busbar mounting bracket on the lefthand bulkhead at fuselage station 130. The airplane manufacturer consequently issued Notice to Operators J 31-24-2 to advise operators of this situation and provide a suitable interim rectification action. This was followed by issuance of ASB Jestream 24-A-JM7631, dated September 10, 1987, which describes an initial inspection of the terminal area to ensure adequate clearance exists between the terminal tag of a cable and an adjacent structure. This inspection allows continued operation, and describes remedial action to provide adequate clearance if it does not exist. The Civil Aviation Authority (CAA) of the United Kingdom (UK), which has responsibility and authority to maintain the continuing airworthiness of these airplanes in the UK, has classified this Alert Service Bulletin and the actions recommended therein by the manufacturer as mandatory to assure the continued airworthiness of the affected airplanes. On airplanes operated under UK registration, this section has the same effect as an AD on airplanes certificated for operation in the United States. The

FAA relies upon the certification of CAA–UK combined with FAA review of pertinent documentation in finding compliance of the design of these airplanes with the applicable United States airworthiness requirements and the airworthiness conformity of products of this type design certificated for operation in the United States. The FAA has examined the available information related to the issuance of ASB Jetstream 24–A–JM7631, dated September 10, 1987, and the mandatory classification of this ASB by the CAA–UK. Based on the foregoing, the FAA believes that the condition addressed by BAe ASB Jetstream 24–A–JM7631, dated September 10, 1987, is an unsafe condition that may exist on other products of this type design certificated for operation in the United States. Consequently, the proposed AD would require an inspection to determine if compliance to the ASB exists and remedial measures if compliance does not exist. This action will prevent possible arcing and loss of essential bus services during critical phases of flight.

The FAA has determined there are approximately 120 airplanes affected by the proposed AD. The cost of the proposed action is estimated to be $30 for the inspection action and $120 for the modification action when it is required. The proposed AD is estimated to cost at most $150 per airplane. The total cost to inspect and modify the fleet is estimated to be $18,000 to the private sector.

The cost of compliance with the proposed AD is so small that the expense of compliance will not be significant financial impact on any small entities operating these airplanes.

Therefore, I certify that this action (1) is not a "major rule" under the provisions of Executive Order 12291; (2) is not a "significant rule" under DOT Regulatory Policies and Procedures (44 FR 11034; February 26, 1979); and (3) if promulgated, will not have a significant economic impact, positive or negative, on a substantial number of small entities under the criteria of the Regulatory Flexibility Act. A copy of the draft regulatory evaluation prepared for this action has been placed in the public docket. A copy of it may be obtained by contacting the Rules Docket at the location provided under the Caption "**ADDRESSES**".

List of Subjects in 14 CFR Part 39

Air transportation, Aviation safety, Aircraft, Safety.

The Proposed Amendment

Accordingly, pursuant to the authority delegated to me by the Administrator, the Federal Aviation Administration proposes to amend § 39.13 of Part 39 of the FAR as follows:

PART 39—[AMENDED]

1. The authority citation for Part 39 continues to read as follows:

Authority: 49 U.S.C. 1354(a), 1421 and 1423; 49 U.S.C. 106(g) (Revised, Pub. L. 97–449, January 12, 1983); 14 CFR 11.89.

§ 39.13 [Amended]

2. By adding the following new AD:

British Aerospace (BAe): Applies to Model 3101 (Includes Model 3100) Jetstream (Serial Numbers 601 thru 646, 648 thru 655, 657, 658, 660 thru 666, 668 thru 695, 697 thru 708, 710 thru 713, 715 thru 741, 743 thru 756, and 758 thru 761) airplanes certificated in any category.

Compliance: Required within the next 100 hours time-in-service after the effective date of this AD unless already accomplished.

To prevent electrical arcing and possible damage to the airplane with loss of essential electrical bus services, accomplish the following:

(a) Visually inspect for correct cable terminal ends on cable PD4 and PD6 at terminal post T1BH–2 as described in British Aerospace (BAe) Alert Service Bulletin (ASB) Jetstream 24–A–JM7631, dated September 10, 1987 "Part A—Initial Inspection." If the installation is not as described in the above ASB, prior to further flight modify the cable terminal configuration of cables PD4 and PD6 at terminal post T1BH–2 as described in BAe ASB Jetstream 24–A–JM7631, dated September 10, 1987 "Part B—Rectification."

(b) A 10% adjustment to the compliance time may be used to allow accomplishment of the AD with other scheduled maintenance activities.

(c) The airplane may be flown in accordance with FAR 21.197 to a location where this AD may be accomplished.

(d) An equivalent means of compliance with this AD may be used if approved by the Manager, Aircraft Certification Staff, AEU–100, Europe, Africa and Middle East Office, FAA c/o American Embassy, 1000 Brussels, Belgium.

All persons affected by this directive may obtain copies of the document(s) referred to herein upon request to British Aerospace, Technical Librarian, Post Office Box 17414, Dulles International Airport, Washington, D.C. 20091; Telephone (703) 435–9100; or may examine these documents at the FAA, Office of the Regional Counsel, Room 1558, 601 East 12th Street, Kansas City, Missouri 64106.

Issued in Kansas City, Missouri, on April 1, 1988.

Paul K. Bohr,

Director, Central Region.

[FR Doc. 88–7890 Filed 4–8–88; 8:45 am]

BILLING CODE 4910–13–M

INTERNATIONAL DEVELOPMENT COOPERATION AGENCY

Agency for International Development

22 CFR Part 204

Housing Guaranty Standard Terms and Conditions

AGENCY: Agency for International Development (A.I.D.), IDCA.

ACTION: Proposed rule.

SUMMARY: Title 22 U.S.C. sections 2181–2183 establishes a housing guaranty program to assist developing countries. 22 U.S.C. 2182 authorizes the issuance of guaranties to eligible investors who meet certain prescribed criteria. The Standard Terms and Conditions set out in this Proposed Rule are those pursuant to which the United States of America would issue its guaranty.

DATE: Comments must be received by May 11, 1988.

ADDRESS: Comments should be sent to Director, Office of Housing and Urban Programs, Agency for International Development, PRE/H, Room 3208 NS., Washington, DC 20523.

FOR FURTHER INFORMATION CONTACT: Michael G. Kitay, Assistant General Counsel, GC/PRE, Room 3328 NS., Washington, DC 20523, Telephone: 202/647–8235 (FTS 647–8235).

SUPPLEMENTARY INFORMATION: Since the inception of the Housing Guaranty Program the Office of Housing (now known as the Office of Housing and Urban Programs) of the Agency for International Development (A.I.D.) has used separately executed Contracts of Guaranty which contain the terms and conditions under which the United States of America will issue its guaranty. Preparing and executing separate Contracts of Guaranty is a cumbersome repetitive process, the purpose of which can be equally well served by publishing a standard rule. Once the rule, (i.e., terms and conditions of A.I.D.'s guaranty) is published, a simple cross reference to the CFR rule in the guaranty legend signed on the reverse side of each guarantied note will suffice to advise noteholders of their contractual rights against A.I.D. as guarantor.

The rulemaking document is not subject to rulemaking under 5 U.S.C. 553 or to regulatory analysis under Executive Order 12291 because it involves a foreign affairs function of the United States.

As required by the Regulatory Flexibility Act, it is hereby certified that this proposed rule will not have a

significant economic impact on a substantial number of small entities. The provisions of the Paperwork Reduction Act of 1969 (44 U.S.C. 3501–3520) (1982) do not apply. An environmental impact statement is not required by the National Environmental Policy Act of 1969 (42 U.S.C. 4321 et seq.).

List of Subjects in 22 CFR Part 204

Loan programs, Foreign relations, Health, Housing and community development, Finance, Guaranteed loans.

The Agency for International Development proposes to add a new Part 204 to Title 22, Chapter II of the Code of Federal Regulations as follows:

PART 204—HOUSING GUARANTY STANDARD TERMS AND CONDITIONS

Subpart A—Definitions

Sec.
204.01 Definitions

Subpart B—The Guaranty

204.11 The guaranty.
204.12 Guaranty eligibility.
204.13 Non-impairment of the Guaranty.
204.14 Representations.
204.15 Transferability of Guaranty.
204.16 Note register.
204.17 Paying agent obligations.

Subpart C—Procedure for Obtaining Compensation

204.21 Application for compensation; payment.
204.22 Right of A.I.D. to cure default.
204.23 Payment to A.I.D. of excess amounts received by the Lender or any Assignee.

Subpart D—Covenants

204.31 Prosecution of claims.
204.32 Change in agreements.
204.33 A.I.D. approval of acceleration of Notes.

Subpart E—Rights of A.I.D.

204.41 Termination of A.I.D.'s obligation.
204.42 Right of A.I.D. to require prepayment of the eligible notes.

Subpart F—Administration

204.51 Arbitration.
204.52 Notice.
204.53 Governing law.

Exhibit A—Application for Compensation

Exhibit B—Assignment

Authority: 22 U.S.C. 2381.

Subpart A—Definitions

§ 204.01 Definitions.

Wherever used in these standard terms and conditions:

(a) "A.I.D." means the United States Agency for International Development or its successor with respect to the housing guaranty authorities contained in Title III, Chapter 2 of Part I of the Foreign Assistance Act of 1961, as amended (the "Act").

(b) "Eligible Note(s)" means (a) Note(s) meeting the eligibility criteria set out in § 204.12 of this part.

(c) "Eligible Investor" means an "eligible investor" as defined in Section 238(c) of the Act.

(d) "Lender" means an Eligible Investor who initially provides loan funds to the Borrower in exchange for Eligible Note(s).

(e) "Investment" respecting any Eligible Note means the principal amount of such Eligible Note.

(f) "Assignee" means the owner of an Eligible Note who is registered as an Assignee on the Note Register of Eligible Notes required to be maintained by the Paying Agent and who is "Eligible Investor."

(g) "Outstanding Investment" respecting any Eligible Note means the Investment less the net amount of any repayments of principal of the Investment made by or on behalf of the Borrower or A.I.D.

(h) "Further Guaranteed Payments" means the amount of any loss suffered by the Lender or by any Assignee by reason of the Borrower's failure to comply on a timely basis with any obligation it may have under an Eligible Note to indemnify and hold harmless the Lender and Assignee from any expense arising out of taxes or any other governmental charges relating to the Note in the country of the Borrower.

(i) "Loss of Investment" respecting any Eligible Note means an amount in Dollars equal to the total of the: (1) Outstanding Investment determined as of the Date of Application, (2) Further Guaranteed Payments unpaid as of the Date of Application and (3) interest accrued at the rate(s) specified in the Note(s) and unpaid on the Outstanding Investment and Further Guaranteed Payments to and including the date on which full payment thereof is made to the Lender or any Assignee.

(j) "Application for Compensation" means an executed application in the form of Exhibit A hereto which the Lender or any Assignee files with A.I.D. pursuant to § 204.21 of this part.

(k) "Applicant" means a Lender or Assignee who files an Application for Compensation with A.I.D.

(l) "Date of Application" means the effective date of an Application for Compensation filed with A.I.D. pursuant to § 204.21 of this part.

(m) "Business Day" means a date on which banks of the District of Columbia of the United States of America are open for business.

(n) "Guaranty Payment Date" means the first Business Day not less than sixty (60) calendar days after the related Date of Application; provided that: (1) Compensation to the party filing the related Application for Compensation is due and payable on such date, in accordance with the terms of this Guaranty and (2) tender of assignment referred to in § 204.21(f) of this part is made as therein provided.

Subpart B—The Guaranty

§ 204.11 The guaranty.

Subject to these standard terms and conditions, the United States of America, acting through A.I.D., agrees to pay to any Lender or Assignee who has been determined to be an Eligible Investor compensation in Dollars equal to its Loss of Investment under the Eligible Note; *Provided, However*, that no such payment shall be made for any such loss arising out of fraud or misrepresentation for which such Lender or Assignee is responsible or of which it had knowledge at the time it became such Lender or Assignee. This Guaranty shall apply to each Eligible Note registered on the Note Register required to be maintained by the Paying Agent.

§ 204.12 Guaranty eligibility.

(a) Eligible Notes only may be guarantied hereunder, and Eligible Investors only are entitled to the benefits of this Guaranty. Notes in order to achieve Eligible Note status must be signed on behalf of the Borrower, manually or in facsimile, by a duly authorized representative of the Borrower; and they must contain a guaranty legend incorporating these standard terms and conditions signed on behalf of A.I.D. by either a manual signature or a facsimile signature of an authorized representative of A.I.D. together with a certificate of authentication manually executed by a Paying Agent whose appointment by the Borrower is consented to by A.I.D. in a Paying and Transfer Agency Agreement.

(b) A.I.D. shall designate in a certificate delivered to the Lender and to the Paying Agent, the person(s) whose signature shall be binding on A.I.D. The certificate of authentication of the Paying Agent issued pursuant to the Paying and Transfer Agency Agreement shall, when manually executed by the Paying Agent, be conclusive evidence building on A.I.D. that the Note has been duly executed on behalf of the Borrower and delivered.

§ 204.13 Non-impairment of the Guaranty.

The full faith and credit of the United States of America is pledged to the performance of this Guaranty. The

Guaranty shall not be affected or impaired by any defect in the authorization, execution, delivery or enforceability by any agreement or other document executed by the Lender, A.I.D., the Paying Agent or the Borrower in connection with the transactions contemplated by this Guaranty. This non-impairment of the guaranty provision shall not, however, be operative with respect to any amount arising out of fraud or misrepresentation for which the Lender or Assignee is responsible or of which it had knowledge prior to the time it became such Lender or Assignee.

§ 204.14 Representations.

Each Lender or Assignee represents and warrants to A.I.D. as follows:

(a) The Lender represents and warrants that it has not received from the Borrower any fee, other than the underwriting or placement fee contemplated by the Parties as compensation for the services to be performed in connection with the loan transaction.

(b) The Lender or Assignee represents and warrants that, to its knowledge, the Borrower has not paid any fee to any other party in connection with obtaining this financing except for fees lawfully paid to the Paying Agent and to the United States of America and/or reasonable and normal legal fees and disbursements for legal counsel, including counsel to the Lender.

(c) The Lender or Assignee represents and warrants that it is an Eligible Investor.

§ 204.15 Transferability of Guaranty.

The Lender or any Assignee may following procedures set out in § 204.16, assign the Eligible Notes to any Eligible Investor who upon accepting the assignment is entitled to all rights under this Guaranty.

§ 204.16 Note register.

The names of all Noteholders are entered upon the Note Register which is maintained by the Paying Agent, in accordance with the Paying and Transfer Agency Agreement. No assignment shall be effective as to A.I.D. or the Borrower until the name of the Assignee has been entered upon such Note Register and (a) new Eligible Note(s) issued in the name of such Assignee. A.I.D., the Borrower and the Paying Agent shall be entitled to treat the persons in whose names the Notes are registered as the owners thereof for all purposes of this Guaranty and shall not be affected by notice to the contrary.

§ 204.17 Paying Agent obligations.

Failure of the Paying Agent to perform any of its obligations pursuant to the Paying and Transfer Agency Agreement shall not impair the Investor's or any Assignee's rights under this Contract of Guaranty, but may be the subject of action for damages against the Paying Agent by A.I.D. as a result of such failure or neglect; provided, however, that the Paying Agent is not authorized to issue and authenticate and have Notes outstanding at any time in excess of the principal amount of the loan.

Subpart C—Procedure for Obtaining Compensation

§ 204.21 Application for compensation; payment.

In order for the Lender or an Assignee to receive compensation under this Guaranty arising out of the Borrower's default under the Note(s), the following action is required:

(a) *Declaration of delinquency.* If the Borrower:

(1) Fails to make, when due and payable, any payment of principal or of interest on any Note or to make any other payment which it is required to make to a Noteholder under the Note;

(2) Effects a material breach of any other covenant or condition in the Loan Documents; or

(3) Makes a material misrepresentation or breaches a warranty; the

The lender or any Assignee may on or after the date of the happening or the discovery of such event, by notice to the Borrower and the Paying Agent, declare that Note(s) to be delinquent.

(b) *Delinquency notice to A.I.D.* If the condition which caused the Lender or Assignee to declare the Note(s) to be delinquent continues for a period of 15 days following the Declaration of Delinquency, the Lender or Assignee as a prerequisite to obtaining compensation pursuant to this Guaranty shall give notice of the Borrower's delinquency to A.I.D.

(c) *Event of Default.* The continuance of the condition which caused the Lender or Assignee to declare the Note(s) to the delinquent for a further period of 15 days following the Delinquency Notice to A.I.D. shall constitute an Event of Default under the Note.

(d) *Notice of Default.* On or after the date of an Event of Default the Lender or any Assignee by notice to the Borrower and to A.I.D. may declare such Note to be in default and indicate its intent to enforce its rights under the Note and/or this Guaranty. No such action, however, shall without the prior approval of A.I.D. be taken in connection with any failure other than nonpayment of principal or interest on any Note.

(e) *Application for compensation.* Within one year after the date of an Event of Default, the Lender or Assignee may file with A.I.D. an Application for Compensation with respect to an (all) Eligible Note(s) held by the Lender or such Assignee.

(f) *Guaranty payment.* On or after the Guaranty Payment Date, the Applicant shall tender assignment of all Applicant's right, title and interest as of the Date of Application in and to all sums for which Application has been made. A.I.D. shall accept the assignment and pay or cause to be paid to Applicant the compensation due to the Applicant pursuant to the Guaranty.

§ 204.22 Right of A.I.D. to cure default.

A.I.D. may at any time make payments to the Lender or any Assignee equal to all installments of principal and interest due and unpaid under any Note; and any Further Guaranteed Payments due and unpaid and any interest on unpaid amounts at the Note interest rate, and thereby prevent or cure any default under the Note.

§ 204.23 Payment to A.I.D. of excess amounts received by the Lender of any Assignee.

If the Lender or Assignee shall, as a result of A.I.D. paying compensation under this Guaranty, receive an excess payment, it shall refund the excess to A.I.D.

Subpart D—Covenants

§ 204.31 Prosecution of claims.

After an assignment to A.I.D. by the Lender or any Assignee pursuant to Section 204.21(f), A.I.D. shall have exclusive power to prosecute all claims related to the oustanding Eligible Notes so assigned. If the Lender or such Assignee continues to have an interest in the outstanding Eligible Notes, the Lender or such Assignee and A.I.D. shall consult with each other with respect to their respective interests in such Eligible Notes and the manner of and responsibility for prosecuting claims.

§ 204.32 Change in agreements.

Neither the Lender nor any Assignee will consent to any change or waiver of any provision of any document contemplated by this Guaranty without prior written consent of A.I.D.

§ 204.33 A.I.D. approval of Acceleration of notes.

Without the prior approval of A.I.D., the Lender or any Assignee shall not

accelerate any Eligible Notes held by it on account of the happening of an Event of Default other than failure to make a payment when dues on the note.

Subpart E—Rights of A.I.D.

§ 204.41 Termination of A.I.D.'s obligation.

As and when A.I.D. shall have compensated the Lender and all Assignees fully for any and all Loss of Investment under this Guaranty, A.I.D. shall not thereafter remain under any further obligation with respect thereto.

§ 204.42 Rights of A.I.D. to require prepayment of the Eligible Notes.

A.I.D. may require the Borrower to prepay the Eligible Notes, in whole or in part, on at least forty-five (45) but not more than sixty (60) calendar days' prior written notice to the Paying Agent in the event the Borrower breaches any of its undertakings or covenants under its Program Agreement with A.I.D. or other obligations with respect to A.I.D., and the Borrower fails to cure such breach within a period of ninety (90) calendar days from the delivery of notice by A.I.D. to the Borrower of such breach.

Subpart F—Administration

§ 204.51 Arbitration.

Any controversy or claim between A.I.D. and the Lender or any Assignee arising out of this Guaranty shall be settled by arbitration to be held in Washington, DC in accordance with the then prevailing rules of the American Arbitration Association, and judgment on the award rendered by the arbitrators may be entered in any court of competent jurisdiction.

§ 204.52 Notice.

Any communication to A.I.D. pursuant to this Guaranty shall be in writing in the English language, shall refer to the A.I.D. Housing Guaranty Project Number inscribed on the Eligible Note and shall be complete on the day it shall be actually received by A.I.D. at the address specified below:

Mail Address:
Office of Housing and Urban Programs, Bureau for Private Enterprise, Agency for International Development, PRE/H, Room 3208 N.S., Washington, DC 20523
Re: A.I.D. Housing Guaranty Project ____-HG-____[1]
Telex Nos.:
ITT 440001 (Answer back is AIDWNDC)
RCA 248379 (Answer back is 248379 AID UR)
WU 892703 (Answer back is AID WSH)
WU 64154 (Answer back is AID 64154)
Fax No.: 647-1805
Cable Address: AID WASH DC

Other addresses may be substituted for the above upon the giving of notice of such substitution in the manner provided in this § 204.52

§ 204.53 Governing law.

This Guaranty shall be governed by and construed in accordance with the laws of the United States of America governing contracts and commercial transactions of the United States Government.

Exhibit A—Application for Compensation

Office of Housing and Urban Programs, Agency for International Development, International Development Cooperation Agency, Washington, DC 20523
Ref: Guaranty dated as of ____, 19____: A.I.D. Housing Project HG—

Gentlemen:

You are hereby advised that payment of $_____ (consisting of $_____ of principal, $_____ of interest and $_____ in Further Guaranteed Payments as defined in § 204.01(i) of the Standard Terms and Conditions of the above-mentioned Guaranty [1]) was due on _____, 19____, on $_____ principal amount of Notes held by the undersigned of the _____ (the "Borrower"), issued pursuant to the Loan Agreement, dated as of _____, _____, between the Borrower and _____. Of such amount $_____ was not received on such date and has not been received by the undersigned at the date hereof. In accordance with the terms and provisions of the above-mentioned Guaranty, the undersigned hereby applies, under Section 204.21 of said Guaranty, for payment of a total of $_____, representing $_____, the outstanding principal amount of the presently outstanding Notes of the Borrower held by the undersigned issued pursuant to said Loan Agreement, and $_____ in Further Guaranteed Payments,[2] plus accrued and unpaid interest thereon to and including the date payment in full is made by you pursuant to said Guaranty. Such payment is to be made at your office in Washington, DC.

[Name of Applicant]
By _____
Name _____
Title _____
Dated _____

Exhibit B—Assignment

The undersigned, being the registered owner of a Note in the principal amount of $_____ issued by the _____ (the "Borrower"), pursuant _____, and guaranty, dated as of _____, _____ the "Guaranty"), between the Lender and the United States of America, acting through the Agency for International Development ("A.I.D."), hereby assigns to A.I.D., without recourse (i) its entire right, title and interest in and to the Note of the Borrower referred to above (which Note is attached hereto), including its rights to unpaid interest on such Note, and (ii) its entire outstanding right, title and interest arising out of said Loan Agreement with respect to such Note, except the undersigned's right to receive payments under the Loan Agreement in respect of which A.I.D. has made no payment to the undersigned as of the date hereof.

[Name of Applicant]
By _____
Name _____
Title _____
Dated _____

Accepted:

UNITED STATES OF AMERICA
By _____
Name _____
Title _____
Dated _____

Date: April 4, 1988.

Mario Pita,

Deputy Director, Agency for International Development, Office of Housing and Urban Programs.

[FR Doc. 88-7861 Filed 4-8-88; 8:45 am]

BILLING CODE 6116-01-M

[1] Enter title and numerical designation of the relevant A.I.D. Housing Guaranty Project as inscribed on each Note guaranty legend.

[1] Strike inapplicable portion.

[2] In the event the Application for Compensation relates to Further Guaranteed Payments, such Application must also contain a statement of the nature and circumstances of the related loss.

DEPARTMENT OF TRANSPORTATION

Federal Highway Administration

23 CFR Parts 625 and 626

[FHWA Docket No. 87-16, Notice No. 2]

Pavement Policy For Highways; Extension of Comment Period

AGENCY: Federal Highway Administration (FHWA), DOT.

ACTION: Extension of comment period on proposed rule.

SUMMARY: The FHWA issued a notice of proposed rulemaking (FHWA Docket 87-16, 53 FR 2041, January 26, 1988, FR Doc. 88-1397) which proposed to amend its regulation on pavement design policy and procedures. The revisions would require the States to establish a Pavement Management System (PMS). As part of its PMS, each State Highway Agency (SHA) shall have a comprehensive process for the type selection and design of new, reconstructed and rehabilitated pavement structures. The revisions would replace the existing regulation to assure that appropriate practices and procedures are utilized by the States in order to promote safety and cost-effective pavement life cycles. The comment period is being extended to May 27, 1988. This extension will provide additional time for the public to

respond to the issues contained in the NPRM.

DATE: Comments must be received on or before May 27, 1988.

ADDRESS. Submit written, signed comments to the Federal Highway Administration, FHWA Docket No. 87-16, HCC-10, Room 4232, 400 Seventh Street, SW., Washington, DC 20590. All comments received will be available for examination at the above address between 8:30 a.m. and 3:30 p.m., e.t., Monday through Friday, except legal holidays. Those desiring notification of receipt of comments must include a self-addressed, stamped postcard.

FOR FURTHER INFORMATION CONTACT: Mr. Norman J. Van Ness, Chief, Pavement Division, Office of Highway Operations, (202) 366-1324 or Mr. Michael J. Laska, Office of the Chief Counsel, (202) 366-1383, Federal Highway Administration, 400 Seventh Street, SW., Washington, DC 20590. Office hours are from 7:45 a.m. to 4:15 p.m., e.t., Monday through Friday, except legal holidays.

(23 U.S.C. 315; 49 CFR 1.48(b))

Issued on: March 31, 1988.

Robert E. Farris,

Deputy Administrator.

[FR Doc. 88-7806 Filed 4-8-88; 8:45 am]

BILLING CODE 4910-22-M

DEPARMTMENT OF THE TREASURY

Internal Revenue Service

26 CFR Part 1

[EE-184-86]

Income Taxes; Continued Accruals Beyond Normal Retirement Age

AGENCY: Internal Revenue Service, Treasury.

ACTION: Notice of proposed rulemaking.

SUMMARY: This document contains proposed regulations relating to the requirement for continued accruals beyond normal retirement age under employee pension benefit plans. Changes to the applicable tax law were made by the Omnibus Budget Reconciliation Act of 1986. These regulations will provide the public with guidance needed to comply with the minimum participation and vesting standards and affect employers maintaining employee retirement plans.

DATES: Written comments and request for a public hearing must be delivered or mailed by June 10, 1988. These amendments generally apply to plan years beginning after December 31, 1987, except as otherwise specified in the Omnibus Budget Reconciliation Act of 1986.

ADDRESS: Send comments and requests for a public hearing to: Commissioner of Internal Revenue, Attention: CC:LR:T (EE-184-86) Washington, DC 20224.

FOR FURTHER INFORMATION CONTACT: Michael C. Garvey of the Employee Benefits and Exempt Organizations Division, Office of Chief Counsel, Internal Revenue Service, 1111 Constitution Avenue NW., Washington, DC 20224 (Attention: CC:LR:T) (202-566-6271) (not a toll-free number).

SUPPLEMENTARY INFORMATION:

Background

This document contains proposed amendments to the Income Tax Regulations (26 CFR Part 1) under sections 410 and 411 of the Internal Revenue Code of 1986. These amendments are proposed to conform the regulations to sections 9201 through 9204, Subtitle C (Older Americans Pension Benefits) of Title IX of the Omnibus Budget Reconciliation Act of 1986 (Pub. L. 99-509) (OBRA 1986) (100 Stat. 1874, 1973).

Explanation of Provisions

Section 9202(b)(1) of OBRA 1986 added subparagraph (H) to section 411(b)(1) of the Internal Revenue Code (Code) to provide rules for continued benefit accruals under defined benefit plans without regard to the attainment of any age. Section 9202(b)(2) of OBRA 1986 redesignated paragraphs (2) and (3) of Code section 411(b) as paragraphs (3) and (4) and added a new paragraph (2) to Code section 411(b) to provide rules for allocations to the accounts of employees in defined contribution plans without regard to the attainment of any age.

Effective with respect to plan years beginning after December 31, 1987, section 411(b)(1)(H)(i) provides the general rule that a defined benefit plan will not be treated as meeting the minimum vesting standards of section 411 (and, accordingly, will not constitute a qualified plan under section 401(a)) if under the plan an employee's benefit accrual is ceased, or the rate of an employee's benefit accrual is reduced, because of the attainment of any age. Effective for plan years beginning after December 31, 1987, section 411(b)(2) provides that a defined contribution plan will not be treated as satisfying the minimum vesting standards of section 411 (and, accordingly, will not constitute a qualified plan under section 401(a)) if allocations to an employee's account are ceased, or the rate of allocations to an employee's account is reduced, because of the attainment of any age.

The proposed regulations provide that reductions or cessations of account allocations or benefit accruals that are based on factors other than age will not affect the qualification of the plan under section 411(b)(1)(H) or (b)(2). The proposed regulations also provide that benefits under a defined benefit plan may accrue at different rates without violating section 411(b)(1)(H), provided the difference in the rate of benefit accrual is determined without regard to the attainment of any age.

Section 411(b)(1)(H)(ii) provides that a plan will not be treated as failing to satisfy the general rule in section 411(b)(1)(H)(i) merely because the plan contains a limitation (determined without regard to age) on the maximum number of years of service or participation that are taken into account in determining benefits under the plan or merely because the plan contains a limitation on the amount of benefits an employee will receive under the plan. The proposed regulations provide that these limitations are permitted in both defined benefit plans and defined contributions plans (including target benefit plans).

Section 411(b)(1)(H)(iii) provides that, with respect to a employee who, as of the end of a plan year, has attained normal retirement age under a defined benefit plan, certain adjustments may be made to the benefit accrual for the plan year if the plan distributes benefits to the employee or if the plan adjusts the amount of the benefits payable to take into account delayed payment. The continued benefit accrual rules of section 411(b)(1)(H) operate in conjunction with the suspension of benefit payment rules under section 203(a)(3)(B) of the Employee Retirement Income Security Act of 1974 (ERISA) and the proposed regulations do not change the rules relating to the suspension of pension benefit payments under section 203(a)(3)(B) of ERISA and the regulations thereunder issued by the Department of Labor. However, the proposed regulations provide rules under which benefit accruals required under section 411(b)(1)(H)(i) may be reduced or offset either by the value of actuarial adjustments in an employee's normal retirement benefit or by the value of benefit distributions made to an employee.

Section 411(b)(1)(H)(iv) provides that a defined benefit plan will not be treated as failing to satisfy the general rule of section 411(b)(1)(H)(i) merely because the subsidized portion of an early retirement benefit provided under

the plan (whether provided on a permanent or temporary basis) is disregarded in determining benefit accruals under the plan. The proposed regulations also provide that a plan will not be treated as failing to satisfy the general rule of section 411(b)(1)(H)(i) merely because a social security supplemental benefit or a qualified disability benefit is disregarded in determining benefit accruals under the plan.

The proposed regulations provide that the rate of an employee's benefit accrual under a defined benefit plan or the rate of allocations to an employee's account under a defined contribution plan will be considered to be reduced on account of the attainment of a specified age if optional forms of benefits, ancillary benefits or other benefits, rights or features under a plan that are provided with respect to benefits or allocations prior to such age are not provided (on terms that are at least as favorable to employees) with respect to benefits or allocations after such age. Thus, for example, under the proposed regulations, a plan may not make a lump sum option available only with respect to benefits or allocations attributable to service prior to a specified age. Similarly, a plan may not use actuarial assumptions that are less favorable to employees for determining lump sum benefits payable after a specified age than are used for determining lump sum benefits payable prior to such age. However, the proposed regulations provide that the accrual rate under a defined benefit plan will not be considered to be reduced merely because the subsidized portion of an early retirement benefit, a qualified disability benefit or a social security supplemental benefit provided under the plan ceases to be provided to an employee or is provided on a reduced basis to an employee by a plan on account of the employee's attainment of a specified age.

Section 411 (b)(1)(H)(v) and (b)(2)(D) provide that the Secretary shall prescribe regulations coordinating the requirements of section 411 (b)(1)(H) and (b)(2) with the requirements of sections 411(a), 404, 410, 415 and the antidiscrimination provisions of subchapter D of Chapter 1 (Code sections 401 through 425). The proposed regulations provide that no allocation to the account of an employee in a defined contribution plan and no benefit accrual on behalf of an employee in a defined benefit plan are required under section 411 (b)(1)(H) or (b)(2) if such allocation or benefit accrual would cause the plan to (1) exceed the section 415 limitations on benefits and contributions, or (2) discriminate in favor of highly compensated employees within the meaning of section 401(a)(4).

Section 9203(a)(2) of OBRA 1986 amended Code section 410(a)(2) to provide that a plan will not constitute a qualified plan under section 401(a) if the plan excludes from participation (on the basis of age) an employee who has attained a specified age. The proposed regulations provide that, effective for plan years beginning after December 31, 1987, a plan may not apply a maximum age provision to any employee who has at least one hour of service for the employer on or after January 1, 1988, regardless of when the employee first performed an hour of service for the employer.

In the case of an employee who was ineligible to participate in a plan before the effective date of amended Code section 410(a)(2) because of a maximum age condition and who is eligible to participate in the plan on or after the effective date of such section, hours of service and years of service credited to the employee before the first plan year beginning on or after January 1, 1988, shall be taken into account in accordance with section 411 and the regulations thereunder and in accordance with 29 CFR Part 2530 for purposes of determining the employee's nonforfeitable right to the employee's accrued benefit. However, with respect to an employee described in the preceding sentence, hours of service and years of service credited to the employee before the first plan year beginning on or after January 1, 1988, are not required to be taken into account for purposes of determining the employee's accrued benefit under the plan for plan years beginning on or after January 1, 1988. See, also, section 411(a)(4) and § 1.411(a)–5 for rules relating to service that must be taken into account in determining an employee's nonforfeitable right to the employee's accrued benefit.

Section 9203(b)(2) of OBRA 1986 amended Code section 411(a)(8)(B) to provide rules relating to the determination of a participant's normal retirement age under a defined benefit plan and a defined contribution plan. Because section 203(e) of the pending Technical Corrections Act of 1987 (H.R. 2636) would change the definition of normal retirement age from the definition now set forth in section 411(a)(8)(B) (as amended by OBRA 1986), the proposed regulations do not set forth any rules under section 411(a)(8)(B) (as amended by OBRA 1986).

Section 9202(b) of OBRA 1986 amended Code section 411(B)(2)(C) to require the Secretary to provide by regulations for the application of the continued allocation rules of section 411(b)(2) to target benefit plans. The proposed regulations do not provide detailed special rules applicable to target benefit plans. Target benefit plans are subject to the rules applicable to defiend contribution plans. The Commissioner will prescribe such additional rules relating to the continued allocation of contributions and accrual of benefits under target benefit plans as may be necessary or appropriate.

Effective Date

Section 9204(a)(1) of OBRA 1986 provides that the amendments made with regard to section 411 (b)(1)(H) and (b)(2) "shall apply only with respect to plan years beginning on or after January 1, 1988, and only to employees who have 1 hour of service in any plan year to which such amendments apply." The proposed regulations provide that section 411 (b)(1)(H) and (b)(2) does not apply to an employee who does not have at least 1 hour of service for the employer in a plan year beginning on or after January 1, 1988.

However, the proposed regulations provide that section 411 (b)(1)(H) and (b)(2) applies with respect to all years of service completed by an employee who has at least 1 hour of service in a plan year beginning on or after January 1, 1988. Accordingly, under section 411(b)(1)(H)(i), the proposed regulations provide that, for plan years beginning on or after January 1, 1988, in determining the benefit payable under a defined benefit plan to a participant who has at least 1 hour of service in a plan year beginning on or after January 1, 1988, the plan does not satisfy section 411(a) if the plan disregards, because of the participant's attainment of any age, any year of service completed by the participant or any compensation earned by the participant after attaining such age, including years of service completed and compensation earned before the first plan year beginning on or after January 1, 1988. Under the proposed regulations, section 411(b)(2) does not require allocations to the accounts of employees under a defined contribution plan for any plan year beginning before January 1, 1988. However, the proposed regulations provide that, for plan years beginning on or after January 1, 1988, in determining the allocation to the account of a participant (who has at least 1 hour of service in a plan year beginning on or after January 1, 1988) under a defined

contribution plan that determines allocations under a service related allocation formula, the plan does not satisfy section 411(a) if the plan disregards, because of the participant's attainment of any age, any year of service completed by the participant.

Under the proposed regulations, a defined benefit plan and a defined contribution plan will not be treated as impermissibly disregarding, because of the participant's attainment of any age, a year of service completed by the participant before the first plan year beginning before January 1, 1988, merely because the participant was not eligible under the plan to make mandatory or voluntary employee contributions (as well as contributions under a cash or deferred arrangement described in section 401(k)) for such year.

Title I of ERISA and OBRA 1986

Under section 101 of Reorganization Plan No. 4 of 1978 (43 FR 47713), the Secretary of the Treasury has jurisdiction over the subject matter addressed in the OBRA 1986 regulations. Therefore, under section 104 of the Reorganization Plan, these regulations apply when the Secretary of Labor exercises authority under Title I of ERISA (as amended, including the amendments made by Title IX of OBRA 1986 and the amendments by the Tax Reform Act of 1986). Thus, the requirements also apply to employee plans subject to Part 2 of Title I of ERISA.

Under section 9201 of OBRA 1986, these regulations also apply for purposes of applying comparable provisions under section 4(i)(7) of the Age Discrimination in Employment Act of 1967 (29 U.S.C. 623) as amended. No interference is intended under the proposed regulations as to the application of the Age Discrimination in Employment Act of 1967, as in effect prior to its amendment by OBRA 1986, to employees who are not credited with at least 1 hour of service in a plan year beginning on or after January 1, 1988.

Reliance on These Proposed Regulations

Taxpayers may rely on these proposed regulations for guidance pending the issuance of final regulations. Because these regulations are generally effective for plan years beginning after 1987, the Service will apply these proposed regulations in issuing rulings and in examining returns with respect to taxpayers and plans. If future guidance is more restrictive, such guidance will be applied without retroactive effect.

Time of Plan Amendments

The proposed regulations provide rules relating to the postponement of the deadline for amending plans to comply with the provisions of OBRA 1986. Plan amendments required to conform the plan to the changes contained in OBRA 1986 need not be made until the dates specified in section 1140 of the Tax Reform Act of 1986 (in general, the last day of the first plan year commencing on or after January 1, 1989). This deferred amendment date is available only if: (1) The plan is operated in accordance with the applicable provisions of OBRA 1986 for the period beginning with the effective date of the provision with respect to the plan; (2) the plan amendments adopted are retroactive to such effective date; and (3) the plan amendments adopted are consistent with plan operation during the retroactive effective period.

Special Analyses

The Commissioner of Internal Revenue has determined that this proposed rule is not a major rule as defined in Executive Order 12291 and that a regulatory impact analysis is not required.

Although this document is a notice of proposed rulemaking which solicits public comments, the Internal Revenue Service has concluded that the regulations proposed herein are interpretative and that the notice and public procedure requirements of 5 U.S.C. 553 do not apply. Accordingly, these proposed regulations do not constitute regulations subject to the Regulatory Flexibility Act (5 U.S.C. Chapter 6).

Comments and Requests for a Public Hearing

Before adopting these proposed regulations, consideration will be given to any written comments that are submitted (preferably eight copies) to the Commissioner of Internal Revenue. All comments will be available for public inspection and copying. A public hearing will be held upon written request to the Commissioner by any person who has submitted comments. If a public hearing is held, notice of the time and place will be published in the **Federal Register**.

Drafting Information

The principal author of these proposed regulations is Michael C. Garvey of the Employee Benefits and Exempt Organizations Division of the Office of Chief Counsel, Internal Revenue Service. However, personnel from other offices of the Internal Revenue Service and Treasury Department participated in developing the regulations, both on matters of substance and style.

List of Subjects in 26 CFR 1.401–0—1.425–1

Income taxes, Employee benefits plans, Pensions.

Proposed Amendments to the Regulations

The proposed amendments to 26 CFR Part 1 are as follows:

PART 1—[AMENDED]

Income Tax Regulations

Paragraph 1. The authority citation for Part 1 is amended by adding the following citation:

Authority: 26 U.S.C. 7805 * * * Section 1.411(b)–2 is also issued under 26 U.S.C. 411(b)(1)(H) and 411(b)(2).

Par. 2. A new § 1.410(a)–4A is added immediately after § 1410(a)–4 to read as follows:

§ 1.410(a)–4A Maximum age conditions after 1987.

(a) *Maximum age conditions.* Under section 410(a)(2), a plan is not a qualified plan (and a trust forming a part of such plan is not a qualified trust) if the plan, either directly or indirectly, excludes any employee from participation on the basis of attaining a maximum age.

(b) *Effective date and transitional rule.* If a plan contains a provision that excludes an employee from participation on the basis of attaining a maximum age, the provision may not be applied in a plan year beginning on or after January 1, 1988, to any employee (regardless of when the employee first performed an hour of service for the employer) who is credited with at least 1 hour of service on or after January 1, 1988. For purposes of determining when such an employee (who is not otherwise ineligible to participate in the plan) must become eligible to participate in the plan under section 410(a)(1)(A)(ii), section 410(a)(1)(B) and the provisions of the plan, hours of service and years of service credited to the employee before the first plan year beginning on or after January 1, 1988, are taken into account in accordance with section 410 and the regulations thereunder and in accordance with 29 CFR Part 2530. Any employee who would be eligible to participate in the plan taking such service into account and whose entry date would be prior to the first day of the first plan year beginning on or after January 1, 1988, must participate in the

plan as of the first day of such plan year.

(c) *Examples.* The provisions of this section may be illustrated by the following examples:

Example (1). Employer X maintains a defined benefit plan that uses a 12-month period beginning July 1 and ending June 30 as its plan year and that specifies a normal retirement age of 65. The plan provides that each employee of X is eligible to become a participant in the plan on the first entry date on or after the employee completes 1 year of service for X. The plan has 2 entry dates, July 1 and January 1. However, prior to the plan year beginning July 1, 1988, the plan contained a provision that excluded from participation any employee first hired within 5 years of attaining the plan's specified normal retirement age of 65. Employee A was hired by X on August 1, 1986 at age 62. A completes 1 year of service for X by August 1, 1987. If A performs at least one hour of service for X on or after January 1, 1988, the plan, in order to meet the requirements of section 410(a)(2), may not apply the maximum age provision to A on or after July 1, 1988, and A must be eligible to become a participant in the plan in accordance with the other eligibility rules contained in the plan, taking into account A's service with X performed prior to July 1, 1988 to the extent required under the terms of the plan or under section 410 and the regulations thereunder and under regulations in 29 CFR Part 2530. Accordingly, if A is still employed by X on July 1, 1988, A must become a participant in the plan on that date.

Example (2). Employer Y maintains a defined benefit plan that uses the calendar year as its plan year and that specifies a normal retirement age of 65. Employee B is first hired by Y in 1988 when B is age 66. In order for the plan to meet the requirements of section 410(a)(2), B may not be excluded from plan participation on the basis of B having attained a specified age.

Par. 3. Section 1.411(a)–1 is amended by revising paragraph (a)(3) to read as follows:

§ 1.411(a)–1 Minimum vesting standards; general rules.

(a) *In general.* * * *

(3) The plan satisfies the requirements of—

(i) Section 411(a)(2) and § 1.411(a)–3 (relating to vesting in accrued benefit derived from employer contributions),

(ii) In the case of a defined benefit plan, section 411(b) (1) and (3) (see §§ 1.411(b)–1 and 1.411(b)–2, relating to accrued benefit requirements, separate accounting and accruals and allocations after a specified age), and

(iii) In the case of a defined contribution plan, section 411(b) (2) and (3) (see §§ 1.411(b)–1(e)(2) and 1.411(b)–2, relating to accruals and allocations after a specified age and separate accounting).

* * * * *

Par. 4. Section 1.411(a)–7 is amended by adding a new paragraph (b)(3) to read as follows:

§ 1.411(a)–7 Definitions and special rules.

* * * * *

(b) *Normal retirement age.* * * *

(3) *Effect of Omnibus Budget Reconciliation Act of 1986 (OBRA).* [Reserved]

* * * * *

Par. 5. A new § 1.411(b)–2 is added after § 1.411(b)–1 to read as follows:

§ 1.411(b)–2 Accruals and allocations after a specified age.

(a) *In general.* Section 411(b)(1)(H) provides that a defined benefit plan does not satisfy the minimum vesting standards of section 411(a) if, under the plan, benefit accruals on behalf of a participant are discontinued or the rate of benefit accrual on behalf of a participant is reduced because of the participant's attainment of any age. Section 411(b)(2) provides that a defined contribution plan does not satisfy the minimum vesting standards of section 411(a) if, under the plan, allocations to a participant's account are reduced or discontinued or the rate of allocations to a participant's account is reduced because of the participant's attainment of any age. A defined benefit plan is not considered to discontinue benefit accruals or reduce the rate of benefit accrual on behalf of a participant because of the attainment of any age in violation of section 411(b)(1)(H) and a defined contribution plan is not considered to reduce or discontinue allocations to a participant's account or reduce the rate of allocations to a participant's account because of the attainment of any age in violation of section 411(b)(2) solely because of a positive correlation between increased age and a reduction or discontinuance in benefit accruals or account allocations under a plan. Thus, for example, if a defined benefit plan or a defined contribution plan provides for reduced or discontinued benefit accruals or account allocations on behalf of participants who have completed a specified number of years of credited service, the plan will not thereby fail to satisfy section 411 (b)(1)(H) or (b)(2) solely because of a positive correlation between increased age and completion of the specified number of years of credited service. See paragraph (b)(2) of this section for rules relating to benefit and service limitations under defined benefit plans and paragraph (c)(2) of this section for rules relating to limitations on allocations under defined contribution plans. Also, if benefit accruals or the rate of benefit accrual on behalf of a participant in a defined benefit plan or allocations or the rate of allocations to the account of a participant in a defined contribution plan are reduced or discontinued under the plan and the reason for the reduction or discontinuance is neither directly nor indirectly related to the participant's attainment of a specified age, the plan does not thereby fail to satisfy the requirements of section 411 (b)(1)(H) or (b)(2). Thus, for example, if a defined benefit plan is amended to cease or reduce the rate of benefit accrual for all plan participants, such cessation or reduction does not fail to satisfy the requirements of section 411(b)(1)(H).

(b) *Defined benefit plans*—(1) *In general.* (i) A defined benefit plan does not satisfy the minimum vesting standards of section 411(a) if, either directly or indirectly, because of the attainment of any age—

(A) A participant's accrual of benefits is discontinued or the rate of a participant's accrual of benefits is decreased, or

(B) A participant's compensation after the attainment of such age is not taken into account in determining the participant's accrual of benefits.

(ii) In determining whether a defined benefit plan satisfies paragraph (b)(1)(i) of this section, the subsidized portion of an early retirement benefit (whether provided on a temporary or permanent basis), a social security supplement (as defined in § 1.411(a)–7(c)(4)(ii)) and a qualified disability benefit (as defined in § 1.411(a)–7(c)(3)) are disregarded in determining the rate of a participant's accrual of benefits under the plan.

(iii) The provisions of paragraph (b)(1)(i) of this section may be illustrated by the following example. In the example, assume that the participant completes the hours of service in a plan year required under the plan to accrue a full benefit for the plan year.

Example. Employer X maintains a defined benefit plan that provides a normal retirement benefit of 1% of a participant's average annual compensation, multiplied by the participant's years of credited service under the plan. Normal retirement age under the plan is age 65. The plan contains no limitations (other than the limitations imposed by section 415) on the maximum amount of benefits the plan will pay to any participant or on the maximum number of years of credited service taken into account under the plan for purposes of determining the amount of any participant's normal retirement benefit. Participant A became a participant in the plan at age 25 and worked continuously for X until A retires at age 70. The plan will satisfy the requirements of section 411(b)(1)(H) and paragraph (b)(2) of this section if, under the plan's benefit

formula, upon A's retirement. A has an accrued normal retirement benefit of at least 45% of A's average annual compensation (1% per year x 45 years).

(2) *Benefit and service limitations*—(i) *In general.* A defined benefit plan does not fail to satisfy section 411(b)(1)(H) and paragraph (b) of this section solely because the plan limits the amount of benefits a participant may accrue under the plan or limits the number of years of service or years of participation taken into account for purposes of determining the accrual of benefits under the plan (credited service). For this purpose, a limitation that is expressed as a percentage of compensation (whether averaged over a participant's total years of credited service for the employer or over a shorter period) and a limitation of the type described in section 401(a)(5)(D) are treated as permissible limitations on the amount of benefits a participant may accrue under the plan. However, in applying a limitation on the number of years of credited service that are taken into account under a plan, the plan may not take into account any year of service that is disregarded in determining the accrual of benefits under the plan (prior to the effective date of section 411(b)(1)(H) and this section) because of the attainment of any age.

(ii) *Limitation not based on age.* Any limitation on the amount of benefits a participant may accrue under the plan and any limitation on the number of years of credited service taken into account under the plan may not be based, directly or indirectly, on the attainment of any age. A limitation that is determined by reference to age or that is not determinable except by reference to age is considered a limitation directly based on age. Thus, a plan provision that, for purposes of benefit accrual, disregards years of service completed after a participant becomes eligible to receive social security benefits is considered a limitation directly based on age. Similarly, a plan provision that, for purposes of benefit accrual, disregards years of service completed after the sum of a participant's age and the participant's number of years of credited service equals a specified number, is considered a limitation directly based on age. Whether a limitation is indirectly based on age is determined with reference to all the facts and circumstances.

(iii) *Examples.* The provisions of paragraph (b)(2) of this section may be illustrated by the following examples. In each example, assume that the participant completes the hours of service in a plan year required under the plan to accrue a full benefit for the plan year.

Example (1). Assume the same facts as in the *Example* set forth in paragraph (b)(1)(ii) of this section, except that the plan provides that not more than 35 years of credited service will be taken into account in determining a participant's normal retirement benefit under the plan. Upon A's retirement at age 70, A will have a normal retirement benefit under the plan's benefit formula of 35% of A's average annual compensation (1% per year x 35 years). The plan will not fail to satisfy the requirements of section 411(b)(1)(H) and this paragraph (b) merely because the plan provides that the final 10 years of A's service under the plan is not taken into account in determining A's normal retirement benefit. The result would be the same if the plan provided that no participant could accrue a normal retirement benefit in excess of 35% of the participant's average annual compensation.

Example (2). Employer Y maintains a defined benefit plan that provides a normal retirement benefit of 50% of a participant's final average compensation. Normal retirement age under the plan is age 65. Other than the limitations imposed by section 415, the plan contains no provision that limits the accrual of the benefit payable to a participant who has less than a specified number of years of credited service for Y. Participant A is hired by Y at age 66 and commences participation in the plan at age 67. Under the plan's benefit formula, if A completes one year of credited service under the plan, A will be entitled to receive (subject to the limitations of section 415) a normal retirement benefit equal to 50% of A's final average compensation.

(3) *Different rates of benefit accrual*—(i) *In general.* A defined benefit plan does not fail to satisfy the requirements of section 411(b)(1)(H) and paragraph (b) of this section solely because the plan provides for the accrual of benefits at different rates with respect to participants under the plan. Accordingly, a plan under which a participant's accrued benefit is determined in accordance with the fractional rule described in section 411(b)(1)(C) and § 1.411(b)–1(b)(3) will not fail to satisfy the requirements of section 411(b)(1)(H) and paragraph (b) of this section solely because the rate at which a participant's normal retirement benefit accrues differs depending on the number of years of credited service a participant would have between the date of commencement of participation and the attainment of normal retirement age. In addition, a plan will not be treated as failing to satisfy section 411(b)(1)(H) and paragraph (b) of this section solely because the plan's benefit formula provides, on a uniform and consistent basis, a normal retirement benefit equal to, for example, 2% of average annual compensation multiplied by a participant's first 15 years of credited service and 1% of average annual compensation multiplied by a participant's years of credited service in excess of 15 years. The preceding sentence applies regardless of when the participant's normal retirement age occurs.

(ii) *Differences not based on age.* Any differences in the rate of benefit accrual described in paragraph (b)(3)(i) of this section may not be based, directly or indirectly, on the attainment of any age.

(4) *Certain adjustments for delayed retirement*—(i) *In general.* Under section 411(b)(1)(H)(iii), a plan may provide that benefit accruals that would otherwise be required under section 411(b)(1)(H)(i) and paragraph (b) of this section for a plan year are reduced (but not below zero) as set forth in paragraph (b)(4) (ii) and (iii) of this section. This paragraph (b)(4) applies for a plan year to a participant who, as of the end of the plan year, has attained normal retirement age under the plan.

(ii) *Distribution of benefits.* (A) A plan may provide that the benefit accrual otherwise required under section 411(b)(1)(H)(i) and paragraph (b) of this section for a plan year is reduced (but not below zero) by the actuarial equivalent of total plan benefit distributions (as determined under this paragraph (b)(4)(ii)) made to the participant by the close of the plan year.

(B) The plan benefit distributions described in this paragraph (b)(4)(ii) are limited to distributions made to the participant during plan years and periods with respect to which section 411(b)(1)(H)(i) and this section apply (including plan years and periods beginning before January 1, 1988) for which the plan could (without regard to section 401(a)(9) and the regulations thereunder) provide for the suspension of the participant's plan benefits in accordance with section 203(a)(3)(B) of the Employee Retirement Income Security Act of 1974 (ERISA) and regulations issued thereunder by the Department of Labor.

(C) For purposes of determining the total amount of plan benefit distributions that may be taken into account under this paragraph (b)(4)(ii) as of the close of a plan year, distributions shall be disregarded to the extent the total amount of distributions made to the participant by the close of the plan year exceeds the total amount of the distributions the participant would have received by the close of the plan year if the distributions had been made in accordance with the plan's normal form of benefit distribution. Accordingly, the plan is required to accrue a benefit for the plan year on

behalf of a participant in accordance with the plan's benefit formula, taking into account all of the participant's years of credited service, reduced (but not below the participant's normal retirement benefit for the prior plan year) by the actuarial equivalent of total benefit distributions (taken into account under this paragraph (b)(4)(ii) made to the participant by the close of the plan year. If, by the close of the plan year, the actuarial equivalent of total plan benefit distributions made to the participant and taken into account under this paragraph (b)(4)(ii) is greater than the total benefit accruals required under section 411(b)(1)(H)(i) and paragraph (b) of this section for the plan years during which such distributions were made, the plan is not required under section 411(b)(1)(H)(i) and paragraph (b) of this section to accrue any benefit on behalf of the participant for the plan year.

(iii) *Adjustment in benefits payable.* (A) A plan may provide that the benefit accrual otherwise required under section 411(b)(1)(H)(i) and paragraph (b) of this section for the plan year is reduced (but not below zero) by the amount of any actuarial adjustment under the plan in the benefit payable for the plan year with respect to the participant because of a delay in the payment of plan benefits after the participant's attainment of normal retirement age.

(B) For purposes of paragraph (b)(4)(iii)(A) of this section, the actuarial adjustment may be taken into account for a plan year only to the extent it is made to the greater of the participant's retirement benefit as of the close of the prior plan year, including any actuarial adjustment made under the plan for the prior plan year, and the participant's normal retirement benefit as of the close of the prior play year determined by including benefit accruals required by section 411(b)(1)(H)(i) and paragraph (b) of this section. If the retirement benefit, as actuarially adjusted for the plan year in accordance with this paragraph (b)(4)(iii) for delayed payment, exceeds the normal retirement benefit, as determined by including benefit accruals required for the plan year by section 411(b)(1)(H)(i) and paragraph (b) of this section, the plan shall be required to provide the retirement benefit, as actuarially adjusted in accordance with this paragraph (b)(4)(iii) under the plan. Notwithstanding the provisions of this paragraph (b)(4)(iii)(B), in the case of a plan that suspends benefit payments in accordance with section 203(a)(3)(B) of the Employee Retirement Income Security Act of 1974 and the regulations issued thereunder by the Department of Labor, the plan does not fail to satisfy the requirements of section 411(b)(1)(H) and paragraph (b) of this section solely because the plan provides that the retirement benefit to which a participant is entitled as of the close of a plan year ending after the participant attains normal retirement age under the plan is the greater of the benefit payable at normal retirement age (not including benefit accruals otherwise required by section 411(b)(1)(H) and paragraph (b) of this section) actuarially adjusted under the plan to the close of the plan year for delayed payment, and the retirement benefit determined under the plan as of the close of the plan year determined by including benefit accruals required by section 411(b)(1)(H) and paragraph (b) of this section and determined without regard to any offset that would otherwise be applicable under this paragraph (b)(4)(iii).

(iv) *Examples.* The provisions of paragraph (b)(4) of this section may be illustrated by the following examples. In each example, assume that the participant completes the hours of service in a plan year required under the plan to accrue a full benefit for the plan year and assume that the participant is not married unless otherwise specified.

Example (1). Employer Y maintains a defined benefit plan that provides a normal retirement benefit of $20 per month multiplied by the participant's years of credited service. The plan contains no limit on the number of years of credited service taken into account for purposes of determining the normal retirement benefit provided by the plan. Participant A attains normal retirement age of 65 and continues in the full time service of Y. At age 65, A has 30 years of credited service under the plan and could receive a normal retirement benefit of $600 per month ($20 × 30 years) if A retires. The plan provides for the suspension of A's normal retirement benefit (in accordance with section 203(a)(3)(B) of the Employee Retirement Income Security Act of 1974 (ERISA) and regulations thereunder issued by the Department of Labor) during the period of A's continued employment with Y. Accordingly, the plan does not provide for an actuarial adjustment of A's normal retirement benefit because of delayed payment and the plan does not pay A's normal retirement benefit while A remains in the full time service of Y. If A retires at age 67, after completing two additional years of credited service for Y, A must receive additional accruals for the two years of credited service completed after attaining normal retirement age in order for the plan to satisfy section 411(b)(1)(H)(i). Accordingly, A is entitled to receive a normal retirement benefit of $640 per month ($20 × 32 years).

Example (2). Assume the same facts as in *Example (1)*, except that the plan provides that at the time A's normal retirement benefit becomes payable, the amount of A's normal retirement benefit (determined as of A's normal retirement age and each year thereafter) will be actuarially increased for delayed retirement. The plan offsets this actuarial increase against benefit accruals in plan years ending after A's attainment of normal retirement age, as permitted by paragraph (b)(4)(iii) of this section. Accordingly, the plan does not provide for the suspension of normal retirement benefits (in accordance with section 203(a)(3)(B) of ERISA and regulations thereunder issued by the Department of Labor). Under section 411(b)(1)(H), the plan must provide A with a benefit of at least $620 per month after A completes 31 years of credited service for Y. However, under paragraph (b)(4)(iii) of this section, the plan is not required to provide A with a benefit accrual for A's additional year of credited service for Y because, under the plan, A will be entitled to receive, upon retirement at age 66 after completing 1 additional year of credited service for Y, an actuarially increased benefit of $672 per month. This monthly benefit of $672 is the greater of A's normal retirement benefit at normal retirement age ($20 × 30 years = $600) actuarially adjusted for delayed payment and A's normal retirement benefit ($20 × 31 years = $620) determined by taking into account A's year of credited service after attaining normal retirement age. Under the plan, A will be entitled to receive, upon retirement at age 67 after completing 2 additional years of credited service for Y after attaining normal retirement age, an actuarially increased benefit of $756 per month. This monthly benefit of $756 is the greater of A's actuarially adjusted normal retirement benefit at age 66 ($672) actuarially adjusted to $756 for delayed payment to age 67 and A's normal retirement benefit ($20 × 32 years = $640) determined by taking into account A's years of credited service after attaining normal retirement age.

Example (3). Assume the same facts as in *Example (1)*, except that the plan neither provides for the suspension of normal retirement benefit payments (in accordance with section 203(a)(3)(B) of ERISA and regulations thereunder issued by the Department of Labor) nor provides for an actuarial increase in benefit payments because of delayed payment of benefits. Consequently, the plan provides that the normal retirement benefit will be paid to a participant, beginning at age 65 (normal retirement age) even though the participant remains in the service of Y and offsets the value of the benefit distributions against benefit accruals in plan years ending after the participant's attainment of normal retirement age, as permitted by paragraph (b)(4)(ii) of this section. Participant B (who remains in the full time service of Y) receives 12 monthly benefit payments prior to attainment of age 66. The total monthly benefit payments of $7,200 ($600 × 12 payments) have an actuarial value at age 66 of $7,559 (reflecting interest and mortality) which would produce a monthly benefit of $72 commencing at age 66. The benefit accrual for the year of credited service B completed after attaining normal retirement age is $20 per month ($20 × 1 year). Because the actuarial value (determined as a monthly benefit of $72) of

the benefit payments made during the one year of credited service after B's attainment of normal retirement age exceeds the benefit accrual for the one year of credited service after B's attainment of normal retirement age, the plan is not required to accrue benefits on behalf of B for the one year of credited service after B's attainment of normal retirement age and the plan is not required to increase B's monthly benefit payment of $600 at age 66.

Assume B receives 24 monthly benefit payments prior to B's retirement at age 67. The total monthly benefit payments of $14,400 ($600 × 24 payments have an actuarial value at age 67 of $15,839 (reflecting interest and mortality) which would produce a monthly benefit payment of $156 commencing at age 67. The benefit accrual for the two years of credited service B completed after attaining normal retirement age is $40 per month ($20 × 2 years). Because the actuarial value (determined as a monthly benefit of $156) of the benefit payments made during the two years of credited service after B's normal retirement age exceeds the benefit accrual for the two years of credited service after B's normal retirement age ($20 × 2 years = $40), the plan is not required to accrue benefits on behalf of B for the second year of credited service B completed after attaining normal retirement age and the plan is not required to increase B's monthly benefit payment of $600.

Example. (4). Assume that Employer Z maintains a defined benefit plan that provides a normal retirement benefit of 2% of the average of a participant's high three consecutive years of compensation multiplied by the participant's years of credited service under the plan. The plan contains no limit on the number of years of credited service taken into account for purposes of determining the normal retirement benefit provided by the plan. Participant C, who has attained normal retirement age (age 65) under the plan, continues in the full time service of Z. At normal retirement age, C has average compensation of $20,000 for C's high three consecutive years and has 10 years of credited service under the plan. Thus, at normal retirement age, C is entitled to receive an annual normal retirement benefit of $4,000 ($20,000 × .02 × 10 years). Assume further that the plan provides for the suspension of N's normal retirement benefit (in accordance with section 203(a)(3)(B) of ERISA and regulations issued thereunder by the Department of Labor) during the period of C's continued employment with Z. Accordingly, the plan does not provide for the actuarial increase of C's normal retirement benefit because of delayed payment and the plan does not pay C's normal retirement benefit while C remains in the full time service of Z. At age 70, when C retires, C has average annual compensation for C's high three consecutive years of $35,000. Under section 411(b)(1)(H), C must be credited with 15 years of credited service for Z and C's increased compensation after attaining normal retirement age must be taken into account for purposes of determining C's normal retirement benefit. At age 70, C is entitled to receive an annual normal retirement benefit of $10,500 ($35,000 × .02 × 15 years).

Example (5). Assume the same facts as in *Example (4)*, except that the payment of C's retirement benefit is not suspended (in accordance with section 203(a)(3)(B) of ERISA and regulations issued thereunder by the Department of Labor) and, accordingly, the plan provides that retirement benefits that commence after a participant's normal retirement age will be actuarially increased for late retirement. The plan offsets this actuarial increase against beneft accruals in plan years ending after C's attainment of normal retirement age, as permitted by paragraph (b)(4)(iii) of this section. Under this provision, at the close of each plan year after C's attainment of normal retirement age, C's retirement benefit is actuarially increased. Under this provision, the actuarial increase for the plan year is made to the greater of C's normal retirement benefit at the close of the prior plan year (including previous actuarial adjustments) and C's normal retirement benefit at the close of the prior plan year determined by including all benefit accruals. Accordingly, at the close of each plan year, C is entitled to receive an annual normal retirement benefit equal to the greater of C's normal retirement benefit (adjusted actuarially under the plan from the benefit to which C was entitled at the close of the prior plan year) determined at the close of the plan year and C's normal retirement benefit determined at the close of the plan year by taking into account C's years of credited service and benefit accruals after C's attainment of normal retirement age. The foregoing is illustrated in the following table with respect to certain years of credited service performed by C after attaining normal retirement age 65.

Age	Years of credited service	Average compensation for high three consecutive years	Normal retirement benefit with additional accruals (.02 × column 2 × column 3)	Retirement benefit, as actuarially increased under the plan from the benefit at prior age (column 6)	Normal retirement benefit to which C is entitled (greater of column 4 and column 5)
1	*2*	*3*	*4*	*5*	*6*
65	10	$20,000	$4,000	N/A	$4,000
66	11	21,000	4,620	4,482	4,620
67	12	29,000	6,960	5,192	6,960
68	13	30,000	7,800	7,848	7,848
69	14	33,000	9,240	9,880	9,240
70	15	35,000	10,500	10,494	10,500

Example (6). Assume the same facts as in *Example (4)*, except that C does not retire at age 70, but continues in the full time service of Z. Upon C's attainment of age 70, the plan commences benefit payments to C. The annual benefit paid to C in the first plan year is $10,500 ($35,000 × .02 × 15 years). In determining the annual benefit payable to C in each subsequent plan year, the plan offsets the value of benefit distributions made to the participant by the close of the prior plan year against benefit accruals in plan years during which such distributions were made, as permitted by paragraph (b)(4)(ii) of this section. Accordingly, for each subsequent plan year, C is entitled under the plan to receive benefit payments based on C's benefit (at the close of the prior plan year) determined under the plan formula by taking into account all of C's years of credited service, reduced (but not below C's normal retirement benefit for the prior plan year) by the value of total benefit distributions made to C by the close of the prior plan year. The foregoing is illustrated in the following table with respect to certain years of credited service performed by C while benefits were being distributed to C.

Years of benefit distributions	Years of credited service (as of close of the year)	Average compensation for high three years	Normal retirement benefit with additional accruals (.02 × column 2 × column 3)	Suspendible benefit distributions made during the year	Cumulative suspendible benefit distributions made as of close of the year	Annual benefit that is actuarial equivalent of cumulative suspendible benefit distributions made as of close of the year	Retirement benefit to which C is entitled at close of the year (column 4 − column 7, but not less than column 8 for prior year)
1	2	3	4	5	6	7	8
N/A	15	$35,000	$10,500	N/A	N/A	N/A	$10,500
1	16	35,000	11,200	$10,500	$10,500	$1,472	10,500
2	17	45,000	15,300	10,500	21,000	3,209	12,091
3	18	50,000	18,000	12,091	33,091	5,510	12,490

(c) *Defined contribution plans*—(1) *In general.* A defined contribution plan (including a target benefit plan described in § 1.410(a)–4(a)(1)) does not satisfy the minimum vesting standards of section 411(a) if, either directly or indirectly, because of the attainment of any age—

(i) The allocation of employer contributions or forfeitures to the accounts of participants is discontinued, or

(ii) The rate at which the allocation of employer contributions or forfeitures is made to the accounts of participants is decreased.

(2) *Limitations on allocations.* (i) A defined contribution plan (including a target benefit plan described in § 1.410(A)–4(a)(1)) does not fail to satisfy the minimum vesting standards of section 411(a) solely because the plan limits the total amount of employer contributions and forfeitures that may be allocated to a participant's account (for a particular plan year or for the participant's total years of credited service under the plan) or solely because the plan limits the total number of years of credited service for which a participant's account may receive allocations of employer contributions and forfeitures. The limitations described in the preceding sentence may not be applied with respect to the allocation of gains, losses or income of the trust to the account of a participant. Furthermore, a defined contribution plan (including a target benefit plan) does not fail to satisfy section 411(a) solely because the plan limits the number of years of credited service that may be taken into account for purposes of determining the amount of, or the rate at which, employer contributions and forfeitures are allocated to a participant's account for a particular plan year. However, in applying a credited service limitation described in this paragraph (c)(2)(i), the plan may not take into account any year of service (prior to the effective date of section 411(b)(2) and paragraph (c) of this section) that is disregarded in determining allocations to a participant's account because of the participant's attainment of any age.

(ii) Any limitation described in paragraph (c)(2)(i) of this section may not be based, directly or indirectly, on the attainment of any age. The provisions of paragraph (b)(2)(ii) of this section shall also apply for purposes of this paragraph (c).

(iii) The Commissioner shall provide such additional rules as may be necessary or appropriate with respect to the application of section 411(b)(2) and this section to target benefit plans.

(d) *Benefits and forms of benefits subject to requirements*—(1) *General rule.* Except as provided in paragraph (d)(2) of this section, section 411(b)(1)(H) and (b)(2) and paragraphs (b) and (c) of this section apply to all benefits (and forms of benefits) provided under a defined benefit plan and a defined contribution plan, including accrued benefits, benefits described in section 411(d)(6), ancillary benefits and other rights and features provided under the plan. Accordingly, except as provided in paragraph (d)(2) of this section, benefit accruals under a defined benefit plan and allocations under a defined contribution plan will be considered to be reduced on account of the attainment of a specified age if optional forms of benefits, ancillary benefits, or other rights or features under the plan provided with respect to benefits or allocations attributable to credited service prior to the attainment of such age are not provided (on at least as favorable a basis to participants) with respect to benefits or allocations attributable to credited service after such age. Thus, for example, a plan may not provide a lump sum payment only with respect to benefits attributable to years of credited service before the attainment of a specified age. Similarly, except as provided in paragraph (d)(2) of this section, if an optional form of benefit is available under the plan at a specified age, the availability of such form of benefit, or the method for determining the manner in which such benefit is paid, may not, directly or indirectly, be denied or provided on terms less favorable to participants because of the attainment of any higher age. Similarly, if the method for determining the amount or the rate of the subsidized portion of a joint and survivor annuity or the subsidized portion of a joint and survivor annuity or the subsidized portion of a preretirement survivor annuity is less favorable with respect to participants who have attained a specified age than with respect to participants who have not attained such age, benefit accruals or account allocations under the plan will be considered to be reduced on account of the attainment of such age.

(2) *Special rule for certain benefits.* A plan will not fail to satisfy section 411(b)(1)(H) or paragraph (b) of this section merely because the following benefits, or the manner in which such benefits are provided under the plan, vary because of the attainment of any higher age.

(i) The subsidized portion of an early retirement benefit (whether provided on a temporary or permanent basis),

(ii) A qualified disability benefit (as defined in § 1.411(a)–7(c)(3)); and

(iii) A social security supplement (as defined in § 1.411(a)–7(c)(4)(ii)).

(e) *Coordination with certain provisions.* Notwithstanding section 411(b)(1)(H), (b)(2) and the preceding paragraphs of this section, the following rules shall apply.

(1) *Section 415 limitations.* No allocation to the account of a participant in a defined contribution plan (including a target benefit plan described in § 1.410(a)–4(a)(1)) shall be required for a limitation year by section 411(b)(2) and no benefit accrual with respect to a participant in a defined benefit plan shall be required for a limitation year by section 411(b)(1)(H)(i) to the extent that the allocation or accrual would cause the plan to exceed the limitations of

section 415(b), (c), or (e) applicable to the participant for the limitation year.

(2) *Prohibited discrimination.* (i) No allocation to the account of a highly compensated employee in a defined contribution plan (including a target benefit plan) shall be required for a plan year by section 411(b)(2) to the extent the allocation would cause the plan to discriminate in favor of highly compensated employees within the meaning of section 401(a)(4).

(ii) No benefit accrual on behalf of a highly compensated employee in a defined benefit plan shall be required for a plan year by section 411(b)(1)(H)(i) to the extent such benefit accrual would cause the plan to discriminate in favor of highly compensated employees within the meaning of section 401(a)(4).

(iii) The Commissioner may provide additional rules relating to prohibited discrimination in favor of highly compensated employees.

(3) *Permitted disparity.* In the case of a plan that would fail to satisfy section 401(a)(4) except for the application of section 401(1), no allocation to the account of a participant in a defined contribution plan and no benefit accrual on behalf of a participant in a defined benefit plan shall be required under section 411 (b)(1)(H) or (b)(2) for a plan year to the extent such allocation or accrual would cause the plan to fail to satisfy the requirements of section 401(1) and the regulations thereunder for the plan year.

(f) *Effective dates*—(1) *Noncollectively bargained plans*—(i) *In general.* Except as otherwise provided in paragraph (f)(2) of this section, section 411 (b)(1)(H) and (b)(2) and paragraphs (b) and (c) of this section are effective for plan years beginning on or after January 1, 1988, with respect to a participant who is credited with at least 1 hour of service in a plan year beginning on or after January 1, 1988. Section 411 (b)(1)(H) and (b)(2) and paragraphs (b) and (c) of this section are not effective with respect to a participant who is not credited with at least 1 hour of service in a plan year beginning on or after January 1, 1988.

(ii) *Defined benefit plans.* In the case of a participant who is credited with at least 1 hour of service in a plan year beginning on or after January 1, 1988, section 411 (b)(1)(H) and paragraph (b) of this section are effective with respect to all years of service completed by the participant, including years of service completed before the first plan year beginning on or after January 1, 1988. Accordingly, in the case of a participant described in the preceding sentence, a defined benefit plan does not satisfy section 411(b)(1)(H) and paragraph (b) of this section for a plan year beginning on or after January 1, 1988, if the plan disregards, because of the participant's attainment of any age, any year of service completed by the participant or any compensation earned by the participant after attaining such age. However, a defined benefit plan is not required under section 411(b)(1)(H) and paragraph (b) of this section to take into account for benefit accrual purposes any year of service completed before an employee becomes a participant in the plan. See paragraph (b)(2) of this section for rules relating to benefit and service limitations that may be imposed by a defined benefit plan.

(iii) *Defined contribution plans.* Section 411(b)(2) and paragraph (c) of this section are not applicable with respect to allocations of employer contributions or forfeitures to the accounts of participants under a defined contribution plan for a plan year beginning before January 1, 1988. However, in the case of a defined contribution plan under which allocations to the accounts of participants for a plan year are determined on the basis of an allocation formula that takes into account service or compensation for the employer during prior plan years, section 411(b)(2) and paragraph (c) of this section are effective for plan years beginning on or after January 1, 1988, with respect to all years of service completed by the participant, including years of service completed before the first plan year beginning on or after January 1, 1988. Accordingly, in the case of a participant who has at least 1 hour of service in a plan year beginning on or after January 1, 1988, a defined contribution plan containing an allocation formula described in the preceding sentence does not satisfy section 411(b)(2) and paragraph (c) of this section with respect to allocations for a plan year beginning on or after January 1, 1988, if the plan disregards, because of the participant's attainment of any age, any year of service completed by the participant. See paragraph (c)(2) of this section for rules relating to limitations on allocations to the accounts of participants that may be imposed by a defined contribution plan.

(iv) *Employee contributions.* In applying paragraph (f)(1) (i), (ii) and (iii) of this section to plan years beginning on or after January 1, 1988, a year of service completed before the first plan year beginning on or after January 1, 1988, will not be treated as being disregarded under a plan on account of a participant's attainment of a specified age solely because such year of service is disregarded under the plan because the participant was not eligible to make voluntary or mandatory employee contributions (as well as contributions under a cash or deferred arrangement described in section 401(k)) under the plan for such year. A plan is not required to permit a participant to make voluntary or mandatory employee contributions (as well as contributions under a cash or deferred arrangement described in section 401(k)) for a plan year beginning before January 1, 1988, in order to satisfy section 411 (b)(1)(H) or (b)(2) or paragraph (b) or (c) of this section for a plan year beginning on or after January 1, 1988.

(v) *Hour of service.* For purposes of this paragraph (f)(1), one hour of service means one hour of service recognized under the plan or required to be recognized under the plan by section 410 (relating to minimum participation standards) or section 411 (relating to minimum vesting standards). In the case of a plan that does not determine service on the basis of hours of service, one hour of service means any service recognized under the plan or required to be recognized under the plan by section 410 (relating to minimum participation standards) or section 411 (relating to minimum vesting standards).

(vi) *Examples.* The provisions of paragraph (f)(1) of this section may be illustrated by the following examples. In each example, assume that the participant completes the hours of service in a plan year required under the plan to accrue a full benefit or receive an allocation for the plan year.

Example (1). Employer X maintains a noncontributory defined benefit plan (that is not a collectively bargained plan) that provides a normal retirement benefit equal to 1% of a participant's average annual compensation for the participant's three consecutive years of highest compensation, multiplied by the participant's years of credited service under the plan. The plan contains no limit on the number of years of credited service taken into account for purposes of determining the normal retirement benefit provided by the plan. The plan uses the calendar year as its plan year. The plan specifies a normal retirement age of 65 and provides (prior to January 1, 1988) that no compensation earned and no service performed by a participant after attainment of normal retirement age will be taken into account in determining the participant's normal retirement benefit. Participant A attains normal retirement age on December 15, 1985. A continues in the full time service of X and has at least 1 hour of service for X during the plan year beginning on January 1, 1988. As of the plan year ending December 31, 1985, A had 35 years of credited service under the plan. In accordance with the plan provisions in effect prior to January 1, 1988, A's service and compensation during the 1988

and 1987 plan years is not taken into account in determining A's normal retirement benefit for those plan years. Beginning on January 1, 1988, the plan provisions that compensation earned and years of service completed after normal retirement age are not taken into account in determining a participant's normal retirement benefit may not be applied to A. Thus, as of the plan year beginning January 1, 1988, A's normal retirement benefit under the plan must be determined without regard to those provisions. Accordingly, beginning on January 1, 1988, the plan is required to take into account A's service for X and A's compensation from X during the 1986 and 1987 plan years for purposes of determining A's normal retirement benefit in order to satisfy section 411(b)(1)(H) and paragraph (b) of this section.

Example (2). Assume the same facts as in *Example (1),* except that the plan provides that, in determining a participant's normal retirement benefit under the plan (a) not more than 35 years of credited service will be taken into account and (b) no compensation earned after 35 years of credited service have been completed will be taken into account. Accordingly, the plan is not required to take into account A's service for X or A compensation from X during the 1986 and 1987 plan years for purposes of determining A's normal retirement benefit in order to satisfy section 411(b)(1)(H) and paragraph (b) of this section.

Example (3). Assume the same facts as in *Example (1),* except that A retires on December 5, 1987 and does not perform any hours of service for X after A's retirement. Accordingly, the plan is not required to take into account A's service for X and A's compensation from X during the 1986 and 1987 plan years for purposes of determining A's normal retirement benefit in order to satisfy section 411(b)(1)(H) and paragraph (b) of this section.

Example (4). Assume the same facts as in *Example (1),* except that the plan requires, as a condition to accruing benefits attributable to employer contributions under the plan, that a participant make employee contributions under the plan. The plan provides that a participant is not eligible to make employee contributions in a plan year beginning after the plan year in which the participant attains normal retirement age under the plan. Accordingly, A does not make employee contributions during the 1986 and 1987 plan years and, therefore, does not accrue in those plan years a benefit attributable to employer contributions. The plan is not required to take into account A's service for X and A's compensation from X during the 1986 and 1987 plan years in order to satisfy section 411(b)(1)(H) and paragraph (b) of this section. In addition, the plan is not required to permit A to make employee contributions to the plan for the 1986 and 1987 plan years in order to satisfy section 411(b)(1)(H) and paragraph (b) of this section.

Example (5). Employer Y maintains a profit-sharing plan (that is not a collectively bargained plan). The plan is the only qualified plan maintained by Y and uses the calendar year as its plan year. The formula under the plan for allocating employer contributions and forfeitures to the accounts of participants contains a years of service factor. Pursuant to the allocation formula containing the years of service factor, employer contributions and forfeitures for the plan year are allocated among the accounts of participants on the basis of one unit for each full $200 of compensation of the participant for the plan year and one unit for each year of credited service for Y completed by the participant. The plan contains no limit on the number of years of credited service taken into account for purposes of determining the allocation to the account of a participant for the plan year under the plan's allocation formula. The plan specifies a normal retirement age of 65 and provides (prior to January 1, 1988) that no service performed by a participant in a plan year beginning after the attainment of normal retirement age will be taken into account in determining the allocation to the participant's account for a plan year. Participant B attains normal retirement age on December 15, 1985. B continues in the full time service of Y and has at least 1 hour of service for Y during the plan year beginning January 1, 1986. As of the plan year ending December 31, 1985, B had 35 years of credited service under the plan. In accordance with the plan provisions in effect prior to January 1, 1988, B's service during the 1986 and 1987 plan year is not taken into account in determining the allocation of employer contributions and forfeitures to B's account for the 1986 and 1987 plan years. As of the plan year beginning January 1, 1988, the plan provision that years of service in plan years beginning after attainment of normal retirement age are not taken into account in determining the allocation of employer contributions and forfeitures to the accounts of participants may not be applied to B. Thus, the allocation of employer contributions and forfeitures to B's account for the 1988 plan year must be determined under the allocation formula contained in the plan without regard to that provision. Accordingly, the plan is required to take into account B's service for Y during the 1986 and 1987 plan years for purposes of determining the allocation of employer contributions and forfeitures to B's account for the 1988 plan year in order to satisfy section 411 (b)(2) and paragraph (c) of this section. However, the plan is not required to provide any additional allocations to B's account under the plan for the 1986 or 1987 plan year in order to satisfy section 411 (b)(2) and paragraph (c) of this section.

Example (6). Assume the same facts as in *Example (5),* except that the plan provides that, in determining the allocation of employer contributions and forfeitures to the account of a participant for a plan year, not more than 35 years of credited service for Y will be taken into account. Accordingly, the plan is not required to take into account B's service for Y during the 1986 or 1987 plan years for purposes of determining the allocation of employer contributions and forfeitures to B's account for the 1988 plan year under the allocation formula contained in the plan.

(2) *Collectively bargained plans.* (i) In the case of a plan maintained pursuant to 1 or more collective bargaining agreements between employee representatives and 1 or more employers, ratified before March 1, 1986, section 411 (b)(1)(H) and (b)(2) is effective for benefits provided under, and employees covered by, any such agreement with respect to plan years beginning on or after the later of—

(A) January 1, 1988, or

(B) The date on which the last of such collective bargaining agreements terminates (determinated without regard to any extension of any such agreement occurring on or after March 1, 1986).

However, notwithstanding the preceding sentence, section 411 (b)(1)(H) and (b)(2) shall be effective for benefits provided under, and employees covered by, any agreement described in this paragraph (f)(2)(i) no later than with respect to the first plan year beginning on or after January 1, 1990.

(ii) The effective date provisions of paragraph (f)(1) of this section shall apply in the same manner to plans described in paragraph (f)(2)(i) of this section, except that the effective date determined under paragraph (f)(2)(i) of this section shall be substituted for the effective data determined under paragraph (f)(1) of this section.

(iii) In accordance with the provisions of paragraph (f)(2)(i) of this section, a plan described therein may be subject to different effective dates under section 411 (b)(1)(H) and (b)(2) for employees who are covered by a collective bargaining agreement and employees who are not covered by a collective bargaining agreement.

(iv) For purposes of paragraph (f)(2)(i) of this section, the service crediting rules of paragraph (f)(1) of this section shall apply to a plan described in paragraph (f)(2)(i) of this section, except that in applying such rules the effective date determined under paragraph (f)(2)(i) of this section shall be substituted for the effective date determined under paragraph (f)(1) of this section. See paragraph (f)(1)(v) of this section for rules relating to the recognition of an hour of service.

(3) *Amendments to plans.* (i) Except as provided in paragraph (f)(3)(ii) of this section, plan amendments required by section 411 (b)(1)(H) and (b)(2) (the applicable sections) shall not be required to be made before the first plan year beginning on or after January 1, 1989, if the following requirements are met—

(A) The plan is operated in accordance with the requirements of the applicable section for all periods before the first plan year beginning on or after January 1, 1989, for which such section is effective with respect to the plan; and

(B) Such plan amendments are adopted no later than the last day of the first plan year beginning on or after January 1, 1989, and are made effective retroactively for all periods for which the applicable section is effective with respect to the plan.

(ii) In the case of a collectively bargained plan described in paragraph (f)(2)(i) of this section that satisfies the requirements of paragraph (f)(3)(i) of this section (as modified by this paragraph (f)(3)(ii)), paragraph (f)(3)(i) shall be applied by substituting for "the first plan year beginning on or after January 1, 1989," the first plan year beginning on or after the later of—

(A) January 1, 1989, or

(B) The date on which the last of such collective bargaining agreements terminate (determined without regard to any extension of any such agreement occurring on or after March 1, 1986).

However, notwithstanding the preceding sentence, section 411 (b)(1)(H) and (b)(2) shall be applicable to plans described in this paragraph (f)(3)(ii) no later than the first plan year beginning on or after January 1, 1990.

Par. 6. Section 1.411(c)–1 is amended by revising paragraph (f)(2) to read as follows:

§ 1.411(c)-1 Allocation of accrued benefits between employer and employee contributions.

* * * * *

(f) *Suspension of benefits,* etc. * * *

(2) *Employment after retirement after retirement.* Except as permitted by paragraph (f)(1) of this section, a defined benefit plan must make an actuarial adjustment to an accrued benefit the payment of which is deferred past normal retirement age. See, also, section 411(b)(1)(H0 (relating to continued accruals after normal retirement age) and § 1.411(b)–2.

Lawrence B. Gibbs,

Commissioner of Internal Revenue.

[FR Doc. 88–7860 Filed 4–8–88; 8:45 am]

BILLING CODE 4830-01-M

DEPARTMENT OF LABOR

Pension and Welfare Benefits Administration

29 CFR Part 2550

Loans to Plan Participants and Beneficiaries Who Are Parties in Interest With Respect to the Plan

AGENCY: Pension and Welfare Benefits Administration, Labor.

ACTION: Notice of hearing.

SUMMARY: Notice is hereby given that the Department of Labor will hold a hearing on April 25, 1988, regarding proposed regulations under section 408(b)(1) of Title I of the Employee Retirement Income Security Act of 1974 (ERISA or the Act), relating to loans to plan participants and beneficiaries who are parties in interest with respect to the plan. The proposed regulations were set forth in a notice of proposed rulemaking published in the **Federal Register** at 53 FR 1798 (January 22, 1988).

DATE: The hearing will be held on Monday, April 25, 1988, beginning at 9:00 a.m., e.s.t.

ADDRESSES: The hearing will be held in Room S–4215 of the Department of Labor Building, 200 Constitution Avenue NW., Washington, DC.

FOR FURTHER INFORMATION CONTACT: Susan E. Rees, Plan Benefits Security Division, Office of the Solicitor, U.S. Department of Labor, Washington, DC 20210, (202) 523–9141 (not a toll free number), or Kathy D. Lewis, Pension and Welfare Benefits Administration, U.S. Department of Labor, Washington, DC 20210, (202) 523–7901 (not a toll free number).

SUPPLEMENTARY INFORMATION: On January 22, 1988, the Department of Labor (the Department) published a notice of proposed rulemaking in the **Federal Register** (53 FR 1798) regarding loans to plan participants and beneficiaries under section 408(b)(1) of ERISA (29 U.S.C. 1108(b)(1)). In that notice the Department invited all interested persons to submit written comments concerning the proposed regulations on or before March 22, 1988. The Department has received a number of comments requesting a public hearing. In view of these requests, and the importance of the proposed regulations, the Department has decided to hold a hearing on the proposed regulations on April 25, 1988, beginning at 9:00 a.m., e.s.t., in Room S–4215 of the Department of Labor Building, 200 Constitution Avenue NW., Washington, DC.

Any interested person who wishes to be assured of an opportunity to present oral comments at the hearing should submit by 3:30 p.m., e.s.t., April 15, 1988: (1) A written request to be heard, and (2) an outline (preferably five copies) of the topics to be discussed, indicating the time allocated to each topic. The request to be heard and accompanying outline should be sent to the Office of Regulations and Interpretations, Pension and Welfare Benefits Administration, Room N–5671, U.S. Department of Labor, Washington, DC 20210, and marked "Attention: Section 408(b)(1) Hearing." Individuals who have not filed written comments regarding the proposed regulations may nonetheless submit a request to make oral comments at the hearing.

The Department will prepare an agenda indicating the order of presentation of oral comments. In the absence of special circumstances each commentator will be allotted ten minutes in which to complete his or her presentation. Information about the agenda may be obtained on or after April 20, 1988 by telephoning Kathy D. Lewis, Washington, DC, (202) 523–7901 (not a toll free number). Individuals not listed in the agenda will be allowed to make oral comments at the hearing to the extent time permits. Those individuals who make oral comments at the hearing should be prepared to answer questions regarding their comments. The hearing will be transcribed.

Notice of Public Hearing

Notice is hereby given that a public hearing will be held on Monday, April 25, 1988, regarding proposed regulations (published at 53 FR 1798, January 22, 1988) under section 408(b)(1) of ERISA relating to loans to plan participants and beneficiaries. The hearing will be held beginning at 9:00 a.m., e.s.t. in Room S–4215 of the Department of Labor Building, 200 Constitution Avenue NW., Washington, DC.

Signed at Washington, DC, this 6th day of April, 1988.

David M. Walker,

Assistant Secretary of Labor, Pension and Welfare Benefits Administration, United States Department of Labor.

[FR Doc. 88–7858 Filed 4–8–88; 8:45 am]

BILLING CODE 4510-29-M

---

29 CFR Part 2580

Proposed Regulation Exempting Certain Broker-Dealers and Investment Advisers From Bonding Requirements; Extension of Comment Period

AGENCY: Department of Labor.

ACTION: Notice of extension of comment period.

SUMMARY: This document extends the comment period regrding a proposed regulation under the Employee Retirement Income Security Act of 1974 (ERISA) which would provide certain broker-dealers and investment advisers with an exemption from the requirement for a bond set forth in section 412 of ERISA. The proposed regulation was set

forth in a notice of proposed rulemaking published in the **Federal Register** at 52 FR 31039 (August 19, 1987).

DATE: The comment period is extended through May 18, 1988.

ADDRESSES: Written comments (preferably at least three copies) should be submitted to the Office of Regulations and Interpretations, Pension and Welfare Benefits Administration, Room N-5671, U.S. Department of Labor, Washington, DC 20210, and marked "Attention: Proposed Bonding Regulation." All submissions will be available for public inspection in the Public Documents Room, Pension and Welfare Benefits Administration, Room N-5507, 200 Constitution Avenue NW., Washington, DC 20210.

FOR FURTHER INFORMATION CONTACT: Linda Shore, Office of Regulations and Interpretations, Pension and Welfare Benefits Administration, U.S. Department of Labor, Washington, DC 20210, (202) 523-7901 (not a toll free number).

SUPPLEMENTARY INFORMATION: On August 19, 1987, the Department of Labor, (the Department), published a notice of proposed rulemaking in the **Federal Register** (52 FR 31039) which would provide certain broker-dealers and investment advisers with an exemption from the requirement for a bond set forth in section 412 of ERISA. In that notice the Department invited all interested persons to submit written comments concerning the proposed regulation on or before October 19, 1987. On November 20, 1987 the Department published a notice in the **Federal Register** (52 FR 44610) extending the comment period for the proposed regulation through January 18, 1988.

The Department has received a request from the Securities Industry Association for additional time to prepare comments, and the Department believes that it is appropriate to grant such additional time. Accordingly, this notice extends the comment period during which comments on the proposed regulation will be received through May 18, 1988.

Notice of Extension of Comment Period

Notice is hereby given that the period of time for the submission of public comments on the proposed regulation exempting certain broker-dealers and investment advisers from the bond otherwise required under section 412 of ERISA (proposed at 52 FR 31039, August 19, 1987), is hereby extended through Wednesday, May 18, 1988.

Signed at Washington, DC, this 6th day of April, 1988.

David M. Walker,

Assistant Secretary of Labor, Pension and Welfare Benefits Administration, United States Department of Labor.

[FR Doc. 88-7857 Filed 4-8-88; 8:45 am]

BILLING CODE 4510-29-M

DEPARTMENT OF THE INTERIOR

Office of Surface Mining Reclamation and Enforcement

30 CFR Part 935

Ohio Permanent Regulatory Program; Public Comment Period and Opportunity for Public Hearing on Amendments; Coal Exploration

AGENCY: Office of Surface Mining Reclamation and Enforcement (OSMRE), Interior.

ACTION: Proposed rule.

SUMMARY: OSMRE is announcing the receipt of proposed amendments to the Ohio permanent regulatory program (hereinafter referred to as the Ohio program) under the Surface Mining Control and Reclamation Act of 1977 (SMCRA). The amendments concern the filing of notices of intent to conduct coal exploration operations and the issuance of coal exploration permits under the Ohio program.

This notice sets forth the times and locations that the Ohio program and proposed amendments to that program will be available for public inspection, the comment period during which interested persons may submit written comments on the proposed amendments, and the procedures that will be followed regarding the public hearing, if one is requested.

DATES: Written comments must be received on or before 4:00 p.m. on (May 11, 1988). If requested, a public hearing on the proposed amendments will be held at 1:00 p.m. on May 6, 1988. Requests to present oral testimony at the hearing must be received on or before 4:00 p.m. on April 26, 1988.

ADDRESSES: Written comments and requests to testify at the hearing should be mailed or hand delivered to Ms. Nina Rose Hatfield, Director, Columbus Field Office, at the address listed below. Copies of the Ohio program, the proposed amendments, and all written comments received in response to this notice will be available for public review at the addresses listed below during normal business hours, Monday through Friday, excluding holidays. Each requester may receive, free of charge, one copy of the proposed amendments by contacting OSMRE's Columbus Field Office.

Office of Surface Mining Reclamation and Enforcement, Columbus Field Office, 2242 South Hamilton Road, Room 202, Columbus, Ohio 43232, Telephone: (614) 866-0578.

Office of Surface Mining Reclamation and Enforcement, 1100 "L" Street, NW., Room 5131, Washington, DC 20240, Telephone: (202) 343-5492.

Ohio Department of Natural Resources, Division of Reclamation, Fountain Square, Building B-3, Columbus, Ohio 43224, Telephone: (614) 265-6675.

FOR FURTHER INFORMATION CONTACT: Ms. Nina Rose Hatfield, Director, Columbus Field Office, (614) 866-0578.

SUPPLEMENTARY INFORMATION:

I. Background

On August 16, 1982, the Secretary of the Interior conditionally approved the Ohio program. Information on the general background of the Ohio program submission and on subsequent revisions, modifications, and amendments to that program, including the Secretary's findings, the disposition of comments, and a detailed explanation of the conditions of approval of the Ohio program, can be found in the August 10, 1982 **Federal Register** (47 FR 34688). Subsequent actions concerning the conditions of approval and program amendments are identified at 30 CFR 935.11, 935.12, 935.15, and 935.16.

II. Discussion of the Proposed Amendments

By letter dated March 8, 1988 (Administrative Record No. OH-1019), the Ohio Department of Natural Resources, Division of Reclamation (ODNR) submitted proposed amendments to the Ohio program at Ohio Administrative Code (OAC) Section 1501:13-4-02. The proposed changes were initiated by Ohio and are briefly summarized below:

(1) The proposed amendments would modify OAC Section 1501:13-4-02(C)(1) to add a requirement that the person seeking to explore for coal give telephone notice on the date of commencement of any exploration activities to the Ohio Division of Reclamation district office having jurisdiction over the exploration area.

(2) The proposed amendments would modify OAC Section 1501:13-4-02(C)(1)(a) to add that exploratory operations involving only drilling activities are not considered substantial disturbance of the land surface unless

BEST COPY AVAILABLE

those activities affect lands designated as unsuitable for coal mining operations.

(3) The proposed amendments would modify OAC Section 1501:13-4-02(E)(2) to provide that notices of intent to explore shall expire on the first anniversary of the date of issuance unless a request for renewal is filed with the Ohio Division of Reclamation at least sixty days prior to the expiration date.

III. Public Comments Procedures

In accordance with the provisions of 30 CFR 732.17(h), OSMRE is now seeking comment on whether the amendments proposed by ODNR satisfy the applicable program approval criteria of 30 CFR 732.15. If the amendment are deemed adequate, they will become part of the Ohio program.

Written Comments

Written comments should be specific, pertain only to the issues proposed in this rulemaking, and include explanations in support of the commenter's recommendations. Comments received after the time indicated under "DATES" or at locations other than the Columbus Field Office will not necessarily be considered in the final rulemaking or included in the Administrative Record.

Public Hearing

Persons wishing to comment at the public hearing should contact the person listed under "FOR MORE INFORMATION CONTACT" by 4:00 p.m. on April 26, 1988. If no one requests an opportunity to comment at a public hearing, the hearing will not be held.

Filing of a written statement at the time of the hearing is requested as it will greatly assist the transcriber. Submission of written statements in advance of the hearing will allow OSMRE officials to prepare adequate responses and appropriate questions.

The public hearing will continue on the specified date until all persons scheduled to comment have been heard. Persons in the audience who have not been scheduled to comment and who wish to do so will be heard following those scheduled. The hearing will end after all persons scheduled to comment and persons present in the audience who wish to comment have been heard.

Public Meeting

If only one person requests an opportunity to comment at a hearing, a public meeting, rather than a public hearing, may be held. Persons wishing to meet with OSMRE representatives to discuss the proposed amendments may request a meeting at the Columbus Field Office by contacting the person listed under "FOR MORE INFORMATION CONTACT." All such meetings shall be open to the public and, if possible, notices of the meetings will be posted at the locations listed under "ADDRESSES." A written summary of each public meeting will be made a part of the Administrative Record.

List of Subjects in 30 CFR Part 935

Coal mining, Intergovernmental relations, Surface mining, Underground mining.

Date: March 22, 1988.

Jeffrey D. Jarrett,

Acting Assistant Director, Eastern Field Operations.

[FR Doc. 88-7822 Filed 4-8-88; 8:45 am]

BILLING CODE 4310-05-M

---

30 CFR Part 948

West Virginia Abandoned Mine Land Reclamation Plan, Public Comment Period on Amendment

AGENCY: Office of Surface Mining Reclamation and Enforcement (OSMRE), Interior.

ACTION: Proposed rule.

SUMMARY: OSMRE is announcing the receipt of proposed amendments to the West Virginia Abandoned Mine Land Reclamation (AMLR) Plan (hereinafter referred to as the West Virginia plan) under the Surface Mining Control and Reclamation Act of 1977 (SMCRA). The amendments concern modifications to reflect changes that have occurred in the State government and agency structure, public participation procedures, and a proposal to assume responsibility for administering an emergency reclamation program.

This notice sets forth the times and locations that the West Virginia plan and proposed amendments to that plan are available for public inspection, and the comment period during which interested persons may submit written comments on the proposed amendments.

DATES: Written comments must be received on or before 4:00 p.m. on May 11, 1988. If requested, a public hearing on the proposed amendments will be held at 1:00 p.m. on May 6, 1988; requests to present oral testimony at the hearing must be received on or before 4:00 p.m. on April 26, 1988.

ADDRESSES: Written comments should be mailed or hand delivered to: Mr. James C. Blankenship, Jr., Director, Charleston Field Office, at the address listed below. Copies of the West Virginia plan, the proposed changes to the plan, and the administrative record of the West Virginia plan are available for public review and copying at the OSMRE Offices and the State regulatory authority office listed below, Monday through Friday, 9:00 a.m. to 4:00 p.m., excluding holidays. Each requestor may receive free of charge, one copy of the proposed amendments by contacting the OSMRE, Charleston Field Office.

Office of Surface Mining Reclamation and Enforcement, Charleston Field Office, 603 Morris Street, Charleston, West Virginia 25301.

Office of Surface Mining Reclamation and Enforcement, Division of Abandoned Mine Lands, 1951 Constitution Avenue, NW., Room 122, Washington, DC 20240, Telephone: (202) 343-5365.

West Virginia Department of Energy, 1615 Washington Street, East, Charleston, West Virginia 25311, Telephone: (304) 348-3500.

FOR FURTHER INFORMATION CONTACT: Mr. James C. Blankenship, Jr., Director, Charleston Field Office, (304) 347-7164.

SUPPLEMENTARY INFORMATION:

I. Background

The Secretary of the Interior approved the West Virginia plan on February 23, 1981. Information pertinent to the general background, revisions, and amendments to the initial program submission, as well as the Secretary's findings and the disposition of comments can be found in the January 23, 1981 **Federal Register** (46 FR 7324-7327).

The Secretary has adopted regulations that specify the content requirements of a State Reclamation Plan and the criteria for plan approval (30 CFR Part 884). The regulations provide that a State may submit to the Director proposed amendments or revisions to the approved reclamation plan. If the amendments or revisions change the scope or major policies followed by the State in the conduct of its reclamation program, the Director must follow the procedures set out in 30 CFR 884.14 in approving or disapproving an amendment or revision. Subsequent actions taken with regard to the West Virginia plan can be found in 30 CFR 948.20 and 948.25.

II. Discussion of Amendments

By letter dated December 30, 1987, West Virginia submitted amendments to the West Virginia plan. The proposed amendments consist of revised narratives to replace several sections of the approved West Virginia plan as provided for by 30 CFR 884.13. Specifically, the following areas of the plan are being revised:

(1) Organization (30 CFR 884.13(d) (1) and (2)): West Virginia is proposing to update certain portions of its AMLR plan to reflect changes that have occurred in the State government and agency structure. The State has also submitted additional material that outlines the administration of a proposed State emergency reclamation program and the procedures for coordinating with OSMRE.

(2) Public participation (30 CFR 884.13(c)(7)): The State has proposed amending its public participation procedures by requiring a public hearing on proposed State AML grants at the State's Division of Abandoned Mine Lands office in Charleston, West Virginia rather than at every Regional Planning and Development Council.

Prior to submission of a construction grant application to OSMRE, the West Virginia Department of Energy will conduct at least one public meeting in Charleston, West Virginia to describe the grant submittal's contents. Additional public meetings may be conducted in other appropriate locations for specific sites in the grant application in the following cases:

(a) A proposed project is expected to cost over one million dollars.

(b) A proposed project is considered potentially sensitive or controversial.

(c) A request by local interests for an explanation of the proposed project.

All public meetings will be conducted as part of the grant submittal process. They will be announced via news releases and legal advertisements. The legal advertisements will be placed in newspapers with circulations in the locations of the proposed projects. The newspapers will comply with Chapter 59, Article 3 of the Code of West Virginia, and copies of the news releases and legal advertisements will be on file in the Office of the West Virginia Secretary of State.

(3) State emergency reclamation activities: On September 19, 1983, OSMRE informed the States and Tribes of the opportunity to amend their reclamation plans to include responsibility for administering emergency response reclamation activities (47 FR 42729–42730). For a State to undertake such activities as part of its reclamation program, it must demonstrate that it has the statutory authority to administer emergency reclamation activities, the technical capabilities to design and supervise emergency response work, and the appropriate procurement procedures to quickly respond to emergencies either directly or through contractors. The State of West Virginia has submitted material to demonstrate compliance with these requirements.

III. Public Comment Procedures

In accordance with the provisions of 30 CFR 884.15, OSMRE is now seeking comments on the adequacy of the amendments proposed by West Virginia, and whether the criteria for assumption of emergency response activities specified in 47 FR 42729–42730 (September 19, 1983), have been satisfied. If approved, the amendments would become part of the West Virginia plan.

Written Comments

Written comments should be specific, pertain only to the issues proposed in this rulemaking, and include explanations in support of the commenter's recommendations. Comments received after the time indicated under "DATES" or at locations other than the Charleston Field Office will not necessarily be considered in the final rulemaking or included in the Administrative Record.

Public Hearing

Persons wishing to comment at the public hearing should contact the person listed under "FOR FURTHER INFORMATION CONTACT" by 4:00 p.m. on April 26, 1988. If no one requests an opportunity to comment on a public hearing, the hearing will not be held.

Filing of a written statement at the time of the hearing is requested as it will greatly assist the transcriber. Submission of written statements in advance of the hearing will allow OSMRE officials to prepare adequate responses and appropriate questions.

The public hearing will continue on the specified date until all persons scheduled to comment have been heard. Persons in the audience who have not been scheduled to comment, and who wish to do so, will be heard following those scheduled. The hearing will end after all persons scheduled to comment and persons present in the audience who wish to comment have been heard.

Public Meeting

If only one person requests an opportunity to comment at a hearing, a public meeting, rather than a public hearing, may be held. Persons wishing to meet with OSMRE representatives to discuss the proposed amendments may request a meeting at the Charleston Field Office by contacting the person listed under "FOR FURTHER INFORMATION CONTACT." All such meetings will be open to the public and, if possible, notices of meetings will be posted at the location, listed under "ADDRESSES." A written summary of each meeting will be made a part of the Administrative Record.

List of Subjects in 30 CFR Part 948

Coal mining, Intergovernmental relations, Surface mining, Underground mining.

Date: March 28, 1988.

Alfred E. Whitehouse,

Acting Assistant Director, Eastern Field Operations.

[FR Doc. 88–7821 Filed 4–8–88; 8:45 am]

BILLING CODE 4310-05-M

ENVIRONMENTAL PROTECTION AGENCY

40 CFR Parts 116, 117, and 302

[SW H-FRL 3363-3]

Reportable Quantity Adjustments

AGENCY: U.S. Environmental Protection Agency (EPA).

ACTION: Proposed rule; extension of comment period.

SUMMARY: On March 2, 1988 (53 FR 6762), the U.S. Environmental Protection Agency (EPA) published a Notice of Proposed Rulemaking (NPRM) to adjust reportable quantities (RQs) for five substances listed as hazardous under the Comprehensive Environmental Response, Compensation, and Liability Act of 1980 (CERCLA). These five substances are: lead metal, lead acetate, lead phosphate, lead stearate, and lead sulfide. In the March 2, 1988 NPRM, EPA also provided an update on the RQ adjustment for methyl isocyanate, proposed to delist ammonium thiosulfate as a CERCLA hazardous substance, and proposed to replace the trademark "Kelthane" with the generic name, dicofol. EPA requested that public comments on the NPRM be submitted by April 1, 1988. Several requests for extension of this comment period have been received. The purpose of today's action is to extend the public comment period until April 15, 1988 to allow the public a greater opportunity to evaluate the issues involved in the March 2, 1988 NPRM.

DATES: Comments on the March 2, 1988 NPRM must be received on or before April 15, 1988.

ADDRESSES: Comments should be submitted in triplicate to Emergency Response Division, Superfund Docket Clerk, Attention: Docket Number 102 RQ–R2, Superfund Docket Room LG–100, U.S. Environmental Protection Agency, 401 M Street, SW., Washington,

DC 20460. Copies of materials relevant to the March 2, 1988 NPRM are available for inspection in Room LG-100 at the above address between the hours of 9:00 a.m. and 4:00 p.m., Monday through Friday, excluding Federal holidays. To review docket materials make an appointment by calling 1-202/382-3046. The public may copy a maximum of 50 pages from any regulatory docket at no cost. Additional copies cost $.20 per page.

FOR FURTHER INFORMATION CONTACT: Gerain H. Perry, Response Standards and Criteria Branch, Emergency Response Division (WH-548B), U.S. Environmental Protection Agency, 401 M Street, SW., Washington, DC 20460, or the RCRA/Superfund Hotline at 1-800/424-9346; in the Washington, DC metropolitan area at 1-202/382-3000.

Dated: April 5, 1988.

J. W. McGraw,

Acting Assistant Administrator.

[FR Doc. 88-7819 Filed 4-8-88; 8:45 am]

BILLING CODE 6560-50-M

---

40 CFR Part 302

[SWH-FRL-3363-2]

Reportable Quantity Adjustments

AGENCY: U.S. Environmental Protection Agency [EPA].

ACTION: Supplement to proposed rule.

SUMMARY: The purpose of this notice is to provide the public with new information and recent determinations that may affect reportable quantity (RQ) adjustments for certain CERCLA hazardous substances. RQ adjustments for these substances were proposed by the U.S. Environmental Protection Agency (EPA) On March 16, 1987 (52 FR 8140).

DATES: Comments must be received on or before May 11, 1988. Comments received after this date may not be considered because of the April 30, 1988 statutory deadline for promulgation of all final RQ adjustments.

ADDRESSES: Comments should be submitted in triplicate to Emergency Response Division, Superfund Docket Clerk, Attention: Docket Number 102 RQ-273C, Superfund Docket Room LG-100, U.S. Environmental Protection Agency, 401 M Street, SW., Washington, DC 20460. Copies of materials relevant to this notice are available for inspection at the same location between the hours of 9:00 a.m. and 4:30 p.m., Monday through Friday, excluding Federal holidays. As provided in 40 CFR Part 2, a reasonable fee may be charged for copying services.

FOR FURTHER INFORMATION CONTACT: Ivette O. Vega, Response Standards and Criteria Branch, Emergency Response Division (WH-548B), U.S. Environmental Protection Agency, 401 M Street, SW., Washington, DC 20460, or the RCRA/Superfund Hotline at 1-800/424-9346; in the Washington, DC metropolitan area at 1-202/382-3000.

SUPPLEMENTARY INFORMATION: In a Notice of Proposed Rulemaking (NPRM) published on March 16, 1987 (52 FR 8140), the U.S. Environmental Protection Agency (EPA) proposed to adjust reportable quantities (RQs) for 273 hazardous substances under section 102(a) of the Comprehensive Environmental Response, Compensation, and Liability Act of 1980 (CERCLA), as amended. Of the 23 hazardous substances proposed for adjustment, 269 substances were identified as potential carcinogens.

Currently, EPA is developing a final rule to promulgate RQ adjustments for these 273 hazardous substances. During this process, EPA has revised the proposed RQs for 18 potential carcinogens for reasons that became apparent after the March 16, 1987 NPRM and therefore were not made available for public comment in the NPRM. These 18 hazardous substances, their proposed RQs, and their revised RQs are listed in Table 1.

TABLE 1: PROPOSED RQ REVISIONS

Hazardous substance	Proposed RQ (lbs.)	Revised RQ (lbs.)
Acetamide, N-fluoren-2-yl	10	1
Acrylonitrile	10	100
Azaserine	10	1
Benz(c)acridine	10	100
Benzotrichloride	1	10
Chrysene	10	100
1,2-Dibromo-3-chloropropane	10	1
Dimethylaminoazobenzene	1	10
3,3'-Dimethlyenzidine	100	10
N-nitroso-N-ethylurea	10	1
1,2-Propylenimine	10	1
Vinyl chloride	10	1
F002	100	10
K019	10	1
K020	10	1
K028	10	1
K029	10	1
K096	10	100

Potency and Weight-of-Evidence Revisions

The RQ revisions for 15 of these 18 hazardous substances are based on potency factor recalculations, consideration of new weight-of-evidence and potency studies, and revisions to the orignal potency calculations.[1] The revised RQ profiles for these 15 hazardous substances are available for inspection in the public docket for the March 16, 1987 NPRM. The docket is contained in Room LG-100, U.S. EPA 401 M Street, SW., Washington, DC 20460 (docket number 102 RQ-273C). An explanation of the reasons for the potency and weight-of-evidence changes, and citations to the studies relied on by the Agency for these changes, are provided in the Technical Analysis Document to Support the Supplement to Proposed Rule: Reportable Quantity Adjustments, available for inspection at the same location.

Technical Revisions

RQs for two of the 18 hazardous substances listed in Table 1, waste streams F002 and K096, have been revised for technical reasons. Although a 100-pound RQ adjustment was proposed for waste stream F002 in the March 16, 1987 NPRM, EPA has decided to revise the proposed RQ adjustment for F002 to 10 pounds to be consistent with EPA's revised definition of this waste stream. A final rule published by EPA on December 31, 1985, broadened the definition of F002 to include (in addition to the wastes already listed as constituents of F002) "* * * all spent solvent mixtures/blends containing, before use, a total of ten percent or more (by volume) of one or more" of the substances listed in waste streams F001, F004, and F005 (50 FR 53315, 53319). In effect, the December 31, 1985 rule establishes a policy that all substances listed as constituents of waste streams F001, F004, and F005 are included as constituents of waste stream F002.[2]

Carbon tetrachloride is explicitly listed under waste stream F001, and benzene and 2-nitropropane are explicitly listed under waste stream F005.[3] Thus, under the policy announced

---

[1] These 15 hazardous substances are: Acetamide, N-fluoren-2-yl; azaserine; benz(c)acridine; benzotrichloride; chrysene; 1, 2-dibromo-3-chloropropane; dimethylaminoazobenzene; 3,3'-dimethylbenzidine; N-nitroso-N-ethylurea; 1,2-propylenimine; vinyl chloride; and waste streams K019, K020, K028, and K029.

[2] The change made by the December 31, 1985 rule to the definition of F002, as well as similar changes to the definitions of F001, F003, F004, and F005, allows EPA to regulate more comprehensively certain solvent mixtures. Previously, only high-concentration solvents before use (i.e., pure, technical grade, and practical grade) were covered. For a detailed discussion of the significance of this change and the scope of the revised definitions of waste streams F001, F002, F003, F004, and F005, see 50 FR 53315, December 31, 1985.

[3] Benzene and 2-nitropropane were added to waste stream F005 by a final rule published on

Continued

in the December 31, 1985 rule, these three hazardous substances are considered part of the definition of waste stream F002. EPA proposed 10-pound adjusted RQs for carbon tetrachloride, benzene, and 2-nitropropane in the March 16, 1987 NPRM. The public has had an opportunity to comment on the proposed RQ adjustments for these three constituents of waste stream F002. No comments were received on the proposed 10-pound RQs for benzene and 2-nitropropane, and the comments recevied on carbon tetrachloride do not appear to warrant a change in the proposd RQ. If the proposed 10-pound RQ adjustments for these three substances are promulgated, the final RQ adjustment for waste stream F002 also will be 10 pounds.

The RQ for waste stream K096 was erroneously proposed to be adjusted to 10 pounds in the March 16, 1987 NPRM. The lowest RQ of any of the hazardous constituents present in this waste stream is 100 pounds. Therefore, EPA has revised the proposed RQ adjustment for waste stream K096 to 100 pounds.

BHP Revision

With respect to the remaining substance, acrylonitrile, the Agency has decided that available data support application of the natural degradative processes of biodegradation, hydrolysis, and photolysis (BHP). As discussed in the March 16, 1987 NPRM (52 FR 8140), when a substance degrades to a less hazardous form by one or more of the BHP processes, its RQ is increased one level. The RQ for acrylonitrile was proposed to be adjusted to 10 pounds based on potential carcinogenicity, but its RQ is being revised to 100 pounds in this supplement due to the application of BHP. Although comments were received on the proposed 10-pound RQ for acrylonitrile, the comments do not address the BHP issue.

Dated: April 4, 1988.

J.W. McGraw,

Acting Assistant Administrator.

[FR Doc. 88-7818 Filed 4-8-88; 8:45 am]

BILLING CODE 6560-50-M

February 25, 1986 (51 FR 6537). The February 25, 1986 rule also added 1,1,2-trichloroethane to F002 and 2-ethoxyethanol to F005, but these two substances are not discussed above because their proposed RQs (100 and 1000 pounds, respectively) do not affect the RQ for waste stream F002.

Notices

Federal Register
Vol. 53, No. 69
Monday, April 11, 1988

This section of the FEDERAL REGISTER contains documents other than rules or proposed rules that are applicable to the public. Notices of hearings and investigations, committee meetings, agency decisions and rulings, delegations of authority, filing of petitions and applications and agency statements of organization and functions are examples of documents appearing in this section.

ADMINISTRATIVE CONFERENCE OF THE UNITED STATES

Special Committee on Ethics in Government and the Committee on Rulemaking; Public Meetings

SUMMARY: Pursuant to the Federal Advisory Committee Act (Pub. L. 92-463), notice is hereby given of meetings of the Special Committee on Ethics in Government and the Committee on Rulemaking of the Administrative Conference of the United States.

Committee: Special Committee on Ethics in Government.

Date: Tuesday, April 26, 1988 at 3:00 p.m.

Location: Library of the Administrative Conference, 2120 L Street NW., Suite 500, Washington, DC.

Agenda: The committee will meet to discuss ethics in government issues related to presidential transitions, such as the rules that should apply to transition team members and remedial actions required of presidential appointees.

Committee: Committee on Rulemaking.

Date: Wednesday, May 4, 1988 at 9:30 a.m.

Location: Library of the Administrative Conference, 2120 L Street NW., Suite 500, Washington, DC.

Agenda: The committee will meet to discuss possible recommendations on the subject of presidential supervision of agency rulemaking.

Public Participation: The committee meetings are open to the interested public, but limited to the space available. Persons wishing to attend should notify the contact person at least two days prior to the meeting. The committee chairman may permit members of the public to present oral statements at the meeting. Any member of the public may file a written statement with the committee before, during, or after the meeting. Minutes of the meeting will be available on request.

FOR FURTHER INFORMATION CONTACT: Michael W. Bowers, Office of the Chairman, Administrative Conference of the United States, 2120 L Street NW., Suite 500, Washington, DC 20037. Telephone: (202) 254-7065.

Dated: April 6, 1988.

Jeffrey S. Lubbers,

Research Director.

[FR Doc. 88-7859 Filed 4-8-88; 8:45 am]

BILLING CODE 6110-01-M

COMMISSION ON CIVIL RIGHTS

New York State Advisory Committee; Agenda and Notice of Public Meeting

Notice is hereby given, pursuant to the provisions of the Rules and Regulations of the U.S. Commission on Civil Rights, that a meeting of the New York State Advisory Committee to the Commission will convene at 4:00 p.m. and adjourn at 6:00 p.m. on April 28, 1988, in Room 130 of the Jacob K. Javits Federal Building, 26 Federal Plaza, New York, New York. The purpose of the meeting is to review the draft of a summary report of the Committee's November 1987 forum on the 1990 decennial census, to discuss civil rights issues in the State, and to select topics for monitoring and a project in 1988.

Persons desiring additional information, or planning a presentation to the Committee, should contact Committee Vice Chairperson Setsuko M. Nishi (718/780-5314, 212/790-4320) or John I. Binkley, Director of the Eastern Regional Division (202/523-5264; TDD 202/376-8117.) Hearing impaired persons who will attend the meeting and require the services of a sign language interpreter should contact the Regional Division at least five (5) working days before the scheduled date of the meeting.

The meeting will be conducted pursuant to the provisions of the rules and regulations of the Commission.

Dated at Washington, DC, March 31, 1988.

Susan J. Prado,

Acting Staff Director.

[FR Doc. 88-7801 Filed 4-8-88; 8:45 am]

BILLING CODE 6335-01-M

Washington Advisory Committee; Agenda and Notice of Public Meeting

Notice is hereby given, pursuant to the provisions of the Rules and Regulations of the U.S. Commission on Civil Rights, that the Washington Advisory Committee to the Commission will convene at 1:00 p.m. and adjourn at 4:00 p.m. on May 6, 1988, at the Red Lion, 18740 Pacific Highway South, Seattle, Washington 98188. The purpose of the meeting is to plan project activities for the new charter period and to discuss civil rights issues affecting the State of Washington.

Persons desiring additional information, or planning a presentation to the Committee, should contact Committee Chairperson, Sharon Bumala or Philip Montez, Director of the Western Regional Division (213) 894-3437, (TDD 213/894-0508). Hearing impaired persons who will attend the meeting and require the services of a sign language interpreter, should contact the Regional Division office at least five (5) working days before the scheduled date of the meeting.

The meeting will be conducted pursuant to the provisions of the rules and regulation of the Commission.

Dated at Washington, DC, April 6, 1988.

Susan J. Prado,

Acting Staff Director.

[FR Doc. 88-7827 Filed 4-8-88; 8:45 am]

BILLING CODE 6335-01-M

DEPARTMENT OF COMMERCE

Minority Business Development Agency

Business Development Center Program Applications; Norfolk, VA

April 4, 1988.

AGENCY: Minority Business Development Agency, Commerce.

ACTION: Notice.

SUMMARY: The Minority Business Development Agency (MBDA) announces that it is soliciting competitive applications under its Minority Business Development Center (MBDC) Program to operate an MBDC for a 3-year period, subject to available funds. The cost of performance for the first 12 months is estimated at $194,118

for the project performance of September 1, 1988 to August 31, 1989. The MBDC will operate in the Norfolk, Virginia, Metropolitan Statistical Area (MSA). The first year cost for the MBDC will consist of $165,000 in Federal Funds and a minimum of $29,118 in non-Federal funds (which can be a combination of cash, in-kind contribution and fees for services)

The funding instrument for the MBDC will be a cooperative agreement and competition is open to individuals, nonprofit and for-profit organizations, local and state governments, American Indian tribes and educational institutions.

The MBDC will provide management and technical assistance to eligible clients for the establishment and operation of businesses. The MBDC program is designed to assist those minority businesses that have the highest potential for success. In order to accomplish this, MBDA supports MBDC programs that can: Coordinate and broker public and private sector resources on behalf of minority individuals and firms; offer them a full range of management and technical assistance; and serve as a conduit of information and assistance regarding minority business.

Applications will be judged on the experience and capability of the firm and its staff in addressing the needs of minority business individuals and organizations; the resources available to the firm in providing management and technical assistance; the firm's proposed approach to performing the work requirements included in the application; and the firm's estimated cost for providing such assistance. It is advisable that applicants have an existing office in the geographic region for which they are applying.

The MBDC will operate for a 3-year period with periodic reviews culminating in annual evaluations to determine if funding for the project should continue. Continued funding will be at the discretion of MBDA based on such factors as an MBDC's satisfactory performance, the availability of funds, and Agency priorities.

Closing Date: The closing date for applications is May 24, 1988. Applications must be postmarked on or before May 24, 1988.

ADDRESS: Washington Regional Office, Minority Business Development Agency, U.S. Department of Commerce, Room 6711, Washington, DC 20230 202/377-8280.

FOR FURTHER INFORMATION CONTACT: Willie J. Williams, Regional Director, Washington Regional Office.

SUPPLEMENTARY INFORMATION: Questions concerning the preceding information, copies of application kits and applicable regulations can be obtained at the above address.

(11.800 Minority Business Development Catalog of Federal Domestic Assistance)

Willie J. Williams,

Regional Director, Washington Regional Office.

Date: April 4, 1988.

[FR Doc. 88-7825 Filed 4-8-88; 8:45 am]

BILLING CODE 3510-21-M

National Oceanic and Atmospheric Administration

Coastal Zone Management, Federal Consistency Appeal by the City of Ponce from an Objection by the Puerto Rico Planning Board

AGENCY: National Oceanic and Atmospheric Administration, Commerce.

ACTION: Dismissal of appeal.

On July 13, 1987, the City of Ponce, Puerto Rico (Appellant) filed with the Secretary of Commerce of Notice of Appeal under section 307(c)(3)(A) of the Coastal Zone Management Act of 1972, 16 U.S.C. 1456(c)(3)(A), and the Department of Commerce's implementing regulations, 15 CFR Part 930, Subpart H (1987). The appeal is taken from an objection by the Puerto Rico Planning Board to the Appellant's consistency certification for U.S. Army Corps of Engineers Permit Application No. 87IPM-20069, under section 10 of the River and Harbor Act of 1899, for an after-the-fact permit to fill wetlands for construction of an industrial park in Ponce, Puerto Rico.

The Puerto Rico Planning Board informed the Department of Commerce that the Puerto Rico Planning Board no longer objects to the Appellant's project provided that the Appellant performs specific mitigation measures. The Appellant has orally expressed a willingness to comply with these mitigation measures. The Appellant did not file its supporting data within the required period.

The Secretary has dismissed the appeal for good cause pursuant to 15 CFR 930.128. The City of Ponce is barred from filing another appeal from the Puerto Rico Planning Board's objection to the aforementioned activities.

FOR ADDITIONAL INFORMATION CONTACT: Cynthia L. Mackey, Attorney-Adviser, Office of the Assistant General Counsel for Ocean Services, National Oceanic and Atmospheric Administration, U.S. Department of Commerce, 1825 Connecticut Avenue, NW., Suite 603, Washington, DC 20235, (202) 673-5200.

(Federal Domestic Assistance Catalog No. 11.419 Coastal Zone Management Program Assistance)

Date: April 6, 1988.

James W. Brennan,

Acting General Counsel.

[FR Doc. 88-7876 Filed 4-8-88; 8:45 am]

BILLING CODE 3510-08-M

Coastal Zone Management; Federal Consistency Appeal by Long Island Lighting Company From an Objection by the New York Department of State

AGENCY: National Oceanic and Atmospheric Administration, Commerce.

ACTION: Notice of decision.

SUMMARY: Long Island Lighting Company (LILCO) owns and operates the Shoreham Nuclear Power Station (SNPS) located at Shoreham, Long Island, New York. In conjunction with the construction of SNPS, and pursuant to a series of permits issued by the U.S. Army Corps of Engineers (Corps), LILCO performed periodic maintenance dredging of Wading River Creek and the SNPS intake canal, and maintenance of the intake canal's two stone jetties between 1968 and 1985. The last Corps permit for these activities expired in June, 1985. On March 20, 1986, LILCO applied to the Corps for a permit to peform the same dredging and jetty maintenance activities that had been carried out since 1968.

On April 16, 1986, LILCO submitted to the New York Department of State (New York or State) a consistency certification for the proposed dredging and jetty maintenance project for the State's review under section 307(c)(3)(A) of the Coastal Zone Management Act of 1972, as amended (CZMA), 16 U.S.C. 1456(c)(3)(A). On October 20, 1986, New York objected to LILCO's consistency certification for its proposed dredging and jetty maintenance project on the ground that LILCO had supplied the State with insufficient information upon which a consistency determination could be made. Under CZMA section 307(c)(3)(A) and 15 CFR 930.131 (1987), the State's consistency objection precludes Federal agencies from issuing any permit or license necessary for LILCO's proposed activity to proceed, unless the Secretary of Commerce finds that the objected-to activity may be Federally approved because it is consistent with the objectives of the CZMA (Ground I) or is otherwise

necessary in the interest of national security (Ground II).

On November 19, 1986, in accordance with CZMA section 307(c)(3)(A) and 15 CFR Part 930, Subpart H (1987), LILCO filed with the Secretary of Commerce a notice of appeal from New York's objection to its consistency determination for the proposed dredging and jetty maintenance project. On February 26, 1988, the Secretary, upon consideration of the information submitted by LILCO, the State, and Federal agencies as well as other information in the administrative record of the appeal, made the following findings pursuant to 15 CFR 930.121 (1987):

Ground I

(a) LILCO's proposed project promotes (1) development and protection of coastal resources and (2) coastal access for recreational purposes, and thereby furthers one or more of the competing national objectives or purposes contained in section 302 or 303 of the CZMA.

(b) The proposed project will not cause adverse effects on the resources of the coastal zone substantial enough to outweigh its contribution to the national interest.

(c) The proposed project will not violate the Clean Air Act or the Clean Water Act.

(d) There is no reasonable alternative available to LILCO that would permit the proposed project to be carried out in a manner consistent with the New York Coastal Management Program.

Conclusion

Because the Secretary has found that LILCO has satisfied the first of the two alternative grounds set forth in the CZMA for allowing the objected-to activity to proceed notwithstanding an objection by the State, LILCO's proposed dredging and jetty maintenance project may be permitted by Federal agencies. Further, because LILCO's proposed project has satisfied Ground I, it is not necessary to address Ground II.

For Additional Information Contact: Sydney Anne Minnerly, Attorney-Adviser, Office of the Assistant General Counsel for Ocean Services, National Oceanic and Atmospheric Administration, U.S. Department of Commerce, 1825 Connecticut Avenue NW., Suite 603, Washington, DC 20235, (202) 673-5200.

(Federal Domestic Assistance Catalog No. 11.419 Coastal Zone Management Program Assistance)

Date: April 5, 1988.

James W. Brennan,

Acting General Counsel.

[FR Doc. 88-7877 Filed 4-8-88; 8:45 am]

BILLING CODE 3510-08-M

Coastal Zone Management; Federal Consistency Appeal by John K. DeLyser From an Objection by the New York Department of State

AGENCY: National Oceanic and Atmospheric Administration, Commerce.

ACTION: Notice of Decision.

SUMMARY: John K. DeLyser (Appellant) owns waterfront property on LeRoy Island in Sodus Bay, Lake Ontario, Huron, New York. In February, 1986, the Appellant applied for and received from the Army Corps of Engineers (Corps) a permit to construct a dock and boathouse on piles in Sodus Bay. The permit contained several conditions, including a prohibition on construction of boathouses with living quarters. Construction began in April and continued into the summer. In July, the Corps became aware that the Appellant was constructing living quarters in the boathouse. Consequently, the Corps ordered Mr. DeLyser to stop all construction. The Corps then allowed the Appellant to submit an application for an after-the-fact permit, which would authorize inclusion of the residential unit in the dock and boathouse project approved earlier.

On August 18, 1986, Mr. DeLyser submitted to the Corps a consistency certification for the proposed activity for the State of New York's (State of New York) review under section 307(c)(3)(A) of the Coastal Zone Management Act of 1972, as amended (CZMA), 16 U.S.C. 1456(c)(3)(A). On December 8, 1986, the State objected to Mr. DeLyser's consistency certification for his project on the ground that the inclusion of the residence in the project violates the State Coastal Management Program's policy of giving priority in the coastal zone to water dependent uses. As an alternative, the State suggested that Mr. DeLyser construct the residence on the upland portion of his property. Under CZMA section 307(c)(3)(A) and 15 CFR 930.131 (1987), the State's consistency objection precludes Federal agencies from issuing any permit or license necessary for the Appellant's proposed activity to proceed, unless the Secretary of Commerce finds that the objected-to activity may be Federally approved because it is consistent with the objectives of the CZMA (Ground I) or is otherwise necessary in the interest of national security (Ground II).

On January 8, 1987, in accordance with CZMA section 307(c)(3)(A) and 15 CFR Part 930, Subpart H (1987), the Appellant, pleading Ground I, filed with the Secretary of Commerce a notice of appeal from the State's objection to his consistency certification for the residential portion of the project. On February 26, 1988, the Secretary, upon consideration of the information submitted by Mr. DeLyser, the State, Federal agencies and members of the public, as well as other information in the administrative record of the appeal, found, pursuant to 15 CFR 930.121 (1987), that the residential component of Mr. DeLyser's project does not further the objectives or purposes of the CZMA. Accordingly, the requirements of Ground I are not met, and the Secretary, therefore, will not override the State of New York's objection to Mr. DeLyser's consistency certification. This decision will preclude the Corps and other Federal agencies from issuing and permits for the residential component of the Appellant's project.

For Additional Information Contact: Sydney Anne Minnerly, Attorney-Adviser, Office of the Assistant General Counsel for Ocean Services, National Oceanic and Atmospheric Administration, U.S. Department of Commerce, 1825 Connecticut Avenue, NW., Suite 603, Washington, DC 20235, (202) 673-5200.

(Federal Domestic Assistance Catalog No. 11.419 Coastal Zone Management Program Assistance)

Dated: April 5, 1988.

James W. Brennan,

Acting General Counsel.

[FR Doc. 88-7878 Filed 4-8-88; 8:45 am]

BILLING CODE 3510-08-M

Marine Mammals; Application for Permit: Dr. Douglas Wartzok (P375A)

Notice is hereby given that an Applicant has applied in due form for a Permit to take marine mammals as authorized by the Marine Mammal Protection Act of 1972 (16 U.S.C. 1361-1407), and the Regulations Governing the Taking and Importing of Marine Mammals (50 CFR Part 216).

1. *Applicant:* Dr. Douglas Wartzok, Professor and Chairman, Department of Biological Sciences, Purdue University, Fort Wayne, Indiana 46805-1499.

2. *Type of Permit:* Scientific Research.

3. *Name and Number of Marine Mammals:* Weddell seals (*Leptonychotes weddelli*), 110.

4. *Type of Take:* The Applicant proposes to capture, temporarily restrain, release, recapture and release Weddell seals during scientific studies. Up to 20 will be taken annually to investigate the contribution of various sensory modalities to the seals ability to find breathing holes when blindfolded. Monitoring of the seals under ice will be by camcorder. Seals will be fitted with padded anklets to which either an acoustic pinger or a tether will be attached to aid in seal recovery if needed. Although accidental deaths are not anticipated, and none have occurred in similar experiments on ringed seals, the Applicant has requested a take by accidental death of up to three seals annually. An additional 10 seals taken during the first year of research only, will be temporarily restrained so that blood samples may be taken to be used in a study of the hemorheological properties of seals. All seals will be released in the vicinity of the capture site.

5. *Location and Duration of Activity:* McMurdo Sound, Antarctica over a 5-year period.

Concurrent with the publication of this notice in the **Federal Register**, the Secretary of Commerce is forwarding copies of this application to the Marine Mammal Commission and the Committee of Scientific Advisors.

Written data or views, or requests for a public hearing on this application should be submitted to the Assistant Administrator for Fisheries, National Marine Fisheries Service, U.S. Department of Commerce, Washington, DC 20235, within 30 days of the publication of this notice. Those individuals requesting a hearing should set forth the specific reasons why a hearing on this particular application would be appropriate. The holding of such hearing is at the discretion of the Assistant Administrator for Fisheries. All statements and opinions contained in this application are summaries of those of the Applicant and do not necessarily reflect the views of the National Marine Fisheries Service.

Documents submitted in connection with the above application are available for review by interested persons in the following offices:

Office of Protected Resources and Habitat Programs, National Marine Fisheries Service, 1825 Connecticut Avenue NW., Rm. 805, Washington, DC; and

Director, Northeast Region, National Marine Fisheries Service, Federal Building, 14 Elm Street, Gloucester, Massachusetts 01930.

Date: March 5, 1988.

Nancy Foster,

Director, Office of Protected Resources and Habitat Programs, National Marine Fisheries Service.

[FR Doc. 88-7837 Filed 4-8-88; 8:45 am]

BILLING CODE 3510-22-M

COMMITTEE FOR THE IMPLEMENTATION OF TEXTILE AGREEMENTS

Adjustment of an Import Limit for Certain Cotton Textile Products Produced or Manufactured in Sri Lanka

April 5, 1988.

AGENCY: Committee for the Implementation of Textile Agreements (CITA).

ACTION: Issuing a directive to the Commissioner of Customs adjusting a limit.

EFFECTIVE DATE: April 5, 1988.

AUTHORITY: Executive Order 11651 of March 3, 1972, as amended; section 204 of the Agricultural Act of 1956, as amended (7 U.S.C.1854).

FOR FURTHER INFORMATION CONTACT: Kimbang Pham, International Trade Specialist, Office of Textiles and Apparel, U.S. Department of Commerce, (202) 377-4212. For information on the quota status of this limit, refer to the Quota Status Reports, posted on the bulletin boards of each Customs port of call (202) 343-6580. For information on embargoes and quota re-openings, call (202) 377-3715.

SUPPLEMENTARY INFORMATION: The limit and sublimit for Category 339 are being increased for special carryforward for the period January 1, 1988 through May 31, 1988.

A description of textile categories in terms of T.S.U.S.A. numbers is available in the CORRELATION: Textile and Apparel Categories with Tariff Schedules of the United States Annotated (see **Federal Register** notice 52 FR 47745, dated December 11, 1987). Also see 52 FR 18413, published on May 15, 1987 and 53 FR 52 and 53 FR 53, published on January 4, 1988.

The letter to the Commissioner of Customs and the actions taken pursuant to it are not designed to implement all of the provisions of the bilateral agreement, but are designed to assist only in the implementation of certain of its provisions.

James H. Babb,

Chairman, Committee for the Implementation of Textile Agreements.

Committee for the Implementation of Textile Agreements

April 5, 1988.

Commissioner of Customs,
Department of the Treasury,
Washington, DC 20229.

Dear Mr. Commissioner: This directive amends, but does not cancel, the directive issued to you on December 30, 1987 by the Chairman, Committee for the Implementation of Textile Agreements, concerning imports into the United States of certain cotton and man-made fiber textile products, produced or manufactured in Sri Lanka and exported during the period which began on January 1, 1988 and extends May 31, 1988.

Effective on April 5, 1988, the directive of December 30, 1987 is hereby amended to adjust the following limit and sublimit, as provided under the terms of the bilateral agreement of May 10, 1983, as amended:

Category	Adjusted Limit [1]
339	194,753 dozen of which not more than 146,065 dozen shall be in other than tank tops and T-shirts.[2]

[1] The limit and sublimit have not been adjusted to account for any imports exported after December 31, 1987.

[2] In Category 339pt., all TSUSA numbers except 384.0205, 384.0207, 384.0212, 384.0220, 384.0221, 384.2806, 384.2810, 384.2814, 384.2914 and 384.2915.

Also effective on April 5, 1988 you are directed to deduct 52,652 dozen from the charges made to the current limit for Category 339. This same amount is to be charged to the limit established in the directive of May 22, 1986 for Category 339 for the period June 1, 1986 through May 31, 1987.

The Committee for the Implementation of Textile Agreements has determined that these actions fall within the foreign affairs exception to the rulemaking provisions of 5 U.S.C. 553(a)(1).

Sincerely,

James H. Babb,

Chairman, Committee for the Implementation of Textile Agreements.

[FR Doc. 88-7842 Filed 4-8-88; 8:45 am]

BILLING CODE 3510-DR-M

COPYRIGHT ROYALTY TRIBUNAL

[CRT Docket No. 87-2-85CD]

Cable Royalty Fund Fees; Distribution Proceedings Amendment

AGENCY: Copyright Royalty Tribunal.

ACTION: Notice of Amendment of Final Determination.

SUMMARY: The Tribunal is amending its final determination of the distribution of the 1985 cable royalty fund based upon a motion filed by National Association of Broadcasters and supported by the Motion Picture Association of America, Inc. and Multimedia Entertainment, Inc.

FOR FURTHER INFORMATION CONTACT: Robert Cassler, General Counsel, Copyright Royalty Tribunal, 1111 20th Street NW., Suite 450, Washington, DC 20036, 202-653-5175.

SUPPLEMENTARY INFORMATION: Subsequent to the publication in the **Federal Register** of the Tribunal's Notice of Final Determination of the 1985 Cable Royalty Distribution Proceeding (53 FR 7132, March 4, 1988), the Tribunal received a motion from the National Association of Broadcasters (NAB) with the authorization of Motion Picture Association of America, Inc. (MPAA) and Multimedia Entertainment, Inc. (Multimedia), to amend the final allocation of the Phase II awards in the Program Suppliers category, to reflect that the Phase II parties had agreed to an award of 0.7% for NAB, and that the previous final allocation which read, "MPAA—99.175%, Multimedia—0.825%, NAB—0.7%." The Tribunal so orders the amendment to be made.

J.C. Argetsinger,
Acting Chairman.

Dated: April 6, 1988.

[FR Doc. 88-7856 Filed 4-6-88; 8:45 am]

BILLING CODE 1410-09-M

DEPARTMENT OF DEFENSE

Public Information Collection Requirement Submitted to OMB for Review

Action: Notice.

The Department of Defense has submitted to OMB for clearance the following proposal for collection of information under the provisions of the Paperwork Reduction Act (44 U.S.C. Chapter 35).

Title, Applicable Form, and Applicable OMB Control Number: DoD FAR Supplement Part 14, and Related Clauses in Part 52.214; DD Form 1630 (published in Supplement 4); and OMB Control Number 0704-0215.

Type of Request: Extension of existing approval.

Annual Burden Hours: 600.

Annual responses: 1,200.

Needs and Uses: Information concerns certain data required to support use of the formal advertising method of contracting, including requirements for placement on research and Development Bidder's Lists.

Affected Public: Businesses or others for profit/small businesses or organizations.

Frequency: Recordkeeping-On Occasion.

Respondent's Obligation: Manadatory.

OMB Desk Officer: Mr. Edward Springer.

Written comments and recommendations on the proposed information collection should be sent to Mr. Edward Springer at Office of Management and Budget, Desk Officer, Room 3235, New Executive Office Building, Washington, DC 20503.

DOD Clearance Officer: Ms. Pearl Rascoe-Harrison.

A copy of the information collection proposal may be obtained from, Ms. Rascoe-Harrison WHS/DIOR, 1215 Jefferson Davis Highway, Suite 1204, Arlington, Virginia 22202-4302, telephone (202) 746-0933.

L.M. Bynum,
Alternate OSD Federal Register Liaison Officer, Department of Defense.

April 5, 1988.

[FR Doc. 88-7814 Filed 4-8-88; 8:45 am]

BILLING CODE 3810-01-M

Public Information Collection Requirement Submitted to OMB for Review

Action: Notice.

The Department of Defense has submitted to OMB for clearance the following proposal for collection of information under the provisions of the Paperwork Reduction Act (44 U.S.C. Chapter 35).

Title, Applicable Form, and Applicable OMB Control Number: A. Tender of Service—Mobile Homes, B. Letter of Intent—Mobile Homes, C. Accessorial Services—Mobile Homes; FIG E-1 (Tender/Letter of Intent) and DD Form 1863; and OMB Control Number 0704-0056.

Type of Request: Extention.

Annual Burden Hours: 852.

Annual Responses: 1,677.

Needs and Uses: Since mobile homes are moved at the Government's expense, data is needed to choose the best service at the lowest cost. Data provided by the carriers state the type of serivce being offered, ability to perform the service and rate to be charged.

Affected Public: Businesses or others for profit/small businesses or organizations.

Frequency: On Occasion.

Respondent's Obligation: Required to obtain or retain a benefit.

OMB Desk Officer: Mr. Edward Springer.

Written comments and recommendations on the proposed information collection should be sent to Mr. Edward Springer at Office of Management and Budget, Desk Officer, Room 3235, New Executive Office Building, Washington, DC 20503.

DOD Clearance Officer: Ms. Pearl Rascoe-Harrison.

A copy of the information collection proposal may be obtained from, Ms. Rascoe-Harrison WHS/DIOR, 1215 Jefferson Davis Highway, Suite 1204, Arlington, Virginia 22202-4302, telephone (202) 746-0933.

L.M. Bynum,
Alternate OSD Federal Register Liaison Officer, Department of Defense.

April 5, 1988.

[FR Doc. 88-7815 Filed 4-8-88; 8:45 am]

BILLING CODE 3810-01-M

Public Information Collection Requirement Submitted to OMB for Review

Action: Notice.

The Department of Defense has submitted to OMB for clearance the following proposal for collection of information under the provisions of the Paperwork Reduction Act (44 U.S.C. Chapter 35).

Title, Applicable Form, and Applicable OMB Control Number: Application for Appointment as Reserves of the Air Force or USAF Without Component; AF Form 24; and OMB Control Number 0701-0096.

Type of Request: Extension.

Annual Burden Hours: 2,666.

Annual Responses: 8,000.

Needs and Uses: The Air Force uses AF Form 24 to collect information from applicants for direct appointment programs as Reserves of the Air Force or during time of war or National emergency as USAF Without Component. Air Force selection committees use the information to help determine the applicants' suitability for commissioning.

Affected Public: Applicants for Air Force Commissions.

Frequency: On Occasion.

Respondent's Obligation: Required to obtain or retain a benefit.

OMB Desk Officer: Mr. Edward Springer.

Written comments and recommendations on the proposed information collection should be sent to Mr. Edward Springer at Office of Management and Budget, Desk Officer, Room 3235, New Executive Office Building, Washington, DC 20503.

DOD Clearance Officer: Ms. Pearl Rascoe-Harrison.

A copy of the information collection proposal may be obtained from, Ms. Rascoe-Harrison WHS/DIOR, 1215 Jefferson Davis Highway, Suite 1204, Arlington, Virginia 22202-4302, telephone (202) 746-0933.

L.M. Bynum,

Alternate OSD Federal Register Liaison Officer, Department of Defense.

April 5, 1988.

[FR Doc. 88-7816 Filed 4-8-88; 8:45 am]

BILLING CODE 3810-01-M

Pilot Program for Military Family Housing

ACTION: Notice of fund availability and application instructions.

SUMMARY: Funds have been appropriated for fiscal year 1988 for the Department of Defense (DOD) to carry out the Pilot Program for Military Family Housing. The purpose of this program is to increase the amount of affordable family housing available to military personnel in communities severely impacted by the presence of military bases and personnel. DOD is soliciting applications for funding under the program. The application instructions are based on the enabling legislation and DOD policies and procedures which contain the key requirements for all applicants to follow in seeking funding from DOD.

DATES: Applications will be accepted from April 11, 1988 to June 17, 1988.

ADDRESS: For further information contact: Renee Anderson, Office of Economic Adjustment, Office of the Secretary of Defense, OASD (FM&P) RM&S, Pentagon Room 4C767, Washington, DC 20301-4000. (202) 697-1768.

SUPPLEMENTARY INFORMATION:

Pilot Program for Military Family Housing

I. Introduction

Section 2321 of the DOD Military Construction Authorization Act of 1988 and 1989 (Pub. L. 100-180, Title II, Section 2321) established the Pilot Program for Military Family Housing. The DOD Appropriation Act of 1988 (Pub. L. 100-498) appropriated $1,000,000 to carry out this authority. The purpose of the program is to provide assistance to units of general local governments to increase, or prevent the decrease, of affordable housing available to military families in communities severely impacted by the presence of military installations and personnel.

II. Who May Apply and What Can Be Funded

DOD may accept applications from the award funds to:

(1) Units of general local government in areas severely impacted by the presence of military installations;

(2) Housing and redevelopment authorities authorized by such units of general local government;

(3) Nonprofit housing corporations authorized by such units of general local governments.

Funds will not be awarded to profit-making organizations.

Military installations include active DOD posts, bases, or stations with Army, Navy, Air Force, or Marine Corps military personnel. The Secretary of Defense shall make the final determination as to whether a community is severely impacted by the presence of a military installation or personnel, and whether there is a need for affordable housing for military families within the community.

Types of Awards

DOD may make grants, enter into cooperative agreements, and supplement funds made available under Federal programs administered by agencies other than DOD. Awards will be competitive and discretionary to eligible applicants. DOD has set July 1, 1988 as its target date for award decisions.

Anticipated Grant Range: $50,000-$200,000.

What Activities May be Funded

Funds available under this program may be used for:

(1) A revolving housing loan fund established and administered by a government, authority or corporation;

(2) A housing loan guarantee fund established and administered by such a government, authority, or corporation to ensure repayment of housing loans made by a private lender;

(3) Feasibility studies of potential housing programs;

(4) One-time start-up costs of housing programs;

(5) Joint community-military technical advisory organizations;

(6) Other similar and related activities as determined by the Secretary of Defense to support the development of affordable housing for military families.

III. Selection Criteria for Awards

DOD will use the following criteria for evaluating applications and making awards:

(1) The extent, or the potential extent, of a joint civilian-military effort to increase or prevent the decrease of affordable housing units in the community served by the local government;

(2) The extent of willingness, or potential extent of willingness, of private organizations to contribute or loan money for the purpose of assisting in the effort;

(3) A commitment by the local government to assure that a reasonable proportion, taking into consideration the extent of Federal funding, of the housing units provided as a result of the effort, will be made available to military personnel;

(4) The feasibility of the proposed effort;

(5) The capacity of the applicant to carry out the proposed activity;

(6) The inadequacy of existing state and local resources to support affordable housing development initiatives for military families;

(7) The degree of need and urgency for affordable housing for military families in the community.

IV. Submission Procedures and Closing Dates for Receipt of Applications

A complete application package consists of Standard Form 424 (SF 424) and all attachments, including Part V, Sections 1 through 5—proposal narrative of no more than 5 typed pages, project management plan, and staff and institutional qualifications. The proposal narrative is a key element in all applications and should include: (1) A brief description of the proposed project; (2) the proposed activities; (3) the project's intended outcome. The narrative should also describe how the proposed project meets the selection criteria described above.

If the applicant is a housing and redevelopment authority or nonprofit corporation, the application must also include a statement by the Chief Executive Officer of the appropriate unit of general local government that the proposed activities are not inconsistent with local housing and community development plans or programs.

The closing date for receipt of applications is June 17, 1988. Late applications will not be accepted.

Applications are subject to the intergovernmental review requirements of Executive Order 12372 and DOD's implementing regulations at 32 CFR Part 243.

Mailing Address and Telephone

Office of Economic Adjustment, Office of the Secretary of Defense, OASD(FM&P)RM&S, Pentagon Room 4C767, Washington, DC 20301-4000 Attn:

Housing Grant Program. Telephone (202) 697-1768.

Number of Copies of Final Proposal

All applicants must submit one (1) signed original application and four (4) copies. Each copy must be covered with a signed Standard Form 424.

V. Grantee Responsibilities

The following laws, regulations, and procedures apply to applicants for and recipients of funding:

(1) The National Defense Authorization Act for Fiscal Years 1988 and 1989.

(2) The applicable Office of Management and Budget Circulars (A-87, A-122, A-102 revised March 11, 1988, A-110, and A-128).

(3) The grant agreement.

The grantee must carry out activities assisted under the program in compliance with public laws prohibiting discrimination because of race, color, national origin, sex, handicap, and age in programs and activities receiving Federal assistance.

Linda M. Bynum,

Alternate OSD Federal Register Liaison Officer, Department of Defense.

[FR Doc. 88-7813 Filed 4-8-88; 8:45 am]

BILLING CODE 3810-01-M

Defense Logistics Agency

Privacy Act of 1974; Notice of a New Continuing Computer Matching Program Between the Department of Defense (DoD) and the Department of Health and Human Services (HHS).

AGENCY: Defense Manpower Data Center (DMDC), Defense Logistics Agency (DLA), Department of Defense (DoD).

ACTION: This action constitutes notice for any public comment on a proposed new ongoing computer matching program between the Department of Defense (DoD) and the Department of Health and Human Services (HHS) for debt collection purposes under the Debt Collection Act of 1982 (Pub. L. 97-365). The HHS component participating in this proposed action is the Health Resources and Services Administration (HRSA) of the Public Health Service.

SUMMARY: The Department of Defense, under an interagency agreement with the Office of Management and Budget (OBM), Department of the Treasury and the Office of Personnel Management (OPM), announces a proposal to match by computer DoD employment records of active and retired military members, including the Reserve and Guard; the OPM government-wide Federal active and retired civilian records with the records of individuals who are delinquent debtors to the U.S. Government under certain programs administrated by the Department of Health and Human Services (HHS).

The purpose of the computer match is to identify and locate HHS delinquent debtors who are receiving Federal salary or benefit payments so as to permit HHS to pursue and collect the debt by voluntary repayment or by administrative or salary offset procedures against the debtors under the provisions of the Debt Collection Act of 1982 (Pub. L. 97-365).

DATES: This proposed action will be effective without further notice on April 11, 1988, unless comments are received which would result in contrary determination.

ADDRESS: Send written comments to Mr. Robert J. Brandewie, Deputy Director, Defense Manpower Data Center, Suite 200, 550 Camino El Estero, Monterey, CA 93940-3231. Telephone: (408) 646-4131; Autovon: 878-2951.

FOR FURTHER INFORMATION CONTACT: Mr. Aurelio Nepa, Jr., Staff Director, Defense Privacy Office, Room 205, 400 Army Navy Drive, Arlington, VA 22202-2803. Telephone: (202) 694-3027; Autovon: 224-3027.

SUPPLEMENTARY INFORMATION:

This proposed computer matching program is being conducted in order to identify by name and locate by address those individuals Federally employed or retired that are indebted and delinquent in their repayment to the U.S. Government under certain programs administered by HHS.

The Office of Management and Budget (OMB) has designated the Financial Management Service of the Department of Treasury, as the Lead Agency to coordinate and monitor the implementation of the U.S. Government's Federal Salary Offset Program. An interagency agreement, restricted exclusively to the implementation of the Debt Collection Act of 1982 (Pub. L. 97-365), established an Interagency Working Group to facilitate computer matching and subsequent salary offset procedures throughout the Federal government under the auspices and oversight of the OMB. This Interagency Working Group consists of the Department of the Treasury, Office of Personnel Management and the Department of Defense. As a result, a centralized computer data base for computer matching made up of Department of Defense and Office of Personnel Management records has been established for debt collection purpose in order to have a data bank record of active and retired military members, including the Reserve and Guard, and further including OPM government-wide active and retired civilian personel that are receiving Federal salaries or other Federal benefit payments. This newly established data bank is being maintained by the Defense Manpower Data Center of the Department of Defense and is available for matching purposes by any Federal creditor agency.

Set forth below is the information required by the paragraph 5.f.(1) of the Revised Supplemental Guidance for Conducting Computerized Matching Programs issued by the Office of Management and Budget on May 11, 1982 (47 FR 21656, May 19, 1982). A copy of this proposed notice has been provided to the President of the Senate, the Speaker of the House of Representatives and the Administrator, Office of Information and Regulatory Affairs, Office of Management and Budget on April 1, 1988 pursuant to the cited OMB matching guidelines.

L.M. Bynum,

Alternate OSD Federal Register Liaison Officer, Department of Defense.

April 5, 1988.

Report of a New Continuing Computer Matching Program Between the Department of Defense (DOD) and the Department of Health and Human Services (HHS)

a. *Authority:* The legal authority under which the computer matching will be conducted is 5 U.S.C. 552a, the Privacy Act of 1974; 5 U.S.C. 5514, Installment deduction of indebtedness; 10 U.S.C. 136, Asst. Secretaries of Defense, appointment, powers and duties; Federal Claims Collection Act of 1966 (Pub. L. 89-508) 31 U.S.C. 952(d); the Debt Collection Act of 1982 (Pub. L. 97-365) 5 U.S.C. 5514, 31 U.S.C. 3711 and 3716-3718; Section 206 of Executive Order 11222; 4 CFR Chapter II, Federal Claims Collection Standards (General Accounting Office-Department of Justice); 5 CFR 550.1101-550.1108, Collection by Offset from Indebted Government Employees—(OPM); 45 CFR Part 30, Claims Collection (HHS); Office of Management and Budget, "Revised Supplemental Guidance for Conducting Matching Programs," dated May 11, 1982 (47 FR 21656, May 19, 1982) and "Guidelines on Relationship Between the Privacy Act of 1974 and the Debt Collection Act of 1982," March 30, 1983 (48 FR 15556, April 11, 1983); the Interagency Agreement for Federal Salary Offset Initiative (Office of

Personnel Management and the Department of Defense) signed April 1987, published at 52 FR 37492, October 7, 1987.

b. *Program Description:* The purpose of this computer matching program is to identify and locate those individuals who are receiving Federal salaries or benefit payments that are indebted and delinquent in their repayment of debts to the U.S. Government under certain programs administered by the Health Resources and Services Administration (HRSA) of the Department of Health and Human Services (HHS) in order to collect the debts by voluntary repayment or by administrative or salary offset procedures under the provisions of the Debt Collection Act of 1982.

The HRSA of HHS, as the source agency, will provide the Defense Manpower Data Center (DMDC) of the DoD, the matching agency, at Monterey, California, a computer tape of all the individual delinquent debtor records of those indebted to the U.S. Government under certain Public Health Service (PHS), HHS programs.

Upon receipt of the computer tape file of debtor accounts, the DMDC will perform a computer match using all nine digits of social security numbers of delinquents against a DMDC computer data base. The DMDC computer data base, established under an interagency agreement, consists of records of active duty and retired military members, including the Reserve and Guard, and all the OPM Government-wide employed civilian and retired civilian records.

Matching records, "hits" based on the social security number, will be furnished to HRSA consisting of the member's name, service or agency, category of employee, salary or benefit amounts, and current work or home address from DMDC's data base records. The "hit" information from DMDC will be referred to HRSA for action to recover the outstanding debt(s) by salary or administrative offset when other collection actions have been pursued and have been unsatisfactory.

The HRSA will be responsible for reviewing the "hit" records to assure that each individual is positively identified in the match as the debtor; to assure that the debtor is afforded proper due process under GAO regulation (4 CFR Chapter II) "Federal Claims Collection Standards" and that a proper accounting of any further disclosures outside the USDA shall be maintained by in accordance with 5 U.S.C. 552a(c) of the Privacy Act. The HRSA is responsible for insuring that the debt is valid and the information is accurate, complete, timely and relevant. Hard copy match records will be used by the HRSA to determine any continued benefit entitlement level, if any, and to contact the debtor if necessary. The notification to the debtor shall include information concerning the amount to be collected, and may include the amount of the proposed monthly deductions if offset procedures is contemplated. The debtor shall be given an opportunity to enter into voluntary agreement to repay the debt before any administrative or salary offset measures are initiated. The debtor shall further be given an opportunity to inspect and copy records related to the debt and for review of the decision related to the debt. If no collection action is needed, the DoD record provided by DMDC will not be used by the HRSA for any other purposes.

c *Records to the Matched:* The following systems of records, subject to the Privacy Act of 1974 (5 U.S.C. 552a), each containing an appropriate routine use permitting records to be matched, are as follows:

Department of Health and Human Services (Source Agency)

(1) HHS component: Public Health Services (PHS)
System identification: 09–15–0045
System name: Health Resources and Services Administration Loan Repayment/Debt Management Records Systems, HHS/HRSA/OA
Federal Register citation: 51 FR 42519, November 24, 1986
Amended: 52 FR 48880, December 28, 1987

Department of Defense (Matching Agency)

(1) DoD component: Defense Logistics Agency (DLA)
System identification: S322.11 DLA–LZ
System name: Federal Creditor Agency Debt Collection Data Base
Federal Register citation: 52 FR 37495, October 7, 1987
(2) Agency: Office of Personnel Management (OPM)
System identification: OPM/GOVT–1
System name: General Personnel Records
Federal Register citation: 49 FR 36954, September 20, 1984
(3) Agency: Office of Personnel Management (OPM)
System identification: OPM/CENTRAL–1
System name: Civil Service Retirement and Insurance Records
Federal Register citation: 49 FR 36950, September 20, 1984

d. *Period of the Match:* The initial match will begin as soon as possible after publication of this public notice and then conducted no more often than semiannually thereafter.

e. *Security Safeguards:* Automated records at the DMDC facility at Monterey, California are stored in limited access computer facilities and accessible only by password. Access to the computer center is by key or picture identification. Hard copy records are maintained in Federal office buildings in lockable file cabinets and accessed only by authorized Federal employees on a need-to-know basis.

f. *Retention and Disposition of Records:* Under written Memorandum of Understanding (MOU) agreement between the DoD/DMDC and the HRSA/HHS Department, it is agreed that tapes provided by the HRSA for matches shall be destroyed or returned to the HRSA upon successful completion of each match and shall be used only for debt collection purposes. Non-hit records will not be used for any purposes. Hard copy matched records (hits) will be used by HRSA to conduct individual reviews and may be used to contact the debtor for payment pursuant to the Debt Collection Act of 1982. Records relating to "hits" will be retained by HRSA until the completion of any necessary administrative collection or legal action and will then be disposed of in accordance with approved records control schedules and/or approved disposition authority from the Archivist of the United States. The HRSA will be responsible for maintaining any disclosure accounting records that may be required by 5 U.S.C. 552(c) of the Privacy Act, as a result of the match information received from DMDC when contacting other agencies pursuing individual debtors. If no collection action is needed, the DoD record will not be used for any other purpose. The HRSA tape file will be used and accessed only to the match agreed to; it will not be used to extract information concerning "non hit" individuals for any purpose and it will not be duplicated or disseminated within or outside the DoD matching agency.

[FR Doc. 88–7817 Filed 4–8–88; 8:45 am]
BILLING CODE 3810–01–M

Corps of Engineers, Department of the Army

Intent to Prepare a Draft Environmental Impact Statement (EIS) for the Mississippi River—Gulf Outlet New Lock and Connecting Channels, New Orleans, LA

AGENCY: U.S. Army Corps of Engineers, DoD.

ACTION: Notice of intent to prepare a Draft EIS.

SUMMARY: The action being taken is to determine whether to repair, to replace, to expand, or to take no action concerning the existing Inner Harbor Navigation Canal (IHNC) lock on the Mississippi River-Gulf Outlet (MRGO) at New Orleans, Louisiana. The reason for the action is the obsolete status of the existing structure. The intended effect of any action would be to increase navigational efficiency and relieve vessel congestion in the vicinity of the lock.

FOR FURTHER INFORMATION CONTACT: Questions regarding the Draft EIS should be addressed to Mr. Bill Wilson, (504) 862-2527, U.S. Army Corps of Engineers, Planning Division (CELMN-PD-RE), P.O. Box 60267, New Orleans, Louisiana 70160-0267.

SUPPLEMENTARY INFORMATION:

Proposed Action

The study will determine the advisability of repairing, replacing, or expanding the lock facilities connecting the MRGO and the Gulf Intracoastal Waterway with the Mississippi River at New Orleans, Louisiana.

2. Alternatives

The alternatives being considered are those specified in section 844(a) of Pub. L. 99-662, the Water Resources Development Act (WRDA) of 1986. These include (a) replacement or expansion of the existing IHNC lock and connecting channels at the existing lock site in Orleans Parish, or (b) construction of a new lock and connecting channels near Violet in St. Bernard Parish. Alternative lock sizes and plans at the two locations will be comparted to the No-Action alternative.

3. Scoping Process

a. Initial studies for the replacement of the existing IHNC lock began in the late 1950's. On February 1, 1960, a public meeting was held. Public involvement during the 1960's was generally limited until the MRGO was put into service in the mid 1960's. Two public meetings were held in late 1972: One in New Orleans on November 29, and the other in Chalmette (St. Bernard Parish), on December 10-11. The purpose of these meetings was to discuss the alternative plans and present the plan tentatively selected at that time. Both extensive project support and opposition were voiced at these meetings. In 1975, a tentative plan in St. Bernard Parish was approved by the Chief of Engineers. However, President Carter in 1977 directed the Corps to restudy the plan with a view toward replacing the lock at the existing site. Subsequently, a public meeting soliciting community feedback was held on May 2, 1978, by the Board of Commissioners for the Port of New Orleans. Planning for a new lock was suspended in late 1982. Legislative guidance regarding a new lock was included in the WRDA of 1986, thus planning has now resumed.

b. Public input for scoping will be achieved through the distribution of a notice to all segments of the public having an interest in the project. In addition, a news release will be issued to the local media. The notice and release will request submission of views on alternatives and any other project-related issues considered significant. The basis for significant issues to be addressed in the EIS will consist of the responses to the public notice and news release. Through this notice of intent and the public notice, all segments of the affected public, including Federal, state, and local agencies, and other interested organizations and individuals will be invited to participate in the planning process.

c. Significant issues that will be discussed in the EIS include business and industrial activity, displacement of people, employment, navigation, tax revenues, property values, public facilities and services, public transportation, noise, housing, community cohesion, community facilities, endangered species, wildlife resources, fishery resources, marsh, forest resources, wildlife refuges and management areas, oyster beds, natural and scenic streams and bayous, National Register sites, and other cultural resources.

d. The U.S. Department of the Interior will provide a Fish and Wildlife Coordination Act Report to accompany the EIS.

e. A 45-day period will be allowed for all interested agencies and individuals to review and comment on the draft report and EIS.

4. Meeting Schedule

Public meetings for the specific purpose of scoping are not being considered. Interest group meetings and/or workshops will be conducted after responses to the public notice have been received and evaluated.

5. Availability

The draft EIS is scheduled to be available to the public in July 1989.

Date: March 25, 1988.

Lloyd K. Brown,

Colonel, Corps of Engineers, District Engineer.

[FR Doc. 88-7802 Filed 4-8-88; 8:45 am]

BILLING CODE 3710-84-M

DEPARTMENT OF ENERGY

Assistant Secretary for International Affairs and Energy Emergencies

Proposed Subsequent Arrangement; Australia

Pursuant to section 131 of the Atomic Energy of 1954, as amended (42 U.S.C. 2160) notice is hereby given of a proposed "subsequent arrangement" under the Additional Agreement for Cooperation between the Government of the United States of America and the European Atomic Energy Community (EURATOM) concerning Peaceful Uses of Atomic Energy, as amended, and the Agreement for Cooperation between the Government of the United States of America and the Government of Australia concerning Peaceful Uses of Nuclear Energy.

The subsequent arrangement to be carried out under the above-mentioned agreements involves approval of the following retransfer:

RTD/AU(EU)-6, for the retransfer of 4 fuel elements from the United Kingdom to Australia for use in the HIFAR research reactor. The fuel elements contain 27.65 kilograms of uranium enriched to 60 percent in the isotope uranium-235.

In accordance with section 131 of the Atomic Energy Act of 1954, as amended it has been determined that this subsequent arrangement will not be inimical to the common defense and security.

This subsequent arrangement will take effect no sooner than fifteen days after the date of publication of this notice.

For the Department of Energy

Date: April 5, 1988.

George J. Bradley, Jr.,

Principal Deputy Assistant Secretary for International Affairs and Energy Emergencies.

[FR Doc. 88-7893 Filed 4-8-88; 8:45 am]

BILLING CODE 6450-01-M

Proposed Subsequent Arrangement; Sweden

Pursuant to section 131 of the Atomic Energy Act of 1954, as amended (42 U.S.C. 2160) notice is hereby given of a proposed "subsequent arrangement" under the Agreement for Cooperation between the Government for the United States of America and the Government of Sweden concerning Peaceful Uses of Nuclear Energy, and the Additional Agreement for Cooperation between the Government of the United States of America and the European Atomic Energy Community (EURATOM) concerning Peaceful Uses of Atomic Energy, as amended.

The subsequent arrangement to be carried out under the above-mentioned agreements involves approval of the following retransfer:

RTD/EU(SW)-77, for the transfer of fuel-assemblies containing 7,430 kilograms of uranium, enriched to approximately 3.23 percent in the isotope uranium-235 from Sweden to the Federal Republic of Germany for use in the Kernskraftwerk Brunsbuttel power reactor.

In accordance with section 131 of the Atomic Energy Act of 1954, as amended, it has been determined that this subsequent arrangement will not be inimical to the common defense and security.

This subsequent arrangement will take effect no sooner than fifteen days after the date of publication of this notice.

For the Department of Energy.

Date April 5, 1988.

George J. Bradley, Jr.,

Principal Deputy Assistant Secretary for International Affairs and Energy Emergencies.

[FR Doc. 88-7894 Filed 4-8-88; 8:45 am]

BILLING CODE 6450-01-M

Response Actions at Four FUSRAP Sites in New York: Notice of Intent To Prepare a Remedial Investigation/ Feasibility Study—Environmental Impact Statement

AGENCY: Department of Energy.

ACTION: Notice of intent to prepare a remedial investigation/feasibility study—environmental impact statement.

SUMMARY: Notice is hereby given that the Department of Energy (DOE), as part of its Formerly Utilized Sites Remedial Action Program (FUSRAP), intends to conduct a comprehensive environmental review and analysis of the Linde and Ashland 1 and 2 sites in Tonawanda, New York, and the Colonie site near Albany, New York, to determine the nature, extent, and environmental impacts of existing contamination at the sites and to evaluate alternative response actions. These response actions are expected to include long-term management of the wastes in-place or at an appropriate alternate site. This environmental review and analysis process will integrate the requirements of both the National Environmental Policy Act (NEPA) and the Comprehensive Environmental Response, Compensation, and Liability Act (CERCLA), as amended by the Superfund Amendments and Reauthorization Act (SARA). The Environmental Impact Statement (EIS) requirements under NEPA will be incorporated into the Remedial Investigation/Feasibility Study (RI/FS) documents of CERCLA.

The purpose of this Notice of Intent (NOI) is to present pertinent background information on the proposed scope and content of the RI/FS-EIS and to solicit comments and suggestions for consideration in their preparation. Federal, State, and local agencies, interested organizations, and individuals desiring to submit comments or suggestions for consideration in the preparation of the RI/FS-EIS are invited to do so. Public scoping meetings will be held on April 26, in Tonawanda and on April 27, in Colonie, as noted below. Upon completion of the draft RI/FS-EIS addressing the four sites, the availability of the document will be announced in the **Federal Register**, at which time comments from the public will again be solicited. Comments received during the public comment period will be addressed in the final RI/FS-EIS.

DATES: Written comments or suggestions postmarked by May 6, 1988, will be considered in the course of implementing the integrated CERCLA/NEPA process and its documentation. Comments or suggestions postmarked after that date will be considered to the maximum extent practicable. Scoping meetings will be held at Franklin Middle School Auditorium, 540 Parkhurst Boulevard, Tonawanda, on April 26, 1988, at 7:30 p.m., and at Lecture Center No. 2, State University of New York at Albany, in Colonie on April 27, at 7:30 p.m. Requests to speak at these meetings should be received by Mr. Gross at the address below by April 22, 1988. Requests to speak may also be made during registration for the meetings.

ADDRESS: All comments or suggestions on the scope of the RI/FS-EIS and requests to speak at the scoping meeting discussed above should be addressed to: Mr. Peter J. Gross, Director, Technical Services Division, U.S. Department of Energy, Oak Ridge Operations, Post Office Box E, Oak Ridge, Tennessee 37831 (615-576-0948).

SUPPLEMENTARY INFORMATION:

Background

The FUSRAP was established in 1974 by the U.S. Atomic Energy Commission, predecessor of the DOE. The primary objective of FUSRAP is to identify and decontaminate sites where radioactive material was handled or processed under government nuclear programs. The goals of decontamination under FUSRAP are (1) to control radioactive contamination at the sites, in compliance with applicable criteria for the protection of human health and the environment, and (2) to certify the sites for unrestricted use following decontamination, to the extent possible. As part of its responsibility under the Atomic Energy Act, as amended, and CERCLA, as amended, and in accordance with NEPA requirements, DOE plans to conduct response actions at four FUSRAP sites in the State of New York: the Ashland 1 and 2 sites, the Linde site, and the Colonie site. The analyses for these sites are being presented in a single set of environmental documents to assure that any cumulative impacts of the New York actions are properly assessed. Also, this will allow DOE to make a comprehensive evaluation of disposal requirements for the FUSRAP New York sites.

The one FUSRAP New York site for which DOE expects to conduct a response action that is not included is the Seaway site in Tonawanda, New York. The Seaway site is being treated independently because the scope of the response action is expected to be very limited and does not appear to have the potential to result in a significant impact. Further, the property owner's use of the site is restricted until DOE reaches a decision and implements the response action. The proposed response action would be to stabilize the radioactive waste in-place. Preliminary analysis indicates that this would be suitable because of the current and future use of the site (i.e., an industrial landfill) and the very low average concentration of radioactive waste at the site. DOE is coordinating the Seaway response action with New York State and the Environmental Protection Agency and plans for public participation are being developed. DOE expects to be able to reach a decision and implement the Seaway action this year. DOE will conduct the Seaway action in conformance with the requirements of NEPA and CERCLA.

Colonie Site—The Colonie site is located at 1130 Central Avenue in the town of Colonie, about 6 km (4 mi) northwest of downtown Albany and is readily accessible by a well-developed regional transportation system. The site is situated in an area that supports commercial, light industrial, and residential land use, and the Colonie site is zoned for industrial use. The Colonie site was used for the processing of uranium and thorium by National Lead (NL) Industries from 1958 to 1984. Prior to these operations, the facility was a brass foundry. In 1960, concurrent foundry activities ceased and operations were concentrated on the manufacturing of enriched uranium products until 1972. Fuel elements were produced from 1958 to 1968, and depleted uranium was handled from 1968 to 1980. Limited operations continued after a temporary restraining order was lifted soon after its imposition in 1980 (the restraining order resulted from local opposition to uranium contamination from airborne releases).

The 1984 Energy and Water Development Appropriations Act authorized DOE to undertake a decontamination research and development project at the Colonie site. Plant operations ceased in 1984 and site ownership was transferred to DOE. In 1985, adjacent property was donated to DOE by the Niagara Mohawk Electric Company. Together, the properties constitute the Colonie site, which is currently managed by the DOE Oak Ridge Operations Office with assistance from Bechtel National, Inc., the project management contractor. The Colonie site is surrounded by a chain-link fence and covers 4.5 ha (11.2 acres); a 45-year-old combined office/operations building occupies one-third of the site.

Radioactive waste present at the Colonie site is low-level waste including uranium process wastes (and a small amount of thorium process wastes) and uranium-contaminated soil, asphalt, and building materials. There is a pile of radioactively contaminated material being temporarily stored within the building. This material is from removal actions conducted by DOE at Colonie vicinity properties which became contaminated as a result of airborne releases of depleted uranium from plant operation at the Colonie site. There are two areas of buried radioactive waste at the Colonie site which constitute localized areas of elevated radioactivity. Chemical wastes and packaged chemicals present at the site include acids, bases, and degreasing agents; carbon tetrachloride, benzene, and PCBs; and cyanide, heavy metals, and asbestos. Some of the chemicals have been removed as part of the site maintenance activities. The total waste volume from response actions at Colonie is estimated to be 23,000 m^3 (30,000 yd^3).

Linde Site—The Linde site is located about 16 km (10 mi.) to the northeast of the eastern end of Lake Erie, within the town of Tonawanda. The site is an industrial area of about 43 ha (105 acres) that is owned by Union Carbide Corporation. It is readily accessible by a well-developed regional transportation system. The Linde site includes parking lots and office buildings as well as large buildings currently used as research laboratories, fabrication facilities, storage areas, and warehouses. About 1,700 individuals are employed at the site. The site was operated for the processing of uranium ores from 1940 through 1948 by Linde Air Products Corporation (a division of Union Carbide Corporation since 1948). This operation was part of a Federal reseach and development program for the Manhattan Engineer District (MED). Several separate activities were carried out in five different buildings (14, 30, 31, 37, and 38). Building 14 was a pilot plant for uranium separation during the early part of the program. Building 30 was the primary facility used for uranium processing, and Buildings 31 and 37 were used for uranium separation. Uranium dioxide was converted to uranium tetrafloride in Building 38. All of these structures have since been converted to other commercial/industrial uses, with the exception of Building 37, which was demolished in 1980.

Building 90 is a relatively new facility, and prior to its construction, contaminated soils were removed from the entire construction site. This displaced soil is currently part of an open pile of contaminated material located west of the building.

In 1953, the site was decontaminated in accordance with the then-current criteria. In 1976, a follow-up survey of the site indicated that additional decontamination should be considered. After 1976, Buildings 14, 31, and 37—three of the original five buildings used for uranium processing—were decontaminated further. Based on a supplemental radiological study in 1981, the remaining two buildings (30 and 38) and nine designated open areas of contaminated soil have been identifed for possible response action. The total volume of radioactive wastes that would result from decontamination of open areas and of the two buildings (30 and 38) is estimated to be about 20,000 m^3 (26,000 yd^3). The wastes would be low-activity, long-lived radioactive wastes consisting primarily of contaminated soil, rubble, and process equipment. The Linde site was formally designated for inclusion in FUSRAP on February 29, 1980.

Ashland 1 Site—The Ashland 1 site is located just south of the Niagara River in an industrial area in Tonawanda, New York, and is readily accessible by a well-developed regional transportation system. It contains two oil storage tanks and one building, the National Fuel Gas distribution center, which is occupied for only a few hours per month. The only other activity at the site results from its use as an electrical switchyard and oil storage area.

The site is a 4-ha (10-acre) tract of land and was used for the disposal of uranium tailings in the 1940s. The tailings were generated at the Linde site during Linde Air Product's participation in the MED ore-processing program. The MED leased the Ashland 1 site in 1943 and purchased it from the Haist group in 1944. The site was owned by the General Services Administration from 1949 to 1960, at which time it was sold to Ashland Oil, Inc. From 1944 to 1946, an estimated 7,300 metric tons (8,000 short tons) of ore residues (i.e., low-activity, long-lived radioactive waste) containing about 0.54 percent uranium-238 (by weight) were spread to a depth of 0.3 to 1.5 m (1 to 5 ft) over two-thirds of the Ashland 1 site. This area was released for unrestricted use following a 1958 radiological survey and was subsequently used for oil refinery operations, which ceased in 1982.

An estimated 4,600 m^3 (6,000 yd^3) of residues—comprising mostly low-grade uranium ore tailings—were transferred in 1974 from the Ashland 1 site to the adjacent Seaway Industrial Park site in order to make way for the construction of two oil storage tanks. As discussed earlier, response action at the Seaway site is being handled as a separate action.

The results of a 1976 radiological survey indicated that contamination at the Ashland 1 site posed no immediate health hazard to the general public under current use of the site. However, it was concluded that potential health hazards could result from relocation or reuse of the residues and contaminated soils or from future uses of the site that would involve excavation and/or habitation. This indicated a need for further assessment of the site to identify possible options for response action; hence, this site was formally designated for inclusion in FUSRAP on June 22, 1984.

Ashland 2 Site—The Ashland 2 site is located in an industrial area about 0.4 km (0.25 mi) north of the Ashland 1 site in Tonawanda, New York. The radioactively contaminated portion of the site is a fill area covering about 0.8 ha (2 acres). The radioactive material in this fill area, estimated to be about 37,000 m^3 (48,000 yd^3), was derived from tailings deposition, including partial relocation of material originally deposited at Seaway and from construction activities at the Ashland 1 site. Based on current use of the site, there is no immediate health hazard to the general public. However, as with the Ashland 1 site, potential health hazards could result from relocation or reuse of the radioactively contaminated soil or from future use of the site that would involve excavation and/or habitation. Adjacent to the contaminated fill area is a larger portion of the Ashland 2 site (currently thought to be uncontaminated), which is being evaluated for suitability as a possible location for long-term waste containment.

Proposed Action and Alternatives

DOE intends to conduct a comprehensive environmental process to meet the requirements of CERCLA and NEPA for implementing response actions at the four New York sites. The environmental review and analysis process has two major parts, a remedial investigation and a feasibility study, which are also the titles or partial titles of the reports resulting from these phases. The results of each part are presented in a report.

The remedial investigation will characterize the four sites and the nature and extent of contamination. Bench or pilot tests of potential waste treatment technologies will be conducted as appropriate. Also, a baseline risk assessment will be conducted to identify the primary health and environmental threats at each of the four sites.

During the feasibility study waste treatment technologies will be screened, remedial alternatives will be identified and screened, general performance criteria for each alternative will be developed, and a detailed evaluation and comparison of reasonable (i.e., screened) alternatives will be performed. Alternatives to be considered include: (1) No action; (2) treatment with disposal of remaining waste either on- or off-site; and (3) containment or institutional control alternatives which control the threats posed by the hazardous substances and/or prevent exposure. Examples of specific alternatives which are expected to be retained through screening include: (1) In-situ stabilization of the wastes at each of the four sites; (2) decontamination of the sites and consolidation of all or some of the wastes at one of the four sites (a portion of the Ashland 2 site is being evaluated as a possible location for a containment cell(s)); and (3) no action at each of the four sites. (The "no action" alternative will be developed because it is required under CERCLA and NEPA and provides a useful baseline for determining the costs and effects of the other alternatives being considered.)

The remedial investigation and feasibility study will be conducted concurrently. The data collected during the investigation will influence the development of the remedial alternatives in the feasibility study, which in turn will affect the data needs and scope of treatability studies and could result in additional field investigations.

The results of the environmental process will be presented in a series of reports. DOE expects to issue a draft RI/FS–EIS addressing the four sites in late 1990 for a 45-day public comment period. Also, at this time there will be a public hearing so that oral as well as written comments can be provided on the draft documents. By the fall of 1991, DOE expects to issue the final RI/FS–EIS, which will include the responses to public comments received on the draft reports. The DOE will select a remedial action alternative for each of the four sites in one or more Records of Decision to be issued no sooner than 30 days after the final RI/FS–EIS is issued. (If any of these sites are added to the EPA National Priorities List, EPA will need to concur in the slection of the alternative for that site.)

Public participation in the environmental review and analysis process is encouraged. In addition to the scoping meeting, public information meetings will be held when significant new phases of the work are planned, when important new information becomes available or when community concern warrants a meeting. Public meetings will be held on a quarterly basis or as appropriate. Fact sheets, technical reports and other information relating to the DOE activities at these four sites will be placed in the Kenmore Branch and William K. Sanford Town Libraries at the addresses noted below.

Nothing in this NOI or the documents to be prepared is intended to represent a statement on the applicability of NEPA to remedial actions under CERCLA.

Preliminary List of Potential Issues

There are a number of potential issues related to response actions at the four New York FUSRAP sites. Some deal with potential environmental impacts, whereas others are factors that may include or be influenced by implementation of one or more of the alternatives. This list is based on DOE experience with major issues that have been raised relative to other DOE proposals of this nature. Interested parties are invited to participate in the scoping process discussed below and to help refine this list to arrive at the significant issues to be analyzed in depth in the integrated CERCLA/NEPA process and to eliminate from detailed study the issues that are not significant.

Following is a list of potential major issues that may require analysis in the integrated CERCLA/NEPA process:

1. Potential radiological impacts in terms of both radiation doses and resulting health risks:

- On people, including workers and the public, individuals and the total population, children and adults, present and future generations;
- Along transportation routes and near other sites included in the alternatives;
- Associated with both routine operations and accidents;
- Associated with various pathways to man, including surface waters and ground waters, gases, dust, and particulates;
- Due to natural forces such as erosion and flooding;
- Associated with human intrusion into the contaminated materials.

2. Potential socioeconomic impacts:

- Associated with land uses, values, and marketability;
- On local transportation systems.

3. Potential chemical impacts:

- Associated with contamination of surface waters and ground waters by heavy metals and other contaminants potentially contained in the wastes/residues.

4. Potential engineering and technical issues:

- The most reasonable engineering options for each type of waste/residue;
- Probable duration of isolation;
- Rates and magnitude of loss of containment;
- Site-specific geohydrological data;
- Site-specific wind dispersion patterns;
- Site characterization and research and development work necessary before the decision or before actual implementation of an alternative.

5. Potential institutional issues:

• Project-specific criteria for decontamination, effluents, environmental concentrations, and release of a site for unrestricted or restricted uses;

• Future institutional controls (monitoring and maintenance);

• Institutional issues that need to be resolved before an alternative could be implemented.

6. Potential issues relative to mitigative measures and monitoring:

• Worker health physics procedures;

• Erosion and dust control measures.

Scoping

The scoping process will involve all interested agencies (Federal, State, and local), groups, and members of the public. Comments are invited on the alternatives and the issues to be considered in the integrated CERCLA/NEPA process. Public scoping meetings are scheduled starting at 7:30 p.m., to be held on April 26, 1988, in Tonawanda, New York, and on April 27, 1988, in Colonie, New York (at the address given under Dates above). These will be informal meetings with a presiding officer, and DOE will establish procedures governing the conduct of the meetings. The meetings will not be conducted as evidentiary hearings, and those who choose to make statements may not be cross-examined by other speakers. To ensure that everyone who wishes to speak has a chance to do so, 5 minutes will be allotted for each speaker and speakers are encouraged to summarize written comments. Depending on the number of persons requesting to be heard, DOE may allow longer times for representatives of organizations; persons wishing to speak on behalf of an organization should identify the organization in their request. Persons who have not submitted a request to speak in advance may register to speak at the scoping meetings; they will be called on to present their comments if time permits. Written comments will also be accepted at the meetings.

Both oral and written scoping comments will be considered and will be given equal weight. A transcript of the scoping meetings will be retained by DOE and made available for inspection at the Freedom of Information Reading Room, Forrestal Building, 1000 Independence Avenue SW., Washington, DC 20585, during business hours, Monday through Friday. In addition, anyone may make arrangements with the reporter to purchase a copy of the transcript.

Copies of the scoping meetings transcript and other CERCLA/NEPA documents and major references used in the preparation of these documents will be made available during normal business hours at the Kenmore Branch Library, 160 Delaware Road, Village of Kenmore, New York 14217 (near Tonawanda); at the William R. Sanford Town Library, 629 Albany-Shaker Road, Loudonville, New York 12211; and at other locations as appropriate. A notice of locations of availability will be published in the **Federal Register** at the time of announcement of availability of the draft RI/FS–EIS.

Those interested parties who do not wish to submit comments or suggestions during the scoping period but who would like to receive a copy of the draft RI/FS–EIS for review and comment should notify Mr. Peter J. Gross at the address given above in the Address section.

Dated at Washington, DC, this 6th day of April, 1988.

Ernest C. Baynard, III,

Assistant Secretary, Environment, Safety and Health.

[FR Doc. 88–7883 Filed 4–6–88; 8:45 am]

BILLING CODE 6450-01-M

Federal Energy Regulatory Commission

[Docket Nos. ER88-305-000 et al.]

Niagara Mohawk Power Corp. et al.; Electric Rate, Small Power Production, and Interlocking Directorate Filings

Take notice that the following filings have been made with the Commission:

1. Niagara Mohawk Power Corporation

[Docket No. ER88–305–000]

April 4, 1988.

Take notice that on March 30, 1988, Niagara Mohawk Power Corporation (Niagara Mohawk) tendered for filing proposed transmission agreement for additional transmission service to New York State Electric & Gas Corporation (NYSEG) of power and energy generated at Nine Mile Point No. 2. The power and energy to be transmitted by Niagara Mohawk are NYSEG;s 18% share of Nine Mile Point No. 2. The rate are proposed to be effective August 1, 1987. Niagara Mohawk has requested waiver of the notice requirements for good cause shown.

Copies of the filing were served upon the New York Public Service Commission and NYSEG.

Comment date: April 18, 1988, in accordance with Standard Paragraph E at the end of this notice.

Kansas Power and Light Company

[Docket No. ER88–306–000

April 4, 1988.

Take notice that on March 30, 1988, Kansas Power and Light Company (KPL) tendered for filing a newly executed renewal contract dated February 12, 1988, with the City of Osage City, Osage City, Kansas for wholesale service to that community. KPL states that this contract permits the City of Osage City to receive service under rate schedule WTU–12/83 designated Supplement No. 11 to R.S. FERC No. 194. The proposed effective date is July 1, 1988. The proposed contract change provides essentially for the ten year extension of the original terms of the presently approved contract. In addition, KPL states that copies of the contract have been mailed to the City of Osage City and the State Corporation Commission.

Comment date: April 18, 1988, in accordance with Standard Paragraph E at the end of this notice.

3. Kansas Power and Light Company

[Docket No. ER88–307–000]

April 4, 1988.

Take notice that on March 30, 1988, Kansas Power and Light Company (KPL) tendered for filing a contract dated December 21, 1987, with the City of Burlingame, Kansas for wholesale service to that community. KPL states that this contract permits the City of Burlingame to receive service under rate schedule WTU–12/83. The effective date of the contract shall be not later than July 1, 1988, or the date such facilities are completed and power becomes available. In addition, KPL states that copies of the contract have been mailed to the City of Burlingame and the State Corporation Commission.

Comment date: April 18, 1988, in accordance with Standard Paragraph E at the end of this notice.

4. Niagara Mohawk Power Corporation

[Docket No. ER88–304–000]

April 4, 1988.

Take notice that on March 30, 1988, Niagara Mohawk Power Corporation (Niagara Mohawk) tendered for filing proposed changes to Rate Schedule No. 97 under which Niagara Mohawk provides transmission service to New York State Electric & Gas Corporation (NYSEG) from NYSEG's Somerset Generating Plant and for loads remote from NYSEG's transmission system and served by Niagara Mohawk facilities. The new rates are proposed to be effective April 1, 1987. Niagara Mohawk has requested waiver of the notice requirements for good cause shown. The

changes are set forth on proposed Supplement No. 8 to Rate Schedule No. 97, which would supersede Supplement No. 7.

Copies of the filing were served upon the New York Public Service Commission and NYSEG.

Comment date: April 18, 1988, in accordance with Standard Paragraph E at the end of this notice.

5. Bangor Hydro-Electric Company

[Docket No. ER88-303-000]

April 5, 1988.

Take notice that on March 30, 1988, Bangor Hydro-Electric Company tendered for filing proposed changes in its FERC Electric Service Tariff as follows:

FPC No. 4 (Lubec Water and Electric District)
FPC No. 5 (Union River Electric Cooperative, Inc.)
FPC No. 7 (Eastern Maine Electric Cooperative, Inc.)
FERC No. 27 (Swan's Island Electric Cooperative, Inc.)
FERC No. 52 (Isle Au Haut Electric Power Co.)

The proposed changes would increase base revenues from jurisdictional sales and service by 18.06% based on the 12 month period ending December 31, 1986. The filing would also change the calculation of the FERC fuel clause to include recovery of costs associated with purchases from qualifying facilities within the meaning of the Public Utility Regulatory Policies Act of 1978.

The proposed tariff changes implement a Stipulation between Bangor Hydro-Electric Company and its wholesale customers: Eastern Maine Electric Cooperative, Inc., Union River Electric Cooperative, Inc., Swans Island Electric Cooperative, Inc., Lubec Water and Electric District, and Isle Au Haut Electric Power Co.

Copies of the filing changes were served on the above-named wholesale customers, on Dirigo Electric Cooperative, Inc., on the Maine Public Utilities Commission, and on the Maine Public Advocate.

Comment date: April 19, 1988, in accordance with Standard Paragraph E at the end of this notice.

6. Pacific Gas and Electric Company

[Docket No. ER88-302-000]

April 5, 1988.

Take notice that on March 30, 1988, Pacific Gas and Electric Company (PG&E) tendered for filing, as a change in rate schedule, an Interconnection Agreement Between Pacific Gas and Electric Company and Modesto Irrigation District (Agreement), covering rates, terms, and conditions for services rendered by PG&E pursuant to the Agreement and for the interconnection of the Parties' electrical systems.

Prior to January 1, 1988, PG&E directly served the City and County of San Francisco (CCSF) under FPC 53, as amended, with partial requirements services and support services to meet CCSF's load (which load includes Modestop). From July, 1985 through midnight, December 31, 1987, PG&E provided the services described above to CCSF, including support services for specified resources of Modesto and the Turlock Irrigation District (Turlock), under an interim extension of FPC 53 (Interim Agreement). By means of a four-party agreement, filed with FERC on December 28, 1987 (Docket No. ER88-168-000), CCSF, Turlock, Modesto and PG&E extended the Interim Agreement, with modifications, until April 1, 1988. Upon its effective date, PG&E will provide services directly to Modesto under the Agreement.

Pursuant to the Agreement, PG&E will provide the following services:

Reserved Transmission Service.	(Rate Schedule A).	Section B.1
Control Area Services.	.....	Section B.2
Scheduling Service.	(Rate Schedule B).	Section B.2.1
Regulation Service.	(Rate Schedule c).	Section B.2.2
Other Charges	.....	Section B.3
Voltage Regulation.	(Rate Schedule D).	Section B.3.1
Reactive Power Correction.	(Rate Schedule E).	Section B.3.2
Spinning Reserves.	(Rate Schedule F).	Section B.3.3
Standby Station Service.	(Rate Schedule G).	Section B.3.4
Customer Service.	(Rate Schedule H).	Section B.3.5
Coordination Services.	.....	Section B.4
Ceiling Price for Capacity Component of Coordination Power Service.	(Ceiling A-1)	Section B.4.1
Ceiling Price for Energy Component of Coordination Power Service	(Ceiling A-2)	Section B.4.2
Ceiling and Floor Price for Coordination Transmission Service.	(Ceiling B)	Section B.4.3

PG&E and Modesto are requesting a waiver of the sixty-day notice period provided in § 35.3 of the Commission's regulations (18 CFR 35.3) and an effective date of April 1, 1988, to follow immediately the expiration of the four-party extension of the Interim Agreement.

Copies of this filing were served upon Turlock, CCSF, Modesto and the Public Utilities Commission of the State of California.

Comment date: April 19, 1988, in accordance with Standard Paragraph E at the end of this notice.

7. Pacific Gas and Electric Company

[Docket No. ER88-301-000]

April 5, 1988.

Take notice that on March 30, 1988, Pacific Gas and Electric Company (PG&E) tendered for filing, as changed rate schedules, Settlement Agreements between PG&E and Shelter Cove Resort Improvement District No. 1, PG&E and Lassen Municipal Utility District, and PG&E and the City of Santa Clara and an Amendment between PG&E and Shasta Dam Area Public Utility District (Agreement), covering rates, terms and conditions for services rendered by PG&E to the four specified customers pursuant to the separate Agreements between PG&E and each customer.

PG&E has separate rate settlement agreements with the City of Santa Clara (CSC), Shelter Cove Resort Improvement District No. 1 (RID #1), and CP National Corporation (CPN) which expired on December 31, 1987. In addition, PG&E and Shasta Dam Area Public Utility District (Shasta) have a rate settlement agreement which expires as of December 31, 1988. PG&E and Shasta desire, as a result of the small Shasta load served by PG&E, to amend the existing PG&E-Shasta rate settlement agreement.

PG&E, CSC, and RID #1 have agreed to an effective date of January 1, 1988; PG&E and Shasta have agreed to use the FERC acceptance date as the effective date: With regards to LMUD, PG&E requests that the Assignment Agreement be made effective upon: (1) The CPUC granting CPN authority to sell its aforementioned electric system to LMUD *and* (2) execution of an Agreement between PG&E and LMUD for the sale of LMUD's electric facilities (as previously owned by CPN) located in Tehama and Plumas counties to PG&E (Sale Agreement) which is expected to occur on May 2, 1988, but this Sale Agreement shall not be effective before May 2, 1988 nor after October 30, 1988 except as the parties may otherwise agree. As of the effective date, PG&E will not longer serve CPN on Rate Schedule R-2.

Copies of this filing were served upon CSC, RID #1, LMUD, Shasta and the

Public Utilities Commission of the State of California.

Comment date: April 19, 1988, in accordance with Standard Paragraph E at the end of this document.

8. Mobile Joliet Refining Corporation

[Docket No. QF86-683-001]

April 5, 1988.

On March 24, 1988, Mobile Joliet, Refining Corporation (Applicant) of Rt. 55 and Arsenal Road, P.O. Box 874, Joliet Illinois 60434 submitted for filing and application for recertification of a facility as a qualifying cogeneration facility pursuant to § 292.207 of the Commission's regulations. No determination has been made that the submittal constitutes a complete filing.

The topping-cycle cogeneration facility was originally certified as a qualifying small power production facility on January 13, 1987 (Docket No. QF86-683-000, 38 FERC ¶62,015). The facility will consist of a combustion turbine generator, a heat recovery steam generator, and a condensing steam turbine generator. The heat recovered from the facility will be used in the refinery. The maximum net electric power production of the facility will be 27.6 MW. The primary energy source will be waste in the form of refinery off gas produced by refinery hydrocarbon cracking process. The installation of the facility was completed in November 1987.

Comment date: Thirty days from publication in the **Federal Register**, in accordance with Standard Paragraph E at the end of this notice.

Standard Paragraph

E. Any person desiring to be heard or to protest said filing should file a motion to intervene or protest with the Federal Energy Regulatory Commission, 825 North Capitol Street NE., Washington, DC 20426, in accordance with Rules 211 and 214 of the Commission's Rules of Practice and Procedure (18 CFR 385.211 and 385.214). All such motions or protests should be filed on or before the comment date. Protests will be considered by the Commission in determining the appropriate action to be taken, but will not serve to make protestants parties to the proceeding. Any person wishing to become a party must file a motion to intervene. Copies of this filing are on file with the Commission and are available for public inspection.

Lois D. Cashell

Acting Secretary.

[FR Doc. 88-7796 Filed 4-8-88; 8:45 am]

BILLING CODE 6717-01-M

[Docket Nos. RM88-4-000 and RM88-5-000]

Environmental Impact Statement; Independent Power Producers and Bidding Programs; Scoping Sessions

Issued April 5, 1988

AGENCY: Federal Energy Regulatory Commission.

ACTION: Notice of scoping session locations and availability of scoping session documents.

SUMMARY: The Federal Energy Regulatory Commission (Commission) is issuing this notice to inform the public of scoping session locations and the availability of scoping session documents. On March 18, 1988, the Commission issued a notice of intent to prepare an environmental statement (EIS) and to hold scoping sessions. The notice of intent to prepare an EIS indicated that a second notice with the exact time and location for each scoping session would be issued in the near future. This notice contains that information.

EFFECTIVE DATE: April 5, 1988.

DATE AND LOCATION: The scoping sessions will be held in Baltimore, Maryland, and Albuquerque, New Mexico, from 8:30 a.m. to 5:00 p.m., on Monday, April 18, 1988.

FOR FURTHER INFORMATION CONTACT:

Michael Schopf, Office of the General Counsel, Federal Energy Regulatory Commission, 825 North Capitol Street, NE., Washington, DC 20426, (202) 357-8002.

Bernard W. Tenebaum, Office of Economic Policy, Federal Energy Regulatory Commission, 825 North Capitol Street, NE., Washington, DC 20426, (202) 357-8100.

SUPPLEMENTARY INFORMATION:

On March 18, 1988, the Federal Energy Regulatory Commission (Commission) issued a notice of intent to prepare an environmental impact statement (EIS) and to hold scoping sessions [1] for two notices of proposed rulemaking (NOPRs) issued by the Commission on March 16, 1988.[2] One NOPR proposes regulations to govern a class of non-traditional utility suppliers, called independent power producers (IPPs). The second NOPR proposes regulations to govern bidding programs under the Public Utility Regulatory Policies Act of 1978 (PURPA).

[1] 53 FR 9682 (Mar. 24, 1988).

[2] "Regulations Governing Bidding Programs" 53 FR 9324, (Docket No. RM88-5-000) (Mar. 22, 1988); "Regulations Governing Independent Power Producers" 53 FR 9327 (Docket No. RM88-4-000) (Mar. 22, 1988).

The notice of intent to prepare an EIS indicated that a second notice with the exact time and location for each scoping meeting would be issued in the near future. This notice contains that information. The scoping sessions will be held at the following locations on Monday, April 18, 1988:

Baltimore, Maryland
- Local Time: 8:30 am-5:00 pm.
- Place: Day's Inn (Port Room), 100 Hopkins Place, Baltimore, Maryland 21201, (301) 576-1000.

Albuquerque, New Mexico
- Local Time: 8:30 am-5:00 pm.
- Place: Albuquerque Convention Center (Acoma Room), 401 Second Street, NW., Albuquerque, New Mexico 87102, (505) 768-4575.

Scoping documents are being prepared and are expected to be available on Wednesday, April 13, 1988. The scoping documents may be obtaining by contacting the Commission's Public Inquiries Branch, address: Federal Energy Regulatory Commission, Public Inquiries Branch, Room 2214, 825 North Capitol Street, NE., Washington, DC 20426, (202) 357-8055.

Lois D. Cashell,

Acting Secretary.

[FR Doc. 88-7795 Filed 4-8-88; 8:45 am]

BILLING CODE 6717-01-M

[Docket Nos. CP88-316-000 et al.]

Southern Natural Gas Company et al.; Natural Gas Certificate Filings

Take notice that the following fillings have been made with the Commission:

1. Southern Natural Gas Company

March 31, 1988.

[Docket No. CP88-316-000]

Take notice that on March 28, 1988, Southern Natural Gas Company (Southern), P.O. Box 2536, Birmingham, Alabama 35202-2563, filed in Docket No. CP88-316-000 an application pursuant to section 7 of the Natural Gas Act, for a blanket certificate of public convenience and necessity authorizing Southern to transport natural gas on behalf of others as specified in Subpart G of Part 284 of the Commission's Regulations, all as more fully set forth in the application which is on file with the Commission and open to public inspection.

Southern states that the blanket certificate would permit it to offer transportation services to interestate pipelines and to other shippers pursuant to §§ 284.222 and 284.223 of the Commission's Regulations, respectively.

Southern would provide such services pursuant to Rate Schedules IT and FT of Southern's FERC Gas Tariff as filed in Docket No. RP88-17-000. The transportation would comply with the regulations and requirements of Order No. 436 as modified by Order No. 500, it is stated.

Comment date: April 21, 1988, in accordance with Standard Paragraph F at the end of this notice.

2. Teal Gathering Company et al.[1]

[Docket No. CI88-366-000 et al.]

April 4, 1988.

Take notice that each Applicant listed herein has filed an application pursuant to section 7 of the Natural Gas Act and the Federal Energy Regulatory Commission's (Commission) regulations thereunder for a blanket certificate with pregranted abandonment authorization for the term listed herein, all as more fully set forth in the applications which are on file with the Commission and open for public inspection.

[1] This notice does not provide for consolidation for hearing of the several matters covered herein.

Docket No. and date filed	Applicant	Requested term of authorization
CI88-366-000, Mar. 17, 1988	Teal Gathering Company, P.O. Box 21734, 525 Milam Street, Shreveport, Louisiana 71151.	Unlimited.
CI88-382-000, Mar. 25, 1988	Conoco Inc., P.O. Box 2197, CH-1134, Houston, Texas 77252	3 years.

Comment date: April 18, 1988, in accordance with Standard Paragraph J at the end of the notice.

3. Lone Star Gas Company, a Division of ENSERCH Corporation

[Docket No. CP87-190-005]

April 4, 1988.

Take notice that on March 24, 1988, Lone Star Gas Company, a Division of ENSERCH Corporation (Lone Star), 301 South Harwood Street, Dallas, Texas 75201, filed in Docket No. CP87-190-005 a petition to amend a certificate issued in Docket No. CP87-190-000 to extend the authorized term to expire on September 30, 1999, all as more fully set forth in the petition to amend which is on file with the Commission and open to public inspection.

It is stated that by order issued June 30, 1987, in Docket No. CP87-190-000, 39 FERC ¶ 61,380 (1987), Lone Star was granted authorization to provide firm transportation service for Coastal States Gas Transmission Company, and to construct and operate certain facilities in interstate commerce necessary to perform the transportation service for a period of one year from the date of issuance of the order. Lone Star, in its petition to amend, requests authority to extend this authorization to expire September 30, 1999, the date of expiration of its gas transportation contract. Lone Star proposes no other changes.

Comment date: April 25, 1988, in accordance with the first subparagraph of Standard Paragraph F at the end of this notice.

Standard Paragraphs

F. Any person desiring to be heard or make any protest with reference to said filing should on or before the comment date file with the Federal Energy Regulatory Commission, 825 North Capitol Street, NE., Washington, DC 20426, a motion to intervene or a protest in accordance with the requirements of the Commission's Rules of Practice and Procedure (18 CFR 385.211 and 385.214) and the Regulations under the Natural Gas Act (18 CFR 157.10). All protests filed with the Commission will be considered by it in detemining the appropriate action to be taken but will not serve to make the protestants parties to the proceeding. Any person wishing to become a party to a proceeding or to participate as a party in any hearing therein must file a motion to intervene in accordance with the Commission's Rules.

Take further notice that, pursuant to the authority contained in and subject to jurisdiction conferred upon the Federal Energy Regulatory Commission by sections 7 and 15 of the Natural Gas Act and the Commission's Rules of Practice and Procedure, a hearing will be held without further notice before the Commission or its designee on this filing if no motion to intervene is filed within the time required herein, if the Commission on its own review of the matter finds that a grant of the certificate is required by the public convenicence and necessity. If a motion for leave to intervene is timely filed, or if the Commission on its own motion believes that a formal hearing is required, further notice of such hearing will be duly given.

Under the procedure herein provided for, unless otherwise advised, it will be unnecessary for the applicant to appear or be represented at the hearing.

J. Any person desiring to be heard or make any protest with reference to said filing should on or before the comment date file with the Federal Energy Regulatory Commission, 825 North Capitol Street NE., Washington, DC 20426 a motion to intervene or a protest in accordance with the requirements of the Commission's Rules of Practice and Procedure (18 CFR 385.211, 385.214). All protests filed with the Commission will be considered by it in determining the appropriate action to be taken but will not serve to make the protestants parties to the proceeding. Any person wishing to become a party in any proceeding herein must file a petition to intervene in accordance with the Commission's rules.

Under the procedure herein provided for, unless otherwise advised, it will be unnecessary for the applicant to appear or be represented at the hearing.

Lois D. Cashell,

Acting Secretary.

[FR Doc. 88-7598 Filed 4-8-88; 8:45 am]

BILLING CODE 6717-01-M

EQUAL EMPLOYMENT OPPORTUNITY COMMISSION

Hearing Series on the Status of Minorities and Women in Corporate America

AGENCY: Equal Employment Opportunity Commission.

ACTION: Notice of hearing series.

SUMMARY: Notice is hereby given that the Equal Employment Opportunity Commission has scheduled a series of public hearings to gather information relating to the advancement of minorities and women in corporate America.

BEST COPY AVAILABLE

Time and Date: The series will be held from 9:00 am to 5:00 pm on June 15, 16 and 17, 1988.

Place: The location of the hearing is the Office of Personnel Management Auditorium 1900 E Street NW., Washington, DC 20415.

FOR FURTHER INFORMATION CONTACT: Linda Jackson, Chair, Hearings Task Force, Equal Employment Opportunity Commission, Room 500, 2401 E Street NW., Washington, DC 20507, (202) 634-6700

SUPPLEMENTARY INFORMATION: The hearings will address important issues within the Commission's jurisdiction under Title VII of the Civil Rights Act of 1964, as amended, which prohibits employment discrimination based on race, color, religion, sex and national origin. These hearings will be informational; any evidence presented will not be used by the Commission in the investigation of a charge or litigation of a lawsuit.

Over the last two decades, minorities and women have enjoyed great progress in their efforts to enter this nation's business community. Yet little attention has been given to the mobility of those groups beyond their arrival in the workplace. In these hearings, the Commission will interact with individuals to explore issues relating to equal employment opportunity in corporate America, and particularly, advancement opportunities.

The three days of hearings will examine independent, yet related issues that include racial and cultural barriers to advancement, factors and practices that enhance the mobility of minorities and women, and corporate efforts to address these equal employment opportunity issues. The Commission will be hearing testimony from witnesses who may include chief executive officers, other corporate and government officials and employees, academicians, and members of various special interest groups. The Commission will choose the witnesses to appear at the hearing.

The Commission is accepting information from interested persons who have knowledge in this area, including those who have first-hand experience with impediments to advancement or with approaches for combatting this problem. Written testimony from the business and labor communities, economists and other specialists, and affected individuals or groups are especially welcome. Written testimony should be limited to 25 pages, including appendices, and should be submitted no later than May 15. Testimony received after this date will be accepted, but may not be considered before the hearing. After the hearings, the Commission will compile relevant materials and publish a report.

Written statements should be addressed to: Executive Secretariat, Equal Employment Opportunity Commission, Room 503, 2401 E Street NW., Washington, DC 20507. Please mark "Hearings" at the lower left hand corner of the envelope.

Signed this 4th day of April 1988.

For the Commission.

Clarence Thomas,

Chairman, Equal Employment Opportunity Commission.

[FR Doc. 88-7826 Filed 4-8-88; 8:45 am]

BILLING CODE 6570-06-M

FEDERAL EMERGENCY MANAGEMENT AGENCY

Agency Information Collection Submitted to the Office of Management and Budget for Clearance

The Federal Emergency Management Agency (FEMA) has submitted to the Office of Management and Budget the following information collection package for clearance in accordance with the Paperwork Reduction Act (44 U.S.C. Chapter 35).

Type: Revision of 3067-0163

Title: Individual and Family Grant (IFG) Program Information

Abstract: The information is necessary for program management purposes. While States administer the IFG program, FEMA regional office staff are responsible for monitoring the State's performance and adherence to FEMA regulations and policy guidance. The information enables regional staff to monitor program delivery and compliance with other Federal requirements.

Type of Respondents: State or local governments

Number of Respondents: 125

Burden Hours: 2,003

Frequency of Recordkeeping or Reporting: Weekly, On Occasion

Copies of the above information collection request and supporting documentation can be obtained by calling or writing the FEMA Clearance Officer, Linda Shiley, (202) 646-2624, 500 C Street, SW., Washington, DC 20472.

Comments should be directed to Francine Picoult, (202) 395-7231, Office of Management and Budget, 3235 NEOB, Washington, DC 20503 within two weeks of this notice.

Date: March 31, 1988.

Wesley C. Moore,

Director, Office of Administrative Support.

[FR Doc. 88-7811 Filed 4-8-88; 8:45 am]

BILLING CODE 6718-21-M

Agency Information Collection Submitted to the Office of Management and Budget for Clearance

The Federal Emergency Management Agency (FEMA) has submitted to the Office of Management and Budget the following information collection package for clearance in accordance with the Paperwork Reduction Act (44 U.S.C. Chapter 35).

Type: Extension of 2067-0172

Title: Radiological Protection Data Base

Abstract: Increasing use of radioactive materials and nuclear technology require a Radiological Protection Program designed to protect the public. Development and maintenance of a Data Base will assist Federal and State governments to track the status and development efforts to implement a radiological defense program with Federal financial and guidance support.

Type of Respondents: State or local governments

Number of Respondents: 5,150

Burden Hours: 2,575

Frequency of Recordkeeping or Reporting: Quarterly

Copies of the above information collection request and supporting documentation can be obtained by calling or writing the FEMA Clearance Officer, Linda Shiley, (202) 646-2624, 500 C Street, SW., Washington, DC 20472.

Comments should be directed to Francine Picoult, (202) 395-7231, Office of Management and Budget, 3235 NEOB, Washington, DC 20503 within two weeks of this notice.

Date: March 31, 1988.

Wesley C. Moore,

Director, Office of Administrative Support.

[FR Doc. 88-7812 Filed 4-8-88; 8:45 am]

BILLING CODE 6718-21-M

FEDERAL HOME LOAN BANK BOARD

[No. 88-239]

Applications for Unlisted Trading Privileges and Opportunity for Hearing; Cincinnati Stock Exchange

Date: April 6, 1988.

AGENCY: Federal Home Loan Bank Board.

ACTION: Notice.

SUMMARY: The Cincinnati Stock Exchange has filed, pursuant to section 12(f)(1)(B) of the Securities Exchange Act of 1934 and Rule 12f-1 thereunder, applications ("Applications") with the Federal Home Loan Bank Board ("Board") for unlisted trading privileges in the following securities.

American Savings and Loan Association, Miami, Florida (FHLBB No. 5405), Common Stock, $.50 Par Value

Northeast Savings, F.A., Hartford, Connecticut (FHLBB No. 3231), Common Stock, $.01 Par Value

These securities are listed and registered on one or more other national securities exchanges and are reported in the consolidated transaction reporting system.

Comments: Any interested person may inspect the Applications at the Board, and, within 15 days of publication of this notice in the **Federal Register**, submit to the Corporate and Securities Division, Office of General Counsel, Federal Home Loan Bank Board, 1700 G Street NW., Washington, DC 20552, written data, views and arguments bearing upon whether the extensions of unlisted trading privileges pursuant to the Applications are consistent with the maintenance of fair and orderly markets and the protection of investors. Following this opportunity for hearing, the Board will approve the Applications after the date mentioned above if it finds, based upon all the information available to it, that the extensions of unlisted trading privileges pursuant to the Applications are consistent with the maintenance of fair and orderly markets and the protection of investors.

FOR FURTHER INFORMATION CONTACT: John P. Harootunian, Assistant General Counsel for Securities Policy, Corporate and Securities Division, Office of General Counsel, at (202) 377-6415 or at the above address.

By the Federal Home Loan Bank Board.

John F. Ghizzoni,

Assistant Secretary.

[FR Doc. 88-7867 Filed 4-8-88; 8:45 am]

BILLING CODE 6720-01-M

[No. 88-240]

Applications for Unlisted Trading Privileges and Opportunity for Hearing; Midwest Stock Exchange, Inc.

April 6, 1988.

AGENCY: Federal Home Loan Bank Board.

ACTION: Notice.

SUMMARY: The Midwest Stock Exchange, Inc. has filed, pursuant to section 12(f)(1)(B) of the Securities Exchange Act of 1934 and Rule 12f-1 thereunder, applications ("Applications") with the Federal Home Loan Bank Board ("Board") for unlisted trading privileges in the following securities.

Crossland Savings Bank, FSB, Brooklyn, New York (FHLBB No. 7812), Common Stock, $1.00 Par Value

Centrust Savings Bank, Miami, Florida (FHLBB No. 2745), Common Stock, $.01 Par Value

Empire of America, FSB, Buffalo, New York (FHLBB No. 5160), Common Stock, $1.00 Par Value

Comfed Savings Bank, Lowell, Massachusetts (FHLBB No. 3483), Common Stock, $.01 Par Value

These securities are listed and registered on one or more other national securities exchanges and are reported in the consolidated transaction reporting system.

Comments: Any interested person may inspect the Applications at the Board, and, within 15 days of publication of this notice in the **Federal Register**, submit to the Corporate and Securities Division, Office of General Counsel, Federal Home Loan Bank Board, 1700 G Street, NW., Washington, DC 20552, written data, views and arguments bearing upon whether the extensions of unlisted trading privileges pursuant to the Applications are consistent with the maintenance of fair and orderly markets and the protection of investors. Following this opportunity for hearing, the Board will approve the Applications after the date mentioned above if it finds, based upon all the information available to it, that the extensions of unlisted trading privileges pursuant to the Applications are consistent with the maintenance of fair and orderly markets and the protection of investors.

FOR FURTHER INFORMATION CONTACT: John P. Harootunian, Assistant General Counsel for Securities Policy, Corporate and Securities Division, Office of General Counsel, at (202) 377-6415 or at the above address.

By the Federal Home Loan Bank Board,

John F. Ghizzoni,

Assistant Secretary.

[FR Doc. 88-7868 Filed 4-8-88; 8:45 am]

BILLING CODE 6720-01-M

[No. 88-241]

Applications for Unlisted Trading Privileges and Opportunity for Hearing; Philadelphia Stock Exchange

Date: April 6, 1988.

AGENCY: Federal Home Loan Bank Board.

ACTION: Notice.

SUMMARY: The Philadelphia Stock Exchange has filed, pursuant to section 12(f)(1)(B) of the Securities Exchange Act of 1934 and Rule 12f-1 thereunder, applications ("Applications") with the Federal Home Loan Bank Board ("Board") for unlisted trading privileges in the following securities.

Standard Federal Bank, Troy, Michigan (FHLBB No. 0161), Common Stock, $1.00 Par Value

Coast Savings and Loan Association, Los Angeles, California (FHLBB No. 7046), Common Stock, No Par Value

These securities are listed and registered on one or more other national securities exchanges and are reported in the consolidated transaction reporting system.

Comments: Any interested person may inspect the Applications at the Board, and, within 15 days of publication of this notice in the **Federal Register**, submit to the Corporate and Securities Division, Office of General Counsel, Federal Home Bank Board, 1700 G Street NW., Washington, DC 20552, written data, views and arguments bearing upon whether the extensions of unlisted trading privileges pursuant to the Applications are consistent with the maintenance of fair and orderly markets and the protection of investors. Following this opportunity for hearing, the Board will approve the Applications after the date mentioned above if it finds, based upon all the information available to it, that the extensions of unlisted trading privileges pursuant to the Applications are consistent with the maintenance of fair and orderly markets and the protection of investors.

FOR FURTHER INFORMATION CONTACT: John P. Harootunian, Assistant General Counsel for Securities Policy, Corporate and Securities Division, Office of General Counsel, at (202) 377-6415) or at the above address.

By the Federal Home Loan Bank Board,

John F. Ghizzoni,

Asistant Secretary

[FR Doc. 88-7869 Filed 4-8-88; 8:45 am]

BILLING CODE 6720-01-M

[No. AC 708; FHLBB No. 7472]

Central Savings and Loan Association, Columbia, PA; Approval of Conversion Application

Date: April 6, 1988.

Notice is hereby given that on March 30, 1988, the Office of the General Counsel of the Federal Home Loan Bank Board, acting pursuant to the authority delegated to the General Counsel or his designee, approved the application of Central Savings and Loan Association, Columbia, Pennsylvania, for permission to convert to the stock form of organization. Copies of the application are available for inspection at the Office of the Secretariat at the Federal Home Loan Bank Board, 1700 G Street NW., Washington, DC 20552, and at the Office of the Supervisory Agent at the Federal Home Loan Bank of Pittsburgh, One Riverfront Center, 20 Stanwix Street, Pittsburgh, Pennsylvania 15222.

By the Federal Home Loan Bank Board.

John F. Ghizzoni
Assistant Secretary.

[FR Doc. 88-7870 Filed 4-8-88; 8:45 am]
BILLING CODE 6720-01-M

[No. AC-707; FHLBB No. 6526]

Cherokee Federal Savings Bank, Canton, GA; Approval of Conversion Application

Date: April 6, 1988.

Notice is hereby given that on March 30, 1988, the Office of the General Counsel of the Federal Home Loan Bank Board, acting pursuant to the authority delegated to the General Counsel or his designee, approved the application of Cherokee Federal Savings Bank, Canton, Georgia, for permission to convert to the stock form of organization. Copies of the application are available for inspection at the Office of the Secretariat at the Federal Home Loan Bank Board, 1700 G Street NW., Washington, DC 20552, and at the Office of the Supervisory Agent at the Federal Home Loan Bank of Atlanta, 1475 Peachtree Street, NE., Atlanta, Georgia 30309.

By the Federal Home Loan Bank Board.

John F. Ghizzoni,
Assistant Secretary.

[FR Doc. 88-7871 Filed 4-8-88; 8:45 am]
BILLING CODE 6720-01-M

FEDERAL MARITIME COMMISSION

Agreement(s) Filed; Evergreen Marine Corp., et al.

The Federal Maritime Commission hereby gives notice of the filing of the following agreement(s) pursuant to section 5 of the Shipping Act of 1984.

Interested parties may inspect and obtain a copy of each agreement at the Washington, DC Office of Federal Maritime Commission, 1100 L Street NW., Room 10325. Interested parties may submit comments on each agreement to the Secretary, Federal Maritime Commission, Washington, DC 20573, within 10 days after the date of the Federal Register in which this notice appears. The requirements for comments are found in § 572.603 of Title 46 of the Code of Federal Regulations. Interested persons should consult this section before communicating with the Commission regarding a pending agreement.

Agreement No.: 213-010079-003

Title: Evergreen Marine Corporation (Taiwan) Ltd. and Japan Line, Ltd. Space Charter and Sailing Agreement in the Far East-North America Trades.

Parties: Evergreen Marine Corporation (Taiwan) Ltd. Japan Line, Ltd.

Synopsis: The proposed amendment would remove the U.S. East Coast-Far East trade from the scope of the agreement. It would also clarify that the 40,000 TEU ceiling in the agreement applies on a monthly basis and would eliminate the 18 vessel limitation on the number of vessels to be operated under the agreement.

Agreement No.: 217-011176-001

Title: Ozean-Linie GmbH/n.v. CMB s.a. d/b/a Deppe Line, Space Charter Agreement.

Parties: Ozean Linie GmbH nv CMB sa d/b/a Deppe Line.

Synopsis: The proposed amendment would restrict the scope of the agreement to the trade between San Juan, Puerto Rico and Northern Europe.

Agreement No.: 217-011187

Title: Ozean-Linie GmbH/Deppe Linie GmbH d/b/a Deppe Line Space Charter Agreement.

Parties: Ozean Line GmbH ("Ozean") Deppe Linie GmbH d/b/a Deppe Line ("Deppe").

Synopsis: The proposed agreement would permit Deppe to charter space from Ozean aboard Ozean vessels operating in the trade between ports in Northern Europe and ports on the Atlantic and Gulf coasts of Florida and other U.S. Gulf ports.

By Order of the Federal Maritime Commission.

Joseph C. Polking,
Secretary.

Dated: April 6, 1988.

[FR Doc. 88-7872 Filed 4-8-88; 8:45 am]
BILLING CODE 6730-01-M

Ocean Freight Forwarder License Revocations; Bernard Lang & Co., Inc., et al.

Notice is hereby given that the following ocean freight forwarder licenses have been revoked by the Federal Maritime Commission pursuant to section 19 of the Shipping Act of 1984 (46 U.S.C. app. 1718) and the regulations of the Commission pertaining to the licensing of ocean freight forwarders, 46 CFR Part 510.

License Number: 209

Name: Bernard Lang & Co., Inc.
Address: 15 Maiden lane, New York, NY 10038
Date Revoked: March 7, 1988
Reason: Surrendered license voluntarily

License Number: 935

Name: Nancy Paul Horton and Thomas J. Kelly dba The Interport Company
Address: 747 Devon Avenue, Park Ridge, IL 60068
Date Revoked: March 9, 1988
Reason: Failed to maintain a valid surety bond

License Number: 1716R

Name: The W. Allen Jennings Company, Inc. dba The Jennings Co.
Address: P.O. box 10126, 2 Whitaker Bldg., Suite 111, Savannah, GA 31412
Date Revoked: March 23, 1988
Reason: Surrendered license voluntarily

Robert G. Drew,
Director, Bureau of Domestic Regulation.

[FR Doc. 88-7873 Filed 4-8-88; 8:45 am]
BILLING CODE 6730-01-M

Ocean Freight Forwarder License Applicants; Lana Davault Willis, et al.

Notice is given that the following applicants have filed with the Federal Maritime Commission applications for licenses as ocean freight forwarders pursuant to section 19 of the Shipping Act of 1984 (46 U.S.C. app. 1718 and 46 CFR Part 510).

Persons knowing of any reason why any of the following applicants should not receive a license are requested to

con'act the Office of Freight Forwarder and Passenger Vessel Operations, Federal Maritime Commission, Washington, DC 20573.

Lana Davault Willis, 1111 Thomas Drive, Humble, TX 77338

Utoku Express (U.S.A.) Inc., 2132A East Dominguez Street, Long Beach, CA 90810

Officers:

Kazuo Murayama, President

Kuzuo Tajima, Director

Tomonobu Kaieada, Secretary/V. President

Katsufumi Segawa, V. Pres./Gen. Mgr.

P.B. Forwarding International, Inc., 15499 Lakes, Of Delray Blvd., C-3, Apt. #107, Delray Beach, FL

Officers:

Paul Benton Fierman, President

Barbara Lee Gould, Vice President

Sylvia Glasser, Secretary/Treasurer

Continental Freight Forwarders, Inc., 401 Broadway, Suite 1612, New York, NY 10013

Officer: Wehbe Hakim, President/Director

Richard G. Shih, 750 S. Glasgow Ave., Inglewood, CA 90301

Dale M. A. Zerda, 580 Washington St., Rm. 204, San Francisco, CA 94111

Cruz Del Sur Shipping, Inc., 1040 Elizabeth Ave., Elizabeth, NJ 07201

Officer: Carlos Goncalves, President/Stockholder

MBW Forwarding, Inc., 600 First Avenue, Suite 332, Seattle, WA 98104

Officers:

Peter Joseph Bouffard, President/Dir.

Janice Lee Williams, VP/Sec./Dir.

Robert Mark Mares, Treas./Director

HWH Overseas, Inc., 99 Hudson Street, New York, NY 10013

Officers:

Brigitte Day, President/Director

George Pratsikas, Secretary/Treasurer.

By the Federal Maritime Commission.

Joseph C. Polking,

Secretary.

Dated: April 5, 1988.

[FR Doc. 88-7789 Filed 4-8-88; 8:45 am]

BILLING CODE 6730-01-M

FEDERAL RESERVE SYSTEM

[Docket No. R-0631]

Request for Comment; Private Sector Presentment

AGENCY: Board of Governors of the Federal Reserve System.

ACTION: Request for comment.

SUMMARY: The Board is requesting comment on the concept of requiring paying banks to pay for checks presented by private sector collecting banks before 2:00 p.m. in same-day funds, and without the imposition of any fees for these presentments.

DATE: Comments must be submitted on or before Auguest 3, 1988.

ADDRESS: Comments, which should refer to Docket No. R-0631, may be mailed to the Board of Governors of the Federal Reserve System, 20th and C Street NW., Washington, DC 20551, Attention: Mr. William W. Wiles, Secretary; or may be delivered to Room B-2223 between 8:45 a.m. and 5:00 p.m. All comments received at the above address will be included in the public comments file, and may be inspected in Room B-1122 between 8:45 a.m. and 5:15 p.m.

FOR FURTHER INFORMATION CONTACT: Elliott C. McEntee, Associate Director (202/452-2231), Louise L. Roseman, Assistant Director (202/452-2789), or Thomas C. Luck, Senior Analyst (202/452-3935), Division of Federal Reserve Bank Operations; or Joseph R. Alexander, Senior Attorney (202/452-2489), Legal Division. For the hearing impaired *only*: Telecommunication Device for the Deaf, Earnestine Hill or Dorothea Thompson (202/452-3254).

SUPPLEMENTARY INFORMATION:

Background

As a result of concerns related to the practice of delayed availability—the holds that some depository institutions (collectively referred to as "banks") place on the proceeds of checks deposited into their customers' accounts before the funds may be withdrawn—Congress passed the Expedited Funds Availability Act, Title VI of Pub. L. 100-86, 101 Stat. 552, 635 (the "Act"). Banks that impose holds had argued that their availability schedules reflected the time needed for the collection and return of checks that were not paid, and provided a measure of protection against the risk that the bank could not recover funds from the depositor if those funds had already been withdrawn from the depositor's account.

In part to reduce the risk to the depository bank [1] from the Act's requirements that funds be made available on a more prompt basis, Congress gave the Board of Governors broad regulatory authority to make improvements to the check collection and return system. To carry out the provisions of the Act, the Board is given the responsibility to regulate "(A) any aspect of the payment system, including the receipt, payment, collection or clearing of checks; and (B) any related function of the payment system with respect to checks." 12 U.S.C. 4008(c).

The Board issued a comprehensive proposal to implement the Act in December 1987, 52 FR 47112 (Dec. 11, 1987), which includes a number of initiatives to improve the check return system. The current check return system is inefficient and is the primary cause of the delay a depositary bank may experience in learning that checks have not been paid. It typically takes over three times longer to return a check than it does to collect a check. In contrast to the high-speed, automated processing involved in the forward collection of checks, the check return system is a slow, labor intensive operation. The proposed improvements to the check return system were designed to speed the return of unpaid checks and to provide notifications of nonpayment for large-dollar checks being returned.

In addition to the initiatives to improve the check return process, it may be possible to make improvements to the forward collection process. Today, Federal Reserve Banks receive same-day payment for checks presented to paying banks prior to 2:00 p.m. by debiting the paying bank's or a correspondent bank's account on the books of a Federal Reserve Bank. In a number of instances, collecting banks negotiate payment terms with paying banks that are similar to, or more favorable than, those accorded Reserve Banks. For example, participating banks receive same-day payment for checks presented through their local clearinghouse exchange, and certain collecting banks negotiate arrangements with paying banks that provide for same-day payment for checks presented after 2:00 p.m. Correspondent banks assert, however, that in other instances their presentment and payment terms are less favorable than those of the Reserve Banks, due to barriers erected by the paying banks. These barriers can be in the form of the method of payment by the paying bank, a requirement to maintain balances at the paying bank, or presentment fees. Some banks use such barriers, including presentment fees, to establish delayed disbursement

[1] The term "depositary bank" is defined in the proposed regulation as the first bank to which a check is transferred even though it is also the paying bank or the payee. Proposed 12 CFR 229.2, 52 FR 47112, 47150 (Dec. 11, 1987).

arrangements that slow the forward collection of checks.

Presentment fees are charges that certain paying banks commonly charge private sector presenting banks when presentment is made. Proponents of presentment fees maintain that the fees discourage presentments after locally established clearinghouse deadlines, or offset the cost of processing checks that are presented after this time, thus making the paying bank's operations more efficient.

Presentment fees may not reflect a service rendered to the collecting bank by the paying bank, and may discourage the prompt presentment of checks because banks often seek to avoid the position of presentment fees. Moreover, presentment fees may create a monopoly pricing situation by paying banks because collecting banks have no alternative but to present checks drawn on a bank to that bank.

Since 1917, the Federal Reserve Act has prohibited Reserve Banks from paying presentment fees, 12 U.S.C. 342, and Reserve Banks will not collect checks drawn on banks that would require the Reserve Banks to pay these fees. The issue of whether Reserve Banks should pay presentment fees has been debated for the past few years. In 1987, Congress directed the General Accounting Office (GAO) to study and report on presentment fees. Specifically, the GAO was asked to study (1) the Federal Reserve System's exemption from the imposition of presentment fees, and (2) the impact of the imposition of presentment fees on the efficiency of the check collection system. Pub. L. 100-86, section 1202, 101 Stat. 661.

Methods to avoid presentment fees and other barriers to direct presentments by private sector collecting banks have been discussed for a number of years. Several years ago, the California Bankers Clearing House Association (CBCHA) proposed a direct settlement service (DSS), whereby presentment of checks by private sector collecting banks would be deemed to have been made by a Federal Reserve Bank, and thus would be subject to the same terms as presentments by a Reserve Bank. Under the proposed service, collecting banks could present checks directly to paying banks without the imposition of presentment fees, and receive immediate payment through the Federal Reserve, with the Federal Reserve handling any returned checks and adjustments. A preliminary staff analysis of the proposed direct settlement service concluded that the societal costs of DSS would likely exceed the societal benefits.

The Board proposed an approach to encourage the direct presentment of returned checks by returning banks in its regulations to implement the Expedited Funds Availability Act. Proposed 12 CFR 229.32, 52 FR at 47157, sets forth the responsibility of the depositary bank in accepting and paying for returned checks. This section would require the depositary bank to pay for returned checks it receives from returning or paying banks in usable funds on the day the returns are received. No substantial objections to this requirement were raised by commenters. Bank of America, N.T. & S.A., San Francisco, California, in its comments on the proposal, urged the Board to expand this provision to apply to presentments of forward collection checks, by requiring paying banks to pay in same-day funds for checks presented by private sector collecting banks before 2:00 p.m.

Discussion

The Board requests public comment on the concept of requiring paying banks to pay for checks in funds that are available for use by the presenting bank on the day that the checks are presented, without the imposition of presentment fees and free from other barriers to direct presentment. This "same-day payment" concept would include the following general features:

(1) The paying bank must accept checks from any presenting bank.

(2) The paying bank cannot assess a presentment fee on a presenting bank for checks presented before 2:00 p.m.

(3) The paying bank must pay for checks presented prior to 2:00 p.m. Payment must be made to the presenting bank so that the funds are available for use by the presenting bank on the day the checks are presented for payment. Acceptable methods of payment might include wire transfer, net settlement through the Federal Reserve, adjustment of correspondent balances before the closing of Fedwire, or any other means of payment acceptable to the presenting bank.

The Board believes that such a same-day payment requirement could speed the foward collection of checks consistent with the purposes of the Expedited Funds Availability Act. Nevertheless, same-day payment may impose unwelcome burdens and operational difficulties on paying banks.

Same-day payment has the potential to accelerate the collection of some checks by encoraging more direct presentments by private sector collecting banks. Same-day payment would allow banks to present directly to those paying banks that provide delayed disbursement services to their corporate customers. Banks providing delayed disbursement services have tried to avoid presemtment by private collecting banks through presentment fees, inaccessible locations, and other means. The Federal Reserve's High Dollar Group Sort program has been successful in obtaining faster availability for remotely disbursed checks that are collected through the Federal Reserve. Same-day payment would likely facilitate prompt collection by the private sector of remotely disbursed checks.

Support for same-day payment is expected from certain correspondent and other collecting banks. Some banks will receive improved availability for the checks they collect, including faster collection of delayed disbursement checks. Correspondent banks with large check collection operations may view the elimination of all presentment fees before 2:00 p.m., and the requirement that payment be made in usable funds on the day of presentment, as making them more comparable competitively with the Federal Reserve Bank. Banks that are currently net payors of presentment fees may also find the elimination of these fees to be advantageous in terms of reductions in operating costs.

Same-day payment is likely, however, to pose problems for paying banks. Specifically, some paying banks may be concerned with the additional complexities resulting from the receipt of checks from new sources, the additional bundles of checks (i.e., cash letters) to process and payments for cash letters to make, and the problems with reconcilement of cash letters after the cash letters have been presented and paid. Paying banks may also experience less certainty with respect to the timing and volume of checks received for payment. This uncertainty may result in an increase in operating costs, especially in the labor intensive adjustment operation.

Banks that currently receive revenue from presentment fees may also be opposed to same-day payment, as may banks and corporations that engage in delayed disbursement and related cash management practices. Same-day payment may make the provision of cash management services more difficult for some paying banks. The arrival pattern of checks may be less predictable, and checks may be presented later in the day. Later presentment would result in cash management information, which is used to determine the amount of funds to invest each day, being sent to corporate

treasurers later than at present. Since the markets are thinner later in the day, a delay in investing the funds may result in a slightly lower yield.

The paying bank may be put at some, albeit small, increased risk by accepting direct presentments if the presenting bank should fail after presentment but before returned checks are settled. Banks that currently exchange checks do so on the basis of agreements, and if one of the parties perceives some risk of failure of the other party, it would either compensate for the risk or void the agreement. The free flow of checks allowed by same-day payment obviates the need for bilateral agreements and, therefore, may increase risk to the paying bank.

Conclusion

Same-day payment raises several important issues that are central to the efficiency of the nation's check collection system. Public comment on the issues addressed by same-day payment, under which paying banks must pay for checks presented by collecting banks prior to 2:00 p.m. in same-day useable funds, without the imposition of presentment fees, may assist the Federal Reserve in determining the operational effect of the proposal. Based on the comments received, a specific proposal may be developed, which could be issued for public comment prior to final adoption of formal rules on this issue.

Specifically, the Board requests comments to respond to the following questions:

A. What is the potential demand for use of a same-day payment requirement and the anticipated public benefits if it were implemented?

(1) *Collecting banks.* By what degree would same-day payment increase direct presentments by private sector collecting banks? How many banks would use same-day payment to make direct presentments? Would presenting banks be primarily larger correspondent banks or a cross-section of the banking community?

(2) *Paying banks.* Would most direct presentments be on a local basis? How many of the paying banks would be new endpoints to which collecting banks do not now separately sort? What are the characteristics of these paying banks—are they large, small, city, country, etc.? Would paying banks receive cash letters primarily from local and regional banks, or are cash letters likely to be presented by depositary or other collecting banks operating on a nationwide basis?

(3) *Volume.* How much volume might be presented for same-day payment? How are these items being collected currently?

(4) *Overall Benefits.* Would same-day payment remove barriers to more prompt collection of checks? Is same-day payment an appropriate enhancement for the check collection system? What are the most significant advantages or drawbacks to same-day payment?

B. What operational characteristics should same-day payment assume?

(1) *Time and place of presentment.* What is the most appropriate cutoff time for presentment to the paying bank? Should different cutoff times be established for different classes of paying banks (i.e., noon for city banks, later (2:00 p.m.) for country banks)?

How would collecting banks keep track of changing presentment points and intercept arrangements? Should the Federal Reserve maintain a directory of presentment places?

(2) *Adjustments and quality of work.* Are any rules necessary to assure adjustments are handled and settled promptly? How would payment for adjustments be made? Is it necessary to specify whether and how compensation would be made for the time value of money when errors are made?

Should a paying bank be able to refuse to accept checks from a presenting bank, if experience indicates that the cash letter information accompanying the checks presented is often in error? Is there any need for standards regarding accuracy of cash letter information? Who should enforce such standards?

(3) *Payment.* What structure should settlement for same-day payment assume? What settlement options should be permitted? What should be the Federal Reserve's involvement? When should payment be made? Should any advance notice be required before a bank begins to present checks for same-day payment?

(4) *Payor bank services.* Is there a need for presenting banks to provide payor bank services when presenting checks for same-day payment? What would be the effects on the cash management services of paying banks, if payor bank services were provided by a number of differenc presenters? Should a paying bank be able to name a Federal Reserve office as a presentment point so that payor bank services, or truncation, could be performed?

C. What impact would same day payment have on:

(1) *Paying bank operations.* What are the operational problems that paying banks will encounter with same-day payment? What could be done to minimize such problems?

(2) *Clearinghouses.* Would the implementation of same-day payment prompt a breakdown in current clearinghouse arrangements? Would clearinghouses tend to move their clearing hour to a later time?

(3) *Existing correspondent relationships.* What effect would same-day payment have on existing inter-city clearing arrangements among correspondent banks? Would such arrangements continue?

(4) *Cash management services of banks.* How would same-day payment affect the provision of cash management services by banks? How would corporations be affected by a same-day payment rule?

(5) *Delayed disbursement.* Would collecting banks focus on improving clearing of checks drawn on banks offering delayed disbursement services?

(6) *Costs/revenues of banks.* How could collecting bnanks reduce check collection costs by using same-day payment? Would banks lose significant revenues from the loss of presentment fees? What additional costs would collecting banks incur in presenting checks under this concept?

(7) *Speed of collection.* How much would same-day payment enable collecting banks to speed the collection of checks and improve availability?

(8) *Time and place.* What effect would same-day payment have on presentment of checks to banks that conduct banking operations in several states? As nationwide banking emerges, are there special rules which should be developed to recognize the interests of both collecting and paying banks?

D. What are the factors affecting risk arising from a same-day payment rule?

(1) *Impact on risk management.* Would same-day payment affect banks' ability to manage to manage daylight overdrafts? Would bank wire transfer systems become congested with late-in-the-day transfers to effect settlement for checks presented for same-day payment?

(2) *Bank failure.* What is the risk to the paying bank of failure of the depositary bank prior to settlement for returned checks? Is this risk significant? What could be done to offset such risk?

E. Are there alternatives to the same-day payment?

(1) Should the Federal Reserve prohibit presentment fees by regulation without addressing the other terms of payment for checks presented to the paying bank? What effect would a

prohibition of presentment fees have on the check collection practices of presenting banks? What effect would a prohibition of presentment fees have on paying banks? Should a prohibition on presentment fees be accompanied by other rules, such as a restriction on the time of day that presentment fees could be imposed?

(2) Would depository institutions be more favorable to reviewing a specific same-day payment proposal at a later time, perhaps after the initial implementation of the Expedited Funds Availability Act is completed?

By order of the Board of Governors of the Federal Reserve System, April 5, 1988.

William W. Wiles,

Secretary of the Board.

[FR Doc. 88-7791 Filed 4-8-88; 8:45 am]

BILLING CODE 6210-01-M

DEPARTMENT OF HEALTH AND HUMAN SERVICES

Food and Drug Administration

[Docket No. 88M-0083]

Baxter Healthcare Corp.; Premarket Approval of MicroScan® Rapid Panels

AGENCY: Food and Drug Administration.

ACTION: Notice.

SUMMARY: The Food and Drug Administration (FDA) is announcing its approval of the application by Baxter Healthcare Corp., West Sacramento, CA, for premarket approval, under the Medical Device Amendments of 1976, of the MicroScan® Rapid Panels. After reviewing the recommendation of the Microbiology Devices Panel, FDA's Center for Devices and Radiological Health (CDRH) notified the applicant of the approval of the application.

DATE: Petitions for administrative review by May 11, 1988.

ADDRESS: Written requests for copies of the summary of safety and effectiveness data and petitions for administrative review to the Dockets Management Branch (HFA-305), Food and Drug Administration, Rm. 4-62, 5600 Fishers Lane, Rockville, MD 20857.

FOR FURTHER INFORMATION CONTACT: Joseph L. Hackett, Center for Devices and Radiological Health (HFZ-440), Food and Drug Administration, 8757 Georgia Ave., Silver Spring, MD 20910, 301-427-7550.

SUPPLEMENTARY INFORMATION: On August 20, 1987, Baxter Healthcare Corp., West Sacramento, CA 95691, submitted to CDRH an application for premarket approval of the MicroScan® Rapid Panels. The device is a rapid microdilution device for determining minimal inhibitory concentration in the performance of antimicrobial susceptibility testing. The device is designed for use in determining identification to the species level and/or antimicrobial agent susceptibility of rapidly growing aerobic and facultatively anaerobic Gram-negative bacilli *Enterobacteriaceae* glucose nonfermenters and non-*Enterobacteriaceae* glucose fermenters). The MicroScan® Rapid Panels include Rapid Neg Combo Type 1, Rapid Urine Combo Type 1, and Rapid Neg/Urine MIC Type 1 and utilize 96 well microdilution panels.

On February 8, 1988, the Microbiology Devices Panel, an FDA advisory committee, reviewed and recommended approval of the application. On February 24, 1988, CDRH approved the application by a letter to the applicant from the Director of the Office of Device Evaluation, CDRH.

A summary of the safety and effectiveness data on which CDRH based its approval is on file in the Dockets Management Branch (address above) and is available from that office upon written request. Requests should be identified with the name of the device and the docket number found in brackets in the heading of this document.

A copy of all approved labeling is available for public inspection at CDRH—contact Joseph L. Hackett (HFZ-440), address above.

Opportunity for Administrative Review

Section 515(d)(3) of the Federal Food, Drug, and Cosmetic Act (the act) (21 U.S.C. 360e(d)(3)) authorizes any interested person to petition, under section 515(g) of the act (21 U.S.C. 360e(g)), for administrative review of CDRH's decision to approve this application. A petitioner may request either a formal hearing under Part 12 (21 CFR Part 12) of FDA's administrative practices and procedures regulations or a review of the application and CDRH's action by an independent advisory committee of experts. A petition is to be in the form of a petition for reconsideration under § 10.33(b) (21 CFR 10.33(b)). A petitioner shall identify the form of review requested (hearing or independent advisory committee) and shall submit with the petition supporting data and information showing that there is a genuine and substantial issue of material fact for resolution through administrative review. After reviewing the petition, FDA will decide whether to grant or deny the petition and will publish a notice of its decision in the **Federal Register**. If FDA grants the petition, the notice will state the issue to be reviewed, the form of review to be used, the persons who may participate in the review, the time and place where the review will occur, and other details.

Petitioners may, at any time on or before May 11, 1988, file with the Dockets Management Branch (address above) two copies of each petition and supporting data and information, identified with the name of the device and the docket number found in brackets in the heading of this document. Received petitions may be seen in the office above between 9 a.m. and 4 p.m., Monday through Friday.

This notice is issued under the Federal Food, Drug, and Cosmetic Act (secs. 515(d), 520(h), 90 Stat. 554-555, 571 (21 U.S.C. 360e(d), 360j(h))) and under authority delegated to the Commissioner of Food and Drugs (21 CFR 5.10) and redelegated to the Director, Center for Devices and Radiological Health (21 CFR 5.53).

Dated: March 30, 1988.

James S. Benson,

Deputy Director, Center for Devices and Radiological Health.

[FR Doc. 88-7848 Filed 4-8-88; 8:45 am]

BILLING CODE 4160-01-M

DEPARTMENT OF THE INTERIOR

Fish and Wildlife Service

Availability of Draft Comprehensive Conservation Plan; Environmental Impact Statement; and Wilderness Review for the Alaska Maritime National Wildlife Refuge, AK; Corrections

AGENCY: Fish and Wildlife Service, Department of the Interior.

ACTION: Notice of availability; Corrections.

SUMMARY: This document corrects a notice of availability that appeared on page 4224 in the **Federal Register** of Friday, February 12, 1988 (53 FR 4224).

FOR FURTHER INFORMATION CONTACT: William Knauer, Refuges and Wildlife, U.S. Fish and Wildlife Service, 1011 E. Tudor Road, Anchorage, Alaska 99503; telephone (907) 786-3399.

Text

The following corrections are made in the **Federal Register** Document 88-5329 appearing on page 4224:

On page 4224, column three, second paragraph, second sentence, "Dates," is corrected to read "A public meeting will be held in Kodiak, Alaska, on Tuesday, April 12, 1988, at 7:00 p.m., in the

Cafeteria of the Kodiak Junior High School, Rezanof Drive and Powell Avenue."

On page 4224, column three, second paragraph, sixth sentence, "Dates," is corrected to read "To be considered in the preparation of the final plan all comments and testimony, both oral and written, should be received no later than May 18, 1988."

Date: April 4, 1988.

Walter O. Stieglitz,

Regional Director.

[FR Doc. 88-7862 Filed 4-8-88; 8:45 am]

BILLING CODE 4310-55-M

Receipt of Applications for Permits, William Gruenerwald et al.

The following applicants have applied for permits to conduct certain activities with endangered species. This notice is provided pursuant to section 10(c) of the Endangered Species Act of 1973, as amended (16 U.S.C. 1531, *et seq.*):

PRT-726239

Applicant: William Gruenerwald, Colorado Springs, CO

The applicant requests a permit to import one male and two female onagers (*Equus hemionus onager*), captive born at the Cologne Zoo, West Germany, and transport to applicant's Canyon Colorado Equid Sanctuary in New Mexico for the purpose of captive breeding.

PRT-726322

Applicant: Ronald L. Tremper, Center for Reptile & Amphibian Propagation, Fresno, CA

The applicant requests a permit to import 10 captive born radiated tortoises (*Geochelone* (=*Testudo*) *radiata*) from Stuttgart, West Germany, for captive-breeding purposes.

PRT-725879

Applicant: Louisville Zoological Garden, Louisville, KY

The applicant requests a permit to import four juvenile Cuban crocodiles (*Crocodylus rhombifer*) from the Skansen-Akvariet in Stockholm, Sweden for purposes of captive propagation.

PRT-718807

Applicant: Audubon Zoological Gardens, New Orleans, LA

The applicant requests a permit to import seven, unsexed captive-hatched juvenile tuataras (*Sphenodon punctatus*) from the Wildlife Service Department of Internal Affairs, Wellington, New Zealand. These tuataras are to be imported for the purpose of developing a breeding program.

Documents and other information submitted with these applications are available to the public during normal business hours (7:45 am to 4:15 pm) Room 403, 1375 K. Street NW., Washington DC 20005, or by writing to the Director, U.S. Office of Management Authority, P.O. Box 27329, Washington, DC 20038-7329.

Interested persons may comment on any of these applications within 30 days of the date of this publication by submitting written views, arguments, or data to the Director at the above address. Please refer to the appropriate applicant and PRT number when submitting comments.

Date: April 5, 1988.

R.K. Robinson,

Chief, Branch of Permits, U.S. Office of Management Authority.

[FR Doc. 88-7896 Filed 4-8-88; 8:45 am]

BILLING CODE 4310-RN-M

Receipt of Applications for Permits; Toledo Zoological Gardens

The following applicant has submitted an amended application for a permit to conduct certain activities with endangered species. This notice is provided pursuant to section 10(c) of the Endangered Species Act of 1973, as amended (16 U.S.C. 1531, *et seq.*):

PRT-726229

Applicant: Toledo Zoological Gardens, Toledo, Ohio

On March 30, 1988, a notice of application for a permit to import a pair of giant pandas that have been held in captivity in China since 1978, was published (53 FR 10298). The applicant has amended its application in order to import a substitute pair of pandas held in captivity in China since 1984. All other aspects of the application remain unchanged.

Documents and other information submitted with this application are available to the public during normal business (7:45 am to 4:15 pm) Room 403, 1375 K Street NW., Washington, DC 20005, or by writing to the Director, U.S. Office of Management Authority, P.O. Box 27329, Washington, DC 20038-7329.

Interested persons may comment on this application within 30 days of the date of its original publication (March 30, 1988) by submitting written views, arguments, or data to the Director at the above address. Please refer to the application and PRT number when submitting comments.

Dated: April 6, 1988.

Marshall P. Jones,

Acting Chief, U.S. Office of Management Authority.

[FR Doc. 88-7897 Filed 4-8-88; 8:45 am]

BILLING CODE 4310-RN-M

Bureau of Land Management

[ID-943-08-4220-11; I-23203]

Realty Action; Issuance of Land Exchange Conveyance Document; Idaho

AGENCY: Bureau of Land Management, Interior.

ACTION: Exchange of public and private lands.

SUMMARY: The United States has issued an exchange conveyance document to Idaho Forest Industries, Inc. of Coeur d'Alene, Idaho 83814, for the following-described lands under section 206 of the Federal Land Policy and Management Act of 1976:

Boise Meridian, Idaho

T. 46 N., R. 1 W.
Sec. 24, S½SE¼
T. 49 N., R. 5 W.
Sec. 3, SW¼;
Sec. 9, lots 1 and 3;
Sec. 17, NW¼SE¼.
Comprising 363.65 acres of public land.

In exchange for these lands, the United States acquired the following-described lands:

Boise Meridian, Idaho

T. 48 N., R. 2 W.
Sec. 19, lots 2, 3, N½NE¼, NE¼NW¼, SE¼SW¼;
Sec. 20, W½SW¼;
Sec. 29, NW¼NW¼;
Sec. 30, NE¼NE¼.
T. 48 N., R. 3 W.
Sec. 23, E½NE¼, NE¼SE¼;
Sec. 24, lots 2, 3, 4, 5, NW¼SW¼.
Comprising 725.10 acres of private land.

The purpose of the exchange was to acquire non-federal land that which has high public value for timber and wildlife. The public interest was well served through completion of this exchange.

The values of the federal public land and the non-federal land in the exchange were both appraised at $419,000 and $419,800 respectively. Idaho Forest Industies, Inc. waived the $800 difference in values.

Charles J. Haszier,

Deputy State Director for Operations.

Date: March 30, 1988.

[FR Doc. 88-7805 Filed 4-8-88; 8:45 am]

BILLING CODE 4310-GG-M

National Park Service

Information Collection Request Under OMB Review

AGENCY: National Park Service, Interior.

ACTION: Notice of information collection request under OMB review.

SUMMARY: On behalf of the land managing bureaus in the Department of the Interior, the National Park Service has submitted the information collection request listed below to the Office of Management and Budget for approval under the provisions of the Paperwork Reduction Act (44 U.S.C. Chapter 35). The request is for revision of an existing information collection requirement approved by OMB and assigned clearance No. 1024–0037. Copies of the request and related forms and explanatory material may be obtained by contacting the Bureau's Clearance Officer at the phone number listed below. Comments and suggestions on the requirements should be made within 30 days directly to the Bureau Clearance Officer and to the Office of Management and Budget, Interior Department Desk Officer, Washington, DC 20503, telephone (202) 395–7340.

Title: Application for and issuance of Federal permits under the Archeological Resources Protection Act and the Antiquities Act

Abstract: Permit applicants provide information to Federal land managers on the survey, collection or excavation work that they propose to conduct at archeological resources on public or Indian lands, their qualifications and institutional affiliation, and written certification by a suitable repository of its willingness to preserve the materials recovered on behalf of the United States Government (if recovered from public lands) or the Indian owner (if recovered from Indian lands and the Indian owner does not wish to take custody). If the work proposed is on Indian lands, the applicant must also obtain written consent from the Indian landowner and the Indian tribe having jurisdiction over the lands. This information allows the Federal land manager to determine if a permit should be issued and what terms and conditions should be placed on the permit. Each permittee is required to provide the Federal land manager with a preliminary and a final report on the work completed. This information enables the Federal land manager to determine if the terms and conditions of the permit were met and to incorporate the information into existing acheological inventories and historic preservation plans.

Departmental Form Numbers: DI 1926 (permit application), DI 1927 (ARPA permit) and DI 1928 (AA permit).

Frequency: On occasion.

Description of Respondents: Individuals, academic institutions and consulting firms desiring to conduct scientific research or environmental compliance activities at archeological resources located on public or Indian lands.

Annual Responses: 1050 responses, consisting of an estimated 350 permit applications and 700 reports (350 preliminary reports and 350 final reports).

Annual Burden Hours: 1050 hours.

Bureau Clearance Officer: Russell K. Olsen, telephone (202) 523–5133.

Russell K. Olsen,

Information Collection Clearance Officer.

[FR Doc. 88–1854 Filed 4–8–88; 8:45 am]

BILLING CODE 4310–70–M

[DES–88–18]

Availability of a Draft Environmental Impact Statement; Gates of the Arctic National Park and Preserve; AK

ACTION: Notice of Availability of the Draft Environmental Impact Statement (DEIS) for the Wilderness Recommendation Gates of the Arctic National Park and Preserve, Alaska, and the holding of public hearings and public meetings.

For Gates of the Arctic National Park and Preserve, four alternatives were examined ranging from no action, which means no additional wilderness designation, to designating all lands within the study area as wilderness. Alternative 2, the proposed action excludes a majority, about 69 percent of the study area, from wilderness designation.

DATES AND ADDRESSES: The public is invited to comment on the DEIS. The public comment period will end July 18, 1988. Written comments should be mailed to Mr. Q. Boyd Evison, Regional Director, Alaska Regional Office, National Park Service, 2525 Gambell, Anchorage, AK 99503. Comments must be received by July 18, 1988, to be considered in the development of the final EIS.

Two formal public hearings have been scheduled to receive oral and written comments on this wilderness DEIS. A section 810 review will be conducted as part of the hearings. The public hearings will also provide the opportunity to receive oral and written comments on Wilderness Recommendations for Wrangell-St. Elias National Park and Preserve and Lake Clark National Park and Preserve draft EISs, which are also on public review. One hearing will be held in Anchorage, Alaska, on Monday, June 6, 1988, 7:00 p.m., Third Floor Conference Room, Alaska Regional Office, National Park Service, 2525 Gambell Street. Another hearing has been tentatively scheduled for Tuesday, June 7, at 7:00 p.m. in Arlington, Virginia, at the Professional Center, Third Floor, Metropolitan Campus of George Mason University, 3401 North Fairfax Drive. The actual date and time will be verified in the local newspapers.

In addition, 5 public meetings will be held on Gates of the Arctic National Park and Preserve Wilderness DEIS. A section 810 review will be conducted as part of the meetings. They will be in Fairbanks on Tuesday, June 7, Allakaket and Coldfoot on Wednesday, June 8, Bettles on Thursday, June 9, and Anaktuvuk on Friday, June 10, 1988. The exact times and locations will be announced in local news media.

FOR FURTHER INFORMATION CONTACT: Division of Planning, Alaska Regional Office, National Park Service, 2525 Gambell Street, Anchorage, Alaska 99503; (907) 257–2654. The headquarters at Fairbanks, Alaska, phone (907) 456–0281 will have reading copies available to the public as will the NPS Alaska Regional Office (address above); the Alaska Resources Library in Anchorage, Alaska, 701 C Street; the Alaska Public Lands Information Office in Fairbanks, Alaska, Third and Cushman Streets; and the Office of Public Affairs, National Park Service, Department of the Interior in Washington, DC, 18th and C Streets, NW.

Gerald D. Patten,

Associate Director, Planning and Development.

Bruce Blanchard,

Director, Office of Environmental Project Review, United States Department of the Interior.

Dated: April 4, 1988.

[FR Doc. 88–7855 Filed 4–8–88; 8:45 am]

BILLING CODE 4310–70–M

INTERNATIONAL TRADE COMMISSION

[Investigations Nos. 303-TA-19 and 20 and 731-TA-391-399 (Preliminary)]

Antifriction Bearings (Other Than Tapered Roller Bearings) and Parts Thereof From the Federal Republic of Germany, France, Italy, Japan, Romania, Singapore, Sweden, Thailand, and the United Kingdom

AGENCY: International Trade Commission.

ACTION: Institution of preliminary countervailing duty and antidumping investigations, and scheduling of a conference to be held in connection with the investigations.

SUMMARY: The Commission hereby gives notice of the institution of preliminary countervailing duty investigations Nos. 303-TA-19 and 20 (Preliminary) under section 303 of the Tariff Act of 1930 (19 U.S.C. 1303) to determine whether there is a reasonable indication that an industry in the United States is materially injured, or is threatened with material injury, or the establishment of an industry in the United States is materially retarded, by reason of imports of antifriction bearings (other than tapered roller bearings) and parts thereof whether finished or unfinished, provided for in items 681.10, 681.39 and 692.32 of the Tariff Schedules of the United States (TSUS), which are alleged to be subsidized by the governments of Singapore and Thailand.[1]

The Commission also gives notice of the institution or preliminary antidumping investigations Nos. 731-TA-391-399 (Preliminary) under section 733(a) of the Tariff Act of 1930 (19 U.S.C. 1673b(a)) to determine whether there is a reasonable indication that an industry in the United States is materially injured, or is threatened with material injury, or the establishment of an industry in the United States is materially retarded, by reason of imports from the following countries of antifriction bearings (other than tapered roller bearings) and parts thereof, whether finished or unfinished, provided for in items 680.30, 680.33, 680.37, 680.39, 680.04, 681.10, 681.39 and 692.32[2] of the Tariff Schedules of the United States (TSUS), that are alleged to be sold in the United States at less than fair value:

Country	Investigation No.
Federal Republic of Germany.	731-TA-391 (preliminary).
France	731-TA-392 (preliminary).
Italy	731-TA-393 (preliminary).
Japan	731-TA-394 (preliminary).
Romania	731-TA-395 (preliminary).
Singapore	731-TA-396 (preliminary).
Sweden	731-TA-397 (preliminary).
Thailand	731-TA-398 (preliminary).
United Kingdom	731-TA-399 (preliminary).

As provided in sections 303 and 733(a), the Commission must complete preliminary countervailing duty and antidumping investigations in 45 days, or in this case by May 16, 1988.

For further information concerning the conduct of these investigations and rules of general application, consult the Commission's Rules of Practice and Procedure, Part 207, Subparts A and B (19 CFR Part 207), and Part 201, Subparts A through E (19 CFR Part 201).

EFFECTIVE DATE: March 31, 1988.

FOR FURTHER INFORMATION CONTACT: Diane Mazur (202-252-1184), Office of Investigations, U.S. International Trade Commission, 500 E Street SW., Washington, DC 20436. Hearing-impaired individuals are advised that information on this matter can be obtained by contacting the Commission's TDD terminal on 202-252-1809. Persons with mobility impairments who will need special assistance in gaining access to the Commission should contact the Office of the Secretary at 202-252-1000.

SUPPLEMENTARY INFORMATION:

Background

These investigations are being instituted in response to petitions filed on March 31, 1988, by the Torrington Co., Torrington, Connecticut.

Participation in the investigations

Persons wishing to participate in these investigations as parties must file an entry of appearance with the Secretary to the Commission, as provided in § 201.11 of the Commission's rules (19 CFR 201.11), not later than seven (7) days after publication of this notice in the **Federal Register**. Any entry of appearance filed after this date will be referred to the Chairman, who will determine whether to accept the late entry for good cause shown by the person desiring to file the entry.

Service List

Pursuant to § 201.11(d) of the Commission's rules (19 CFR 201.11(d)), the Secretary will prepare a service list containing the names and addresses of all persons, or their representatives, who are parties to these investigation upon the expiration of the period for filing entries of appearance. In accordance with §§ 201.16(c) and 207.3 of the rules (19 CFR 201.16(c) and 207.3), each document filed by a party to the investigations must be served on all other parties to the investigation (as identified by the service list), and a certificate of service must accompany the document. The Secretary will not accept a document for filing without a certificate of service.

Conference

The Director of Operations of the Commission has scheduled a conference in connection with these investigations for 9:30 a.m. on April 21, 1988 at the U.S. International Trade Commission Building, 500 E Street SW., Washington, DC. Parties wishing to participate in the conference should contact Diane Mazur (202-252-1184) not later than April 14, 1988 to arrange for their appearance.

Written Submissions

Any person may submit to the Commission on or before April 25, 1988 a written statement of information pertinent to the subject of the investigations, as provided in § 207.15 of the Commission's rules (19 CFR 207.15). A signed original and fourteen (14) copies of each submission must be filed with the Secretary to the Commission in accordance with § 201.8 of the rules (19 CFR 201.8). All written submissions except for confidential business data will be available for public inspection during regular business hours (8:45 a.m.

[1] Antifriction bearings (other than tapered roller bearings) and parts thereof from Singapore and Thailand subject to investigation include ball or roller bearing type flange, take-up, cartridge, and hanger units, and parts of the foregoing (TSUS item 681.10 and HTS subheadings 8483.20.40, 8483.30.40, 8483.90.20, and 8483.90.30); machinery parts containing any of the foregoing bearings, not containing electrical features and not specially provided for (TSUS item 681.39 and HTS subheading 8485.90.00); and parts of motor vehicles containing any of the foregoing bearings and not specially provided for (TSUS item 692.32 and HTS subheading 8708.99.50).

[2] For purposes of these investigations, the subject bearings and parts thereof include the following articles, whether finished or unfinished: antifriction balls and rollers (TSUS item 680.30 and proposed Harmonized Tariff Schedule (HTS) subheading 8482.91.00); ball bearings with integral shafts (TSUS item 680.33 and HTS subheading 8482.10.10); ball bearings (including radial ball bearings) and parts thereof (TSUS item 680.37 and HTS subheadings 8482.10.50 and 8482.99.10); spherical roller bearings and parts thereof (TSUS item 689.39 and HTS subheadings 8482.30.00 and 8482.99.50); other roller bearings (except tapered roller bearings) and parts thereof (TSUS item 680.39 and HTS subheadings 8482.99.70; ball or roller bearing type pillow blocks and parts thereof (TSUS item 681.04 and HTS subheadings 8483.20.80, 8483.20.80, 8483.90.30, and 8483.90.70); ball or roller bearing type flange, take-up, cartridge, and hanger units, and parts of the foregoing (TSUS item 681.10 and HTS subheadings 8483.20.40, 8483.30.40, 8483.90.20, and 8483.90.30); machinery parts containing any of the foregoing bearings, not containing electrical features and not specially provided for (TSUS item 681.3900 and HTS subheading 8485.90.00); and parts of motor vehicles containing any of the foregoing bearings and not specially provided for (TSUS item 692.3295 and HTS subheading 8708.99.50).

to 5:15 p.m.) in the Office of the Secretary to the Commission.

Any business information for which confidential treatment is desired must be submitted separately. The envelope and all pages of such submissions must be clearly labeled "Confidential Business Information." Confidential submissions and requests for confidential treatment must conform with the requirements of § 201.6 of the Commission's rules (19 CFR 201.6).

Authority: These investigations are being conducted under authority of the Tariff Act of 1930, title VII. This notice is published pursuant to § 207.12 of the Commission's rules (19 CFR 207.12).

By order of the Commission.

Kenneth R. Mason,

Secretary.

Issued: April 6, 1988.

[FR Doc. 88-7833 Filed 4-8-88; 8:45 am]

BILLING CODE 7020-02-M

INTERSTATE COMMERCE COMMISSION

[Docket No. AB-55 (Sub-No. 227X)]

CSX Transportation, Inc.; Abandonment Near Chillicothe in Ross County, OH

AGENCY: Interstate Commerce Commission.

ACTION: Notice of exemption.

SUMMARY: The Commission exempts from the prior approval requirements of 49 U.S.C. 10903, *et seq.*, the abandonment by CSX Transportation, Inc. of approximately .87 miles of track in Ross County, OH subject to standard labor protective conditions.

DATES: Provided no formal expression of intent to file an offer of financial assistance has been received, this exemption will be effective on May 11, 1988. Petitions to stay must be filed April 26, 1988, and petitions for reconsideration must be filed by May 6, 1988. Formal expressions of an intent to file an offer of financial assistance under 49 1152.27(c)(2)[1] must be filed by April 21, 1988.

ADDRESSES: Send pleadings referring to Docket No. AB-55 (Sub-No. 227X) to:

(1) Office of the Secretary Case Control Branch Interstate Commerce Commission, Washington, DC 20423

(2) Petitioner's representative: Lawrence H. Richmond, 100 North Charles Street, Baltimore, MD 21201.

FOR FURTHER INFORMATION CONTACT: Joseph H. Dettmar, (202) 275-7245. (TDD for hearing impaired (202) 275-1721).

SUPPLEMENTARY INFORMATION: Additional information is contained in the Commission's decision. To purchase a copy of the full decision, write to Dynamic Concepts, Inc., Room 2229, Interstate Commerce Commission Building, Washington, DC 20423, or call (202) 289-4357/4359 (DC Metropolitan area), TDD services (202) 275-1721 or by pickup from Dynamic Concepts, Inc., in Room 2229 at Commission headquarters).

Decided: April 4, 1988.

By the Commission, Chairman Gradison, Vice Chairman Andre, Commissioners Sterrett, Simmons, and Lamboley.

Noreta R. McGee,

Secretary.

[FR Doc. 88-7808 Filed 4-8-88; 8:45 am]

BILLING CODE 7035-01-M

[1] *See Exemption of Rail Line Abandonment or Discontinuance—Offers of Financial Assistance*_____ I.C.C.2d_____ served December 21, 1987, and final rules published in the **Federal Register** on December 22, 1987 (52 FR 48440-48446).

[Docket No. AB-290 (Sub-No. 6X)]

Southern Railway Co.; Abandonment Exemption in Fauquier County, VA

AGENCY: Interstate Commerce Commission.

ACTION: Notice of exemption.

SUMMARY: The Interstate Commerce Commission exempts from the prior approval requirements of 49 U.S.C. 10903, *et seq.*, the abandonment by Southern Railway Company of approximately 5.14 miles of its Warrenton Branch between milepost CW-3.76 at or near Casanova and milepost CW-8.90 at or near Warrenton, in Fauquier County, VA, subject to a 180 day public use condition and standard employee protective conditions.

DATES: Provided no formal expression of intent to file an offer of financial assistance has been received, this exemption is effective on May 11, 1988. Formal expressions of intent to file an offer[1] of financial assistance under 49 CFR 1152.27(c)(2) must be filed by April 21, 1988, petitions to stay must be filed by April 26, 1988, and petitions for reconsideration must be filed by May 6, 1988.

ADDRESSES: Send pleadings referring to Docket No. AB-290 (Sub-No. 6X) to:

(1) Office of the Secretary, Case Control Branch, Interstate Commerce Commission, Washington, DC 20423.

(2) Petitioner's representative: Virginia K. Young, Attorney, Norfolk Southern Corporation, One Commercial Place, Norfolk, VA 23510-2191.

FOR FURTHER INFORMATION CONTACT: Joseph H. Dettmar, (202) 275-7245. (TDD for hearing impaired: (202) 275-1721).

SUPPLEMENTARY INFORMATION: Additional information is contained in the Commission's decision. To purchase a copy of the full decision, write to Dynamic Concepts, Inc., Room 2229, Interstate Commerce Commission Building, Washington, DC 20423, or call (202) 289-4357/4359 (DC Metropolitan area), (assistance for the hearing impaired is available through TDD services (202) 275-1721 or by pickup from Dynamic Concepts, Inc., in Room 2229 at Commission headquarters).

Decided: April 4, 1988.

By the Commission, Chairman Gradison, Vice Chairman Andre, Commissioners Sterrett, Simmons, and Lamboley.

Noreta R. McGee,

Secretary.

[FR Doc. 88-7809 Filed 4-8-88; 8:45 am]

BILLING CODE 7035-01-M

[1] See Exempt. or Rail Abandonment—Offers of Finan. Assist., 4 I.C.C.2d 164 (1987), and final rules published in the **Federal Register** on December 22, 1987 (52 FR 48 440-48 446).

DEPARTMENT OF JUSTICE

Drug Enforcement Administration

Manufacturer of Controlled Substances; Application; Applied Science Laboratories

Pursuant to § 1301.43(a) of Title 21 of the Code of Federal Regulations (CFR), this is notice that on January 19, 1988, Applied Science Laboratories, Division of Alltech Associates, Inc., 2701 Carolean Industrial Drive, P.O. Box 440, State College, Pennsylvania 16801, made application to the Drug Enforcement Administration (DEA) for registration as a bulk manufacturer of the basic classes of controlled substances listed below:

Drug	Schedule
4-Methylaminorex (1590)	I
Methadone (9250)	II

Any other such applicant and any person who is presently registered with DEA to manufacture such substances

may file comments or objections to the issuance of the above application and may also file a written request for a hearing thereon in accordance with 21 CFR 1301.54 and in the form prescribed by 21 CFR 1316.47.

Any such comments, objections or requests for a hearing may be addressed to the Deputy Assistant Administrator, Drug Enforcement Administration, United States Department of Justice, 1405 I Street NW., Washington, DC 20537, Attention: DEA Federal Register Representative (Room 1112), and must be filed no later than May 11, 1988.

Gene R. Haislip,

Deputy Assistant Administrator, Office of Diversion Control, Drug Enforcement Administration.

Dated: April 4, 1988.

[FR Doc. 88-7851 Filed 4-8-88; 8:45am]

BILLING CODE 4410-09-M

Importation of Controlled Substances; Arenol Chemical Corp.

Pursuant to section 1008 of the Controlled Substances Import and Export Act (21 U.S.C. 958(h)), the Attorney General shall, prior to issuing a registration under this section to a bulk manufacturer of a controlled substance in Schedule I or II and prior to using a regulation under section 1002(a) authorizing the importation of such a substance, provide manufacturers holding registrations for the bulk manufacture of the substance an opportunity for a hearing.

Therefore, in accordance with § 1311.42 of Title 21, Code of Federal Regulations (CFR), notice is hereby given that on March 3, 1988, Arenol Chemical Corporation, 189 Meister Avenue, Somerville, New Jersey 08876, made application to the Drug Enforcement Administration to be registered as an importer of phenylacetone (8501), a basic class controlled substance in Schedule II.

Any manufacturer holding, or applying for, registration as a bulk manufacturer of this basic class of controlled substance may file written comments on or objections to the application described above and may, at the same time, file a written request for a hearing on such application in accordance with 21 CFR 1301.54 in such form as prescribed by 21 CFR 1316.47.

Any such comments, objections or requests for a hearing may be addressed to the Deputy Assistant Administrator, Drug Enforcement Administration, United States Department of Justice, 1405 I Street NW., Washington, DC 20537, Attention: DEA Federal Register Representative (Room 1112), and must be filed no later than May 11, 1988.

This procedure is to be conducted simultaneously with and independent of the procedures described in 21 CFR 1311.42 (b), (c), (d), (e), and (f). As noted in a previous notice at 40 FR 43745-46 (September 23, 1975), all applicants for registration to import a basic class of any controlled substance in Schedule I or II are and will continue to be required to demonstrate to the Deputy Assistant Administrator of the Drug Enforcement Administration that the requirements for such registration pursuant to 21 U.S.C. 958(a), 21 US.C. 823(a), and 21 CFR 1311.42 (a), (b), (c), (d), (e), and (f) are satisfied.

Gene R. Haislip,

Deputy Assistant Administrator, Office of Diversion Control, Drug Enforcement Administration.

Dated: April 4, 1988.

[FR Doc. 88-7852 Filed 4-8-88; 8:45 am]

BILLING CODE 4410-09-M

Manufacturer of Controlled Substances; Application; Arenol Chemical Corp.

Pursuant to § 1301.43(a) of Title 21 of the Code of Federal Regulations (CFR), this is notice that on March 3, 1988, Arenol Chemical Corporation, 189 Meister Avenue, Somerville, New Jersey 08876, made application to the Drug Enforcement Administration (DEA) for registration as a bulk manufacturer of the basic classes of controlled substances listed below:

Drug	Schedule
Amphetamine, its salts, optical isomers, and salts of its optical isomers (1100).	II
Methamphetamine, its salts, isomers, and salts of its isomers (1105).	II

Any other such applicant and any person who is presently registered with DEA to manufacture such substances may file comments or objections to the issuance of the above application and may also file a written request for a hearing thereon in accordance with 21 CFR 1301.54 and in the form prescribed by 21 CFR 1316.47.

Any such comments, objections or requests for a hearing may be addressed to the Deputy Assistant Administrator, Drug Enforcement Administration, United States Department of Justice, 1405 I Street NW., Washington, DC 20537, Attention: DEA Federal Register Representative (Room 1112), and must be filed no later than May 11, 1988.

Gene R. Haislip,

Deputy Assistant Administrator, Office of Diversion Control, Drug Enforcement Administration.

Dated: April 1, 1988.

[FR Doc. 88-7850 Filed 4-8-88; 8:45 am]

BILLING CODE 4410-09-M

[Docket No. 87-71]

Bobby Watts, M.D.; Revocation of Registration

On September 23, 1987, the Deputy Assistant Administrator, Office of Diversion Control, Drug Enforcement Administration (DEA) issued an Order to Show Cause to Bobby Watts, M.D. (Respondent) of 4005 Ames Drive, Nashville, Tennessee 37218, proposing to revoke his DEA Certificate of Registration AW2182234 and to deny any pending applications for the renewal of such registration as a practitioner under 21 U.S.C. 823(f). The statutory predicate for the Order to Show Cause was Respondent's lack of authorization to handle controlled substances in the State of Tennessee. In addition, the Order to Show Cause alleged that Respondent's continued registration with DEA is inconsistent with the public interest as that term is used in 21 U.S.C. 823(f) and 824(a)(4).

By letter dated October 22, 1987, Respondent requested a hearing on the issues raised by the Order to Show Cause and the matter was docketed before Administrative Law Judge Mary Ellen Bittner. On October 30, 1987, Judge Bittner issued an Order for Prehearing Statements. In lieu of filing a prehearing statement, Government counsel filed a motion for summary disposition on November 10, 1987. In an Order dated November 12, 1987, Judge Bittner stayed the Order for Prehearing Statements and provided Respondent an opportunity to respond to the motion for summary disposition. Respondent failed to file such a response within the specified time period. The Administrative Law Judge then provided Respondent with a further opportunity to respond to the Govenment's motion. Respondent submitted a letter dated January 6, 1988, however he did not address the Government's motion for summary disposition. Judge Bittner considered the motion for summary disposition, and on January 22, 1988, issued her opinion and recommended decision. No hearing was held, since no factual issues were involved. Neither side filed exceptions to the recommended decision of the

Administrative Law Judge. On February 23, 1988, Judge Bittner transmitted the record in this matter to the Administrator. The Administrator, having considered the record in its entirety, hereby enters his final order in this matter pursuant to 21 CFR 1316.67.

The Administrative Law Judge found that in an Order dated May 7, 1987, the State of Tennessee, Department of Health and Environment, Board of Medical Examiners suspended Respondent's license to practice medicine in the State of Tennessee. Judge Bittner further found, as does the Administrator, that DEA does not have the statutory authority under the Controlled Substances Act to issue or maintain a registration if the applicant or registrant is without state authority to handle controlled substances. See 21 U.S.C. 823(f). The Administrator and his predecessors have consistently so held. See. *Emerson Emory, M.D.*, Docket No. 85-46, 51 FR 9543 (1986); *Avner Kauffman, M.D.*, Docket No. 85-8, 50 FR 34208 (1985); *Agostino Carlucci, M.D.*, Docket No. 82-20; 49 FR 33184 (1984).

The Administrative Law Judge concluded that at least until November 1987, when Government counsel filed its motion for summary disposition, Respondent was not authorized in Tennessee to practice medicine or to handle controlled substances, and Respondent has not shown that he has subsequently been reauthorized to handle controlled substances. Therefore, because Respondent lacks this state authority, he is not entitled to a DEA registration and his DEA Certificate of Registration may be revoked pursuant to 21 U.S.C. 824(a)(3).

The Administrative Law Judge also found that the motion for summary disposition was properly entertained and must be granted. When no fact question is involved, or when the facts are agreed, there is no requirements that an agency convene a plenary, adversarial administrative proceeding, even though the pertinent statute prescribes a hearing. Congress does not intend administrative agencies to perform meaningless tasks. See, *U.S. v. Consolidated Mines and Smelting Co., Ltd.*, 445 F.2d 432, 435 (9th Cir. 1971); *NLRB v. International Association of Bridge, Structural and Ornamental Ironworkers, AFL-CIO*, 549 F.2d 634 (9th Cir. 1977); *Alfred Tennyson Smurthwaite, N.D.*, Docket No. 77-29, 43 Fed. Reg. 11873 (1978).

Based on Respondent's lack of authorization to handle controlled substances in the State of Tennessee, the Administrative Law Judge recommended that Respondent's DEA registration be revoked. The Administrator adopts the Administrative Law Judge's opinion and recommended ruling in its entirety. Accordingly, the Administrator of the Drug Enforcement Administration, pursuant to the authority vested in him by 21 U.S.C. 823 and 824 and 28 CFR 0.100(b), hereby orders that DEA Certificate of Registration AW2182234, previously issued to Bobby Watts, M.D., be, and it hereby is revoked, and any pending applications for the renewal of such registration, be, and they hereby are denied. This order is effective immediately.

John C. Lawn,
Administrator.

Date: April 5, 1988.

[FR Doc. 88-7853 Filed 4-8-88; 8:45 am]
BILLING CODE 4410-09-M

DEPARTMENT OF LABOR

Employment and Training Administration

Determinations Regarding Eligibility to Apply for Worker Adjustment Assistance; Murata Erie North America, Inc., et al.

In accordance with section 223 of the Trade Act of 1974 (19 U.S.C. 2273) the Department of Labor herein presents summaries of determinations regarding eligibility to apply for adjustment assistance issued during the period March 28, 1988-April 1, 1988.

In order for an affirmative determination to be made and a certification of eligibility to apply for adjustment assistance to be issued, each of the group eligibility requirements of section 222 of the Act must be met.

(1) That a significant number or proportion of the workers in the workers' firm, or an appropriate subdivision thereof, have become totally or partially separated,

(2) That sales or production, or both, of the firm or subdivision have decreased absolutely, and

(3) That increases of imports of articles like or directly competitive with articles produced by the firm or appropriate subdivision have contributed importantly to the separations, or threat thereof, and to the absolute decline in sales or production.

Negative Determinations

In each of the following cases the investigation revealed that criterion (3) has not been met. A survey of customers indicated that increased imports did not contribute importantly to worker separations at the firm.

TA-W-20,436; Murata Erie North America, Inc., Carlisle Div., Carlisle, PA

TA-W-20,442; Witco Corp., Kendall/Amalie Div., Youngsville, PA

TA-W-20,438; Southwest General Industry, Phoenix, AZ

TA-W-20,456; Philadelphia Steel & Wire Corp., Philadelphia, PA

TA-W-20,455; Parker-Hannifin Corp., Waverly, OH

TA-W-20,455; Fairbanks Morse, Engine Accessories, Roscoe, IL

In the following cases the investigation revealed that criterion (3) has not been met for the reasons specified.

TA-W-20,447; General Instrument Corp., Tocom Div., Irving, TX

Increased imports did not contribute importantly to workers separations at the firm.

TA-W-20,448; General Instrument Corp., Tocom Div., Brownsville, TX

Increased imports did not contribute importantly to workers separations at the firm.

TA-W-20,452; Mack Truck, Inc., Hagerstown, MD

Increased imports did not contribute importantly to workers separations at the firm.

Affirmative Determinations

TA-W-20,470; Abingdon Harwood Manufacturing Corp., Abindgon, VA

A certification was issued covering all workers of the firm separated on or after March 17, 1988.

TA-W-20,434; Levolor-Lorentzen, Inc., North Bergen, NJ

A certification was issued covering all workers of the firm separated on or after January 13, 1987.

TA-W-20,435; Mirro Corp., Manitowoc, WI

A certification was issued covering all workers of the firm separated on or after September 19, 1987.

TA-W-20,468; Wolvering Knitting Mills, Bay City, MI

A certification was issued covering all workers of the firm separated on or after February 4, 1987.

TA-W-20,444; Fairbanks Morse Engine Div., Beloit, WI

A certification was issued covering all workers of the firm separated on or after January 19, 1987.

TA-W-20,451; Levolor-Lorentzen, Inc., Hialeah, FL

A certification was issued covering all workers of the firm separated on or after January 3, 1987.

TA-W-20,370; Health-Tex, Inc., Central Falls, RI

A certification was issued covering all workers of the firm separated on or after December 23, 1986.

TA-W-20,370A; Health-Tex, Inc., Cranston, RI

A certification was issued covering all workers of the firm separated on or after December 23, 1986.

TA-W-20,370B; Health-Tex, Inc., Elmwood Ave., Providence, RI

A certification was issued covering all workers of the firm separated on or after December 23, 1986.

I hereby certify that the aforementioned determinations were issued during the period March 28, 1988–April 1, 1988. Copies of these determinations are available for inspection in Room 6434, U.S. Department of Labor, 601 D Street NW., Washington, DC 20213 during normal business hours or will be mailed to persons who write to the above address.

Marvin M. Fooks,

Director, Office of Trade Adjustment Assistance.

Dated: April 5, 1988.

[FR Doc. 88-7787 Filed 4-8-88; 8:45 am]

BILLING CODE 4510-30-M

[TA-W-20,398]

Sealed Power Division, Sealed Power Corp., Muskegon, MI; Negative Determination Regarding Application for Reconsideration

By an application dated March 21, 1988, Local #637 of the United Auto Workers of America (UAW) requested administrative reconsideration of the Department's notice of negative determination on the subject petition for trade adjustment assistance for workers at the Sealed Power Division, Sealed Power Corporation, Muskegon, Michigan. The denial notice was signed on March 14, 1988 and published in the **Federal Register** on March 25, 1988 (53 FR 9824).

Pursuant to 29 CFR 90.18(c) reconsideration may be granted under the following circumstances:

(1) If it appears on the basis of facts not previously considered that the determination complained of was erroneous;

(2) If it appears that the determination complained of was based on a mistake in the determination of facts not previously considered; or

(3) If, in the opinion of the Certifying Officer, a misinterpretation of facts or of the law justified reconsideration of the decision.

The union submitted newspaper clippings concerning the U.S. International Trade Commission's report on imports of auto parts including piston rings. The union also cites that the Department is inconsistent in its determinations by certifying workers at the Muskegon Piston Ring Company in Muskegon in 1987 and denying the workers at the subject firm in 1988.

Workers at Sealed Power in Muskegon produce piston rings. Investigative findings show that the "Contributed importantly" test of the increased import criterion was not met for workers at the subject plant in 1987. The "contributed importantly" test is generally demonstrated through a survey of the firm's customers. The department's survey revealed that respondents which reported increased imports of piston rings while decreasing their purchases from Sealed Power represented only a minor portion of the survey group's reduction in purchases from the subject firm. Moreover, Sealed Power had increased sales and production of piston rings in 1987 compared to 1986.

A review of the petition indicates that worker separations began in 1980 and continued through the investigative period. Section 223(b)(1) of the Trade Act of 1974 does not permit the certification of workers who were laid off more than one year from the date of the petition which in this case is January 4, 1988.

With respect to the auto parts report issued by U.S. International Trade Commission, its findings are industry-wide and would not, by themselves, form a basis for certification of a specific worker group. Worker group certifications under the Trade Act of 1974 must meet the group Eligibility Requirements set in section 222 of the Act which state that increased imports must have "contributed importantly" to worker separations and production and/or sales declines at the workers' firm.

The union claims that the Department's certification of workers at the Muskegon Piston Ring Division (MPR) of Goetze Corporation of America (TA-W-18,877) should govern this petition as well. The factual determinations required of the Department under the Trade Act are very fact specific. Accordingly, each worker petition must be judged on its own merits and in the time frame in which it was filed and for the product which the workers produced. Workers of MPR met all the criteria necessary for certification including the "contributed importantly" test. The Department's survey in that investigation showed that customers which increased purchases of imported piston rings accounted for an important portion of MPR's reduced sales in 1986 compared with 1985. This is a different finding from that obtained in the Department's investigation at Sealed Power.

Conclusion

After review of the application and investigative findings, I conclude that there has been no error or misinterpretation of the law or of the facts which would justify reconsideration of the Department of Labor's prior decision. Accordingly, the application is denied.

Signed at Washington, DC, this 31st day of March 1988.

Barbara Ann Farmer,

Director, Office of Program Management, UIS.

[FR Doc. 88-7786 Filed 4-8-88; 8:45 am]

BILLING CODE 4510-30-M

Pension and Welfare Benefits Administration

Advisory Council on Employee Welfare and Pension Benefits Plans; Work Group Meeting

Pursuant to the authority contained in section 512 of the Employee Retirement Income Security Act of 1974 (ERISA), 29 U.S.C. 1142, a public meeting of the Work Group on Retiree Health of the Advisory Council on Employee Welfare and Pension Benefit Plans will be held at 10:30 a.m., Thursday, April 28, 1988, at the American Association of Retired Persons (AARP), 1909 K Street NW., Room 701, Washington, DC 20049.

This seven-member work group was formed by the Advisory Council to study issues relating to retiree health benefit programs for employee welfare plans covered by ERISA.

The purpose of the April 28 meeting is to hear from several experts who will speak of recent congressional proposals in the field of Retiree Health Benefits. In addition, the work group will take testimony from employee representatives, employer representatives and other interested individuals and groups regarding subject matter.

Individuals, or representatives of organizations, wishing to address the work group should submit written

requests on or before April 25, 1988 to Charles W. Lee, Jr., Executive Secretary, ERISA Advisory Council, U.S. Department of Labor, Room N-5677, 200 Constitution Avenue NW., Washington, DC 20210. Oral presentations will be limited to ten minutes, but witnesses may submit an extended statement for the record.

Organizations or individuals may also submit statements for the record without testifying. Twenty (20) copies of such statements should be sent to the Executive Secretary of the Advisory Council at the above address. Papers will be accepted and included in the record of the meeting if received on or before April 25, 1988.

David M. Walker,

Assistant Secretary, Pension and Welfare Benefits Administration.

Signed at Washington, DC, this 5th day of April, 1988.

[FR Doc. 88-7807 Filed 4-8-88; 8:45 am]

BILLING CODE 4510-29-M

NATIONAL FOUNDATION ON THE ARTS AND THE HUMANITIES

Federal Council on the Arts and the Humanities; Arts and Artifacts Indemnity Panel Advisory Committee; Meeting

Pursuant to the provisions of the Federal Advisory Committee Act (Pub. L. 92-463 as amended) notice is hereby given that a meeting of the Arts and Artifacts Indemnity Panel of the Federal Council on the Arts and the Humanities will be held at 1100 Pennsylvania Avenue NW., Washington, DC 20506, in Room 730, from 9:00 a.m. to 5:30 p.m. on May 3, 1988.

The purpose of the meeting is to review applications for Certificates of Indemnity submitted to the Federal Council on the Arts and the Humanities for exhibitions beginning after July 1988.

Because the proposed meeting will consider financial and commercial data and because it is important to keep values of objects, methods of transportation and security measures confidential, pursuant to the authority granted me by the Chairman's Delegation of Authority to Close Advisory Committee Meetings, dated April 16, 1978, I have determined that the meeting would fall within exemptions (4) and (9) of U.S.C. 552(b) and that it is essential to close the meetings to protect the free exchange of views and to avoid interference with the operations of the committee.

It is suggested that those desiring more specific information contact the Advisory Committee Management Officer, Stephen J. McCleary, 1100 Pennsylvania Avenue NW., Washington, DC 20506, or call 202/786-0322.

Stephen J. McCleary,

Advisory Committee Management Officer.

[FR Doc. 88-7832 Filed 4-8-88; 8:45 a.m]

BILLING CODE 7537-01-M

Music Advisory Panel; Meeting

Pursuant to section 10(a)(2) of the Federal Advisory Committee Act (Pub. L. 92-463), as amended, notice is hereby given that a meeting of the Music Advisory Panel (Jazz Fellowships Section) to the National Council on the Arts will be held on April 27-28, 1988 from 9:00 a.m.-7:00 p.m., and on April 29, 1988 from 10:00 a.m.-6:00 p.m. in room 730 of the Nancy Hanks Center, 1100 Pennsylvania Avenue NW., Washington, DC 20506.

A portion of this meeting will be open to the public on April 29, 1988, from 1:00 p.m.-3:00 p.m. for a general program overview and guidelines discussion.

The remaining sessions of this meeting on April 27-28, 1988 from 9:00 a.m.-7:00 p.m., and on April 29, 1988 from 10:00 a.m.-1:00 p.m. and from 3:00 p.m.-6:00 p.m. are for the purpose of Panel review, discussion, evaluation and recommendation on applications for financial assistance under the National Foundation on the Arts and the Humanities Act of 1965, as amended, including information given in confidence to the agency by grant applicants. In accordance with the determination by the Chairman published in the **Federal Register** of February 13, 1980, these sessions will be closed to the public pursuant to subsection (c) (4), (6) and (9)(b) of section 552b of Title 5, United States Code.

If you need special accommodations due to a disability, please contact the Office for Special Constituencies, National Endowment for the Arts, 1100 Pennsylvania Avenue NW., Washington, DC 20506, 202/682-5532, TTY 202/682-5496 at least seven (7) days prior to the meeting.

Further information with reference to this meeting can be obtained from Ms. Yvonne M. Sabine, Advisory Committee Management Officer, National Endowment for the Arts, Washington, DC 20506, or call 202/682-5433.

Martha Y. Jones,

Program Specialist, Council and Panel Operations, National Endowment for the Arts.

[FR Doc. 88-7804 Filed 4-8-88; 8:45 am]

BILLING CODE 7537-01-M

NUCLEAR REGULATORY COMMISSION

Commonwealth Edison Co.; Environmental Assessment and Finding of No Significant Impact

[Docket Nos. 50-295 and 50-304]

The U.S. Nuclear Regulatory Commission (the Commission) is considering issuance of amendments to Facility Operating License Nos. DPR-39 and DPR-48 issued to Commonwealth Edison Company, (the licensee), for operation of the Zion Nuclear Power Station, Units 1 and 2, located in Lake County, Illinois.

Environmental Assessment

Identification of Proposed Action

The proposed amendments would clarify and upgrade the Technical Specifications for measuring the leakage through pressure isolation valves in the Zion Nuclear Power Station Units 1 and 2.

The proposed action is in accordance with the licensee's application for amendment dated November 13, 1987 and modified March 4, 1988.

The Need for the Proposed Action

The proposed change to the TS is required in order to clarify and upgrade procedures for measuring the leakage through pressure isolation valves.

Environmental Impacts of the Proposed Action

The Commission had completed its evaluation of the proposed revision to Technical Specification (TS), and has concluded that the proposed changes to the Technical Specifications provide reasonable assurance that the facility can be operated safely. The proposed changes do not increase the probability or consequences of accidents, no changes are being made in the types of any effluent that may be released offsite, and there is no significant increase in the allowable individual or cumulative occupational radiation exposure. Accordingly, the Commission concludes that this proposed action would result in no significant radiological environmental impact.

With regard to potential nonradiological impacts, the proposed change to the TS involves systems located within the restricted area as defined in 10 CFR Part 20. It does not affect nonradiological plant effluents and has no other environmental impact. Therefore, the Commission concludes that there are no significant nonradiological environmental impacts

associated with the proposed amendments.

The Notice of Consideration of Issuance of Amendment and Opportunity for Hearing in connection with this action was published in the **Federal Register** on December 16, 1987 (52 FR 47807). No request for hearing or petition for leave to intervene was filed following this notice.

Alternative to the Proposed Actions

Since the Commission has concluded that there are no significant effects that would result from the proposed action, any alternatives with equal or greater environmental impacts need not be evaluated.

The principal alternative would be to deny the requested amendment. This would not reduce environmental impacts of plant operation and would result in reduced operational flexibility.

Alternative Use of Resources

This action does not involve the use of any resources not previously considered in the Final Environmental Statement for the Zion Nuclear Power Station, Units 1 and 2, dated December 1972.

Agencies and Persons Consulted

The NRC staff reviewed the licensee's request and did not consult other agencies or persons.

Finding of No Significant Impact

The Commission has determined not to prepare an environmental impact statement for the proposed license amendment.

Based upon this Environmental Assessment, we conclude that the proposed action will not have a significant effect on the quality of the human environment.

For further details with respect to this action, see the request for amendments dated November 13, 1987 as supplemented March 4, 1988 which are available for public inspection at the Commission's Public Document Room 1717 H Street NW., Washington, DC 20555; and at the Waukegan Public Library, 128 N. County Street, Waukegan, Illinois 60085.

Dated at Rockville, Maryland this 1st day of April 1988.

For the Nuclear Regulatory Commission.

Daniel R. Muller,

Director, Project Directorate III-2, Division of Reactor Projects—III, IV, V and Special Projects.

[FR Doc. 88-7834 Filed 4-8-88; 8:45 am]

BILLING CODE 7590-01-M

[Docket No. 50-266 and 50-301]

Wisconsin Electric Power Co.; Environmental Assessment and Finding of No Significant Impact

The U.S. Nuclear Regulatory Commission (the Commission) is considering issuance of exemptions from the requirements of 10 CFR Part 50, Appendix R, Section III.G.3.b, to Wisconsin Electric Power Company (the licensee) for the Point Beach Nuclear Plant, Units 1 and 2, located at the licensee's site in Manitowoc County, Wisconsin. The exemptions were requested by the licensee in a letter dated June 11, 1986, as supplemented by letter dated October 10, 1986.

Environmental Assessment

Identification of Proposed Action

10 CFR Part 50, Appendix R, Section III.G.3.b, requires a fixed fire suppression system for areas containing redundant trains of safe shutdown cables. Implementation of TMI-related modifications at Point Beach included the rerouting of several of the safe shutdown instrument cables from the monitor tank area through the Component Cooling Water Heat Exchanger and Boric Acid Tank Room (Fire Zone 237) and the Computer and Instrument Rack Room (Fire Zone 336) to the Control Room. As a result of these modifications, the Component Cooling Water Heat Exchanger and Boric Acid Tank Room, and the Computer and Instrument Rack Room are not in compliance with Section III.G.3.b of Appendix R.

The Need for the Proposed Action

The proposed exemptions are needed to permit the licensee to operate the plant without being in violation of the Commission's requirements.

Environmental Impact of the Proposed Action

The proposed exemptions are from the specific requirement of Appendix R, Section III.G.3.b to have a fixed suppression system for areas containing redundant trains of safe shutdown cables. In its June 11, 1986 application, the licensee stated that alternate shutdown capability, independent of the fire zones for which the exemptions are proposed, will be provided. In the unlikely event of fire in these fire zones, and damage to the redundant instrument cables, alternate shutdown capability is provided. There are no changes in plant operation or effluents or ability to shut down the plants to be considered with the proposed exemptions. Therefore, in consideration of the above, the exemption does not involve a significant environmental impact.

Alternative to Proposed Action

Because the staff has concluded that there is no significant impact associated with the proposed exemptions, any alternative to the exemption will have either no environmental impact or greater environmental impact.

The installation of fixed fire suppression systems would result in additional costs to the licensee without adding any benefits already available by the independent shutdown capability.

Agencies and Persons Consulted

The staff reviewed the licensee's request and has not consulted other agencies or persons.

Finding of No Significant Impact

The Commission has determined not to prepare an environmental impact statement for the proposed action.

Based upon this environmental assessment, we conclude that the proposed action will not have a significant effect on the quality of the human environment.

For further details with respect to this action see the licensee's application dated June 11, 1986, as supplemented on October 10, 1986, which is available for public inspection at the Commission's Public Document Room, 1717 H Street NW., Washington, DC, and at the Joseph P. Mann Library, 1516 Sixteenth Street, Two Rivers, Wisconsin.

Dated at Rockville, Maryland this 4th day of April 1988.

For the Nuclear Regulatory Commission.

Kenneth E. Perkins,

Director, Project Directorate III-3, Division of Reactor Projects—III, IV, V and Special Projects.

[FR Doc. 88-7835 Filed 4-8-88; 8:45 am]

BILLING CODE 7590-01-M

Naturally Occurring and Accelerator-Produced Radioactive Materials—1987 Review (NUREG-1310); Availability

The U.S. Nuclear Regulatory Commission (NRC) has published a report entitled, "Naturally Occurring and Accelerator-Produced Radioactive Materials—1987 Review, NUREG-1310." From time to time, the issue as to whether the NRC should seek legislative authority to regulate naturally occurring and accelerator-produced radioactive materials (NARM) is raised. Because NARM exists in the environment, in homes, in workplaces, in medical institutions, and in consumer products,

the issue of Federal controls over NARM is very old and very complex. NUREG-1310 presents a review of NARM sources and uses as well as incidents and problems associated with those materials. A review of previous congressional and Federal agency actions on radiation protection matters, in general, and on NARM, in particular, is provided to develop an understanding of existing Federal regulatory activity in ionizing radiation and in control of NARM. In addition, State controls over NARM are reviewed. Eight questions are examined in terms of whether the NRC should seek legislative authority to regulate NARM. The assessment of these questions serves as the basis for developing and evaluating five options. The evaluation of those options leads to two recommendations.

Copies of NUREG-1310 may be purchased from the Superintendent of Documents, U.S. Government Printing Office, P.O. Box 37082, Washington, DC 20013-7082. Copies are also available from the National Technical Information Service, 5285 Port Royal Road, Springfield, VA 22161. A copy is also available for inspection and/or copying for a fee in the NRC Public Document Room, 1717 H Street NW., Washington, DC.

Dated at Washington, DC, this 4th day of April 1988.

For the Nuclear Regulatory Commission.

Robert M. Bernero,

Deputy Director, Office of Nuclear Material Safety and Safeguards.

[FR Doc. 88-7836 Filed 4-8-88; 8:45 am]

BILLING CODE 7590-01-M

OFFICE OF THE UNITED STATES TRADE REPRESENTATIVE

Reestablishment of an Investment Policy Advisory Committee

The U.S. Trade Representative has taken steps to reestablish an Investment Policy Advisory Committee. This Committee will be chartered pursuant to section 135(c)(2) of the Trade Act of 1974 (19 U.S.C. 2155(c)(2)), as amended; the Federal Advisory Committee Act (5 U.S.C. App. 1); section 4(b) of Executive Order No. 11846, March 27, 1985; and Executive Order No. 12188. The charter of this Committee will be filed 15 days from the date of this notice.

The Investment Policy Advisory Committee is being reestablished to provide the United States Trade Representative with policy advice and information regarding direct investment to the extent it relates to international trade, including the following areas: operations of multinational enterprises, and multilateral and bilateral agreements on international investment, direct investment by Americans abroad and issues of direct foreign investment in the United States.

The Committee will meet approximately three or four times per year, depending on the needs of the U.S. Trade Representative. The U.S. Trade Representative or his designee will convene meetings of the Committee.

Members of the Committee shall be appointed by, and serve at the discretion of the U.S. Trade Representative. Individuals wishing further information or to be considered for appointment to serve on the Committee should contact: The United States Trade Representative, Office of Private Sector Liaison, 600 17th Street NW., Washington, DC 20506, (202) 395-6120.

Barbara W. North,

Director, Office of Private Sector Liaison.

[FR Doc. 88-7823 Filed 4-8-88; 8:45 am]

BILLING CODE 3190-01-M

Reestablishment of an Intergovernmental Policy Advisory Committee

The U.S. Trade Representative has taken steps to reestablish an Intergovernmental Policy Advisory Committee on Trade. This Committee will be chartered pursuant to section 9(a)(2) of the Federal Advisory Committee Act (5 U.S.C. App. 9(a)(2)). The charter of this Committee will be filed 15 days from the date of this notice.

The Committee will advise, consult with, and make recommendations to the U.S. Trade Representative and relevant Cabinet agencies on policy issues including, but not limited to, statutes and/or regulations enacted or promulgated by state and local governments that may affect U.S. trade policy objectives, as well as statutes, regulations, and other acts promulgated or enacted by the federal government that may affect the relationship between international trade and state and local governments.

The Committee will meet approximately three or four times per year, depending on the needs of the U.S. Trade Representative. The U.S. Trade Representative or his designee will convene meetings of the Committee.

Members of the Committee shall be appointed by, and serve at the discretion of the U.S. Trade Representative. Representatives from the private sector wishing further information or to be considered for appointment to serve on the Committee should contact: The United States Trade Representative, Office of Private Sector Liaison, 600 17th Street NW., Washington, DC 20506, (202) 395-6120.

Barbara W. North,

Director, Office of Private Sector Liaison.

[FR Doc. 88-7824 Filed 4-8-88; 8:45 am]

BILLING CODE 3190-01-M

PEACE CORPS

Agency Information Collection Activities Under OMB Review

AGENCY: Peace Corps.

ACTION: Notice of submission of public use form review request to the Office of Management and Budget.

SUMMARY: Pursuant to the Paperwork Reduction Act of 1981 (44 U.S.C. Chapter 35), the Peace Corps has submitted to the Office of Management and Budget, a request to approve the use of the Medical History and Examination Forms through June 1, 1991. All applicants for service in the Peace Corps must undergo physical and dental examinations prior to service. The results of these examinations are used to ensure that the applicants will, with reasonable accommodation, be able to serve in Peace Corps without jeopardizing their health. The Peace Corps Office of Medical Services (M/MS) is responsible for the collection and review of applicant medical information.

Information about the forms:

Agency Address: Peace Corps, 806 Connecticut Avenue, NW., Washington, DC 20526.

Title: Medical History and Examination Forms.

Request: Approval of Use.

Frequency of Collection: One time per respondent.

General Description of Respondent: All individuals who are nominated and/or invited for Peace Corps Service and their physicians.

Estimated Number of Responses: 15,540 per year.

Estimated Hours for Respondents to Furnish Information: Thirty (30) minutes for Medical Examination Section and fifteen (15) minutes for Medical History Section.

Respondents' Obligation to Reply: Required for entrance into the Peace Corps Comments: Comments on this form request should be directed to Francine Picoult, Desk Officer, Office of Information and Regulatory Affairs, Office of Management and Budget, Washington, DC 20503.

A copy of the form may be obtained from Karl Pulley, Office of Medical Services, Peace Corps, 806 Connecticut

Avenue, NW., Room P-214, Washington, DC 20526. Mr. Pulley may be called at (202)-254-6916. This is not a request to which 44 U.S.C. 3504(h) applies. This notice is issued in Washington, DC on April 4, 1988.

Margaret H. Thome,

Associate Director for Management.

[FR Doc. 88-7831 Filed 4-8-88; 8:45 am]

BILLING CODE 6051-01-M

SECURITIES AND EXCHANGE COMMISSION

[Release No. IC-16348/File No. 812-6964]

Application for Exemption; United Services Life Insurance Co.

Date: April 5, 1988.

AGENCY: Securities and Exchange Commission ("SEC").

ACTION: Notice of Application for Exemption under the Investment Company Act of 1940 (the "1940 Act").

Applicants:

United Services Life Insurance Company ("USL"), United Services Variable Life Separate Account I (USL Separate Account I"), United Services Variable Life Separate Account II ("USL Separate Account II"), United Services Variable Life Separate Account III ("USL Separate Account III"), United Services Variable Life Separate Account IV ("USL Separate Account IV") (collectively the "USL Separate Accounts"), Bankers Security Life Insurance Society ("BSL"), Bankers Security Variable Life Separate Account I ("BSL Separate Account I"), Bankers Security Variable Life Separate Account II ("BSL Separate Account II"), Bankers Security Variable Life Separate Account III ("BSL Separate Account III"), Bankers Security Variable Life Separate Account IV ("BSL Separate Account IV") (Collectively the "BSL Separate Accounts") and USLICO Series Fund (the "Fund") (collectively the "Applicants").

Relevant 1940 Act Sections and Rules: Exemptions requested under sections 6(c) and 17(b) and Rule 17d-1, from sections 9(a), 13(a), 15(a), 15(b), 17(a) and Rules 6e-2(b)(15) and 17d-1.

Filing Date: The application was filed on January 22, 1988.

Hearing or Notification of Hearing: If no hearing is ordered, the application will be granted. Any interested person may request a hearing on this application, or ask to be notified if a hearing is ordered. Any requests must be received by the SEC by 5:30 p.m. on April 27, 1988. Request a hearing in writing, giving the nature of your interest, the reason for the request, and the issues you contest. Serve the Applicant with the request, either personally or by mail, and also send it to the Secretary of the SEC, along with proof of service by affidavit, or, for lawyers, by certificate. Request notification of the date of a hearing by writing to the Secretary of the SEC.

ADDRESSES: SEC, 450 5th Street NW., Washington, DC 20549. Applicants, c/o Jeffrey S. Puretz, 1730 Pennsylvaina Avenue NW., Suite 1100, Washington, DC 20006.

FOR FURTHER INFORMATION CONTACT: Staff Attorney Nancy M. Rappa, (202) 272-2622 or Special Counsel Lewis B. Reich, (202) 272-2061 (Office of Insurance Products and Legal Compliance).

SUPPLEMENTARY INFORMATION: Following is a summary of the application; the complete application is available for a fee from either the SEC's Public Reference Branch in person or the SEC's commercial copier which may be contacted at (800) 231-3282 (in Maryland (301) 253-4300).

Applicants' Representations

1. USL is a stock life insurance company and, except for New York, is authorized to conduct business in all of the states, the District of Columbia, Japan, Guam and on U.S. military bases. USL was originally incorporated under the laws of the District of Columbia and later redomesticated as a life insurance company under the laws of the Commonwealth of Virginia. USL Separate Accounts I, II, III and IV were established as separate investment accounts of USL in September 1986 under the insurance laws of the Commonwealth of Virginia., BSL, a wholly-owned subsidiary of USL, is a stock life insurance company authorized to conduct business as a life insurance company in all of the states, the District of Columbia, and the Dominican Republic. BSL Separate Accounts I and II were established as separate investment accounts in 1982 under the insurance laws of the State of New York and BSL Separate Accounts III and IV were similarly established in 1986. The USL and BSL Separate Accounts are separate investment accounts to which assets are allocated to support benefits payable under single premium and level premium variable life insurance policies issued by USL and BSL (the "USL and BSL Policies"). The USL and BSL Separate Accounts are registered under the 1940 Act as open-end diversified management companies.

2. The Fund is an open-end diversified management investment company organized in the form of a Massachusetts business trust. The Fund will initially be authrized to issue four series or classes of shares, each of which will represent an interest in one of the Fund's portfolios. Shares of each portfolio will be purchased and redeemed by a corresponding sub-account of the Continuing Accounts.

3. The USL Continuing Account will be a separate investment account of USL, operated as a unit investment trust ("UIT") to fund benefits under the Policies. Similarly, the BSL Continuing Account will be a separate investment account of BSL, operated as a UIT, which will fund benefits under the Policies. The Fund, which will assume the assets and investment-related liabilities of the USL and BSL Separate Accounts, will be the continuing funding vehicle for the Policies of USL and BSL.

4. An Agreement and Plan of Reorganization ("USL Agreement") will be entered into among USL, each of the USL Separate Accounts and the Fund, subject to the approval of the individuals who make contributions or for whom contributions are made under the USL Policies ("USL Policyowners"). A separate Agreement and Plan of Reorganization will be entered into among BSL, each of the BSL separate accounts, and the Fund, subject to the approval of those who contribute or for whom contributions are made, under the BSL Policies ("BSL Policyowners"). Those Agreements provide that USL and BSL will assume all costs to be incurred in effecting the reorganizations, including the expenses of organizing the Fund. Applicants state that, with respect to policies issued prior to the effective time of the reorganizations, no investment advisory or other expenses shall become the responsibility of the Fund or shall be charged against the Stock, Money Market, Bond or Asset Allocation Portfolios of the Fund of a type or in an amount which could not have been charged against the Separate Accounts had the reorganizations not occurred. USL and BSL have agreed to continue to pay initially the costs of legal, compliance, and audit services for the Fund. USL and BSL will bear these costs until the net assets of the Fund have increased to a point where, in the opinion of the companies, the Fund may bear the expenses without significant adverse impact on the interests held by Policyowners. In addition, to prevent any existing Policyowner from bearing the cost of the higher advisory fee payable by the Fund, USL and BSL will make an annual adjustment to the cash

value of each Policy outstanding as of the date of the reorganization in an amount equal to .25% on an annual basis of the cash value of the Policy less the amount of any outstanding loan attributable to the Policy.

5. USL and BSL Policyowners under the USL and BSL Policies currently have voting rights with respect to each of the USL and BSL Separate Accounts in which they have an interest. Under both the USL or BSL Policies, a USL or BSL Policyowner may cast one vote for each $100 of the cash value of a USL or BSL Policy (less outstanding indebtedness) allocated to a particular USL and BSL Separate Account. Following the reorganizations, USL or BSL Policyowners will have the opportunity to instruct USL and BSL, respectively, as to the voting of Fund shares attributable to their respective interests under the USL or BSL Policies, on matters as to which they currently have a voting right. USL and BSL, respectively, will vote the shares of each Portfolio held by the USL and BSL Continuing Accounts attributable to the USL and BSL Policies, in accordance with the instructions received from USL and BSL Policyowners. Shares of the Fund held by the USL and BSL Continuing Accounts which are not attributable to USL and BSL Policyowners or for which instructions have not been received will be voted in proportion to the instructions received from USL and BSL Policyowners. Voting rights exercised by the current USL and BSL Policyowners will consist of the right to instruct USL or BSL on the exercise of voting interests in the Fund, rather than to vote directly on matters submitted to USL and BSL Policyowners by the USL and BSL Separate Accounts. These differences will not, as a practical matter, diminish the USL and BSL Policyowners' existing voting rights.

6. The Applicants may be deemed to be affiliated persons of each other or affiliated persons of an affiliated person under section 2(a)(3) of the 1940 Act, and the reorganizations may be deemed to involve one or more purchases or sales of securities or property between and among certain of the Applicants. Therefore, the Agreements and the reorganizations may require an exemption from section 17(a) of the 1940 Act, pursuant to section 17(b) of the 1940 Act, for the agreement and the reorganization. Therefore, Applicants request an order pursuant to section 17(b) of the 1940 Act exempting the proposed reorganization transactions from the provisions of section 17(a).

7. Applicants represent that the terms of the proposed transactions, as described in this Application and the Agreements, including the consideration to be paid and received, are reasonable and fair, do not involve overreaching, are consistent with the investment policies of each of the USL and BSL Separate Accounts, and are consistent with the general purposes of the 1940 Act.

8. Applicants note that the proposed reorganizations will benefit existing and future USL and BSL Policyowners by facilitating the future expansion of investment alternatives under the USL and BSL Policies and subsequent policies. The addition of a new portfolio to the Fund, with different investment objectives, is more easily and economically accomplished through a UIT than by the establishment of a new management separate account. This potential benefit is created at no cost to any USL or BSL Policyowner, as USL and BSL have undertaken to assume all expenses relating to the reorganizations and the establishment of the Fund.

9. Applicants state that the exchange of the assets of each of the USL and BSL Separate Accounts for corresponding Portfolio shares will be effected in conformity with section 22(c) of the 1940 Act and Rule 22c–1 thereunder.

10. Applicants state that the investment objectives, policies, and restrictions of each of the Portfolios derived from the USL and BSL Separate Accounts will not differ in any material respect from the investment objectives, policies, and restrictions of the corresponding USL and BSL Separate Accounts immediately preceding the reorganizations, except with respect to the restriction on borrowing. The Fund will be permitted to borrow up to 25% of its assets, whereas the USL and BSL Separate Accounts are currently permitted to borrow only up to 5% of their assets. However, this difference does not affect the fairness of the transaction, and indeed, permits the Fund greater flexibility than currently permitted to the USL and BSL Separate Accounts to borrow to meet redemptions for emergency or administrative purposes. The reorganizations will not require liquidation of any assets of any of the USL and BSL Separate Accounts or the Fund. The only sales of assets of the USL and BSL Separate Accounts will be those arising in the ordinary course of business. Therefore, neither the USL and BSL Separate Accounts nor the Fund will incur any extraordinary costs, such as brokerage commissions, in effecting the transfer of assets. Based on a review of existing federal income tax laws and regulations, USL and BSL Policyowners will recognize no gain or loss on the transfer of assets of USL and BSL Separate Accounts to the Fund, and the USL and BSL Separate Accounts and the Fund will pay no tax as a result of the transfer.

Additionally, in the event that Policyowners of USL or BSL approve the USL or BSL reorganization, but Policyowners of the other company do not approve the reorganization, then the transfer of assets by the company whose reorganization has been approved will be a tax-free transaction for purposes of determining the basis and holding period of the assets transferred.

11. USL and BSL Policyowners will be fully informed of the terms of the Agreements through the proxy materials and will have an opportunity to approve or disapprove the Agreements and the reoganizations at the meetings of USL and BSL Policyowners called for that purpose.

12. Applicants may be deemed to be affiliated persons of each other or affiliated persons of an affiliated person under section 2(a)(3) of the 1940 Act, and the reorganizations may be deemed to be transactions that are prohibited under section 17(d). Accordingly, Applicants request an order pursuant to Rule 17d–1 approving the proposed reorganizations.

13. Participation of each of the USL and BSL Separate Accounts, including the USL and BSL Continuing Accounts, and the Fund in the Agreements will be on an equal basis and will not result in advantages to any one of the USL and BSL Separate Accounts or the Fund to the detriment of any other party. Each of the USL and BSL Separate Accounts will have its assets transferred to a corresponding Portfolio of the Fund with identical policies and restrictions. Because there will be no need to liquidate assets of any of the USL and BSL Separate Accounts or of the Fund because of the reorganizations, none of the USL and BSL Separate Accounts or the Fund will incur any extraordinary costs, such as brokerage commissions, in effecting the transfer of assets. Further, none of the USL and BSL Separate Accounts or the fund will bear any of the costs of the reorganizations, which will be borne entirely by USL or BSL, respectively.

14. Although the voting privileges under the UIT structure will be different from the voting rights under the management separate account structure, Applicants assert that, for all practical purposes, USL or BSL Policyowners will have the same voting power regardless of which structure is utilized.

15. Applicants believe that the reorganizations will result in certain economies of scale and efficiencies of administration to USL and BSL that should also benefit the USL and BSL Separate Accounts and the USL and BSL Policyowners. The reorganizations also will permit other separate accounts of USL and BSL and other affiliated insurance companies to use the Fund as the underlying investment vehicle for their insurance products. In addition the establishment of the Fund will benefit USL and BSL Policyowners by permitting broader diversification of assets and consequent reduction of investment risk; certain economies of scale and other operating efficiencies, with the potential to result in lower overall expense ratios; and enhanced ability to add (and maintain) new investment options to fund the USL and BSL Policies; more flexibility in portfolio management; and the possibility of enhanced investment performance.

16. Applicants therefore represent that the terms of the proposed agreements and the related transactions meet all the requirements of section 17(d) of the 1940 Act and Rule 17d-1 thereunder and that an order should be granted permitting the proposed transactions pursuant to these provisions.

Mixed Funding Relief

17. Applicants also request an exemption, pursuant to section 6(c) of the 1940 Act, from sections 9(a), 13(a), 15(a) and 15(b) of the 1940 Act and Rule 6e-2(b)(15) thereunder, to the extent necessary to permit Applicants to rely on the relief provided under Rule 6e-2(b)(15), even though shares of the Fund may be offered to other separate accounts sponsored by USL and BSL or its affiliates offering variable annuity policies. Rule 6e-2(b)(15) provides a separate account, organized as a UIT, partial exemptions from the eligibility restrictions of section 9(a) and from sections 13(a), 15(a) and 15(b) of the 1940 Act to the extent those latter provisions might be deemed to require "pass-through" voting with respect to an underlying mutual fund's shares. The exemptions are available only where all of the assets of the unit investment trust are shares of management investment companies "which offer their shares exclusively to variable life insurance separate accounts of the life insurer or of any affiliated life insurance company."

18. The use of a common underlying fund to support insurance products other than and in addition to variable life insurance policies is referred to herein as "mixed funding". Applicants submit that the exemptive relief requested with respect to the proposed mixed funding is appropriate in the public interest and consistent with protection of investors and the purposes fairly intended by the policy and provision of the 1940 Act. The use of a common underlying fund avoids additional start-up and ongoing expenses for the operation and administration of separate management investment.

19. Applicants agree that the exemptive relief requested in connection with the mixed funding be subject to the following conditions:

(1) A majority of the Board of Trustees of the Fund (the "Board") will consist of persons who are not "interested persons" of the Fund, as defined by section 2(a)(19) of the 1940 Act and the Rules thereunder, and as modified by any applicable order of the Commission.

(2) The Board will monitor the Fund for the existence of any material irreconcilable conflict between the interests of owners of variable life insurance policies or variable annuity contracts issued by Separate Accounts investing in the Fund. A material irreconcilable conflict may arise for a variety of reasons, including: (a) An action by any state insurance regulatory authority; (b) a change in applicable Federal or state insurance, tax, or securities laws or regulations, or a public ruling, private letter ruling, no-action or interpretative letter, or any similar action by insurance, tax or securities regulatory authorities; (c) an administrative or judicial decision in any relevant proceeding; (d) the manner in which the investments of any portfolio are being managed; (e) a difference in voting instructions given by variable annuity contractowners and variable life insurance policyowners; or (f) a decision by an insurer to disregard the voting instructions of its policyowners or contractowners.

(3) USL and BSL and any affiliated insurance company whose separate account invests in the Fund will report any potential or existing conflicts to the Board. Such insurance companies will be responsible for assisting the Board in carrying out its responsibilities under these conditions by providing the Board with all information reasonably necessary for the Board to consider any issues raised. This includes, but is not limited to, an obligation by each such insurance company to inform the Board whenever voting instructions of policyowners or contractowners are disregarded.

(4) If it is determined by a majority of the Board, or a majority of its disinterested trustees, that a material irreconcilable conflict exists, each insurance company designated by the Board will, at its expense, take whatever steps are necessary to remedy or eliminate the material irreconcilable conflict, which steps could include: (a) Withdrawing the assets allocable to some or all of the separate accounts from the Fund or any series and reinvesting such assets in a different investment medium, including another series of the Fund, or submitting the question of whether such segregation should be implemented to a vote of all affected policyowners or contractowners and, as appropriate, segregating the assets of any particular group (i.e., annuity contractowners, life insurance policyowners or owners of policies or contracts of one or more insurer) that votes in favor of such segregation, or offering to the affected policyowners or contractowners the option of making such a change; and (b) establishing a new registered management investment company or management separate account. If a material irreconcilable conflict arises because of an insurer's decision to disregard contractowner voting instructions and that decision represents a minority position or would preclude a majority vote, the insurer may be required at the Fund's election to withdraw its separate account's investment in the Fund, and no charge or penalty will be imposed against any separate account as a result of such a withdrawal. For purposes of this condition (4) a majority of the distinterested members of the Board shall determine whether or not any proposed action adequately remedies any material irreconcilable conflict, but in no event will the Fund or any other Applicant be required to establish a new funding medium for any variable annuity contract or variable life insurance policy if an offer to do so has been declined by vote of a majority of affected policyowners or contractowners.

(5) Applicants represent that if and to the extent that Rule 6e-2 is amended to provide exemptive relief from any provision of the 1940 Act, or the rules promulgated thereunder, with respect to mixed funding on terms that materially differ from any exemptive order issued by the SEC in connection with this application, then the appropriate Applicants shall take all steps as may be necessary to comply with the amended rule.

(6) Participating insurance companies and their separate accounts participating in the Fund shall provide pass-through voting privileges to all policyonwers and contractowners so

BEST COPY AVAILABLE

long as and to the extent that the Commission continues to interpret the 1940 Act to require pass-through voting privileges for such persons.

(7) All reports received by the Board of potential or existing conflicts, determining the existence of a conflict, notifying participating insurance companies of a conflict and determining whether any proposed action adequately remedies a conflict will be properly recorded in the minutes of the Board or other appropriate records and such minutes or other records shall be made available to the Commission upon request.

20. Applicants submit, for all of the reasons stated herein, that their exemptive requests, including those under section 17 of the 1940 Act, meet the standards set out in section 6(c) of the 1940 Act and that an order should, therefore, be granted on the grounds and conditions stated herein.

For the Commission, by the Division of Investment Management, pursuant to delegated authority.

Jonathan G. Katz,

Secretary.

[FR Doc. 88-7879 Filed 4-8-88; 8:45 am]

BILLING CODE 8010-01-M

SMALL BUSINESS ADMINISTRATION

[License No. 01/01-0344]

First New England Capital L.P., Notice of Issuance of a Small Business Investment Company License

On February 19, 1988, a notice was published in the **Federal Register** (53 FR 5071) stating that an application has been filed by First New England Capital L.P., with the Small Business Administration (SBA) pursuant to the Regulations governing small business investment companies (13 CFR 107.102 (1987)) for a license as a small business investment company.

Interested parties were given until close of business March 20, 1988, to submit their comments to SBA. No comments were received.

Notice is hereby given that, pursuant to section 301(C) of the Small Business Investment Act of 1958, as amended, after having considered the application and all other pertinent information, SBA issued License No. 01/01-0344 on March 25, 1988, to First New England Capital L.P. to operate as a small business investment company.

(Catalog of Federal Domestic Assistance Program No. 59.011, Small Business Investment Companies)

Dated: April 6, 1988.

Robert G. Lineberry,

Deputy Associate Administrator for Investment.

[FR Doc. 88-7829 Filed 4-8-88; 8:45 am]

BILLING CODE 8025-01-M

Presidential Advisory Committee on Small and Minority Business Ownership; Public Meeting

The Presidential Advisory Committee on Small and Minority Business Ownership, located in Washington, DC, will meet on May 2, 1988, at 9:00 a.m. until 5:00 p.m. at the Old Supreme Courtroom, Texas Capitol Building, 3rd Floor, 11th and Congress Avenue, Austin, Texas. At the hearing, private sector executives, local officials, trade associations, small and minority business entrepreneurs, will represent testimony regarding the challenges they face in the development of their businesses, along with proposed solutions to these problems for possible implementation.

Persons wishing to obtain further information should contact Milton Wilson, Jr., Office of Minority Small Business Outreach, U.S. Small Business Administration, 1441 L Street NW., Room 602, Washington, DC 20416, Telephone (202) 653-6526, no later than April 25, 1988.

Jean M. Nowak,

Director, Office of Advisory Councils.

[FR Doc. 88-7830 Filed 4-8-88; 8:45 am]

BILLING CODE 8025-01-M

DEPARTMENT OF STATE

[CM-8/1185]

Shipping Coordinating Committee, Subcommittee on Safety of Life at Sea, Working Group on Stability and Load Lines and on Fishing Vessels Safety, Working Group on Ship Design and Equipment; Meetings

The Working Group on Stability and Load Lines and on Fishing Vessels Safety and the Working Group on Ship Design and Equipment of the Subcommittee on Safety of Life at Sea (SOLAS) will conduct open meetings on April 28, 1988, and May 10, 1988, respectively, in Room 2415 at Coast Guard Headquarters, 2100 Second Street SW., Washington, DC. The meeting for the Working Group on Stability and Loadlines and on Fishing Vessels Safety will be held between 9:00 a.m. and 12:00 noon, while the meeting for the Working Group on Ship Design and Equipment will commence at 9:30 a.m.

Working Group on Stability and Load Lines and on Fishing Vessels Safety

The purpose of the SOLAS Working Group on Stability and Load Lines and on Fishing Vessels Safety meeting (April 28, 1988) will be to discuss the results and activities of the 32nd Session of the International Maritime Organization (IMO) Subcommittee on Stability and Load Lines and on Fishing Vessels Safety (SLF), held September 2 to 11, 1987, and to prepare for the 33rd Session of IMO SLF scheduled for July 4 to 8, 1988. Items of discussion will include the following: Subdivision and damage stability of dry cargo ships, including Ro-Ro ships; intact stability; subdivision and stability requirements for MODUs; flooding protection and residual stability standards for passenger ships; survival capabilities of ships carrying irradiated nuclear fuel; double bottoms in cargo ships; load lines and stability for timber deck cargo ships; below deck openings in cargo tanks; basic principals for future revisions to the 1966 Load Line Convention; safety of fishing vessels, including discussions on external forces caused by fishing gear and possible revisions to the 1977 Torremolinos Convention; the Work Programme of SLF 33; and review of reporting requirements on Codes and Assembly resolutions related to the work of the Subcommittee.

Working Group on Ship Design and Equipment

The purpose of the SOLAS Working Group on Ship Design and Equipment meeting (May 10, 1988) will be to discuss the results and activities of an Intersessional meeting and the 31st Session of the International Maritime Organization (IMO) Subcommittee on Ship Design and Equipment (DE), held February 29 to March 4, 1988 and March 7 to 11, 1988, respectively, and to prepare for the 32nd Session of IMO DE scheduled for December 5 to 9, 1988. Items of discussion will include the following: Harmonization of alarm provisions; maneuverability of ships; review of the MODU Code; helicopter facilities offshore; operating mechanisms for watertight doors and operating procedures in service; materials other than steel for pipes; below deck openings into cargo tanks; design and construction of sea inlets under slush ice conditions; requirements for purpose- and non-purpose-built ships dedicated for the carriage of irradiated nuclear fuel; ventilation of vehicle decks during loading and unloading, surveillance of vehicle spaces, warning lights and operational procedures

covering vehicle spaces; amendments of regulations II-1/41, 42, and 43 of the 1974 SOLAS Convention, as amended; and, review of reporting requirements on Codes and Assembly resolutions related to the work of the Subcommittee.

Members of the public may attend up to the seating capacity of the room.

For further information regarding the meeting of the SOLAS Working Group on Stability and Loadlines and on Fishing Vessels Safety (April 28, 1988) contact Mr. J.S. Spencer or Mr. H.P. Cojeen at (202) 267-2988, and for further information regarding the meeting of the SOLAS Working Group on Ship Design and Equipment (May 10, 1988) contact Captain G.G. Piche or Commander C.E. Bills at (202) 267-2967, U.S. Coast Guard Headquarters (G-MTH), 2100 Second Street SW., Washington, DC 20593-0001.

Dated: March 28, 1988.

Richard C. Scissors,

Chairman, Shipping Coordinating Committee.

[FR Doc. 88-7803 Filed 4-8-88; 8:45 am]

BILLING CODE 4710-07-M

DEPARTMENT OF TRANSPORTATION

Federal Aviation Administration

[Summary Notice No. PE-88-12]

Petition for Exemption; Summary of Petitions Received; Dispositions Issued; Skyworld Airlines, et al.

AGENCY: Federal Aviation Administration (FAA), DOT.

ACTION: Notice of petitions for exemption received and of dispositions of prior petitions.

SUMMARY: Pursuant to FAA's rulemaking provisions governing the application, processing, and disposition of petitions for exemption (14 CFR Part 11), this notice contains a summary of certain petitions seeking relief from specified requirements of the Federal Aviation Regulations (14 CFR Chapter I), dispositions of certain petitions previously received, and corrections. The purpose of this notice is to improve the public's awareness of, and participation in, this aspect of FAA's regulatory activities. Neither publication of this notice nor the inclusion or omission of information in the summary is intended to affect the legal status of any petition or its final disposition.

DATE: Comments on petitions received must identify the petition docket number involved and must be received on or before: May 2, 1988.

ADDRESS: Send comments on any petition in triplicate to: Federal Aviation Administration, Office of the Chief Counsel, Attn: Rules Docket (AGC-10), Petition Docket No. _____, 800 Independence Avenue, SW., Washington, DC 20591.

FOR FURTHER INFORMATION: The petition, any comments received, and a copy of any final disposition are filed in the assigned regulatory docket and are available for examination in the Rules Docket (AGC-10), Room 915G, FAA Headquarters Building (FOB 10A), 800 Independence Avenue SW., Washington, DC 20591; telephone (202) 267-3132.

This notice is published pursuant to paragraphs (c), (e), and (g) of § 11.27 of Part 11 of the Federal Aviation Regulations (14 CFR Part 11).

Issued in Washington, DC, on March 31, 1988.

Denise D. Hall,

Acting Manager Program Management Staff.

PETITIONS FOR EXEMPTION

Docket No.	Petitioner	Regulations affected	Description of relief sought
25508	Skyworld Airlines	14 CFR 121.391 (a) and (e)	To allow petitioner to board passengers with three flight attendants on board its B-707 airplane while the fourth flight attendant supervises boarding from either a position on the ramp or inside a terminal building.
25555	SilverStar Aviation, Inc	14 CFR 135.271(g)	To allow petitioner to assign certain of its flight crewmembers to other duties during a helicopter hospital emergency medical evacuation service assignment. These duties would be limited to conducting training, public relations, or routine transportation missions.
25562	Bar Harbor Airways, Inc., dba Eastern Express.	14 CFR 135.225(e)(1)	To allow pilots of petitioner to perform IFR takeoffs at foreign airports when the visibility is less than 1 mile.

[FR Doc. 88-7882 Filed 4-8-88; 8:45 am]

BILLING CODE 4910-13-M

Flight Service Station at Zanesville Municipal Airport, Zanesville, OH; Closing

Notice is hereby given that on or about March 15, 1988, the Flight Service Station at Zanesville Municipal Airport, Zanesville, Ohio was closed. Services to the general public, formerly provided by this office, are being provided by the Automated Flight Service Station in Cleveland, Ohio. This information will be reflected in the FAA organization statement the next time it is reissued.

(Sec. 313(a), 72 Stat. 752; 49 U.S.C. 1354)

William H. Pollard,

Director, Great Lakes Region.

Issued in Des Plaines, Illinois on March 28, 1988.

[FR Doc. 88-7891 Filed 4-8-88; 8:45 am]

BILLING CODE 4910-13-M

Flight Service Station at LaCrosse Municipal Airport, LaCrosse, WI; Closing

Notice is hereby given that on or about March 15, 1988, the Flight Service Station at LaCrosse Municipal Airport, LaCrosse, Wisconsin was closed. Services to the general public, formerly provided by this office, are being provided by the Automated Flight Service Station in Green Bay, Wisconsin. This information will be reflected in the FAA organization statement the next time it is reissued.

(Sec. 313(a), 72 Stat. 752; 49 U.S.C. 1354)

William H. Pollard,

Director, Great Lakes Region.

Issued in Des Plaines, Illinois on March 28, 1988.

[FR Doc. 88-7892 Filed 4-8-88; 8:45 am]

BILLING CODE 4910-13-M

Research and Special Programs Administration

Grants and Denials of Applications for Exemptions

AGENCY: Research and Special Programs Administration, DOT.

ACTION: Notice of grants and denials of applications for exemptions.

SUMMARY: In accordance with the procedures governing the application for, and the processing of, exemptions from the Department of Transportation's Hazardous Materials Regulations (49 CFR Part 107, Subpart B), notice is hereby given of the exemptions granted in January 1988. The modes of transportation involved are identified by a number in the "Nature of Application" portion of the table below as follows: 1—Motor vehicle, 2—Rail freight, 3—Cargo vessel, 4—Cargo-only aircraft, 5—Passenger-carrying aircraft. Application numbers prefixed by the letters EE represent applications for Emergency Exemptions.

RENEWAL AND PARTY TO EXEMPTIONS

Application No.	Exemption No.	Applicant	Regulation(s) affected	Nature of exemption thereof
2787-X	DOT-E 2787	U.S. Department of Defense, Falls Church, VA.	49 CFR 173.302(a)(1), 175.3	To authorize shipment of certain nonflammable compressed gases, in non-DOT specification pressure vessels equipped with a regulating valve, a pressure relief valve, and a squibb actuated valve. (Modes 1, 2, 3, 4.)
3302-X	DOT-E 3302	Airco Industrial Gases, Murray Hill, NJ.	49 CFR 173.302, 175.3	To authorize use of non-DOT specification sampling bottles (cylinders), for transportation of certain nonflammable gases. (Modes 1, 2, 3, 4.)
3302-X	DOT-E 3302	Air Products and Chemicals, Inc., Allentown, PA.	49 CFR 173.302, 175.3	To authorize use of non-DOT specification sampling bottles (cylinders), for transportation of certain nonflammable gases. (Modes 1, 2, 3, 4.)
4453-P	DOT-E 4453	W.A. Murphy, Inc., El Monte, CA	49 CFR 172.101, 173.114a(h)(3), 176.415, 176.83.	To become a party to exemption 4453. (Modes 1, 3.)
4600-X	DOT-E 4600	Great Lakes Chemical Corporation, El Dorado, AR.	49 CFR 173.315, 178.245 3(a)	To authorize transport of hydrogen bromide (anhydrous) in DOT Specification 51 type portable tanks with a design pressure of 525 psig. (Mode 1.)
4612-X	DOT-E 4612	EM Science, Cincinnati, OH	49 CFR 173.135, 173.122, 173.136, 173.139, 173.154, 173.206, 173,230, 173.245, 173.247, 173.252, 173.253, 173.271, 173.276, 173.281, 173.293, 173.346, 173.382.	To authorize shipment of small quantities of hazardous materials in inside glass bottles overpacked in metal cans further overpacked in DOT Specification 12B fiberboard boxes. (Mode 1.)
4990-X	DOT-E 4990	Joseph E. Seagram & Sons, Inc., New York, NY.	49 CFR 173.125	To authorize use of AAR Specification 206W tank car, for transportation of certain flammable liquids. (Mode 2.)
5206-X	DOT-E 5206	Kesco, Incorporated, Adrian, PA	49 CFR 173.114a	To authorize privately operated bulk hopper-type units, for transportation of blasting agents. (Mode 1.)
5206-X	DOT-E 5206	Thermex Energy Corporation, Dallas, TX.	49 CFR 173.114a	To authorize privately operated bulk hopper-type units, for transportation of blasting agents. (Mode 1.)
5861-X	DOT-E 5861	HTL Division, Pacific Scientific, Duarte, CA.	49 CFR 173.304(a)(1), 175.3, 178.47.	To authorize use of a stainless steel other than prescribed in the regulations, in the construction of a cylinder patterned after the DOT Specification 4DS cylinders, for transportation of a nonflammable compressed gas. (Modes 1, 2, 4, 5.)
6016-X	DOT-E 6016	Airco Distribution Gases, Murray Hill, NJ.	49 CFR 173.315(a)	To authorize shipment of liquid oxygen, nitrogen, and argon in non-DOT specification portable tanks. (Mode 1.)
6325-X	DOT-E 6325	Atlas Powder Company, Dallas, TX	49 CFR 173.154(a)	To authorize transport of oxidizers in non-DOT specification cargo tanks or DOT Specification MC-306, MC-307 or MC-312 cargo tanks. (Mode 1.)
6325-X	DOT-E 6325	Wampum Hardware Company, New Galilee, PA.	49 CFR 173.154(a)	To authorize transport of oxidizers in non-DOT specification cargo tanks or DOT Specification MC-306, MC-307 or MC-312 cargo tanks. (Mode 1.)
6325-X	DOT-E 6325	Wampum Distributing Company, New Galilee, PA.	49 CFR 173.154(a)	To authorize transport of oxidizers in non-DOT specification cargo tanks or DOT Specification MC-306, MC-307 or MC-312 cargo tanks. (Mode 1.)
6325-X	DOT-E 6325	Armstrong Explosives Company, New Galilee, PA.	49 CFR 173.154(a)	To authorize transport of oxidizers in non-DOT specification cargo tanks or DOT Specification MC-306, MC-307 or MC-312 cargo tanks. (Mode 1.)
6325-X	DOT-E 6325	Belmont Mine Supply Company, INc., New Galilee, PA.	49 CFR 173.154(a)	To authorize transport of oxidizers in non-DOT specification cargo tanks or DOT Specification MC-306, MC-307 or MC-312 cargo tanks. (Mode 1.)
6325-X	DOT-E 6325	Northern Ohio Explosives, Inc., New Galilee, PA.	49 CFR 173.154(a)	To authorize transport of oxidizers in non-DOT specification cargo tanks or DOT Specification MC-306, MC-307 or MC-312 cargo tanks. (Mode 1.)
6563-X	DOT-E 6563	Mada Medical Products, Inc., Carlstadt, NJ.	49 CFR 173.302(a)(1), 175.3	To authorize shipment of certain nonflammable gases in non-DOT specification steel cylinders, made in compliance with DOT Specification 3E with certain exceptions. (Modes 1, 2, 3, 4, 5.)
6602-X	DOT-E 6602	Ethyl Corporation, Baton Rouge, LA.	49 CFR 173.245(a), 173.314(c)	To authorize use of 105A500W or 106A500X multi-unit tank car tanks, for shipment of certain corrosive liquids and nonflammable compressed gases. (Modes 1, 2.)
6602-X	DOT-E 6602	Great Lakes Chemical Corporation, El Dorado, AR.	49 CFR 173.245(a), 173.314(c)	To authorize use of 105A500W or 106A500X multi-unit tank car tanks, for shipment of certain corrosive liquids and nonflammable compressed gases. (Modes 1, 2.)
6602-X	DOT-E 6602	Jones Chemicals, Incorporated, Caledonia, NY.	49 CFR 173.245(a), 173.314(c)	To authorize use of 105A500W or 106A500X multi-unit tank car tanks, for shipment of certain corrosive liquids and nonflammable compressed gases. (Modes 1, 2.)

RENEWAL AND PARTY TO EXEMPTIONS—Continued

Application No.	Exemption No.	Applicant	Regulation(s) affected	Nature of exemption thereof
6651-X	DOT-E 6651	Park Chemical Company, Detroit, MI.	49 CFR 173.28(ff), 173.28(m)	To authorize one-time reuse of involved single-trip containers, for transportation of certain Class B poisonous solids. (Mode 1.)
6691-X	DOT-E 6691	Industrial Gas Distributors, Inc., Billings, MT.	49 CFR 173.34(e)(15)(i), Part 107, Appendix B.	To authorize use of DOT Specification 3A or 3AA cylinders over 35 years old which may be retested every 10 years, for transportation of certain flammable and nonflammable compressed gases. (Modes 1, 2, 3, 4, 5.)
6735-X	DOT-E 6735	Great Lakes Chemical Corporation, El Dorado, AR.	49 CFR 173.252	To authorize transportation of bromine in a non-DOT specification cylinder constructed in accordance with all requirements of DOT Specification 4B, 4BA or 4BW except that the cylinder shall be marked "DOT-E 6735" in lieu of the DOT specification marking. (Modes 1, 2, 3.)
6743-X	DOT-E 6743	Atlas Powder Company, Dallas, TX	49 CFR 173.114a(h)(3), 173.182	To authorize shipment of an oxidizing material and a blasting agent in DOT Specification 56 or 57 portable tanks. (Mode 1.)
6765-X	DOT-E 6765	Messer Griesheim Industries, Inc., Valley Forge, PA.	49 CFR 173.318(a), 176.76(h)(4)	To authorize use of non-DOT specification containerized portable tanks, for transportation of a flammable and nonflammable gas. (Modes 1, 3.)
6765-X	DOT-E 6765	Union Carbide Corporation, Danbury, CT.	49 CFR 173.318(a), 176.76(h)(4)	To authorize use of non-DOT specification containerized portable tanks, for transportation of a flammable and nonflammable gas. (Modes 1, 3.)
6765-X	DOT-E 6765	Teisan Kabushiki Kaisha, Tokyo, Japan.	49 CFR 173.318(a), 176.76(h)(4)	To authorize use of non-DOT specification containerized portable tanks, for transportation of a flammable and nonflammable gas. (Modes 1, 3.)
6801-X	DOT-E 6801	Phillips Petroleum Company, Bartlesville, OK.	49 CFR 173.119(a)(7), 173.119(e)(1).	To authorize use of a one-gallon glass bottle, packed in a DOT Specification 12B fiberboard box, for shipment of certain flammable liquids. (Modes 1, 2.)
6883-X	DOT-E 6883	Hedwin Corporation, Baltimore, MD	49 CFR 173.119, 173.154, 173.221, 173.245(a)(26), 173.249(a)(1), 173.250a(a)(1), 173.256(a), 173.257(a)(1), 173.263(a)(28), 173.265(d)(6), 173.266(b)(8), 173.272(g), 173.272(i)(9), 173.277(a)(6), 173.287(c)(1), 173.288, 173.289(a)(1), 173.292(a)(1), 173.346(a), 178.19.	To authorize manufacture, marking and sale of non-DOT specification molded polyethylene containers, for shipment of oxidizers, poison B, corrosive liquids, organic peroxides and flammable liquids. (Modes 1, 2, 3.)
6908-X	DOT-E 6908	Garrett Fluid Systems Company, Tempe, AZ.	49 CFR 173.302(a)(1), 175.3, 178.65.	To authorize variances from the specifications for DOT Specification 39 cylinders, for shipment of certain nonflammable gases. (Modes 1, 2, 3, 4.)
7052-P	DOT-E 7052	Battery Pak, Inc., Spring, TX	49 CFR 172.101, 172.420, 175.3	To become a party to exemption 7052. (Modes 1, 2, 3, 4.)
7052-P	DOT-E 7052	Datachecker Systems, Santa Clara, CA.	49 CFR 172.101, 172.420, 175.3	To become a party to exemption 7052. (Modes 1, 2, 3, 4.)
7052-P	DOT-E 7052	Wildlife Materials, Inc., Carbondale, IL.	49 CFR 172.101, 172.420, 175.3	To become a party to exemption 7052. (Modes 1, 2, 3, 4.)
7052-P	DOT-E 7052	Synergistic Batteries, Inc., Marietta, GA.	49 CFR 172.101, 172.420, 175.3	To become a party to exemption 7052. (Modes 1, 2, 3, 4.)
7446-X	DOT-E 7446	Kaiser Aluminum and Chemical Corporation, Erie, PA.	49 CFR 173.302(a)(1), 173.304(a), 178.38.	To authorize manufacture, marking and sale of dry powder-fire extinguishant or bromotriflouromethane charged with compressed air or nitrogen, in non-DOT specification seamless aluminum cylinders. (Modes 1, 2, 3.)
7465-X	DOT-E 7465	State of Alaska, Department of Transportation, Juneau, AK.	49 CFR 173.119, 173.304, 176.83, 176.905(1), Part 172, Part 176 Subpart H.	To authorize stowage and transportation of motor vehicles, gasoline including camp stove or lantern fuel) and liquefied petroleum gas aboard passenger vessels. (Mode 3.)
7541-X	DOT-E 7541	E.I. du Pont de Nemours & Company, Inc., Wilmington, DE.	49 CFR 173.315(a)	To authorize use of a non-DOT specification portable tank for transportation of certain flammable and nonflammable compressed gases. (Modes 1, 3.)
7548-X	DOT-E 7548	U.S. Department of Defense, Falls Church, VA.	46 CFR 146.29-100	To authorize stowage of explosives on deck of vessel, over the square of the hatch. (Mode 3.)
7621-X	DOT-E 7621	Great Lakes Chemical Corporation, El Dorado, AR.	49 CFR 173.357, 174.63(b)	To authorize use of DOT Specification 51/ISO portable tanks, for shipment of poison B liquid. (Modes 1, 2, 3.)
7654-X	DOT-E 7654	Tennessee Eastman Company, Kingsport, TN.	49 CFR 173.119(f)	To authorize use of a glass bottle not exceeding 500 milliliter capacity inside a metal container overpacked in a DOT Specification 12B fiberboard box, for transportation of a flammable liquid. (Modes 1, 2.)
7654-X	DOT-E 7654	Texas Eastman Company, Longview, TX.	49 CFR 173.119(f)	To authorize use of a glass bottle not exceeding 500 milliliter capacity inside a metal container overpacked in a DOT Specification 12B fiberboard box, for transportation of a flammable liquid. (Modes 1, 2.)
7654-X	DOT-E 7654	J.T. Baker Chemical Company, Phillipsburg, NJ.	49 CFR 173.119(f)	To authorize use of a glass bottle not exceeding 500 milliliter capacity inside a metal container overpacked in a DOT Specification 12B fiberboard box, for transportation of a flammable liquid. (Modes 1, 2.)
7674-X	DOT-E 7674	U.S. Department of Defense, Falls Church, VA.	49 CFR 174.104(a)	To authorize shipment of certain Class A explosives on flat-cars and open-top rail cars. (Mode 2.)

RENEWAL AND PARTY TO EXEMPTIONS—Continued

Application No.	Exemption No.	Applicant	Regulation(s) affected	Nature of exemption thereof
7891-X	DOT-E 7891	Sigma-Aldrich Corporation, Saint Louis, MO.	49 CFR 172.400, 172.402(a)(2), 172.402(a)(3), 172.504 Table 1, 172.504(a), 173.126, 173.138, 173.237, 173.246, 173.25(a), 175.3.	To authorize transport of packages bearing the DANGEROUS WHEN WET label, in motor vehicles which are not placarded FLAMMABLE SOLID W. (Modes 1, 2, 4.)
7929-X	DOT-E 7929	Austin Powder Company, Cleveland, OH.	49 CFR 173.65	To authorize transport of flaked or pelletized TNT in woven polyethylene or polypropylene cloth outer bags, with plastic film liners. (Modes 1, 2.)
7943-X	DOT-E 7943	Alstar Company, Tracy, CA	49 CFR 173.263(a)(15), 173.272(c), 173.272(i)(12), 173.277(a)(1).	To authorize shipment of corrosive liquids in one or two one-gallon polyethylene containers packed in fiberboard boxes, complying with DOT Specification 12B except for handholes in top flaps. (Mode 1.)
7943-X	DOT-E 7943	All Pure Chemical Company, Inc., Tracy, CA.	49 CFR 173.263(a)(15), 173.272(c), 173.272(i)(12), 173.277(a)(1).	To authorize shipment of corrosive liquids in one or two one-gallon polyethylene containers packed in fiberboard boxes, complying with DOT Specification 12B except for handholes in top flaps. (Mode 1.)
7943-P	DOT-E 7943	T Chem Products, Santa Fe Springs, CA.	49 CFR 173.263(a)(15), 173.272(c), 173.272(i)(12), 173.277(a)(1).	To become a party to exemption 7943. (Mode 1.)
7945-P	DOT-E 7945	U.S. Department of Defense, Falls Church, Va.	49 CFR 173.304(a)(1), 175.3, 178.47.	To become a party to exemption 7945. (Modes 1, 2, 4, 5.)
7945-X	DOT-E 7945	HTL Division, Pacific Scientific, Duarte, CA.	49 CFR 173.304(a)(1), 175.3, 178.47.	To authorize use of a stainless steel other than that prescribed in the regulations, in the construction of a cylinder patterned after DOT Specification 4DS cylinders, for shipment of a nonflammable compressed gas. (Modes 1, 2, 4, 5.)
7991-X	DOT-E 7991	CSX Transportation, Inc., Jacksonville, FL.	49 CFR Parts 100-177	To authorize transport of railway track torpedoes and fuses in flagging kits of specified construction. (Mode 1.)
8156-X	DOT-E 8156	Union Carbide Corporation, Danbury, CT.	49 CFR 173.121, 173.302(a)(4), 173.302(f), 173.304(a)(1).	To authorize transport of certain flammable or nonflammable compressed gases and carbon bisulfide in a DOT Specification 39 steel cylinder up to 225 cubic inches in volume. (Modes 1, 2.)
8156-X	DOT-E 8156	Liquid Air Corporation, Walnut Creek, CA.	49 CFR 173.121, 173.302(a)(4), 173.302(f), 173.304(a)(1).	To authorize transport of certain flammable or nonflammable compressed gases and carbon bisulfide in a DOT Specification 39 steel cylinder up to 225 cubic inches in volume. (Modes 1, 2.)
8168-X	DOT-E 8168	Container Corporation of America, Wilmington, DE.	49 CFR Part 173, Subparts E, F, H	To authorize additional hazardous materials and classes of materials authorized for shipment in DOT Specification 21C fiber drum. (Modes 1, 2, 3.)
8214-X	DOT-E 8214	Morton Thiokol, Incorporated, Ogden, UT.	49 CFR 173.153, 173.154, 175.3	To authorize a new packaging arrangement for shipment of inflators and modules for passive restraint systems. (Modes 1, 2, 3, 4.)
8299-X	DOT-E 8299	HTL Division, Pacific Scientific, Duarte, CA.	49 CFR 173.304(a)(1), 175.3, 178.44.	To authorize manufacture, marking and sale of a non-DOT specification pressure vessel comparable to a DOT Specification 3HT cylinder with certain exceptions, for transportation of a compressed gas. (Modes 1, 2, 4, 5.)
8329-X	DOT-E 8329	Texas Instruments, Inc., Dallas, TX	49 CFR 173.266	To authorize use of DOT Specification 57 portable tanks in less than truckload quantities with other hazardous materials subject to 49 CFR 177.848. (Mode 1.)
8390-X	DOT-E 8390	J.T. Baker Chemical Company, Phillipsburg, NJ.	49 CFR 173.272, 178.210, 178.24a	To authorize shipment of 95%-98% sulfuric acid in DOT Specification 2E polyethylene bottles overpacked in DOT Specification 12A80 fiberboard boxes. (Mode 1.)
8427-X	DOT-E 8427	U.S. Department of Defense, Falls Church, VA.	49 CFR 173.276	To authorize use of a stainless steel DOT Specification seamless 3A or 3E cylinder, for shipment of a flammable liquid. (Mode 4.)
8445-X	DOT-E 8445	Dow Consumer Products, Inc., Indianapolis, IN.	49 CFR Part 173, Subparts D, E, F and H.	To authorize shipment of various hazardous substances and wastes packed in inside plastic, glass, earthenware or metal containers, overpacked in a DOT Specification removable head steel, fiber or polyethylene drum, only for the purposes of disposal, repackaging or reprocessing. (Mode 1.)
8445-X	DOT-E 8445	Union Carbide Corporation, Danbury, CT.	49 CFR Part 173, Subparts D, E, F and H.	To authorize shipment of various hazardous substances and wastes packed in inside plastic, glass, earthenware or metal containers, overpacked in a DOT Specification removable head steel, fiber or polyethylene drum, only for the purposes of disposal, repackaging or reprocessing. (Mode 1.)
8445-X	DOT-E 8445	Monsanto Company, St. Louis, MO	49 CFR Part 173, Subparts D, E, F and H.	To authorize shipment of various hazardous substances and wastes packed in inside plastic, glass, earthenware or metal containers, overpacked in a DOT Specification removable head steel, fiber or polyethylene drum, only for the purposes of disposal, repackaging or reprocessing. (Mode 1.)
8453-X	DOT-E 8453	Atlas Powder Company, Dallas, TX	49 CFR 173.114a	To authorize use of non-DOT specification cargo tanks and DOT Specification MC-306, MC-307, or MC-312 stainless steel cargo tanks, to transport blasting agent. (Mode 1.)

RENEWAL AND PARTY TO EXEMPTIONS—Continued

Application No.	Exemption No.	Applicant	Regulation(s) affected	Nature of exemption thereof
8453-X	DOT-E 8453	Austin Powder Company, Cleveland, OH.	49 CFR 173.114a	To authorize use of non-DOT specification cargo tanks and DOT Specification MC-306, MC-307, or MC-312 stainless steel cargo tanks, to transport blasting agent. (Mode 1.)
8645-X	DOT-E 8645	Austin Powder Company, Cleveland, OH.	49 CFR 173.154(a)(18)	To authorize bulk shipment of a thickened solution of an oxidizing material, commercially designated as "HEF", in DOT Specification MC-307 or MC-311 insulated cargo tanks at ambient temperature (Mode 1.)
8770-X	DOT-E 8770	Eastman Kodak Company, Rochester, NY.	49 CFR 172.402, 173.286(c)	To authorize shipment of a corrosive liquid and minute quantity of a flammable, poisonous solid in DOT Specification 12A, 12B or 15A fiberboard or wooden boxes with inside glass bottles. (Modes 1, 2, 3.)
8811-X	DOT-E 8811	Hoechst Celanese Corporation, Somerville, NJ.	49 CFR 173.294, 178.340-3, 178.343-2.	To authorize use of modified DOT Specification MC-312 cargo tanks made of titanium, for shipment of certain corrosive materials. (Mode 1.)
8843-X	DOT-E 8843	GOEX, Inc., Cleburne, TX	49 CFR 173.246, 175.3	To authorize manufacture, marking and sale of non-DOT specification nonrefillable cylinders, for transportation of bromine trifluoride. (Modes 1, 2, 3, 4.)
8871-X	DOT-E 8871	Bulk Lift International, Inc., Carpenterville, IL.	49 CFR 173.182, 173.217, 173.245(b), 173.366.	To authorize manufacture, marking and sale of large, collapsible polyethylene-lined woven polypropylene bulk bags, having a capacity of approximately 2,000 pounds each, and top and bottom outlets, for shipment of corrosive solid, nitrates and poisons. (Modes 1, 2, 3.)
9043-X	DOT-E 9043	Ozella Harrington Trucking Company, Benson, AZ.	49 CFR 173.154(a)(18)	To authorize shipment of ammonium nitrate solution, classed as an oxidizer in a DOT Specification MC-306 stainless steel insulated cargo tanks modified to DOT Specification 307 cargo tanks. (Mode 1.)
9072-X	DOT-E 9072	Morton Thiokol, Inc., Brigham City, UT.	49 CFR 173.92	To authorize shipment of rocket motors, Class B explosive in specially designed non-DOT specification containers. (Mode 1.)
9080-X	DOT-E 9080	Henderson's Welding and Manufacturing Corporation, Seminole, TX.	49 CFR 173.119, 173.245, 178.253	To authorize manufacture, marking and sale of four non-DOT specification portable tanks manifolded together within a frame and securely mounted on a truck chassis, for transportation of flammable liquids and corrosive liquids. (Mode 1.)
9132-X	DOT-E 9132	Welchem, Inc., Houston, TX	49 CFR 173.119, 173.245, 178.253	To authorize use of non-DOT specification portable tanks manifolded together within a frame and securely mounted on a truck chassis, for transportation of flammable and corrosive liquids. (Mode 1.)
9136-X	DOT-E 9136	Sonoco Plastic Drum, Inc., Lockport, IL.	49 CFR 173.119, 173.221, 173.245b(a)(6), 173.271, 173.357(b), 178.19.	To authorize manufacture, marking and sale of DOT Specification 34 drums of up to 30 gallon capacity, for shipment of various poison B liquids, flammable liquids, organic peroxides, oxidizers and corrosive materials. (Modes 1, 2, 3.)
9176-X	DOT-E 9176	Minnesota Valley Engineering, Inc., New Prague, MN.	49 CFR 173.304(a), 177.840(a)(1)	To authorize manufacture, marking and sale of DOT Specification 4L cylinders, for transportation of certain nonflammable gases. (Mode 1.)
9211-X	DOT-E 9211	American Overseas Marine Corporation, Quincy, MA.	49 CFR 146.29-35(f)	To authorize installation and operation of electrically-powered lighting, air conditioning, alarm, fire detection, and cargo-handling systems in cargo holds containing Class A, B and C explosives in a Maritime Prepositioning Ship (TAKX). (Mode 3.)
9463-X	DOT-E 9463	Guzzler Manufacturing, Inc., Birmingham, AL.	49 CFR 173.119 (a), (m), 173.245(a), 173.340-8(c), 173.346(a), 178.340-7, 178.342-5, 178.342-7(a), 178.343-5.	To authorize manufacture, marking and sale of non-DOT specification cargo tanks complying generally with DOT Specification MC-307/312 except for full opening rear head for shipment of flammable, corrosive or poison B waste liquids or semi-solids. (Mode 1.)
9525-X	DOT-E 9525	American Cyanamid Company, Wayne, NJ.	49 CFR 178.42, Part 173, Subparts D, E, and H.	To authorize use of a welded stainless steel cylinder equivalent to DOT Specification 3E with exceptions, for transportation of certain pyroforic liquids, flammable liquids, poison B liquids and flammable solids. (Modes 1, 3, 4.)
9525-X	DOT-E 9525	Cyanamid Canada, Inc., East Willowdale, Canada.	49 CFR 178.42, Part 173, Subparts D, E, and H.	To authorize use of a welded stainless steel cylinder equivalent to DOT Specification 3E with exceptions, for transportation of certain pyroforic liquids, flammable liquids, poison B liquids and flammable solids. (Modes 1, 3, 4.)
9527-X	DOT-E 9527	Carolina Aircraft Corporation, Ft. Lauderdale, FL.	49 CFR 172.101, 172.204(c)(3), 173.27, 175.30(a)(1), 175.320(b), Part 107, Appendix B.	To authorize carriage of various Class A, B and C explosives not permitted for air shipment or in quantities greater than those prescribed for air shipment. (Mode 4.)
9571-X	DOT-E 9571	U.S. Department of Defense, Falls Church, VA.	49 CFR Parts 100-177	To authorize transport of not more than 5 grams of an approved or unapproved explosive in a special packaging essentially without regulation. (Modes 1, 2, 3, 4, 5.)
9718-P	DOT-E 9718	Eurotainer, 75008 Paris, France	49 CFR 173.315, 178.245	To become a party to exemption 9718. (Modes 1, 2, 3.)
9785-X	DOT-E 9785	Hapag-Lloyd (America) Inc., Staten Island, NY.	49 CFR 176.11, 176.83	To authorize highway and rail as additional modes of transportation. (Modes 1, 2, 3.)

RENEWAL AND PARTY TO EXEMPTIONS—Continued

Application No.	Exemption No.	Applicant	Regulation(s) affected	Nature of exemption thereof
9851-X	DOT-E 9851	American Airlines, Inc., Dallas, TX	49 CFR Parts 100-199	To reissue exemption originally issued on an emergency basis to authorize shipment of insulated dewars containing liquid nitrogen in the cabin of a passenger carrying aircraft with certain conditions. (Mode 5.)

NEW EXEMPTIONS

Application No.	Exemption No.	Applicant	Regulation(s) affected	Nature of exemption thereof
9722-N	DOTE-E 9722	Russell-Stanley Corporation, Red Bank, NJ.	49 CFR 173.266	To authorize manufacture, marking and sale of a DOT Specification 34 drum of 55-gallon capacity, for the shipment of hydrogen peroxide solution in water, containing not more than 70% hydrogen peroxide by weight (modes 1, 2, and 4.)
9785-N	DOTE-E 9785	Hapag-Lloyd AG, Hamburg, West Germany.	49 CFR 176.11, 176.83	To authorize stowage and segregation of hazardous materials transported in freight containers to be in accordance with the proposed Amendment 24-86 to the International Maritme Dangerous Goods Code. (modes 1, 2, and 3.)
9791-N	DOTE-E 9791	Pressed Steel Tank Co., Inc., Milwaukee, WI.	49 CFR 173, 301(h), 173.302(a), 173.34(a)(1), 178.37.	To authorize manufacture, marking and sale of a high strength, non-specification cylinder comforming in part with the DOT-3AA specification, for transportation of certain nonflammable, nonliquefied compressed gases. (mode 1.)
9823-N	DOTE-E 9823	Moog Incorporated Carleton Group, East Aurora, NY.	49 CFR 173.302(a)(4), 175.3, 178.65.	To authorize use of a non-DOT specification, toroidal shape pressure vessel for transportation of helium. (modes 1, 2, and 4.)
9827-N	DOTE-E 9827	Mobay Corporation, Kansas City, MO.	49 CFR 173.359	To authorize shipment of certain organophosphorus compounds, in a DOT Specification 34 polyethylene drum with a maximum capacity of 30 gallons. (modes 1, 2.)
9846-N	DOTE-E 9846	Elexcon and Systems, Inc., Lafayette, LA.	49 CFR 173.154, 173.164, 173.178, 173.182, 173.217, 173.234, 173.245b.	To authorize manufacture, marking and sale of large, collapsible polyethylene-lined woven polypropylene bulk bags having a capacity of approximately 2200 pounds each, and top and bottom outlets, for shipment of a flammable solid, oxidizing materials, and corrosive solids. (modes 1, 2.)

EMERGENCY EXEMPTIONS

Application No.	Exemption No.	Applicant	Regulation(s) affected	Nature of exemption thereof
EE8470-X	DOT-E 8470	Thiokol Corporation, Brigham City, UT.	49 CFR 173.92(a)	To authorize use of a non-DOT specification box for shipping rocket motors. (mode 1.)
EE9904-N	DOT-E 9904	Fomo Products, Inc., Norton, OH	49 CFR 173.1200(a)(5)(ii)(E), 178.65-11(a).	To authorize a one-time return shipment of materials in a packaging which deviate from certain test criteria. (mode 1.)
EE 9905-N	DOT-E 9905	Moli Energy Limited, Burnaby, B.C., Canada.	49 CFR 172.101, 172.420	To authorize transport of lithium batteries containing parallel branches of series connected cells without diodes. (mode 1.)
EE 9906-N	DOT-E 9906	Boston University School of Medicine/Pulmonary Ctr., Boston, MA.	49 CFR 173.316, 176.63(b)	To authorize use of non-DOT specification packaging and patient use of oxygen systems on board a passenger ship. (mode 3.)
EE 9908-N	DOT-E 9908	Pennwalt Corporation, King of Prussia, PA.	49 CFR 173.31(b), (c), Part 107, Appendix B(1).	To authorize a one-time shipment of carbon disulfide in a DOT Specification 105A300W tank car tank which is overdue for retest. (mode 2.)

WITHDRAWAL EXEMPTIONS

Application No.	Applicant	Regulation(s) affected	Nature of exemption thereof
9871-N	Olin Hunt Specialty Products, Inc., Seward, IL.	49 CFR 173.251(b)(1), 175.3	To authorize shipment of boron tribromide classed as a corrosive material in accordance with 49 CFR 173.251(b)(1) except that a stainless steel container not to exceed 1.2 liters will be substituted for the specified glass inner container. (modes 1, 2, 3, and 4.)

Denials

8489-P Request by Syn-Tex Convertors, Ltd. Winnipeg, Manitoba, Canada authorize shipment of copper arsenate as an additional commodity denied January 29, 1988.

8706–X Request by Petro-Steel Division of Prairie State Equipment Sioux Falls, SD to amend paragraph 7c to authorize a 10-inch maximum diameter bottom outlet denied January 12, 1988.

9771–N Request by Honeywell Inc., Defense Systems Division Hopkins, MN to authorize shipment of unclassed waste explosive scrap, for disposal, packaged in specially designed containers denied January 22, 1988.

Issued in Washington, DC, on March 21, 1988.

J. Suzanne Hedgepeth,

Chief, Exemptions Branch, Office of Hazardous Materials Transportation.

[FR Doc. 88–7895 Filed 4–8–88; 8:45 am]

BILLING CODE 4910-60-M

DEPARTMENT OF THE TREASURY

Fiscal Service

[Dept. Circ. 570, 1987 Rev., Supp. No. 17]

Surety Companies Acceptable on Federal Bonds; American Surety Co.

A Certificate of Authority as an acceptable surety on Federal bonds is hereby issued to the following company under sections 9304 to 9308, Title 31, of the United States Code. Federal bond-approving officers should annotate their reference copies of the Treasury Circular 570, 1987 Revision, on page 24806 to reflect this addition:

American Surety Company. Business Address: 7470 North Figueroa St., Los Angeles, California 90041.

Underwriting Limitation [b]: *$109,000.*

Surety License [c]: CA.

Incorporated In: California. Federal Process Agents [d].

Certificates of Authority expire on June 30 each year, unless revoked prior to that date. The Certificates are subject to subsequent annual renewal as long as the companies remain qualified (31 CFR Part 223). A list of qualified companies is published annually as of July 1 in Treasury Department Circular 570, with details as to underwriting limitations, areas in which licensed to transact surety business and other information.

Copies of the Circular may be obtained from the Surety Bond Branch, Finance Division, Financial Management Service, Department of the Treasury, Washington, DC 20227, telephone (202/FTS) 287–3918.

Dated: March 30, 1988.

Mitchell A. Levine,

Assistant Commissioner, Comptroller, Financial Management Service.

[FR Doc. 88–7793 Filed 4–8–88; 8:45 am]

BILLING CODE 4810-35-M

UNITED STATES INFORMATION AGENCY

United States Advisory Commission on Public Diplomacy; Meeting

A meeting of the U.S. Advisory Commission on Public Diplomacy will be held April 20, 1988, in Room 600, 301 4th Street SW., Washington, DC, from 11:30 a.m. to 12:00 p.m

The Commission will meet with Mr. Richard Werksman, Assistant General Counsel and Deputy Ethics Officer, USIA for a briefing on standards of conduct for federal advisory committee members.

Please call Gloria Kalamets, (202) 485–2468, if you are interested in attending the meeting since space is limited and entrance to the building is controlled.

Dated: April 5, 1988.

Charles N. Canestro,

Management Analyst, Federal Register Liaison.

[FR Doc. 7820 Filed 4–8–88; 45 am]

BILLING CODE 8230-01-M

Sunshine Act Meetings

Federal Register
Vol. 53, No. 69
Monday, April 11, 1988

This section of the FEDERAL REGISTER contains notices of meetings published under the "Government in the Sunshine Act" (Pub. L. 94-409) 5 U.S.C. 552b(e)(3).

FEDERAL DEPOSIT INSURANCE CORPORATION

Pursuant to the provisions of the "Government in the Sunshine Act" (5 U.S.C. 552b), notice is hereby given that at 3:07 p.m. on Wednesday, April 6, 1988, the Board of Directors of the Federal Deposit Insurance Corporation met in closed session to consider the following matters:

Request for financial assistance pursuant to section 13(c) of the Federal Deposit Insurance Act.

Recommendation regarding the liquidation of a bank's assets acquired by the Corporation in its capacity as receiver, liquidator, or liquidating agent of those assets:

Case No. 47,199
Capital Bank & Trust Co., Baton Rouge, Louisiana

Recommendation regarding Capital Bank & Trust Co., National Association, Baton Rouge, Louisiana.

Matters relating to an assistance agreement pursuant to section 13(c) of the Federal Deposit Insurance Act.

In calling the meeting, the Board determined, on motion of Director C.C. Hope, Jr. (Appointive), seconded by Director Robert L. Clarke (Comptroller of the Currency), concurred in by Chairman L. William Seidman, that Corporation business required its consideration of the matters on less than seven days' notice to the public; that no earlier notice of the meeting was practicable; that the public interest did not require consideration of the matters in a meeting open to public observation; and that the matters could be considered in a closed meeting pursuant to subsections (c)(2), (c)(4), (c)(6), (c)(8), (c)(9)(A)(ii), and (c)(9)(B) of the "Government in the Sunshine Act" (5 U.S.C. 552b(c)(2), (c)(4), (c)(6), (c)(8), (c)(9)(A)(ii), and (c)(9)(B)).

The meeting was held in the Board Room on the sixth floor of the FDIC Building located at 550 17th Street, NW., Washington, DC.

Dated: April 7, 1988.

Federal Deposit Insurance Corporation.
Robert E. Feldman,
Assistant Executive Secretary (Operations).
[FR Doc. 88-7933 Filed 4-7-88; 1:11 pm]
BILLING CODE 6714-01-M

FEDERAL DEPOSIT INSURANCE CORPORATION

Pursuant to the provisions of the "Government in the Sunshine Act" (5 U.S.C. 552b), notice is hereby given that the Federal Deposit Insurance Corporation's Board of Directors will meet in open session at 2:00 p.m. on Wednesday, April 13, 1988, to consider the following matters:

Summary Agenda: No substantive discussion of the following items is anticipated. These matters will be resolved with a single vote unless a member of the Board of Directors requests that an item be moved to the discussion agenda.

Disposition of minutes of previous meetings.

Application for Federal deposit insurance for a Federal branch:

The Bank of East Asia, Limited, Hong Kong, for Federal deposit insurance of deposits received at and recorded for the account of its Federal branch to be lcoated at 202-204 Canal Street, New York (Manhattan), New York.

Recommendations regarding the liquidation of a bank's assets acquired by the Corporation in its capacity as receiver, liquidator, or liquidating agent of those assets:

Case No. 47,194
Orlando Consolidated Office, Orlando, Florida
Case No. 47,195 (Amendments)
Omaha Consolidated Office, Omaha, Nebraska

Reports of actions approved by the standing committees of the Corporation and by officers of the Corporation pursuant to authority delegated by the Board of Directors.

Discussion Agenda:

Memorandum and resolution re: Supervisory Policy of the Federal Financial Institutions Examination Council, entitled "Selection of Securities Dealers and Unsuitable Investment Practices."

Memorandum and resolution re: Establishment of the "Insured Bank Liquidation Records" system pursuant to the Privacy Act of 1974 which concerns records of individuals who had obligations with FDIC-insured institutions that have failed or that were provided open-bank assistance by the Corporation and for which the Corporation is acting in its corporate capacity or in its receivership capacity as liquidator of certain of the institutions' assets.

Memoradum and resolution re: Proposed Statement of Policy Regarding Independent External Audits of State Nonmember Banks.

The meeting will be held in the Board Room on the sixth floor of the FDIC Building located at 550-17th Street, NW., Washington, DC.

Requests for further information concerning the meeting may be directed to Mr. Hoyle L. Robinson, Executive Secretary of the Corporation, at (202) 898-3813.

Dated: April 6, 1988.

Federal Deposit Insurance Corporation.
Hoyle L. Robinson,
Executive Secretary.
[FR Doc. 88-7944 Filed 4-7-88; 1:29 pm]
BILLING CODE 6714-01-M

FEDERAL DEPOSIT INSURANCE CORPORATION

Pursuant to the provisions of the "Government in the Sunshine Act" (5 U.S.C. 552b), notice is hereby given that at 2:30 p.m. on Wednesday, April 13, 1988, the Federal Deposit Insurance Corporation's Board of Directors will meet in closed session, by vote of the Board of Directors, pursuant to sections 552b(c)(2), (c)(6), (c)(8), (c)(9)(A)(ii), and (c)(9)(B) of Title 5, United States Code, to consider the following matters:

Summary Agenda: No substantive discussion of the following items is anticipated. These matters will be resolved with a single vote unless a member of the Board of Directors requests that an item be moved to the discussion agenda.

Recommendations with respect to the initiation, termination, or conduct of administrative enforcement proceedings (cease-and-desist proceedings, termination-of-insurance proceedings, suspension or removal proceedings, or assessment of civil money penalties) against certain insured banks or officers, directors, employees, agents or other persons participating in the conduct of the affairs thereof:

Names of persons and names and locations of banks authorized to be exempt from disclosure pursuant to the provisions of subsections (c)(6) (c)(8), and (c)(9)(A)(ii) of the "Government in the Sunshine Act" (5 U.S.C. 552b(c)(6), (c)(8), and (c)(9)(A)(ii)).

Note. Some matters falling within this category may be placed on the discussion agenda without further public notice if it becomes likely that substantive discussion of those matters will occur at the meeting.

Reports of the Director, Office of Corporate Audits and Internal Investigations:

Audit Report re:
Alaska National Bank of the North, Fairbanks, Alaska (5915) (Memo dated March 18, 1988)
Audit Report re:
South Denver National Bank, Glendale, Colorado (2702) (Memo dated March 3, 1988)
Audit Report re:
United Bank of Texas, Austin, Texas (6869) (Memo dated March 4, 1988)
Audit Rport re:
Waxahachie Bank and Trust Company, Waxahachie, Texas (2724) (Memo dated March 4, 1988)
Audit Report re:
Des Moines Consolidated Office, Cost Center-203 (Memo dated March 3, 1988)
Audit Report re:
Orlando Consolidated Office, Cost Center—104 (Memo dated February 24, 1988)
Audit Report re:
San Jose Consolidated Office, Cost Center—604 (Memo dated March 4, 1988)
Audit Report re:
San Juan Consolidated Office, Cost Center—501 (Memo dated March 10, 1988)
EDP Audit Report re:
Costa Mesa Consolidated Office (Memo dated March 18, 1988)
EDP Audit Report re:
Des Moines Consolidated Office (Memo dated February 29, 1988)
EDP Audit Report re:
Minneapolis Consolidated Office (Memo dated February 29, 1988)
EDP Audit Report re:
New York Regional Office (Memo dated March 17, 1988)

Discussion Agenda:

Application for Federal deposit insurance:

Winchester Co-operative Bank, an operating non-FDIC-insured co-operative bank located at 19 Church Street, Winchester, Massachusetts.

Personnel actions regarding appointments, promotions, administrative pay increases, reassignments, retirements, separations, removals, etc.:

Names of employees authorized to be exempt from disclosure pursuant to the provisions of subsections (c)(2) and (c)(6) of the "Government in the Sunshine Act" (5 U.S.C. 552b(c)(2) and (c)(6)).

Matters relating to the possible closing of certain insured banks:

Names and locations of banks authorized to be exempt from disclosure pursuant to the provisions of subsections (c)(8), (c)(9)(A)(ii), and (c)(9)(A)(ii), and (c)(9)(B)).

The meeting will be held in the Board Room on the sixth floor of the FDIC Building located at 550—17th Street, NW., Washington, DC.

Requests for further information concerning the meeting may be directed to Mr. Hoyle L. Robinson, Executive Secretary of the Corporation, at (202) 898-3813.

Dated: April 6, 1988.

Federal Deposit Insurance Corporation.

Hoyle L. Robinson,

Executive Secretary.

[FR Doc. 88-7945 Filed 4-7-88; 1:29 pm]

BILLING CODE 6714-01-M

U.S. NATIONAL COMMISSION ON LIBRARIES AND INFORMATION SCIENCE

DATE AND TIME:

April 21-22, 1988

PLACE:

Hotel Washington, Capital Room, Pennsylvania Avenue at 15th Street, Washington, DC 20004

STATUS:

April 21, 1988, 8:00 a.m.-10:00 a.m.—Closed Sec. 1703.202(2) and (6) of the Code of Federal Regulations, 45 CFR Part 1703
April 21, 1988, 10:30 a.m.-5:00 p.m.—Open
April 22, 1988, 9:00 a.m.-2:00 p.m.—Closed Section 1703.202(2) and (6) of the Code of Federal Regulations, 45 CFR Part 1703
April 22, 1988, 3:00 p.m.-4:30 p.m.—Awards Ceremony, OEOB-NCLIS Staff and award recipients only

MATTERS TO BE DISCUSSED:

Chairman's Report
Approval of January 14-15, 1988 Minutes
Executive Director's Report
—FY 88 Second Quarter Program Report
—Administrative Report
NCLIS Committee Reports—
—Public Affairs
—White House Conference
—Program Review
—Budget
—School Library
—International
—Legislative
—Bicentennial
Information for Governance Meeting Report
Guest Speaker, Robert Chartrand, Senior Specialist in Information and Technology Policy, CRS, "Review of Current Legislation on Information Policy"
Preservation: Electronic Archives Inventory
NAC: Federal Funding for Minimum Network Equipment
NCLIS Recognition Award

Special provisions will be made for handicapped individuals by calling Jane McDuffie (202) 254-3100, no later than one week in advance of the meeting.

FOR FURTHER INFORMATION CONTACT:

Margaret Phelan, NCLIS Acting Executive Director, 1111 18th Street, NW., Suite 310, Washington, DC 20036, (202) 254-3100.

Dated: April 5, 1988.

Jane McDuffie,

Staff Assistant.

[FR Doc. 88-7902 Filed 4-7-88; 10:46 am]

BILLING CODE 7537-01-M

Corrections

Federal Register
Vol. 53, No. 69
Monday, April 11, 1988

This section of the FEDERAL REGISTER contains editorial corrections of previously published Presidential, Rule, Proposed Rule, and Notice documents and volumes of the Code of Federal Regulations. These corrections are prepared by the Office of the Federal Register. Agency prepared corrections are issued as signed documents and appear in the appropriate document categories elsewhere in the issue.

ENVIRONMENTAL PROTECTION AGENCY

21 CFR Part 561

[PP-5H5467/R937; FRL-3331-4]

Pesticide Tolerances for Ethephon

Correction

In rule document 88-3557 appearing on page 5367 in the issue of Wednesday, February 24, 1988, make the following correction:

§ 561.225 [Corrected]

In the third column, in § 561.225(a), in the table, the first heading "Foods" should read "Feeds".

BILLING CODE 1505-01-D

ENVIRONMENTAL PROTECTION AGENCY

40 CFR Part 180

[PP 6E3457/R936; FRL-3333-2]

Pesticide Tolerance for 3,5-Dichloro-N-(1,1-Dimethyl-2-Propynyl)Benzamide

Correction

In rule document 88-3699 appearing on page 5378 in the issue of Wednesday, February 24, 1988, make the following correction:

§ 180.317 [Corrected]

In the second column, in the heading for § 180.317, in the second line, "propynyl)benzamide" was misspelled.

BILLING CODE 1505-01-D

ENVIRONMENTAL PROTECTION AGENCY

21 CFR Part 193

[OPP-300179; FRL 3330-3]

Proposed Revocation of Food Additive Regulations for Certain Pesticide Chemicals

Correction

In proposed rule document 88-3429 beginning on page 4643 in the issue of Wednesday, February 17, 1988, make the following correction:

§ 193.400 [Corrected]

On page 4644, in the third column, in § 193.400(a), in the fifth line, "ethylamino" was misspelled.

BILLING CODE 1505-01-D

ENVIRONMENTAL PROTECTION AGENCY

[OPP-240079; FRL-3329-7]

State Registration of Pesticides

Correction

In notice document 88-3436 beginning on page 4888 in the issue of Thursday, February 18, 1988, make the following correction:

On page 4889, in the first column, under Connecticut, in the first line, "Chempar" was misspelled.

BILLING CODE 1505-01-D

ENVIRONMENTAL PROTECTION AGENCY

[OPP-30000/44C; FRL 3310-4]

Alachlor; Notice of Intent to Cancel Registrations; Conclusion of Special Review

Correction

In notice document 87-30041 beginning on page 49480 in the issue of Thursday, December 31, 1987, make the following corrections:

1. On page 49484, in the first column, in paragraph d, in the 11th line, "2(methylsulfonyl)" should read "2-(methylsulfonyl)"; and in the 12th line insert a hypen between "hydroxyethyl)" and "phenyl".

2. On page 49487, in the first column, in the 16th line, "hydroxyethylethylaniline" should read "hydroxyethyl-ethylaniline".

3. On page 49490, in the first column, in the 13th line, "II.8.5.b." should read "II.B.5.b.".

4. On page 49499, in the first column, in the second complete paragraph, in the 18th line, "carcinogenesis" was misspelled.

BILLING CODE 1505-01-D

ENVIRONMENTAL PROTECTION AGENCY

[OPP-180759; FRL-3336-1]

Receipt of Applications for Emergency Exemptions From Pennsylvania To Use Dinoseb; Solicitation of Public Comment

Correction

In notice document 88-4464 beginning on page 6695 in the issue of Wednesday, March 2, 1988, make the following correction:

On page 6696, in the second column, in the second line from the bottom, "Treflan" was misspelled.

BILLING CODE 1505-01-D

ENVIRONMENTAL PROTECTION AGENCY

[OPP-180757; FRL 3329-5]

Receipt of Application for a Specific Exemption To Use Thiophanate-Methyl; Solicitation of Public Comment

Correction

In notice document 88-3435 beginning on page 4887 in the issue of Thursday, February 18, 1988, make the following corrections:

1. On page 4887, in the third column, in the first line, "OOP-180757" should read "OPP-180757".

2. On page 4888, in the first column, in the fifth line, "1987-99" should read "1987-88'.

BILLING CODE 1505-01-D

ENVIRONMENTAL PROTECTION AGENCY

[OPTS-51702; FRL-3351-4]

Toxic and Hazardous Substances; Certain Chemical Premanufacture Notices

Correction

In notice document 88-5976 beginning on page 8960 in the issue of Friday, March 18, 1988, make the following corrections:

1. On page 8962, in the second column, under "P 88-382", in the second line, "aliphatic" was misspelled.

2. On page 8972, in the second column, under "P 88-663", the *"Chemical"* should read "(S) 1,3-Divinyl-1,3-dimethyl-1,3-bis(trimethylsiloxy) disiloxane hexamethyl disoloxane.".

BILLING CODE 1505-01-D

DEPARTMENT OF HEALTH AND HUMAN SERVICES

Food and Drug Administration

Consumer Information Exchanger; Open Meeting

Correction

In notice document 88-3625 appearing on page 5218 in the issue of Monday, February 22, 1988, make the following correction:

In the second column, the signature should read:

John M. Taylor,

Associate Commissioner for Regulatory Affairs.

BILLING CODE 1505-01-D

VOL
53

ISS
69

AP
11

1988

UMI

federal register

Monday
April 11, 1988

Part II

Department of Education

34 CFR Part 99

Family Educational Rights and Privacy; Final Regulations

DEPARTMENT OF EDUCATION

34 CFR Part 99

Family Educational Rights and Privacy

AGENCY: Department of Education.

ACTION: Final regulations.

SUMMARY: The Secretary revises and renames the Department of Education regulations formerly titled the Privacy Rights of Parents and Students. These regulations are retitled Family Educational Rights and Privacy and eliminate some of the regulatory requirements placed on educational agencies and institutions. The regulations have also been rewritten for clarity.

EFFECTIVE DATE: These regulations take effect either 45 days after publication in the **Federal Register** or later if the Congress takes certain adjournments. If you want to know the effective date of these regulations, call or write the Department of Education contact person.

FOR FURTHER INFORMATION CONTACT: Ellen Campbell or Connie Moore, Family Policy and Regulations Office, Office of Management, U.S. Department of Education, 400 Maryland Avenue, SW. (Room 3021, Federal Office Building No. 6), Washington, DC 20202. Telephone: (202) 732-2057.

SUPPLEMENTARY INFORMATION: Under Executive Order 12291, the Department of Education regularly reviews its regulations to determine whether the Department can decrease burdens on the public and otherwise simplify and clarify existing regulations. As part of this process, the Department has reviewed the regulations implementing the Family Educational Rights and Privacy Act (FERPA).

The FERPA regulations of the former Department of Health, Education, and Welfare (HEW) (45 CFR Part 99) were transferred to the Department of Education (ED) and recodified in Part 99 of Title 34 of the Code of Federal Regulations on May 9, 1980 (45 FR 30802). These regulations implement FERPA, which was enacted as section 438 of the General Education Provisions Act (GEPA) (20 U.S.C. 1232g).

The FERPA sets out requirements designed to afford parents and students privacy and other rights with respect to education records. The statute applies to educational agencies and institutions that receive funds under an applicable program administered by ED. For purposes of FERPA an applicable program is a program that was either formerly administered by the Commissioner of Education prior to the establishment of ED on May 4, 1980 or any program that came into existence after ED was established, unless the law creating the new program has the effect of making FERPA inapplicable. Educational agencies and institutions to which FERPA applies must maintain education records consistent with the requirements of FERPA. In brief, FERPA requires those agencies or institutions to provide parents and eligible students access to records directly related to the students; to permit parents and eligible students to challenge those records on the grounds that they are inaccurate, misleading, or otherwise in violation of the student's privacy or other rights; to obtain the written consent of parents and eligible students before releasing personally identifiable information about the students contained in education records to other than organizations or individuals described in statutory exceptions; and to notify parents and eligible students of these rights.

On June 10, 1987, the Secretary published a notice of proposed rulemaking (NPRM) for this part in the **Federal Register** (52 FR 22250). The NPRM included a discussion of the numerous revisions and invited public comment. The revisions are intended to simplify and clarify the regulations and not to alter any interpretation under existing regulations.

In response to the Secretary's invitation in the NPRM, educational associations, organizations, universities, and individuals submitted 20 letters, which contained a total of 113 comments. More than half of the letters were from institutions of higher education and were transmitted through an organization representing the higher education community. An analysis of the comments and of the changes in the regulations since publication of the NPRM is published as an appendix to these final regulations.

Executive Order 12606

The Secretary has reviewed these regulations in accordance with Executive Order 12606, "The Family." The regulations was assessed in light of the criteria set forth in the Executive Order to determine whether they have any potential negative impact on the family. They were found to have no negative impact. In fact, the regulations will strengthen the autonomy, stability, and rights of the family unit.

The criterion of the Order which is most applicable to these regulations asks: "Does this action strengthen or erode the authority and rights of parents in the education, nurture, and supervision of their children?" The statute and the implementing regulations strengthen the rights of parents by reaffirming their basic right to have access to the education records of their children, their right to be assured of the privacy of their children's records, and their right to challenge records believed to be inaccurate, misleading, or otherwise in violation of the student's privacy.

Another criterion which is applicable to these regulations asks: "Does this action by government strengthen or erode the stability of the family and, particularly, the marital commitment?" Overall, these regulations are found to strengthen the stability of the family. In particular, the FERPA provisions which afford parents the right to have access to and some control over the education records of their children serve to encourage parents to be involved in the education of their children. Furthermore, by affording both parents (whether custodial or non-custodial) the right to have access to the records, the regulations serve to encourage joint parental involvement in their children's education.

Executive Order 12291

These regulations have been reviewed in accordance with Executive Order 12291. They are not classified as major because they do not meet the criteria for major regulations established in the order.

Assessment of Educational Impact

In the NPRM, the Secretary requested comments on whether the proposed regulations would require transmission of information that is being gathered from any other agency or authority of the United States.

Based on the response to the proposed rules and on its own review, the Department has determined that the regulations in this document do not require transmission of information that is being gathered by or is available from any other agency or authority of the United States.

List of Subjects in 34 CFR Part 99

Administrative practice and procedure, Education department, Family educational rights, Privacy, Parents, Reporting and recordkeeping requirements, Students.

(Catalog of Federal Domestic Assistance number does not apply.)

Dated February 19, 1988.

William J. Bennett,

Secretary of Education.

The Secretary revises Part 99 of Title 34 of the Code of Federal Regulations to read as follows:

PART 99—FAMILY EDUCATIONAL RIGHTS AND PRIVACY

Subpart A—General

Sec.

99.1 To which educational agencies or institutions do these regulations apply?
99.2 What is the purpose of these regulations?
99.3 What definitions apply to these regulations?
99.4 What are the rights of parents?
99.5 What are the rights of eligible students?
99.6 What information must an educational agency's or institution's policy contain?
99.7 What must an educational agency or institution include in its annual notification?

Subpart B—What are the Rights of Inspection and Review of Education Records?

99.10 What rights exist for a parent or eligible student to inspect and review education records?
99.11 May an educational agency or institution charge a fee for copies of education records?
99.12 What limitations exist on the right to inspect and review records?

Subpart C—What are the Procedures for Amending Education Records?

99.20 How can a parent or eligible student request amendment of the student's education records?
99.21 Under what conditions does a parent or eligible student have the right to a hearing?
99.22 What minimum requirements exist for the conduct of a hearing?

Subpart D—May an Educational Agency or Institution Disclose Personally Identifiable Information from Education Records?

99.30 Under what conditions must an educational agency or institution obtain prior consent to disclose information?
99.31 Under what conditions is prior consent not required to disclose information?
99.32 What recordkeeping requirements exist concerning requests and disclosures?
99.33 What limitations apply to the redisclosure of information?
99.34 What conditions apply to disclosure of information to other educational agencies or institutions?
99.35 What conditions apply to disclosure of information for Federal or State program purposes?
99.36 What conditions apply to disclosure of information in health and safety emergencies?
99.37 What conditions apply to disclosing directory information?

Subpart E—What are the Enforcement Procedures?

99.60 What functions has the Secretary delegated to the Office and to the Education Appeal Board?
99.61 What responsibility does an educational agency or institution have concerning conflict with State or local laws?
99.62 What information must an educational agency or institution submit to the Office?
99.63 Where are complaints filed?
99.64 What is the complaint procedure?
99.65 What is the content of the notice of complaint issued by the Office?
99.66 What are the responsibilities of the Office in the enforcement process?
99.67 How does the Secretary enforce decisions?

Authority: Sec. 438, Pub. L. 90-247, Title IV, as amended, 88 Stat. 571-574 (20 U.S.C. 1232g), unless otherwise noted.

Subpart A—General

§ 99.1 To which educational agencies or institutions do these regulations apply?

(a) This part applies to an educational agency or institution to which funds have been made available under any program administered by the Secretary of Education that—

(1)(i) Was transferred to the Department under the Department of Education Organization Act (DEOA); and

(ii) Was administered by the Commissioner of Education on the day before the effective date of the DEOA; or

(2) Was enacted after the effective date of the DEOA, unless the law enacting the new Federal program has the effect of making section 438 of the General Education Provisions Act inapplicable.

(Authority: 20 U.S.C. 1230, 1232g, 3487, 3507)

(b) The following chart lists the funded programs to which Part 99 does not apply as of April 11, 1988:

Name of program	Authorizing statute	Implementing regulations
1. High School Equivalency Program and College Assistance Migrant Program	Section 418A of the Higher Education Act of 1965 as amended by the Education Amendments of 1980 (Pub. L. 96-374) 20 U.S.C. 1070d-2).	Part 206.
2. Programs administered by the Commissioner of the Rehabilitation Services Administration, and the Director of the National Institute on Disability and Rehabilitation Research.	The Rehabilitation Act of 1973, as amended. (29 U.S.C. 700, *et seq.*).	Parts 350-359, 361, 365, 366, 369-371, 373-375, 378, 379, 385-390, and 395.
3. Transition program for refugee children	Immigration and Nationality Act, as amended by the Refugee Act of 1980, Pub. L. 96-212 (8 U.S.C. 1522(d)).	Part 538.
4. College Housing	Title IV of the Housing Act of 1950, as amended (12 U.S.C. 1749, *et seq.*).	Part 614.
5. The following programs administered by the Assistant Secretary for Educational Research and Improvement: Educational Research Grant Program. Regional Educational Laboratories Research and Development Centers. All other research or statistical activities funded under Section 405 or 406 of the General Education Provisions Act.	Section 405 of the General Education Provisions Act (20 U.S.C. 1221e), and section 406 of the General Education Provisions Act (20 U.S.C. 1221-1).	Parts 700, 706-708.

Note: The Secretary, as appropriate, updates the information in this chart and informs the public.

(c) This part does not apply to an educational agency or institution solely because students attending that agency or institution receive non-monetary benefits under a program referenced in paragraph (a) of this section, if no funds under that program are made available to the agency or institution.

(d) The Secretary considers funds to be made available to an educational agency or institution of funds under one or more of the programs referenced in paragraph (a) of this section—

(1) Are provided to the agency or institution by grant, cooperative agreement, contract, subgrant, or subcontract; or

(2) Are provided to students attending the agency or institution and the funds may be paid to the agency or institution by those students for educational purposes, such as under the Pell Grant Program and the Guaranteed Student Loan Program (Titles IV-A-1 and IV-B, respectively, of the Higher Education Act of 1965, as amended).

(e) If an educational agency or institution receives funds under one or more of the programs covered by this section, the regulations in this part apply to the recipient as a whole, including each of its components (such as a department within a university).

(Authority: 20 U.S.C. 1232g)

§ 99.2 What is the purpose of these regulations?

The purpose of this part is to set out requirements for the protection of privacy of parents and students under section 438 of the General Education Provisions Act, as amended.

(Authority: 20 U.S.C. 1232g)

(Note: 34 CFR 300.560-300.576 contain requirements regarding confidentiality of information relating to handicapped children who receive benefits under the Education of the Handicapped Act.)

§ 99.3 What definitions apply to these regulations?

The following definitions apply to this part:

"Act" means the Family Educational Rights and Privacy Act of 1974, as amended, enacted as section 438 of the General Education Provisions Act.

(Authority: 20 U.S.C. 1232g)

"Attendance" includes, but is not limited to—

(a) Attendance in person or by correspondence; and

(b) The period during which a person is working under a work-study program.

(Authority: 20 U.S.C. 1232g)

"Directory information" means information contained in an education record of a student which would not generally be considered harmful or an invasion of privacy if disclosed. It includes, but is not limited to the student's name, address, telephone listing, date and place of birth, major field of study, participation in officially recognized activities and sports, weight and height of members of athletic teams, dates of attendance, degrees and awards received, and the most recent previous educational agency or institution attended.

(Authority: 20 U.S.C. 1232g(a)(5)(A))

"Disclosure" means to permit access to or the release, transfer, or other communication of education records, or the personally indentifiable information contained in those records, to any party, by any means, including oral, written, or electronic means.

(Authority: 20 U.S.C. 1232g(b)(1))

"Educational agency or institution" means any public or private agency or institution to which this part applies under § 99.1(a).

(Authority: 20 U.S.C. 1232g(a)(3))

"Education records" (a) The term means those records that are—

(1) Directly related to a student; and

(2) Maintained by an educational agency or institution or by a party acting for the agency or institution.

(b) The term does not include—

(1) Records of instructional, supervisory, and administrative personnel and educational personnel ancillary to those persons that are kept in the sole possession of the maker of the record, and are not accessible or revealed to any other person except a temporary substitute for the maker of the record;

(2) Records of a law enforcement unit of an educational agency or institution, but only if education records maintained by the agency or institution are not disclosed to the unit, and the law enforcement records are—

(i) Maintained separately from education records;

(ii) Maintained solely for law enforcement purposes; and

(iii) Disclosed only to law enforcement officials of the same jurisdiction;

(3)(i) Records relating to an individual who is employed by an educational agency or institution, that—

(A) Are made and maintained in the normal course of business;

(B) Relate exclusively to the individual in that individual's capacity as an employee; and

(C) Are not available for use for any other purpose.

(ii) Records relating to an individual in attendance at the agency or institution who is employed as a result of his or her status as a student are education records and not excepted under paragraph (b)(3)(i) of this definition.

(4) Records on a student who is 18 years of age or older, or is attending an institution of postsecondary education, that are—

(i) Made or maintained by a physician, psychiatrist, psychologist, or other recognized professional or paraprofessional acting in his or her professional capacity or assisting in a paraprofessional capacity;

(ii) Made, maintained, or used only in connection with treatment of the student; and

(iii) Disclosed only to individuals providing the treatment. For the purpose of this definition, "treatment" does not include remedial educational activities or activities that are part of the program of instruction at the agency or institution; and

(5) Records that only contain information about an individual after he or she is no longer a student at that agency or institution.

(Authority: 20 U.S.C. 1232g(a)(4))

"Eligible student" means a student who has reached 18 years of age or is attending an institution of postsecondary education.

(Authority: 20 U.S.C. 1232g(d))

"Institution of postsecondary education" means an institution that provides education to students beyond the secondary school level; "secondary school level" means the educational level (not beyond grade 12) at which secondary education is provided as determined under State law.

(Authority: 20 U.S.C. 1232g(d))

"Parent" means a parent of a student and includes a natural parent, a guardian, or an individual acting as a parent in the absence of a parent or a guardian.

(Authority: 20 U.S.C. 1232g)

"Party" means an individual, agency, institution, or organization.

(Authority: 20 U.S.C. 1232g(b)(4)(A))

"Personally identifiable information" includes, but is not limited to—

(a) The student's name;

(b) The name of the student's parent or other family member;

(c) The address of the student or student's family;

(d) A personal identifier, such as the student's social security number or student number;

(e) A list of personal characteristics that would make the student's identity easily traceable; or

(f) Other information that would make the student's identity easily traceable.

(Authority: 20 U.S.C. 1232g)

"Record" means any information recorded in any way, including, but not limited to, handwriting, print, tape, film, microfilm, and microfiche.

(Authority: 20 U.S.C. 1232g)

"Secretary" means the Secretary of the U.S. Department of Education or an official or employee of the Department of Education acting for the Secretary under a delegation of authority.

(Authority: 20 U.S.C. 1232g)

"Student", except as otherwise specifically provided in this part, means any individual who is or has been in attendance at an educational agency or institution and regarding whom the agency or institution maintains education records.

(Authority: 20 U.S.C. 1232g(a)(6))

§ 99.4 What are the rights of parents?

An educational agency or institution shall give full rights under the Act to either parent, unless the agency or institution has been provided with evidence that there is a court order, State statute, or legally binding document relating to such matters as divorce, separation, or custody that specifically revokes these rights.

(Authority: 20 U.S.C. 1232g)

§ 99.5 What are the rights of eligible students?

(a) When a student becomes an eligible student, the rights accorded to, and consent required of, parents under this part transfer from the parents to the student.

(b) The Act and this part do not prevent educational agencies or institutions from giving students rights in addition to those given to parents.

(c) If an individual is or has been in attendance at one component of an educational agency or institution, that attendance does not give the individual rights as a student in other components of the agency or institution to which the individual has applied for admission, but has never been in attendance.

(Authority: 20 U.S.C. 1232g(d))

§ 99.6 What information must an educational agency's or institution's policy contain?

(a) Each educational agency or institution shall adopt a policy regarding how the agency or institution meets the requirements of the Act and of this part. The policy must include—

(1) How the agency or institution informs parents and students of their rights, in accord with § 99.7;

(2) How a parent or eligible student may inspect and review education records under § 99.10, including at least—

(i) The procedure the parent or eligible student must follow to inspect and review the records;

(ii) With an understanding that it may not deny access to education records, a description of the circumstances in which the agency or institution believes it has a legitimate cause to deny a request for a copy of those records;

(iii) A schedule of fees (if any) to be charged for copies; and

(iv) A list of the types and locations of education records maintained by the agency or institution, and the titles and addresses of the officials responsible for the records;

(3) A statement that personally identifiable information will not be released from an education record without the prior written consent of the parent or eligible student, except under one or more of the conditions described in § 99.31;

(4) A statement indicating whether the educational agency or institution has a policy of disclosing personally identifiable information under § 99.1(a)(1), and , if so, a specification of the criteria for determining which parties are school officials and what the agency or institution considers to be a legitimate educational interest;

(5) A statement that a record of disclosures will be maintained as required by § 99.32, and that a parent or eligible student may inspect and review that record;

(6) A specification of the types of personally identifiable information the agency or institution has designated as directory information under § 99.37; and

(7) A statement that the agency or institution permits a parent or eligible student to request correction of the student's education records under § 99.20, to obtain a hearing under § 99.21(a), and to add a statement to the record under § 99.21(b)(2).

(b) The educational agency or institution shall state the policy in writing and make a copy of it available on request to a parent or eligible student.

(Authority: 20 U.S.C. 1232g(e) and (f))

(Approved by the Office of Management and Budget under control number 1880–0508)

§ 99.7 What must an educational agency or institution include in its annual notification?

(a) Each educational agency or institution shall annually notify parents of students currently in attendance, and eligible students currently in attendance, at the agency or institution of their rights under the Act and this part. The notice must include a statement that the parent or eligible student has a right to—

(1) Inspect and review the student's education records;

(2) Request the amendment of the student's education records to ensure that they are not inaccurate, misleading, or otherwise in violation of the student's privacy or other rights;

(3) Consent to disclosures of personally identifiable information contained in the student's education records, except to the extent that the Act and the regulations in this part authorize disclosure without consent;

(4) File with the U.S. Department of Education a complaint under § 99.64 concerning alleged failures by the agency or institution to comply with the requirements of the act and this part; and

(5) Obtain a copy of the policy adopted under § 99.6.

(b) The notice provided under paragraph (a) of this section must also indicate the places where copies of the policy adopted under § 99.6 are located.

(c) An educational agency or institution may provide this notice by any means that are reasonably likely to inform the parents and eligible students of their rights.

(d) An agency or institution of elementary or secondary education shall effectively notify parents of students who have a primary or home language other than English.

(Authority: 20 U.S.C. 1232g(e))

(Approved by the Office of Management and Budget under control number 1880–0508)

Subpart B—What are the Rights of Inspection and Review of Education Records?

§ 99.10 What rights exist for a parent or eligible student to inspect and review education records?

(a) Except as limited under § 99.12, each educational agency or institution shall permit a parent or eligible student to inspect and review the education records of the student.

(b) The educational agency or institution shall comply with a request for access to records within a reasonable period of time, but in no case more than 45 days after it has received the request.

(c) The educational agency or institution shall respond to reasonable requests for explanations and interpretations of the records.

(d) The educational agency or institution shall give the parent or eligible student a copy of the records if failure to do so would effectively prevent the parent or student from exercising the right to inspect and review the records.

(e) The educational agency or institution shall not destroy any education records if there is an outstanding request to inspect and review the records under this section.

(f) While an education agency or institution is not required to give an eligible student access to treatment records under paragraph (b)(4) of the

definition of "Education records" in § 99.3, the student may have those records reviewed by a physician or other appropriate professional of the student's choice.

(Authority: 20 U.S.C. 1232g(a)(1)(A))

§ 99.11 May an educational agency or institution charge a fee for copies of education records?

(a) Unless the imposition of a fee effectively prevents a parent or eligible student from exercising the right to inspect and review the student's education records, an educational agency or institution may charge a fee for a copy of an education record which is made for the parent or eligible student.

(b) An educational agency or institution may not charge a fee to search for or to retrieve the education records of a student.

(Authority: 20 U.S.C. 1232g(a)(1))

§ 99.12 What limitations exist on the right to inspect and review records?

(a) If the education records of a student contain information on more than one student, the parent or eligible student may inspect, review, or be informed of only the specific information about that student.

(b) A postsecondary institution does not have to permit a student to inspect and review education records that are—

(1) Financial records, including any information those records contain, of his or her parents;

(2) Confidential letters and confidential statements of recommendation placed in the education records of the student before January 1, 1975, as long as the statements are used only for the purposes for which they were specifically intended; and

(3) Confidential letters and confidential statements of recommendation placed in the student's education records after January 1, 1975, if—

(i) The student has waived his or her right to inspect and review those letters and statements; and

(ii) Those letters and statements are related to the student's—

(A) Admission to an educational institution;

(B) Application for employment; or

(C) Receipt of an honor or honorary recognition.

(c)(1) A waiver under paragraph (b)(3)(i) of this section is valid only if—

(i) The educational agency or institution does not require the waiver as a condition for admission to or receipt of a service or benefit from the agency or institution; and

(ii) The waiver is made in writing and signed by the student, regardless of age.

(2) If a student has waived his or her rights under paragraph (b)(3)(i) of this section, the educational institution shall—

(i) Give the student, on request, the names of the individuals who provided the letters and statements of recommendation; and

(ii) Use the letters and statements of recommendation only for the purpose for which they were intended.

(3)(i) A waiver under paragraph (b)(3)(i) of this section may be revoked with respect to any actions occurring after the revocation.

(ii) A revocation under paragraph (c)(3)(i) of this section must be in writing.

(Authority: 20 U.S.C. 1232g(a)(1) (A) and (B))

Subpart C—What are the Procedures for Amending Education Records?

§ 99.20 How can a parent or eligible student request amendment of the student's education records?

(a) If a parent or eligible student believes the education records relating to the student contain information that is inaccurate, misleading, or in violation of the student's rights of privacy or other rights, he or she may ask the educational agency or institution to amend the record.

(b) The education agency or institution shall decide whether to amend the record as requested within a reasonable time after the agency or institution receives the request.

(c) if the educational agency or institution decides not to amend the record as requested, it shall inform the parent or eligible student of its decision and of his or her right to a hearing under § 99.21.

(Authority: 20 U.S.C. 1232g(a)(2))

§ 99.21 Under what conditions does a parent or eligible student have the right to a hearing?

(a) An educational agency or institution shall give a parent or eligible student, on request, an opportunity for a hearing to challenge the content of the student's education records on the grounds that the information contained in the education records is inaccurate, misleading, or in violation of the privacy or other rights of the student.

(b)(1) If, as a result of the hearing, the educational agency or institution decides that the information is inaccurate, misleading, or otherwise in violation of the privacy or other rights of the student, it shall—

(i) Amend the record accordingly; and

(ii) Inform the parent or eligible student of the amendment in writing.

(2) If, as a result of the hearing, the educational agency or institution decides that the information in the education record is not inaccurate, misleading, or otherwise in violation of the privacy or other rights of the student, it shall inform the parent or eligible student of the right to place a statement in the record commenting on the contested information in the record or stating why he or she disagrees with the decision of the agency or institution, or both.

(c) If an educational agency or institution places a statement in the education records of a student under paragraph (b)(2) of this section, the agency or institution shall—

(1) Maintain the statement with the contested part of the record for as long as the record is maintained; and

(2) Disclose the statement whenever it discloses the portion of the record to which the statement relates.

(Authority: 20 U.S.C. 1232g(a)(2))

§ 99.22 What minimum requirements exist for the conduct of a hearing?

The hearing required by § 99.21 must meet, at a minimum, the following requirements:

(a) The educational agency or institution shall hold the hearing within a reasonable time after it has received the request for the hearing from the parent or eligible student.

(b) The educational agency or institution shall give the parent or eligible student notice of the date, time, and place, reasonably in advance of the hearing.

(c) The hearing may be conducted by any individual, including an official of the educational agency or institution, who does not have a direct interest in the outcome of the hearing.

(d) The educational agency or institution shall give the parent or eligible student a full and fair opportunity to present evidence relevant to the issues raised under § 99.21. The parent or eligible student may, at their own expense, be assisted or represented by one or more individuals of his or her own choice, including an attorney.

(e) The educational agency or institution shall make its decision in writing within a reasonable period of time after the hearing.

(f) The decision must be based solely on the evidence presented at the hearing, and must include a summary of the evidence and the reasons for the decision.

(Authority: 20 U.S.C. 1232g(a)(2))

Subpart D—May an Educational Agency or Institution Disclose Personally Identifiable Information From Education Records?

§ 99.30 Under what conditions must an educational agency or institution obtain prior consent to disclose information?

(a) Except as provided in § 99.31, an educational agency or institution shall obtain a signed and dated written consent of a parent or an eligible student before it discloses pesonally identifiable information from the student's education records.

(b) The written consent must—

(1) Specify the records that may be disclosed;

(2) State the purpose of the disclosure; and

(3) Identify the party or class of parties to whom the disclosure may be made.

(c) When a disclosure is made under paragraph (a) of this section—

(1) If a parent or eligible student so requests, the educational agency or institution shall provide him or her with a copy of the records disclosed; and

(2) If the parent of a student who is not an eligible student so requests, the agency or institution shall provided the student with a copy of the records disclosed.

(Authority: 20 U.S.C. 1232g (b)(1) and (b)(2)(A))

§ 99.31 Under what conditions is prior consent not required to disclose information?

(a) An educational agency or institution may disclose personally identifiable information from an education record of a student without the consent required by § 99.30 if the disclosure meets one or more of the following conditions:

(1) The disclosure is to other school officials, including teachers, within the agency or institution whom the agency or institution has determined to have legitimate educational interests.

(2) The disclosure is, subject to the requirements of § 99.34, to officials of another school, school system, or institution of postsecondary education where the student seeks or intends to enroll.

(3) The disclosure is, subject to the requirements of § 99.35, to authorize representatives of—

(i) The Comptroller General of the United States;

(ii) The Secretary; or

(iii) State and local educational authorities.

(4)(i) The disclosure is in connection with financial aid for which the student has applied or which the student has received, if the information is necessary for such purposes as to—

(A) Determine eligibility for the aid;

(B) Determine the amount of the aid;

(C) Determine the conditions for the aid; or

(D) Enforce the terms and conditions of the aid.

(ii) As used in paragraph (a)(4)(i) of this section, "financial aid" means a payment of funds provided to an individual (or a payment in kind of tangible or intangible property to the individual) that is conditioned on the individual's attendance at an educational agency or institution.

(Authority: 20 U.S.C. 1232g(b)(1)(D))

(5)(i) The disclosure is to State and local officials or authorities, if a State statute adopted before November 19, 1974, specifically requires disclosures to those officials and authorities.

(ii) Paragraph (a)(5)(i) of this section does not prevent a State from further limiting the number or type or State or local officials to whom disclosures may be made under that paragraph.

(6)(i) The disclosure is to organizations conducting studies for, or on behalf of, educational agencies or institutions to—

(A) Develop, validate, or administer predictive tests;

(B) Administer student aid programs; or

(C) Improve instruction.

(ii) The agency or institution may disclose information under paragraph (a)(6)(i) of this section only if—

(A) The study is conducted in a manner that does not permit personal identification of parents and students by individuals other than representatives of the organization; and

(B) The information is destroyed when no longer needed for the purposes for which the study was conducted.

(iii) For the purposes of paragraph (a)(6) of this section, the term "organization" includes, but is not limited to, Federal, State, and local agencies, and independent organizations.

(7) The disclosure is to accrediting organizations to carry out their accrediting functions.

(8) The disclosure is to parents of a dependent student, as defined in section 152 of the Internal Revenue Code of 1954.

(9)(i) The disclosure is to comply with a judicial order or lawfully issued subpoena.

(ii) The educational agency or institution may disclose information under paragraph (a)(9)(i) of this section only if the agency or institution makes a reasonable effort to notify the parent or eligible student of the order or subpoena in advance of compliance.

(10) The disclosure is in connection with a health or safety emergency, under the conditions described in § 99.36.

(11) The disclosure is information the educational agency or institution has designated as "directory information", under the conditions described in § 99.37.

(12) The disclosure is to the parent of a student who is not an eligible student or to the student.

(b) This section does not forbid or require an educational agency or institution to disclose personally identifiable information from the education records of a student to any parties under paragraphs (a) (1) through (11) of this section.

(Authority: 20 U.S.C. 1232g (a)(5)(A), (b)(1) and (b)(2)(B))

§ 99.32 What recordkeeping requirements exist concerning requests and disclosures?

(a)(1) An educational agency or institution shall maintain a record of each request for access to and each disclosure of personally identifiable information from the education records of each student.

(2) The agency or institution shall maintain the record with the education records of the student as long as the records are maintained.

(3) For each request or disclosure the record must include—

(i) The parties who have requested or received personally identifiable information from the education records; and

(ii) The legitimate interests the parties had in requesting or obtaining the information.

(b) If an educational agency or institution discloses personally identifiable information from an education record with the understanding authorized under § 99.33(b), the record of the disclosure required under this section must include—

(1) The names of the additional parties to which the receiving party may disclose the information on behalf of the educational agency or institution; and

(2) The legitimate interests under § 99.31 which each of the additional parties has in requesting or obtaining the information.

(c) The following parties may inspect the record relating to each student:

(1) The parent or eligible student.

(2) The school official or his or her assistants who are responsible for the custody of the records.

(3) Those parties authorized in § 99.31(a) (1) and (3) for the purposes of

BEST COPY AVAILABLE

auditing the recordkeeping procedures of the educational agency or institution.

(d) Paragarph (a) of this section does not apply if the request was from, or the disclosure was to—

(1) The parent or eligible student;

(2) A school official under § 99.31(a)(1);

(3) A party with written consent from the parent or eligible student; or

(4) A party seeking directory information.

(Authority: 20 U.S.C. 1232g(b)(4)(A))

(Approved by the Office of Management and Budget under control number 1880-0508)

§ 99.33 What limitations apply to the redisclosure of information?

(a)(1) An educational agency or institution may disclose personally identifiable information from an education record only on the condition that the party to whom the information is disclosed will not disclose the information to any other party without the prior consent of the parent or eligible student.

(2) The officers, employees, and agents of a party that receives information under paragraph (a)(1) of this section may use the information, but only for the purposes for which the disclosure was made.

(b) Paragraph (a) of this section does not prevent an educational agency or institution from disclosing personally identifiable information with the understanding that the party receiving the information may make further disclosures of the information on behalf of the educational agency or institution if—

(1) The disclosures meet the requirements of § 99.31; and

(2) The educational agency or institution has complied with the requirements of § 99.32(b).

(c) Paragraph (a) of this section does not apply to disclosures of directory information under § 99.31(a)(11) or to disclosures to a parent or student under § 99.31(a)(12).

(d) Except for disclosures under § 99.31(a) (11) and (12), an educational agency or institution shall inform a party to whom disclosure is made of the requirements of this section.

(Authority: 20 U.S.C. 1232g(b)(4)(B))

§ 99.34 What conditions apply to disclosure of information to other educational agencies or institutions?

(a) An educational agency or institution that discloses an education record under § 99.31(a)(2) shall—

(1) Make a reasonable attempt to notify the parent or eligible student at the last known address of the parent or eligible student, unless—

(i) The disclosure is initiated by the parent or eligible student; or

(ii) The policy of the agency or institution under § 99.6 includes a notice that the agency or institution forwards education records to other agencies or institutions that have requested the records and in which the student seeks or intends to enroll;

(2) Give the parent or eligible student, upon request, a copy of the record that was disclosed; and

(3) Give the parent or eligible student, upon request, an opportunity for a hearing under Subpart C.

(b) An educational agency or institution may disclose an education record of a student in attendance to another educational agency or institution if—

(1) The student is enrolled in or receives services from the other agency or institution; and

(2) The disclosure meets the requirements of paragraph (a) of this section.

(Authority: 20 U.S.C. 1232g(b)(1)(B))

§ 99.35 What conditions apply to disclosure of information for Federal or State program purposes?

(a) The officials listed in § 99.31(a)(3) may have access to education records in connection with an audit or evaluation of Federal or State supported education programs, or for the enforcement of or compliance with Federal legal requirements which relate to those programs.

(b) Information that is collected under paragraph (a) of this section must—

(1) Be protected in a manner that does not permit personal identification of individuals by anyone except the officials referred to in paragraph (a) of this section; and

(2) Be destroyed when no longer needed for the purposes listed in paragraph (a) of this section.

(c) Paragraph (b) of this section does not apply if—

(1) The parent or eligible student has given written consent for the disclosure under § 99.30; or

(2) The collection of personally identifiable information is specifically authorized by Federal law.

(Authority: 20 U.S.C. 1232g(b)(3))

§ 99.36 What conditions apply to disclosure of information in health and safety emergencies?

(a) An educational agency or institution may disclose personally identifiable information from an education record to appropriate parties in connection with an emergency if knowledge of the information is necessary to protect the health of safety or the student or other individuals.

(b) Paragraph (a) of this section shall be strictly construed.

(Authority: 20 U.S.C. 1232g(b)(1)(I))

§ 99.37 What conditions apply to disclosing directory information?

(a) An educational agency or institution may disclose directory information if it has given public notice to parents of students in attendance and eligible students in attendance at the agency or institution of—

(1) The types of personally identifiable information that the agency or institution has designated as directory information;

(2) A parent's or eligible student's right to refuse to let the agency or institution designate any or all of those types of information about the student as directory information; and

(3) The period of time within which a parent or eligible student has to notify the agency or institution in writing that he or she does not want any or all of those types of information about the student designated as directory information.

(b) An educational agency or institution may disclose directory information about former students without meeting the conditions in paragraph (a) of this section.

(Authority: 20 U.S.C. 1232g(a)(5) (A) and (B))

Subpart E—What are the Enforcement Procedures?

§ 99.60 What functions has the Secretary delegated to the Office and to the Education Appeal Board?

(a) For the purposes of this subpart, "Office" means the Family Policy and Regulations Office, U.S. Department of Education.

(b) The Secretary designates the Office to—

(1) Investigate, process, and review complaints and violations under the Act and this part; and

(2) Provide technical assistance to ensure compliance with the Act and this part.

(c) The Secretary designates the Education Appeal Board to act as the Review Board required under the Act.

(Authority: 20 U.S.C. 1232g (f) and (g), 1234)

§ 99.61 What responsibility does an educational agency or institution have concerning conflict with State or local laws?

If an educational agency or institution determines that it cannot comply with the Act or this part due to a conflict with State or local law, it shall notify the

Office within 45 days, giving the text and citation of the conflicting law.

(Authority: 20 U.S.C. 1232g(f))

§ 99.62 What information must an educational agency or institution submit to the Office?

The Office may require an educational agency or institution to submit reports containing information necessary to resolve complaints under the Act and the regulations in this part.

(Authority: 20 U.S.C. 1232g (f) and (g))

§ 99.63 Where are complaints filed?

A person may file a written complaint with the Office regarding an alleged violation under the Act and this part. The Office's address is: Family Policy and Regulations Office, U.S. Department of Education, Washington, DC 20202.

(Authority: 20 U.S.C. 1232g(g))

§ 99.64 What is the complaint procedure?

(a) A complaint filed under § 99.63 must contain specific allegations of fact giving reasonable cause to believe that a violation of the Act or this part has occurred.

(b) The Office investigates each timely complaint to determine whether the educational agency or institution has failed to comply with the provisions of the Act or this part.

(Authority: 20 U.S.C. 1232g(f))

§ 99.65 What is the content of the notice of complaint issued by the Office?

(a) If the Office receives a complaint, it notifies the complainant and the educational agency or institution against which the violation has been alleged, in writing, that the complaint has been received.

(b) The notice to the agency or institution under paragraph (a) of this section—

(1) Includes the substance of the alleged violation; and

(2) Informs the agency or institution that the Office will investigate the complaint and that the educational agency or institution may submit a written response to the complaint.

(Authority: 20 U.S.C. 1232g(g))

§ 99.66 What are the responsibilities of the Office in the enforcement process?

(a) The Office reviews the complaint and response and may permit the parties to submit further written or oral arguments or information.

(b) Following its investigation, the Office provides to the complainant and the educational agency or institution written notice of its findings and the basis for its findings.

(c) If the Office finds that the educational agency or institution has not complied with the Act or this part, the notice under paragraph (b) of this section—

(1) Includes a statement of the specific steps that the agency or institution must take to comply; and

(2) Provides a reasonable period of time, given all of the circumstances of the case, during which the educational agency or institution may comply voluntarily.

(Authority: 20 U.S.C. 1232g(f))

§ 99.67 How does the Secretary enforce decisions?

(a) If the eductional agency or institution does not comply during the period of time set under § 99.66(c), the Secretary may take an action authorized under 34 CFR Part 78, including—

(1) Issuing a notice of intent to terminate funds under 34 CFR 78.21;

(2) Issuing a notice to withhold funds under 34 CFR 78.21, 200.94(b) or 298.45(b), depending upon the applicable program under which the notice is issued; or

(3) Issuing a notice to cease and desist under 34 CFR 78.31, 200.94(c) or 298.45(c), depending upon the program under which the notice is issued.

(b) If, after an investigation under § 99.66, the Secretary finds that an educational agency or institution has complied voluntarily with the Act or this part, the Secretary provides the complianant and the agency or institution written notice of the decision and the basis for the decision.

(Note: 34 CFR Part 78 contains the regulations of the Education Appeal Board.)

(Authority: 20 U.S.C. 1232g(g))

Note: The following appendix will not appear in the Code of Federal Regulations.

Appendix—Analysis of Comments and Changes

The following is an analysis of comments and changes in the regulations since publication of the NPRM. Substantive issues are discussed under the section of the regulations to which they pertain. Technical and other minor changes are not addressed.

Two issues were raised that cannot be addressed under any specific section of the regulations. In one case commenters raised the issue in the context of different sections of the regulations; in the other case the issues concerned a section that was removed from the regulations. The following is a discussion of those two issues:

• Release of records from another agency or institution.

Comment: Several commenters believed an agency or institution should not be required to provide a student a copy of a transcript or other records from another agency or institution unless the originating agency or insitution is no longer in existence. Other commenters believed language should be included that would permit an educational agency or institution to decline a request for disclosure of a student's transcript or other records from another agency or institution, unless the originating agency or institution is no longer in existence.

Discussion: The records in question fall within the definition of education records in that they are directly related to a student and are maintained by an educational agency or institution. An agency or institution is required to provide a parent or an eligible student access to all records, including those transcripts and records it did not originate but that it maintains. This requirement is set forth in the section entitled, "What rights exist for a parent or eligible student to inspect and review education records?" The FERPA does not forbid or require an agency or institution to disclose records to a third party, nor would it prevent an agency or institution from establishing a policy of not disclosing to third parties records that had originated at another agency or instituion.

Change: None.

• *Waiver of Rights.*

Comment: One commenter expressed concern about the removal of the section which set forth the conditions under which a parent or a student could waive any or all of his or her rights under the Act. While not endorsing nonstatutory waivers, the commenter believed that if nonstatutory waivers will continue to be recognized, the conditions governing those waivers are necessary in order to protect against any possible abuse. A second commenter supported the deletion of the general waiver provision, stating that there is no authority for waivers beyond the very narrow ones set forth in the statute.

Discussion: There was no statutory requirement for the waiver provision that was included in the regulations or the conditions under which nonstatutory waivers could be permitted. Therefore, the section was removed. However, in removing it, the Secretary does not intend to preclude educational agencies and institutions from establishing policies and conditions under which parents or students would be allowed to execute nonstatutory waivers.

Change: None.

The Secretary's discussion of the other comments received on the NPRM follows:

Section 99.1 To which educational agencies or institutions do these regulations apply?

Comment: One commenter questioned the specific legislative authority exempting programs from this part and the effect of exempting the programs.

Discussion: The statute appears in Part C of the General Education Provisions Act (GEPA). Prior to the establishment of the Department, Part C applied only to programs administered by the Commissioner of Education. The Commissioner had no authority over programs administered by the Assistant Secretary of Education and the Director of the National Institute of Education. For programs that were transferred to the Department under the Department of Education Organization Act (DEOA), the provisions of Part C continued to apply only to those programs administered by the Commissioner on the day preceding the effective date of the DEOA. Thus, FERPA does not apply to former National Institute of Education programs and the former National Center for Educational Statistics, Rehabilitation Services, National Institute of Disability and Rehabilitation Research, College Housing, and the Transition Program for Refugee Children.

Change: None.

Section 99.3 What definitions apply to these regulations?

Definition of "Directory Information".

Comment: Several commenters objected to the standard proposed in the definition of "directory information," stating there is no authority to broaden the term to include other information beyond that identified by Congress. Others stated that what may be considered an invasion of privacy by one person may not be so considered by another, which could result in inconsistency.

In contrast, an equal number of commenters stated that the standard is "most helpful," a "notable improvement" and "should be incorporated in the regulations." One commenter asked that distinguished academic performance or public service be included.

One commenter asked how the standard was developed. Others seemed to believe the standard would replace the items that have been designated by statute.

Discussion: The statute states that " 'directory information' relating to a student includes the following: * * *" and then lists items which may be considered directory information. The Department had interpreted the word "includes" to mean the list was not prescriptive. To clarify that interpretation, the phrase "* * * and other similar information" was added to the definition in the regulations published in 1976.

The Secretary, in revising the regulations, decided it would be preferable to establish a standard for interpreting the scope of the legislation. The standard, together with the list of items, should provide sufficient guidance for educational agencies and institutions. The standard would permit an agency or institution to mention distinguished academic performance or public service as long as it had designated that information as directory information and the parent or student had not objected to such a disclosure.

Change: None.

Section 99.3 Definition of "Education Records".

Comment: A commenter believed the regulations are unclear on whether the definition of education records includes or excludes records relating to an individual in attendance at an educational agency or institution who is also employed as a result of his or her status as a "student."

Discussion: All records relating to a student who is also an employee of an educational agency or institution are included in the definition of education records if the student's employment is contingent on the fact that he or she is a student. For example, all records, including employment records, of a student enrolled in a work-study program are education records; likewise, all records of a student who, because he or she is a student, is employed by the educational agency or institution to serve as a teaching assistant, lecturer, or in some other capacity, are education records. Excluded from the definition of education records are the employment records of an employee—including, for example, a teaching assistant or lecturer—whose employment did not result from and does not depend on the fact that he or she may also be a student at the agency or institution, provided that these employment records are made and maintained in the normal course of business, relate exclusively to the individual in that individual's capacity as an employee, and are not available for use for any other purpose.

Change: The definition has been rewritten for clarity.

Comment: One commenter believed that personally identifiable information relating to events or matters that transpire after the student is no longer in attendance should be covered by the definition of education records. The commenter was concerned that the exclusion of this information from the definition is without statutory authority, that it would allow an educational agency or institution to collect negative allegations or information on a former student, and that the parent or student would have no protection against release of the information to third parties.

Discussion: The exclusion is intended to allow educational agencies and institutions and their alumni organizations to perform their traditional functions of fund-raising and publishing information concerning the accomplishments of alumni. Most, if not all, alumni organizations perform these functions in contact with the former students. Since the collection and use of negative information about alumni is not an accepted or usual practice of educational agencies or institutions, the Secretary has decided that any expectation of abuse is minimal and would be insufficient to justify imposing an additional regulatory burden.

Change: None.

Section 99.3 Definition of "Parent".

Comment: One commenter believed the definition of "parent" should specifically state that a school district must provide rights to both natural parents, custodial and noncustodial. Another commenter believed that the new section "What are the rights of parents?" should specifically state that "noncustodial" parents are included in the Act's coverage. The commenters believed the proposed additions would further clarify the rights of noncustodial parents.

Discussion: In revising the regulations, the Secretary recognized the need to clarify the rights of custodial and noncustodial parents. Therefore, the new section was added to state specifically that the agency or institution shall give full rights under the law to either parent unless the agency or institution has been provided with evidence that there is a court order, State statue, or legally binding document relating to such matters as divorce, separation, or custody, that specifically revokes these rights. The Secretary believes this new section provides sufficient clarification and that the definition of "parent" should remain as it appeared in the proposed regulations.

Change: None.

Section 99.3 Definition of "Student".

Comment: One commenter stated that the inclusion of "former student" in the definition of "student" improves the definition. Two other commenters

appeared to believe that the purpose of the revision was to extend the law's coverage to include former students.

Discussion: Former students are covered under the statute's definition of student and have been entitled to the same rights as students in attendance since the law's passage. The intent of the revision is to make this clear in the definition section of the regulations. Those specific provisions of the regulations where rights are limited to current students are clearly stated in the revised regulations. See § 99.7 regarding annual notification, § 99.34 regarding disclosure to other educational agencies and institutions and § 99.37 regarding directory information.

Change: None.

Section 99.5 What are the rights of eligible students?

Comment: Two commenters believed the paragraph that was removed from this section, which is entitled "Student Rights" in the current regulations, should be reinserted. The paragraph stated that the rights of an eligible student are not affected by a provision in the regulations that allows an agency or institution to disclose information to the parents of such a student without the student's written consent. One of these commenters believed the reference should be reinserted in order to make clear the fact that the student's right to have access to his or her education records is not affected by the student's status as a dependent. The other commenter believed the removal of the reference may result in increased pressure on institutions to grant a parent's request for access without formally establishing that the student is in fact a dependent as defined in section 152 of the Internal Revenue Code.

Discussion: This section of the regulations clearly states that when a student becomes an eligible student, all of the FERPA rights transfer from the parents to the student. The section of the regulations entitled "Under what conditions is prior consent not required to disclose information?" provides that an agency or institution may disclose information to the parents of a dependent student without the student's consent; the provision does not require the school to do so. The paragraph that is being removed was not intended to have any effect on an agency's or institution's decision on whether to grant the parent's request for information. Nor was it intended to affect an agency's or institution's policies in establishing that a student is a dependent as defined in section 152 of the Internal Revenue Code.

Change: None.

Comment: Three commenters believed educational agenices and institutions should be required to allow the parents of dependent students to inspect and review the education records of the student. Another commenter believed that even allowing educational agencies and institutions to afford the parents the opportunity to have access undermined the intent of the law by removing the student's right to have control over the disclosure. This commenter believed that specific procedures for release of information to parents in specific circumstances were needed.

Discussion: The statute clearly provides that the parents' rights afforded by the law transfer to the student when the student reaches age 18 or is attending an institution of postsecondary education. The statute also clearly provides that an educational agency may disclose the education records of a dependent student to the parents of the student without the student's consent. The Secretary has no authority to change these statutory provisions. He finds nothing in the statute to indicate that Congress intended the Department to develop procedures such as the one commenter suggested and believes that to do so would impose an unnecessary regulatory burden.

Change: None.

Comment: A commenter believed the regulations should clarify the status of handicapped students over the age of 18 whose handicapping condition is such as to affect their ability to understand and/or exercise their rights under the Act.

Discussion: The Secretary has carefully considered this question in light of the fact that at age 18 the rights transfer from the parent to the student. He has decided that a student who is so severely handicapped as to prevent the student from exercising his or her rights under the Act would in most cases be under the legal care or guardianship of another person or entity. In the absence of a court's order of guardianship, the Secretary believes it would be reasonable to presume that the parents of such a student are the persons who are in the best position to act on behalf of the student. Therefore, the Secretary has decided that no specific provision in the regulations is necessary.

Change: None.

Comment: One commenter was concerned about the statement in the proposed regulations that provides that an individual does not have rights in components of an "agency or institution at which the individual has never been in attendance." The commenter questioned whether a student who is enrolled in one component of a university and takes one course in another component is considered to be a student in attendance at, and with rights in, both components. The commenter believed the provision could result in the disclosure of records by a component of the institution in which the student has never been in attendance.

Discussion: In revising the regulations, two significant phrases were unintentionally omitted from the statement. The statement should have read, "If an individual is or has been in attendance at one component of an educational agency or institution, that attendance does not give the individual rights as a student in other components of the agency or institution to which the individual has applied for admission but has never been in attendance." Concerning the commenter's specific question, if an individual applied for but was not admitted to a component, the individual would have no rights with regard to his or her application for admission to that component. This result is consistent with extensive legislative history on the subject. However, if an individual took a course in the component to which he or she had been denied admission, that individual would have FERPA rights with respect to that course, but still would not have rights with respect to the denied application for admission to that component.

Change: The phrases "is or has been in attendance at" and "to which the individual has applied for admission" have been added.

Comment: A commenter was concerned that an institution might misinterpret the language in this provision to mean that a student would not have rights with respect to records which happen to be maintained in a component other than the component in which the student is enrolled.

Discussion: A student cannot be denied access or other rights with respect to his or her education records, regardless of location.

Change: None.

Comment: A commenter suggested that the words "his or her parent" in this section be changed to "the parents" and the words "parents of students" be changed to "parents."

Discussion: In revising the regulations, the Secretary changed the definition of "parent" to eliminate the need to refer to "the parent of the student" or "his or her parent" throughout the regulations. The need for changing the terminology in this section was overlooked.

Change: The terminology has been revised to read "parents."

Section 99.6 What information must an educational agency's or institution's policy contain?

Comment: One commenter believed an educational agency or institution should be required to include in its policy a statement that grades may not be appealed.

Discussion: The legislative history of FERPA indicates that the Act was not intended to be used to replace previously established procedures to appeal the grade given the student's performance in a course. However, given the discretion delegated to educational agencies or institutions in implementing FERPA, an agency or institution might choose to permit parents of students or eligible students to use FERPA procedures to challenge a grade. Therefore, the Secretary has decided that it is not necessary or appropriate to require educational agencies and institutions to state in their policies that a student's grade may not be appealed.

Change: None.

Comment: Another commenter expressed agreement with the revisions made in this section with regard to the written policy each educational agency or institution must adopt. However, the commenter seemed to believe that the regulations required an educational agency or institution to publish its policy as part of its annual notification and that this requirement was being removed in revising the regulations.

Discussion: The only revisions made in this section, which was previously numbered 99.5, were made for the purpose of clarification. Neither the current nor the revised regulations require that an educational agency or institution include its policy in the annual notification. Both regulations require that the annual notification include a statement of where the policy may be obtained.

Change: None.

Section 99.7 What must an educational agency or institution include in its annual notification?

Comment: One commenter believed the intent of the law is that educational agencies and institutions be required to "make notification available" to parents or students rather than to "notify" parents or students. Therefore, the commenter suggested that the word "notify" in the first paragraph of the section be replaced by the words "make notification available."

Discussion: The statute requires educational agencies and institutions to inform the parents or the eligible students of the rights accorded them by the Act. In order to inform the parents or the eligible students of their rights, educational agencies and institutions would be required to notify, not simply make notification available.

Change: None.

Comment: One commenter pointed out that the revised regulations would require educational agencies and institutions to notify parents of students in attendance "and" eligible students in attendance whereas the former regulations required that parents "or" students be notified.

Discussion: The use of the word "or" can connote the idea that an educational agency or institution has an option either to notify parents of all students—whether the students are eligible or not—or to notify only eligible students. Conversely, use of "and" could be construed to require disclosure to eligible students and all parents, whether or not they were the parents of noneligible students. The word "and" is used in this section with the understanding that in the phrase "parents and eligible students" the word "parents" means the parents of students who are not eligible students. Thus, the requirements in question apply both to eligible students and to parents of students who are not eligible students.

Change: None.

Comment: One commenter, writing on behalf of an institution of higher education, believed language should be inserted to relieve notification requirements with respect to parents who reside outside the continental United States. The commenter also believed agencies and institutions should not be required to notify parents of students who have a primary or home language other than English if the student has demonstrated the minimal command of the English language required for admission to the institution.

Discussion: The statute requires that educational agencies or institutions inform the parents or students of their rights. It does not, however, require that the parents or students be notified individually; a general notification, such as by publication in a newsletter or college bulletin, is adequate. The requirement that an agency or institution notify parents of students who have a primary or home language other than English applies only to elementary and secondary schools. Institutions of higher education are not required to inform parents of rights, just eligible students.

Change: None.

Comment: One commenter asked for information on how educational agencies and institutions are to notify former students of their rights and the agency's or institution's policies.

Discussion: Both the current regulations and the revised regulations provide that notification must be given only to parents of students in attendance or eligible students in attendance. The notification of rights and policy need not be provided to former students or their parents. In any case, as noted in the discussion of the preceding comment, a general notification by publication in a newsletter or college bulletin is adequate to satisfy the statutory and regulatory requirements.

Change: None.

Section 99.10 What rights exist for a parent or eligible student to inspect and review education records?

Comment: A commenter believed there was a need to clarify the requirement that an educational agency or institution comply with a request for access to records within "a reasonable period of time, but in no case more than 45 days after it has received the request." The commenter indicated that the regulations should emphasize that it is quite often reasonable to provide access within a shorter period of time than the 45-day limit.

Discussion: The Secretary finds that, in practice, schools often provide access within a period of time which is considerably shorter than the 45-day limit. He has decided that the phrase "but in no case more than 45 days" serves to emphasize that 45 days is the maximum time allowed for compliance.

Change: None.

Comments: Two commenters were of the opinion that parents should be entitled to obtain copies of the education records of their children. Both commenters indicated that having copies of the records would provide protection against a school's losing or misplacing records. One of the commenters believed the provision would be particularly beneficial for families who move to a new location, in the event the education records are misplaced or lost in transit or in the event transfer of the records is delayed. The other commenter believed such a provision would also relieve schools of the necessity of determining when a denial of copies would effectively result in a denial of access.

Discussion: Both the current and the revised regulations set forth conditions which apply to the disclosure of information to other educational agencies and institutions in which a student seeks or intends to enroll. One of the conditions is that an agency or

institution which transfers records to another agency or institution must give the parent or eligible student, upon request, a copy of the record that was disclosed. This is required by statute.

The second case in which an educational agency or institution must provide copies is when a parent or student gives a written consent for the disclosure of information from the student's education records and requests a copy of the records disclosed. This is also a statutory requirement.

The current and the revised regulations also require an educational agency or institution to provide copies of education records if a failure to do so would effectively result in a denial of access, and to include in their written policy a description of the circumstances in which the agency or institution believes it has a legitimate cause to deny a request for a copy of education records. These requirements, while not specifically stated in the statute, are necessary to implement the statutory requirement that an educational agency or institution shall not have a policy of denying, or effectively preventing, a parent or student the right to inspect and review the education records of the student.

The Secretary has decided that it would impose an unnecessary burden to require educational agencies or institutions to provide copies except as is now required by statute and the implementing regulations. However, nothing in the statute or the regulations would preclude an educational agency or institution from adopting a policy of providing copies in other cases, if it so chooses.

Change: None.

Comments: Two commenters believed the provision that prohibits educational agencies and institutions from destroying records if there is a pending request for access should be expanded. Both commenters believed educational agencies and institutions should be required to notify parents prior to destruction of documents and afford them an opportunity to inspect and review or obtain the records.

Discussion: The Secretary had decided that such a requirement would impose an unnecessary burden on educational agencies and institutions. In many cases, State law or agency or institutional policies and procedures prescribe a period of time in which education records are required to be maintained. Nothing in the Act or these regulations would preclude an educational agency or institution from implementing a policy of notifying parents or eligible students prior to the destruction of any education records.

Change: None.

Comments: One commenter expressed concern about the provision that accords an eligible student the right to have his or her medical treatment records reviewed by a physician or other appropriate professional of the student's choice. The commenter questioned whether postsecondary institutions would be obligated to verify the credentials of the professional chosen by the student.

Discussion: This provision is based on a requirement in the statute. The provision describes the rights of inspection and review of education records in the revised regulations. Neither the statute nor the regulations prescribe any procedures for verification.

Change: None.

Comments: One commenter believed that a provision in this section lends support to parents who claim they should have the right to have access so long as they are supporting the student in college. The provision in question reads, "* * * each educational agency or institution shall permit a parent or eligible student to inspect and review the education records of the student." It is the phase "parent or eligible student" that the commenter believed lends support to the parent's claim.

Discussion: Two word "parent" in the phase "parent or eligible student" means the parent of a student who is not an eligible student. Thus, at the college level, FERPA affords the eligible student the right of inspection and review. FERPA does not, however, prohibit an educational agency or institution from disclosing the education records of an eligible student to the parents of the eligible student if the student is a dependent child as defined in section 152 of the Internal Revenue Code of 1954. The provision which allows educational agencies and institutions to disclose information to parents of eligible students is set forth in the section entitled, "Under what conditions is prior consent not required to disclose information?"

Change: None.

Section 99.11 May an educational agency or institution charge a fee for copies of education records?

Comments: One commenter believed fees for copying should be limited to the actual cost of reproduction. The commenter believed that unless fees are limited to the actual cost of copying, an educational agency or institution might incorporate into the fee costs for search and retrieval of education records. A second commenter indicated that an educational agency or institution should be allowed to charge a fee for search and retrieval, if done manually, and for any other costs incurred in providing copies.

Discussion: Educational agencies and institutions are entitled to charge reasonable fees for the actual cost of reproduction, secretarial time, and postage. The Secretary considered whether to include a provision to allow educational agencies and institutions to charge a fee for search and retrieval. He decided that providing parents or students access to education records is a function that is generally a part of the accepted and normal business of educational agencies and institutions.

Change: None.

Section 99.12 What limitations exist on the right to inspect and review records?

Comment: One commenter was concerned about the removal of the provision that required educational agencies and institutions to document the confidentiality of letters and statements of recommendation that were placed in the education records of a student prior to January 1, 1975. The commenter believed that the requirement provided the only reliable way of determining that a letter or statement was indeed "confidential."

Discussion: The provision was removed because it placed an undue burden on agencies and institutions to expect that they would be able to document the confidentiality of letters or statements that were solicited or sent and retained more than 10 years ago.

Change: None.

Comment: A commenter raised a question relating to the provision that an educational agency or institution cannot require a waiver as a condition for admission to or receipt of a service or benefit from the agency or institution. With that in mind, the commenter asked whether a placement office would be denying a service or benefit to a student by advising the student that a professor will not write a letter of recommendation or an employer will not accept a letter of recommendation, or both, unless the student signs a waiver.

Discussion: A faculty member's refusal to write a reference without a waiver would be considered an action of that individual and not of the agency or institution. A placement office would not be denying a service or benefit by advising the student of the faculty member's or employer's refusal.

Change: None.

Comment: One commenter believed the provision in this section that allows an applicant for admission to waive his

or her rights under certain conditions should be removed.

Discussion: The provision is required by statute. Therefore, the Secretary has no authority to remove it from the regulations.

Change: None.

Section 99.21 Under what conditions does a parent or eligible student have the right to a hearing?

Comments: Two commenters believed that a parent or student should have the option of inserting a statement in an education record without first going through the hearing process that is provided in this section. The commenters interpreted the statute as intending that an educational agency or institution must provide a parent or a student both an opportunity for a hearing and an opportunity to insert a statement in the record. They believed the regulations misapply the statute's intent by requiring that a parent or student go through the hearing process before exercising the right to place a statement in the record. One of the commenters stated that this requirement can result in extensive delay in cases where a parent's or student's interest in inserting a clarifying statement in the record is time-sensitive.

Discussion: The statute provides that the parents or students must be afforded "an opportunity for a hearing * * * to challenge the content of [the] records and to provide an opportunity for the correction or deletion of [data] and to insert into [the] records a written explanation * * * respecting the content of [the] records." the statute is not definitive on the question of whether the parent's or student's right to place a statement in the records exists independent of the hearing process. However, the Secretary believes that the order in which the hearing and the statement are addressed in the statute indicates that the Congressional intent was that a parent or student should exhaust the administrative remedy afforded by the hearing process before exercising the right to place an explanatory statement in the record.

After considering this issue, the Secretary has decided that to require a hearing would be burdensome in cases where an educational agency or institution and the parent or student are clearly in agreement that an explanatory statement alone is the appropriate remedy. If one or the other of the two parties disagrees, then the parents or eligible student must exhaust the remedy afforded by the hearing process before entering an explanation in the record. The Secretary finds no reason to regulate on this issue since it may be resolved by the two parties directly involved.

The Secretary has also considered whether an agency or institution could be required to allow a parent or student to insert a statement in the record if the parent or student considers the matter to be time-sensitive. There is no FERPA provision which would require an agency or institution to expedite the process in a situation where a parent or student believes time is a factor. The explanatory statement provided for in the regulations is not intended to serve any purpose other than to document the parent's or student's final position on the accuracy of an education record.

Change: None.

Comment: One commenter believed the statement that a parent or student inserts in the education record could provide an unlimited opportunity to enter a statement of disagreement. The commenter suggested that such a statement should be limited to a declaration of disagreement and that the educational agency or institution should have the right to refuse to include information beyond such a declaration.

Discussion: The statute requires that a parent or student be afforded an opportunity to insert into the records "a written explanation * * * respecting the content of [the disputed] records." The Secretary has no authority to require that the statement be limited to a declaration of disagreement.

Change: None.

Comment: One commenter suggested an amendment of the provision which requires that an educational agency or institution disclosed a parent's or a student's explanatory statement whenever it discloses the portion of the record to which the statement relates. The commenter believed that educational agencies or institutions with complex or automated recordkeeping systems should not be required to provide a copy of the explantatory statement along with a disclosed record. Instead, the commenter believed agencies or institutions should be allowed to include on the disclosed record a reference to the fact that the explanatory statement exists and will be made available on request.

Discussion: The statute requires that the statement be maintained with the record. The Secretary believes the regulatory requirement that the statement be disclosed whenever the contested record is disclosed is necessary to meet the statutory intent.

Change: None.

Section 99.30 Under what conditions must an educational agency or institution obtain prior consent to disclosed information?

Comment: One commenter believed that it seemed inappropriate to require that a student's written consent state the purpose of the release. The commenter seemed to believe that the written consent is intended to be a mechanism to restrict what he assumes is a student's right to have information released from his or her own education records. In interpreting the provision in this way, the commenter believed that requiring the student to state the purpose of the release limited his right to have the records released.

Discussion: The statute requires that the purpose of the release be stated in the written consent; therefore, the Secretary has no authority to remove the provision. The purpose of the written consent is to document that the student consented to a disclosure of information from his or her education records; the consent is not intended in any way to restrict any of a student's rights.

Change: None.

Comment: Another commenter indicated that educational agencies and institutions should be able to accept requests by telephone with proper safeguards.

Discussion: The commenter did not specify whether he or she was referring to requests made by a third party for disclosure of information from a student's education records or a request made by a parent or eligible student to disclose information to a third party. Concerning the former, the regulations do not require that a request be in writing in order for an agency or institution to disclose information pursuant to one of the statutory exclusions permitting disclosure without consent. Concerning the latter, the statute requires an agency or institution to obtain written consent of a parent or eligible student before disclosing information to a third party.

Change: None.

Section 99.31 Under what conditions is prior consent not required to disclose information?

Comment: A commenter believed the term "legitimate educational interest" should be more definitive. The commenter indicated that some institutions interpret the term too broadly while others interpret it too narrowly.

Discussion: The Secretary believes the Department could not make a definitive statement of legitimate

educational interest that would apply to each school district and college and university across the nation. Each educational agency and institution must establish its own criteria, according to its own procedures and requirements, for determining when its school officials have a legitimate educational interest in a student's records.

Change: None.

Comment: Two commenters disagreed with the proposal to add language to clarify that education records may be disclosed without consent to a postsecondary institution in which a student seeks or intends to enroll. The commenters believed the addition expanded the scope of the statute and that the statutory purpose of the provision was to facilitate the transfer of records when a student moves from one public school system to another. In the case of postsecondary institutions, the commenters believed it would be more appropriate to require consent of the parent or the student before transferring records.

Discussion: The current regulations did not clearly specify that postsecondary educational institutions are covered by the exception. The provision has been applicable in practice to postsecondary institutions since enactment of the law. The change to this provision clarifies that "schools" include institutions of postsecondary education.

Change: None.

Comment: A commenter asked that the definition of "financial aid" be explicitly broadened to include all debts owed to an institution as a result of the student's participation in the institution's programs. The commenter strongly believed that Congress did not intend that an institution should be restricted by the law from collecting any and all debts owed it by students.

Discussion: The statute was intended to provide parents or students some control over the disclosure of information from the student's education records. With certain specified exceptions, including the provision with regard to financial aid, information cannot be disclosed without a student's written consent. The statute refers to disclosure "in connection with a student's application for, or receipt of, financial aid." In that context, the definition of financial aid could not be broadened to include other debts owed the institution.

Change: None.

Comment: One commenter, a representative of a State Department of Education, believed a provision should be included to acknowledge that State law may in some cases be more protective of students' privacy than Federal law, particularly in restricting the conditions under which information can be disclosed without the parent's written consent.

Discussion: The current and revised regulations provide that a State is not prevented from further limiting the number or type of State or local officials to whom disclosures may be made without consent. The regulations also state under the section "What are the rights of eligible students?" that the law and regulations "do not prevent educational agencies or institutions from giving students rights in addition to those given to parents of students." The Secretary has decided that no regulatory purpose would be served by including a provision such as suggested by the commenter.

Change: None.

Comment: A commenter suggested a change in the provision that allows disclosure "to organizations conducting studies for, or on behalf of, educational agencies or institutions [if] the study is conducted in a manner that does not permit personal identification of parents or students by individuals other than representatives of the organization * * *." The commenter believed the word "by" should be changed to "to".

Discussion: The word "by" is used in the statute, and the Secretary believes the meaning is clear.

Change: None.

Comment: None.

Discussion: In the notice of proposed rulemaking (NPRM) for these regulations the phrase "parents or students" was used in § 99.31(a)(6)(ii)(A). However, the statute requires organizations that receive information under this exception to the consent requirement to protect the information "in such a manner as will not permit the personal identification of students and their parents * * *."

Change: The word "or" has been changed to "and" to ensure that both groups are fully protected.

Comment: A commenter believed the educational agency or institution should be relieved in some cases of the requirement of making a reasonable effort to notify a parent or student in advance of compliance with a subpoena. The commenter indicated that in legal actions to which the student is a party, the court process itself requires that any subpoena be served on the opposing party, thereby making any notification effort by the educational agency or institution superfluous.

Discussion: The statutory language requires that parents or students be notified of "all such orders or subpoenas" in advance of compliance. The language was modified in the course of promulgating the current regulations to require that the agency or institution "make a reasonable effort to notify * * *." The modification was made in recognition that it would be difficult in many cases for the agency or institution to comply with the statutory requirement and in the belief that the modification was in accord with the Congressional intent.

The Secretary has decided that he has no authority to relieve educational agencies or institutions of the statutory requirement that parents and students be notified of "all such orders or subpoenas." The Secretary has also decided that even in cases where the parent or student brings the action, the notification serves to assure that the party serving a subpoena is in fact acting on behalf of the parent or student.

Change: None.

Comment: One commenter suggested that a condition be added to allow a postsecondary institution to contact a parent of an eligible student without the student's consent if the institution suspects that the student has a physical or emotional problem of which the university believes the parent may be unaware and that affects the student's academic or campus life.

Discussion: The Secretary has no authority to regulate an exception to the statutory requirement that at age 18 the rights afforded by FERPA transfer from the parent to the student. However, if an institution determined that the circumstances of a situation were such as to constitute a health or safety emergency and if the university decided that the parent is the party who is in the best position to deal with the emergency, then the disclosure could be made under the section of the regulations that provides for disclosure in those emergencies.

Change: None.

Comment: Four commenters believed a condition should be added to permit disclosure without a student's consent if the agency or institution has reason to believe that the student has provided inaccurate or misleading information concerning his or her academic record to another educational agency or institution, to an employer, to a professional association, or to a governmental agency to whom the student applies for benefits or services.

Another commenter believed educational agencies and institutions should be allowed to disclose information without prior written consent to government officials, including U.S. Senators and Representatives, State legislators, and governors, who have been contacted by

a parent or student who believes his or her rights under this law have been violated. The commenter indicated that the agencies or institutions are unable to respond to, or to defend themselves against, the parent's or student's allegations because they cannot release information to the government officials without the parent's or student's written consent.

Discussion: The Secretary understands the concerns of the commenters and has carefully considered whether provisions could be included in the regulations to address the problems. He has decided that the statute is specific in stating the conditions under which disclosure can be made without consent and that he has no authority to include the provisions proposed by the commenters.

Change: None.

Section 99.32 What recordkeeping requirements exist concerning requests and disclosures?

Comment: A commenter suggested that the term "list" be changed to "record" in this section. The commenter indicated that as long as a record of requests for and disclosures of information is maintained, the form of the record is irrelevant.

Discussion: The Secretary did not intend to prescribe the form of the record; the intent was to suggest a convenient way to maintain the information. However, in order to conform to the statutory language, the term "record" will be used.

Change: The term "record" has been substituted for "list."

Comment: One commenter stated that keeping a record of requests for disclosure is impractical and implies that a record must be kept even for requests that are denied. The commenter also believed it impractical to require the record of disclosure to be kept with the education records of the student, inasmuch as most institutions maintain records in computerized formats. Another commenter believed maintaining a record of disclosures without consent is self-incriminating. The commenter also stated that institutions should be free to establish their own retention schedule.

Discussion: The student requires each educational agency and institution to maintain a record, kept with the education records of each student, that will indicate all parties who have requested or obtained access to a student's education records, including those parties to whom the statute permits disclosure without consent. While the statute states that the record should be kept with the education records of a student, it does not intend to require the agency or institution to keep it in one file or in one location. However, it does intend to require the agency or institution to make the record available to a parent or student as part of the parent's or student's general access to the education records. Since parents or students should be able to learn of those parties interested in the records, the record of disclosure should be maintained as long as the agency or institution maintains records on the student.

Change: None.

Comment: A commenter asked whether the placement office of an educational agency or institution would be required to keep a list (record) of all parties to whom a student's credential files were sent if the student had given a blanket consent to release his or her education records without specifying the individual parties.

Discussion: The statutory and regulatory language require an agency or institution to maintain a record of each disclosure.

Change: None.

Comment: One commenter questioned the recordkeeping requirement concerning disclosure and redisclosure of information to parties if prior written consent for disclosure is not required. An educational agency or institution may disclose information to a party if consent is not required with the understanding that that party may redisclose the information to another party to whom information can be disclosed without consent. The agency or institution must keep a record of the parties to whom the disclosure and redisclosures are made and the legitimate educational interests all parties have in the records. The commenter believed the recordkeeping requirement places an undue burden on institutions and that most reasonable approach is to assert that no information may be redisclosed.

Discussion: The Secretary did not intend any change in the recordkeeping requirement. At the time the final regulations were issued in 1976, the Department had considered whether student consent should be required if disclosure by a party excepted from the consent requirement is to another party excepted from the consent requirement—even though the institution could disclose information without consent to either excepted party. The Secretary considered, for example, whether an institution that disclosed information to the Department of Education under the Guaranteed Student Loan Program as permitted by the "financial aid" exception, would be required to tell the Department of Education not to make a future disclosure of that information to the bank that loaned the money under the program—even though the bank could obtain the information directly from the institution under the same exception.

If the Department of Education could disclose the information freely to other excepted parties, there would be no harm done to the consent requirement. However, the student would no longer have a means to discover all of the parties outside the institution who had had access to his or her records without consent. To remedy this problem, the Secretary authorized an institution to disclose information to excepted parties with the understanding it would be redisclosed to other excepted parties, but only if a record of access were kept for all of those parties.

The Secretary did not intend to impose a recordkeeping burden on educational institutions. Rather, the intent was to give a better understanding of the disclosure and recordkeeping requirement with regard to excepted parties.

Section 99.34 What conditions apply to disclosure of information to other educational agencies or institutions?

Comment: A commenter believed an example should be inserted in this section to specify that the phrase "is enrolled in or receives service from the other agency or institution" encompasses consortia, cross-enrollment, joint-enrollment, work-study, and coordination of such programs among postsecondary institutions and participating agencies and institutions.

Discussion: The Secretary believes the provision, as it now stands, can clearly be construed to encompass the examples included in the comment.

Change: None.

Comment: None.

Discussion: The proposed regulations changed the definition of student to include former students in order to make clear that most rights accorded students in attendance also apply to former students. In cases where the provisions of a section do not apply to former students, the term "students in attendance" is used. The provision in this section that, in the proposed regulations, stated "an educational agency or institution may disclose an education record of a student to another educational agency or institution if the student is enrolled in or receives services from the other agency or institution" would extend the provision beyond the statutory authority and

would indicate that an agency or institution could disclose information on former students without consent to another agency or institution if the former student is enrolled in or receives services from the other agency or institution.

Change: The provision has been clarified to state that it applies only to students in attendance.

Section 99.36 What conditions apply to disclosure of information in health and safety emergencies?

Comments: One commenter believed that the regulations, in stating that the provisions of the section "shall be strictly construed," rightly leaves it to the educational agency or institution to develop its own definition of emergency. The commenter viewed the revision as helpful to educational agencies and institutions and as a step to assure an appropriate deregulation and an appropriate recordkeeping process within the institution on defining when an emergency may arise. Another commenter believed the factors that were removed from the health and safety emergency section in revising the regulations should be reinserted. The commenter believed that the statute specifically directs the Secretary to issue regulations concerning disclosure in a health or safety emergency and also believed that the criteria provided useful guidance.

Discussion: The statute, in setting forth the conditions in which personally identifiable information from an education record or records can be disclosed without a parent's or student's consent states that "[such a disclosure may be made], subject to regulations of the Secretary in connection with an emergency, [to] appropriate persons if the knowledge of such information is necessary to protect the health or safety of the student or other persons." The regulations required that educational agencies or institutions include four specific criteria in the factors to be taken into account in determining whether personally identifiable information from the education records of a student could be disclosed under the section.

The Secretary based his decision to remove the nonstatutory criteria from the regulations on his belief that educational agencies and institutions are capable of making those determinations without the need for Federal regulation. It is the Secretary's opinion that Congress did not intend to require that regulations be promulgated that would impose burdensome requirements on agencies and institutions. He believes the requirement that agencies and institutions strictly construe the provision fully meets the Congressional intent. Nothing in the statute or legislative history prohibits an agency or institution from considering the four specific criteria that have been removed.

Change: None.

Section 99.37 What conditions apply to disclosing directory information?

Comment: One commenter thought the use of the word "and" in the text of the first paragraph under the section was incorrect.

Discussion: In the proposed regulations the word "and" was inserted in place of the word "or" in the phrase "* * * parents of students in attendance and eligible students in attendance * * *." However, replacing the word "or" with the word "and" does not remove all possibility for misinterpreting the provision. As clarification, we note that in the phrase "parents of students in attendance," the word "students" means students who are not eligible students. Thus, the educational agency or institution must notify both, all eligible students and the parents of all students who are not eligible students.

Change: None.

Comment: A commenter, a representative of a postsecondary educational institution, believed that the refusal that student's are allowed to exercise over the designation of directory information should be limited to the students' address and telephone number. The commenter indicated that the students' right of refusal has in some cases enabled students to commit fraudulent acts with a lessened chance of discovery.

Discussion: The statute provides students the right to refuse to allow the educational agency or institution to designate any or all of the items of information about the directory information.

Change: None.

Section 99.61 What responsibility does an educational agency or institution have concerning conflict with State or local laws?

Comment: One commenter believed the Department of Education should give some direction to State schools or institutions that are mandated by State law to allow a student to have access to confidential letters of recommendation to which the student, under FERPA, has waived his or her right of access. The commenter indicated that if placement directors send a credential file that contains confidential letters of recommendation to schools or institutions in States that have those mandates, the schools or institutions will return the file on the basis that the confidentiality of the letters cannot be protected.

Discussion: The Secretary is unable to advise State schools or institutions with respect to the laws of each State. With respect to the Federal law, the statute provides that the access rights afforded by the law shall not operate to make letters and statements of recommendation available to students in institutions of postsecondary education who have executed a valid waiver of the right to inspect and review the letters or statements. In implementing the law, the regulations provide that a postsecondary institution "does not have to permit" a student to inspect and review the letters and statements of recommendation provided the student has executed a valid waiver. Under these provisions, an educational agency or institution is not precluded from providing a student access to a letter or statement of recommendation. Therefore, if a State law requires that a State institution afford a student access to letters or statements of recommendation, the Federal law would not interfere, irrespective of whether the student has executed a valid waiver of his or her right.

Change: None.

Section 99.64 What is the complaint procedure?

Comment: A commenter proposed that the intended meaning of the word timely as it appears in the second paragraph of this section should be defined.

Discussion: The Secretary has decided not to include a definition in the regulations for two reasons. First, the word appears only once in the regulations. Secondly, the meaning of the word would depend largely on the circumstances which are peculiar to each case. A complaint might involve complex circumstances and attempts by a complainant to resolve the issue independently that might reasonably have delayed the filing of the complaint. Such a complaint would be considered timely. Another complaint might involve

an allegation of a violation that occurred many years ago and was never pursued despite the full knowledge of the student. In this case, the complaint would not be considered timely.

Change: None.

Section 99.67 How does the Secretary enforce decisions?

Comment: A commenter believed the law should be changed to provide that the Secretary may decide to withhold Federal funding under programs in addition to those administered by the Department of Education.

Discussion: The Secretary has no authority to withhold Federal funds under programs in other Federal agencies.

Change: None.

[FR Doc. 88-7764 Filed 4-8-88; 8:45 am]

BILLING CODE 4000-01-M

VOL 53 ISS 69 AP 11 1988 UMI

federal register

Monday
April 11, 1988

Part III

Federal Reserve System

Estimated Price Ranges and Deadline for Federal Reserve Returned Check Services; Notice

FEDERAL RESERVE SYSTEM

[Docket No. R-0630]

Estimated Price Ranges and Deadline for Federal Reserve Returned Check Services

AGENCY: Board of Governors of the Federal Reserve System.

ACTION: Notice.

SUMMARY: The Board is publishing estimated ranges of prices and deadlines for new Federal Reserve returned check services to be implemented in September, 1988. Although the actual prices and deadlines will not be available until June 1988, the Board is providing this advance notice of the likely ranges of prices and deadlines so that those who plan on using these services or offering competing services can plan appropriate responses.

FOR FURTHER INFORMATION CONTACT: Elliott C. McEntee, Associate Director (202/452-2231), Louise L. Roseman, Assistant Director (202/452-2789), or Nalini T. Rogers, Analyst (202/452-3801), Division of Federal Reserve Bank Operations; for the hearing impaired only: Telecommunication Device for the Deaf, Earnestine Hill or Dorothea Thompson (202/452-3254).

SUPPLEMENTARY INFORMATION: The Expedited Funds Availability Act gives the Board of Governors broad regulatory authority to improve the check collection and return system. The Board published a comprehensive proposal to implement the Act in December 1987, 52 FR 47112 (Dec. 11, 1987), which included a number of initiatives to speed the return of unpaid checks. These improvements to the check return system are designed to reduce the risk to the depositary bank from making funds available for withdrawal on a more prompt basis, as mandated by the Act. The Board also published for comment new Federal Reserve services to facilitate bank compliance with the proposed requirements. 52 FR 47171 (Dec. 11, 1987).

Currently, the Federal Reserve Banks do not explicitly price returned checks; instead, the costs of handling returns are incorporated in the forward collection fees. With the introduction of new check return services, returns will be priced explicitly, with the returned check fees assessed on the paying or returning bank depositing returns with a Federal Reserve Bank.[1] Forward collection fees will be reduced due to the elimination of the return cost component. In its proposal, the Board included estimated price ranges for returned check services, as well as general guidelines regarding return deadlines and sorting requirements.

A number of correspondent banks noted in their comments on the proposal that more detailed information regarding the Federal Reserve's new returned check services is needed for their development of competing services. Other banks stated that further information would be useful in planning how to meet their new expeditious return responsibilities most effectively. The Federal Reserve's forward collection and returned check fees and return deadlines, which will become effective when the new return services are implemented, will not be available for Board approval until June 1988.

Given the industry's desire for more information prior to this time, the Board has compiled returned check price and deadline estimates, on an office by office basis. The tables appended include returned check price ranges, deadlines, and sorting requirements for each Federal Reserve office. These estimates provide more definitive information than that published in the Board's proposal in December.

The new returned check deposit deadlines will correspond generally to forward collection deadlines in order to minimize transportation costs to banks depositing returns with the Federal Reserve. Each Reserve Bank will offer a raw return[2] deadline that corresponds to the office's RCPC forward collection deadline, around midnight. Generally, these midnight deadlines will include sorting requirements, in which case at least one earlier mixed return deadline will be offered, no earlier than 8:00 p.m. All fine sort returns will also be eligible for deposit at fine sort forward collection deadlines.[3] All automated or qualified returned checks will be eligible for deposit at any of the basic forward collection deadlines.

The raw return price ranges for each Reserve Bank office published in the December proposal were $0.25–$0.75 for local items, and $0.30–$1.00 for nonlocal (other Fed) items. Revised price ranges have been established, $0.30–$0.75 for local items, and $0.40–$1.00 for nonlocal items. Selected final prices may be slightly lower than this range due to special sorting requirements. In addition, Reserve Banks are still in the process of refining their volume and cost estimates; therefore, in some cases, other final prices and deadlines published in June may vary from the estimates published here.

Although the proposal stated that fees for qualified returned checks initially were expected to be the same as fees for forward collection checks of the same type, Board and Reserve Bank staff have found, upon further review, that processing qualified returned checks will be significantly more costly on a per item basis than forward collection items. This is due, in part, to the handling of qualified returns in a separate processing stream, the significantly smaller check return volume as compared to forward collection volume, and the need to sort these items to a larger number of endpoints. Consequently, qualified return prices are expected to be two to three times the corresponding forward collection price.

[1] Returns must be explicitly priced since some returned checks handled by the Federal Reserve will not follow the same route as they followed in the collection process, and therefore may not be subject to the Reserve Bank's forward collection fees. Also, paying banks and returning banks could deposit returned checks with the Federal Reserve in various ways that result in different costs being incurred.

[2] A raw return is a returned check that has not been prepared for automated processing.

[3] Fine sort return prices and deadlines will be the same as those for forward collection fine sort items. These will not be announced until June 1988, in order to allow Reserve Banks more time to analyze the changes needed in forward collection fine sort fees.

Part I—Raw Returns

District/Office	Deposit Deadline [2]	Item Fee Range by Component (cents)		Return Letter Fee (dollars) [1]	Sorting Requirements
		Local	Other Fed		
1 Boston	0001	45 to 60	60 to 85	1.00/2.50	City/RCPC/OF.
	1900	45 to 60	60 to 85	1.00	None.
	2100	50 to 70	70 to 90	1.00	None.
Lewiston	0001	35 to 50	50 to 70	1.00/2.50	Local/OF.
	2100	40 to 60	60 to 85	1.00	None.

District/Office	Deposit Deadline [2]	Item Fee Range by Component (cents)		Return Letter Fee (dollars) [1]	Sorting Requirements
		Local	Other Fed		
Windsor Locks	0001	45 to 60	60 to 85	1.00/2.50	Local/OF.
	1900	45 to 60	60 to 85	1.00	None.
	2100	50 to 70	70 to 90	1.00	None.
2 New York:					
Buffalo	0001	60 to 75	70 to $1.00	0.50/2.00	City/RCPC/OF.
	2000	60 to 75	70 to $1.00	0.50	None.
	1200 Sat	60 to 75	70 to $1.00	0.50	None.
Jericho	0001	60 to 75	70 to $1.00	0.50/2.00	City/RCPC/Country/OF.
	2000	60 to 75	70 to $1.00	0.50	None.
Cranford	0001	60 to 75	70 to $1.00	0.50/2.00	City/RCPC/OF.
	2000	60 to 75	70 to $1.00	0.50	None.
Utica	0001	60 to 75	70 to $1.00	0.50/2.00	City/RCPC/OF.
	2000	60 to 75	70 to $1.00	0.50	None.
3 Philadelphia	0030	35 to 50	45 to 60	1.75/2.75	Local/OF.
	2000	35 to 50	45 to 60	2.25	None.
	2000	30 to 45	45 to 60	1.75/2.75	Local/OF.
	2300	45 to 60	60 to 75	2.25	None.
	0830	30 to 45	45 to 60	1.75/2.75	City Clearinghouse/OF.
4 Cleveland	0001 [3]	50 to 75	70 to $1.00	1.75	None.
	1800 [3]	50 to 75	70 to $1.00	1.75	None.
	2200 [3]	50 to 75	70 to $1.00	1.75	None.
	0830	50 to 75	70 to $1.00	1.75/3.50	City.
Cincinnati	0001 [3]	50 to 75	70 to $1.00	1.75/3.50	RCPC/OF.
	1800 [3]	50 to 75	70 to $1.00	1.75	None.
	2230 [3]	50 to 75	70 to $1.00	1.75	None.
	0830	50 to 75		1.75/3.50	City.
Pittsburgh	0001 [3]	50 to 75	70 to $1.00	1.75	None.
	0130	50 to 75		1.75/3.50	RCPC.
	0830	50 to 75		1.75/3.50	City.
	1600 [3]	50 to 75	70 to $1.00	1.75	None.
Columbus	0001 [3]	50 to 75	70 to $1.00	1.75	None.
	0745	50 to 75		1.75/3.50	City.
	1800 [3]	50 to 75	70 to $1.00	1.75	None.
	2200 [3]	50 to 75	70 to $1.00	1.75	None.
5 Richmond	0001	30 to 45	40 to 60	1.25/2.25 [4]	Local/OF.
	2115 [5]	30 to 45	40 to 60	2.00	None.
Baltimore	0001	30 to 45	40 to 60	1.75/2.75 [4]	Local/OF.
	2030 [5]	30 to 45	40 to 60	2.25	None.
Charlotte	0001	30 to 45	40 to 60	1.25/2.25 [4]	Local/OF.
	2130 [5]	30 to 45	40 to 60	1.50	None.
Columbia	0001	30 to 45	40 to 60	1.50/2.50 [4]	Local/OF.
	2200 [5]	30 to 45	40 to 60	1.75	None.
Charleston	0001	30 to 45	40 to 60	1.50/3.00 $	Local/OF.
	2115 [5]	30 to 45	40 to 60	2.00	None.
6 Atlanta	0001	30 to 45	40 to 60	0.50/2.00	City/RCPC/OF.
	2130	32 to 48	48 to 72	0.50	None.
	2200		40 to 60	0.50	OF.
Birmingham	0001	30 to 45	40 to 60	0.50/2.00	Local/OF.
	1900		40 to 60	0.50	OF.
	2130	32 to 48	48 to 72	0.50	None.
Jacksonville	0001	30 to 45	40 to 60	0.50/2.00	Local/OF.
	2100	32 to 48	48 to 72	0.50	None.
	2300		40 to 60	0.50	OF.
Nashville	0001	30 to 45	40 to 60	0.50/2.00	Local/OF.
	0900	30 to 45		0.50/2.00	Local.
	2030	32 to 48	48 to 72	0.50	None.
New Orleans	0001	30 to 45	40 to 60	0.50/1.75	Local/OF.
	0900 Sat		40 to 60	0.50	OF.
	2030	32 to 48	48 to 72	0.50	None.
Miami	0001	30 to 45	40 to 60	0.50/2.00	Local/OF.
	2130	32 to 48	48 to 72	0.50	None.
7 Chicago	0001	45 to 68	55 to 82	1.00/2.00	City/RCPC/OF.
	2100	45 to 68	55 to 82	1.00	None.
Detroit	0001	45 to 68	55 to 82	1.00/2.50	City/RCPC/OF.
	2000	45 to 68	55 to 82	1.00	None.
Des Moines	0001	45 to 68	55 to 82	1.00/2.00	City/RCPC/OF.
	2000	45 to 68	55 to 82	1.00	None.
Indianapolis	0001	45 to 68	55 to 82	1.00/2.00	City/RCPC/OF.
	2100	45 to 68	55 to 82	1.00	None.
Milwaukee	0001	45 to 68	55 to 82	1.00/2.00	City/RCPC/OF.
	2130	45 to 68	55 to 82	1.00	None.
8 St. Louis	0001	35 to 53 [6]	40 to 60 [6]	1.50/2.50	Local/OF.
	1500 [3]	35 to 53 [6]	40 to 60 [6]	1.50	None.
	1500 [3]	35 to 53 [6]	40 to 60 [6]	1.50/2.50	Local/OF.
	2000 [3]	35 to 53 [6]	40 to 60 [6]	1.50	None.
Little Rock	0001	35 to 53 [6]	40 to 60 [6]	0.50/2.25	Local/OF.
	1500	35 to 53 [6]	40 to 60 [6]	0.50/2.25	Local/OF.
	2030	35 to 53 [6]	40 to 60 [6]	0.50	None.
Louisvill	0001	35 to 53 [6]	40 to 60 [6]	0.50	None.
	0001	35 to 53 [6]	40 to 60 [6]	0.50/2.50	Local/OF.

District/Office	Deposit Deadline [2]	Item Fee Range by Component (cents)		Return Letter Fee (dollars) [1]	Sorting Requirements
		Local	Other Fed		
	1500	35 to 53 [6]	40 to 60 [6]	0.50/2.50	Local/OF.
Memphis	0001	35 to 53 [6]	40 to 60 [6]	1.75/2.75	Local/OF.
	1500	35 to 53 [6]	40 to 60 [6]	1.75/2.75	Local/OF.
	2200	35 to 53 [6]	40 to 60 [6]	1.75	None.
9 Minneapolis	0001	45 to 55	60 to 80	0.75	None.
	0001	35 to 45	60 to 80	0.75/2.75	City/RCPC/Country/OF.
	1230	35 to 45	60 to 80	0.75/2.75	Country/OF.
	2200	35 to 45	60 to 80	0.75	None.
	0800	35 to 45		0.75/2.75	City.
Helena	0001	30 to 40	40 to 55	1.00	None.
	1200	30 to 40		1.00/2.00	Country.
	1900	30 to 40	40 to 55	1.00/2.00	City/RCPC/Country/OF.
	0030	30 to 40		1.00/2.00	RCPC.
	0830	30 to 40	40 to 55	1.00	None.
	1000	30 to 40		1.00/2.00	City.
10 Kansas City	0001	40 to 60	40 to 60	1.00/2.00	Local/OF.
	0001	25 to 33		1.00	City Group Sort.
	2130	30 to 45	40 to 60	1.00	None.
Denver	0001	40 to 60	40 to 60	0.75/1.75	Local/OF.
	2030	30 to 45	40 to 60	0.75	None.
	0900	30 to 45	40 to 60	0.75	None.
Oklahoma City	0001	36 to 54	40 to 60	1.00/2.00	Local/OF.
	2000	30 to 40	40 to 60	1.00	None.
Omaha	0030	36 to 54	40 to 60	1.00/2.00	Local/OF.
	2000	30 to 40	40 to 60	1.00	None.
11 Dallas	0001	40 to 60	47 to 70	1.00/2.00	City/RCPC/Country/OF.
	2000	40 to 60	47 to 70	1.00	None.
Houston	0001	40 to 60	47 to 70	1.00/2.00	City/RCPC/OF.
	2000	40 to 60	47 to 70	1.00	None.
San Antonio	0001	40 to 60	47 to 70	1.00/2.00	City/RCPC/OF.
	2000	40 to 60	47 to 70	1.00	None.
El Paso	0001	40 to 60	47 to 70	1.00/2.00	City/RCPC/OF.
	2000	40 to 60	47 to 70	1.00	None.
12 San Francisco	0001	35 to 50	55 to 80	1.00/2.00	City/RCPC/Country/OF.
	2100	45 to 70	60 to 90	1.00	None.
Los Angeles	0001	35 to 50	55 to 80	1.00/2.00	City/RCPC/OF.
	2100	45 to 70	60 to 90	1.00	None.
Portland	0001	30 to 45	50 to 75	1.00/2.00	City/RCPC/OF.
	2100	40 to 60	55 to 80	1.00	None.
Salt Lake City	0001	30 to 45	50 to 75	1.00/2.00	City/RCPC/OF.
	2100	40 to 60	55 to 80	1.00	None.
Seattle	0001	30 to 45	50 to 75	1.00/2.00	City/RCPC/OF.
	2100	40 to 60	55 to 80	1.00	None.

[1] This is a fixed charge that applies to each return letter. The first fee applies to local depositors; the second fee applies to interterritory depositors.
[2] Deadlines reported in military time i.e. 12:01 a.m. is shown as 0001, 9:00 a.m. is shown as 0900, 9:00 p.m. is shown as 2100.
[3] Availability differs by deadline.
[4] The second return letter fee applies to Other Fed return letters from local depositors as well as to local return letters received from interterritory depositors, except in Charleston where return letter fees are $1.50/local letter from local depositor; $2.00/Other Fed letter from local depositor; $3.00/local letter from interterritory depositor.
[5] These offices are considering an additional deadline between 0600 and 0900 for raw Other Fed return letters. Prices may be slightly higher than those shown at 0001 for Other Fed returns.
[6] Fees may vary by deadline even though the same range is shown for all.

Part II—Qualified Returns: Estimated Price Ranges and Deadlines for Federal Reserve Return Item Services

Section A: Open to Local Depositors, Consolidated Senders and Direct Shippers

District/Office	City			RCPC			Country	
	Unsorted		Group Sort	Unsorted		Group Sort	Unsorted Regular	Group Sort
	Regular	Premium		Regular	Premium			
1 Boston:								
Return Letter Fee ($) [1]	1.00/2.50	1.00/2.50		1.00/2.50	1.00/2.50			
Item Fee Range (cents/item)	4.0–5.1	6.0–7.5		6.0–6.6	7.0–9.9			
Deposit deadline [2]	0700	0830		0001	0245			
Lewiston:								
Return Letter Fee ($) [1]				1.00/2.50	1.00/2.50			
Item Fee Range (cents/item)				4.0–5.4	5.0–6.6			
Deposit deadline [2]				0001	0200			
Windsor Locks:								
Return Letter Fee ($) [1]				1.00/2.50	1.00/2.50			
Item Fee Range (cents/item)				6.0–6.6	7.0–9.9			
Deposit deadline [2]				0001	0245			
2 New York:								
Return Letter Fee ($) [1]								
Item Fee Range (cents/item)								
Deposit deadline [2]								

District/Office	City			RCPC			Country	
	Unsorted		Group Sort	Unsorted		Group Sort	Unsorted Regular	Group Sort
	Regular	Premium		Regular	Premium			
Buffalo:								
Return Letter Fee ($) [1]	0.50/2.00			0.50/2.00	0.50/2.00			
Item Fee Range (cents/item)	4.4–6.6			4.8–7.5	9.4–14.1			
Deposit deadline [2]	0815			0001	0315			
Jericho:								
Return Letter Fee ($) [1]	0.50/2.00	0.50/2.00		0.50/2.00	0.50/2.00		0.50/2.00	
Item Fee Range (cents/item)	4.6–6.9	9.0–13.5		4.8–7.5	9.4–14.0		7.4–11.1	
Deposit deadline [2]	0700	0830		0001	0230		1200	
Cranford:								
Return Letter Fee ($) [1]	0.50/2.00	0.50/2.00		0.50/2.00	0.50/2.00			
Item Fee Range (cents/item)	4.6–6.9	9.0–13.5		4.8–7.5	9.4–14.1			
Deposit deadline [2]	0700	0830		0001	0230			
Utica:								
Return Letter Fee ($) [1]	0.50/2.00			0.50/2.00	0.50/2.00			
Item Fee Range (cents/item)	4.6–6.9			4.8–7.5	9.4–14.1			
Deposit deadline [2]	0001			0001	0245			
3 Philadelphia:								
Return Letter Fee ($) [1]	1.75/2.75	1.75/2.75		1.75/2.75	1.75/2.75			
Item Fee Range (cents/item)	3.0–4.5	3.8–5.7		4.4–6.6	7.0–10.5			
Deposit deadline [2]	0700	0830		0030	0230			
4 Cleveland:								
Return Letter Fee ($) [1]	1.75/3.50	1.75/3.50		1.75/3.50	1.75/3.50			
Item Fee Range (cents/item)	4.5–4.8	5.3–5.6		6.0–6.3	8.3–8.6			
Deposit deadline [2]	0930	1030		0001	0300			
Cincinnati:								
Return Letter Fee ($) [1]	1.75/3.50			1.75/3.50	1.75/3.50			
Item Fee Range (cents/item)	4.5–4.8			6.0–6.3	8.3–8.6			
Deposit deadline [2]	0830			0001	0245			
Pittsburgh:								
Return Letter Fee ($) [1]	1.75/3.50	1.75/3.50		1.75/3.50	1.75/3.50			
Item Fee Range (cents/item)	4.5–4.8	5.3–5.6		6.0–6.3	8.3–8.6			
Deposit deadline [2]	0830	0930		0130	0330			
Columbus:								
Return Letter Fee ($) [1]	1.75/3.50			1.75/3.50	1.75/3.50			
Item Fee Range (cents/item)	4.5–4.8			6.0–6.3	8.3–8.6			
Deposit deadline [2]	0745			0001	0230			
5 Richmond:								
Return Letter Fee ($) [1]	1.25/2.25			1.25/2.25	1.25/2.25			
Item Fee Range (cents/item)	3.2–4.8			4.2–6.3	8.6–12.9			
Deposit deadline [2]	0900			0001	0245			
Baltimore:								
Return Letter Fee ($) [1]	1.75/2.75	1.75/2.75		1.75/2.75	1.75/2.75			
Item Fee Range (cents/item)	3.4–5.1	4.0–6.0		4.4–6.6	8.6–12.9			
Deposit deadline [2]	0700	0830		0001	0315			
Charlotte:								
Return Letter Fee ($) [1]	1.25/2.25			1.25/2.25	1.25/2.25			
Item Fee Range (cents/item)	3.2–4.8			4.0–6.0	9.4–14.1			
Deposit deadline [2]	0900			0001	0245			
Columbia:								
Return Letter Fee ($) [1]	1.50/2.50			1.50/2.50	1.50/2.50			
Item Fee Range (cents/item)	3.4–5.1			4.0–6.0	8.6–12.9			
Deposit deadline [2]	0900			0001	0245			
Charleston:								
Return Letter Fee ($) [1]	1.50/3.00			1.50/3.00	1.50/3.00			
Item Fee Range (cents/item)	3.6–5.4			4.2–6.3	8.6–12.9			
Deposit deadline [2]	0900			0001	0230			
6 Atlanta:								
Return Letter Fee ($) [1]	0.50/2.00			0.50/2.00	2.00/3.50			
Item Fee Range (cents/item)	2.2–3.3			3.6–5.4	6.0–9.0			
Deposit deadline [2]	0900			0001	0130			
Birmingham:								
Return Letter Fee ($) [1]	0.50/2.00			0.50/2.00	2.50/4.00			
Item Fee Range (cents/item)	2.4–3.6			3.6–5.4	6.8–10.2			
Deposit deadline [2]	0900			0001	0130			
Jacksonville:								
Return Letter Fee ($) [1]	0.50/2.00			0.50/2.00	3.00/4.50			
Item Fee Range (cents/item)	2.2–3.3			3.4–5.1	7.2–10.8			
Deposit deadline [2]	0900			0001	0230			
Nashville:								
Return Letter Fee ($) [1]	0.50/2.00	1.50/3.50		0.50/2.00	2.00/3.50			
Item Fee Range (cents/item)	2.6–3.9	4.0–6.0		3.6–5.4	7.0–10.5			
Deposit deadline [2]	0900	1000		0001	0130			
New Orleans:								
Return Letter Fee ($) [1]	0.50/1.75			0.50/1.75	3.00/4.25			
Item Fee Range (cents/item)	2.0–3.0			3.6–5.4	7.0–10.5			
Deposit deadline [2]	0900			0001	0215			
Miami:								
Return Letter Fee ($) [1]	0.50/2.00			0.50/2.00	0.50/3.00			

District/Office	City			RCPC			Country	
	Unsorted		Group Sort	Unsorted		Group Sort	Unsorted Regular	Group Sort
	Regular	Premium		Regular	Premium			
Item Fee Range (cents/item)	2.2-3.3			3.4-5.1	5.8-8.7			
Deposit deadline [2]	0830			0001	0300			
7 Chicago:								
Return Letter Fee ($) [1]	1.00/2.00	1.00/2.00		1.00/2.00	1.00/2.00			
Item Fee Range (cents/item)	4.4-6.6	5.0-7.5		6.6-9.9	8.0-12.0			
Deposit deadline [2]	0630	0730		0001	0100			
Detroit:								
Return Letter Fee ($) [1]	1.00/2.50			1.00/2.50	1.50/3.00			
Item Fee Range (cents/item)	3.2-4.8			4.2-6.3	7.8-11.7			
Deposit deadline [2]	0900			0001	0215			
Des Moines:								
Return Letter Fee ($) [1]	1.00/2.00			1.00/2.00	1.00/2.00			
Item Fee Range (cents/item)	3.0-4.5			4.6-6.9	8.8-13.2			
Deposit deadline [2]	0800			0001	0230			
Indianapolis:								
Return Letter Fee ($) [1]	1.00/2.00	1.00/2.00		1.00/2.00	1.00/2.00			
Item Fee Range (cents/item)	2.8-4.2	3.2-4.8		3.4-5.1	7.2/10.8			
Deposit deadline [2]	0900	0930		0001	0315			
Milwaukee:								
Return Letter Fee ($) [1]	1.00/2.00			1.00/2.00	1.00/2.00			
Item Fee Range (cents/item)	3.8-5.7			4.0-6.0	7.0-10.5			
Deposit deadline [2]	0915			0100	0215			
8 St. Louis:								
Return Letter Fee ($) [1]	1.50/2.50	2.00/3.00		1.50/2.50	2.00/3.00		1.50/2.50	
Item Fee Range (cents/item)	4.0-6.0	6.2-9.3		4.4-6.6	6.2-9.3		4.8-7.2	
Deposit deadline [2]	0900	0930		0230	0300		2000	
Little Rock:								
Return Letter Fee ($) [1]	0.50/2.25	0.50/2.25		0.50/2.25	0.50/2.25			
Item Fee Range (cents/item)	4.2-6.3	6.2-9.3		5.0-7.5	7.2-10.8			
Deposit deadline [2]	0900	1030		0001	0130			
Louisville:								
Return Letter Fee ($) [1]	0.50/2.50	1.00/3.00		0.50/2.50	1.00/3.00			
Item Fee Range (cents/item)	4.0-6.0	6.4-9.6		4.2-6.3	9.4-14.1			
Deposit deadline [2]	0815	0900		0001	0230			
Memphis:								
Return Letter Fee ($) [1]	1.75/2.75	2.75/3.75		1.75/2.75	2.75/3.75			
Item Fee Range (cents/item)	4.0-6.0	6.2-9.3		4.6-6.9	7.0-10.5			
Deposit deadline [2]	0800	0930		0001	0130			
9 Minneapolis:								
Return Letter Fee ($) [1]	1.00/3.00			1.00/3.00	1.00/3.00		1.00/3.00	
Item Fee Range (cents/item)	4.2-5.1			6.5-7.8	8.5-10.5		0.0-9.9	
Deposit deadline [2]	0800			0001	0230		1230	
Helena:								
Return Letter Fee ($) [1]	1.00/2.00			1.00/2.00	1.00/2.00		1.00/2.00	
Item Fee Range (cents/item)	3.8-5.7			5.4-8.1	7.8-11.7		5.8-8.7	
Deposit deadline [2]	1000			0001	0030		1200	
10 Kansas City:								
Return Letter Fee ($) [1]	1.00/2.00	1.00/2.00					1.00/2.00	
Item Fee Range (cents/item)	3.4-5.1	7.0-10.5					6.0-9.0	
Deposit deadline [2]	0830	0930					0001	
Denver:								
Return Letter Fee ($) [1]	.75/1.75			.75/1.75	.75/1.75		.75/1.75	
Item Fee Range (cents/item)	3.4-5.1			4.0-6.0	8.2-12.3		5.2-7.8	
Deposit deadline [2]	0900			0001	0130		1300	
Oklahoma City:								
Return Letter Fee ($) [1]	1.00/2.00			1.00/2.00	1.00/2.00		1.00/2.00	
Item Fee Range (cents/item)	3.2-4.8			4.0-6.0	6.6-9.9		4.4-6.6	
Deposit deadline [2]	0900			0400	0500		0001	
Omaha:								
Return Letter Fee ($) [1]	1.00/2.00			1.00/2.00	1.00/2.00		1.00/2.00	
Item Fee Range (cents/item)	3.6-5.4			4.4-6.6	6.4-9.6		6.0-9.0	
Deposit deadline [2]	0900			0030	0130		1500	
11 Dallas:								
Return Letter Fee ($) [1]	1.00/2.00			1.00/2.00	1.00/2.00	1.00/2.00	1.00/2.00	1.00/2.00
Item Fee Range (cents/item)	3.2-4.8			4.2-6.3	6.4-9.6	5.0-7.5	5.2-7.8	4.2-6.3
Deposit deadline [2]	0900			0001	0115	0330	2000	2000
Houston:								
Return Letter Fee ($) [1]	1.00/2.00		1.00/2.00	1.00/2.00	1.00/2.00	1.00/2.00		
Item Fee Range (cents/item)	3.2-4.8		2.4-3.6	4.2-6.3	6.4-9.6	3.6-5.4		
Deposit deadline [2]	0815		1100	0001	0030	0200		
San Antonio:								
Return Letter Fee ($) [1]	1.00/2.00			1.00/2.00				
Item Fee Range (cents/item)	3.2-4.8			4.2-6.3				
Deposit deadline [2]	0930			0200				
El Paso:								
Return Letter Fee ($) [1]	1.00/2.00			1.00/2.00	1.00/2.00			
Item Fee Range (cents/item)	3.2-4.8			5.8-8.7	8.6-12.9			
Deposit deadline [2]	0915			0001	0030			

District/Office	City			RCPC			Country	
	Unsorted		Group Sort	Unsorted		Group Sort	Unsorted Regular	Group Sort
	Regular	Premium		Regular	Premium			
12 San Francisco:								
Return Letter Fee ($) [1]	1.00/2.00			1.00/2.00	1.00/2.00		1.00/2.00	
Item Fee Range (cents/item)	4.0–6.0			4.5–6.8	7.7–11.6		5.0–7.5	
Deposit deadline [2]	0730			0001	0200		0001	
Los Angeles:								
Return Letter Fee ($) [1]	1.00/2.00			1.00/2.00	1.00/2.00		1.00/2.00	
Item Fee Range (cents/item)	4.0–6.0			4.5–6.8	7.7–11.6		5.0–7.5	
Deposit deadline [2]	0800			0001	0200		0001	
Portland:								
Return Letter Fee ($) [1]	1.00/2.00			1.00/2.00	1.00/2.00			
Item Fee Range (cents/item)	4.0–6.0			4.5–6.8	7.7–11.6			
Deposit deadline [2]	0900			0001	0200			
Salt Lake City:								
Return Letter Fee ($) [1]	1.00/2.00			1.00/2.00	1.00/2.00			
Item Fee Range (cents/item)	4.0–6.0			4.5–6.8	7.7–11.6			
Deposit deadline [2]	0930			0001	0200			
Seattle:								
Return Letter Fee ($) [1]	1.00			1.00	1.00			
Item Fee Range (cents/item)	4.0–6.0			4.5–6.8	7.7–11.6			
Deposit deadline [2]	0900			0001	0200			

[1] This is a fixed charge that applies to each return letter. The first fee applies to local depositors; the second applies to out-of-zone depositors.
[2] Deadlines reported in military time i.e. 12:01 a.m. is shown as 0001, 9:00 a.m. is shown as 0900, 9:00 p.m. is shown as 2100.

Section B Open to Local Depositors Only

1. Mixed Qualified Return Deposits

District/Office	Deposit Deadline [2]	Item FEE Range by Component (cents)					Return Letter Fee (dollars) [1]
		City	RCPC	Country	Local	Other FED	
1 Boston	2100				5.6 to 8.4	12.0 to 18.0	1.00
	0001				5.6 to 8.4	12.0 to 18.0	1.00
	0700				5.6 to 8.4	12.0 to 18.0	1.00
Lewiston	2100				5.6 to 8.4	12.0 to 18.0	1.00
	0001				5.6 to 8.4	12.0 to 18.0	1.00
Windsor Locks	2100				5.6 to 8.4	12.0 to 18.0	1.00
	0001				5.6 to 8.4	12.0 to 18.0	1.00
2 New York:							
Buffalo	0001	4.4 to 6.6	4.8 to 7.5		5.6 to 8.4	10.2 to 15.3	0.50
	0200	4.4 to 6.6	9.4 to 14.1		5.6 to 8.4	10.2 to 15.3	0.50
Jericho	2200	4.6 to 6.9	4.8 to 7.5		5.6 to 8.4	10.2 to 15.3	0.50
	0001	4.6 to 6.9	4.8 to 7.5		5.6 to 8.4	10.2 to 15.3	0.50
Cranford	2200	4.6 to 6.9	4.8 to 7.5		5.6 to 8.4	10.2 to 15.3	0.50
	0001	4.6 to 6.9	4.8 to 7.5		5.6 to 8.4	10.2 to 15.3	0.50
Utica	2200	4.6 to 6.9	4.8 to 7.5		5.6 to 8.4	10.2 to 15.3	0.50
	0001	4.6 to 6.9	4.8 to 7.5		5.6 to 8.4	10.2 to 15.3	0.50
	0130	4.6 to 6.9	9.4 to 14.1		5.6 to 8.4	10.2 to 15.3	0.50
3 Philadelphia	2100				4.6 to 6.9	10.0 to 15.0	2.25
	2300				4.6 to 6.9	10.0 to 15.0	2.25
4 Cleveland	1900	4.5 to 5.1	6.0 to 6.6			11.4 to 21.0	1.75
	2100	4.5 to 5.1	6.0 to 6.6			11.4 to 21.0	1.75
	2200	4.5 to 5.1	6.0 to 6.6			11.4 to 21.0	1.75
	0001	4.5 to 5.1	6.0 to 6.6			11.4 to 21.0	1.75
Cincinnati	2000	4.5 to 5.1	6.0 to 6.6			11.4 to 21.0	1.75
	2230	4.5 to 5.1	6.0 to 6.6			11.4 to 21.0	1.75
	0001	4.5 to 5.1	6.0 to 6.6			11.4 to 21.0	1.75
Pittsburgh	1600	4.5 to 5.1	6.0 to 6.6			11.4 to 21.0	1.75
	2130	4.5 to 5.1	6.0 to 6.6			11.4 to 21.0	1.75
	0001	4.5 to 5.1	6.0 to 6.6			11.4 to 21.0	1.75
Columbus	1800	4.5 to 5.1	6.0 to 6.6			11.4 to 21.0	1.75
	0001	4.5 to 5.1	6.0 to 6.6			11.4 to 21.0	1.75
5 Richmond	2115	3.2 to 4.8	4.2 to 6.3			10.2 to 15.3	2.00
Baltimore	2030	3.4 to 5.1	4.4 to 6.6			10.4 to 15.4	2.25
	2330	3.4 to 5.1	4.4 to 6.6			10.4 to 15.4	2.25
	1300	3.4 to 5.1	4.4 to 6.6			10.4 to 15.4	2.25
Charlotte	2130	3.2 to 4.8	4.0 to 6.0			10.2 to 15.3	1.50
Columbia	2200	3.4 to 5.1	4.0 to 6.0			10.4 to 15.4	1.75
Charleston	2115	3.6 to 5.4	4.2 to 6.3			11.0 to 16.5	2.00
6 Atlanta	2130	2.4 to 3.6	3.8 to 5.7			8.8 to 13.2	0.50
	1430 (Bat)	2.4 to 3.6	3.8 to 5.7			8.8 to 13.2	0.50
Birmingham	2130	2.6 to 3.9	3.8 to 5.7			9.2 to 13.8	0.50
Jacksonville	2100	2.4 to 3.6	3.6 to 5.4			8.4 to 12.6	0.50
Nashville	2230	2.8 to 4.2	3.8 to 5.7			9.8 to 14.7	0.10
New Orleans	0001	2.4 to 3.6	4.0 to 6.0			8.4 to 12.6	0.50
Miami	1900	2.4 to 3.6	3.6 to 5.4			8.4 to 12.6	0.50

1. MIXED QUALIFIED RETURN DEPOSITS—Continued

District/Office	Deposit Deadline [2]	Item FEE Range by Component (cents)					Return Letter Fee (dollars) [1]
		City	RCPC	Country	Local	Other FED	
7 Chicago	1830	4.4 to 6.6	6.6 to 9.9			11.2 16.8	1.00
	2100	4.4 to 6.6	6.6 to 9.9			11.2 16.8	1.00
	2300	4.6 to 6.8	6.8 to 10.2			11.4 to 17.1	1.00
Detroit	2000				4.2 to 6.3	10.4 to 15.6	1.00
	2315				4.2 to 6.3	10.4 to 15.6	1.00
	0001				4.2 to 6.3	10.4 to 15.6	1.00
Des Moines	2000	3.2 to 4.8	3.6 to 6.0			10.4 to 15.6	1.00
	2300	3.2 to 4.8	3.6 to 6.0			10.4 to 15.6	1.00
Indianapolis	2100	3.0 to 4.5	3.4 to 5.1			9.6 to 14.4	1.00
	2300	3.0 to 4.5	3.4 to 5.1			9.6 to 14.4	1.00
Milwaukee	2130	3.0 to 5.0	3.2 to 5.3			8.7 to 14.5	1.00
	2330	3.0 to 5.0	3.2 to 5.3			8.7 to 14.5	1.00
	0001	3.0 to 5.0	3.2 to 5.3			8.7 to 14.5	1.00
8 St. Louis	1700				4.6 to 6.9	10.4 to 15.6	1.50
	2000				4.6 to 6.9	10.4 to 15.6	1.50
	0130				4.6 to 6.9	10.4 to 15.6	1.50
	0800				4.6 to 6.9	10.4 to 15.6	1.50
Little Rock	1730				5.0 to 7.5	11.4 to 17.1	0.50
	2030				5.0 to 7.5	11.4 to 17.1	0.50
	0001				5.0 to 7.5	11.4 to 17.1	0.50
	0800				5.0 to 7.5	11.4 to 17.1	0.50
Louisville	0001				4.2 to 6.3	10.0 to 15.0	0.50
	0815				4.2 to 6.3	10.0 to 15.0	0.50
Memphis	2200				4.6 to 6.9	9.6 to 14.4	1.75
	0001				4.6 to 6.9	9.6 to 14.4	1.75
	0800				4.6 to 6.9	9.6 to 14.4	1.75
9 Minneapolis	1230				7.5 to 9.0	15.5 to 18.6	1.00
	1830				7.5 to 9.0	15.5 to 18.6	1.00
	2200				7.5 to 9.0	15.5 to 18.6	1.00
	0001				7.5 to 9.0	15.5 to 18.6	1.00
	0800				7.5 to 9.0	15.5 to 18.6	1.00
Helena	1900	3.9 to 5.8	5.5 to 8.2	5.9 to 8.8		11.7 to 17.5	1.00
	0001	3.9 to 5.8	5.5 to 8.2	5.9 to 8.8		11.7 to 17.5	1.00
	0830	3.9 to 5.8	5.5 to 8.2	5.9 to 8.8		11.7 to 17.5	1.00
10 Kansas City	1530	3.6 to 5.4		6.2 to 9.3		11.0 to 16.5	1.00
	1900 (M–Th)	3.6 to 5.4		6.2 to 9.3		11.0 to 16.5	1.00
	2130 (M–Th)	3.6 to 5.4		6.2 to 9.3		11.0 to 16.5	1.00
	0001	3.6 to 5.4		6.2 to 9.3		11.0 to 16.5	1.00
	0830	3.6 to 5.4		6.2 to 9.3		11.0 to 16.5	1.00
	1330 (Sat)	3.6 to 5.4		6.2 to 9.3		11.0 to 16.5	1.00
Denver	1300	3.6 to 5.4	4.2 to 6.3	5.4 to 8.1		10.2 to 15.3	0.75
	1430	3.6 to 5.4	4.2 to 6.3	5.4 to 8.1		10.2 to 15.3	0.75
	0001	3.6 to 5.4	4.2 to 6.3	5.4 to 8.1		10.2 to 15.3	0.75
	2030	3.6 to 5.4	4.2 to 6.3	5.4 to 8.1		10.2 to 15.3	0.75
	0900	3.6 to 5.4	4.2 to 6.3	5.4 to 8.1		10.2 to 15.3	0.75
Oklahoma City	2000	3.4 to 5.1	4.2 to 6.3	4.6 to 6.9		12.6 to 18.9	1.00
	0001	3.4 to 5.1	4.2 to 6.3	4.6 to 6.9		12.6 to 18.9	1.00
	0400	3.4 to 5.1	4.2 to 6.3	4.6 to 6.9		12.6 to 18.9	1.00
	0900	3.4 to 5.1	4.2 to 6.3	4.6 to 6.9		12.6 to 18.9	1.00
Omaha	1500	3.8 to 5.6	4.6 to 6.8	6.2 to 9.3		12.6 to 18.8	1.00
	2000	3.8 to 5.6	4.6 to 6.8	6.2 to 9.3		12.6 to 18.8	1.00
	0030	3.8 to 5.6	4.6 to 6.8	6.2 to 9.3		12.6 to 18.8	1.00
	0900	3.8 to 5.6	4.6 to 6.8	6.2 to 9.3		12.6 to 18.8	1.00
11 Dallas	1400	3.5 to 5.2	4.5 to 6.7	5.5 to 8.2		12.3 to 18.4	1.00
	1900	3.5 to 5.2	4.5 to 6.7	5.5 to 8.2		12.3 to 18.4	1.00
	0001	3.5 to 5.2	4.5 to 6.7	5.5 to 8.2		12.3 to 18.4	1.00
	0900	3.5 to 5.2	4.5 to 6.7	5.5 to 8.2		12.3 to 18.4	1.00
Houston	1200	3.5 to 5.2	4.5 to 6.7			12.3 to 18.4	1.00
	1900	3.5 to 5.2	4.5 to 6.7			12.3 to 18.4	1.00
	0001	3.5 to 5.2	4.5 to 6.7			12.3 to 18.4	1.00
	0900	3.5 to 5.2	4.5 to 6.7			12.3 to 18.4	1.00
San Antonio	1200	3.5 to 5.2	4.5 to 6.7			12.3 to 18.4	1.00
	1900	3.5 to 5.2	4.5 to 6.7			12.3 to 18.4	1.00
	0001	3.5 to 5.2	4.5 to 6.7			12.3 to 18.4	1.00
	0930	3.5 to 5.2	4.5 to 6.7			12.3 to 18.4	1.00
El Paso	1200	3.5 to 5.2	6.1 to 9.1			12.3 to 18.4	1.00
	0001	3.5 to 5.2	6.1 to 9.1			12.3 to 18.4	1.00
	0915	3.5 to 5.2	6.1 to 9.1			12.3 to 18.4	1.00
12 San Francisco	0001				5.0 to 7.5	11.5 to 17.5	1.00
Los Angeles	0001				5.0 to 7.5	11.5 to 17.5	1.00
Portland	0001				5.0 to 7.5	9.5 to 14.0	1.00
Salt Lake City	0001				5.0 to 7.5	9.5 to 14.0	1.00
Seattle	0001				5.0 to 7.5	9.5 to 14.0	1.00

[1] This is a fixed charge that applies to each return letter.

[2] Deadlines reported in military time, i.e. 12:01 a.m. is shown as 0001, 9:00 a.m. is shown as 0900, 9:00 p.m. is shown as 2100. Deposit deadlines are Monday through Friday unless otherwise noted. Availability differs by deadline.

2. Other FED Qualified Return Deposits

District/Office	Deposit Deadline [2]	Item Fee Range (cents)	Return Letter Fee (dollars) [1]
1. Boston	0001	12.0 to 16.0	1.00
Lewiston	0001	12.0 to 16.0	1.00
Windsor Locks	0001	12.0 to 16.0	1.00
2. New York:			
Buffalo	1600	10.2 to 15.3	0.50
	1000	10.2 to 15.3	0.50
Jericho	0001	10.2 to 15.3	0.50
Cranford	2000	9.8 to 14.7	0.50
	2200	11.2 to 16.8	0.50
	0001	10.2 to 15.3	0.50
Utica	0001	10.2 to 15.3	0.50
3. Philadelphia	1400	10.0 to 15.0	2.25
	2300	10.0 to 15.0	2.25
4. Cleveland	1900	11.4 to 21.0	1.75
	2100	11.4 to 21.0	1.75
	2200	11.4 to 21.0	1.75
	0001	11.4 to 21.0	1.75
Cincinnati	2000	11.4 to 21.0	1.75
	2230	11.4 to 21.0	1.75
Pittsburgh	1600	11.4 to 21.0	1.75
	2130	11.4 to 21.0	1.75
	2230	11.4 to 21.0	1.75
	0001	11.4 to 21.0	1.75
Columbus	1800	11.4 to 21.0	1.75
	2200	11.4 to 21.0	1.75
5. Richmond	0001	11.4 to 21.0	1.75
	2000	10.2 to 15.3	2.25
Baltimore	2300	10.2 to 15.3	2.25
	1300	10.4 to 15.4	2.75
	2030	10.4 to 15.4	2.75
	2330	10.4 to 15.4	2.75
Charlotte	2130	10.2 to 15.3	2.25
	2400	10.2 to 15.3	2.25
Columbia	2230	10.4 to 15.4	2.50
	2400	10.4 to 15.4	2.50
Charleston	2115	11.0 to 16.5	2.00
	2400	11.0 to 16.5	2.00
6. Atlanta	2200 (M–Th)	8.4 to 12.6	0.50
	1430 (Sat)	8.4 to 12.6	0.50
Birmingham	1900 (M–Th)	8.8 to 13.2	0.50
	1000 (Sat)	8.8 to 13.2	0.50
Jacksonville	2300 (M–Th)	8.2 to 12.3	0.50
	1200 (Sat)	8.2 to 12.3	0.50
Nashville	2230 (M–Th)	9.4 to 14.1	0.50
	1200 (Sat)	9.4 to 14.1	0.50
New Orleans	2230 (M–Th)	7.4 to 11.1	0.50
	1615 (Fri)	7.4 to 11.1	0.50
	1400 (Sat)	7.4 to 11.1	0.50
Miami	1915 (M–Th)	8.2 to 12.3	0.50
	1500 (Sat)	8.2 to 12.3	0.50
7. Chicago	1830	11.2 to 16.8	1.00
	2100	11.2 to 16.8	1.00
	2300	11.2 to 16.8	1.00
	0001	11.2 to 16.8	1.00
Detroit	2000	10.2 to 15.3	1.00
	2315	10.2 to 15.3	1.00
Des Moines	0001	10.2 to 15.3	1.00
	2000	9.8 to 14.7	1.00
	2200	9.8 to 14.7	1.00
Indianapolis	0001	10.2 to 15.3	1.00
	2100	9.4 to 14.1	1.00
Milwaukee	2300	9.4 to 14.1	1.00
	2130	11.4 to 17.1	1.00
	2330	11.4 to 17.1	1.00
	0001	11.4 to 17.1	1.00
8 St. Louis	1700	10.4 to 15.6	1.50
	2000	10.4 to 15.6	1.50
Little Rock	1730	11.4 to 17.1	0.50
	2030	11.4 to 17.1	0.50
Louisville	0001	10.0 to 15.0	0.50
Memphis	2200	9.6 to 14.4	1.75
9. Minneapolis	1830	15.5 to 18.6	1.00
	2200	15.5 to 18.6	1.00
	1230	15.5 to 18.6	1.00
Helena	1900	11.6 to 17.4	1.00
	0830	11.6 to 17.4	1.00
10. Kansas City	1530 (M–Th)	10.8 to 16.2	1.00
	1900 (M–Th)	1.8 to 16.2	1.00

BEST COPY AVAILABLE

2. OTHER FED QUALIFIED RETURN DEPOSITS—Continued

District/Office	Deposit Deadline [2]	Item Fee Range (cents)	Return Letter Fee (dollars) [1]
	2130 (M–Th)	10.8 to 16.2	1.00
	1330 (Sat)	10.8 to 16.2	1.00
Denver	1430	10.0 to 15.0	0.75
	2030	10.0 to 15.0	0.75
Oklahoma City	2000	12.4 to 18.6	1.00
Omaha	2000	12.4 to 18.6	1.00
11. Dallas	1400	10.8 to 15.8	1.00
	1900	10.8 to 15.8	1.00
Houston	12.00	10.8 to 15.8	1.00
	1900	10.8 to 15.8	1.00
San Antonio	1200	10.8 to 15.8	1.00
	1900	10.8 to 15.8	1.00
El Paso	1200	10.8 to 15.8	1.00
12. San Francisco	1400	10.0 to 15.0	1.00
Los Angeles	1400	10.0 to 15.0	1.00
Portland	1200	8.5 to 12.5	1.00
Salt Lake City	2030	8.5 to 12.5	1.00
Seattle	1200	8.5 to 12.5	1.00

[1] This is a fixed charge that applies to each return letter.
[2] Deadlines reported in military time, i.e. 12:01 a.m. is shown as 0001, 9:00 a.m. is shown as 0900, 9:00 p.m. is shown as 2100. Deposit deadlines are Monday through Friday unless otherwise noted. Availability differs by deadline.

By order of the Board of Governors of the Federal Reserve System, April 5, 1988.

William W. Wiles,

Secretary of the Board.

[FR Doc. 88–7790 Filed 4–8–88; 8:45 am]

BILLING CODE 6210-01-M

VOL 53 ISS 69 AP 11 1988 UMI

federal register

Monday
April 11, 1988

Part IV

Department of Health and Human Services

Alcohol, Drug Abuse, and Mental Health Administration

Mandatory Guidelines for Federal Workplace Drug Testing Programs; Final Guidelines; Notice

VOL 53 ISS 69 AP 11 1988 UMI

DEPARTMENT OF HEALTH AND HUMAN SERVICES

Alcohol, Drug Abuse, and Mental Health Administration

Mandatory Guidelines for Federal Workplace Drug Testing Programs

AGENCY: National Institute on Drug Abuse, HHS.

ACTION: Final Guidelines.

SUMMARY: The Department of Health and Human Services (DHHS) adopts scientific and technical guidelines for Federal drug testing programs and establishes standards for certification of laboratories engaged in urine drug testing for Federal agencies.

EFFECTIVE DATE: April 11, 1988.

FOR FURTHER INFORMATION CONTACT: Maureen Sullivan (301) 443-6780.

SUPPLEMENTARY INFORMATION: These Final Guidelines, titled "Mandatory Guidelines for Federal Workplace Drug Testing Programs" were developed in accordance with Executive Order No. 12564 dated September 15, 1986, and section 503 of Pub. L. 100-71, the Supplemental Appropriations Act for fiscal year 1987 dated July 11, 1987. The statute specifically requires that notice of proposed mandatory guidelines be published in the **Federal Register**; that interested persons be given not less than 60 days to submit written comments; and that after review and consideration of written comments, final guidelines be published which:

I. Establish comprehensive standards for all aspects of laboratory drug testing and laboratory procedures to be applied in carrying out Executive Order No. 12564, including standards which require the use of the best available technology for ensuring the full reliability and accuracy of drug tests and strict procedures governing the chain of custody of specimens collected for drug testing;

II. Specify the drugs for which Federal employees may be tested; and

III. Establish appropriate standards and procedures for periodic review of laboratories and criteria for certification and revocation of certification of laboratories to perform drug testing in carrying out Executive Order No. 12564.

Subpart A of this document contains general provisions. Subpart B, titled "Scientific and Technical Requirements," responds to the mandates in items I and II above. Subpart C, titled "Certification of Laboratories Engaged in Urine Drug Testing for Federal Agencies," responds to item III.

In substance, these Final Guidelines are very similar to those in the Notice of Proposed Guidelines published on August 14, 1987 (52 FR 30638). However, significant editorial and format changes have been made. The Guidelines have been edited as a single, integrated document organized in a more traditional format with subparts, numbered sections, and consistent paragraph designators. Definitions have been grouped together in Subpart A. Rather than repeat identical material, the document contains internal cross-references, particularly from Subpart C to Subpart B. This new organizational approach should add clarity to presentation of the material and aid the cross-referencing and citation of individual sections and paragraphs.

Prior to addressing comments on the specifics of the scientific and technical requirements and the certification program, it is worth noting that a number of commentors perceived the laboratory standards in these Guidelines as redundant, viewing existing regulations, guidelines, and certification/licensure mechanisms of the Medicare and Clinical Laboratory Improvement Act of 1967 (CLIA) interstate licensure program—also administered by DHHS—as sufficient to provide quality assurance for urine drug testing laboratories.

The Medicare and CLIA certification requirements apply to laboratories conducting a wide range of medical tests, having been designed for any medical testing laboratory receiving Medicare/Medicaid reimbursement or performing testing on specimens in interstate commerce, respectively.

The laboratory portion of the President's Drug-Free Federal Workplace Program can be distinguished from the Medicare/CLIA programs by important differences in policies, procedures, and personnel arising from standards appropriate to the application of analytical forensic toxicology for this program. Unique distinguishing features include:

- Rigorous chain of custody procedures for collection of specimens and for handling specimens during testing and storage.
- Stringent standards for making the drug testing site secure, for restricting access to all but authorized personnel, and providing an escort for any others who are authorized to be on the premises;
- Precise requirements for quality assurance and performance testing specific to urine assays for the presence of illegal drugs; and
- Specific educational and experience requirements for laboratory personnel to ensure their competence and credibility as experts on forensic urine drug testing, particularly to qualify them as witnesses in legal proceedings which challenge the finding of the laboratory.

Medicare and CLIA laboratory certification procedures do not provide for quality assurance and performance testing specific to urine drug testing laboratories. With few exceptions, the Medicare and CLIA certification programs do not have employees specifically trained in toxicology to perform the on-site surveys and evaluations of the laboratories and the technologies employed in the laboratories. The Medicare and CLIA standards do not address issues such as cutoff limits for drug detection, grading criteria for the performance testing programs, blind performance testing requirements, specifications for the analytical techniques to be employed, types of drugs to be detected (including metabolites), and detailed outcome measures of performance such as requiring assays of quality control samples and a large number of performance test samples as an initial and ongoing requirement for certification.

The need to assure the protection of individual rights within the context of a drug testing program—linked to both employee assistance programs and the management potential for taking adverse action against an employee—makes essential the development of a separate laboratory certification program to respond to the unique requirements of the program mandated by the President and the Congress. These Guidelines set standards for such a certification program.

The Final Guidelines make clear that they do not apply to drug testing under any legal authority other than E.O. 12564, including testing of persons under the jurisdiction of the criminal justice system, such as arrestees, detainees, probationers, incarcerated persons, or parolees (see § 1.1(e)). The testing of persons in the criminal justice system is different than testing under E.O. 12564 for several reasons: (1) The overriding purpose of the criminal justice system is to protect community safety through the apprehension, adjudication, and punishment of law violators; (2) the incidence of drug use among those under the jurisdiction of the criminal justice system is high; and (3) the legal interests at issue in the criminal justice system, including liberty, privacy, and property interests, are different and, therefore, are subject to established practices, constitutional protections, and evidentiary rules specific to the criminal

justice system. The Guidelines also do not apply to military testing of service personnel or applicants to the military.

Response to Comments

Written comments to the Notice of Proposed Guidelines published August 14, 1987, were received from approximately 150 individuals, organizations, and Federal agencies. All written comments were reviewed and taken into consideration in the preparation of the Final Guidelines. This section summarizes major comments and the Department's response to them. Similar comments are considered together.

1. Several commenters requested that the Guidelines require a split sample technique in which a second sample or a portion of a sample could be saved for further testing. Although this possibility was considered, it is viewed as a cumbersome and expensive process involving the collection of two separate sets of samples and the retention of one for an indefinite period of time in some type of secured long term refrigerated storage. The use of a split sample was suggested as a mechanism to overcome perceived problems arising out of situations such as sample mixups, erroneous identification of samples, and lost samples. The Department does not agree that split or additional sample proposal would have any scientific advantage over the current system nor would they increase reliability. In fact, such a system could increase the risk of administrative error by doubling the labeling, initialing, storage, and accountability requirements. Furthermore, the Guidelines already include sufficient safeguards to eliminate the problems the use of split or additional samples are thought to address; e.g., detailed safeguards for labeling and chain of custody of the urine sample. Accordingly, we do not project any real scientific, chain of custody, or reliability benefits sufficient to justify placing the added requirement of collection and storage of split samples of Federal agencies and have rejected the split sample requirement. Furthermore, these Guidelines specifically reject allowing the tested employee or anyone else from presenting to the Medical Review Officer a split sample or private sample that does not fully comply with these Guidelines.

2. A number of commentors said that specific educational and experience requirements for laboratory directors and supervisors were too restrictive and that specific board certifications, experience, and degree requirements were also too restrictive and did not provide any additional quality assurance. In many cases these individuals recommended that the current Medicare and CLIA personnel standards be used in place of the standards proposed in the Guidelines. Other individuals and organizations stated that the proposed personnel standards in the Guidelines were not stringent enough. Some recommended that specific standards also be adopted for the personnel performing the tests.

The Department carefully considered the comments about the personnel standards proposed in the Guidelines—most of which came from employees of clinical laboratories or organizations representing those employees—from the perspective of the intent of the Guidelines. It is not possible to reconcile the divergent viewpoint represented in the comments. In this connection it should be noted that credentialing standards for laboratory personnel have been an issue for a number of years in other laboratory programs administered by DHHS, as well as among those who commented on the Notice proposing these Guidelines.

The laboratory personnel requirements in the Guidelines are designated to assure that any individual responsible for test-review and result-reporting is qualified to perform the function and could appear as an expert witness in a court challenge of the results. This requires familiarity with a wide range of material related to test selection, quality assurance, interferences with various tests, maintenance of chain of custody, documentation of findings, interpretation of test results, validation and verfication of test results, and the ability to testify as an expert in legal proceedings. The Guidelines set personnel requirements for the individuals responsible for day-to-day management and operation of laboratories engaged in urine drug testing for Federal agencies aimed at ensuring those competencies.

While a consultant may be able to carry out some of these specialized functions, it is essential that comprehensive oversight and control of the responsibilities cited above be exercised by those who are directly responsible on a day-to-day basis for the laboratory, who are accountable for the test results, and who may be called on to consult with the agency for which testing is performed as well as to appear at any legal proceeding to defend the quality of testing in the laboratory. Therefore, the Guidelines set functional employee qualification standards which are essential to the mission of a drug testing laboratory and require that laboratory employees meet those standards. For the purpose of meeting laboratory personnel requirements, no provision is made for the use of consultants who are not involved in the day-to-day management or operation of the laboratory.

The Final Guidelines set functional requirements for individuals engaged in the day-to-day management and operation of laboratories engaged in urine drug testing for Federal agencies. They do not specify requirements for other personnel, including employees who perform the assays, but rather depend on the ability of those responsible individuals to select and oversee properly qualified employees in each specific laboratory, and they depend on outcome measures of laboratory performance such as performance testing. The individual responsible for day-to-day laboratory management is responsible for determining staffing needs and types of personnel required to perform particular functions in a specific facility. The individual responsible for day-to-day laboratory operations is responsible for supervision of analysts performing drug tests and related duties. Outcome measures will provide the responsible individual with feedback on the performance of laboratory employees. Within this framework, the Guidelines do not establish qualifications for additional laboratory positions.

The individuals who perform the tests are a vital part of any laboratory operation, and there is no intent to minimize their importance by omitting qualifications for them. However, by holding the appropriate laboratory officials responsible for review and certification of all test results before they are sent forward and by relying on various quality control and quality assurance measures, performance testing and on-site evaluations to provide direct measures of the quality of testing, the Department expects to ensure a standard of excellence in drug testing without setting additional personnel requirements. This reliance on the qualifications of the individuals responsible for the day-to-day management and operation of urine drug testing laboratories does not prohibit the laboratories themselves from setting additional employees standards which may include specific credentials, certifications, licenses, registries, etc., for specific functions.

However, once a laboratory is certified in accordance with these Guidelines, laboratory employees whose functions are prescribed by these

Guidelines are deemed qualified. These Guidelines establish the exclusive standards for qualifying or certifying these employees involved in urainalysis testing. Certification of a laboratory under these Guidelines shall be a determination that all appropriate qualification requirements have been met. Agencies may not establish or negotiate additional requirements for these laboratory personnel.

Some commentors felt that references to director, supervisor of analysts, certifying officials, and other analysts did not clearly distinguish between those positions. Other commentors criticized the establishment of specific position titles. We have clarified laboratory employee functions and dropped the use of specific position titles in 2.3 Laboratory Personnel. A laboratory engaged in urine drug testing for Federal agencies must have personnel to perform the following functions:

- Be responsible for the day-to-day management and for the scientific and technical performance of the drug testing laboratory (even where another individual has overall responsibility for an entire multispeciality laboratory).
- Attest to the validity of the laboratory's test reports. This individual may be any employee who is qualified to be responsible for the day-to-day management or operation of the drug testing laboratory.
- Be responsible for the day-to-day operation of the drug testing laboratory and for the direct supervision of analysts performing drug tests and related duties.

In response to those commentors who were concerned about the proposed requirement for a Ph.D. to qualify as a laboratory director, the Final Guidelines provide that the individual responsible for the day-to-day drug testing laboratory management may have education and experience in lieu of a Ph.D. to demonstrate an individual's scientific qualifications in analytical forensic toxicology (see 2.3(a)(2)(iii)). Together with the specific analytical forensic toxicology experience required in 2.3(a)(2)(iv), scientific qualifications may be demonstrated by showing "training and experience comparable to a Ph.D. in one of the natural sciences, such as a medical or scientific degree and in addition have training and laboratory or research experience in biology, chemistry, and pharmacology or toxicology." This Ph.D. comparability provision eliminates the utility of the "grandfather" clause in the proposed guidelines, a clause which would have qualified incumbent laboratory directors who have a graduate degee in the natural sciences followed by extensive experience (6 years postgraduate), in analytical forensic toxicology. Thus, the Final Guidelines omit the "Grandfather" clause.

The Ph.D comparability provision, while not requiring specific research experience, recognizes research as one mechanism for demonstrating scientific competency to be responsible for day-to-day laboratory management. Lack of research experience does not disqualify an individual for that function if he or she has other appropriate training or experience. The Ph.D. comparability provision also makes explicit that a medical degree is an acceptable alternative to the Ph.D. for this purpose, provided, of course, that the M.D. has the other requisite training and experience.

The Final Guidelines do not require specific board certification for any laboratory employees. Some commentors were concerned particularly that individuals who supervise analysts would have to be on the registry of the American Society for Clinical Pathologists (ASCP). The proposed guidelines cited the ASCP registry, but only as an example of the type of experience and education that would qualify an individual to oversee the day-to-day operations of a urine drug testing laboratory, including the supervision of analysts. The important factors associated with day-to-day operation and supervision of analysts in a forensic toxicology laboratory are captured in 2.3(c). Therefore, the Final Guidelines omit any reference to a registry as a factor in qualifying an individual for this function. Likewise, the Guidelines do not refer to a registry for the individual responsible for day-to-day laboratory management or the individual responsible for attesting to the validity of the laboratory's test reports, but rely instead on education and experience qualifications set out in 2.3 (a) and (b), respectively.

Consistent with editorial revisions throughout the Final Guidelines, editorial changes in the personnel provisions are intended to clarify specific education, training, and experience requirements for individuals to carrying out vital laboratory functions, to simplify by adopting consistent terminology, and to eliminate the need to compare similar provisions by using identical provisions when appropriate. In this regard, the personnel provisions in Subpart B, which sets out the scientific and technical requirements, and in Subpart C, which sets out the standards for certification of laboratories, are identical: Subpart C simply cross-references the personnel provisions in Subpart B.

3. A number of commentors said that it was unnecessarily restrictive to require that the screening and confirmation tests be performed at the same site. They believed that the majority of tests would be negative and that would reduce the number of samples that must be shipped to another site and would, in turn, prevent sample mixup and loss.

After having carefully reviewed this issue, the Department has determined that both screening and confirmatory testing must be performed at the same time (3.5). Although use of separate screening and confirmation laboratories may produce adequate results, Pub. L. 100-71 mandates that the Secretary set standards which "require * * * strict procedures governing the chain of custody of specimens collected for drug testing." Same-site screening and confirmation is the best method for maintaining such strict control in the chain of custody.

Requiring the two tests to be performed in the same laboratory will reduce problems inherent in having two test sites, such as problems maintaining chain of custody forms at two test sites; need for having two separate laboratory forms; possible mix-ups and loss of samples in transit between sites; potential delays in reporting results; and potential for having results reported only on the basis of an initial screening test.

Several commentors indicated that if screening were done on-site this would reduce the number of subsequent requirements for rescreening and result in fewer samples being sent to another site. The Federal work force testing program does not envision performing initial tests at the collection site. Therefore, considerations concerning on-site initial screening tests are not relevant to the current Federal testing program.

4. Several commenters indicated that a number of terms were not defined or that there was no single section defining terms used in the Notice of Proposed Guidelines. The Final Guidelines include a section to centralize the definitions that appeared in the proposed document and add definitions to several previously undefined terms (1.2). The term "proficiency testing" has been edited throughout to read "performance testing" as a more precise reflection of the nature of the testing with which these Guidelines are concerned.

5. A number of commenters said that the cutoff limits for the reporting of positive results should be higher or

lower than those proposed (see 52 FR 30641). There also were commentors who believed that the cutoff limits for the screening and confirmation tests should be set at the same level.

The initial immunoassay test cutoff is established at levels generally similar to those used by the Department of Defense and available with commercial immunoassays. These levels are consistent with detection of recent drug use.

The second set of cutoff levels is for the gas chromatography/mass spectrometry (GC/MS) confirmatory test, chosen so that the specimens determined to be positive by the first technique (screening technique) could be confirmed at a reasonable level of analytical accuracy.

The Final Guidelines retain all the proposed initial test cutoff values (2.4(e)). Confirmation for marijuana is changed by 5 ng/ml in accordance with DOD experience. Likewise, confirmation for amphetamines reflects the cutoff intended for the notice of proposed guidelines consistent with DOD levels. Cutoffs for specific opiates (morphine and codeine) and amphetamines (amphetamine and methamphetamine) are delineated for clarity (2.4(f)).

In finalizing both screening and confirmation cutoffs, among the matters considered were prevalence rate; cross-reactivity; state of the art in drug detection; and the experience of the Department of Defense and other groups in large-volume drug testing programs.

6. Several commentors indicated that alcohol should be included among the substances to be tested. The Department acknowledges the significance of alcohol and its use as well as its potential impact on performance in the workplace. In any event, alcohol is not an illegal substance, and Executive Order 12564, which these Guidelines implement, only authorizes testing for illicit drugs listed in Schdule I and Schedule II of the Controlled Substances Act. However, nothing in these Guidelines restricts the authority of agencies to test for alcohol under authorities other than E.O. 12564.

7. Several commentors indicated that photo identifications should be required at the testing site to ensure that the tested individual is properly identified. We concur that proper identification should be provided by the individuals at the test site to assure that the correct individual will be tested. Since most Federal agencies already issue photo identification cards to their employees and most employees have a driver's license with photo identification, it is not unreasonable to require this form of identification for individuals presenting themselves for testing. In cases where the individual does not have a proper photo identification, the collection site person must get the employee's supervisor, coordinator of the drug testing program, or any other agency official who knows the employee to provide a positive identification (2.2(f)(2)).

8. Several commentors suggested that toilets, water faucets, and other sources of water which could be used as adulterants should be taped shut or sealed to prevent adulteration of the sample at the collection site. The Department acknowledges that sources of water should not be available which would enable an individual to adulterate the sample. However, there are also needs, such as hand washing, for a relatively convenient source of water. These Guidelines cannot anticipate the needs at each collection site and the hardship which would be imposed by sealing all sources of water at the site. However, the proposed and Final Guidelines do include in 2.2 precautions in specimen collection procedures to ensure the integrity and identity of the specimen. Because we have taken reasonable steps to ensure that specimens are not adulterated at the collection site and because there are practical reasons for having a convenient source of water, the Final Guidelines do not require that all sources of water be taped or sealed shut but rather require that precautions be taken to ensure that unadulterated specimens are obtained. Among the precautions included in 2.2(f) to ensure unadulterated specimens is a requirement to use a bluing agent so that the water in the toilet tank and bowl are colored blue and that there be no other source of water in the enclosure where the sampe is given.

9. Several commentors requested more specific guidelines to define "unusual behavior" at the urine collection site which would give reason to believe a particular individual may alter or substitute the specimen to be provided which, in turn, would trigger the requirement to obtain a second specimen under direct observation of a same gender collection site person (see 2.2(f)(16)). The guidelines focus on whether there is "reason to believe" (see 1.2 for definition) that a sample is adulterated. Observations of unusual behavior may bear on whether there is a "reason to believe" and for that reason the Guidelines require such observations to be documented in the permanent record book. While it may be desirable to provide specific descriptions of or guidelines to identify "unusual behavior," the Department cannot foresee or define every contingency which might occur. Thus, "unusual behavior" is not further defined in the Guidelines.

It should be noted, however, that other indicia of "reason to believe" are set out in 2.2(f). For example, 2.2(f)(12) and (13) require a temperature reading upon collection of the specimen and indicate those temperatures which would give rise to a reason to believe that a specimen may be altered or substituted. Elsewhere the Guidelines require the collection site person to inspect the sample for unusual color or other signs of contaminants (2.2(f)(14)). Likewise, if a collection site person sees unusual behavior which causes him or her to question the integrity of the sample such that it leads to a reason to believe that a particular individual may alter or substitute the specimen to be provided, the Guidelines require that such an observation be noted in writing in the permanent record book (2.2(f)(8)). The Final Guidelines also add a requirement that any "reason to believe" observation be concurred in by a higher level supervisor of the collection site person (2.2(f)(23).

With regard to reason to believe that a particular individual may alter or substitute the specimen based on the specimen's temperature falling outside the acceptable range, the Final Guidelines permit an individual to volunteer to have an oral temperature reading to provide evidence that the temperature of the specimen was consistent with the individual's body temperature, i.e., an individual's fever could cause an elevation in the temperature of the specimen (2.2(f)(13)).

10. Several commentors said that if the first specimen is subject to a reason to believe that the particular individual may alter or substitute the specimen which would require a second specimen to be collected, the second specimen should be collected immediately. The Department concurs that the second specimen should be collected as soon as the need for it is established. Therefore, the Guidelines provide that the second specimen shall be collected as soon as possible whenever there is reason to believe that the particular individual may alter or substitute the specimen. (2.2(f)(16)).

11. Several commentors wanted to know the basis for the choice of cocaine and marijuana as the drugs required to be screened by all agencies. The requirement that all agencies screen for cocaine and marijuana was based on the incidence and prevalence of their abuse in the general population and the experiences of the Department of

Defense and the Department of Transportation in screening their work forces. The choice of cocaine and marijuana as the only substances for which all agencies must test takes into account that the predictive value of any positive diagnostic test is a function of prevalence in the tested population. Agencies have also been authorized to test for phencyclidine, amphetamines, and opiates because their high incidence and prevalence in the general population may warrant testing of particular agency work forces for these illegal substances (2.1(a)).

Federal agency requests for screening drugs other than the five authorized in these Guidelines must be made in writing to the Secretary. The Secretary will review the requests on a case-by-case basis and make a determination of the acceptability of the plans, cutoff limits, and testing protocols. The Secretary's determination shall be limited to the use of appropriate science and technology and shall not otherwise restrict agency authority to test for drugs included in schedules I and II of the Controlled Substances Act (2.1(b)).

12. Several commentors wanted clarification of the procedures for the Medical Review Officer's (MRO's) protocols for performing the review function. They also wanted to know if individual employees would have an opportunity to discuss the Medical Review Officer's findings with him or her. Procedures for the conduct of the medical review function, including a handbook to cover the activities of the MRO, will be disseminated to all Federal agencies. While there is agreement that there should be an opportunity for some type of medical interview between the medical review officer and the employee prior to the MRO's final decision concerning a positive test result, a face-to-face interview may not always be feasible or possible. For example, they may be in widely distant geographic areas, and it may be more practical to arrange a telephone or teleconference interview than a direct meeting. Therefore, we have provided for flexibility in the mechanism for this communication and have stated at 2.7(c) that prior to making a final decision to verify a positive result, the MRO shall give the individual employee an opportunity to discuss the test result with him or her. The Medical Review Officer shall not, however, consider the results of urine samples that are not obtained or processed in accordance with these Guidelines.

13. Several commentors indicated that color blindness measurements for laboratory workers were not necessary since none of the currently approved methodologies involved the use of visual color measurements. The requirement that laboratories maintain files which include information on employee color vision was originally proposed because some immunoassay systems have color-coded components and the reliable manipulation of such systems requires good color vision. In view of the methodologies currently approved in the Guidelines, we agree that an across-the-board requirement to maintain files on color blindness is not warranted. However, the Department has a more general concern that laboratories employ individuals who have the ability to perform any necessary test procedures. Therefore, the Guidelines generally provide at 2.3(f) that laboratory personnel files shall include results of any tests which establish employee competency for the position he or she holds and provide, as a specific example, a test for color blindness if the employee will be using color coded analytical systems. Similarly, the final Guidelines do not require that laboratories maintain any other medical data about employees unless that data would be necessary to show the employee's competency to perform a specific job function.

While these Guidelines do not require laboratories to maintain general health or medical information in employee files, they do not preclude a laboratory from maintaining such files. What 2.3(f) is intended to do is require laboratories to maintain sufficient files to show employee competency for the position he or she holds.

14. One commentor requested that the laboratory notify agency management officials of a positive result at the same time the Medical Review Officer is notified, so that individuals in sensitive positions or in positions where they could pose a hazard to other individuals or the public could be temporarily removed from these positions, with no punitive action, until after the Medical Review Officer had completed the review process. After considering both the safety implications and the employee rights in this type of notification, the Department has determined that it would be inappropriate to report a result before the Medical Review Officer has the opportunity to review the facts and circumstances and make a decision on the meaning of the test results. In instances where an agency determines that it has a need for immediate action or might have such a need based on its mission, the agency should develop a mechanism to expedite the review process or allow the Medical Review Officer to require review of the individual's general fitness to continue performing a specific function. Circumventing the review system would abridge necessary protections for employees and could result in prejudging an individual employee's case (2.7).

15. Several commentors called for a medical review board instead of a single Medical Review Officer. A primary purpose of the Medical Review Officer position is to provide for the privacy and confidentiality of the employee's personal medical history during the course of reviewing positive test results. To call together a board which would be privy to that private information would increase the exposure of the employee's medical history to several other individuals. Furthermore, the Department views the physician in the Medical Review Officer's role in retaining overall responsibility for reviewing and interpreting positive test results. There is no restriction on the Medical Review Officer's seeking advice on an ad hoc or a continuous basis from an individual or group if he or she does not breach employee confidentiality during the course of the review and interpretation of the employee's test results. Because the Department is vitally concerned with maintaining confidentiality and privacy and because the Medical Review Officer is not now limited in seeking advice from persons who might have served on the proposed medical review board (e.g., the drug program coordinator, employee assistance program officials, or any other agency employee), the Guidelines will continue to call for review by a single medical officer rather than a board (2.7).

16. Several commentors requested that the term "inexpensive immunoassay" to describe the initial test be eliminated since cost should be left to the agency and the laboratory and techniques other than immunoassay should be used to test for certain drugs. The term "inexpensive" was not intended to set specifications for price; that is a matter for negotiation between the laboratory and the contracting Federal agency. It was meant to serve as part of a generic description of the procedure and purpose of a screening assay. The term "initial test" has been revised in 1.2 and does not use the word "inexpensive".

17. Several commentors indicated that more specific guidelines should be issued to assure the security of test results whether sent by mail or by electronic means. The Guidelines clarify

that the laboratory must ensure the security of data transmission and limit access to any data transmission, storage, and retrieval system (2.4(g)(4)).

18. Several commentors stated that individuals should have access to all records, data, and documents relating to their test results and the certification of the laboratory which performed the urine drug test. Section 503 of Pub. L. 100–71 provides that any Federal employee who is the subject of a drug test shall, upon written request, have access to any records relating to his or her drug test and any records relating to the results of any relevant certification, review, or revocation-of-certification proceedings. In response to this comment the provisions of the statute have been set out in a new paragraph at 2.9. The Department anticipates that individuals will be able to obtain information about their own test results from the agency's Medical Review Officer, employee assistance program, or other staff person designated by the agency. Any other relevant information will be made available in accordance with the statute.

19. Several laboratories indicated that the monthly statistical summary required of the testing laboratories would be costly and an excessive burden. The Department views the monthly data as necessary for several purposes including evaluating the laboratory testing program, gathering statistical data to evaluate the drug testing program's effectiveness, and providing demographic data on drug use by the Federal work force. The information will assist in making decisions concerning changes in policy or program implementation and identifying specific programs for attention. The Department anticipates that the cost of providing the data will be built into the contract the laboratory signs with each agency. Therefore, provision of the data will be a function for which the laboratory is duly compensated, not an undue cost or burden (2.4(g)(6)).

20. One commentor indicated that samples for which the initials on the specimen bottle and in the permanent record book do not match should not be rejected automatically, since that would provide an opportunity for individuals to attempt to have their specimens rejected when they knew the specimens would test positive. We have considered the fact that individuals might deliberately alter their initials in an attempt to have their samples rejected. However, we do not anticipate that samples should be thrown out solely on the basis of unmatched initials on the specimen bottle and in the permanent record book. If unmatched initials provide reason to believe that a particular individual may have altered or substituted the specimen, both the proposed and the Final Guidelines provide that the specimen be forwarded for testing along with a second sample obtained as soon as possible after reason to believe the individual may have altered or substituted the specimen is established (2.2(f) (15) and (16)). The Final Guidelines ensure the identification of the person from whom the specimen is collected through the requirement for photo identification (see 2.2(f)(2)). In addition, a principal responsibility of the collection site person is to gather and verify information on site and to detect any problems with the identification of the specimen. Until experience in the program indicates that misidentified samples arising out of unmatched initials is a significant problem, the Guidelines will require that the individual initial the specimen bottle and sign the permanent record book to certify that the identified sample is the one collected from the individual.

21. One commentor asked if the Guidelines apply to Federal contract employees. The Guidelines do not apply to Federal contract employees; however, any agency may require a contractor to test its own employees following the procedures in the Guidelines by making the requirement a term or condition of the contract.

22. One commentor indicated that the proposed requirement for signing a procedure manual on an annual basis was in conflict with current DHHS efforts in the Medicare and CLIA programs to delete the annual signing requirement and replace it with a requirement that the manual be signed initially and whenever changes are made. We concur with the comment that the important factor is that the manual be signed by the responsible individual whenever a procedure is instituted or changed or whenever a new individual becomes responsible for the day-to-day management of the drug testing laboratory. The Guidelines do not require annual signing of the procedure manual.

The on-site review of the laboratory together with the assignment to an individual of the overall responsibility for the testing will assure that the procedures in the manual are current and followed. If the procedures in the manual are not current or followed, it is an indication that the responsible individual is not performing the oversight function appropriate to the management of the laboratory.

We have also clarified that the individual responsible for the day-to-day management of the drug testing laboratory is the individual responsible for signing the manual (2.3(a)(5)). It is not appropriate for the individual who is responsible for day-to-day operations and supervision of analysts or for any other individual to be delegated this responsibility since the manual is the vehicle for selection of methodologies, and the approval of methodologies is a principal reason for requiring the individual responsible for day-to-day management of the drug testing laboratory to possess detailed knowledge in the area of toxicology.

23. One commentor indicated that laboratories should be notified when they may discard samples. We have reviewed the comment and concur that the agency should be able to notify the laboratory in writing if it determines that samples no longer need to be retained because no further action is pending which will require the samples. Both 2.4(g)(8) and 2.4(h) permit the agency to instruct or authorize storage for less than the period for which there is a storage requirement.

24. Several commentors indicated a discrepancy in the periods for maintenance of frozen samples in storage—1 year in the proposed guidelines and 6 months in Appendix B to the proposed guidelines. The time interval in the appendix was in error. The Final Guidelines consistently call for frozen storage of confirmed positive samples for 1 year (2.4(h)). Note that the Appendix has been omitted, although pertinent provisions from it are integrated in the Final Guidelines.

25. In response to concern that specimens may be misused to test for physiological states other than drug abuse (e.g., pregnancy), a provision has been added to the Final Guidelines to prohibit the specimens collected for urine drug testing from being used for any other types of analyses unless otherwise authorized by law. It is important to the integrity and goals of the President's program to achieve a drug-free work place that any specimens collected for that purpose not be analyzed or used for inappropriate purposes. To ensure that outcome, a paragraph has been added at 2.1(c) stating that specimens may be used only to test for those drugs included in the agency drug-free workplace plan and may not be used to conduct any other analysis or test unless the agency is authorized by law to perform other analyses.

26. One commentor indicated that the individuals permitted in the "secure test area" should include routine service and maintenance personnel and that these individuals should not require escorts. While providing escorts for all employees, including service and maintenance personnel, may cause considerable inconvenience, unless the facilities are secured at night and all materials locked away with no possible access, there is always the potential for tampering with the specimens or test results. The Guidelines make no provision for routine service and maintenance personnel to enter the secure test area without an escort (2.4(a)).

27. One commentor suggested that collection personnel be provided with gloves or other protective garments to prevent contamination of the personnel from the urine. The Department encourages a protected work environment for collection site personnel, including any necessary protective garments. Various State and Federal guidelines provide for the health and safety of employees. Collection agents are expected to be aware of and to comply with such provisions to safeguard their own health and the health and safety of employees. However, no requirement was added to the Guidelines to require provision of protective garments to collection personnel.

28. One commentor recommended that DHHS use its own personnel to investigate any quality assurance problems which arise with a particular laboratory instead of requiring each agency to have its own investigative staff. Other commentors viewed agencies as lacking the in-house expertise to perform this analysis, and it was not clear to them who in each agency should carry out such an investigation. The Final Guidelines reflect a decision that the Secretary (which might include a DHHS contractor or DHHS recognized certification program) shall assume this investigative responsibility and carry out the related coordinating activities. A coordinating mechanism within the National Institute on Drug Abuse (NIDA) will ensure that all agencies are aware of problems with any given laboratory. Conducting investigations and coordinating findings through DHHS will eliminate the need to provide a more complex mechanism for agencies to notify each other about laboratory performance (2.5(d)(4)).

29. Several commentors said that the format for reporting employee drug test results was not sufficiently clear and that while there was a discussion of the mechanism for reporting performance test results, there was no comparable discussion on reporting employee test results. 2.4(g), Reporting Results, clarifies that laboratories will not report quantitation on test results but will report whether a result is positive or negative and that this is indicative of a result being above or below a particular cutoff limit. A negative report does not signify the absence of a particular drug or metabolite but only that the particular drugs or metabolites screened for were not detected at a specified concentration (i.e., cutoff level).

Quantitation will not be reported to the agency for confirmed positive reports in order to provide for identical reporting by the laboratory of performance test specimens and employee specimens. However, quantitation may be obtained by the Medical Review Officer on request from the laboratory. In the case of the opiates, we have indicated that the particular opiate to be reported will depend on the amounts of morphine and codeine detected by the confirmation test. We have included the reporting scheme in the scientific and technical requirements as well as in the revision of the requirements for reporting performance test results (2.4(g), 3.11 which cross-references 2.4(g), and 3.17(f)).

30. The Final Guidelines attempt to clarify the purpose of the certification program, since the comments reflect uncertainty as to what certification implies and what would be surveyed in the process of certifying a laboratory. Subpart C permits DHHS to recognize certification programs run by other organizations. These programs may be private accrediting organizations that are recognized by the Secretary to determine whether laboratories meet the Guideline requirements. Any laboratory accredited by these organizations in accordance with these Guidelines is deemed to be a certified laboratory, thus making it eligible to perform urine drug testing for Federal agencies. DHHS is contemplating publishing standards for recognition of private accrediting organizations in the near future.

The provisions of Subpart C apply to any laboratory which has or seeks a contract to perform, or otherwise performs urine drug testing for Federal agencies under a drug testing program conducted under E.O. 12564. Only certified laboratories will be authorized to perform urine drug testing for Federal agencies. However, in order to create a pool of qualified laboratories to bid on agency contracts to perform such testing, the Secretary may certify laboratories as contract eligible that meet the requirements of Subpart C. This pool of qualified laboratories will lead to competitive pricing and better services for Federal agencies.

The certification process will be limited to the five classes of drugs (2.1)(a) (1) and (2)) and the methods (2.4 (e) and (f)) specified in these Guidelines. The laboratory will be surveyed and performance tested only for these methods and drugs. Certification of a laboratory indicates that any test result reported by the laboratory for the Federal Government meets the standards in these Guidelines for the five classes of drugs using the methods specified herein. The Guidelines require that a certified laboratory must inform its non-Federal clientele when testing procedures are to be those specified by these Guidelines. Non-Federal purchasers are free to bargain with a certified laboratory for any standards they may deem appropriate.

31. The Guidelines delete the checklist in Appendix B of the proposed certification standards. The checklist was initially intended to provide a tool for the inspectors of laboratories to use in conducting their on-site inspections and to enumerate the standards contained in the section on the certification program published in the **Federal Register**. However, there was confusion regarding whether the checklist represented an additional or different set of requirements. Relevant portions of the checklist have been integrated in the Guidelines. The checklist itself will be revised to correspond to the requirements in the Guidelines and will be made available to laboratories by the DHHS-recognized certification program(s).

32. Several commentors asked that the specific criteria used by the group(s) who will perform the certification function for the Department be detailed in these Guidelines. In response, the Guidelines include a new section explaining how performance testing will be evaluated for initial certification as well as for previously certified laboratories (3.19 (a) and (b)). All major aspects of the certification program, including personnel and quality assurance and quality control requirements, are included in Subpart C of these Guidelines. With the addition of 3.19 (a) and (b), we believe the Guidelines are appropriately specific and there is no need to include additional detail in the Guidelines concerning the certification process.

33. Some commentors indicated that the number of blind performance test samples required to be run by the

laboratories (i.e., 1,000) for initial certification and (i.e., 250 per quarter) for continuing certification was excessive and would be too costly. The commentors also indicated that it was not clear whether the laboratory or the submitting organization would bear the cost of the samples and if it were necessary for each submitting organization to submit this number of samples to each laboratory. In response to the comments, we have revised this section to indicate that each agency shall submit blind performance test specimens to each laboratory it contracts with in the amount of at least 50 percent of the total number of samples submitted (up to a maximum of 500 samples) during the initial 90-day period of program implementation and a minimum of 10 percent of all samples (to a maximum of 250) submitted per quarter thereafter. The Final Guidelines also clarify that approximately 80 percent of the blind performance test samples are to be blank (i.e., certified to be drug free) and the remaining samples are to be positives (2.52(d)(3) and 3.7). The cost of the blind performance test samples will be borne by the submitting agency.

34. Several commentors requested corrective action and reanalysis of previously run specimens in the case of discovered laboratory administrative error. They also requested that the union and all employees who tested positive be notified of the error in writing. The recommendation was to notify all employees with positive results who were tested between the time of resolution of the error and the preceding cycle of correct results. In the case of an administrative error, there are no plans to automatically have all specimens retested. The decision on whether to retest will be dependent on the type and extent of the error. For example, if a single employee's test results were transcribed incorrectly, nothing would be gained from rerunning all the specimens in a given timeframe since it would not change the values attributed to the specimens. If an error occurred such that it was not clear whose specimen was being tested and which results belonged to which specimen, this would require retesting of the group for which the values where uncertain and for those analytes for which the values were uncertain. However, it would be unproductive to require the automatic retesting of all specimens for any error.

Agency policy under which individuals are notified of errors will depend on the circumstances. If the error is corrected before the results are reported to any employee, it is unnecessary to notify each employee that an error was discovered and subsequently corrected. If a discovered error affects an employee after results have been reported, the Medical Review Officer will be notified and the affected employee will also be notified through the appropriate mechanisms established by each agency.

35. Several commentors indicated that the laboratory contract should be suspended if the laboratory committed the same administrative error twice and that the designated reviewing official's discretion to continue a laboratory in the program should be more limited or more clearly defined. The Department has reviewed the comments concerning the point at which a contract should be suspended because of an administrative error and submits that the current policy allows sufficient flexibility and protection to the employee and the laboratory and that it should not be changed. There are no circumstances under which administrative or human error can be entirely eliminated. The major assurance of accuracy in the overall program is the series of checks to assure that such errors are detected and corrected. The reviewing official has been given the necessary flexibility and definition of authority to make the appropriate technical and program judgments concerning the status of each facility and to assure that reasonable and responsible decisions are made. Nevertheless, the Final Guidelines add several features to put greater responsibility on the individual responsible for the day-to-day management of the drug testing laboratory for the quality assurance program and ensuring that quality assurance procedures are followed. These Guidelines also more clearly describe what constitutes a quality assurance and quality control program to detect and correct errors (2.5) and a program of performance testing (3.17–3.19).

We have chosen not to include a formal definition of administrative or clerical error in the Guidelines as was suggested. Among the errors to which either term refers are incorrect transcription of test results or errors in recording specimen identities, i.e., errors that are not due to the analysis of the specimens with regard to analytical accuracy, precision, interpretation of test results, or calibration of equipment. Clearly analytical errors are not considered "administrative." While it is not possible to write guidelines that cover every possibility, at no place in these Guidelines are incorrect analyses considered administrative error but rather are consistently treated as a basis for prompt action against the laboratory by the responsible officials.

36. Several commentors indicated that laboratory inspections should be conducted unannounced and that union representatives should be permitted to accompany the inspection teams. The Guidelines neither require nor prohibit unannounced inspections. They contemplate that agencies will, through their contract with a certified laboratory, specify the terms and conditions of inspections in accordance with the requirements in the Guidelines. If individuals other than members of the inspection team were entitled to accompany the inspectors, it would significantly complicate coordination and conduct of the inspections. More importantly, we see additional participants in the inspection as inhibiting the laboratory's freedom to provide complete cooperation out of concern for protecting proprietary information. While some laboratories may be willing to provide escorted tours to union officials to illustrate the quality of their processes, the Guidelines do not establish a right for union officials to participate in inspections incident to certification of laboratories under these Guidelines (2.4(1) and 3.20).

37. One commentor indicated that any of the five general factors indicated in 3.13(b) as a possible basis for revocation in the certification requirements should inevitably lead to revocation without any further determination that the revocation is "necessary." The issue of how many potential grounds for revocation are necessary to determine that revocation of a laboratory is necessary was considered when the list of grounds was developed. The Department views the nature and seriousness of the facts concerning the grounds for revocation as factors to be weighed in deciding to revoke a certification. It is difficult and would not contribute to the maintenance of high quality testing standards to develop *a priori* statements about the magnitude of an offense or a combination of violations and to formulate necessary actions in response to each possible violation of the provisions of 3.13. All five factors listed are considered serious violations of these certification criteria, and it is not necessary for more than one factor to be violated to take action against a laboratory. However, the Guidelines retain the flexibility for the Secretary to determine that revocation is necessary to ensure the full reliability and accuracy of drug tests and the accurate reporting of test results (3.13(b)).

38. Several commentors indicated that when a laboratory fails a performance test it would be inordinately expensive (especially in high volume laboratories) to retest all samples since the last performance test the laboratory passed and to test for all analytes rather than for the one analyte for which the laboratory had failed performance testing. The reason for retesting all positive samples since the last successful performance test is that the quality of the test results has been called into question. In order to verify test results for the period between a successful performance testing and the failed testing, it will be necessary to retest all specimens tested positive for which an incorrect analysis may have been performed. It is not routinely necessary to retest for all analytes but only for those on which the laboratory failed its performance testing. However, the laboratory may be required to test for other analytes if the performance test failure reflects broader problems (3.19(b)(1)(v)).

39. Several commentors indicated that performance testing every other month is excessive and that quarterly testing would be sufficient to assure the quality of the testing. Others indicated that fewer challenges per shipment would be adequate to determine the quality of the laboratory. Still other individuals stated that the limits for acceptable performance on performance tests were too high in terms of the concentrations used. Others said that the grading criterion of failure based on one false positive was too strict. We have reviewed the concerns that bimonthly performance testing is excessive and maintain that the use of performance tests is a valid outcome measure of performance and will assist in the evaluation of quality of the laboratory performance. If future experience with the program indicates that a lesser frequency will assure the quality of the testing, we will revise the frequency and the number of specimens accordingly. Relatively frequent performance testing reduces the time period for which samples may have to be rerun in case of performance test failure (3.17).

To the extent that the Guidelines amended the cutoff limits for drugs for which employees may be tested for consistency with those currently used by the Department of Defense, it was necessary to modify the values of the various performance test samples correspondingly. We have clarified that a laboratory must achieve an overall grade of 90 percent on the first three cumulative shipments of performance tests and that if such a poor grade is obtained on the first or second challenge that a laboratory cannot achieve an overall grade of 90 percent on the three successive performance test challenges, then the laboratory will fail at that point. Laboratories already in the program must achieve a grade of 90 percent on each shipment of performance testing. It was unclear in the proposed notice whether the grade of 90 percent referred only to the positive samples. We intend that the 90 percent refer only to positive samples, since any negative sample giving rise to a false positive would be the basis for automatic disqualification for initial certification. It also was unclear whether the 90 percent referred to performance on all drugs in the shipment, not on each drug tested. We have clarified the Guidelines in both these areas. We adopted a strategy requiring 90 percent for all drugs because it is not always feasible to have a sufficient number of challenges for each drug in each shipment to avoid a single failure on a drug leading to a failing grade of less than 90 percent (3.19(b)(2)).

40. Some commentors thought laboratories should be required to notify all users if their certification was revoked. Since the requirements in these Guidelines only apply to certification for Federal drug testing programs, it would be inappropriate to require laboratories to notify non-Federal users of revocation or suspension.

41. We have not adopted the recommendations that any changes in the Guidelines be accomplished by publication of a notice, review of comments, and then publication of final changes. (Section 503 of Pub. L. 100-71 required such steps for initial development of these Guidelines.) The time required for this process would not permit rapid adjustment to changes in technology. Accordingly, the Guidelines retain the provision permitting final revision of these Guidelines by publication of a notice in the **Federal Register** (1.3).

42. One commentor suggested that only positive tests be certified as to accuracy and validity before reporting. Although this practice would reduce paperwork, it does not reflect the potential impact on public safety of false negative results. The Guidelines continue to require that negative results be reviewed carefully and attested to by the proper officials in the same way as positive results (2.4(g)).

43. One commentor wanted us to specify the time the individual responsible for day-to-day management must spend in the laboratory. No change has been made in the Guidelines. The critical factor here is the quality of the work and not the absolute number of hours spent. The Department views the use of outcome measures of performance for the laboratory as more effective in assuring accurate and reliable test results than attempting to set hours for the responsible individual particularly in view of the qualifications which the Guidelines set for the individual responsible for day-to-day management of the drug testing laboratory.

44. The criterion for retesting specimens (i.e., those being challenged) was clarified to indicate that in performing a retest the laboratory must confirm the presence of the substance but does not have to confirm that it is present above the cutoff level. Since the drug levels may deteriorate with time, it is only necessary to show that the drug (or its metabolite) is present to reconfirm its presence during retesting (2.4(i)).

45. A provision has been added to the Guidelines requiring that laboratories be capable of testing for at least the five classes of drugs specified in the Guidelines. The laboratories are being required to possess the flexibility to test for all the specified classes of drugs in order to assure that they have a sufficient range of capabilities to respond to the agencies' testing protocols, including testing for reasonable suspicion (3.4).

46. Several Federal agencies commenting on the proposed guidelines sought waivers of particular provisions in reliance on the original Scientific and Technical Guidelines issued February 13, 1987, which provided that, "Agencies may not deviate from the provisions of these Guidelines without the written approval of the Secretary, Health and Human Services or his designee." This waiver statement, which was not explicit in the proposed guidelines, is included at 1.1(f). Absent such a waiver, these Guidelines represent the exclusive standard for urinalysis testing and agencies may not deviate from these established procedures.

In order to clarify that the laboratory certification standards apply to laboratories which have or seek certification to perform urine drug testing for Federal agencies, a paragraph was added to the applicability section, 1.1(c), stating that Subpart C of the Guidelines applies to any laboratory which has or seeks such certification and that certification is required to perform urine drug testing for Federal agencies.

Section 4(d) of E.O. 12564 states that "agencies shall conduct their drug testing programs in accordance with * * * [scientific and technical] guidelines" promulgated by the Secretary of Health and Human Services. Since the Guidelines impose mandatory requirements on a Government-wide basis, they are exempt from the duty to bargain under section 7117(a)(1) of the Federal Service Labor-Management Relations Statute.

Information Collection Requirements

Information collection and recordkeeping requirements which would be imposed on laboratories engaged in urine drug testing for Federal agencies concern quality assurance and quality control; security and chain of custody; documentation; reports; performance testing; and inspections as set out in 3.7, 3.8, 3.10, 3.11, 3.17, and 3.20. To facilitate ease of use and uniform reporting, standard forms have been developed for chain of custody records and the permanent record books as referenced in 2.2(c) and (f).

The information collection and recordkeeping requirements contained in these Final Guidelines have been approved by the Office of Management and Budget under section 3504(h) of the Paperwork Reduction Act of 1980 and have been assigned control number 09300130, approved through April 30, 1989.

Date: April 1, 1988.

Robert E. Windom,

Assistant Secretary for Health.

Date: April 1, 1988.

Otis R. Bowen,

Secretary.

These Final Mandatory Guidelines are hereby adopted in accordance with Executive Order 12564 and section 503 of Pub. L. 100-71 as set forth below:

MANDATORY GUIDELINES FOR FEDERAL WORKPLACE DRUG TESTING PROGRAMS

Subpart A—General

1.1 Applicability.
1.2 Definitions.
1.3 Future Revisions.

Subpart B—Scientific and Technical Requirements

2.1 The Drugs.
2.2 Specimen Collection Procedures.
2.3 Laboratory Personnel.
2.4 Laboratory Analysis Procedures.
2.5 Quality Assurance and Quality Control.
2.6 Interim Certification Procedures.
2.7 Reporting and Review of Results.
2.8 Protection of Employee Records.
2.9 Individual Access to Test and Laboratory Certification Results.

Subpart C—Certification of Laboratories Engaged in Urine Drug Testing for Federal Agencies

3.1 Introduction.
3.2 Goals and Objectives of Certification.
3.3 General Certification Requirements.
3.4 Capability to Test for Five Classes of Drugs.
3.5 Initial and Confirmatory Capability at Same Site.
3.6 Personnel.
3.7 Quality Assurance and Quality Control.
3.8 Security and Chain of Custody.
3.9 One-Year Storage for Confirmed Positives.
3.10 Documentation.
3.11 Reports.
3.12 Certification.
3.13 Revocation.
3.14 Suspension.
3.15 Notice; Opportunity for Review.
3.16 Recertification.
3.17 Performance Test Requirement for Certification.
3.18 Performance Test Specimen Composition.
3.19 Evaluation of Performance Testing.
3.20 Inspections.
3.21 Results of Inadequate Performance.

Authority: E.O. 12564 and sec. 503 of Pub. L. 100-71.

Subpart A—General

1.1 Applicability.

(a) These mandatory guidelines apply to:

(1) Executive Agencies as defined in 5 U.S.C. 105;

(2) The Uniformed Services, as defined in 5 U.S.C. 2101 (3) (but excluding the Armed Forces as defined in 5 U.S.C. 2101(2));

(3) And any other employing unit or authority of the Federal Government except the United States Postal Service, the Postal Rate Commission, and employing units or authorities in the Judicial and Legislative Branches.

(b) Any agency or component of an agency with a drug testing program in existence as of September 15, 1986, and the Departments of Transportation and Energy shall take such action as may be necessary to ensure that the agency is brought into compliance with these Guidelines no later than 90 days after they take effect, except that any judicial challenge that affects these Guidelines shall not affect drug testing programs subject to this paragraph.

(c) Except as provided in 2.6, Subpart C of these Guidelines (which establishes laboratory certification standards) applies to any laboratory which has or seeks certification to perform urine drug testing for Federal agencies under a drug testing program conducted under E.O. 12564. Only laboratories certified under these standards are authorized to perform urine drug testing for Federal agencies.

(d) The Intelligence Community, as defined by Executive Order No. 12333, shall be subject to these Guidelines only to the extent agreed to by the head of the affected agency.

(e) These Guidelines do not apply to drug testing conducted under legal authority other than E.O. 12564, including testing of persons in the criminal justice system, such as arrestees, detainees, probationers, incarcerated persons, or parolees.

(f) Agencies may not deviate from the provisions of these Guidelines without the written approval of the Secretary. In requesting approval for a deviation, an agency must petition the Secretary in writing and describe the specific provision or provisions for which a deviation is sought and the rationale therefor. The Secretary may approve the request upon a finding of good cause as determined by the Secretary.

1.2 Definitions.

For purposes of these Guidelines the following definitions are adopted:

Aliquot A portion of a specimen used for testing.

Chain of Custody Procedures to account for the integrity of each urine specimen by tracking its handling and storage from point of specimen collection to final disposition of the specimen. These procedures shall require that an approved agency chain of custody form be used from time of collection to receipt by the laboratory and that upon receipt of the laboratory an appropriate laboratory chain of custody form(s) account for the sample or sample aliquots within the laboratory. Chain of custody forms shall, at a minimum, include an entry documenting date and purpose each time a specimen or aliquot is handled or transferred and identifying every individual in the chain of custody.

Collection Site A place designated by the agency where individuals present themselves for the purpose of providing a specimen of their urine to be analyzed for the presence of drugs.

Collection Site Person A person who instructs and assists individuals at a collection site and who receives and makes an initial examination of the urine specimen provided by those individuals. A collection site person shall have successfully completed training to carry out this function.

Confirmatory Test A second analytical procedure to identify the presence of a specific drug or metabolite which is independent of the initial test and which uses a different technique and chemical principle from that of the intitial test in order to ensure reliability

and accuracy. (At this time gas chromatography/mass spectrometry (GC/MS) is the only authorized confirmation method for cocaine, marijuana, opiates, amphetamines, and phencyclidine.)

Initial Test (also known as Screening Test) An immunossay screen to eliminate "negative" urine specimens from further consideration.

Medical Review Officer A licensed physician responsible for receiving laboratory results generated by an agency's drug testing program who has knowledge of substance abuse disorders and has appropriate medical training to interpret and evaluate an individual's positive test result together with his or her medical history and any other relevant biomedical information.

Permanent Record Book A permanently bound book in which identifying data on each specimen collected at a collection site are permanently recorded in the sequence of collection.

Reason to Believe Reason to believe that a particular individual may alter or substitute the urine specimen as provided in section 4(c) of E.O. 12564.

Secretary The Secretary of Health and Human Services or the Secretary's designee. The Secretary's designee may be contractor or other recognized organization which acts on behalf of the Secretary in implementing these Guidelines.

1.3 Future Revisions.

In order to ensure the full reliability and accuracy of drug assays, the accurate reporting of test results, and the integrity and efficacy of Federal drug testing programs, the Secretary may make changes to these Guidelines to reflect improvements in the available science and technology. These changes will be published in final as a notice in the **Federal Register**.

Subpart B—Scientific and Technical Requirements

2.1 The Drugs.

(a) The President's Executive Order 12564 defines "illegal drugs" as those included in Schedule I or II of the Controlled Substances Act (CSA), but not when used pursuant to a valid prescription or when used as otherwise authorized by law. Hundreds of drugs are covered under Schedule I and II and while it is not feasible to test routinely for all of them, Federal drug testing programs shall test for drugs as follows:

(1) Federal agency applicant and random drug testing programs shall at a minimum test for marijuana and cocaine;

(2) Federal agency applicant and random drug testing programs are also authorized to test for opiates, amphetamines, and phencyclidine; and

(3) When conducting reasonable suspicion, accident, or unsafe practice testing, a Federal agency may test for any drug listed in Schedule I or II of the CSA.

(b) Any agency covered by these guidelines shall petition the Secretary in writing for approval to include in its testing protocols any drugs (or classes of drugs) not listed for Federal agency testing in paragraph (a) of this section. Such approval shall be limited to the use of the appropriate science and technology and shall not otherwise limit agency discretion to test for any drugs covered under Schedule I or II of the CSA.

(c) Urine specimens collected pursuant to Executive Order 12564, Pub. L. 100-71, and these Guidelines shall be used only to test for those drugs included in agency drug-free workplace plans and may not be used to conduct any other analysis or test unless otherwise authorized by law.

(d) These Guidelines are not intended to limit any agency which is specifically authorized by law to include additional categories of drugs in the drug testing of its own employees or employees in its regulated industries.

2.2 Specimen Collection Procedures.

(a) Designation of Collection Site. Each agency drug testing program shall have one or more designated collection sites which have all necessary personnel, materials, equipment, facilities, and supervision to provide for the collection, security, temporary storage, and shipping or transportation of urine specimens to a certified drug testing laboratory.

(b) Security Procedures shall provide for the designated collection site to be secure. If a collection site facility is dedicated solely to urine collection, it shall be secure at all times. If a facility cannot be dedicated solely to drug testing, the portion of the facility used for testing shall be secured during drug testing.

(c) Chain of Custody. Chain of custody standardized forms shall be properly executed by authorized collection site personnel upon receipt of specimens. Handling and transportation of urine specimens from one authorized individual or place to another shall always be accomplished through chain of custody procedures. Every effort shall be made to minimize the number of persons handling specimens.

(d) Access to Authorized Personnel Only. No unauthorized personnel shall be permitted in any part of the designated collection site when urine specimens are collected or stored.

(e) Privacy. Procedures for collecting urine specimens shall allow individual privacy unless there is reason to believe that a particular individual may alter or substitute the specimen to be provided.

(f) Integrity and Identity of Specimen. Agencies shall take precautions to ensure that a urine specimen not be adulterated or diluted during the collection procedure and that information on the urine bottle and in the record book can identify the individual from whom the specimen was collected. The following minimum precautions shall be taken to ensure that unadulterated specimens are obtained and correctly identified:

(1) To deter the dilution of specimens at the collection site, toilet bluing agents shall be placed in toilet tanks wherever possible, so the reservoir of water in the toilet bowl always remains blue. There shall be no other source of water (e.g., no shower or sink) in the enclosure where urination occurs.

(2) When an individual arrives at the collection site, the collection site person shall request the individual to present photo identification. If the individual does not have proper photo identification, the collection site person shall contact the supervisor of the individual, the coordinator of the drug testing program, or any other agency official who can positively identify the individual. If the individual's identity cannot be established, the collection site person shall not proceed with the collection.

(3) If the individual fails to arrive at the assigned time, the collection site person shall contact the appropriate authority to obtain guidance on the action to be taken.

(4) The collection site person shall ask the individual to remove any unnecessary outer garments such as a coat or jacket that might conceal items or substances that could be used to tamper with or adulterate the individual's urine specimen. The collection site person shall ensure that all personal belongings such as a purse or briefcase remain with the outer garments. The individual may retain his or her wallet.

(5) The individual shall be instructed to wash and dry his or her hands prior to urination.

(6) After washing hands, the individual shall remain in the presence of the collection site person and shall not have access to any water fountain, faucet, soap dispenser, cleaning agent or

any other materials which could be used to adulterate the specimen.

(7) The individual may provide his/her specimen in the privacy of a stall or otherwise partitioned area that allows for individual privacy.

(8) The collection site person shall note any unusual behavior or appearance in the permanent record book.

(9) In the exceptional event that an agency-designated collection site is not accessible and there is an immediate requirement for specimen collection (e.g., an accident investigation), a public rest room may be used according to the following procedures: A collection site person of the same gender as the individual shall accompany the individual into the public rest room which shall be made secure during the collection procedure. If possible, a toilet bluing agent shall be placed in the bowl and any accessible toilet tank. The collection site person shall remain in the rest room, but outside the stall, until the specimen is collected. If no bluing agent is available to deter specimen dilution, the collection site person shall instruct the individual not to flush the toilet until the specimen is delivered to the collection site person. After the collection site person has possession of the specimen, the individual will be instructed to flush the toilet and to participate with the collection site person in completing the chain of custody procedures.

(10) Upon receiving the specimen from the individual, the collection site person shall determine that it contains at least 60 milliliters of urine. If there is less than 60 milliliters of urine in the container, additional urine shall be collected in a separate container to reach a total of 60 milliliters. (The temperature of the partial specimen in each separate container shall be measured in accordance with paragraph (f)(12) of this section, and the partial specimens shall be combined in one container.) The individual may be given a reasonable amount of liquid to drink for this purpose (e.g., a glass of water). If the individual fails for any reason to provide 60 milliliters of urine, the collection site person shall contact the appropriate authority to obtain guidance on the action to be taken.

(11) After the specimen has been provided and submitted to the collection site person, the individual shall be allowed to wash his or her hands.

(12) Immediately after the specimen is collected, the collection site person shall measure the temperature of the specimen. The temperature measuring device used must accurately reflect the temperature of the specimen and not contaminate the specimen. The time from urination to temperature measurement is critical and in no case shall exceed 4 minutes.

(13) If the temperature of a specimen is outside the range of 32.5°–37.7°C/90.5°–99.8°F, that is a reason to believe that the individual may have altered or substituted the specimen, and another specimen shall be collected under direct observation of a same gender collection site person and both specimens shall be forwarded to the laboratory for testing. An individual may volunteer to have his or her oral temperature taken to provide evidence to counter the reason to believe the individual may have altered or substituted the specimen caused by the specimen's temperature falling outside the prescribed range.

(14) Immediately after the specimen is collected, the collection site person shall also inspect the specimen to determine its color and look for any signs of contaminants. Any unusual findings shall be noted in the permanent record book.

(15) All specimens suspected of being adulterated shall be forwarded to the laboratory for testing.

(16) Whenever there is reason to believe that a particular individual may alter or substitute the specimen to be provided, a second specimen shall be obtained as soon as possible under the direct observation of a same gender collection site person.

(17) Both the individual being tested and the collection site person shall keep the specimen in view at all times prior to its being sealed and labeled. If the specimen is transferred to a second bottle, the collection site person shall request the individual to observe the transfer of the specimen and the placement of the tamperproof seal over the bottle cap and down the sides of the bottle.

(18) The collection site person and the individual shall be present at the same time during procedures outlined in paragraphs (f)((19)–(f)(22) of this section.

(19) The collection site person shall place securely on the bottle an identification label which contains the date, the individual's specimen number, and any other identifying information provided or required by the agency.

(20) The individual shall initial the identification label on the specimen bottle for the purpose of certifying that it is the specimen collected from him or her.

(21) The collection site person shall enter in the permanent record book all information identifying the specimen. The collection site person shall sign the permanent record book next to the identifying information.

(22) The individual shall be asked to read and sign a statement in the permanent record book certifying that the specimen identified as having been collected from him or her is in fact that specimen he or she provided.

(23) A higher level supervisor shall review and concur in advance with any decision by a collection site person to obtain a specimen under the direct observation of a same gender collection site person based on a reason to believe that the individual may alter or substitute the specimen to be provided.

(24) The collection site person shall complete the chain of custody form.

(25) The urine specimen and chain of custody form are now ready for shipment. If the specimen is not immediately prepared for shipment, it shall be appropriately safeguarded during temporary storage.

(26) While any part of the above chain of custody procedures is being performed, it is essential that the urine specimen and custody documents be under the control of the involved collection site person. If the involved collection site person leaves his or her work station momentarily, the specimen and custody form shall be taken with him or her or shall be secured. After the collection site person returns to the work station, the custody process will continue. If the collection site person is leaving for an extended period of time, the specimen shall be packaged for mailing before he or she leaves the site.

(g) Collection Control. To the maximum extent possible, collection site personnel shall keep the individual's specimen bottle within sight both before and after the individual has urinated. After the specimen is collected, it shall be properly sealed and labeled. An approved chain of custody form shall be used for maintaining control and accountability of each specimen from the point of collection to final disposition of the specimen. The date and purpose shall be documented on an approved chain of custody form each time a specimen is handled or transferred and every individual in the chain shall be identified. Every effort shall be made to minimize the number of persons handling specimens.

(h) Transportation to Laboratory. Collection site personnel shall arrange to ship the collected specimens to the drug testing laboratory. The specimens shall be placed in containers designed to minimize the possibility of damage during shipment, for example, specimen boxes or padded mailers; and those containers shall be securely sealed to eliminate the possibility of undetected tampering. On the tape sealing the

container, the collection site supervisor shall sign and enter the date specimens were sealed in the containers for shipment. The collection site personnel shall ensure that the chain of custody documentation is attached to each container sealed for shipment to the drug testing laboratory.

2.3 Laboratory Personnel.

(a) Day-to-Day Management.

(1) The laboratory shall have a qualified individual to assume professional, organizational, educational, and administrative responsibility for the laboratory's urine drug testing facility.

(2) This individual shall have documented scientific qualifications in analytical forensic toxicology. Minimum qualifications are:

(i) Certification as a laboratory director by the State in forensic or clinical laboratory toxicology; or

(ii) A Ph.D. in one of the natural sciences with an adequate undergraduate and graduate education in biology, chemistry, and pharmacology or toxicology, or

(iii) Training and experience comparable to a Ph.D. in one of the natural sciences, such as a medical or scientific degree with additional training and laboratory/research experience in biology, chemistry, and pharmacology or toxicology; and

(iv) In addition to the requirements in (i), (ii), and (iii) above, minimum qualifications also require:

(A) Appropriate experience in analytical forensic toxicology including experience with the analysis of biological material for drugs of abuse, and

(B) Appropriate training and/or experience in forensic applications of analytical toxicology, e.g., publications, court testimony, research concerning analytical toxicology of drugs of abuse, or other factors which qualify the individual as an expert witness in forensic toxicology.

(3) This individual shall be engaged in and responsible for the day-to-day management of the drug testing laboratory even where another individual has overall responsibility for an entire multispecialty laboratory.

(4) This individual shall be responsible for ensuring that there are enough personnel with adequate training and experience to supervise and conduct the work of the drug testing laboratory. He or she shall assure the continued competency of laboratory personnel by documenting their inservice training, reviewing their work performance, and verifying their skills.

(5) This individual shall be responsible for the laboratory's having a procedure manual which is complete, up-to-date, available for personnel performing tests, and followed by those personnel. The procedure manual shall be reviewed, signed, and dated by this responsible individual whenever procedures are first placed into use or changed or when a new individual assumes responsibility for management of the drug testing laboratory. Copies of all procedures and dates on which they are in effect shall be maintained. (Specific contents of the procedure manual are described in 2.4(n)(1).)

(6) This individual shall be responsible for maintaining a quality assurance program to assure the proper performance and reporting of all test results; for maintaining acceptable analytical performance for all controls and standards; for maintaining quality control testing; and for assuring and documenting the validity, reliability, accuracy, precision, and performance characteristics of each test and test system.

(7) This individual shall be responsible for taking all remedial actions necessary to maintain satisfactory operation and performance of the laboratory in response to quality control systems not being within performance specifications, errors in result reporting or in analysis of performance testing results. This individual shall ensure that sample results are not reported until all corrective actions have been taken and he or she can assure that the tests results provided are accurate and reliable.

(b) Test Validation. The laboratory's urine drug testing facility shall have a qualified individual(s) who reviews all pertinent data and quality control results in order to attest to the validity of the laboratory's test reports. A laboratory may designate more than one person to perform this function. This individual(s) may be any employee who is qualified to be responsible for day-to-day management or operation of the drug testing laboratory.

(c) Day-to-Day Operations and Supervision of Analysts. The laboratory's urine drug testing facility shall have an individual to be responsible for day-to-day operations and to supervise the technical analysts. This individual(s) shall have at least a bachelor's degree in the chemical or biological sciences or medical technology or equivalent. He or she shall have training and experience in the theory and practice of the procedures used in the laboratory, resulting in his or her thorough understanding of quality control practices and procedures; the review, interpretation, and reporting of test results; maintenance of chain of custody; and proper remedial actions to be taken in response to test systems being out of control limits or detecting aberrant test or quality control results.

(d) Other Personnel. Other technicians or nontechnical staff shall have the necessary training and skills for the tasks assigned.

(e) Training. The laboratory's urine drug testing program shall make available continuing education programs to meet the needs of laboratory personnel.

(f) Files. Laboratory personnel files shall include: resume of training and experience; certification or license, if any; references; job descriptions; records of performance evaluation and advancement; incident reports; and results of tests which establish employee competency for the position he or she holds, such as a test for color blindness, if appropriate.

2.4 Laboratory Analysis Procedures.

(a) Security and Chain of Custody. (1) Drug testing laboratories shall be secure at all times. They shall have in place sufficient security measures to control access to the premises and to ensure that no unauthorized personnel handle specimens or gain access to the laboratory processes or to areas where records are stored. Access to these secured areas shall be limited to specifically authorized individuals whose authorization is documented. With the exception of personnel authorized to conduct inspections on behalf of Federal agencies for which the laboratory is engaged in urine testing or on behalf of the Secretary, all authorized visitors and maintenance and service personnel shall be escorted at all times. Documentation of individuals accessing these areas, dates, and time of entry and purpose of entry must be maintained.

(2) Laboratories shall use chain of custody procedures to maintain control and accountability of specimens from receipt through completion of testing, reporting of results, during storage, and continuing until final disposition of specimens. The date and purpose shall be documented on an appropriate chain of custody form each time a specimen is handled or transferred, and every individual in the chain shall be identified. Accordingly, authorized technicians shall be responsible for each urine specimen or aliquot in their possession and shall sign and complete chain of custody forms for those specimens or aliquots as they are received.

(b) Receiving. (1) When a shipment of specimens is received, laboratory personnel shall inspect each package for evidence of possible tampering and compare information on specimen bottles within each package to the information on the accompanying chain of custody forms. Any direct evidence of tampering or discrepancies in the information on specimen bottles and the agency's chain of custody forms attached to the shipment shall be immediately reported to the agency and shall be noted on the laboratory's chain of custody form which shall accompany the specimens while they are in the laboratory's possession.

(2) Specimen bottles will normally be retained within the laboratory's accession area until all analyses have been completed. Aliquots and the laboratory's chain of custody forms shall be used by laboratory personnel for conducting initial and confirmatory tests.

(c) Short-Term Refrigerated Storage. Specimens that do not receive an initial test within 7 days of arrival at the laboratory shall be placed in secure refrigeration units. Temperatures shall not exceed 6°C. Emergency power equipment shall be available in case of prolonged power failure.

(d) Specimen Processing. Laboratory facilities for urine drug testing will normally process specimens by grouping them into batches. The number of specimens in each batch may vary significantly depending on the size of the laboratory and its workload. When conducting either initial or confirmatory tests, every batch shall contain an appropriate number of standards for calibrating the instrumentation and a minimum of 10 percent controls. Both quality control and blind performance test samples shall appear as ordinary samples to laboratory analysts.

(e) Initial Test. (1) The initial test shall use an immunoassay which meets the requirements of the Food and Drug Administration for commercial distribution. The following initial cutoff levels shall be used when screening specimens to determine whether they are negative for these five drugs or classes of drugs:

	Initial test level (ng/ml)
Marijuana metabolites	100
Cocaine metabolites	300
Opiate metabolites	[1] 300
Phencyclidine	25
Amphetamines	1,000

[1] 25ng/ml if immunoassay specific for free morphine.

(2) These test levels are subject to change by the Department of Health and Human Services as advances in technology or other considerations warrant identification of these substances at other concentrations. Initial test methods and testing levels for other drugs shall be submitted in writing by the agency for the written approval of the Secretary.

(f) Confirmatory Test. (1) All specimens identified as positive on the initial test shall be confirmed using gas chromatography/mass spectrometry (GC/MS) techniques at the cutoff values listed in this paragraph for each drug. All confirmations shall be by quantitative analysis. Concentrations which exceed the linear region of the standard curve shall be documented in the laboratory record as "greater than highest standard curve value."

	Confirmatory test level (ng/ml)
Marijuana metabolite [1]	15
Cocaine metabolite [2]	150
Opiates:	
Morphine	* 300
Codeine	* 300
Phencyclidine	25
Amphetamines:	
Amphetamine	500
Methamphetamine	500

[1] Delta-9-tetrahydrocannabinol-9-carboxylic acid.
[2] Benzoylecgonine.

(2) These test levels are subject to change by the Department of Health and Human Services as advances in technology or other considerations warrant identification of these substances at other concentrations. Confirmatory test methods and testing levels for other drugs shall be submitted in writing by the agency for the written approval of the Secretary.

(g) Reporting Results. (1) The laboratory shall report test results to the agency's Medical Review Officer within an average of 5 working days after receipt of the specimen by the laboratory. Before any test result is reported (the results of initial tests, confirmatory tests, or quality control data), it shall be reviewed and the test certified as an accurate report by the responsible individual. The report shall identify the drugs/metabolites tested for, whether positive or negative, and the cutoff for each, the specimen number assigned by the agency, and the drug testing laboratory specimen identification number. The results (positive and negative) for all specimens submitted at the same time to the laboratory shall be reported back to the Medical Review Officer at the same time.

(2) The laboratory *shall report as negative* all specimens which are negative on the initial test or negative on the confirmatory test. Only specimens confirmed positive shall be reported positive for a specific drug.

(3) The Medical Review Officer may request from the laboratory and the laboratory shall provide quantitation of test results. The Medical Review Officer may not disclose quantitation of test results to the agency but shall report only whether the test was positive or negative.

(4) The laboratory may transmit results to the Medical Review Officer by various electronic means (for example, teleprinters, facsimile, or computer) in a manner designed to ensure confidentiality of the information. Results may not be provided verbally by telephone. The laboratory must ensure the security of the data transmission and limit access to any data transmission, storage, and retrieval system.

(5) The laboratory shall send only to the Medical Review Officer a certified copy of the original chain of custody form signed by the individual responsible for day-to-day management of the drug testing laboratory or the individual responsible for attesting to the validity of the test reports.

(6) The laboratory shall provide to the agency official responsible for coordination of the drug-free workplace program a monthly statistical summary of urinalysis testing of Federal employees and shall not include in the summary any personal identifying information. Initial and confirmation data shall be included from test results reported within that month. Normally this summary shall be forwarded by registered or certified mail not more than 14 calendar days after the end of the month covered by the summary. The summary shall contain the following information:

(i) Initial Testing:

(A) Number of specimens received;

(B) Number of specimens reported out; and

(C) Number of specimens screened positive for:

Marijuana metabolites
Cocaine metabolites
Opiate metabolites
Phencyclidine
Amphetamines

(ii) Confirmatory Testing:

(A) Number of specimens received for confirmation;

(B) Number of specimens confirmed positive for:

Marijuana metabolite

Cocaine metabolite
Morphine, codeine
Phencyclidine
Amphetamine
Methamphetamine

(7) The laboratory shall make available copies of all analytical results for Federal drug testing programs when requested by DHHS or any Federal agency for which the laboratory is performing drug testing services.

(8) Unless otherwise instructed by the agency in writing, all records pertaining to a given urine specimen shall be retained by the drug testing laboratory for a minimum of 2 years.

(h) Long-Term Storage. Long-term frozen storage (−20 °C or less) ensures that positive urine specimens will be available for any necessary retest during administrative or disciplinary proceedings. Unless otherwise authorized in writing by the agency, drug testing laboratories shall retain and place in properly secured long-term frozen storage for a minimum of 1 year all specimens confirmed positive. Within this 1-year period an agency may request the laboratory to retain the specimen for an additional period of time, but if no such request is received the laboratory may discard the specimen after the end of 1 year, except that the laboratory shall be required to maintain any specimens under legal challenge for an indefinite period.

(i) Retesting Specimens. Because some analytes deteriorate or are lost during freezing and/or storage, quantitation for a retest is not subject to a specific cutoff requirement but must provide data sufficient to confirm the presence of the drug or metabolite.

(j) Subcontracting. Drug testing laboratories shall not subcontract and shall perform all work with their own personnel and equipment unless otherwise authorized by the agency. The laboratory must be capable of performing testing for the five classes of drugs (marijuana, cocaine, opiates, phencyclidine, and amphetamines) using the initial immunoassay and confirmatory GC/MS methods specified in these Guidelines.

(k) Laboratory Facilities. (1) Laboratory facilities shall comply with applicable provisions of any State licensure requirements.

(2) Laboratories certified in accordance with Subpart C of these Guidelines shall have the capability, at the same laboratory premises, of performing initial and confirmatory tests for each drug or metabolite for which service is offered.

(l) Inspections. The Secretary, any Federal agency utilizing the laboratory, or any organization performing laboratory certification on behalf of the Secretary shall reserve the right to inspect the laboratory at any time. Agency contracts with laboratories for drug testing, as well as contracts for collection site services, shall permit the agency to conduct unannounced inspections. In addition, prior to the award of a contract the agency shall carry out preaward inspections and evaluation of the procedural aspects of the laboratory's drug testing operation.

(m) Documentation. The drug testing laboratories shall maintain and make available for at least 2 years documentation of all aspects of the testing process. This 2-year period may be extended upon written notification by DHHS or by any Federal agency for which laboratory services are being provided. The required documentation shall include personnel files on all individuals authorized to have access to specimens; chain of custody documents; quality assurance/quality control records; procedure manuals; all test data (including calibration curves and any calculations used in determining test results); reports; performance records on performance testing; performance on certification inspections; and hard copies of computer-generated data. The laboratory shall be required to maintain documents for any specimen under legal challenge for an indefinite period.

(n) Additional Requirements for Certified Laboratories.—(1) Procedure Manual. Each laboratory shall have a procedure manual which includes the principles of each test, preparation of reagents, standards and controls, calibration procedures, derivation of results, linearity of methods, sensitivity of the methods, cutoff values, mechanisms for reporting results, controls, criteria for unacceptable specimens and results, remedial actions to be taken when the test systems are outside of acceptable limits, reagents and expiration dates, and references. Copies of all procedures and dates on which they are in effect shall be maintained as part of the manual.

(2) Standards and Controls. Laboratory standards shall be prepared with pure drug standards which are properly labeled as to content and concentration. The standards shall be labeled with the following dates: when received; when prepared or opened; when placed in services; and expiration date.

(3) Instruments and Equipment. (i) Volumetric pipettes and measuring devices shall be certified for accuracy or be checked by gravimetric, colorimetric, or other verification procedure. Automatic pipettes and dilutors shall be checked for accuracy and reproducibility before being placed in service and checked periodically thereafter.

(ii) There shall be written procedures for instrument set-up and normal operation, a schedule for checking critical operating characteristics for all instruments, tolerance limits for acceptable function checks and instructions for major trouble shooting and repair. Records shall be available on preventive maintenance.

(4) Remedial Actions. There shall be written procedures for the actions to be taken when systems are out of accceptable limits or errors are detected. There shall be documentation that these procedures are followed and that all necessary corrective actions are taken. There shall also be in place systems to verify all stages of testing and reporting and documentation that these procedures are followed.

(5) Personnel Available To Testify at Proceedings. A laboratory shall have qualified personnel available to testify in an administrative or disciplinary proceeding against a Federal employee when that proceeding is based on positive urinalysis results reported by the laboratory.

2.5 Quality Assurance and Quality Control.

(a) General. Drug testing laboratories shall have a quality assurance program which encompasses all aspects of the testing process including but not limited to specimen acquisition, chain of custody, security and reporting of results, initial and confirmatory testing, and validation of analytical procedures. Quality assurance procedures shall be designed, implemented, and reviewed to monitor the conduct of each step of the process of testing for drugs.

(b) Laboratory Quality Control Requirements for Initial Tests. Each analytical run of specimens to be screened shall include:

(1) Urine specimens certified to contain no drug;

(2) Urine specimens fortified with known standards; and

(3) Positive controls with the drug or metabolite at or near the threshold (cutoff).

In addition, with each batch of samples a sufficient number of standards shall be included to ensure and document the linearity of the assay method over time in the concentration area of the cutoff. After acceptable values are obtained for the known standards, those values will be used to calculate sample data. Implementation of procedures to ensure that carryover does not contaminate the

testing of an individual's specimen shall be documented. A minimum of 10 percent of all test samples shall be quality control specimens. Laboratory quality control samples, prepared from spiked urine samples of determined concentration shall be included in the run and should appear as normal samples to laboratory analysts. One percent of each run, with a minimum of at least one sample, shall be the laboratory's own quality control samples.

(c) Laboratory Quality Control Requirements for Confirmation Tests. Each analytical run of specimens to be confirmed shall include:

(1) Urine specimens certified to contain no drug;

(2) Urine specimens fortified with known standards; and

(3) Positive controls with the drug or metabolite at or near the threshold (cutoff).

The linearity and precision of the method shall be periodically documented. Implementation of procedures to ensure that carryover does not contaminate the testing of an individual's specimen shall also be documented.

(d) Agency Blind Performance Test Procedures. (1) Agencies shall purchase drug testing services only from laboratories certified by DHHS or a DHHS-Recognized certification program in accordance with these Guidelines. Laboratory participation is encouraged in other performance testing surveys by which the laboratory's performance is compared with peers and reference laboratories.

(2) During the initial 90-day period of any new drug testing program, each agency shall submit blind performance test specimens to each laboratory it contracts with in the amount of at least 50 percent of the total number of samples submitted (up to a maximum of 500 samples) and thereafter a minimum of 10 percent of all samples (to a maximum of 250) submitted per quarter.

(3) Approximately 80 percent of the blind performance test samples shall be blank (i.e., certified to contain no drug) and the remaining samples shall be positive for one or more drugs per sample in a distribution such that all the drugs to be tested are included in approximately equal frequencies of challenge. The positive samples shall be spiked only with those drugs for which the agency is testing.

(4) The Secretary shall investigate any unsatisfactory performance testing result and, based on this investigation, the laboratory shall take action to correct the cause of the unsatisfactory performance test result. A record shall be make of the Secretary's investigative findings and the corrective action taken by the laboratory, and that record shall be dated and signed by the individuals responsible for the day-to-day management and operation of the drug testing laboratory. Then the Secretary shall send the document to the agency contracting officer as a report of the unsatisfactory performance testing incident. The Secretary shall ensure notification of the finding to all other Federal agencies for which the laboratory is engaged in urine drug testing and coordinate any necessary action.

(5) Should a false positive error occur on a blind performance test specimen and the error is determined to be an administrative error (clerical, sample mixup, etc.), the Secretary shall require the laboratory to take corrective action to minimize the occurrence of the particular error in the future; and, if there is reason to believe the error could have been systematic, the Secretary may also require review and reanalysis of previously run specimens.

(6) Should a false positive error occur on a blind performance test specimen and the error is determined to be a technical or methodological error, the laboratory shall submit all quality control data from the batch of specimens which included the false positive specimen. In addition, the laboratory shall retest all specimens analyzed positive for that drug or metabolite from the time of final resolution of the error back to the time of the last satisfactory performance test cycle. This retesting shall be documented by a statement signed by the individual responsible for day-to-day management of the laboratory's urine drug testing. The Secretary may require an on-site review of the laboratory which may be conducted unannounced during any hours of operations of the laboratory. The Secretary has the option of revoking (3.13) or suspending (3.14) the laboratory's certification or recommending that no further action be taken if the case is one of less serious error in which corrective action has already been taken, thus reasonably assuring that the error will not occur again.

2.6 Interim Certification Procedures.

During the interim certification period as determined under paragraph (c), agencies shall ensure laboratory competence by one of the following methods:

(a) Agencies may use agency or contract laboratories that have been certified for urinalysis testing by the Department of Defense; or

(b) Agencies may develop interim self-certification procedures by establishing preaward inspections and performance testing plans approved by DHHS.

(c) The period during which these interim certification procedures will apply shall be determined by the Secretary. Upon noticed by the Secretary that these interim certification procedures are no longer available, all Federal agencies subject to these Guidelines shall only use laboratories that have been certified in accordance with Subpart C of these Guidelines and all laboratories approved for interim certification under paragraphs (a) and (b) of this section shall become certified in accordance with Subpart C within 120 days of the date of this notice.

2.7 Reporting and Review of Results.

(a) Medical Review Officer Shall Review Results. An essential part of the drug testing program is the final review of results. A positive test result does not automatically identify an employee/applicant as an illegal drug user. An individual with a detailed knowledge of possible alternate medical explanations is essential to the review of results. This review shall be performed by the Medical Review Officer prior to the transmission of results to agency administrative officials.

(b) Medical Review Officer—Qualifications and Responsibilities. The Medical Review Officer shall be a licensed physician with knowledge of substance abuse disorders and may be an agency or contract employee. The role of the Medical Review Officer is to review and interpret positive test results obtained through the agency's testing program. In carrying out this responsibility, the Medical Review Officer shall examine alternate medical explanations for any positive test result. This action could include conducting a medical interview with the individual, review of the individual's medical history, or review of any other relevant biomedical factors. The Medical Review Officer shall review all medical records made available by the tested individual when a confirmed positive test could have resulted from legally prescribed medication. The Medical Review Officer shall not, however, consider the results of urine samples that are not obtained or processed in accordance with these Guidelines.

(c) Positive Test Result. Prior to making a final decision to verify a positive test result, the Medical Review Officer shall give the individual an opportunity to discuss the test result

with him or her. Following verification of a positive test result, the Medical Review Officer shall refer the case to the agency Employee Assistance Program and to the management official empowered to recommend or take administrative action.

(d) Verification for opiates; review for prescription mediation. Before the Medical Review Officer verifies a confirmed positive result for opiates, he or she shall determine that there is clinical evidence—in addition to the urine test—of illegal use of any opium, opiate, or opium derivative (e.g., morphine/codeine) listed in Schedule I or II of the Controlled Substances Act. (This requirement does not apply if the agency's GC/MS confirmation testing for opiates confirms the presence of 6-monoacetylmorphine.)

(e) Reanalysis Authorized. Should any question arise as to the accuracy or validity of a positive test result, only the Medical Review Officer is authorized to order a reanalysis of the original sample and such retests are authorized only at laboratories certified under these Guidelines.

(f) Result Consistent with Legal Drug Use. If the Medical Review Officer determines there is a legitimate medical explanation for the positive test result, he or she shall determine that the result is consistent with legal drug use and take no further action.

(g) Result Scientifically Insufficient. Additionally, the Medical Review Officer, based on review of inspection reports, quality control data, multiple samples, and other pertinent results, may determine that the result is scientifically insufficient for further action and declare the test specimen negative. In this situation the Medical Review Officer may request reanalysis of the original sample before making this decision. (The Medical Review Officer may request that reanalysis be performed by the same laboratory or, as provided in 2.7(e), that an aliquot of the original specimen be sent for reanalysis to an alternate laboratory which is certified in accordance with these Guidelines.) The laboratory shall assist in this review process as requested by the Medical Review Officer by making available the individual responsible for day-to-day management of the urine drug testing laboratory or other employee who is a forensic toxicologist or who has equivalent forensic experience in urine drug testing, to provide specific consultation as required by the agency. The Medical Review Officer shall report to the Secretary all negative findings based on scientific insufficiency but shall not include any personal identifying information in such reports.

2.8 Protection of Employee Records.

Consistent with 5 U.S.C. 522a(m) and 48 CFR 24.101–24.104, all laboratory contracts shall require that the contractor comply with the Privacy Act, 5 U.S.C. 552a. In addition, laboratory contracts shall require compliance with the patient access and confidentiality provisions of section 503 of Pub. L. 100–71. The agency shall establish a Privacy Act System of Records or modify an existing system, or use any applicable Government-wide system of records to cover both the agency's and the laboratory's records of employee urinalysis results. The contract and the Privacy Act System shall specifically require that employee records be maintained and used with the highest regard for employee privacy.

2.9 Individual Access to Test and Laboratory Certification Results.

In accordance with section 503 of Pub. L. 100–71, any Federal employee who is the subject of a drug test shall, upon written request, have access to any records relating to his or her drug test and any records relating to the results of any relevant certification, review, or revocation-of-certification proceedings.

Subpart C—Certification of Laboratories Engaged in Urine Drug Testing for Federal Agencies

3.1 Introduction.

Urine drug testing is a critical component of efforts to combat drug abuse in our society. Many laboratories are familiar with good laboratory practices but may be unfamiliar with the special procedures required when drug test results are used in the employment context. Accordingly, the following are minimum standards to certify laboratories engaged in urine drug testing for Federal agencies. Certification, even at the highest level, does not guarantee accuracy of each result reported by a laboratory conducting urine drug testing for Federal agencies. Therefore, results from laboratories certified under these Guidelines must be interpreted with a complete understanding of the total collection, analysis, and reporting process before a final conclusion is made.

3.2 Goals and Objectives of Certification.

(a) Uses of Urine Drug Testing. Urine drug testing is an important tool to identify drug users in a variety of settings. In the proper context, urine drug testing can be used to deter drug abuse in general. To be a useful tool, the testing procedure must be capable of detecting drugs or their metabolites at concentrations indicated in 2.4 (e) and (f).

(b) Need to Set Standards; Inspections. Reliable discrimination between the presence, or absence, of specific drugs or their metabolites is critical, not only to achieve the goals of the testing program but to protect the rights of the Federal employees being tested. Thus, standards have been set which laboratories engaged in Federal employee urine drug testing must meet in order to achieve maximum accuracy of test results. These laboratories will be evaluated by the Secretary or the Secretary's designee as defined in 1.2 in accordance with these Guidelines. The qualifying evaluation will involve three rounds of performance testing plus on-site inspection. Maintenance of certification requires participation in an every-other-month performance testing program plus periodic, on-site inspections. One inspection following successful completion of a performance testing regimen is required for initial certification. This must be followed by a second inspection within 3 months, after which biannual inspections will be required to maintain certification.

(c) Urine Drug Testing Applies Analytical Forensic Toxicology. The possible impact of a positive test result on an individual's livelihood or rights, together with the possibility of a legal challenge of the result, sets this type of test apart from most clinical laboratory testing. In fact, urine drug testing should be considered a special application of analytical forensic toxicology. That is, in addition to the application of appropriate analytical methodology, the specimen must be treated as evidence, and all aspects of the testing procedure must be documented and available for possible court testimony. Laboratories engaged in urine drug testing for Federal agencies will require the services and advice of a qualified forensic toxicologist, or individual with equivalent qualifications (both training and experience) to address the specific needs of the Federal drug testing program, including the demands of chain of custody of specimens, security, property documentation of all records, storage of positive specimens for later or independent testing, presentation of evidence in court, and expert witness testimony.

3.3 General Certification Requirements.

A laboratory must meet all the pertinent provisions of these Guidelines in order to qualify for certification under these standards.

3.4 Capability to Test for Five Classes of Drugs.

To be certified, a laboratory must be capable of testing for at least the following five classes of drugs: Marijuana, cocaine, opiates, amphetamines, and phencyclidine, using the initial immunoassay and quantitative confirmatory GC/MS methods specified in these Guidelines. The certification program will be limited to the five classes of drugs (2.1(a) (1) and (2)) and the methods (2.4 (e) and (f)) specified in these Guidelines. The laboratory will be surveyed and performance tested only for these methods and drugs. Certification of a laboratory indicates that any test result reported by the laboratory for the Federal Government meets the standards in these Guidelines for the five classes of using the methods specified. Certified laboratories must clearly inform non-Federal clients when procedures followed for those clients conform to the standards specified in these Guidelines.

3.5 Initial and Confirmatory Capability at Same Site.

Certified laboratories shall have the capability, at the same laboratory site, of performing both initial immunoassays and confirmatory GC/MS tests (2.4 (e) and (f)) for marijuana, cocaine, opiates, amphetamines, and phencyclidine and for any other drug or metabolite for which agency drug testing is authorized (2.1(a) (1) and (2)). All positive initial test results shall be confirmed prior to reporting them.

3.6 Personnel.

Laboratory personnel shall meet the requirements specified in 2.3 of these Guidelines. These Guidelines establish the exclusive standards for qualifying or certifying those laboratory personnel involved in urinalysis testing whose functions are prescribed by these Guidelines. A certification of a laboratory under these Guidelines shall be a determination that these qualification requirements have been met.

3.7 Quality Assurance and Quality Control.

Drug testing laboratories shall have a quality assurance program which encompasses all aspects of the testing process, including but not limited to specimen acquisition, chain of custody, security and reporting of results, initial and confirmatory testing, and validation of analytical procedures. Quality control procedures shall be designed, implemented, and reviewed to monitor the conduct of each step of the process of testing for drugs as specified in 2.5 of these Guidelines.

3.8 Security and Chain of Custody.

Laboratories shall meet the security and chain of custody requirements provided in 2.4(a).

3.9 One-Year Storage for Confirmed Positives.

All confirmed positive specimens shall be retained in accordance with the provisions of 2.4(h) of these Guidelines.

3.10 Documentation.

The laboratory shall maintain and make available for at least 2 years documentation in accordance with the specifications in 2.4(m).

3.11 Reports.

The laboratory shall report test results in accordance with the specifications in 2.4(g).

3.12 Certification.

(a) General. The Secretary may certify any laboratory that meets the standards in these Guidelines to conduct urine drug testing. In addition, the Secretary may consider to be certified and laboratory that is certified by a DHHS-recognized certification program in accordance with these Guidelines.

(b) Criteria. In determining whether to certify a laboratory or to accept the certification of a DHHS-recognized certification program in accordance with these Guidelines, the Secretary shall consider the following criteria:

(1) The adequacy of the laboratory facilities;

(2) The expertise and experience of the laboratory personnel;

(3) The excellence of the laboratory's quality assurance/quality control program;

(4) The performance of the laboratory on any performance tests;

(5) The laboratory's compliance with standards as reflected in any laboratory inspections; and

(6) Any other factors affecting the reliability and accuracy of drug tests and reporting done by the laboratory.

3.13 Revocation.

(a) General. The Secretary shall revoke certification of any laboratory certified under these provisions or accept revocation by a DHHS-recognized certification program in accordance with these Guidelines if the Secretary determines that revocation is necessary to ensure the full reliability and accuracy of drug tests and the accurate reporting of test results.

(b) Factors to Consider. The Secretary shall consider the following factors in determining whether revocation is necessary:

(1) Unsatisfactory performance in analyzing and reporting the results of drug tests; for example, a false positive error in reporting the results of an employee's drug test;

(2) Unsatisfactory participation in performance evaluations or laboratory inspections;

(3) A material violation of a certification standard or a contract term or other condition imposed on the laboratory by a Federal agency using the laboratory's services;

(4) Conviction for any criminal offense committed as an incident to operation of the laboratory; or

(5) Any other cause which materially affects the ability of the laboratory to ensure the full reliability and accuracy of drug tests and the accurate reporting of results.

(c) Period and Terms. The period and terms of revocation shall be determined by the Secretary and shall depend upon the facts and circumstances of the revocation and the need to ensure accurate and reliable drug testing of Federal employees.

3.14 Suspension.

(a) Criteria. Whenever the Secretary has reason to believe that revocation may be required and that immediate action is necessary in order to protect the interests of the United States and its employees, the Secretary may immediately suspend a laboratory's certification to conduct urine drug testing for Federal agencies. The Secretary may also accept suspension of certification by a DHHS-recognized certification program in accordance with these Guidelines.

(b) Period and Terms. The period and terms of suspension shall be determined by the Secretary and shall depend upon the facts and circumstances of the suspension and the need to ensure accurate and reliable drug testing of Federal employees.

3.15 Notice; Opportunity for Review.

(a) Written Notice. When a laboratory is suspended or the Secretary seeks to revoke certification, the Secretary shall immediately serve the laboratory with written notice of the suspension or proposed revocation by personal service or registered or certified mail, return

BEST COPY AVAILABLE

receipt requested. This notice shall state the following:

(1) The reasons for the suspension or proposed revocation;

(2) The terms of the suspension or proposed revocation; and

(3) The period of suspension or proposed revocation.

(b) Opportunity for Informal Review. The written notice shall state that the laboratory will be afforded an opportunity for an informal review of the suspension or proposed revocation if it so requests in writing within 30 days of the date of mailing or service of the notice. The review shall be by a person or persons designated by the Secretary and shall be based on written submissions by the laboratory and the Department of Health and Human Services and, at the Secretary's discretion, may include an opportunity for an oral presentation. Formal rules of evidence and procedures applicable to proceedings in a court of law shall not apply. The decision of the reviewing official shall be final.

(c) Effective Date. A suspension shall be effective immediately. A proposed revocation shall be effective 30 days after written notice is given or, if review is requested, upon the reviewing official's decision to uphold the proposed revocation. If the reviewing official decides not to uphold the suspension or proposed revocation, the suspension shall terminate immediately and any proposed revocation shall not take effect.

(d) DHHS-Recognized Certification Program. The Secretary's responsibility under this section may be carried out by a DHHS-recognized certification program in accordance with these Guidelines.

3.16 Recertification.

Following the termination or expiration of any suspension or revocation, a laboratory may apply for recertification. Upon the submission of evidence satisfactory to the Secretary that the laboratory is in compliance with these Guidelines or any DHHS-recognized certification program in accordance with these Guidelines, and any other conditions imposed as part of the suspension or revocation, the Secretary may recertify the laboratory or accept the recertification of the laboratory by a DHHS-recognized certification program.

3.17 Performance Test Requirement for Certification.

(a) An Initial and Continuing Requirement. The performance testing program is a part of the initial evaluation of a laboratory seeking certification (both performance testing and laboratory inspection are required) and of the continuing assessment of laboratory performance necessary to maintain this certification.

(b) Three Initial Cycles Required. Successful participation in three cycles of testing shall be required before a laboratory is eligible to be considered for inspection and certification. These initial three cycles (and any required for recertification) can be compressed into a 3-month period (one per month).

(c) Six Challenges Per Year. After certification, laboratories shall be challenged every other month with one set of at least 10 specimens a total of six cycles per year.

(d) Laboratory Procedures Identical for Performance Test and Routine Employee Specimens. All procedures associated with the handling and testing of the performance test specimens by the laboratory shall to the greatest extent possible be carried out in a manner identical to that applied to routine laboratory specimens, unless otherwise specified.

(e) Blind Performance Test. Any certified laboratory shall be subject to blind performance testing (see 2.5(d)). Performance on blind test specimens shall be at the same level as for the open or non-blind performance testing.

(f) Reporting—Open Performance Test. The laboratory shall report results of open performance tests to the certifying organization in the same manner as specified in 2.4(g)(2) for routine laboratory specimens.

3.18 Performance Test Specimen Composition.

(a) Description of the Drugs. Performance test specimens shall contain those drugs and metabolites which each certified laboratory must be prepared to assay in concentration ranges that allow detection of the analyte by commonly used immunoassay screening techniques. These levels are generally in the range of concentrations which might be expected in the urine of recent drug users. For some drug analytes, the specimen composition will consist of the parent drug as well as major metabolites. In some cases, more than one drug class may be included in one specimen container, but generally no more than two drugs will be present in any one specimen in order to imitate the type of specimen which a laboratory normally encounters. For any particular performance testing cycle, the actual composition of kits going to different laboratories will vary but, within any annual period, all laboratories participating will have analyzed the same total set of specimens.

(b) Concentrations. Performance test specimens shall be spiked with the drug classes and their metabolites which are required for certifications: marijuana, cocaine, opiates, amphetamines, and phencyclidine, with concentration levels set at least 20 percent above the cutoff limit for either the initial assay or the confirmatory test, depending on which is to be evaluated. Some performance test specimens may be identified for GC/MS assay only. Blanks shall contain less than 2 ng/ml of any of the target drugs. These concentration and drug types may be changed periodically in response to factors such as changes in detection technology and patterns of drug use.

3.19 Evaluation of Peformance Testing.

(a) Initial Certification. (1) An applicant laboratory shall not report any false positive result during performance testing for initial certification. Any false positive will automatically disqualify a laboratory from further consideration.

(2) An applicant laboratory shall maintain an overall grade level of 90 percent for the three cycles of performance testing required for initial certification, i.e., it must correctly identify and confirm 90 percent of the total drug challenges for each shipment. Any laboratory which achieves a score on any one cycle of the initial certification such that it can no longer achieve a total grade of 90 percent over the three cycles will be immediately disqualified from further consideration.

(3) An applicant laboratory shall obtain quantitative values for at least 80 percent of the total drug challenges which are ±20 percent or ±2 standard deviations of the calculated reference group mean (whichever is larger). Failure to achieve 80 percent will result in disqualification.

(4) An applicant laboratory shall not obtain any quantitative values that differ by more than 50 percent from the calculated reference group mean. Any quantitative values that differ by more than 50 percent will result in disqualification.

(5) For any individual drug, an applicant laboratory shall successfully detect and quantitate in accordance with paragraphs (a)(2), (a)(3), and (a)(4) of this section at least 50 percent of the total drug challenges. Failure to successfully quantitate at least 50 percent of the challenges for any individual drug will result in disqualification.

(b) Ongoing Testing of Certified Laboratories.—(1) False Positives and Procedures for Dealing With Them. No

false drug identifications are acceptable for any drugs for which a laboratory offers service. Under some circumstances a false positive test may result in suspension or revocation of certification. The most serious false positives are by drug class, such as reporting THC in a blank specimen or reporting cocaine in a specimen known to contain only opiates. Misidentifications within a class (e.g., codeine for morphine) are also false positives which are unacceptable in an appropriately controlled laboratory, but they are clearly less serious errors than misidentification of a class. The following procedures shall be followed when dealing with a false positive:

(i) The agency detecting a false positive error shall immediately notify the laboratory and the Secretary of any such error.

(ii) The laboratory shall provide the Secretary with a written explanation of the reasons for the error within 5 working days. If required by paragraph (b)(1)(v) below, this explanation shall include the submission of all quality control data from the batch of specimens that included the false positive specimen.

(iii) The Secretary shall review the laboratory's explanation within 5 working days and decide what further action, if any, to take.

(iv) If the error is determined to be an administrative error (clerical, sample mixup, etc.), the Secretary may direct the laboratory to take corrective action to minimize the occurence of the particular error in the future and, if there is reason to believe the error could have been systematic, may require the laboratory to review and reanalyze previously run specimens.

(v) If the error is determined to be technical or methodological error, the laboratory shall submit to the Secretary all quality control data from the batch of specimens which included the false positive specimen. In addition, the laboratory shall retest all specimens analyzed positive by the laboratory from the time fo final resolution of the error back to the time of the last satisfactory performance test cycle. This retesting shall be documented by a statement signed by the individual responsible for the day-to-day management of the laboratory's urine drug testing. Depending on the type of error which caused the false positive, this retesting may be limited to one analyte or may include any drugs a laboratory certified under these Guidelines must be prepared to assay. The laboratory shall immediately notify the agency if any result on a retest sample must be corrected because the critieria for a positive are not satisfied. The Secretary may suspend or revoke the laboratory's certification for all drugs or for only the drug or drug class in which the error occurred. However, if the case is one of a less serious error for which effective corrections have already been made, thus reasonably assuring that the error will not occur again, the Secretary may decide to take no further action.

(vi) During the time required to resolve the error, the laboratory shall remain certified but shall have a designation indicating that a false positive result is pending resolution. If the Secretary determines that the laboratory's certification must be suspended or revoked, the laboratory's official status will become "Suspended" or "Revoked" until the suspension or revocation is lifted or any recertification process is complete.

(2) Requirement to Identify and Confirm 90 Percent of Total Drug Challenges. In order to remain certified, laboratories must successfully complete six cycles of performance testing per year. Failure of a certified laboratory to maintain a grade of 90 percent on any required performance test cycle, i.e., to identify 90 percent of the total drug challenges and to correctly confirm 90 percent of the total drug challenges, may result in suspension or revocation of certification.

(3) Requirement to Quantitate 80 Percent of Total Drug Challenges at ±20 Percent or ±2 standard deviations. Quantitative values obtained by a certified laboratory for at least 80 percent of the total drug challenges must be ±20 percent or ±2 standard deviations of the calculated reference group mean (whichever is larger).

(4) Requirement to Quantitate within 50 Percent of Calculated Reference Group Mean. No quantitative values obtained by a certified laboratory may differ by more than 50 percent from the calculated reference group mean.

(5) Requirement to Successfully Detect and Quantitate 50 Percent of the Total Drug Challenges for Any Individual Drug. For any individual drug, a certified laboratory must successfully detect and quantitate in accordance with paragraphs (b)(2), (b)(3), and (b)(4) of this section at least 50 percent of the total drug challenges.

(6) Procedures When Requirements in Paragraphs (b)(2)–(b)(5) of this Section Are Not Met. If a certified laboratory fails to maintain a grade of 90 percent per test cycle after initial certification as required by paragraph (b)(2) of this section or if it fails to successfully quantitate results as required by paragraphs (b)(3), (b)(4), or (b)(5) of this section, the laboratory shall be immediately informed that its performance fell under the 90 percent level or that it failed to successfully quantitate test results and how it failed to successfully quantitate. The laboratory shall be allowed 5 working days in which to provide any explanation for its unsuccessful performance, including administrative error or methodological error, and evidence that the source of the poor performance has been corrected. The Secretary may revoke or suspend the laboratory's certification or take no further action, depending on the seriousness of the errors and whether there is evidence that the source of the poor performance has been corrected and that current performance meets the requirements for a certified laboratory under these Guidelines. The Secretary may require that additional performance tests be carried out to determine whether the source of the poor performance has been removed. If the Secretary determines to suspend or revoke the laboratory's certification, the laboratory's official status will become "Suspended" or "Revoked" until the suspension or revocation is lifted or until any recertification process is complete.

(c) 80 Percent of Participating Laboratories Must Detect Drug. A laboratory's performance shall be evaluated for all samples for which drugs were spiked at concentrations above the specified performance test level unless the overall response from participating laboratories indicates that less than 80 percent of them were able to detect a drug.

(d) Participation Required. Failure to participate in a performance test or to participate satisfactorily may result in suspension or revocation of certification.

3.20 Inspections.

Prior to laboratory certification under these Guidelines and at least twice a year after certification, a team of three qualified inspectors, at least two of whom have been trained as laboratory inspectors, shall conduct an on-site inspection of laboratory premises. Inspections shall document the overall quality of the laboratory setting for the purposes of certification to conduct urine drug testing. Inspection reports may also contain recommendations to the laboratory to correct deficiencies noted during the inspection.

3.21 Results of Inadequate Performance.

Failure of a laboratory to comply with any aspect of these Guidelines may lead to revocation or suspension of certification as provided in 3.13 and 3.14 of these Guidelines.

[FR Doc. 88–7864 Filed 4–8–88; 8:45 am]

BILLING CODE 4150–20–M

VOL
53
ISS
69
AP
11
1988
UMI

Rea

INFORM

Federal

Index, f
Public i
Correcti
Docume
Machine

Code o

Index, f
Printing

Laws

Public L
Addition

Preside

Executiv
Public P
Weekly

The Uni

General

Other S

Data ba
Guide to
Legal st
Library
Privacy
Public L
TDD for

FEDERA

10519–10
10869–11
11031–11
11239–11
11487–11
11633–11
11815–11

Reader Aids

Federal Register

Vol. 53, No. 69

Monday, April 11, 1988

INFORMATION AND ASSISTANCE

Federal Register

Index, finding aids & general information	523-5227
Public inspection desk	523-5215
Corrections to published documents	523-5237
Document drafting information	523-5237
Machine readable documents	523-5237

Code of Federal Regulations

Index, finding aids & general information	523-5227
Printing schedules	523-3419

Laws

Public Laws Update Service (numbers, dates, etc.)	523-6641
Additional information	523-5230

Presidential Documents

Executive orders and proclamations	523-5230
Public Papers of the Presidents	523-5230
Weekly Compilation of Presidential Documents	523-5230

The United States Government Manual

General information	523-5230

Other Services

Data base and machine readable specifications	523-3408
Guide to Record Retention Requirements	523-3187
Legal staff	523-4534
Library	523-5240
Privacy Act Compilation	523-3187
Public Laws Update Service (PLUS)	523-6641
TDD for the deaf	523-5229

FEDERAL REGISTER PAGES AND DATES, APRIL

10519-10868 1
10869-11030 4
11031-11238 5
11239-11486 6
11487-11632 7
11633-11814 8
11815-11990 11

CFR PARTS AFFECTED DURING APRIL

At the end of each month, the Office of the Federal Register publishes separately a List of CFR Sections Affected (LSA), which lists parts and sections affected by documents published since the revision date of each title.

3 CFR

Proclamations:
5784 10519
5785 10521
5786 10523
5787 11031
5788 11489
5789 11809
5790 11811
5791 11813

Executive Orders:
12634 11041

Administrative Orders:
Memorandums:
Mar. 31, 1988 11039

Presidential Determinations:
No. 88-10 of February 29, 1988 11487

5 CFR
831 11633
842 11633
1633 11815

Proposed Rules:
1632 11864
2431 10885

7 CFR
2 11636
300 10525
301 11825
400 10526
910 ..... 10527, 11636
911 11830
917 11832
946 11043
1032 11637
1064 11590
1126 11638
1421 11239
3600 11639
3601 11639

Proposed Rules:
6 11091
53 10545
54 10545
449 11299
917 11669
918 11867
949 10887
1030 10894
1106 11092
1497 11474
1498 11474
1530 11098
1700 11511
1701 10545

8 CFR

Proposed Rules:
3 11300
208 11300
236 11300
242 11300
253 11300

9 CFR
77 11491
92 11043

10 CFR
430 10869
1010 11240

Proposed Rules:
2 11310
50 11311

12 CFR
202 11044
205 11046
226 ..... 11047, 11055
229 11832
265 11640
563 ..... 11242, 11243

14 CFR
Ch. III 11004
39 ..... 11246, 11641-11643, 11837, 11838
71 ..... 10528, 11020, 11060, 11061, 11839-11841
97 11062

Proposed Rules:
Ch. I 11868
21 11869
23 11869
27 ..... 10826, 11162
29 ..... 10826, 11162
39 ..... 11674-11676, 11678, 11871
71 ..... 10546, 11100, 11101
73 11102

16 CFR
13 11247

17 CFR
30 11491
230 11841
240 11841

18 CFR
157 ..... 11644, 11845

20 CFR
10 11594

Proposed Rules:
10 11596

21 CFR
184 11247
340 11731
510 11492

520 ... 11063
522 ... 11064, 11493
524 ... 11064
540 ... 11492
558 ... 11065, 11251
561 ... 11938
800 ... 11251
803 ... 11251
807 ... 11251
808 ... 11251
809 ... 11251
812 ... 11251
813 ... 11251
820 ... 11251
860 ... 11251
861 ... 11251
862 ... 11645
864 ... 11251
866 ... 11251
876 ... 11251
895 ... 11251
1002 ... 11251
1005 ... 11251
1010 ... 11251
1020 ... 11251
1030 ... 11251
1040 ... 11251
1050 ... 11251
1308 ... 10834, 10861, 10869

Proposed Rules:
133 ... 11312
175 ... 11402
176 ... 11402
177 ... 11402
178 ... 11402
193 ... 11938
561 ... 11313

22 CFR
120 ... 11494
121 ... 11494
122 ... 11494
123 ... 11494
124 ... 11494
125 ... 11494
126 ... 11494
127 ... 11494
128 ... 11494
514 ... 10528
602 ... 10529

Proposed Rules:
204 ... 11872

23 CFR
650 ... 11065
771 ... 11065
1204 ... 11255
1205 ... 11255

Proposed Rules:
625 ... 11875
626 ... 11875
1309 ... 11679

24 CFR
50 ... 11224
200 ... 11270
203 ... 10529
221 ... 11224
236 ... 11224
241 ... 11224
248 ... 11224

Proposed Rules:
35 ... 11164
200 ... 11164
510 ... 11164
511 ... 11164
570 ... 11164
882 ... 11164
886 ... 11164
941 ... 11164
965 ... 11164
968 ... 11164

25 CFR
61 ... 11271

26 CFR
1 ... 11002, 11066, 11162, 11731
602 ... 11066, 11162, 11731

Proposed Rules:
1 ... 11103, 11876

28 CFR
0 ... 10870, 10871, 11645
71 ... 11645

29 CFR
102 ... 10872
1910 ... 11414
2610 ... 10530
2622 ... 10530
2644 ... 10531

Proposed Rules:
516 ... 11590
530 ... 11590
1910 ... 11511
1915 ... 11511
1917 ... 11511
1918 ... 11511
2550 ... 11886
2580 ... 11886

30 CFR
75 ... 11395
250 ... 10596
256 ... 10596
773 ... 11606
934 ... 11500

Proposed Rules:
785 ... 11685
823 ... 11685
935 ... 11887
948 ... 11888

31 CFR

Proposed Rules:
103 ... 11513

32 CFR
388 ... 10876

33 CFR
84 ... 10532
100 ... 11502
117 ... 10533, 10534

Proposed Rules:
100 ... 11515
110 ... 11395, 11515
117 ... 11516, 11517

34 CFR
99 ... 11942
600 ... 11208
657 ... 10820
668 ... 11208

Proposed Rules:
105 ... 10808

38 CFR
36 ... 11502

39 CFR

Proposed Rules:
111 ... 11685

40 CFR
52 ... 11068, 11273, 11655, 11847
60 ... 11590
180 ... 11071, 11274, 11938

Proposed Rules:
52 ... 11314, 11686, 11688
116 ... 11889
117 ... 11889
180 ... 10895
264 ... 11742
265 ... 11742
268 ... 11742
271 ... 11742
302 ... 11889, 11890
761 ... 11104
763 ... 10546
796 ... 11104

41 CFR
101-25 ... 11847
101-40 ... 11849

Proposed Rules:
201-33 ... 11518

42 CFR
405 ... 11504
416 ... 11504
418 ... 11504
442 ... 11504
482 ... 11504

43 CFR

Proposed Rules:
3160 ... 11318

Public Land Orders:
6670 ... 10535

44 CFR
67 ... 11510
80 ... 11275
82 ... 11275
83 ... 11275

Proposed Rules:
61 ... 10547

45 CFR
36 ... 11279
79 ... 11656
96 ... 11656

Proposed Rules:
606 ... 10896

46 CFR
572 ... 11072

Proposed Rules:
Ch. I ... 11440

47 CFR
0 ... 11849
1 ... 11851
2 ... 10878, 11855
15 ... 11861
22 ... 11855
73 ... 11668, 11863
90 ... 11849
94 ... 11855

Proposed Rules:
Ch. I ... 10549, 10550
73 ... 10905, 11690

48 CFR
15 ... 10828
31 ... 10828
52 ... 10828
215 ... 11073
227 ... 10780
242 ... 11073
252 ... 10780, 11073

Proposed Rules:
43 ... 11795
47 ... 11795
52 ... 11795
916 ... 11318
931 ... 11318
952 ... 11318
1505 ... 11519
1506 ... 11519

49 CFR
533 ... 11074
571 ... 11280
1160 ... 10536

Proposed Rules:
171 ... 11320
173 ... 11320
177 ... 11618
192 ... 10906
571 ... 11105
840 ... 11520

50 CFR
17 ... 10879, 11609, 11612
285 ... 11510
301 ... 10536
672 ... 11297

Proposed Rules:
644 ... 11321

LIST OF PUBLIC LAWS

Note: No public bills which have become law were received by the Office of the Federal Register for inclusion in today's **List of Public Laws.**

Last List April 6, 1988

CFR CHECKLIST

This checklist, prepared by the Office of the Federal Register, is published weekly. It is arranged in the order of CFR titles, prices, and revision dates.

An asterisk (*) precedes each entry that has been issued since last week and which is now available for sale at the Government Printing Office.

New units issued during the week are announced on the back cover of the daily **Federal Register** as they become available.

A checklist of current CFR volumes comprising a complete CFR set, also appears in the latest issue of the LSA (List of CFR Sections Affected), which is revised monthly.

The annual rate for subscription to all revised volumes is $595.00 domestic, $148.75 additional for foreign mailing.

Order from Superintendent of Documents, Government Printing Office, Washington, DC 20402. Charge orders (VISA, MasterCard, CHOICE, or GPO Deposit Account) may be telephoned to the GPO order desk at (202) 783-3238 from 8:00 a.m. to 4:00 p.m. eastern time, Monday—Friday (except holidays).

Title	Price	Revision Date
1, 2 (2 Reserved)	$10.00	Jan. 1, 1988
3 (1986 Compilation and Parts 100 and 101)	11.00	[1] Jan. 1, 1987
4	14.00	Jan. 1, 1988
5 Parts:		
*1-699	14.00	Jan. 1, 1988
700-1199	15.00	Jan. 1, 1988
1200-End, 6 (6 Reserved)	11.00	Jan. 1, 1988
7 Parts:		
0-45	25.00	Jan. 1, 1987
27-45	11.00	Jan. 1, 1988
46-51	16.00	Jan. 1, 1988
52	23.00	Jan. 1, 1988
53-209	18.00	Jan. 1, 1987
210-299	22.00	Jan. 1, 1987
300-399	10.00	Jan. 1, 1987
400-699	15.00	Jan. 1, 1987
*700-899	22.00	Jan. 1, 1988
900-999	26.00	Jan. 1, 1987
1000-1059	15.00	Jan. 1, 1988
1060-1119	12.00	Jan. 1, 1988
1120-1199	11.00	Jan. 1, 1988
1200-1499	18.00	Jan. 1, 1987
1500-1899	9.50	Jan. 1, 1988
*1900-1939	11.00	Jan. 1, 1988
1900-1944	25.00	Jan. 1, 1987
1945-End	26.00	Jan. 1, 1987
8	11.00	Jan. 1, 1988
9 Parts:		
*1-199	19.00	Jan. 1, 1988
200-End	16.00	Jan. 1, 1987
10 Parts:		
0-199	29.00	Jan. 1, 1987
*51-199	14.00	Jan. 1, 1988
200-399	13.00	[2] Jan. 1, 1987
*400-499	13.00	Jan. 1, 1988
500-End	24.00	Jan. 1, 1987
11	10.00	July 1, 1988
12 Parts:		
1-199	11.00	Jan. 1, 1988
200-219	10.00	Jan. 1, 1988
*220-299	14.00	Jan. 1, 1988
300-499	13.00	Jan. 1, 1987
500-End	27.00	Jan. 1, 1987
13	19.00	Jan. 1, 1987
14 Parts:		
*1-59	21.00	Jan. 1, 1988
*60-139	19.00	Jan. 1, 1988
140-199	9.50	Jan. 1, 1988
200-1199	20.00	Jan. 1, 1988
1200-End	11.00	Jan. 1, 1987
15 Parts:		
0-299	10.00	Jan. 1, 1988
300-399	20.00	Jan. 1, 1987
400-End	14.00	Jan. 1, 1988
16 Parts:		
0-149	12.00	Jan. 1, 1988
150-999	13.00	Jan. 1, 1987
*1000-End	19.00	Jan. 1, 1988
17 Parts:		
1-199	14.00	Apr. 1, 1987
200-239	14.00	Apr. 1, 1987
240-End	19.00	Apr. 1, 1987
18 Parts:		
1-149	15.00	Apr. 1, 1987
150-279	14.00	Apr. 1, 1987
280-399	13.00	Apr. 1, 1987
400-End	9.50	Apr. 1, 1987
19 Parts:		
1-199	27.00	Apr. 1, 1987
200-End	5.50	Apr. 1, 1987
20 Parts:		
1-399	12.00	Apr. 1, 1987
400-499	23.00	Apr. 1, 1987
500-End	24.00	Apr. 1, 1987
21 Parts:		
1-99	12.00	Apr. 1, 1987
100-169	14.00	Apr. 1, 1987
170-199	16.00	Apr. 1, 1987
200-299	5.50	Apr. 1, 1987
300-499	26.00	Apr. 1, 1987
500-599	21.00	Apr. 1, 1987
600-799	7.00	Apr. 1, 1987
800-1299	13.00	Apr. 1, 1987
1300-End	6.00	Apr. 1, 1987
22 Parts:		
1-299	19.00	Apr. 1, 1987
300-End	13.00	Apr. 1, 1987
23	16.00	Apr. 1, 1987
24 Parts:		
0-199	14.00	Apr. 1, 1987
200-499	26.00	Apr. 1, 1987
500-699	9.00	Apr. 1, 1987
700-1699	18.00	Apr. 1, 1987
1700-End	12.00	Apr. 1, 1987
25	24.00	Apr. 1, 1987
26 Parts:		
§§ 1.0-1.60	12.00	Apr. 1, 1987
§§ 1.61-1.169	22.00	Apr. 1, 1987
§§ 1.170-1.300	17.00	Apr. 1, 1987
§§ 1.301-1.400	14.00	Apr. 1, 1987
§§ 1.401-1.500	21.00	Apr. 1, 1987
§§ 1.501-1.640	15.00	Apr. 1, 1987
§§ 1.641-1.850	17.00	Apr. 1, 1987
§§ 1.851-1.1000	27.00	Apr. 1, 1987
§§ 1.1001-1.1400	16.00	Apr. 1, 1987
§§ 1.1401-End	20.00	Apr. 1, 1987
2-29	20.00	Apr. 1, 1987
30-39	13.00	Apr. 1, 1987
40-49	12.00	Apr. 1, 1987
50-299	14.00	Apr. 1, 1987
300-499	15.00	Apr. 1, 1987
500-599	8.00	[3] Apr. 1, 1980
600-End	6.00	Apr. 1, 1987
27 Parts:		
1-199	21.00	Apr. 1, 1987
200-End	13.00	Apr. 1, 1987
28	23.00	July 1, 1987
29 Parts:		
0-99	16.00	July 1, 1987

Title	Price	Revision Date
100–499	7.00	July 1, 1987
500–899	24.00	July 1, 1987
900–1899	10.00	July 1, 1987
1900–1910	28.00	July 1, 1987
1911–1925	6.50	July 1, 1987
1926	10.00	July 1, 1987
1927–End	23.00	July 1, 1987
30 Parts:		
0–199	20.00	July 1, 1987
200–699	8.50	July 1, 1987
700–End	18.00	July 1, 1987
31 Parts:		
0–199	12.00	July 1, 1987
200–End	16.00	July 1, 1987
32 Parts:		
1–39, Vol. I	15.00	[4] July 1, 1984
1–39, Vol. II	19.00	[4] July 1, 1984
1–39, Vol. III	18.00	[4] July 1, 1984
1–189	20.00	July 1, 1987
190–399	23.00	July 1, 1987
400–629	21.00	July 1, 1987
630–699	13.00	[5] July 1, 1986
700–799	15.00	July 1, 1987
800–End	16.00	July 1, 1987
33 Parts:		
1–199	27.00	July 1, 1987
200–End	19.00	July 1, 1987
34 Parts:		
1–299	20.00	July 1, 1987
300–399	11.00	July 1, 1987
400–End	23.00	July 1, 1987
35	9.00	July 1, 1987
36 Parts:		
1–199	12.00	July 1, 1987
200–End	19.00	July 1, 1987
37	13.00	July 1, 1987
38 Parts:		
0–17	21.00	July 1, 1987
18–End	16.00	July 1, 1987
39	13.00	July 1, 1987
40 Parts:		
1–51	21.00	July 1, 1987
52	26.00	July 1, 1987
53–60	24.00	July 1, 1987
61–80	12.00	July 1, 1987
81–99	25.00	July 1, 1987
100–149	23.00	July 1, 1987
150–189	18.00	July 1, 1987
190–399	29.00	July 1, 1987
400–424	22.00	July 1, 1987
425–699	21.00	July 1, 1987
700–End	27.00	July 1, 1987
41 Chapters:		
1, 1–1 to 1–10	13.00	[6] July 1, 1984
1, 1–11 to Appendix, 2 (2 Reserved)	13.00	[6] July 1, 1984
3–6	14.00	[6] July 1, 1984
7	6.00	[6] July 1, 1984
8	4.50	[6] July 1, 1984
9	13.00	[6] July 1, 1984
10–17	9.50	[6] July 1, 1984
18, Vol. I, Parts 1–5	13.00	[6] July 1, 1984
18, Vol. II, Parts 6–19	13.00	[6] July 1, 1984
18, Vol. III, Parts 20–52	13.00	[6] July 1, 1984
19–100	13.00	[6] July 1, 1984
1–100	10.00	July 1, 1987
101	23.00	July 1, 1987
102–200	11.00	July 1, 1987
201–End	8.50	July 1, 1987
42 Parts:		
1–60	15.00	Oct. 1, 1987
61–399	5.50	Oct. 1, 1987
400–429	21.00	Oct. 1, 1987
430–End	14.00	Oct. 1, 1987
43 Parts:		
1–999	15.00	Oct. 1, 1987
1000–3999	24.00	Oct. 1, 1987
4000–End	11.00	Oct. 1, 1987
44	18.00	Oct. 1, 1987
45 Parts:		
1–199	14.00	Oct. 1, 1987
200–499	9.00	Oct. 1, 1987
500–1199	18.00	Oct. 1, 1987
1200–End	14.00	Oct. 1, 1987
46 Parts:		
1–40	13.00	Oct. 1, 1987
41–69	13.00	Oct. 1, 1987
70–89	7.00	Oct. 1, 1987
90–139	12.00	Oct. 1, 1987
140–155	12.00	Oct. 1, 1987
156–165	14.00	Oct. 1, 1987
166–199	13.00	Oct. 1, 1987
200–499	19.00	Oct. 1, 1987
500–End	10.00	Oct. 1, 1987
47 Parts:		
0–19	17.00	Oct. 1, 1987
20–39	21.00	Oct. 1, 1987
40–69	10.00	Oct. 1, 1987
70–79	17.00	Oct. 1, 1987
80–End	20.00	Oct. 1, 1987
48 Chapters:		
1 (Parts 1–51)	26.00	Oct. 1, 1987
1 (Parts 52–99)	16.00	Oct. 1, 1987
2 (Parts 201–251)	17.00	Oct. 1, 1987
2 (Parts 252–299)	15.00	Oct. 1, 1987
3–6	17.00	Oct. 1, 1987
7–14	24.00	Oct. 1, 1987
15–End	23.00	Oct. 1, 1987
49 Parts:		
1–99	10.00	Oct. 1, 1987
100–177	25.00	Oct. 1, 1987
178–199	19.00	Oct. 1, 1987
200–399	17.00	Oct. 1, 1987
400–999	22.00	Oct. 1, 1987
1000–1199	17.00	Oct. 1, 1987
1200–End	18.00	Oct. 1, 1987
50 Parts:		
1–199	16.00	Oct. 1, 1987
200–599	12.00	Oct. 1, 1987
600–End	14.00	Oct. 1, 1987
CFR Index and Findings Aids	27.00	Jan. 1, 1987
Complete 1988 CFR set	595.00	1988
Microfiche CFR Edition:		
Complete set (one-time mailing)	155.00	1983
Complete set (one-time mailing)	125.00	1984
Complete set (one-time mailing)	115.00	1985
Subscription (mailed as issued)	185.00	1987
Subscription (mailed as issued)	185.00	1988
Individual copies	3.75	1988

[1] Because Title 3 is an annual compilation, this volume and all previous volumes should be retained as a permanent reference source.

[2] No amendments to this volume were promulgated during the period Jan. 1, 1987 to Dec. 31, 1987. The CFR volume issued January 1, 1987, should be retained.

[3] No amendments to this volume were promulgated during the period Apr. 1, 1980 to March 31, 1987. The CFR volume issued as of Apr. 1, 1980, should be retained.

[4] The July 1, 1985 edition of 32 CFR Parts 1–189 contains a note only for Parts 1–39 inclusive. For the full text of the Defense Acquisition Regulations in Parts 1–39, consult the three CFR volumes issued as of July 1, 1984, containing those parts.

[5] No amendments to this volume were promulgated during the period July 1, 1986 to June 30, 1987. The CFR volume issued as of July 1, 1986, should be retained.

[6] The July 1, 1985 edition of 41 CFR Chapters 1–100 contains a note only for Chapters 1 to 49 inclusive. For the full text of procurement regulations in Chapters 1 to 49, consult the eleven CFR volumes issued as of July 1, 1984 containing those chapters.

VOL 53 ISS 69 AP 11 1988 UMI

ion Date
1, 1987
1, 1987
1, 1987

1, 1987
1, 1987
1, 1987
1, 1987

1, 1987
1, 1987
1, 1987
1, 1987

1, 1987
1, 1987
1, 1987
1, 1987
1, 1987
1, 1987
1, 1987
1, 1987
1, 1987

1, 1987
1, 1987
1, 1987
1, 1987
1, 1987

1, 1987
1, 1987
1, 1987
1, 1987
1, 1987
1, 1987
1, 1987
1, 1987
1, 1987

1, 1987
1, 1987
1, 1987
1, 1987
1, 1987
1, 1987
1, 1987

1, 1987
1, 1987
1, 1987

1, 1987

1988

1983
1984
1985
1987
1988
1988

should be

7 to Dec.

to March

rts 1–39
nsult the

6 to June

ters 1 to
he eleven

VOL 53 ISS 69 AP 11 1988 UMI

Just Released

Code of Federal Regulations

Revised as of January 1, 1988

Quantity	Volume	Price	Amount
	Title 10—Energy		
_____	Parts 51–199 (Stock No. 869–004–00030–8)	$14.00	$_____
_____	Parts 400–499 (Stock No. 869–004–00032–4)	13.00	_____
	Title 11—Federal Elections		
_____	(Stock No. 869–004–00034–1)	10.00	_____
		Total Order	$_____

A cumulative checklist of CFR issuances appears every Monday in the Federal Register in the Reader Aids section. In addition, a checklist of current CFR volumes, comprising a complete CFR set, appears each month in the LSA (List of CFR Sections Affected).

Please do not detach

Order Form

Mail to: Superintendent of Documents, U.S. Government Printing Office, Washington, D.C. 20402

Enclosed find $_____. Make check or money order payable to Superintendent of Documents. (Please do not send cash or stamps). Include an additional 25% for foreign mailing.

Charge to my Deposit Account No.

☐☐☐☐☐☐☐–☐

Order No._____

VISA

MasterCard

Credit Card Orders Only

Total charges $_____ Fill in the boxes below.

Credit Card No. ☐☐☐☐☐☐☐☐☐☐☐☐☐☐☐☐☐☐☐☐

Expiration Date Month/Year ☐☐-☐☐

Please send me the **Code of Federal Regulations** publications I have selected above.

Name—First, Last

Street address

Company name or additional address line

City State ZIP Code

(or Country)

PLEASE PRINT OR TYPE

For Office Use Only.

	Quantity	Charges
Enclosed		
To be mailed		
Subscriptions		
Postage		
Foreign handling		
MMOB		
OPNR		
UPNS		
Discount		
Refund		

unt

ach

C. 20402

w.

Charges

VOL
53

ISS
69

AP
11

1988

UMI

VOL
53

ISS
70

AP
12

1988

UMI

4-12-
Vol. 5

Unite
Gove
Print
SUPER
OF DO
Washin

OFFICI
Penalty

4-12-88
Vol. 53 No. 70

federal register

Tuesday
April 12, 1988

United States
Government
Printing Office
SUPERINTENDENT
OF DOCUMENTS
Washington, DC 20402

OFFICIAL BUSINESS
Penalty for private use, $300

**********5-DIGIT 48106

A FR SERIA300S NOV 88 R
SERIALS PROCESSING
UNIV MICROFILMS INTL
300 N ZEEB RD
ANN ARBOR MI 48106

SECOND CLASS NEWSPAPER
Postage and Fees Paid
U.S. Government Printing Office
(ISSN 0097-6326)

VOL
53

ISS
70

AP
12

1988

UMI

4-12-8
Vol. 53
Pages

4-12-88
Vol. 53 No. 70
Pages 11991-12136

federal register

Tuesday
April 12, 1988

Briefings on How To Use the Federal Register—
For information on briefings in Washington, DC, and Boston, MA, see announcement on the inside cover of this issue.

BEST COPY AVAILABLE

FEDERAL REGISTER Published daily, Monday through Friday, (not published on Saturdays, Sundays, or on official holidays), by the Office of the Federal Register, National Archives and Records Administration, Washington, DC 20408, under the Federal Register Act (49 Stat. 500, as amended; 44 U.S.C. Ch. 15) and the regulations of the Administrative Committee of the Federal Register (1 CFR Ch. I). Distribution is made only by the Superintendent of Documents, U.S. Government Printing Office, Washington, DC 20402.

The **Federal Register** provides a uniform system for making available to the public regulations and legal notices issued by Federal agencies. These include Presidential proclamations and Executive orders and Federal agency documents having general applicability and legal effect, documents required to be published by act of Congress and other Federal agency documents of public interest. Documents are on file for public inspection in the Office of the Federal Register the day before they are published, unless earlier filing is requested by the issuing agency.

The **Federal Register** will be furnished by mail to subscribers for $340.00 per year, or $170.00 for 6 months in paper form, or $188.00 per year, or $94.00 for six months in microfiche form, payable in advance. The charge for individual copies is $1.50 for each issue, or $1.50 for each group of pages as actually bound. Remit check or money order, made payable to the Superintendent of Documents, U.S. Government Printing Office, Washington, DC 20402, or charge to your GPO Deposit Account or VISA or Mastercard.

There are no restrictions on the republication of material appearing in the **Federal Register**.

How To Cite This Publication: Use the volume number and the page number. Example: 52 FR 12345.

SUBSCRIPTIONS AND COPIES

PUBLIC

Subscriptions:

Paper or fiche	202-783-3238
Magnetic tapes	275-3328
Problems with public subscriptions	275-3054

Single copies/back copies:

Paper or fiche	783-3238
Magnetic tapes	275-3328
Problems with public single copies	275-3050

FEDERAL AGENCIES

Subscriptions:

Paper or fiche	523-5240
Magnetic tapes	275-3328
Problems with Federal agency subscriptions	523-5240

For other telephone numbers, see the Reader Aids section at the end of this issue.

THE FEDERAL REGISTER
WHAT IT IS AND HOW TO USE IT

FOR: Any person who uses the Federal Register and Code of Federal Regulations.

WHO: The Office of the Federal Register.

WHAT: Free public briefings (approximately 3 hours) to present:
1. The regulatory process, with a focus on the Federal Register system and the public's role in the development of regulations.
2. The relationship between the Federal Register and Code of Federal Regulations.
3. The important elements of typical Federal Register documents.
4. An introduction to the finding aids of the FR/CFR system.

WHY: To provide the public with access to information necessary to research Federal agency regulations which directly affect them. There will be no discussion of specific agency regulations.

WASHINGTON, DC

WHEN: April 15; at 9:00 a.m.
WHERE: Office of the Federal Register, First Floor Conference Room, 1100 L Street NW., Washington, DC
RESERVATIONS: Carolyn Payne, 202-523-3187

BOSTON, MA

WHEN: April 19; at 9 a.m.
WHERE: Thomas P. O'Neill, Jr. Federal Building, Auditorium, 10 Causeway Street, Boston, MA.
RESERVATIONS: Call the Boston Federal Information Center, 617-565-8123

Contents

Federal Register
Vol. 53, No. 70
Tuesday, April 12, 1988

Administrative Conference of the United States
NOTICES
Government contractors, indemnification, 12048
Meetings:
Judicial Review Committee, 12049

Agriculture Department
See also Animal and Plant Health Inspection Service; Soil Conservation Service
NOTICES
Committees; establishment, renewal, termination, etc.:
National Plant Genetic Resources Board, 12050

Air Force Department
NOTICES
Meetings:
Scientific Advisory Board, 12054

Alcohol, Drug Abuse, and Mental Health Administration
NOTICES
Grants and cooperative agreements:
Alcohol-related behavior that increases risk of AIDS and/or prevention strategies that reduce risk; research grants, 12076
Meetings; advisory committees:
May, 12076

Alcohol, Tobacco and Firearms Bureau
PROPOSED RULES
Alcoholic beverages:
Wine; foreign names of geographical significance and nongeneric designations, 12024

Animal and Plant Health Inspection Service
PROPOSED RULES
Livestock and poultry disease control:
Brucellosis, 12019

Arts and Humanities, National Foundation
See National Foundation on the Arts and the Humanities

Child Support Enforcement Office
PROPOSED RULES
Program operation standards:
Federal tax refund offset; fees for printing and mailing services, etc., 12041

Commerce Department
See also Foreign-Trade Zones Board; International Trade Administration; National Oceanic and Atmospheric Administration
NOTICES
Agency information collection activities under OMB review, 12051

Committee for the Implementation of Textile Agreements
NOTICES
Cotton, wool, and man-made textiles:
Bangladesh, 12052
Sri Lanka, 12052, 12053
(2 documents)
Export visa requirements; certification, waivers, etc.:
Sri Lanka, 12053

Defense Department
See also Air Force Department; Defense Logistics Agency
RULES
Federal Acquisition Regulation (FAR):
Federal public works projects restrictions and American aerospace exports promotion at domestic and international exhibits, 12128
PROPOSED RULES
Personnel:
Certificates of release or discharge from active duty (DD Form 214/5 series), 12034

Defense Logistics Agency
NOTICES
Procurement:
Commercial activities, performance; program studies (OMB A-76 implementation), 12054

Drug Enforcement Administration
NOTICES
Applications, hearings, determinations, etc.:
Daniel, George C., M.D., 12087
Syncates Associates, Inc., 12087

Economic Regulatory Administration
NOTICES
Energy Supply and Environmental Coordination Act; prohibition orders, rescissions, etc.:
Wisconsin Public Service Corp., 12057
Environmental statements; availability, etc.:
Washington Water Power Co.; electric transmission facilities at U.S.-Canada international border, 12055
Natural gas exportation and importation:
Standard Gas Marketing Co., 12058
Powerplant and industrial fuel use; new electric powerplant coal capability; compliance certifications:
Delmarva Power & Light Co., 12059

Education Department
NOTICES
Education Appeal Board hearings:
Jurisdiction designations—
Glenpool Public Schools, OK, 12054

Employment and Training Administration
NOTICES
Adjustment assistance:
Amstar Corp. et al., 12088

Energy Department
See Economic Regulatory Administration; Federal Energy Regulatory Commission; Hearings and Appeals Office, Energy Department

Environmental Protection Agency
RULES
Air pollution; standards of performance for new stationary sources:
Kraft pulp mills, 12008

Residential wood heaters
Correction, 12009
PROPOSED RULES
Superfund program:
Toxic chemical release reporting; community right-to-know; acid blue 9 deletion from list, 12035
NOTICES
Air programs:
Ambient air monitoring reference and equivalent methods—
Dasibi Model 3008 Gas Filter Correlation CO Analyzer, 12073
Meetings:
Biotechnology Science Advisory Committee, 12075
Senior Executive Service:
Performance Review Board; membership, 12074

Executive Office of the President
See Presidential Commission on the Human Immunodeficiency Virus Epidemic; Presidential Documents

Export Administration
See International Trade Administration

Family Support Administration
See Child Support Enforcement Office

Federal Aviation Administration
NOTICES
Exemption petitions; summary and disposition, 12092

Federal Emergency Management Agency
NOTICES
Agency information collection activities under OMB review, 12075
Radiological emergency; State plans:
Texas, 12075

Federal Energy Regulatory Commission
RULES
Electric utilities (Federal Power Act):
Generic determination of rate of return on common equity for public utilities, 11991
Natural gas companies (Natural Gas Act):
Purchased gas adjustment regulations
Correction, 11991
NOTICES
Electric rate, small power production, and interlocking directorate filings, etc.:
Arkansas Power & Light Co. et al., 12060
Meetings; Sunshine Act, 12096
Natural gas certificate filings:
Great Lakes Gas Transmission Co. et al., 12061
Transcontinental Gas Pipe Line Corp. et al., 12062
Natural gas companies:
Certificates of public convenience and necessity; applications, abandonment of service and petitions to amend (ARCO Oil & Gas Co. et al.), 12070
Applications, hearings, determinations, etc.:
Canyon Creek Compression Co., 12065
Kentucky West Virginia Gas Co., 12066
Mississippi River Transmission Corp., 12066
Natural Gas Pipeline Co. of America, 12066
Northwest Pipeline Corp., 12067
Questar Pipeline Co., 012067
Transcontinental Gas Pipe Line Corp., 12068
Valley Gas Transmission, Inc., 12068
Williams Natural Gas Co., 12069
Williston Basin Interstate Pipeline Co., 12069

Federal Maritime Commission
NOTICES
Agreements filed, etc., 12075

Federal Reserve System
NOTICES
Agency information collection activities under OMB review, 12076
Meetings; Sunshine Act, 12096

Fish and Wildlife Service
PROPOSED RULES
Marine mammals:
Commercial fishing operations, incidental taking; small take exemption, 12043

Food and Drug Administration
NOTICES
Medical devices:
Ophthalmic devices—
Class III daily wear contact lenses, alternate design configurations; premarket approval policy statement, 12077

Foreign-Trade Zones Board
NOTICES
Applications, hearings, determinations, etc.:
Kentucky—
Hitachi Auto Components Plant, 12051
Toyota Automobile Manufacturing Plant, 12051

General Services Administration
RULES
Federal Acquisition Regulation (FAR):
Federal public works projects restrictions and American aerospace exports promotion at domestic and international exhibits, 12128

Health and Human Services Department
See Alcohol, Drug Abuse, and Mental Health Administration; Child Support Enforcement Office; Food and Drug Administration; Health Care Financing Administration

Health Care Financing Administration
RULES
Medicare:
Hospital outpatient services; return on equity capital, allowance elimination, 12016
Medicare and medicaid:
Reporting and recordkeeping requirements, and HMO and PHP contract requirements, 12010
PROPOSED RULES
Medicare:
Physician services; prevailing charge differentials for specialists, discontinuation, 12037

Hearings and Appeals Office, Energy Department
NOTICES
Decisions and orders, 12071

Housing and Urban Development Department
RULES
Mortgage and loan insurance programs:
Maximum mortgage limits for high-cost areas
Correction, 11997

Human Immunodeficiency Virus Epidemic Presidential Commission
See Presidential Commission on the Human Immunodeficiency Virus Epidemic

Interior Department
See Fish and Wildlife Service; Land Management Bureau; National Park Service

Internal Revenue Service
RULES
Income taxes:
Mortgage interest received in trade or business from individuals, 12000
Trusts and estates; estimated tax payment deposits, 12006

International Development Cooperation Agency
See Overseas Private Investment Corporation

International Trade Administration
NOTICES
Meetings:
Electronic Instrumentation Technical Advisory Committee, 12052

Interstate Commerce Commission
NOTICES
Railroad operation, acquisition, construction, etc.:
Atchison, Topeka & Santa Fe Railroad Co., 12081
Railroad services abandonment:
Soo Line Railroad Co., 12081

Justice Department
See also Drug Enforcement Administration
RULES
Grants and cooperative agreements to State and local governments; uniform administrative requirements (OMB A-102 implementation)
Correction, 12099
NOTICES
Cooperative agreements:
Mariel Cubans paroled or reparoled from Immigration and Naturalization Service detention facilities; special placement programs, 12081

Labor Department
See also Employment and Training Administration; Occupational Safety and Health Administration; Veterans Employment and Training, Office of Assistant Secretary
NOTICES
Agency information collection activities under OMB review, 12087

Land Management Bureau
NOTICES
Realty actions; sales, leases, etc.:
Arizona, 12078
California, 12078, 12079
(3 documents)

Legal Services Corporation
RULES
Individuals eligible for legal assistance; income levels, 12017

National Aeronautics and Space Administration
RULES
Federal Acquisition Regulation (FAR):
Federal public works projects restrictions and American aerospace exports promotion at domestic and international exhibits, 12128

National Foundation on the Arts and the Humanities
NOTICES
Meetings:
Humanities National Council, 12089

National Highway Traffic Safety Administration
NOTICES
Motor vehicle safety standards; exemption petitions, etc.:
General Motors Corp., 12093

National Oceanic and Atmospheric Administration
PROPOSED RULES
Fishery conservation and management:
Gulf of Mexico shrimp, 12046

National Park Service
NOTICES
National Register of Historic Places:
Pending nominations—
Alabama et al., 12080

Nuclear Regulatory Commission
NOTICES
Environmental statements; availability, etc.:
Malapai Resources Co., 12090
Meetings; Sunshine Act, 12098
Applications, hearings, determinations, etc.:
Pennsylvania Power & Light Co., 12090

Occupational Safety and Health Administration
RULES
Safety and health standards:
Equipment and materials; testing or certification, 12102

Overseas Private Investment Corporation
RULES
Freedom of Information Act; implementation:
Uniform fee schedule and administrative guidelines, 11992

Presidential Commission on the Human Immunodeficiency Virus Epidemic
NOTICES
Meetings, 12091

Presidential Documents
EXECUTIVE ORDERS
Panama; prohibition of certain transactions (EO 12835), 12134

Public Health Service
See Alcohol, Drug Abuse, and Mental Health Administration; Food and Drug Administration

Securities and Exchange Commission
NOTICES
Meetings; Sunshine Act, 12098
Self-regulatory organizations; unlisted trading privileges:
Cincinnati Stock Exchange, Inc., 12091

Midwest Stock Exchange, Inc., 12092
Applications, hearings, determinations, etc.:
American Pain & Stress, Inc., et al., 12092

Soil Conservation Service
NOTICES
Environmental statements; availability, etc.:
Pamunkey River Watershed, VA, 12050
Upper Choptank River Watershed, DE, 12050

State Department
RULES
Defense articles and services; exports
Correction, 12099
NOTICES
Organization, functions, and authority delegations:
Inter-American Affairs, Assistant Secretary of State; Federal Reserve Act functions concerning Panama, 12092

Textile Agreements Implementation Committee
See Committee for the Implementation of Textile Agreements

Transportation Department
See Federal Aviation Administration; National Highway Traffic Safety Administration

Treasury Department
See Alcohol, Tobacco and Firearms Bureau; Internal Revenue Service

United States Information Agency
NOTICES
Grants; availability, etc.:
Private non-profit organizations in support of international educational and cultural activities, 12094

Veterans Employment and Training, Office of Assistant Secretary
NOTICES
Grants; availability, etc.:
Homeless veterans reintegration project; preapplication procedures, 12088

Separate Parts In This Issue

Part II
Department of Labor, Occupational Safety and Health Administration, 12102

Part III
Department of Defense; General Services Administration; National Aeronautics and Space Administration, 12128

Part IV
The President, 12134

Reader Aids
Additional information, including a list of public laws, telephone numbers, and finding aids, appears in the Reader Aids section at the end of this issue.

VOL 53 ISS 70 APR 12 1988 UMI

CFR PARTS AFFECTED IN THIS ISSUE

A cumulative list of the parts affected this month can be found in the Reader Aids section at the end of this issue.

3 CFR
Executive Orders:
12635 12134

9 CFR
Proposed Rules:
78 12019

18 CFR
37 11191
154 11191

22 CFR
120 12099
121 12099
122 12099
123 12099
124 12099
125 12099
126 12099
127 12099
128 12099
706 11992

24 CFR
201 11997
203 11997
234 11997

26 CFR
1 (2 documents) 12000
602 (2 documents) 12000

27 CFR
Proposed Rules:
4 12024
12 12024

28 CFR
66 12099

29 CFR
1907 12102
1910 12102

32 CFR
Proposed Rules:
45 12034

40 CFR
60 (2 documents) 12008, 12009

Proposed Rules:
372 12035

42 CFR
405 12010
413 12016
434 12010

Proposed Rules:
405 12037

45 CFR
1611 12017

Proposed Rules:
303 12041

48 CFR
25 12128
31 12128
52 12128

50 CFR
Proposed Rules:
18 12043
658 12046

VOL
53

ISS
70

AP
12

1988

UMI

Rule

This sec
contains
general
of which
the Code
published
U.S.C. 1
The Cod
by the S
Prices of
first FED
week.

DEPART

Federal
Commis

18 CFR

[Docket

Generic
Return
Utilities

Issued Ma

AGENCY:
Commis

ACTION:

SUMMAR
Regulato
issued a
35–000 (
5, 1988).
Commis
determin
benchma
equity fo
of public
concerni
a rate of
received
final rule
contends
underest
equity of
conduct
the finan
the elect
Commiss
argumen
the finan
the elect
reflected
discount
performe
petitione
of the ge
proceedi
Federal
Commiss
consider

Rules and Regulations

Federal Register
Vol. 53, No. 70
Tuesday, April 12, 1988

This section of the FEDERAL REGISTER contains regulatory documents having general applicability and legal effect, most of which are keyed to and codified in the Code of Federal Regulations, which is published under 50 titles pursuant to 44 U.S.C. 1510.
The Code of Federal Regulations is sold by the Superintendent of Documents. Prices of new books are listed in the first FEDERAL REGISTER issue of each week.

DEPARTMENT OF ENERGY

Federal Energy Regulatory Commission

18 CFR Part 37

[Docket No. RM87-35-001]

Generic Determination of Rate of Return on Common Equity for Public Utilities

Issued March 30, 1988.

AGENCY: Federal Energy Regulatory Commission, DOE.

ACTION: Order denying rehearing.

SUMMARY: The Federal Energy Regulatory Commission (Commission) issued a final rule in Docket No. RM87-35-000 (Order No. 489, 53 FR 3342, Feb. 5, 1988). In Order No. 489, the Commission readopted a procedure for determining and updating the benchmark rate of return on common equity for the jurisdictional operations of public utilities and took other actions concerning the generic determination of a rate of return. The Commission received one petition for rehearing of the final rule in this docket. The petitioner contends that the Commission underestimated the cost of common equity of electric utilities by failing to conduct a comprehensive assessment of the financial and operating conditions of the electric utility industry. The Commission rejects the petitioner's argument by stating that assessments of the financial and operating conditions of the electric utility industry are already reflected in components of the discounted cash flow (DCF) analysis performed by the Commission. The petitioner also argues that the extension of the generic rate of return to proceedings under section 206 of the Federal Power Act is inappropriate. The Commission affirms its prior decision to consider the generic rate of return on an advisory basis in proceedings under section 206, stating that such consideration would be useful as an indication of the industry average rate of return.

EFFECTIVE DATE: This order will become effective March 30, 1988.

FOR FURTHER INFORMATION CONTACT: Robert E. Gian, Office of the General Counsel, Federal Energy Regulatory Commission, 825 North Capitol Street, NE., Washington, DC 20426, (202) 357-8530.

SUPPLEMENTARY INFORMATION: This is a summary of the Commission's action in Docket No. RM87-35-001 adopted and released March 30, 1988.

The full text of this Commission action is available for inspection and copying during normal business hours in Room 1000 at the Commission's Headquarters, 825 North Capitol Street, NE., Washington, DC 20426. The complete text on diskette in WordPerfect format may also be purchased from the Commission's copy contractor, La Dorn Systems Corporation, also located in Room 1000, 825 North Capitol Street, NE., Washington, DC 20426.

By the Commission.

Lois D. Cashell,

Acting Secretary.

[FR Doc. 88-7988 Filed 4-11-88; 8:45 am]

BILLING CODE 6717-01-M

18 CFR Part 154

[Docket No. RM-6-14-000; Order Nos. 483, 483-A]

Revisions to the Purchased Gas Adjustment Regulations; Correction

Issued April 6, 1988.

AGENCY: Federal Energy Regulatory Commission, DOE.

ACTION: Final rule, Correction Notice.

SUMMARY: The Federal Energy Regulatory Commission (Commission) is correcting the final rule, Revisions to the Purchased Gas Adjustment Regulations, 52 FR 43854 (Nov. 17, 1987) and the Order on Rehearing on the Revisions to the Purchased Gas Adjustment Regulations, 53 FR 7495 (March 9, 1988).

EFFECTIVE DATE: April 6, 1988.

FOR FURTHER INFORMATION CONTACT: Andrew S. Katz, Office of the General Counsel, Federal Energy Regulatory Commission, 825 N. Capitol Street, NE., Washington, DC 20426, Phone: (202) 357-8020.

SUPPLEMENTARY INFORMATION:

On November 10, 1987, and March 2, 1988 respectively, the Commission issued its final rule and order on rehearing for Revisions to the Purchased Gas Adjustment Regulations. In both the final rule and the order on rehearing, § 154.304 incorrectly lists the names of three of the pipelines subject to annual and quarterly PGA filings. The Commission is correcting those references. Further, the order on rehearing amending § 154.305(e) introductory text, (i)(3)(i) and (i)(3)(ii) inadvertently omitted revisions to the cross references in those paragraphs. This correction notice provides the correct cross references.

By direction of the Commission.

Lois D. Cashell,

Acting Secretary.

PART 154—RATE SCHEDULES AND TARIFFS

1. The authority citation for Part 154 continues to read as follows:

Authority: Natural Gas Act, 15 U.S.C. 717-717w (1982); Department of Energy Organization Act, 42 U.S.C. 7102-7352 (1982); E.O. 12009, 3 CFR 1978 Comp., p. 142; Independent Offices Appropriation Act, 31 U.S.C. 9701 (1976).

2. In § 154.304, paragraph (c) is revised to read as follows:

§ 154.304 Scheduled annual and quarterly PGA filings.

* * * * *

(c) *Effective dates.* A pipeline must file its annual and quarterly PGA filings with the Commission to be effective as follows:

Annual Date: January 1

[Quarterly Dates: Apr 1, July 1, Oct 1]

Alabama-Tennessee Natural Gas Company
Granite State Gas Transmission, Inc.
East Tennessee Natural Gas Company
Nothern Natural Gas Company
Sea Robin Pipeline Company
Tennessee Gas Pipeline Company
National Fuel Gas Supply Corporation

Annual Date: February 1

[Quarterly Dates: May 1, Aug 1, Nov 1]

Lawrenceburg Gas Transmission Corporation
Texas Eastern Transmission Corporation
Texas Gas Transmission Corporation

Annual Date: March 1

[Quarterly Dates: June 1, Sept 1, Dec 1]

Algonquin Gas Transmission Company
Natural Gas Pipeline Company of America
North Penn Gas Company
Panhandle Eastern Pipe Line Company

Annual Date: April 1

[Quarterly Dates: July 1, Oct 1, Jan 1]

Arkla Energy Resources, A Division of Arkla, Inc.
Commercial Pipeline Company, Inc.
Midwestern Gas Transmission Company, Southern Division
Northwest Pipeline Corporation
Southern Natural Gas Company

Annual Date: May 1

[Quarterly Dates: Aug 1, Nov 1, Feb 1]

ANR Pipeline Company
Columbia Gas Transmission Company
Florida Gas Transmission Company
Kentucky-West Virginia Gas Company
MIGC, Inc.
Williams Natural Gas Company

Annual Date: June 1

[Quarterly Dates: Sept 1, Dec 1, Mar 1]

Mississippi River Transmission Corporation
Questar Pipeline Company
Pacific Interstate Transmission Company
Valero Interstate Transmission Company

Annual Date: July 1

[Quarterly Dates: Oct 1, Jan 1, Apr 1]

Distrigas of Massachusetts Corporation
El Paso Natural Gas Company
Gas Gathering Corporation
South Georgia Natural Gas Company
Transwestern Pipeline Company

Annual Date: August 1

[Quarterly Dates: Nov 1, Feb 1, May 1]

Bayou Interstate Pipeline System
Transcontinental Gas Pipe Line Company
Western Gas Interstate Company
Williston Basin Interstate Pipeline Company

Annual Date: September 1

[Quarterly Dates: Dec 1, Mar 1, June 1]

CNG Transmission Corporation
Carnegie Natural Gas Company
Equitrans, Inc.
Locust Ridge Gas Company
Mid Louisiana Gas Company
Trunkline Gas Company

Annual Date: October 1

[Quarterly Dates: Jan 1, Apr 1, Jul 1]

Colorado Interstate Gas Company
Raton Gas Transmission Company
Ringwood Gathering Company
Southwest Gas Corporation
United Gas Pipeline Company
West Texas Gas, Inc.

Annual Date: November 1

[Quarterly Dates: Feb 1, May 1, Aug 1]

Eastern Shore Natural Gas Company
Great Lakes Gas Transmission Company
Inter-City Minnesota Pipeline, Ltd., Inc.
Texas Gas Pipe Line Corporation
Valley Gas Transmission
Midwestern Gas Transmission Company, Northern Division

Annual Date: December 1

[Quarterly Dates: Mar 1, June 1, Sept 1]

KN Energy, Incorporated
Louisiana-Nevada Transit Company
Western Transmission Corporation

3. In § 154.305, paragraphs (e) introductory text, (i)(3)(i) and (i)(3)(ii) are revised to read as follows:

§ 154.305 Annual PGA filing.

* * * * *

(e) *Surcharge balance.* Subject to the conditions in paragraph (f) of this section and § 154.306, the balance for determining the surcharge includes:

* * * * *

(i) *Refunds.* * * *

(3) *Debiting refund subaccount.* * * *

(i) If the balance is a credit balance, disburse the amounts in cash in the manner described in paragraphs (i)(2)(i) or (i)(2)(ii) of this section; or

(ii) If the balance is a debit balance or the pipeline elects not to make a cash disbursement under paragraph (i)(3)(i) of this section, transfer the amounts to the current deferral subaccount balance determined under paragraphs (e) and (g) of this section.

* * * * *

[FR Doc. 88-7967 Filed 4-11-88; 8:45 am]

BILLING CODE 6717-01-M

OVERSEAS PRIVATE INVESTMENT CORPORATION

22 CFR Part 706

Public Information

AGENCY: Overseas Private Investment Corporation ("OPIC").

ACTION: Final rule.

SUMMARY: These final rules replace the regulations of the Overseas Private Investment Corporation ("OPIC" or the "Corporation") governing the agency's processing of requests under the Freedom of Information Act ("FOIA" or the "Act"). The rules set forth the procedures governing public access to information contained in the files, documents and records of the Corporation, as well as the procedures by which persons submitting confidential business information to OPIC may designate such information as exempt from disclosure under the FOIA. Many of the changes are necessary to implement certain provisions of the Freedom of Information Act of 1986 (Pub. L. 99-570) which *inter alia*, prescribes the adoption of a government-wide uniform schedule of fees in accordance with the Office of Management and Budget Guidelines published at 52 FR 10012-10020.

DATE: Effective date: May 12, 1988.

FOR FURTHER INFORMATION CONTACT: Ralph T. Mabry at (202) 457-7021 or Robert Jordan at (202) 457-7093, or write to either of them at Overseas Private Investment Corporation, 1615 M Street, NW., Washington, D.C. 20527.

SUPPLEMENTARY INFORMATION: OPIC published notice of the regulations in the **Federal Register** on February 25, 1988 (53 FR 5583). No comments were received. Accordingly, the proposed rules are being promulgated today as OPIC's final rules on the processing of requests under the Freedom of Information Act.

The proposed replacement regulations include new policies and procedures relating to: (1) Predisclosure notification procedures for confidential business information; (2) designation of confidential business information; and (3) the schedule of fees to be charged in connection with the search, review and duplication of documents requested.

Pursuant to Executive Order 12600 of June 23, 1987, the regulations hereby promulgated establish procedures to notify submitters of records containing confidential business information of requests for the disclosure of this information under the Act. The rules formalize OPIC's long standing policy of notifying submitters of information and giving them an opportunity to object to its public disclosure. Also established are procedures enabling applicants for OPIC programs who provide confidential business information in support of their applications to designate information as privileged and confidential at the time the information is submitted to OPIC.

A new fee schedule is also established. The amended changes are intended to reflect the Corporation's direct costs in processing FOIA requests. The schedule has been prepared in accordance with the Freedom of Information Reform Act ("FOIRA") of 1986 (Pub. L. 99-570). FOIRA requires that all federal agencies conform to a uniform charging system as established by the Office of Management and Budget ("OMB"). The new fee schedule is based on the OMB uniform fee schedule and guidelines issued March 27, 1987 (52 FR 10012).

In the preamble to OPIC's proposed replacement regulations, the Corporation announced its intention to follow the guidelines issued by the Department of Justice on April 2, 1987 The final rules set forth below have

been amended to provide greater detail on the criteria the Corporation will consider in granting fee waivers and reducing fees.

Pursuant to the Regulatory Flexibility Act, 5 USC 601 *et seq.*, the head of OPIC has certified that the rules, as promulgated, will not have a significant economic impact on a substantial number of small entities.

The proposed rules are not a major rule for the purposes of Executive Order 12291 of February 17, 1981, since they are not likely to result in:

(1) An annual effect on the United States economy of $100 million or more;

(2) A major increase in costs or prices for consumers, individual industries, Federal, State, or local government agencies, or geographic regions; or

(3) Significant adverse effects on competition, employment, investment, productivity, innovation, or on the ability of the Unites States-based enterprises in domestic or export markets.

The rules hereby promulgated do not contain a collection of information for the purposes of the Paperwork Reduction Act.

List of Subjects in 22 CFR Part 706

Freedom of information.

For the reasons set forth in the preamble, 22 CFR Part 706 is revised to read as follows:

PART 706—DISCLOSURE OF PUBLIC INFORMATION

Subpart A—General

Sec.
706.11 Purpose and policy.
706.12 Scope.
706.13 Definitions.

Subpart B—Procedures and Fees

706.21 Information and records available to the public.
706.22 Information and records not generally available to the public.
706.23 Public access to information and records.
706.24 Notification of corporation action.
706.25 Extension of time.
706.26 Fees.
706.27 Administrative appeal of refusal to disclose.

Subpart C—Rights of Submitters of Confidential Business Information

706.31 Notification to submitters of business information.
706.32 Prior designation of business information as privileged or confidential.

Authority: The Freedom of Information Act, as amended, 5 U.S.C. 552.

Subpart A—General

§ 706.11 Purpose and policy.

(a) This part is adopted pursuant to the provisions of the Freedom of Information Act, 5 U.S.C. 552. It establishes the procedures governing public access to information contained in the files, documents and records of the Corporation. It also sets forth the procedures by which persons submitting written information to the Corporation may designate such information as exempt from disclosure under 5 U.S.C. 552(b)(4); and provides submitters of confidential business information with the right to be notified of a request for disclosure and to object to the disclosure of such information.

(b) This part reflects the policy of the Corporation to honor all requests for the disclosure of Corporation records provided that such disclosure does not adversely affect a legitimate public or private interest, is required and/or not prohibited by law or other authority, and would not impose an unreasonable burden on the Corporation. However, this part also reflects the view of the Corporation that the soundness and viability of many of its programs depend in large measure upon the willingness of applicants for Corporation assistance to provide full and reliable commercial, financial, technical and business information relating to the conduct of their affairs. Since the release of such information may imperil the competitive business position and credit standing of an applicant, it is essential that applicants be assured that confidential commercial or financial information which is submitted to the Corporation will not be disclosed to the public. This part is designed in part to give this assurance and thereby to encourage applicants to make complete disclosure of information bearing upon an application for OPIC assistance.

§ 706.12 Scope.

This part applies to all files, documents, records, and information obtained or produced by officers and employees of the Corporation in the course of their official duties and/or under such officer or employee's control. Specific types of files, documents, records and items of information described herein are illustrative rather than exclusive. This part does not purport to describe or set forth every file, document, record or item of information which may or may not be disclosed or to incorporate every exemption from disclosure provided by law.

§ 706.13 Definitions.

(a) Except as may be otherwise provided in paragraph (b) of this section, all terms used in this part which are defined in the Freedom of Information Act, 5 U.S.C. 552 shall have the same meaning.

(b)(1) "Act" means the "Freedom of Information Act," as amended, 5 U.S.C. 552.

(2) "Business information" means trade secrets or confidential or privileged commercial or financial information obtained from any person, including but not necessarily limited to such information as is contained in individual case files relating to such activities as insurance, loans and loan guarantees.

(3) "Business submitter" means any person or entity which provides business information to the Corporation.

(4) "Commercial use request" refers to a request from or on behalf of one who seeks information for a use or purpose that is related to the commerce, trade, or profit interests of the requester or the person on whose behalf the request is made. The term "commercial use requester" refers to any person making a commercial use request. In determining whether a requester properly belongs in this category, the Corporation will determine the use to which a requester will put the documents requested. Where the Corporation has reasonable cause to doubt the use to which a requester will put records sought, or where that use is not clear from the request itself, the Corporation may seek additional clarification before assigning the request to a specific category.

(5) "Direct costs" means those expenditures which the Corporation actually incurs in searching for and duplicating (and in the case of commercial requesters, reviewing) documents to respond to a request under the Freedom of Information Act.

(6) "Duplication" refers to the process of making a copy of a document available to the FOIA requester. Copies will be ordinarily in the form of a photocopy of the original document.

(7) "Educational institution" refers to a preschool, a public or private elementary or secondary school, an institution of graduate higher education, an institution of vocational education, an institution of undergraduate higher education, an institution of professional education and an institution of vocational education, which operates a program or programs of scholarly research.

(8) "FOIA" means the Act.

(9) "Non-commercial scientific institution" refers to an institution that

is not operated on a commercial basis and which is operated solely for the purpose of conducting scientific research, the results of which are not intended to promote any particular product or industry.

(10) "Representative of the news media" refers to any person actively gathering news for an entity that is organized and operated to publish or broadcast news to the public. The term "news" means information that is about current events or that would be of current interest to the public. Examples of news media entities include television or radio stations broadcasting to the public at large, and publishers of periodicals, but only in those instances when they can qualify as disseminators of "news" who make their products available for purchase or subscription by the general public. These examples are not intended to be all-inclusive. Moreover, as traditional methods of news delivery evolve (e.g., electronic dissemination of newspapers through telecommunications services), such alternative media would be included in this category. In the case of "freelance" journalists, they may be regarded as working for a news organization if they can demonstrate a solid basis for expecting publication through that organization, even though not actually employed by it. A publication contract would be the clearest proof, but the Corporation may also look to the past publication record of a requester in making this determination.

(11) "Review" refers to the process of examining documents located in response to a "commercial use request" under the Act (as the term "commercial use request" is defined in paragraph (b)(4) of this section) to determine whether any portion of any document located is permitted to be withheld. The term "review" includes processing any documents for disclosure, including doing all that is necessary to excise exempt portions and otherwise prepare them for release. Review does not include time spent resolving general legal or policy issues regarding the application of exemptions.

(12) "Search" includes all time spent looking for material that is responsive to request, including a page-by-page or line-by-line identification of material within documents. Line-by-line search will not be done when duplicating an entire document would prove to be the less expensive and quicker method of complying with a request.

Subpart B—Procedures and Fees

§ 706.21 Information and records available to the public.

(a) *General.* Corporation information and records in existence which are not exempt from disclosure by law are available for public inspection and copying in the manner specified in § 706.23 of this part. A fee will be charged for the Corporation's expenses incurred in searching for, reviewing, duplicating, tabulating and compiling such information and records in accordance with the charging system and schedule of fees set forth in § 706.26.

(b) *Materials available from the Office of Public Affairs.* For the convenience of the public, the following Corporation materials will be maintained and readily available from the Office of Public Affairs.

(1) Current issues of the Corporation's annual report, which report ordinarily sets forth: (i) the names of recipients of Corporation insurance, loans, guarantees and other assistance during the fiscal year covered; (ii) the kind and amount of assistance provided; (iii) the purpose of the approved assistance in general terms; (iv) statistical data on Corporation programs; and (v) the audited financial statements of the Corporation;

(2) Pamphlets describing Corporation programs;

(3) Blank Corporation insurance forms currently in use; and

(4) Press releases.

(c) *Materials available from the Assistant General Counsel for Claims.* The Assistant General Counsel for Claims maintains public information files relating to the determination of claims filed under the Corporation's political risk insurance contracts and a list of all claims resolved by cash settlements or guarantees. Public access to such public information files will be granted in acsordance with the procedures described in § 706.23(b) of this part.

(d) *Materials available from the Corporate Secretary.* The Corporate Secretary maintains public information files containing the minutes of the public portions of the Board of Directors' meetings, as well as the resolutions of the Board of Directors. Public access to such information will be granted in accordance with the procedures described in § 706.23(c) of this part.

§ 706.22 Information and records not generally available to the public.

The following kinds of files, documents, records, and items of information, among others, are generally not available to the public:

(a) "Business information" as that term is defined in § 706.13(b)(2) of this part:

(b) Information provided in applications for political risk insurance, loans, loan guaranties and other Corporation assistance;

(c) Insurance policies, loan agreements and loan guarantee agreements relating to specific recipients of Corporation assistance;

(d) Information on declined, withdrawn or canceled applications for Corporation assistance;

(e) Inter-agency or intra-agency communications not routinely available to a party in litigation with the Corporation, including, among other things, memoranda between officials or agencies, Corporation staff memoranda, opinions and interpretations prepared by Corporation attorneys or consultants, research studies performed internally or under contract for internal management purposes, and internal management reports; and

(f) Personnel files and related documents containing private or personal information.

§ 706.23 Public access to information and records.

(a) *Access to routinely available information.* Corporation facilities are available to the public between 8:45 a.m. and 5:30 p.m. (except for Saturdays, Sundays and official holidays) for obtaining copies of materials of the kind described in § 706.21(b). Persons wishing to obtain copies of such documents may request them by reporting in person to the Corporation receptionist, by telephoning the office of the Director of Public Affairs at (202) 457-7093 or by writing the Corporation to the attention of such officer.

(b) *Access to the Public Information Files on Claims.* Access by any member of the public to the Corporation's public information files on claim matters described in § 706.21(c) shall be granted by appointment only. Persons desiring such access may request an appointment by telephoning the Claims Assistant at (202) 457-7019 or by writing the Corporation to the attention of such officer. Although the Corporation will endeavor to grant an appointment at the time requested, some delay may be required at times because of the small size of the Corporation's staff. Persons desiring access to the public information files should seek an appointment at least twenty-four hours in advance.

(c) *Access to Public Information Files on Board Matters.* Access by any member of the public to the Corporation's public information files

described in § 706.21(d) shall be granted by appointment only. Persons desiring such access may request an appointment by telephoning the Corporate Secretary at (202) 457-7079 or by writing the Corporation to the attention of such officer.

(d) *Access to Any Records of the Corporation Not Otherwise Made Available by the Corporation to the Public.* Access to records of the Corporation other than those described in paragraphs (b), (c), and (d) of § 706.21, or the duplication of such records, shall be granted only upon specific written request to the Corporation addressed to the Vice President, Office of Corporate Communications, which shall be deemed not to have been received until actual receipt thereof by such officer or his designee. Such request shall, to the extent required under the law, accurately describe the records as to which access or duplication is requested including, by way of example only, the subject matter, format, date, and where pertinent, the country, project or person involved. Any request which does not describe such records in sufficient detail to permit the staff of the Corporation promptly to locate them shall be deemed not to have been received by the Corporation until such time as the requester has clarified the request to meet this standard. The Corporation will make every reasonable effort by telephone or by letter to assist the person making the request to be more specific in describing the document or information sought.

§ 706.24 Notification of corporation action.

Persons making a request for disclosure normally will be notified of the availability of the material within ten working days after the date of receipt of the request. The information or records subject to release shall be made available promptly provided the requirements of § 706.26 regarding payment of fees are satisfied. Any denial of a request in whole or in part shall be made in writing and such notification shall set forth the reasons for the denial. Any person whose request for information has been denied may appeal from such determination in accordance with the provisions of § 706.27 of this part.

§ 706.25 Extension of time.

Although the Corporation will make every effort to respond to an initial request for disclosure of information within ten working days, there may be delays because of the Corporation's limited staff. Moreover, in certain circumstances the period of time within which the Corporation will respond to an initial request will be extended by an additional ten working days. Circumstances which would necessitate such an extension include the following:

(a) The need to search for and collect requested records from storage facilities located outside Corporation premises;

(b) The need to search for, collect, and appropriately examine a voluminous amount of separate and distinct records which are demanded in a single request;

(c) The need for consultation with another agency having a substantial interest in the determination of the request, or among two or more components of the agency having substantial subject-matter interest therein; or

(d) The need to notify the submitter of confidential business information of the request and to allow a reasonable period for objection to disclosure per § 706.31 of this part.

It is the practice of the Corporation to inform a requester in writing or by telephone of any anticipated delays.

§ 706.26 Fees.

(a) *General policy.* A fee representing direct costs shall be charged for services rendered by the Corporation under 5 U.S.C. 552(a) in furnishing information to members of the public, in accordance with the provisions of paragraph (c) of this section and as required or permitted by law.

(b) *Anticipated fees.* A letter requesting a document or information should specifically state that all costs chargeable under this section will be paid or, alternatively that they will be paid up to a specified limit. If the letter makes no reference to anticipated fees, and the request is expected to involve fees in excess of $25, or it is estimated by the Corporation that the fee will exceed the dollar limit specified in the request, the Corporation will notify the requester of the estimated fee promptly upon receipt of the request. The request will not be deemed to have been received until the Corporation receives a reply from the requester stating its willingness to pay the estimated fee.

(c) *Uniform fee schedule.* Fees will be charged in accordance with the category of the requester and as specified below. All photocopying costs will be assessed at the rate of $0.15 per page.

(1) *Commercial use requesters.* "Commercial use requesters," as that term is defined in § 706.13 of this part, will be charged the direct cost of all time spent searching for and reviewing for release the records requested. Search costs are $13 per hour. Review costs are $33 per hour. Search and review costs will be assessed even though no records may be found or, after review, there is no disclosure of records. All pages photocopied will be assessed at the rate set out above.

(2) *Educational and non-commercial scientific institution requesters.* The Corporation will provide records to "educational institutions" or "non-commercial scientific institutions," as those terms are defined in § 706.13 (b)(7) and (b)(9) of this part, for the cost of reproduction alone. No fee will be charged for the costs of photocopying the first 100 pages of documents encompassed by a request. The fee for all pages photocopied will be assessed at the rate set out above. To be eligible for inclusion in this category, requesters must show that the request is being made under the auspices of a qualifying "educational institution" or "non-commercial scientific institution" and that the records are sought in furtherance of scholarly (if the request is from an educational institution) or scientific (if the request is from a non-commercial scientific institution) research.

(3) *Representatives of the news media.* The Corporation shall provide records to "representatives of the news media," as that term is defined in § 706.13(b)(10) of this part, for the cost of reproduction alone. No fee will be charged for the costs of photocopying the first 100 pages of documents encompassed by a request. The fee for all pages photocopied will be assessed at the rate set forth above. To be eligible for inclusion in this category a requester must be a "representative of the news media" and his or her request must not be made for a commercial use. In reference to this class of requester, a request for records supporting the news dissemination function of the requester shall not be considered to be a request that is for a commercial use.

(4) *All other requesters.* The Corporation will provide documents to requesters who do not fit into any of the categories in paragraphs (c) (1), (2), and (3) of this section for the cost of any search time in excess of two hours and for photocopying any documents in excess of 100 pages. The fee for search time will be assessed at the rate set forth in paragraph (c)(1) of this section. The fee for all pages photocopied will be assessed at the rate set forth above.

(d) *Non-payment of fees.* (1) The Corporation will begin assessing interest charges on the 31st day following the day on which the requester is advised of the fee charged, such interest charges to accrue as of the date of such

notification. Interest will be at the rate prescribed in 31 U.S.C. 3717.

(2) Where a requester has previously failed to pay a fee charged in a timely fashion (i.e. within 30 days of the billing date), the Corporation will require the requester to pay the full amount owed plus any applicable interest as provided above, and to make an advance payment of the full amount of the estimated fee before the Corporation begins to process a new request or a pending request from the requester.

(3) When the Corporation acts under paragraph (c) (1) or (2) of this section the administrative time limits prescribed in subsection (a)(6) of the Act (i.e. 10 working days from receipt of initial request and 20 working days from receipt of appeals from initial denial plus permissible extensions of these time limits) will begin only after the Corporation has received fee payments described above.

(e) *Advance payments.* Where the Corporation estimates or determines that allowable charges that a requester may be required to pay are likely to exceed $250 the Corporation will require a requester to make an advance payment of the entire fee before continuing to process the request.

(f) *Waiving or reducing fee.* (1) In accordance with section (4)(A)(ii) of the Act the Corporation will furnish documents without charge or at reduced charges if disclosure of the information is in the public interest because it is likely to contribute significantly to public understanding of the operations or activities of the government and is not primarily in the commercial interest of the requester.

(i) In determining whether disclosure of the information is in the public interest because it is likely to contribute significantly to public understanding of the operations or activities of the government, the Corporation will consider the following factors:

(A) The subject of the request: Whether the subject of the requested records concerns the operations or activities of the government;

(B) The informative value of the information to be disclosed: Whether the disclosure is likely to contribute to an understanding of government operations or activities;

(C) The contribution to an understanding of the subject by the general public likely to result from disclosure: Whether disclosure of the requested information will contribute to public understanding; and

(D) The significance of the contribution to public understanding: Whether the disclosure is likely to contribute significantly to public understanding of government operations or activities.

(ii) In determining whether disclosure of the information is not primarily in the commercial interest of the requester, the Corporation will consider the following factors:

(A) The existence and magnitude of a commercial interest: Whether the requester has a commercial interest that would be furthered by the requested disclosure; and, if so

(B) The primary interest in disclosure: Whether the magnitude of the identified commercial interest of the requester is sufficiently large, in comparison with the public interest in disclosure, that disclosure is primarily in the commercial interest of the requester.

(2) The requester in all cases has the burden of presenting sufficient evidence or information to justify the requester waiver or reduction.

(g) *Restrictions on assessing fees.* With the exception of requesters seeking documents for a commercial use, section (4)(A)(iv) of the Act, as amended, requires agencies to provide the first 100 pages of duplication and the first two hours of search time without charge. Moreover, this section prohibits agencies from charging fees to any requester, including commercial use requesters, if the cost of collecting the fee would be equal to or greater than the fee itself. These provisions work together so that, except for commercial use requesters, the Corporation will not begin to assess fees until after providing the free search and reproduction. For example, for a request that involved two hours and ten minutes of search time and resulted in 105 pages of documents, the agency will determine the cost of only 10 minutes of search time and only five pages of reproduction. If this cost is equal to or less than the cost of processing the fee collected, there will be no charge to the requester.

(h) *Documents made available free of charge.* No fee will be charged to any requester for any brochure or annual report readily available from the Office of Public Affairs pursuant to § 706.21(b).

(i) *Inspection.* Persons may inspect and copy in the Corporation's facilities specifically requested documents other than those which are not generally available under § 706.22 or exempt by law without charge except for search, duplication, tabulation, or compilation fees which may be otherwise payable.

(j) *Other provisions—*

(1) *Charges for unsuccessful search.* The Corporation will assess charges for time spent searching, even if the Corporation fails to locate the records or if records located are determined to be exempt from disclosure.

(2) *Aggregating requesters.* When the Corporation reasonably believes that a requester or group of requesters is attempting to break a request down into a series of requests for the purpose of evading the assessment of fees, the Corporation will aggregate any such requesters and charge accordingly.

(3) *Effect of the Debt Collection Act of 1982 (Pub. L. 97-365).* The Corporation will use the authorities of the Debt Collection Act, including disclosure to consumer reporting agencies and use of collection agencies, where appropriate, to encourage repayment.

(4) *Remittances.* (i) All payments under this section shall be in the form of a personal check, bank draft drawn on a bank located in the United States, or cash. Remittances shall be made payable to the order of United States Treasury and mail to the Director of Public Affairs, Office of Corporate Communications, Overseas Private Investment Corporation, 1615 M Street, NW., Washington, DC 20527. The Corporation will assume no responsibility for cash which is lost in the mail.

(ii) A receipt for fees paid will be given only upon request.

(iii) Where it is anticipated that the fees chargeable under this section will amount to more than $25, and the requester has not indicated in advance a willingness to pay fees as high as are anticipated, the requester will be promptly notified of the amount of the anticipated fee or such portion thereof as can readily be estimated. In appropriate cases an advance deposit may be required. The requester is at any time welcome to confer with the Director of Public Affairs in order to formulate the request in a manner which will reduce the fee and meet the needs of the requester. A request will not be deemed to have been received until the requester has agreed to pay the anticipated fees and has made an advance deposit if one is required.

§ 706.27 Administrative appeal of refusal to disclose.

(a) *Who may appeal.* Any person whose request for information or records has been denied in whole or in part shall be entitled to submit a written appeal to the Corporation.

(b) *Time for appeal.* An appeal from a denial may be filed with the Corporation at any time within 20 days following the date of receipt of the initial determination, in cases of denials of an entire request, or from the date of receipt of any records being made available under an initial determination in cases of partial denials.

(c) *Form of appeal.* An appeal shall be by letter addressed to the Vice President & General Counsel, Overseas Private Investment Corporation, 1615 M Street, NW., Washington, DC 20527. The envelope and the letter setting forth the appeal shall be clearly marked in capital letters: FREEDOM OF INFORMATION ACT APPEAL. The letter shall reasonably describe the information or records requested and such other pertinent facts and statements as the appellant may deem appropriate. An appeal submitted in an envelope which is not addressed to the Vice President & General Counsel will not be deemed to have been received until such time as the appeal is forwarded to such officer.

(d) *Final Corporation Decision.* Final Corporation decisions on appeals from denials of requests for information or records shall be made in writing by the Vice President & General Counsel or his/her designee within twenty working days after the date of receipt of the request, unless an extension of up to ten working days has been deemed necessary in accordance with the procedures set forth in § 706.25 of this part. The 10-day extension may be applied to the response to the initial request or to the appeal, or to both, but in no event shall the extension exceed a total of ten working days. If the decision upholds the denial of the request, the appellant shall be notified in writing, which notice shall set forth the reasons for upholding the previous denial. If the Vice President & General Counsel or his/her designee acts favorably on the appeal, the information or records requested shall be made available promptly provided the requirements of § 706.26 regarding payment of fees are satisfied.

Subpart C—Rights of Submitters of Confidential Business Information

§ 706.31 Notification to submitters of business information.

(a) Except as provided in paragraph (c) of this section, the Director for Public Affairs will promptly notify a "business submitter" (as that term is defined in § 706.13(b)(3) of this part) that a request for disclosure has been made for any "business information" (as that term is defined in Section 706(b)(2) of this part) provided by such submitter, and shall describe the nature and scope of the request and advise such submitter of its right to submit written objections in response to the request. Such notice of intent to disclose shall be made to the submitter in writing and shall state the intent of the Corporation to disclose the business information on the expiration of 10 working days from the receipt of the notice.

(b) The business submitter may, within 10 working days of the forwarding of the Corporation's notification under paragraph (a) of this section, submit to the attention of the Director for Public Affairs, with copy to FOIA Counsel, written objection to the disclosure of the information requested, specifying the grounds upon which it is contended that the information should not be disclosed. In setting forth such grounds, the submitter shall specify to the maximum extent feasible the basis of its belief that the nondisclosure of any item of information requested is mandated or permitted by law. In the case of information which the submitter believes to be exempt from disclosure under subsection (b)(4) of the Act, the submitter shall demonstrate why the information is considered a trade secret or commercial or financial information that is privileged or confidential. Information provided by a business submitter pursuant to this paragraph may itself be subject to disclosure under the Act. The 10 working day period for providing the Corporation with a statement objecting to the disclosure of information encompassed by an FOIA request may be extended by the Corporation upon receipt of a written request for an extension. Such written request shall set forth the date which the statement is expected to be completed and shall provide reasonable justification for the extension. The Corporation's approval of a request for an extension shall not be unreasonably withheld.

(c) The Corporation will not ordinarily notify the submitter pursuant to paragraph (a) of this section if:

(1) The Corporation determines, prior to giving such notice, that the request should be denied;

(2) The disclosure is required by law (other than pursuant to 5 U.S.C. 552); or

(3) The information has been published or otherwise made available to the public, including material described in § 706.21.

(d) The Corporation shall carefully consider the objections of the submitter made pursuant to paragraph (b) of this section and shall promptly notify the submitter of any final determination regarding the release of the information requested.

§ 706.32 Prior designation of business information as privileged or confidential.

In order to facilitate the Corporation's determination of whether to disclose information submitted to it a submitter may designate information which it regards as confidential business information entitled to exemption from disclosure under 5 U.S.C. 552(b)(4). Such designation may be made at the time such information is submitted to the Corporation or at any time thereafter. Each document, record or item of information to be so designated shall be clearly marked in capital letters: PRIVILEGED BUSINESS INFORMATION. In accepting documents, records or any item of information so marked, the Corporation shall not be bound by such designation.

Ralph T. Mabry,

Senior Commercial Counsel.

[FR Doc. 88-7979 Filed 4-11-88; 8:45 am]

BILLING CODE 3210-01-M

DEPARTMENT OF HOUSING AND URBAN DEVELOPMENT

Office of the Assistant Secretary for Housing—Federal Housing Commissioner

24 CFR Parts 201, 203, and 234

[Docket No. N-88-1770; FR-2442]

Mortgage Insurance; Changes to the Maximum Mortgage Limits for Single Family Residences, Condominiums and Manufactured Homes and Lots; Correction

AGENCY: Office of the Assistant Secretary for Housing—Federal Housing Commissioner, HUD.

ACTION: Notice of correction to FHA maximum mortgage limits for high-cost areas.

SUMMARY: This document corrects technical and typographical errors in the Maximum Mortgage Limits for Single Family Residences, Condominiums and Manufactured Homes and Lots, published in the **Federal Register** on March 3, 1988 (53 FR 6922).

EFFECTIVE DATE: March 3, 1988.

FOR FURTHER INFORMATION CONTACT: Grady J. Norris, Assistant General Counsel for Regulations, Room 10276, 451 Seventh Street, SW., Washington, DC 20410, telephone (202) 755-7055. (This is not a toll-free number.)

Accordingly, the following corrections are made to FR Doc. 88-4578, published on March 3, 1988 (53 FR 6922):

Market area designation and local jurisdictions	Mortgage limits			
	1-family and condominium unit	2-family	3-family	4-family
REGION I				
HUD Field Office: Bangor Office				
Portland, ME MSA:				
Cumberland County	$81,600	$91,900	$111,650	$128,850
Lewiston-Auburn, ME MSA:				
Androscoggin County	101,250	114,000	138,000	160,500
HUD Field Office: Boston Office				
Barnstable County	$87,400	$98,400	$119,600	$138,000
Berkshire County	101,250	114,000	138,000	160,500
REGION III				
HUD Field Office: Washington, DC, Office				
Washington, DC–MD–VA MSA:				
District of Columbia	$101,250	$114,000	$138,000	$160,500
Montgomery County, MD				
Prince Georges County, MD				
Alexandria City, VA				
Arlington County, VA				
Fairfax County, VA				
Falls Church, VA				
Loudon County, VA				
Manassas City, VA				
Manassas Park City, VA				
Prince William County, VA				
HUD Field Office: Richmond Office				
Fauquier County	$99,300	$111,800	$135,850	$156,750
REGION IV				
HUD Field Office: Birmingham Office				
Anniston, AL MSA:				
Calhoun County	$76,000	$85,600	$104,000	$120,000
HUD Field Office: Greensboro Office				
Raleigh-Durham, NC MSA:				
Durham County	$101,250	$114,00	$138,000	$160,500
Franklin County				
Orange County				
Wake County				
REGION V				
HUD Field Office: Chicago Office				
Joliet, IL PMSA:				
Grundy County	$87,250	$98,300	$119,400	$137,800
Will County				
Aurora-Elgin, IL PMSA:				
Kane County	87,250	98,300	119,400	137,800
Kendall County				

Market area designation and local jurisdictions	Mortgage limits			
	1-family and condo-minium unit	2-family	3-family	4-family
HUD Field Office: Minneapolis-St. Paul Office				
Minneapolis-St. Paul, MN MSA:				
Anoka County	$101,250	$114,000	$138,000	$160,500
Carver County				
Chisago County				
Dakota County				
Hennepin County				
Isanti County				
Ramsey County				
Scott County				
Washington County				
Wright County				
St. Croix County				
REGION VIII				
HUD Field Office: Casper Office				
Teton County	$91,200	$102,700	$124,800	$144,000
HUD Field Office: Los Angeles Office				
Los Angeles Office Metro and Non-Metro Areas:				
Los Angeles County	$101,250	$114,000	$138,000	$160,500
San Luis Obispo County				
Santa Barbara County				
Ventura County				
Kern County				
HUD Field Office: San Francisco Office				
San Francisco Office Metro and Non-Metro Areas:				
Alameda County	$101,250	$114,000	$138,000	$160,500
Contra Costa County				
Del Norte County				
Humboldt County				
Lake County				
Marin County				
Mendocino County				
Monterey County				
Napa County				
San Benito County				
San Francisco County				
San Mateo County				
Santa Clara County				
Santa Cruz County				
Solano County				
Sonoma County				
HUD Field Office: Fresno Office				
Fresno Office Metro and Non-Metro Areas:				
Fresno County	$101,250	$114,000	$138,000	$160,500
Kern County				
Kings County				
Madera County				
Mariposa County				
Merced County				
Stanislaus County				
Tulare County				

Market area designation and local jurisdictions	Mortgage limits			
	1-family and condo-minium unit	2-family	3-family	4-family
HUD Field Office: Sacramento Office				
Sacramento Office Metro and Non-Metro Areas:				
Alpine County	$101,250	$114,000	$138,000	$160,500
Amador County				
Butte County				
Calaveras County				
Colusa County				
El Dorado County				
Glenn County				
Lassen County				
Modoc County				
Nevada County				
Placer County				
Plumas County				
Sacramento County				
San Joaquin County				
Shasta County				
Sierra County				
Siskiyou County				
Sutter County				
Tehama County				
Trinity County				
Tuolumne County				
Yolo County				
Yuba County				
HUD Field Office: San Diego Office				
San Diego Office Metro and Non-Metro Areas:				
Imperial County	$101,250	$114,000	$138,000	$160,500
San Diego County				
HUD Field Office: Santa Ana Office				
Metro Areas:				
Orange County	$101,250	$114,000	$138,000	$160,500
Riverside County				
San Bernardino County				
Non-Metro Areas:				
Mono County	75,000	84,000	102,500	118,000
Inyo County	75,000	84,000	102,500	118,000

Dated: April 1, 1988.

Grady J. Norris,

Assistant General Counsel for Regulations.

[FR Doc. 88-7972 Filed 4-11-88; 8:45 am]

BILLING CODE 4210-27-M

DEPARTMENT OF THE TREASURY

Internal Revenue Service

26 CFR Parts 1 and 602

[T.D. 8191]

Income Tax; Returns Relating to Mortgage Interest Received in a Trade or Business From Individuals

AGENCY: Internal Revenue Service, Treasury.

ACTION: Final regulations and temporary regulations.

SUMMARY: This document contains final and temporary regulations relating to the reporting of mortgage interest received in a trade or business from individuals. The Tax Reform Acts of 1984 and 1986 changed the applicable law. The final regulations affect a person that is engaged in a trade or business and that, in the course of that trade or business, receives $600 or more of mortgage interest from an individual for a calendar year. The final regulations provide these persons with guidance necessary to comply with the law.

EFFECTIVE DATES: The final regulations are effective on January 1, 1988, and apply to mortgage interest received after December 31, 1987.

FOR FURTHER INFORMATION CONTACT: Katherine Lee Wambsgans, Legislation and Regulations Division, Office of the Chief Counsel, Internal Revenue Service, 1111 Constitution Avenue N.W., Washington, DC 20224, Attention: CC:LR:T (202-566-3288, not a toll-free call).

SUPPLEMENTARY INFORMATION:

Background

On August 20, 1985, the **Federal Register** published temporary regulations (50 FR 33529) under section 6050H of the Internal Revenue Code relating to the reporting of mortgage interest received in a trade or business from individuals. The text of those temporary regulations also served as a notice of proposed rulemaking published in the **Federal Register** for the same day (50 FR 33551).

Section 145 of the Tax Reform Act of 1984 (Pub. L. 98-369, 98 Stat. 685) added Section 6050H to the Code. Section 6050H requires a person engaged in a trade or business to report receipt of at least $600 of mortgage interest from an individual for a calendar year if the interest is received in the course of the trade or business. Section 1811(a) of the Tax Reform Act of 1986 (Pub. L. 99-514, 100 Stat. 2832) made technical corrections to section 6050H. The final regulations reflect the relevant provisions of the 1984 and 1986 Acts.

After the Internal Revenue Service published temporary and proposed regulations, interest recipients noted their inability to comply with certain provisions. The Service's publication of Announcement 86-3, 1986-3, I.R.B. 42, relaxed several reporting requirements

for interest received in 1985. Announcement 86–112, 1986–46 I.R.B. 22, clarified the application of Announcement 86–3 to interest received after 1985. The final regulations reflect the issues addressed in Announcement 86–3.

The Service received public comments on the proposed regulations and held a public hearing on January 7, 1986. After fully considering comments and statements made at the hearing, the Service adopts the proposed regulations as revised by this Treasury decision. Revisions to the proposed regulations are discussed below.

Effective Date

The final regulations are effective only for interest received after December 31, 1987. The temporary regulations and Announcements 86–3 and 86–112 apply to interest received before January 1, 1988.

Points and Other Prepaid Interest

The proposed regulations prohibited an interest recipient from reporting points and other prepaid interest in the year of receipt but did not address when, if ever, to report those amounts. Announcement 86–3 provided that an interest recipient that received points and other prepaid interest in 1985 can report those amounts as received in 1985 if it was unable to segregate those amounts. Announcement 86–112 stated that the reporting requirement for points and other prepaid interest was relaxed only for 1985. The final regulations prohibit reporting of points and other prepaid interest in the year of prepayment, prohibit reporting of prepaid interest in the form of points in any year, and require reporting of prepaid interest other than points in the proper year of accrual.

Commentators suggested permitting an interest recipient to report in the current calendar year prepaid interest accruing shortly after year-end. For example, an interest payment properly accruing for the period December 6, 1988, through January 5, 1989, contains prepaid interest if received on December 31, 1988. The final regulations permit an interest recipient to report as interest received during the current calendar year prepaid interest properly accruing by the following January 15.

Rule of 78s Method of Accounting

The proposed regulations provided no special reporting rule for interest earned under the Rule of 78s method of accounting. Announcement 86–3 allowed an interest recipient that calculates interest earned under the Rule of 78s method of accounting to report interest received under that method provided it met certain notice requirements. The final regulations permit an interest recipient to report interest earned under the Rule of 78s method of accounting as interest received in circumstances identical to those described in Announcement 86–3.

Definition of Mortgage

The proposed regulations defined a mortgage as an obligation secured primarily by real property. Because commentators found difficulty in applying that definition, the final regulations define a mortgage as an obligation all or part of which is secured by real property. Real property includes a manufactured home meeting the definition of section 25(e)(10).

The proposed regulations exempted reporting for interest received on lines of credit or credit card obligations secured primarily by real property. Because the Tax Reform Act of 1986 limits interest deductibility and because payors of record are using these obligations more often, the final regulations remove this exemption.

The final regulations do not address issues arising out of the limitations on qualified residence interest.

The final regulations provide a transitional rule for obligations existing on December 31, 1987, that are not primarily secured by real property. An obligation covered by the transitional rule is not a mortgage subject to reporting after 1987.

Interest Received on Behalf of Another Person

The proposed regulations required interest received on behalf of another person to be reported by the first person to receive it (the initial recipient). Commentators noted difficulty in compliance when the initial recipient did not possess the mortgage reporting information. Announcement 86–3 suspended this reporting rule for 1985 to allow initial recipients time to obtain the reporting information. Announcement 86–112 stated that Announcement 86–3 applied only to 1985 reporting. The final regulations require the initial recipient to report interest received on behalf of another person but except an initial recipient from reporting for any period for which the initial recipient does not possess the mortgage reporting information if the person for which the interest is received is engaged in a trade or business and would receive the interest in the course of its trade or business if it received the interest directly. The exception requires the person for which the interest is received, rather than the initial recipient, to report.

Interest Received by Foreign Persons

The proposed regulations provided that a foreign-person interest recipient must report mortgage interest received outside the United States if it is a corporation such that any interest received from it would be from sources within the United States under section 861(a)(1)(C). The final regulations incorporate the criteria described in that section, extend the reporting requirements to noncorporate persons, and clarify that the term "foreign person" means "not a United States person" as defined in section 7701(a)(30).

Interest Received From Nonresident Alien Individuals

The proposed regulations did not exempt an interest recipient from reporting interest received from a nonresident alien individual. Announcement 86–3 provided that for 1985 an interest recipient need not report interest received from a nonresident alien individual. Announcement 86–112 extended this rule to post-1985 reporting. Announcement 86–3 provided documentary evidence rules to determine nonresident alien individual status. The final regulations except an interest recipient from reporting interest received from a nonresident alien individual in circumstances substantially similar to those described in Announcement 86–3.

Special Analyses

The Commissioner of Internal Revenue has determined that this final rule is not a major rule as defined in Executive Order 12291. Therefore, a regulatory impact analysis is not required.

Although the Service issued a notice of proposed rulemaking soliciting public comment, it concluded on issuing the notice that the regulations are interpretative and that the notice and public procedure requirements of 5 U.S.C. 553 do not apply. Accordingly, the final regulations do not constitute regulations subject to the Regulatory Flexibility Act (5 U.S.C. chapter 6).

The Service has submitted the collection-of-information requirements contained in these regulations to the Office of Management and Budget in accordance with the requirements of the Paperwork Reduction Act of 1980. OMB has approved these requirements.

Drafting Information

The principal authors of these regulations are Katherine Lee Wambsgans and Annette Guarisco, Legislation and Regulations Division, Office of Chief Counsel, Internal Revenue Service. However, personnel from other offices of the Internal Revenue Service and Treasury Department participated in developing these regulations on matters of both substance and style.

List of Subjects

26 CFR Parts 1.6001-1—1.6109-2

Income taxes, Administration and procedure, Filing requirements.

26 CFR Part 602

Reporting and recordkeeping requirements.

Adoption of amendments to the regulations

For the reasons set forth in the preamble, Title 26, Chapter 1, Subchapter A, Part 1, and Subchapter H, Part 602, of the Code of Federal Regulations is amended as set forth below:

PART I—INCOME TAX; TAXABLE YEARS BEGINNING AFTER DECEMBER 31, 1953

Paragraph 1. The authority for Part 1 is amended by adding the following citation:

Authority: 26 U.S.C. 7805. * * * Sections 1.6050H-0, 1.6050H-1, and 1.6050H-2 also issued under 26 U.S.C. 6050H.

Par. 2. Section 1.6050H-1T is amended by revising the title of such section to read as follows:

§ 1.6050H-1T Information reporting of mortgage interest received in a trade or business from individuals after 1985 and before 1988 (Temporary).

Par. 3. Section 1.6050H-1T is amended by revising Q/A-32 to read as follows:

Effective Date

Q-32: When is this section effective?

A-32: This section generally is effective for mortgage interest received after December 31, 1984, and before January 1, 1988. However, Q/A-15a of this section is effective for mortgage interest received after December 31, 1986, and before January 1, 1988.

Par. 4. The following new, §§ 1.6050H-0, 1.6050H-1 and 1.6050H-2, are added immediately following § 1.6050H-1T and read as follows:

§ 1.6050H-0 Table of contents.

§ 1.6050H-1 Information reporting of mortgage interest received in a trade or business from an individual.

(a) *Reporting requirement.*
(b) *Qualified mortgage.* (1) In general.
(2) Mortgage.
(i) In general.
(ii) Transitional rule for certain obligations existing on December 31, 1984.
(iii) Transitional rule for certain obligations existing on December 31, 1987.
(3) Payor of record.
(c) *Interest recipient.* (1) Trade or business requirement.
(2) Interest received or collected on behalf of another person.
(i) General rule.
(ii) Exception.
(3) Examples.
(4) Governmental unit.
(d) *Additional rules.* (1) Reporting by foreign person.
(2) Reporting with respect to nonresident alien individual.
(i) In general.
(ii) Nonresident alien individual status.
(3) Reporting by cooperative housing corporations.
(e) *Amount of interest received on mortgage for calendar year.* (1) In general.
(2) Calendar year.
(i) In general.
(ii) De minimis rule.
(3) Certain interest not received on mortgage.
(i) Interest received from seller on payor of record's mortgage.
(ii) Interest received from governmental unit.
(4) Interest calculated under Rule of 78s method of accounting.
(f) [Reserved]
(g) Effective date.

§ 1.6050H-2 Time, form, and manner of reporting interest received on qualified mortgage.

(a) *Requirement to file return.* (1) Form of return.
(2) Information included on return.
(3) Time and place for filing return.
(4) Use of magnetic media.
(b) *Requirement to furnish statement.* (1) In general.
(2) Information included on statement.
(3) Statement furnished pursuant to Federal mortgage program.
(4) Copy of Form 1098 to payor of record.
(5) Furnishing statement with other information reports
(6) Time and place for furnishing statement.
(c) Notice requirement for use of Rule of 78s method of accounting.
(1) In general.
(2) Time and manner.
(d) *Reporting by related parties.* (1) In general.
(2) Qualified person.
(3) Designation agreement.
(4) Penalties.
(e) *Penalty provisions.* (1) Failure to file return or to furnish statement.
(2) Failure to furnish TIN.
(3) Failure to include correct information.
(f) *Requirement to request and to obtain TIN.* (1) In general.
(2) Manner of requesting TIN.
(g) Effective date.

§ 1.6050H-1 Information reporting of mortgage interest received in a trade or business from an individual.

(a) *Reporting requirement.* Except as otherwise provided in this section and § 1.6050H-2, an interest recipient that receives at least $600 of interest on a qualified mortgage for a calendar year must, with respect to that interest—

(1) File an information return with the Internal Revenue Service; and

(2) Furnish a statement to the payor of record on the mortgage.

Paragraph (e) of this section contains rules to determine the amount of interest received on a mortgage for a calendar year. Section 1.6050H-2 contains rules relating to the form, time, and manner of filing information returns and furnishing statements. Paragraph (d) of this section contains additional rules relating to the reporting requirement for foreign persons, cooperative housing corporations, and nonresident alien individuals. An interest recipient may, but is not required to, report its receipt of less than $600 of interest on a qualified mortgage for a calendar year. An interest recipient that chooses, but is not required, to file a return as provided in § 1.6050H-2 (a) or to furnish a statement as provided in § 1.6050H-2 (b) is subject to this section and § 1.6050H-2.

(b) *Qualified mortgage*—(1) *In general.* A mortgage is a qualified mortgage if the payor of record on the mortgage is an individual, including an individual acting in a capacity as a sole proprietor of a business. A mortgage is not a qualified mortgage if the payor of record on the mortgage is not an individual (such as a trust, estate, partnership, association, company, or corporation), even though an individual is a co-borrower on the mortgage and all the trustees, beneficiaries, partners, members, or shareholders of the payor of record are individuals.

(2) *Mortgage*—(i) *In general.* Except as otherwise provided in paragraphs

(b)(2)(ii) and (b)(2)(iii) of this section, an obligation is a mortgage if real property (regardless of where located) secures all or part of the obligation. An interest recipient must determine whether real property secures an obligation at the time the obligation is created or, if security is added or removed at a later time, at that later time. Real property includes a manufactured home as defined in section 25(e)(10). An obligation includes a line of credit or a credit card obligation. For purposes of this section and § 1.6050H-2, a borrower incurs a line of credit or credit card obligation when the borrower first has the right to borrow against the line of credit or credit card, whether the borrower actually borrows an amount at that time. An obligation will not fail to be treated as a mortgage solely because, under an applicable State or local homestead law or other debtor protection law in effect on August 16, 1986, the security interest is ineffective or the enforceability of the security interest is restricted.

(ii) *Transitional rule for certain obligations existing on December 31, 1984*—(A) *In general.* An obligation that existed on December 31, 1984, is not a mortgage if, at the time the payor of record incurred the obligation, the interest recipient reasonably classified the obligation as other than a mortgage, real property loan, real estate loan, or other similar type of obligation. A reasonable classification of an obligation must be consistent with industry practices and determined according to the purpose of the obligation, the property securing the obligation, and any other reasonable factor. For purposes of this paragraph (b)(2)(ii)(A), an obligation was not reasonably classified as other than a mortgage, real property loan, real estate loan, or other similar type of obligation if, at the time the payor of record incurred the obligation, more than one-half of the obligations in the particular class in which the obligation was classified were secured primarily by real property.

(B) *Examples.* The following examples illustrate the rules of paragraph (b)(2)(ii)(A) of this section:

Example (1). B offers an unsecured line of credit and a line of credit secured by real property. B separately markets the two credit lines, and they are governed by different terms and conditions. For accounting purposes, B classifies the two types of loans as a single class. For purposes of paragraph (b)(2)(ii)(A) of this section, the two types of loans are different classes of obligations.

Example (2). B operates a program to make loans to small businesses. Depending on the amount of the loan and the credit history of the borrower, B may or may not require security for the loan. If B requires security, it may consist of real or personal property. For accounting purposes, B classifies all of the loans within this program as a single class. For purposes of paragraph (b)(2)(ii)(A) of this section, all of the loans within this program may be classified as belonging to a single class.

(iii) *Transitional rule for certain obligations existing on December 31, 1987.* An obligation that was incurred after December 31, 1984, and that existed on December 31, 1987, is not a mortgage if the obligation is not primarily secured by real property.

(3) *Payor of record.* A payor of record on a mortgage is the person carried on the books and records of the interest recipient as the principal borrower on the mortgage. If the books and records of the interest recipient do not indicate which borrower is the principal borrower, the interest recipient must designate a borrower as the principal borrower.

(c) *Interest recipient*—(1) *Trade or business requirement.* Except as provided in paragraph (c)(4) of this section, an interest recipient is a person that is engaged in a trade or business (whether or not the trade or business of lending money) and that, in the course of the trade or business, receives interest on a mortgage. For purposes of this paragraph (c)(1), if a person holds a mortgage which was originated or acquired in the course of a trade or business, the interest on the mortgage is considered to be received in the course of that trade or business. For example, if real estate developer A lends money to individual B to enable B to purchase a house in a subdivision owned and developed by A, and B gives a mortgage to A for the loan, A is an interest recipient for interest received on the mortgage. Alternatively, if C, a person engaged in the trade or business of being a physician, lends money to individual D to enable D to purchase C's home, and D gives a mortgage to C for the loan, C is not an interest recipient for interest received on the mortgage because C will not receive the interest in the course of the trade or business of being a physician.

(2) *Interest received or collected on behalf of another person*—(i) *General rule.* Except as otherwise provided in paragraph (c)(2)(ii) of this section, a person that, in the course of its trade or business, receives or collects interest on a mortgage on behalf of another person is the interest recipient (the initial recipient) for the mortgage. In this case, the reporting requirement of paragraph (a) of this section does not apply to the transfer of interest from the initial recipient to the person for which the initial recipient receives or collects the interest. For example, if financial institution A collects interest on behalf of financial institution B, A is the initial recipient for the mortgage, and B is not required to report the interest received on the mortgage from A.

(ii) *Exception.* Paragraph (c)(2)(i) of this section does not apply for a period for which—

(A) An initial recipient does not possess the information needed to comply with the reporting requirement of paragraph (a) of this section; and

(B) The person for which the interest is received or collected would receive the interest in the course of its trade or business if the interest were paid directly to that person.

The person for which the interest is received or collected is the interest recipient with respect to interest received or collected on the mortgage during such a period. For purposes of paragraph (c)(2)(ii)(B) of this section, if interest is received or collected on behalf of a person other than an individual, that person is presumed to receive interest in a trade or business.

(3) *Examples.* The following examples illustrate the rules of paragraph (c) of this section:

Example (1). Financial institution F collects mortgage interest on behalf of financial institution G and deposits the amount collected into G's account held with F. F possesses the information needed to comply with the reporting requirement of paragraph (a) of this section. F is the interest recipient for the mortgage. G is not required to report.

Example (2). The facts are the same as in example (1), except that F does not possess the information needed to comply with the reporting requirement. G, the person for which F collects the interest, is the interest recipient for the mortgage. F is not required to report.

Example (3). S, an individual, sells real property to another individual, P, and takes back a mortgage from P to finance the sale. S does not receive the interest in the course of a trade or business. B, a bank, collects P's payments of principal and interest on behalf of S and deposits that amount into an account held at the bank in S's name. B does not possess the information needed to comply with the reporting requirement of paragraph (a) of this section. B is the interest recipient for P's mortgage without regard to paragraph (c)(2)(ii) of this section, because S would not receive the interest in the course of a trade or business. S is not required to report.

Example (4). X collects mortgage interest on behalf of Y, who would receive the interest in the course of a trade or business. X possesses the information needed to comply with the reporting requirement of paragraph (a) of this section. On July 1, 1988, Z assumes X's interest collection responsibilities. Z does not possess the information needed to comply with the reporting requirement of paragraph (a) of this section. X is the interest recipient for interest received from January 1, 1988, through June 30, 1988. Because Z does not

BEST COPY AVAILABLE

possess the requisite information and Y would receive the interest in the course of a trade or business, Y is the interest recipient for interest received from July 1, 1988, through December 31, 1988.

(4) *Governmental unit.* A governmental unit or an agency or instrumentality of a governmental unit that receives interest on a mortgage is an interest recipient without regard to the requirement of paragraph (c)(1) of this section that the interest be received in the course of a trade or business. A governmental unit or an agency or instrumentality of a governmental unit that is an interest recipient must designate an officer or employee to satisfy the reporting requirements of paragraph (a) of this section.

(d) *Additional rules*—(1) *Reporting by foreign person.* An interest recipient that is not a United States person (as defined in section 7701(a)(30)) must report interest received on a qualified mortgage only if it receives the interest—

(i) At a location in the United States, or

(ii) At a location outside the United States if the interest recipient is—

(A) A controlled foreign corporation (within the meaning of section 957(a)), or

(B) A person, 50 percent or more of the gross income of which, from all sources for the three-year period ending with the close of the taxable year preceding the receipt of interest (or for such part of the period as the person was in existence), was effectively connected with the conduct of a trade or business within the United States.

(2) *Reporting with respect to nonresident alien individual*—(i) *In general.* The reporting requirement of paragraph (a) of this section does not apply if—

(A) The payor of record is a nonresident alien individual, and

(B) Real property located in the United States does not secure the mortgage.

(ii) *Nonresident alien individual status.* For purposes of paragraph (d)(2)(i)(A) of this section, an interest recipient must apply the following documentary evidence rules to determine whether a payor of record is a nonresident alien individual:

(A) If interest is paid outside the United States, the interest recipient must satisfy the documentary evidence standard provided in § 35a.9999–4T (Q/A–5 (iii)) with respect to the payor of record; and

(B) If interest is paid within the United States, the interest recipient must secure from the payor of record a Form W–8 or a substantially similar statement signed by the payor under penalty of perjury as described in § 1.6049–5(b)(2)(iv).

For purposes of this paragraph (d)(2)(ii), the place of payment is the place where the payor of record completes the acts necessary to effect payment. An amount paid by transfer to an account maintained by an interest recipient in the United States or by mail to a United States address is considered to be paid within the United States.

(3) *Reporting by cooperative housing corporations.* For purposes of this section and § 1.6050H–2, an amount received by a cooperative housing corporation from an individual tenant-stockholder that represents the tenant-stockholder's proportionate share of interest described in section 216(a)(2) is interest received on a qualified mortgage in the course of the cooperative housing corporation's trade or business. A cooperative housing corporation is an interest recipient with respect to each tenant-stockholder's proportionate share of interest and must report $600 or more of interest received from an individual tenant-stockholder. The terms "cooperative housing corporation," "tenant-stockholder," and "tenant-stockholder's proportionate share" are defined in section 216 and the regulations thereunder.

(e) *Amount of interest received on mortgage for calendar year*—(1) *In general.* For purposes of this section and § 1.6050H–2, interest includes mortgage prepayment penalties and late charges other than late charges for a specific mortgage service. Interest does not include interest prepaid in the form of points, regardless of the payor of record's ability to deduct the points under section 461(g)(2). An interest recipient must not report interest prepaid in the form of points as interest received for any calendar year. For example, although an interest recipient receives $3,400 interest prepaid in the form of points in 1988, it must not report that interest in 1988 or a subsequent year. Whether an interest recipient receives $600 or more of interest on a mortgage for a calendar year is determined on a mortgage-by-mortgage basis. An interest recipient need not aggregate interest received on all of a payor of record's mortgages which it holds to determine if it meets the $600 threshold. Therefore, an interest recipient need not report interest of less than $600 received on a mortgage, even though it receives $600 or more of a total interest on all of a payor of record's mortgages for a calendar year.

(2) *Calendar year*—(i) *In general.* Except as otherwise provided in paragraph (e)(2)(ii) of this section, the calendar year for which interest is received is the later of—

(A) The calendar year in which the interest is received, or

(B) The calendar year in which the interest properly accrues.

For example, if an interest recipient receives a payment on December 20, 1988, that includes interest accruing by December 31, 1988, the interest recipient must report the interest as received for 1988 even if the interest payment is not due until February 1989.

(ii) *De minimis rule.* An interest recipient may treat interest received during the current calendar year which properly accrues by January 15 of the subsequent calendar year as interest received for the current calendar year. For example, if an interest recipient receives a monthly interest payment on December 31, 1988, which includes interest accruing for the period December 5, 1988, to January 5, 1989, the interest recipient may treat the entire interest payment as received for 1988. If a portion of an interest payment received in a current calendar year accrues after January 15 of the subsequent calendar year, an interest recipient must report as interest received for the current calendar year only the portion that properly accrues by the end of the current calendar year. For example, if an interest recipient receives a monthly payment that includes interest accruing for the period December 20, 1988, through January 20, 1989, the interest recipient may not report as interest received for 1988 any interest accruing after December 31, 1988. The interest recipient must report the interest accruing after December 31, 1988, as received for calendar year 1989.

(3) *Certain interest not received on mortgage*—(i) *Interest received from seller on payor of record's mortgage.* Interest received from a seller or a person related to a seller within the meaning of section 267(b) or section 707(b)(1) on a payor of record's mortgage is not interest received on a mortgage. For example, interest is not received on a mortgage if a real estate developer deposits an amount in escrow with an interest recipient and advises it to draw on the account to pay interest on a payor of record's mortgage (e.g., a buy-down mortgage). Similarly, interest is not received on a mortgage if an interest recipient receives a lump sum from a real estatge developer for interest on a payor of record's mortgage.

(ii) *Interest received from governmental unit.* Interest received from a governmental unit or an agency or instrumentality of a governmental unit is not interest received on a

mortgage. For example, interest is not received on a mortgage if received as a housing assistance payment from the Department of Housing and Urban Development on a mortgage insured under section 235 of the National Housing Act (12 U.S.C. 1701–1715z (1982 & Supp. 1983)). Except as otherwise provided in paragraph (e) (1) and (2) of this section, interest received on a mortgage is only the excess of interest received on the mortgage over interest received from a governmental unit or an agency or instrumentality of a governmental unit.

(4) *Interest calculated under Rule of 78s method of accounting.* An interest recipient permitted by Revenue Procedure 83–40, 1983–1, C.B. 774 (or other revenue procedure) to use the Rule of 78s method of accounting to calculate interest earned on a transaction may report as interest received on a mortgage interest earned on the transaction as calculated under the Rule of 78s method of accounting only if the interest recipient satisfies the notice requirement of § 1.6050H–2(c).

(f) [Reserved]

(g) *Effective date.* This section is effective for mortgage interest received after December 31, 1987. Section 1.6050H–1T contains rules for reporting mortgage interest received after December 31, 1984, and before January 1, 1988.

§ 1.6050H–2 Time, form, and manner of reporting interest received on qualified mortgage.

(a) *Requirement to file return*—(1) *Form of return.* An interest recipient must file a return required by § 1.6050H–1(a) on Form 1098 (with Form 1096 as the transmittal form). An interest recipient may use forms containing provisions substantially similar to those in Forms 1098 and 1096 if it complies with applicable revenue procedures relating to substitute Forms 1098 and 1096. An interest recipient must file a separate return for each qualified mortgage for which it receives $600 or more of interest for a calendar year.

(2) *Information included on return.* An interest recipient must include on Form 1098:

(i) The name, address, and taxpayer identification number (TIN) (as defined in section 7701(a)(41)) of the payor of record;

(ii) The name, address, and TIN of the interest recipient;

(iii) The amount of interest required to be reported with respect to the qualified mortgage for the calendar year; and

(iv) Any other information required by Form 1098 or its instructions.

Section 1.6050H–1(e) contains rules to determine the amount of interest received on a mortgage for a calendar year.

(3) *Time and place for filing return.* An interest recipient must file a return required by paragraph (a) of this section on or before February 28 of the year following the calendar year for which it receives the mortgage interest. An interest recipient must file the return with the same Internal Revenue Service Center where it files its other returns.

(4) *Use of magnetic media.* An interest recipient must file the return required by paragraph (a) of this section on magnetic media only if required by section 6011(e) and the regulations thereunder. An interest recipient not required by section 6011(e) to file returns on magnetic media may request permission to do so. Section 301.6011–2 contains rules relating to the use of magnetic media. A failure to file on magnetic media when required constitutes a failure to file an information return under section 6721.

(b) *Requirement to furnish statement*—(1) *In general.* An interest recipient that must file a return under paragraph (a) of this section must furnish a statement to the payor of record.

(2) *Information included on statement.* An interest recipient must include on the statement that it must furnish to a payor of record:

(i) The information required under paragraph (a)(2) of this section;

(ii) A legend identifying the statement as important tax information which is being furnished to the Internal Revenue Service, and notifying the payor of record that if the payor of record is required to file a return, a negligence penalty or other sanction will be imposed on the payor of record if the IRS determines that an underpayment of tax results because the payor of record overstated a deduction for this mortgage interest on the payor of record's return; and

(iii) A legend stating that the payor of record may be unable to deduct the full amount of mortgage interest reported on the statement; that limitations based on the cost and value of the property securing the mortgage may apply; and that the payor of record may only deduct mortgage interest to the extent it was incurred, actually paid by the payor of record, and not reimbursed by another person.

(3) *Statement furnished pursuant to Federal mortgage program.* An interest recipient that furnishes a statement to a payor of record under a Federal mortgage program will satisfy the requirement of paragraph (b)(1) of this section if the statement contains all the information and legends required by paragraph (b)(2) of this section and is furnished by the time and at the place required by paragraph (b)(6) of this section.

(4) *Copy of Form 1098 to payor of record.* An interest recipient will satisfy the requirement of paragraph (b)(1) of this section by furnishing to a payor of record a copy of Form 1098 (or a substitute statement that complies with applicable revenue procedures) containing all the information filed with the Internal Revenue Service and all the legends required by paragraph (b)(2) of this section by the time and at the place required by paragraph (b)(6) of this section.

(5) *Furnishing statement with other information reports.* An interest recipient may transmit the statement required by paragraph (b)(1) of this section to the payor of record with other information, including other information returns, as permitted by applicable revenue procedures.

(6) *Time and place for furnishing statement.* An interest recipient must furnish a statement required by paragraph (b)(1) of this section to a payor of record on or before January 31 of the year following the calendar year for which it receives the qualified mortgage interest. The interest recipient furnishes the statement to the payor of record if it mails the statement to the payor of record's last known address.

(c) *Notice requirement for use of Rule of 78s method of accounting*—(1) *In general.* An interest recipient seeking to report interest received on a mortgage under the Rule of 78s method of accounting as permitted under § 1.6050H–1(e)(4) must notify the payor of record that the Rule of 78s method of accounting was used to calculate interest received on the mortgage and that the payor of record may not deduct as interest the amount calculated under the Rule of 78s method of accounting unless the payor of record properly uses that method to determine interest deductions. The notice must state that the payor of record may use the Rule of 78s method of accounting to determine interest paid for Federal income tax purposes only for a self-amortizing consumer loan requiring level payments at regular intervals (at least annually) over no longer than a five-year period, with no balloon payment at the end of the loan term, and only when the loan agreement provides for use of the Rule of 78s method of accounting to determine interest earned. See Rev. Proc. 83–40, 1983–1 C.B. 774; Rev. Rul. 83–84, 1983–1 C.B. 97.

(2) *Time and manner.* An interest recipient must provide notice required by paragraph (c)(1) of this section to a payor of record on or with the statement required by paragraph (b) of this section. An interest recipient may provide notice on a separate paper or on the statement required by paragraph (b) of this section.

(d) *Reporting by related parties*—(1) *In general.* An interest recipient that receives or collects interest on a mortgage for a qualified person may designate that qualified person to satisfy the reporting requirements of paragraphs (a), (b), and (c) of this section. If a designated qualified person reports as permitted under this paragraph (d), it will satisfy the requirement of paragraph (a)(2)(ii) of this section by including on Form 1098 (and Form 1096) the name, address, and TIN of either the interest recipient or the designated qualified person.

(2) *Qualified person.* A qualified person is a trade or business with respect to which the interest recipient is under common control within the meaning of § 11.414(c)–2.

(3) *Designation agreement.* An interest recipient that designates a qualified person to satisfy the reporting requirements described in paragraph (d)(1) of this section must so designate in a written designation agreement. The designation agreement must identify the mortgages and calendar years for which the designated qualified person must report. Both the interest recipient and the designated qualified person must sign and retain a copy of the designation agreement, but neither must file the designation agreement with the Internal Revenue Service.

(4) *Penalties.* A designated qualified person is subject to any applicable penalties (e.g., the section 6723 penalty for failing to include correct information) as if it were an interest recipient. An interest recipient is not relieved from joint and several liability for applicable penalties by designating a qualified person under the provisions of paragraph (d)(3) of this section. Paragraph (e) of this section describes applicable penalties.

(e) *Penalty provisions*—(1) *Failure to file return or to furnish statement.* The section 6721 penalty applies to an interest recipient that fails to file a return required by paragraph (a) of this section with respect to a payor of record. The section 6722 penalty applies to an interest recipient that fails to furnish a statement required by paragraph (b) of this section to a payor of record.

(2) *Failure to furnish TIN.* The section 6676 penalty may apply to an interest recipient that fails to furnish the TIN of a payor of record on a return required by paragraph (a) of this section. The section 6676 penalty may apply to an interest recipient that fails to request and to obtain the TIN of a payor of record under paragraph (f) of this section.

(3) *Failure to include correct information.* The section 6723 penalty may apply to an interest recipient that fails to include correct information on a return required by paragraph (a) of this section or on a statement required by paragraph (b) of this section to be furnished to a payor of record.

(f) *Requirement to request and to obtain TIN*—(1) *In general.* For obligations incurred after December 31, 1987, an interest recipient must make all reasonable efforts to obtain the TIN of a payor of record when the payor of record incurs the obligation. For example, an interest recipient may require a borrower to furnish a TIN during the mortgage approval or application process. If an interest recipient does not maintain the TIN of a payor of record on a mortgage, whenever incurred, it must request the TIN at least annually and must process responses properly and promptly.

(2) *Manner of requesting TIN.* An interest recipient need not separately mail a request for a TIN. An interest recipient may include a request in its regular mailing of payment coupon booklets or annual statements. If an interest recipient makes no mailing to a payor of record during the year in which the payor of record incurs the obligation, it must request the TIN in a separate mailing. No particular form is required to request a TIN. Nevertheless, an interest recipient must make the request on a separate paper and must clearly notify a payor of record that the Internal Revenue Service requires the payor of record to furnish a TIN in order to verify any mortgage interest deduction. An interest recipient must notify a payor of record that failure to furnish a TIN subjects the payor of record to a $50 penalty imposed by the Internal Revenue Service. A request for a TIN made on Form W–9 satisfies the requirement of this paragraph (f)(2).

(g) *Effective date.* This section is effective for mortgage interest received after December 31, 1987. Section 1.6050H–1T contains rules for reporting mortgage interest received after December 31, 1984, and before January 1, 1988.

PART 602—OMB CONTROL NUMBERS UNDER THE PAPERWORK REDUCTION ACT

Par. 5. The authority for Part 602 continues to read as follows:

Authority: 26 U.S.C. 7805. * * *

Par. 6. Section 602.101(c) is amended by inserting in the appropriate place in the table

"§ 1.6050H–1 ..... 1545–0901"

and

"§ 1.6050H–2 ..... 1545–0901."

Lawrence B. Gibbs,

Commissioner of Internal Revenue.

Approved: March 24, 1988.

Donaldson Chapoton,

Assistant Secretary of the Treasury.

[FR Doc. 88–7977 Filed 4–11–88; 8:45 am]

BILLING CODE 4830–01–M

[T.D. 8192]

26 CFR Parts 1 and 602

Income Taxes; Deposits of Estimated Tax Payments of Certain Trusts

AGENCY: Internal Revenue Service, Treasury.

ACTION: Final regulations.

SUMMARY: This document provides a final regulatory amendment that requires certain banks and financial institutions to deposit estimated income tax payments with respect to taxable trusts for which they act as fiduciaries through the Federal Tax Deposit (FTD) system instead of forwarding them to an Internal Revenue Service Center. The amendment would affect certain financial institutions which are authorized depositaries for Federal taxes and which act as fiduciaries for at least 200 taxable trusts.

DATE: This amendment is applicable and effective for estimated tax payments required to be made with respect to certain trusts on and after September 15, 1988.

FOR FURTHER INFORMATION CONTACT: John A. Tolleris of the Legislation and Regulations Division, Office of the Chief Counsel, Internal Revenue Service, 1111 Constitution Avenue, NW., Washington, DC 20224 (Attention: CC:LR:T) (202–566–3060, not a toll-free number).

SUPPLEMENTARY INFORMATION:

Background

On November 18, 1987, the **Federal Register** published (52 FR 44139) a notice of proposed rulemaking regarding a proposed amendment to the Income Tax

Regulations under section 6302(c) of the Internal Revenue Code of 1986 relating to deposits of certain quarterly estimated income tax payments required to be made by estates and trusts under section 6654(1) of the Internal Revenue Code of 1986. This document contains final regulations regarding deposits under section 6302(c) of the Internal Revenue Code of 1986 of the above-described payments required to be made by certain trusts, effective for such payments required to be made on or after September 15, 1988. The regulations are issued under the authority of sections 6302(c) and 7805 of the Internal Revenue Code of 1986.

Several public comments were received in response to the notice of proposed rulemaking, but no hearing was requested with respect to the proposed amendment, and none was held. The public comments discussed several problems that the proposed amendment could cause. After consideration of these comments, it was decided to promulgate the proposed amendment with several modifications to resolve those problems. These revisions are discussed in the public comments section of this regulatory preamble.

Explanation of Provisions

The final regulatory amendment requires certain banks and financial institutions to deposit through the Federal Tax Deposit (FTD) system the quarterly estimated income tax payments relating to certain taxable trusts for which such institutions act as fiduciaries, instead of delivering the payments to an Internal Revenue Service Center as is presently required.

The requirement that quarterly estimated income tax payments be made for certain trusts and estates was enacted in section 1404(a) of the Tax Reform Act of 1986. The Service had required all estimated tax payments for the 1987 taxable year with respect to trusts and estates to be delivered to an Internal Revenue Service Center along with a Form 1041-ES estimated tax voucher. The Service has experienced administrative difficulties in processing a single payment from fiduciaries in payment of estimated tax with respect to a large number of trusts administered by such fiduciaries. The amendment helps to resolve these diffculties by requiring certain financial institutions to pay estimated tax with respect to trusts for which they act as fiduciaries through the FTD system and to make magnetic tape reports of such payments in accordance with Revenue Procedure 87-64 (1987-52 I.R.B. 21). The institutions subject to this requirement are those that have Treasury Tax & Loan (TT&L) accounts for deposited Federal taxes ("TT&L fiduciaries") and that administer at least 200 trusts required to make estimated tax payments during the current calendar year.

Other fiduciaries that do not have TT&L accounts and TT&L fiduciaries that administer fewer than 200 trusts and that wish to make a single estimated tax payment with respect to a large number of trusts (*i.e.*, at least 50) for which they act as fiduciaries will be permitted to elect to make such payments through the FTD system in accordance with the procedures established in Revenue Procedure 87-64.

Public Comments

Most of the commentators requested that the proposed taxable-years-beginning-on January 1, 1988, effective date for implementing the FTD system with respect to trusts' estimated tax payments be postponed for up to a year to provide fiduciaries time both to adjust to the new payment system and to place all trusts on a calendar year basis as required by the Tax Reform Act of 1986. After consideration of these comments, the Service determined that the lead time from the publication of Revenue Procedure 87-64 in December 1987 until September 15, 1988, would be necessary and sufficient to implement the new estimated tax payment requirement. Therefore, the Treasury decision delays the effective date and requires certain trusts to make estimated tax payments through the FTD system beginning with payments required to be made on and after September 15, 1988.

A commentator contended that requiring every TT&L fiduciary with at least 50 taxable trusts to make estimated tax payments through the FTD system and to report them on magnetic tape would impose an undue burden on a number of small financial institutions that lack in-house magnetic tape capability. After considering this comment, the Service decided to reduce the burdens for small fiduciaries by revising this requirement so that only TT&L fiduciaries that have at least 200 trusts are required to make quarterly estimated tax payments under section 6654(1). However, it should be noted that Revenue Procedure 87-64 provides a procedure whereby fiduciaries with at least 50 taxable trusts and those without a TT&L account may apply for authorization to make estimated tax payments through the FTD system and to report them on a single magnetic tape. Thus, these fiduciaries may elect to make and report such payments in accordance with Revenue Procedure 87-64.

Two commentators objected that requiring fiduciaries to submit a preprinted individual voucher for each trust would be unduly burdensome. After consideration of both the burden on fiduciaries and the Service's requirements in order to process payments accurately, it was determined that Form 1041-ES vouchers would continue to be required in all circumstances in which a fiduciary does not use magnetic tape reporting. Fiduciaries of more than 50 taxable trusts that find use of Form 1041-ES vouchers unduly burdensome may elect to report estimated tax payments on magnetic tape in accordance with the procedures in Revenue Procedure 87-64.

Two commentators contended that requiring fiduciaries to make quarterly estimated tax payments through the FTD system for estates opened for more than 2 years would be unduly burdensome. They explained that estates comprise only a small portion of fiduciary accounts administered by banks and that estates, unlike taxable trusts, have a variety of fiscal years. Therefore, they contended, if this requirement was retained, the Service Centers would, in off-quarter months, receive a large number of magnetic tapes each reporting only a few estimated tax payments of such estates. After considering these comments, the Service decided to exclude estates from the Treasury decision's requirement to make certain estimated tax payments through the FTD system. Thus, all fiduciaries will continue to make and report estimated tax payments of taxable estates on the Form 1041-ES vouchers.

Special Analyses

The Commissioner of Internal Revenue has determined that this rule is not a major rule as defined in Executive Order 12291 and that a regulatory impact analysis therefore is not required. It has been certified that this rule will not have a significant impact on a substantial number of small entities because the regulations would be applicable only to financial institutions which administer a large number of trusts actually required to make estimated tax payments. A regulatory flexibility analysis, therefore, is not required under the Regulatory Flexibility Act (5 U.S.C. chapter 6).

Paperwork Reduction Act

The collection of information requirements contained in this regulation have been submitted to the Office of Management and Budget (OMB) in accordance with the requirements of the Paperwork

Reduction Act of 1980. The requirements have been approved by OMB under control number 1545-0971.

Drafting Information

The principal author of these proposed regulations is John A. Tolleris of the Legislation and Regulations Division of the Office of Chief Counsel, Internal Revenue Service. However, personnel from other offices of the Internal Revenue Service and Treasury Department participated in developing the regulations, both on matters of substance and style.

List of Subjects

26 CFR Parts 1.6302-1—1.6302-3

Income taxes, Administration and procedure, Tax depositaries.

26 CFR Part 602

Reporting and recordkeeping requirements.

Adoption of amendments to the regulations

Accordingly, 26 CFR Parts 1 and 602 are amended as follows:

PART 26—[AMENDED]

Paragraph 1. The authority for Part 1 is amended by adding the following citation:

Authority: 26 U.S.C. 7805. * * * Section 1.6302-3 also issued under 26 U.S.C. 6302(c). * * *

Par. 2. A new § 1.6302-3 is added immediately following § 1.6302-2 to read as follows:

§ 1.6302-3 Use of Government depositaries in connection with estimated taxes of certain trusts.

(a) *Requirement.* A bank or other financial institution described in paragraph (b) of this section shall deposit in its Treasury Tax & Loan account 0described in 31 CFR 203 or with a Federal Reserve Bank all payments of estimated tax required to be paid on or after September 15, 1988, under section 6654(1) with respect to trusts for which such institution acts as a fiduciary on or before the date otherwise prescribed for paying such tax.

(b) *Banks and financial institutions subject to this requirement.* The requirement of paragraph (a) of this section applies to banks and other financial institutions described in sections 581 and 591 that have been designated as authorized Federal tax depositaries described in section 6302(c) and that act as fiduciaries for at least 200 trusts to which section 6654(1) applies that during the calendar year are required to make installment payments of estimated tax with respect to such trusts. For purposes of this section, a fiduciary is the person responsible for filing the tax returns and paying the taxes with respect to a trust.

(c) *Cross-references.* For provisions relating to the procedures for depositing the estimated tax payments described in paragraph (a) of this section and for reporting such deposits on magnetic tape, see Revenue Procedure 87-64 [1] or its successor. For provisions relating to the penalty for failure to make a deposit within the prescribed time, see § 301.6656-1 of this chapter (Regulations on Procedure and Administration).

PART 26—[AMENDED]

Par. 3. The authority citation for Part 602 continues to read as follows:

Authority: 26 U.S.C. 7805.

Par. 4. Section 602.101(c) is amended by inserting in the appropriate place in the table "§ 1.6302-3 ..... 1545-0971".

Lawrence B. Gibbs,
Commissioner of Internal Revenue.

Approved: April 4, 1988.

Donaldson Chapoton,
Assistant Secretary of the Treasury.

[FR Doc. 88-8035 Filed 4-8-88; 2:51 pm]

BILLING CODE 4830-01-M

[1] This information is available from the Internal Revenue Service, Department of the Treasury, 1111 Constitution Ave., N.W., Room 5300, Washington, D.C. 20224.

ENVIRONMENTAL PROTECTION AGENCY

40 CFR Part 60

[AD-FRL-3303-1]

Extension to Innovative Technology Waiver for New Source Performance Standards for Kraft Pulp Mills

AGENCY: Environmental Protection Agency (EPA).

ACTION: Final rule.

SUMMARY: On August 21, 1987 (52 FR 31633), the EPA proposed to amend the standards of performance for kraft pulp mills by extending the time period granted for an innovative technology waiver for operation of a new batch digester at the OI Valdosta and Timber STS, Inc. (OI) kraft pulp mill in Valdosta, Georgia, pursuant to section 111(j) of the Clean Air Act, as amended, 42 U.S.C. 7411(j). This action promulgates the extension to the waiver.

EFFECTIVE DATE: April 12, 1988. Under section 307(b)(1) of the Clean Air Act, judicial review of this waiver extension is available only by the filing of petitions for review in the U.S. Court of Appeals for the appropriate circuit within 60 days of today's publication. Under section 307(b)(2) of the Clean Air Act, the requirements that are the subject of today's notice may not be challenged later in civil or criminal proceedings initiated to enforce these requirements.

ADDRESSES: *Docket.* Under section 307(d)(2), 42 U.S.C. 7607(d)(2), the Administrator is required to establish two separate rulemaking dockets for each rule that would apply only within the boundaries of one State. One copy of the docket (Docket No. A-84-16) is located in Washington, DC, at EPA's Central Docket Section, South Conference Center, Room 4, U.S. Environmental Protection Agency, 401 M Street, SW. A second copy is located at the EPA Regional Office in Atlanta, Georgia at 345 Courtland Street.

The docket may be inspected at the listed addresses between 8:00 a.m. and 4:00 p.m. on weekdays. A reasonable fee may be charged for copying.

FOR FURTHER INFORMATION CONTACT: Mr. James Eddinger, Industrial Studies Branch, Emission Standards Division (MD-13), U.S. Environmental Protection Agency, Research Triangle Park, North Carolina 27711, telephone number (919) 541-5420.

SUPPLEMENTARY INFORMATION:

Background

On September 6, 1984, an innovative technology waiver was proposed for operation of a new batch digester at the OI kraft pulp mill in Valdosta, Georgia (49 FR 35156). The waiver was granted on Febraury 14, 1985 (50 FR 6316), to continue to December 31, 1986, or until the batch digester achieved the standard specified in 40 CFR 60.283, whichever came first. The waiver expired on December 31, 1986.

On March 25, 1987, OI submitted a request for an extension of the innovative technology waiver for the batch digester at its kraft pulp mill in Valdosta, Georgia. The Agency reviewed the waiver extension requested with regard to the requirements under section 111(j) of the Act and concluded that this request met the requirements of the Act. Therefore, the Agency proposed, on August 21, 1987, to grant an extension to the innovative technology waiver for the OI kraft pulp mill in Valdosta, Georgia.

Waiver Extension

An extension to the waiver, as proposed on August 21, 1987, is granted

to OI for the No. 10 batch digester at the kraft pulp mill in Valdosta, Georgia.

Public Participation

The extension to the waiver was proposed and published in the **Federal Register** on August 21, 1987 (54 FR 31633). The preamble to the proposed extension discussed information relating to the batch digester system and the requirements of a waiver under section 111(j) of the Clean Air Act. Public comments were solicited at the time of proposal and interested persons were given the opportunity to request a public hearing on the extension to the waiver. No public hearing was requested. The public comment period was from August 21, 1987, to September 21, 1987. No public comments were received.

Docket

The docket is an organized and complete file of all the information considered by EPA in the development of this rulemaking. The docket is a dynamic file, since material is added throughout the rulemaking development. The docketing system is intended to allow members of the public and industries involved to readily identify and locate documents so that they can intelligently and effectively participate in the rulemking process. Along with the statement of basis and purpose of the proposed and promulgated waiver, the contents of the docket will serve as the record in case of judicial review except for interagency review material (Section 307(d)(A)).

Miscellaneous

The Paperwork Reduction Act of 1980 (Pub. L. 96–511) requires EPA to submit to the Office of Management and Budget (OMB) certain public reporting/recordkeeping requirements before proposal. This rulemaking does not involve a "collection of information."

The Administrator certifies that a regulatory flexibility analysis under 5 U.S.C. 60 *et seq.* is not required for this rulemaking because the rulemaking would not have a significant impact on a substantial number of small entities. The rulemaking would not impose any new requirements and, therefore, no additional costs would be imposed. It is, therefore, classified as nonmajor under Executive Order 12291.

Lists of Subjects in 40 CFR Part 60

Air pollution control, Aluminum, Ammonium sulfate plants, Asphalt, Cement industry, Coal, Copper, Electric power plants, Glass and glass products, Grains, Intergovernmental relations, Iron, Lead, Metals, Metallic minerals, Motor vehicles, Nitric acid plants, Paper and paper products industry, Petroleum, Phosphate, Sewage disposal, Steel, Sulfuric acid plants, Waste treatment and disposal, Zinc, Tires, Incorporation by reference, Can surface coating, Industrial organic chemicals, Organic solvent cleaners, Fossil fuel-fired steam generators.

Dated: April 4, 1988.

Lee M. Thomas,

Administrator.

Title 40 Part 60, Subpart BB of the Code of Federal Regulations is amended as follows:

PART 60—STANDARDS OF PERFORMANCE FOR NEW STATIONARY SOURCES

1. The authority citation for Part 60 continues to read as follows:

Authority: 42 U.S.C. 7401, 7411, 7414, 7416, 7601.

2. Section 60.286 is amended by revising paragraph (a)(2) introductory text to read as follows:

§ 60.286 Innovative technology waiver.

(a) * * *

(2) Commencing on February 14, 1985, and continuing to December 31, 1987, or until the DHS that can achieve the standard specified in 40 CFR 60.283 (February 23, 1987), is demonstrated to the Administrator's satisfaction, whichever comes first, OI Valdosta and Timber STS Inc. shall limit the discharge of TRS emissions to the atmosphere:

* * * * *

[FR Doc. 88-7934 Filed 4-11-88; 8:45 am]

BILLING CODE 6560-50-M

---

40 CFR Part 60

[AD-FRL-3363-8]

Standards of Performance for New Stationary Sources; New Residential Wood Heaters; Correction

AGENCY: Environmental Protection Agency (EPA).

ACTION: Final rule; correction.

SUMMARY: This document corrects a final rule on standards of performance for new stationary sources for new residential wood heaters that appeared in the **Federal Register** on February 26, 1988 (53 FR 5860). This action is necessary because, due to a numbering error in the final rule, the provisions relating to temporary labels contained in paragraphs (j)(2) through (j)(8) of 40 CFR 60.536 inadvertently applied only to certain affected facilities although the provisions are intended to apply to other categories of affected facilities as well, as originally proposed. This action also merges the provision contained in paragraph (j)(7) of § 60.536 with that contained in paragraph (j)(4) of § 60.536 to form (j)(2)(iii) under the revised numbering and clarifies EPA's intent that the use of adhesive backings or other means on temporary labels to prevent label destruction or removal during retail display of wood heaters is optional.

FOR FURTHER INFORMATION CONTACT: Rick Colyer, Standards Development Branch, U.S. Environmental Protection Agency, Research Triangle Park, North Carolina 27711, telephone number (919) 541–5262.

Dated: April 5, 1988.

Don R. Clay,

Acting Assistant Administrator for Air and Radiation.

List of Subjects in 40 CFR Part 60

Air pollution control.

For the reasons set out in the preamble, 40 CFR Part 60 is amended as follows:

PART 60—[AMENDED]

1. The authority citation for Part 60 continues to read as follows:

Authority: Secs. 101, 111, 114, 301, Clean Air Act as amended (42 U.S.C. 7401, 7411, 7414, 7601).

2. Section 60.536 is amended by removing the introductory text of paragraph (j), by revising paragraphs (j)(1) and (2), and by removing paragraphs (j)(3) through (8). As revised paragraph (j) reads as follows:

§ 60.536 Permanent label, temporary label, and owner's manual.

* * * * *

(j)(1) An affected facility permanently labeled under paragraph (e), (f)(3), or (g) of this section have attached to it a temporary label that shall contain only the information provided for in Appendix I, section 2.3, 2.4, or 2.5, as applicable.

(2) The temporary label of an affected facility permently labeled under paragraph (b), (c), (e), (f)(3), or (g) of this section shall:

(i) Be affixed to a location on the wood heater that is readily seen and accessible when the wood heater is offered for sale to consumers by any commercial owner;

(ii) Not be combined with any other label or information;

(iii) Be attached to the wood heater in such a way that it can be easily removed by the consumer upon purchase, except that the label or wood

heaters displayed by a commercial owner may have an adhesive backing or other means to preserve the label to prevent its removal or destruction;

(iv) Be printed on 90 pound bond paper in black ink with a white background except that those for models that are not otherwise exempted which do not meet the applicable emission limits, or have not been tested pursuant to this subpart, shall be on a red background as described in Appendix I, section 2.5;

(v) Have dimensions of five inches by seven inches as described in Appendix I, section 2.1;

(vi) Have wording, presentation of the graphic data, and typography as presented in Appendix I.

* * * * *

[FR Doc. 88-7935 Filed 4-11-88; 8:45 am]

BILLING CODE 6560-50-M

DEPARTMENT OF HEALTH AND HUMAN SERVICES

Health Care Financing Administration

42 CFR Parts 405 and 434

[BERC-293-F]

Medicare/Medicaid Program; Revisions in Reporting, Recordkeeping, and Other Requirements

AGENCY: Health Care Financing Administration (HCFA), HHS.

ACTION: Final rule.

SUMMARY: This final rule amends several regulations containing collection of information requirements. These requirements affect the Medicare providers of outpatient physical therapy and speech pathology services; physical therapists in independent practice; portable X-ray services; and Medicaid contracts with health maintenance organizations (HMOs) and prepaid health plans (PHPs).

This final rule also sets forth other changes affecting outpatient physical therapy and speech pathology services and physical therapists in independent practice. These changes, authorized by sections 2341 and 2342 of Pub. L. 98-369, the Deficit Reduction Act of 1984, amend the definition of "physician", and modify the plan of care requirements.

Under the direction of OMB, we have been advised to make changes in information collection requirements that are unnecessarily burdensome, duplicative or lack practical utility. This final rule will accommodate OMB's requirement.

EFFECTIVE DATE: The amendments to 42 CFR 405.1702, 405.1717, 405.1731, and 405.1733 are effective May 12, 1988. The amendments to all other sections are effective July 11, 1988. See section VI of the Supplementary Information for a fuller explanation.

FOR FURTHER INFORMATION CONTACT:

William Larson (301) 966-4640. For issues related to outpatient physical therapy and speech pathology services, physical therapists in independent practice, portable X-ray supplies, physician definition, and plan of care requirements.

or

Joan Mahanes (301) 966-4642. For issues related to HMOs and PHPs.

SUPPLEMENTARY INFORMATION:

I. Background

A. Review of Information Collection Requirements

The Paperwork Reduction Act of 1980 (44 U.S.C. 3504(h)) and implementing regulations authorize the Office of Management and Budget (OMB) to review all collection of information requirements in Federal regulations. On March 31, 1983, OMB published regulations at 5 CFR 1320.14 to implement its authority to review (48 FR 13666). OMB has the authority to require agencies to initiate a proposal for a change in information collection requirements if they are unnecessarily burdensome, duplicative, or lack practical utility. The agency responsible for the regulations is required to publish a notice in the **Federal Register** informing the public that OMB has directed the agency to revise certain requirements for the collection of information, and that OMB has granted approval of the collection of information requirements for the period necessary for consideration of the proposed change.

In its review of collection of information requirements for Medicare providers of outpatient physical therapy and speech pathology services, physical therapists in independent practice, and portable X-ray services, and for Medicaid health maintenance organizations (HMOs), and prepaid health plans (PHPs), OMB identified requirements in need of revision, in that they were overly prescriptive. In accordance with the requirements in 5 CFR 1320.14(f), a notice was published in the **Federal Register** on August 20, 1984 to inform the public of OMB's action and to state that OMB had granted approval of the questioned requirements for the period necessary: However, we have since noticed that § 405.1733(b) has never been previously approved, and must be submitted to OMB for approval under section 3507 of the Paperwork Reduction Act (44 U.S.C. 3507). Subsequently, on February 24, 1986, we issued a proposed rule setting forth proposed changes in the regulations in question. (51 FR 6429)

B. Definition of "Physician" and Plan of Care Requirements

Section 2341 of Pub. L. 98-369, the Deficit Reduction Act of 1984, amended the definition of "outpatient physical therapy services" to include services furnished to an individual who is under the care of a podiatrist. Section 2342 of Pub. L. 98-369 permits a physical therapist to establish a plan of care for physical therapy. These changes affect outpatient physical therapy and speech pathology organizations and physical therapists in independent practice. We proposed regulations to implement sections 2341 and 2342 of Pub. L. 98-369 in the above mentioned proposed rule, published on February 24, 1986.

II. Revision of Information Collection Requirements

A. Section 405.1413 Condition for Coverage—Qualifications and orientation of technical personnel and employee records (in 42 CFR Part 405, Subpart N—Conditions for Coverage of Portable X-Ray Services).

Statutory Authority

Under section 1861(s)(3) of the Social Security Act (the Act), there is no explicit statutory provision for personnel policies for x-ray suppliers. The current regulation is based on section 1861(s)(13) of the Act, which provides that laboratories must meet health and safety requirements prescribed by the Secretary.

Proposal

We proposed to remove the unnecessary paperwork burdens in the existing regulation, and to require only that records be maintained to demonstrate that (1) each employee is qualified for his or her position by means of training and experience and (2) employees receive adequate health supervision.

Comment and Response

Comment: One commenter questioned the meaning of "health supervision". Another questioned why evidence of licensure is not being required.

Response: The intent of the phrase "health supervision" in these amended regulations remains the same as in the current regulations. That is, we expect the facility, as well as the employee, to

be jointly cognizant of health conditions (including, but not limited to, excessive exposure to radiation) that could be detrimental to others. The facility is to assume primary responsibility for monitoring personnel for radiation exposure and general knowledge of employees' fitness for the job, but the employees must take responsibility for their own general health status.

There is no need that evidence of State licensure be maintained in a specific system of records. Section 405.1411 requires that all personnel be licensed where applicable, and although we expect that facilities will maintain evidence of licensure in their employee record system, there is no compelling reason to specifically require that this be the only place where this evidence may be maintained.

Provisions in Final Rule

We are amending § 405.1413 to require that employee records be maintained; however, we would not impose Federal requirements on how those records are to be structured.

B. 42 CFR Part 405, Subpart Q—Conditions of Participation: Clinics, Rehabilitation Agencies and Public Health Agencies as Providers of Outpatient Physical Therapy and/or Speech Pathology Services; and Conditions for Coverage: Outpatient Physical Therapy Services Furnished by Physical Therapists in Independent Practice.

1. Section 405.1716(c) Condition of Participation—Administrative Management Statutory Requirement.

There is no explicit statutory provision dealing with personnel policies. The current regulation is based on section 1861(p)(4)(A)(v) of the Act, which provides that providers meet health and safety requirements prescribed by the Secretary.

Proposal

We proposed to modify the requirement in existing regulations that detailed lists of records must be maintained. Some items in the list of personnel record requirements are too prescriptive and thus inappropriate for application at the Federal level. We proposed to delete the requirements that personnel records include job descriptions, performance evaluations, and health examinations.

Comment and Response

Comment: Some commenters expressed the opinion that OPT/OSP facilities should continue to be required to provide evidence of job descriptions, health examinations, and performance evaluations. It was suggested that if the proposed regulations were to become final, facilities would no longer maintain those types of records. This, in turn, would create significant problems for State survey agencies, and would adversely affect employee performance.

Response: The record items in question are of such a type that their existence does not directly affect the quality of care furnished to patients. Although we do agree that certain personnel records are necessary for every business, we do not believe that the Federal government should continue to insist that facilities develop and maintain records that are not directly linked to patient health and safety. We do not believe the quality of patient care will diminish as a result of deleting certain items from the personnel records.

Provisions in Final Rule

As proposed, we are modifying the requirement that detailed lists of records must be maintained and deleting the requirement in § 405.1716(c) that personnel records include job descriptions, performance evaluations, and health examinations.

2. Section 405.1716(d) Condition of Participation—Administrative Management Statutory Authority.

Section 1861(p)(4)(A)(ii) of the Act requires a facility furnishing outpatient physical therapy services or speech pathology (or others furnishing those services under arrangement with the facility) to have policies established by a group of professional personnel, including one or more physicians associated with the facility, and one or more qualified physical therapists or speech pathologists, to govern the physical therapy and speech pathology services.

Proposal

We proposed to remove the detailed list of requirements from the existing regulation. The statute does not specify that patient care policies must be written; however, we would retain the requirement that they be written to ensure that they are applied consistently to patient plans of care. We would remove the detailed list of items to be covered in the policies to allow facilities the flexibility to structure the policies to fit their individual administrative needs.

Comment and Response

Comment: Two commenters suggested that facilities should still be required (under section 405.1716(d)) to maintain policies covering patient care plans and methods of implementation, clinical records, and program evaluation.

Response: We expect facilities to develop and maintain those policies that are necessary for their operation and for patient well being. Since the intended results of the policies in question are all capable of being monitored (they are all addressed as separate OPT/OSP requirements), it is not necessary again to refer to them under this particular section.

Provisions in Final Rule

We are amending § 405.1716(d) by removing the detailed list of requirements from the regulations to allow facilities the flexibility to structure the policies to fit their individual administrative needs. However, we will retain the requirement that patient care policies be written, to ensure that they are applied consistently to patient plans of care.

3. Section 405.1717(b) Condition of Participation—Physician's Direction and Plan of Care.

Statutory Authority

Sections 1835(a)(2) (C) and (D) and 1861(p)(2) of the Act require, as an element of the definition of outpatient physical therapy services, the establishment and periodic review of a physician's plan of care delineating the type, amount and duration of physical therapy and speech pathology services which are to be furnished. The statute does not explicitly provide that the plan of care be in writing or that it make reference to anticipated goals or frequency of treatment.

Proposal

We proposed to delete the requirements that (1) the plan be developed in consultation between the physician and specific practitioners; and (2) other appropriate professional staff be required to participate in the review of plans of care. Regarding the requirement for consultation, it is standard practice for plans of care to result from a collaborative effort between physicians and the other practitioners furnishing care. Therefore, we believe that formal consultation need not be addressed at the Federal level, and its deletion from regulations will have no adverse effect upon the quality of patient care. Regarding the requirement for participation by other professional staff, it is standard practice that the physician, based upon his or her knowledge of the patient and upon information submitted by the other practitioners furnishing care, determines the plan of care changes as often as necessary. Therefore, we are deleting the requirement that other appropriate

professional staff be required to participate in the plans of care. While health professionals are no longer required to participate in the formal plan of care review, they nevertheless can furnish information essential to the physician's review.

We believe that no further revisions are prudent. The statute stipulates sufficient detail regarding the content of plans of care and suggests that the nature of the regulation, as a requirement designed to protect the health and safety of patients, would not be satisfied by broad requirements or by plans not committed to writing. For that reason, we proposed to retain the requirement that the plan be written. We are equally committed to assuring that program monies are not expended for unnecessary services because of vague plans of care that make assessment of medical necessity for the services unduly difficult. We believe that the retention of anticipated goals and frequency of treatment in the plan of care is also crucial to this assessment and is an important adjunct to patient health and safety.

Provisions in Final Rule

We received no comments on our proposed change. Therefore, as proposed; in § 405.1717(b) we are deleting the requirement that formal consultation be required between the physician and specified practitioner, and the requirement that other appropriate professional staff be required to participate in the review of plans of care. We have retained the requirement that the plan be written. As required by section 2342 of Pub. L. 98-369, we will also permit a physical therapist to establish a plan of care for physical therapy. (See discussion in section III.B., below.)

4. Section 405.1717(e) Condition of Participation Physician's Direction and Plan of Care.

Statutory Authority

Current law at section 1861(p)(4)(A)(v) qives broad authority to the Secretary to promulgate regulations relating to the health and safety of patients as he or she determines are necessary.

Proposal

We proposed to delete the requirement that the provider post the names and phone numbers of the "on call" physicians as well as their specific days of availability. We believe that the concept of physician availability is medically sound, but the details of the procedures by which this goal is achieved need not be prescribed by Federal regulations.

Provisions in Final Rule

We received no comments on our proposed change. Therefore, as proposed, we are deleting the requirement in § 405.1717(e) that the provider post the names and phone numbers of the "on call" physicians as well as their specific days of availability.

5. Section 405.1725(a) Condition of Participation—Disaster Preparedness.

Statutory Authority

Current law at section 1861(p)(4)(A)(v) gives broad authority to the Secretary to promulgate regulations relating to the health and safety of patients as he or she determines are necessary.

Proposal

We proposed to retain items to be included in structuring a disaster plan because they are instructive to providers, but we would remove the specific requirements that the plan include "instructions", "information", and "specifications" because they require paperwork which may not contribute to readiness for disaster.

Comment and Response

Comment: Two commenters objected to the deletion of the language in § 405.1725 that directs the facility to specify the manner in which items contained within the disaster plan are to be set out.

Response: We agree that items in a disaster plan need to be clear and straightforward if they are to be effective. We believe that the words that were deleted (for example, procedures, instructions, and specifications) are unduly duplicative and will not, by their absence, alter the manner in which facilities prepare disaster plans. The very nature of the requirement necessitates that some detail be made part of each disaster item. For example, it would not suffice to say that casualties and records will be transferred during a disaster without specifying how and where, since the disaster plan requirement dictates that the plan must contain the procedures to be followed in the event of disaster.

Provisions in Final Rule

As proposed, we revised § 405.1725(a) to remove specific requirements that the plan include "instructions", "information", and "specifications" because these were paperwork requirements that may not contribute to readiness for disaster.

6. Section 405.1733(b) Conditions for Coverage—Physician's Direction and Plan of Care.

Statutory Authority

Sections 1835(a)(2) (C) and (D) and 1861(p)(2) of the Act require, as an element of the definition of outpatient physical therapy services (relating to services furnished by a physical therapist in independent practice), the establishment and periodic review of a physician's plan of care delineating the type, amount, and duration of physical therapy which are to be furnished. The statute does not explicitly provide that the plan of care be in writing or that it make reference to anticipated goals or frequency of treatment.

Proposal

We proposed to delete the requirements that (1) the plan be developed in consultation between a physician and the physical therapist; and (2) that the physical therapist be required to participate in the review of the plans of care. Regarding the requirement for consultation, it is standard practice for plans of care to result from a collaborative effort between physicians and the other practitioners furnishing care. Therefore, we believe that formal consultation need not be addressed at the Federal level, and its deletion from regulations will have no adverse effect upon the quality of patient care. Regarding the requirement for participation by the physical therapist, it is standard practice that the physician, based upon his or her knowledge of the patient and upon information submitted by the other practitioners furnishing care, determines the plan of care changes as often as necessary. Therefore, the proposed regulations would delete the requirement that the physical therapist be required to participate in the plans of care. While physical therapists would not be required to participate in the formal plan of care review, they nevertheless could furnish information essential to the physician's review.

We believe that no further revisions are prudent. The statute stipulates sufficient detail regarding the content of plans of care to suggest to us that the nature of the regulation, as a requirement designed to protect the health and safety of patients, would not be satisfied by broad requirements or by plans not committed to writing. For that reason, we proposed to retain the requirement that the plan be written. We are equally committed to the goal of assuring that program monies are not expended for unnecessary services provided because plans of care that are so vague that assessment of medical necessity for the services by fiscal

agents is made unduly difficult. We believe that the retention in the plan of care of anticipated goals and frequency of treatment is also crucial to this assessment and is an important adjunct to patient health and safety.

Provisions in Final Rule

We received no comments on our proposed change. Therefore, as proposed, we are amending § 405.1733(b) by deleting the requirement that the plan of care be developed in consultation between a physician and the physical therapist and that the physical therapist be required to participate in the review of plans of care. We are retaining the provision that the plan be in writing.

7. General Request for Comments on Subpart Q.

In addition to requesting comments concerning the proposed changes to information collection requirements in Subpart Q included in this document, we requested comments on the need to revise or eliminate any other information collection requirements in Subpart Q, as well.

Comment and Response

We received no comments on our request to revise or eliminate any other information collection requirements in Subpart Q; therefore, no additional changes have been made.

C. 42 CFR Part 434, Subpart C—Contracts with HMOs and PHPs: Contract Requirements

1. Section 434.27(a)(3) Termination of Enrollment

Statutory Authority

Under section 1903(m)(2)(A)(v) of the Social Security Act there is no explicit statutory provision for requiring State Medicaid agencies to review each termination of enrollment by an HMO or PHP, but only a requirement that such terminations not discriminate against individuals on the basis of their health status or need for health care services.

Proposal

We proposed to require that the contract between the HMO or PHP and the agency specify the methods by which the HMO or PHP will assure the agency that termination of individuals from participation is for the reasons permitted under the contract. However, approval of these methods would be left to State Medicaid agency discretion.

Comment and Response

Comment: A commenter objected to our proposed deletion of the requirement that individual disenrollments from HMOs and PHPS be reviewed by Medicaid State agencies. The commenter experienced difficulty in assisting an enrollee who had been incorrectly terminated and was therefore convinced that more, not less, oversight of HMO actions was necessary.

Response: The proposed regulation did not weaken the requirement that disenrollments be processed only for those reasons specified in the contract. The regulation requires that the contract between the State Medicaid agency and the HMO or PHP specify the methods by which the State agency will be assured of the fairness of individual disenrollments from the HMO or PHP. However, we do not believe that it is necessary to dictate to States which methods are preferable, beyond stating that such methods must be specified in the contract. As further protection for recipients, regulations at § 434.62 continue to require State agencies to monitor HMO and PHP grievance procedures and enrollment and disenrollment practices.

Provisions in Final Rule

Therefore, as proposed, in § 434.27(a)(3) we will require only that the contract between the HMO or PHP and the agency specify the methods by which the HMO or PHP will assure the agency that termination of individuals from participation is for the reasons permitted under the contract; selection of appropriate methods will be left to the discretion of the agency.

2. Section 434.36 Marketing

Statutory Authority

Under section 1903(m)(2)(A)(v) of the Social Security Act there is no explicit statutory provision for requiring agencies to review marketing plans, procedures or material prior to their use. There is a requirement that the contract specify that the HMO's enrollment procedures will not discriminate among individuals on the basis of health status.

Proposal

Section 434.36 presently requires that contracts with HMOs and PHPs provide that they submit marketing plans, procedures and materials to the State agency for approval before using the plans.

We proposed to revise § 434.36 to require only that the contract specify the methods by which the HMO or PHP will assure the agency that marketing plans, procedures and materials are accurate, and do not mislead, confuse, or defraud either the recipients or the agency. As revised, approval of these methods would have been left to the discretion of the Medicaid State agency.

Comment and Response

Comment: One commenter objected to our deleting Federal requirements that marketing materials for HMOs and PHPs contracting with the State Medicaid agencies be reviewed by those agencies prior to their use. The commenter was especially concerned about a perceived weakening of these regulations in light of recent increases in competition for Medicaid enrollees by HMOs and PHPs in certain areas of the country.

Response: The proposed regulation did not weaken the regulations requirement that marketing materials be clear and accurate. The proposed regulation required that the contract between the Medicaid State agency and the HMO or CMP assure the accuracy and clarity of marketing materials. However, we do not believe that it is necessary to dictate to States which procedures for assurance are preferable.

Provisions in Final Rule

As proposed, we are amending § 434.36 to require that the contract specify the methods by which the HMO or PHP will assure the agency that marketing plans, procedures and materials are accurate. Approval of these methods will be left to the discretion of the Medicaid State agency.

3. Section 434.55 Approval of Marketing Plans, Procedures, and Materials

Statutory Authority

As stated above, section 1903(m)(2)(A)(v) of the Act provides no explicit statutory provision for requiring the Medicaid State agencies to review marketing plans, procedures, or materials before their use.

Proposal

We proposed to delete the existing requirement that the Medicaid State agency adopt a system for approval of marketing plans, procedures, and materials submitted by the contractor.

Provisions in Final Rule

We received no comments on our proposed change. Therefore, we are deleting § 434.55, since § 434.36 has been clarified to indicate that the contract must specify the methods by which the HMO or PHP will assure the agency that marketing plans, procedures, and materials are accurate, and do not mislead, confuse, or defraud either recipients or the agency.

III. Changes Per Legislation

As mandated by sections 2341 and 2342 of Pub. L. 98–369, we are making the following revisions to 42 CFR Part 405, Subpart Q.

A. Definition of Physician

Statutory Authority

Section 2341 of Pub. L. 98–369 amended the definition of "outpatient physical therapy services" to include services furnished to an individual who is under the care of a podiatrist.

Proposal

We proposed to include a definition of physician to apply to 42 CFR Part 405, Subpart Q. This definition would expand the use of the term "physician" as it relates to outpatient physical therapy services to include a podiatrist in all but the following two instances:

1. Qualifications of a Physical Therapist

As set forth in current regulations at §§ 405.1702(d)(4)(ii) and 405.1731(a)(4)(ii), an individual may qualify as a Medicare physical therapist if he or she has had prior to 1970, fifteen years of full-time experience in the practice of physical therapy services that were furnished under the order and direction of a physician. Historically, we have only recognized a doctor of medicine or osteopathy as a physician for the purposes of this requirement. Redefining the term physician to include a podiatrist would alter the original intent of this provision since during the timeframe embodied under this regulation, physical therapists were restricted to treating only those patients referred by doctors of medicine or osteopathy.

2. Emergency Staffing Requirements

Section 405.1717(e) specifies requirements concerning the availability of physicians for emergency care. Since patients treated in outpatient providers generally present a broad array of symptoms, we believe that patient health and safety requires the availability of personnel with broad medical knowledge in the event that emergency care is needed. Therefore, in this standard, we have specified that a doctor of medicine or osteopathy must be available.

Provisions in Final Rule

We received no comments on our proposed change. Therefore, as proposed, we have revised §§ 405.1702 and 405.1731 to expand the definition of physician, as it relates to outpatient physical therapy services, to include a podiatrist.

B. Physical Therapists

Statutory Authority

Section 2342 of Pub. L. 98–369 allows either the physical therapist or the physician to establish a plan of care. However, the physician would still be required to review periodically all plans of care.

Proposal

We proposed to revise §§ 405.1717(b) and 405.1733(b) to permit a physical therapist to establish a plan of care for physical therapy.

Provisions in Final Rule

We received no comments on our proposed change. Therefore, as proposed, we have amended §§ 405.1717(b) and § 405.1733(b) to permit a physical therapist to establish a plan of care for physical therapy.

IV. Regulatory Impact Statement

Executive Order 12291 requires us to prepare and publish a regulatory impact analysis for regulations that are likely to have an annual effect on the economy of $100 million or more, cause a major increase in costs or prices, or meet other threshold criteria that are specified in the Executive Order. In addition, consistent with the Regulatory Flexibility Act, (5 U.S.C. 601 to 612), we prepare and publish a regulatory flexibility analysis for regulations unless the Secretary certifies that the regulation will not have a significant economic impact on a substantial number of small entities. As we discussed in the proposed rule, the estimated impact of this rule will not meet any of the threshold criteria of E.O. 12291 or of the Regulatory Flexibility Act. We have determined, and the Secretary certifies, that this rule is not likely to result in a significant economic impact on a substantial number of small entities.

V. Clearance of Information Collection Requirements

The majority of these regulation provisions amend information collection requirements previously approved by OMB as part of the following information clearances:

§ 405.1413(c)	OMB No. 0938–0339
§ 405.1716(c)	OMB No. 0938–0336
§ 405.1716(d)	OMB No. 0938–0336
§ 405.1717(b)	OMB No. 0938–0336
§ 405.1717(e)	OMB No. 0938–0336
§ 405.1725(a)	OMB No. 0938–0336
§ 434.27(a)	OMB No. 0938–0326
§ 434.36	OMB No. 0938–0326
§ 434.55	OMB No. 0938–0326

However, § 405.1733(b) has not been previously cleared.

At the time of the notice published on February 24, 1988 (51 FR 6429), OMB granted interim approval to the regulation provisions as they stood at that time. The provisions of this final rule now must be submitted to OMB for approval under Section 3507 of the Paperwork Reduction Act (44 U.S.C. 3507). A notice will be published in the Federal Register when approval is obtained.

VI. Effective Date

Our usual practice is to make regulations effective 30 days from the date of final publication, unless a statutory requirement or some other compelling reason necessitates a shorter or longer period. Thus, the amendments to §§ 405.1702, 405.1717, 405.1731 and 405.1733, implementing sections 2341 and 2342 of Pub. L. 98–369, are effective May 12, 1988.

All the remaining amendments made by this final rule affect collection of information requirements for which we have only interim approval from OMB. OMB's regulations at 5 CFR 1320.13(j) specify that collection of information requirements promulgated through notice-and-comment rulemaking may not become effective until OMB has assigned a control number and such number is displayed. We have provided a 90-day delay in the effective date to allow for OMB approval and issuance of control numbers for those regulation provisions containing information collection requirements. We will publish a notice in the Federal Register when we receive notice of OMB's approval.

List of Subjects

42 CFR Part 405

Administrative practice and procedure, Health facilities, Health professions, Kidney diseases, Laboratories, Medicare, Nursing homes, Reporting and recordkeeping requirements, Rural areas, X-rays.

42 CFR Part 434

Grant programs—health, Health maintenance organizations (HMO), Medicaid, Reporting and recordkeeping requirements.

42 CFR Chapter IV is amended as set forth below:

I. Part 405 is amended as follows:

PART 405—FEDERAL HEALTH INSURANCE FOR THE AGED AND DISABLED

A. Subpart N is amended as follows:

1. The authority citation for Subpart N is revised to read as follows:

Authority: Secs. 1102, 1861(s) (3), (11) and (12), 1864, and 1871 of the Social Security Act (42 U.S.C. 1302, 1395x(s) (3), (11), and (12), 1395aa and 1395hh).

2. Section 405.1413 is amended by revising the section heading and paragraph (c) to read as follows:

§ 405.1413 Condition for coverage—qualifications, orientation and health of technical personnel.

* * * * *

(c) *Standard: Employee records.* Records are maintained and include evidence that—

(1) Each employee is qualified for his or her position by means of training and experience; and

(2) Employees receive adequate health supervision.

B. Subpart Q is amended as follows:

1. The authority citation for Subpart Q continues to read as follows:

Authority: Secs. 1102, 1861(p) and 1871 of the Social Security Act (42 U.S.C. 1302, 1395x(p), 1395hh).

2. In § 405.1702, the introductory text for the section, the introductory text in paragraph (d) and paragraph (d)(4)(ii) are revised; the current paragraphs (f)–(k) are redesignated as (g)–(l); and a new paragraph (f) is added to read as follows:

§ 405.1702 Definitions relating to clinics, rehabilitation agencies, and public health agencies.

As used in §§ 405.1702–405.1726, the following definitions apply:

* * * * *

(d) *Physical therapist.* A person who is licensed as a physical therapist by the State in which he or she is practicing if the State licenses physical therapists, and—

* * * * *

(4) * * *

(ii) Prior to January 1, 1970, had 15 years of full-time experience in the treatment of illness or injury through the practice of physical therapy in which services were rendered under the order and direction of attending and referring doctors of medicine or osteopathy; or

* * * * *

(f) *Physician.* A person who is—

(1) A doctor of medicine or osteopathy legally authorized to practice medicine and surgery by the State in which he or she performs those functions or actions; or

(2) A doctor of podiatric medicine, but only with respect to the functions which he or she is legally authorized to perform by the State in which he or she performs them.

* * * * *

3. In § 405.1716, paragraphs (c) and (d) are revised to read as follows:

§ 405.1716 Condition of participation—administrative management.

* * * * *

(c) *Standard: Personnel policies.* Personnel practices are supported by appropriate written personnel policies that are kept current. Personnel records include the qualifications of all professional and assistant level personnel, as well as evidence of State licensure where applicable.

(d) *Standard: Patient care policies.* Patient care practices and procedures are supported by written policies established by a group of professional personnel including one or more physicians associated with the clinic or rehabilitation agency, one or more qualified physical therapists (if physical therapy services are provided), and one or more qualified speech pathologists (if speech pathology services are provided). The policies govern the outpatient physical therapy and/or speech pathology services and related services which are provided. These policies are evaluated at least annually by the group of professional personnel, and revised as necessary based upon this evaluation.

4. In § 405.1717, paragraphs (b) and (e) are revised to read as follows:

§ 405.1717 Condition of participation—physician's direction and plan of care.

* * * * *

(b) *Standard: Plan of Care.* For each patient there is a written plan of care established by the physician or, for speech pathology services, by the physician or by the speech pathologist who furnishes the services, or, for physical therapy services, by the physician or by the physical therapist who furnishes the services. The plan of care indicates anticipated goals and specifies the type, amount, frequency, and duration of physical therapy or speech pathology services. The plan of care and results of treatment are reviewed at least once every 30 days, by the attending or other physician, and the indicated action is taken.

* * * * *

(e) *Standard: Emergency care.* The organization provides for one or more doctors of medicine or osteopathy to be available on call to furnish necessary medical care in case of emergency. There are established procedures to be followed by personnel in an emergency, which cover immediate care of the patient, persons to be notified and reports to be prepared.

5. In § 405.1725, paragraph (a) is revised to read as follows:

§ 405.1725 Condition of participation—disaster preparedness.

* * * * *

(a) *Standard: Disaster plan.* The organization has a written plan in operation, with procedures to be followed in the event of fire, explosion, or other disaster. The plan is developed and maintained with the assistance of qualified fire, safety, and other appropriate experts, and includes:

(1) Transfer of casualties and records;

(2) The location and use of alarm systems and signals;

(3) Methods of containing fire;

(4) Notification of appropriate persons; and

(5) Evacuation routes and procedures.

* * * * *

6. In § 405.1731, the introductory text is revised; in paragraph (a), the introductory text is revised; paragraph (a)(4)(ii) is revised; and paragraph (d) is added to read as follows:

§ 405.1731 Definitions relating to physical therapists in independent practice.

As used in §§ 405.1731 through 405.1737, the following definitions apply:

(a) *Physical therapist.* A person who is licensed as a physical therapist by the State in which he is practicing if the State licenses physical therapists, and—

* * * * *

(4) * * *

(ii) Prior to January 1, 1970, had 15 years of full-time experience in the treatment of illness or injury through the practice of physical therapy in which services were rendered under the order and direction of attending and referring doctors of medicine or osteopathy; or

* * * * *

(d) *Physician.* A person who is—

(1) A doctor of medicine or osteopathy legally authorized to practice medicine and surgery by the State in which he or she performs these functions or actions; or

(2) A doctor of podiatric medicine, but only with respect to the functions which he or she is legally authorized to perform by the State in which he or she performs them.

7. In § 405.1733, paragraph (a)(7) is amended by replacing the word "rendered" with "provided" and paragraph (b) is revised to read as follows:

§ 405.1733 Condition for coverage—physician's direction and plan of care.

* * * * *

(b) *Standard: Plan of care.* For each

patient there is a written plan of care established by the physician or by the physical therapist who furnishes the services, which indicates anticipated goals and specifies the type, amount, frequency, and duration of physical therapy Services. The plan of care and results of treatment are reviewed at least once every 30 days by the attending or other physician and the indicated action is taken.

* * * * *

II. Part 434 is amended as set forth below:

PART 434—CONTRACTS

A. The authority citation for Part 434 continues to read as follows:

Authority: Sec. 1102 of the Social Security Act (42 U.S.C. 1302).

B. In § 434.27, the introductory language in paragraph (a) is republished and paragraph (a)(3) is revised to read as follows:

§ 434.27 Termination of enrollment.

(a) All HMO and PHP contracts must specify—

* * * * *

(3) The methods by which the HMO or PHP will assure the agency that terminations are consistent with the reasons permitted under the contract and are not due to an adverse change in the recipient's health.

* * * * *

C. Section 434.36 is revised to read as follows:

§ 434.36 Marketing.

The contract must specify the methods by which the HMO or PHP will assure the agency that marketing plans, procedures, and materials are accurate, and do not mislead, confuse, or defraud either recipients or the agency.

§ 434.55 [Removed]

D. Section 434.55 is removed.

(Catalog of Federal Domestic Assistance Program No. 13.774, Medicare-Supplementary Medical Insurance Program; No. 13.714, Medical Assistance)

Dated: November 24, 1987.

William L. Roper,

Administrator, Health Care Financing Administration.

Approved: January 19, 1988.

Otis R. Bowen,

Secretary.

[FR Doc. 88-7860 Filed 4-11-88; 8:45 am]

BILLING CODE 4120-01-M

42 CFR Part 413

[BERC-435-F]

Medicare Program; Changes to the Return on Equity Capital Provisions for Outpatient Hospital Services

AGENCY: Health Care Financing Administration (HCFA), HHS.

ACTION: Final rule.

SUMMARY: We are revising the Medicare regulations to eliminate the allowance for a return on equity capital for outpatient services furnished by proprietary hospitals as required by section 4065 of the Omnibus Budget Reconciliation Act of 1987 (enacted on December 22, 1987). Section 4065 prohibits recognition of any return on equity capital with respect to hospital outpatient departments effective January 1, 1988.

EFFECTIVE DATE: This rule is effective May 12, 1988.

FOR FURTHER INFORMATION CONTACT: Anthony Coates, (301) 966-4515.

SUPPLEMENTARY INFORMATION:

I. Background and Provisions of the Final Rule

On December 22, 1987, the Omnibus Budget Reconciliation Act of 1987 (Pub. L. 100-203) was enacted. Section 4065(a) of Pub. L. 100-203 added paragraph (S) to section 1861(v)(1) of the Social Security Act (the Act) to prohibit Medicare regulations from including a "provision for specific recognition of any return on equity capital with respect to hospital outpatient departments." Similarly, section 4065(b) of Pub. L. 100-203 amended section 1881(b)(2)(C) of the Act to restrict the Secretary's authority to provide for a return on equity capital to "facilities (other than hospital outpatient departments) * * *."

On September 1, 1987, we published a final rule in the **Federal Register** (52 FR 32920) that eliminated the allowance for a return on equity capital for outpatient services furnished by proprietary hospitals, effective for cost reporting periods beginning on or after October 1, 1987. In that document, we also made conforming changes to the regulations to describe the phaseout of the return on equity capital for inpatient hospital services effective for cost reporting periods beginning on or after October 1, 1986, as mandated by the provisions of section 1886(g)(2) of the Act.

On September 29, 1987, the Balanced Budget and Emergency Deficit Control Reaffirmation Act of 1987 (Pub. L. 100-119) was enacted. Section 107(b)(1) of Pub. L. 100-119 specifies that the "final Regulation * * * published on September 1, 1987 (52 FR 32920) and relating to changes to the return on equity capital provisions for outpatient hospital services is void and of no effect." In addition, section 107(b)(1)(C) of Pub. L. 100-119 prohibited the Department from issuing "after September 18, 1987, and before November 21, 1987 * * * any final regulation that changes the policy * * * with respect to payment for a return on equity capital for outpatient hospital services." We notified the public of this legislation in a notice published in the **Federal Register** on October 23, 1987 (52 FR 39637).

The conforming changes made in the September 1, 1987 final rule to the regulations that described the phase-out of the return on equity capital for inpatient hospital services were not affected by the provisions of Pub. L. 100-119 and have remained in effect. (See 42 CFR 413.157(b)(2).)

Because the legislative prohibition in section 107(b)(1)(C) of Pub. L. 100-119 on publishing a regulation concerning elimination of the allowance for a return on equity capital for outpatient hospital services has ended and we are precluded by the provisions of section 4065 of Pub. L. 100-203 from providing for a return on equity capital for outpatient hospital services on or after January 1, 1988, we are revising § 413.157 of our regulations to conform with the law by eliminating the allowance for a return on equity capital for outpatient services furnished by proprietary hospitals effective for services provided on or after January 1, 1988.

II Regulatory Impact Statement

Executive Order 12291 requires us to prepare and publish a final regulatory impact analysis for regulations that are likely to have an annual effect on the economy of $100 million or more; cause a major increase in costs or prices, or result in significant adverse effects on competition, employment, investment, productivity, innovation, or the ability of United States-based enterprises to compete with foreign-based enterprises in domestic or export markets. In addition, we generally prepare a final regulatory flexibility analysis that is consistent with the Regulatory Flexibility Act (RFA) (5 U.S.C. 601 through 612), unless the Secretary certifies that a final regulation will not have a significant economic impact on a substantial number of small entities. For purposes of the RFA, we treat all hospitals as small entities.

Since the only purpose of this final rule is to conform our regulations with

the provisions of new section 1861(v)(1)(S) of the Act and revised section 1881(b)(2)(C) of the Act and to notify the public of this changes, there is no impact on hospitals that is attributable to this rule. For these reasons, we have determined that a final regulatory impact analysis is not required. In addition, we have determined, and the Secretary certifies, that this rule will not result in a significant economic impact on a substantial number of small entities. Therefore, we have not prepared a regulatory flexibility analysis.

III. Other Required Information

A. Paperwork Reduction Act

These changes will not impose information collection requirements; consequently, they need not be reviewed by the Executive Office of Management and Budget under the authority of the Paperwork Reduction Act of 1980 (44 U.S.C. 3501–3511).

B. Waiver of Proposed Rulemaking

We ordinarily publish a notice of proposed rulemaking in the **Federal Register** and provide a period for public comment. Such notices include a statement of the time, place, and nature of rulemaking proceedings, reference to the legal authority under which the rule is proposed, and the terms or substance of the proposed rule or a description of the subjects and issues involved. However, we may waiver that procedure if we find good cause that such a notice-and-comment procedure is impractical, unnecessary, or contrary to the public interest, and incorporate a statement of the finding and its reasons in the rule issued.

The purpose of this final rule is to conform § 413.157 of our regulations with the precise provisions of sections 1861(v)(1)(S) and 1881(b)(2)(C) of the Act and to notify the public of these changes in the Act that prohibit all allowance for the return of equity capital for outpatient services furnished by proprietary hospitals. Because these changes are effective January 1, 1988 and the law provides no Secretarial descretion in implementation, affording a proposed rulemaking process is impractical and not in the public interest because the only effect would be to withhold notification of the changes in the Act. Therefore, we find good cause to waive proposed rulemaking and to issue these regulations as final.

C. Opportunity for Comment

We routinely provide an opportunity for public comment when issuing Medicare rules. This final rule, which conforms § 413.157 with sections 1861(v)(1)(S) and 1881(b)(2)(C) of the Act, embodies essentially the same policy contained in the final rule we issued on this same subject on September 1, 1987. In that document, we responded to issues raised by public comment on the notice of proposed rulemaking (June 5, 1987; 52 FR 21330). Thus, we are merely reissuing a final rule that sets forth the same policy upon which the public has previously been afforded an opportunity to comment. Therefore, we find good cause for not affording additional opportunity for public comment since it would be unnecessary.

List of Subjects in 42 CFR Part 413

Administrtative practice and procedure, Health facilities, Health professions, Kidney diseases, Laboratories, Medicare, Nursing homes, Reporting and recordkeeping requirements, Rural areas, X-rays.

42 CFR Part 413 is amended as set forth below:

PART 413—PRINCIPLES OF REASONABLE COST REIMBURSEMENT; PAYMENT FOR END-STAGE RENAL DISEASE SERVICES

A. The authority citation for Part 413 continues to read as follows:

Authority: Secs. 1102, 1122, 1814(b), 1815, 1833(a), 1861(v), 1871, 1881, and 1886 of the Social Security Act as amended (42 U.S.C. 1302, 1320a–1; 1395f(b), 1395g, 1395l(a), 1395x(v), 1395hh, 1395rr, and 1395ww).

B. Section 413.157 is amended by redesignating paragraph (b)(4) as new paragraph (b)(5), and adding a new paragraph (b)(4) to read as follows:

§ 413.157 Return on equity capital of proprietary providers.

* * * * *

(b) *General rule.* * * *

(4) *Rate of return related to outpatient hospital services.* (i) For cost reporting periods beginning on or after October 1, 1985, the rate used in determining the return for outpatient hospital services furnished before January 1, 1988 is a percentage equal to the average of the rates of interest described in paragraph (b)(1) of this section.

(ii) There is no allowance for return for outpatient hospital services furnished on or after January 1, 1988.

* * * * *

(Catalog of Federal Domestic Assistance Program No. 13.773, Medicare—Hospital Insurance; and No. 13.774, Medicare—Supplementary Medical Insurance)

Dated: February 11, 1988.

William L. Roper,

Administrator, Health Care Financing Administration.

Approved: March 14, 1988.

Otis R. Bowen,

Secretary.

[FR Doc. 88–7907 Filed 4–11–88; 8:45 am]

BILLING CODE 4120–01–M

LEGAL SERVICES CORPORATION

45 CFR Part 1611

Eligibility; Income Level for Individuals Eligible for Assistance

AGENCY: Legal Services Corporation.

ACTION: Final Rule.

SUMMARY: The Legal Services Corporation is required by law to establish maximum income levels for individuals eligible for legal assistance. This document updates the specified income levels to reflect the annual amendments to the official Federal Poverty Income Guidelines as defined by the Department of Health and Human Services.

EFFECTIVE DATE: April 12, 1988.

FOR FURTHER INFORMATION CONTACT: Timothy B. Shea, General Counsel, Legal Services Corporation, 400 Virginia Avenue SW., Washington, DC 20025–2571; (202) 863–1823.

SUPPLEMENTARY INFORMATION: Section 1007(a)(2) of the Legal Services Corporation Act, 42 U.S.C. 2996f(a)(2), requires the Corporation to establish maximum income levels for individuals eligible for legal assistance, and the Act provides that income shall be taken into account along with other specified factors. Section 1611.3(b) of the Corporation's Regulations establishes a maximum income level equivalent to one-hundred and twenty-five percent (125%) of the official Federal Poverty Income Guidelines as defined by the Office of Management and Budget. Responsibility for revision of the official Federal Poverty Income Guidelines was shifted in 1982 from the Office of Management and Budget to the Department of Health and Human Services. The revised figures for 1988 equivalent to 125% of the current official Poverty Income Guidelines as set out at 53 FR 4214 (Feb. 12, 1988) are set forth below:

List of Subjects in 45 CFR Part 1611

Legal services.

PART 1611—ELIGIBILITY

1. The authority citation for Part 1611 continues to read as follows:

Authority: Secs. 1006(b)(1), 1007(a)(1), 1007(a)(2) Legal Services Corporation Act of 1974, as amended, 42 U.S.C. 2996e(b)(1), 2996f(a)(1), 2996f(a)(2).

2. Appendix A of Part 1611 is revised to read as follows:

Appendix A of Part 1611—Legal Services Corporation Poverty Guideline

Size of family unit	All States but Hawaii and Alaska [1]	Alaska [2]	Hawaii [3]
1	7,212	9,012	8,312
2	9,662	12,075	11,125
3	12,112	15,137	13,937
4	14,562	18,200	16,750
5	17,012	21,262	19,562
6	19,462	24,325	22,375
7	21,912	27,387	25,187
8	24,362	30,450	28,000

[1] For family units with more than eight members, add $2,450 for each additional member in a family.
[2] For family units with more than eight members, add $3,062 for each additional member in a family.
[3] For family units with more than eight members, add $2,812 for each additional member in a family.

Dated: April 6, 1988.

Timothy B. Shea,

General Counsel.

[FR Doc. 88-7990 Filed 4-11-88; 8:45 am]

BILLING CODE 7050-01-M

Proposed Rules

Federal Register
Vol. 53, No. 70
Tuesday, April 12, 1988

This section of the FEDERAL REGISTER contains notices to the public of the proposed issuance of rules and regulations. The purpose of these notices is to give interested persons an opportunity to participate in the rule making prior to the adoption of the final rules.

DEPARTMENT OF AGRICULTURE

Animal and Plant Health Inspection Service

9 CFR Part 78

[Docket No. 88-020]

Official Brucellosis Tests

AGENCY: Animal and Plant Health Inspection Service, USDA.

ACTION: Proposed rule.

SUMMARY: We are proposing to amend the brucellosis regulations by adding the particle concentration fluorescence immunoassay (PCFIA) test to the list of official tests for brucellosis in cattle and bison. We believe this action is warranted in order to allow for testing that is faster, more sensitive, and more specific than many of the official laboratory tests currently being used.

DATE: Consideration will be given only to comments postmarked or received on or before May 12, 1988.

ADDRESSES: Send an original and two copies of written comments to APHIS, USDA, Room 1143, South Building, P.O. Box 96464, Washington, DC, 20090-6464. Please state that your comments refer to Docket No. 88-020. Comments received may be inspected at Room 1141 of the South Building between 8 a.m. and 4:30 p.m., Monday through Friday, except holidays.

FOR FURTHER INFORMATION CONTACT: Dr. Hugh E. Metcalf, Senior Staff Veterinarian, Program Planning Staff, VS, APHIS, USDA, Room 841, Federal Building, 6505 Belcrest Road, Hyattsville, MD 20782, 301-436-8713.

SUPPLEMENTARY INFORMATION:

Background

Brucellosis is a serious infectious and contagious disease, caused by bacteria of the genus Brucella, that affects animals and man. The Secretary of Agriculture is authorized to cooperate with the states in conducting a brucellosis eradication program and in preventing the interstate spread of brucellosis. The regulations in 9 CFR Part 78 (referred to below as the regulations) govern the interstate movement of cattle, bison, and swine in order to help prevent the spread of brucellosis.

Official brucellosis tests are used for determining the brucellosis status of cattle, bison, and swine. The regulations stipulate that testing negative to an official brucellosis test is a condition for certain interstate movements of cattle, bison, and swine. Additionally, official tests are used to determine eligibility for indemnity payments for animals destroyed because of brucellosis.

In testing for brucellosis, both "presumptive" and "diagnostic" official tests are conducted. Presumptive tests are preliminary tests that offer greater sensitivity than other tests, because, in addition to identifying more brucellosis-infected animals than other tests, they may also identify animals as positive for other reasons. Animals that test positive to a presumptive test are then tested with a diagnostic test. The diagnostic test usually provides greater specificity than the presumptive test, in that it better distinguishes brucellosis-infected animals from those not infected with brucellosis. In addition to sensitivity and specificity, reproductibility is a factor in the effectiveness of a test. The more often a test yields the same results when conducted on the same sample, the greater its reproductibility.

A new serologic test for the testing for brucellosis in cattle and bison, called the particle concentration fluorescence immunoassay (PCFIA) test, has been evaluated by extensive field tests in seven states. Additionally, the PCFIA test was preformed on sera from 684 animals that were already known to be either brucellosis-infected or negative animals.[1] Based on the results of these tests, we believe that the PCFIA test affords higher sensitivity than many of our presumptive tests, and also greater specificity and reproductibility than most official diagnostic tests. Because of these performance levels, the PCFIA test would not have to be supplemented by other official tests. Additionally, the test procedure is faster than many of those currently being used. Therefore, we are proposing to amend the regulations by adding the PCFIA test to the list of official tests for brucellosis in cattle and bison.

Executive Order 12291 and Regulatory Flexibility Act

We are issuing this proposed rule in conformance with Executive Order 12291, and we have determined that it is not a "major rule." Based on information compiled by the Department, we have determined that this rule would have an effect on the economy of less than $100 million; would not cause a major increase in costs or prices for consumers, individual industries, federal, state, or local government agencies, or geographic regions; and would not cause a significant adverse effect on competition, employment, investment, productivity, innovation, or on the ability of United States-based enterprises to compete with foreign-based enterprises on domestic or export markets.

For this action, the Office of Management and Budget has waived its review process required by Executive Order 12291.

This action would only provide an additional official brucellosis test for cattle and bison as an option for use in determining whether an animal is infected with the disease. The testing requirements for brucellosis would not change. Moreover, use of the PCFIA test would not affect the market price of the animals tested. Although more rapid testing may allow faster marketing, the economic effect on owners of cattle or bison would not be significant. Nor would the economic effect upon laboratories that wish to use the PCFIA test be significant. Although the cost of this test may be more than that for other official tests, due to the need for new equipment and to higher reagent costs, lower personnel expenses due to the increased speed and automation of the test would offset the start-up and recurring costs.

Under those circumstances, the Acting Administrator of the Animal and Plant Health Inspection Service has determined that this action would not have a significant economic impact on a substantial number of small entities.

Paperwork Reduction Act

This proposed rule contains no information collection or recordkeeping requirements under the Paperwork

[1] For more information, contact AgriTech Systems, Inc., 100 Fore Street, Portland, Maine, 04101.

Reduction Act of 1980 (44 U.S.C. 3501 *et seq.*).

Executive Order 12372

This program/activity is listed in the Catalog of Federal Domestic Assistance under No. 10.025 and is subject to the provisions of Executive Order 12372, which requires intergovernmental consultation with state and local officials. (See 7 CFR Part 3015, Subpart V.)

List of Subjects in 9 CFR Part 78

Animal disease, Brucellosis, Cattle, Hogs, Quarantine, Transportation.

Accordingly, 9 CFR Part 78 would be amended as follows:

PART 78—BRUCELLOSIS

1. The authority citation for Part 78 would continue to read as follows:

Authority: 21 U.S.C. 111–114a–1, 114g, 115, 117, 120, 121, 123–126, 134b, 134f; 7 CFR 2.17, 2.51, and 371.2(d).

2. In § 78.1, the definiton of "official test" would be amended by redesignating paragraph (a)(9) as paragraph (a)(10), and by adding a new paragraph (a)(9) to read as follows:

§ 78.1 Definitions.

* * * * *

Official test.

(a) * * *

(9) Particle concentration fluoresecence immunoassay (PCFIA) test. An automated serologic test to determine the brucellosis disease status of test-eligible cattle and bison when conducted according to instructions provided in Appendices 1 and 2 of this part.

(10) * * *

* * * * *

3. Appendix 1 and Appendix 2 would be added at the end of Part 78 to read as follows:

Appendix 1 to Part 78—Instructions for Agrichek® Particle Concentration Fluoresence Immunoassay (PCFIA)* Brucella abortus Antibody Test

Name and Intended Use

Agrichek* PCFIA *Brucella abortus* Antibody Test Kit is AgriTech System's Particle Concentration Fluoresence Immunoassay (PCFIA) for the detection of antibody to *B. abortus* in bovine serum. This is an official test to be used in the cooperative State/Federal Brucellosis Eradication Program.

AgriChek Screen Machine and AgriChek* PCFIA are registered trademarks of AgriTech Systems, Inc.

General Information

Brucellosis in cattle is a disease caused by *Brucella abortus*, a facultative, intracellular bacterium. The major mode of disease transmission is by ingestion of *B. abortus* organisms that may be present in tissues of aborted fetuses, fetal membranes, and uterine fluids. In addition, infection may occur as the result of cattle ingesting *B. abortus* contaminated feed or water. Infection in cows also has occurred through venereal transmission of the organisms by infected bulls.(1)

Abortion is the most outstanding clinical feature of the disease. If a carrier state develops in a majority of infected cows in a herd, the clinical manifestations may be reduced milk production, dead calves at term, and/or a higher frequency of retained placenta. Disease in the bull may produce infections of the seminal vesicles and testicles resulting in shedding of the organisms in semen.(2)

Diagnosis is based on serological and/or bacteriological procedures. While a positive bacteriological finding is the most definite diagnosis, several weeks may be required to obtain final culture results. The success of disease eradication is dependent upon the accurate identification and *elimination of B. abortus* reactors in a herd.(1) Reliable serological techniques for *B. abortus* provide a rapid and accurate assessment of natural infection or response to vaccine by a measurement of antibodies to *B. abortus* in the serum.

Description/Principles

PCFIA is a fluoresence immunoassay technique which utilizes submicron polystyrene particles as the solid phase onto which *B. abortus* antigens are attached. The conjugate is comprised of fluorescein labelled *B. abortus* antibodies.

In the assay, the test sample and coated particles are initially mixed and incubated in a specially designed 96-well plate. After this initial incubation period, conjugate is added, allowed to react, and the reaction mixture is then filtered through the membrane at the bottom of each well. The particles, being too large to pass through the membrane, are retained on the surface of the membrane. Each well is washed to remove unbound conjugate and antibody, and then moved into position below a front-surface fluorimetric read system. The amount of particle-bound fluoresence is measured as counts from the membrane surface. The system reads fluoresence in two channels, a sample channel (A) and a reference channel (B). The ratio of these counts in each channel normalizes any variation due to pipetting.

Anti-*B. abortus* PCFIA is a competitive immunoassay for antigen-specific antibodies. During the reaction, specific antibodies in the sample compete with the conjugate for antigen binding sites on the solid phase. The amount of conjugate bound to the solid phase will decrease as the specific antibody concentration in the sample increases, thus providing an inverse measurement of specific antibody. Binding of a non-specific antibody to the solid phase does not affect the competition between specific antibody in the sample and the conjugate, and thus does not affect the resulting signal. Non-specific binding to the antigen on the solid phase is displaced by either the higher affinity conjugate or specific antibody in the sample, and again, does not affect the resulting signal.

Reagents

1. *B. abortus* Coated Particles. Antigen-coated particles in Phosphate Buffered Saline with protein stabilizers. Preserved with Sodium Azide and Thimerosal.
2. Anti-*B. abortus:* FITC Conjugate. Fluorescein isothiocyanate labelled antibody to *B. abortus* in Phosphate Buffered Saline with protein stabilizers. Preserved with Sodium Azide and Thimerosal.
3. *B. abortus* Strong Positive Control. Bovine anti-*B. abortus* serum, diluted in sample diluent. Preserved with Sodium Azide and Thimerosal.
4. *B. abortus* Weak Positive Control. Bovine anti-*B. abortus* serum, diluted in sample diluent. Preserved with Sodium Azide and Thimerosal.
5. Negative Control. Bovine serum nonreactive to *B. abortus*, diluted in sample diluent. Preserved with Sodium Azide and Thimerosal.
6. Sample Diluent. Phosphate Buffered Saline with protein stabilizers. Preserved with Sodium Azide and Thimerosal.
7. Wash Concentrate (10x). Phosphate Buffered Saline, 10x. Preserved with Sodium Azide and Thimerosal.

Materials Required but Not Provided

1. AgriChek® Screen Machine.
2. Special 96-well AgriChek® PCFIA assay plates.
3. 500 ml graduated cylinder for preparing wash solution.
4. Precision pipettes: Suitable for delivering 2 ul and 50 ul.
5. Distilled or deionized water.

Precautions and Warnings for Users—Thoroughly Read All Directors Prior to Starting Test Procedure

1. Handle all *B. abortus* biological materials as though capable of transmitting Brucellosis.
2. Store all reagents at 2–7 degrees C.
3. Store *B. abortus* Coated Particles and Anti-*B. abortus:* FITC Conjugate protected from light. Use the dropper tops to dispense these reagents; DO NOT RETUREN UNUSED REAGENT TO STOCK BOTTLES.
4. There should be no eating, drinking, or smoking where specimens or kit reagents are being handled.
5. Kit reagents contain sodium azide as a preservative. Disposal requires flushing plumbing with large volumes of water to prevent the formation of copper or lead azide complexes which may explode upon percussion.
6. All wastes should be properly decontaminated prior to disposal.
7. DO NOT USE KIT PAST EXPIRATION DATE AND DO NOT INTERMIX COMPONENTS FROM DIFFERENT SERIAL LOTS.

Preparation of Wash Solution

The Wash Concentrate (10x) should be brought to room temperature, and must be

diluted 1 to 10 with distilled or deionized water before use (e.g. add 100 ml of concentrate to 900 ml of water). Store the diluted (1x) wash solution at room temperature.

Sample Preparation

Serum samples must be diluted 1:25 with Sample Diluent (e.g., by adding 2 ul of serum to 50 ul of Sample Diluent).

Note: DO NOT DILUTE CONROLS.

Some hemolyzed sample may cause clogging of the membrane in the well, resulting in an invalid test for that sample. Treatment of these serums with kaolin (hydrated aluminum silicate) has been shown to effectively reduce clogging without detrimental effect on the specific reaction. A recognized kaoline treatment for this type of sample is as follows:

Mix approximately 20 mg of dry kaolin with 0.3 ml of serum. Vortex and allow to stand at room temperature for 30 minutes. Centrifuge at 660xg for 30 minutes.(3) Dilute the supernatant 1:25 for testing.

Test Procedure

The *B. abortus* antibody test is performed using the AgriChek® PCFIA systems. (Refer to the Agrichek® PCFIA Operation Manual for complete instructions on maintenance and operation of the instrument and use of the data management program. See Appendix 2 of this part.)

1. Allow all reagents to come to room temperature prior to use.

2. Mix particles gently by inversion; avoid foaming.

3. Add sample Diluent to the assay plates using the following procedure (NOTE: TAKE CARE NOT TO TOUCH THE MEMBRANE WITH THE PIPETTE TIP.):

a. Leave row A, wells 1–12 and row B, wells 1–4 of plate 1, empty so that controls can be added directly to the assay plate. Pipette 50 ul of sample diluent into assay plate 1, beginning with the wells in row B, column 5, and continuing through other rows C-H.

b. Continuing pipetting 50 ul of sample diluent into each well of the remaining plates to be processed, all rows and columns.

4. Add controls and serum to the appropriate wells.

a. Create a layout with the AgriChek® data management program to indicate sample position in the assay plate(s). NOTE. Refer to the Agrichek® PCFIA Operation Manual for instructions. (See Appendix 2 of this part).

b. Add 50 ul of UNDILUTED Negative Control to row A, all wells.

c. Add 50 ul of UNDILUTED *B. abortus* Weak Positive Control to wells B1 and B2 of plate 1.

d. Add 50 ul of UNDILUTED *B. abortus* Strong Positive Control to wells B3 and B4 of plate 1.

e. Add 2 ul of each serum sample to the appropriate remaining wells, using the layout created in step 4a as a guide.

5. Running the Assay

a. To Reagent Tray, add the following reagents:

1x Wash Solution to WASH Compartment (or fill external reservoir if applicable).

1x Wash Solution to AUX Compartment (or fill external reservoir if applicable).

Particles to compartment A.

Conjugate to compartment B. (Refer to Volume Chart in the AgriChek® PCFIA Operation Manual for appropriate volumes. See Appendix 2 of this part.)

b. Load Reagent Tray. Insert plates with diluted samples in numerical plate order.

c. Press PROCESS PLATES.

d. Press BRUCELLA.

e. Press IDENTIFY WELLS.

f. The total number of plates to be processed must be indicated. To do this, press PLATE 1 until the plate nubmer displayed on the screen equals the total number of plates in your batch.

g. Press CHECK REAGENTS. At this point, the instrument will verify if sufficient reagent volumes are present to process the indicated number of plates. Insufficient volumes will be highlighted on the screen. If this occurs, remove the reagent tray and add additional reagents as appropriate.

h. Press CHECK DATA LINK to begin assay. (If applicable, press CONFIGURE OUTPUT, then press PERSONAL COMPUTER, then press SAVE to begain assay.)

6. Follow the instructions in the AgriChek® PCFIA Operation Manual to generate a computer printout of results upon assay completion. (See Appendix 2 of this part.)

Results

Results are expressed as an S/N value, which is the ratio of sample or positive control signal to negative control signal. For the assay to be valid, the *B. abortus* Weak Positive Control must have an S/N value less than 0.70, and the *B. abortus* Strong Positive Control must have a value less than 0.3. The system automatically checks for these parameters to validate or invalidate the assay. (Refer to "Calculations" Section for a definition of the S/N value.)

The presence or absence of antibody to *B. abortus* is determined on the basis of the S/N value. Serum samples with an S/N value greater than 0.70 are considered negative for *B. abortus* antibody; samples with S/N less than or equal to 0.70 are considered positive.

Interpretation of Results

Animals are considered reactors when the S/N value is less than or equal to 0.25; an S/N value greater than 0.25, and less than or equal to 0.70, indicates suspect status; an S/N value greater than 0.70 is considered negative.

Expected results on a 30-day retest of a test eligible vaccinate typically show an increase in the S/N value.

Calculations

1. Calculation of Negative Control (NC) Mean:

$$NC = \frac{\text{Sum of A/B ratios for row A, all wells}}{12}$$

$$\text{A/B ratio} = \frac{\text{channel A counts}}{\text{channel B counts}}$$

2. Calculation of S/N for *B. abortus* Weak Positive Control (WPC) Mean:

$$S/N = \frac{\dfrac{\text{Sum of A/B ratios for wells B1 and B2}}{2}}{\text{NC (A/B ratio)}}$$

3. Calculation of S/N for *B. abortus* Strong Positive Control (SPC) Mean:

$$S/N = \frac{\dfrac{\text{Sum of A/B ratios for wells B3 and B4}}{2}}{\text{NC (A/B ratio)}}$$

4. Calculation of S/N for serum sample:

$$S/N = \frac{\text{A/B ratio of sample well}}{\text{NC (A/B ratio)}}$$

Bibliography

(1) Davis, Dulbecco, Eisen and Ginsberg, Microbiology, 2nd edition. Harper and Row Publishers, New York, N.Y. pp. 686–690, 1980.

(2) Merck and Sharp, The Merck Veterinary Manual, 6th edition. Fraser, C.M. (Ed.) Merck & Co. Inc., Rahway, N.J. pp. 639–641, 1986.

(3) Snyder, M.L., Eernisse, K.A., McKnight, R.A., and Stewart, W.C.: Microtitration Hemagglutination Inhibition Test for Procine Parvovirus (PPV), in Serologic Microtitration Techniques, USDA, APHIS, NVSL, Ames, Iowa pp. 28–31, 1981.

Appendix 2 to Part 78—Portion of Agrichek® PCFIA Operation Manual (II(D) and (E))

Brucella Test Protocol

Creating Plate Layouts with the AgriTech Brucellosis Software.

Plate layouts can be prepared before or after an assay is in progress. However, the operator *must* create layouts in the same order in which batches are to be run on the instrument; otherwise, the layouts will be assigned incorrectly.

1. Beginning from the Main Menu of the AgriTech Brucellosis Software, create the plate layouts by using the computer keyboard as follows:

Type "L" (for "plate layouts")

Type "S" (for "set up new layout")

Type in one character as a batch ID and press the <ENTER> key (↵).

Type in one character as a batch ID and press the <ENTER> key (↵).

Type in the total number of plates to be run in this batch (up to 10) and press <ENTER>.

2. The next screen observed will show an 8 × 12 plate format for Plate #1.

Type in sample identifications in the following format:

1st ID (owner)/2nd ID (vet)/1st Tube #/Total # of tubes in sequence

Up to 10 characters may be used for the 1st ID; 5 characters for the 2nd ID. The information will be visible at the bottom of the screen. Press the <ENTER> key and the computer will enter the information into the place format. Only the 1st ID will be visible on the current screen. To see the 2nd ID and Tube #'s, use the <F1> key to toggle the 2nd screen.

To use only one ID, type:

ID/1st Tube #/Total # of tubes in sequence

3. Continue to type in each set of identification numbers using the same format designated in Step 2. The computer will continue to fill in identifications and will automatically move to successive plates until the total number of plates designated for the batch are all full.

4. To view any plate in the batch, use the MINUS (−) key or the PLUS (+) key; use the <F1> key to toggle between the 1st and 2nd screen of each plate.

5. To obtain a printout of each plate layout, turn on the printer and perform the following:

a. Return to Plate #1 using the MINUS (−) key.

b. Toggle to the 2nd screen of Plate #1 using the <F1>

c. Simultaneously press the SHIFT key (⇧) and the <PRTSC> key.

The printer will then print the screen currently visible on the computer monitor.

d. Access plate #2 using the PLUS (+) key and repeat Steps b and c to obtain a printout of Plate #2. Repeat these steps to obtain a printout of each successive plate layout in the batch.

e. Use the <F9> key to quit (return to the "Plate Layouts" Sub-menu).

Type "M" to return to the Main Menu.

Obtaining Printed Reports

1. When the assay is complete, reports can be generated from the AgriTech Brucellosis Software as follows:

a. Set paper at top page of printer. Be sure printer is turned on and both the "power" and "select" lights are illuminated.

b. From the Main Menu of the AgriTech Brucellosis Software, type "R" (to select "Reports").

c. Type in the appropriate Batch ID and press <ENTER> key (↵). Results for each plate in the batch designated will begin to print.

Note: Plate layouts and Batch ID *must* be created before the data can be accessed and reports printed.

d. After results have printed, type "Y" if histograms are desired; type "N" if no histograms are desired.

Press <ENTER> key to proceed.

* * * * *

BILLING CODE 3410-34-M

Volume Chart

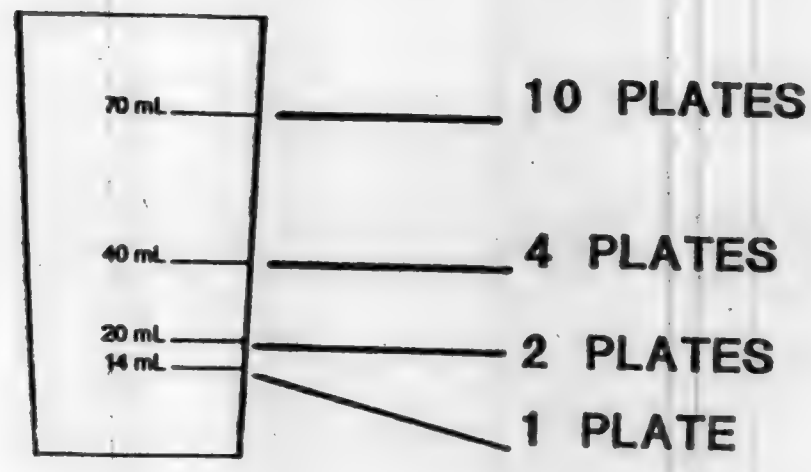

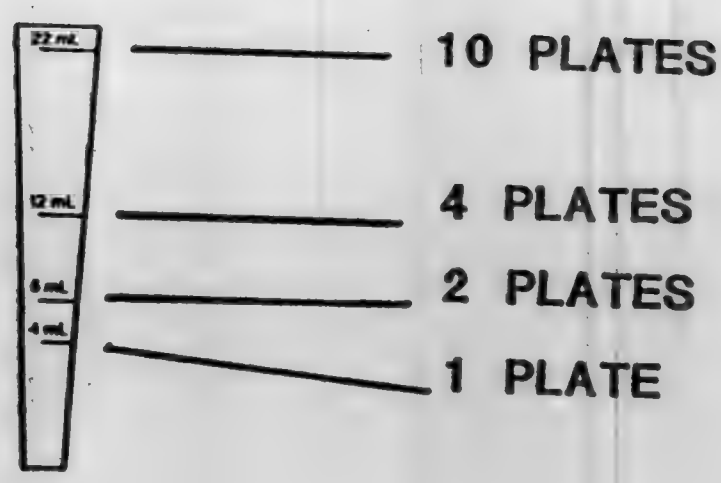

BILLING CODE 3410-34-C

BEST COPY AVAILABLE

Done in Washington, DC, this 5th day of April, 1988.

Larry B. Slagle,

Acting Administrator, Animal and Plant Health Inspection Service.

[FR Doc. 88-7779 Filed 4-11-88; 8:45 am]

BILLING CODE 3410-34-M

DEPARTMENT OF THE TREASURY

Bureau of Alcohol, Tobacco and Firearms

27 CFR Parts 4 and 12

[Notice No. 657, Ref. Notice No. 492]

Nongeneric Designations of Grape Wine Having Geographic Significance

AGENCY: Bureau of Alcohol, Tobacco and Firearms (ATF), Department of the Treasury.

ACTION: Notice of proposed rulemaking.

SUMMARY: The Bureau of Alcohol, Tobacco and Firearms (ATF) is considering expanding the list of names which are officially recognized under 27 CFR Part 4 as names of geographic significance for the purpose of labeling and advertising wine. As provided in 27 CFR 4.24(c) and 4.39 (i) and (j), names of geographic significance may be used only to designate wines of the origin indicated by such name. In addition, § 4.24(c) provides that certain nongeneric (i.e., geographically significant) names may be used as "distinctive" designations of wines upon approval by ATF. Numerous foreign countries, including members of the European Economic Community, have petitioned that ATF recognize, through publication, names of geographic significance that are used in connection with foreign wines, including those nongeneric designations which, in their view, denote distinctive national products.

ATF believes that 2,113 names submitted by 13 foreign countries may be recognized as names of geographic significance that may appear only on labels of qualifying wines from the appropriate country of origin. Of these 2,113 names, ATF has further determined that 618 names submitted from eight countries also qualify as nongeneric names which are the distinctive designations of specific wines as defined in § 4.24(c).

Accordingly, ATF proposes to list all of these names in a new part 12, entitled "Foreign Names of Geographic Significance", to be added to Title 27, CFR. The purpose of this listing will be to emphasize that the foreign names that are being published are restricted for use on labels of wines from the appropriate country of origin. This listing does not exhaustively state the names of geographic significance that may appear on wine labels.

DATE: Written comments must be received on or before July 11, 1988.

ADDRESS: Please submit all comments to the Chief, Alcohol Import-Export Branch, Bureau of Alcohol, Tobacco and Firearms, P.O. Box 385, Washington, DC 20044-0385 (Attn: Notice No. 657).

FOR FURTHER INFORMATION CONTACT: Lilia M. Vannett, Specialist, Alcohol Import-Export Branch, Bureau of Alcohol, Tobacco and Firearms, Ariel Rios Federal Building, 1200 Pennsylvania Ave., NW., Washington, DC 20226 (202-535-6245).

SUPPLEMENTARY INFORMATION:

Background

Certain regulations in 27 CFR Part 4 specifically provide for the use on wine labels of names having geographic significance. Unless a name has been determined by the Director to be "generic" or "semigeneric", or a fanciful product name, product or brand names of geographic significance may be used to designate wines only if they are consistent with the true origin of the wine. The regulations are designed to insure that consumers are not misled with respect to the origin or identity of wines.

Specifically, 27 CFR 4.24 governs the use of geographically significant names which are also used to designate a particular class or type of grape wine. This section initially recognizes that certain geographic names have been so widely used over the years that consumers recognize them as descriptions of the class or type of grape wine rather than as indicators of the origin of the wine. For example, § 4.24(a) provides that names such as "Vermouth" are generic, *i.e.*, they no longer have any geographic significance but are indicative of a class or type of wine. A wine may be labeled with a generic designation regardless of the place of origin. Semigeneric designations, such as "Chablis", "Chianti", and "Sherry", are listed in § 4.24(b). While these names retain some geographic significance, they are also known to the consumer as the description of a class or type of wine. Section 4.24(b) thus provides that semigeneric names may be used to designate wines of an origin other than that indicated by the particular geographic names provided the designation is accompanied by an appellation of origin indicating the true origin of the wine.

Section 4.24(c) states the general rule for use of names of geographic significance on wine labels. Unless a name has been found by the Director to be generic or semigeneric, nongeneric (non-generic) names such as "American", "French", "Spanish", "Deidsheimer", "Lacryma Christi", "Bordeaux", and "Beaujolais", may *only* be used to designate wines of the origin indicated by such name. Section 4.24(c) further provides that certain nongeneric names such as "Deidsheimer", "Lacryma Christi", "Bordeaux", "Beaujolais", "Medoc", and certain other names (when qualified by the word "wine" or its French or German equivalent), have been found by the Director to be "distinctive" designations of specific grape wines. A name of geographic significance is deemed to be a distinctive designation if it is known to the consumer and to the trade as the designation of a specific wine of a particular place or region, distinguishable from all other wines. In the case of still grape wines, a nongeneric distinctive designation may, as is provided in 27 CFR 4.34 appear on the wine label in lieu of the class designation.

In addition to the rule on the use of geographically significant names as class and type designations, the regulation appearing at 27 CFR 4.39(i) expressly restricts the use of brand names of viticultural significance. Section 4.39(j) prohibits the use of product names of geographic significance unless the Director finds that, through long usage, the names are recognized by consumers as fanciful product names.

Recognition of Foreign Names of Geographic Significance

In applying §§ 4.24(c) and 4.39 (i) and (j), ATF has had difficulty, in the past, in identifying names which are geographically significant and thus entitled to protection under the regulations. For example, until ATF officially recognized American viticultural areas, there was often confusion about which names were geographically significant in the context of American wines. Listing the names of approved American viticultural areas in 27 CFR Part 9 has provided one basis for determining whether a domestic name is geographically significant. There continues to be a problem, however, in determining which names used in connection with foreign wines are geographically significant. As a result, numerous foreign countries, including several Member States of the European Economic Community, have long sought

ATF recognition, through official publication, of names of geographic significance used in connection with their wine products. In Notice No. 492, published in the **Federal Register** of November 8, 1983 (48 FR 51333), ATF announced its intention to expand the list of nongeneric wine designations currently referenced in § 4.24(c) and invited all interested national governments to submit a list of those wine designations which they desired ATF deem nongeneric. As indicated in Notice No. 492, ATF desires to give official recognition, through publication, to foreign nongeneric wine designations so as to restrict the use of these designations to qualifying wines imported into the United States. In response to Notice No. 492, ATF received petitions from 13 countries: Argentina, Australia, Austria, France, The Federal Republic of Germany, Greece, Italy, New Zealand, Portugal, Romania, Spain, Switzerland, and Yugoslavia. Approximately 5,400 names were proposed for nongeneric status. The number submitted ranged from two names submitted by Argentina to over 3,000 names submitted by the Federal Republic of Germany. The length and detail of background material supporting each name submitted also varied widely from country to country.

After a review of the supporting information accompanying the petitions, and taking into account factors such as previous United States recognition of names; the historical interpretations and policies of ATF in enforcing the labeling provisions of the Federal Alcohol Administration Act (27 U.S.C. 205) and the regulations implemented thereunder to prevent consumer deception in the labeling and advertising of wine, ATF believes that 2,113 names submitted by the 13 countries may be recognized as names denoting appellation of origin or viticultural areas that may appear only on labels of qualifying wines from the appropriate origin as required by 27 CFR 4.24(c). ATF further believes that these 2,113 names should likewise be recognized as names that may appear as brand or product names on labels of qualifying wines from the appropriate origin only, as required by 27 CFR 4.39 (i) and (j). ATF is proposing to publish these 2,113 names, by country, in a new Part 12 to be added to Title 27, CFR. As is the case with the American viticultural names, a list of foreign names of geographic significance in the regulations will afford the widest possible recognition to these names in order to prevent consumer confusion with respect to the true origin of the wine. Publication of these foreign names will also serve to prevent erosion to the geographic significance of the listed name. ATF contemplates that this list of geographically significant foreign names will be expanded in the future.

Expansion of Distinctive Designations

An important additional purpose of Notice No. 492 was to publish a more extensive list of those foreign nongeneric names which are also deemed by the Director to be distinctive designations of wines, as defined in § 4.24(c)(1). To assist the Director in making this determination, ATF requested that the national governments submit those designations which the respective governments restrict to their own wines, produced subject to specific national requirements and having characteristics which distinguish them from all other wines.

A review of the petitions submitted in connection with Notice No. 492 reveals that many of the nongeneric names submitted are known to the consumer and to the trade as the distinctive designations of a specific wine so that they may be used in lieu of a class and type designation.

Specifically, ATF determined that of the 2,113 names being recognized as nongeneric, 618 names submitted from eight countries qualify as names which are also distinctive designations since the petitions establish that these are names used to designate specific grape wines from a particular place or region distinguishable from all other wines. In this regard, the data submitted by the foreign governments, in connection with these 618 names, detailing national requirements controlling growing area, yield per acre, crushing, blending, irrigation, grape variety, preservatives, and other enological practices, enabled ATF to make these determinations. In addition, ATF also believes that, as the result of an evolving understanding of the significance of distinctive wine designation, these 618 names are equally well known to the U.S. consumer and to the trade as wines from a particular place of origin distinguishable from all other wines. Therefore, ATF also proposes to publish these distinctive designations by country in the new Part 12.

In proposing these 618 names for publication as distinctive designations, ATF is not suggesting that other names submitted by the various governments are not in fact names which the governments, as a matter of practice, restrict to their own distinctive national wine products. Rather, ATF has determined that only 618 of the names submitted are currently known to the U.S. consumer and the trade as distinctive designations of specific wines as the term is defined in § 4.24(c)(1). Again, ATF contemplates that this list of nongeneric distinctive designations will be expanded in the future.

Finally, ATF believes that the names which are currently listed in § 4.24(c)(4) as examples of distinctive designations of natural table wines when accompanied by the word "wine", or its French or German equivalent, have become so well known to consumers and to the trade that they may now be included in § 4.24(c)(3) and in the new Part 12 as examples of distinctive grape designations which do not require any further qualifiers.

Names not Adopted for Listing in the Regulations

The 3,287 names submitted by the various national governments which ATF rejected for publication as examples of names of geographic significance were primarily commune and vineyard designations. In addition, varietal and color designations modifying a specific type of grape wine were also rejected where it appeared that any of several different varieties or colors were also authorized to modify the specific grape wine. ATF believes that names denoting vineyards, communes, grape varieties, and colors are supplemental to the principal name of geographic significance and are afforded sufficient protection when shown with a principal name (*e.g.*, the designations "Cotes Du Rhone Visan" and "Cotes Du Rhone Sablet" are restricted to wines from France by the very fact that the primary designation "Cotes Du Rhone" will be published in Part 12). Furthermore, limiting official recognition to the principal name only would avoid potential confusion to the consumer and would assure a more workable administrative process for recognizing geographically significant names. Additionally, ATF did not consider names such as Angelica, Burgundy, Claret, Chablis, Champagne, Chianti, Madeira, Malaga, Marsala, Moselle, Port, Rhine wine (syn Hock), Sauterne, Haut Sauterne, Sherry, and Tokay since the Director previously determined that these names are semigeneric under 27 CFR 4.24(b)(2).

Finally, denominations of origin that are identical or similar to varietal designations recognized in the United States were generally not considered by ATF to be geographically significant and were excluded from consideration. Denominations of origin rejected because they were found to be similar to United States varietal designations

included: Columbier, Frontignan, Muscat de Frontignan, Vin de Frontignan, Johanisberg, Moscato di Pantelleria, Primitivo di Goia, Sweetwater, and Valdepenas. An exception was made, however, for the name "St. Emilion", similar to the United States varietal name "St. Emilion" as "St. Emilion" has been recognized as a nongeneric distinctive designation since the 1930's and is listed in 27 CFR 4.24(c)(4). ATF does, however, seek specific comments on retaining St. Emilion as a distinctive designation, as well as on the exclusion from recognition, as geographically significant, all foreign names of origin that are similar to varietal names used in the United States.

Semigeneric, generic, varietal and color terms appear in connection with the principal names proposed by ATF as examples of distinctive designations under § 4.24(c). By this process, ATF proposes official recognition of the wine designation in its full context. ATF is not suggesting that varietal and color terms be considered nongeneric, nor is it recommending nongeneric status for names already determined to be generic or semigeneric. It is not ATF's intention that terms such as "rose," "vin," "retsina," or "sherry," which are parts of the full wine designation, not be used in other contexts by more than one country for other products, provided such use is in compliance with the labeling regulations which are stated in 27 CFR Part 4.

In view of the foregoing, ATF proposes that a complete list of recognized foreign names of geographic significance, as well as a complete list of foreign nongeneric names which are also deemed to be the distinctive designations of specific wines pursuant to § 4.24(c)(1), be published in a new Part 12 to be added to Title 27, CFR. The new Part 12 shall be entitled "Foreign Names of Geographic Significance." It is anticipated that only Part 12 will be amended when additional foreign names are recognized by publication in the future. Regulations in 27 CFR 4.24(c) and 4.39(i) will make reference to the new Part 12, but will otherwise remain concise and unchanged. ATF believes that the addition of a new Part 12 will be less costly and administratively more feasible than inserting lists of foreign geographic names in 27 CFR Part 4.

ATF also proposes to eliminate as unnecessary the current § 4.24(c)(4) listing examples of names which are distinctive designations of specific natural table wines when qualified by the word "wine" or its French or German equivalent. In view of the U.S. consumer's evolving understanding of the significance of distinctive designations, ATF believes there is no longer any need to require that a distinctive designation be qualified by the word "wine" since the consumer would not be receiving information that is not already evident to him. As previously indicated, ATF proposes that the names currently listed in § 4.24(c)(4) be considered distinctive designations under § 4.24(c)(3) which do not require any qualifying information. ATF further proposes that § 4.24(c) (2) and (3) be amended to include more examples of nongeneric names. Finally, if § 4.24(c) is amended as proposed, and a new Part 12 is established, then Revenue Ruling 61-110, 1961-1 C.B. 847, and ATF Ruling 73-23, 1973 ATF C.B. 88, would be superseded. Revenue Ruling 61-110 provides for the nongeneric status of "Rioja" while ATF Ruling 73-23 indicates "Soave", "Bardolino", "Frascati", and "Valpolicella" to be nongeneric. Under the current proposal, these names will be officially listed in the new Part 12.

Public Participation—Written Comments

ATF requests comments concerning this proposal from all interested persons, especially on the following specific questions:

1. (a) Examples of nongeneric terms in the current 27 CFR 4.24(c) date back to the 1930's and have been retained by ATF in the proposed list which is the subject of this NPRM. Should any of these names be deleted or changed? (b) This NPRM incorporates all the names currently found in § 4.24(c)(4) into § 4.24(c)(3); do you agree?

2. Are there any errors in the spelling of the names being proposed as examples of nongeneric designations? Has ATF listed a proposed name under the wrong country?

3. Would any of the foreign names proposed for inclusion in § 4.24(c), as examples of nongeneric designations, be misleading to the United States consumer? In this regard, ATF is interested in obtaining comments in connection with the following areas which it has identified as potential sources for confusion:

(a) When identical names submitted by two or more foreign countries are recognized by ATF as examples of nongeneric names. For example, ATF proposes that the name "Sonnenberg", submitted by both Austria and Switzerland, be recognized as geographically significant names for qualifying wines from each of those countries;

(b) When nearly identical names submitted by two or more foreign countries are recognized by ATF as examples of names of geographic significance. For example, ATF proposes to recognize "North Richmond" (Australia), and "Richmond" (New Zealand) as names to be used on wines from New Zealand. Additionally, the name "Chateauneuf" is proposed as a name of geographic significance for wines from Switzerland, while the name "Chateauneuf-du-Pape" is proposed not only as a nongeneric name for France but as a distinctive designation under § 4.24(c)(3);

(c) When names submitted by foreign countries and recognized as geographically significant by ATF are identical or similar to the names of United States counties, States, or other appellations or to United States trade names. For example, ATF proposes that the name "Montana" submitted by Switzerland, the name "Lincoln" submitted by New Zealand and the names "Marion," "Morgan" and "Great Western" submitted by Australia, be recognized as geographically significant names for wines from those respective countries; and,

(d) When names which are submitted by foreign countries are identical or similar to grape varietals that are recognized in the United States and are being considered as a part of an approved list of American grape variety names.

Refer to ATF Notice of Proposed Rulemaking No. 581, "Grape Variety Names; Wine Labeling," published in the **Federal Register** on February 4, 1986 (51 FR 4392-4396). For example, "Frontignan," "Muscat de Frontignan," and "Vin de Frontignan" were submitted by France as nongeneric names. However, these names are similar to "Muscat Frontignan", an alternative name for the prime United States varietal name "Muscat blanc." As previously indicated, ATF does not consider foreign denominations of origin that are identical to or similar to United States varietal names to be geographically significant.

The name "St. Emilion" submitted by France creates a special case. "St. Emilion" is identical to the synonym "St Emilion" which is used in the United States for the varietal grape named "Ugni Blanc". However, "St. Emilion" has been recognized as a nongeneric distinctive designation since the 1930's and is listed under 27 CFR 4.24(c)(4). Should "St. Emilion" be retained as a nongeneric distinctive designation?

4. If any of the names proposed for recognition as names of geographic significance or as nongeneric distinctive designations would be misleading, how

can the product be labeled to avoid confusion?

New submissions of names proposed by interested national governments will be accepted by ATF at any time but will not be considered as part of this rulemaking procedure. ATF believes this limitation is necessary to allow for a manageable comment period. New submissions may be made part of a future rulemaking proposal.

Disclosure

Copies of the petitions and the written comments will be available for public inspection during normal business hours at: ATF Reading Room, Room 4412, Disclosure Branch, Ariel Rios Federal Building, 1200 Pennsylvania Avenue, NW., Washington, DC.

Comments received on or before the closing date will be carefully considered. Comments received after that date will be given the same consideration if it is practical to do so, but assurance of consideration cannot be given except as to comments received on or before the closing date.

ATF will not recognize any material or comments as confidential. Comments may be disclosed to the public. Any material which the respondent considers to be confidential or inappropriate for disclosure to the public should not be included in the comment. The names of commenters are not exempt from disclosure.

Any person who desires an opportunity to comment orally at a public hearing on these proposed regulations should submit his/her request, in writing, to the Director within the 90 day comment period. The request should include reasons why the commentator feels that a public hearing is necessary. The Director, however, reserves the right to determine, in light of all circumstances, whether a public hearing should be held.

Regulatory Flexibility Act

The provisions of the Regulatory Flexibility Act relating to an initial and final regulatory flexibility analysis (5 U.S.C. 603, 604) are not applicable to this proposal because the notice of proposed rulemaking, if promulgated as a final rule, will not have a significant economic impact on a substantial number of small entities. The proposal will not impose, or otherwise cause, a significant increase in reporting, recordkeeping, or other compliance burdens on a substantial number of small entities. The proposals are not expected to have significant secondary or incidental effects on a substantial number of small entities.

Accordingly, it is hereby certified under the provisions of section 3 of the Regulatory Flexibility Act (5 U.S.C. 605(b)) that this notice of proposed rulemaking, if promulgated as a final rule, will not have a significant economic impact on a substantial number of small entities.

Executive Order 12291

It has been determined that this proposal is not a "major rule" within the meaning of Executive Order 12291, 46 FR 13193 (February 17, 1981), because it will not have an annual effect on the economy of $100 million or more; it will not result in a major increase in costs or prices for consumers, individual industries, Federal, State, or local government agencies, or geographic regions; and it will not have significant adverse effects on competition, employment, investment, productivity, innovation, or on the ability of United States-based enterprises to compete with foreign-based enterprises in domestic or export markets.

Paperwork Reduction Act

The provisions of the Paperwork Reduction Act of 1980, Pub. L. 96-511, 44 U.S.C. Chapter 35, and its implementing regulations, 5 CFR Part 1320, do not apply to this notice because no requirement to collect information is proposed.

Drafting Information

The principal authors of this document were John Kodadek and Lilia M. Vannett, Alcohol Import-Export Branch, Bureau of Alcohol, Tobacco and Firearms.

List of Subjects

27 CFR Part 4

Advertising, Consumer protection, Imports, Labeling, Packaging and Containers, Wine.

27 CFR Part 12

Administrative practice and procedures, Imports, Labeling, Wine.

Authority and Issuance

Accordingly, the Director proposes to amend regulations in 27 CFR Part 4 and to issue new regulations in 27 CFR Part 12 as follows:

PART 4—[AMENDED]

Paragraph A. The regulations in 27 CFR Part 4—Labeling and Advertising of Wine—are amended as follows:

1. The authority citation for Part 4 continues to read as follows:

Authority: 27 U.S.C. 205.

2. Section 4.24 is amended by revising paragraphs (c)(2) and (c)(3) and removing (c)(4), to read as follows:

§ 4.24 Generic, semigeneric and nongeneric designations of geographic significance.

* * * * *

(c) * * *

(2) Examples of nongeneric names which are not distinctive designations of specific grape wines are: American, French, Spanish, South-Eastern Australia, Bisamberg-Kreuzenstein, Adlikon, Kaitaia, California, New York State, Napa Valley. Additional foreign nongeneric names are listed in Subpart C of Part 12 of this chapter.

(3) Examples of nongeneric names which are also distinctive designations of specific grape wines are: Alsace, Beaune, Bordeaux Blanc, Rosé d'Anjou, Vin de Pays de l'Aude, Dolcetto d'Asti, Orvieto, Valpolicella, Deidesheimer, Liebfrauenmilch, Schloss Johannisberger, Mosel, Retsina Attica, Moschatos Patras, Dao, Douro, Moscatel de Setubal, Porto, Rioja, Jerez-Xéres-Sherry, Blatina Mostar, Vinaracki Merlo. Additional foreign distinctive designations are listed in Subpart D of Part 12 of this chapter.

§ 4.39 [Amended]

3. Section 4.39(i)(3) is amended by replacing the words "or by a foreign government", with "or when recognized as a name of geographic significance in Part 12 of this chapter".

Par. B. A new Part 12, listing foreign names having geographic significance, is proposed to be added to read as follows:

PART 12—FOREIGN NAMES OF GEOGRAPHIC SIGNIFICANCE USED IN CONNECTION WITH WINES

Subpart A—General Provisions

Sec.
12.1 Scope.
12.2 Territorial extent.
12.3 Procedure for recognition of foreign names of geographic significance.

Subpart B—[Reserved]

Subpart C—Foreign Names of Geographic Significance

12.21 List of approved names by country.

Subpart D—Foreign Nongeneric Names Which Are Distinctive Designations of Specific Grape Wines

12.31 List of approved names by country.

Authority: 27 U.S.C. 205.

Subpart A—General Provisions

§ 12.1 Scope.

The regulations in this part relate to foreign names used to designate wines

which have been officially recognized as names of geographic significance under Part 4 of this chapter, and includes those nongeneric names which the Director has found to be distinctive designations of wine defined in 27 CFR 4.24(c)(1).

§ 12.2 Territorial extent.

This part applies to the several States of the United States, the District of Columbia, and Puerto Rico.

§ 12.3 Procedure for recognition of foreign names of geographic significance.

(a) *Procedure.* Under the provisions of 27 CFR 71.41(c), the Director may approve petitions from national governments requesting ATF recognition of names of geographic significance for their grape wines, including those names which are the distinctive designations of specific wines under § 4.24(c) of this chapter.

(b) *Format.* A petition shall be in the form of a letterhead application submitted by the appropriate foreign governmental department requesting that ATF recognize the nongeneric wine designations listed in their petition. All background material and supporting data submitted will be made part of the application and will be considered in the review process.

Subpart B—[Reserved]

Subpart C—Foreign Names of Geographic Significance

§ 12.21 List of approved names by country.

The names listed in this section have been recognized as names of geographic significance under 27 CFR 4.24(c)(2) and 4.39 (i) and (j).

(a) *Argentina:* Alto Colorado, Valles Calchaquies.

(b) *Australia:* Adelaide, Adelaide Plains, Alice Springs, Angaston, Auburn, Avoca, Ballandean, Bannockburn, Barmera, Barnawartha, Barooga, Barossa, Barossa Valley, Baynton, Beelbangera, Bendigo, Berri, Beverford, Bickley, Big Hill, Bilbul, Branxton, Bridgewater, Broke, Buckland River Valley, Bunbury, Bungendore, Buronga, Camden, Canberra, Clare, Clare Valley, Clarendon, Cobbitty, Coldstream, Coleambally, Corbie Hill, Coromandel Valley, Corowa, Cowra, Currency Creek, Dalwood, Dandenong Valley, Dareton, Darling Ranges, Denman, Dixons Creek, Dookie, Dorrien, Drumborg, Eden Valley, Evanston, Flaxmans Valley, Forbes, Fordwich, Frankland River, Gawler River, Geelong, Glenrowan, Gomersal, Goodnight, Goulburn Valley, Granite Belt, Graytown, Great Western, Greenock, Griffith, Guildford, Hanwood, Happy Valley, Harcourt, Hay, Heathcote, Herberton, Herne Hill, High Eden, Hillston, Hilltops, Hope Valley, Hunter River, Hunter River Valley, Hunter Valley, Kangaroo Lake, Karadoc, Katunga, Keppoch, Keyneton, King Valley, Kingower, Kingston, Koraleigh, Kyneton, Lake Boga, Lake George, Lake Wyangan, Lancefield, Langhorne Creek, Leasingham, Leeton, Lights Pass, Lilydale, Lindsay Point, Lower Hunter River Valley, Loxton, Luddenham, Lyndoch, Lyrup, Macedon, Magill, Maiden Gully, Mandurah, Mandurang, Mansfield, Maranaga, Margaret River, Marion, McLaren Flat, McLaren Vale, McLaren Valley, Merbein, Mid Murray, Middle Swan, Milawa, Mildura, Mitchellstown, Modbury, Monash, Moonambel, Moondah Brook, Moorabool, Moorook, Morgan, Morphett Vale, Mount Pleasant, Mount View, Mt. Barker, Mt. Helen, Mt. Ida, Mt. Macedon, Mudgee, Murchison, Murray River Valley, Murrumbateman, Murtho, Muswellbrook, Mystic Park, Nagambie, Namoi Valley, Nangiloc, Nericon, New South Wales, Newham, Nildottie, North East Victoria, North Richmond, Northern Territory, Nuriootpa, Ovens Valley, Padthaway, Partalunga, Pewsey Vale, Picola, Pokolbin, Qualco, Queensland, Ramco, Red Cliffs, Redbank, Renmark, Reynella, River Murray Valley, Riverina, Riverland, Robinvale, Roma, Romsey, Rooty Hill, Rothbury, Rowland Flat, Rutherglen, Sandy Hollow, Seaview, Seppeltsfield, Sevenhill, Seville, Seymour, Shepparton, South Australia, South-Eastern Australia, South-West Coastal, Springton, St. Andrews, Stanbridge, Stanthorpe, Steels Creek, Strathbogie Ranges, Sunbury, Sunraysia, Swan Hill, Swan Valley, Sydney, Tabilk, Tanunda, Tasmania, Tea Tree Gully, Tharbogang, Toodyay, Tooleybuc, Upper Hunter River Valley, Upper Swan, Victoria, Wagga Wagga, Waikerie, Wallacia, Wangunyan, Wanneroo, Watervale, West Swan, Western Australia, Whitton, Willunga, Wood Wood, Woorinen, Wybong, Yanco, Yarck, Yarra Glen, Yarra Valley, Yarra Yering, Yass, Yass Valley, Yenda.

(c) *Austria:* Bisamberg-Kreuzenstein, Bisamberg-Wien, Burgenland, Carnuntum, Eisenberg, Falkenstein, Frauenweingarten, Goldbachtal, Gumpoldskirchen, Kahlenberg, Kaisergarten, Kaiserstiege, Kapellenweg, Kirchberger Wagran, Kloch-Oststeiermark, Klosterneuburg, Krems, Kremstal, Langelois, Marthal-Kegelberg, Matzner Hugel, Niederosterreich, Nussberg, Osterreichischer, Oststeirisches Hugelland, Punkatal, Retz, Rosaliakapelle, Rust-Neusiedlersee, Sausal, Schatzberg, Schonberger Kalvarienberg, Sonnenberg, Staholin, Steiermark, Steirisches Vulkanland, Sudsteiermark, Sudsteirisches Rebenland, Tattendorfer Steinholle, Traismauer Weinberger, Vogelsag, Voslau, Wachau, Weisser Stein, Weststeiermark, Wien.

(d) *France:* Aloxe-Corton, Alsace, Alsace Grand Cru, Alsation, Anjou, Anjou Coteaux de la Loire, Anjou Gamay, Anjou mousseux, Anjou pétillant, Anjou-Saumer, Arbois, Arbois Mousseux, Arbois-Pupillin, Auvergne, Auxey-Duresses, Bandol, Banyuls, Banyuls Grand Cru, Banyuls Grand Cru Rancio, Banyuls Rancio, Barsac, Batard-Montrachet, Beaujolais, Beaujolais Villages, Beaujolais supérieur, Beaujolais followed by commune, Beaumes de Venise, Beaune, Bellegarde, Bellet, Bergerac, Bergerac sec, Bienvenues Batard-Montrachet, Blagny, Blanc Fumé de Pouilly, Blanquette de Limoux, Blayais, Blaye, Bonnes Mares, Bonnezeaux, Bordeaux, Bordeaux Blanc, Bordeaux Clairet, Bordeaux Cotes de Castillon, Bordeaux Cotes de Francs, Bordeaux Haut-Benauge, Bordeaux Rouge, Bordeaux Supérieur, Bordeaux mousseux, Bordeaux rosé, Bordeaux supérieur Clairet, Bordeaux supérieur Cotes de Castillon, Bordeaux supérieur rosé, Bourg, Bourgeais (vins blancs), Bourgeais (vins rouges), Bourgogne, Bourgogne Aligote, Bourgogne Clairet, Bourgogne Clairet Hautes Cotes de Beaune, Bourgogne Clairet Hautes Cotes de Nuits, Bourgogne Clairet Marsannay, Bourgogne Grand Ordinaire, Bourgogne Grand Ordinaire Clairet, Bourgogne Grand Ordinaire Rosé, Bourgogne Hautes Cotes de Beaune, Bourgogne Hautes Cotes de Nuits, Bourgogne Irancy, Bourgogne Marsannay, Bourgogne Marsannay la Cote, Bourgogne Mousseux, Bourgogne Ordinaire, Bourgogne Ordinaire Clairet, Bourgogne Ordinaire Rosé, Bourgogne Passetoutgrains, Bourgogne Rosé, Bourgogne Rosé Hautes Cotes de Beaune, Bourgogne Rosé Hautes Cotes de Nuits, Bourgogne Rosé Marsannay, Bourgogne des Environs de Chablis, Bourgueil, Brouilly, Bugey, Bearn, Cabardés, Cabernet d'Anjou, Cabernet de Saumur, Cabrieres, Cadillac, Cahors, Canon-Fronsac, Cassis, Chablis grand cru, Chambertin, Chambertin Clos de Béze, Chambolle-Musigny, Chappelle-Chambertin, Charentais, Charentes, Charlemagne, Charmes-Chambertin, Chassagne-Montrachet, Chateau-Chalon, Chateau-Grillet, Chateau Lafite, Chateau Margaux, Chateau Yquem, Chateaumeillant, Chateauneuf-du-Pape, Cheilly-les-Maranges, Chevalier-Montrachet, Cheverny, Chinon, Chiroubles, Chorey-les-Beaunes,

Chénas, Clairette de Bellegarde, Clairette de Die, Clairette de Die Mousseux, Clairette du Languedoc, Clos Saint-Denis, Clos Vougeot, Clos de Tart, Clos de la Roche, Clos des Lambrays, Collioure, Condrieu, Corbieres, Corbieress Supérieurs, Cornas, Corse, Corton, Corton Charlemagne, Costieres du Gard, Cote Beaujolaise, Cote Maconnaise, Cote Rotie, Cote Roannaise, Cote de Beaune, Cote de Beaune preceded by commune, Cote de Beaune-Villages, Cote de Brouilly, Cote de Jura Mousseux, Cote de Nuits, Cote de Nuits-Villages, Cote du Rhone, Coteaux Champenois, Coteaux d' Aix-en-Provence, Coteaux d' Ancenis, Coteaux de Baux-de-Provence, Coteaux de Méjanelle, Coteaux de Pierrevert, Coteaux de Saint-Christol, Coteaux de Saumur, Coteaux de Vérargues, Coteaux de l'Aubance, Coteaux de la Méjanelle, Coteaux du Giennos, Coteaux du Languedoc, Coteaux du Layon, Coteaux du Layon followed by commune, Coteaux du Layon-Chaume, Coteaux du Loir, Coteaux du Tricastin, Coteaux du Vendomois, Coteaux re la Loise, Cotes Canon-Fronsac, Cotes d' Auvergne, Cotes de Bergerac, Cotes de Bergerac moelleux, Cotes de Blaye, Cotes de Bordeaux Saint-Macaire, Cotes de Bourg (vins rouges), Cotes de Bourg (vins blancs), Cotes de Buzet, Cotes de Duras, Cotes de Gien, Cotes de Montravel, Cotes de Provence, Cotes de Saint-Mont, Cotes de Toul, Cotes du Cabardés et de l'Orbiel, Cotes du Forez, Cotes du Frontonnais, Cotes du Jura, Cotes du Luberon, Cotes du Marandais, Cotes du Rhone, Cotes du Rhone followed by commune, Cotes du Rhone-Villages, Cotes du Roussilon, Cotes ou Roussilon-Villages, Cotes du Roussilon-Villages-Caramany, Cotes du Roussilon-Villages-Latour de France, Cotes du Ventoux, Cotes du Vivarais followed by grape varieties, Criots Batard-Montrachet, Croze Hermitage, Crémant d'Alsace, Crémant de Bourgogne, Crémant de Loire, Crépy, Cérons, Dezize-lés-Maranges, Die, Echézeaux, Entraygues et Fel, Entre-Deux-Mers, Entre-Deux-Mers-Haut-Benauge, Estaing, Faugeres, Fitou, Fixin, Flagey-Echezeaux, Fleurie, Fronsac, Gaillac, Gaillac Mosseux, Gaillac Premieres Cotes, Gaillac doux, Gevrey-Chambertin, Gigondas, Givry, Grand Chablis, Grand Roussillon, Grand Roussillon Rancio, Grands Echézeaux, Graves, Graves Barsac, Graves Supérieurs, Graves de Vayres, Griotte Chambertin, Gros Plant, Gros Plant du Pays Nantais.

Haut Montravel, Haut Médoc, Haut-Poitou, Hermitage, Irouléguy, Jasnieres, Juliénas, Jurançon, Jurançon sec, Lalande de Pomerol, Latricieres Chambertin, L'Etoile, L'Etoile Mousseux, La Clape, Ladoix, Languedoc, Lavilledieu, Limoux, Lirac, Listrac, Loire, Loire-Atlantique, Loire-et-Cher, Loupiac, Lunel, Lussac Saint-Emilion, Lyonnais, Macon, Macon followed by commune, Macon-Supérieur, Macon-Villages, Maconnais, Madiran, Maranges, Marcillac, Margaux, Maury, Maury Rancio, Mazis-Chambertin, Mazoyeres Chambertin, Menetou Salon, Memetou Salon followed by commune, Mercurey, Meursault, Minervois, Minervois Noble, Mireval, Monbazillac, Montagne Saint-Emilion, Montagny, Monthelie, Montlouis, Montlouis Mousseux, Montlouis Pétillant, Montpeyroux, Montrachet, Montravel, Morey, Morey Saint-Denis, Morgon, Moulin-a-Vent, Moulis, Moulis-en-Médoc, Mousseux de Savoie, Mousseux de Savoie Ayze, Mousseux du Bugey, Muscadet, Muscadet de Sévre-et-Maine, Muscadet des Coteaux de la Loire, Muscat de Beaumes de Venise, Muscat de Lunel, Muscat de Mireval, Muscat de Rivesaltes, Muscat de Saint-Jean-de-Minervois, Musigny, Médoc, Méjanelle, Néac, Nuits, Nuits-Saint-George, Orleanais, Pacherenc du Vic Bilh, Palette, Parsac Saint-Emilion, Pauillac, Pernand-Vergelesses, Petit Chablis, Pic-Saint-Loup, Picpoul-de-Pinet, Pineau Charentais, Pineau des Charentes, Pinot Chardonnay Macon, Pomerol, Pommard, Pouilly, Pouilly Fumé, Pouilly Fumé de Pouilly, Pouilly-Fuissé, Pouilly-Loché, Pouilly-Vinzelles, Pouilly-sur-Loire, Premieres Cotes de Blaye, Premieres Cotes de Bordeaux, Premieres Cotes de Bordeaux followed by commune, Puisseguin Saint-Emilion, Puligny-Montrachet, Pécharmant, Pétillant de Savoie, Pétillant du Bugey, Quarts-de-Chaume, Quatourze, Quincy, Rasteau, Rasteau Rancio, Reuilly, Rhone, Richebourg, Riceys, Rivesaltes, Rivesaltes Rancio, Romanée, Romanee Conti, Romanée Saint-Vivant, Rosé d'Anjou, Rosé d'Anjou petillant, Rosé de Loire, Rosé des Riceys, Rosette, Roussette de Savoie, Roussette du Bugey, Roussillon Ruchottes-Chambertin, Rully, Saint-Amour, Saint-Aubin, Saint-Bris, Saint-Chinian, Saint-Denis, Saint-Drezery, Saint-Emilion, Saint-Estephe, Saint-George-Saint-Emilion, Saint-Georges-d'Orques, Saint-Jean-de-Minervois, Saint-Joseph, Saint-Julien, Saint-Nicolas-de-Bourgueil, Saint-Pourçain, Saint-Péray, Saint Péray Mousseux, Saint-Roman, Saint-Saturnin, Saint-Véran, Sainte-Croix-du-Mont, Sampigny-les-Maranges, Sancerre, Santenay, Saumur, Saumur Champigny, Saumur Mousseux, Saumur Pétillant, Saussignac, Sauvignon de Saint-Bris, Savennieres-Coul ée-de-Serrant, Savenniéres, Savenniéres-Roches-Aux-Moines, Savigny, Savigny-lés-Beaune, Savoie, Seyssel, Seyssel Mousseux, Tache (la), Tavel, Thouarsais, Touraine, Touraine Amboise, Touraine Azay-le-Rideau, Touraine Mesland, Touraine Mousseux, Touraine Pétillant, Tursan, Valeńcay, Vin Noble du Minervois, Vin d'Alsace, Vin d'Alsace Edelzwicker, Vin de pays Charentais, Vin de pays de la Loire-Atlantique, Vin de pays des Bouches-du-Rhone, Vin de pays du Loir-et-Cher, Vin de pays du Maine-et-Loire, Vin du Haut-Poitou, Vin d'Entraygues et du Fel, Vin d'Estaing, Vin de Blanquette, Vin de Corse, Vin de Corse Calvi, Vin de Corse Coteaux d'Ajaccio, Vin de Corse Coteaux du Cap Corse, Vin de Corse Figari, Vin de Corse Patrimonio, Vin de Corse Porto Vecchio, Vin de Corse Sartene, Vin de Coteaux du Giennois, Vin de Lavilledieu, Vin de Marcillac, Vin de Savoie, Vin de Savoie Mousseux, Vin de Savoie Petillant, Vin de Savoie Roussette, Vin de Savoie followed by variety, Vin de l'Orléanais, Vin de pays Catalan, Vin de pays d'Allobrogie, Vin de pays d'Argens, Vin de pays d'Oc, Vin de pays d'Urfé, Vin de pays de Bessan, Vin de pays de Cassan, Vin de pays de Caux, Vin de pays de Cessenon, Vin de pays de Cucugnan, Vin de pays de Franche-Comté, Vin de pays de Hauterive en Pays d'Aude.

Vin de pays de Mont-Caume, Vin de pays de Petite Crau, Vin de pays de Pezenas, Vin de pays de Retz, Vin de pays de Saint-Sardos, Vin de pays de l'Agenais, Vin de pays de l'Ardeche, Vin de pays de l'Aude, Vin de pays de l'Aveyron, Vin de pays de l'Hérault, Vin de pays de l'Ile de Beauté, Vin de pays de l'Isere, Vin de pays de l'Uzége, Vin de pays de la Benovie, Vin de pays de la Dordogne, Vin de pays de la Drome, Vin de pays de la Gironde, Vin de pays de la Haute Vallée de l'Aude, Vin de pays de la Haute Vallée de l'Orb, Vin de pays de la Haute-Garonne, Vin de pays de la Principauté d'Orange, Vin de pays de la Vallée du Paradis, Vin de pays de la Vaunage, Vin de pays de la Vendée, Vin de pays de la Vicomté d'Aumelas, Vin de pays de la Vistrenque, Vin de pays des Balmes dauphinoises, Vin de pays des Collines Rhodaniennes, Vin de pays des Collines de la Moure, Vin de pays des Coteaux Cathares, Vin de pays des Coteaux Cévenols, Vin de pays des Coteaux Flaviens, Vin de pays des Coteaux Termenes, Vin de pays des Coteaux Varois, Vin de pays des Coteaux d'Enserune, Vin de pays des Coteaux de Céze, Vin de pays des Coteaux de Fenouilledes, Vin de pays des Coteaux de Fontcaude, Vin de pays des Coteaux de Glanes, Vin de pays des Coteaux de Laurens, Vin de pays des

Coteaux de Miramont, Vin de pays des Coteaux deMurviel, Vin de pays des Coteaux de Narbonne, Vin de pays des Coteaux de Peyriac, Vin de pays des Coteaux de l'Ardeche, Vin de pays des Coteaux de la Cabrerisse, Vin de pays des Coteaux de la Cité de Carcassonne, Vin de pays des Coteaux des Baronnies, Vin de pays des Coteaux du Cher et de l'Arnon, Vin de pays des Coteaux du Grésivaudan, Vin de pays des Coteaux du Lezignanais, Vin de pays des Coteaux du Libron, Vin de pays des Coteaux du Littoral Audois, Vin de pays des Coteaux du Pont du Gard, Vin de pays des Coteaux du Quercy, Vin de pays des Coteaux du Salagou, Vin de pays des Coteaux du Salaves, Vin de pays des Coteaux et Terrasses de Montauban, Vin de pays des Cotes Catalanes, Vin de pays des Cotes de Cascogne, Vin de pays des Cotes de Ceressou, Vin de pays des Cotes de Lastours, Vin de pays des Cotes de Montestruc, Vin de pays des Cotes de Prouilhe, Vin de pays des Cotes de Pérignan, Vin de pays des Cotes de Thau, Vin de pays des Cotes de Thongue, Vin de pays des Cotes de la Malepere, Vin de pays des Cotes du Brian, Vin de pays des Cotes du Brulhois, Vin de pays des Cotes du Condomois, Vin de pays des Cotes du Tarn, Vin de pays des Cotes du Vidourle, Vin de pays des Fiefs Vendéens, Vin de pays des Fiefs Vendéens Brem, Vin de pays des Fiefs Vendéens Chantonnay, Vin de pays des Fiefs Vendéens Mareuil, Vin de pays des Fiefs Vendéens Pissotte, Vin de pays des Fiefs Vendéens Talmondais, Vin de pays des Fiefs Vendéens Vix, Vin de pays des Gorges de l'Hérault, Vin de pays des Gorges et Cotes de Millau, Vin de pays des Hautes-Alpes, Vin de pays des Hauts de Badens, Vin de pays des Jardins de la France, Vin de pays des Landes, Vin de pays des Marches de Bretagne, Vin de pays des Maures, in de pays des Monts de la Grage, Vin de pays des Pyrenénées Atlantiques, Vin de pays des Pyrénées-Orientales, Vin de pays des Sables des Golfes du Lion, Vin de pays des Vals d'Agly, Vin de pays du Berange, Vin de pays du Comté Tolosan, Vin de pays du Comté de Grignan, Vin de pays du Gard, Vin de pays du Gers, Vin de pays du Jardin de la France, Vin de pays du Littoral Orb-Hérault, Vin de pays du Lot, Vin de pays du Lot-et-Garonne, Vin de pays du Mont Baudile, Vin de pays du Mont Bouquet, Vin de pays du Puy-de-Dome, Vin de pays du Serre de Coiran, Vin de pays du Tarn, Vin de pays du Tarn-et-Garonne, Vin de pays du Val d'Orbieu, Vin de pays du Val de Cesse, Vin de pays du Val de Dagne, Vin de pays du Val de Montferrant, Vin de pays du Var, Vin de pays du Vaucluse, Vin du Bugey Cerdon Mousseux, Vin du Bugey Cerdon Pétillant, Vin du Bugey followed by grape variety, Vin du Lyonnais, Vin du Thouarsais, Volnay, Volnay Santenots, Vosne-Romanée, Vougeot, Vouvray, Vouvray Mousseux, Vouvray Pétillant.

(e) *Germany:* Aftentaler, Ahr, Bacharach, Baden, Badisch Rotgold, Badische Bergstrasse/Kraichgau, Badisches Frankenland, Bayerischer Bodensee, Bernkastel, Bingen, Bodensee, Breisgau, Deidesheimer, Ehrentrudis, Forster, Franken, Hessiche Bergstrasse, Kaiserstuhl-Tuniberg, Kocher-Jagst-Tauber, Kreuznach, Liebfraumilch, Liebfraunenmilch, Maindreieck, Mainviereck, Markgraflerland, Mittelhaardt/Deutsche Weinstrasse, Mittelrhein, Mosel, Mosel-Saar-Ruwer, Moseltor, Nahe, Nierstein, Obermosel, Ortenau, Remstal-Stuttgart, Rhein, Rheinburgengau, Rheingau, Rheinhessen, Rheinpfalz, Rudesheimer, Saar-Ruwer, Schloss Bockelheim, Schloss Johannisberger, Siebengebirge, Starkenburg, Steigerwald, Sudliche Weinstrasse, Umstadt, Walporzheim/Ahrtal, Wonnegau, Wurttemberg, Wurttembergisch Bodensee, Wurttembergisch Unterland, Zell/Mosel.

(f) *Greece:* Aghialos, Agioritikos, Amynteon, Archanes, Daphnes, Goumenitsa, Kantza, Lemnos, Mantinea, Mavrodaphni Cefalonia, Mavrodaphni Patras, Moschatos Cefalonia, Moschatos Lemnos, Moschatos Patras, Moschatos Rhodes, Moschatos Riou Patras, Naousa, Nemea, Paros, Patras, Peza, Plagies Melitona, Rapsani, Retsina Attica, Retsina Boetia, Retsina Chalkida, Retsina Euboea, Retsina Gialtra, Retsina Karystos, Retsina Koropi, Retsina Kropias, Retsina Liopesi, Retsina Markopoulo, Retsina Megara, Retsina Mesogeon, Retsina Paiania, Retsina Pallini, Retsina Pikermi, Retsina Spata, Retsina Thebes, Rhodes, Robola Cefalonia, Samos, Sitia, Santorini, Zitsa.

(g) *Italy:* Abruzzo, Aglianico del Vulture, Albana di Romagna, Alcamo, Aleatico di Gradoli, Aleatico di Puglia, Alezio, Alto Mincio, Aprilia, Aquileia, Alto Adige, Barbaresco, Barbera d'Alba, Barbera d'Asti, Barbera del Monferrato, Barbera di Castel S. Lorenzo, Bardolino, Barolo, Basilicata, Bianchello del Metauro, Bianco Capena, Bianco Pisano di S. Torpe', Bianco Vergine Valdichiana, Bianco dei Colli Maceratesi, Bianco della Val di Nievola, Bianco di Custoza, Bianco di Nugola, Bianco di Pitigliano, Bianco di Scandiano, Biferno, Boca, Bolgheri, Bosco Eliceo, Botticino, Brachetto d' Acqui, Bramaterra, Breganze, Brindisi, Brunello di Montalcino, Cabernet di Pramaggiore, Cacc'e Mmitte di Lucera, Calabria, Caldaro, Lago di Caldaro, Camarro, Campania, Campidiano di Terralba, Candia dei Colli Apuani, Cannonau di Sardegna, Capri, Capriano del Colle, Carema, Carignano del Sulcis, Carmignano, Castel del Monte, Casteller, Cellatica, Cerasuolo di Vittoria, Cerveteri, Cesanese del Piglio, Cesanese di Affile, Cesanese di Olevano Romano, Cinqueterre, Ciro', Ciro' di Cagliari, Colli Albani, Colli Altotiberini, Colli Berici, Colli Bolognesi Monte S. Pietro, Colli Euganei, Colli Lanuvini, Colli Morenici Mantovani del Garda, Colli Orientali del Friuli, Colli Perugini, Colli Tortonesi, Colli del Trasimeno, Colli della Toscana Centrale, Colli di Bolzano, Colli di Parma, Collio Goriziano, Copertino, Cori, Cortese dell'Alto Montferrato, Cortese di Gavi, Delia Nivolelli, Dolcetto d'Alba, Dolcetto d'Asti, Dolcetto delle Langhe Monregalesi, Dolcetto di Acqui, Dolcetto di Diano D'Alba, Dolcetto di Dogliani, Dolcetto di Ovada, Donnaz, Donnici, Elba, Emilia Romagna, Erbaluce di Caluso, Enfer d'Arvier, Est! Est! Est! di Montefiascone, Etna, Falerio dei Colli Ascolani, Fara, Faro, Fiano di Avellino, Franciacorta, Frascati, Freisa di Chieri, Friularo di Bagnoli, Friuli Venezia Giulia, Gabiano, Gambellara, Gattinara, Gavi, Genazzano, Ghemme, Grave del Friuli, Gravina, Greco di Bianco, Greco di Tufo, Grignolino d' Asti, Grignolino del Monferrato Casalese, Gutturnio dei Colli Piacentini, Ischia, Isonzo, Lacryma Christi, Lagrima, Lambrusco di Sorbara, Lambrusco Grasparossa di Castelvetro, Lambrusco Reggiano, Lambrusco Salamino di S. Croce, Lamezia, Latisana, Lazio, Lessona, Leverano, Liguria, Locorotondo, Lombardia, Lugana, Malvasia delle Lipari, Malvasia di Bosa, Malvasia di Cagliari, Malvasia di Casorzo d'Asti, Malvasia di Castelnuovo Don Bosco, Mandrolisai, Marche, Marino, Martina, Martina Franca, Matino.

Mentana-Monterotondo, Meranese di Collina, Merlot del Conselvano, Merlot di Pramaggiore, Meslissa, Molise, Monica di Cagliari, Monica di Sardegna, Monte Antico, Montecarlo, Montecompatri Colonna, Montefalco, Montello E Colli Asolani, Monterosso Val d'Arda, Montepulcianio, Montescudaio, Morellino di Scansano, Moscato di' Cagliari, Moscato di Noto, Moscato di Sardegna, Moscato di Siracusa, Moscato di Sorso Sennori, Moscato di Trani, Moscato Naturale d'Asti, Nasco di Cagliari, Nebbiolo d' Alba, Nettuno, Nuragus di Cagliari, Oltrep'Pavese, Orvieto, Ostuni, Ottavianello, Parrina, Pentro d'Isernia, Pentro, Piemonte, Pollino, Pomino,

Primitivo di Manduria, Primitivo Tarantino, Prosecco di Conegliano Valdobbiadene, Puglia, Recioto di Soave, Riviera del Garda Bresciano, Rosato del Salento, Rossese di Dolceacqua, Rosso Barletta, Rosso Canosa, Rosso Cerignola, Rosso Conero, Rosso Piceno, Rosso delle Colline Lucchesi, Rotaliana, Rubino di Cantavenna, S. Anna Isola di Capo Rizzuto, Salice Salentino, San Severo, Santa Maddalena, Sangiovese dei Colli Pesaresi, Sangiovese di Romagna, Sardegna, Savuto, Sicilia, Sizzano, Soave, Solopaca, Sorni, Squinzano, Taurasi, Terlano, Teroldego Rotaliana, Tocai di Lison, Tocai di S. Martino della Battaglia, Torgiano, Toscana, Trebbianno d' Abruzo, Trebbianno di Romagna, Trebbiano Val Trebbica, Trentino, Trentino Alto Adige, Umbria, Valcalepio, Valdadige, Valle Isarco, Valle d'Aosta, Valpolicella, Valtellina, Velletri, Veneto, Verbicaro, Verdiccio dei Castelli di Jesi, Verdicchio di Matelica, Vermentino di Gallura, Vernaccia di Oristano, Vernaccia di S. Gimignano, Vernaccia di Serrapetrona, Vesuvio, Vino Nobile di Montepulciano, Zagarolo.

(h) *New Zealand:* Bay View, Benmorven, Blenheim, Brookfield, Brookvale, Bushmere, Canterbury, Central Otago, Dargaville, Drury, Esk Valley, Eskdale, Fairhall, Fernhill, Flaxmere, Gisborne, Glendene, Greenmeadows, Haumoana, Hawkes Bay, Henderson, Henderson Valley, Huapai, Huapai Valley, Kaikohe, Kaitaia, Kapiti, Kerikeri, Kohukohu, Kumeu, Lincoln, Mangatangi, Mangere, Mariri, Marlborough, Matawnero, Matua Valley, Meeanee, Moutere, Mt Erin, Muriwai, Nelson, Northland, Omaka, Oratia, Ormond, Pakuratahi Valley, Pukekohe, Puketapu, Ranui, Renwick, Richmond, Riverhead, Riverlands, Riverlea, Rodney, Ruakaka, Ruapare, Ruawai, South Auckland, Sunnyvale, Taradale, Te Awanga, Te Hana, Te Karaka, Te Kauwhata, Te Mata, Thames, Tolaga Bay, Totara, Tuapaki, Tuki Tuki, Waihirere, Waimauku, Wairau Valley, Wairoa, Wanganui, Wellington, Whangarei, Wharerangi, Whatitiri, Woodbourne, Woodhill.

(i) *Portugal:* Agueda, Alcanhoes, Alcobaça, Alentejo, Algarve, Alijo, Almeirim, Amarante, Amares, Arco de Val-de-Vez, Armamar, Arrabida, Arruda, Azueira, Açores, Baiao, Bairrada, Baixo Corgo, Barcelos, Basto, Batalha, Beiradouro, Beiras, Belém, Benfica do Ribatejo, Biscoitos, Bombarral, Borba, Braga, Bucelas, Cadaval, Camara de Lobos, Campanario, Cantanhede, Carcavelos, Cartaxo, Carvoeira, Casteletes, Castelo de Paiva, Chamusca, Chaves, Cima Corgo, Cinfaes, Colares, Cortes, Covilha, Dao, Dois Portos, Douro, Douro Superior, Ervedal da Beira, Estremadura, Fafe, Famelicao, Favaios, Felgueiras, Figueira de Castelo Rodrigo, Freixo de Espada a Cinta, Freixo de Numao, Fundao, Gouxa-Alpiarça, Graciosa, Granja Mourao, Guimaraes, Ilha Terceira, Labrujeira, Lafoes, Lagoa, Lagos, Lamego, Lima, Lousada, Macedo de Cavaleiros, Madére, Mangualde, Marco de Canavezes, Martim-Rei-Sabugal, Mealhada, Meda, Mesao Frio, Mogofores, Moncorvo, Montijo, Monçao, Moscatel de Douro, Moscatel de Setubal, Murça, Neias, Nogueira do Cravo, Olhalvo, Oporto, Palmela, Paredes, Pegarinhos, Pegoes Velhos, Penafiel, Penajoia, Penalva do Castelo, Peso da Régua, Pico, Pinhel, Ponte da Barca, Ponte de Lima, Portalegre, Portimao, Porto, Portugal, Portwein, Portwijn, Povoa de Lanhoso, Preces, Redondo, Reguengos, Reguengos de Monsaras, Riba Tua-Cachao, Ribadouro-Mogadouro, Ribatejo, Ribatejo-Oeste, Ribeira de Cura-Vidago, Rio Maior, Régua, S. Mamede da Ventosa, S. Romao-Armamar, S. Jorge, Sabrosa, Sanfins do Douro, Santa Comba Dao, Santa Luzia, Santa Maria de Penaguiao, Santo Antonio, Santo Isidro de Pegoes, Santo tirso, Sao Joao, Sao Joao da Pesqueira, Sao Martinho, Sao Paio, Sao Pedro, Setubal, Silgueiros, Sobral de Monte Agraço, Souselas, Tavira, Tavora-Moimenta da Beira, Terra Fria-Bragança, Tomar, Tondela, Torre, Torres, Torres Vedras, Torrinha, Tras-os-Montes, Trevoes, Vale da Teja, Vale de Cambra, Vale do Sorraia-Coruche, Vale do Varosa-Tarouca, Valpaços, Vargem, Vermelha, Viana, Viana do Castelo, Vidigueira-Alvito, Vila Flor, Vila Franca das Naves-Trancoso, Vila Nova de Foscoa, Vila Nova de Tazem, Vila Real, Vilarinho do Bairro, Vinho do Porto, Vinho Verde.

(j) *Romania:* Alba Iulia, Arges, Bistrita-Nasaud, Bujoru, Cotesti, Cotnari, Dealu Mare, Dealurile, Dragasani, Drobeta Turnuseverin, Istria, Ivesti, Jidvei, Medias, Mehedinti, Minis, Moldovei, Murfatlar, Nicoresti, Odobesti, Oltina, Panciu, Recas, Sarica Niculitel, Sebes, Segarcea, Tecuci-Galati, Teremia, Tirnave.

(k) *Spain:* Alella, Alicante, Almansa, Ampurdan-Costa Brava, Campo de Borja, Carinena, Condado de Huelva, Jerez-Xéres-Sherry, Jumilla, Mancha (La), Manzanilla Sanlucar de Barrameda, Méntrida, Montilla-Moriles, Navarra, Penedés, Priorato, Ribeiro, Ribera del Duero, Rioja, Rueda, Tarragona, Utiel-Requena, Valdeorras, Valencia, Yecla.

(l) *Switzerland:* Adlikon, Aesch, Agarn, Aigle, Aire-la-Ville, Alfermée, Altstatten, Amlikon, Anchette, Andelfingen, Anieres, Appenhalde, Ardon, Arenenberg, Argovie, Arlesheim, Arnex, Au, Aubonne, Auenstein, Ausserberg, Auvernier, Avully, Avusy, Ayent, Bachenbulach, Bachtobel, Balavaud, Bale, Balgach, Balsthal, Baltschieder, Bardonnex, Bas-Vully, Batassé, Begnins, Bellevue, Benken, Berg am Irchel, Bergdietikon, Beringen, Berlingen, Berne, Berneck, Bernex, Bernune, Beudon, Bevaix, Bex, Bick, Biel-Benken, Birmenstorf, Blaurock, Blonay, Bodeler, Bole, Bonvillars, Boppelsen, Bottmingen, Bottstein, Boudry, Bougy-Villars, Bourdigny, Bovernier, Bozen, Bramois, Branson, Bratsch, Bremgarten, Brestenberg, Buch am Irchel, Buchackern, Buchberg, Buchenhalde, Buchs, Bulach, Burghalden, Burghof, Burignon, Bursinel, Bursins, Buus, Calamin, Cartigny, Cerlier, Chablais, Chaferstei, Chalais, Chamoson, Champlan, Champréveyres, Champsabé, Chancy, Chardonne, Charrat, Charrot, Chataignier, Chateau de Luins, Chateauneuf, Chatroz, Chavannes, Chermignon, Chexbres, Cheyres, Chiendsruet-Chorhusler, Chigny, Chippis, Chorherren, Choulex, Choully, Chrachenfels, Chur, Clavoz, Cleves (Les), Coinsins, Collex-Bossy, Collonges, Collonges-Bellerive, Cologny Concise, Confignon, Conthey, Coquempey, Corbassiere, Corcelles, Corin, Cormondréche, Cornaux, Corseau, Corsier, Cortaillod, Costams, Coteau de Vincy, Cressier, Crétaplan, Cully, Cure d'Attalens, Dachsen, Dardagny, Darnonaz, Dattlikon, Daucher, Dennens, Diesldorf, Diessenhofen, Dinhard, Diolly, Domat/Ems, Dorf, Dorflingen, Dorénaz, Dottingen, Douanne, Dézaley, Effingen, Eggerberg, Eglisau, Eichberg, Eisenhalde, Elfingen, Endingen, Ennetbaden, Epesses, Ergisch, Erlach, Erlenbach, Erlinsbach, Ermatingen, Eschenz, Essertines, Ettingen, Evionnaz, Evouettes (Les), Farhof, Faverges, Feldbach, Flaach, Flanthey, Flasch, Fluringen, Forst, Founex, Frauenfeld, Freienstein, Freudenberg, Freudenfels, Friburg, Frick, Fruthwilen, Fully, Féchy, Gachlingen, Gall, Gampel, Geneve, Genthod, Gilly, Gléresse, Goffersberg, Goldenberg, Goldwand, Gollion, Gorgier, Gotighofen, Goubing, Graba, Grand-Brulé, Grandson, Grandvaux, Granges, Griesenberg, Grimisuat, Grisons, Grone, Guggenhurli, Guggenhusli, Gy, Géronde, Habsburg, Hallau, Haut-Vully, Hauterive, Heerenberg, Heidegg, Heiligberg, Henggart, Herdern, Hermance, Herrenberg, Herrliberg, Herznach,

Hessenreuti, Hettlingen, Hohenfels, Hohtenn, Holderberg, Hombrechtikon, Hongg, Horhussen, Hottwil, Humlikon, Huntwangen, Huttwilen, Igis, Ile St. Pierre, Jenins, Jussy, Kaisten, Kalchrain, Kartaus Ittingen, Kleinandelfingen, Klingnau, Klosterberg, Klus, Kusnacht, Kuttigen, La Cote, La Coudre, La Folie, La Milliere, La Neuveville, Laconnex, Lalden, Landecy, Landvogt, Lattenberg, Laufen-Uhwiesen, Lavaux, Le Carre, Le Landron, Le Mont, Lens, Lentine, Lenzburg, Les Cotes de l'Orbe, Leuk/Loeche, Leutschen, Leytron, Lichten, Ligerz, Limmattal, Loc, Lohningen, Lucerne, Luins, Lully, Lutry, Magden, Magnot, Maienfeld, Maisprach, Malans, Mammern, Manndach, Mannedorf, Mannenbach, Maragnenaz, Marbach.

Mariahalde, Marstetten, Martigny, Martigny-Combe, Meilen, Meinier, Mels, Miege, Molignon, Monstein, Mont d'Or, Mont (Le), Mont-sur-Rolle, Montagnon, Montagny, Montana, Monthey, Montibeux, Montorge, Montreux, Morges, Motier, Munot, Mur, Muraz, Muttenz, Muzot, Nant, Nax, Neftenbach, Nendaz, Neuchatel, Neuenstadt, Niedergesteln, Niederneuenforn, Noes, Nussbaumen, Nyon, Oberdorf, Oberembrach, Oberengstringen, Oberflachs, Oberhallau, Oberhofen, Obermumpf, Oberneuenforn, Oeschgen, Ollon, Onnens, Orbe, Ossingen, Osterfingen, Otelfingen, Ottenberg, Pagane, Paudex, Peissy, Perly-Certoux, Perroy, Peseux, Pfafers, Pfeffingen, Plan Cerisier, Port-Valais, Pratteln, Praz, Presinge, Puidoux, Puilly, Rafz, Ragaz, Randogne, Rapperwil, Raron/Rarogne, Ravanay, Ravyre, Rebstein, Regensberg, Reinach, Remigen, Rheinau, Rheinhalde, Rickenbach, Riddes, Riex, Rivaz, Rolle, Rosenberg, Rudlingen, Rudolfingen, Rufnach, Russin, Rutiberg, Saillon, Saint-Aubin, Saint-Blaise, Saint-Légier, Saint-Saphorin, Salenstein, Salgesch/Salquenen, Salins, Sargans, Satigny, Saviese, Savuit, Saxon, Schaffhausen, Schaffhouse, Schafis, Scherbengut, Schernelz, Schinznach, Schipfgut, Schiterberg, Schlattingen, Schloss Giersberg, Schloss Goldenberg, Schloss Schwandegg, Schloss Sonnenberg, Schloss Teufen, Schlossberg, Schlossgut Bachtobel, Schlossgut Herdern, Schmalzler, Schutzenhalde, Schwerzenberg, Schwyz, Seengen, Siblingen, Sierre, Signese, Sion, Sissach, Sonnenberg, Soral, Spiez, St. Clément, St. Gall, St. Katharinatal, St. Léonard, St. Maurice, St. Pierre-de-Clages, St. Raphael, St. Anna-Oelenberg, St. Luzisteig, Stadtberg, Stadtreben, Stadtschryber, Stadtscryber, Stafa, Stalden, Staldenried, Stammheim, Steckborn, Steg, Steigassli, Stein am Rhein, Steinbruchler, Steinmaur, Sternenhalde, Stettfurt, Stiftshalde, Straussberg, Suisse, Sugiez, Sulgen, Sunnehalde, Swiss, Tartegnin, Tegerfelden, Tessin, Teufen, Thal, Thalheim, Thayngen, Thurgovie, Thurgut, Trasadingen, Treytorrents, Trimmis, Troinex, Troistorrents, Trottenhalde, Trullikon, Trullisberg, Truttikon, Trémazieres, Tschapperli, Turmgut, Turtmann/Tourtemagne, Tuscherz, Twann, Ueken, Uerikon, Uesslingen, Uetikon am See, Uhwiesen, Untersiggenthal, Uvrier, Vaas, Valais, Vallamand, Valleyres-sous-Rances, Varen/Varone, Vaud, Venthone, Vernamiege, Vevey, Vex, Veyras, Veyrier, Vignelz, Vigneule, Villeneuve, Villette, Villigen, Vinzel, Vionnaz, Visp/Viege, Visperterminen, Volken, Volleges, Vouvry, Vufflens-le-Chateau, Vully, Vétroz, Wadenswil, Walenstadt, Waltalingen, Wartau, Warth, Wasterkingen, Weinfelden, Weiningen, Weinland/Kanton Zurich, Werdenberg, Wessenberg, Wettingen, Wiesendangen, Wil, Wilchingen, Wildensbuch, Winkel, Wintersingen, Winterthur-Wulflingen, Wittnau, Worrenberg, Wortberg, Wurenlingen, Wurenlos, Yvorne, Zeiningen, Zeneggen, Zizers, Zurcher Unterland, Zurich, Zurichsee.

(m) *Yugoslavia:* Beljski Burgundac Bijeli, Beljski Rizling, Blatina Mostar, Bolski Plavac, Borje, Brodska Grasevina, Bujska Malvazija, Buzetski Teran, Crnogorski Vranac, Dingac, Dubrovacka Malvazija, Erdutska Grasevina, Erdutski Burgundac Bijeli, Faros, Grasevina Pajzas, Grk Lumbarda, Ilocka Frankovka, Ilocka Grasevina, Ilocki Burgundac Bijeli, Ilocki Traminac, Kutjevacka Grasevina, Mandicevacka Grasevina, Mandicevacki Bijeli Burgundac, Merlot Bujstine, Metliska Crnina, Plesivicki Burgundac Bijeli, Plesivicki Rizling Rajnski, Porecki Cabarnet Sauvignon, Porecki Merlot, Postup, Primostenski Babic, Smederevski Rizling, Smederevski Sovinjon, Smederevski Traminac, Trnovacki Traminac, Tabernakalj, Vinaracki Merlo, Viska Vugava, Vrsacki Rizling, Zlata Radgonska Penina, Zilavka Mostar.

Subpart D—Foreign Nongeneric Names Which Are Distinctive Designations of Specific Grape Wines

§ 12.31 List of approved names by country.

The names listed in this section have been approved for use as nongeneric designations which are also recognized as distinctive designations of specific grape wines, in accordance with § 4.24(c)(3) of this chapter.

(a) *France:* Aloxe-Corton, Alsace, Alsace Grand Cru, Alsation, Anjou, Anjou Coteaux de la Loire, Anjou Gamay, Anjou mousseux, Anjou pétillant, Anjou-Saumer, Auxey-Duresses, Bandol, Banyuls, Banyuls Grand Cru, Banyuls Grand Cru Rancio, Banyuls Rancio, Barsac, Batard-Montrachet, Beaujolais, Beaujolais Villages, Beaujolais supérieur, Beaujolais followed by commune, Beaumes de Venise, Beaune, Bergerac, Bergerac sec, Bienvenues Batard-Montrachet, Blagny, Blanc Fumé de Pouilly, Bordeaux, Bordeaux Blanc, Bordeaux Clairet, Bordeaux Cotes de Castillon, Bordeaux Cotes de Francs, Bordeaux Haut-Benauge, Bordeaux Rouge, Bordeaux Supérieur, Bordeaux mousseux, Bordeaux rosé, Bordeaux supérieur Clairet, Bordeaux supérieur Cotes de Castillon, Bordeaux supérieur rosé, Bourg, Bourgeais (vins blancs), Bourgeais (vins rouges), Bourgogne, Bourgogne Aligote, Bourgogne Clairet, Bourgogne Clairet Hautes Cotes de Beaune, Bourgogne Clairet Hautes Cotes de Nuits, Bourgogne Clairet Marsannay, Bourgogne Grand Ordinaire, Bourgogne Grand Ordinaire Clairet, Bourgogne Grand Ordinaire Rosé, Bourgogne Hautes Cotes de Beaune, Bourgogne Hautes Cotes de Nuits, Bourgogne Irancy, Bourgogne Marsannay, Bourgogne Marsannay la Cote, Bourgogne Mousseux, Bourgogne Ordinaire, Bourgogne Ordinaire Clairet, Bourgogne Ordinaire Rosé, Bourgogne Passetoutgrains, Bourgogne Rosé, Bourgogne Rosé Hautes Cotes de Beaune, Bourgogne Rosé Hautes Cotes de Nuits, Bourgogne Rosé Marsannay, Bourgogne des Environs de Chablis, Bourgueil, Brouilly, Cabernet d'Anjou, Cabernet de Saumur, Cahors, Canon-Fronsac, Chablis grand cru, Cnambertin, Chambertin Clos de Béze, Chambolle-Musigny, Chappelle-Chambertin, Charentais, Charmes-Chambertin, Chassagne-Montrachet, Chateau Lafite, Chateau Margaux, Chateau Yquem, Chateauneuf-du-Pape, Chevalier-Montrachet, Chinon, Chiroubles, Chorey-les-Beaunes, Chénas, Clairette de Bellegarde, Clairette de Die, Clairette de Die Mousseux, Clairette du Languedoc, Clos Saint-Denis, Clos Vougeot, Clos de la Roche, Concrieu, Coroieres, Coroieress Supérieurs, Cornas, Corton, Corton Charlemagne, Cote Beaujolaise, Cote Maconnaise, Cote Rotie, Cote de Beaune, Cote de Beaune preceded by commune, Cote de Beaune-Villages, Cote de Brouilly, Cote oe Nuits, Cote de Nuits-Villages, Cote du Rhone, Coteaux de Saumur, Coteaux du Layon, Coteaux du Layon followed by commune, Coteaux du Layon-Chaume, Coteaux du Loir, Coteaux re la Loise, Cotes Canon-Fronsac, Cotes de

Bergerac, Cotes de Bergerac moelleux, Cotes de Blaye, Cotes de Bordeaux Saint-Macaire, Cotes de Bourg (vins rouges), Cotes de Bourg (vins blancs), Cotes de Buzet, Cotes de Duras, Cotes de Provence, Cotes du Frontonnais, Cotes du Jura, Cotes du Rhone, Cotes du Rhone followed by commune, Cotes du Rhone-Villages, Cotes du Roussilon, Cotes du Roussilon-Villages, Cotes du Roussilon-Villages-Caramany, Cotes du Roussilon-Villages-Latour de France, Cotes du Ventoux, Cotes du Vivarais followed by grape varieties, Criots Batard-Montrachet, Croze Hermitage, Crémant d'Alsace, Crémant de Bourgogne, Crémant de Loire, Echézeaux, Entre-Deux-Mers, Entre-Deux-Mers-Haut-Benauge, Fitou, Fixin, Flagey-Echezeaux, Fleurie, Fronsac, Gevrey-Chambertin, Gigondas, Givry, Grand Chablis, Grand Roussillon, Grand Roussillon Rancio, Grands Echézeaux, Graves, Graves Barsac, Graves Supérieurs, Graves de Vayres, Griotte Chambertin, Gros Plant, Gros Plant du Pays Nantais, Haut Médoc, Haut-Poitou, Hermitage, Juliénas, Jurançon, Jurançon sec, Lalande de Pomerol, Latricieres Chambertin, Listrac, Loire, Loire-Atlantique, Loire-et-Cher, Lussac Saint-Emilion, Macon, Macon followed by commune, Lyonnais, Macon-Supérieur, Macon-Villages, Maconnais, Margaux, Mazis-Chambertin, Mazoyeres Chambertin, Menetou Salon, Memetou Salon followed by commune, Mercurey, Meursault, Minervois, Minervois Noble, Monbazillac, Montagne Saint-Emilion, Montagny, Monthelie, Montrachet, Morey, Morey Saint-Denis, Morgon, Moulin-a-Vent, Moulis, Moulis-en-Médoc, Mousseux de Savoie, Mousseux de Savoie Ayze, Muscadet, Muscadet de Sévre-et-Maine, Muscadet des Coteaux de la Loire, Muscat de Beaumes de Venise, Muscat de Lunel, Muscat de Mireval, Muscat de Rivesaltes, Muscat de Saint-Jean-de-Minervois, Musigny, Médoc, Nuits, Nuits-Saint-George, Pàrsac Saint-Emilion, Pauillac, Pernand-Vergelesses, Petit Chablis, Pic-Saint-Louys, Picpoul, Picpoul-de-Pinet, Pineau Charentais, Pineau des Charentes, Pinot Chardonnay Macon, Pomerol, Pommard, Pouilly, Pouilly Fumé, Pouilly Fumé de Pouilly, Pouilly-Fuissé, Pouilly-Loché, Pouilly-Vinzelles, Pouilly-sur-Loire, Premieres Cotes de Bordeaux, Premieres Cotes de Bordeaux followed by commune, Puisseguin Saint-Emilion, Puligny-Montrachet.

Quarts-de-Chaume, Quincy, Rhone, Romanée, Romanée Conti, Romanée Saint-Vivant, Rosé d'Anjou, Rosé d'Anjou petillant, Rosé de Loire, Rosé des Riceys, Roussette de Savoie, Roussillon, Rully, Saint-Amour, Saint-Aubin, Saint-Denis, Saint-Emilion, Saint-Estephe, Saint-George-Saint-Emilion, Saint-Georges-d'Orques, Saint-Jean-de-Minervois, Saint-Joseph, Saint-Julien, Saint-Nicolas-de-Bourgueil, Sancerre, Santenay, Saumur, Saumur Champigny, Saumur Mousseux, Saumur Pétillant, Sauvignon de Saint-Bris, Savigny, Savigny-lés-Beaune, Tavel, Touraine, Touraine Amboise, Touraine Azay-le-Rideau, Touraine Mesland, Touraine Mousseux, Touraine Pétillant, Vin Noble du Minervois, Vin d'Alsace, Vin d'Alsace Edelzwicker, Vin de pays Charentais, Vin de pays de la Loire-Atlantique, Vin de pays des Bouches-du-Rhone, Vin de pays du Loir-et-Cher, Vin de pays du Maine-et-Loire, Vin du Haut-Poitou, Vin d'Entraygues et du Fel, Vin d'Estaing, Vin de Blanquette, Vin de Corse, Vin de Corse Calvi, Vin de Corse Coteaux d'Ajaccio, Vin de Corse Coteaux du Cap Corse, Vin de Corse Figari, Vin de Corse Patrimonio, Vin de Corse Porto Vecchio, Vin de Corse Sartene, Vin de Coteaux du Giennois, Vin de Lavilledieu, Vin de Marcillac, Vin de Savoie, Vin de Savoie Mousseux, Vin de Savoie Petillant, Vin de Savoie Roussette, Vin de Savoie followed by variety, Vin de l'Orléanais, Vin de pays Catalan, Vin de pays d'Allobrogie, Vin de pays d'Argens, Vin de pays d'Oc, Vin de pays d'Urfé, Vin de pays de Bessan, Vin de pays de Cassan, Vin de pays de Caux, Vin de pays de Cessenon, Vin de pays de Cucugnan, Vin de pays de Franche-Comté, Vin de pays de Hauterive en Pays d'Aude, Vin de pays de Mont-Caume, Vin de pays de Petite Crau, Vin de pays de Pezenas, Vin de pays de Retz, Vin de pays de Saint-Sardos, Vin de pays de l'Agenais, Vin de pays de l'Ardeche, Vin de pays de l'Aude, Vin de pays de l'Aveyron, Vin de pays de l'Hérault, Vin de pays de l'Ile de Beauté, Vin de pays de l'Isere, Vin de pays de l'Uzége, Vin de pays de la Benovie, Vin de pays de la Dordogne, Vin de pays de la Drome, Vin de pays de la Gironde, Vin de pays de la Haute Vallée de l'Aude, Vin de pays de la Haute Vallée de l'Orb, Vin de pays de la Haute-Garonne, Vin de pays de la Principauté d'Orange, Vin de pays de la Vallée du Paradis, Vin de pays de la Vaunage, Vin de pays de la Vendée, Vin de pays de la Vicomté d'Aumelas, Vin de pays de la Vistrenque, Vin de pays des Balmes dauphinoises, Vin de pays des Collines Rhodaniennes, Vin de pays des Collines de la Moure, Vin de pays des Coteaux Cathares, Vin de pays des Coteaux Cévenols, Vin de pays des Coteaux Flaviens, Vin de pays des Coteaux Termenes, Vin de pays des Coteaux Varois, Vin de pays des Coteaux d'Enserune, Vin de pays des Coteaux de Céze, Vin de pays des Coteaux de Fenouilledes, Vin de pays des Coteaux de Fontcaude, Vin de pays des Coteaux de Glanes, Vin de pays des Coteaux de Laurens, Vin de pays des Coteaux de Miramont, Vin de pays des Coteaux de Murviel, Vin de pays des Coteaux de Narbonne, Vin de pays des Coteaux de Peyriac, Vin de pays des Coteaux de l'Ardeche, Vin de pays des Coteaux de la Cabrerisse, Vin de pays des Coteaux de la Cité de Carcassonne, Vin de pays des Coteaux des Baronnies, Vin de pays des Coteaux du Cher et de l'Arnon, Vin de pays des Coteaux du Grésivaudan, Vin de pays des Coteaux du Lezignanais, Vin de pays des Coteaux du Libron, Vin de pays des Coteaux du Littoral Audois, Vin de pays des Coteaux du Pont du Gard, Vin de pays des Coteaux du Quercy, Vin de pays des Coteaux du Salagou, Vin de pays des Coteaux du Salaves, Vin de pays des Coteaux et Terrasses de Montauban, Vin de pays des Cotes Catalanes, Vin de pays des Cotes de Cascogne, Vin de pays des Cotes de Ceressou, Vin de pays des Cotes de Lastours, Vin de pays des Cotes de Montestruc, Vin de pays des Cotes de Prouilhe, Vin de pays des Cotes de Pérignan, Vin de pays des Cotes de Thau, Vin de pays des Cotes de Thongue, Vin de pays des Cotes de la Malepere, Vin de pays des Cotes du Brian, Vin de pays des Cotes du Brulhois, Vin de pays des Cotes du Condomois, Vin de pays des Cotes du Tarn, Vin de pays des Cotes du Vidourle, Vin de pays des Fiefs Vendéens, Vin de pays des Fiefs Vendéens Brem, Vin de pays des Fiefs Vendéens Chantonnay, Vin de pays des Fiefs Vendéens Mareuil, Vin de pays des Fiefs Vendéens Pissotte, Vin de pays des Fiefs Vendéens Talmondais, Vin de pays des Fiefs Vendéens Vix, Vin de pays des Gorges del'Hérault, Vin de pays des Gorges et Cotes de Millau, Vin de pays des Hautes-Alpes, Vin de pays des Hauts de Badens, Vin de pays des Jardins de la France, Vin de pays des Landes, Vin de pays des Marches de Bretagne, Vin de pays des Maures, Vin de pays des Monts de la Grage, Vin de pays des Pyrenénées Atlantiques, Vin de pays des Pyrénées-Orientales, Vin de pays des Sables des Golfes du Lion, Vin de pays des Vals d'Agly, Vin de pays du Berange, Vin de pays du Comté Tolosan, Vin de pays du Comté de Grignan, Vin de pays du Gard, Vin de pays du Gers, Vin de pays du Jardin de la France, Vin de pays du Littoral Orb-Hérault, Vin de pays du Lot, Vin de pays du Lot-et-Garonne, Vin de pays du Mont Baudile, Vin de pays du Mont Bouquet, Vin de pays du Puy-de-Dome, Vin de pays du

Serre de Coiran, Vin de pays du Tarn, Vin de pays du Tarn-et-Garonne, Vin de pays du Val d'Orbieu, Vin de pays du Val de Cesse, Vin de pays du Val de Dagne, Vin de pays ou Val de Montferrant, Vin de pays du Var, Vin de pays du Vaucluse, Vin du Bugey Cerdon Mousseux, Vin du Bugey Cerdon Pétillant, Vin du Bugey followed by grape variety, Vin du Lyonnais, Vin du Thouarsais, Volnay, Volnay Santenots, Vosne-Romanée, Vougeot, Vouvray, Vouvray Mousseux, Vouvray Pétillant.

(b) *Germany:* Ahr, Baden, Deidesheimer, Forster, Franken, Hessische Bergstrasse, Liebfraumilch, Liebfrauenmilch, Mittelrhein, Mosel, Mosel-Saar-Ruwer, Nahe, Rhein, Rheingau, Rheinhessen, Rheinpfalz, Rudesheimer, Schloss Johannisberger, Wurttemberg.

(c) *Greece:* Mavrodaphni Cefalonia, Mavrodaphni Patras, Moschatos Cefalonia, Moschatos Lemnos, Moschatos Patras, Moschatos Rhodes, Moschatos Riou Patras, Retsina Attica, Retsina Boetia, Retsina Chalkida, Retsina Euboea, Retsina Gialtra, Retsina Karystos, Retsina Koropi, Retsina Kropias, Retsina Liopesi, Retsina Markopoulo, Retsina Megara, Retsina Mesogeon, Retsina Paiania, Retsina Pallini, Retsina Pikermi, Retsina Spata, Retsina Thebes.

(d) *Italy:* Aglianico del Vulture, Aleatico di Giadolu, Aleatico di Puglia, Barbaresco, Barbera d'Alba, Barbera d'Asti, Barbera del Monferrato, Barbera di Castel S. Lorenzo, Bardolino, Barolo, Bianchello del Metauro, Brachetto d' Acqui, Brunello di Montalcino, Cabernet di Pramaggiore, Cannonau di Sardegnan, Carignamo del Sulcis, Cesanese del Piglio, Cesanese di Affile, Cesanese di Olevanno Romano, Cortese Dell'Alto Montferato, Cortese di Gavi, Dolcetto d'Alba, Dolcetto d'Asti, Dolcetto delle Langhe Monregalesi, Dolcetto di Acqui, Dolcetto di Diano D'Alba, Dolcetto di Dogliani, Dolcetto di Ovada, Est! Est! Est! di Montefiascone, Fiano di Avellino, Frascati, Freisa di Chieri, Greco di Bianco, Greco di Tufo, Grignolino d' Asti, Grignolino del Monferrato Casalese, Lacryma Christi, Lagrima, Lambrusco di Sorbara, Lambrusco Grasparossa di Castelvetro, Lambrusco Reggiano, Lambrusco Salamino di S. Croce, Malvasia delle Lipari, Malavesia di Bosa, Malvasia di Cagliari, Malvasia di Casorzo d'Asti, Malvasia di Castelnuovo Don Bosco, Merlot del Conselvan, Merlot di Pramaggiore, Montepulcianio, Moscato di' Cagliari, Moscato di Noto, Moscato di Sardegna, Moscato di Siracusa, Moscato di Sorso Sennori, Moscato di Trani, Moscato Naturale d'Asti, Nebbiolo d' Alba, Orvieto, Primitivo di Manduria, Primitivo Tarantino, Prosecco di Conegliano Valdobbiadene, Recioto di Soave, Sangiovese dei Colli Pesaresi, Sangiovese di Romagna, Soave, Tocai di Lison, Tocai di Sr. Martino della Battaglia, Trebbianno d' Abruzo, Trebbianno di Romagna, Trebbiano Val Trebbica, Valpolicella, Verdiccio dei Castelli di Jesi, Verdicchio di Matelica, Vernaccia di S. Gimignano, Vernaccia di Serrapetrona, Vino Nobile di Montepulciano.

(e) *Portugal:* Dao, Douro, Douro Superior, Moscatel de Douro, Moscatel de Setubal, Oporto, Porto, Portwein, Portwijn, Vinho do Porto, Vinno Verde.

(f) *Spain:* Jerez-Xéres-Sherry, Montilla-Moriles, Rioja.

(g) *Switzerland:* Swiss, Suisse.

(h) *Yugoslavia:* Beljski Burgundac Bijeli, Beljski Rizling, Blatina Mostar, Bolski Plavac, Brodska Grasevina, Bujska Malvazija, Crnogorski Vranac, Dubrovacka Malvazija, Erdutska Grasevina, Erdutski Burgundac Bijeli, Grasevina Pajzas, Grk Lumbarda, Ilocka Frankovka, Ilocka Grasevina, Ilocki Burgundac Bijeli, Ilocki Traminac, Kutjevacka Grasevina, Mandicevacka Grasevina, Mandicevacki Bijeli Burgundac, Merlot Bujstine, Plesivicki Burgundac Bijeli, Plesivicki Rizling Rajnski, Porecki Cabarnet Sauvignon, Porecki Merlot, Smederevski Rizling, Smederevski Sovinjon, Smederevski Traminac, Trnovacki Traminac, Vinaracki Merlo, Vrsacki Rizling.

Signed: January 19, 1988.

Stephen E. Higgins,

Director.

Approved: February 11, 1988.

Francis A. Keating, II,

Assistant Secretary (Enforcement).

[FR Doc. 88-7863 Filed 4-11-88; 8:45 am]

BILLING CODE 4810-31-M

DEPARTMENT OF DEFENSE

Office of the Secretary

32 CFR Part 45

[DoD Instruction 1336.1]

Certificate of Release or Discharge From Active Duty (DD Form 214/5 Series)

AGENCY: Office of the Secretary, DoD.

ACTION: Proposed rule.

SUMMARY: This part proposes revisions to the DD Form 214/214WS and Part 45 text. Form changes include adding a "Home of Record at Time of Entry" block, enlarging and moving the "Reserve Obligation Termination Date" block, adding a block to document dental treatment within 90 days of separation and adding a "Name and Address of Nearest Relative" block to help locate Service members who have transferred to the Individual Ready Reserve (IRR). Text changes would authorize certain officials in grade E-5, GS-5 or above to sign the form, specify issuance requirements for reenlisting members, clarify potential obligations of retired and IRR members, and clarify certain other administrative matters.

DATES: Comments should be received by May 12, 1988.

FOR FURTHER INFORMATION CONTACT: Capt M. Burns, Office of the Assistant Secretary of Defense (Force Management and Personnel), Pentagon, Washington, DC 20301, telephone 695-6312.

SUPPLEMENTARY INFORMATION:

List of Subjects in 32 CFR Part 45

Armed forces reserves, Military personnel.

Accordingly, Title 32 CFR Part 45 is proposed to be amended to read as follows:

PART 45—CERTIFICATE OF RELEASE OR DISCHARGE FROM ACTIVE DUTY (DD FORM 214/5 SERIES)

1. The authority citation for Part 45 continues to read as follows:

Authority: 10 U.S.C. 1168 and 972.

§ 45.2 [Amended]

2. In § 45.2 "NOTE," change "(Manpower, Reserve Affairs, and Logistics)" to "(Force Management and Personnel)."

§ 45.3 [Amended]

3. In § 45.3, paragraph (b)(3)(i), after the words "DD Form 214" add "will furnish the member a DD Form 256, Honorable Discharge Certificate, and"

4. In § 45.3, paragraph (d)(8) is proposed to be revised and paragraphs (d)(10), (11), and (12) to be added as follows:

§ 45.3 Policy and procedures.

* * * * *

(d) * * *

(8) The authorized official will sign the original in ink ensuring that the signature is legible on all carbon copies. If not, a second signature may be necessary on a subsequent carbon copy. The authorized official shall be an E-7, GS-7, or higher grade, except that the Service concerned may authorize chiefs of installation separation activities (E-5, GS-5 or above) to serve in this capacity if designated in writing by the

responsible commander/director (0–4 or above).

* * * * *

(10) The date entered in block 12a shall be the date of enlistment for the earliest period of continuous active service for which a DD Form 214 was not previously issued. For members who have previously reenlisted without being issued a DD Form 214, and who are being separated with any discharge characterization except "Honorable," the following statement shall appear as the first entry in block 18, "Remarks," on the DD Form 214: "CONTINUOUS HONORABLE ACTIVE SERVICE FROM (applicable date) UNTIL (applicable date)." The "from" date shall be the date of initial entry onto active duty, or the first day of service for which a DD Form 214 was not previously issued, as applicable; the "until" date shall be the date prior to commencement of the current enlistment.

(11) For Service members retiring from active duty, enter "Subject to active duty recall by Service Secretary in an emergency" in block 9, "Command to Which Transferred."

(12) For Service members being transferred to the Individual Ready Reserve, enter "Ready Reserve." Subject to active duty recall/annual 1-day muster" in block 9, "Command to Which Transferred."

* * * * *

§ 45.3 [Amended]

5. In § 45.3(g), last sentence, remove the period (.) and add ", the size of the information blocks may be increased or decreased, and copies 7 and/or 8 may be deleted at the discretion of the Service."

Linda M. Bynum,

Alternate OSD Federal Register, Liaison Officer, Department of Defense.

April 7, 1988.

[FR Doc. 88–7969 Filed 4–11–88; 8:45 am]

BILLING CODE 3810-01-M

ENVIRONMENTAL PROTECTION AGENCY

40 CFR Part 372

[OPTS–400011; FRL—3364–5]

Acid Blue 9; Toxic Chemical Release Reporting; Community Right-to-Know

AGENCY: Environmental Protection Agency (EPA).

ACTION: Proposed rule.

SUMMARY: EPA is granting a petition by proposing to delete Acid Blue ((both the diammonium and the disodium salts) from the list of toxic chemicals under section 313 of Title III of the Superfund Amendments and Reauthorization Act (SARA) of 1986. EPA proposes to amend the final rule codifying the list of chemicals published on February 16, 1988 (53 FR 4500). This proposed rule, if made final, applies only to the second year and beyond of reporting requirements under section 313. Therefore, facilities will have to report to EPA and State agencies by July 1, 1988, on covered releases that occurred during the 1987 calendar year.

DATE: Written comments should be submitted on or before June 1, 1988.

ADDRESSES: Written comments should be submitted in triplicate to: Section 313 Petition Coordinator, OTS Docket Clerk, TSCA Public Docket Office, Environmental Protection Agency, Mail Stop TS–793, 401 M St., SW., Washington, DC 20460, Attention: Docket Control Number OPTS–400011.

FOR FURTHER INFORMATION CONTACT: Renee Rico, Petition Coordinator (WH–562A), Emergency Planning and Community Right-to-Know Hotline, Environmental Protection Agency, 401 M St., SW., Washington, DC 20460, (800) 535–0202, In Washington, DC and Alaska: (202) 479–2449.

SUPPLEMENTARY INFORMATION:

I. Introduction

A. Statutory Authority

The response to the petition and proposed deletion are issued under section 313(e)(1) of Title III of the Superfund Amendments and Reauthorization Act of 1986 (Pub. L. 99–499, "SARA" or "the Act"). Title III of SARA is also the Emergency Planning and Community Right-to-Know Act of 1986.

B. Background

For reporting purposes, section 313 establishes an initial list of "toxic chemicals" that is composed of 328 entries, 20 of which are categories of chemicals. This list is a combination of lists of chemicals used by the States of Maryland and New Jersey for emissions reporting under their individual right-to-know laws. Section 313(d) authorizes EPA to modify by rulemaking the list of chemicals covered either as a result of EPA's self-initiated review or in response to petitions under section 313(e).

Section 313(e)(1) provides that any person may petition the Agency to add chemicals to or delete chemicals from the list of "toxic chemicals." In the **Federal Register** of February 4, 1987 (52 FR 3479), EPA issued a statement of policy and guidance, which provided guidance to potential petitioners regarding the recommended content and format for submitting petitions. The Agency must respond to petitions within 180 days either by initiating a rulemaking or by publishing an explanation of why the petition is denied. If EPA fails to respond within 180 days, it is subject to citizen suits; therefore, EPA is under specific constraints to evaluate petitions and to issue a timely response.

II. Description of Petition

The Agency received a petition to delist C.I. Acid Blue 9, diammonium salt (CAS No. 2650–18–2) and C.I. Acid Blue 9, disodium salt (CAS No. 3844–45–9). The petition was submitted by the Ecological and Toxicological Association of the Dyestuffs Manufacturing Industry (ETAD). EPA received the petition on October 5, 1987, and under the statutory deadline must respond by April 2, 1988.

III. EPA Review of Acid Blue 9

A. Chemistry

Acid Blue 9 is an aromatic sulfonated triphenylmethane dye. The diammonium and disodium salts of the dye are the subject of this petition. The two salts have fairly similar properties. Both are described as reddish-brown powders. Both compounds melt with decomposition at greater than 250°C and exhibit appreciable water solubility (Ref. 1).

B. Toxicity Evaluation

Information on the health and environmental effects of Acid Blue 9 were obtained from the following sources: 1981 EPA Chemical Hazard Information Profile (CHIP) for Brilliant Blue FCF (synonym); EPA's Office of Pesticide Programs data on "Aquashade," an aqueous formulation of the subject dye; FDA cancer bioassays on FD&C Blue #1 (synonym); studies cited in the ETAD petition to remove Acid Blue 9 from the 313 list; and studies found in searching the published literature.

Toxicological data on all salts of Acid Blue 9 were reviewed for evidence indicating developmental toxicity, acute toxicity, mutagenicity, oncogenicity, and environmental toxicity (Ref. 3).

1. *Developmental toxicity.* The available data are insufficient to assess the developmental or reproductive toxicity of Acid Blue 9.

2. *Acute toxicity.* Acid Blue 9 has low acute toxicity. The subcutaneous LD_{50} in mice = 4,600 mg/kg bodyweight. The oral LD_{50} in rats is greater than 2,000 mg/kg bodyweight.

3. *Heritable genetic effects.* Acid Blue 9 does not exhibit mutagenic activity in the Ames assay. No other data on heritable genetic defects or mutagenic potential of the chemical are available.

4. *Carcinogenicity.* The total weight of evidence for the carcinogenicity of Acid Blue 9 is not sufficient to reasonably anticipate that the chemical will cause cancer in humans. This conclusion is based on a review of three well-conducted rodent bioassays performed in multiple species and involving multiple routes of exposure: A 2-year feeding study in mice (0, 0.5, 1.5, and 5 percent dose levels) indicated no oncogenic activity in either sex; a 2-year feeding study in rats (0.1, 1.0, and 2 percent dose levels) revealed no compound- related tumors; and an 18-month bioassay in mice in which a 1.0 percent solution of the chemical was administered via skin painting, did not result in oncogenic activity.

Acid Blue 9 was originally classified by the International Agency for Research on Cancer (IARC, 1978) as an animal carcinogen based on subcutaneous injection studies in which injection site tumors were found. However, in a subsequent reevaluation of experimental data (IARC, 1982), the chemical was no longer classified as a carcinogen. In the weight-of-evidence determination for Acid Blue 9 the injection site tumors were not given as much importance as the three negative full-term feeding and skin painting studies by appropriate routes of human exposure. Additionally, the U.S. Food and Drug Administration (FDA) has permanently listed C.I. Acid Blue 9 as a permitted color additive for food, drug, and cosmetic use based on the negative results of the feeding studies.

5. *Ecotoxicity.* Acid Blue 9 shows low acute ecotoxicity. The 48-hr LC_{50} for Daphnia and the 96-hr LC_{50} for fish are both greater than 1,000 mg/L.

EPA has a moderate concern for chronic ecotoxity of Acid Blue 9 based on a 30-day bioconcentration study in rainbow trout. Results of this study indicated that the chemical does not bioaccumulate; however, partial mortalities were observed at the four concentrations tested (1.8 to 10 mg/L). Adverse effects to kidneys and gills were observed at all concentrations tested. A 30-day chronic LC_{50} value for fish of 2.7 mg/L, and a chronic maximum allowable toxic concentration (MATC) of 0.45 mg/L were estimated from these data using probit analysis (Ref. 3).

A 30-day chronic study reported a 98 percent reduction in the population of aquatic plants at 2 mg/L of Acid Blue 9. A 40 to 60 percent reduction in aquatic plant and algae populations were observed at 0.8 to 10 mg/L concentrations. These effects are a result of the light screening ability of the chemical. (The typical use concentration of the chemical as an algicide in ponds is 1 mg/L) (Refs. 3 and 5).

A field study on the use of Acid Blue 9 as an aquatic weed control agent suggested that, in small shallow ponds, the chemical has a degradation half-life of up to 2 months. The mechanism of degradation is probably photolysis: Triphenylmethane dyes are relatively resistant to biodegradation but subject to photodegradation (it is the poor lightfastness of the dye that has made it undesirable in textile applications) (Ref. 5).

C. Use, Release, and Exposure

1. *Production and use.* The Agency has confirmed that three companies currently manufacture Acid Blue 9 in the United States. The yearly production volume for the diammonium and disodium salts combined is estimated to be 1.1 to 1.3 million pounds. BASF Corporation (Rensselaer, NY) produces an estimated 670,000 to 730,000 lbs/yr; Hilton Davis (Cincinnati, OH) produces an estimated 330,000 to 370,000 lbs/yr; and Warner-Jenkinson (St. Louis, MO) produces an estimated 100,000 to 225,000 lbs/yr (Ref. 4).

Acid Blue 9 is available in two grades, technical grade and FDA-certified food grade (the food grade dye must contain greater than 85 percent active colorant). BASF and Hilton Davis produce the technical grade product; Hilton Davis and Warner-Jenkinson produce the food grade product. A representative of Warner-Jenkinson has stated that the firm produced about 225,000 lbs of Acid Blue 9 for FDA-certified uses in 1986. The firm also imports 6,000 to 10,000 lbs of the food grade dye each year (Ref. 4).

Representatives from industry have stated that the major use for technical grade Acid Blue 9 is as a dye in toilet bowl cleaners and toilet bowl cakes (70 to 75 percent of the production volume). Acid Blue 9 is registered with the EPA Office of Pesticide Programs for use in ponds with low outflow to control the growth of weeds and algae. It functions by absorbing sunlight needed by the plant to carry out photosynthesis. Other minor uses include: a dye for paper, a marker for agricultural products, a component in inks, a textile dye (wool and leather), an indicator dye, a biological stain, and a colorant in miscellaneous products (Ref. 4).

Food grade Acid Blue 9 comprises an estimated 15 to 20 percent of the total production volume of the dye. A breakdown of uses for the food grade product has been provided by Warner-Jenkinson. They estimate that 80 percent is used in dairy goods, bakery goods, and confections, 10 percent is used in pet foods, 5 percent in dry mix beverages, and 5 percent in pharmaceuticals (Refs. 2 and 4).

2. *Exposure and Release*—a. *Manufacture.* BASF Corporation has provided EPA with a general description of its manufacture operations for Acid Blue 9. Evaluation of this information as well as EPA's best estimates indicate that exposure due to releases from manufacture will be low (Refs. 2 and 5).

b. *Processing.* Little factual data were available on processing operations. Standard release scenarios were used to estimate potential releases. The Agency has no health concerns for Acid Blue 9, so release and exposure estimates focus on water releases and predicted concentrations of Acid Blue 9 in surface waters.

The Agency has estimated that processing of Acid Blue 9 may take place at as many as 5 large volume processors, 80 moderate volume blenders and/or resellers, and 200 to 300 very small volume processors or repackagers. Large and medium scale processors are mainly involved in formulating Acid Blue 9 for use in toilet bowl cleaners. Processing operations for most uses will be essentially the same: The chemical will be transferred from shipping drums, blended with other materials, formed (if the product is a solid), and packaged. The Agency estimates that the most significant release of the chemical that may occur during processing will result from moderate volume blending operations. Using worst-case estimates (based on 10th percentile low flow of receiving waters and assuming no removal of the chemical during treatment operations), releases of Acid Blue 9 from processing could result in surface water concentrations of up to 0.015 mg/L (Refs. 2 and 5).

c. *Use.* The most significant release of Acid Blue 9 by users that could be subject to section 313 reporting may arise from use in paper drying. The Agency estimates that release of the chemical from this use could result in surface water concentrations of up to 0.019 mg/L.

D. Summary of Technical Review

The Agency has low human health concerns for Acid Blue 9. The dye has low acute toxicity, does not show evidence of oncogenic activity in adequate animal tests by appropriate routes of exposure, and does not exhibit mutagenic acitivy in the Ames assay. The Agency has a moderate concern for

chronic aquatic toxicity based on a 30-day study of fish and aquatic plants, and the level of persistence of the chemical. However, estimated releases of Acid Blue 9 will not result in exposure levels of concern: The suggested level of concern for chronic ecotoxicity is defined by the MATC value of 0.45 mg/L. The worst-case surface water concentration of the dye is estimated to be less than 0.019 mg/L.

IV. Explanation for Proposed Action To Delete

A. General Policy

EPA has broad discretion in determining whether to grant or deny petitions from the general public under section 313. When granting petitions, the Agency has a clear obligation to show how the granting of the petition fulfills the statutory criteria the Agency is to use in section 313(d) when modifying the list of toxic chemicals. However, in the Joint Conference Committee Report, the conferees made clear that EPA may conduct risk assessments or site-specific analyses in making listing determinations under section 313(d). In cases of petitions to delist chemicals, EPA believes that such analyses are important factors in determining whether removal of a substance from the list would serve the public's right-to-know. These analyses might show that while the toxicity of the chemical is not of high concern, exposures to humans and the environment are significant enough to warrant maintaining the chemical on the list.

B. Reasons for Proposing Deletion

EPA is granting the petition submitted by ETAD by proposing to delete Acid Blue 9 (both the diammonium and disodium salts) from the list of toxic chemicals subject to release reporting under section 313 of Title III of the Superfund Amendments and Reauthorization Act of 1986.

The decision to grant the petition and to initiate action to modify the list is primarily based on the toxicity data on all salts of Acid Blue 9. A review of these data led to the conclusion that Acid Blue 9 is not known to cause nor reasonably anticipated to cause serious acute human health effects, cancer, teratogenic effects, or serious or irreversible reproductive dysfunctions, neurological disorders, heritable genetic mutations, or other chronic health effects; or significant adverse effects on the environment of sufficient seriousness to warrant reporting.

V. Rulemaking Record

The record supporting this proposed rule is contained in docket control number OPTS-400011. All documents, including an index of the docket, are available to the public in the OTS Reading Room from 8 a.m. to 4 p.m., Monday through Friday, excluding legal holidays. The TSCA Public Docket Office is located at EPA Headquarters, Room NE-G004, 401 M St., SW., Washington, DC 20460.

VI. Request for Public Comment

The Agency requests comments on all the analyses conducted for this review and on the Agency's proposal to delete Acid Blue 9 from the list of toxic chemicals. EPA also requests that any pertinent data on Acid Blue 9 be submitted to the address at the front of this notice. Any comments or data should be submitted on or before May 1, 1988.

VII. References

(1) Doa, M.J. Title III, Section 313, Chemistry Report on Acid Blue 9. USEPA. 1987.

(2) Heath, G.A. Petition Review Engineering Report, SARA Title III, Section 313 Environmental Release Analysis, C.I. Acid Blue 9. USEPA. 1987.

(3) Locke, D. Hazard Assessment of Acid Blue 9. USEPA. 1987.

(4) Long, J.W. Economic Analysis for ETAD Petition to Delist C.I. Acid Blue 9 From the Title III of SARA Section 313 List of Toxic Chemicals. USEPA. 1987.

(5) Lynch, D.G. Environmental Exposure Assessment; SARA Title III, Section 313: Petition to Delist C.I. Acid Blue 9. USEPA. 1987.

VIII. Regulatory Assessment Requirements

A. Executive Order 12291

Under Executive Order 12291, EPA must judge whether a regulation is "major" and, therefore, requires a Regulatory Impact Analysis. EPA has determined that this proposed rule is not a "major rule" because it will not have an effect on the economy of $100 million or more.

This proposed rule would decrease the impact of the section 313 reporting requirements on covered facilities and would result in cost savings to both industry and EPA. Therefore, this is a minor regulation under Executive Order 12291.

This proposed rule was submitted to the Office of Management and Budget (OMB) under Executive Order 12291.

B. Regulatory Flexibility Act

Under the Regulatory Flexibility Act of 1980, the Agency must conduct a small business analysis to determine whether a substantial number of small entities will be significantly affected. Because the proposed rule results in cost savings to facilities, the Agency certifies that small entities will not be significantly affected by this proposed rule.

C. Paperwork Reduction Act

OMB has reviewed the information collection requirements contained in this proposed rule under the provisions of the Paperwork Reduction Act of 1980, 44 U.S.C. 3501 *et seq.* Submit comments on these requirements to OMB, Office of Information and Regulatory Affairs, 726 Jackson Place, NW., Washington, DC 20503, marked "Attention: Desk Officer for EPA."

List of Subjects in 40 CFR Part 372

Community right-to-know, Environmental protection, reporting and recordkeeping requirements, Toxic chemicals.

Dated: April 1, 1988.

Victor J. Kimm,

Assistant Administrator, Office of Pesticides and Toxic Substances.

Therefore, it is proposed that Part 372 of Chapter I of 40 CFR be amended as follows:

PART 372—[AMENDED]

1. The authority citation would continue to read as follows:

Authority: 42 U.S.C. 11013 and 11028.

§ 372.65 [Amended]

2. Section 372.65 (a) and (b) are amended by removing the entire entry for C.I. Acid Blue 9, diammonium salt and C.I. Acid Blue 9, disodium salt under paragraph (a) and removing the entire CAS No. entries for 2650-18-2 and 3844-45-9 under paragraph (b).

[FR Doc. 88-7937 Filed 4-11-88; 8:45 am]

BILLING CODE 6560-50-M

DEPARTMENT OF HEALTH AND HUMAN SERVICES

Health Care Financing Administration

42 CFR Part 405

[BERC-455-NRC]

Medicare Program; Discontinuation of Prevailing Charge Differentials for Specialists

AGENCY: Health Care Financing Administration (HCFA), HHS.

ACTION: Notice of request for comments.

SUMMARY: This notice requests comments on a possible change to the regulations that govern determinations of the reasonable charges that Medicare pays for physician services. We are considering discontining the establishment of separate prevailing charge screens for physicians services based on specialty practice, with the possible exception of specified medical visits and consultations.

DATE: Comments will be considered if we receive them at the appropriate address, as provided below, no later than 5:00 p.m. on June 13, 1988.

ADDRESS: Mail comments to the following address: Health Care Financing Administration, Department of Health and Human Services, Attention: BERC-455-NI, P.O. Box 26676, Baltimore, Maryland 21207.

If you prefer, you may deliver your comments to one of the following addresses:

Room 309-G, Hubert H. Humphrey Building, 200 Independence Ave. SW., Washington, DC,

or

Room 132, East High Rise Building, 6325 Security Boulevard, Baltimore, Maryland.

In commenting, please refer to file code BERC-455-NI. Comments received timely will be available for public inspection as they are received, generally beginning approximately three weeks after publication of a document, in Room 309-G of the Department's offices at 200 Independence Ave. SW., Washington, DC, on Monday through Friday of each week from 8:30 a.m. to 5:00 p.m. (phone: 202-245-7890).

FOR FURTHER INFORMATION CONTACT: Paul Riesel (301) 966-4494.

SUPPLEMENTARY INFORMATION:

I. Background

Section 1833 of the Social Security Act (the Act) provides that Medicare payment for most physician and medical and other health services furnished under Part B of the program (Supplementary Medical Insurance) is made on a reasonable charge basis through Medicare contractors known as carriers. Under section 1842(b)(3) of the Act, when payment is made on a charge basis, it is the responsibility of the carrier to ensure that the charge is "reasonable". In determining the reasonableness of a charge for a physician service, carriers are required to consider the following factors and, in general, payment for the physician service is based on the lowest of these factors:

- The actual charge.
- The customary charge for similar services generally made by the physician furnishing the service.
- The prevailing charge in the locality for similar services. The prevailing charge may not exceed the 75th percentile of the customary charges of physicians in the locality.
- Other factors that are necessary and appropriate.

Section 1842(b)(3)(H) of the Act requires that in making a reasonable charge determination for a certain service, carriers must take into consideration the prevailing charge in the locality for "similar services." Neither the statute nor the legislative history of the statute provide any guidance on whether services described by the same procedure code and terminology (listed in the American Medical Association's *Physicians' Current Procedural Terminology*, Fourth Edition (1987) (CPT-4)), but performed by physicians in different specialties, constitute similar services.

Recognizing that physicians who engage in a specialty practice frequently charge different amounts for their services than do other physicians for services described by the same procedure code and terminology, our regulations currently located at 42 CFR 405.504(b) provide for the following:

- In establishing prevailing charge levels, carriers should be responsive to any differentials in the levels of charges among different kinds of specialty practices.
- If physicians in a locality have established different levels of fees for their services based on specialty practice, the carriers should recognize these differences in establishing prevailing charge screens.
- If the physicians have not established fee differentials based on specialty practice, the carrier should not establish artificial differences.

Carriers have made individual decisions both in determining whether or not a physician is a specialist in a particular area of medicine, and in establishing specialty prevailing charge screens.

II. Problems With the Current Regulations

A. Specialty Prevailing Charge Screens

There are marked differences in how carriers identify physicians as practicing in a particular specialty field in order to establish prevailing charge screens. Although some carriers adhere to a limited definition of a specialist (that is, one who has attained board certification or has had prerequisite training in a particular field), most carriers accept as specialists those physicians who classify themselves as specialists. Many carriers calculate discrete prevailing charge screens for individual specialties; however, these carriers may combine localities or, if necessary, specialties, to establish prevailing charge screens if there are insufficient data for a particular service to establish prevailing charges by separate locality and specialty. In addition, some carriers use groupings of specialties; one carrier groups by type of service; and a few carriers use single prevailing charge screens for all physician services without regard to specialty practice.

The medical visit categories account for approximately 37 percent of Medicare payments for physician services. The CPT 4 (1987) provides some explanations of the various levels of visit services. However, the visit codes used to describe the visits do not differentiate explicitly by diagnosis or the content of the service provided on the basis of the specialty of the physician (except with respect to the intermediate and comprehensive visits for ophthalmological services). Therefore, a major issue is whether there are significant service differences based on specialty practice in the visit categories that are reflected in physician charges and that should be recognized through different payment levels.

The results of a National Study of Medical and Surgical Specialties conducted at the University of Southern California School of Medicine by Robert Mendenhall and his associates indicated that there are differences among specialties in average time spent in patient encounters, referral patterns, percentage of patients with multiple problems, and the frequency of certain diagnostic and therapeutic services. These results, which were based on a survey of 10,000 physicians, suggest there are some differences in the content of patient visits. They were published in 1981 in a special report ("Medical Practice in the United States") by the Robert Wood Johnson Foundation, P.O. Box 2316, Princeton, New Jersey 08540.

However, the results of another study by Linda Aiken ("The Contribution of Specialists to the Delivery of Primary Care" published in the New England Journal of Medicine on June 14, 1979) suggest that a significant number of primary care problems are being handled by specialists incidentally to the treatment of specialty-related problems. Moreover, the data from the Aiken study did not support a presumption that responsibility for primary care was assumed by specialists for only very ill patients or

patients with conditions requiring care by a physician in a particular specialty.

A third study, by Howard Greenwald ("An Analysis of the Content of Specialty Practices and Their Service Capacities") published by the Health Resources Administration, Hyattsville, Maryland (DHHS/HRA Pub. No. 61–650), concluded that different specialties provide specific components of care with significantly different frequencies and encounter times. For example, internists consistently ordered more tests and spent longer periods of time in patient encounters than family practitioners.

Another study by Janet Mitchell, Ph.D. and Jerry Cromwell, Ph.D. (Health Economics Research, Inc.), resulted in similar findings. It indicated that at each level of patient encounter, internists had longer visits and performed and ordered more medical procedures than general practitioners. It concluded that internists have a more complex case mix than general practitioners

In order to assess the relationship between price differentials in the visit categories and service intensity, Mitchell and Cromwell also applied the data from the Mendenhall survey mentioned above to 1981 Medicare claims data for South Carolina. This exercise showed that although other medical specialists have higher reimbursement rates than general and family practitioners in each visit category, payments per patient hour to these groups were nearly identical. This suggests that higher specialty charges may be largely attributable to additional time physicians in some specialties spend with beneficiaries.

In 1976, the Michigan Academy of Family Physicians challenged in court the prevailing charge screens based on specialty that were used by Michigan Blue Shield. This case was brought because the services of the members of the Michigan Academy of Family Physicians who were board eligible but not board certified were included in the same prevailing charge screens as general practitioners and nonspecialists rather than with those of specialists. In contrast, Michigan Blue Shield recognized as specialists those physicians who were board eligible in other fields.

The U.S. District Court found the carrier's application of the regulation (§ 405.504(b)) to be unlawful in this instance. In the court's view, the carrier had not developed any factual basis for treating family physicians differently from all other physicians. (*Michigan Academy of Family Physicians, et al. v. Blue Cross and Blue Shield of Michigan, and Patricia Harris, Secretary of Health and Human Services*, 502 F. Supp. 751 (E.D. Mich., 1980)). The court ordered the carrier to provide a single screen for all physicians, separate from the screen for "chiropractors, podiatrists and dentists." In addition, it found that the regulation itself is unlawful because, in the court's view, under the Medicare law, charge payments for similar services in a locality must be based on a single prevailing charge. In practical terms this meant that in the court's view the same prevailing charge in the locality must be applied as a Part B Medicare payment limitation to all services that are described by the same CPT 4 procedure code, unless it can be established that these services are *not* similar when they are furnished by physicians in different kinds of specialty practice.

The Court of Appeals for the Sixth Circuit upheld the lower court decision (*Michigan Academy of Family Physicians, et al., v. Blue Cross and Blue Shield of Michigan and Richard S. Schweiker, Secretary of Health and Human Services*, 728 F. 2d 326 (1984)), and on June 9, 1986, the Supreme Court ruled that the lower courts have jurisdiction to consider challenges to Part B Medicare regulations (*Bowen v. Michigan Academy of Family Physicians, et al.*, 106 S. Ct. 2133 (1986)).

Section 9341(a)(1)(D) of the Omnibus Budget Reconciliation Act of 1986 (Pub. L. 99–509), which enacted section 1869(b)(3) and (4) of the Social Security Act, has limited the precedential effect of the Supreme Court decision to carrier guidelines, manual instructions, and regulations issued on or after January 1, 1981. However, neither the Supreme Court decision nor the new legislation have resolved the substantive issues in the Michigan court case.

B. Defining "Specialist"

As we have indicated, currently, there is no commonly accepted definition of specialist, and carriers have wide latitude in recognizing specialist status. The 23 member boards of the American Board of Medical Specialties (ABMS) certify a total of 44 specialties and subspecialties in allopathic medicine. Board certification is voluntary and generally involves formal training in a specialized residency program, and written and oral examinations.

The ABMS member boards do not recognize the term "board eligible" and will not issue statements concerning board eligibility of individuals. The ABMS has indicated that the term "board eligible" is no longer used because eligibility requirements for admission to the board certification process vary among boards and over time. (For example, until 1988 candidates for certification in Emergency Medicine may substitute practice experience for formal training in a residency program; and several specialties require one or more years of practice experience in addition to residency training.)

Osteopathic physicians receive specialty certification from the Advisory Board for Osteopathic Specialists and are eligible for certification by some ABMS specialty boards.

While it has not addressed the issue specifically from the point of view of third party payment differentials for physicians' services, the Council of Medical Specialty Societies (CMSS) has recommended that either certification by a member board of the ABMS or full membership in the relevant specialty society should be a prerequisite for specialty designation. The CMSS would also require advanced training in the designated specialty or hospital designation based on peer review of specialty competence.

The CMSS maintains that specialty self-designation is not acceptable. However, data from the American Medical Association (AMA) Masterfile indicate a significant percentage of physicians would be affected by the elimination of self-designation. In 1985, less than five percent of active physicians reported general practice as their primary specialty. Of the remaining physicians, only 55 percent were board certified. Of those physicians, 83 percent were certified by the board corresponding to their primary specialty, four percent were certified by the corresponding board and other board(s), and the remaining 13 percent were certified by a board not corresponding to their primary specialty.

Among the medical specialties, the percentages of physicians who are board certified (including certification by a noncorresponding board) range from 50 percent of internists to 78 percent of cardiologists. Within the surgical specialties, 53 percent of general surgeons are board certified in contrast to 73 percent of plastic surgeons. Among the ancillary physician specialties, the percentages with board certification are: anesthesiology, 45 percent; pathology, 73 percent; and radiology, 89 percent.

III. Request for Comments

We are concerned that our policy of allowing carriers to establish separate prevailing charge screens by specialty has led to different payment levels for the same procedure performed by different physicians in the same locality, and that it has led to inconsistent

administration of the reasonable charge criteria by the carriers, for example, in identifying specialists and specialties for this purpose. The payment distinctions among physicians based on specialty practice have tended to become wider over the years as a result of the application of the Medicare economic index. Also, the use of specialty specific prevailing charges assumes that the value of a service does not depend on the nature of the service, but rather, on the specialty of the physician who furnished it. This is particularly difficult to justify in the case of services such as surgery and diagnostic procedures, which tend to be described in considerable detail by the codes and terminology physicians use for billing purposes. Most surgical and diagnostic procedure codes are quite specific; therefore, perhaps the level of Medicare payment made to a physician should be based on the service furnished to the beneficiary rather than on the specialty of the physician who furnished the service. On the other hand, the medical visit and consultation codes are less specific, and research indicates that there may be significant service differences in those categories, depending on specialty. To the extent that there are such differences, it might be appropriate to describe the services as being different rather than similar. Such different services could be appropriately recognized in different prevailing charge levels.

We are also concerned that carriers are using different methods or definitions to decide who is or is not a specialist. Further, eliminating specialty distinctions in paying for similar services would result in a major program simplification for Medicare carriers. There would be fewer prevailing charge screens to establish, and administrative costs would be reduced.

We are considering publishing a proposed rule that would eliminate specialty differentials in Medicare prevailing charges for all physician services except, possibly, for medical visits and consultations. We are also considering adding a definition of "specialist" to the regulations, to the extent we continue to recognize specialty differentials. However, we are requesting comments from the public to assist us in formulating our proposal.

We are particularly interested in comments and suggestions regarding the following:

1. Eliminating specialty-specific prevailing charge screens with or without an exception for medical visits and consultations, and assessing the impact this measure would have on the provision, scope, and availability of primary care services, particularly in rural areas and in urban underserved areas.

2. The specific similarities and differences in the contents of visit services and consultations from one type of specialty to another

3. The need, if any, to use different codes or modifiers and terminology to describe services in ways that make needed specialty distinctions.

4. Permitting carriers to maintain separate prevailing charge screens for specific specialties or groups of specialties for medical visits and consultations.

5. Appropriate standards for recognizing a physician as a specialist for Medicare payment purposes if it is decided to retain some specialty distinctions.

IV. Impact on Program Payments of Eliminating Specialty Differentials

Eliminating specialty distinctions could change the proportions of total Medicare payments that are expended for the services of physicians in a particular specialty. These redistributive effects, and their financial importance to physicians, would be different for different specialties, depending on a complex interplay of several variables. One factor would be how merging the charge data for all specialties would affect Medicare carriers' prevailing charge calculations, and whether the resulting new prevailing charge would be higher or lower than the former specialty-specific prevailing charges. The results might vary from one service, specialty, or locality to another.

Another factor would be the proportion of their total incomes that physicians in a particular specialty derive from Medicare. The impact of the changes in the Medicare program's payment levels may be less for those physicians who derive only a small part of their income from services furnished to Medicare beneficiaries than for those physicians who receive large portions of their incomes from services furnished to Medicare beneficiaries. Information in Arthur Owens' "How Much of Your Money Comes From Third Parties?" (*Medical Economics*, Apr. 4, 1983 at 262) indicates that the percentage of a physician's gross income that is attributable to services furnished to Medicare beneficiaries varies by specialty from lows of 1 percent for pediatrics, 5 percent for obstetrics/gynecology, and 6 percent for psychiatry to 15 percent for family practice, 18 percent for general practices, 21 percent for pathology, 22 percent for anesthesiology, 24 percent for ophthalmology, 24 percent for neurology, 25 percent for general surgery, 29 percent for internal medicine, and a high of 35 percent for thoracic surgery.

A third factor would be the kinds of services that physicians in a particular specialty field generally furnish since the redistributive effects mentioned above would probably affect some services more than others. For example, many surgical procedures tend to be furnished primarily by physicians in a particular specialty. Consequently, the redistributive effects of eliminating all specialty distinctions would probably be less significant for surgery than for medical care (that is, for the Medicare covered services described by CPT-4 codes 90000 through 99199). In contrast to surgery, the CPT-4 codes for medical care are, with some exceptions, used by many specialties. General surgeons may be an exception to the extent that they perform a wider range of procedures that overlap with the services of more highly specialized surgeons.

Information from Table 4 in "Medicare Physicians' Services: The Composition of Spending and Assignment Rates" (*Health Care Financing Review*, Fall 1985, Vol. 7, No. 1) indicates that 37.3 percent of all Medicare payments for physicians' services are for medical care. (These services are, as indicated above, more likely than surgical services to be affected by a discontinuation of Medicare specialty distinctions.) However, as Table 4 indicates, the percentages of the total Medicare payments received by physicians that are attributable to medical care are much higher for some specialties than others, for example, 88.9 percent for psychiatry, 74.4 percent for general practice, 76.6 percent for family practice, 70.8 percent for internal medicine, 64.4 percent for pulmonary disease specialists, and 45.5 percent for cardiology. Also, Table 6 in the article cited above indicates that general practitioners, internists, and family practice physicians as a group account for nearly 57 percent of Medicare payments for medical care services.

Since general practitioners, internists, and family practice specialists both derive substantial portions of their practice incomes from Medicare and receive a high proportion of their Medicare incomes for medical care services, the impact of discontinuing all specialty distinctions is perhaps more likely to be felt by these specialties than by others. However, the factors discussed above need to be viewed in relation to each other. For example, while thoracic surgeons receive 35

percent of their gross incomes from Medicare, the financial impact on them of discontinuing specialty distinctions would be ameliorated by the extent to which their services tend to be highly specialized and primarily performed only by them. Similarly, psychiatrists as a group receive 88.9 percent of their Medicare payments for medical care services, but Medicare accounts for only 6 percent of their gross income; consequently, they are not likely to be affected as significantly by the discontinuation of specialty differentials as general practitioners, family practice physicians, and internists.

(Sec. 1842(b)(3) of the Social Security Act (42 U.S.C. 1395u(b)(3); 42 CFR 405.504(b))

(Catalogue of Federal Domestic Assistance Program No. 13.774, Medicare—Supplementary Medical Insurance)

Dated: November 23, 1987.

William L. Roper,

Administrator, Health Care Financing Administration.

Approved: February 1, 1988.

Otis R. Bowen,

Secretary.

[FR Doc. 88-7985 Filed 4-11-88; 8:45 am]

BILLING CODE 4120-01-M

Office of Child Support Enforcement

45 CFR Part 303

Child Support Enforcement Program; Federal Tax Refund Offset

AGENCY: Office of Child Support Enforcement, (OCSE), HHS.

ACTION: Notice of proposed rulemaking.

SUMMARY: This regulation would revise Federal tax refund offset regulations to provide that the Office of Child Support Enforcement (OCSE) will recover its costs from the States for certain services provided in the Federal tax refund offset process. These services are limited to printing and mailing pre-offset notices when OCSE provides this service.

In addition, this regulation would make necessary changes to conform OCSE regulations with the revised method the Internal Revenue Service (IRS) will use beginning in processing year 1988 to recover costs of the offset procedure. The IRS fee will no longer be billed to the State and collected by the Secretary of Health and Human Services. Beginning with the 1988 processing year, the IRS will deduct its fee from the offset amount, although States will be required to credit the obligor with the full amount of the offset.

DATES: Consideration will be given to written comments received on or before June 13, 1988.

ADDRESS: Address comments to: Associate Deputy Director, Office of Child Support Enforcement, Attention: Division of Policy and Planning, Room 2086, 330 C Street, SW., Washington, DC 20201.

FOR FURTHER INFORMATION CONTACT: Carol Jordan, OCSE Policy Branch, (202) 245-1979.

SUPPLEMENTARY INFORMATION:

Background

Under the Federal tax refund offset program, States are required to send the absent parent advance notice that his or her case will be referred for offset, pursuant to section 464(a)(3)(A) of the Social Security Act (the Act). During the initial years of the Federal tax refund offset program, OCSE, under its regulatory authority, chose to provide States with the option of having OCSE send the advance notice on behalf of the State IV-D agency, if requested to do so, to encourage use of the offset mechanism. Currently, 38 States and jurisdictions have requested OCSE to provide the advance notice to absent parents for them.

OCSE has always had the statutory authority to charge fees for this service, but until now has not done so to give States an incentive to implement the offset procedure. OCSE believes that State programs have sufficiently developed now so that it is no longer necessary to provide this technical assistance, without cost to States, in order to promote participation by States in as broad a scale as possible. It is appropriate for States to assume the cost of the services OCSE provides (approximately $250,000 annually), since the Federal government is now constrained by the growing deficit and it is no longer appropriate to provide a service at no cost which is clearly the obligation of the State. Accordingly, OCSE will now charge for services it provides in the Federal tax refund offset process. These services include printing and mailing pre-offset notices on behalf of the States. Any fees charged the State would be reimbursable at the current Federal matching rate for child support administrative expenses so that the Federal government would still bear the majority of the cost (68 percent in FY 1988). Additional information, including the amount of the fee and its effective date, will be provided by the Office in instructions.

Another provision of the Federal tax refund offset program is that the IRS shall charge the State a fee for its costs of applying the offset procedure. Prior to the 1988 processing year, this fee was billed and collected from the State IV-D agency by the Secretary of Health and Human Services (HHS). However, the IRS has changed its cost recovery method, and beginning with the 1988 processing year will deduct its fee directly from the offset amount. Therefore, these regulations would delete the requirement that the IRS fee be billed and collected from the State IV-D agency by HHS.

States have been notified well in advance, and through several different media (conferences, action transmittal, letters) of the pending IRS change in its method of recovering costs under the offset procedure. While a small number of States may have difficulties with these changes if conforming State legislative changes are necessary, States have had ample warning and opportunity to implement necessary legislation. In 1986, the IRS notified OCSE of its intention to deduct its fee directly from the offset amount and OCSE informed States in a "Dear Colleague" letter of IRS' intention and asked for comments on whether or not this change would pose any problems. Although the IRS did not implement its proposal in the 1987 processing year, States have been on notice since that time of a potential change in the IRS method for cost recovery.

The revised cost recovery method used by the IRS does not affect current IV-D collection and distribution policy. The State IV-D agency must consider the total amount offset as a support collection and distribute this amount pursuant to Federal regulations at 45 CFR 303.72(h). For example, if the State certifies $2000 for Federal tax refund offset and the IRS offsets $2000 and deducts the IRS offset fee from this amount, the State must credit the absent parent with a $2000 payment and distribute $2000, not $2000 less the IRS fee. The State may recover the IRS fee in non-AFDC cases pursuant to regulations at 45 CFR 302.33(d).

Statutory Authority

Section 464(a)(3) of the Act requires the State to send notice to an individual that a Federal tax refund offset will be made. Section 464(b)(1) provides that the Secretary of the Treasury shall prescribe the fee that a State must pay to reimburse the Secretary of the Treasury for the full cost of applying the offset procedure.

Section 1102 authorizes the Secretary of HHS to publish regulations (not inconsistent with the Act) necessary to efficiently administer his functions

under the Act. Under the title IV-D State plan requirement contained in section 454(13) of the Act, the Secretary may prescribe, and the State must comply with, requirements and standards necessary to establish an effective title IV-D program.

General authority for the Federal government to charge for certain specialized or technical services which it may perform is found in the Intergovernmental Cooperation Act at 31 U.S.C. 6505. This statute states that services may be provided if requested by the State in writing and payment is made.

OMB Circular No. A-97 promulgates rules and regulations permitting Federal agencies to provide specialized or technical services to State and local units of government under title III of the Intergovernmental Cooperation Act of 1968. Specifically, this Circular permits Federal agencies to provide (among other services) technical information, data processing, communications and personnel management systems services, and technical advice on improving logistical and management services which the Federal agency normally provides for itself or others under existing authorities. We believe that sending the pre-offset notice on behalf of States meets the above criterion because it provides data processing services which improve the Federal tax refund offset process by ensuring that the offset notice is accurate and timely. The authority for OCSE to provide this service exists because OCSE serves as the agent between the State and the IRS for the offset process. Therefore, OCSE is intrinsically involved in the actual Federal tax refund offset process and this is just one aspect of that process.

Regulatory Provisions

45 CFR 303.72(e)(1) states that the Office, or the State IV-D agency if it elects to do so, shall send a written advance notice to inform an absent parent that the amount of his or her past-due support will be referred to the IRS for collection by Federal tax refund offset.

45 CFR 303.72 (i)(1) states that a refund offset fee, in such amount as the Secretary of the Treasury and the Secretary of HHS have agreed to be sufficient to reimburse the IRS for the full cost of the offset procedure, shall be billed and collected from the IV-D agency by the Secretary of HHS or designee and credited to the IRS appropriations which bore all or part of the costs involved in making the collection

Regulatory Changes

This regulation would revise 45 CFR 303.72(e)(1) to require that the State IV-D agency, or the Office, if the State requests and the Office agrees, shall send the advance notice. This revision is consistent with section 464(a)(3) of the Act. The revised language would merely clarify that the State is ultimately responsible for sending the advance notice and that the Office is providing technical assistance to the State when it sends the advance notice on behalf of the State.

Paragraph (i)(1) of this section would be revised by deleting the reference to the IRS cost recovery procedure, i.e., the IRS fee is billed and collected from the IV-D agency by the Secretary of HHS. This change is necessary to conform OCSE regulations to the change in the IRS method for collecting the IRS offset fee. Beginning in processing year 1988, the IRS will deduct its fee from the offset collection instead of billing the State and having HHS collect the fee.

A new paragraph (i)(3) would be added to this section. This paragraph would provide that OCSE will charge the State a fee for services provided in regard to the Federal tax refund offset process, including the printing and mailing of pre-offset notices on behalf of the State. The amount of the fee and the effective date for charging a fee would be established by the Office in instructions.

Paperwork Reduction Act

This regulation contains no new information collection requirements. The existing information collection requirements were approved by the Office of Management and Budget (OMB) pursuant to the Paperwork Reduction Act of 1980 (Pub. L. 96-511) and assigned OMB No. 0960-0253.

Executive Order 12291

The Secretary has determined, in accordance with Executive Order 12291, that this rule does not constitute a major rule. A major rule is one that is likely to result in:

(1) An annual effect on the economy of $100 million or more; or

(2) A major increase in costs or prices for consumers, individual industries, Federal, State, or local government agencies, or geographic regions; or

(3) Significant adverse effects on competition, employment, investment, productivity, innovation, or the ability of United States-based enterprises to compete with foreign-based enterprises in domestic or export markets.

This regulation has been reviewed under Executive Order 12291 and does not meet any of the criteria for a major rule. This regulation permits OCSE to charge the State for providing the advance notice of tax refund offset to the absent parent. In addition, this regulation revises OCSE regulations to conform to the revised cost recovery procedures established by the IRS for collecting offset fees. The cost for sending advance notice to an absent parent is allocated differently, but total expenditures remain the same. The method used by the IRS to recover costs of the offset program is revised, but the IRS fee is not affected by this regulation. Therefore, this rule will have little or no economic effect.

Regulatory Flexibility Analysis

The Secretary certifies, under 5 U.S.C. 605(b), as enacted by the Regulatory Flexibility Act (Pub. L. 96-354), that this regulation will not result in a significant impact on a substantial number of small entities. The primary impact is on State governments, which are not considered small entities under the Act.

List of Subjects in 45 CFR Part 303

Child support, Grant programs/social programs, Reporting and recordkeeping requirements.

(Catalog of Federal Domestic Assistance Program No. 13.783, Child Support Enforcement Program)

Date: November 3, 1987.

Wayne A. Stanton,

Director, Office of Child Support Enforcement.

Approved: February 8, 1988.

Otis R. Bowen,

Secretary.

For the reasons set out in the preamble, Chapter III of Title 45 of the Code of Federal Regulations is proposed to be amended as follows:

PART 303—[AMENDED]

1. The authority citation for Part 303 continues to read as follows:

Authority: 42 U.S.C. 651 through 658, 660, 663, 664, 666, 667, 1302, 1396a(a)(25), 1396b(d)(2), 1396b(o), 1396(b)(p) and 1396(k).

2. Section 303.72 is amended by revising paragraphs (e)(1) introductory text and (i)(1) and adding a new paragraph (i)(3) to read as follows:

§ 303.72 Requests for collection of past-due support by Federal tax refund offset.

* * * * *

(e) *Notices of offset*—(1) *Advance.* The State IV-D agency, or the Office, if the State requests and the Office agrees, shall send a written advance notice to inform an absent parent that the amount

of his or her past-due support will be referred to the IRS for collection by Federal tax refund offset. The notice must inform absent parents:

* * * * *

(i) *Payment of fee.* (1) A refund offset fee, in such amount as the Secretary of the Treasury and the Secretary of Health and Human Services have agreed to be sufficient to reimburse the IRS for the full cost of the offset procedure, shall be deducted from the offset amount and credited to the IRS appropriations which bore all or part of the costs involved in making the collection. The full amount offset must be credited against the obligor's payment record. The fee which the Secretary of the Treasury may impose with respect to non-AFDC submittals shall not exceed $25 per submittal.

* * * * *

(3) The Office will charge the State a fee, in an amount established by the Office in instructions, for printing and mailing of pre-offset notices in regard to the Federal tax refund offset process. This fee shall be credited to the Health and Human Services (HHS) appropriations which bore all or part of the costs involved in making the collection.

* * * * *

[FR Doc. 88-7906 Filed 4-11-88; 8:45 am]

BILLING CODE 4150-04-M

DEPARTMENT OF THE INTERIOR

Fish and Wildlife Service

50 CFR Part 18

Marine Mammals; Taking of Marine Mammals Incidental to Commercial Fishing Operations; Small Take Exemption; Taking by Federal, State, and Local Government Officials

AGENCY: Fish and Wildlife Service, Interior.

ACTION: Proposed rule.

SUMMARY: The U.S. Fish and Wildlife Service (Service) proposes to amend 50 CFR Part 18 to implement sections 101(a)(4) and 109(h) of the Marine Mammal Protection Act of 1972 (Act), as amended on October 9, 1981. Section 101(a)(4) provides a procedure for applicants to qualify for an exemption to the Act's moratorium on the taking of marine mammals for the incidental, but not intentional, taking of small numbers of non-depleted marine mammals by U.S. commercial fishermen.

Section 109 was amended to allow the taking of marine mammals by Federal, in addition to State or local, government officials or employees or designees under section 112(c) if it is done in the course of his/her duties as an official, employee or designee and if it is done consistent with the requirements of section 109(h).

DATE: Comments concerning this proposed rule should be submitted no later than June 13, 1988.

ADDRESS: Send comments to Fish and Wildlife Service, Room 514, Matomic Building, Department of the Interior, Washington, DC 20240.

FOR FURTHER INFORMATION CONTACT: Lynn B. Starnes, Chief, Division of Fish and Wildlife Management Assistance, Room 514, Matomic Building, U.S. Fish and Wildlife Service, Department of the Interior, Washington, DC 20240, telephone (202) 632-2202.

SUPPLEMENTAL INFORMATION:

Background

The Marine Mammal Protection Act of 1972 (16 U.S.C. 1361-1407) established a moratorium on the taking of marine mammals. Pub. L. 97-58 amended the Act in 1981 by adding sections 101(a)(4) and 109(h) (16 U.S.C. 1371(a)(4) and 1379(h)). Section 101(a)(4) directs the Secretary of the Interior (Secretary), during any period of five consecutive years, to allow the incidental but not intentional taking of small numbers of non-depleted species or population stocks of marine mammals by citizens of the United States while engaged in commercial fishing operations. This exemption to the taking moratorium of the Act can be granted only if, after notice and opportunity for public comment, the Secretary: (1) Finds that the total of such taking will have a negligible impact on such species or stocks, and (2) provides guidelines pertaining to the establishment of a cooperative system among the fisherman involved in the operation to monitor and report any such taking.

The Service is responsible for implementing this new section with respect to the Orders Carnivora (polar bear, sea otter, and marine otter), Pinnipedia (walrus only), and Sirenia (manatee and dugong). The southern sea otter, manatee, and dugong are also protected by the Endangered Species Act, 16 U.S.C. 1531 *et seq.*, which restricts taking of these species independent of the Act's regulations proposed herein. If a marine mammal species is listed as an endangered species or a threatened species under the Endangered Species Act, it is considered depleted under the Act. Depleted species may not be incidentally taken under the authority of section 101(a)(4) of the Act.

The Service announced its intent to revise 50 CFR Part 18 to implement the Act's amendments of 1981. A **Federal Register** notice was published on July 29, 1983 (48 FR 34486), and invited public comment on implementing sections 101(a)(4) and 109(h) of the Act as amended on October 9, 1981. No comments were received.

Taking of Marine Mammals Incidental to Commercial Fishing Operations; Small Take Exemption

The proposed rule would delete all of the language that now appears in § 18.24 of 50 CFR Part 18, which noted that persons could lawfully take marine mammals incidental to commercial fishing operations until October 21, 1974 (subject to Department of Commerce regulations). The Service has never had any regulations under sections 101(a)(2) and 103 for the taking of nonnegligible numbers of marine mammals during commercial fishing activities (i.e., tuna-porpoise regulations). The Service is now proposing to substitute these "Taking of Marine Mammals Incidental to Commercial Fishing Operations; Small Take Exemption" regulations for the outdated reference to the Department of Commerce regulations.

The Service's proposed "small take" regulations closely follow the Department of Commerce guidelines found at 48 FR 55493 of December 13, 1983. Congress did not disturb the Department of Commerce's guidelines when the Act was reauthorized in 1984. Therefore, the Service has decided to use them as a template for these proposed "small take" regulations.

Request and Information Needed

A formal written request submitted in accordance with paragraph (d) of these proposed regulations would be received by the Service so that it can determine whether the described incidental take by citizens of the United States while engaging in commercial fishing operations may be authorized. Paragraph (d) requests specific information from the applicant regarding the description of the fisheries, the number of marine mammals by species expected to be taken annually, a description of the status and distribution of the affected species or stocks, the cooperative efforts between fishermen and scientists concerning retention of marine mammal specimens for scientific study, and a description of the system to be used by the fishermen to facilitate the reporting of any incidental takes.

The number of animals expected to be taken by harassment also must be estimated in requests for exemption and

BEST COPY AVAILABLE

will be considered by the Service in making the determination that the taking by any particular fishery is, or is not, small. Although harassment is generally recognized as a prohibited taking, the Service believes that directed harassment in appropriate cases could prevent accidental mortality or injury by keeping marine mammals away from nets.

Decision Criteria

The Service will evaluate each complete request in light of the best available scientific evidence, and will consider all comments received during a required **Federal Register** public comment review period to determine if the total taking over a five-year or less period will result in a negligible impact to the species or stocks, satisfy all other requirements of section 101(a)(4), and thus warrant issuance of an exemption in a "Notice of Exemption."

Suspension of Notice of Exemption

To ensure that the purposes of section 101(a)(4) continue to be satisfied, a Notice of Exemption may be suspended if, after notice and opportunity for public comment, the Service determines that either: (1) the take is not small; (2) the total taking is having more than a negligible impact on the species or stocks of marine mammals concerned; (3) the species or stock is subsequently determined to be depleted; or (4) the policies, purposes, and goals of the Act would be better served through the application of other provisions of the Act. The Service proposes to amend 50 CFR Part 18 by revising Section 18.24 in order to implement Section 101(a)(4) of the Act.

Taking by Federal, State, or Local Government Officials

Section 109(h) of the Act, as amended, allows the taking of marine mammals by a Federal, State, or local government official or employee or a person designated under section 112(c) if it is done in the course of his/her duties as an official, employee, or designee, and if the marine mammals are taken in a humane manner (including euthanasia). The Act requires that such taking be for (1) the protection or welfare of the mammal, (2) the protection of the public health and welfare, or (3) the nonlethal removal of nuisance animals. Mammals so taken must be returned to their natural habitat, if feasible.

Section 112(c) of the Act authorizes the Secretary to enter into contracts, leases, cooperative agreements, or other transactions as may be necessary to carry out the purposes of the Act and on such terms as he/she deems appropriate with any Federal or State agency, public or private institution, or other person.

The Service proposes to revise § 18.22(a) of 50 CFR Part 18 to implement fully section 109(h) of the Act. Initially only State or local government officials could take marine mammals under Section 109 of the Act. The proposed revision to § 18.22(a) would allow Federal officials and persons designated under section 112(c) of the Act to take marine mammals for the limited purposes outlined in Section 109(h) of the Act.

The term "Federal officials" was added in a separate rulemaking action published on May 16, 1986 (51 FR 17981).

Required Determinations

The Service has determined that the proposed regulations affecting 50 CFR 18.24 contained herein provide procedures to be followed by U.S. citizens applying for a Notice of Exemption to allow incidental taking of marine mammals and, as such, are categorically excluded from further National Environmental Policy Act requirements (Part 516 of the Departmental Manual, Chapter 6, Appendix 1, categorically excludes the issuance of regulatory procedures when the impacts are limited to administrative or technological effects). When an exemption is requested, an environmental assessment will be prepared according to the Service's National Environmental Policy Act compliance procedures.

The Service has determined that the proposed regulations affecting 50 CFR 18.22 reflect the statutory language. An environmental assessment, as defined under authority of the National Environmental Policy Act, need not be prepared for this action. There are no impacts on the public other than to remove any confusion created by the lack of consistent wording contained in the regulations and the statute.

The Department of the Interior has determined that this is not a major rule under Executive Order 12291, nor does it have a significant economic impact on a substantial number of small entities under the Regulatory Flexibility Act (5 U.S.C. 601 *et seq.*). Commercial fisheries will be applicants under the proposed regulations. This rule affects Alaskan commercial fishermen, many of whom may be considered small businesses under 5 U.S.C. 601 *et seq.* However, no significant impacts are expected. The Determination of Effects on this proposed rule is available from the individual identified under the section of this proposed rule entitled, "**FOR FURTHER INFORMATION CONTACT.**"

Information Collection Requirements

The information collection requirements contained in this proposed regulation have been submitted to the Office of Management and Budget for approval as required by 44 U.S.C. 3501 *et seq.* Collection of this information will not be required until it has been approved by the Office of Management and Budget.

The author of this proposed rule is Jeffrey L. Horwath, Wildlife Biologist, Division of Fish and Wildlife Management Assistance, U.S. Fish and Wildlife Service, Washington, DC 20240.

List of Subjects in 50 CFR Part 18

Administrative practice and procedure, Imports, Indians, Marine mammals, Transportation.

Accordingly, the Service proposes to amend 50 CFR Part 18 as shown below:

PART 18—MARINE MAMMALS

1. The authority for 50 CFR Part 18 is revised to read as follows:

Authority: Marine Mammal Protection Act of 1972, as amended (Pub. L. 92–522, 86 Stat. 1027; Pub. L. 97–58, 95 Stat. 979; Pub. L. 98–364, 98 Stat. 440 (16 U.S.C. 1361–1407)).

2. Amend the table of sections for Part 18 by revising the title for § 18.24 as shown below:

* * * * *

§ 18.24 Taking of marine mammals incidental to commercial fishing operations; small take exemption.

* * * * *

3. Revise § 18.22(a) in Subpart C—General Exceptions, to read as follows:

§ 18.22 Taking by Federal, State, or local government officials.

(a) A Federal, State or local government official or employee or a person designated under section 112(c) of the Act may take, in the course of his/her duties as an official, employee, or designee, a marine mammal in a humane manner (including euthanasia) if such taking is for:

(1) The protection or welfare of the mammal;

(2) The protection of the public health and welfare; or

(3) The nonlethal removal of nuisance animals; and, in any case in which the return of the mammal to its natural habitat is feasible, includes steps designed to achieve that result. In addition, any such official, employee, or designee may, incidental to such taking, possess and transport, but not sell or offer for sale, such mammal and use any port, harbor, or other place under the jurisdiction of the United States. All

steps reasonably practicable under the circumstances shall be taken by any such employee, official, or designee to prevent injury or death to the marine mammal as the result of such taking.

* * * * *

4. Revise § 18.24 in Subpart C—General Exceptions, to read as follows:

§ 18.24 Taking of marine mammals incidental to commercial fishing operations; small take exemption.

(a) *Purpose of regulations.* The regulations in this Section implement section 101(a)(4) of the Act, as amended (16 U.S.C. 1371(a)(4)), which provides a mechanism for allowing, during periods of not more than five consecutive years each, the incidental, but not intentional taking of small numbers of nondepleted marine mammals by citizens of the United States while engaged in commercial fishing operations within a specified geographical region.

(b) *Scope of regulations.* The taking of small numbers of marine mammals under section 101(a)(4) of the Act may be allowed only if, after notice and opportunity for public comment, the Service:

(1) Finds that the total of such taking will have a negligible impact on such non-depleted species or stocks, and

(2) Provides guidelines pertaining to the establishment of a cooperative system among the fishermen involved in the operation to monitor and report any such taking.

(c) *Definitions.* In addition to the definitions contained in the Act and 50 CFR 18.3 and, unless the context otherwise requires, in this Section:

"Incidental, but not intentional, taking" means an accidental taking. It does not mean that the taking is unexpected, but rather that it includes those takings which are infrequent, unavoidable or accidental (take is defined in 50 CFR 18.3).

"Negligible impact" means an impact which can be disregarded or which is so small or unimportant or of so little consequence as to warrant little or no attention. A finding of negligible impact cannot be made if a species or stock is considered depleted under section 3(1) of the Act.

"Small numbers" means a portion of a marine mammal species or population stock whose removal would have a negligible impact on that species or stock.

"U.S. citizens" means individual U.S. citizens or any partnership, corporation, association or similar entity (whether or not it is organized under the laws of any State) if it is controlled by individuals who are U.S. citizens.

(d) *Submission of requests.* (1) In order for the Service to consider allowing the taking by U.S. citizens of small numbers of non-depleted marine mammals incidental to commercial fishing operations, a written request must be submitted to the Director, U.S. Fish and Wildlife Service, Department of the Interior, Washington, DC 20240. Requests for an exemption are limited to U.S. citizens and shall be for a specific fishery within a specified geographical region. Individuals may not apply for a small take exemption unless they are duly authorized representatives of a fishery and have the capability and authority to establish a system for reporting all incidental takes and to receive and collate these reports. Requests for an exemption must include the following information:

(i) A detailed description of the fishery, including the type of gear used, species of fish sought, seasonality of the fishery, area of operations, number of participating fishermen and/or vessels, and the known interactions of the fishery with marine mammals.

(ii) The number of marine mammals by species expected to be taken (including by harassment) annually by the commercial fishery covered by the exemption and the reason the mammals are taken.

(iii) A description of the status and distribution of the affected species or stocks likely to be affected by the fishery so that a negligible impact determination can be made.

(iv) A statement concerning cooperative efforts, if any, between those fishermen to be covered by an exemption and scientists holding a scientific research permit authorized by sections 101(a)(1) and 104 of the Act regarding the retention of marine mammal specimens for scientific study.

(v) A description of the system to be used by the fishermen to facilitate the reporting of any incidental takes. Such information should include:

(A) Copies of the reporting form to be utilized;

(B) Name and address of the person to whom completed forms will be sent;

(C) Person who will be responsible for collating and compiling them; and

(D) Mechanism by which information on taking will be conveyed to the Director.

(vi) Any other relevant information which the Service may subsequently request.

(2) Upon receipt of a signed application, the Director shall determine the adequacy and completeness of a request and in that connection may waive any requirement for information, or require either elaboration or further information which may be deemed necessary. If the application is found to be adequate, the Service will summarize the application and invite public comment on the request through publication in the **Federal Register**. After a 30-day comment period, the Director will determine whether the total taking constitutes a negligible impact on the species or stocks of marine mammals based on public comments received and on the best scientific evidence available. If a determination can be made that the level of taking in the applicant's fishery will be consistent with the finding that the total of such taking will have a negligible impact on the marine mammal species or stocks, the Director will issue a Notice of Exemption through the **Federal Register**. Exemptions will be valid for a specified period of up to five years. An accompanying Letter of Exemption to the applicant will specify any terms or conditions relating to reducing the take of marine mammals in the fishery and any guidelines relating to the cooperative system for reporting marine mammal takings.

(3) A Letter of Exemption shall be withdrawn or suspended for a specified period if, after notice and opportunity for comment, the Director determines that either:

(i) The total taking is having more than a negligible impact on the species or stocks of marine mammals concerned;

(ii) The species or stock is subsequently determined to be depleted; or

(iii) The policies, purposes, and goals of the Act would be better served through the application of other provisions of the Act.

(e) *Conditions.* (1) A participant operating in a fishery covered by a Letter of Exemption may take marine mammals as long as the taking is an incidental occurrence in the course of normal commercial fishing operations and the participant is registered with the individual or organization responsible for compiling reports of marine mammal mortality. Taking of marine mammals without a permit by non-registered participants in the fishery will be considered a violation of sections 101 and 102 of the Act and subject to prosecution thereunder.

(2) A registered participant shall take such steps as are necessary to minimize the impact of taking or the actual take of marine mammals without inflicting death or injury to any marine mammal. Such steps may include the judicious use of non-lethal harassment, as specified by the Service in the Letter of Exemption, to prevent net entanglement

or similar occurrences that would increase jeopardy to the animal.

(3) Marine mammals taken in the course of commercial fishing operations must be immediately returned to the environment where captured without further injury. Marine mammals may not be retained by the participant except in cooperation with Government officials as authorized in section 109(h) or an individual holding a valid scientific reseach permit authorized by sections 101(a)(1) and 104 of the Act.

(f) *Record keeping and reporting requirements.* (1) All registered participants in the fishery must maintain records of incidental take of marine mammals in such a form as agreed upon by the holder of the Letter of Exemption and the Service. Such records, which are to be forwarded to the holder of the Letter of Exemption, must include at least the following information:

(i) The date and location of the taking, classified by entrapment or entanglement and whether it caused serious injury or death;

(ii) The identity and number by species of marine mammals taken and, of those taken, the number killed or injured (noting which animals and number were killed, injured, or released unharmed); and

(iii) The total amount of time actually fished and the type and amount of gear used.

(2) If there are individuals in the fishery covered by a Letter of Exemption who are not participating in the reporting scheme, then the holder of the Letter of Exemption will be expected to estimate for those nonregistered participants the total number of hours fished, so that an estimate of the total taking of marine mammals by the fleet can be made.

(3) The holder of a Letter of Exemption will be expected to compile these individual participant reports and forward a summary and assessment to the Director no later than January 30 for the preceding calendar year.

(4) Failure to comply with the conditions of the Letter of Exemption may result in actions leading to the suspension or withrawal of the Letter of Exemption and a reimposition of the general permit requirements of the Act.

Date: March 17, 1988.

Susan Recce,

Acting Assistant Secretary for Fish and Wildlife and Parks.

[FR Doc. 88-7976 Filed 4-11-88; 8:45 am]

BILLING CODE 4310-55-M

DEPARTMENT OF COMMERCE

National Oceanic and Atmospheric Administration

50 CFR Part 658

[Docket No. 80349-8049]

Shrimp Fishery of the Gulf of Mexico

AGENCY: National Marine Fisheries Service (NMFS), NOAA, Commerce.

ACTION: Proposed rule.

SUMMARY: NOAA proposes to amend the regulations for the Fishery Management Plan for the Shrimp Fishery of the Gulf of Mexico (FMP). NOAA is modifying for 1988 the area off Texas closed to trawl fishing. This action will enable fishermen to harvest marketable-sized shrimp from an area that would otherwise be closed. The intended effect is efficient management of the shrimp fishery.

DATE: Written comments must be received on or before April 27, 1988.

ADDRESS: Written comments and requests for copies of the environmental assessment and regulatory impact review should be sent to Michael E. Justen, Southeast Region, NMFS, 9450 Koger Boulevard, St. Petersburg, FL 33702.

FOR FURTHER INFORMATION CONTACT: Michael E. Justen, 813-893-3722.

SUPPLEMENTARY INFORMATION: The shrimp fishery is managed under the FMP and its implementing regulations at 50 CFR Part 658, as provided by the Magnuson Fishery Conservation and Management Act (Magnuson Act). Under the FMP, as amended, the Director, Southeast Region, NMFS, may modify the geographical scope of the seasonal closure of the exclusive economic zone (EEZ) off Texas after consultation with the Gulf of Mexico Fishery Management Council (Council), consideration of specified criteria, and determination that benefits may be increased or adverse impacts decreased by the action.

Section 658.25 of the regulations provides for a 45- to 60-day closure to shrimping in the EEZ off Texas in conjunction with that State's closure of its waters. This cooperative closure is designed to delay harvest of juvenile brown shrimp, migrating from coastal estuaries to the deeper waters of the Gulf, until they reach a larger size, thus producing more pounds of more valuable shrimp.

In 1986 the Council requested and NOAA issued emergency regulations to reduce the 200-nm (nautical miles) EEZ closure to 15 nm to provide relief to the economically troubled fishery while still protecting the majority of small shrimp. The intent was (1) to relieve the economic hardship of the shrimp fleet in the western Gulf by allowing fishing in areas where larger shrimp occur and (2) to obtain more current baseline data to analyze the effects of the closure.

In 1987 the Council again requested and NOAA issued regulations to reduce the closure to 15 nm. The intent was (1) to obtain additional information to evaluate the closure and (2) to allow fishing for larger shrimp offshore without jeopardizing the FMP's objective of optimizing yield, by deferring harvest of small shrimp located near shore.

Analysis and Justification

In 1988 the Council again requested that the closure of the EEZ off Texas extend 15 nm rather than 200 nm to provide relief to the economically troubled fishery while still protecting the majority of small shrimp until they reach a larger, more valuable size. The majority of small shrimp would be protected by this 15-nm closure, which would further the FMP's objective to optimize yield, by deferring harvest of small shrimp located near shore. Sampling by the Texas Parks and Wildlife Department and NMFS indicates that the majority of small shrimp could be protected by a 15 nm closure during most years. The average size caught beyond 15 nm in June 1987 was 66 count (i.e., tails to the pound) or nearly the same as the target size of 65 count expected from the closure.

This reduced closure area is intended to mitigate adverse social and economic impacts of the full 200 nm closure on the approximately 1,800 commercial shrimp vessels under 55 feet in length licensed by Texas. Many of these vessels do not have the capability to travel to and fish for shrimp in the open waters off other Gulf States during a full 200-nm closure off Texas. Scientific information indicated that a 200-nm closure in 1986 might have increased the value of the shrimp harvest by up to $9.8 million, as a result of deferred harvest of larger, more valuable shrimp. If this gain in value were equally divided among the estimated Gulf shrimp fleet, 5,400 shrimp vessels, it would amount to about $1,800 per vessel; however, the gain is unevenly distributed among the vessels according to size. The larger, more mobile freezer vessels are able to move to alternative shrimping areas during the 200-nm closure, while the smaller vessels are more likely to remain in port accruing fixed costs during the closure. Under these conditions the actual gain

in income is probably limited to about 3,600 vessels, or nearly $2,700 per vessel. Reduced catches of shrimp also disrupt shore facilities and cause shrimp processors and suppliers to scale back operations. Processors must rely on imports to continue operations until the reopening of the season.

Opening the EEZ beyond 15 nm during the 1988 season would allow Texas-based craft to fish in the open waters and land marketable-sized shrimp, thus providing income and employment for crew and shore facilities. The partial opening would allow harvest of larger pink and brown shrimp in the EEZ beyond 15 nm. From 1980 to 1986, offshore production of these shrimp from these waters averaged 643,000 pounds with an estimated value of $1.8 million. The strong markets for small shrimp that reduced the need for culling and discarding in 1987 likely will continue in 1988.

Available information showed that closure out to 15 nm is similar in effect to having the entire EEZ open (i.e., only State waters closed). Texas-based trawlers are able to operate outside the geographical area of the closure, thus providing continuous income and employment for the crews and shore facilities.

Attention is directed to the specification of the closed area in terms of 15 nm from the baseline from which the territorial sea is measured (in contrast to measurement from the physical shore). For the purpose of delimiting the territorial sea, the outermost permanent harbor works which form an integral part of the harbor system are regarded as forming part of the coast. The 15-nm closure line is 3 nm seaward of the line labeled on Coast Charts (1:80,000 scale) as "Contiguous Zone."

Effect on Endangered and Threatened Species and Marine Mammals

The expected change in fishing patterns during the 15 nm closure is unlikely to alter significantly the impact of the fishery on endangered species Five endangered sea turtle species are known to occur in the area (Kemp's ridley, loggerhead, green, hawksbill, and leatherback). A consultation held under section 7 of the Endangered Species Act in 1980 determined that management of the shrimp resource through cooperative closures was unlikely to jeopardize the continued existence of these endangered species.

A section 7 consultation held by NMFS in April 1986 concluded that the 15 nm closure is not likely to jeopardize the continued existence of sea turtles but may result in mortality of up to 20 Kemp's ridley and 80 loggerhead turtles. Because of this low level of take, and because regulations authorized by the Endangered Species Act require most shrimp vessels that operate in waters from 0 to 15 nm off Texas to use turtle exclusion gear beginning March 1, 1988, adequate protection is afforded sea turtles.

Classification

The Assistant Administrator for Fisheries, NOAA, determined that this proposed rule is consistent with the National Standards and other provisions of the Magnuson Act and other applicable law.

A regulatory impact review was prepared for this proposed rule and the Under Secretary, NOAA, determined that the rule is not major under Executive Order 12291.

The Council prepared an initial regulatory flexibility analysis as part of the regulatory impact review which concludes that this proposed rule, if adopted, would have significant effects on small entities. You may obtain a copy of this analysis from NMFS at the address above.

This proposed rule contains no information collection requirement for purposes of the Paperwork Reduction Act.

The Council prepared an environmental assessment for this proposed rule and the Assistant Administrator for Fisheries concluded that there will be no significant impact on the human environment as a result of this rule. A copy of the environmental assessment is available from the address above.

This proposed rule does not contain policies with federalism implications sufficient to warrant preparation of a federalism assessment under Executive Order 12612.

The Assistant Administrator determined that his proposed rule does not directly affect the coastal zone of any State with an approved coastal zone management program. Texas, the only State involved, does not have an approved coastal zone management program.

List of Subjects in 50 CFR Part 658

Fisheries, Fishing.

Dated: April 7, 1988.

James E. Douglas, Jr.,

Acting Assistant Administrator for Fisheries, National Marine Fisheries Service.

For reasons set forth in the preamble, 50 CFR Part 658 is proposed to be amended as follows:

PART 658—SHRIMP FISHERY OF THE GULF OF MEXICO

1. The authority citation for Part 658 continues to read as follows:

Authority: 16 U.S.C. 1801 *et seq.*

2. In § 658.25, paragraph (a) is suspended from May 15 through July 31, 1988, and a new paragraph (c) is added, to be effective from May 15 through July 31, 1988, to read as follows:

§ 658.25 Texas closure.

* * * * * *

(c) *Area and season restrictions.* Between June 1 and July 15, 1988, the area described in this paragraph is closed to all trawl fishing. The area is that part of the EEZ within 15 nautical miles of the baseline from which the territorial sea is measured off Texas west of a line connecting point A (29°32.1′ N. latitude, 93°47.7′ W. longitude) to point B (26°11.4′ N. latitude, 92°53.0′ W. longitude) as shown in Figure 3.

[FR Doc. 88-7980 Filed 4-7-88; 4:35 pm]

BILLING CODE 3510-22-M

Notices

Federal Register
Vol. 53, No. 70
Tuesday, April 12, 1988

This section of the FEDERAL REGISTER contains documents other than rules or proposed rules that are applicable to the public. Notices of hearings and investigations, committee meetings, agency decisions and rulings, delegations of authority, filing of petitions and applications and agency statements of organization and functions are examples of documents appearing in this section.

ADMINISTRATIVE CONFERENCE OF THE UNITED STATES

Indemnification of Government Contractors

AGENCY: Administrative Conference of the United States.

ACTION: Request for public comments.

SUMMARY: The Administrative Conference's Committee on Governmental Processes has under consideration a draft recommendation on federal government indemnification of government contractors. Interested persons are invited to comment on the draft recommendation.

DATE: Please submit comments by May 3, 1988.

ADDRESS: Send comments to David M. Pritzker, Administrative Conference of the United States, 2120 L Street, NW., Suite 500, Washington, DC 20037.

FOR FURTHER INFORMATION CONTACT: David M. Pritzker, 202–254–7065.

SUPPLEMENTARY INFORMATION: The Administrative Conference's Committee on Governmental Processes has under consideration a draft recommendation of federal government indemnification of government contractors. The proposed recommendation is based in part on a draft report written by Professor Frank P. Grad, Chamberlain Professor of Legislation at the Columbia University School of Law. The committee also took into account comments received in response to a notice of inquiry published in the **Federal Register** on February 9, 1988 (53 FR 3766). The text of the draft recommendation is printed in full below. Copies of Professor Grad's draft report are available from the Office of the Chairman of the Administrative Conference.

The draft recommendation proposes steps that Federal agencies can take to improve the way in which they make decisions on whether to include indemnification clauses in government contracts. Affected agencies are urged to set forth clear written statements of the extent of their authority to indemnify contractors. Several factors are identified which ought to be considered in determining whether to agree to indemnification. The recommendation also addresses the need for adequate risk assessments in deciding on indemnification, and suggests referral and interagency cooperation as a way of assisting agencies that do not often confront such decisions.

The committee does not offer any advice on whether existing agency authority to indemnify contractors should be altered. Determination of such matters depends on substantive and political considerations that are beyond the purview of the Administrative Conference. However, the proposal would call for compilation of information that would provide a better basis in the future for ascertaining the need for and risk associated with broader indemnification.

The Conference's Committee on Governmental Processes will meet in early May for further consideration of the draft recommendation in the light of any comments that may be received. At that time, the committee will decide whether to approve a draft recommendation for consideration by the Administrative Conference at its Plenary Session scheduled for June 9 and 10, 1988. Comments should be sent to the address given above.

Draft Recommendation: Federal Government Indemnification of Government Contractors

Indemnification of government contractors for third-party liability involves this issue: who should bear the risk of injury or damage to a third party caused by products and services supplied by government contractors—the government, the contractor, or the third party? This issue is especially significant when the products and services involve high-risk or hazardous governmental activities.

The liability of the government is limited by the doctrine of sovereign immunity, which has been waived only in certain situations, such as the Federal Tort Claims Act. Some courts have recognized a common law immunity for government contractors who have complied with pertinent government specifications and have disclosed all known defects or hazards to the government. In the absence of insurance or an indemnity, government contractors are exposed to claims based on alleged failure to follow specifications or adequately warn the government or others about product design defects.

No government-wide legislation provides generally for indemnification of government contractors for third-party liability, although a number of individual departments and agencies are authorized to indemnify contractors.[1] All of the laws authorizing government indemnification of contractors state conditions that must be met before contractual indemnity will be granted, and designate the official who is to determine whether the conditions have been met. Thus some statutes restrict indemnification to unusually hazardous governmental activities or activities that may result in catastrophic losses and further require the contractor to obtain such insurance as is available. Indemnification clauses included in contracts usually contain further conditions, some of which are required by agency rule. A common restriction is that the indemnity does not cover claims resulting from the contractor's willful misconduct.

Indemnification clauses are reserved for unusual circumstances, and few contractors are actually provided with indemnity. The Department of Defense, for example, included indemnification clauses in an average of about 70 contracts per year in the five-year period 1980–1984; during fiscal year 1984 alone, the Department executed over 14.8 million contract actions.

The Conference's study of contractual indemnification found virtually no

[1] Examples are the National Defense Contracts Act, 50 U.S.C. 1431, as implemented by Executive Order 10789 (providing for indemnification under national defense contracts for unusually hazardous or nuclear risks); section 2354 of title 10 of the United States Code (providing for indemnification for unusually hazardous defense research and development activities); section 170 of the Atomic Energy Act, as amended by the Price-Anderson Act of 1957, 42 U.S.C 2210(d) (providing indemnification for activities involving the risk of a substantial nuclear incident); the Federal Aviation Act, as amended, 49 U.S.C. 1531 et seq. (providing for indemnification for risks where aircraft operations are necessary to carry out U.S. foreign policy); and the National Aeronautics and Space Act, as amended, 42 U.S.C. 2458b (providing for indemnification for damages related to the launch, operation or recovery of space vehicles).

evidence of claims made on the basis of indemnification clauses or litigation over such claims. Although there is no indication that the government has incurred significant costs under contractual indemnity provisions in the 30 years that have passed since enactment of the National Defense Contracts Act in 1958 and the Price-Anderson Act in 1957, the space shuttle disaster and the Three Mile Island nuclear incident suggest that contingent liabilities under indemnity agreement are potentially costly.[2]

The Conference's study found that agencies generally do not believe that current practices and limits on indemnities discourage potential contractors from bidding. Federal agencies, with few exceptions, see little need for greater indemnification authority or for broad legislation that would extend indemnities to government contractors generally. However, this view is not shared by many federal contractors. They take the position that the decreasing availability of private insurance for a broad range of hazardous activities is greatly reducing the pool of bidders for contracts involving those activities in the absence of government indemnification. This legislative debate is beyond the scope of the present recommendation.

While the Conference takes no position of the current debate over proposals to expand agency authority to indemnify contractors for hazardous activities, mass injuries, or other special circumstances, the Conference does recommend the compilation of certain information that would provide a better basis in the future for ascertaining the need for and risks associated with broader indemnification.

This recommendation also identifies several factors that agencies should consider when they determine whether to grant an indemnity clause to a particular contractor. These decisions ordinarily require an assessment of whether the activity in question involves an unacceptable hazard or degree of risk. Sometimes the degree of risk is defined in terms of availability of insurance. Agencies regularly engaged in high-risk activities and able to grant indemnity clauses, such as the Department of Energy, Nuclear Regulatory Commission, or National Aeronautics and Space Administration, would normally have the resources to perform risk assessments. However, contracting offices of other agencies that confront these issues less frequently may not have adequate technical expertise to decide. It has been asserted that there is often great uncertainty, and such decisions may be made inconsistently. The recommendation suggests referral and interagency cooperation as a way of meeting this problem.

Recommendation

1. *Identification of Agency Authority to Indemnify.* Each agency that anticipates a possible need to indemnify any of its contractors against liability to third parties should set forth, in a policy statement of regulation, the agency's understanding of the extent and source of its authority to indemnify contractors. The agency should consult with the Department of Justice in drafting the statement.

2. *Agency Decision Whether to Grant an Indemnity Clause.* Any decision by an agency concerning whether to grant an indemnity clause to a contractor should take into account the following factors:

(a) The nature and magnitude of the risks involved in the covered activities;

(b) The source of funds that would be used to pay an award under the indemnity clause, and the impact, if any, that such an award will have on the programs of the agency or other units of the government;

(c) The incentives that either providing or denying an indemnification clause would give the agency for supervising contractual performance, so as to provide for maximum protection of the public from injury and to protect the government from unwarranted liability in light of the identifiable risks;

The incentives that the contractor would have, assuming indemnification were granted, for performing under the contract in a safe and prudent manner;

(e) The incentives that the contractor would have, assuming indemnification were granted, to defend itself or to help the government in any subsequent litigation; and

(f) Any effects, assuming indemnification were granted, on the ability or the willingness of the insurance industry to make available private insurance for the kinds of activities to which the indemnification would apply.

3. *The Need for More Information.* Each agency that has paid out any sum of money or received any claims for payment under a contractual obligation to indemnify a contractor, or on whose behalf such sums have been paid by the federal government, should report all such payments and claims to the Comptroller General on an annual basis. The Comptroller General should periodically issue a report summarizing the information received. All such reports should be made available to the public except to the extent that release of any information included is prohibited by law. The Comptroller General should also obtain from each affected agency a list, updated periodically, of all existing contractual indemnity clauses.

4. *Contracting Office Expertise.* Where an agency contracting office must consider whether to grant an indemnity clause, but does not have sufficient technical expertise to assess the degree of risk, the extent of the hazard, or the availability of insurance, these questions should be assigned to an office that does have the requisite expertise to make such decisions or to assist the contractng office in making such decisions.

5. *Indemnity in High Risk Areas.* When an agency becomes engaged in contracting for activities that involve special risks for which the agency's staff is not able to conduct adequate risk assessments (for example, newly emerging technological risks), it is appropriate to seek the assistance and cooperation of other agencies. Agencies that are frequently or normally engaged in similar high-risk activities should cooperate to make available to requesting agencies staff members whose experience in risk assessment may be helpful. It may be appropriate to create a small, highly-qualified risk assessment office to furnish or coordinate such assistance.

Dated, April 7, 1988.

Jeffrey S. Lubbers,

Research Director.

[FR Doc. 88-7975 Filed 4-7-88; 4:06 pm]

BILLING CODE 6110-01-M

[2] In 1982, the Comptroller General issued an opinion (B-201672, May 3, 1982; reconsid. 62 Comp. Gen. 361 (1983)) stating that to comply with the Federal Anti-Deficiency Act, 31 U.S.C. 1341, indemnity clauses in government contract must specify that the indemnity is available only to the extent of available authorized appropriations. This limitation, however, has limited impact where Congress has set maximum indemnity limits by statute, as in the Price-Anderson Act, or where no ceiling is set, as in the National Defense Contracts Act. The Price-Anderson Act reauthorization is pending as of the date of this recommendation.

Committee on Judicial Review; Public Meeting

Summary: Pursuant to the Federal Advisory Committee Act (Pub. L. 92-463), notice is hereby given of a meeting of the Committee on Judicial Review of the Administrative Conference of the United States. The Committee has scheduled this meeting to continue discussion of Professor Thomas

Sargentich's draft report on assignment of federal court jurisdiction over interlocutory challenges to agency action and draft recommendations based on that report.

Date: Thursday, April 21, 1988 at 9:30 a.m.

Location: United States Claims Court, Courtroom 4, 5th Floor, 717 Madison Place NW., Washington, DC. 20005

Public Participation: Committee meetings are open to the interested public, but limited to the space available. Persons wishing to attend should notify the contact person at least two days prior to the meeting. The committee chairman may permit members of the public to present oral statements at the meetings. Any member of the public may file a written statement with the committee before during, or after, the meeting. Minutes of the meeting will be available on request.

For Further Information Contact: Mary Candace Fowler, Office of the Chairman Administrative Conference of the United States, 2120 L Street, NW, Suite 500 (202) 254-7020.

April 8, 1988.

Jeffrey S. Lubbers,

Research Director.

[FR Doc. 88-8016 Filed 4-11-88; 8:45 am]

BILLING CODE 6110-01-M

DEPARTMENT OF AGRICULTURE

Office of the Secretary

National Plant Genetic Resources Board; Notice of Renewal

The Department of Agriculture has renewed the National Plant Genetic Resources Board for a 2-year period.

The Board was originally established in July 1975 by the Secretary and was last renewed on May 8, 1986.

The purpose of the Board is to advise the Secretary of Agriculture and officers of the National Association of State Universities and Land-Grant Colleges in order to assess national needs and identify high-priority programs for conserving and utilizing plant genetic resources, including such things as collection, maintenance and description of genetic stocks, and utilization of the stocks in plant improvement programs.

The Secretary has determined that continuation of the Board is necessary and in the public interest in order to assure adequate supplies of food, feed, and fiber by minimizing the genetic vulnerability of crops.

Done at Washington, DC, this 6th day of April 1988.

John J. Franke, Jr.,

Assistant Secretary for Administration.

[FR Doc. 88-7927 Filed 4-11-88; 8:45 am]

BILLING CODE 3410-03-M

Soil Conservation Service

Pamunkey River Watershed; Finding of No Significant Impact

AGENCY: Soil Conservation Service, USDA.

ACTION: Notice of a Finding of No Significant Impact.

SUMMARY: Pursuant to section 102(2)(C) of the National Environmental Policy Act of 1969; the Council on Environmental Quality Guidelines (40 CFR Part 1500; and the Soil Conservation Service Guidelines (CFR Part 650); the Soil Conservation Service, U.S. Department of Agriculture, gives notice that an environmental impact statement is not being prepared for the Pamunkey River Watershed in King William County, Virginia.

FOR FURTHER INFORMATION CONTACT: Mr. George C. Norris, State Conservationist, Soil Conservation Service, 400 North Eighth Street, Richmond, Virginia 23240-9999, telephone (804) 771-2455.

SUPPLEMENTARY INFORMATION: The environmental assessment of this federally assisted action indicates that the project will not cause significant local, regional, or national impacts on the environment. As a result of these findings, Mr. George C. Norris, State Conservationist, has determined that the preparation and review of an environmental impact statement are not needed for this project.

The project concerns a plan for reducing soil erosion on 11,420 acres of cropland, pastureland, and forestland and the installation of seven animal waste systems to improve water quality in the Pamunkey River. This will be accomplished by installation of soil and water conservation practices.

The Notice of Finding of No Significant Impact (FONSI) has been forwarded to the Environmental Protection Agency and to various Federal, State, and local agencies and interested parties. A limited number of copies of the FONSI are available to fill single-copy requests at the above address. Basic data developed during the environmental assessment are on file and may be reviewed by contacting Mr. George C. Norris, State Conservationist.

No administrative action on implementation of the proposal will be taken until 30 days after the date of this publication in the **Federal Register.**

(Catalog of Federal Domestic Assistance Program No. 10,901, Resource Conservation and Development Program. Executive Order 12372 regarding inter-government review of federal and federally-assisted programs and projects is applicable.)

Date: April 1, 1988.

George C. Norris,

State Conservationist.

[FR Doc. 88-7960 Filed 4-11-88; 8:45 am]

BILLING CODE 3410-16-M

Upper Choptank River Watershed, DE; Finding of No Significant Impact

AGENCY: Soil Conservation Service, USDA.

ACTION: Notice of a finding of no significant impact.

SUMMARY: Pursuant to section 102(2)(C) of the National Environmental Policy Act of 1969; the Council of Environmental Quality Guidelines (40 CFR Part 1500); and the Soil Conservation Service Guidelines (7 CFR Part 650); and the Soil Conservation Service, U.S. Department of Agriculture, gives notice that an environmental impact statement is not being prepared for the Upper Choptank River Watershed Plan Supplement, Kent County, Delaware.

FOR FURTHER INFORMATION CONTACT: Mr. Douglas E. Hawkins, State Conservationist, Soil Conservation Service, 9 E. Loockerman Street, Suite 207, Dover, Delaware 19901-7377, telephone (302 678-4160).

SUPPLEMENTARY INFORMATION: The environmental assessment of this federally assisted action indicates that the project will not cause significant local, regional, or national impacts on the environment. As a result of these findings, Douglas E. Hawkins, State Conservationist, has determined that the preparation and review of an environmental impact statement are not needed for this project.

The project concerns a plan for agricultural water management and water quality improvement. The planned works of improvement include structures for water control and attendant practices to protect the structures, which include controlled inlet pipes, grade stabilization structures, shaped berms, and accelerated technical assistance for land treatment.

The Notice of Finding of No Significant Impact (FONSI) has been

forwarded to the Environmental Protection Agency and to various Federal, State, and local agencies and interested parties. A limited number of copies of the FONSI are available to fill single copy requests at the above address. Basic data developed during the environmental assessment are on file and may be reviewed by contacting Mr. Douglas E. Hawkins.

No administrative action on implementation of the proposal will be taken until 30 days after the date of this publication in the **Federal Register**.

(This activity is listed in the Catalog of Federal Domestic Assistance Under No. 10.904, Watershed Protection and Flood Prevention Program, and is subject to the provision of Executive Order 12372 which requires intergovernmental consultation with State and Local officials).

Douglas E. Hawkins,

State Conservationist.

April 4, 1988.

[FR Doc. 88-7903 Filed 4-11-88; 8:45 am]

BILLING CODE 3410-16-M

DEPARTMENT OF COMMERCE

Agency Information Collection Under Review by the Office of Management and Budget (OMB)

DOC has submitted to OMB for clearance the following proposal for collection of information under the provisions of the Paperwork Reduction Act (44 U.S.C. Chapter 35).

Agency: United States Travel and Tourism Administration

Title: Survey of International Air Travelers

Form Number: Agency—N/A; OMB—0605-0007

Type of Request: Extension of the expiration date of a currently approved collection

Needs and Uses: The National Tourism Policy Act directs the Department of assist in the collection, analysis, and dissemination of tourism data. This survey provides consumer marketing data on international travelers and is used to identify and analyze specific foreign travel markets. It is used by private and public sector entities in developing marketing programs.

Affected Public: Individuals

Frequency: Monthly

Respondent's Obligation: Voluntary

OMB Desk Officer: John Griffen, 395-7340

Copies of the above information collection proposal can be obtained by calling or writing DOC Clearance Officer, Edward Michals, (202) 377-3271, Department of Commerce, Room 6622, 14th and Constitution Avenue, NW., Washington, DC 20230.

Written comments and recommendations for the proposed information collection should be sent to John Griffen, OMB Desk Officer, Room 3228, New Executive Office Building, Washington, DC 20503.

Dated: April 6, 1988.

Edward Michals,

Departmental Clearance Officer, Office of Management and Organization.

[FR Doc. 88-7904 Filed 4-11-88; 8:45 am]

BILLING CODE 3510-CW-M

Foreign-Trade Zones Board

[Docket No. 19-88]

Foreign-Trade Zone 29, Louisville, KY; Application for Subzone for Hitachi Auto Components Plant, Harrodsburg, KY

An application has been submitted to the Foreign-Trade Zones Board (the Board) by the Louisville and Jefferson County Riverport Authority, grantee of FTZ 29, requesting special-purpose subzone status for the automobile components manufacturing plant of Hitachi Automotive Products (USA), Inc. (subsidiary of Hitachi, Ltd., Japan), located in Harrodsburg, Kentucky. The application was submitted pursuant to the provisions of the Foreign-Trade Zones Act, as amended (19 U.S.C. 81a-81u), and the regulations of the Board (15 CFR Part 400). It was formally filed on March 30, 1988.

The Hitachi plant (50 acres) is located at 955 Warwick Road, Harrodsburg, Kentucky. The facility employs 250 persons and is used to produce automobile components such as alternators, starter motors, engine control modules, ignition coils, pressure signal transducers, air flow meters, and pollution control cannisters. Foreign sourced materials for those products range from 40 to 84 percent of the value of the products. They include items such as integrated circuits, transistors, capacitors, resistors, connectors, transducers, coils, armatures, yokes, pinions, magnetic assemblies, plungers, bushings, motors, sensors, activated charcoal, cases, covers and fasteners. Hitachi has plans to export some of the finished products to Japan and Canada.

Zone procedures would exempt Hitachi from Customs duty payments on foreign materials used in its exports. On domestic sales, the company would be able to choose the same finished product duty rate that applies to the completed components (3.1-4.9%). The rates on materials and subcomponents range from 0.0 to 11.0%. If the components are shipped to auto assembly plants with subzone status the auto duty rate (2.5%) would apply. The applicant indicates that the savings would help improve the plant's international competitiveness.

In accordance with the Board's regulations, an examiners committee has been appointed to investigate the application and report to the Board. The committee consists of: Dennis Puccinelli (Chairman), Foreign-Trade Zones Staff, U.S. Department of Commerce, Washington, DC 20230; John F. Nelson, District Director, U.S. Customs Service, North Central Region, 6th Floor, Plaza Nine Bldg., 55 Erieview Plaza, Cleveland, OH 44114; and Colonel Robert L. Oliver, District Engineer, U.S. Army Engineer District Louisville, P.O. Box 59, Louisville, KY 40201.

Comments concerning the proposed subzone are invited in writing from interested parties. They should be addressed to the Board's Executive Secretary at the address below and postmarked on or before May 27.

A copy of the application is available for public inspection at each of the following locations:

U.S. Dept. of Commerce District Office, Gene Snyder Courthouse and Customhouse, 601 W. Broadway, Room 636B, Louisville, KY 40202

Office of the Executive Secretary, Foreign-Trade Zones Board, U.S. Department of Commerce, Room 1529, 14th & Pennsylvania Avenue NW., Washington, DC 20230.

Dated: April 6, 1988.

John J. Da Ponte, Jr.,

Executive Secretary.

[FR Doc. 88-7970 Filed 4-11-88; 8:45 am]

BILLING CODE 3510-DS-M

Foreign-Trade Subzone 29E, Scott County, KY; Toyota Automobile Manufacturing Plant (A-10-88); Manufacturing of Engines, Axles and Steering Columns

The Foreign-Trade Zones Board has been advised by Toyota Motor Manufacturing, U.S.A., Inc. (TMM), that it will soon begin using zone procedures at its auto assembly plant in Scott County, Kentucky, pursuant to the authority granted by the Board on December 18, 1987 (Board Order 369, 53 FR 45, 1-4-88). The company indicates that it plans to manufacture engines, axles, and steering columns, beginning in late 1988, for the vehicles produced at this plant, instead of importing these

items from its plants abroad as had been indicated in the subzone application.

TMM seeks confirmation that the manufacture of these items under zone procedures is within the scope of the foregoing Board order. The FTZ Staff has reviewed the matter, and it appears that the proposed activity involving the shifting of production of major components to the United States is within the range of activity sanctioned in the order. Before issuing its final decision, the FTZ Staff invites the comments of interested parties on this question.

Comments must be submitted in writing (triplicate) and postmarked on or before May 12, 1988. They should be addressed as follows: Office of the Executive Secretary, Foreign-Trade Zones Board, U.S. Department of Commerce, Room 1529, 14th and Pennsylvania Avenue NW., Washington, DC 20230.

Dated: April 6, 1988.

John J. Da Ponte, Jr.,

Executive Secretary.

[FR Doc. 88-7971 Filed 4-11-88; 8:45 am]

BILLING CODE 3510-DS-M

International Trade Administration

Laser and Opto-Electronic Subcommittee of the Electronic Instrumentation Technical Advisory Committee; Open Meeting

A meeting of the Laser and Opto-Electronic Subcommittee of the Electronic Instrumentation Technical Advisory Committee will be held May 11, 1988, in the Herbert C. Hoover Building, 14th & Constitution Avenue NW., Washington, DC. The May 11 meeting will convene in Room B-841 at 9:30 a.m.

The Subcommittee advises the Office of Technology and Policy Analysis with respect to technical questions which affect the level of export controls applicable to lasers and related equipment and technology.

Agenda

1. Opening remarks by the Chairman.
2. Public discussion on any matters related to the activities of the Laser and Opto-Electronic Subcommittee of the Electronic Instrumentation Technical Advisory Committee.
3. Committee discussion on specific proposed revisions to CCL entry 1522, Lasers. The proposed revisions include: Recommendations concerning GLV levels and G-COM and GFW regulations, redefinition of certain laser equipment and the proposed assignment of certain equipment containing lasers to other CCL entries.

The meeting will be open to the public and a limited number of seats will be available. To the extent time permits, members of the public may present oral statements to the Subcommittee. Written statements may be submitted at any time before or after the meeting and can be directed to: Technical Support Staff, Office of Technology & Policy Analysis, Room 4606, 14th Street & Constitution Ave., NW., Washington, DC 20230.

For further information or copies of the minutes, contact Carol P. Willis, 202-377-2583.

Date: March 29, 1988.

Betty A. Ferrell,

Acting Director, Technical Support Staff, Office of Technology and Policy Analysis.

[FR Doc. 88-7947 Filed 4-11-88; 8:45 am]

BILLING CODE 3510-DT-M

COMMITTEE FOR THE IMPLEMENTATION OF TEXTILE AGREEMENTS

Adjustment of Import Limits for Certain Cotton and Man-Made Fiber Textile Products Produced or Manufactured in the People's Republic of Bangladesh

April 6, 1988.

AGENCY: Committee for the Implementation of Textile Agreements (CITA).

ACTION: Issues a directive to the Commissioner of Customs adjusting limits.

EFFECTIVE DATE: April 13, 1988.

Authority: E.O. 11651 of March 3, 1972, as amended; sec. 204 of the Agricultural Act of 1956, as amended (7 U.S.C. 1854)

FOR FURTHER INFORMATION CONTACT: Anne Novak, International Trade Specialist, Office of Textiles and Apparel, U.S. Department of Commerce, (202) 377-4212. For information on the quota status of these limits, refer to the Quota Status Reports posted on the bulletin boards of each Customs port. For information on embargoes and quota re-openings, call (202) 377-3715.

SUPPLEMENTARY INFORMATION: The current limits for Categories 347/348 and 638/639 are being increased by application of swing. The limit for Category 635 is being reduced to account for the increases.

A description of the textile categories in terms of T.S.U.S.A. numbers is available in the CORRELATION: Textile and Apparel Categories with Tariff Schedules of the United States Annotated (see **Federal Register** notice 52 FR 47745, dated December 11, 1987). Also see 53 FR 752, published on January 12, 1988.

The letter to the Commissioner of Customs and the actions taken pursuant to it are not designed to implement all of the provisions of the bilateral agreement, but are designed to assist only in the implementation of certain of its provisions.

James H. Babb

Chairman, Committee for the Implementation of Textile Agreements.

April 6, 1988.

Committee for the Implementation of Textile Agreements

Commissioner of Customs,
Department of the Treasury, Washington, DC 20229

Dear Mr. Commissioner: This directive amends, but does not cancel, the directive of January 7, 1988, concerning imports into the United States of certain cotton and man-made fiber textile products, produced or manufactured in Bangladesh and exported during the twelve-month period which began on February 1, 1988 and extends through January 31, 1989.

Effective on April 13, 1988, the directive of January 7, 1988 is amended to adjust the previously established restraint limits for the following categories, under the terms of the current bilateral agreement between the Governments of the United States and the People's Republic of Bangladesh.

Category	Adjusted limits[1]
347/348	1,179,106 dozen.
638/639	870,790 dozen.
635	107,572 dozen.

[1] The limits have not been adjusted to account for any imports exported after January 31, 1988.

The Committee for the Implementation of Textile Agreements has determined that these actions fall within the foreign affairs exception to the rulemaking provisions of 5 U.S.C. 553(a)(1).

Sincerely,

James H. Babb,

Chairman, Committee for the Implementation of Textile Agreements.

[FR Doc. 88-7951 Filed 4-11-88; 8:45 am]

BILLING CODE 3510-DR-M

Adjustment of an Import Limit for Certain Cotton Textile Products Produced or Manufactured in Sri Lanka

April 7, 1988.

AGENCY: Committee for the Implementation of Textile Agreements (CITA).

ACTION: Issuing a directive to the Commissioner of Customs adjusting a limit.

EFFECTIVE DATE: April 7, 1988.

Authority: E.O. 11651 of March 3, 1972, as amended; sec. 204 of the Agricultural Act of 1956, as amended (7 U.S.C. 1854)

FOR FURTHER INFORMATION CONTACT: Kimbang Pham, International Trade Specialist, Office of Textiles and Apparel, U.S. Department of Commerce, (202) 377–4212. For information on the quota status of this limit, refer to the Quota Status Reports posted on the bulletin boards of each Customs port or call (202) 343–6580. For information on embargoes and quota re-openings, call (202) 377–3715.

SUPPLEMENTARY INFORMATION: The current limit for Category 336 is being increased for special carryforward for the period January 1, 1988 through May 31, 1988.

A description of textile categories in terms of T.S.U.S.A. numbers is available in the CORRELATION: Textile and Apparel Categories with Tariff Schedules of the United States Annotated (see **Federal Register** notice 52 FR 47745, dated December 11, 1987). Also see 52 FR 18413, published on May 15, 1987 and 53 FR 52 and 53 FR 53, published on January 4, 1988.

The letter to the Commissioner of Customs and the actions taken pursuant to it are not designed to implement all of the provisions of the bilateral agreement, but are designed to assist only in the implementation of certain of its provisions.

William J. Dulka

Acting Chairman, Committee for the Implementation of Textile Agreements.

April 7, 1988.

Committee for the Implementation of Textile Agreements

Commissioner of Customs,
Department of the Treasury, Washington, D.C. 20229

Dear Mr. Commissioner: This directive amends, but does not cancel the directive issued to you on December 30, 1987 by the Chairman, Committee for the Implementation of Textile Agreements, concerning imports into the United States of certain cotton and man-made fiber textile products, produced or manufactured in Sri Lanka and exported during the period which began on January 1, 1988 and extends through May 31, 1988.

Effective on April 7, 1988, the directive of December 30, 1987 is hereby amended to adjust the limit for Category 336 to 57,378 dozen [1], as provided under the terms of the bilateral agreement of May 10, 1983, as amended.

The Committee for the Implementation of Textile Agreements has determined that this action falls within the foreign affairs exception to the rulemaking provisions of 5 U.S.C. 553(a)(1).

Sincerely,

William J. Dulka,

Acting Chairman, Committee for the Implementation of Textile Agreements.

[FR Doc. 88–7950 Filed 4–11–88; 8:45 am]

BILLING CODE 3510-DR-M

[1] The limit has not been adjusted to account for any imports exported after December 31, 1987.

Adjustment of Import Limits for Certain Cotton Textile Products Produced or Manufactured in Sri Lanka

April 7, 1988.

AGENCY: Committee for the Implementation of Textile Agreements (CITA).

ACTION: Issuing a directive to the Commissioner of Customs adjusting limits.

EFFECTIVE DATE: April 19, 1988.

Authority: E.O. 11651 of March 3, 1972, as amended; sec. 204 of the Agricultural Act of 1956, as amended (7 U.S.C. 1854).

FOR FURTHER INFORMATION CONTACT: Kimbang Pham, International Trade Specialist, Office of Textiles and Apparel, U.S. Department of Commerce, (202) 377–4212. For information on the quota status of these limits, refer to the Quota Status Reports posted on the bulletin boards of each Customs port or call (202) 343–6580. For information on embargoes and quota re-openings, call (202) 377–3715.

SUPPLEMENTARY INFORMATION: The current limits for Categories 342 and 348 are being increased for special carryforward for the period January 1, 1988 through May 31, 1988. As a result of the adjustment to Category 348, the limit, which is currently filled, will re-open.

A description of textile categories in terms of T.S.U.S.A. numbers is available in the CORRELATION: Textile and Apparel Categories with Tariff Schedules of the United States Annotated (see **Federal Register** notice 52 FR 47745, dated December 11, 1987). Also see 52 FR 18413, published on May 15, 1987 and 53 FR 52 and 53 FR 53, published on January 4, 1988.

The letter to the Commissioner of Customs and the actions taken pursuant to it are not designed to implement all of the provisions of the bilateral agreement, but are designed to assist only in the implementation of certain of its provisions.

William J. Dulka,

Acting Chairman, Committee for the Implementation of Textile Agreements.

April 7, 1988.

Committee for the Implementation of Textile Agreements

Commissioner of Customs,
Department of the Treasury, Washington, DC 20229

Dear Mr. Commissioner: This directive amends, but does not cancel, the directive issued to you on December 30, 1987 by the Chairman, Committee for the Implementation of Textile Agreements, concerning imports into the United States of certain cotton and man-made fiber textile products, produced or manufactured in Sri Lanka and exported during the period which began on January 1, 1988 and extends through May 31, 1988.

Effective on April 19, 1988, the directive of December 30, 1987 is hereby amended to adjust the following limits, as provided under the terms of the bilateral agreement of May 10, 1983, as amended:

Category	Adjusted limit [1]
342	149,289 dozen.
348	209,662 dozen.

[1] The limits have not been adjusted to account for any imports exported after December 31, 1987.

The Committee for the Implementation of Textile Agreements has determined that these actions fall within the foreign affairs exception to the rulemaking provisions of 5 U.S.C. 553(a)(1).

Sincerely,

William J. Dulka,

Acting Chairman, Committee for the Implementation of Textile Agreements.

[FR Doc. 88–7948 Filed 4–7–88; 5:07 pm]

BILLING CODE 3510-DR-M

Cancellation of Visas for Certain Cotton Textile Products Produced or Manufactured in Sri Lanka

April 7, 1988.

AGENCY: Committee for the Implementation of Textile Agreements (CITA).

ACTION: Issuing a directive to the Commissioner of Customs cancelling visas.

EFFECTIVE DATE: April 19, 1988.

Authority: E.O. 11651 of March 3, 1972, as amended; sec. 204 of the Agricultural Act of 1956, as amended (7 U.S.C. 1854)

FOR FURTHER INFORMATION CONTACT: Kimbang Pham, International Trade Specialist, Office of Textiles Apparel, U.S. Department of Commerce, (202) 377–4212.

SUPPLEMENTARY INFORMATION: The Government of Sri Lanka has notified the United States Government that an undetermined amount of goods in Category 348, which are currently in embargo at U.S. Customs ports, may be accompanied by fraudulent visas. At the request of the Government of Sri Lanka, visas issued on or after June 1, 1987 for Category 348 are being cancelled. The Government of Sri Lanka will accept visa waiver requests for shipments of Category 348 which have been determined by the Government of Sri Lanka to be accompanied by a valid visa. Contact Ms. Manel De Silva, Embassy of the Democratic Socialist Republic of Sri Lanka, 2148 Wyoming Avenue, NW. Washington, DC 20008.

A valid visa issued by the Government of Sri Lanka on or after June 1, 1988 will be required for entry of Category 348 exported on or after June 1, 1988. Shipments accompanied by visas issued before June 1, 1988 will be denied entry unless further notice is published in the **Federal Register**.

A description of textile categories in terms of T.S.U.S.A. numbers is available in the CORRELATION: Textile and Apparel Categories with Tariff Schedules of the United States Annotated (see **Federal Register** notice 52 FR 47745, dated December 11, 1987).

William J. Dulka,

Acting Chairman, Committee for the Implementation of Textile Agreements.

Committee for the Implementation of Textile Agreements

April 7, 1988.

Commissioner of Customs,
Department of the Treasury
Washington, DC 20229

Dear Mr. Commissioner: Effective on April 19, 1988 and until further notice, you are directed to prohibit entry into the United States (i.e., the 50 States, the District of Columbia and the Commonwealth of Puerto Rico) for consumption and withdrawal from warehouse for consumption of cotton textile products in Category 348, produced or manufactured in Sri Lanka and exported during the period June 1, 1987 through May 31, 1988 for which the Government of Sri Lanka has issued an export visa.

Visa waivers shall be required for shipments of Category 348 which are exported during the period June 1, 1987 through May 31, 1988 and determined by the Government of Sri Lanka to be accompanied by a valid visa.

A valid visa issued by the Government of Sri Lanka on or after June 1, 1988 shall be required for entry of goods exported on or after June 1, 1988. Shipments accompanied by visas issued before June 1, 1988 shall be denied entry.

The Committee for the Implementation of Textile Agreements has determined that these actions fall within the foreign affairs exception to the rulemaking provisions of 5 U.S.C. 553(a)(1).

Sincerely,

William J. Dulka,

Acting Chairman, Committee for the Implementation of Textile Agreements.

[FR Doc. 88-7949 Filed 4-7-88; 5:07 pm]

BILLING CODE 3510-DR-M

DEPARTMENT OF DEFENSE

Department of the Air Force

USAF Scientific Advisory Board; Meeting

April 5, 1988.

The USAF Scientific Advisory Board AD Hoc Committee on Requirements for Hypersonic Test Facilities will meet on 17 May 1988, from 8:00 a.m. to 5:00 p.m., and on 18 May 1988, from 8:00 a.m. to 12:00 p.m., at the Arnold Engineering Development Center (AEDC), Tullahoma, TN, and on 18 May 1988, from 1:00 p.m. to 5:00 p.m., and on 19 May 1988 from 8:00 a.m. to 5:00 p.m. at the NASA Langley Reserach Center, Hampton VA.

The purpose of the meeting at AEDC is to tour their hypersonic test facilities and obtain information on future hypersonic facility upgrades/modifications and proposals. The purpose of the meeting at LaRC is to tour their hypersonic test facilities, obtain information on future NASA hypersonic applications, and obtain information on future hypersonic test facility upgrades/modifications and proposals. This meeting will involve discussions of classified defense matters listed in Section 552b(c) of Title 5, United States Code, specifically subparagraph (1) thereof, and accordingly will be closed to the public.

For further information, contact the Scientific Advisory Board Secretariat at (202) 697-4648.

Patsy J. Conner,

Air Force Federal Register Liaison Officer.

[FR Doc. 88-7901 Filed 4-11-88; 8:45 am]

BILLING CODE 3910-01-M

Defense Logistics Agency

Announcement of Direct Conversion to Contract Performance of Commercial Activities (CA) Function

AGENCY: Defense Logistics Agency (DLA), DoD.

ACTION: Notification of intent to effect direct conversion to contract performance of DLA CA function.

SUMMARY: The publication of decisions to directly convert commercial activities (CA) to contract performance is required by Supplement to OMB Circular No. A-76 (Revised) and DoD Instruction 4100.33, "Commercial Activities Program Procedures."

Based on a Simplified Cost Comparison conducted 5 January 1988, the Defense Logistics Agency will issue a solicitation to directly covert to contract performance the travel services of the Defense General Supply Center (DGSC), Richmond, Virginia. The travel services include performing a full range of DoD passenger transportation and ticketing services for CONUS and international travel.

FOR FURTHER INFORMATION CONTACT: Mr. Gary Arnett, DGSC, Office of Policy and Plans (DLSC-LPC). Richmond, Virginia 23297-5000, (804) 275-4017.

Interested commercial concerns should refer to announcements in the Commerce Business Daily (CBD) to be made as part of the contract solicitation process.

William J. Cassell,

Comptroller, Defense Logistics Agency.

[FR Doc. 88-7961 Filed 4-11-88; 8:45 am]

BILLING CODE 3620-01-M

DEPARTMENT OF EDUCATION

Office of the Under Secretary

Education Appeal Board; Designation of Jurisdiction; Glenpool, OK

AGENCY: Department of Education.

ACTION: Notice of designation of jurisdiction to Education Appeal Board.

SUMMARY: The Under Secretary designates the Education Appeal Board (EAB) as the forum to hear the appeal of the Glenpool Public Schools, Glenpool Oklahoma (Glenpool) of a final determination that Glenpool received overpayments of $191,246 in fiscal year 1983-1986 formula grant funds under Part A of the Indian Education Act (Part A; U.S.C. 241aa-241ff) and must refund that amount to the Department. The Assistant Secretary for Elementary and Secondary Education (Assistant Secretary) issued that final determination in her August 13, 1987 final determination letter.

FOR FURTHER INFORMATION CONTACT: Honorable Ernest C. Canellos, Chairman, EAB, 400 Maryland Avenue,

SW. (Room 1065, FOB-6), Washington, DC 20202. Telephone: (202) 245-7835.

SUPPLEMENTARY INFORMATION: Under section 451(a) of the General Education Provisions Act (20 U.S.C. 1234(a)), the EAB has the jurisdiction to conduct withholding, cease and desist, and audit appeal hearings, and other proceedings designated by the Secretary. By delegation of the Secretary, the Under Secretary may designate such proceedings to the EAB. The EAB regulation implementing the statutory provision (34 CFR 78.2(a) (1981)) clearly includes an appeal by a recipient of Part A funds from a final determination disallowing expenditures as within the EAB jurisdiction; an appeal from a final determination that a recipient must refund overpaid funds is not so designated.

In issuing this final determination concerning overpayments, the Assistant Secretary determined that for fiscal years 1983–1986 Glenpool submitted to the Department significantly overstated counts of Indian children, upon which the Part A awards were made, which resulted in a total overpayment to Glenpool of $191,246 (1983: $56,113; 1984: $40,321; 1985: $46,072; and 1986: $47,940). The Assistant Secretary concluded that Glenpool had improperly counted children (1) who were not enrolled in Glenpool's schools on the date Glenpool compiled the count of Indian children, (2) who had never been enrolled in Glenpool's schools, and (3) whose student certification forms, as determined by Glenpool, had been improperly signed by Glenpool officials.

The Assistant Secretary determined that, in including such children in the Part A count, Glenpool had violated (1) the statutory (Sec. 303(a)(1); 20 U.S.C. 241bb(a)(1)) and regulatory (34 CFR 251.31 (1983), 34 CFR 251.30 (1985)) requirements that the count of children be based upon children "enrolled" in the schools of applicant, (2) the statutory requirement (Sec. 453(c)(4) of the Indian Education Act; 20 U.S.C. 1221h(c)(4)) that the student certification form be signed by the parent or legal guardian of the child, verifying the accuracy of the information provided on the form, and (3) the regulatory requirement (34 CFR 251.40(n) (1983) and 34 CFR 251.50 (1985)) that a recipient of Part A funds maintain student certification form for each child counted under Part A.

In her August 13, 1987 final determination letter, the Assistant Secretary issued this final determination concerning overpayments and a final determination that Glenpool must refund $164,630 of fiscal year 1983–1986 Part A funds which it expended on unallowable costs. Noting that recovery under both final determinations would result in duplicative repayments by Glenpool, the Assistant Secretary sustained each final determination independently but stated that the total to be repaid in recovery under both final determinations was $200,001 (the overpayments of $191,246 plus the $8,845 determined to be the excess of unallowable costs beyond the overpayments in fiscal years 1983–1986).

In that letter, the Assistant Secretary notified Glenpool that it could appeal the unallowable costs final determination to the EAB and could appeal the overpayments final determination to the Assistant Secretary. By separate letters of September 10, 1987, Glenpool appealed the unallowable costs final determination to the EAB and the overpayments final determination to the Assistant Secretary. On September 23, 1987, the EAB accepted the appeal of the unallowable costs final determination.

The Under Secretary has determined that it is in the Department's and Glenpool's best interests to consolidate the two separate appeals from this single final determination letter. This is particularly true as the total amount sought for recovery under both findings requires an offsetting of the recoveries under each finding. The designation of this appeal to the EAB would simplify and expedite the resolution of the final determinations contained in the Assistant Secretary's August 13, 1987 final determination letter.

Designation of Jurisdiction

Under the authority of section 451(a)(4) of the General Education Provisions Act (20 U.S.C. 1234(a)(4)) and 34 CFR 78.2(a)(5) of the EAB regulations, the Under Secretary announces that on April 7, 1988, the Under Secretary designates the EAB as the forum to review Glenpool's appeal of the Assistant Secretary's August 13, 1987 final determination that it received overpayments of $191,246 in fiscal year 1983–1986 Part A funds and must refund that amount to the Department. The EAB is to review this appeal in accordance with the requirements of 34 CFR Part 78.

(Catalog of Federal Domestic Assistance Number Not Applicable)

Dated: April 7, 1988.

Linus Wright,

Under Secretary of Education.

[FR Doc. 88-7988 Filed 4-11-88; 8:45 am]

BILLING CODE 4000-01-M

DEPARTMENT OF ENERGY

Economic Regulatory Administration

[Docket No. PP-88]

Intent To Prepare an Environmental Impact Statement and Conduct Public Scoping Meetings; Washington Water Power Co.

AGENCY: Economic Regulatory Administration, DOE.

ACTION: Notice of intent to prepare an Environmental Impact Statement and to hold public scoping meetings.

SUMMARY: Pursuant to the National Environmental Policy Act of 1969 and the regulations of the Council on Environmental Quality at 40 CFR 1501.7, the Economic Regulatory Administration (ERA) of the Department of Energy (DOE) announces its intention to prepare an Environmental Impact Statement (EIS) and to conduct public scoping meetings. The EIS will be prepared to assess the environmental impacts of a proposed DOE action: To grant (with terms and conditions) or to deny a Presidential permit authorizing Washington Water Power Company (WWP) to construct, connect, operate and maintain electric transmission facilities at the international border between the United States and Canada. Specifically, WWP seeks permission to construct a double-circuit alternating current (ac) transmission line with a design voltage of 230 kilovolts (kV) from the U.S.-Canadian border near Northport, Washington, to a planned substation to be located in the vicinity of Spokane, Washington.

Written Comments should be addressed to: Anthony J. Como, Economic Regulatory Administration (RG-22), Department of Energy, 1000 Independence Ave., SW., Washington, DC 20585, (202) 586-5935.

For general information on the EIS process contact:

Carol M. Borgstrom, Acting Director, Office of NEPA Project Assistance (EH-25), Department of Energy, 1000 Independence Avenue SW., Washington, DC 20585 (202) 586-4600.

Stan Echols, Office of General Counsel (GC-11), Department of Energy, 1000 Independence Avenue SW., Washington, DC 20585 (202) 586-6947.

DATES: Written comments are to be submitted to the above address by May 27, 1988. Oral comments may be presented at the scoping meetings which have been scheduled as follows:

Tuesday, May 3, 1988, Ponderosa and Hemlock Rooms, Holiday Inn West,

4212 Sunset Blvd., Spokane, Washington 99204, Convenign at 7:00 p.m.

Wednesday, May 4, 1988, Colville High School Cafeteria, 985 South Elm Street, Colville, Washington 99114, Covening at 7:00 p.m.

Thursday, May 5, 1988, Pend Oreille County Public Utility, District Conference Room, 130 North Washington Street, Newport, Washington 99156, Convening at 7:00 p.m.

SUPPLEMENTARY INFORMATION: On October 15, 1987, the Washington Water Power Company filed an application with the ERA for a Presidential permit pursuant to Executive Order 10485, as amended by Executive Order 12038, to construct, operate, maintain and connect a double-circuit 230 kV, overhead transmission line which would interconnect with British Columbia Hydro and cross the U.S. international border near the city of Trail, British Columbia, and the town of Northport, Washington. The length of the proposed line is approximately 118 miles (from the international boundary to the proposed Marshall substation) and would require all new right-of-way. The two circuits will be capable of transmitting 800 to 1,200 megawatts (MW) of firm power from British Columbia Hydro to WWP for distribution in the Pacific Northwest.

The purpose of the proposed transmission line, according to the applicant, is to provide the customers of WWP and the Pacific Northwest Region with a future economic source of power. The application notes the need for additional supplies of peaking power for both WWP and the Pacific Northwest Region as early as 1993, and projects additional power needs of up to 210 MW and 550 MW, respectively, by the year 2000.

The ERA has determined that the issuance of a Presidential permit to WWP for the proposed facilities would constitute a major Federal action significantly affecting the environment. Consequently, pursuant to the provisions of the National Environmental Policy Act of 1969, an EIS will be prepared to assess the impact of the proposed action on the environment.

Interested agencies, organizations, and members of the general public desiring to submit written comments or suggestions for consideration in connection with the preparation of the EIS are invited to do so and are encouraged to attend the public scoping meetings which will be held on May 3, 1988, in Spokane, Washington; on May 4, 1988, in Colville, Washington; and on May 5, 1988, in Newport, Washington. Parties who desire to present oral comments at the scoping meetings are requested to provide advance notice to ERA as described below under "COMMENTS AND SCOPING MEETINGS". Although advance notice is not required, compliance with this request will provide for more orderly meetings and help insure that ample time will be allotted to everyone desiring to present oral comments. All comments received during the scoping process (both written and oral) will be considered in the preparation of the draft EIS which is presently scheduled for completion by November 1988. Upon completion of the draft EIS, its availability will be announced in the **Federal Register**, copies will be distributed for review, and further comments will be solicited.

Preliminary Definition of Environmental Issues

The purpose of this Notice is to solicit comments and suggestions on topics and issues which should be considered in the preparation of the EIS. As background for public comment and suggestions, following is a list of those environmental issues which have been tentatively identified for analysis and assessment in the EIS. This list is not intended to be all-inclusive or to imply any predetermination of impacts.

Additional issues for analysis may be identified as a result of comments received during the scoping process.

A. Environmental Issues Associated with Transmission Line Construction

(1) The loss or modification of upland plant communities due to the permanent removal of all tall-growing vegetation from the proposed right-of-way, and of all vegetation from tower footings, access roads and substation sites;

(2) Minor relocations and alterations to other existing facilities along the proposed right-of-way;

(3) Temporary disruption of wildlife communities, agricultural production and other land uses along the line route during actual construction;

(4) Potential long-term effects on wildlife communities from loss or modification of habitat;

(5) Temporary interference with aquatic life during construction at stream and river crossings;

(6) Potential long-term effects to aquatic resources from erosion and sedimentation and clearing of riparian vegetation;

(7) Temporary socio-economic perturbations due to the influx of construction workers into sparsely populated areas;

(8) Temporary noise and air pollution resulting from operation of construction equipment and from the burning of slash from clearing of the right-of-way;

(9) Disruption and displacement of soils during activities associated with land clearing; and

(10) Potential disturbance and contamination of groundwater.

B. Environmental Issues Associated with Transmission Line Operation and Maintenance

(1) Long-term withdrawal of land from traditional uses (e.g., forest, agriculture, residential) within right-of-way and land required for other project facilities;

(2) Periodic interference with plant and wildlife communities along right-of-way due to required maintenance activities, particularly vegetation control;

(3) Generation of acoustic noise and electronmagnetic interference with radio and television reception along right-of-way;

(4) Possible biological effects such as reduced growth or viability for plant and animal species resident within or in proximity of the right-of-way;

(5) Possible health effects from periodic and/or prolonged exposure to electric and magnetic fields produced by alternating current transmission;

(6) Possible long-term effects on public health and on aquatic and terrestrial organisms due to the use of herbicides for vegetation control along right-of-way;

(7) Indirect ecological and socioeconomic effects resulting from easier unauthorized human access to some areas via access roads and right-of-way, such as incresed hunting or use by motorcycles or snowmobiles; and

(8) Long-term visual impacts resulting from the presence of support towers, conductors, and other project facilities.

C. Other Specific Environmental Issues

(1) The possibility of affecting threatened or endangered species or critical habitats for such species;

(2) Identification and review of alternatives to construction within a 100-year floodplain or identified wetlands; and identification and review of mitigating measures to be taken if it is found that there are no practicable alternatives to construction in a floodplain or wetland;

(3) Possible direct and adverse effects on the values for which a wild, scenic or recreational river was established;

(4) Environmental factors relevant to any proposed construction in or over navigable rivers, or to any proposed actions resulting in the discharge of

dredge or fill materials into any waters of the U.S.;

(5) Actions having an impact on the continued use and viability of prime and unique farmlands;

(6) Possible effects on sites or properties included on, nominated for, or eligible for inclusion in the National Register of Historic Places, or on historical, architectural or archeological sites of national significance;

(7) Possible adverse impacts on National Forest lands; and

(8) Possible impacts on local Indian tribes.

Preliminary Definition of Alternatives

One of the major purposes of an EIS is to define the reasonable alternatives to the proposed action, and the environmental impacts to be expected from each reasonable alternative. As background for comments and suggestions concerning reasonable alternatives to be considered, the broad classes of alternatives which have been tentatively identified are described briefly below:

A. If the Presidential Permit is Issued

Issuance of the Presidential permit by DOE is one of the necessary steps leading to the construction of an electric transmission line which crosses the U.S. international border. Issuance of the permit indicates that there is no federal objection to the project, but does not mandate that the project be completed. Also, issuance of the permit would not necessarily result in construction of the project as presently proposed by WWP. Alternate project configurations which will be considered in the EIS include:

(1) Alternative corridor routes for the proposed transmission line and alternative sites for the proposed substation;

(2) Alternative tower designs; and

(3) Undergrounding of the proposed facilities.

B. If the Presidential Permit is Denied

Denial of the Presidential permit by DOE would result in WWP relying on other means to meet future increases in customer demand. Alternative means to meet new load requirements could include:

(1) The traditional course of action of continuing the operation of existing generating plants as necessary to meet load, and the construction of new, conventional thermal or hydroelectric generating plants as necessary to satisfy future increases in load;

(2) Development and construction of new, non-conventional types of generating plants (e.g., solar or wind) to reduce the need for future construction of conventional generating plants;

(3) Load management by energy storage or conservation and/or replacement of some end uses of electricity by other sources of energy, which would reduce seasonal variations in load and total annual electrical energy requirements;

(4) Purchases of power from utilities within the United States; and

(5) Development of cogeneration and distributed small power projects throughout the state.

Mitigation Alternatives

The environmental impacts which would result from construction and operation of the proposed project would depend on the choice among a number of alternative possibilities as to where, when and how the project was constructed, as well as the choice of alternative maintenance and repair procedures during operation. Tentatively identified groups of alternatives for consideration in the EIS include: (a) Design, (b) route selection, (c) construction practices and (seasonal) timing, (d) right-of-way clearing procedures, and (e) right-of-way maintenance practices.

Comments and Scoping Meetings

The purpose of the scoping meetings is to obtain information from interested parties on the issues which should be addressed when preparing the EIS. These meetings will be conducted informally; however, a transcript of the meetings will be prepared. Parties who desire to present oral comments at any meeting are requested to provide advanced notice to ERA by April 29, 1988, *if possible*. Every effort will be made to provide those attending the meetings, who have not provided advance notice, with a chance to speak if time permits. The ERA has designated Mr. Anthony J. Como as presiding officer at these meetings. The presiding officer will establish the order of speakers and provide any additional procedures necessary for the conduct of the meetings.

Each speaker will be allotted approximately 10 minutes to make an oral statement. However, this time constraint may be adjusted depending upon the number of speakers. Should any speaker desire to provide for the record further information which cannot be presented within the designated time limit, or if any party wishes to submit written comments in lieu of making an oral presentation at the scoping meetings, such information may be submitted in writing by May 27, 1988. Written comments will be considered and given equal weight with oral comments.

A transcript of the scoping meetings will be retained by DOE and, upon request, made available for inspection and copying at the Freedom of Information Library, Room 1E-090, Forrestal Bldg., 1000 Independence Avenue, SW., Washington, DC 20585, between the hours of 9:00 a.m. and 4:00 p.m., Monday through Friday. Alternatively, copies of the transcript(s) may be purchased directly from the court reporter.

Draft EIS Schedule and Availability of Environmental Documents

The draft EIS (DEIS) is scheduled for completion by November 1988, at which time its availability will be announced in the **Federal Register** and public comments again will be solicited.

Those individuals who do not wish to submit comments or suggestions at this time but who would like to receive a copy of the DEIS for review and comment when it is issued should contact Mr. Anthony J. Como at the address given in the prior section.

One of the requirements placed on the applicant for a Presidential permit is the submission of an Environmental Report. This and other documents to be used in preparation of the DEIS will be made available for public inspection at several public libraries or reading rooms in Washington. A notice of these locations will be provided in the **Federal Register** and in local newspapers at a later date.

Issued in Washington, DC on April 5, 1988.

Ernest C. Baynard, III,

Assistant Secretary, Environment, Safety and Health.

[FR Doc. 88-7930 Filed 4-11-88; 8:45 am]

BILLING CODE 6450-01-M

[Docket No. OFU 048]

Order Granting Rescission of a Prohibition Order Issued to the Wisconsin Public Service Corporation Pursuant to the Energy Supply and Environmental Coordination Act of 1974

AGENCY: Economic regulatory Administration, DOE.

ACTION: Order granting rescission.

SUMMARY: The Economic Regulatory Administration (ERA) of the Department of Energy (DOE) [1] hereby gives notice

[1] Effective October 1, 1977, the responsibility for implementing ESECA was transferred by Executive Order 12009 from the Federal Energy Administration (FEA) to the Department of Energy pursuant to the Department of Energy Organization Act (42 U.S.C. 7101 et seq.).

that acting under the authority granted to it in section 2(f) of the Energy Supply and Environmental Coordination Act of 1974 (ESECA) as amended 15 U.S.C. 792(f) and implemented by 10 CFR 303.130(b), it is granting a request by the Wisconsin Public Service Corporation (WPSC) or the Company to rescind the prohibition order issued on June 30, 1975 to the following powerplant.

Owner	Docket No.	Generating station	Unit No.	Location
Wisconsin Public Service Corporation	OFU-048	Weston	2	Rothschild, Wisconsin.

This action is taken in accordance with the provisions of 10 CFR Part 303, Subpart J ("Modification on Rescission of Prohibition Orders and Construction Orders") of the ESECA regulations. The basis for ERA's action is provided in the **SUPPLEMENTARY INFORMATION** section below.

EFFECTIVE DATE: April 12, 1988, in accordance with 10 CFR 303.10(a).

FOR FURTHER INFORMATION CONTACT:

Xavier Puslowski, Office of Fuels Programs, Economic Regulatory Administration, 1000 Independence Avenue SW., Room GA-093, Washington, DC 20585, Telephone (202) 586-4708.

Steven E. Ferguson, Esq., Office of General Counsel, Department of Energy, 1000 Independence Avenue SW., Room GA-113, Washington, DC 20585, Telephone (202) 586-6947.

The public file containing a copy of this Order and other documents and supporting materials on this proceeding is available upon request from DOE, Freedom of Information Reading Room, 1000 Independence Avenue SW., Room 1E-190, Washington, DC 20585, Monday through Friday, 9:00 a.m. to 4:00 p.m.

SUPPLEMENTARY INFORMATION: On June 30, 1975, the Federal Energy Administration (FEA) issued a Prohibition Order prohibiting Weston Unit 2 from burning natural gas or petroleum products as its primary energy source. The Prohibition Order became effective on June 13, 1977, pursuant to a Notice of Effectiveness (NOI) issued by FEA on that date. ERA issued an Amended NOI on December 21, 1978, deleting the termination date of December 31, 1978, for the Prohibition Order set forth in the original NOI. The amendment served to extend the effectiveness of the Prohibition Order indefinitely.

On July 7, 1987, WPSC submitted an Application for Rescission of Prohibition Orders to ERA regarding the above enumerated generating station unit. The Petitioner maintains that the rescission of the Prohibition Order for Weston No. 2 is warranted by significantly changed circumstances, a substantial change in the facts or circumstances upon which the Prohibition Order was based. Placed in service in 1960, Weston No. 2 located near Rothschild, Wisconsin has the capability to burn both coal and natural gas either separately or together to generate power. At maximum generation the unit can burn 863 Mcf of natural gas or 70,700 pounds of coal per hour. Using natural gas as the primary energy source its maximum generation capability is approximately 90 megawatts.

The Company believes it would be in the best interest of its ratepayers and of the general public to be able to use natural gas as a primary fuel in the Weston No. 2 generating unit. Natural gas would allow the Company to address the environmental emission limitations facing it in the most cost effective manner. It would also allow the company to operate the unit in a manner that will maximize its useful life. It is anticipated that gas will not be used as the primary fuel in the Weston No. 2 boiler unless it is needed to meet emission limitations during transitional operating conditions, such as start-up or during load changes, or if the cost of producing electric power would be less if burning gas than if burning coal.

The use of natural gas would have a favorable impact on the useful life expectancy of the plant by reducing wear on coal handling and other relevant equipment, in addition to reducing corrosive effects in the boiler. Natural gas would also be used for flame stabilization reducing the Company's use of petroleum.

WPSC believes that the use of natural gas is both practical and feasible. The Company maintains that its supplier generally has quantities of natural gas available for use by the Company as boiler fuel.

In accordance with the procedural requirements of 10 CFR 303.134(a), ERA published its Notice of Acceptance of a request by WPSC to rescind certain prohibition orders issued to it pursuant to the ESECA in the **Federal Register** on October 28, 1987 (52 FR 9698), commencing a 45-day public comment period. During that period interested persons were also afforded an opportunity to request a public hearing. The period for submitting comments and for requesting a public hearing closed December 14, 1987. No comments were received and no hearing was requested.

Decision and Order

Accordingly, based upon information received from WPSC and the entire record of this proceeding, ERA has determined that as a result of significantly changed circumstances with respect to the prohibition orders issued to WPSC's Weston No. 2 generating unit set forth in 10 CFR 303.136(b), that this powerplant can be operated more effectively, efficiently, practically and reliably by using natural gas, rather than coal as a primary energy source. Pursuant to § 303.137(a) ERA hereby grants the rescission request of WPSC and hereby orders that the prohibition order to this unit be rescinded.

Pursuant to 10 CFR 303.100 (a) and (b), any person aggrieved by this order has not exhausted his administrative remedies until an appeal has been filed with DOE's Office of Hearing and Appeals and an order granting or denying the appeal has been issued. Such appeal must be filed within 10 days of the publication of this order in the **Federal Register** in accordance with the requirements of § 303.102.

Issued in Washington, DC on March 30, 1988.

Robert L. Davies,

Director, Office of Fuels Programs, Economic Regulatory Administration.

[FR Doc. 88-7931 Filed 4-11-88; 8:45 am]

BILLING CODE 6450-01-M

[ERA Docket No. 88-12-NG]

Standard Gas Marketing Co.; Application To Export Natural Gas to Canada

AGENCY: Economic Regulatory Administration, DOE.

ACTION: Notice of application for blanket authorization to export natural gas.

SUMMARY: The Economic Regulatory Administration (ERA) of the Department of Energy (DOE) gives notice of receipt

on March 18, 1988, of an application filed by Standard Gas Marketing Company (Standard) requesting blanket authorization to export natural gas to Canada on a short-term and spot basis not to exceed 75 Bcf in the aggregate over a two-year period beginning on the date of first delivery.

The application is filed with the ERA pursuant to section 3 of the Natural Gas Act and DOE Delegation Order No. 0204–111. Protests, motions to intervene, notices of intervention and written comments are invited.

DATE: Protests, motions to intervene or notices of intervention, as applicable, request for additional procedures and written comments are to be filed no later than May 12, 1988.

FOR FURTHER INFORMATION:

William Durbin, Natural Gas Division, Economic Regulatory Administration, Forrestal Building, Room GA–076, 1000 Independence Avenue SW., Washington, DC 20585, (202) 586–9516.

Diane Stubbs, Natural Gas and Mineral Leasing, Office of General Counsel, U.S. Department of Energy, Forrestal Building, Room 6E–042, 1000 Independence Avenue SW., Washington, DC 20585, (202) 586–6667.

SUPPLEMENTARY INFORMATION:

Standard, a Delaware corporation with its principal office in Cleveland, Ohio, is a wholly owned subsidiary of Sohio Petroleum Company. The applicant proposes to act as a broker or as an agent, acting on its own behalf or on behalf of others. The gas would be supplied from a variety of domestic sources and sold to a range of Canadian purchasers, including, but not limited to, industrial and commercial end users, agricultural users, electric utilities, pipelines and distribution companies.

The terms of each arrangement would be negotiated in response to market conditions. Standard intends to use existing transmission systems and will not require the construction of new or separate facilities in order to export the natural gas. Standard also intends to comply with ERA's reporting requirements.

This export application will be reviewed pursuant to section 3 of the Natural Gas Act and the authority contained in DOE Delegation Order No. 0204–111. The decision on whether this export of natural gas is in the public interest will be based upon the domestic need for the gas and on whether the arrangement is consistent with the DOE policy of promoting competition in the natural gas marketplace by allowing parties to freely negotiate their own trade arrangements. The applicant asserts current excess gas supplies evidence a lack of need for this gas to serve regional and national markets. The applicant further asserts that this export arrangement would promote competition and have a beneficial impact on the balance of trade. Parties opposing the arrangement should comment in any response on these matters.

Standard requests that an authorization be granted on an expedited basis. An ERA decision on Standard's request for expedited treatment will not be made until all responses to this notice have been received and evaluated.

Public Comment Procedures

In response to this notice, any person may file a protest, motion to intervene or notice of intervention, as applicable, and written comments. Any person wishing to become a party to the proceeding and to have the written comments considered as the basis for any decision on the application must, however, file a motion to intervene or notice of intervention, as applicable. The filing of a protest with respect to this application will not serve to make the protestant a party to the proceeding, although protests and comments received from persons who are not parties will be considered in determining the appropriation action to be taken on the application. All protests, motions to intervene, notices of intervention, and written comments must meet the requirements that are specified by the regulations in 10 CFR Part 590.

Protests, motions to intervene, notices of intervention, requests for additional procedures, and written comments should be filed with the Natural Gas Division, Office of Fuels Programs, Economic Regulatory Administration, Room GA–076, RG–23, Forrestal Building, 1000 Independence Avenue SW., Washington, DC 20585, (202) 586–9478. They must be filed no later than 4:30 p.m. e.d.t., May 12, 1988.

The Administrator intends to develop a decisional record on the application through responses to this notice by parties, including the parties' written comments and replies thereto. Additional procedures will be used as necessary to achieve a complete understanding of the facts and issues. A party seeking intervention may request that additional procedures be provided, such as additional written comments, an oral presentation, a conference, or trial-type hearing. Any request to file additional written comments should explain why they are necessary. Any request for an oral presentation should identify the substantial question of fact, law, or policy at issue, show that it is material and relevant to a decision in the proceeding, and demonstrate why an oral presentation is needed. Any request for a conference should demonstrate why the conference would materially advance the proceeding. Any request for a trial-type hearing must show that there are factual issues genuinely in dispute that are relevant and material to a decision and that a trial-type hearing is necessary for a full and true disclosure of the facts.

If an additional procedure is scheduled, the ERA will provide notice to all parties. If no party requests additional procedures, a final opinion and order may be issued based on the official record, including the application and responses filed by parties pursuant to this notice, in accordance with 10 CFR 590.316.

A copy of Standard's application is available for inspection and copying in the Natural Gas Division Docket Room, GA–076 at the above address. The docket room is open between the hours of 8:00 a.m. and 4:30 p.m., Monday through Friday, except Federal holidays.

Issued in Washington, DC., April 6, 1988.

Constance L. Buckley,

Director, Natural Gas Division, Office of Fuels Programs, Economic Regulatory Administration.

[FR Doc. 88–7973 Filed 4–11–88; 8:45 am]

BILLING CODE 6450–01–M

[Docket No. ERA C&E 88–09; Certification Notice–14]

Filing of Certification of Compliance; Coal Capability of New Electric Powerplants; Delmarva Power and Light Co.

AGENCY: Economic Regulatory Administration, DOE.

ACTION: Notice of filing.

SUMMARY: Title II of the Powerplant and Industrial Fuel Use Act of 1978, as amended ("FUA" or "the Act") (42 U.S.C. 8301 *et seq.*) provided that no new electric powerplant may be constructed or operated as a base load powerplant without the capability to use coal or another alternate fuel as a primary energy source (setion 201(a)). In order to meet the requirement of coal capability, the owner or operator of any new electric powerplant to be operated as a base load powerplant proposing to use natural gas or petroleum as its primary energy source may certify, pursuant to section 201(d) to the Secretary of Energy prior to construction, or prior to operation as a

base load powerplant, that such powerplant has capabiity to use coal or another alternate fuel. Such certification establishes compliance with section 201(a) as of the date it is filed with the Secretary. The Secretary is required to publish in the **Fedral Register** a notice reciting that the certificatation has been filed. One owner and operator of a proposed new electric base load powerplant has filed a self certification in accordance with section 201(d). Further information is provided in the **SUPPLEMENTARY INFORMATION** section below.

SUPPLEMENTARY INFORMATION: The following company filed a self certification:

Name	Date received	Type facility	Megawatt capacity	Location
Delmarva Power and Light Company, Wilmington, DE	3-23-88	Powerplant Simple Cycle.	200	Wilmington, DE.

Amendments to FUA on May 22,1987 (Pub.L. 100-42) altered the general prohibitions to include only new electric baseload powerplants and to provide the self certification procedure.

Issued in Washington, DC, on April 6, 1988.

Robert L. Davies,

Director, Office of Fuels Programs, Economic Regulatory Administration.

[FR Doc. 88-7929 Filed 4-11-88; 8:45 am]

BILLING CODE 6450-01-M

Federal Energy Regulatory Commission

[Docket Nos. ER88-313-000 et al.]

Arkansas Power & Light Co. et al.; Electric Rate, Small Power Production, and Interlocking Directorate Filings

April 7, 1988.

Take notice that the following filings have been made with the Commission:

1. Arkansas Power & Light Company

[Docket No. ER88-313-000]

Take notice that on March 31, 1988, Arkansas Power & Light Company (AP&L) tendered for filing a Refund Payment Schedule containing a proposed allocation of refunds to its wholesale customers and Co-owners of the White Bluff and Independence Coal Plants concerning amounts received by AP&L from Burlington Northern Railroad Company. AP&L proposes to make refunds, with interest, in accordance with the Refund Payment Schedule 30 days after Commission authorization.

Comment date: April 21, 1988, in accordance with Standard Paragraph E at the end of this notice.

2. Boston Edison Company

[Docket No. ER88-311-000]

Take notice that on March 31, 1988, Boston Edison Company (Edison) tendered for filing an agreement for the sale of power to Public Service Company of New Hampshire (PSNH) and an associated Exhibit A to Edison's non-firm transmission tariff, FERC Electric Tariff Original Vol. III. Pursuant to the power sales agreement on a monthly basis Edison will sell to PSNH varying amounts of power from certain designated Edison jet turbine units.

Edison requests waiver of the Commission's notice requirements to permit the power sales agreement and the Exhibit A to become effective as of the commencement of the transaction, November 1, 1987.

Copies of the filing have been served upon PSNH and on the Department of Public Utilities of the Commonwealth of Massachusetts.

Comment date: April 21, 1988, in accordance with Standard Paragraph E at the end of this notice.

3. Pennsylvania-New Jersey-Maryland Interconnection (PJM) Agreement

[Docket No. ER88-310-000]

Take notice that on March 31, 1988, the Office of the Pennsylvania-New Jersey-Maryland Interconnection (PJM) tendered for filing, on behalf of the parties to the PJM Agreement, Revision No. 9 to Schedule 4.01 of that Agreement.

The purpose of this filing is to increase the rate applicable to capacity deficiency transactions determined in accordance with the PJM Agreement. The new rate is to become effective with the beginning of the next 12-month Planning Period on June 1, 1988. No changes in facilities are proposed in this filing.

Comment date: April 21, 1988, in accordance with Standard Paragraph E at the end of this notice.

4. Interstate Power Company

[Docket No. ER88-309-000]

Take notice that on March 31, 1988, Interstate Power Company (Company) tendered for filing, an Electric Service Agreement between the Public Utilities Commission of the City of Truman, Minnesota and Interstate Power Company. This agreement provides for the delivery of firm power and energy the Company receives from the Missouri Basin Municipal Power Agency for delivery to the City.

The Company's standard wheeling rate, as approved in Docket ER76-555, as adjusted for the TRA of 1986 (Docket RM87-4-000) will apply.

Comment date: April 21, 1988, in accordance with Standard Paragraph E at the end of this notice.

5. Northern States Power Company

[Docket No. EL87-45-002]

Take notice that on February 18, 1988, Northern States Power Company tendered for filing a supplement to its transmission service contracts and proposed refunds with interest for the off-line transmission service customers in accordance with § 35.19(a) of the Commission's regulations, 18 CFR 35.19(a) (1987).

Comment date: April 21, 1988, in accordance with Standard Paragraph E at the end of this notice.

6. Southern California Edison Company

[Docket No. ER88-296-000]

Take notice that on March 31, 1988, Southern California Edison Company tendered for filing an exhibit supporting an increase in rate per kilowatthour for interruptible transmission service under Rate Schedule FERC No. 130. The supported rate is an increase in the presently authorized filed rate.

Comment date: April 21, 1988, in accordance with Standard Paragraph E at the end of this document.

7. Arizona Public Service Company

[Docket No. ER88-312-000]

Take notice that on March 31, 1988, Arizona Public Service Company (APS) tendered for filing a Transmission Service Agreement (Agreement) between APS and the Department of the Air Force (Air Force). The Agreement provides for the transmission of up to 2.63 MW of the Air Force's recently acquired allotment of preference power from the Parker-Davis Project.

The Agreement provides for APS to wheel the Air Force's preference power

allocations and make delivery of such power at a distribution voltage level of service. The proposed rate level is similar to that for rates on file with the Commission for similar type service; however, differs from the others in that it reflects delivery of Air Force's allocations of preference power at a distribution voltage level of service as low as 4.2kV.

No new facilities or modifications to existing facilities are required to provide service under the Agreement.

APS, has agreed to begin service on April 1, 1988 and thus, with the concurrence of the Air Force, requests waiver of the Commission's Notice Requirements so service may begin on such date.

Copies of this filing have been served on the Air Force and the Arizona Corporation Commission.

Comment date: April 21, 1988, in accordance with Standard Paragraph E at the end of this notice.

Standard Paragraph

E. Any person desiring to be heard or to protest said filing should file a motion to intervene or protest with the Federal Energy Regulatory Commission, 825 North Capitol Street NE., Washington, DC 20426, in accordance with Rules 211 of the Commission's Rules of Practice and Procedure (18 CFR 385.211 and 385.214). All such motions or protests should be filed on or before the comment date. Protests will be considered by the Commission in determining the appropriate action to be taken, but will not serve to make protestants parties to the proceeding. Any person wishing to become a party must file a motion to intervene. Copies of this filing are on file with the Commission and are available for public inspection.

Lois D. Cashell,

Acting Secretary.

[FR Doc. 88-7913 Filed 4-11-88; 8:45 am]

BILLING CODE 6717-01-M

[Docket Nos. CP88-307-000 et al.]

Great Lakes Gas Transmission Co. et al.; Natural Gas Certificate Filings

April 6, 1988.

Take notice that the following filings have been made with the Commission:

1. Great Lakes Gas Transmission Company

Docket No. CP88-307-000]

Take notice that on March 22, 1988, Great Lakes Gas Transmission Company (Great Lakes), 2100 Buhl Building, Detroit, Michigan 48226, filed in Docket No. CP88-307-000 an application pursuant to section 7(c) of the Natural Gas Act for a certificate of public convenience and necessity authorizing Great Lakes to transport natural gas, on an interruptible basis, for the account of Northern States Power Company (Northern States), a Wisconsin distribution company, all as more fully set forth in the application which is on file with the Commission and open to public inspection.

Great Lakes states that Northern States has requested that Great Lakes transport up to 30,000 Mcf per day, on an interruptible basis, which Northern States would purchase from Canadian suppliers, from a point on the International Border between the United States and Canada, at Emerson, Manitoba, where the facilities of Great Lakes interconnect with the facilities of TransCanada Pipe Lines Limited, to a point where Great Lakes' facilities interconnect with those of Northern Natural Gas Company, a Division of Enron Corporation (Northern Natural) at Carlton, Minnesota. It is further stated that the term of the proposed arrangements would end two years after the effective date of all regulatory approvals deemed necessary to implement the service. Great Lakes indicates that it has entered into a transportation service agreement (Agreement) dated September 10, 1987, which implements these arrangements.

Great Lakes states that the Agreement provides for a rate for the transportation service which is equal to the 100% load factor rate applicable to deliveries in the Western Zone under Great Lakes' existing Rate Schedule T-5 of Great Lakes existing FERC Gas Tariff. It is further stated that no new facilities would be required to provide the proposed service.

Great Lakes indicates that Northern States has entered into transportation arrangements with Northern Natural, for the subsequent transportation of the subject volumes to various points of interconnection between the facilities of Northern Natural and Northern States, all located in the state of Wisconsin.

Comment date: April 27, 1988, in accordance with Standard Paragraph F at the end of this notice.

CNG Transmission Corporation

[Docket No. CP88-319-000]

Take notice that on March 29, 1988, CNG Transmission Corporation (CNG), 4455 West Main Street, Clarksburg, West Virginia 26301, filed in docket No. CP88-319-000 an application pursuant to section 7 (b) and (c) of the Natural Gas Act for authorization to retire 24.97 miles of parallel 20-inch Line Nos. 25 and 35, and to construct and operate replacement 30-inch Line No. TL-469, between Stull and Coxcomb Gates in Butler and Allegheny Counties, Pennsylvania, all as more fully set forth in the application which is on file with the Commission and open to public inspection.

CNG states that existing Line Nos. 25 and 35 are parallel pipelines located within the same right-of-way for approximately 52 miles between Coxcomb Gate, in southwestern Pennsylvania, and Petersburg, at the Ohio-Pennsylvania border. CNG explains that Line Nos. 25 and 35 link the western and central portions of its pipeline system and that this portion of its pipeline system was constructed for a maximum allowable operating pressure (MAOP) of 850 psig. CNG states that between Stull and Coxcomb Gates, population growth has occurred steadily in the vicinity of these pipelines since their construction. CNG further states that because the wall thickness of the existing installed pipe would not permit operation at the original design pressures in areas of such population density, CNG has reduced the MAOP's of the segments of Line Nos. 25 and 35 to 657 and 727 psig, respectively. CNG proposes to replace the pipeline segments with 30-inch Line No. TL-469, designed with sufficient wall thickness to restore CNG's ability to operate the affected portion of its systems at the original design pressure of 850 psig.

CNG further explains that the construction of Line No. TL-469 would alleviate the current restriction of the reduced MAOP's and would enhance CNG's ability to move gas from west to east. CNG states that restoration of its ability to move such quantities of natural gas from west to east would enable CNG to respond most efficiently to changing market requirements. No new sales or services are proposed by CNG.

CNG estimates that it would cost approximately $23,290,000 to construct Line No. TL-469, exclusive of Commission filing fees. CNG states that the cost would be financed from funds on hand or to be obtained from CNG's parent corporation, Consolidated Natural Gas Company. CNG proposes to construct Line No. TL-469 during the summer of 1988 and estimates that the project would take 3½ months to complete.

Comment date: April 27, 1988, in accordance with Standard Paragraph F at the end of this notice.

3. Tennessee Gas Pipeline Company

[Docket No. CP88-308-000]

Take notice that on March 23, 1988, Tennessee Gas Pipeline Company, a Division of Tenneco Inc. (Applicant), P. O. Box 2511, Houston, Texas 77252, filed in Docket No. CP88-308-000 a request, pursuant to §§ 157.205 and 284.223 of the Commission's Regulations under the Natural Gas Act (NGA) (18 CFR 157.205) and the National Gas Policy Act (NGPA) (18 CFR 284.223) for authorization to provide a transportation service for Catamount Natural Gas, Inc., a marketer, under the certificate issued in Docket No. CP87-115-000 pursuant to section 7(c) of the Natural Gas Act, all as more fully set forth in the request on file with the Commission and open to public inspection.

Applicant states that pursuant to a transportation agreement dated February 24, 1988, it proposes to transport natural gas for Catamount Natural Gas, Inc. from points of receipt located in the states of Louisiana, Texas, Mississippi, Alabama, New York, Pennsylvania, Ohio, Kentucky, and offshore Louisiana and offshore Texas. Applicant states that the delivery points are located in the states of Massachusetts, New York, New Jersey, Alabama, Rhode Island, New Hampshire, Pennsylvania, Connecticut, Tennessee, Mississippi, West Virginia, Kentucky, and Louisiana. The delivery points are interconnections with downstream transporters, it is stated.

Applicant further states that the peak day quantities would be 102,600 dekathems, the average daily quantities would be 3,440 dekatherms, and that the annual quantities would be 1,255,600 dekatherms. Applicant asserts that service under § 284.223(a) commenced March 2, 1988, as reported in Docket No. ST88-2863 (filed March 18, 1988).

Comment date: May 23, 1988, in accordance with Standard Paragraph G at the end of this notice.

4. Union Gas System, Inc.

[Docket No. CP88-300-000]

Take notice that on March 15, 1988, Union Gas System, Inc. (Union Gas), P.O. Box 347, Independence, Kansas 67301-0347, filed in Docket No. CP88-300-000 an application pursuant to § 152.1 of the Regulations under the Natural Gas Act (18 CFR 152.1) for an exemption from the provisions of the Natural Gas Act and the rules and regulations of the Commission issued pursuant thereto, all as more fully set forth in the application which is on file with the Commission and open to public inspection.

Union Gas states that it is a local gas distribution company operating within the State of Kansas. Union Gas further states that all of its facilites are located within the State of Kansas, all of the natural gas transported or distributed through those facilities is received by Union Gas from its suppliers at delivery points within the State of Kansas, and all of such natural gas is delivered by Union Gas to residential, commercial and industrial customers for ultimate consumption within the State of Kansas.

Union Gas states that it makes no sales of natural gas at wholesale and none of the rates of Union Gas is, or has ever been, subject to the jurisdiction of the Commission. Union Gas further states that the State Corporation Commission of the State of Kansas has regulatory jurisdiction over the rates, service and facilities of Union Gas and is exercising such jurisdiction.

Comment date: April 27, 1988, in accordance with Standard Paragraph F at the end of this notice.

Standard Paragraphs

F. Any person desiring to be heard or make any protest with reference to said filing should on or before the comment date file with the Federal Energy Regulatory Commission, 825 North Capitol Street NE, Washington, DC 20426, a motion to intervene or a protest in accordance with the requirements of the Commission's Rules of Practice and Procedure (18 CFR 385.211 and 385.214) and the Regulations under the Natural Gas Act (18 CFR 157.10). All protests filed with the Commission will be considered by it in determining the appropriate action to be taken but will not serve to make the protestants parties to the proceeding. Any person wishing to become a party to a proceeding or to participate as a party in any hearing therein must file a motion to intervene in accordance with the Commission's Rules.

Take further notice that, pursuant to the authority contained in and subject to jurisdiction conferred upon the Federal Energy Regulatory Commission by sections 7 and 15 of the Natural Gas Act and the Commission's Rules of Practice and Procedure, a hearing will be held without further notice before the Commission or its designee on this filing if no motion to intervene is filed within the time required herein, if the Commission on its own review of the matter finds that a grant of the certificate is required by the public convenience and necessity. If a motion for leave to intervene is timely filed, or if the Commission on its own motion believes that a formal hearing is required, further notice of such hearing will be duly given.

Under the procedure herein provided for, unless otherwise advised, it will be unnecessary for the applicant to appear or be represented at the hearing.

G. Any person or the Commission's staff may, within 45 days after the issuance of the instant notice by the Commission, file pursuant to Rule 214 of the Commission's Procedural Rules (18 CFR 385.214) a motion to intervene or notice of intervention and pursuant to § 157.205 of the Regulations under the Natural Gas Act (18 CFR 157.205) a protest to the request. If no protest is filed within the time allowed therefor, the proposed activity shall be deemed to be authorized effective the day after the time allowed for filing a protest. If a protest is filed and not withdrawn within 30 days after the time allowed for filing a protest, the instant request shall be treated as an application for authorization pursuant to section 7 of the Natural Gas Act.

Lois D. Cashell,

Acting Secretary.

[FR Doc. 88-7911 Filed 4-11-88; 8:45 am]

BILLING CODE 6717-01-M

[Docket Nos. CP88-328-000 et al.]

Transcontinental Gas Pipe Line Corp. et al.; Natural Gas Certificate Filings

Take notice that the following filings have been made with the Commission:

1. Transcontinental Gas Pipeline Corporation

[Docket No. CP88-328-000]

April 4, 1988.

Take notice that on April 1, 1988, Transcontinental Gas Pipe Line Corporation (Applicant), P.O. Box 1396, Houston, Texas 77251 filed in Docket No. CP88-328-000 an application pursuant to section 7 of the Natural Gas Act for a blanket certificate of public convenience and necessity to transport natural gas under Section 284.221 of the Commission's regulations, all as more fully set forth in the application which is on file with the Commission and open for public inspection.

Applicant states that self-implementing transportation would be provided in accordance with Rate Schedule IT for interruptible transportation and Rate Schedule FT for firm transportation. Applicant states that its Rate Schedules IT and FT were accepted by Commission order issued December 31, 1987, in Docket Nos. RP88-5-004 and RP88-37-001.

Applicant states that issuance of a blanket certificate authorizing it to transport natural gas on behalf of others is required by the public convenience and necessity, that it is willing and able to perform the acts proposed in the application, and that the requested authorization should be granted.

Comment date: April 18, 1988, in accordance with Standard Paragraph F at the end of this notice.

2. United Gas Pipe Line Company

[Docket No. CP88-306-000]

April 5, 1988.

Take notice that on March 21, 1988, United Gas Pipe Line Company (United), P.O. Box 1478, Houston, Texas 77251-1478, pursuant to section 7(b) and 7(c) of the Natural Gas Act, as amended, filed in Docket No. CP88-306-000 an application requesting a certificate of public convenience and necessity to sell natural gas to Louisiana Gas Service Company (LGS) under new service agreements. In order to implement the new service agreements, United requests an order permitting and approving abandonment of its current sales to LGS under service agreements which expired on January 1, 1988.

Specifically, United has three service agreements with LGS which have expired. LGS has requested certain reductions relating to their purchase of natural gas from United and have entered into new service agreements with United to incorporate those changes, all as more fully set forth in the application which is on file with the Commission and open to public inspection.

Comment date: April 26, 1988, in accordance with Standard Paragraph F at the end of this notice.

3. Texas Eastern Transmission Corporation

[Docket No. CP88-301-000]

April 5, 1988.

Take notice that on March 18, 1988, Texas Eastern Transmission Corporation (Texas Eastern), Post Office Box 2521, Houston, Texas 77252, filed in Docket No. CP88-301-000 an application pursuant to section 7(b) of the Natural Gas Act requesting the Commission to issue an order authorizing the abandonment of a 285-horsepower field compressor and appurtenant facilities (Gohlke Unit) located in the Gohlke Field, DeWitt County, Texas, all as more fully set forth in the application which is on file with the Commission and open to public inspection.

Texas Eastern states that the Gohlke Unit was originally installed as a 75-horsepower field compressor unit pursuant to a certificate of public convenience and necessity granted to Wilcox Trend Gathering System, Inc. (Wilcox Trend)[1] by FPC order issued April 23, 1956, in Docket No. G-8584 (15 FPC 1316) and that the engine was subsequently changed to a 285-horsepower unit under Wilcox Trend's budget-type certificate issued August 2, 1957, in Docket No. G-12140 (18 FPC 102).

Texas Eastern further states that the Gohlke Unit was originally installed to boost the pressure of gas produced from wells in the Gohlke Field to pressures sufficient to enter Texas Eastern's transmission line in DeWitt County, Texas. Subsequently, production from the Gohlke Field declined due to gradual depletion of reserves and reduction of producing wells to the point where continuation of comrpession was no longer feasible from either an economic or operational standpoint. Accordingly Texas Eastern discontinued operation of the Gohlke Unit.

It is stated that only one of the gas wells in the Gohlke Field is currently producing. It is indicated that the operator of the field has provided a field compressor for this well, which increases the pressure sufficiently for the gas to enter Texas Eastern's transmission system.

Texas Eastern states that service to Texas Eastern's customers will not be affected as a result of abandonment of the Gohlke Unit. Texas Eastern's other gas supply sources will continue to be used for such service. In addition, abandonment of the Gohlke Unit will eliminate the ongoing expense of maintenance and surveillance of the Unit. Further, to place the Gohlke Unit in good operating condition would require a major overhaul, it is stated.

Texas Eastern asserts that the available supply of gas for compression by the Gohlke Unit is depleted to the extent that continuation of the service provided by the unit is unwarranted.

Comment date: April 26, 1988, in accordance with Standard Paragraph F at the end of this notice.

4. Tennessee Gas Pipeline Company

[Docket No. CP88-293-000]

April 5, 1988.

Take notice that on March 14, 1988, Tennessee Gas Pipeline Company (Tennessee), P.O. Box 2511, Houston, Texas 77252, filed in Docket No. CP88-293-000, pursuant to §§ 157.205 and 157.212 of the Regulations under the Natural Gas Act (18 CFR 157.205) and (157.212) for authorization to establish a new delivery point to its existing GS-1 firm sales customer, the city of Pontotoc, Mississippi (Pontotoc) under the blanket certificate issued in Docket No. CP82-413-000, on September 1, 1982, all as more fully set forth in the request on file with the Commission and open to public inspection.

Tennessee states that pursuant to Pontotoc's request, it has agreed to establish a new GS-1 sales delivery point to Pontotoc in Tennessee's Rate Zone 1 to be known as the Pontotoc No. 2 Sales Meter Station located in Pontotoc County, Mississippi. Tennessee also states that the new delivery point is necessary to serve the growing requirements of the Southwest portion of its existing service area. The total estimated cost of the proposed new delivery point is $92,000.

Tennessee indicates that it proposed to increase or decrease the total daily and/or annual quantities it is authorized to deliver to Pontotoc. Tennessee asserts that the establishment of the proposed new delivery point is not prohibited by its currently effective tariff and that it has sufficient capacity to accomplish the deliveries at the proposed new delivery point without detriment or disadvantage to any of its other customers.

Comment date: May 20, 1988, in accordance with Standard Paragraph G at the end of this notice.

5. Pacific Gas Transmission Company

[Docket No. CP88-295-000]

April 5, 1988.

Take notice that on March 15, 1988, as supplemented March 21, 1988, Pacific Gas Transmission Company (PGT), 160 Spear Street, San Francisco, California 94105-1570, filed in Docket No. CP88-295-000 a request pursuant to § 157.205 of the Regulations under the Natural Gas Act (18 CFR 157.205), to add a new delivery point and to reassign a portion of the volumes of gas authorized for delivery at an existing sales tap for delivery at such new tap, under PGT's blanket certificate issued in Docket No. CP82-530-000, all as more fully set forth in the request on file with the Commission and open to public inspection.

PGT states that PGT currently delivers up to 151,731 Mcf per day of natural gas to Northwest Pipeline Company (Northwest) at various points in Idaho, Washington and Oregon. PGT states that it would construct and operate a new delivery point to Northwest near Athol, Idaho and would

[1] Wilcox Trend, formerly a wholly owned subsidiary of Texas Eastern was merged into Texas Eastern Transmission Corporation pursuant to FPC order issued July 9, 1958, in Docket No. G-14870 (20 FPC 21).

BEST COPY AVAILABLE

reassign to such tap 300 Mcf per day of the 8,490 Mcf per day of natural gas presently authorized for delivery to Northwest at an existing sales tap located at a point near Mica, Washington. PTG states that it would construct the new sales tap and reassign a portion of the volumes from the existing delivery point to enable Northwest to provide service to the Washington Water Power Company, a local distribution company, which in turn will provide service to the town of Athol, Idaho. PGT states that there will be no increase in the total quantity of gas which PGT is authorized to transport for Northwest.

Comment date: May 20, 1988, in accordance with Standard Paragraph G at the end of this notice.

6. Nothern Natural Gas Company Division of Enron Corporation

[Docket No. CP88-305-000]

April 5, 1988.

Take notice that on March 18, 1988, Northern Natural Gas Company, Division of Enron Corporation (Northern), 2223 Dodge Street, Omaha, Nebraska 68102, filed in Docket No. CP88-305-000, a request for authorization pursuant to §§ 157.205 and 157.216(b) of the Regulations under the Natural Gas Act, and Northern's blanket certificate issued in Docket No. CP82-401-000, for permission and approval to abandon in place approximately 1,840 feet and remove 250 feet of the Yankton, South Dakota, 6-inch Branchline, all as more fully set forth in the application which is on file with the Commission and open to public inspection.

It is stated that the Yankton 6-inch Branchline was placed in service in 1954, and due to erosion is partially exposed and suspended over the James River. It is further stated that erosion would continue to deteriorate the banks of the James River and further expose the Yankton 6-inch Branchline, adding to an already unsafe situation. Northern asserts that the Yankton 8-inch Branchline can more adequately serve the current and future needs of the Yankton, South Dakota town border station (TBS) No. 1 which is utilized as a delivery point to Iowa Public Service Company.

Northern states that even though the overall volume capacity of the Yankton TBS would be reduced to 13,175 Mcf/d, the proposed abandonment would not impair the operational continuity and integrity of Northern's transmission system. In addition, projections indicate that the required capacity of the TBS is not expected to exceed 9,877 Mcf/d. It is asserted that the abandonment of said Branchline would not result in abandonment of service to any of Northern's existing customers.

Comment date: May 20, 1988, in accordance with Standard Paragraph G at the end of this notice.

7. Northwest Pipeline Corporation

[Docket No. CP88-303-000]

April 5, 1988.

Take notice that on March 18, 1988, Northwest Pipeline Corporation (Northwest), 295 Chipeta Way, Salt Lake City, Utah 84108, filed in Docket No. CP88-303-000 its request pursuant to §§ 157.205 and 157.212 of the Commission's Regulations under the Natural Gas Act (18 CFR 157.205 and 157.212) for authorization to add an additional sales delivery point and reallocate natural gas service for The Washington Water Power Company (Water Power), an existing customer of Northwest's, under its blanket certificate issued pursuant to secton 7 of the Natural Gas Act in Docket No. CP82-433-000, all as more fully set forth in the request which is on file with the Commission and open to public inspection.

Northwest states that Water Power has requested an additional sales delivery point, the Athol Meter Station, to be located in Section 16, Township 53 North, Range 3 West, Kootenai County, Idaho. Water Power has informed Northwest that the additional delivery point is needed to provide natural gas service to the town of Athol, Idaho, and for the development at the nearby Henley Aerodome.

It is stated that since the community of Athol, Idaho, is in the vicinity of Pacific Gas Transmission Company's (PGT) pipeline, PGT would construct and operate the Athol Meter Station and provide transportation of Northwest's system supply to that point. PGT has agreed to build the Athol Meter Station and Northwest has agreed to reimburse PGT for its actual costs of doing so. Likewise, Water Power has agreed to reimburse Northwest for all out-of-pocket costs incurred in construction of the Athol Station. The total cost of the meter station is estimated to be $165,500. It is stated that the Commission authorized the subject transportation service on August 5, 1960, at Docket No. G-17350 (24 FPC 134). PGT filed a request under §§ 157.205 and 157.212 of the Commission's Regulations on March 15, 1988, at Docket No. CP88-295-000 for authorization to construct and operate the Athol Meter Station and to reallocate transportation volumes to the Athol delivery point.

Northwest proposed to sell up to approximately 296.373 Mcf of natural gas per day under Rate Schedule ODL-1 to Water Power at the Athol Meter Station by utilizing existing quantities of natural gas heretofore authorized for sale and delivery under Rate Schedule ODL-1 to Water Power at the Mica Meter Station in Ada County, Idaho. No increase in the total daily contract quantity of natural gas which Northwest is authorized to sell and delivery to Water Power is proposed, nor would any such increase result from the grant of the authorization sought herein. Northwest avers that the proposed sales would be made by utilizing its currently existing system capacity and that Northwest has sufficient capacity to provide for the proposed deliveries without detriment or disadvantage to any of Northwest's existing customers.

Comment date: May 20, 1988, in accordance with Standard Paragraph G at the end of this notice.

8. Natural Gas Pipeline Company of America

[Docket No. CP88-312-000]

April 5, 1988.

Take notice that on March 24, 1988, Natural Gas Pipeline Company of America (Natural), 701 East 22nd Street, P.O. Box 1208, Lombard, Illinois 60148, filed in Docket No. CP88-312-000 an application pursuant to sections 7(b) and 7(c) of the Natural Gas Act for a blanket certificate of public convenience and necessity and permission and approval to abandon service authorized under such certificate so that Natural may make and discontinue interruptible sales for resale and direct sale deliveries in interstate commerce of natural gas supplies, which are surplus to the current and anticipated needs of Natural's existing jurisdictional and direct sale customers, to existing DMQ-1 and G-1 customers and new customers including interstate, intrastate and Hinshaw pipelines and local distribution companies under proposed Rate Schedule IS-1, which incorporates, *inter alia*, the ability for Natural to discount its sales rate where market conditions require a reduced rate for Natural to be competitive, all as more fully set forth in the application which is on file with the Commission and open to public inspection.

Natural states that it is experiencing a gas supply/demand imbalance due to the current structural changes occurring in the natural gas industry. Changes in Commission policy are said to have encouraged the development of a spot market for gas and Natural's existing customers are said to have been

foregoing Natural's supplies to achieve short-term cost reductions in the spot market. As a result, Natural alleges, its annual supply deliverability far exceeds current average purchase levels by traditional customers. Average daily sales by Natural are said to have slipped from the historical levels prevalent for many years in excess of 2.5 Bcf per day to levels of about 0.5 Bcf per day during 1987. In addition, Natural states that it has experienced significant volatility in its sales market over the past 24 months and expects this volatility to continue, causing further sales reductions with corresponding increases in surplus supplies. Some of Natural's traditional customers are purchasing no gas from Natural on many days.

Natural further states that to help alleviate the drastic swings in sales described above, Natural is requesting blanket authorization to make interruptible sales for resale and direct sale deliveries to Natural's existing customers or to new customers, including interstate, intrastate and Hinshaw pipelines and local distribution companies. These sales would be made from deliverability which is in excess of that required to meet the current and projected needs of Natural's traditional customers. All of these proposed sales would be on an interruptible basis, subject to available supply and pipeline capacity. Natural each month would designate various points where Natural's excess system supply gas would be made available for sale. Natural would, based upon market conditions, determine the price from time to time, within a minimum and maximum range, at which sales will be made at each of the specified delivery points in a non-discriminatory basis.

Natural is proposing to make these sales pursuant to a new Rate Schedule IS-1. Natural would charge a negotiated rate for sales within a minimum and maximum range. Natural proposes to discount its sales rate to any level within this range if necessary to allow Natural to compete effectively. The minimum rate would be Natural's current weighted average commodity cost of gas plus the variable costs incurred to provide the service. The maximum rate would be Natural's 100% load factor DMQ-1 sales rate. The annual charges adjustment and Gas Research Institute surcharge if applicable, would be added to the rate Natural charges.

Comment date: April 26, 1988, in accordance with Standard Paragraph F at the end of this notice.

Standard Paragraphs

F. Any person desiring to be heard or make any protest with reference to said filing should on or before the comment date file with the Federal Energy Regulatory Commission, 825 North Capitol Street NE., Washington, DC 20426, a motion to intervene or a protest in accordance with the requirements of the Commission's Rules of Practice and Procedure (18 CFR 385.211 and 385.214) and the Regulations under the Natural Gas Act (18 CFR 157.10). All protests filed with the Commission will be considered by it in determining the appropriate action to be taken but will not serve to make the protestants parties to the proceeding. Any person wishing to become a party to a proceeding or to participate as a party in any hearing therein must file a motion to intervene in accordance with the Commission's Rules.

Take further notice that, pursuant to the authority contained in and subject to jurisdiction conferred upon the Federal Energy Regulatory Commission by sections 7 and 15 of the Natural Gas Act and the Commission's Rules of Practice and Procedure, a hearing will be held without further notice before the Commission or its designee on this filing if no motion to intervene is filed within the time required herein, if the Commission on its own review of the matter finds that a grant of the certificate is required by the public convenience and necessity. If a motion for leave to intervene is timely filed, or if the Commission on its own motion believes that a formal hearing is required, further notice of such hearing will be duly given.

Under the procedure herein provided for, unless otherwise advised, it will be unnecessary for the applicant to appear or be represented at the hearing.

G. Any person or the Commission's staff may, within 45 days after the issuance of the instant notice by the Commission, file pursuant to Rule 214 of the Commission's Procedural Rules (18 CFR 385.214) a motion to intervene or notice of intervention and pursuant to § 157.205 of the Regulations under the Natural Gas Act (18 CFR 157.205) a protest to the request. If no protest is filed within the time allowed therefor, the proposed activity shall be deemed to be authorized effective the day after the time allowed for filing a protest. If a protest is filed and not withdrawn within 30 days after the time allowed for filing a protest, the instant request shall be treated as an application for authorization pursuant to section 7 of the Natural Gas Act.

Lois D. Cashell,

Acting Secretary.

[FR Doc. 88-7912 Filed 4-11-88 8:45 am]

BILLING CODE 6717-01-M

[Docket No. RP88-95-000]

Canyon Creek Compression Co.; Proposed Changes in FERC Gas Tariff

April 5, 1988.

Take notice that Canyon Creek Compression Company (Canyon) on March 31, 1988, tendered for filing proposed changes in its FERC Gas Tariff, Original Volume No. 1 to become effective May 1, 1988. Canyon's filing states that it will result in a rate decrease and that the filed cost of service is approximately $220,000, or 3%, less than the cost of service supporting Canyon's currently effective rates. The filed rates were developed utilizing a base period of the twelve months ended November 30, 1987, as adjusted for known and measurable changes through the end of the test period, August 31, 1988.

In addition to the proposed rate decrease, Canyon also proposed Original Volume 1A which sets in place the General Terms and Conditions under which Canyon could perform firm and interruptible transportation and compression service under section 311 of the Natural Gas Policy Act. Rate Schedule FCS (Firm) and Rate Schedule ICS (Interruptible) were also filed.

Any person desiring to be heard or to protest said filing should file a motion to intervene or protest with the Federal Energy Regulatory Commission, 825 North Capitol Street NE, Washington, DC 20426, in accordance with §§ 385.214 and 385.211 of the Commission's Rules of Practice and Procedure. All such motions or protests must be filed on or before April 12, 1988. Protests will be considered by the Commission in determining the appropriate action to be taken, but will not serve to make protestants parties to the proceeding. Any person wishing to become a party must file a motion to intervene. Copies of this filing are on file with the Commission and are available for public inspection.

Lois D. Cashell,

Acting Secretary.

Appendix A—Proposed Tariff Sheets

FERC Gas Volume No. 1

Sixth Revised Sheet No. 4
First Revised Sheet No. 7

First Revised Sheet No. 8
First Revised Sheet No. 9
First Revised Sheet Nos. 101–127

FERC Gas Volume No. 1A

Original Sheet Nos. 1–3
Original Sheet No. 4
Original Sheet Nos. 5–21
Original Sheet Nos. 31–44
Original Sheet Nos. 101–110
Original Sheet Nos. 111–120

[FR Doc. 88–7916 Filed 4–11–88; 8:45 am]

BILLING CODE 6717–01–M

[Docket No. TA88–2–46–001]

Kentucky West Virginia Gas Co.; Proposed Change in FERC Gas Tariff

April 5, 1988.

Take notice that Kentucky West Virginia Gas Company (Kentucky West) on March 31, 1988, tendered for filing with the Federal Energy Regulatory Commission (Commission) the following tariff sheets to its FERC Gas Tariff, Second Revised Volume No. 1, to become effective May 1, 1988.

Second Revised Sheet No. 40
Second Revised Sheet No. 41

Kentucky West states that the change in rates results from the application of the Purchase Gas Cost Adjustment provision in section 18, General Terms and Conditions of its FERC Gas Tariff.

Kentucky West states the current purchase gas adjustment is a decrease of 2.71¢ per dekatherm (dth). The deferred gas cost adjustment is an increase of 2.71¢ per dth. These changes result in a total net jurisdiction purchase gas cost charge of 193.77¢ per dth, to become effective May 1, 1988.

Kentucky West states that a copy of its filing has been served upon its purchasers and interested state commissions and upon each party on the service list of Docket No. RP86–52.

Any person desiring to be heard or to protest said filing should file a motion to intervene or protest with the Federal Energy Regulatory Commission, 825 North Capitol Street NE., Washington, DC 20426, in accordance with §§ 385.211 and 385.214 of the Commission's Rules of Practice and Procedure (18 CFR 385.211 and 385.214). All such motions or protests should be filed on or before April 12, 1988. Protests will be considered by the Commission in determining the appropriate action to be taken, but will not serve to make protestants parties to the proceeding. Any person wishing to become a party must file a motion to intervene. Copies of this filing are on file with the Commission and are available for public inspection.

Lois D. Cashell,

Acting Secretary.

[FR Doc. 88–7917 Filed 4–11–88; 8:45 pm]

BILLING CODE 6717–01–M

[Docket No. TA88–2–25–002]

Mississippi River Transmission Corp.; Rate Change Filing

April 5, 1988.

Take notice that on March 30, 1988, Mississippi River Transmission Corporation ("MRT"), tendered for filing the following tariff sheets to its FERC Gas Tariff, Second Revised Volume No. 1:

Tariff Sheet and Proposed Effective Date

Substitute Twenty-Second Revised Sheet No. 4, March 1, 1988
Eighth Revised Sheet No. 4A, March 1, 1988
First Revised Sheet No. 61A, March 1, 1988
Original Sheet No. 61B, March 1, 1988
Original Sheet No. 61C, March 1, 1988

MRT states that the purpose of the filing is to comply with conditions set forth in the Commission's February 29, 1988 order which required, among other things, that MRT file revised tariff sheets reflecting reduced purchased gas costs, and a revised allocation of take-or-pay charges incurred from United Gas Pipe Line Company based on the cumulative purchase deficiency method as set forth in Order No. 500.

MRT claims that the combined impact of the purchased gas and take-or-pay adjustments contained therein on MRT's jurisdictional customers is an annual decrease of $7.0 million in costs from that contained in MRT's January 29, 1988 filing in this docket. MRT states that Rate Schedule CD–1 reflects decreases of $1.583 per Mcf and $.0133 per Mcf in Demand Charge D–1 and D–2, respectively. The single part rate under Rate Schedule SGS–1 reflects a decrease of $.1664 per Mcf. The annual fixed take-or-pay charges that MRT anticipates to incur from United have declined from $15.4 million to $12.3 million.

MRT states that because the cumulative deficiency method causes a severe misallocation of costs among its customers, the instant filing includes alternate tariff sheets to recover the take-or-pay charges incurred from United in a manner roughly equivalent to the D–1 methodology proposed in its original January 29, 1988 filing in this docket. MRT requests that such sheets be accepted and placed into effect during the pendency of its Request for Rehearing and Motion for Clarification filed in the instant docket on March 30, 1988.

MRT states that copies of its filing have been served on all jurisdictional customers and interested state commissions. Any person desiring to be heard or to protest said filing should file a motion to intervene or protest with the Federal Energy Regulatory Commission, 825 North Capitol Street NE., Washington, DC 20426, in accordance with §§ 385.211 and 385.214 of the Commission's Rules of Practice and Procedure (18 CFR 385.211, 385.214). All such motions or protests should be filed on or before April 12, 1988. Protests will be considered by the Commission in determining the appropriate action to be taken, but will not serve to make protestants parties to the proceeding. Any person wishing to become a party must file a motion to intervene. Copies of this filing are on file with the Commission and are available for public inspection.

Lois Cashell,

Acting Secretary.

[FR Doc. 88–7918 Filed 4–11–88; 8:45 pm]

BILLING CODE 6717–01–M

[Docket No. RP88–94–000]

Natural Gas Pipeline Company of America; Tariff Filing

April 6, 1988.

Take notice that on March 31, 1988, Natural Gas Pipeline Company of America (Natural) submitted revised tariff sheets to establish initial rates and institute billing procedures for recovery of the costs of (i) extinguishing or reducing take-or-pay claims; (ii) terminating gas purchase contracts; and (iii) revising, or resolving disputes relating to, the pricing, take, or other economic terms of gas purchase agreements.

Natural proposes that all such costs prudently incurred be recovered through a two-part rate mechanism. Half of the costs would be recovered through a demand surcharge allocated among customers based on a factor giving equal weight to the daily contract quantities and monthly entitlements of Natural's sales customers in effect on the initial effective date. The remaining half of the costs would be recovered through volumetric charges based on total sales

and transportation throughput. The volumetric charge would be collected through adjustments to unit sales and transportation rates.

Natural states that the initial charges would become effective May 1, 1988, subject to refund, and reflect costs of approximately $470 million actually paid or expected to be paid as of that date. The charges would be recalculated on a semi-annual basis, effective each subsequent December 1 and June 1 to coincide with Natural's periodic PGA filings. These semi-annual recalculations would reflect collections, additional payments under qualifying settlement agreements, and carrying charges on the uncollected balance of the costs. Special accounting procedures would be set up for recording transition costs and collections. The program will terminate on November 30, 1992, with a reconciliation to be made 90 days later. The reconciliation may result in refunds or additional billings as to costs recoverable on a demand basis.

Natural also submitted alternate sheets on a contingent basis in the event its proposal is rejected. Natural states that the alternate sheets provided for monthly billing on a demand basis of a calculated dollar amount for each sales customer of Natural to provide for the recovery, commencing May 1, 1988, of one-half these costs. Under this alternate approach, the remaining 50 percent of such costs would be absorbed by Natural. These alternate tariff sheets conform to the billing procedures approved by the Commission in Order No. 500 and 18 CFR 2.104. Consistent with Order No. 500, the costs to be recovered would be allocated based on purchase deficiencies from a base period of 1983–85.

Natural requested an effective date of May 1, 1988, for the proposed tariff changes.

Natural states that a copy of its filing has been mailed to Natural's jurisdictional customers and interested state regulatory agencies.

Any person desiring to be heard or to protest said filing should file a motion to intervene or a protest with the Federal Energy Regulatory Commission, 825 North Capitol Street NE., Washington, DC 20426, in accordance with Rules 214 and 211 of the Commission's Rules of Practice and Procedure (18 CFR 385.214, 385.211 (1987)). All such motions or protests should be filed on or before April 13, 1988. Protests will be considered by the Commission in determining the appropriate action to be taken, but will not serve to make protestants parties to the proceeding. Any person wishing to become a party must file a motion to intervene. Copies of this filing are on file with the Commission and are available for public inspection.

Lois D. Cashell,

Acting Secretary.

[FR Doc. 88–7914 Filed 4–11–88; 8:45 am]

BILLING CODE 6717-01-M

[Docket No. RP88-47-002]

Northwest Pipeline Corp.; Filing of Restatement of Base Tariff Rates

April 5, 1988.

Take notice that on March 31, 1988, Northwest Pipeline Corporation (Northwest) tendered for filing a restatement of Base Tariff Rates on Third Amended Thirty-Ninth Revised Sheet No. 10 of First Revised Volume No. 1 of its FERC Gas Tariff to be effective May 1, 1988.

Northwest states that this filing reflects no changes in the level of its jurisdictional rates but is being made for the sole purpose of restating and justfying such rates, as required by the 36-month review procedures within the Commission's Regulations governing PGA provisions. Accordingly, for this purpose, the filing contains a supporting cost study pursuant to § 154.303(e) of the Commission's Regulations.

Northwest states its agreement that this filing will automatically be subject to refund as of May 1, 1988, as required by § 154.303(e)(i) of the Commission's Regulations.

Any person desiring to be heard or to protest said filing should file a motion to intervene or protest with the Federal Energy Regulatory Commission, 825 North Capitol Street NE., Washington, DC 20426, in accordance with Rules 211 and 214 of the Commission's Rules of Practice and Procedure (18 CFR 385.211, 385.214). All such motions or protests should be filed on or before April 12, 1988. Protests will be considered by the Commission in determining the appropriate action to be taken, but will not serve to make protestants parties to the proceeding. Any person wishing to become a party must file a motion to intervene. Copies of this filing are on file with the Commission and are available for public inspection.

Lois D. Cashell,

Acting Secretary.

[FR Doc. 88–7919 Filed 4–11–88 8:45 am]

BILLING CODE 6717-01-M

[Docket No. RP88-93-000]

Questar Pipeline Co.; Proposed Changes in FERC Gas Tariff

April 5, 1988.

Take notice that on March 31, 1988, Questar Pipeline Company (Questar) (formerly Mountain Fuel Resources, Inc.), tendered for filing and acceptance proposed changes in the following tariff sheets in its FERC Gas Tariff and has requested that they become effective May 1, 1988:

First Revised Volume No. 1:
- Thirteenth Revised Sheet No. 12
- Original Sheet No. 12–A
- Second Revised Sheet No. 15
- Second Revised Sheet No. 15–A
- Second Revised Sheet No. 15–B
- First Revised Sheet No. 16
- First Revised Sheet No. 17
- Second Revised Sheet No. 39
- Original Sheet No. 39–A

Original Volume No. 1–A:
- Fifth Revised Sheet No. 5
- Original Sheet No. 5–A

Original Volume No. 3:
- Eighth Revised Sheet No. 8
- Original Sheet No. 8–A
- Fourth Revised Sheet No. 9
- Fifth Revised Sheet No. 10
- Original Sheet No. 10–A
- Original Sheet No. 10–B

Questar states that the proposed tariff changes would increase its annual revenues from jurisdictional sales-for-resale and transportation services by approximately $21.5 million based on the 12-month base period ended December 31, 1987, adjusted for known and measurable changes for the test period ending September 30, 1988. Questar further states that the total annual cost of service established in Docket No. RP86–7–000 was $89.6 million, including $26.2 million related to non-jurisdictional gathering services and $63.4 million for jurisdictional sales and transportation services. According to Questar, the jurisdictional Transmission Division cost of service in its rate increase application is $82.8 million.

Questar states that the tendered tariff sheets also: (1) Modify its standby charge under Rate Schedule CD–1 to First Revised Volume No. 1 of its tariff; and (2) include provisions that improve the administration of transportation arrangements under Original Volume No. 3 of its tariff with respect to nomination procedures, maximum daily quantity levels and application of authorized overrun charges.

Questar states that the filing reflects only assets, revenues and costs associated with its Transmission Division. Questar indicates that it has

excluded from the determination of rates the assets, costs and revenues related to: (1) Questar's Storage Division, which owns and operates the Clay Basin Storage Project. The Clay Basin project was separately certificated by the Commission in Docket No. CP76-285, Mountain Fuel Resources, Inc., 16 FERC § 61,040 (1981), and provides service to Northwest Pipeline Corporation and Questar's Transmission Division under a project-specific, cost-of-service tariff. (2) Questar's Gathering Division, which it says has been formed to own and operate those Questar facilities that carry out non-jurisdictional gathering operations under section 1(b) of the Natural Gas Act.

Questar further states that the key elements of the filing include changes in transportation and sales volumes; a rate of return on equity of 15.5%; a consolidated restatement of certain depreciation rates; and a modification to the allocation of storage costs between the sales and transportation classes of service.

Questar states that its filing was served on each of its customers and affected state commissions pursuant to § 154.16(b) of the Commission's regulations.

Any person desiring to be heard or to protest said filing should file a motion to intervene or a protest with the Federal Energy Regulatory Commission, 825 North Capitol Street, NE., Washington, DC 20426, in accordance with Rules 211 and 214 of the Commission's rules of practice and procedures (18 CFR 385.211, 385.214). All such motions or protests should be filed on or before April 12, 1988. Protests will be considered by the Commission in determining the appropriate action to be taken, but will not serve to make protestants parties to the proceeding. Any person wishing to become a party must file a motion to intervene. Copies of this filing are on file with the Commission and are available for public inspection.

Lois D. Cashell,

Acting Secretary.

[FR Doc. 88-7920 Filed 4-11-88 8:45 am]

BILLING CODE 6717-01-M

[Docket No. TA88-4-29-000]

Transcontinental Gas Pipe Line Corp.; Proposed Changes in FERC Gas Tariff

April 5, 1988.

Take notice that Transcontinental Gas Pipe Line Corporation (Transco) tendered for filing on March 31, 1988, certain revised tariff sheets included in Appendix A attached to the filing. Such sheets are proposed to be effective May 1, 1988.

Transco states the proposed tariff sheets reflect an overall rate increase of 5.7 cents per dt in the commodity charge under the CD, G, OG, PS, E, ACQ and S-2 Rate Schedules.

Transco states the increase of 5.7 cents in the commodity charge of the aforementioned rate schedules is comprised of a 0.1 cent per dt decrease related to the current gas cost portion of commodity rates and a 5.8 cents per dt increase in the Deferred Adjustment. Transco states that the instant PGA filing reflects a projected average cost of purchased gas of $2.3946 per dt based on projected system gas purchases.

Transco has included in the instant filing the continuation of the 5.8 cents per dt special transition gas cost surcharge. Further, Transco states that the carrying charge amounts included in the filing which are attributable to transition gas costs have been calculated in accordance with the methodology approved by the Commission in its order issued April 30, 1987, in Docket No. TA87-4-29.

Transco states that copies of the instant filing are being mailed to its jurisdictional customers and interested state commissions. In accordance with the provisions of § 154.16 of the Commission's Regulations, copies of this filing are available for public inspection during regular business hours, in a convenient form and place at Transco's main office at 2800 Post Oak Boulevard in Houston, Texas.

Any person desiring to be heard or to protest said filing should file a motion to intervene or protest with the Federal Energy Regulatory Commission, 825 North Capitol Street, NE., Washington, DC 20426, in accordance with Rule 211 and Rule 214 of the Commission's Rules of Practice and Procedure (18 CFR 385.211 and 385.214). All such motions or protests should be filed on or before April 12, 1988. Protests will be considered by the Commission in determining the appropriate action to be taken, but will not serve to make protestants parties to the proceeding. Any person wishing to become a party must file a motion to intervene. Copies of this filing are on file with the Commission and are available for public inspection.

Lois D. Cashell,

Acting Secretary.

Appendix A—Transcontinental Gas Pipe Line Corporation

Second Revised Volume No. 1

Revised Tariff Sheets

Fifty-Second Revised Sheet No. 12

Forty-Eighth Revised Sheet No. 15

Eighth Revised Sheet No. 15-A

Alternate Tariff Sheets

Alternate Fifty-First Revised Sheet No. 12

Alternate Forty-Seventh Revised Sheet No. 15

Alternate Seventh Revised Sheet No. 15-A

[FR Doc. 88-7921 Filed 4-11-88; 8:45 am]

BILLING CODE 6717-01-M

[Docket No. TA88-2-50-000

Valley Gas Transmission, Inc.; Change in Rates Pursuant to Purchased Gas Adjustment

April 5, 1988.

Take notice that on March 31, 1988, Valley Gas Transmission, Inc. ("Valley") tendered for filing and acceptance the following tariff sheets as part of its FERC Gas Tariff:

Thirty-seventh Revised Sheet No. 2A to Original Volume No. 1

Tenth Revised Sheet No. 10 to Original Volume No. 2.

Valley states that these tariff sheets, which are proposed to become effective on May 1, 1988 are being filed pursuant to the purchased gas cost adjustment provisions of its tariff. Valley further states that these proposed changes reflect adjustments to its current surcharge adjustment and current gas cost adjustment, and that its filing has been served on all jurisdictional customers.

Any person desiring to be heard or to protest said filing should file a motion to intervene or protest with the Federal Energy Regulatory Commission, 825 N. Capitol Street, NE., Washington, DC 20426 in accordance with §§ 385.211 and 385.214 of the Commission's Rules of Practice and Procedures (18 CFR 385.211, 385.214). All such motions or protests should be filed on or before April 12, 1988. Protests will be considered by the Commission in determining the appropriate action to be taken, but will not serve to make protestants parties to the proceeding. Any person wishing to become a party must file a motion to intervene. Copies of this filing are on file with the Commission and are available for public inspection.

Lois D. Cashell,

Acting Secretary.

[FR Doc. 88-7923 Filed 4-11-88; 8:45 am]

BILLING CODE 6717-01-M

[Docket No. TA88-3-43-000]

Williams Natural Gas Co.; Proposed Changes in FERC Gas Tariff

April 5, 1988.

Take notice that Williams Natural Gas Company (WNG) on March 31, 1988, tendered for filing First Revised Fourth Revised Sheet No. 6 and Second Revised Third Revised Sheet No. 7 to its FERC Gas Tariff, Original Volume No. 1. WNG states that pursuant to the Purchased Gas Adjustment in Article 21 of its FERC Gas Tariff, it proposes to decrease its rates effective May 1, 1988, to reflect:

(1) A $.2790 per Mcf decrease in the Cumulative Adjustment as measured against WNG's last regular PGA filing in Docket No. TA88-1-43-000 which became effective November 1, 1987 and a $.0717 per Mcf increase as measured against WNG's flex PGA" filing in Docket No. TF88-1-43-000 which became effective on February 1, 1988, due to an increase in WNG's projected gas purchase costs.

(2) A $1.054 per Mcf decrease in the Surcharge Adjustment (to a negative $.1359 per Mcf from a negative $.0305 per Mcf) to amortize the Deferred Purchased Gas Cost Subaccount Balance.

WNG states that copies of its filing were served on all jurisdictional customers and interested state commissions.

Any person desiring to be heard or to protest said filing should file a motion to intervene or protest with the Federal Energy Regulatory Commission, 825 North Capitol Street NE., Washington, DC 20426, in accordance with §§ 385.211 and 385.214 of the Commission's Rules of Practice and Procedure (18 CFR 385.211, 385.214). All such motions or protests should be filed on or before April 12, 1988. Protests will be considered by the Commission in determining the appropriate action to be taken, but will not serve to make protestants parties to the proceedings. Any person wishing to become a party must file a motion to intervene. Copies of this filing are on file with the Commission and are available for public inspection.

Lois D. Cashell,

Acting Secretary.

[FR Doc. 88-7922 Filed 4-11-88; 8:45 am]

BILLING CODE 6717-01-M

[Docket No. TA88-3-49-000]

Williston Basin Interstate Pipeline Co.; Purchased Gas Cost Adjustment Filing

April 6, 1988.

Take notice that on March 31, 1988, Williston Basin Interstate Pipeline Company (Williston Basin), Suite 200, 304 East Rosser Avenue, Bismarck, North Dakota 58501, tendered for filing as part of its FERC Gas Tariff the following tariff sheets:

First Revised Volume No. 1

Ninth Revised Sheet No. 10
Fourth Revised Sheet No. 11
Second Revised Sheet No. 91
First Revised Sheet Nos. 92-96
Second Revised Sheet No. 97
First Revised Sheet Nos.98-100
First Revised Sheet No. 104
Second Revised Sheet No. 113

Original Volume No. 1-A

Sixth Revised Sheet No. 11
Ninth Revised Sheet No. 12
Fifth Revised Sheet No. 275
Fourth Revised Sheet Nos. 275A-275B
Fifth Revised Sheet No. 276
Second Revised Sheet No. 276A

Original Volume No. 2

Eleventh Revised Sheet No. 10

Williston Basin also submitted for filing as part of its FERC Gas Tariff the following alternate tariff sheet:

First revised Volume No.1

Alternate Ninth Revised Sheet No. 10

Williston Basin's filing includes a number of changes including revisions to reflect changes in lost or unaccounted for gas, inert gas, a Rate Schedule X-1 commodity rate decrease, incremental pricing, and purchased gas costs. Williston Basin also states that its filing, *inter alia*, includes information in compliance with Commission orders issued April 30, 1985 and June 1, 1987. Among other things, Willison Basin requests that the Commission grant any waivers necessary to accept its Alternate Ninth Revised Sheet No. 10 in lieu of Ninth Revised Sheet No. 10 to avoid potential significant instability in its rates.

The Company requests an effective date for the tariff sheets of May 1, 1988.

Williston Basin states that Ninth Revised Sheet No. 10 (First Revised Volume No. 1) and Eleventh Revised Sheet No. 10 (Original Volume No. 2) and the schedules in support thereof were computed in accordance with Williston Basin's PGA clause and the Commission's Rules and Regulations. The changes herein reflect a cumulative gas cost adjustment for Rate Schedules G-1, SGS-1, E-1 and X-1 of a negative 33.529 cents per dkt. The surcharge adjustment for Rate Schedules G-1 and SGS-1 is a negative 87.193 cents per dkt. These changes produce a net decrease in rates for Rate Schedules G-1 and SGS-1 of 89.248 cents per dkt and a net decrease of 18.508 cents per dkt for Rate Schedules E-1 and X-1 relative to Williston Basin's February 29, 1988 filing in Docket No. RP87-115-003.

Williston Basin states that Alternate Ninth Revised Sheet No. 10 reflects a negative 2.634 cents per dkt surcharge adjustment applicable to Rate Schedules G-1 and SGS-1. This alternate surcharge adjustment, coupled with the proposed cumulative gas cost adjustment produce a net decrease in rates for Rate Schedules G-1 and SGS-1 of 23.689 cents per dkt relative to Williston Basin's February 29, 1988 filing in Docket No. RP87-115-003.

Williston Basin states that the projected price of deregulated gas supplies reflect that price last agreed-to by the various suppliers of natural gas.

Williston Basin has also submitted Sixth Revised Sheet No. 11 and Ninth Revised Sheet No. 12 (Original Volume No. 1-A) and Eleventh Revised Sheet No. 10 (Original Volume No. 2) respectively, to reflect a revised Company Use, Lost and Unaccounted For Gas percentage applicable to certain transportation rate schedules.

Pursuant to § 154.41(b) of the Commission's Regulations, Williston Basin also submits Fifth Revised Sheet No. 275, Fourth Revised Sheet Nos. 275A-275B, Fifth Revised Sheet No. 276 and Second Revised Sheet No. 276A (Original Volume No. 1-A). These sheets have been revised to update the "Index of Purchasers".

Williston Basin has also submitted Fourth Revised Sheet No. 11, Second Revised Sheet No. 91, and First Revised Sheet Nos. 92-96, Second Revised Sheet No. 97 and First Revised Sheet Nos. 98-100, (First Revised Volume No. 1). These sheets have been revised to implement a twelve-month amortization of the balance in the current deferred account. Williston Basin also filed revised tariff sheets to reflect the repeal of the incremental pricing provisions of the Natural Gas Policy Act pursuant to the Commission's order dated July 27, 1987 in Docket No. RM87-28-000, *et al.*, Order No. 478.

Additionally Williston Basin has submitted First Revised Sheet No. 104 (First Revised Volume No. 1) deleting the Subsection 22.1.3.14 reference to sales service under Rate Schedules X-5 and X-6, pursuant to the Commission authorized abandonment of Williston Basin's sales and purchase obligations thereunder in Docket No. CP86-430-000.

Williston Basin has also submitted Second Revised Sheet No. 113 (First Revised Volume No. 1) to correct an oversight in Subsection 27.5.3, i.e., to recite the GRI funding unit applicability to Sheet No. 11B (Original Volume No. 2).

Any person desiring to be heard or to protest said filing should file a motion to intervene or protest with the Federal Energy Regulatory Commission, 825 North Capitol Street NE., Washington, DC 20426, in accordance with Rules 214 and 211 of the Commission's Rules of Practice and Procedure (18 CFR 385.24, 385.211). All such motions or protests should be filed on or before April 13, 1988. Protests will be considered by the Commission in determining the appropriate action to be taken, but will not serve to make protestants parties to the proceeding. Any person wishing to become a party must file a motion to intevene. Copies of this filing are on file with the Commission and are available for public inspection.

Lois D. Cashell,

Acting Secretary.

[FR Doc. 88-7915 Filed 4-11-88; 8:45 am]

BILLING CODE 6717-01-M

[Docket No. G-2923-000 et al.]

ARCO Oil and Gas Co., Division of Atlantic Richfield Co., et al.; Applications for Certificates, Abandonment of Service and To Amend Certificates [1]

April 6, 1988.

Take notice that each of the Applicants listed herein has filed an application pursuant to section 7 of the Natural Gas Act for authorization to sell natural gas in interstate commerce, to abandon service or to amend certificates as described herein, all as more fully described in the respective applications which are on file with the Commission and open to public inspection.

Any person desiring to be heard or to make any protest with reference to said applications should on or before April 20, 1988, file with the Federal Energy Regulatory Commission, Washington, DC 20426, a petition to intervenes or a protest in accordance with the requirements of the Commission's Rules of Practice and Procedure (18 CFR 385.211, 385.214). All protests filed with the Commission will be considered by it in determining the appropriate action to be taken but will not serve to make the protestants parties to the proceeding. Any person wishing to become a party in any proceeding herein must file a petition to intervene in accordance with the Commission's rules.

Under the procedure herein provided for, unless otherwise advised, it will be unnecessary for Applicants to appear or to be represented at the hearing.

Lois D. Cashell,

Acting Secretary.

[1] This notice does not provide for consolidation for hearing of the several matters covered herein.

Docket No. and date filed	Applicant	Purchaser and location	Description
G-2923-000, D, Mar. 28, 1988.	ARCO Oil and Gas Company, Division of Atlantic Richfield Company, P.O. Box 2819, Dallas, TX 75221.	Panhandle Producing Company, Panhandle Field, Hutchinson County, Texas.	(1)
G-11479-001, D, Mar. 25, 1988.	Amoco Production Company, P.O. Box 3092, Houston, TX 77253.	El Paso Natural Gas Company, Langlie-Mattix Field, Lea County, New Mexico.	(2)
CI79-364-001, D, Mar. 22, 1988.	Multistate Oil Properties, N.V., P.O. Box 2511, Houston, TX 77001.	K N Energy, Inc., Lorena and Lorena S.E. Fields, Beaver County, Oklahoma.	(3)
CI81-438-002, D, Mar. 28, 1988.	ARCO Oil and Gas Company, Division of Atlantic Richfield Company.	Transwestern Pipeline Company, Kermit and S. Kermit Field, Winkler County, Texas.	(4)
CI84-498-004, D, Mar. 28, 1988.	Eastern Kentucky Production Company, 1989 East Stone Drive, Kingsport, TN 37660.	Kentucky West Virginia Gas Company, Various Counties, Kentucky.	(5)
CI88-362-000 (CI71-444), B, Mar. 10, 1988.	Conoco Inc., P.O. Box 2917, Houston, TX 77252	Tennessee Gas Pipeline Company, a Division of Tenneco Inc., Grand Isle Area, Offshore Louisiana.	(7)
CI88-380-000 (G-10672-000), D, Mar. 24, 1988.	Sun Exploration & Production Company, P.O. Box 2880, Dallas, TX 75221-2880.	Colorado Interstate Gas Co., Hugoton Field, Kearney County, Kansas.	(8)
CI88-383-000, F, Mar. 25, 1988.	Sun Exploration & Production Company	Natural Gas Pipeline Company of America, West Indian Basin Field, Eddy County, New Mexico.	(9)
CI88-386-000 (G-3009), D, Mar. 28, 1988.	ARCO Oil and Gas Company, Division of Atlantic Richfield Company.	United Gas Pipe Line Company, Dulac Field, Terrebonne Parish, Louisiana.	(11)
CI88-387-000 (G-14832), D, Mar. 28, 1988.	do	Abbeville Field, Vermilion Parish, Louisiana	(12)

Footnotes:

[1] Effective 3-1-86, ARCO assigned certain interest to Lyco Panhandle 1985 Limited Partnership Lyco-MM Panhandle Limited Partnership and Lyco/MM 1986 Limited Partnership.

[2] Effective 12-1-86, Amoco sold all of its interest in certain acreage to Mobil Producing Texas & New Mexico Inc.

[3] The three wells dedicated to FERC Gas Rate Schedule No. 7, the Haller #1, the Dubois Trust #1, and the Strickland #1, have been plugged and abandoned.

[4] Effective 1-1-87, ARCO assigned its interest in certain acreage to Hondo Oil & Gas Comapny.

[5] Wells have been plugged and abandoned due to either economic depletion, hydrogen sulfide, or coal mining operations.

[6] Not used.

[7] Lease expired.

[8] Effective 6-1-86, Sun assigned the last remaining property under FERC Gas Rate Schedule No. 73, to Kenworthy Operating Company.

[9] Effective 1-1-88, Sun acquired from Doil Oil and Gas Corporation and Monarch Petroleum Properties, Inc. additional interests in the amount of .08308490% in the West Indian Basin #1 Unit, and .04154240% in the West Indian Basin #2 Unit in Eddy County, New Mexico.

[10] Not used.

[11] Effective 6-1-86, ARCO assigned all its interest subject to FERC Gas Rate Schedule No. 531 to Pennzoil Producing Company.

[12] Effective 5-1-86, ARCO assigned its interest in all acreage under contract dated 3-14-58 comprising its FERC Gas Rate Schedule No. 535 to Great Southern Oil and Gas Company, Inc.

Filing Code: A—Initial Service; B—Abandonment; C—Amendment to add acreage; D—Amendment to delete acreage; E—Total Succession; F—Partial Succession.

[FR Doc. 88-7986 Filed 4-11-88; 8:45 am]

BILLING CODE 6717-01-M

OFFICE OF HEARINGS AND APPEALS

Issuance of Decisions and Orders for Week of February 22 Through 26, 1988

During the week of February 22 through February 26, 1988, the decisions and orders summarized below were issued with respect to applications for relief filed with the Office of Hearings and Appeals of the Department of Energy. The following summary also contains a list of submissions that were dismissed by the Office of Hearings and Appeals.

Refund Applications

Clifford Jensen, et al., 2/26/88, RF272-2550, et al.

The DOE issued a Decision and Order granting 50 applications for Refund filed in connection with the Subpart V crude oil refund proceedings. Each applicant purchased refined petroleum products during the period August 19, 1973, through January 27, 1981, and used the products for various agricultural activities. Each applicant calculated the volume of its fuel purchases by using the USDA estimate of the average annual petroleum product consumption per acre among the nation's farmers. As an end-user, each applicant was entitled to receive a refund of its full volumetric share. The sum of the refunds granted in this Decision is $1,608.

Coline Gasoline Corp./New York Pennozoil Co./New York Perry Gas Processors, Inc./New York, 2/23/88, RM2-92, RM10-93, RQ10-432, and RM183-94

The DOE issued a Decision and Order approving the second-stage refund application and Motions for Modification filed by the State of New York in the Coline Gasoline, Pennzoil, and Perry Gas refund proceedings. New York requested permission to use its previously-approved Coline, Pennzoil, and Perry Gas funds for the Transportation Systems Management (TSM) program. TSM provides information and technical assistance services to employers and commuters on the alternatives to single-occupant vehicle commuting. The DOE found that the TSM program will encourage ridesharing and will therefore help injured consumers reduce their energy use and costs. Because the litigation involving the Pennzoil funds has been resolved, the DOE can now disburse the Pennzoil funds for those programs it previously approved. New York will receive a total of $9,002 from the Pennzoil escrow fund, as well as permission to modify its use of the previously-received Coline and Perry Gas funds.

Cranston Oil Service Company, Inc./Park Ave. Cement Block Co., Inc. et al., 2/24/88, RF276-20 et al.

The DOE issued a Decision and Order concerning five Applications for Refund filed by end-users of No. 2 heating oil covered by a consent order that the agency entered into with Cranston Oil Service Company, Inc., and its successor-in-interest, Galego Oil Company. The Applications were evaluated in accordance with procedures set forth in *Cranston Oil Service Co.*, 14 DOE ¶ 85,499 (1986). The sum of the refunds approved in this Decision is $869, representing $749 in principal and $120 in interest.

Dorchester Gas Corp./C.W. Oil Company, 2/25/88, RF253-47

This Decision and Order concerns an Application for Refund filed by C.W. Oil Company in the Dorchester Gas Corporation refund proceeding. C.W. Oil claimed that it purchased 368,466 gallons of refined products from Dorchester during the Dorchester consent order period. Since the applicant's claim did not exceed $5,000, the DOE granted it a refund without requiring a showing of injury. The amount of the refund was $3,482 in principal plus accrued interest of $1,244.

Ernest A. Ditch, 2/26/88, RF272-2278

The Department of Energy (DOE) issued a Decision approving an Application for Refund in the Crude Oil Subpart V refund proceedings. The claimant was a farmer who used income tax records to compute the dollar amount of petroleum products he purchased during the August 1973 to January 1981 crude oil price control period. In order to derive the amount of fuel consumed (in gallons), the claimant then divided this amount by an estimated average price per gallon ($0.80/gallon). Because the claimant relied on the end-user presumption, he was not required to demonstrate injury. A total of $15 was approved in this Decision and Order.

Getty Oil Company/D.S. Caldwell Oil Co., Inc., 2/22/88, RF265-535 et al.

The DOE issued a Decision and Order concerning 59 Applications for Refund filed by resellers or retailers of products covered by a Consent Order that the DOE entered into with Getty Oil Company. Each applicant submitted information indicating the volume of its Getty purchases. In 55 of these cases, the applicants elected to limit their claims on the basis of the level-of-distribution presumption of injury methodology and were eligible for a refund below the maximum $50,000 threshold. In the remaining four cases, the applicants elected to limit their claims to $50,000 in accordance with the level-of-distribution presumption of injury for motor gasoline and middle distillates. The sum of refunds approved in this Decision is $865,583, representing $427,752 in principal and $437,831 in accrued interest.

Joseph Seibel et al., 2/23/88, RF272-4622 et al.

The DOE issued a Decision and Order granting refunds from crude oil overcharge funds to 50 applicants based on their respective purchases of refined petroleum products during the period August 19, 1973, through January 27, 1981. Each applicant used the products for various agricultural activities, and each determined its claim either by consulting actual purchase records or by estimating its consumption based on the acres it farmed. Each applicant was an end-user of the products it claimed and was therefore presumed by the DOE to have been injured. The sum of the refunds granted in this Decision is $646. All of the claimants will be eligible for additional refunds as additional crude oil overcharge funds become availablle.

Martin Standard Service, 2/25/88, RF272-897

The DOE issued a Decision and Order denying Martin Standard Service's Application for Refund from crude oil overcharge funds. Martin was gasoline retailer during the period August 19, 1973 through January 27, 1981. Because Martin did not demonstrate that it was injured due to the crude oil overcharges, it was found to be ineligible for a crude oil refund.

Mobile Oil Corporation/Chevron U.S.A., Inc., 2/23/88, RF225-6820

The DOE issued a Decision concerning an Application for Refund from the Mobile Oil Corporation escrow account filed by Chevron U.S.A., Inc. (Chevron). Chevron purchased refined petroleum products from Mobile during the consent order period which made it eligible to receive a refund of more than $5,000. However, the firm elected to limit its refund claim to the small claims threshold of $5,000 rather than submit the cost bank and competitive pricing data needed to receive a larger refund. Accordingly, the DOE granted Chevron a refund of $6,206 ($5,000 principal plus $1,206 interest).

Mobil Oil Corp./Eagle Oil Company, 2/22/88, RF225-10972, RF225-10973, and RF225-10974

The DOE issued a Decision and Order in which it determined that Eagle Oil Company had inadvertently been granted two refunds in the Mobil refund proceeding. Accordingly, the DOE rescinded the refund granted to Eagle in *Mobil Oil Corp./A-Z Service Station, Inc.*, 17 DOE ¶ 85,0085 (1988), and ordered the Controller's Office of the DOE not to disburse Eagle's refund.

Mobil Oil Corp./Edward R. Knoll, 2/23/88, RF225-146

The DOE issued a Decision and Order approving a refund application in the Mobil Oil Corp. special refund proceeding filed by Edward R. Knoll, a retailer of Mobil motor gasoline during the consent order period. Although Mr. Knoll has since sold his retail business, the OHA found no evidence that his right to this refund was among the assets purchased by the new owner in the sale. In accordance with the procedures outlined in *Mobil Oil Corp.*, 13 DOE ¶ 85,339 (1985), Mr. Knoll was granted a refund totalling $225 ($181 in principal plus $44 in accrued interest).

Mobil Oil Corporation/Hansen Oil Co. et al., 2/26/88, RF225-9087 et al.

The DOE issued a Decision granting seven Applications for Refund from the Mobil Oil Corporation escrow account filed by retailers and resellers of Mobil refined petroleum products. Each applicant elected to apply for a refund based upon the presumptions set forth in *Mobil Oil Corp.*, 13 DOE ¶ 85,339 (1985). The DOE granted refunds totalling $8,744 ($7,059 in principal plus $1,685 in interest).

Mobil Oil Corporation/Prien Mobil Mobil I 10, 2/25/88, RF225-125, RF225-126

The DOE issued a Decision and Order granting Applications for Refund from the Mobil Oil Corporation escrow account filed by two retailers of Mobil motor gasoline. Both applicants elected to apply for a refund based upon the presumptions set forth in *Mobil Oil Corp.*, 13 DOE ¶ 85,339 (1985). The DOE granted refunds totalling $954 ($529 in principal plus $425 in interest).

Mobil Oil Corporation/Ropet, Inc. Waterfront Services Co., 2/23/88, RF225-2882, RF225-2883, RF225-2884, and RF225-4598

The DOE issued a Decision granting Applications for Refund from the Mobil Oil Corporation escrow account to Ropet, Inc. and Waterfront Services Company. Each applicant's claim was limited to the small claims threshold of $5,000 set forth in *Mobil Oil Corp.*, 13 DOE ¶ 85,339 (1985). The refund amounts approved in this Decision and Order totalled $12,388, representing $10,000 in principal plus $2,388 in interest).

Mobil Oil Corporation William R. Peterson Oil Co., Inc. Koenig Fuel & Supply Co., 2/26/88, RF225-9598, RF225-9665, RF225-9666, RF225-9667

The DOE issued a Decision granting four Applications for Refund from the Mobil Oil Corporation escrow account filed by two firms that resold Mobil refined petroleum products. Each applicant elected to limit its claim to the $5,000 small claims threshold as set forth in *Mobil Oil Corp.*, 13 DOE ¶ 85,339 (1985). The DOE granted refunds totalling $12,388 (representing $10,000 in principal plus $2,388 in interest).

Mobil Oil Corp./Wisconsin Electric Power Co., Frontier Airlines, Inc., 2/25/88, RF225-387, RF225-4292

The DOE issued a Decision and Order granting four Applications for Refund from the Mobil Oil Corporation consent order fund filed by Wisconsin Electric Power Company, and Frontier Airlines, Inc., both end-users of Mobil refined petroleum products. Both applicants presented evidence that they purchased refined petroleum products directly from Mobil during the consent order period. According to the methodology set forth in *Mobil Oil Corp.*, 13 DOE ¶ 85,339 (1985), both applicants were found to be eligible for a refund from the Mobil consent order fund based on the volume of their purchase times 100 percent of the volumetric refund amount. The aviation jet fuel volumes claimed by Frontier were adjusted to account for that product's date of decontrol. The refunds approved in the Decision totaled $8,786 ($7,078 principal plus $1,708 interest).

Paul Koch et al., 2/25/88, RF272-4154 et al.

The DOE issued a Decision and Order granting refunds to 28 claimants that filed Applications for Refund under OHA's Subpart V crude oil overcharge refund proceedings. Each applicant provided evidence of the volume of refined petroleum products that it purchased during the period August 19, 1973 through January 27, 1981. As an agricultural end-user of petroleum products, each claimant was presumed have been injured as a result of the crude oil overcharges. The total of the refunds granted was $956.

Phillip J. Parrent et al., 2/23/88, RF272-4504 et al.

The DOE issued a Decision and Order granting refunds from crude oil overcharge funds to 46 applicants based on their respective purchases of refined petroleum products during the period August 19, 1973 through January 27, 1981. Each applicant used the products for various agricultural activities, and each determined its volume claim by either utilizing actual purchase records from the crude oil price control period or by estimating its petroleum consumption based on the acres it farmed. Each applicant was an end-user of the products it claimed and was therefore presumed by the DOE to have been injured. The sum of the refunds granted in this Decision is $1,522.

Sid Richardson Carbon and Gasoline Company/Mellon Enterprises, Inc., 2/22/88, RF26-56

The Department of Energy considered a refund application filed by Mellon Enterprises, Inc., in connection with a consent order fund made available by Sid Richardson Carbon and Gasoline Company. As a spot purchaser of Sid Richardson propane, Mellon was expected to overcome the presumption that it was not injured as a result of its Sid Richardson purchases. In order to make such a demonstration, Mellon submitted information showing that it traded the Sid Richardson propane for gasoline from LaJet, Inc., and that it did not make a profit in its resale of the LaJet gasoline. The DOE found that such a showing did not establish that Mellon experienced any injury as a result of its Sid Richardson purchases, but only that it may have made an unprofitable arrangement with LaJet. Accordingly, the refund application was denied.

Standard Oil Co. (Indiana)/South Dakota, 2/23/88, [RM251-105]

The DOE issued a Decision and Order denying the Motion for Modification and the second-stage refund application filed by the State of South Dakota in the Standard Oil Co. (Indiana) (Amoco II) refund proceeding. South Dakota requested permission to use $105,000 for the "Ethanol Production Incentive Program." The DOE found that the program failed to provide restriction to injured consumers of petroleum products. The Decision noted that the DOE has previously stated that programs which primarily promote commercial enterprises, such as the proposed by South Dakota, do not benefit injured consumers. Accordingly, South Dakota's submission was denied.

Standard Oil Co. (Indiana)/Tennessee Belridge Oil Co./Tennessee Palo Pinto Oil & Gas/Tennessee, 2/24/88, [RM21-75, RMB-76, RM5-77]

The DOE issued a Decision and Order approving the Motions for Modification filed by the State of Tennessee in the Standard Oil Co. (Indiana), Belridge,

and Palo Pinto refund proceedings. Tennessee requested permission to use $177,000 of its previously-approved Standard Oil Co. (Indiana), Belridge, and Palo Pinto funds for the Ridesharing program. The DOE found that the Ridesharing program will encourage commuters to use energy-efficient commuting options, thereby helping injured consumers reduce their energy consumption and costs. Tennessee received permission to use $177,000 for this program.

Suburban Propane Gas Corporation/ Blu-Gas Service, Inc. Ciba-Geigy Corp. Leach Camper Sales, Inc., 2/24/88, [RF229-34, FR299-37, RF299-38]

The DOE issued a Decision granting three Applications for Refund from the Suburban Propane Gas Corporation escrow account filed by retailers and end-users of Suburban propane, butane, and natural gasoline during the period November 1, 1973 through October 31, 1978. Each applicant elected to apply for a refund based upon the presumption set forth in *Suburban Propane Gas Corp.*, 16 DOE ¶ 85,382 (1987). The DOE granted refund totalling $7,461 ($6,696 principal plus $765 interest).

Suburban Propane Gas Corporation/ Park Avenue Mobil Park et al., 2/25/88, [RF299-68 et al.]

The DOE issued a Decision and Order granting eight refund applications filed by reseller/retailers and end-users of Suburban propane. According to the procedures set forth in *Suburban Propane Gas Corp.*, 16 DOE ¶ 85,382 (1987), each applicant was found to be eligible for a refund based on the volume of propane it purchased from Suburban. The total amount of refunds approved in the Decision was $2,041, representing $1,832 in principal plus $209 in accrued interest.

Wayment Cattle Company, et al., 2/25/88, FR272-3066 et al.

The DOE issued a Decision and Order granting refunds from crude oil overcharge funds to 35 applicants based on their respective purchases of refined petroleum products during the period August 19, 1973 through January 27, 1981. Each applicant used the products for various agricultural activities. In addition, some applicants used the products to heat their homes, to operate transportation vehicles, and/or to tend livestock. Each applicant determined its claim either by consulting actual purchase records or by estimating its consumption based on the acres it farmed. Each applicant was an end-user of the products it claimed and was therefore presumed by the DOE to have been injured. The sum of the refunds granted in this Decision is $1,360.

Welliver Brothers et al., 2/22/88, RF272-4717 et al.

The DOE issued a Decision and Order granting refunds from crude oil overcharge funds to 50 applicants based on their respective purchases of refined petroleum products during the period August 19, 1973 through January 27, 1981. Each applicant used the products for various agricultural activities, and each calculated its claim either by consulting actual purchase records or by estimating its consumption based on the acres it farmed. Each applicant was an end-user of the products it claimed and was therefore found injured based upon the end-user presumption of injury. The sum of the refunds granted in this Decision is $1,174.

Dismissal

The following submissions were dismissed:

Name	Case No.
Dave's Getty	RF262-2
Southern Bell Telephone and Telegraph Company.	RF272-5717

Copies of the full text of these decisions and orders are available in the Public Reference Room of the Office of Hearings and Appeals, Room 1E-234, Forrestal Building, 1000 Independence Avenue SW., Washington, DC 20585, Monday through Friday, between the hours of 1:00 p.m. and 5:00 p.m., except Federal holidays. They are also available in *Energy Management: Federal Energy Guidelines*, a commercially published loose leaf reporter system.

April 6, 1988.

George B. Breznay,

Director, Office of Hearings and Appeals.

[FR Doc. 88-7974 Filed 4-11-88; 8:45am]

BILLING CODE 6450-01-M

ENVIRONMENTAL PROTECTION AGENCY

[FRL-3363-6]

Office of Research and Development, Ambient Air Monitoring Reference and Equivalent Methods; Reference Method Designation

Notice is hereby given that EPA, in accordance with 40 CFR Part 53, has designated another reference method for the measurement of ambient concentrations of carbon monoxide. The new reference method is an automated method (analyzer) which utilizes a measurement principle based on non-dispersive infrared spectrometry. The new designated method is identified as follows:

RFCA-0488-067, "Dasibi Model 3008 Gas Filter Correlation CO Analyzer," operated on the 0-50 ppm range, with a time constant setting of 60 seconds, a particulate filter installed in the analyzer sample inlet line, with or without use of the auto zero or auto zero/span feature, and with or without any of the following options:
Z-0176-S Rack Mounting Brackets
S-0132-A Rack Mounting Slides
N-0056-A RS 232 C Interface

This method is available from Dasibi Environmental Corporation, 515 West Colorado Street, Glendale, California 91204. A notice of receipt of application for this method appeared in Volume 51 of the **Federal Register**, on September 6, 1986, on page 32834.

A test analyzer representative of this method has been tested by the applicant, in accordance with the test procedures specified in 40 CFR Part 53. After reviewing the results of these tests and other information submitted by the applicant, EPA has determined, in accordance with Part 53, that this method should be designated as a reference method. The information submitted by the applicant will be kept on file at EPA's Environmental Monitoring Systems Laboratory, Research Triangle Park, North Carolina, and will be available for inspection to the extent consistent with 40 CFR Part 2 (EPA's regulations implementing the Freedom of Information Act).

As a designated reference method, this method is acceptable for use by states and other control agencies under requirements of 40 CFR Part 58, Ambient Air Quality Surveillance. For such purposes, the method must be used in strict accordance with the operation or instruction manual provided with the method and subject to any limitations (e.g., operating range) specified in the applicable designation (see description of the method above). Vendor modifications of a designated method used for purposes of Part 58 are permitted only with prior approval of EPA, as provided in Part 53. Provisions concerning modification of such methods by users are specified under Section 2.8 of Appendix C to 40 CFR Part 58 (Modifications of Methods by Users).

In general, designation applies to any analyzer which is identical to the analyzer described in the designation. In many cases, similar analyzers manufactured prior to the designation may be upgraded (e.g., by minor modification or by substitution of a new operation or instruction manual) so as to be identical to the designated method

and thus achieve designated status at a modest cost. The manufacturer should be consulted to determine the feasibility of such upgrading.

Part 53 requires that sellers of designated methods comply with certain conditions. These conditions are given in 40 CFR 53.9 and are summarized below:

(1) A copy of the approved operation or instruction manual must accompany the analyzer when it is delivered to the ultimate purchaser.

(2) The analyzer must not generate any unreasonable hazard to operators or to the environment.

(3)The analyzer must function within the limits of the performance specifications given in Table B-1 of Part 53 for at least one year after delivery when maintained and operated in accordance with the operation manual.

(4) Any analyzer offered for sale as a reference or equivalent method must bear a label or sticker indicating that it has been designated as a reference or equivalent method in accordance with Part 53.

(5) If such an analyzer has one or more selectable ranges, the label or sticker must be placed in close proximity to the range selector and indicate which range or ranges have been included in the reference or equivalent method designation.

(6) An applicant who offers analyzers for sale as reference or equivalent methods is required to maintain a list of ultimate purchasers of such analyzers and to notify them within 30 days if a reference or equivalent method designation applicable to the analyzer has been cancelled or if adjustment of the analyzers is necessary under 40 CFR 53.11(b) to avoid a cancellation.

(7) An applicant who modifies an analyzer previously designated as a reference or equivalent method is not permitted to sell the analyzer (as modified) as a reference or equivalent method (although he may choose to sell it without such representation), nor to attach a label or sticker to the analyzer (as modified) under the provisions described above, until he has received notice under 40 CFR 53.14(c) that the original designation or a new designation applies to the method as modified or until he has applied for and recieved notice under 40 CFR 53.8(b) of a new reference or equivalent method determination for the analyzer as modified.

Aside from occasional breakdowns or malfunctions, consistent or repeated noncompliance with any of these conditions should be reported to: Director, Environmental Monitoring Systems Laboratory, Department E (MD-77), U.S. Environmental Protection Agency, Research Triangle Park, North Carolina 27711.

Designation of this reference method will provide assistance to the states in establishing and operating their air quality surveillance systems under Part 58. Additional information concerning this action may be obtained by writing to the address given above. Technical questions concerning the method should be directed to the manufacturer.

Vaun A. Newill,

Assistant Administrator for Research and Development.

[FR Doc. 88-7938 Filed 4-11-88; 8:45 am]

BILLING CODE 6560-50-M

[FRL-3363-7]

Senior Executive Service Performance Review Board Membership

AGENCY: Environmental Protection Agency.

ACTION: Notice.

SUMMARY: Notice is hereby given of the memberthip of the EPA Performance Review Board.

DATE: April 12, 1988.

FOR FURTHER INFORMATION CONTACT: Doris McCurdy, SES and Executive Resources Staff, Office of Human Resources Management, Office of Administration and Resources Management, Environmental Protection Agency, 401 M Street SW., Washington, DC 20460 (202) 382-3328.

SUPPLEMENTARY INFORMATION: Section 4314(c)(1) through (5) of Title 5, U.S.C., requires each agency to establish in accordance with regulations prescribed by the Office of Personnel Management, one or more SES performance review boards. This board shall review and evaluate the initial appraisal of a senior executive's performance by the supervisor, along with any recommendations to the appointing authority relative to the performance of the senior executive.

Members of the EPA Performance Review Board are:

J. Daniel Berry (Chair), Associate General Counsel (Grants, Contracts, and General Law), Office of General Counsel

Douglas D. Campt, Director, Office of Pesticide Programs, Office of Pesticides and Toxic Substances

Allyn M. Davis, Director, Hazardous Waste Management Division, Region VI

Timothy Fields. Jr., Director, Emergency Response Division, Office of Solid Waste and Emergency Response

Susan C. Gordon, Assistant Regional Administrator for Policy and Management, Region VII

Edwin L. Johnson, Director, Developing Countries Staff, Office of the Adminstrator

Thomas E. Kelly, Director, Office of Standards and Regulations, Office of Policy, Planning and Evaluation

Donald E. Kirkendall, Deputy Inspector General, Office of Inspector General

Arnold M. Kuzmack, Director, Office of Program Development and Evaluation, Office of Water

Francis T. Mayo, Director, Water Engineering Research Laboratory, Office of Research and Development

Courtney Riordan, Director, Office of Environmental Processes and Effects Research, Office of Research and Development

David P. Ryan, Director, Office of the Comptroller, Office of Administration and Resources Management

Richard E. Sanderson, Director, Office of Federal Activities, Office of External Affairs

Nathaniel Scurry (Ex-Officio), Director, Office of Civil Rights, Office of the Administrator

Glenn L. Unterberger, Associate Enforcement Counsel for Water Enforcement, Office of Enforcement and Compliance Monitoring

Richard D. Wilson, Director, Office of Mobile Sources, Office of Air and Radiation

Kenneth F. Dawsey (Executive Secretary), Deputy Director, Office of Human Resources Management, Office of Administration and Resources Management

Members of the Inspector General Subcommittee to the EPA Performance Review Board are:

Bill D. Colvin, Assistant Inspector General for Investigations, Veterans Administration

Robert A. Hincken, Assistant Inspector General for Investigations, Veterans Administration

Mitchell L. Laine, Assistant Inspector General for Audit, Department of Education

Date: April 4, 1988.

Charles L Grizzle,

Assistant Administrator for Administration and Resources Management.

[FR Doc. 88-7941 Filed 4-11-88; 8:45 am]

BILLING CODE 6560-50-M

[OPP-00258A; FRL-3385-1]

Biotechnology Science Advisory Committee; Partially Closed Meeting of Subcommittee

AGENCY: Environmental Protection Agency (EPA).

ACTION: Notice of change of meeting.

SUMMARY: The location of the meeting of a subcommittee of the EPA Biotechnology Science Advisory Committee (BSAC) has been moved from Room 1112, Crystal Mall Building No. 2, 1921 Jefferson Davis Highway, Arlington, Virginia to the Farragut Room, Plaza Level, Stouffer's Hotel, 2399 Jefferson Davis Highway, Arlington, Virginia. The meeting place is being moved to provide a larger room for the meeting. The meeting was previously announced in the **Federal Register** on March 29, 1988 (53 FR 10150). The subcommittee will review an application submitted pursuant to section 5 of FIFRA by Crop Genetics International for an experimental use permit (EUP) for a genetically engineered microbial pesticide. The meeting will be closed to the public from 9 to 11:00 a.m. and open to the public from 11:00 a.m. to 4 p.m.

DATE: Monday, April 18, 1988.

FOR FURTHER INFORMATION CONTACT:
By mail: Stephen L. Johnson, Acting Executive Secretary, Biotechnology Science Advisory Committee, Office of Pesticide Programs (TS-769C), 401 M Street SW., Washington, D.C. 20460
Office location and telephone number: Room 1121, Crystal Mall, Building No. 2, Arlington, VA (703-557-7695).

Dated: April 5, 1988.

John A. Moore,

Assistant Administrator for Pesticides and Toxic Substances.

[FR Doc. 88-8034 Filed 4-11-88; 8:45 am]

BILLING CODE 6560-50-M

FEDERAL EMERGENCY MANAGEMENT AGENCY

Agency Information Collection Submitted to the Office of Management and Budget for Clearance.

The Federal Emergency Management Agency (FEMA) has submitted to the Office of Management and Budget the following information collection package for clearance in accordance with the Paperwork Reduction Act (44 U.S.C. Chapter 35).

Type: Extension of 3067-0125.

Title: Request for Loan Information.

Abstract: FEMA Form 90-68, Request for Loan Information Verification, is used to obtain information required to determine a fair and equitable sales price of mobile home unit to a disaster victim. The ability to borrow money commercially is an important factor in determining the final sales price.

Type of Respondents: Individuals or households, businesses or other for-profit, and small businesses or organizations.

Number of Respondents: 500.

Burden Hours: 83.

Frequency of Recordkeeping or Reporting: On occasion.

Copies of the above information collection request and supporting documentation can be obtained by calling or writing the FEMA Clearance Officer, Linda Shiley, (202) 646-2624, 500 C Street SW., Washington, DC 20472.

Comments should be directed to Francine Picoult, (202) 395-7231, Office of Management and Budget, 3235 NEOB, Washington, DC 20503 within two weeks of this notice.

Date: April 5, 1988.

Alfred E. Warren,

Acting Director, Office of Administrative Support.

[FR Doc. 88-7925 Filed 4-11-88; 8:45 am]

BILLING CODE 6718-21-M

[Docket No.: FEMA-REP-6-TX-2]

The Texas Radiological Emergency Response Plan Site-Specific For The South Texas Project Electric Generating Station; Finding and Determination

ACTION: Certification of FEMA finding and determination.

In accordance with the Federal Emergency Management Agency (FEMA) rule, 44 CFR Part 350, the State of Texas formally submitted its plan relating to the South Texas Project Electric Generating Station to the Director of FEMA Region VI on October 8, 1986, for FEMA review and approval. On January 13, 1988, the Regional Director forwarded his evaluation to the Associate Director for State and Local Programs and Support in accordance with § 350.11 of the FEMA rule. Included in this evaluation is a review of the State and local plans around the South Texas Project Electric Generating Station, an interim finding dated May 29, 1987, an evaluation of the full-participation exercise conducted on April 8, 1987, in accordance with § 350.9 of the FEMA rule, and a public meeting held on April 9, 1987, to discuss the site-specific aspects of the State and local plans around the South Texas Project Electric Generating Station in accordance with § 350.10 of the FEMA rule.

Based on the evaluation by the Regional Director and the review by the FEMA Headquarter's staff, I find and determine that the State and local plans and preparedness for the South Texas Project Electric Generating Station are adequate to protect the health and safety of the public living in the vicinity of the plant. These offsite plans and preparedness are assessed as adequate in that they provide reasonable assurance that appropriate protective actions can be taken offsite in the event of a radiological emergency and are capable of being implemented. However, while there is a public Alert and Notification (A&N) system in place and operational, this approval is conditional on FEMA's verification of the A&N system in accordance with the criteria of NUREG-0654/FEMA REP-1, Rev. 1, Appendix 3, and the "Guide for the Evaluation of Alert and Notification Systems for Nuclear Power Plants" (FEMA REP-10).

FEMA will continue to review the status of offsite plans and preparedness associated with the South Texas Project Electric Generating Station in accordance with the FEMA rule.

For further details with respect to this action, refer to Docket File FEMA-REP-6-TX-2 maintained in the FEMA Region VI Office at 800 North Loop 288, Denton, Texas 76201-3698.

For the Federal Emergency Management Agency.

Grant C. Peterson,

Associate Director, State and Local Programs and Support.

[FR Doc. 88-7926 Filed 4-11-88; 8:45 am]

BILLING CODE 6718-21-M

FEDERAL MARITIME COMMISSION

Agreement(s) Filed

The Federal Maritime Commission hereby gives notice of the filing of the following agreement(s) pursuant to section 5 of the Shipping Act of 1984.

Interested parties may inspect and obtain a copy of each agreement at the Washington, DC, Office of the Federal Maritime Commission, 1100 L Street NW., Room 10325. Interested parties may submit comments on each agreement to the Secretary, Federal Maritime Commission, Washington, DC 20573, within 10 days after the date of the **Federal Register** in which this notice appears. The requirements for comments are found in § 572.603 of Title 46 of the Code of Federal Regulations. Interested persons should consult this

section before communicating with the Commission regarding a pending agreement.

Agreement No.: 224-011062-001

Title: Maryland Port Administration Lease Agreement.

Parties:

Maryland Port Administration
Evergreen Marine Corporation (Taiwan) Ltd.

Synopsis: The proposed agreement modifies the basic agreement and lease to reflect the termination of Japan Line's participation as of May 31, 1988.

Agreement No.: 224-200105

Title: Port of Seattle Terminal Agreement.

Parties:

Port of Seattle (Seattle)
International Terminal Company (ITC)

Synopsis: The proposed agreement provides for ITC's lease from Seattle of terminal facilities at Seattle's Terminal 115, preferential use of space at Berth Nos. 1 and 2 and easements for vehicular ingress and egress across areas of Terminal 115, subject to Seattle retaining secondary right to the entire premises.

By Order of the Federal Maritime Commission.

Dated: April 7, 1988.

Joseph C. Polking,

Secretary.

[FR Doc. 88-7967 Filed 4-11-88; 8:45 am]

BILLING CODE 6730-01-M

FEDERAL RESERVE SYSTEM

Agency Forms Under Review

April 6, 1988.

Background

Notice is hereby given of final approval of proposed information collection(s) by the Board of Governors of the Federal Reserve System (Board) under OMB delegated authority, as per 5 CFR 1320.9 (OMB Regulation on Controlling Paperwork Burdens on the Public).

FOR FURTHER INFORMATION CONTACT:

Federal Reserve Board Clearance Officer—Nancy Steele, Division of Research and Statistics, Board of Governors of the Federal Reserve System, Washington, DC 20551 (202-452-3822)

OMB Desk Officer—Robert Neal, Jr., Office of Information and Regulatory Affairs, Office of Management and Budget, New Executive Office Building, Room 3208, Washington, DC 20503 (202-395-7340)

PROPOSAL TO APPROVE UNDER OMB DELEGATED AUTHORITY THE EXTENSION, WITHOUT REVISION, OF THE FOLLOWING REPORT

Report Title: Annual Report on Status of Disposition of Assets Acquired in Satisfaction of Debt Previously Contracted

Agency Form Number: FR 4006

OMB Docket Number: 7100-0129

Frequency: Annual

Reporters: Bank holding companies

Annual Reporting Hours: 3000

Significant effect on small businesses is not expected.

General Description of Report: This report is required by law (12 U.S.C. 1843(c)(2), 1844(b)). Certain portions may be given confidential treatment at applicant's request (5 U.S.C. 52(b)(4)).

Bank holding companies that acquire assets in satisfaction of debts previously contracted are required to submit an annual report to the Board outlining the efforts made to date to effect divestiture of the assets, a description and valuation of assets divested and those to be divested. The report provides supervisory information needed to monitor compliance with prudent banking practices.

Board of Governors of the Federal Reserve System, April 6, 1988.

William W. Wiles,

Secretary of the Board.

[FR Doc. 88-7900 Filed 4-11-88; 8:45 am]

BILLING CODE 6210-01-M

DEPARTMENT OF HEALTH AND HUMAN SERVICES

Alcohol, Drug Abuse, and Mental Health Administration

National Institute on Alcohol Abuse and Alcoholism; Research Grants on Alcohol-Related Behavior That Increases the Risk of Aids and/or Research on Prevention Strategies To Reduce That Risk

AGENCY: National Institute on Alcohol Abuse and Alcoholism, HHS.

ACTION: Issuance of a request for applications for research grants on alcohol-related behavior that increases the risk of AIDS and/or research on prevention strategies to reduce that risk.

SUMMARY: The National Institute on Alcohol Abuse and Alcoholism (NIAAA) announces the availability of a Request For Applications (RFA) For Research Grants on Alcohol-Related Behavior That Increases The Risk of AIDS And/Or Research On Prevention Strategies to Reduce That Risk. Areas of research interest may include, but are not limited to, risk taking behaviors among specific target groups; the effect of alcohol use on judgment, decision making, perception of risk with respect to AIDS, and moral commitments to others. Other areas that could be explored are the impact of alcohol as a disinhibitor for indiscriminate sex or intravenous drug use; the consequences of alcohol consumption on the role of women or men as possible gatekeepers for protective or unsafe sex practices; and the function of alcohol environments (e.g., the singles or gay bar) as facilitators or disincentives for AIDS-related risk taking behavior. Support may be requested for up to 5 years. It is estimated that $500,000 to $1,000,000 will be available to make three to six awards for the first year of the study, including direct and indirect costs. Awards may be made late in FY 1988 or early in FY 1989.

Receipt Dates for Applications: Only one receipt date, May 25, 1988, is available for this RFA.

For a Copy of the RFA Contact: Donald F. Godwin, The National Institute on Alcohol Abuse and Alcoholism (NIAAA), Division of Clinical and Prevention Research, Prevention Research Branch, Parklawn Building, Room 16C-03, 5600 Fishers Lane, Rockville, Maryland 20857, Telephone 301-443-1677.

Donald Ian Macdonald,

Administrator, Alcohol, Drug Abuse, and Mental Health Administration.

[FR Doc. 88-7905 Filed 4-11-88; 8:45 am]

BILLING CODE 4160-20-M

Advisory Committee Meetings

SUMMARY: This notice sets forth the schedule and proposed agenda of the forthcoming meetings of the agency's initial review committees and national advisory councils in the month of May 1988. These committees will be preforming initial review of applications for Federal assistance. Therefore, portions, of the meetings will be closed to the public as determined by the Administrator, ADAMHA, in accordance with 5 U.S.C. 552(b)(6) and 5 U.S.C. app. 2 10(d). Notice of these meetings is required under the Federal Advisory Committee Act, Pub. L. 92-463.

Committee Name: National Advisory Mental Health Council, NIMH

Date and Time: May 16-18: 9:00 a.m.

Place: May 16: National Institues of Health, Building #31C, Conference

Room 6, 9000 Rockville Pike, Bethesda, Maryland 20892 May 17–18: Parklawn Building, Conference Room G and H, 5600 Fishers Lane, Rockville, Maryland 20857

Status of Meeting:

Open—May 16: 9:00 a.m.–5:00 p.m.
Closed—Otherwise

Contact: Ms. Rachel Townson, Parklawn Building, Room 9–105, 5600 Fishers Lane, Rockville, Maryland 20857, (301) 443–3367.

Purpose: The Council advises the Secretary of Health and Human Services, the Administrator, Alcohol, Drug Abuse, and Mental Health Administration, and the Director, National Institute of Mental Health, regarding policies and programs of the Department in the field of mental health. The Council reviews applications for grants-in-aid relating to research and training in the field of mental health and makes recommendations to the Secretary with respect to approval of applications for, and amount of, these grants.

Committee Name: Research Scientist Development Review Committee, NIMH.

Date and Time: May 23–25: 9:00 a.m.

Place: Chevy Chase Holiday Inn, 5520 Wisconsin Avenue, Chevy Chase, Maryland 20815

Status of Meeting:

Open—May 23: 9:00–10:00 a.m.
Closed—Otherwise

Contact; Diana Souder, Parklawn Building, Room 9C–05, 5600 Fishers Lane, Rockville, Maryland 20857, (301) 443–6470

Purpose: The committee is charged with the initial review of applications for assistance from the National Institute of Mental Health for support of activities to develop and execute a program of Research Scientist and Research Scientist Development Awards to appropriate institutions for the support of individuals who are engaged full time in research and related activities relevant to mental health, with recommendations to the National Advisory Mental Health Council for final review.

Committee Name: Cognition, Emotion, and Personality Research Review Committee, NIMH.

Date and Time: May 26–28: 9:00 a.m.

Place: Hyatt Regency, Bethesda, One Bethesda Metro Center, Bethesda, Maryland 20814.

Status of Meeting:

Open—May 26: 9:00–10:00 a.m.
Closed—Otherwise

Contact: Shirley Maltz, Parklawn Building, Room 9C–26, 5600 Fishers Lane, Rockville, Maryland 20857, (301) 443–3944

Purpose: The Committee is charged with the initial review of applications for assistance from the National Institute of Mental Health for support of research and research training activities relating to the fields of personality, cognition, emotion, and higher mental processes, with recommendations to the National Advisory Mental Health Council for final review.

Committee Name: National Advisory Council on Alcohol Abuse and Alcoholism, NIAAA.

Date and Time: May 26–27: 10:30 a.m.

Place: National Institutes of Health, Building #31C, 6th Floor, Conference Room 6, 9000 Rockville Pike, Bethesda, Maryland 20892.

Status of Meeting:

Open—May 26: 10:30 a.m.–5:00 p.m.
Closed—Otherwise

Contact: James Vaughan, Parklawn Building, Room 16C–20, 5600 Fishers Lane, Rockville, Maryland 20857, (301) 443–4375.

Purpose: The Council advises the Secretary, Department of Health and Human Services regarding policy direction and program issues of national significance in the area of alcohol abuse and alcoholism. Reviews all grant applications submitted, evaluates these applications in terms of scientific merit and adherence to Department policies, and makes recommendations to the Secretary with respect to approval and amount of award.

Substantive information, summaries of the meetings, and rosters of committee members may be obtained as follows: Ms. Diana Widner, NIAAA Committee Management Officer, Parklawn building, Room 16C–20, 5600 Fishers Lane, Rockville, Maryland 20857, (301) 443–4375; Ms. Joanna Kieffer, NIMH Committee Management Officer, Parklawn Building, Room 9–105, 5600 Fishers Lane, Rockville, Maryland 20857, (301) 443–4333.

Date: April 6, 1988.

Peggy W. Cockrill,

Committee Management Officer, Alcohol, Drug Abuse, and Mental Health Administration.

[FR Doc. 88–7952 Filed 4–11–88; 8:45 am]

BILLING CODE 4160-20-M

Food and Drug Administration

[Docket No. 88N–0071]

Approval of Alternate Design Configurations of Class III Daily Wear Contact Lenses; Availability

AGENCY: Food and Drug Administration.

ACTION: Notice of policy statement.

SUMMARY: The Food and Drug Administration (FDA) is announcing the availability of an agency policy statement concerning premarket approval of alternate design configurations of class III daily wear contact lenses, under certain conditions based on an applicant's submission of a supplemental premarket approval application (PMA) without additional clinical data.

ADDRESS: The policy statement is available at, and written comments on the policy statement may be sent to, the Dockets Management Branch (HFA–305), Food and Drug Administration, Rm. 4–62, 5600 Fishers Lane, Rockville, MD 20857.

FOR FURTHER INFORMATION CONTACT: Richard E. Lippman, Food and Drug Administration, Center for Devices and Radiological Health (HFZ–460), 8757 Georgia Ave., Silver Spring, MD 20910, 301–427–7320.

SUPPLEMENTARY INFORMATION: FDA has reevaluated the clinical data requirements for premarket approval of alternate designs of already approved class III daily wear contact lenses, based upon publicly available information and discussions with the Ophthalmic Devices Advisory Committee. FDA now believes that it is appropriate to approve a supplemental PMA application for an alternate design configuration of a daily wear contact lens without additional clinical data, if the applicant shows that clinical and other data in the original approved PMA apply to the alternate design and other necessary information is submitted.

This policy applies to all class III daily wear lenses including those lenses made using soft (hydrophilic) (21 CFR 886.5925) or rigid gas permeable (21 CFR 886.5916) materials. (See the **Federal Register** of September 2, 1987; 52 FR 33346). Design configurations eligible for consideration under this policy include spherical, toric, lenticular, aspheric, and bifocal intended for correction of myopia, hyperopia, presbyopia, and/or astigmatism.

FDA is prepared to review PMA supplements submitted in accordance with this policy as part of its established "Fast Track" review process. Panel

review of these supplements will not be required, if the lens design modifications do not raise difference safety and effectiveness questions in comparison to the original approved device and its design. A preapproval inspection of the manufacturing facility will not automatically be required, if the facility has recently been found to be in compliance with the current good manufacturing practices regulations (21 CFR Part 820).

Interested persons may submit to the Dockets Management Branch (address above) written comments on the policy statement. Comments will be considered in determining if changes in the policy statement are warranted. Two copies of any comments should be submitted, except that individuals may submit one copy. Comments are to be identified with the docket number found in the heading of this document. Single copies of the policy statement may be obtained by contacting Richard E. Lippman (address above).

Dated: April 2, 1988.

Frank E. Young,

Commissioner of Food and Drugs.

[FR Doc. 88-7953 Filed 4-11-88; 8:45 am]

BILLING CODE 4160-01-M

DEPARTMENT OF THE INTERIOR

Bureau of Land Management

[AZ-940-08-4212-12; A-20348-A]

Arizona; Exchange of Public and State Land in Arizona

April 4, 1988.

AGENCY: Bureau of Land Management, Interior.

ACTION: Notice of exchange of land.

SUMMARY: This action informs the public of the completion of an exchange between the United States and the State of Arizona. The United States transferred title to 1,340.83 acres in Coconino and Mohave Counties and accepted title from the State of Arizona on 3,499.16 acres in Mohave County.

FOR FURTHER INFORMATION CONTACT: Marsha L. Luke, Arizona State Office, P.O. Box 16563, Phoenix, Arizona 85011, Telephone (602) 241-5534.

SUPPLEMENTARY INFORMATION: Notice is hereby given that pursuant to section 206 of the Federal Land Policy and Management Act, the following described public land was transferred to the State of Arizona:

Gila and Salt River Meridian, Arizona

T. 41 N., R. 2 W.,
Sec. 9, S½NE¼, SE¼NW¼, E½SW¼, SE¼;
Sec. 21, lots 1 and 3, NE¼, NE¼SE¼;
Sec. 27, all.
T. 41 N., R. 12 W.,
Sec. 6, S½NE¼.

Comprising 1,340.83 acres in Coconino and Mohave Counties.

In exchange the United States accepted title to the following described land conveyed by the State of Arizona:

Gila and Salt River Meridian, Arizona

T. 40 N., R. 15 W.,
Sec. 16, N½NW¼NE¼;
Sec. 32, all.
T. 40 N., R. 16 W.,
Sec. 16, N½.
T. 41 N., R. 7 W.,
Sec. 13, NW¼, N½SW¼, SW¼SW¼.
T. 41 N., R. 8 W.,
Sec. 19, E½;
Sec. 32, all.
T. 41 N., R. 13 W.,
Sec. 2, lots 1-4, incl., S½N½, S½.
T. 41 N., R. 15 W.,
Sec. 2, lots 1-4, incl., S½N½, S½.

The area described comprises 3,499.16 acres in Mohave County.

The purpose of this notice is to inform the public and local governmental officials of the exchange of public and state land between the United States and the State of Arizona.

John T. Mezes,

Chief, Branch of Lands and Minerals Operations.

[FR Doc. 88-7965 Filed 4-11-88; 8:45 am]

BILLING CODE 4310-32-M

[CA-060-08-7122-10-1018; CA-20228]

Realty Action; Exchange of Public and Private Lands in Riverside and San Bernardino Counties, CA

AGENCY: Bureau of Land Management, Interior.

ACTION: Notice of realty action—exchange of public and private lands, CA 20228.

SUMMARY: The following described public lands in San Bernardino County have been determined to be suitable for disposal by exchange under section 206 of the Federal Land Policy and Management Act of October 21, 1976 (43 U.S.C. 1716).

San Bernardino Meridian, California

T. 5N., R. 14 E.,
Sec. 28:S½SE¼.

Containing 80 acres, more or less.

In exchange for these lands, the United States will acquire the following described non-federal lands in Riverside County from The Nature Conservancy:

San Bernardino Meridian, California

T. 4S., R. 7E.,
Sec. 7: E½SW¼SE¼, W½SE¼SE¼.

Except 50% of all minerals, gas, oil, and geothermal rights and substances, under the real estate described in the Deed, without right of surface entry, as reserved in the Deed from Lou R. Crandall and Marguerita Crandall, husband and wife; William V. Lawson and Mary Lou Lawson, husband and wife; Stanley N. Gleis and Kathleen R. Gleis, husband and wife; and William J.D. Lane and Kathleen C. Lane, husband and wife; each as to an undivided one-quarter interest, by deed recorded April 27, 1971 as Instrument No. 43314 of Official Records of Riverside County, California. Containing 40 acres, more or less.

SUPPLEMENTARY INFORMATION: The purpose of the exchange is to acquire a portion of the non-federal lands within the 13,030 acre preserve for the Coachella Valley fringe-toed lizard. The lizard is federally listed as threatened and State listed as endangered. The Bureau of Land Management's goal is to acquire approximately 6700 acres of private land within the preserve. The acres being acquired do not constitute habitat for the lizard, but provide a sand source required for the continuing production of active sand dune areas that are critical habitat for the lizard. Other State and Federal agencies will acquire the remaining portions of the preserve. The public interest will be well served by completing this exchange.

The values of the lands to be exchanged are approximately equal; full equalization of values will be achieved through acreage adjustment, or by cash payment in an amount not to exceed 25% of the value of the lands being transferred out of federal ownership.

Lands to be transferred from the United States will be subject to the following reservations, terms, and conditions:

1. A reservation to the United States of a right-of-way for ditches or canals contructed by the authority of the United States, under the Act of August 30, 1890 (43 U.S.C. 945).

2. An existing pipeline right-of-way granted by the United States to All American Pipeline Company, its successors or assigns, by right-of-way grant CA-14013 under the Act of February 25, 1920 (30 U.S.C. 181).

3. An existing electric distribution line right-of-way granted by the United States to Atchison, Topeka, and Santa Fe Railroad, its successors or assigns, by right-of-way grant LA-0168288 under the Act of March 4, 1911 (43 U.S.C. 961).

4. An existing pipeline right-of-way granted by the United States to Four Corners Pipeline Company, its

successors or assigns, by right-of-way grant LA–0152777, under the Act of February 25, 1920 (30 U.S.C. 181).

Publication of this notice in the **Federal Register** segregates the public lands from operation of the public land laws and the mining law, except for mineral leasing. The segregative effect will end upon issuance of patent or two years from the date of publication, whichever occurs first.

For detailed information concerning this exchange, including the environmental assessment and land report, contact John Sullivan, BLM Indio Resource Area Office, (619) 323–4221.

For a period of 45 days after publication of this Notice in the **Federal Register**, interested parties may submit comments to the District Manager, California Desert District, 1695 Spruce Street, Riverside, California 92507. Any adverse comments will be evaluated by the State Director, who may vacate or modify this realty action and issue a final determination. In the absence of any adverse comments this realty action will become the final determination of the Department of the Interior.

Date: April 1, 1988.

H.W. Riecken,

Acting District Manager.

[FR Doc. 88–7964 Filed 4–11–88; 8:45 am]

BILLING CODE 4310–40–M

[CA–940–08–4212–13; CA 20339]

California; Realty Action; Exchange of Public and Private Lands in Riverside and San Diego Counties, CA, and Order Providing for Opening of Public Land

AGENCY: Bureau of Land Management, Interior.

ACTION: Notice of issuance of land exchange conveyance document and opening order.

ADDRESS: Inquiries concerning the land should be addressed to: Chief, Branch of Adjudication and Records, Bureau of Land Management, California State Office, 2800 Cottage Way (Room E–2841), Sacramento, California 95825.

SUMMARY: The purpose of this exchange was to acquire a portion of the non-Federal land within the proposed 13,030-acre preserve for the Coachella Valley fringe-toed lizard. The lizard is Federally listed as threatened and State listed as endangered. The Bureau of Land Management's goal is to acquire approximately 6,700 acres within the preserve. The land acquired does not constitute habitat for the lizard, but provides a sand source required for the continuing production of active sand dune areas that are critical habitat for the lizard. Other State and Federal agencies will acquire the remaining portion for the preserve. The public interest was well served through completion of this exchange. The land acquired in this exchange will be opened to operation of the public land laws and to the full operation of the United States mining and mineral leasing laws.

FOR FURTHER INFORMATION CONTACT: Dianna Storey, California State Office, (916) 978–4815.

1. The United States issued a land exchange conveyance document to The Nature Conservancy on March 24, 1988, pursuant to the authority of section 206 of the Act of October 21, 1976 (43 U.S.C. 1716), for the following described public land:

San Bernardino Meridian, California

T. 18 S., R. 7 E.,
Sec. 15, lots 5 and 6.

The area described contains 78.87 acres in San Diego County.

2. In exchange for the land described in paragraph 1, on March 23, 1988, the United States accepted title to the following described private land from the Nature Conservancy:

San Bernardino Meridian, California

T. 4 S., R. 7 E.,
Sec. 17, E½NE¼, SW¼NE¼, and E½NE¼NW¼NE¼.

The area described contains 125 acres in Riverside County.

3. The values of the public land and the non-Federal land were equalized by the procedures set forth in the Memorandum of Agreement dated December 10, 1987.

4. At 10 a.m. on May 16, 1988, the land described above in paragraph 2 shall be open to operation of the public land laws generally, subject to valid existing rights and the requirements of applicable law. All valid applications received at or prior to 10 a.m. on May 16, 1988, shall be considered as simultaneously filed at that time. Those received thereafter shall be considered in the order of filing.

5. At 10 a.m. on May 16, 1988, the land described in paragraph 2 above shall be open to location under the United States mining laws. Appropriation of any of the land described in this order under the general mining laws prior to date and time of opening is unauthorized. Any such attempted appropriation, including attempted adverse possession under 30 U.S.C. section 38, shall vest no rights against the United States. Acts required to establish a location and to initiate a right of possession are governed by State law where not in conflict with Federal law. The Bureau of Land Management will not intervene in disputes between rival locators over possessory rights since Congress has provided for such determinations in local courts.

6. At 10 a.m. on May 16, 1988, the land described in paragraph 2 above shall be open to applications and offers under the mineral leasing laws.

Date: April 4, 1988.

Robert C. Nauert,

Chief, Branch of Adjudication and Records.

[FR Doc. 88–7963 Filed 4–11–88; 8:45 am]

BILLING CODE 4310–40–M

[CA 940–08–5410–10–ZBKA; CA 20969]

Realty Action; Conveyance of Mineral Interests in California

AGENCY: Bureau of Land Management, Interior.

ACTION: Notice of segregation.

SUMMARY: The private lands described in this notice, aggregating 319.54 acres, are segregated and made unavailable for filings under the public land laws, including the mining laws, to determine their suitability for conveyance of the reserved mineral interest pursuant to section 209 of the Federal Land Policy and Management Act of October 21, 1976. The mineral interests will be conveyed in whole or in part upon favorable mineral examination.

The purpose is to allow consolidation of surface and subsurface of minerals ownership where there are no known mineral values or in those instances where the reservation interferes with or precludes appropriate nonmineral development and such development is a more beneficial use of the land than the mineral development.

FOR FURTHER INFORMATION CONTACT: Judy Bowers, California State Office, Federal Office Building, 2800 Cottage Way, Room E–2841, Sacramento, California 95825, (916) 978–4815.

Serial No. CA 20969
T. 28 S., R. 33 E., Mount Diablo Meridian
Sec. 30, lots 3, 4, 9, 10, 11, 12, 13, 14.
County—Kern
Minerals Reservation—Coal and other minerals

Upon publication of this Notice of Segregation in the **Federal Register** as provided in 43 CFR 2720.1–1(b), the mineral interests owned by the United States in the private lands covered by the application shall be segregated to the extent that they will not be subject to appropriation under the public land laws, including the mining laws. The segregative effect of the application shall terminate by publication of an

opening order in the **Federal Register** specifying the date and time of opening; upon issuance of a patent or other document of conveyance to such mineral interests; or two years from the date of publication of this notice, whichever occurs first.

Date: April 4, 1988.

Nancy J. Alex,

Chief, Lands Section, Branch of Adjudication and Records.

[FR Doc. 88-7962 Filed 4-11-88; 8:45 am]

BILLING CODE 4310-40-M

National Park Service

National Register of Historic Places; Pending Nominations; Alabama et al.

Nominations for the following properties being considered for listing in the National Register were received by the National Park Service before April 2, 1988. Pursuant to § 60.13 of 36 CFR Part 60 written comments concerning the significance of these properties under the National Register criteria for evaluation may be forwarded to the National Register, National Park Service, U.S. Department of the Interior, Washington, DC 20243. Written comments should be submitted by April 27, 1988.

Amy Schlagel,

Acting Chief of Registration, National Register.

ALABAMA

Baldwin County

Point Clear, *Brodbeck—Zundel Historic District*, US 98 Scenic Route and Old Marlow Rd.

Point Clear, *Point Clear Historic District*, W side of US 98/Eastern Shore Blvd.

Colbert County

Tuscumbia, *Johnson's Woods*, 801 E. North Commons

Talladega County

Talladega, *Talladega Courthouse Square Historic District (Boundary Increase)*, Roughly bounded by N. East and E. North and S. East, Coffee and Springs Sts.

ARKANSAS

Garland County

Hot Springs, *Jones School*, Linwood and Hobson Aves.

ILLINOIS

Shelby County

Shelbyville, *Tallman, Horace M., House*, 816 W. Main

MASSACHUSETTS

Hampshire County

Hadley, *Hadley Center Historic District (Boundary Increase)*, Roughly bounded by Town Farm Ln., Spruce Hill Rd. and Fort River, and the Connecticut River

NEW MEXICO

Grand County

Dwyer vicinity, *Andazola, Trinidad, House (Mimbres Valley MRA)*, SE of NM 61 and S of Eby Ranch Rd.

Dwyer vicinity, *Baca, Ramon, House (Mimbres Valley MRA)*, SE of NM 61

Dwyer vicinity, *Eby, Tom, Storage Building (Mimbres Valley MRA)*, W. of NM 61 and N of Eby Ranch Rd.

Dwyer vicinity, *NAN Ranch (Mimbres Valley MRA)*, E. of NM 61

Dwyer vicinity, *Soliz—Baca House (Mimbres Valley MRA)*, SE of NM 61 and S of Eby Ranch Rd.

Dwyer vicinity, *Trujillo, Maria J. and Juan, House (Mimbres Valley MRA)*, E of NM 61 and S of Eby Ranch Rd.

Mimbres vicinity, *Huechling, Otto, House (Mimbres Valley MRA)*, E of NM 61

Mimbres vicinity, *Valencia, Ysabel, House (Mimbres Valley MRA)*, E of NM 61

Mimbres vicinity, *Wood, Dr. Granville, House (Mimbres Valley MRA)*, E. of NM 61

Mimbres, *Hooks—Moore Store (Mimbres Valley MRA)*, NM 61 and Forest Rt. 73

Mimbres, *Mimbres School (Mimbres Valley MRA)*, E of NM 61 and Forest Rt. 73

Mimbres, *Redding, William, House (Mimbres Valley MRA)*, Off NM 61

Mimbres, *Sibole, George, Store (Mimbres Valley MRA)*, E. of NM 61, N of Forest Rt. 73

San Juan vicinity, *Valencia, Jesus, House (Mimbres Valley MRA)*, E of NM 61

San Juan, *San Juan Historic District (Mimbres Valley MRA)*, 2281–2291 NM 61

San Lorenzo vicinity, *Acklin Store (Mimbres Valley MRA)*, N of NM 90 of NM 61

San Lorenzo vicinity, *Grijalva, Luciana B., House (Mimbres Valley MRA)*, E of NM 61

San Lorenzo vicinity, *Menard—Galaz House (Mimbres Valley MRA)*, W of NM 90

San Lorenzo vicinity, *Portillo, Mauricio, House (Mimbres Valley MRA)*, E of NM 61 1 mi. S of NM 90

San Lorenzo vicinity, *Torres, Antonio, House (Mimbres Valley MRA)*, N of NM 90 W of Mimbres River bridge

San Lorenzo, *San Lorenzo Historic District (Mimbres Valley MRA)*, Roughly Galaz St. between C and H Sts.

Sherman vicinity, *Perrault, George O., House (Mimbres Valley MRA)*, E of NM 61 1.7 mi. N of Mimbres Hot Springs Canyon Rd.

Sherman vicinity, *San Juan Teacherage (Mimbres Valley MRA)*, W of NM 61 1.7 mi. N of Mimbres Hot Springs Canyon Rd.

Sierra County

Archeological Site No. LA1082 (Prehistoric Adaptations along the Rio Grande Drainage, Sierra County, New Mexico TR)

Archeological Site No. LA1119 (Prehistoric Adaptations along the Rio Grande Drainage, Sierra County, New Mexico TR)

Archeological Site No. LA49016 (Prehistoric Adaptations along the Rio Grande Drainage, Sierra County, New Mexico TR)

Archeological Site No. LA49030 (Prehistoric Adaptations along the Rio Grande Drainage, Sierra County, New Mexico TR)

Archeological Site No. LA50548 (Prehistoric Adaptations along the Rio Grande Drainage, Sierra County, New Mexico TR)

Archeological Site No. LA517 (Prehistoric Adaptations along the Rio Grande Drainage, Sierra County, New Mexico TR)

Chambers Canyon Site (LA49028)(Prehistoric Adaptations along the Rio Grande Drainage, Sierra County, New Mexico TR)

Horse Island Site (LA48996)(Prehistoric Adaptations along the Rio Grande Drainage, Sierra County, New Mexico TR)

Kettle Top Butte Site (LA48995)(Prehistoric Adaptations along the Rio Grande Drainage, Sierra County, New Mexico TR)

Longbotton Canyon Site (LA49033)(Prehistoric Adaptations along the Rio Grande Drainage, Sierra County, New Mexico TR)

Monticello Point Archeological District (LA48990, LA48991, LA48992, LA48993, LA48994)(Prehistoric Adaptations along the Rio Grande Drainage, Sierra County, New Mexico TR)

Palomas Narrows North (LA38755)(Prehistoric Adaptations along the Rio Grande Drainage, Sierra County, New Mexico TR)

Palomas Narrows South (LA49007)(Prehistoric Adaptations along the Rio Grande Drainage, Sierra County, New Mexico TR)

NEW YORK

Nassau County

Hempstead, *Rectory of St. George's Episcopal Church*, 217 Peninsula Blvd.

Otsego County

Cherry Valley, *Cherry Valley Village Historic District*, Roughly bounded by Alden St. and Montgomery St., Maple Ave. and Elm St., and Main St.

Sullivan County

Jeffersonville, *Jeffersonville School*, Terrace Ave.

NORTH CAROLINA

Camden County (also in Chesapeake County, VIRGINIA)

South Mills, *Dismal Swamp Canal (Dismal Swamp Canal and Associated Development, Southeast Virginia and Northeast North Carolina MPS)*, Runs between Chesapeake, VA and South Mills, NC

RHODE ISLAND

Providence County

Foster, *Moosup Valley Historic District (Foster MPS)*, Roughly bounded by Harrington, Johnson, Moosup Valley and Barb Hill, and Cucumber Hill Rds.

Providence, *Parkis—Comstock Historic District (Boundary Increase)*, 568, 570–572 Broad St. and 39–41, 54–56, and 60–62 Harvard Ave.

[FR Doc. 88-7978 Filed 4-11-88; 8:45 am]

BILLING CODE 4310-70-M

INTERSTATE COMMERCE COMMISSION

Release of Waybill Data for Use in Assessing Potential Acquisition of Three Branch Lines of Atchison, Topeka, and Santa Fe Railroad Co.

The Commission has received a request from Pacific Rail Partners of Glendale, California for persmission to use certain waybill data pertaining to California rail traffic from the Commission's 1985 and 1986 Waybill Sample. The requested data are needed to assess the feasibility of acquiring three branch lines of the Atchison, Topeka, and Santa Fe Railroad Company: (1) San Jacinto Subdivision, (2) Redlands Subdivision and (3) Lucerne Valley Subdivision. The specific waybill data items requested are:

1. Waybill Number
2. Waybill Date
3. Accounting Period
4. Number of Carloads
5. Car Initials
6. Commodity Code
7. Billed Weight
8. Actual Weight of Lading
9. Freight Revenues
10. Transit Charges
11. Miscellaneous Charges
12. Interstate/Intrastate Code
13. All Rail/Intermodal Code
14. Shortline Miles
15. Stratum Identification
16. Subsample Code Number
17. Reporting Railroad
18. Routing

The Commission requires rail carriers to file waybill sample information if any of the past three years they terminated on their lines at least: (1) 4,500 revenue carloads or (2) 5 percent of revenue carloads in any one State (49 CFR Part 1244). From this waybill information, the Commission has developed a Public Use File that has satisfied the majority of all waybill data requests while protecting the confidentiality of proprietary data submitted by the railroads. However, if confidential waybill data are requested, as in this case, we will consider releasing the data only after certain protective conditions are met and public notice is given. More specifically, under the Commisison's rules for release of waybill data [Ex Parte 385 (Sub-No. 2), 52 FR 12415, April 16, 1987], we will not release any confidential waybill data until after: (1) Public notice is provided so affected parties have an opportunity to object and (2) certain requirements designed to protect the data's confidentiality are agreed to by the requesting party.

If any parties object to this request, they should file their objections (an original and 3 copies) with the Director of the Commission's Office of Transportation Analysis (OTA) within 14 calendar days of the date of this notice. Objections should identify the parties seeking the waybill data, state the purpose for which the data are sought, and include all grounds for objection to the full or partial disclosure of the requested data. The Director of OTA will consider these objections in determining whether to release the requested waybill data. Any parties who objected will be timely notified of the Director's decision.

Contact: Elaine Kaiser, (202) 275-7684

Noreta R. McGee,

Secretary.

[FR Doc. 88-7810 Filed 4-11-88; 8:45 am]

BILLING CODE 7035-01-M

[Docket No. AB-57 (Sub-27X)]

Soo Line Railroad Co.; Abandonment at Minneapolis, MN

AGENCY: Interstate Commerce Commission.

ACTION: Notice of exemption.

SUMMARY: The Interstate Commerce Commission exempts from the prior approval requirements of 49 U.S.C. 10903, *et seq.*, the abandonment by Soo Line Railroad Company of an approximate .63-mile track at Minneapolis, MN, subject to standard labor protective conditions.

DATES: Provided no formal expression of intent to file an offer of financial assistance has been received, this exemption will be effective on May 12, 1988. Petitions to stay must be filed April 27, 1988, and petitions for reconsideration must be filed by May 9, 1988. Formal expressions of intent to file an offer [1] of financial assistance under 49 CFR 1152.27(c)(2) must be filed by April 22, 1988.

ADDRESSES: Send pleadings referring to Docket No. AB-57 (Sub-No. 27X) to:

(1) Office of the Secretary, Case Control Branch, Interstate Commerce Commission, Washington, DC 20423

(2) Petitioner's representative: Larry D. Starns, Soo Line Building, Suite 1000, 105 South Fifth Street, Minneapolis, MN 55402.

FOR FURTHER INFORMATION CONTACT: Joseph H. Dettmar, (202) 275-7245. (TDD for hearing impaired: (202) 275-1721)

SUPPLEMENTARY INFORMATION: Additional information is contained in the Commission's decision. To purchase a copy of the full decision, write to Dynamic Concepts, Inc., Room 2229, Interstate Commerce Commission Building, Washington, DC 20423, or call (202) 289-4357/4359 (DC Metropolitan area), (assistance for the hearing impaired is available through TDD services (202) 275-1721 or by pickup from Dynamic Concepts, Inc., in Room 2229 at Commission headquarters).

Decided: April 5, 1988.

By the Commission, Chairman Gradison, Vice Chairman Andre, Commissioners Sterrett, Simmons, and Lamboley.

Noreta R. McGee,

Secretary.

[FR Doc. 88-7991 Filed 4-11-88; 8:45 am]

BILLING CODE 7035-01-M

[1] *See Exemption of Rail Line Abandonments or Discontinuance Offers of Financial Assistance,* XXX I.C.C.2d XXX, served December 21, 1987, and final rules published in the **Federal Register** on December 22, (52 FR 48440-48446).

DEPARTMENT OF JUSTICE

Community Relations Service; Availability of Funding for Special Placement Progams (SPP) for Mariel Cubans Paroled or Reparoled by the Immigration and Naturalization Service Detention from Various Federal Detention Facilities

AGENCY: Community Relations Service (CRS), U.S. Department of Justice.

ACTION: Notice of availability of funding for grant agreements to provide community-based Special Placement Programs for Mariel Cuban detainees paroled or reparoled by the Immigration and Naturalization Service from various Federal detention facilities.

SUMMARY: This announcement governs the award of Grant Agreements to public or private non-profit organizations or agencies, and under certain conditions, to for-profit organizations or agencies, to provide eligible Mariel Cubans paroled or reparoled by the Immigration and Naturalization Service (INS) from various Federal detention facilities with intensive, structured, and comprehensive residential and community-based follow-up support services. Programs providing such services shall hereafter be referred to as Special Placement Programs (SPPs).

Special Placement Programs have the specific goal of assisting eligible clients to develop self-sufficiency and integration into the community through a comprehensive system of support services, delivered first in a residential setting (3 months) and subsequently in a community setting (9 months).

DATE: Closing Date: 5:00 p.m. Eastern Daylight Time: Friday, May 27, 1988.

SUPPLEMENTARY INFORMATION:

Purpose and Scope

The purpose of the Special Placement Program is the re-integration of certain detained Mariel Cubans into society through a structured program of residential and community-based follow-up support services.

The client population consists of Mariel Cubans who have been returned to the custody of the United States Department of Justice, Immigration and Naturalization Service, from local and state criminal justice systems. Currently, those detainees deemed eligible for parole or reparole by the INS are detained at over twenty-five INS and Federal Bureau of Prisons (BOP) detention facilities.

Detainees approved for release are directly referred to Grant Recipients by the Community Relations Service (CRS).

During a three (3) month residential period, Recipients provide clients with basic physical care and maintenance, as well as counseling, employment services, English language training, life skills instruction, and other programmatic assistance. Upon resettlement into the community, Recipients provide strong community based follow-up support services and continued case management for a minimum period of nine (9) months. Clients are eligible for another six months of follow-up services, if required. Services are rendered within the context of a highly structured, accountable program environment.

Authorization: Authority for the Community Relations Service Special Placement Program is contained in Title V, section 501(c) of Public Law 96–422 (the Refugee Education Assistance Act of 1980).

Award Instrument: Awards to support Special Placement Program services will be in the form of Grants issued by the Community Relations Service.

Available Funds: Approximately $1.6 million will be available on a Fiscal Year basis to support up to 2 Grant Agreements. Fiscal year funding for each award is anticipated to be between $700,000 and $800,000, depending upon such factors as the geographic area of resettlement and specific program design.

Awards normally will not exceed a 36 month program performance period. Funding will be for 12 month budget periods.

The estimated amount of available funds and the anticipated ranges of funding contained in this Notice are intended to serve as bench marks only. These estimates and ranges do not bind the Community Relations Service to any specific number of Grant Agreements or to any specific level of funding.

Future fiscal year funding for the Special Placement Program will be contingent upon need and the availability of Federal appropriations. If adequate funds are available, the Acting Director, CRS, anticipates continuation of this program.

Proposal Review: Proposals will be reviewed, evaluated, rated, and competitively ranked by an independent review panel on the basis of weighted criteria listed in this Notice. Applicants must receive a minimum score of 65 points, out of a total of 100 possible points, in order to be considered for funding. All funding decisions are made at the discretion of the Acting Director, Community Relations Service. Awards will be subject to the availability of funds.

Eligible Applicants

Non-profit organizations incorporated under State law, which have demonstrated experience in:

(1) The resettlement of or provision of services to Cuban Entrants, or similar populations; (2) the administration of residential, community-based correctional treatment programs for ex-offenders, or; (3) the administration of other types of residential, community-based rehabilitative programs are eligible to apply.

For-profit organizations, incorporated under State law, which have demonstrated experience in:

(1) The resettlement of or provision of services to Cuban Entrants, or similar populations; (2) the administration of residential, community-based correctional treatment programs for ex-offenders, or; (3) the administration of other types of residential, community-based rehabilitative programs, *and* which can clearly demonstrate that only costs and not profits, fees, or other elements above costs have been budgeted, are also eligible to apply.

Subcontractual arrangements for the administration of a Special Placement Program will only be acceptable in the cases of national-level organizations through local-level agencies which have a demonstrable affiliation with, or membership in, the national-level organization and which have an institutional presence in the selected area of resettlement.

Consortiums or joint ventures between or among unrelated agencies or organizations, i.e., those where no formal affiliation or membership relationship exists, will not be considered for funding under the terms of this Notice. Present CRS Recipients are not precluded from submitting applications under the terms and conditions of this Notice.

Eligible Client Population

Under the terms of this announcement, the eligible client population consists of Cuban Nationals who have been approved for parole or reparole from Federal detention by the Immigration and Naturalization Service and who meet the definition of Cuban/Haitian Entrant as specified in Title V, section 501(e) of Public Law 96–422:

(1) Any individual granted parole status as a Cuban-Haitian Entrant (Status Pending) or granted any other special status subsequently established under the Immigration laws for nationals of Cuba or Haiti, regardless of the status of the individual at the time assistance or services are provided; and

(2) Any other national of Cuba or Haiti:

(A) Who—

(i) Was paroled into the United States and has not acquired any other status under the Immigration and Nationality Act;

(ii) Is the subject of exclusion or deportation proceedings under the Immigration and Nationality Act; or,

(iii) Has an application for asylum pending with the Immigration and Nationality Service; and,

(B) With respect to whom a final, nonappealable and legally enforceable order of exclusion or deportation has not been entered.

Further information concerning other characteristics of this population is contained in the CRS document entitled "Special Placement Program—Program Requirements and Description".

Areas of Resettlement

Funding cannot be considered for applicants who propose resettlement in states or areas heavily impacted by Cuban/Haitian Entrants, refugees, or Special Placement Programs, unless the applicant can assure full-time employment, service delivery, and community support in such areas. These impacted areas include the states of Florida, California, Illinois, Michigan, Minnesota, Missouri, New Jersey, New York, Ohio, Texas, Virginia and Washington.

Applicants need not be located in the proposed city of resettlement, however, it is strongly suggested that they have a strong institutional presence or broad support base in this location. Local-level affiliates of national-level organizations, however, must be located in the proposed city of resettlement.

Application Contents

Applicants are required to set forth in detail a proposal that meets the program requirements described in this Notice and as supplemented by the CRS document entitled "Special Placement Program—Program Description and Requirements".

Applicants are required to set forth in detail the following:

1. Program Abstract

The Program Abstract is intended to be a brief summary of the proposal which includes names and locations of relevant agencies, proposed resettlement city and proposed location of facility, total number of clients and cycles to be served during the entire program performance period, proposed program periods and phases, and services to be offered to clients during these periods and phases.

2. Organization/Agency Background

Applicants must include a detailed discussion of:

a. The applicant's history, philosophy and goals;

b. Its particular demonstrated experience with respect to: (1) The resettlement of or provision of services to Cuban Entrants, or similar populations; (2) the administration of residential, community-based correctional treatment programs for ex-offenders, or; (3) the administration of other types of residential, community-based rehabilitative programs; and

c. The applicant's history of service delivery and institutional presence in the proposed city of resettlement.

If the applicant is a national-level organization which proposes to deliver services through a local-level affiliate, the proposed affiliate must be identified. Within the context of the topics outlined above, discuss the local-level affiliate's qualifications and provide a rationale for its particular selection as the service provider and for the use of such a subcontractual arrangement.

3. Characteristics of Program Site

a. Characteristics of the Proposed Resettlement City

Applications must contain a detailed qualitative and quantitative rationale for the selection of the proposed resettlement city with particular regard to:

1. A description of the city's racial, ethnic and sociocultural composition, including a description of existing Cuban populations and Cuban organizations;

2. A description of the political and law enforcement structures of the resettlement city and their potential receptivity regarding the program;

3. Current levels of employment and unemployment in various relevant local job markets, by race and ethnicity, if possible;

4. Availability of immediate or imminent prospects for full-time, permanent employment consistent with the skill levels of the program participants;

5. Availability of housing which is safe, sanitary, and affordable to the clients;

6. A description of the local social service network including any services targeted primarily to Hispanic populations; and

7. A brief discussion of the probable impact of the Immigration Reform and Control Act of 1986 (Public Law 99-603) on community tension and upon receptivity to the proposed program.

b. Characteristics of the Proposed Resettlement Community

The proposed resettlement community refers to the immediate geographical area in which the proposed facility is located. This area may be a defined, named neighborhood/area which is recognized as a political unit, or it may be a less formally designated area. In either case, the applicant must describe the relevant area in terms of the following characteristics:

1. Address of the Proposed Facility;

2. A description of the racial, ethnic and sociocultural composition of the community, including the presence of a Cuban community;

3. Identification of important local community groups, such as neighborhood watch associations, tenant organizations, neighborhood task forces;

4. Identification of political representatives who represent the constituency of that area, such as City Council members, Congressional representatives or local Community Board members;

5. Identification of the local social service and educational network, such as local churches, schools, the Salvation Army, and YMCAs;

6. Location of nearest police precinct or responsible law enforcement agency;

7. Location of nearest schools or day care centers;

8. Crime rate of the area; and

9. Availability of public transportation.

c. Residential/Office Facility

Applicants are required to set forth in detail comprehensive information regarding:

1. A physical description of the proposed facility including the proposed allocation of residential and office space; and

2. Documentation that the facility meets all relevant zoning, licensing, fire, safety and health codes required to operate a residentially-based social service program.

Copies of relevant documents must be submitted at the time of application.

If a facility properly zoned, licensed, or inspected is not available at the time of application, the applicant must submit a report on the progress made in obtaining the appropriate documentation, as noted above. This report consists of a description of the required documents, copies of correspondence to relevant local officials or offices from which they will be obtained, and the means and timeline for obtaining the documentation.

d. Community Support

Applicants are required to detail those measures which have and will be taken to develop and maintain:

(1) Community receptivity and support and/or reduce community opposition to the program and its clientele;

(2) On-going communication with the relevant INS office and with the relevant law enforcement agency; and

(3) An Advisory Committee for the Special Placement Program.

Such measures must be supported by appropriate documentation, as outlined in the Application Addenda Material.

4. General Program Design

Applicants are required to set forth in detail a comprehensive narrative which includes:

a. Client Population

1. A description of the client population to be served and the client selection criteria proposed by the applicant;

2. Total number of clients to be resettled during the entire proposed Program Performance Period (up to 36 months); and

3. The number of clients to be served during each cycle and the number of cycles to be accepted during each budget year (A cycle is comprised of 20-30 clients; programs normally serve a total of 80-120 clients or four (4) cycles of clients in a budget year).

b. Program Periods

1. An estimate of program start-up time; that is the period during which the program operations will begin and staff hiring and training will occur, and a

BEST COPY AVAILABLE

description of the activities which will occur during this time;

2. A description of the program periods, including period length and services to be rendered in each period;

3. A description of the criteria for clients to enter the community follow-up period; and

4. A flow chart or time-line which identifies significant milestones during each period.

c. Program Phases

1. A description of the phases within the residential and community follow-up periods, including the length of each phase and the services to be rendered during each phase;

2. A description of the criteria for clients to pass from one phase to another; and

3. A flow chart or time-line which identifies significant milestones during each phase.

d. Applicant Organization/Agency Management Plan

Applicants are required to submit a comprehensive plan which outlines the proposed management of the program. The plan must include the following:

1. A comprehensive organizational chart of the applicant organization or agency, which:

a. Shows the overall lines of authority and responsibility in the organization or agency as a whole;

b. Shows the relationship of the proposed project to other organization or agency projects; and

c. Shows the relationship of the local level affiliate to the national-level organization, if applicable.

2. Identification of the staff member who will assume overall supervision of the program at the applicant organization or agency level.

3. A description of the methods for the administration and supervision of the program by the applicant organization or agency.

4. A description of the means of communication among the various levels of program administration.

For national-level organizations whose local-level affiliates will administer the program, the following material must also be included:

A description of the specific services to be rendered by the national level organization to its local-level affiliate, the specific services to be rendered by the affiliate, and a monitoring plan.

e. Local-Level Affiliate Management Plan

For national-level organizations whose local-level affiliate will be responsible for the administration and operation of the program, a management plan must also be included which contains the following:

1. A comprehensive organizational chart of the local-level affiliate which:

a. Shows overall lines of authority and responsibility within the local-level affiliate; and

b. Shows the relationship of the proposed program to other agency programs.

2. Identification of the local-level affiliate staff member who will assume overall responsibility for the program.

3. A description of the methods for the administration and supervision of the program which identifies all responsible staff members.

f. Special Placement Program Management and Staffing Model

This plan refers to the administration, management and staff of the actual Special Placement Program.

For both the residential and community-based follow-up periods, identify or discuss:

1. The staff member responsible for the overall program management and staff supervision;

2. A plan to ensure intra-program coordination and communication;

3. The staffing pattern, include a comprehensive organizational chart of the proposed program showing lines of authority, responsibility and supervision;

4. A proposed staff schedule;

5. Proposed staff training;

6. The roles of consultants and rationale for their use; and

7. The role of volunteers, if applicable.

5. Basic Services—Residential Period

Applicants are required to provide a detailed narrative description of the following services to be rendered and the method of service delivery:

a. Housing;

b. Food Service;

c. Clothing;

d. Arrival Package;

e. Stipends;

f. Medical Services;

g. Transportation, and;

h. Resettlement Package.

6. Residential Program Services (3 months)

Applicants are required to provide a detailed narrative description of the following services and the method of service delivery, including identification of the community resources which will be accessed to provide or to enhance such services.

a. Orientation to the Program and to the Local Community.

b. Counseling Services, including:

1. Individual Counseling;

2. Group Counseling; and

3. Substance Abuse Counseling.

c. Employment Development, Placement and Maintenance Services.

d. English Language Training and Assistance with Higher Education or Vocational Training.

e. Life Skills Instruction including a substance abuse education component.

f. Assistance in Obtaining Documents, i.e., Social Security cards and new I–94 cards.

g. Recreational Services.

h. Resettlement Transition Plan.

7. Intensive Community-Based Follow-Up Period (9 months)

Applicants are required to provide a detailed narrative description of the services to be rendered and the method of service delivery, including the frequency with which services will be rendered.

a. Basic Services.

1. Emergency Assistance, and

2. Medical Coverage.

b. Program Services.

1. Individual Counseling;

2. Group Counseling;

3. Information and Referral Services;

4. Job Development, Placement, and Counseling Services;

5. Comprehensive Crisis Intervention Services; and

6. A Comprehensive Discharge Plan.

8. Final Six Month Follow-up Period

Applicants are required to provide a narrative description of the services to be rendered and the method of service delivery.

a. Basic Services.

1. Emergency Assistance,

b. Program Services.

1. Individual Counseling;

2. Group Counseling;

3. Information and Referral Services;

4. Job Development, Placement, and Counseling Services;

5. Comprehensive Crisis Intervention Services; and

6. A Comprehensive Discharge Plan.

9. Program Records and Accountability

Applicants are required to set forth a detailed narrative describing the following:

a. Internal administrative controls, such as daily logs, weekly staff meetings, in-house client meetings, program policies and procedures;

b. Administrative program records such as cash disbursement records, other financial records, inventory lists, medication dispensing records, food allocation, and similar files;

c. Method for insuring 24 hour monitoring of the program and its clients, such as sign in/sign out sheets and a pass system;

d. The reward/sanction system;

e. Disciplinary and grievance procedures;

f. Room search and pat-down procedures and frequency; and

g. A plan for testing for substance abuse.

10. Case Management System and Client Records, including

a. A description of the case management system for tracking and monitoring client progress;

b. A description of individual client service plans, including time lines for routine review and revision of plans; and

c. A description of the client case files, i.e., types of records to be maintained.

11. Program Evaluation

Applicants must set forth a plan for program evaluation which includes, at minimum, data pertaining to and an assessment of:

1. Achievement of overall stated goals and objectives of the program;

2. Client Statistics, including number completing program, parole revocations, AWOL cases, serious incidents, and arrests;

3. Major program components, particularly employment;

4. Factors contributing to or inhibiting successful delivery of services; and

5. The program relationship with the local community.

12. Budget and Budget Narrative

a. A Proposed Budget.

More detailed information concerning budget categories is contained in the "Special Placement Program—Program Description and Requirements" Document. The following budget structure should be used to provide appropriate cost breakdowns:

1. Personnel;
2. Fringe Benefits;
3. Travel Costs;
4. Equipment;
5. Supplies;
6. Contractual Obligations;
7. Renovation Costs (if applicable);
8. Direct Client Costs;
9. Other; and
10. Indirect Costs.

b. Budget Narrative.

A narrative explanation of each line item (in each budget category) must accompany the proposed budget.

13. Application Addenda Material

Applicants are required to submit the following material as an addendum to the program proposal. Material is required for all participating agencies, i.e., applicant organizations as well as local-level affiliates, as applicable:

a. Organization/Agency Administration.

1. A copy of the Organization/Agency's Articles of Incorporation;

2. A copy of the IRS status as a non-profit organization/agency, if applicable;

3. A list of officers and board members, if applicable; and

4. A list of professional affiliations and certifications.

b. Organizational/Agency Standards and Policies.

1. Personnel handbook and statement of standards of conduct;

2. Statement regarding professional and agency liability; and

3. A copy of policy regarding confidentiality of client information and records.

c. Staff.

1. Position descriptions and resumes, if individuals have been identified for certain positions, for all personnel to be hired for both the residential and community-based follow-up periods, and of individuals responsible for administering the program from the applicant organization/agency level and local-level affiliate, as applicable; and

2. Resumes of program consultants.

d. Community Support.

1. A proposed list of Advisory Committee members;

2. Letters of program support. Sources must be located in, or representative of the proposed resettlement community, i.e., *the immediate geographic area in which the proposed facility is located.* Appropriate sources include, but are not limited to, local political representatives, law enforcement officials, community leaders, community/neighborhood organizations or associations, social service agency representatives, merchants, and potential employers.

Applicants may also submit letters from other sources as supplemental material to the site-specific letters of support;

3. Letters showing that the relevant INS District Office and the relevant law enforcement agency have been notified of the program's purpose and intent; and

4. A list of voluntary or donated resources, including letters of intent from agencies or entities providing the resources.

e. Finance and Budget.

1. A description of the financial management system of the applicant and local-level affiliate, as applicable;

2. A copy of the latest financial audit of the applicant and local-level affiliate, as applicable; and

3. A listing of other Federal, State, local or foundation grants, cooperative agreements, or contracts administered by the applicant and local-level affiliate, as applicable.

This material should include information regarding the funding source, grant, cooperative agreement, or contract number; level of financial support, purpose of grant, cooperative agreement, or contract; grant, cooperative agreement, or contract performance period; and name, address, and telephone number of the grant, cooperative agreement, or contract officer from the relevant agency.

f. Subcontracts/Subgrants.

Subcontracts/Subgrants refers to those procurement arrangements which will be entered into by the Special Placement Program for the delivery of certain goods or services such as food catering or renovations, which will not be provided directly by the program.

1. Identify all proposed services which are to be provided through subcontractors/subgrants;

2. Provide letters from the proposed subcontractors/subgrants indicating their commitment and the specific services to be provided.

Application Screening Criteria

The Community Relations Service will screen all applications submitted pursuant to this Notice. Screening shall be done to determine whether an application is sufficiently complete to warrant consideration and review by the independent CRS Review Panel.

An application may be rejected if:

1. The application is from an ineligible applicant or, in the case of national-level organizations, the applicant or its local-level affiliate does not meet the eligibility criteria contained in this Notice.

2. The application is received after the stated closing time and date.

3. The application omits any of the following information:

a. Relevant documentation regarding the proposed residential/office facility;

b. Documented written evidence of community support for the program;

c. A comprehensive line item budget with appropriate narrative description; and

d. A copy of the latest financial audit of the applicant and of the local-level affiliate, if the applicant is a national-level organization.

Criteria for Evaluation of SPP Applications

SPP applications will be competitively reviewed, evaluated, rated and ranked by an independent Review Panel, according to the weighted criteria outlined below.

Applicants must receive a minimum score of 65 points out of a total of 100 possible points in order to be considered for funding.

1. The qualifications of the applicant organization or agency, and the local-level affiliate, if applicable, with respect to:

- Demonstrated experience in: (1) the resettlement of or provision of services to Cuban entrants or similar populations; (2) the administration of residential, community-based programs for ex-offenders; or, (3) the administration of other types of residential, community-based rehabilitation programs; and
- Demonstrated capacity for effective programmatic and fiscal management and accountability.

(10 POINTS)

2. The rationale for the proposed program location as evidenced by:

- The quantitative and qualitative descriptions of the characteristics of the proposed resettlement city and proposed resettlement community;
- The institutional presence or broad support base of the applicant agency, or, the presence of a local-level affiliate in the proposed resettlement city; and
- Documentation of community support.

(10 POINTS)

3. The availability of a suitable residential/office facility and submission of required documentation regarding facility compliance with applicable health, safety, licensing, and zoning regulations or requirements.

(15 POINTS)

4. The adequacy of the overall general program design in terms of:

- Proposed client load;
- Proposed period and phase activities, timeliness, and services, and criteria for entering various program periods and phases;
- Proposed plans for overall agency management and program management, including clear organizational charts reflecting lines of authority and responsibility; and
- Staff qualifications, staffing patterns, and proposed training.

(15 POINTS)

5. The capacity for providing required program services, as demonstrated by:

- The program plan to provide basic services during all phases and periods of the program;
- An integrated program plan to provide all program services during the residential and community follow-up periods, particularly with regard to providing full-time employment for clients, and
- Sensitivity to the issues of culture, race, ethnicity and native language and use of resources in a manner which promotes and fosters cultural identification and mutual support.

(15 POINTS)

6. The degree to which the applicant provides for effective program structure and accountability as demonstrated by administrative and programmatic controls, as well as program and client records and reports.

(10 POINTS)

7. The reasonableness of the proposed budget and budget narrative.

(10 POINTS)

8. The adequacy of the program evaluation plan.

(5 POINTS)

9. The submission of the requested Application Addenda Material.

(10 POINTS)

Application Request and Submissions

Eligible applicants may request Proposal Application Packages from the United States Department of Justice, Community Relations Service, Suite 330, 5550 Friendship Boulevard, Chevy Chase, Maryland 20815; Attention: Cynthia Bowie, Grants Officer.

Proposal Application Packages may also be obtained by contacting the Community Relations Service at 301-492-5818, or, 1-800-424-9304.

Applicants must submit a signed original and two (2) copies of the proposal and supporting documentation to the United States Department of Justice, Community Relations Service, Suite 330, 5550 Friendship Boulevard, Chevy Chase, Maryland 20815; Attention: Cynthia Bowie, Grants Officer.

Applications Delivered by Mail

An applicant must show proof of mailing consisting of the following:

1. A legible dated U.S. Postal Service postmark.
2. A legible mail receipt with the date of mailing stamped by the U.S. Postal Service.
3. A dated shipping label, invoice, or receipt from a commercial carrier.

If an application is sent through the U.S. Postal Service, the Director does not accept either of the following as proof of mailing: (1) A private metered postmark, or (2) a mail receipt that is not dated by the U.S. Postal Service.

Applicants should note that the U.S. Postal Service does not uniformly provide a dated postmark. Before relying on this method, the applicant should check with its local Post Office.

Applicants are encouraged to use registered or at least First Class mail. Each late applicant will be notified that the application will not be considered.

Applications postmarked on or before 5 p.m. (Eastern Daylight Time), Friday, May 27, 1988, shall be considered as timely applications.

Applications Delivered by Hand

An application that is hand delivered must be taken to the United States Department of Justice, Community Relations Service, Suite 330, 5550 Friendship Boulevard, Chevy Chase, Maryland, 20815.

The Grants Management Office will accept hand delivered applications between 9:00 a.m. and 5:00 p.m., Eastern Daylight Time, daily, except Saturdays, Sundays, and Federal holidays.

An application that is hand delivered will not be accepted after 5:00 p.m., Eastern Daylight Time, on the closing date.

Catalogue of Federal Domestic Assistance Number: 16.201.

Date: April 6, 1988.

Robert L. Martinez,

Acting, Director, Community Relations Service.

Intergovernmental Review

Application Requirements

Pursuant to Executive Order 12372, *Intergovernmental Review of Federal Programs*, all States have the option of designing procedures for the review and comment on Federally assisted programs.

Each applicant is required to notify each State in which it is proposing activities under this Announcement and to comply with the States' established review procedures. This may be done by contacting the applicable State Single Point of Contact (SPOC).

State Requirements

Comments and recommendations relative to applications submitted under this solicitation should be mailed no later than May 27, 1988, addressed to: Richard Gutierrez, Coordinator, Immigration and Refugee Affairs, Community Relations Service, Suite 330, 5550 Friendship Boulevard, Chevy Chase, Maryland, 20815.

Drug Enforcement Administration

George C. Daniel, M.D.; Order To Show Cause

The following is an Order to Show Cause proposing to revoke DEA Certificate of Registration AD2730706, previously issued to George C. Daniel, M.D. On February 24, 1988, Dr. Daniel was declared to be a fugitive from justice. Since Dr. Daniel cannot be located, notice of DEA's proposed action is being given through publication in the **Federal Register.**

Gene R. Haislip,

Deputy Assistant Administrator, Office of Diversion Control.

Date: April 6, 1988.

Order To Show Cause

In the matter of: George C. Daniel, M.D., 11610 Milbern Drive, Potomac, Maryland 20854.

Pursuant to sections 303 and 304 of the Controlled Substances Act, Title 21, United States Code, sections 823 and 824,

Notice is hereby given to afford George C. Daniel, M.D. an opportunity to Show Cause before the Drug Enforcement Administration, at a place and time to be determined, as to why the Drug Enforcement Administration should not revoke his DEA Certificate of Registration, AD2730706, and deny any pending applications for registration as a practitioner under 21 U.S.C. 823(f), for reason that his continued registration is inconsistent with the public interest, as that term is used in 21 U.S.C. 823(f) and 824(a)(4), and as evidenced by, but not limited to, the fact that he unlawfully distributed Schedule II controlled substances by issuing prescriptions for such substances to undercover agents of the Drug Enforcement Administration for no legitimate medical purpose.

The following procedures are available to you in this matter:

1. Within 30 days after the date of publication of this Order to Show Cause, the above-named registrant may file with the Administrator of the Drug Enforcement Administration a written request for a hearing in the form set forth in § 1316.47, Title 21, Chapter 2, Code of Federal Regulations. (See § 1301.54(a)).

2. Within 30 days after the date of publication of this Order to Show Cause, the above-named registrant may file with the Administrator a waiver of hearing together with a written statement regarding your position on the matters of fact and law involved. (See § 1301.54(c)).

3. Should the above-named registrant decline to file a request for a hearing or should he so file and fail to appear at the hearing, he shall be deemed to have waived the hearing and the Administrator may cancel such hearing, if scheduled, and may enter his final order in this matter without a hearing and based upon the investigative file and the record of this proceeding as it may then appear. (See § 1301.54(d) and 1301.54(e)).

Correspondence concerning this matter should be addressed to the Hearing Clerk, Office of the Administrative Law Judge, Drug Enforcement Administration, 1405 Eye Street, NW., Washington, DC 20537.

Gene R. Haislip,

Deputy Assistant Administrator, Office of Diversion Control.

[FR Doc. 88-7959 Filed 4-11-88; 8:45 am]

BILLING CODE 4410-09-M

Manufacturer of Controlled Substances; Application; Syncates Associates, Inc.

Pursuant to § 1301.43(a) of Title 21 of the Code of Federal Regulations (CFR), this is notice that on February 3, 1988, Syncates Associates, Inc., 10863 Rockley Road, Houston, Texas 77099, made application to the Drug Enforcement Administration (DEA) for registration as a bulk manufacturer of the Schedule II controlled substance pentobarbital (2270).

Any other such applicant and any person who is presently registered with DEA to manufacture such substance may file comments or objections to the issuance of the above application and may also file a written request for a hearing thereon in accordance with 21 CFR 1301.54 and in the form prescribed by 21 CFR 1316.47.

Any such comments, objections or requests for a hearing may be addressed to the Deputy Assistant Administrator, Drug Enforcement Administration, United States Department of Justice, 1405 I Street, NW., Washington, DC 20537, Attention: DEA Federal Register Representative (Room 1112), and must be filed no later than May 12, 1988.

Gene R. Haislip,

Deputy Assistant Administrator, Office of Diversion Control, Drug Enforcement Administration.

Dated: April 6, 1988.

[FR Doc. 88-7957 Filed 4-11-88; 8:45 am]

BILLING CODE 4410-09-M

DEPARTMENT OF LABOR

Office of the Secretary

Agency Recordkeeping/Reporting Requirements Under Review by the Office of Management and Budget (OMB)

Background: The Department of Labor, in carrying out its responsibilities under the Paperwork Reduction Act (44 U.S.C. Chapter 35), considers comments on the reporting and recordkeeping requirements that will affect the public.

List of Recordkeeping/Reporting Requirements Under Review: As necessary, the Department of Labor will publish a list of the Agency recordkeeping/reporting requirements under review by the Office of Management and Budget (OMB) since the last list was published. The list will have all entries grouped into new collections, revisions, extensions, or reinstatements. The Departmental Clearance Officer will, upon request, be able to advise members of the public of the nature of the particular submission they are interested in. Each entry may contain the following information:

The Agency of the Department issuing this recordkeeping/reporting requirement.

The title of the recordkeeping/reporting requirement. The OMB and Agency identification numbers, if applicable. How often the recordkeeping/reporting requirement is needed. Who will be required to or asked to report or keep records. Whether small businesses or organizations are affected. An estimate of the total number of hours needed to comply with the recordkeeping/reporting requirements.

The number of forms in the request for approval, if applicable.

An abstract describing the need for and uses of the information collection.

Comments and Questions: Copies of the recordkeeping/reporting requirements may be obtained by calling the Departmental Clearance Officer, Paul E. Larson, telephone (202) 523-6331. Comments and questions about the items on this list should be directed to Mr. Larson, Office of Information Management, U.S. Department of Labor, 200 Constitution Avenue, NW., Room N-1301, Washington, DC 20210. Comments should also be sent to the Office of Information and Regulatory Affairs, Attn: OMB Desk Officer for (BLS/DM/ESA/ETA/OLMS/MSHA/OSHA/PWBA/VETS), Office of Management and Budget, Room 3208, Washington, DC 20503 (Telephone (202) 395-6880).

Any member of the public who wants to comment on a recordkeeping/reporting requirement which has been submitted to OMB should advise Mr. Larson of this intent at the earliest possible date.

New Collection

Bureau of Labor Statistics

Laboratory Research on the CPS questionnaire
CPS-1
One time, nonrecurring
Individuals; no business or organizations will be involved.
1650 individual respondents; 225 hours
The proposed "Laboratory Research on the CPS" would determine if the questions in the CPS questionnaire are still relevant, properly understood, and worded so as to yield the appropriate information. The CPS is the primary source of data on employment and unemployment, and the proposed research is designed to enhance the quality of these data, which are widely used within and outside the Government.

Occupational Safety and Health Administration

Survey of Facilities for Regulatory Impact Analysis of Proposed Revisions to OSHA Standards for Four Ethylene Glycol Ethers Non-Recurring;
Businesses and other for-profit; Small businesses or organizations
940 responses; 787 burden hours, 0 forms
This information request is to support the Regulatory Impact Analysis of PEL revisions for four ethylene glycol ethers. The survey and site visits will collect data from industries where these substances are manufactured, processed, and used, to ascertain workforce characteristics, exposures, engineering controls, and substitutes.

Signed at Washington, DC this 7th day of April, 1988.

Paul E. Larson,
Departmental Clearance Officer.

[FR Doc. 88-7984 Filed 4-11-88 8:45 am]
BILLING CODE 4510-24-26-M

Employment and Training Administration

Investigations Regarding Certifications of Eligibility to Apply for Worker Adjustment Assistance; Amstar Corp. et al.

Petitions have been filed with the Secretary of Labor under section 221(a) of the Trade Act of 1974 ("the Act") and are identified in the Appendix to this notice. Upon receipt of these petitions, the Director of the Office of Trade Adjustment Assistance, Employment and Training Administration, has instituted investigations pursuant to section 221(a) of the Act.

The purpose of each of the investigations is to determine whether the workers are eligible to apply for adjustment assistance under Title II, Chapter 2, of the Act. The investigations will further relate, as appropriate, to the determination of the date on which total or partial separations began or threatened to begin and the subdivision of the firm involved.

The petitioners or any other persons showing a substantial interest in the subject matter of the investigations may request a public hearing, provided such request is filed in writing with the Director, Office of Trade Adjustment Assistance, at the address shown below, not later than April 22, 1988.

Interested persons are invited to submit written comments regarding the subject matter of the investigations to the Director, Office of Trade Adjustment Assistance, at the address shown below, not later than April 22, 1988.

The petitions filed in this case are available for inspection at the Office of the Director, Office of Trade Adjustment Assistance, Employment and Training Administration, U.S. Department of Labor, 601 D Street NW., Washington, DC 20213.

Signed at Washington, DC, this 4th day of April 1988.

Marvin M. Fooks,
Director, Office of Trade Adjustment Assistance.

APPENDIX

Petitioner (union/workers/firm)	Location	Date received	Date of petition	Petition No.	Articles produced
Amstar Corp. (Bunker Hill Refinery) (ILA)	Charlestown, MA	4/4/88	3/20/88	20,575	Refined cane sugar.
Colorado Westmoreland, Inc. (Company)	Paonia, CO	4/4/88	3/21/88	20,576	Steam coal.
Eaton Corp. Controls Div. (UAW)	Winamac, IN	4/4/88	3/17/88	20,577	Automotive switches.
Shenango China Co. (USWA)	New Castle, PA	4/4/88	3/5/88	20,578	Pottery.
Skan-A-Matic Corp. (Workers)	Elbridge, NY	4/4/88	3/23/88	20,579	Photo-electric optical scanners.
Tektronix, Inc. (Graphic Terminals Div.) & Admin. (Company).	Wilsonville, OR	4/4/88	3/16/88	20,580	Workstations.
Theurer Atlantic, Inc. (Teamsters)	Newark, NJ	4/4/88	3/22/88	20,581	Containers & trailers.
Van Dorn Plastic Machinery (Company)	West Boylston, MA	4/4/88	3/14/88	20,582	Plastic injection molding machines.

[FR Doc. 88-7983 Filed 4-11-88; 8:45 am]
BILLING CODE 4510-30-M

Office of the Assistant Secretary for Veterans' Employment and Training

Procedures for Preapplication for Funds; Stewart B. McKinney Homeless Assistance Act; Fiscal Year 1988

AGENCY: Office of the Assistant Secretary for Veterans' Employment and Training, Labor.

ACTION: Notice.

SUMMARY: This notice sets forth the procedures for obtaining a preapplication for funds for the operation of a Homeless Veterans' Reintegration Project (HVRP) funded under the Stewart B. McKinney Homeless Assistance Act, Title VII, Subtitle C, section 738. Projects will be administered by the Department of Labor through grants with State and local public agencies.

DATE: A preapplication package and instructions for completion will be available for issuance as of April 15, 1988. The closing date for receipt of a completion preapplication package in response to this notice is May 6, 1988.

ADDRESS: A copy of the preapplication package and instructions for completion may be obtained by written request only, including two self-addressed mailing labels, to: U.S. Department of Labor, Office of Procurement Services, Rm. S5220, 200 Constitution Ave. NW., Washington, DC 20210, Attention: Melvin Goldberg, Reference: PAG-01.

FOR FURTHER INFORMATION CONTACT: Ms. Christine Chudd, Office of the Assistant Secretary for Veterans' Employment and Training, 200

Constitution Ave. NW., Rm S1313, Washington, DC 20210, Telephone (202) 523-2752.

SUPPLEMENTARY INFORMATION: The Office of the Assistant Secretary for Veterans' Employment and Training announces the availability of a preapplication package for its Homeless Veterans' Reintegration Projects for Fiscal Year 1988. Funding for these projects is authorized by the Stewart B. McKinney Homeless Assistance Act, Pub. L. 100-77, section 738, 101 Stat. 482, 538 (1987).

The McKinney Act, enacted on July 22, 1987, provides well over $800 million during Fiscal Years 1987 and 1988 to several Federal agencies to administer a variety of programs for homeless persons. Title VII, Subtitle C, Section 738 of the Act authorizes programs "to expedite the reintegration of homeless veterans into the labor force." There are approximately $1.6 million available in Fiscal Year 1988 to carry out demonstration Homeless Veterans' Reintegration Projects (HVRP) authorized under section 738.

Project funding will range from a minimum of $50,000 to a maximum of $200,000. Between 15 and 25 projects will be funded. It is expected that most projects will be in the $50,000 to $100,000 range. Projects will begin no later than September 30, 1988 and will end no later than September 30, 1989. Funding could begin as early as July 1988.

In keeping with the demonstration nature of the McKinney Act, the program is designed to provide each potential program operator with flexibility in determining the range of employment and training related activities which best meet the need of the homeless veteran population in its jurisdiction. There are two elements, however, which will be required in each HVRP: (1) An outreach activity staffed by veterans who have experienced homelessness; and (2) linkages with providers of other services which could benefit homeless veterans, including, where applicable, other recipients of funds under the McKinney Act.

Potential jurisdictions which will be served through HVRPs are limited to: (1) The 35 largest U.S. cities: or (2) jurisdictions which were served through Jobs for Homeless Veterans' grants funded under Program Year (PY) 1987 Job Training Partnership Act (JTPA), Title IV-C funds. A list of these jurisdictions follows:

ARIZONA
- Phoenix

CALIFORNIA
- Long Beach
- Los Angeles [1]
- San Diego
- San Francisco
- San Jose

COLORADO
- Denver [1]

FLORIDA
- Ft. Lauderdale [1]
- Jacksonville

GEORGIA
- Atlanta [1]

ILLINOIS
- Chicago

INDIANA
- Indianapolis

LOUISIANA
- New Orleans [1]

MARYLAND
- Baltimore [1]

MASSACHUSETTS
- Boston [1]

MICHIGAN
- Detroit [1]

MISSOURI
- Kansas City
- St. Louis

NEW YORK
- New York City [1]

OHIO
- Cleveland
- Columbus

OKLAHOMA
- Oklahoma City

OREGON
- Portland

PENNSYLVANIA
- Philadelphia
- Pittsburgh

TENNESSEE
- Memphis
- Nashville

TEXAS
- Austin
- Dallas
- El Paso
- Ft. Worth
- Houston
- San Antonio [1]

WASHINGTON
- Olympia [1]
- Seattle [1]
- Tacoma [1]

WISCONSIN
- Milwaukee

DISTRICT OF COLUMBIA [1]

Entities which are eligible to submit preapplications for serving the jurisdictions listed above are limited to State and local public agencies.

The preapplication instructions will include a more detailed program description, program guidelines, and approach to implementation. The preapplication package will consist of a standard preapplication form; a two- to three-page narrative description of proposed activities and current services, and a generalized budget.

Criteria for identifying the most promising and effective proposals will be applied, and between 15 and 25 preapplicants will be identified as potential grantees. These entities will be sent a full grant application package and instructions. Grant awards will be noncompetitive, subject to satisfactory completion of a full grant application.

Signed at Washington DC, this 6th day of April 1988.

Donald E. Shasteen,

Assistant Secretary for Veterans' Employment and Training.

[FR Doc. 88-7982 Filed 4-11-88; 8:45 am]

BILLING CODE 4510-79-M

[1] Program Year 1987 Job Training Partnership Act, Title IV-C, Jobs for Homeless Veterans' jurisdictions.

NATIONAL FOUNDATION ON THE ARTS AND THE HUMANITIES

National Endowment for the Humanities;

National Council on the Humanities; Meeting

April 7, 1988.

Pursuant to the provisions of the Federal Advisory Committee Act (Pub. L. 92-463, as amended) notice is hereby given that a meeting of the National Council on the Humanities will be held in Washington, DC, on May 12-13, 1988.

The purpose of the meeting is to advise the Chairman of the National Endowment for the Humanities with respect to policies, programs, and procedures for carrying out her functions, and to review applications for financial support and gifts offered to the Endowment and to make recommendations thereon to the Chairman.

The meeting will be held in the Old Post Office Building, 1100 Pennsylvania Avenue, NW., Washington, DC. A portion of the morning and afternoon sessions scheduled on May 12-13, 1988, will be closed to the public pursuant to subsections (c)(4), (6) and (9)(B) of section 552b of Title 5, United States Code because the Council will consider information that may disclose: Trade secrets and commercial or financial information obtained from a person and privileged or confidential; information of a personal nature the disclosure of which will constitute a clearly unwarranted invasion of personal privacy; and information the disclosure of which would significantly frustrate implementation of proposed agency action. I have made this determination under the authority granted me by the

Chairman's Delegation of Authority dated January 15, 1978.

The agenda for the sessions on May 12, 1988, will be as follows:

8:30–9:30 a.m.: Coffee for Council Members—Room 527 (Open to the Public)

Committee Meetings

(Open to the Public) Policy Discussion

9:30–10:30 a.m.:
- Education Programs—Room M–14
- Fellowship Programs—Room 316–2
- General Programs—Room 415
- Research Programs/Preservation Grants—Room 315
- State Programs/Challenge Grants—Room M–07

10:30 a.m. until Adjourned:
- (Closed to the Public)
- Discussion of specific grant applications before the Council

(Open to the Public) Policy Discussion

3:00 p.m. until Adjourned:
- Jefferson Lecture Committee—Room 430
- (Closed to the Public)
- Discussion of Jefferson Lecture Nominees

The morning session on May 13, 1988, will convene at 9:00 a.m., in the 1st Floor Council Room, M–09, and will be open to the public. The agenda for the morning session will be as follows:

(Coffee for Staff and Council members attending the meeting will be served from 8:30–9:00 a.m.)

Minutes of the Previous Meeting Reports
A. Introductory Remarks
B. Introduction of New Staff
C. Contracts Awarded in the Previous Quarter
D. Dates of Future Council Meetings
E. Application Report and Matching Report
F. Status of Fiscal Year 1988 Funds
G. Fiscal Year 1989 Appropriation Request
H. Fiscal Year 1990 Budget Planning
I. Committee Reports on Policy and General Matters
1. Education Programs
2. Fellowship Programs
3. Preservation Grants
4. Research Programs
5. General Programs
6. State Programs
7. Challenge Grants
8. Jefferson Lecture

The remainder of the proposed meeting will be given to the consideration of specific applications (closed to the public for the reasons stated above).

Further information about this meeting can be obtained from Mr. Stephen J. McCleary, Advisory Committee Management Officer, Washington, DC 20506, or call area code 202–786–0322.

Stephen J. McCleary,
Advisory Committee Management Officer.

[FR Doc. 88–7946 Filed 4–11–88; 8:45 am]

BILLING CODE 7536–01–M

NUCLEAR REGULATORY COMMISSION

[Docket No. 40–8502]

Draft Finding of No Significant Impact Regarding Major License Amendment to Malapai Resources Company Irigaray Operation Located in Johnson County, WY

AGENCY: U.S. Nuclear Regulatory Commission.

ACTION: Notice of draft finding of no significant impact.

1. Proposed Action

The proposed administrative action is to issue a major amendment to Source and Byproduct Material License SUA–1341. This amendment would allow in situ leach uranium recovery at the 14,000 acre Christensen Ranch Satellite Operation located in Johnson and Campbell Counties, Wyoming.

2. Reasons for Draft Finding of No Significant Impact

An environmental assessment was prepared by the staff at the U.S. Nuclear Regulatory Commission (NRC) and issued by the Commission's Uranium Recovery Field Office, Region IV. The environmental assessment performed by the Commission's staff evaluated potential impacts on-site and off-site due to radiological releases that may occur during the course of the operation. Documents used in preparing the assessment included operational data from the Willow Creek Research and Development in situ leach operation located on Christensen Ranch and the licensee's application dated January 5, 1988. Based on the review of the operational data and the application materials, the Commission has determined that no significant impact will result from the proposed action, and therefore, an Environmental Impact Statement is not warranted.

The following statements support the draft finding of no significant impact and summarize the conclusions resulting from the environmental assessment.

A. The ground-water monitoring program proposed by Malapai Resources Company is sufficient to monitor the operations and will provide a warning system that will minimize any impact on ground water. Furthermore, aquifer testing indicates that the production zone is adequately confined, thereby assuring hydrologic control of mining solutions.

B. Radiological effluents from the proposed operation of the well field and processing plant will be within regulatory limits and will be continuously monitored.

C. The environmental monitoring program is comprehensive and will detect any radiological releases resulting from the operation.

D. Radioactive wastes will be minimal and will be disposed of at an approved site in accordance with applicable Federal and State regulations.

E. Ground water, based upon previous testing, can be restored to baseline concentrations or applicable class of use standards.

In accordance with 10 CFR 51.33(a), the Director of the Uranium Recovery Field Office, made the determination to issue a draft finding of no significant impact and to accept comments on the draft finding for a period of 30 days after issuance in the **Federal Register**.

This finding, together with the environmental assessment setting forth the basis for the findings, is available for public inspection and copying at the Commission's Uranium Recovery Field Office at 730 Simms Street, Golden, Colorado and at the Commission's Public Document Room at 1717 H Street NW., Washington, DC.

Dated at Denver, Colorado, this 30th day of March, 1988.

For The Nuclear Regulatory Commission.

Edward F. Hawkins,
Chief, Licensing Branch 1, Uranium Recovery Field Office, Region IV.

[FR Doc. 88–7942 Filed 4–11–88; 8:45 am]

BILLING CODE 7590–01–M

[Docket Nos. 50–387 and 50–388]

Pennsylvania Power and Light Co.; Issuance of Amendments to Facility Operating Licenses

The U.S. Nuclear Regulatory Commission (Commission) has issued Amendment No. 77 to Facility Operating License No. NPF–14 and Amendment No. 42 to Facility Operating License No. NPF–22, issued to Pennsylvania Power and Light Company (the licensee), which revised the Technical Specifications for operation of the Susquehanna Steam Electric Station, Units 1 and 2, located in Luzerne County, Pennsylvania.

The amendments were effective as of the date of issuance.

The amendments modified the Technical Specifications to incorporate changes related to diesel generator loading timer.

The application for the amendments complies with the standards and requirements of the Atomic Energy Act of 1954, as amended (the Act), and the Commission's rules and regulations. The Commission has made appropriate findings as required by the Act and the Commission's rules and regulations in 10 CFR Chapter 1, which are set forth in the license amendments.

Notice of Consideration of Issuance of Amendments and Opportunity for Prior Hearing in connection with this action was published in the **Federal Register** on January 28, 1988 (53 FR 2554). No request for a hearing or petition for leave to intervene was filed following this notice.

The Commission has prepared an Environmental Assessment related to the action and has concluded that an environmental impact statement is not warranted because there will be no environmental impact attributable to the action beyond that which has been predicted and described in the Commission's Final Environmental Statement for the facility dated June 1981.

For further details with respect to the action see (1) the application for amendments dated October 15, 1987, as revised October 30, 1987, (2) Amendment No. 77 to License No. NPF-14, (3) Amendment No. 42 to License No. NPF-22, and (4) the Commission's related Safety Evaluation and Environmental Assessment. All of these items are available for public inspection at the Commission's Public Document Room, 1717 H Street NW., and at the Osterhout Free Library, Reference Department, 71 South Franklin Street, Wilkes-Barre, Pennsylvania 18701. A copy of items (2), (3), and (4) may be obtained upon request addressed to the U.S. Nuclear Regulatory Commission, Washington, DC 20555, Attention: Director, Division of Reactor Projects I/II.

Dated at Rockville, Maryland this 30th day of March 1988.

For the Nuclear Regulatory Commission.

Walter R. Butler,

Director, Project Directorate I-2, Division of Reactor Projects I/II, Office of Nuclear Reactor Regulation.

[FR Doc. 88-7943 Filed 4-11-88; 8:45 am]

BILLING CODE 7590-01-M

PRESIDENTIAL COMMISSION ON THE HUMAN IMMUNODEFICIENCY VIRUS EPIDEMIC

Meeting

Notice is hereby given, pursuant to Pub. L. 92-463, that the Presidential Commission on the Human Immunodeficiency Virus Epidemic will hold a public meeting on "Financing the Costs of the HIV Epidemic" Tuesday, April 26, 1988, at 10:00 A.M. to 5:30 P.M.; Wednesday, April 27, 1988, 9:00 A.M. to 5:30 P.M.; and Thursday, April 28, 1988, 9:00 A.M. to 1:00 P.M. at the Interstate Commerce Commission Building, 12th and Constitution Ave., NW. (Constitution Avenue entrance) Hearing Room B, Washington DC.

The purpose of the meeting is to receive testimony from representatives of the health care and research community as well as the private sector on the costs and alternatives for financing the programs, activities and services needed to adequately address the HIV epidemic.

Records shall be kept of all Commission proceedings and shall be available for public inspection at 655 15th Street, NW., Suite 901, Washington, DC 20005.

Polly L. Gault,

Executive Director.

[FR Doc. 88-8083 Filed 4-8-88; 8:45am]

BILLING CODE 6160-15-M

SECURITIES AND EXCHANGE COMMISSION

Self-Regulatory Organizations; Applications for Unlisted Trading Privileges and of Opportunity for Hearing; Cincinnati Stock Exchange, Inc.

April 6, 1988.

The above named national securities exchange has filed applications with the Securities and Exchange Commission pursuant to section 12(f)(1)(B) of the Securities Exchange Act of 1934 and Rule 12f-1 thereunder, for unlisted trading privileges in the following securities:

AAR Corporation
  Common Stock, $1.00 Par Value (File No. 7-3181)
Armtek Corporation
  Common Stock, $1.00 Par Value (File No. 7-3182)
Best Buy Co., Inc.
  Common Stock, $.10 Par Value (File No. 7-3183)
Beverly Investment Properties
  Common Stock, $.10 Par Value (File No. 7-3184)
BRT Realty Trust
  Shares of Beneficial Interest, $3.00 Par Value (File No. 7-3185)
DCNY Corporation
  Common Stock, $.50 Par Value (File No. 7-3186)
Eldon Industries, Inc.
  Common Stock, $.01 Par Value (File No. 7-3187)
Furr/Bishops' Cafeterias
  Common Stock, No Par Value (File No. 7-3188)
Gallagher (Arthur J.) & Co.
  Common Stock, $1.00 Par Value (File No. 7-3189)
Hotel Investor Trust
  Shares of Beneficial Interest, $1.00 Par Value (File No. 7-3190)
Hunt Manufacturing Co.
  Common Stock, $.10 Par Value (File No. 7-3191)
Lea-Ronal, Inc.
  Common Stock, $1.00 Par Value (File No. 7-3192)
Lomas Mortgage Co.
  Common Stock, $.01 Par Value (File No. 7-3193)
Montedison
  American Depository Shares (File No. 7-3194)
Munsingwear Inc.
  Common Stock, $1.00 Par Value (File No. 7-3195)
New Plan Realty Trust
  Shares of Beneficial Interest, No Par Value (File No. 7-3196)
Nuveen CA Municipal Value Fund
  Common Stock, $1.00 Par Value (File No. 7-3197)
Progressive Corporation (Ohio)
  Common Stock, $1.00 Par Value (File No. 7-3198)
Strategic Mortgage Investors, Inc.
  Common Stock, $.01 Par Value (File No. 7-3199)
Sun Distributors, L.P.
  Common Stock, No Par Value (File No. 7-3200)
Sun Energy Partners
  Common Stock, No Par Value (File No. 7-3201)
Wallace Computer Services, Inc.
  Common Stock, $1.00 Par Value (File No. 7-3202)
Weingarten Realty Inc.
  Common Stock, $.03 Par Value (File No. 7-3203)
Weis Markets Inc.
  Common Stock, No Par Value (File No. 7-3204)
USAcafes, L.P.
  Common Stock, $.10 Par Value (File No. 7-3205)

These securities are listed and registered on one or more other national securities exchange and are reported in the consolidated transaction reporting system.

Interested persons are invited to submit on or before April 27, 1988, written data, views and arguments concerning the above-referenced applications. Persons desiring to make written comments should file three copies thereof with the Secretary of the Securities and Exchange Commission, Washington, DC 20549. Following this opportunity for hearing, the Commission will approve the applications if it finds, based upon all the information available to it, that the extensions of unlisted trading privileges pursuant to such applications are consistent with the maintenance of fair and orderly markets and the protection of investors.

For the Commission, by the Division of Market Regulation, pursuant to delegated authority.

Jonathan G. Katz,

Secretary.

[FR Doc. 88-7954 Filed 4-11-88; 8:45 am]

BILLING CODE 8010-01-M

Self-Regulatory Organizations; Applications for Unlisted Trading Privileges and of Opportunity for Hearing; Midwest Stock Exchange, Inc.

April 6, 1988.

The above named national securities exchange has filed applications with the Securities and Exchange Commission pursuant to section 12(f)(1)(B) of the Securities Exchange Act of 1934 and Rule 12f-1 thereunder, for unlisted trading privileges in the following stocks:

MGI Properties
- Common Stock, $1.00 Par Value (File No. 7-3175)

EMC Corporation
- Common Stock, $.01 Par Value (File No. 7-3176)

Colonial Government Trust
- Shares of Beneficial Interest, No Par Value (File No. 7-3177)

Oppenheimer Multi-Sector Income Trust
- Shares of Beneficial Interest, $.01 Par Value (File No. 7-3178)

Daniel Industries, Inc.
- Common Stock, $1.25 Par Value (File No. 7-3179)

Equimark Corporation
- Common Stock, $1.00 Par Value (File No. 7-3180)

These securities are listed and registered on one or more other national securities exchange and are reported in the consolidated transaction reporting system.

Interested persons are invited to submit on or before April 27, 1988, written data, views and arguments concerning the above-referenced applications. Persons desiring to make written comments should file three copies thereof with the Secretary of the Securities and Exchange Commission, Washington, DC 20549. Following this opportunity for hearing, the Commission will approve the applications if it finds, based upon all the information available to it, that the extensions of unlisted trading privileges pursuant to such applications are consistent with the maintenance of fair and orderly markets and the protection of investors.

For the Commission, by the Division of Market Regulation, pursuant to delegated authority.

Jonathan G. Katz,

Secretary.

[FR Doc. 88-7955 Filed 4-11-88; 8:45 am]

BILLING CODE 8010-01-M

[File No. 500-1]

American Pain & Stress, Inc., et al.; Order Modifying Prior Order Imposing Trading Suspension

April 6, 1988.

On April 5, 1988 the Commission issued an Order suspending trading for a single 10 day period in forty-six issuers pursuant to section 12(k) of the Securities Exchange Act of 1934. It has since been determined that one of the companies listed in the Order, ASTI, Inc. had changed its name to Republic Financial Group Ltd. The Commission has determined that it is appropriate to modify the Order to reflect this name change.

Accordingly, *It is Hereby Ordered* that the Order entered on April 5, 1988 is modified by changing the name of ASTI, Inc. to Republic Financial Group, Ltd.

By the Commission.

Jonathan Katz,

Secretary.

[FR Doc. 88-7956 Filed 4-11-88; 8:45 am]

BILLING CODE 8010-01-M

DEPARTMENT OF STATE

[Public Notice 1058]

Federal Reserve Act; Delegation of Authority No. 168

By virtue of the authority vested in me by section 4 of the Act of May 26, 1949, 22 U.S.C. 2658, it is hereby directed as follows:

1. Functions Delegated to the Assistant Secretary of State for Inter-American Affairs

The functions conferred upon the Secretary of State by section 25(b) of the Federal Reserve Act, as amended, 12 U.S.C. 632, insofar as such functions relate to certifying to any Federal Reserve Bank or any insured bank concerning any property heretofore or hereafter held in such Federal Reserve Bank or insured bank from or for the account of the Republic of Panama or any central bank or fiscal agent thereof, including Banco Nacional de Panama and Caja de Ahorros, are hereby delegated to the Assistant Secretary of State for Inter-American Affairs.

2. Technical Provisions

(a) As used herein, the word "functions" includes any duty, obligation, power, authority, responsibility, right, privilege, discretion or activity.

(b) Notwithstanding any provision of this delegation of authority, the Secretary of State may at any time exercise any function delegated by this delegation of authority.

(c) This delegation of authority shall become effective on April 4, 1988, and shall remain in effect until terminated by appropriate authority.

(d) Except to the extent inconsistent with this delegation of authority, all certifications and other actions made, issued or entered into with respect to any function affected by this delegation of authority and not revoked, superseded or otherwise made inapplicable before the effective date of this delegation of authority, shall continue in full force and effect until modified, amended, or terminated by appropriate authority.

Date: April 1, 1988.

John C. Whitehead,

Acting Secretary of State.

[FR Doc. 88-7966 Filed 4-11-88; 8:45 am]

BILLING CODE 4710-08-M

DEPARTMENT OF TRANSPORTATION

Federal Aviation Administration

[Summary Notice No. PE-88-13]

Petition for Exemption; Summary of Petitions Received; Dispositions of Petitions Issued

AGENCY: Federal Aviation Administration (FAA), DOT.

ACTION: Notice of petitions for exemption received and of dispositions of prior petitions.

SUMMARY: Pursuant to FAA's rulemaking provisions governing the application, processing, and disposition of petitions for exemption (14 CFR Part 11), this notice contains a summary of

certain petitions seeking relief from specified requirements of the Federal Aviation Regulations (14 CFR Chapter I), dispositions of certain petitions previously received, and corrections. The purpose of this notice is to improve the public's awareness of, and participation in, this aspect of FAA's regulatory activities. Neither publication of this notice nor the inclusion or omission of information in the summary is intended to affect the legal status of any petition or its final disposition.

DATE: Comments on petitions received must identify the petition docket number involved and must be received on or before May 2, 1988.

ADDRESS: Send comments on any petition in triplicate to: Federal Aviation Administration, Office of the Chief Counsel, Attn: Rules Docket (AGC-10), Petition Docket No. ———, 800 Independence Avenue, SW., Washington, DC 20591.

FOR FURTHER INFORMATION CONTACT: The petition, any comments received, and a copy of any final disposition are filed in the assigned regulatory docket and are available for examination in the Rules Docket (AGC-10), Room 915G, FAA Headquarters Building (FOB 10A), 800 Independence Avenue, SW., Washington, DC 20591; telephone (202) 267-3132.

This notice is published pursuant to paragraphs (c), (e), and (g) of § 11.27 of Part 11 of the Federal Aviation Regulations (14 CFR Part 11).

Issued in Washington, DC, on April 6, 1988.

Denise D. Hall,

Acting Manager, Program Management Staff.

PETITIONS FOR EXEMPTION

Docket No.	Petitioner	Regulations affected	Description of relief sought
15691	Air Logistics	14 CFR 43.3(h)	To extend Exemption No. 4660 that allows petitioner's appropriately trained and certificated pilots to continue to remove, check, and reinstall magnetic chip detector plugs and the Allison 250C series turbine engines, aircraft transmissions, and tail rotor gearboxes installed on Aerospatiale Model 355 and Bell 206, 212, and 412 series helicopters while operated by petitioner in, or en route to, remote areas.
25233	Alaska Air Carriers Association	14 CFR 43.3(g)	To extend Exemption No. 4802 that allows pilots employed by petitioner's member air carriers to continue to perform the preventive maintenance function of removing and/or replacing the passenger seats of aircraft used in Part 135 operations.
25493	Corporate Air	14 CFR 21.197(c)	To allow petitioner to ferry an aircraft to its closest maintenance facility under special circumstances, unrestricted by normal business hours of the FAA.
25556	McDonnell Aircraft Company	14 CFR 21.187	To allow petitioner to operate certain aircraft in both experimental and normal category operations without complying with procedural requirements specified in § 21.187.
25566	Eastern Air Lines Incorporated	14 CFR 91.27	To allow petitioner to use, for a period not to exceed 72 hours, company-generated teletype messages pending receipt of a replacement airworthiness or registration certificate from the FAA.
25536	Hazeltine Corporation	14 CFR 91.79(b) & (c), 91.87(d)(2) & (d)(3), 91.109(a)(1) & (a)(2).	To allow petitioner to perform pre-commissioning flight inspection maneuvers of microwave landing systems at altitudes/distances: below normal obstacle clearance altitudes; below the instrument landing system and/or visual approach slope indicator glide paths; or not in accordance with altitudes specified for VFR level cruising flight.
25448	British Aerospace, Inc	14 CFR 93.123	Petitioner requests an exemption from the slot allocation regulations for high density traffic airports to permit a specific type version of the BAe ATP turboprop transport certificated for a maximum seating capacity of 60 passengers to be operated using commuter slots. Exemption would allow use of the BAe ATP in a short-haul markets with commuter slots limited to use by aircraft having less than 56 passengers seats.

PETITIONS FOR EXEMPTION

Docket No.	Petitioner	Regulations affected	Description of relief sought, disposition
24888	John L. Geltz	14 CFR 135.293(a)(2) and (b) and 135.337(a)(2), (3), and (4).	To allow petitioner to serve as check airman under certain limitations for "on-demand" air carriers who operate under the provisions of Part 135 without meeting, in each case, all provisions of the FAR. *Denial, March 28, 1988, Exemption No. 4918*
25482	Acme School of Aeronautics	14 CFR 141.65	To allow petitioner to exercise examining authority for flight instructor and airline transport pilot written tests. *Grant, March 25, 1988, Exemption No. 4919*

[FR Doc. 88-7899 Filed 4-11-88; 8:45 am]

BILLING CODE 4910-13-M

National Highway Traffic Safety Administration

[Docket No. EX88-1; Notice 1]

General Motors Corp.; Petition for Temporary Exemption From Federal Motor Vehicle Safety Standards Nos. 108 and 111

General Motors Corporation of Warren, Michigan, has petitioned for a temporary exemption from several requirements of Motor Vehicle Safety Standards Nos. 108 *Lamps, Reflective Devices, and Associated Equipment,* and 111 *Rearview Mirrors.* The basis of the petition is that requiring compliance would prevent it from selling a motor vehicle whose overall level of safety is equivalent to or exceeds the overall level of safety of nonexempted motor vehicles.

Notice of receipt of the petition is published in accordance with the regulations of the National Highway Traffic Safety Administration on this subject (49 CFR Part 555) and does not represent any agency decision or exercise of judgment concerning the merits of the petition.

GM wishes to institute a factory

delivery program for two of its passenger cars, similar to programs established by European manufacturers where Americans purchase vehicles in Europe meeting the Federal motor vehicle safety standards, drive them there on holiday, and then return to the U.S. with their vehicles. The purchasers of the vehicles for which exemptions are sought would be "European citizens who are either visiting or temporarily assigned to work in the U.S.", who would drive them in the U.S., and export them to their home countries. GM notes that these vehicles would have to be built to European safety specifications, and that this necessitates a noncompliance with two Federal motor vehicle safety standards which, absent an exemption, precludes sale and use of the cars in the United States.

The petitioner seeks a 2-year exemption to cover, as limited by 15 U.S.C. 1410, not more than 2500 vehicles each year. These vehicles are 1988–90 Cadillac Eldorado and Seville passenger cars. The vehicles would comply with all Federal motor vehicle safety standards with the exception of portions of the standards on lighting and rearview mirrors. Specifically, the headlamps will meet European (ECE R20) photometrics rather than those of Standard No. 108, the side marker lamps and reflectors will be eliminated, and the turn signals and stop lamps will meet the photometrics of ECE R7 and R6 respectively. The outside driver's side rearview mirror will be convex, and the passenger side convex mirror will not have the words "Objects in mirror are closer than they appear" etched on them."

GM argues that the noncomplying vehicles will nevertheless have an equivalent overall level of safety for the following reasons. The vehicles will be equipped with lamps not required by Standard No. 108, such as rear fog lamps and "side repeater (turn signal) lamps", which "will serve to improve the conspicuity of the vehicle, and in the aggregate should compensate for the photometric variances". It notes that the center highmounted stop lamps will be supplied and wired for use while the vehicles are in the U.S. Vehicles intended for use in Norway and Sweden will be equipped with daytime running lamps, while those sold to residents of Finland and Sweden will have a fluidic headlamp cleaning system. With respect to headlamp photometrics, GM states that safety evaluation of U.S. and European specifications tends to be subjective, that each has trade offs, and that a number of countries "including Sweden, Switzerland, Canada, Japan, and the Persian Gulf States permit headlamps with either European or U.S. beam patterns." More specifically, it discusses beam pattern differences. On the upper beam, minimum values for test points at 9 and 12 degrees left and right of HV will not be met (GM fails to specify the shortfall) but since "the primary purpose of the high beam is to provide illumination 'down the road', we do not believe that providing illumination below the minimum value at these wide test points poses a safety concern". As for the lower beam, the lamp provides only 80% of the minimum value at test point 2 D 15 R, and 67% at 1½ D 2R. But since the drivers of the cars "will be Europeans who are accustomed to the forward illumination characteristics of these vehicles" the noncompliant lighting "should provide 'equivalent safety' for these drivers compared to vehicles with headlights complying with FMVSS 108 photometrics."

As for the noncompliance with Standard No. 111, GM argues that right hand mirrors without legends are used throughout Europe. Further, many European vehicles also use convex mirrors on the driver's side. In sum, "since Europeans are more accustomed to convex mirrors than U.S. drivers, there is not safety value added by providing flat mirrors on the driver's side or the passenger side etched explanation to the users of the subject vehicles."

In addition to the supplemental lighting equipment heretofore described, the vehicles will be equipped with safety equipment not required under U.S. standards. This includes "vehicle sensitive and webbing sensitive seatbelt retractors", ECE requirements for more rounded surfaces on the inside and exterior of the vehicle, ECE requirements for antiskid braking systems, and three point seat belts at rear outboard seating positions.

GM argues that an exemption will be in the public interest in "improving the severe trade deficit currently being suffered by the U.S.", albeit in a small way. Further, the potential exists "for this type of export activity to expand in the future to include additional car models, and perhaps make a more significant contribution to reducing the deficit, provided regulatory constraints do not preclude such activity."

Interested persons are invited to submit comments on the petition of General Motors Corporation described above. Comments should refer to the docket number and be submitted to Docket Section, Room 5109, National Highway Traffic Safety Administration, 400 Seventh Street, SW., Washington, DC 20590. It is requested but not required that five copies be submitted.

All comments received before the close of business on the comment closing date indicated below will be considered. The petition and supporting materials, and all comments received are available for examination in the docket both before and after the closing date. Comments received after the closing date will be considered to the extent practicable. Notice of final action on the petition will be published in the **Federal Register** pursuant to the authority indicated below.

Comment closing date: May 12, 1988.

(15 U.S.C. 1410; delegations of authority at 49 CFR 1.50 and 501.8)

Issued on April 7, 1988.

Ralph J. Hitchcock,

Acting Associate Administrator for Rulemaking.

[FR Doc. 88–7981 Filed 4–11–88; 8:45 am]

BILLING CODE 4910-59-M

UNITED STATES INFORMATION AGENCY

Grants Program for Private Not-For-Profit Organizations in Support of International Educational and Cultural Activities

The United States Information Agency (USIA) announces a program of selective assistance and limited grant support to non-profit activities of United States institutions and organizations in the Private Sector. The program is designed to increase mutual understanding between the people of the U.S. and other countries and to strengthen the ties which unite our societies. The information collection involved in this solicitation is covered by OMB Clearance Number 3116–0175, entitled "A Grants Program for Private, Non-Profit Organization in Support of

International Education and Cultural Activities," announced in the **Federal Register** June 3, 1987.

Private Sector Organizations interested in working cooperatively with USIA on the following concept are encouraged to so indicate:

The Office of Private Sector Programs will assist in supporting an exchange that will focus on the United States and Africa: Petroleum Issues in the 1990s. USIA representatives abroad will select the participants from developing countries in sub-Saharan Africa. The project scheduled for fall 1988 will be conceived and executed by a U.S. not-for-profit institution with expertise in the field of foreign affairs or energy issues. The project design will include discussion of U.S. trade in petroleum with Africa, the relationship between the petroleum sector and economic development, financing energy and mineral projects, and petroleum investment and contract negotiations. US national oil policy and energy prospects in the 1990s for Africa and the United States will also be covered.

USIA is most interested in working with organizations that show promise for innovative and cost-effective programming; and with organizations that have potential for obtaining private-sector funding in addition to USIA support. Organizations must have the substantive expertise and logistical capability needed to successfully develop and conduct the above project and should also demonstrate a potential for designing programs which will have lasting impact on their participants.

Interested organizations should submit a request for complete application materials—postmarked no later than fifteen days from the date of this notice—to the address listed below. The Office of Private Sector Programs will then forward a set of materials, including proposal guidelines. Office of Private Sector Programs, Bureau of Educational and Cultural Affairs (ATTN: Initiative Programs), United States Information Agency, 301 4th Street S.W., Washington, DC 20547.

Robert Francis Smith,

Director, Office of Private Sector Programs.

Date: April 1, 1988.

[FR Doc. 88-7928 Filed 4-11-88 8:45 am]

BILLING CODE 8230-01-M

VOL 53 ISS 70 AP 12 1988 UMI

Sunshine Act Meetings

Federal Register
Vol. 53, No. 70
Tuesday, April 12, 1988

This section of the FEDERAL REGISTER contains notices of meetings published under the "Government in the Sunshine Act" (Pub. L. 94-409) 5 U.S.C. 552b(e)(3).

FEDERAL ENERGY REGULATORY COMMISSION

April 6, 1988.

The following notice of meeting is published pursuant to section 3(a) of the Government in the Sunshine Act (Pub. L. No. 94-409), 5 U.S.C. 552B:

TIME AND DATE: 10:00 p.m., April 13, 1988.

PLACE: 825 North Capitol Street, NE., Room 9306, Washington, DC 20426.

STATUS: Open.

MATTERS TO BE CONSIDERED: Agenda.

*Note.—Items listed on the agenda may be deleted without further notice.

CONTACT PERSON FOR MORE INFORMATION: Lois D. Cashell, Acting Secretary, Telephone (202) 357-8400.

This is a list of matters to be considered by the Commission. It does not include a listing of all papers relevant to the items on the agenda; however, all public documents may be examined in the Public Reference Room.

Consent Power Agenda, 875th Meeting—April 13, 1988, Regulator Meeting (10:00 p.m.)

CAP-1.
Project No. 2543-006, The Montana Power Company
CAP-2.
Project No. 5776-004, Dr. Daniel C. Merrill
CAP-3.
Docket No. EL87-5-001, Island Power Company, Inc.
CAP-4.
Project No. 8142-006, Henwood Associates, Inc.
CAP-5.
Project No. 8863-002, Northeast Hydrodevelopment Corporation
CAP-6.
Project No. 8924-002, Northeast Hydrodevelopment Corporation
CAP-7.
Project Nos. 6727-003 and 008, Northwest Power Company, Inc.
CAP-8.
Project Nos. 4940-003 and 7612-003, Eastern States Energy and Resources, Inc.
CAP-9.
Omitted
CAP-10.
Project No. 2205-007, Central Vermont Public Service Corporation
CAP-11.
Project No. 4437-008, Glacier Energy Company
CAP-12.
Project No. 9066-000, Northwest Power Company, Inc.
CAP-13.
Project No. 1389-001, Southern California Edison Company
CAP-14.
Docket No. ER88-261-000, Centel Electric-Kansas
CAP-15.
Docket No. ER88-237-000, Utah Power & Light Company
CAP-16.
Docket No. EC87-25-001, Northern Indiana Public Service Company
CAP-17.
Docket No. EC88-5-001, Public Service Company of Indiana, Inc.
CAP-18.
Docket Nos. ER82-774-004, ER83-209-000 and ER83-227-000, Tapoco, Inc.
Docket Nos. ER82-829-000 and ER83-219-000, Natahala Power and Light Company
Docket No. EL83-6-000, Lacey H. Thornburg, Attorney General of the State of North Carolina v. Aluminum Company of America, Tapoco, Inc., and Nantahala Power and Light Company
Docket No. EL84-29-000, Town of Highlands, North Carolina, *et al.* v. Nantahala Power and Light Company
CAP-19.
Docket Nos. EL87-65-000 and ER87-653-000, Minnesota Power & Light Company and Northern States Power Company (Minnesota)
CAP-20.
Docket No. EC87-24-000, Minnesota Power & Light Company and Northern States Power Company (Minnesota)
CAP-21.
Docket No. ER81-177-006, Southern California Edison Company
CAP-22.
Docket Nos. E-7777-000 (Phase II), Project No. 2735-001, Project No. 1988-003 and Project No. 233-006, Pacific Gas and Electric Company
CAP-23.
Docket Nos. ER84-571-004 (Phase II) and ER86-300-002, Utah Power & Light Company
CAP-24.
Docket No. ER87-418-000, Niagara Mohawk Power Corporation
CAP-25.
Docket Nos. ER87-435-000, ER87-554-000, 002 and 003, Wisconsin Power & Light Company
CAP-26.
Docket No. ER86-558-016, Gulf States Utilities Company
CAP-27.
Docket No. QF88-33-000, Luz Solar Partners VI, Ltd.
Docket No. QF-88-34-000, Luz Solar Partners VII, Ltd.
CAP-28.
Docket No. EL-88-11-000, Dominion Resources, Inc.

Consent Miscellaneous Agenda

CAM-1.
Docket No. FA85-58-000, Arkansas Power & Light Company
CAM-2.
Docket No. FA85-65-000, Mississippi Power & Light Company
CAM-3.
Docket No. FA86-63-000, Louisiana Power & Light Company
CAM-4.
Docket No. FA85-49-001, Public Service Company of New Mexico
CAM-5.
Omitted
CAM-6.
Docket No. RM87-7-000, Information to be Made Available by Hydroelectric Licensees Under Section 4(a) of the Electric Consumers Protection Act of 1986
CAM-7.
Docket No. RM88-16-000, Regulations Amending Commission Review of Contested DOE Remedial Orders
CAM-8.
Docket No. GP88-14-000, State of Kentucky, Public Service Commission, Blacklog #5 Well, *et al.*, JD81-43949, *et al.*
CAM-9.
Docket No. GP87-71-000 Railroad Commission of Texas, Brown No. 1 Well, NGPA Section 102(c)(1)(C), JD No. 83-45087 and H.E. Wilcox No. 1 Well, NGPA Section 108, JD No. 80-44765
CAM-10.
Docket No. GP84-15-000, Railroad Commission of Texas, El Paso Natural Gas Company, Section 103 NGPA Determination, Patterson No. 2 Well, FERC No. JD81-15154
CAM-11.
Docket No. GP84-20-003, City of Farmington v. Amoco Gas Company and Amoco Production Company

Consent Gas Agenda

CAG-1.
Docket No. RP88-62-000, Equitable Gas Company
CAG-2.
Docket No. RP88-78-000, Transwestern Pipeline Company
CAG-3.
Docket No. ST88-677-000, Hill Transportation Company, Inc.
CAG-4.
Docket No. RP88-29-003, Tarpon Transmission Company
CAG-5.
Docket No. TA88-1-22-001, CNG Transmission Corporation

CAG–6.
Docket no. RP87–15–021, Trunkline Gas Company
CAG–7.
Docket No. RP87–26–026, Tennessee Gas Pipeline Company
CAG–8.
Docket Nos. RP88–5–006 and RP88–37–003, Transcontinental Gas Pipe Line Corporation
CAG–9.
Docket Nos. RP85–177–044 through 046 and CP88–136–000, Texas Eastern Transmission Corporation
CAG–10.
Docket No. RP85–177–009, Texas Eastern Transmission Corporation
CAG–11.
Docket Nos. RP88–45–002 and RP88–46–001, Arkla Energy Resources, a division of Arkia, Inc.
CAG–12.
Docket No. RP86–144–000 and 002, Sea Robin Pipeline Company
CAG–13.
Docket No. RP85–122–004, Colorado Interstate Gas Company
CAG–14.
Docket Nos. RP86–100–002 and RP86–119–001, Tennessee Gas Pipeline Company
CAG–15.
Docket Nos. RP86–111–001 and 002, Transcontinental Gas Pipe Line Corporation
CAG–16.
Docket No. RP88–47–001, Northwest Pipeline Corporation
CAG–17.
Docket Nos. CP86–401–007, CP87–354–002 and CP87–393–002, Southern Natural Gas Company
CAG–18.
Docket No. TA88–1–52–001, Western Gas Interstate Company
CAG–19.
Docket No. TA88–2–39–000, Pacific Interstate Transmission Company
CAG–20.
Docket Nos. RP85–177–008 and RP85–176–001 (Minimum Bill), Texas Eastern Transmission Corporation
CAG–21.
Docket No. RP87–61–000, Eastern Shore Natural Gas Company
CAG–22.
Docket No. RI87–553–000, Cities Service Oil and Gas Corporation
CAG–23.
Docket Nos. CI86–138–002 and CI86–295–002, Chevron U.S.A. Inc. and Tenneco Oil Company
CAG–24.
Docket No. G–13299–006, ARCO Oil and Gas Company, Division of Atlantic Richfield Company
Docket No. CI67–851–001, Amoco Production Company
Docket No. CI86–745–000, Harry Allen Chapman
Docket No. CI86–745–001, Harry Allen Chapman
Docket No. CI87–231–000, Gordon Oil Company
Docket No. CI88–166–000, Vintage Petroleum, Inc.
Docket No. CI88–182–000, Amoco Production Company
Docket No. CI88–209–000, Midland Resources, Inc.
Docket No. CI88–210–000, Kerr-McGee Corporation and Perkins Energy Company
Docket No. CI88–299–000, Gibson, *et al.*
Docket No. CI88–309–000, Arlington Exploration Company
Docket No. CI88–354–999, Lone Wolf Producing Company
Docket No. CI88–202–000, Kirkpatrick Oil and Gas Company
Docket No. CI88–371–000, Exxon Corporation
Docket No. CI86–282–000, Fina Oil and Chemical Company, *et al.*
Docket No. CI86–282–002, Fina Oil and Chemical Company, *et al.*
Docket No. CI87–126–000, Republic Mineral Corporation
Docket No. CI87–170–000, Hutton Gas Company
Docket No. CI87–420–000, Amerada Hess Corporation
Docket No. CI87–611–000, Amerada Hess Corporation
Docket No. CI87–618–000, Amerada Hess Corporation
Docket No. CI87–801–000, Amoco Production Company
Docket No. CI87–877–000, Pennzoil Company and Pennzoil Gas Marketing Company
Docket No. CI87–890–000, Pennzoil Company
Docket No. CI88–114–000, Pauley Petroleum, Inc.
Docket No. CI88–115–000, Pauley Petroleum, Inc.
Docket No. CI88–186–000, Mitchell Energy Corporation,
Docket No. CI88–220–000, John A. Newman and Foy Tomlinson
Docket No. CI88–227–000, Wilshire Oil Company of Texas
Docket No. CI88–265–000, Hill Trusts
Docket No. CI88–268–000, Mesa Operating Limited Partnership
Docket No. CI88–319–000, Mesa Operating Limited Partnership
Docket No. CI88–368–000, Louis J. Hector, *et al.*
Docket No. CI87–373–000, WTG Exploration, Inc.
Docket No. CI88–347–000, Edinger Inc., *et al.*
Docket No. CI86–293–000, Transcontinental Gas Pipe Line Corporation
Docket No. CI86–297–000, Transcontinental Gas Pipe Line Corporation
Docket No. CI86–637–004, ANR Pipeline company
Docket No. CI87–239–000, Northwest Central Pipeline Corporation (now Williams Natural Gas Company)
Docket No. CI87–115–002, Colorado Interstate Gas Company
Docket No. CI87–121–002, Colorado Intrestate Gas Company
Docket No. CI87–684–000, Natural Gas Pipeline Company of America
Docket No. CI88–290–000, J.M. Huber Corporation
Docket No. CI88–364–000, Ultramar Oil and Gas Limited
CAG–25.
Docket No. CI87–533–000, Mesa Operating Limited Partnership (Successor to Pioneer Production Corporation)
Docket Nos. CI69–491–001 and 002, Amoco Production Company
CAG–26.
Docket No. CP88–231–000, Oklahoma Gas Pipeline Company, Enron Gas Gathering, Inc., Odeco Gas Gathering Inc., Tabasco Gas Pipe Line Company, Sonat Gas Gathering Inc., and Murphy Gas Gathering Inc.
CAG–27.
Docket No. CI88–59–000, Conoco, Inc., Cities Service Oil and Gas Corporation, Texaco Producing, Inc. and AGIP Petroleum Company, Inc.
CAG–28.
Docket No. CP83–335–212, Williston Basin Interstate Pipeline Company
CAG–29.
Docket No. RP88–13–001, James River Corporation of Nevada v. Northwest Pipeline Corporation
Docket No. CP88–111–001, Northwest Pipeline Corporation
Docket No. CP87–328–002, Northwest Pipeline Corporation
CAG–30.
Docket No. CP86–232–028, Panhandle Eastern Pipe Line Company
CAG–31.
Docket Nos. CP86–407–001 and RP86–136–004, National Fuel Gas Supply Corporation
CAG–32.
Docket No. CP86–376–001, Panhandle Eastern Pipe Line Company
CAG–33.
Docket No. CP86–676–001, Equitable Gas Company, a Division of Equitable Resources, Inc. and Equitable Transmission Company
CAG–34.
Docket No. CP86–337–003, Algonquin Gas Transmission Company
CAG–35.
Docket Nos. CP84–209–010, 011 and 012, Lawrenceburg Gas Transmission Corporation and Texas Gas Transmission Corporation
CAG–36.
Docket Nos. CP87–332–001, CP87–333–001, CP87–334–001, CP87–457–001 and 002, Trunkline Gas Company
CAG–37.
Docket No. CP86–489–001, Transcontinental Gas Pipe Line Corporation
CAG–38.
Docket No. CP87–261–000, K N Energy, Inc.
CAG–39.
Iowa Public Service Company

I. Licensed Project Matters

P–1.
Project No. 9391–002, Pan Pacific Hydro, Inc. Order on preliminary permit.

II. Electric Rate Matters

ER–1.
Docket No. EL87–53–000, Orange and Rockland Utilities, Inc., Rockland Electric Company and Pike County Light & Power Company. Order on petition for declaratory order concerning rates for purchases from qualifying facilities.

Miscellaneous

M-1.
Reserved
M-2.
Reserved

I. Pipeline Rate Matters

RP-1.
Docket Nos. CP88-291-000 and 001, Natural Gas Pipeline Company of America. Order concerning a proposal to implement a gas supply charge.
RP-2.
Omitted

II. Producer Matters

CI-1.
Reserved

III. Pipeline Certificate Matters

CP-1.
Docket No. CP86-492-001, Moraine Pipeline Company
Docket No. CP86-494-001, Moraine Pipeline Company
Docket No. CP86-493-001, Natural Gas Pipeline Company of America. Order on request for rehearing of optional procedures certificate to construct and operate facilities.

Lois D. Cashell,
Acting Secretary.
[FR Doc. 88-7989 Filed 4-7-88; 4:42 pm]
BILLING CODE 6717-01-M

FEDERAL RESERVE SYSTEM BOARD OF GOVERNORS

TIME AND DATE: 11:00 a.m., Monday, April 18, 1988.

PLACE: Marriner S. Eccles Federal Reserve Board Building, C Street entrance between 20th and 21th Streets, NW., Washington, D.C. 20551.

STATUS: Closed.

MATTERS TO BE CONSIDERED:

1. Personnel actions (appointments, promotions, assignments, reassignments, and salary actions) involving individual Federal Reserve System employees.
2. Any items carried forward from a previously announced meeting.

CONTACT PERSON FOR MORE INFORMATION: Mr. Joseph R. Coyne, Assistant to the Board; (202) 452-3204. You may call (202) 452-3207, beginning at approximately 5 p.m. two business days before this meeting, for a recorded announcement of bank and bank holding company applications scheduled for the meeting.

Dated: April 8, 1988.
William W. Wiles,
Secretary of the Board.
[FR Doc. 88-8079 Filed 4-8-88; 3:47 am]
BILLING CODE 6210-01-M

NUCLEAR REGULATORY COMMISSION

DATE: Weeks of April 11, 18, 25, and May 2, 1988.

PLACE: Commissioners' Conference Room, 11555 Rockville Pike, Rockville, Maryland.

STATUS: Open and Closed.

MATTERS TO BE CONSIDERED:

Week of April 11

Wednesday, April 13

3:30 p.m.
Affirmation/Discussion and Vote (Public Meeting) (if needed)

Week of April 18—Tentative

Thursday, April 21

10:00 a.m.
Briefing on Status of Program for Performance Indicators (Public Meeting)
2:00 p.m.
Discussion of Management-Organization and Internal Personnel Matters (Closed-Ex. 2 and 6)
3:30 p.m.
Affirmation/Discussion and Vote (Public Meeting) (if needed)

Week of April 25—Tentative

Thursday, April 28

3:30 p.m.
Affirmation/Discussion and Vote (Public Meeting) (if needed)

Week of May 2—Tentative

Wednesday, May 4

10:00 a.m.
Annual Briefing on the State of the Nuclear Industry (Public Meeting)
2:00 p.m.
Briefing on NRC Point Papers for Consultation Draft of the Site Characterization Plan for Yucca Mountain (Public Meeting)

Thursday, May 5

2:00 p.m.
Briefing on Status of Operator Requalification Program (Public Meeting)
3:30 p.m.
Affirmation/Discussion and Vote (Public Meeting) (if needed)

Note: Affirmation sessions are initially scheduled and announced to the public on the time-reserved basis. Supplementary notice is provided in accordance with the Sunshine Act as specific items are identified and added to the meeting agenda. If there is no specific subject listed for affirmation, this means that no item has as yet been identified as requiring any Commission vote on this date.

TO VERIFY THE STATUS OF MEETINGS CALL (RECORDING): (301) 492-0292.

CONTACT PERSON FOR MORE INFORMATION: William Hill (301) 492-1661.

William M. Hill, Jr.,
Office of the Secretary.
April 7, 1988.
[FR Doc. 88-7998 Filed 4-8-88; 8:45 am]
BILLING CODE 7590-01-M

SECURITIES AND EXCHANGE COMMISSION

"FEDERAL REGISTER" CITATION OF PREVIOUS ANNOUNCEMENT: (53 FR 11001 April 4, 1988).

STATUS: Closed meetings.

PLACE: 450 5th Street, N.W., Washington, D.C.

DATE PREVIOUSLY ANNOUNCED: Wednesday, March 30, 1988.

CHANGES IN THE MEETING: Additional meeting/item.

The following item was considered at a closed meeting on Monday, April 4, 1988, at 2:30 p.m.

Formal order of investigation.

The following additional item was considered at a closed meeting scheduled on Tuesday, April 5, 1988, at 2:30 a.m.

Chapter 11 proceeding.

Commissioner Peters, as duty officer, determined that Commission business required the above changes.

At times changes in Commission priorities require alterations in the scheduling of meeting items. For further information and to ascertain what, if any, matters have been added, deleted or postponed, please contact: Nancy Morris at (202) 272-2468.

Jonathan G. Katz,
Secretary.
April 6, 1988.
[FR Doc. 88-8086 Filed 4-8-88; 3:58 pm]
BILLING CODE 8010-01-M

Corrections

Federal Register
Vol. 53, No. 70
Tuesday, April 12, 1988

This section of the FEDERAL REGISTER contains editorial corrections of previously published Presidential, Rule, Proposed Rule, and Notice documents and volumes of the Code of Federal Regulations. These corrections are prepared by the Office of the Federal Register. Agency prepared corrections are issued as signed documents and appear in the appropriate document categories elsewhere in the issue.

DEPARTMENT OF STATE

22 CFR Parts 120, 121, 122, 123, 124, 125, 126, 127 and 128

[Departmental Regulations 108.866]

The International Traffic in Arms Regulations (ITAR) and Implementation of the Foreign Relations Authorization Act

Correction

In rule document 88-7709 beginning on page 11494 in the issue of Thursday, April 7, 1988, make the following correction:

On page 11495, in the first column, in the 16th line, "ineligible" should read "eligible".

BILLING CODE 1505-01-D

DEPARTMENT OF JUSTICE

28 CFR Part 66

Uniform Administrative Requirements for Grants and Cooperative Agreements to State and Local Government

Correction

In rule document 88-5251 beginning on page 8034 in the issue of Friday, March 11, 1988, make the following correction:

§ 66.32 [Corrected]

On page 8069, in § 66.32(a), in the first column, in the 11th line, insert "justice" after "criminal".

BILLING CODE 1505-01-D

VOL
53

ISS
70

AP
12

1988

UMI

federal register

Tuesday,
April 12, 1988

Part II

Department of Labor

Occupational Safety and Health Administration

29 CFR Parts 1907 and 1910

Safety Testing or Certification of Certain Workplace Equipment and Materials; Final Rule

VOL 53 ISS 70 AP 12 1988 UMI

DEPARTMENT OF LABOR

Occupational Safety and Health Administration

29 CFR Parts 1907 and 1910

[Docket No. S-110]

Safety Testing or Certification of Certain Workplace Equipment and Materials: Deletion of Specific Testing Laboratory Names; Definition of Nationally Recognized Testing Laboratory; Determination of Eligible Testing Organizations

AGENCY: Occupational Safety and Health Administration, U.S. Department of Labor.

ACTION: Final Rule.

SUMMARY: The Occupational Safety and Health Administration is deleting the names of Underwriters Laboratories Inc. (UL) and Factory Mutual Research Corporation (FMRC) from 23 testing-related standards provisions in the OSHA "general industry" standards (29 CFR Part 1910). Generally, the Agency is substituting the term "nationally recognized testing laboratory" (NRTL) and is providing a new definition for this previously undefined term. Additional minor terminology changes are also being made.

This rule also provides a mandatory procedure for a testing organization to be recognized as a nationally recognized testing laboratory (NRTL) by OSHA. This procedure will replace 29 CFR Part 1907 which has remained unimplemented since its promulgation in 1973. This new mandatory procedure includes public review of an applicant's operations against the NRTL definitional criteria.

OSHA will closely monitor progress under these new provisions and will evaluate the effectiveness of the program on an ongoing basis. Further rulemaking will be undertaken as appropriate if necessary to make the recognition process work more effectively.

EFFECTIVE DATE: June 13, 1988.

FOR FURTHER INFORMATION CONTACT: Mr. James F. Foster, Director, Office of Information and Consumer Affairs, Occupational Safety and Health Administration, U.S. Department of Labor, Room N-3670, 200 Constitution Avenue, NW., Washington, DC 20210, Telephone: (202) 523-8151. This final rule was written by William J. Higgins, Directorate of Safety Standards Programs.

SUPPLEMENTARY INFORMATION:

I. Introduction

A. Summary of Rule

The Agency is deleting the names of Underwriters Laboratories, Inc. (UL) and Factory Mutual Research Corporation (FMRC) from 23 testing-related standards provisions in 29 CFR Part 1910.

Under these standards, third-party (or independent) testing for safety is necessary in order that certain equipment and materials be acceptable for workplace use. The safety standards being revised either had explicitly required or had implied that this safety testing be performed only by UL or FMRC. Over the past decade, certain testing laboratories other than UL and FMRC have claimed to have suffered economic losses due to this situation.[1] They repeatedly have sought regulatory relief of a type being afforded here by OSHA.

As a result of this UL/FMRC name deletion, the 23 identified OSHA safety standards now will provide that certain types of workplace equipment and materials be third-party tested for safety by "nationally recognized testing laboratories." The Agency is adding a definition of NRTL since heretofore there has been no definition of this term in OSHA's safety standards. Those testing certain workplace equipment and materials required to be approved by OSHA standards will need to be recognized by OSHA as a nationally recognized testing laboratory.

This new definition of NRTL includes the following requirements:

(1) Capability to examine specific equipment for workplace safety;

(2) Provision of controls and services necessary for assuring and demonstrating original conformity of equipment to appropriate test standards;

(3) Independence from manufacturers, suppliers and vendors of products, and from other employers; and

(4) Procedures for producing creditable findings and reports and for handling complaints and disputes.

This final rule includes a requirement that testing laboratories listing or approving products or equipment required to be approved under Part 1910 be recognized as Nationally Recognized Testing Laboratories (NRTL) by OSHA. Under this rule OSHA will evaluate applicant testing and control programs against the NRTL definitional requirements, and issue a written "recognition" letter. This will be done in accordance with a new Appendix A which is being issued under this rule and described in greater detail later. OSHA contemplates continuing surveillance over OSHA-recognized NRTLs to assure conformance with the requirements of this rule. OSHA may, in the future, also engage in post approval audits of products listed or approved by laboratories recognized under this program by OSHA as nationally recognized testing laboratories. Such postmarketing surveys would be designed to evaluate the effectiveness of the OSHA recognition program being established in this final rule and the effectiveness of individual laboratories in assuring that products they have approved do indeed meet the required standards.

This final rule is issued as a result of OSHA's proposal entitled "Safety Testing and Certification of Certain Workplace Equipment and Materials" (49 FR 8326). The remaining proposed requirements and related questions arising from the Agency's March 6, 1984 proposal are unaffected by this action. These issues will undergo further study by the Agency.

B. Proposal History

On March 6, 1984, the Occupational Safety and Health Administration (OSHA) proposed to initiate a comprehensive overhaul of its regulatory procedures related to OSHA's requirements for safety testing or certification of certain workplace equipment and materials (49 FR 8326).[2]

[1] In 1983, the Agency entered into a settlement agreement with a Baltimore, Maryland testing laboratory (*MET Electrical Testing Company, Inc.* v. *Raymond J. Donovan, Secretary of Labor*, No. Y-82-1133, D. Md.), and the suit was dismissed without prejudice. Under that agreement, it was mutually agreed that OSHA would "continue development of a rule looking toward (1) deletion of references to UL and FM wherever these terms appear in 29 CFR Part 1910 and (2) amendment of Part 1907 to create a workable procedure for designation of enterprises whose approval of products will be accepted by OSHA." MET recently filed suit to "compel compliance with the settlement agreement" and the Secretary moved to dismiss for lack of subject matter jurisdiction and alternatively moved to transfer the case to the U.S. Court of Appeals. The Judge denied the Secretary's motion to dismiss and ordered the Secretary to complete the rulemaking process within 120 days (*MET Electrical Testing Co., Inc.* v. *Secretary of Labor*, No. Y-87-1480, D. Md., 12/8/87).

[2] The Agency's NPRM included four related components:

1. Proposed revisions to nine Subparts of Part 1910 (General Industry Safety and Health Standards);

2. Proposed Part 1936, replacing current Part 1907.

3. Proposed Part 1935, covering OSHA test methods and procedures; and,

4. Proposed addition to Part 1910, Subpart A, concerning valid testing and certification for OSHA purposes.

The goals of the proposal were:

(1) To assure that products required to be tested or certified would be reliably tested or certified;

(2) To implement testing and certification requirements and procedures which would be administratively workable; and

(3) To take advantage of recent developments by others in organizing and evaluating product certification systems and in accrediting laboratories for testing (49 FR 8327, col. 2).

In proposed revisions to Part 1910, the names of Underwriters Laboratories Inc. (UL) and Factory Mutual Research Corporation (FMRC) were to be deleted from OSHA's general industry standards. This removal would end any perceived preference on the part of the Agency for the product safety testing activity of these two enterprises.

The proposal also included significant changes to several key testing-related definitions contained in OSHA's general industry standards. These changes would update and provide uniformity to the testing and certification terminology used in Part 1910.

The Agency also proposed to revise completely OSHA's unimplemented regulation at 29 CFR Part 1907, "Accreditation of Testing Laboratories." Major portions of Part 1907 were to be revised and redesignated as part of a proposed new Part 1936; other provisions of questionable utility were to be revoked.

New 29 CFR Part 1936—entitled "OSHA Recognition of Testing-Related Agencies and Certification Programs"—proposed a new procedure by which OSHA would recognize enterprises it considered competent to perform activities related to the testing or certification requirements contained in the Part 1910 safety standards. It would include requirements related to (1) laboratory accreditation agencies and accredited laboratories, and (2) product certification systems, including both manufacturer self-certification and third-party certification programs.

As a related matter, OSHA also proposed to establish a new Part 1935 of Title 29, "Occupational Safety and Health Test Methods and Procedures." Specific test methods and procedures intended for use in complying with OSHA's safety standards would be set forth in Part 1935 after promulgation by OSHA.

The proposal also included a new section for Part 1910, *§ 1910.7 Valid testing data and certifications for safety.* This section included provisions concerning the validity of testing data and the use of standard test methods and procedures. It also included a requirement that laboratory-based testing—other than testing conducted directly by employers—be conducted only in duly accredited laboratories. These requirements were intended to apply only to the safety standards in Part 1910; health standards in Subpart Z of Part 1910 were specifically excluded.

In the proposal, OSHA stated that it was attempting to build upon the self-regulatory efforts of the private sector, particularly in the fields of electrical and fire safety. OSHA stated its intention to take full advantage of the mechanisms which now exist in the private sector or in government, and to keep its long-term involvement in these activities to a minimum (49 FR 8329).

As noted, the proposal was issued on March 6, 1984. A three-day informal public hearing was held on September 25 and 26, and October 1, 1984, and additional written submissions concerning this proposal were received until December 31, 1984. The record on the proposal closed December 31, 1984.

(References in this text to written public comments, post-hearing submissions, etc., will be marked by "EX" or "EXs" in parentheses, and to the transcript of the informal public hearing by "TR" in parentheses.)

II. Major Issues and Questions

A. General

Based on a thorough review of the public comments and testimony in the record, the Agency now believes that the "comprehensive overhaul" which it originally proposed cannot be accomplished on the present record. However, OSHA has identified certain important elements of its original proposal—including the deletion of the specific name references to UL and FMRC throughout Part 1910—which should be finalized.

OSHA believes it is appropriate to complete the deletion of the references to UL and FMRC at this time. The following facts support this action:

1. The record contains sufficient documentation to support this action;

2. Proper implementation of these changes, in close cooperation with the private sector, including operators of independent testing laboratories, should maintain current levels of worker safety protection.

To assure no diminution of worker safety, the Agency is also providing a definition of "nationally recognized testing laboratory," the term which is being substituted for references to UL and FMRC in the standards, and is including a requirement that firms doing product and equipment approval or listing required by OSHA, be recognized by OSHA as a NRTL. The new definition will foster compliance with OSHA standards in a manner consistent with worker safety and assist in the enforcement of these standards. The procedure prescribed in the standard for obtaining OSHA recognition would also assure that there is no diminution of worker safety.

The Agency believes that this NRTL definition is supported by substantial evidence as to the necessary elements of an appropriate substitute for the UL and FMRC designation. This definition will assist in maintaining current worker protection levels.

Further rulemaking on this definition is not necessary; adequate notice was given that substantive elements, such as those contained in the NRTL definition, were being considered as part of the regulatory scheme contemplated in the proposed overhaul. The full regulatory scheme contemplated in the proposal is not being implemented at this time for reasons discussed more specifically below. Briefly, the scheme was cumbersome and administratively awkward (see also EX 8–26, pp. 2, 12).

OSHA believes that the regulatory action taken today provides a better resolution to the problem of removing the UL/FM references in the standard and providing objective criteria and procedures for competent laboratories to be able to obtain OSHA recognition to list or approve certain workplace equipment or materials (EX 2–30). It should be noted that this rule in no way extends the requirements for approval to any additional equipment or material not already required by the OSHA standards to be approved. It merely provides a vehicle to allow OSHA as well as employers who have the responsibility for using approved equipment or material under certain OSHA standards to be able to ascertain that the above described equipment or material has been approved and is therefore acceptable.

This rule provides a method for a testing organization to be considered a nationally recognized testing laboratory (NRTL) as defined in this rule. The method requires a testing laboratory to request OSHA recognition as an NRTL. This procedure includes public review of an applicant's operations against the NRTL definitional criteria. The elements of such a mandatory process were discussed in the proposal.

These changes will become effective 60 days after their publication as a final rule. This time period is reasonable in this case, since the definitional requirements of a nationally recognized testing laboratory being promulgated

BEST COPY AVAILABLE

herein should be readily achievable without an extended period for familiarization.

B. Deletion of UL and FMRC Names

1. Proposal for Deletion

One of the principal changes proposed in the March 6, 1984, Notice of Proposed Rulemaking, was the deletion of the names of Underwriters Laboratories Inc. (UL) and Factory Mutual Research Corporation (FMRC) from the safety standards in 29 CFR Part 1910. The Agency stated that it intended to eliminate references to specific third-party testing/inspection organizations, and provide uniformity and consistency in terminology (49 FR 8329, col. 1).

The proposed UL/FMRC deletion was supported by a number of participants in the rulemaking proceeding, including the National Electrical Manufacturers Association and the National Electrical Contractors Association (EX 39; TR 470, 497, 529, 565 and 597). Moreover, no substantial objection has been raised concerning the proposed deletion.

The sole negative comment appears to opt for the status quo, claiming that the proposed change is neither necessary nor desirable. Associated Specialty Contractors, Inc., said:

> The self-regulatory efforts of the private sector have been entirely adequate, and the success of these efforts and the results of the high standards of the testing laboratories which have been performing these services for many years have been remarkable achievements. Almost everyone responsible for preparing products to be tested, for meeting testing standards in design and production, and for using certification of accepted laboratories as a measure of safety is completely familiar with the present arrangements. In fact, the general public widely relies on labels by known laboratories and could be greatly confused by a change in procedures. (EX 8–47)

The Agency believes that this comment does not establish that the references to UL and FMRC must be retained. This is based on the following reasons:

a. The deletion of the names of UL and FMRC is not based on a judgment as to the performance or capabilities of these two testing laboratories (49 FR 8330, col. 3, and 8346, col. 2);

b. No evidence was presented to demonstrate that the private sector system in place today would be incapable of adjusting to these changes easily; and,

c. There is no evidence that the deletion would in any way diminish worker safety and health or that there would be any confusion created by the deletion.

In fact, the evidence in the record indicates that several additional testing laboratories can be expected to provide these services in a reliable and efficient manner (See, for example, TR 529).

A number of witnesses supported these findings. For example, Mr. Gmoser, representing ETL Testing Laboratories, stated that:

> * * * [UL and FMRC] have served a positive and necessary role, but, now, so can many other laboratories. (EX 8–43, pg. 7)

In addition, Mr. O'Neill, representing the American Council of Independent Laboratories, stated that:

> There are certainly a handful of qualified laboratories at this moment who, without any impairment to safety in the workplace, could offer their services in this market. (TR 353)

Mr. Miller, representing Factory Mutual Research Corporation, stated in the record:

> While we are most appreciative of the expression of confidence implicitly rendered by OSHA, we are at the same time cognizant that other organizations are capable of providing similar services . . . There are, in fact, many qualified laboratories who, should they choose, could contribute to maintaining safety in the workplace. (TR 529)

Neither UL nor FMRC opposed OSHA's plan to delete their names from the safety standards at issue (TR 497, 565). In fact, Mr. Collins, representing UL at the hearing, concurred in the proposed deletion, saying:

> We don't want to be singled out, named. Take it out. (TR 470)

Acceptance of this change by manufacturers, who are the principal users of the testing services under consideration in this rulemaking, is evidenced by the post hearing comment of the National Electrical Manufacturers Association, a major organization which participated heavily in this rulemaking:

> NEMA urges OSHA to * * * delete all references to named testing laboratories (*e.g.*, 'Underwriters Laboratories, Inc.,' 'UL,' 'Factory Mutual Research Corp.,' 'Factory Mutual Engineering Corp.,' 'FM', and the like) * * * (EX 39)

Similarly, another participant, the National Electrical Contractors Association, suggested "maybe going a little bit further * * * in deleting the references to the two laboratories, and delete the words, 'Such as, but not limited to, Underwriters Laboratories, Incorporated [sic], and Factory Mutual Engineering Corporation" (TR 597).

Therefore, based on the rulemaking record, OSHA finds that there is general and widespread acceptance of the appropriateness of deleting the names of Underwriters Laboratories Inc. (UL) and Factory Mutual Research Corporation (FMRC) from the safety standards in 29 CFR Part 1910.

2. Additional Standards Being Included

In its proposal, the Agency attempted to identify those texts in Part 1910 wherein the UL/FMRC name deletions were to be made. Revisions were proposed for each of nine subparts in the general industry standards (49 FR 8350 through 8353).[3]

OSHA stated its intent to eliminate all references in its standards to specific third-party testing/inspection organizations (49 FR 8329, col. 1) and the public was invited "to identify any provisions in Part 1910 where such requirements are now in effect, but which the Agency may have inadvertently failed to include in this proposed change" (49 FR 8329, col. 1). No additional instances of UL and FMRC references requiring name deletion were submitted to the record by the public.

After the proposal was published, the Agency again conducted a thorough review of the Part 1910 safety standards. As a result of this review, the Agency identified some additional standards where the UL/FMRC names should be deleted. Therefore, the number of standards provisions in Part 1910 subject to this deletion activity have been almost doubled, from the 12 which had been identified at the time of the proposal to 23 identified in this document. (These additional provisions are identified with an asterisk in the listing below.[4]

3. Standards Provisions Affected

The names of Underwriters Laboratories Inc. (UL) and Factory Mutual Research Corporation (FMRC) appear in 23 testing-related provisions in OSHA's general industry safety standards. These specific-name references which appear in Part 1910 can be organized into three categories:

"Acceptable" Definitions—In this category, UL and FMRC have been used as illustrative examples of an undefined "nationally recognized testing

[3] The deletions of the UL/FMRC names were also among the specific actions described in the "Summary and Explanation of the Proposed Regulation" (49 FR 8332, col. 2, through 8334, col. 2).

[4] Other UL citations which merely reference UL Standards will remain unchanged. For example, 29 CFR 1910.252(b) (2) (i) reads: "Assurance of consideration of safety in design is obtainable by choosing apparatus complying with the Requirements for Electric Arc-Welding Apparatus, NEMA EW–1–1962, National Electrical Manufacturers Association or the Safety Standard for Transformer-Type Arc-Welding Machines ANSI C33.2–1956, Underwriters' Laboratories."

See also: §§ 1910.106(b)(1)(iii)(*a*)(*1*), 1910.107(b)(5)(vi), 1910.107(k), and 1910.155(a)(17).

laboratory" which tests (and lists, labels, etc.) equipment:
(a) Subpart H—§ 1910.111(b)(1)(ii)
(b) Subpart S—§ 1910.111(a)(1)(i)

"Approved" Definitions with NRTL—In this category, both the "nationally recognized testing laboratory" term and the names of UL and FMRC have been used together to define the "approved" requirement for equipment specified in the particular standard:
(a) Subpart H—§ 1910.106(a)(1)(ii)
(b) Subpart H—§ 1910.106(a)(35)
(c) Subpart H—§ 1910.107(a)(8)
(d) Subpart H—§ 1910.108(a)(3)
(e) Subpart H—§ 1910.110(a)(14)
(f) Subpart L—§ 1910.155(c)(3) (i)
(g) Subpart N—§ 1910.176(a)(7)
(h) Subpart Q—§ 1910.251(b)

Text allows only UL/FMRC—In this last category, safety testing, listing or approval by UL and/or FMRC is required for specific products:
(a) Subpart D—§ 1910.28(f)(2)
(b) Subpart D—§ 1910.28(g)(3)
(c) Subpart D—§ 1910.28(h)(2)
(d) Subpart D—§ 1910.28(i)(1)
*(e) Subpart H—§ 1910.109(d)(2)(iii)(*a*)
*(f) Subpart H—§ 1910.110(b)(2)(iii)
*(g) Subpart H—§ 1910.110(c)(5)(i)(*g*)(*l*)
*(h) Subpart H—§ 1910.110(f)(5)(iv)
*(i) Subpart N—§ 1910.180(i)(4)(i)
*(j) Subpart N—§ 1910.181(j)(4)(i)
*(k) Subpart R—§ 1910.265(d)(2)(iv)(*c*)
*(l) Subpart R—§ 1910.266(c)(4)(iii)
*(m) Subpart R—§ 1910.268(c)(4)(iv)

4. Actions Being Taken

In the first two categories described above, when the names of UL and FMRC are removed from the provision in question, the term "nationally recognized testing laboratory" (NRTL) will remain.

For example, in the first category, § 1910.111(b)(1)(ii) previously read:

(ii) It is accepted, or certified, or listed, or labeled, or otherwise determined to be safe by a nationally recognized testing laboratory, such as, but not limited to, Underwriter's Laboratories Inc. and Factory Mutual Research Corporation; . . .

It will now read:

(ii) It is accepted, or certified, or listed, or labeled, or otherwise determined to be safe by a nationally recognized testing laboratory; . . .

Similarly, in the second category, § 1910.103(a)(1)(ii) previously read:

(ii) Approved—Means unless otherwise indicated listed or approved by the following nationally recognized testing laboratories: Underwriters' Laboratories, Inc., and Factory Mutual Engineering Corp.

It will now read:

(ii) Approved—Means, unless otherwise indicated, listed or approved by a nationally recognized testing laboratory.

Concerning the "nationally recognized testing laboratory" (NRTL) term currently in use in 29 CFR Part 1910, the Agency notes that it had proposed, in its NPRM, several substitute terms for this NRTL term. Due to its decision not to adopt the scheme contemplated in the proposal considered as a whole, OSHA has decided to return to the nationally recognized testing laboratory term. The Agency believes that the regulatory text changes described above adequately demonstrate the practicality of this approach.

In items (a) through (h) of the third category, the standard simply designates UL and FMRC. A new term needs to be substituted for UL/FMRC, because the deletion of those names without some substitution would render the entire provision meaningless. Therefore, the term "nationally recognized testing laboratory" will be substituted in these instances.

For example, in § 1910.28(f)(2), the requirement that

The scaffold shall be provided with hoisting machines that meet the requirements of Underwriters' Laboratories or Factory Mutual Engineering Corp.

will become

The scaffold shall be provided with hoisting machines that meet the requirements of a nationally recognized testing laboratory.

Similarly, in § 1910.109(d)(2)(iii)(*a*), the requirement that

Only extinguishers listed or approved by Underwriters' Laboratories, Inc., or the Factory Mutual Engineering Corp. shall be deemed suitable for use on explosives-carrying vehicles.

will become

Only extinguishers listed or approved by a nationally recognized testing laboratory shall be deemed suitable for use on explosives-carrying vehicles.

However, in items (i) through (m) in the third category, it will not be necessary to insert the term nationally recognized testing laboratory. The Agency will simply delete the UL/FMRC names, and rely on the term "approved" which is currently used in the standard. The term "approved" is defined elsewhere in the standards as being accepted, labeled, listed or certified by a nationally recognized testing laboratory.

For example, § 1910.180(i)(4)(i) previously read:

(i) Refueling with small portable containers shall be done with Underwriters' Laboratories or Factory Mutual Laboratories approved, or equivalent, safety type can equipped with an automatic closing cap and flame arrester.

It will now read:

(i) Refueling with small portable containers shall be done with an approved safety type can equipped with an automatic closing cap and flame arrester.

As shown above, OSHA has also deleted the phrase "or equivalent" from §§ 1910.180(i)(4)(i) and 1910.181(j)(4)(i). The Agency interprets this phrase in these current standards as referring back to the two named laboratories. In other words, its inclusion appears to provide for possible acceptance of safety cans tested and accepted by laboratories other than UL and FMRC, a goal accomplished by this final rule in another manner.

Continued inclusion of the "or equivalent" phrase will no longer be necessary under the provisions of this final rule. The current definitions of "approved" in Part 1910—see, for example, § 1910.155(c)(3)(1)—refer to a "nationally recognized testing laboratory," and a suitable definition of that term is contained in this final rule. Since the new NRTL definition will allow for full activity by all nationally recognized testing laboratories, rather than just UL and FRMC, it is unnecessary to retain the term "or equivalent" in §§ 1910.180 and 1910.181.

As part of this revision, OSHA is including cross-references to terms such as "nationally recognized testing laboratory" and "approved" which are defined elsewhere in the Part 1910 standards in order to facilitate understanding of these requirements in the standards. These cross-references will be inserted in each of the 23 provisions included here. A cross-reference to the definition of nationally recognized testing laboratory is also being added to 29 CFR 1910.35(b) which uses this term.

This differs from the proposal, which included a thorough revision of many of the definitions in each Subpart. Such revisions are not necessary to achieve the goal of this final rule, namely the deletion of the names of UL and FMRC and the use or substitution of a newly-defined term, "nationally recognized testing laboratory," or the term "approved" instead. The other changes proposed are not necessary to achieve this end and are therefore not being made.

C. Nationally Recognized Testing Laboratory

1. OSHA Definition of NRTL

As mentioned above, it is necessary for the Agency to provide a definition of "NRTL" in 29 CFR Part 1910, in order to assure no diminution of worker safety as a result of this UL/FMRC name

deletion. The Agency has determined that the term "nationally recognized testing laboratory" needs to be defined at this time and in a manner which does not allow the term to be subject to possible misinterpretation or misapplication (TR 352, 364).

The Agency has decided to define the regulatory term "nationally recognized testing laboratory" (NRTL) using certain elements that had been included in the proposed definitions of "qualified fire testing laboratory" and "qualified electrical testing laboratory" (see proposed 29 CFR 1910.155(c)(46) and 29 CFR 1910.399(a)(99a); 49 FR 8326, 8351 and 8353).

The definition for the "nationally recognized testing laboratory" term being promulgated herein is as follows:

(b) *Laboratory requirements.* The term "nationally recognized testing laboratory" (NRTL) means an organization which is recognized by OSHA in accordance with Appendix A of this section and which tests for safety, and lists or labels or accepts, equipment or materials and which meets all of the following criteria:

(1) For each specified item of equipment or material to be listed, labeled or accepted, the NRTL has the capability (including proper testing equipment and facilities, trained staff, written testing procedures, and calibration and quality control programs) to perform:

(i) Testing and examining of equipment and materials for workplace safety purposes to determine conformance with appropriate test standards; or

(ii) Experimental testing and examining of equipment and materials for workplace safety purposes to determine conformance with appropriate test standards or performance in a specified manner.

(2) The NRTL shall provide, to the extent needed for the particular equipment or materials listed, labeled, or accepted, the following controls or services:

(i) Implements control procedures for identifying the listed and labeled equipment or materials;

(ii) Inspects the run of production of such items at factories for product evaluation purposes to assure conformance with the test standards; and

(iii) Conducts field inspections to monitor and to assure the proper use of its identifying mark or labels on products;

(3) The NRTL is completely independent of employers subject to the tested equipment requirements, and of any manufacturers or vendors of equipment or materials being tested for these purposes; and

(4) The NRTL maintains effective procedures for:

(i) Producing creditable findings or reports that are objective and without bias; and

(ii) Handling complaints and disputes under a fair and reasonable system.

(c) *Test standards.* An "appropriate test standard" referred to in § 1910.7(b)(1)(i) and (ii) is a document which specifies the safety requirements for specific equipment or class of equipment and is:

(1) Recognized in the United States as a safety standard providing an adequate level of safety, and

(2) Compatible with and maintained current with periodic revisions of applicable national codes and installation standards, and

(3) Developed by a standards developing organization under a method providing for input and consideration of views of industry groups, experts, users, consumers, governmental authorities, and others having broad experience in the safety field involved, or

(4) In lieu of paragraphs (c)(1), (2) and (3), the standard is currently designated as an American National Standards Institute (ANSI) safety-designated product standard or an American Society for Testing and Materials (ASTM) test standard used for evaluation of products or materials.

(d) *Alternative test standard.* If a testing laboratory desires to use a test standard other than one allowed under paragraph (c) of this section, then the Assistant Secretary of Labor shall evaluate the proposed standard to determine that it provides an adequate level of safety before it is used.

In promulgating this definition, it is not Agency purpose to impose a fixed organizational structure or operational scheme on any testing laboratory. Nor is it the Agency purpose to provide an OSHA-mandated definition of testing laboratories for uniform application to all OSHA standards including those in Subpart Z of this Part. This new definition will be applied only to those safety-related testing provisions in the Part 1910 general industry standards which are the subject of this rulemaking.

2. Overview of NRTL Definition

OSHA's new NRTL definition is comprehensive. It contains four detailed requirements, intended to be specific and exacting, which must be met by any organization intending to have itself considered as an NRTL for these purposes. Without exception, each NRTL must be technically qualified for the tasks it undertakes.

In addition, OSHA's NRTL definition does not require that NRTL status be limited only to those testing laboratories which are qualified to do all such OSHA-required testing, or even a major portion of it. Therefore, there could be an NRTL for only "ground fault circuit interrupters," another for only safety cans. OSHA recognition of a laboratory as an NRTL clearly will require designation of the specific equipment, or category of equipment, which the testing laboratory is found to be technically qualified to third-party test.

a. *Capability for Product Testing.* The first of the NRTL requirements addresses capability. The capability requirement includes proper testing equipment and facilities as well as trained personnel. This is a performance-oriented requirement and OSHA recognizes that the level of staff training and the sophistication of the equipment and facilities appropriate to do the testing to approve or list certain equipment or materials will vary with the particular equipment or materials that are the subject of the application for recognition. Generally, OSHA expects that most applicants will do the testing in-house. However, this is not a requirement of the standard. OSHA recognizes that, in some cases, laboratories may wish to subcontract out the testing of a certain product or aspect thereof due to unique or special testing needs. The laboratory actually doing the work must have the necessary capability to conduct the tests, and the laboratory applying for recognition would retain primary responsibility for fulfilling the requirements of the standard and complying with the procedures set out in Appendix A.

The Agency believes that the capability required for any particular testing laboratory to test a product is primarily influenced by the actual product testing standards, methods and procedures used in that testing. Another aspect of the capability requirement has been subdivided to distinguish between two categories of testing activity conducted by NRTLs.

In the first, the NRTL tests products using testing standards, methods and procedures which are published and recognized in the United States as appropriate for the products being tested. This might be termed "ordinary" or "routine" testing.

A second testing activity, being termed "experimental" in this definition, entails the testing of new or innovative products or the use of new tests on existing products. These products often may not fit well under existing testing standards, methods and procedures of the first category. Many of these testing activities may require revised standards, methods or procedures, or totally new ones for adequate testing. Others may require the use of available standards (revised or unrevised), combined with engineering expertise and decisionmaking as yet unspecified in writing. NRTLs which engage in this type of activity clearly require capabilities different from those utilized for "ordinary" testing. A laboratory which is well qualified for "ordinary" testing may not have the capability to do "experimental" testing.

Each NTRL's capability must be demonstrated in relation to the specific product being tested, the testing standards, methods and procedures

being used (see discussion below), and the quality of engineering decisionmaking needed to reach a workplace safety determination for the product.

b. *Continued Oversight of Products.* The second requirement addresses the need for the NRTL to maintain sufficient oversight of the "product line" (those facsimiles of the successfully tested equipment and materials which bear the NRTL's listing, label or acceptance). An organized product "follow-through" program is necessary so that a testing laboratory can assure itself, and OSHA, of the accuracy of all of its listings, labelings and acceptances. This part of the definition of NRTL has three elements: the implementation of control procedures for identifying the listed or labeled equipment; production line inspection to assure conformance with the test standards; and the initiation of service value determinations through post-marketing field inspections to monitor and assure the proper use of the mark or label.

The requirement for field inspections to monitor and assure the proper use of its identifying marks or labels on products means that the NRTL must evaluate as necessary the field performance of equipment which it has listed or labeled. This field inspection would serve at least three purposes. First, the NRTL would check for the correct use of its labels on products and the possible improper transfer of the laboratory's listing mark. Second, the laboratory would determine, for example, by responding to complaints from customers, whether in fact the product meets the test standards and requirements, or whether due to improper manufacturing or testing, the product does not satisfy the safety requirements of the testing standard when actually used in the workplace. Third, the field inspections may be used in appropriate circumstances to evaluate the effectiveness of the test standard. Where a laboratory uses a test standard which it has developed, it may well be necessary for it to evaluate the effectiveness of its standard through field testing of the actual product. On the other hand, where a third-party standard, such as an ANSI or ASTM standard has been used, such evaluation, beyond that required by the standard itself, should be the responsibility of the developing organization. The requirement is performance-oriented in that it is framed in terms of "to the extent needed for the particular equipment or materials listed or labeled. * * *" This recognizes that the amount of product oversight will vary from product to product and from manufacturer to manufacturer and that the NRTL is in the best position to make rational decisions on a case by case basis as to the level of oversight appropriate.

The elements of this product line/oversight requirement include well known and acceptable techniques for attempting to maintain the integrity of the testing and listing/labeling/acceptance systems in the United States. They include controlled marking/labeling procedures, factory inspections, and field inspections of products.

c. *Organizational Independence.* The third requirement is for independence of the NRTL from manufacturers, suppliers, vendors, and users of the equipment and materials it tests. Absent the direct involvement of the Agency in testing laboratory decisionmaking, this independence requirement is necessary to assure the integrity of the testing activities.

This independence requirement is consistent with longstanding practice by authorities enforcing NFPA codes and related standards. Historically, they have required the use of third-party or independent testing laboratories for fire/electrical safety testing.

d. *Controls and Accountability.* This last requirement is essentially procedural. It includes performance requirements related to the internal control and external accountability of the NRTL. The first subparagraph is intended to result in creditable findings and reports upon which reliance can be placed. The second requires the NRTL to have set procedures for handling complaints and disputes from parties having an interest in the NRTL's activities. These two requirements are focused primarily on promoting the high quality of NRTL operations necessary for workplace safety assurance.

3. Provisions Revised From Proposal

The OSHA definition of NRTL being adopted in this final rule is based on the definition of "qualified testing laboratory" (either fire or electrical) [5] included in the Agency's proposal of March 6, 1984. The proposed definition for these testing laboratories was based on an analysis of (1) OSHA's original section 6(a) and current section 6(b) safety standards (particularly those for electrical and fire safety); (2) past National Fire Protection Association and National Electrical Code documents which were sources for OSHA's standards; and (3) the testing laboratory requirements currently contained in 29 CFR Part 1907.

In this final definition of NRTL, the following changes have been made:

- The "OSHA-designated standards" requirement has been deleted
- The laboratory "capability" requirement is better focused
- The provision concerning "recall" has been deleted
- The "independence" requirement is clarified
- New "control" and "accountability" requirements, relating to "testing quality" and "due process," have been added
- The linkage to "third-party certification" has been deleted.

a. *Deletion of "OSHA-Designated Standards".* The Agency has deleted the phrase "in accordance with OSHA-designated standards" from the "capability" criterion in paragraph (ii) of the proposed definition.[6] In this final rule, the Agency will not be "identifying" or designating the test standards in the manner it had originally proposed in Part 1936.

The question of whether or not to require the use of "OSHA-designated standards" by the laboratories arose during the development of the March 4, 1984, proposal. It was generated by two concerns regarding "OSHA-recognized third-party certification" activity:

(1) There were many claims made to OSHA during the development of the

---

[5] The originally proposed definition for Subpart S—Electrical, § 1910.399(a)(99a), read as follows:

"(99a) *Qualified electrical testing laboratory.* The validating laboratory of a third-party certification program recognized under Part 1936 of this Title which:

(i) Is completely independent of manufacturers, vendors, and employers subject to this standard,

(ii) has the capability for properly examining and identifying equipment and materials as described in § 1910.303(b) in accordance with OSHA-designated standards, and

(iii) provides, to the extent needed for the particular equipment or materials tested, such controls or services as:

(A) Experimental testing for safety of specified items of equipment and materials referred to in this standard to determine conformance with appropriate test standards or performance in a specified manner;

(B) inspecting the run of such items of equipment and materials at factories for product evaluation to assure conformance with the test standards;

(C) service-value determinations through field inspections to monitor the proper use of labels on products, with provisions for recall in the event a hazardous product is installed; and

(D) controlled procedure for identifying the listed and/or labeled equipment or materials tested." (49 FR 8353; See also 49 FR 8351–2 for proposed § 1910.155(c)(46) in Subpart L—Fire Protection.)

[6] In addition, the phrases "as described in § 1910.303(b)" (Subpart S—Electrical) and ". . . in this subpart" (Subpart L—Fire) have been deleted from the proposed "Qualified testing laboratory" definition. The NRTL definition will serve more than one subpart, which makes these deletions necessary.

proposal as to the caliber and applicability of testing standards, methods and procedures being used in the private sector to test or certify products; and

(2) It was not clear to the Agency whether each third-party certification program should determine its own testing methods and procedures which would be used in its program, or whether those should be stipulated beforehand by OSHA.

The Agency raised the test standard issue in the proposal and invited comments on the necessity for including a requirement that equipment be tested to OSHA-designated standards (49 FR 8334, col. 3). A considerable number of comments were received on this issue (EXs 8–17, 8–22, 8–23, 8–26, 8–30, 8–34, 8–36B, 8–43, 8–44, 8–47, 8–49, 37 and 38). A number of organizations, including NEMA, the National Bureau of Standards (NBS), UL, FMRC, ETL Testing Laboratories, and the Electronic Industries Association, testified on this subject at the hearings (TR 174, 309, 395, 527, 572 and 606).

A large proportion of these commenters (EXs 8–17, 8–22, 8–23, 8–26, 8–34, 8–44 and 8–47; TR 210, 255, 287, 404, 473, 532, 540 and 611) urged OSHA not to engage in designating test standards, suggesting that such action would be both generally impractical and a needless imposition on the manufacturers of these products.

Certain other commenters, particularly NEMA, restated a position that had been argued before the Consumer Product Safety Commission at a hearing prior to the OSHA hearing on this proposal. In summary, that position strongly opposed a CPSC proposal concerning possible "recognition" by that Agency of private-sector voluntary consensus product standards which are acknowledged as essential to national efforts to improve the safety of many products. In the OSHA proceeding, NEMA also opposed this concept and argued that OSHA designation or adoption of specific test standards requires rulemaking under section 6(b) of the OSH Act (EXs 8–36B and 8–49; TR 177, 179, 192, 194–195, 252, 274 and 499). Beyond that, it was also claimed that any other similar action by OSHA in relation to sanctioning test standards for purposes of testing or certification requirements would constitute an evasion of the section 6(b) due process rights of manufacturers (EXs 8–36B, 33 and 39).

OSHA's proposal clearly indicated that it intended to identify the test standards for both manufacturer self-certification and third-party certification (proposed Part 1936), and OSHA may seek additional public comment on this issue in the future (see discussion below, II.c.3.f.). However, the Agency will not designate standards to be tested to in connection with this proceeding, which requires that third-party testing laboratories approving or listing certain equipment or materials required by OSHA standards to be approved must be recognized by OSHA as NRTLs for that purpose.

At this time, the Agency need only decide this issue to the extent that it is relevant to this final rule, i.e., third-party testing performed by nationally recognized testing laboratories. The evidence suggests that in the context of defining the NRTL, there is no need to designate the test standard for every product which must be listed, labeled or approved under the OSHA standards.

The record indicates that the preponderance of test standards being used in this country to test workplace equipment and materials of interest to OSHA in this rulemaking (and to workplaces subject to its standards and enforcement) are ANSI standards developed by Underwriters Laboratories (TR 413). In addition, most of the other standards being used are either those of FMRC (TR 531–539) or those which are in the process of being developed by UL (EX 31, pp. 1, 4). The latter are either proposed ANSI standards (in that they are in published form and have entered into an ANSI-sanctioned review process) or are in a preliminary development stage ("desk standards") and will ultimately be processed through the standards development process (TR 401 thru 404). Therefore, within this limited testing context, the Agency will not specify the specific test standards, methods and procedures to be used by the NRTLs in product evaluation.

In addition, one potential NRTL has indicated in the hearing record that it uses, intends to use, only the ANSI/UL standards (the nationally recognized standards) as part of its testing activities, since it (unlike UL) is not a standards-setting organization (TR 589, 592; EX 31).

It seems reasonable that product testing systems already in place should be able to continue their operations without Agency rulemaking on the testing standards, methods and procedures they are using now and have successfully used in the past. The operation of already-existing product testing systems, such as UL and FRMC, could be seriously disrupted if the Agency attempted to undertake rulemaking on the testing standards, methods and procedures they are using. The Agency is not prepared to make such a change at this time, particularly since the record does not reflect any need to impose such a requirement on these third-party testing laboratories (see EX 31, p. 4).

A related question was raised by NEMA concerning multiple producers of similar standards in the private sector standards community (TR 185). A short list of comparable standards was submitted by NEMA to the record (EX 33, pg. 2 and Appendix B). However, while the record indicates that current safety testing standards and practices may vary slightly among the various third-party safety testing organizations, the testing laboratories themselves indicate that they have compensating mechanisms and controls built into their particular systems which are intended to assure that the ultimate result will fall within an acceptable range (TR 534, 550). The laboratories' claim that they use those testing standards, methods and procedures which adequately address all necessary safety concerns and thereby justify their decision to "pass" the item in question and to allow the use of the laboratory's listing or identifying mark (EX 38, p. 3; TR 552–553).

Based upon its review of the record, the Agency observes that these minor operational differences are considered, and have been considered, as acceptable by the private and other public sector entities participating in the development and enforcement of the NFPA-based fire and electrical safety codes and standards. The Agency has found no evidence in the record which would justify any attempt, based on workplace safety considerations, to modify these currently acceptable practices, or to consider them as antithetical to worker safety and therefore requiring Agency involvement.

The sole purpose of this present action is to remove the specification of UL/FMRC as preferred testing laboratories from the OSHA standards; to provide relief for other laboratories by substituting and defining the term NRTL and to provide a procedure by which they can receive OSHA recognition (EX 30).

The Agency concludes that there is an adequate system of testing standards, methods and procedures currently existing in this country under the auspices of the private sector consensus standards community. Consequently, there appears to be no need at this time for OSHA to undertake the burdensome task of specifying each testing standard, method or procedure to be used by the NRTLs (EX 8–26, pp. 4–5). The recognition scheme adopted herein, as opposed to the more indirect scheme

contemplated in the proposal, provides an ample opportunity for Agency overview of the applying laboratory and its operation (TR 540–541). Therefore, there is no need to decide at this time whether the Agency would need to go through rulemaking in order to designate test standards.

Moreover, the insertion of an "OSHA-designated standards" requirement into the NRTL definition would constitute a substantial change in the current relationship between this Agency and the NRTLs as third-party testing organizations. It is not the purpose of this rulemaking to change these basic relationships.

However, the Agency believes that some guidance should be given to laboratory organizations seeking to be recognized as nationally recognized testing laboratories concerning what test standards will be considered "appropriate test standards."

OSHA has provided a definition of an appropriate test standard in § 1910.7 as follows:

(c) *Test standards.* An "appropriate test standard" referred to in § 1910.7(b)(1) (i) and (ii) is a document which specifies the safety requirements for specific equipment or class of equipment and is:

(1) Recognized in the United States as a safety standard providing an adequate level of safety, and

(2) Compatible with and maintained current with periodic revisions of applicable national codes and installation standards, and

(3) Developed by a standards developing organization under a method providing for input and consideration of views of industry groups, experts, users, consumers, governmental authorities, and others having broad experience in the safety field involved, or

(4) In lieu of paragraphs (c) (1), (2) and (3), the standard is currently designated as an American National Standards Institute (ANSI) safety-designated product standard or an American Society for Testing and Materials (ASTM) test standard used for evaluation of products or materials.

(d) *Alternative test standard.* If a testing laboratory desires to use a test standard other than one allowed under paragraph (c) of this section, then the Assistant Secretary of Labor shall evaluate the proposed standard to determine that it provides an adequate level of safety before it is used.

In addition to accepting ANSI test standards as appropriate test standards within the meaning of this rule, OSHA also recognizes the American Society for Testing and Materials' (ASTM) test standards for products and materials as appropriate test standards. ASTM has been the nationally recognized standards development organization for product and materials testing standards since its beginning in 1898. In addition, it should be noted that many of the ANSI standards make use of or incorporate ASTM test standards; for example, the *ANSI/UL 153–1983 Standard for Portable Electric Lamps* makes use of these standards by referencing over nine separate ASTM standards. OSHA believes that the definition of appropriate test standard should specifically include test standards produced by these two organizations (see EX 8–21). OSHA does, however, retain the right to review the test standards and revisions to test standards of these two organizations. If OSHA believes that one of these test standards would compromise or diminish worker safety, OSHA would take appropriate action to disallow the use by nationally recognized testing laboratories of the standard in question.

This definition is intended to allow competent testing laboratories applying for OSHA recognition to continue following the responsible, safety enhancing practices which they have already been following successfully (see TR 529). In other words, it is an attempt to incorporate into the procedure successful past practice in the area. The record shows that testing laboratories prefer, where possible, to use test standards already developed by ANSI through an elaborate consensus process. Since it is not OSHA's intention to change this successful relationship but merely to codify it, ANSI standards are clearly stated to be presumed to be acceptable (see TR 531). The definition also allows necessary flexibility; even where an appropriate ANSI standard exists, applying laboratories may use alternative test procedures so long as they provide an adequate level of safety (EX 8–26, pp. 4–5; TR 532, 539, 547, 559). The definition also addresses the issue of that small percentage of cases where there is no test standard developed: the applying laboratory will determine how best to test the materials or equipment in question and the Secretary will ascertain as part of the recognition procedure that the testing will produce an adequate level of safety. This definition is intended to be fluid and dynamic to enable testing laboratories to meet the challenge of new products in a timely manner. For example, in some cases such a burden would be met by combining parts of already established test standards to adapt the test procedure to an innovative product (see TR 532–533, 543).

b. *Laboratory Capability.* In the NRTL definition, new paragraph (1) addresses "capability" and requires that the laboratory:

(1) For each specified item of equipment or material to be listed, labeled, or accepted, the NRTL has the capability (including proper testing equipment and facilities, trained staff, written testing procedures, and calibration and quality control programs) to perform:

(i) Testing and examining of equipment and materials for workplace safety purposes to determine conformance with appropriate test standards; or

(ii) Experimental testing and examining of equipment and materials for workplace safety purposes to determine conformance with appropriate test standards or performance in a specified manner.

This criterion relates to paragraph (ii) in the proposal.[7]

In establishing this capability requirement, the Agency has sought to allow the flexibility in approach which each testing laboratory will need in order to determine its NRTL capabilities, and also has sought to promote the exercise of rational decisionmaking by the Agency and others in determining the adequacy of these NRTLs.

As now written, this performance-related capability requirement would allow each testing laboratory to continue to determine its own level of competence, as long as those which operate as NRTLs in the OSHA sense meet the requirements of the NRTL definition (see generally, TR 534).

This performance (as opposed to specification) requirement allows for sufficient flexibility so that testing laboratories will not have to be overqualified for the task at hand merely to meet OSHA requirements (TR 552). Nor does the Agency consider it necessary to establish a specific model as the sole criterion against which all other NRTLs providing OSHA-related testing are to be evaluated.

As mentioned previously, it is the particular equipment or material which is to be tested (and then listed, labeled or accepted), combined with the particular testing standards, methods and procedures available for that testing, which will determine the capability level necessasry for the NRTL to make the workplace safety determination needed for that product.

Therefore, the NRTL capability requirement in this definition establishes two categories of NRTL operation:

(1) "Ordinary" testing for workplace safety purposes, and

[7] See footnote 5 above (or 49 FR 8353).

(2) "Experimental" testing for the same purpose. Each category is based on the current status of the testing standards, methods and procedures being used. An NRTL can be recognized to do both types of testing, ordinary as well as experimental.

As mentioned above, "appropriate standards" form the basis of the "ordinary" testing mode for NRTLs. These appropriate standards are those testing standards, methods and procedures which are published and recognized in the United States as appropriate for product evaluation safety level purposes. They include but are not limited to ANSI or ASTM test standards.

The second testing category addresses testing of "new or innovative" products against these "appropriate standards." This category also includes the testing of a product for performance in a specified manner, or for conformance with other pertinent codes and standards accepted and used in the United States, either during such time when these testing standards, methods or procedures are still unpublished or in the occasional absence of such appropriate standards. An example of this category would be the testing of tray cable (TR 181; EX 32, pg. 4; EX 33, pg. 1, Appendix A).

An experimental testing designation does not imply any diminished OSHA role in overseeing the recognition process. Those applying for recognition must specify in their application the test standard or standards that they will be using for a particular type of equipment or material to be tested. OSHA will then evaluate the proposed standard to determine that it provides an adequate level of safety before granting a recognition where the NRTL will use that standard as part of its testing. The alternative test standard provisions found in paragraph (d) of the new rule were included at least in part to provide flexibility to deal with products that are new or innovative and for which no other standard exists. However, even laboratories doing "ordinary" testing can avail themselves of the alternative standard provisions if they wish to use test standards that do not meet the criteria in paragraph (c) provided, of course, that the Assistant Secretary agrees that the test standards in question provide an adequate level of safety.

The capability requirements for NRTLs also specifically mention important elements of capability including "proper testing equipment and facilities, trained staff, written testing procedures, and calibration and quality control programs." These capability requirements, and others, are already routinely included within existing laboratory evaluation and accreditation documents used by the private sector, such as ASTM E548-84.

The Agency believes that accreditation is an increasingly valuable tool for testing laboratories in demonstrating their capability. OSHA encourages the voluntary use of properly designed and operated accreditation systems. They provide an excellent means of identifying those laboratories which have the capability to engage in product safety testing, including third-party testing as nationally recognized testing laboratories. However, as noted above, for the present OSHA has decided not to require accreditation.

c. *Deletion of "Recall".* In this final rule, as part of the "controls and services" portion of the NRTL definition, the testing laboratory is required in paragraph (b)(2)(iii) to provide services such as:

(iii) Conducts service-value determinations through field inspections to monitor and to assure the proper use of its identifying mark or labels on products;

In the original proposal, subparagraph (iii)(C) required the qualified laboratory to make service-value determinations through field inspections to monitor the proper use of labels on products "with provisions for recall in the event a hazardous product is installed . . ." [8]

The recall phrase has been deleted in the final rule because there was considerable confusion as to its purpose. The deletion reflects the Agency's position, disclosed in the hearing record, that the purpose of this subparagraph is to insure monitoring of the proper use of the laboratory's identifying mark and labels on products (TR 32, 83, 265, 372, 388, 441, 489, 490, 566, 587).

Six commenters had specifically addressed the recall issue initially (EXs 8-16, 8-30, 8-33, 8-36C, 8-43, 8-45). The National Electrical Manufacturers Association (NEMA) suggested that the inclusion of "recall" in the proposed definition of "qualified electrical testing laboratory" in Subpart S may have been inappropriate when compared with NFPA/NEC texts (EX 8-36C). To some extent, UL paralleled this by stating its general impression that entities such as itself do not have "delegated" authority relative to the recall of products (EX 8-30). OSHA agrees; it was never its intention in the proposed definition to "empower" anyone to require recalls (EX 8-33).

During the development of the proposal, the recall clause in proposed subparagraph (iii)(C) originally was related to the criteria in proposed § 1936.111 concerning identification and control of certified equipment. Proposed § 1936.111 reflected industry practice whereby a laboratory already would have established all appropriate procedures it considers necessary to prevent misuse of a mark, including corrective actions to be taken when necessary to maintain the integrity of the certification program. These would then be made operative through contractual arrangements with the manufacturer or product supplier. The Agency expected that the same would hold true for the marks used by these product testing laboratories for identifying successfully tested equipment.

Indeed, the Agency continues to expect that entities performing product safety testing functions will take all necessary control and remedial measures needed to maintain the integrity of their activities, including pre-established procedures and such supplementary contractual arrangements with manufacturers as may be needed. The testing laboratory may use recall or any other means to achieve the objective of assuring the proper use of its marks. OSHA considers this to be appropriate and necessary for workplace safety reasons. Program integrity would be quickly compromised by hazardous products being listed or bearing these marks or labels. This remedial activity would continue to be a contractually-based private sector activity; it involves no grant of authority from this Federal agency.

d. *"Independent Testing" Still Required.* In the Agency's proposal, the "Qualified testing laboratory" was required to be "completely independent of manufacturers, vendors and employers subject to this standard" under proposed paragraph (i).[9]

Several commenters addressed this question of independence (or "third-party" status) of testing laboratories (EXs 8-6, 8-17, 8-30, 8-33, 8-37). Seven organizations commented on this issue at the informal public hearing, including Iron Age Protective Company, NEMA, the American Plywood Association (APA), the Safety Equipment Institute (SEI), UL, FMRC and ETL (TR 92, 152, 176, 191, 302, 340, 370, 496, 569, 578).

The record supports the need for independent testing in the NFPA-related fire/electrical safety testing arena (EXs 5-2, 5-13, 5-15, 8-6, 8-17; TR 176, 578).

[8] See footnote 5 above (or 49 FR 8353, col. 2).

[9] See footnote 5 above (or proposed § 1910.399(a)(99a)(i), 49 FR 8353, col. 2).

The Agency finds nothing substantial in the record to dispute its historical interpretation (unchanged since 1971) that "authorities having jurisdiction" [10] which adopt and enforce NFPA codes and related standards (including the National Electrical Code (NEC)) have always relied upon this type of "independence" for proper operation of the testing requirements. NEMA corroborates this by stating that OSHA's electrical safety standards (Subpart S of 29 CFR Part 1910) require third-party testing (TR 302). The Fire Equipment Manufacturer's Association, Inc. (FEMA) also supports the need for independent, third-party testing and indicates that it is necessary when addressing fire protection equipment (Subpart L of 29 CFR Part 1910) (EX 8–17). Since this standard is merely elaborating on what is already in place, it is appropriate that the element of independence be specifically preserved.

The reliance on "independence" by the users of these codes and standards does not adversely reflect on the caliber or motivation of company-owned testing laboratories. Rather, it appears to call for special analytical and decisionmaking relationships to be maintained through the fire/electrical safety testing process for the benefit of all potential users of this equipment.

Certain manufacturers also appear to accept and value a third-party relationship. As NEMA stated:

> We support that concept of third party testing where the user, if you will, requests it and requires it. And some manufacturers may on their own, I know of several manufacturers who will not produce any product unless it has third party listing. They use that as a matter of manufacturing and sales policy. (TR 191)

In the Agency's new NRTL definition, the testing laboratory is required to be "independent" in that it:

> (b)(3) . . . is completely independent of employers subject to the tested equipment requirements, and of any manufacturers or vendors of equipment or materials being tested for these purposes.

The revised format for this requirement emphasizes that products and their producers, i.e., manufacturers, suppliers, and vendors, are not directly subjected to these testing requirements by the 23 OSHA testing-related provisions in Part 1910 discussed above. Instead, they are indirectly influenced by the OSHA-employer relationships established under the OSH Act and the standards.

The independence requirement being specified in paragraph (3) of the NRTL definition in this final rule applies only to this NRTL definition and to the 23 NFPA-derived testing requirements in Part 1910 which are the subject of this rule. It is not intended for other applications without further rulemaking action by OSHA. In particular, OSHA notes that this determination on independence is not relevant to the concerns raised by the American Plywood Association (APA) (Exs 8–37, 28; TR 92).

This means that the Agency's adoption of this independence requirement for the NRTLs in Part 1910 does not preclude it from reaching a different decision on the "independence" concept—either as to the requirement itself or as to any specific criteria which define it—in future rulemaking related to other testing or laboratory requirements in its other safety standards, or to any future third-party certification program requirements. This will be especially pertinent in situations where testing requirements are derived from non-NFPA standards sources, or are based on other historical practices, or simply are new OSHA requirements. The Agency will continue to review these independence requirements in the context of third-party certification.

e. *Testing Quality and Fairness Requirements.* This last requirement in OSHA's new NRTL definition reads:

> (b)(4) The NRTL maintain effective procedures for:
>
> (i) Producing creditable findings or reports that are objective and without bias; and
>
> (ii) Handling complaints and disputes under a fair and reasonable system.

This requirement is essentially a procedural one. It includes performance requirements related to the internal and external accountability of the NRTL.

The first subparagraph is intended to result in creditable findings and reports upon which reliance can be placed routinely. It is essential that the testing results, i.e., the findings and reports, be totally reliable, objective and without bias. If they are not, employee safety may be adversely affected. Moreover, the employer would not know whether any particular listing, labeling or approval was worthy of acceptance; thus, the entire purpose of the tested equipment requirement would be undermined.

This requirement is indirectly derived from that part of the Agency's proposal which proposed a new *§ 1910.7, "Valid testing data and certifications for safety."* While the scheme proposed for § 1910.7 is not being adopted at this time, its intent needs to be incorporated into this final NRTL definition.

In the proposal, the Agency stated:

> Since OSHA is not a testing or certifying organization, OSHA believes that the most appropriate means to provide assurance to employers and workers, and to itself, that specific equipment or material will conform to the Agency's requirements is to require valid testing data and valid certifications. The Agency proposes that whenever OSHA standards require that equipment be tested or certified, the validity of the testing or certification is the prerequisite of the equipment's acceptability.
>
> This entire activity would be based on fundamental OSHA requirements for the validity of testing data combined with whatever level of product manufacturing quality control is considered necessary for worker safety under each of OSHA's safety standards. (49 FR 8327, col. 3) [11]

No comments were received on this aspect of proposed § 1910.7. However, since (1) the issue was raised in the proposal, (2) the need for the requirement is evident, and (3) UL and FMRC, and also ETL, give sufficient indirect evidence in their comments and testimony that such quality control systems are necessary and in place, the Agency believes that this requirement is justifiably included in this final rule.

The exact design and operation of such an "internal quality control" system for each NRTL is being left for each NRTL to determine in light of OSHA's requirement.

The second subparagraph addresses complaints and disputes which could arise from external sources concerning an NRTL's activites. It requires that such complaints and disputes be handled in a planned and organized manner by the NRTL.

The handling of complaints and disputes was raised as a question regarding proposed § 1936.402 "Dispute resolution procedures" in the Agency's proposal:

> * * * this regulation will include provisions for resolving complaints * * * concerning testing * * * practices related to safety * * * Comments are requested from the public * * * on this subject area. Constructive proposals submitted for the rulemaking record will be considered for

[10] "Authority having jurisdiction" is a term of art used originally in materials produced by the National Fire Protection Association (NFPA). The NFPA has defined it as an "organization, office or individual responsible for 'approving' equipment, an installation, or a procedure," with an added note "The phrase . . . is used in NFPA documents in a broad manner since jurisdictions and 'approval' agencies vary as do their responsibilities . . ." (NFPA 70E–1979). This is also reflected in the definition of "Approved" in § 1910.399(a)(7).

[11] The "product manufacturing quality control" considered by the Agency as necessary for these NFPA-related OSHA safety standards is covered separately in paragraph (2)(ii) of the NRTL definition.

incorporation in the final rule. (49 FR 8341, col. 2)

Although there was little substantive comment in the public record, OSHA is acting on its belief that this subject is of importance to workers, and their representatives, as well as manufacturers and testing laboratories (TR 11). At the informal public hearing, OSHA presented as one of its witnesses David Swankin, Esq., a recognized expert on questions of consumer affairs, testing and certification, and product safety in the United States.

Mr. Swankin discussed those mechanisms needed to assure the public that complaints and disputes which may arise in relation to testing activities would be properly handled by the appropriate responsible person or entity (TR 115). He indicated that a "fair and reasonable system for handling both procedural and technical complaints" was necessary and that it should be included in "any final rule" (TR 116):

> * * * it is clear that with recognition goes a tremendous responsibility to test properly. Because of this, it is essential that the rights of all interested parties are protected. A fair and reasonable complaint system is one of the essential ways in which such rights can indeed be protected* * * (TR 145–146)

To demonstrate that "an appeals system for handling complaints is an essential ingredient of due process," Mr. Swankin discussed recent activities of various institutions and their end products, such as the "National Policy on Standards for the United States," OMB Circular A–119, the *ASME* v. *Hydrolevel* decision of the U.S. Supreme Court (456 U.S. 556, 102 S. Ct. 1935 (1982)), the FTC Proposed Trade Regulation Rule Governing Standards and Certification (43 FR 57269, December 7, 1978), the provisions contained in the Presiding Officers Report on the above FTC issue (16 CFR Part 457, Public Record 215–61, June 1983), the laboratory accreditation criteria of the American Association for Laboratory Accreditation (AALA) and the National Voluntary Laboratory Accreditation Program (NVLAP) of the National Bureau of Standards, Guides 25 and 40 of the International Organization for Standardization (ISO), and the voluntary standard ASTM E–548 (TR 116–123).

Mr. Swankin also suggested specific criteria to be used and the language which should be incorporated in any OSHA rule (TR 123–125, 144, 146–148). In summary, Mr. Swankin urged:

> * * * it behooves OSHA to insure that its final rule recognizes the need for any of these organizations that seek recognition to assure full due process and, in particular, to assure adequate complaint mechanisms. (TR 145)

Subsequent comments by NEMA, UL, FMRC and ETL during the informal public hearing were generally positive ((TR 290, 445, 562, 563, 593). An additional 30 day period was given after the close of the hearing for additional comments on dispute handling requirements, and any alternative methods of appeals handling (49 FR 47049). There were five post-hearing comments submitted on this topic. They generally agreed with the due process concept proposed by Mr. Swankin (EXs 31, 32, 33, 37 and 38).

OSHA has determined that Mr. Swankin's suggestion is consistent with the purposes of this final rule, and will significantly contribute to its effectiveness. Therefore, the Agency has incorporated the requirement that NRTLs have effective procedures for complaint and dispute settlement within the new NRTL definition.

The dispute/complaint resolution system actually used by each NRTL must be fair and reasonable, but the exact design and operation of the system is being left to each testing laboratory to determine. As mentioned above, specific criteria which might be used by NRTLs have been described in Mr. Swankin's testimony, and in the exhibits he submitted to the record.

f. *"Third-Party Certification" Inappropriate.* The beginning of the NRTL definition reads:

> The term "nationally recognized testing laboratory" (NRTL) means an organization which is recognized by OSHA in accordance with Appendix A of this section and which tests for safety, and lists or labels or accepts, equipment or materials and which meets all of the following criteria:

This new phrasing replaces the beginning of the proposed definition of "Qualified testing laboratory," which would have required that the laboratory be the "validating laboratory of a third-party certification program recognized under Part 1936 of this Title * * *"[12]

The proposed phrasing was consistent with the regulatory scheme which formed the basis of the March 6, 1984, proposal. That scheme was based on the adoption of third-party certification procedures to handle the fire/electrical safety testing requirements. In that proposal, OSHA stated that it had "categorically classified all UL, FM, testing laboratory, and 'nationally recognized testing laboratory' terms and requirements as having been third-party certification requirements under its safety standards" (49 FR 8329, col. 3).

This classification was being applied across the board to the various testing-related provisions in 29 CFR Part 1910 which were included in the proposal. The proposed definition of "Qualified testing laboratory" was developed to reflect this determination.

The written record developed as the result of the March 6, 1984 proposal contains only one substantive challenge to the Agency's intended "classification" action described above. Harvey Hubbell, Incorporated, a manufacturer of electrical products, stated:

> On page 8329 there is the statement that OSHA has "categorically classified all UL, FM, testing laboratory and 'nationally recognized testing laboratory' terms and requirements as having been third party certification requirements". . . The "categorical classification" seems to be an arbitrary action by OSHA. (EX 8–23, pg. 3)

In support of its claim, the firm explained its qualifications and intent:

> Hubbell has been in business since 1888 and it has correspondence in its files indicating a relationship with Underwriters Laboratory (UL) since 1907. As a result of this long experience in working with UL, we have become familiar with the process and we feel competent to comment on the OSHA proposal. We are particularly interested in the effect of the [proposal] on Subpart S of Part 1910, and our comments should be construed as being limited to the effect of the proposed rule on this Subpart. (EX 8–23, pg. 1)

After carefully reviewing the entire record of this proceeding, and as a result of its recent reexamination of the many testing-related provisions proposed for revision, OSHA has concluded that the "third-party certification" claim it made in the proposal was incorrect. There exists no clear pattern, either in the record or in the Part 1910 standards themselves, which indicates that the affected workplace equipment and materials must be certified (as opposed to tested) for safety.

Instead, the Agency now believes the product safety testing requirements already contained in the standards in question to be comparatively simple. As indicated in each of the 23 standards provisions included in the final rule, employers may use only equipment and materials which have been tested successfully as conforming to the NEC, to nationally recognized standards, to Federal regulations, or to other NFPA codes and related standards. For such products to be acceptable, this testing must have been conducted by an appropriate safety testing organization, i.e., a "nationally recognized testing

[12] See footnote 5 above (or proposed § 1910.399(a)(99a), 49 FR 8353, col. 2).

laboratory," and may be evidenced by that organization's identifying mark, label or listing.[13] In other words, re-examination of the provisions in question supports the view that approval contemplated third-party testing as opposed to third-party certification.

Since the third-party certification linkage is not being established for the 23 standards provisions covered in this final rule, the Agency has determined that the proposed certification-related terminology is clearly inappropriate for the new NRTL definition. Therefore, it will not be used.

Instead, the text at the beginning of the NRTL definition reflects the sense of the definition of "Acceptable" currently in the Part 1910 standards. For example, § 1910.399(a)(1) states:

> (1) Acceptable. An installation or equipment is acceptable to the Assistant Secretary of Labor, and approved within the meaning of this Subpart S: (i) If it is accepted, or certified, or listed, or labeled, or otherwise determined to be safe by a nationally recognized testing laboratory. . .

Clearly, the new NRTL definition tracks the term "acceptable" by simply characterizing the laboratory organization as one which tests for safety, and which then lists, labels or accepts the equipment and materials.[14]

g. *Requirement for OSHA Recognition.* The proposed rule intended to revise completely OSHA's unimplemented regulation at 29 CFR Part 1907, "Accreditation of Testing Laboratories." Major portions of Part 1907 were to be revised and redesignated as part of a proposed new Part 1936; other provisions of questionable utility were to be revoked.

Part 1907 was never implemented by OSHA, and was proposed for revocation on June 3, 1974 (although no actual revocation ever took place). Part 1907 contains the criteria and procedures which OSHA intended to use to "accredit" independent testing laboratories. The accredited laboratories were to test and certify equipment which is required to be "acceptable" or "approved" under OSHA safety standards.

A new 29 CFR Part 1936—entitled: "OSHA Recognition of Testing-Related Agencies and Certification Programs"—proposed a new framework for recognition by OSHA of enterprises it considered competent to perform activities related to the testing or certification requirements contained in the Part 1910 safety standards.

It would have included considerations related to (1) laboratory accreditation agencies and accredited laboratories, and (2) product certification systems, including both manufacturer self-certification and third-party certification programs.

As stated earlier, OSHA believes that, based on a thorough review of the public comments and testimony in the record, a "comprehensive overhaul" which it originally proposed need not be undertaken at this time. OSHA therefore is not creating a new 29 CFR Part 1936 in this rulemaking, and is dropping for the present that proposed framework for recognition by OSHA.

At this time, it is establishing in its place a mandatory requirement for OSHA recognition, using approval procedures similar to those in Part 1907.

The Agency believes that its definition of NRTL, in order to be most effective, should address only the minimum necessary criteria which must be met by such laboratories. OSHA's definition provides the means of identifying those laboratories which are properly engaged in the required testing and whose activities meet OSHA's requirements, and thereby should be acceptable to employers, workers, OSHA and other safety-related personnel. OSHA believes that a reliable means must be provided in the absence of a new Part 1936 by which these laboratories can be recognized as meeting these criteria, and by which the concerned public can be informed of the results of a recognition process. OSHA has determined therefore that it will fill this role at this time (TR 528–529). OSHA will evaluate this mandatory process with an eye to future rulemaking that will look for alternatives to a major OSHA involvement.

It should be noted that under all of the schemes under consideration since before the promulgation of Part 1907 in 1973, some element of OSHA recognition or accreditation has always been included. See for example, 29 CFR 1907.1(b): proposed 29 CFR 1936.100, 49 FR 8356. The proposed definition of qualified testing laboratory also required that it be "recognized under Part 1936." The Agency believes that a requirement for universal OSHA recognition of these testing laboratories is necessary and appropriate.

Although the issue of OSHA recognition was extremely controversial and was opposed by many participants (see, for example, EX 8–36C and TR 530), a thorough review of this rulemaking record has led OSHA to conclude that it is necessary to impose an "OSHA-recognition" requirement upon these laboratories as part of the NRTL definition itself.

The Agency even considered allowing testing laboratories to designate themselves as nationally recognized testing laboratories, certifying in effect that they meet all of the elements of the definition (EX 61). Various comments from the public expressed concern that incompetent laboratories might avail themselves of this process and thereby diminish workplace safety while lending a false sense of security to employers who bought materials or equipment labeled by such laboratories. It would be very difficult for employers under such a scheme to have any idea as to whether the equipment they purchase would be acceptable to OSHA. Moreover, it would be difficult for OSHA compliance personnel in the field to easily determine if a given piece of equipment had been approved by a legitimate laboratory which might be many miles or continents away. The spectre of unfair competition between "legitimate" and "illegitimate" or incompetent laboratories was also raised. Finally, some felt that a mandatory recognition process was the only way to undo the preferential treatment that the OSHA standards unwittingly may have accorded UL and FM.

The March 4, 1984, proposal was wide-ranging in scope: it set up procedures for all aspects of product/equipment safety testing, proposing procedures for OSHA recognition of laboratory accrediting agencies, requiring all validating laboratories in third-party certification programs to be accredited by an OSHA-recognized laboratory accreditation system within six years, and also setting up procedures for manufacturer self-certification. The proposal also addressed other issues that are relevant to the testing field in general, but are not relevant to the issue at hand, i.e., providing a mechanism whereby competent laboratories can approve equipment or material already required by OSHA standards to be acceptable. In fact, some topics covered by the proposal (e.g., manufacturer self-certification) are not presently required by any existing OSHA standard; they would have been triggered only if and when a substantive regulation would require manufacturer self-certification. In other words, the proposal attempted to set up a comprehensive framework

---

[13] Only two minor exceptions are allowed. Refer to any definition of "Acceptable"—29 CFR 1910.399(a)(1), for example—for the details of these two exceptions.

[14] These are the activities which have been characteristic of product safety testing laboratories such as UL and FMRC (now being deleted from the definition of "Acceptable" and from other standards). The Agency anticipates that these activities will continue to be performed in the future by whichever testing laboratories meet the requirements of its new NRTL definition.

for numerous aspects of product and equipment safety testing, ambitious but far more comprehensive than necessary to resolve any problems posed by the lawsuit or the requirements of OSHA standards presently in effect.

The main thrust of the proposal was setting up a framework to recognize accrediting agencies, who would in turn accredit third-party certifiers. OSHA subsequently determined that the standards in question contemplate third-party testing, rather than requiring third-party certification. FMRC and others expressed concern that the proposal would result in a diminution of the safety afforded by the present system. To assure that a uniform high level of performance in safety testing be maintained, FMRC urged OSHA "to modify the proposal so that responsibility for the recognition or accreditation of testing laboratories and certification programs will remain vested with the federal government" (TR 423, 530, 559–560). FMRC stated:

> It is our view that rule making, to delegate this activity to private sector agencies, should not be proposed until it is clear that such agencies are fully prepared to carry out the entire scope of the activity required. (TR 530)

This is not to say that presently existing laboratory accrediting systems would not be capable of performing satisfactorily in the proposed regulatory scheme. However, it must be noted that no private sector accrediting system is presently recognized by OSHA. Moreover, since OSHA subsequently determined that the standards in question contemplate third-party testing rather than third-party certification, it is not necessary to resolve all of these issues at this time.

OSHA is adopting therefore a streamlined approach that will provide for recognition of testing laboratories listing or approving certain workplace equipment and materials as required by OSHA standards (see TR 565). This approach has substantial support in the record (e.g., EXs 2–7, 2–8, 5–25, 5–31, 5–32). OSHA intends to monitor the program being put into place today and to look for alternatives to OSHA recognition of testing laboratories. One such alternative would be to amend the pertinent OSHA standards to require third-party certification, and to engage in further investigation concerning the ability of other enterprises to carry out this activity. In this regard, there are a number of unanswered questions that need to be studied (see, e.g., EX. 8–26, p. 8).

D. *Procedures for Obtaining OSHA Recognition*—1. Accepting Applications for Recognition. OSHA has determined, on the basis of its review of the entire record, that a testing laboratory which wants to function as a "nationally recognized testing laboratory" under the OSHA standards must obtain recognition from OSHA that the laboratory satisfies the criterial for an NRTL. This recognition will be reflected in a letter from OSHA. Recognition will be granted only with the respect to those items of equipment which the application requested and the review under Appendix A to this section clearly supports. In the event that the application is acceptable as to some items of equipment or material but does not presently meet the criteria for other requested areas of recognition, the Agency may issue a letter of recognition limited to those areas where the applicant has demonstrated that it meets the criteria. Opportunities for public input in this review process are also provided.

Appendix A to this section, which establishes the procedures for obtaining OSHA recognition, is based primarily on Subpart D of proposed Part 1936 (49 FR 8337, March 6, 1984). The procedures adopted in this final rule focus on the key elements necessary to assure a reasonable process, which is fair to the applicants for recognition and to others whose safety is affected by the decisions made. More detailed procedures may develop as OSHA and the regulated community gain experience with implementation of these provisions.

2. Procedure

Certain highlights of the procedure for recognition in Appendix A are discussed below.

Any testing organization is allowed to apply to OSHA for recognition. At the request of the Office of the U.S. Trade Representative, however, some restrictions may be placed on foreign entities in cases where the foreign government does not recognize U.S. testing laboratories (EX 8–39).

Like the proposal, the final rule requires that the application contain sufficient detail, including the scope of the recognition which is sought. No specific form is required for the application, as long as the necessary information is submitted. Applications which are submitted will be accepted and acknowledged by OSHA in writing.

The proposed procedure in Subpart D of Part 1936 contained several points, such as § 1936.121(d)(5) (ii) and (iii), where action would have been automatically discontinued by the Agency if the applicant unreasonably delayed in providing requested data and information. Similar provisions are included in this final rule; for example, in paragraph I.A.4.b. of Appendix A. The applicant, not the Agency, bears the responsibility for the completeness of the application. This will also be reflected in Agency procedural directives, as appropriate. This is necessary so that the Agency can deal expeditiously with fully completed applications and not waste resources on incomplete applications.

New Appendix A includes the following provisions:

- On-site review of testing facilities, and administrative and technical practices.
- Technically qualified experts to be involved.
- Written reports of all reviews available to applicant.

These provisions were originally included as part of proposed § 1936.121.

A decision by Agency staff to proceed with a positive finding will be sent to the Assistant Secretary for ratification of the staff work and conclusions (paragraph I.B.2., Appendix A).

At this point a new process is added to the evaluation procedure under Appendix A. The public is given an opportunity, after **Federal Register** notice, to review and comment upon the entire application which has been preliminarily acted upon by the Assistant Secretary. This is a much more open procedure than had been envisioned in the original Part 1907. This procedure with increased public participation was proposed as part of § 1936.121 and there were no objections.

During a 60-day period, any member of the public may supply written comments concerning the applicant's fulfillment of the criteria for recognition. At this point, while the application has been "accepted" by the Assistant Secretary, it has not received any official sanction, nor has there been any interim or temporary recognition given to the applicant.

Assuming smooth processing through the public comment period, with no need to do follow-up work concerning the application, the Assistant Secretary will proceed to make a final decision and, after giving notice in the **Federal Register**, initiate a five-year recognition period.

There could be, on occasion, significant objection raised to the applicant's proposal, either from the Agency staff or from the public during the public comment period. If so, special additional reviews, a reopening of the public record for more documentary submissions, or the convening of an informal hearing may be undertaken. This will lead ultimately to a decision on

every application, using a procedure which allows every opportunity for each applicant to complete the application process successfully, or know clearly why the application process was unsuccessful.

Appendix A also includes a section on special terms and conditions, including details on:

- Letter of recognition
- Periods of recognition
- Consistency in NRTL operations
- Accurate and controlled publicity
- Handling test method changes

A careful reading of the text of Appendix A will show each of these various factors built into OSHA's rule. Additionally, the remainder of the rule covers other aspects of recognition such as expansions of recognitions, renewals, and possible revocations of recognition which are all treated in a similar manner to those in proposed Part 1936.

3. Temporary Recognition of Certain NRTLs.

The issue of how to treat Underwriters Laboratories (UL) and Factory Mutual Research Corporation (FMRC) has been carefully considered. In many people's opinion, both laboratories have been recognized by OSHA for many years as the very definition of nationally recognized testing laboratories. The Agency finds no support in the record for forcing either of these two organizations to apply initially for recognition. If these two organizations were forced to apply immediately for recognition, it might cause undue disruption and gaps in employee protection during the OSHA recognition process. There would be a hiatus in the ability of employers to comply with certain OSHA standards that require the use of approved equipment. Ongoing approval activity would be disrupted if OSHA were not to accord temporary recognition to these two laboratories. Moreover, the processing of recognition applications from heretofore unrecognized laboratories might be unduly delayed. However, it might be inappropriate to "grandfather" these laboratories indefinitely. In fact, neither of these organizations requested permanent recognition (TR 427–428, 531). Therefore, the Agency has included in Appendix A, at I.C.6., a section entitled, "Temporary Recognition of Certain NRTLs." This section would establish temporary recognition of UL and FM for a period of five years beginning with the effective date of the final rule. Five years was selected since that is the period of OSHA initial recognition for other laboratories which seek OSHA recognition. At the end of the five-year period, the two temporarily recognized laboratories will need to apply for renewal of OSHA recognition, as will all other recognized laboratories.

III. Detailed Summary of CFR Changes

A. Subpart A—General

A new § 1910.7, is being added to Subpart A of Part 1910 to provide a single definition of "nationally recognized testing laboratory" as it applies to Part 1910 provisions. The definition parallels that which was proposed for "Qualified fire testing laboratory" (49 FR 8351, col. 3), and "Qualified electrical testing laboratory" (49 FR 8353, col. 1), amended as has been described previously.

Paragraph (a) restricts use of this definition to those provisions in Part 1910 which use the term "nationally recognized testing laboratory."

The four subparagraphs in the definition in § 1910.7(b) provide four separate criteria, all of which must be met in order that any organization may be considered a "nationally recognized testing laboratory."

Paragraphs (c) and (d) define appropriate test standards and paragraph (e) and Appendix A provide a method for a testing organization to be considered an NRTL. The method provides that a testing laboratory must request that OSHA review its operations against the NRTL definitional criteria.

Appendix A to § 1910.7

This new appendix implements the method provided in § 1910.7. Entitled: "OSHA Recognition Process for Nationally Recognized Testing Laboratories," this Appendix establishes procedures for use by testing organizations and OSHA.

The Appendix consists of two parts:

- Procedures for initial OSHA recognition
- Supplementary procedures

Part I—*Procedures for Initial OSHA Recognition*—consists of three sections:

- Applications
- Review and Decision Process
- Terms and Conditions of Recognition

Section A. Applications addresses eligibility, content of application, filing office location and amendments.

In particular, paragraph A.1. provides eligibility for this procedure to any testing organization believing it fulfills the definition of NRTL in § 1910.7, while providing a possible ineligibility for NRTLs in nations whose practices in this regard are not similar to those incorporated in the text of this standard and Appendix.

Paragraph A.2. allows eligible applicants to determine the content and scope of their application, as long as it is sufficient to allow the Assistant Secretary to make an informed decision of each applicant's case. In other words, it establishes the minimum information which must be included. Also, no fixed Federal application form will be required.

Paragraphs A.3. and A.4. provide specific administrative details for use by the applicant.

Section B. Review and decision process details the steps to be followed by the Assistant Secretary and the applicant. It consists of seven paragraphs:

- Acceptance and on-site review
- Positive finding by staff
- Negative finding by staff
- Preliminary finding by Assistant Secretary
- Public review and comment period
- Action after public comment
- Action after public objection

Paragraph B.1. covers acceptance and on-site review requirements. In particular, subparagraphs B.1.b. and c. establish that an on-site review of the applicant's administrative and testing practices and the testing facilities themselves will be conducted. A written report may be prepared, as well as documentation of all standards used in the process, which will be made available to the applicant.

Paragraph B.2. provides that OSHA conduct a review of the application, supporting documents, on-site review reports to determine whether the applicant appears to meet the requirement for recognition. If positive, a written recommendation for approval shall be submitted by OSHA staff to the Assistant Secretary.

Paragraph B.3. provides, in the case of a negative finding, that no recommendation be made to the Assistant Secretary at that occasion. Instead, responsible OSHA staff will provide the applicant with a listing of shortcomings, and provide a reasonable time to respond to this negative finding. The applicant may submit a revised application, or make a request, that the application be processed despite the negative staff finding. This revision procedure is limited to one use per application, in the interest of expediting the procedure. If more revisions are necessary, the application must be refiled.

Paragraph B.4. provides for a preliminary finding by the Assistant Secretary based on the results of paragraphs B.2. and B.3. Each preliminary finding is a straightforward yes or no decision. Documentation is not

required of the Assistant Secretary, except that notification will be made in writing to the applicant. Notice will also be published in the Federal Register; no status accrues to any applicant by such publication.

Paragraph B.5. establishes a public review and comment period of 60 days on the question of whether the applicant has fulfilled the requirements for recognition. All materials submitted or developed during this procedure under Appendix A to § 1910.7 will be available for public inspection and copying. Any member of the public may provide comments in writing during the review period.

Paragraph B.6. provides for a final decision to be made by the Assistant Secretary on recognition of the applicant if there are no serious objections or substantive claims contrary to the preliminary finding that was published. The published preliminary finding by the Assistant Secretary may have been positive or negative, and, therefore, a "positive recognition" or a "denial" could be forthcoming in the final decision in subparagraph B.6.a. This final decision shall be based on all materials provided through the preliminary finding by the Assistant Secretary, supplemented by the information received through the public review and comment period. A copy will be provided to the applicant and published in the Federal Register.

Subparagraph B.6.c. states that, at this point, Agency action is complete and that there is no review available in the Department to the Assistant Secretary's final decision.

Paragraph B.7. covers what will be done if serious objections or substantial claims contrary to the preliminary finding have been received during the public review and comment period. The Assistant Secretary has the authority to assign or engage Federal, State or contract personnel to initiate special reviews of information in the public comment record which require resolution. Each special review will be included in the public record, also. Based on the results, the Assistant Secretary will either reopen the written comment period for further comments, or convene an informal hearing for the same purpose. (While this informal hearing would be conducted under applicable OSHA procedures for similar hearings, the discretion as to its necessity and utility remains with the Assistant Secretary at all times.) Once this extended public review and comment period or informal hearing phase is complete, a final decision will be made by the Assistant Secretary. The remaining procedures track the procedure established in subparagraphs B.6.a., b., and c. above.

Section C. Terms and Conditions of Recognition provides what will be the terms and conditions of every recognition. There will be a written letter of recognition containing details of the scope, the specific equipment and materials, and any additional special conditions; and a period of validity, usually five years; and a requirement for continuous conformity. This section also addresses questions related to proper advertising to avoid misleading employers, vendors, or workers themselves as to the meaning of "OSHA-recognized NRTL." The fifth paragraph provides for temporary recognition of UL and FMRC.

Part II—*Supplementary Procedures*—consists of five sections:

- Test standard changes;
- Expansion of current recognition;
- Renewal of OSHA recognition;
- Voluntary termination by laboratory;
- Revocation of recognition for cause by OSHA.

Section A. Test standard changes requires the already recognized testing laboratory to notify the Assistant Secretary of any changes they intend to make in the test standards that are being used, certify that the revised test standard will be at least as effective as the one for which they received aproval, and provide data to support this conclusion. However, it is not OSHA's intention to require the NRTL to notify it of a change in ANSI or ASTM test standards. In general, currently designated ANSI safety-designated product standards or ASTM test standards used for evaluation of products or materials as well as future revisions to test standards in this category are presumed to be acceptable to OSHA. OSHA does, however, retain the right to specifically disallow the use of any one of these test standards by its recognized laboratories if this use might compromise or diminish employee safety.

This section does not require prior OSHA approval before a recognized NRTL may use a new test standard. Laboratories that have already been recognized by OSHA will have already undergone close scrutiny of all aspects of their operation as it relates to the testing of specified equipment or materials. Therefore, OSHA sees no need to delay the implementation of a new test standard. The Agency does reserve the right, however, after evaluating the new test standard, to disapprove it if it will not provide a substantially equivalent level of safety to that obtained from the prior test standard. In the event that OSHA disapproves the new test standard, the Agency will initiate proceedings to discontinue that aspect of the recognition affected by the modification.

Section B. Expansion of current recognition addresses the questions of eligibility and procedure. Eligibility is limited only to currently OSHA-recognized NRTLs under paragraph B.1.; the procedure followed will be that in I.B., except that on-site reviews may not be necessary in many cases.

Section C. Renewal of OSHA recognition also consists of eligibility and procedural items. A renewal request must be filed within one year and not less than nine months before the expiration date of the current recognition (paragraph 2.a.). A renewal visit will be performed only at OSHA's discretion. However, should the Agency receive, during the comment period specific and substantial evidence indicating the need for them, the need for these on-site reviews will be reevaluated (paragraph 2.b.). Properly filed renewal requests will ensure that the current recognition will not expire until a final decision has been made by OSHA.

Renewal procedures are both necessary and appropriate to assure continuing compliance with the standard and to guard against a diminution of worker safety. Therefore, NRTLs wishing to continue their recognition must make timely application for renewal. However, after a NRTL has successfuly obtained the renewal of its recognition once, subsequent renewals may be obtained by certifying that the laboratory is in continuing compliance with the terms of its letter of recognition as well as 29 CFR 1910.7 (paragraph 2.d.). It is felt that this provision will provide some relief from any possible burden that might be caused by forcing the NRTL to go through the recognition process again and again. After a 10-year track record (original recognition and one five year renewal), it is felt that the Agency would have enough experience with a particular laboratory to make laboratory self-certification of continuing compliance acceptable.

Under certain circumstances, a recognized laboratory would not have to go through the procedure of submitting a renewal application and would merely be required to certify its continuing compliance with the standard and its letter of recognition (paragraph 3). This alternative procedure would apply where OSHA makes a finding that there is a sufficient basis for continuing the

recognition and good cause to dispense with the renewal procedure.

Section D. Voluntary termination provides a procedure to end a recognition when an OSHA-recognized NRTL decides to discontinue participation under Appendix A.

Section E. Revocation by OSHA is provided to use when OSHA, for cause, decides to withdraw current recognition. It addresses potential causes for revocation action, procedures which must be followed, special factors involved in making the final decision, and the public announcement.

In paragraph E.1., three potential causes are described: failure substantially to satisfy § 1910.7 and Appendix A requirements; poor performance of testing requirements which are described in its letter of recognition; or misrepresentation in any documentation used under this procedure or misrepresentation of the scope or conditions of its recognition. The rule allows for complete or partial revocation decisions.

Paragraph E.2. requires OSHA to identify alleged deficiencies and give a reasonable period to the OSHA-recognized NRTL to reconcile or correct them. If the NRTL fails to take acceptable action, OSHA will propose to revoke, in 60 days, in a letter directed to the recognized NRTL but not otherwise publicized. The recognized NRTL will be expected to correct the deficiencies or request a hearing in writing. Parties to the hearing would be OSHA, the recognized NRTL, and such other parties as OSHA may determine could be useful to the purpose of the proceeding.

Under paragraph E.3., the Administrative Law Judge (ALJ) shall issue a decision based on the entirety of the record, with the burden of proof on OSHA to prove why recognition should be revoked. Exceptions to the ALJ decision will be accepted for 20 days. If no exceptions are filed, this will become the final decision of the Assistant Secretary. If exceptions are filed, the ALJ decision, the exceptions filed, and the entire file will be forwarded to the Assistant Secretary for final decision. Additional administrative procedures related to the final decision, discussed above, are also included here to complete the procedure.

B. Subpart D—Walking-Working Surfaces

§ 1910.28 Safety requirements for scaffolding is revised to delete the names of "Underwriters' Laboratories" and "Factory Mutual Engineering Corp." from four paragraphs—(f)(2), (g)(3), (h)(2) and (i)(1)—in the standard. Inserted in their stead is the term "nationally recognized testing laboratory," which is defined at § 1910.7 in Subpart A—General. Additional text provides a cross-reference to the Subpart A definition for the user.

C. Subpart E—Means of Egress

§ 1910.35 Definitions is amended in paragraph (h), Approved, to add a cross-reference to the definition of Listed located in Subpart L—Fire Protection, and Nationally recognized testing laboratory in Subpart A. The definition of Approved remains unchanged from the current text in the CFR. The text references are included for the purpose of providing consistency throughout the safety standards in Part 1910 as regards these requirements.

D. Subpart H—Hazardous Materials

A revision is being made to Subpart H which consists of 10 separate amendments being made to seven sections. Each amendment deletes the names of "Underwriters' Laboratories, Inc." and/or "Factory Mutual Engineering Corp." (or "Factory Mutual Research Corporation") from the standards involved.

Only four provisions had been indicated in the original proposal. However, all 10 include specific laboratory name references which are the subject of this proceeding and therefore are being amended in this final rule. In each instance, additional text provides cross-references to related terms in Part 1910 for the user.

§ 1910.103 Hydrogen is revised to delete the testing laboratory names from paragraph (a)(1)(ii) and to provide a cross-reference to the definition of Nationally recognized testing laboratory.

§ 1910.106 Flammable and combustible liquids is similarly changed in paragraph (a)(35).

§ 1910.107 Spray finishing using flammable and combustible materials is revised to delete the testing laboratory names from paragraph (a)(8) and to provide a cross-reference to the definition of Nationally recognized testing laboratory.

§ 1910.108 Dip tanks containing flammable or combustible liquids is revised to change paragraph (a)(3) similarly.

§ 1910.109 Explosives and blasting agents is revised in paragraph (d)(2)(iii)(*a*) to delete the testing laboratory names, to insert in their stead the "nationally recognized testing laboratory" term, and to insert a cross-reference to the definitions of Listed in Subpart L—Fire Protection, and the NRTL in Subpart A.

§ 1910.110 Storage and handling of liquefied petroleum gases is revised in four separate locations.

In § 1910.110(a)(14), the testing laboratory names are deleted from the "Approved" definition, and a cross-reference to the definition of NRTL in Subpart A is included.

In §§ 1910.110(b)(2)(iii), 1910.110(c)(5)(i)(*g*)(*1*) and 1910.110(f)(5)(iv), the testing laboratory names, or the name of UL alone, have been deleted from the text and the NRTL term substituted instead, with a cross-reference to the NRTL definition in Subpart A.

§ 1910.111 Storage and handling of anhydrous ammonia is revised in paragraph (b)(1)(ii) to delete the illustrative example, which included the names of UL and FMRC, leaving simply the NRTL term. A new paragraph (b)(1)(vi) referencing the NRTL definition in Subpart A has been added.

E. Subpart L—Fire Protection

§ 1910.155 Scope, application and definitions applicable to this subpart is revised in paragraph (c)(3) to delete the illustrative example of "such as, but not limited to, Underwriter's Laboratories, Inc. or the Factory Mutual System" and to use only the already existing "nationally recognized testing laboratory" (NRTL) term. A new paragraph (c)(3)(iv)(E) has been added to refer the user to the NRTL definition being included in Subpart A—General.

F. Subpart N—Materials Handling and Storage

§ 1910.178 Powered industrial trucks is revised in paragraph (a)(7) to delete the example, which included two testing laboratory names, and to use only the "nationally recognized testing laboratory" (NRTL) term. A cross-reference is included to refer the user to the definition of Listed in Subpart L, and the NRTL in Subpart A.

In addition to revising paragraph (a)(7), revision is being made to two other sections in Subpart N. Each revision deletes the testing laboratory names from these standards.

§ 1910.180 Crawler, locomotive and truck cranes is revised in paragraph (i)(4)(i) to delete the names of "Underwriters Laboratories" and "Factory Mutual Laboratories" from the text, leaving the qualification of "approved" as the operative requirement, and to add a cross-reference to the definition of Approved in Subpart L. The term "or equivalent" has been deleted as redundant since the names of specific laboratories have been removed.

§ 1910.181 Derricks is revised similarly in paragraph (j)(4)(i).

G. Subpart Q—Welding, Cutting, and Brazing

§ 1910.251 Definitions is revised in paragraph (b) to delete the illustrative example, which included the names of "Factory Mutual Engineering Corp." and "Underwriters' Laboratories, Inc.," and to use the already existing "Nationally recognized testing laboratory" (NRTL) term. Additional text refers the user to the definitions of Listed or NRTL in other subparts.

H. Subpart R—Special Industries

Revision is being made to two sections in Subpart R which had not been included in the March 6, 1984, proposal. Each revision will delete the testing laboratory names from these standards.

§ 1910.265 Sawmills is revised in paragraph (d)(2)(iv)(c) to delete the name of "Underwriters' Laboratories, Inc." from the text, leaving "approved" as the operational requirement, and to add new text referring the user to the definition of Approved in Subpart L.

§ 1910.268 Pulpwood logging is revised similarly in paragraphs (c)(4)(iii) and (iv), after deleting the names of "Underwriter's Laboratories" and "Factory Mutual Engineering Corp."

I. Subpart S—Electrical

§ 1910.399 Definitions applicable to this subpart is revised by the amendment of existing paragraph (a)(1).

"Acceptable" is revised to delete the illustrative example, which included the names of "Underwriters' Laboratories, Inc." and "Factory Mutual Engineering Corp." This leaves simply the NRTL term, with an added reference to the NRTL definition being provided in § 1910.7(b) in Subpart A—General. (Although § 1910.399(a)(1) is only partially revised, the entire text of the revised paragraph is being reprinted for the benefit of users of this document.)

IV. Regulatory Assessment

A. Regulatory Impact Assessment

1. Summary

In accordance with Executive Order No. 12291 (46 FR 13193, February 17, 1981), OSHA has assessed the potential economic impact of this final rule. OSHA has determined that this final rule is not a "major" action requiring a Regulatory Impact Analysis (RIA) because the annual cost of compliance would be between $167,000 and $235,000. In addition, OSHA has determined that this final rule would increase competition in the affected markets while maintaining the necessary level of employee safety. Thus, OSHA has concluded that this final rule does not require an RIA.

2. Data Sources

The primary data sources for this section are: the May 1985 Final Report by Eastern Research Group (ERG) entitled, "Supporting Analysis for Economic Impact Study of the Final Rule on Equipment Testing or Certification"; the Docket compiled in response to OSHA's January 4, 1983, Advance Notice of Proposed Rulemaking (ANPR) on the Accreditation of Testing Laboratories; the record compiled in response to OSHA's March 6, 1984, Notice of Proposed Rulemaking (NPRM) on the Safety Testing or Certification of Certain Workplace Equipment and Materials; the testimony from the September 25, 26, and October 1, 1984, public hearings on the NPRM; and the post-hearing comments submitted to the Docket.

3. Industry Profile

Those most significantly affected by this final rule are the following: (1) Employers and employees using products that OSHA requires to be tested for use in the workplace; (2) manufacturers of those products; and (3) domestic and foreign testing laboratories. This final rule does not impose any new requirements for product testing. It provides a mechanism in which various testing organizations can perform testing already required by OSHA safety standards by showing that they are NRTLs.

As this final rule is not concerned with whether any specific product testing requirement in Part 1910 is necessary, detailed information concerning the affected employers and employees is not needed.

The types of products that OSHA requires to be tested are items such as electrical wiring and equipment; valves and other equipment used in the handling of hazardous substances; equipment necessary for fire protection; and equipment necessary for motor vehicles used in hazardous work areas, etc. Generally, these requirements are based on requirements in the National Electric Code (NEC).

These products are manufactured by firms of all sizes and are sold in all types of markets. They are frequently used in situations other than those exclusively regulated by OSHA; e.g., electrical equipment must meet both OSHA requirements and, often, consumer product safety requirements as well as state and local building code requirements. In addition, manufacturers have products examined by testing laboratories in order to meet the demands of their product liability insurers as well as to improve the product.

Based on the ERG report, OSHA has estimated that the total projected value of products that will be tested for safety considerations would be approximately $20 billion to $30 billion, of which approximately $2 billion to $3 billion would be the value of products affected by OSHA standards.

An independent testing laboratory (e.g., Underwriters Laboratories, Inc. (UL), Factory Mutual Research Corporation (FMRC), Maryland Electrical Testing (MET), etc.) is a laboratory that is not affiliated with a manufacturer and is one that tests products for many different firms.

A profitmaking independent testing laboratory is one run as a typical profitmaking business, whereas a non-profit independent testing laboratory (government controlled or privately controlled) charges its clients only enough to cover expenses.

Based upon the ERG report, OSHA has estimated that in 1983 there were approximately 2,500 independent testing laboratories, of which 2,275 were profitmaking and 225 were non-profit. Total receipts for these laboratories were approximately $950 million, of which profitmaking laboratories received approximately $820 million, and non-profit laboratories received approximately $130 million.

Total employment in these independent laboratories was approximately 38,500. Most of these laboratories are very small entities—45 percent have four or fewer employees, and 85 percent have fewer than 20 employees. About 62 percent of these laboratories have annual revenues of less than $500,000.

Most of these small laboratories specialize in very specific types of tests and very specific products. Even the larger testing laboratories tend to have specialty areas and do not test every product category.

Only eight laboratories employ more than 250 workers, and of those, only three employ more than 1,000. These eight laboratories generated approximately 20 percent of the total testing laboratory revenues.

Both domestic and foreign testing laboratories may be affected by this final rule. The Canadian Standards Association (CSA) is the only foreign organization that has entered the American product testing market to any significant degree. Its program is

recognized by several state and local building code agencies.

4. Annual Market Projection

The market for product testing directly affected by the OSHA requirements has been estimated by OSHA, based upon the ERG report, to have total sales of between $70 million and $100 million. Of that total, $50 million goes to UL; $5 million to FMRC; between $10 million and $35 million to manufacturer-affiliated laboratories, and between $5 million and $10 million to independent testing laboratories.

As has been described, much of the product testing performed for OSHA-related purposes is also performed to comply with state and local building code requirements, as well as with product liability insurance demands.

Nevertheless, conformance by a testing laboratory with the criteria in the NRTL definition would probably lead that laboratory to claim that it thereby demonstrated the competence and capability required for such testing, and to attempt to obtain OSHA recognition as a nationally recognized testing laboratory. Obtaining such a status would then, in turn, improve that testing laboratory's ability to compete for the total yearly testing market business of $950 million.

Finally, this market also includes the testing of foreign manufactured products for safety. Based upon the ERG report, this foreign product share of the market is approximately $13 million of which UL receives approximately $12 million. No foreign testing laboratory or foreign manufacturer has submitted any testimony or comment concerning the ANPR or the NPRM, and OSHA has concluded that this final rule would not significantly affect them.

5. Current Regulatory Environment

OSHA has examined the existing regulatory environment from two perspectives. The first perspective is whether the intent of the Part 1910 provisions requiring product testing—ensuring that workers have safe equipment—has been met. The second perspective is the economic impact of the existing requirements.

In terms of the first issue, OSHA has found that the existing system has generated safe products and equipment. Thus, the safety intentions underlying the testing requirements in Part 1910 have been met.

From the manufacturer's point of view, the price of testing entails not only the direct testing service charges, but also the length of time taken by the testing process. In other words, the time spent by the manufacturer waiting for his product to be tested is time during which the product is not being sold and the manufacturer is not receiving the income necessary to offset the expenses of designing the product, establishing a production line, etc.

In addition to the time component, there is the issue of the actual fees charged by testing laboratories. OSHA has determined that within the likely range of these fees, the manufacturer demand for testing services is highly competitive and the price inelastic because, in general, the price for testing services is a very small component of the overall costs of the product. Consequently, even a relatively large increase in testing fees would likely not cause a manufacturer to abandon the testing service. The current situation therefore contains little incentive for serious cost containment.

OSHA suggests it is likely that—as a byproduct of increasing competition in this market—the nationally recognized testing laboratories may find new and innovative ways of testing products more rapidly and at lower costs than is currently being done, without reducing the current level of workplace safety provided through OSHA's safety testing requirements.

6. The Regulatory Environment Expected from the Final Rule

The final rule has been designed to maintain the existing level of worker safety gained from product testing, in the most cost-effective manner.

This final rule will eliminate the specific references to UL and FMRC in Part 1910. OSHA has determined that allowing nationally recognized testing laboratories into this market will increase competition which, in turn, will likey result in reduction in both product testing fees and product testing time. Tha main beneficiaries will be the product manufacturers and nationally recognized testing laboratories. The primary groups that may be adversely affected are UL and FMRC.

In order to ensure a continuation of worker safety, OSHA has established a review and evaluation procedure for testing labs. Based on the ERG Report, OSHA estimates that between 25 and 50 testing labs will seek OSHA recognition as meeting the criteria with respect to testing equipment for compliance with Part 1910. Of these testing labs, about 10 will seek acceptance for a wide variety of products within a major testing discipline (e.g., electrical, thermal, etc.), whereas, between 15 and 40 will seek acceptance for a specialized subset of products within a major testing discipline. On average, the larger testing labs will test about 50 types of products, and the smaller testing labs will test about 10 types of products.

Based on the ERG Report, OSHA has determined that certain work practices of some testing labs would need to be upgraded before the testing lab would be recognized by OSHA. In particular, improvements in the follow-up testing procedures will be necessary. On that basis, OSHA estimates that the annual costs of this upgrading for all of these testing labs would be between $144,500 and $200,000. The costs of applying and being reviewed by OSHA would have an annual cost to these testing labs of between $23,000 and $34,700. Thus, the total annual costs to these testing labs would be between $167,500 and $234,700.

In addition, UL and FM would be required to apply to OSHA acceptance five years from the promulgation of this standard. This application would impose costs upon UL and FM. In particular, the requirements for making all test standards available to OSHA and the OSHA on-site investigation of these testing labs would be the two major components of these costs. OSHA estimates that the annual costs starting in five years to UL would be $23,000 and the annual costs starting in five years to FM would be $2,300.

Even though OSHA does not have a quantitative basis for demonstrating that this final rule will provide net benefits to the economy, OSHA does have a qualitative basis for its expectation that there will be net benefits. This regulation makes entry into product safety testing markets accessible to a larger number of testing organizations; however, no individual testing laboratory will have to participate. To the extent that any of these enterprises enter these markets, it is self-evident that they will do so with the expectation of making a profit or, at least, breaking even.

OSHA has also determined that the final rule will maintain the existing level of worker safety because only testing laboratories that are recognized by OSHA as being well qualified in that product area will be utilized to test products covered under Part 1910.

The interlocking relationships mentioned above, including activities of other federal agencies, state and local governments, the insurance industry, and the testing industry, when combined with the criteria in the NRTL definition and the OSHA recognition process provided in this final rule, will assure a high level of competence among nationally recognized testing laboratories. This arrangement provides sufficient assurance to the Agency that

worker safety will not be reduced by the definitional changes being made in this final rule.

Therefore, OSHA has determined that this final rule is a cost-effective solution to the problem of redressing any existing economic inequity in the product safety testing market while maintaining the existing high level of worker safety.

B. Regulatory Flexibility Analysis

Pursuant to the Regulatory Flexibility Act of 1980 (P.L. 96-353, 94 Stat. 1164 [5 U.S.C. 60 et seq.], the Assistant Secretary has evaluated the impact of the final rule and has concluded that it would not have a significant adverse impact upon a substantial number of small entities. Some 82 percent of the testing laboratories have yearly sales of less than $500,000. This final rule, by opening a market to small testing laboratories, would likely have a positive impact upon them. Thus, this final rule would not adversely affect any small entity and would likely benefit small entities.

C. International Trade Impacts

This rule does not impact heavily on international trade nor affect a trade-sensitive activity, although it may have a minor impact. Nevertheless, no comments were received from foreign governments, industries, or other interests on this issue during the public comment period.

D. Environmental Impact Assessment and Finding of No Significant Impact

This proposed rule and its major alternatives have been reviewed in accordance with the requirements of the National Environmental Policy Act (NEPA) of 1969 (42 U.S.C. 4321 *et seq.*), the regulations of the Council on Environmental Quality (CEQ) (40 CFR Part 1500), and OSHA's DOL NEPA procedures (29 CFR Part 11). As a result of this review, the Assistant Secretary for OSHA has determined that the proposed rule will have no significant environmental impact.

The final revisions to 29 CFR Part 1910—Deletion of Specific Testing Laboratory Names and Definition of Nationally Recognized Testing Laboratory—focus on changes in language, definition, and format of the standard. These revisions as such do not impact on air, water, or soil quality, on plant or animal life, or on the use of land or energy, or other aspects of the environment. Moreover, as safety standards these revisions can be categorized as excluded actions according to the DOL NEPA regulations (29 CFR 11.10(a)(1)).

V. OMB Approval Under the Paperwork Reduction Act

Appendix A to § 1910.7 of this section contains a collection of information as defined by OMB at 5 CFR Part 1320. The Appendix requires organizations, who want to be recognized by OSHA as a nationally recognized testing laboratory, to provide certain information to OSHA for evaluation. OMB has reviewed this collection and approved it. The approval number is OMB No. 1218-0147.

VI. State Plan States

The 25 States and territories with their own OSHA-approved occupational safety and health plans must adopt a comparable standard within six months of the effective date of the final rule. These States and territories are: Alaska, Arizona, California, Connecticut (for state and local government employees only), Hawaii, Indiana, Iowa, Kentucky, Maryland, Michigan, Minnesota, Nevada, New York (for State and local government employees only), New Mexico, North Carolina, Oregon, Puerto Rico, South Carolina, Tennessee, Utah, Vermont, Virginia, Virgin Islands, Washington, and Wyoming. Until such time as a comparable standard is promulgated, Federal OSHA will provide interim enforcement assistance, as appropriate.

List of Subjects in 29 CFR Parts 1907 and 1910

Laboratory, Occupational safety and health, Reporting and recordkeeping requirements, Safety, Testing.

Authority.

This document was prepared under the direction of John A. Pendergrass, Assistant Secretary of Labor for Occupational Safety and Health, U.S. Department of Labor, 200 Constitution Avenue, NW., Washington, DC 20210.

Accordingly, pursuant to section 6(b) of the Occupational Safety and Health Act of 1970, (84 Stat. 1593, 29 U.S.C. 655), Secretary of Labor's Order No. 9-83 (48 FR 35736), and 29 CFR Part 1911, 29 CFR Part 1910 is amended, as set forth below, effective June 13, 1988.

Signed at Washington, DC, this 5th day of April 1988.

John A. Pendergrass,

Assistant Secretary of Labor.

PART 1907—[REMOVED]

Part 1907 of Title 29 of the Code of Federal Regulations is hereby removed.

PART 1910—[AMENDED]

Effective June 13, 1988, 29 CFR Part 1910 is amended as follows:

Subpart A—General

1. The authority citation for Subpart A of Part 1910 is revised to read as follows:

Authority: Secs. 4, 6, 8, Occupational Safety and Health Act of 1970 (29 U.S.C. 653, 655, 657); Sec. 107, Contract Work Hours and Safety Standards Act (Construction Safety Act) (40 U.S.C. 333); Sec. 41, Longshoremen's and Harbor Workers' Compensation Act (33 U.S.C. 941); Secretary of Labor's Order No. 12-71 (36 FR 8754), 8-76 (41 FR 25059), or 9-83 (48 FR 35736), as applicable.

Sections 1910.6(a) and 1910.7 also issued under 29 CFR Part 1911.

2. A new § 1910.7 is added to 29 CFR, to read as follows:

§ 1910.7 Definition and requirements for a nationally recognized testing laboratory.

(a) *Application.* This section shall apply only when the term "nationally recognized testing laboratory" is used in other sections of this Part.

(b) *Laboratory requirements.* The term "nationally recognized testing laboratory" (NRTL) means an organization which is recognized by OSHA in accordance with Appendix A of this section and which tests for safety, and lists or labels or accepts, equipment or materials and which meets all of the following criteria:

(1) For each specified item of equipment or material to be listed, labeled or accepted, the NRTL has the capability (including proper testing equipment and facilities, trained staff, written testing procedures, and calibration and quality control programs) to perform:

(i) Testing and examining of equipment and materials for workplace safety purposes to determine conformance with appropriate test standards; or

(ii) Experimental testing and examining of equipment and materials for workplace safety purposes to determine conformance with appropriate test standards or performance in a specified manner.

(2) The NRTL shall provide, to the extent needed for the particular equipment or materials listed, labeled, or accepted, the following controls or services:

(i) Implements of control procedures for identifying the listed and labeled equipment or materials;

(ii) Inspects the run of production of such items at factories for product evaluation purposes to assure conformance with the test standards; and

(iii) Conducts field inspections to monitor and to assure the proper use of

its identifying mark or labels on products;

(3) The NRTL is completely independent of employers subject to the tested equipment requirements, and of any manufacturers or vendors of equipment or materials being tested for these purposes; and,

(4) The NRTL maintains effective procedures for:

(i) Producing creditable findings or reports that are objective and without bias; and

(ii) Handling complaints and disputes under a fair and reasonable system.

(c) *Test standards.* An "appropriate test standard" referred to in § 1910.7(b)(1) (i) and (ii) is a document which specifies the safety requirements for specific equipment or class of equipment and is:

(1) Recognized in the United States as a safety standard providing an adequate level of safety, and

(2) Compatible with and maintained current with periodic revisions of applicable national codes and installation standards, and

(3) Developed by a standards developing organization under a method providing for input and consideration of views of industry groups, experts, users, consumers, governmental authorities, and others having broad experience in the safety field involved, or

(4) In lieu of paragraphs (c) (1), (2), and (3), the standard is currently designated as an American National Standards Institute (ANSI) safety-designated product standard or an American Society for Testing and Materials (ASTM) test standard used for evaluation of products or materials.

(d) *Alternative test standard.* If a testing laboratory desires to use a test standard other than one allowed under paragraph (c) of this section, then the Assistant Secretary of Labor shall evaluate the proposed standard to determine that it provides an adequate level of safety before it is used.

(e) *Implementation.* A testing organization desiring recognition by OSHA as an NRTL shall request that OSHA evaluate its testing and control programs against the requirements in this section for any equipment or material it may specify. The recognition procedure shall be conducted in accordance with Appendix A to this section.

Subpart D—Walking-Working Surfaces

3. The authority citation for Subpart D of Part 1910 continues to read as follows:

Authority: Secs. 4, 6, 8, Occupational Safety and Health Act of 1970 (29 U.S.C. 653, 655, 657); Secretary of Labor's Order No. 12–71 (36 FR 8754), 8–76 (41 FR 25059), or 9–83 (48 FR 35736), as applicable.

Sections 1910.23, 1910.24, 1910.25, 1910.26 and 1910.28 are also issued under 29 CFR Part 1911.

4. In § 1910.28, paragraphs (f)(2) introductory text, (g)(3), (h)(2), and (i)(1) are revised to read as follows:

§ 1910.28 Safety requirements for scaffolding.

* * * * *

(f) * * *

(2) The scaffold shall be provided with hoisting machines that meet the requirements of a nationally recognized testing laboratory. Refer to § 1910.7 for definition of nationally recognized testing laboratory.

* * * * *

(g) * * *

(3) When hoisting machines are used on two-point suspension scaffolds, such machines shall be of a design tested and approved by a nationally recognized testing laboratory. Refer to § 1910.7 for definition of nationally recognized testing laboratory.

* * * * *

(h) * * *

(2) The hoisting machine and its supports shall be of a type tested and listed by a nationally recognized testing laboratory. Refer to § 1910.399(a)(77) for definition of listed, and § 1910.7 for nationally recognized testing laboratory.

* * * * *

(i) * * *

(1) The scaffolding, including power units or manually operated winches, shall be a type tested and listed by a nationally recognized testing laboratory. Refer to § 1910.399(a)(77) for definition of listed, and § 1910.7 for nationally recognized testing laboratory.

* * * * *

Subpart E—Means of Egress

5. The authority citation for Subpart E of Part 1910 continues to read as follows:

Authority: Secs. 4, 6, 8, Occupational Safety and Health Act of 1970 (29 U.S.C. 653, 655, 657); Secretary of Labor's Order No. 12–71 (36 FR 8754), 8–76 (41 FR 25059) or 9–83 (48 FR 35736), as applicable.

Sections 1910.35, .37, .38 and .40 are also issued under 29 CFR Part 1911.

6. In § 1910.35, paragraph (h) is revised to read as follows:

§ 1910.35 Definitions.

* * * * *

(h) *Approved.* For the purpose of this subpart approved shall mean listed or approved equipment by a nationally recognized testing laboratory. Refer to § 1910.155(c)(3)(iv)(A) for definition of listed, and § 1910.7 for nationally recognized testing laboratory.

* * * * *

Subpart H—Hazardous Materials

7. The authority citation for Subpart H of Part 1910 is revised to read as follows:

Authority: Secs. 4, 6, 8, Occupational Safety and Health Act of 1970 (29 U.S.C. 653, 655, 657); Secretary of Labor's Order No. 12–71 (36 FR 8754), 8–76 (41 FR 25059) or 9–83 (48 FR 35736), as applicable.

Sections 1910.103, .106, .107, .108, .109, .110 and .111 are also issued under 29 CFR Part 1911.

8. In § 1910.103, paragraph (a)(1)(ii) is revised to read as follows:

§ 1910.103 Hydrogen.

(a) * * *

(1) * * *

(ii) Approved—Means, unless otherwise indicated, listed or approved by a nationally recognized testing laboratory. Refer to § 1910.7 for definition of nationally recognized testing laboratory.

* * * * *

9. In § 1910.106, paragraph (a)(35) is revised to read as follows:

§ 1910.106 Flammable and combustible liquids.

(a) * * *

(35) Approved unless otherwise indicated, approved, or listed by a nationally recognized testing laboratory. Refer to § 1910.7 for definition of nationally recognized testing laboratory.

* * * * *

10. In § 1910.107, paragraph (a)(8) is revised to read as follows:

§ 1910.107 Spray finishing using flammable and combustible materials.

(a) * * *

(8) *Approved.* Shall mean approved and listed by a nationally recognized testing laboratory. Refer to § 1910.7 for definition of nationally recognized testing laboratory.

* * * * *

11. In § 1910.108, paragraph (a)(3) is revised to read as follows:

§ 1910.108 Dip tanks containing flammable or combustible liquids.

(a) * * *

(3) *Approved.* Unless otherwise indicated, approval or listing by a nationally recognized testing laboratory. Refer to § 1910.7 for definition of nationally recognized testing laboratory.

* * * * *

12. In § 1910.109, paragraph (d)(2)(iii)(*a*) is revised to read as follows:

§ 1910.109 Explosives and blasting agents.

* * * * *

(d) * * *

(2) * * *

(iii) * * *

(*a*) Only extinguishers listed or approved by a nationally recognized testing laboratory shall be deemed suitable for use on explosives-carrying vehicles. Refer to § 1910.155(c)(3)(iv)(A) for definition of listed, and § 1910.7 for nationally recognized testing laboratory.

* * * * *

13. In § 1910.110, paragraphs (a)(14), (b)(2)(iii), (c)(5)(i)(*g*)(*1*) and (f)(5)(iv) are revised to read as follows:

§ 1910.110 Storage and handling of liquified petroleum gases.

(a) * * *

(14) Approved—unless otherwise indicated, listing or approval by a nationally recognized testing laboratory. Refer to § 1910.7 for definition of nationally recognized testing laboratory.

* * * * *

(b) * * *

(2) * * *

(iii) In systems utilizing containers of over 2,000 gallons water capacity, each regulator, container valve, excess flow valve, gaging device, and relief valve installed on or at the container, shall have its correctness as to design, construction, and performance determined by listing by a nationally recognized testing laboratory. Refer to § 1910.7 for definition of nationally recognized testing laboratory.

* * * * *

(c) * * *

(5) * * *

(i) * * *

(*g*)(*1*) Hose shall be designed for a working pressure of at least 250 p.s.i.g. Hose and hose connections shall have their correctness as to design, construction and performance determined by listing by a nationally recognized testing laboratory. The hose length may exceed the length specified in paragraph (b)(9)(vii)(*b*) of this section, but shall be as short as practicable. Refer to § 1910.7 for definition of nationally recognized testing laboratory.

* * * * *

(f) * * *

(5) * * *

(iv) Each opening from such storage rooms to other parts of the building shall be protected by a 1½ hour (B) fire door listed by a nationally recognized testing laboratory. Refer to § 1910.7 for definition of nationally recognized testing laboratory.

* * * * *

14. In § 1910.111, paragraph (b)(1)(ii) is revised, and new paragraph (b)(1)(vi) added, to read as follows:

§ 1910.111 Storage and handling of anhydrous ammonia.

* * * * *

(b) * * *

(1) * * *

(ii) It is accepted, or certified, or listed, or labeled, or otherwise determined to be safe by a nationally recognized testing laboratory; or

* * * * *

(vi) For the purposes of this paragraph (b)(1), refer to § 1910.7 for definition of nationally recognized testing laboratory.

* * * * *

Subpart L—Fire Protection

15. The authority citation for Subpart L is revised to read as follows:

Authority: Secs. 4, 6, 8, Occupational Safety and Health Act of 1970 (29 U.S.C. 653, 655, 657); Secretary of Labor's Order No. 12–71 (36 FR 8754), 8–76 (41 FR 25059) or No. 9–83 (48 FR 35736), as applicable.

Sections 1910.155, 1910.156, 1910.160 and 1910.161 also issued under 29 CFR Part 1911.

16. In § 1910.155, paragraph (c)(3)(i) is revised, and new paragraph (c)(3)(iv)(E) is added, to read as follows:

§ 1910.155 Scope, application and definitions applicable to this subpart.

* * * * *

(c) * * *

(3) * * *

(i) If it is accepted, or certified, or listed, or labeled or otherwise determined to be safe by a nationally recognized testing laboratory; or

* * * * *

(iv) * * *

(E) Refer to § 1910.7 for definition of nationally recognized testing laboratory.

* * * * *

Subpart N—Materials Handling and Storage

17. The authority citation for Subpart N of Part 1910 is revised to read as follows:

Authority: Secs. 4, 6, 8, Occupational Safety and Health Act of 1970 (29 U.S.C. 653, 655, 657); Secretary of Labor's Order No. 12–71 (36 FR 8754), 8–76 (41 FR 25059 (or 9–83 (48 FR 35736), as applicable.

Sections 1910.177, .178, .179, .180, .181, .183, .184, .189 and .190 also issued under 29 CFR Part 1911.

18. In § 1910.178, paragraph (a)(7) is revised to read as follows:

§ 1910.178 Powered industrial trucks.

(a) * * *

(7) As used in this section, the term, "approved truck" or "approved industrial truck" means a truck that is listed or approved for fire safety purposes for the intended use by a nationally recognized testing laboratory, using nationally recognized testing standards. Refer to § 1910.155(c)(3)(iv)(A) for definition of listed, and to § 1910.7 for definition of nationally recognized testing laboratory.

* * * * *

19. In § 1910.180, paragraph (i)(4)(i) is revised to read as follows:

§ 1910.180 Crawler locomotive and truck cranes.

* * * * *

(i) * * *

(4) * * *

(i) Refueling with small portable containers shall be done with an approved safety type can equipped with an automatic closing cap and flame arrester. Refer to § 1910.155(c)(3) for definition of approved.

* * * * *

20. In § 1910.181, paragraph (j)(4)(i) is revised to read as follows:

§ 1910.181 Derricks.

* * * * *

(j) * * *

(4) * * *

(i) Refueling with portable containers shall be done with approved safety type containers equipped with automatic closing cap and flame arrester. Refer to § 1910.155(c)(3) for definition of Approved.

* * * * *

Subpart Q—Welding, Cutting, and Brazing

21. The authority citation for Subpart Q of Part 1910 is revised to read as follows:

Authority: Secs. 4, 6, 8, Occupational Safety and Health Act of 1970 (29 U.S.C. 653, 655, 657); Secretary of Labor's Order No. 12–71 (36 FR 8754), 8–76 (41 FR 25059) or 9–83 (48 FR 35736), as applicable.

Section 1910.251 also issued under 29 CFR Part 1911.

22. In § 1910.251, paragraph (b) is revised to read as follows:

§ 1910.251 Definitions.

* * * * *

(b) "Approved" means listed or approved by a nationally recognized testing laboratory. Refer to § 1910.155(c)(3) for definitions of listed

and approved, and § 1910.7 for nationally recognized testing laboratory.

* * * * *

Subpart R—Special Industries

23. The authority citation for Subpart R of Part 1910 is revised to read as follows:

Authority: Secs. 4, 6, 8, Occupational Safety and Health Act of 1970 (29 U.S.C. 653, 655, 657); Secretary of Labor's Order No. 12–71 (36 FR 8754), 8–76 (41 FR 25059) or 9–83 (48 FR 35736), as applicable.

Sections 1910.261, 1910.262, 1910.265, 1910.266, 1910.267, 1910.268, 1910.269, 1910.274 and 1910.275 also issued under 29 CFR Part 1911.

24. In § 1910.265, paragraph ((d)(2)(iv)(*c*) is revised to read as follows:

§ 1910.265 Sawmills.

* * * * *

(d) * * *
(2) * * *
(iv) * * *

(*c*) Boat fuel shall be transported and stored in approved safety containers. Refer to § 1910.155(c)(3) for definition of approved.

* * * * *

25. In § 1910.266, paragraphs (c)(4)(iii) and (iv) are revised to read as follows:

§ 1910.266 Pulpwood logging.

* * * * *

(c) * * *
(4) * * *

(iii) An approved fire extinguisher shall be provided at locations where machines are operating and/or on each vehicle. Refer to § 1910.155(c)(3) for definition of approved.

(iv) Fuel shall be stored only in approved well-marked containers located for safe access for fueling vehicles and equipment and at a safe distance from all fire hazards. Refer to § 1910.155(c)(3) for definition of approved.

* * * * *

Subpart S—Electrical

26. The authority citation for Subpart S continues to read as follows:

Authority: Secs. 6, 8, Occupational Safety and Health Act of 1970 (29 U.S.C. 655, 657); Secretary of Labor's Order No. 8–76 (41 FR 25059) or 9–83 (48 FR 35736), as applicable; and 29 CFR Part 1911.

27. In § 1910.399, paragraph (a)(1) is revised to read as follows:

§ 1910.399 Definitions applicable to this subpart.

(a) * * *

(1) *Acceptable.* An installation or equipment is acceptable to the Assistant Secretary of Labor, and approved within the meaning of this Subpart S: (i) If it is accepted, or certified, or listed, or labeled, or otherwise determined to be safe by a nationally recognized testing laboratory; or (ii) with respect to an installation or equipment of a kind which no nationally recognized testing laboratory accepts, certifies, lists, labels, or determines to be safe, if it is inspected or tested by another Federal agency, or by a State, municipal, or other local authority responsible for enforcing occupational safety provisions of the National Electrical Code and found in compliance with the provisions of the National Electrical Code as applied in this Subpart; or (iii) with respect to custom-made equipment or related installations which are designed, fabricated for, and intended for use by a particular customer, if it is determined to be safe for its intended use by its manufacturer on the basis of test data which the employer keeps and makes available for inspection to the Assistant Secretary and his authorized representatives. Refer to § 1910.7 for definition of nationally recognized testing laboratory.

* * * * *

28. A new Appendix A and OMB numbers are added to § 1910.7 to read as follows:

Appendix A to § 1910.7— OSHA Recognition Process for Nationally Recognized Testing Laboratories

Introduction

This Appendix provides requirements and criteria which OSHA will use to evaluate and recognize a Nationally Recognized Testing Laboratory (NRTL). This process will include the the evaluation of the product evaluation and control programs being operated by the NRTL, as well as the NRTL's testing facilities being used in its program. In the evaluation of the NRTLs, OSHA will use either consensus-based standards currently in use nationally, or other standards or criteria which may be considered appropriate. This Appendix implements the definition of NRTL in 29 CFR 1910.7 which sets out the criteria that a laboratory must meet to be recognized by OSHA (initially and on a continuing basis). The Appendix is broader in scope, providing procedures for renewal, expansion and revocation of OSHA recognition. Except as otherwise provided, the burden is on the applicant to establish by a preponderance of the evidence that it is entitled to recognition as an NRTL. If further detailing of these requirements and criteria will assist the NRTLs or OSHA in this activity, this detailing will be done through appropriate OSHA Program Directives.

I. Procedures for Initial OSHA Recognition

A. Applications.

1. *Eligibility.* a. Any testing agency or organization considering itself to meet the definition of nationally recognized testing laboratory as specified in § 1910.7 may apply for OSHA recognition as an NRTL.

b. However, in determining eligibility for a foreign-based testing agency or organization, OSHA shall take into consideration the policy of the foreign government regarding both the acceptance in that country of testing data, equipment acceptances, and listings, and labeling, which are provided through nationally recognized testing laboratories recognized by the Assistant Secretary, and the accessibility to government recognition or a similar system in that country by U.S.-based safety-related testing agencies, whether recognized by the Assistant Secretary or not, if such recognition or a similar system is required by that country.

2. *Content of application.* a. The applicant shall provide sufficient information and detail demonstrating that it meets the requirements set forth in § 1910.7, in order for an informed decision concerning recognition to be made by the Assistant Secretary.

b. The applicant also shall identify the scope of the NRTL-related activity for which the applicant wishes to be recognized. This will include identifying the testing methods it will use to test or judge the specific equipment and materials for which recognition is being requested, unless such test methods are already specified in the test standard. If requested to do so by OSHA, the applicant shall provide documentation of the efficacy of these testing methods.

c. The applicant may include whatever enclosures, attachments, or exhibits the applicant deems appropriate. The application need not be submitted on a Federal form.

3. *Filing office location.* The application shall be filed with: NRTL Recognition Program, Occupational Safety and Health Administration, U.S. Department of Labor, 200 Constitution Avenue, NW., Washington, DC 20210.

4. *Amendments and withdrawals.* a. An application may be revised by an applicant at any time prior to the completion of activity under paragraph I.B.4. of this Appendix.

b. An application may be withdrawn by an applicant, without prejudice, at any time prior to the final decision by the Assistant Secretary in paragraph I.B.7.c. of this Appendix.

B. Review and Decision Process; Issuance or Renewal.

1. *Acceptance and on-site review.* a. Applications submitted by eligible testing agencies will be accepted by OSHA, and their receipt acknowledged in writing. After receipt of an application, OSHA may request additional information if it believes information relevant to the requirements for recognition has been omitted.

b. OSHA shall, as necessary, conduct an on-site review of the testing facilities of the applicant, as well as the applicant's administrative and technical practices, and, if necessary, review any additional documentation underlying the application.

c. These on-site reviews will be conducted by qualified individuals technically expert in these matters, including, as appropriate, non-Federal consultants/contractors acceptable to OSHA. The protocol for each review will be based on appropriate national consensus

BEST COPY AVAILABLE

standards or international guides, with such additions, changes, or deletions as may be considered necessary and appropriate in each case by OSHA. A written report shall be made of each on-site review and a copy shall be provided to the applicant.

2. *Positive finding by staff.* If, after review of the application, and additional information, and the on-site review report, the applicant appears to have met the requirements for recognition, a written recommendation shall be submitted by the responsible OSHA personnel to the Assistant Secretary that the application be approved, accompanied by a supporting explanation.

3. *Negative finding by staff.*—a. *Notification to applicant.* If, after review of the application, any additional information and the on-site review report, the applicant does not appear to have met the requirements for recognition, the responsible OSHA personnel shall notify the applicant in writing, listing the specific requirements of § 1910.7 and this Appendix which the applicant has not met, and allow a reasonable period for response.

b. *Revision of application.* (i) After receipt of a notification of negative finding (i.e., for intended disapproval of the application), and within the response period provided, the applicant may:

(*a*) Submit a revised application for further review, which could result in a positive finding by the responsible OSHA personnel pursuant to subsection I.B.2. of this Appendix; or

(*b*) Request that the original application be submitted to the Assistant Secretary with an attached statement of reasons, supplied by the applicant of why the application should be approved.

(ii) This procedure for applicant notification and potential revision shall be used only once during each recognition process.

4. *Preliminary finding by Assistant Secretary.* a. The Assistant Secretary, or a special designee for this purpose, will make a preliminary finding as to whether the applicant has or has not met the requirements for recognition, based on the completed application file, the written staff recommendation, and the statement of reasons supplied by the applicant if there remains a staff recommendation of disapproval.

b. Notification of this preliminary finding will be sent to the applicant and subsequently published in the **Federal Register.**

c. This preliminary finding shall not be considered an official decision by the Assistant Secretary or OSHA, and does not confer any change in status or any interim or temporary recognition for the applicant.

5. *Public review and comment period.*—a. The **Federal Register** notice of preliminary finding will provide a period of not less than 60 calendar days for written comments on the applicant's fulfillment of the requirements for recognition. The application, supporting documents, staff recommendation, statement of applicant's reasons, and any comments received, will be available for public inspection in the OSHA Docket Office.

b. Any member of the public, including the applicant, may supply detailed reasons and evidence supporting or challenging the sufficiency of the applicant's having met the requirements of the definition in 29 CFR § 1910.7 and this Appendix. Submission of pertinent documents and exhibits shall be made in writing by the close of the comment period.

6. *Action after public comment.*— a. *Final decision by Assistant Secretary.* Where the public review and comment record supports the Assistant Secretary's preliminary finding concerning the application, i.e., absent any serious objections or substantive claims contrary to the preliminary finding having been received in writing from the public during the comment period, the Assistant Secretary will proceed to final written decision on the application. The reasons supporting this decision shall be derived from the evidence available as a result of the full application, the supporting documentation, the staff finding, and the written comments and evidence presented during the public review and comment period.

b. *Public announcement.* A copy of the Assistant Secretary's final decision will be provided to the applicant. Subsequently, a notification of the final decision shall be published in the **Federal Register.** The publication date will be the effective date of the recognition.

c. *Review of final decision.* There will be no further review activity available within the Department of Labor from the final decision of the Assistant Secretary.

7. *Action after public objection.*— a. *Review of negative information.* At the discretion of the Assistant Secretary or his designee, OSHA may authorize Federal or contract personnel to initiate a special review of any information provided in the public comment record which appears to require resolution, before a final decision can be made.

b. *Supplementation of record.* The contents and results of special reviews will be made part of this record by the Assistant Secretary by either:

(i) Reopening the written comment period for public comments on these reviews; or

(ii) Convening an informal hearing to accept public comments on these reviews, conducted under applicable OSHA procedures for similar hearings.

c. *Final decision by the Assistant Secretary.* The Assistant Secretary shall issue a decision as to whether it has been demonstrated, based on a preponderance of the evidence, that the applicant meets the requirements for recognition. The reasons supporting this decision shall be derived from the evidence available as a result of the full application, the supporting documentation, the staff finding, the comments and evidence presented during the public review and comment period, and written to transcribed evidence received during any subsequent reopening of the written comment period or informal public hearing held.

d. *Public announcement.* A copy of the Assistant Secretary's final decision will be provided to the applicant, and a notification will be published in the **Federal Register** subsequently announcing the decision.

e. *Review of final decision.* There will be no further review activity available within the Department of Labor from the final decision of the Assistant Secretary.

c. *Terms and conditions of recognition.* The following terms and conditions shall be part of every recognition:

1. *Letter of recognition.* The recognition by OSHA of any NRTL will be evidenced by a letter of recognition from OSHA. The letter will provide the specific details of the scope of the OSHA recognition, including the specific equipment or materials for which OSHA recognition has been granted, as well as any specific conditions imposed by OSHA.

2. *Period of recognition.* The recognition by OSHA of each NRTL will be valid for five years, unless terminated before the expiration of the period. The dates of the period of recognition will be stated in the recognition letter.

3. *Constancy in operations.* The recognized NRTL shall continue to satisfy all the requirements or limitations in the letter of recognition during the period of recognition.

4. *Accurate publicity.* The OSHA-recognized NRTL shall not engage in or permit others to engage in misrepresentation of the scope or conditions of its recognition.

5. *Temporary Recognition of Certain NRTLs.* a. Notwithstanding all other requirements and provisions of § 1910.7 and this Appendix, the following two organizations are recognized temporarily as nationally recognized testing laboratories by the Assistant Secretary for a period of five years beginning June 13, 1988 and ending on July 13, 1993:

(i) Underwriters Laboratories, Inc., 333 Pfingsten Road, Northbrook, Illinois 60062.

(ii) Factory Mutual Research Corporation, 1151 Boston-Providence Turnpike, Norwood, Massachusetts 02062.

b. At the end of the five-year period, the two temporarily recognized laboratories shall apply for renewal of OSHA recognition utilizing the following procedures established for renewal of OSHA recognition.

II. Supplementary Procedures.

A. Test standard changes.

A recognized NRTL may change a testing standard or elements incorporated in the standard such as testing methods or pass-fail criteria by notifying the Assistant Secretary of the change, certifying that the revised standard will be at least as effective as the prior standard, and providing the supporting data upon which its conclusions are based. The NRTL need not inform the Assistant Secretary of minor deviations from a test standard such as the use of new instrumentation that is more accurate or sensitive than originally called for in the standard. The NRTL also need not inform the Assistant Secretary of its adoption of revisions to third-party testing standards meeting the requirements of § 1910.7(c)(4), if such revisions have been developed by the standards developing organization, or of its adoption of revisions to other third-party test standards which the developing organization has submitted to OSHA. If, upon review, the Assistant Secretary or his designee determines that the proposed revised standard is not "substantially equivalent" to the previous version with regard to the level

of safety obtained, OSHA will not accept the proposed testing standard by the recognized NRTL, and will initiate discontinuance of that aspect of OSHA-recognized activity by the NRTL by modification of the official letter of recognition. OSHA will publicly announce this action and the NRTL will be required to communicate this OSHA decision directly to affected manufacturers.

B. Expansion of current recognition

1. *Eligibility.* A recognized NRTL may apply to OSHA for an expansion of its current recognition to cover other categories of NRTL testing in addition to those included in the current recognition.

2. *Procedure.* a. The application for expansion will be acted upon and processed by OSHA in accordance with subsection I.B. of this Appendix.

b. In that process, OSHA may decide not to conduct an on-site review, where the substantive scope of the request to expand recognition is closely related to the current area of recognition.

c. The expiration date for each expansion of recognition shall coincide with the expiration date of the current basic recognition period.

C. Renewal of OSHA recognition

1. *Eligibility.* A recognized NRTL may renew its recognition by filing a renewal request at the address in paragraph I.A.3. of this Appendix not less than nine months, nor more than one year, before the expiration date of its current recognition.

2. *Procedure.* a. The renewal request will be processed in accordance with subsection I.B. of this Appendix.

b. In that process, OSHA may determine not to conduct the on-site reviews in I.B.1.a. where appropriate.

c. When a recognized NRTL has filed a timely and sufficient renewal request, its current recognition will not expire until a final decision has been made by OSHA on the request.

d. After the first renewal has been granted to the NRTL, the NRTL shall apply for a continuation of its recognition status every five years by submitting a renewal request. In lieu of submitting a renewal request after the initial renewal, the NRTL may certify its continuing compliance with the terms of its letter of recognition and 29 CFR 1910.7.

3. *Alternative procedure.* After the initial recognition and before the expiration thereof, OSHA may (for good cause) determine that there is a sufficient basis to dispense with the renewal requirement for a given laboratory and will so notify the laboratory of such a determination in writing. In lieu of submitting a renewal request, any laboratory so notified shall certify its continuing compliance with the terms of its letter of recognition and 29 CFR 1910.7.

D. Voluntary termination of recognition.

At any time, a recognized NRTL may voluntarily terminate its recognition, either in its entirety or with respect to any area covered in its recognition, by giving written notice to OSHA. The written notice shall state the date as of which the termination is to take effect. The Assistant Secretary shall inform the public of any voluntary termination by **Federal Register** notice.

E. Revocation of recognition by OSHA.

1. *Potential causes.* If an NRTL either has failed to continue to substantially satisfy the requirements of § 1910.7 or this Appendix, or has not been reasonably performing the NRTL testing requirements encompassed within its letter of recognition, or has materially misrepresented itself in its applications or misrepresented the scope or conditions of its recognition, the Assistant Secretary may revoke the recognition of a recognized NRTL, in whole or in part. OSHA may initiate revocation procedures on the basis of information provided by any interested person.

2. *Procedure.* a. Before proposing to revoke recognition, the Agency will notify the recognized NRTL in writing, giving it the opportunity to rebut or correct the alleged deficiencies which would form the basis of the proposed revocation, within a reasonable period.

b. If the alleged deficiencies are not corrected or reconciled within a reasonable period, OSHA will propose, in writing to the recognized NRTL, to revoke recognition. If deemed appropriate, no other announcement need be made by OSHA.

c. The revocation shall be effective in 60 days unless within that period the recognized NRTL corrects the deficiencies or requests a hearing in writing.

d. If a hearing is requested, it shall be held before an administrative law judge of the Department of Labor pursuant to the rules specified in 29 CFR Part 1905, Subpart C.

e. The parties shall be OSHA and the recognized NRTL. The Assistant Secretary may allow other interested persons to participate in these hearings if such participation would contribute to the resolution of issues germane to the proceeding and not cause undue delay.

f. The burden of proof shall be on OSHA to demonstrate by a preponderance of the evidence that the recognition should be revoked because the NRTL is not meeting the requirements for recognition, has not been reasonably performing the product testing functions as required by § 1910.7, this Appendix A, or the letter of recognition, or has materially misrepresented itself in its applications or publicity.

3. *Final decision.* a. After the hearing, the Administrative Law Judge shall issue a decision stating the reasons based on the record as to whether it has been demonstrated, based on a preponderance of evidence, that the applicant does not continue to meet the requirements for its current recognition.

b. Upon issuance of the decision, any party to the hearing may file exceptions within 20 days pursuant to 29 CFR 1905.28. If no exceptions are filed, this decision is the final decision of the Assistant Secretary. If objections are filed, the Administrative Law Judge shall forward the decision, exceptions and record to the Assistant Secretary for the final decision on the proposed revocation.

c. The Assistant Secretary will review the record, the decision by the Administrative Law Judge, and the exceptions filed. Based on this, the Assistant Secretary shall issue the final decision as to whether it has been demonstrated, by a preponderance of evidence, that the recognized NRTL has not continued to meet the requirements for OSHA recognition. If the Assistant Secretary finds that the NRTL does not meet the NRTL recognition requirements, the recognition will be revoked.

4. *Public announcement.* A copy of the Assistant Secretary's final decision will be provided to the applicant, and a notification will be published in the **Federal Register** announcing the decision, and the availability of the complete record of this proceeding at OSHA. The effective date of any revocation will be the date the final decision copy is sent to the NRTL.

5. *Review of final decision.* There will be no further review activity available within the Department of Labor from the final decision of the Assistant Secretary.

(Approved by the Office of Management and Budget under Control Number 1218-0147)

[FR Doc. 88-7782 Filed 4-6-88; 8:45 am]

BILLING CODE 4510-26-M

VOL
53

ISS
70

AP
12

1988

UMI

federal register

Tuesday
April 12, 1988

Part III

Department of Defense

General Services Administration

National Aeronautics and Space Administration

48 CFR Parts 25, 31, and 52

Federal Acquisition Regulation; Restrictions on Federal Public Works Projects, and Promotion of American Aerospace Exports at Domestic and International Exhibits; Interim Rule With Request for Comments and Final Rule

DEPARTMENT OF DEFENSE

GENERAL SERVICES ADMINISTRATION

NATIONAL AERONAUTICS AND SPACE ADMINISTRATION

48 CFR Parts 25, 31, and 52

[Federal Acquisition Circular 84-36]

Federal Acquisition Regulation (FAR); Restrictions on Federal Public Works Projects, and Promotion of American Aerospace Exports at Domestic and International Exhibits

AGENCIES: Department of Defense (DOD), General Services Administration (GSA), and National Aeronautics and Space Administration (NASA).

ACTION: Interim rule with request for comments and final rule.

SUMMARY: Federal Acquisition Circular (FAC) 84-36 amends the Federal Acquisition Regulation as an interim rule with respect to Government acquisition of construction, alteration, or repair of any public building or public work in the United States or any territory or possession of the United States with any contractor or subcontractor of certain foreign countries or any supplier of products of such foreign countries and as a final rule the allowability of costs to promote American aerospace exports at domestic and international exhibits.

DATES: Effective date: April 12, 1988.

COMMENT DATE: Comments on the interim rule, Parts 25 and 52, should be submitted to the FAR Secretariat at the address shown below on or before June 13, 1988 to be considered in the formulation of a final rule. Please cite FAC 84-36 in all correspondence on this subject.

ADDRESS: Interested parties should submit written comments to: General Services Administration, FAR Secretariat (VRS), 18th and F Streets NW., Room 4041, Washington, DC 20405.

FOR FURTHER INFORMATION CONTACT: Margaret A. Willis, FAR Secretariat, Room 4041, GS Building, Washington, DC 20405, (202) 523-4755.

SUPPLEMENTARY INFORMATION:

A. Background

Item I, FAC 84-36 (Interim Rule). Pub. L. 100-202, enacted December 22, 1987, Making Further Appropriations for the Fiscal Year Ending September 30, 1988, contains restrictions concerning the use of Federal funds for construction services and products on public works. Section 109(a) of Pub. L. 100-202 prohibits the obligation or expenditure of funds appropriated for Fiscal Year 1988 by Pub. L. 100-202 or any other law to enter into any contract for construction, alteration, or repair of any public building or work with any contractor or subcontractor of a foreign country or any supplier of products of a foreign country that is identified by the United States Trade Representative (USTR) or by Pub. L. 100-202 as discriminating against U.S. firms in conducting acquisitions for public works projects. On December 30, 1987, the USTR published an initial list in the **Federal Register** identifying only one country, Japan, that discriminates against U.S. firms.

The USTR may add other countries to its list as a result of its ongoing review of countries' practices that may deny fair and equitable market opportunities to U.S. firms.

Item II, FAC 84-36 (Final Rule). The Defense Acquisition Regulatory and Civilian Agency Acquisition Councils made major revisions to FAR 31.205-1, Public relations and advertising costs, as a result of Pub. L. 99-145, Defense Procurement Improvement Act of 1985. The revisions were promulgated in Federal Acquisition Circular (FAC) 84-15 effective April 7, 1986 (51 FR 12296), and published in the **Federal Register** on April 9, 1986. Recently, Congress further addressed this matter in Sec. 4, Chap. II, of Title I of the Supplemental Defense Appropriations Act of 1987 (Pub. L. 100-71). More recently, Congress again addressed this matter in Section 8056 of the 1988 Appropriations Act. Twenty-six letters of comment on the proposed rule were received. None objected to the liberalizing direction of the proposed rule, while thirteen commenters suggested changes. All comments were carefully considered, but none were adopted. Accordingly, the Councils hereby amended FAR 31.205-1, Public relations and advertising costs, to reflect the new law.

B. Regulatory Flexibility Act

Item I, FAC 84-36. The interim rule may have a significant economic impact upon a substantial number of small entities within the meaning of the Regulatory Flexibility Act of 1980, 5 U.S.C 601, et seq., principally with respect to its implementation of statutory limitations on subcontracting with or providing materials of foreign countries listed by the USTR. While foreign contractors are generally excluded from the definition of small entities, the interim rule would prohibit small entities from obtaining a government contract if they offer material or services from prohibited countries.

Pursuant to the authority contained in section 608(a) of the Regulatory Flexibility Act (5 U.S.C. 601, et seq.) a determination has been made that the circumstances require delay in preparation of an Initial Regulatory Flexibility Analysis in order to issue regulatory guidance in consonance with the December 22, 1987, effective date of section 109(a) of Pub. L. 100-202. It is anticipated that an Initial Regulatory Flexibility Analysis will be prepared and forwarded to the Chief Counsel for Advocacy of the SBA within 120 days. Comments are invited.

Comments from small entities concerning the affected FAR subparts will also be considered in accordance with section 610 of the Act. Such comments must be submitted separately and cite FAR Case 88-610 in correspondence.

Item II, FAC 84-36. Dod, GSA, and NASA certify that the change to FAR 31.205-1 will not have a significant economic impact on a substantial number of small entities under the Regulatory Flexibility Act (5 U.S.C. 601, et seq.) because the number of small entities and exhibition at air shows and the like is considered insignificant in relation to the overall small business community. Furthermore, the costs involved and the potential recovery from the Government of related promotional costs should not involve

amounts great enough to have a "significant economic impact" on the small businesses that may participate in such shows. At any rate, the more favorable treatment of contractor costs caused by this FAR revision will benefit all contractors equally in line with statutory requirements. The proposed rule stated that this rule would not have a significant economic impact on a substantial number of small entities. None of the comments received would lead to a different conclusion.

C. Determination To Issue an Interim Regulation

Item I, FAC 84–36. A determination has been made under authority of the Secretary of Defense (DoD), the Administrator of General Services (GSA), and the Administrator of the National Aeronautics and Space Administration (NASA) to issue the regulations in FAC 84–36 as an interim rule. This action is necessary because the statutory prohibition was effective December 22, 1987. DoD, GSA, and NASA have determined that compelling reasons exist to promulgate an interim rule without prior opportunity for public comment. However, pursuant to Pub. L. 98–577 and FAR 1.501, public comments received in response to this interim rule will be considered in formulating a final rule.

D. Paperwork Reduction Act

Item I, FAC 84–36. This interim rule does not contain information collection requirements within the meaning of the Paperwork Reduction Act of 1980, 44 U.S.C. 3501, et seq., and regulations prescribed by OMB at 5 CFR Part 1320. Accordingly, OMB approval of the interim rule is not required.

Item II, FAC 84–36. The rule does not contain information collection requirements which require the approval of OMB under 44 U.S.C. 350.1 et seq.

List of Subjects in 48 CFR Parts 25, 31, and 52

Government procurement.

Harry S. Rosinski,

Acting Director, Office of Federal Acquisition and Regulatory Policy.

Federal Acquisition Circular

[Number 84–36]

Unless otherwise specified, all Federal Acquisition Regulation (FAR) and other directive material contained in FAC 84–36 is effective April 8, 1988.

Eleanor R. Spector,

Deputy Assistant Secretary of Defense for Procurement.

Paul Trause,

Deputy Administrator, GSA.

S.J. Evans,

Assistant Administrator for Procurement, NASA.

Federal Acquisition Circular (FAC) 84–36 amends the Federal Acquisition Regulation (FAR) as specified below:

Item I—Restrictions on Federal Public Works Projects

This interim rule, FAR Subpart 25.10, Restrictions on Federal Public Works Projects, and the provision at 52.225–12, Restrictions on Federal Public Works Projects Certification, and the clause at 52.225–13, Restrictions on Federal Public Works Projects, are added to implement section 109(a) of Pub. L. 100–202. Pub. L. 100–202 specifies that none of the funds appropriated for Fiscal Year 1988 by it or any other law may be obligated or expended to enter into any contract for the construction, alteration or repair of any public building or public work in the United States or any territory or possession of the United States with any contractor or subcontractor of a foreign country, or any supplier of products of a foreign country, during any period in which such foreign country is listed by the United States Trade Representative. The restriction applies to all projects for which funds appropriated for FY 1988 are obligated or expended on contracts awarded on or after December 22, 1987, regardless of when the funds were appropriated.

This subpart is effective on April 12, 1988. It applies to situations where (1) the prime contract and subsequent subcontracts thereunder were awarded on or after December 22, 1987, or (2) the prime contract was awarded prior to December 22, 1987, but a subsequent subcontract thereunder was awarded on or after December 22, 1987. Solicitations shall be amended and contracts modified in accordance with this subpart. In the event that the contracting officer is unable to obtain a waiver for or modify without cost to the Government a contract that is not in compliance and is described in situation (1) of this paragraph, the contract shall be terminated without cost to the Government. If the contracting officer is unable to obtain a waiver for or modify a contract that is not in compliance and is described in situation (2) of this paragraph, the contract shall be terminated in whole or in part in accordance with applicable law.

Waivers to the subpart may be granted in accordance with § 25.1003. Although any decision to waive a contract must be made after a review of the specific contract involved, it is more likely that it is in the public interest to waive the termination of a contract already entered into rather than to waive the prohibition on entering into a contract that has not yet been awarded. Factors that should be considered include: the national security interests of the United States; the availability of necessary products or services; and costs to the taxpayer that significantly exceed the costs associated with terminating the contract and awarding another contract for similar products or services.

The restrictions of this subpart are in addition to any other restrictions contained in Federal law, including the Buy American Act, 41 U.S.C. 10a–10d.

Item II—Promotion of American Aerospace Exports at Domestic and International Exhibits

Under the 1987 DoD Supplemental Appropriations Act (Pub. L. 100–71), the Congress permitted reimbursement of contractors costs to promote American aerospace exports at domestic and international exhibits. Under the 1988 Appropriations Act, the Congress directed that the regulations be amended to reimburse contractors costs to promote American aerospace exports at domestic and international exhibits. FAR 31.205–1 is modified as a final rule to make these costs allowable. Therefore, 48 CFR Parts 25, 31, and 52 are amended as set forth below:

1. The authority citation for Parts 25, 31, and 52 continues to read as follows:

Authority: 40 U.S.C. 486(c); 10 U.S.C. Chapter 137; and 42 U.S.C. 2473 (c).

PART 25—FOREIGN ACQUISITION

2. Subpart 25.10, consisting of §§ 25.1000 through 25.1003, is added to read as follows:

Subpart 25.10—Restrictions on Federal Public Works Projects

Sec.
25.1000 Scope of subpart.
25.1001 Applicability.
25.1002 Solicitation provisions and contract clauses.
25.1003 Waivers.

Subpart 25.10—Restrictions on Federal Public Works Projects

25.1000 Scope of subpart.

This subpart implements section 109(a), Pub. L. 100–202, enacted December 22, 1987, Making Further Appropriations for the Fiscal Year ending September 30, 1988. That section

prohibits the obligation or expenditure of funds appropriated for Fiscal Year 1988 by Pub. L. 100-202 or any other law to enter into any contract for construction, alteration, or repair of any public building or work with any contractor or subcontractor of a foreign country or any supplier of products of a foreign country that is identified by the United States Trade Representative (USTR) or by Pub. L. 100-202 as discriminating against U.S. firms in conducting acquisitions for public works projects. On December 30, 1987 (52 FR 49244), the USTR published an initial list in the **Federal Register** identifying only one country, Japan, that discriminates against U.S. firms. The USTR may add other countries to its list as a result of its ongoing review of countries' practices that may deny fair and equitable market opportunities to U.S. firms.

25.1001 Applicability.

(a) The restrictions imposed by section 109(a) of Pub. L. 100-202 apply to contracts and subcontracts awarded on or after December 22, 1987, using funds appropriated for FY 1988 regardless of when the funds were appropriated. The prohibition only applies to public buildings and public works projects in the United States or any territory or possession of the United States.

(b) The restrictions in this subpart apply to any contract or subcontract for construction, alteration, or repair, and architect, engineering, or other services directly related to the preparation for or performance of construction, alteration, or repair of public buildings or public works. The restrictions include all products used in the construction, alteration, or repair of public buildings or public works: *Provided, however,* That the restrictions do not cover construction equipment or vehicles that do not become part of a delivered structure, product, or project.

25.1002 Solicitation provisions and contract clauses.

(a) Contracting officers shall insert the provision at 52.225-12, Restrictions on Public Works Projects Certification, in solicitations containing the clause at 52.225-13, Restrictions on Federal Public Works Projects.

(b) The contracting officer shall insert the clause at 52.225-13, Restrictions on Federal Public Works Projects, in each solicitation and contract—

(1) Involving the obligation or expenditure of funds appropriated for FY 1988; and

(2) For the acquisition of construction, alteration or repair, architectural, engineering, or other services directly related to the preparation for, or performance of, construction, alteration or repair of public buildings or public works projects in the United States, or any territory or possession of the United States, unless the President or the Head of the Agency issues a waiver in accordance with 25.1003.

25.1003 Waivers.

(a) The President or the Head of the Agency, on a nondelegable basis, may waive the restrictions imposed by section 109(a) of Pub. L. 100-202 with respect to an individual contract or subcontract upon a determination that such action is necessary in the public interest.

(b) Notice of any waiver shall be published in the **Federal Register** within 10 days. The notice shall describe in detail the contract or subcontract involved and the specific reasons for granting the waiver.

PART 31—CONTRACT COST PRINCIPLES AND PROCEDURES

3. Section 31.205-1 is amended by redesignating the existing paragraph (g) as paragraph (h) and adding a new paragraph (g) to read as follows:

31.205-1 Public relations and advertising costs.

* * * * *

(g) Notwithstanding the provisions of paragraph (d) and subparagraph (f)(2) of this subsection, reasonable costs incurred to promote American aerospace exports at domestic and international exhibits, such as air shows, trade shows, and conventions, are allowable. Such reasonable costs include transportation of the aircraft, aerospace parts and equipment, and other associated support cost. However, such allowable costs shall not include the cost of entertainment, hospitality suites or chalets, advertising media other than exhibits, and other costs not necessary to establish, operate or maintain an exhibit, display, or demonstration so long as Section 8062 of Pub. L. 100-202, or a similar provision in a subsequent act, is in effect.

* * * * *

PART 52—SOLICITATION PROVISIONS AND CONTRACT CLAUSES

4. Sections 52.225-12 and 52.225-13 are added to read as follows:

52.225-12 Restrictions on Federal Public Works Projects Certification.

As prescribed in 25.1002(a), insert the following provision:

RESTRICTIONS ON FEDERAL PUBLIC WORKS PROJECTS CERTIFICATION (APR 1988)

(a) *Definitions.* The definitions pertaining to this provision are those that are set forth in the clause entitled, "Restrictions on Federal Public Works Projects."

(b) *Certification.* Except as provided in paragraph (c) of this provision, by submission of its offer, the offeror certifies that it—

(1) Is not a Contractor of a foreign country included on the list of countries that discriminate against U.S. firms published by the Office of the United States Trade Representative (USTR) (see paragraph (h) of this provision);

(2) Has not or will not enter into any subcontract with a subcontractor of a foreign country included on the list of countries that discriminate against U.S. firms published by the USTR; and

(3) Will not provide any product of a country included on the list of foreign countries that discriminate against U.S. firms published by the USTR.

(c) *Inability to certify.* An offeror unable to certify in accordance with paragraph (b) of this provision shall submit with its offer a written explanation fully describing the reasons for its inability to make the certification.

(d) *Applicability of 18 U.S.C. 1001.* The certification in paragraph (b) of this provision concerns a matter within the jurisdiction of any agency of the United States and the making of a false, fictitious, or fraudulent certification may render the maker subject to prosecution under Title 18, United States Code, Section 1001.

(e) *Notice.* The offeror shall provide immediate written notice to the Contracting Officer if, at any time prior to contract award, the Offeror learns that its certification was erroneous when submitted or has become erroneous by reason of changed circumstances.

(f) *Restrictions on contract award.* Unless a waiver to these restrictions is granted by the President of the United States or the Head of the Agency, no contract will be awarded to an offeror (1) who is owned or controlled by a citizen or national of a foreign country included on the list of foreign countries that discriminate against U.S. firms published by the USTR, (2) whose subcontractors are owned or controlled by citizen(s) or national(s) of a foreign country on such USTR list or, (3) who incorporates any product of a foreign country on such USTR list in the Federal public works project.

(g) *Recordkeeping.* Nothing contained in the foregoing shall be construed to require establishment of a system of records in order to render, in good faith, the certification required by paragraph (b) of this provision. The knowledge and information of an offeror is not required to exceed that which is normally possessed by a prudent person in the ordinary course of business dealings.

(h) *USTR list.* The USTR published an initial list in the **Federal Register** on December 30, 1987 (53 FR 49244), which identified one country, Japan. The USTR can add countries to the list, and delete countries

VOL 53 ISS 70 AP 12 1988 UMI

from it, in accordance with section 109(c) of Pub. L. 100-202.

(End of provision)

52.225-13 Restrictions on Federal Public Works Projects

As prescribed in 25.1002(b), insert the following clause:

RESTRICTIONS ON FEDERAL PUBLIC WORKS PROJECTS (APR 1988)

(a) Definitions.

"Component," as used in this clause, means those articles, materials, and supplies incorporated directly into the product.

"Contractor or subcontractor of a foreign country," as used in this clause, means any Contractor or subcontractor that is a citizen or national of a foreign country, or is controlled directly or indirectly by citizens or nationals of a foreign country. A Contractor or subcontractor shall be considered to be a citizen or national of a foreign country, or controlled directly or indirectly by citizens or nationals of a foreign country—

(1) If 50 percent or more of the Contractor or subcontractor is owned by a citizen or a national of the foreign country;

(2) If the title to 50 percent or more of the stock of the Contractor or subcontractor is held subject to trust or fiduciary obligation in favor of a citizen(s) or national(s) of the foreign country;

(3) If 50 percent or more of the voting power in the Contractor or subcontractor is vested in or exercisable on behalf of a citizen(s) or national(s) of the foreign country;

(4) In the case of a partnership, if any general partner is a citizen of the foreign country;

(5) in the case of a corporation, if its president or other chief executive officer or the chairman of its board of directors is a citizen of the foreign country or the majority of any number of its directors necessary to constitute a quorum are citizens of the foreign country or the corporation is organized under the laws of the foreign country or any subdivision, territory, or possession thereof; or

(6) In the case of a contractor or subcontractor who is a joint venture, if any participant is a citizen or national of a foreign country or meets any of the criteria in subparagraphs (a)(1) through (5) of this clause.

"Product," as used in this clause, means construction materials; i.e., articles, materials, and supplies brought to the construction site for incorporation into the public works project. In determining the origin of a product, Federal agencies or recipients of Federal funds are to consider a product as produced in a foreign country if it has been assembled or manufactured in the foreign country, or if the cost of the components mined, produced, or manufactured in the foreign country exceed 50 percent of the cost of all its components.

(b) *Restrictions.* The Contractor shall not (1) knowingly enter into any subcontract under this contract with a subcontractor of a foreign country included on the list of countries that discriminate against U.S. firms published by the United States Trade Representative (USTR) (see paragraph (c) of this clause), or (2) supply any product under this contract of a country included on the list of foreign countries that discriminate against U.S. firms published by the USTR.

(c) *USTR list.* The USTR published an initial list in the **Federal Register** on December 30, 1987 (53 FR 49244), which identified one country, Japan. The USTR can add other countries to the list, and delete countries from it, in accordance with section 109(c) of Pub. L. 100-202.

(d) *Certification.* The Contractor may rely upon the certification of a prospective subcontractor that it is not a subcontractor of a foreign country included on the list of countries that discriminate against U.S. firms published by the USTR and that products supplied by such subcontractor for use on the Federal public works project under this contract are not products of a foreign country included on the list of foreign countries that discriminate against U.S. firms published by the USTR, unless the Contractor has knowledge that the certification is erroneous.

(e) *Subcontracts.* The Contractor shall incorporate this clause, modified only to properly identify the parties, including this paragraph (e), in all subcontracts.

(End of clause)

[FR Doc. 88-7992 Filed 4-11-88; 8:45 am]

BILLING CODE 6820-61-M

VOL
53

ISS
70

AP
12

1988

UMI

federal register

Tuesday
April 12, 1988

Part IV

The President

Executive Order 12635—Prohibiting Certain Transactions With Respect to Panama

Federal Register
Vol. 53, No. 70
Tuesday, April 12, 1988

Presidential Documents

Title 3—

The President

Executive Order 12635 of April 8, 1988

Prohibiting Certain Transactions With Respect to Panama

By the authority vested in me as President by the Constitution and laws of the United States of America, including the International Emergency Economic Powers Act (50 U.S.C. 1701 *et seq.*), the National Emergencies Act (50 U.S.C. 1601 *et seq.*), and section 301 of title 3 of the United States Code,

I, RONALD REAGAN, President of the United States of America, find that the policies and actions in Panama of Manuel Antonio Noriega and Manuel Solis Palma constitute an unusual and extraordinary threat to the national security, foreign policy, and economy of the United States and hereby declare a national emergency to deal with that threat.

Section 1. I hereby order blocked all property and interests in property of the Government of Panama that are in the United States, that hereafter come within the United States, or that are or hereafter come within the possession or control of persons located within the United States. For purposes of this Order, the Government of Panama is defined to include its agencies, instrumentalities and controlled entities, including the Banco Nacional de Panama and the Caja de Ahorros.

Sec. 2. Except to the extent provided in regulations which may hereafter be issued pursuant to this Order:

(a) Any direct or indirect payments or transfers from the United States to the Noriega/Solis regime of funds, including currency, cash or coins of any nation, or of other financial or investment assets or credits are prohibited. All transfers, or payments owed, to the Government of Panama shall be made into an account at the Federal Reserve Bank of New York, to be held for the benefit of the Panamanian people. For purposes of this Order, the term "Noriega/Solis regime" shall mean Manuel Antonio Noriega, Manuel Solis Palma, and any agencies, instrumentalities or entities purporting to act on their behalf or under their asserted authority.

(b) Any direct or indirect payments or transfers to the Noriega/Solis regime of funds, including currency, cash or coins of any nation, or of other financial or investment assets or credits, by any United States person located in the territory of Panama, or by any person organized under the laws of Panama and owned or controlled by a United States person, are prohibited. All transfers, or payments owed, to the Government of Panama by such persons shall be made into an account at the Federal Reserve Bank of New York, to be held for the benefit of the Panamanian people. For purposes of Section 2(b), "United States person" is defined to mean any United States citizen, permanent resident alien, juridical person organized under the laws of the United States, or any person in the United States.

Sec. 3. Sections 1 and 2 shall not be deemed to block property or interests in property of the Government of Panama, including, but not limited to, accounts established at the Federal Reserve Bank of New York as described in section 2, with respect to which transactions are authorized by, or on behalf of, the recognized representative of the Government of Panama as certified by the Secretary of State, or are otherwise authorized in regulations which may hereafter be issued pursuant to this Order. Section 2 shall not be deemed to prohibit interbank clearing payments.

VOL 53 ISS 70 APR 12 1988 UMI

Sec. 4. The measures taken pursuant to this Order are intended to extend the effectiveness of actions initiated in cooperation with the Government of Panama and its President, Eric Arturo Delvalle, and are not intended to block private Panamanian assets subject to the jurisdiction of the United States or to prohibit remittances by United States persons to Panamanian persons other than the Noriega/Solis regime.

Sec. 5. This Order shall take effect at 4:00 p.m. Eastern Daylight Time on April 8, 1988, except as otherwise provided in regulations issued pursuant to this Order.

Sec. 6. The Secretary of the Treasury, in consultation with the Secretary of State, is authorized to take such actions, including the promulgation of rules and regulations, and to employ all powers granted to me by the International Emergency Economic Powers Act, as may be necessary to carry out the purposes of this Order. The Secretary of the Treasury may redelegate any of these functions to other officers or agencies of the Federal Government.

Sec. 7. Nothing contained in this Order shall confer any substantive or procedural right or privilege on any person or organization, enforceable against the United States, its agencies or its officers, or the Federal Reserve Bank of New York or its officers.

This Order shall be transmitted to the Congress and published in the **Federal Register.**

Ronald Reagan

THE WHITE HOUSE,
April 8, 1988.

[FR Doc. 88-8101
Filed 4-11-88; 12:04 pm]
Billing code 3195-01-M

VOL
53

ISS
70

AP
12

1988

UMI

Rea

INFORM

Federal

Index, fi
Public in
Correcti
Docume
Machine

Code of

Index, fi
Printing

Laws

Public L
Addition

Presiden

Executiv
Public P
Weekly

The Unit

General

Other S

Data bas
Guide to
Legal sta
Library
Privacy
Public La
TDD for

FEDERA

10519-109
10869-110
11031-112
11239-114
11487-116
11633-118
11815-119
11991-121

Reader Aids

Federal Register
Vol. 53, No. 70
Tuesday, April 12, 1988

INFORMATION AND ASSISTANCE

Federal Register

Index, finding aids & general information	523-5227
Public inspection desk	523-5215
Corrections to published documents	523-5237
Document drafting information	523-5237
Machine readable documents	523-5237

Code of Federal Regulations

Index, finding aids & general information	523-5227
Printing schedules	523-3419

Laws

Public Laws Update Service (numbers, dates, etc.)	523-6641
Additional information	523-5230

Presidential Documents

Executive orders and proclamations	523-5230
Public Papers of the Presidents	523-5230
Weekly Compilation of Presidential Documents	523-5230

The United States Government Manual

General information	523-5230

Other Services

Data base and machine readable specifications	523-3408
Guide to Record Retention Requirements	523-3187
Legal staff	523-4534
Library	523-5240
Privacy Act Compilation	523-3187
Public Laws Update Service (PLUS)	523-6641
TDD for the deaf	523-5229

FEDERAL REGISTER PAGES AND DATES, APRIL

10519-10868 1
10869-11030 4
11031-11238 5
11239-11486 6
11487-11632 7
11633-11814 8
11815-11990 11
11991-12136 12

CFR PARTS AFFECTED DURING APRIL

At the end of each month, the Office of the Federal Register publishes separately a List of CFR Sections Affected (LSA), which lists parts and sections affected by documents published since the revision date of each title.

3 CFR
Proclamations:
5784 10519
5785 10521
5786 10523
5787 11031
5788 11489
5789 11809
5790 11811
5791 11813
Executive Orders:
12634 11041
12635 12134
Administrative Orders:
Memorandums:
Mar. 31, 1988 11039
Presidential Determinations:
No. 88-10 of February 29, 1988 11487

5 CFR
831 11633
842 11633
1633 11815
Proposed Rules:
1632 11864
2431 10885

7 CFR
2 11636
300 10525
301 11825
400 10526
910 ..... 10527, 11636
911 11830
917 11832
946 11043
1032 11637
1064 11590
1126 11638
1421 11239
3600 11639
3601 11639
Proposed Rules:
6 11091
53 10545
54 10545
449 11299
917 11669
918 11867
949 10887
1030 10894
1106 11092
1497 11474
1498 11474
1530 11098
1700 11511
1701 10545

8 CFR
Proposed Rules:
3 11300
208 11300
236 11300
242 11300
253 11300

9 CFR
77 11491
92 11043
Proposed Rules:
78 12019

10 CFR
430 10869
1010 11240
Proposed Rules:
2 11310
50 11311

12 CFR
202 11044
205 11046
226 ..... 11047, 11055
229 11832
265 11640
563 ..... 11242, 11243

14 CFR
Ch. III 11004
39 ..... 11246, 11641-11643, 11837, 11838
71 ..... 10528, 11020, 11060, 11061, 11839-11841
97 11062
Proposed Rules:
Ch. I 11868
21 11869
23 11869
27 ..... 10826, 11162
29 ..... 10826, 11162
39 ..... 11674-11676, 11678, 11871
71 ..... 10546, 11100, 11101
73 11102

16 CFR
13 11247

17 CFR
30 11491
230 11841
240 11841

18 CFR
37 11191
154 11191
157 ..... 11644, 11845

20 CFR
10 11594
Proposed Rules:
10 11596

21 CFR

184 ... 11247
340 ... 11731
510 ... 11492
520 ... 11063
522 ... 11064, 11493
524 ... 11064
540 ... 11492
558 ... 11065, 11251
561 ... 11938
800 ... 11251
803 ... 11251
807 ... 11251
808 ... 11251
809 ... 11251
812 ... 11251
813 ... 11251
820 ... 11251
860 ... 11251
861 ... 11251
862 ... 11645
864 ... 11251
866 ... 11251
876 ... 11251
895 ... 11251
1002 ... 11251
1005 ... 11251
1010 ... 11251
1020 ... 11251
1030 ... 11251
1040 ... 11251
1050 ... 11251
1308 ... 10834, 10861, 10869

Proposed Rules:

133 ... 11312
175 ... 11402
176 ... 11402
177 ... 11402
178 ... 11402
193 ... 11938
561 ... 11313

22 CFR

120 ... 11494, 12099
121 ... 11494, 12099
122 ... 11494, 12099
123 ... 11494, 12099
124 ... 11494, 12099
125 ... 11494, 12099
126 ... 11494, 12099
127 ... 11494, 12099
128 ... 11494, 12099
514 ... 10528
602 ... 10529
706 ... 11992

Proposed Rules:

204 ... 11872

23 CFR

650 ... 11065
771 ... 11065
1204 ... 11255
1205 ... 11255

Proposed Rules:

625 ... 11875
626 ... 11875
1309 ... 11679

24 CFR

50 ... 11224
200 ... 11270
201 ... 11997
203 ... 10529, 11997
221 ... 11224
234 ... 11997
236 ... 11224
241 ... 11224
248 ... 11224

Proposed Rules:

35 ... 11164
200 ... 11164
510 ... 11164
511 ... 11164
570 ... 11164
882 ... 11164
886 ... 11164
941 ... 11164
965 ... 11164
968 ... 11164

25 CFR

61 ... 11271

26 CFR

1 ... 11002, 11066, 11162, 11731, 12000
602 ... 11066, 11162, 11731, 12000

Proposed Rules:

1 ... 11103, 11876

27 CFR

Proposed Rules:

4 ... 12024
12 ... 12024

28 CFR

0 ... 10870, 10871, 11645
66 ... 12099
71 ... 11645

29 CFR

102 ... 10872
1907 ... 12102
1910 ... 11414, 12102
2610 ... 10530
2622 ... 10530
2644 ... 10531

Proposed Rules:

516 ... 11590
530 ... 11590
1910 ... 11511
1915 ... 11511
1917 ... 11511
1918 ... 11511
2550 ... 11886
2580 ... 11886

30 CFR

75 ... 11395
250 ... 10596
256 ... 10596
773 ... 11606
934 ... 11500

Proposed Rules:

785 ... 11685
823 ... 11685
935 ... 11887
948 ... 11888

31 CFR

Proposed Rules:

103 ... 11513

32 CFR

388 ... 10876

Proposed Rules:

45 ... 12034

33 CFR

84 ... 10532
100 ... 11502
117 ... 10533, 10534

Proposed Rules:

100 ... 11515
110 ... 11395, 11515
117 ... 11516, 11517

34 CFR

99 ... 11942
600 ... 11208
657 ... 10820
668 ... 11208

Proposed Rules:

105 ... 10808

38 CFR

36 ... 11502

39 CFR

Proposed Rules:

111 ... 11685

40 CFR

52 ... 11068, 11273, 11655, 11847
60 ... 11590, 12008, 12009
180 ... 11071, 11274, 11938

Proposed Rules:

52 ... 11314, 11686, 11688
116 ... 11889
117 ... 11889
180 ... 10895
264 ... 11742
265 ... 11742
268 ... 11742
271 ... 11742
302 ... 11889, 11890
372 ... 12035
761 ... 11104
763 ... 10546
796 ... 11104

41 CFR

101-25 ... 11847
101-40 ... 11849

Proposed Rules:

201-33 ... 11518

42 CFR

405 ... 11504, 12010
413 ... 12016
416 ... 11504
418 ... 11504
434 ... 12010
442 ... 11504
482 ... 11504

Proposed Rules:

405 ... 12037

43 CFR

Proposed Rules:

3160 ... 11318

Public Land Orders:

6670 ... 10535

44 CFR

67 ... 11510
80 ... 11275
82 ... 11275
83 ... 11275

Proposed Rules:

61 ... 10547

45 CFR

36 ... 11279
79 ... 11656
96 ... 11656
1611 ... 12017

Proposed Rules:

303 ... 12041
606 ... 10896

46 CFR

572 ... 11072

Proposed Rules:

Ch. I ... 11440

47 CFR

0 ... 11849
1 ... 11851
2 ... 10878, 11855
15 ... 11861
22 ... 11855
73 ... 11668, 11863
90 ... 11849
94 ... 11855

Proposed Rules:

Ch. I ... 10549, 10550
73 ... 10905, 11690

48 CFR

15 ... 10828
25 ... 12128
31 ... 10828, 12128
52 ... 10828, 12128
215 ... 11073
227 ... 10780
242 ... 11073
252 ... 10780, 11073

Proposed Rules:

43 ... 11795
47 ... 11795
52 ... 11795
916 ... 11318
931 ... 11318
952 ... 11318
1505 ... 11519
1506 ... 11519

49 CFR

533 ... 11074
571 ... 11280
1160 ... 10536

Proposed Rules:

171 ... 11320
173 ... 11320
177 ... 11618
192 ... 10906
571 ... 11105
840 ... 11520

50 CFR

17 ... 10879, 11609, 11612
285 ... 11510
301 ... 10536
672 ... 11297

Proposed Rules:

18 ... 12043
644 ... 11321
658 ... 12046

LIST OF PUBLIC LAWS

Note: No public bills which have become law were received by the Office of the Federal Register for inclusion in today's List of Public Laws.

Last List April 6, 1988

VOL 53 ISS 70 AP 12 1988 UMI

.... 11656
.... 11656
.... 12017

.... 12041
.... 10896

.... 11072

.... 11440

.... 11849
.... 11851
8, 11855
.... 11861
.... 11855
8, 11863
.... 11849
.... 11855

9, 10550
5, 11690

.... 10828
.... 12128
8, 12128
8, 12128
.... 11073
.... 10780
.... 11073
0, 11073

.... 11795
.... 11795
.... 11795
.... 11318
.... 11318
.... 11318
.... 11519
.... 11519

.... 11074
.... 11280
.... 10536

.... 11320
.... 11320
.... 11618
.... 10906
.... 11105
.... 11520

09, 11612
.... 11510
.... 10536
.... 11297

.... 12043
.... 11321
.... 12046

LAWS

which
re
e of the
nclusion
blic

g

VOL 53 ISS 70 AP 12 1988 UMI

Just Released

Code of Federal Regulations

Revised as of January 1, 1988

Quantity	Volume	Price	Amount
	Title 12—Banks and Banking		
_____	Parts 200–219 (Stock No. 869-004-00036-7)	$10.00	$_____
_____	Parts 220–299 (Stock No. 869-004-00037-5)	14.00	_____
	Title 14—Aeronautics and Space		
_____	Parts 1–59 (Stock No. 869-004-00042-1)	21.00	_____
_____	Parts 60–139 (Stock No. 869-004-00043-0)	19.00	_____
	Title 16—Commercial Practices		
_____	Parts 0–149 (Stock No. 869-004-00050-2)	12.00	_____
_____	Part 1000–End (Stock No. 869-004-00052-9)	19.00	_____
		Total Order	**$**_____

A cumulative checklist of CFR issuances appears every Monday in the Federal Register in the Reader Aids section. In addition, a checklist of current CFR volumes, comprising a complete CFR set, appears each month in the LSA (List of CFR Sections Affected).

Please do not detach

Order Form

Mail to: Superintendent of Documents, U.S. Government Printing Office, Washington, D.C. 20402

Enclosed find $_____. Make check or money order payable to Superintendent of Documents. (Please do not send cash or stamps). Include an additional 25% for foreign mailing.

Charge to my Deposit Account No.

☐☐☐☐☐☐☐–☐

Order No._____

VISA

MasterCard

Credit Card Orders Only

Total charges $_____ Fill in the boxes below.

Credit Card No. ☐☐☐☐☐☐☐☐☐☐☐☐☐☐☐☐☐☐☐☐

Expiration Date Month/Year ☐☐☐☐

Please send me the **Code of Federal Regulations** publications I have selected above.

Name—First, Last

Street address

Company name or additional address line

City State ZIP Code

(or Country)

PLEASE PRINT OR TYPE

For Office Use Only.

	Quantity	Charges
Enclosed		
To be mailed		
Subscriptions		
Postage		
Foreign handling		
MMOB		
OPNR		
UPNS		
Discount		
Refund		

unt

tach

.C. 20402

ow.

y	Charges

VOL
53

ISS
70

AP
12

1988

UMI

VOL
53
ISS
71
AP
13
1988
UMI

4-13-
Vol. 5

United
Gover
Printin
SUPERIN
OF DOCU
Washingt

OFFICIAL
Penalty fo

4-13-88
Vol. 53 No. 71

federal register

Wednesday
April 13, 1988

United States
Government
Printing Office
SUPERINTENDENT
OF DOCUMENTS
Washington, DC 20402

OFFICIAL BUSINESS
Penalty for private use, $300

**********5-DIGIT 48106

A FR SERIA300S NOV 88 R
SERIALS PROCESSING
UNIV MICROFILMS INTL
300 N ZEEB RD
ANN ARBOR MI 48106

SECOND CLASS NEWSPAPER
Postage and Fees Paid
U.S. Government Printing Office
(ISSN 0097-6326)

VOL
53

ISS
71

AP
13

1988

UMI

4-13-88
Vol. 53
Pages 1

4-13-88
Vol. 53 No. 71
Pages 12137-12370

federal register

Wednesday
April 13, 1988

Briefings on How To Use the Federal Register—
For information on briefings in Washington, DC, and Boston, MA, see announcement on the inside cover of this issue.

BEST COPY AVAILABLE

FEDERAL REGISTER Published daily, Monday through Friday, (not published on Saturdays, Sundays, or on official holidays), by the Office of the Federal Register, National Archives and Records Administration, Washington, DC 20408, under the Federal Register Act (49 Stat. 500, as amended; 44 U.S.C. Ch. 15) and the regulations of the Administrative Committee of the Federal Register (1 CFR Ch. I). Distribution is made only by the Superintendent of Documents, U.S. Government Printing Office, Washington, DC 20402.

The **Federal Register** provides a uniform system for making available to the public regulations and legal notices issued by Federal agencies. These include Presidential proclamations and Executive orders and Federal agency documents having general applicability and legal effect, documents required to be published by act of Congress and other Federal agency documents of public interest. Documents are on file for public inspection in the Office of the Federal Register the day before they are published, unless earlier filing is requested by the issuing agency.

The **Federal Register** will be furnished by mail to subscribers for $340.00 per year, or $170.00 for 6 months in paper form, or $188.00 per year, or $94.00 for six months in microfiche form, payable in advance. The charge for individual copies is $1.50 for each issue, or $1.50 for each group of pages as actually bound. Remit check or money order, made payable to the Superintendent of Documents, U.S. Government Printing Office, Washington, DC 20402, or charge to your GPO Deposit Account or VISA or Mastercard.

There are no restrictions on the republication of material appearing in the **Federal Register**.

How To Cite This Publication: Use the volume number and the page number. Example: 52 FR 12345.

SUBSCRIPTIONS AND COPIES

PUBLIC

Subscriptions:

Paper or fiche	202-783-3238
Magnetic tapes	275-3328
Problems with public subscriptions	275-3054

Single copies/back copies:

Paper or fiche	783-3238
Magnetic tapes	275-3328
Problems with public single copies	275-3050

FEDERAL AGENCIES

Subscriptions:

Paper or fiche	523-5240
Magnetic tapes	275-3328
Problems with Federal agency subscriptions	523-5240

For other telephone numbers, see the Reader Aids section at the end of this issue.

THE FEDERAL REGISTER
WHAT IT IS AND HOW TO USE IT

FOR: Any person who uses the Federal Register and Code of Federal Regulations.

WHO: The Office of the Federal Register.

WHAT: Free public briefings (approximately 3 hours) to present:
1. The regulatory process, with a focus on the Federal Register system and the public's role in the development of regulations.
2. The relationship between the Federal Register and Code of Federal Regulations.
3. The important elements of typical Federal Register documents.
4. An introduction to the finding aids of the FR/CFR system.

WHY: To provide the public with access to information necessary to research Federal agency regulations which directly affect them. There will be no discussion of specific agency regulations.

WASHINGTON, DC

WHEN: April 15; at 9:00 a.m.
WHERE: Office of the Federal Register, First Floor Conference Room, 1100 L Street NW., Washington, DC
RESERVATIONS: Carolyn Payne, 202-523-3187

BOSTON, MA

WHEN: April 19; at 9 a.m.
WHERE: Thomas P. O'Neill, Jr. Federal Building, Auditorium, 10 Causeway Street, Boston, MA.
RESERVATIONS: Call the Boston Federal Information Center, 617-565-8123

Contents

Federal Register
Vol. 53, No. 71
Wednesday, April 13, 1988

ACTION
NOTICES
Grants; availability, etc.:
Senior companion program, 12171

Agriculture Department
NOTICES
Agency information collection activities under OMB review, 12176
Meetings:
Rural Development National Advisory Council, 12176
Privacy Act; systems of records, 12175

Antitrust Division
NOTICES
National cooperative research notification:
Engine Manufacturers Association, 12202

Army Department
See also Engineers Corps
NOTICES
Meetings:
Science Board, 12177
(2 documents)

Centers for Disease Control
NOTICES
Grants and cooperative agreements; availability, etc.:
Preventive health services; tuberculosis control, 12194

Commerce Department
See National Oceanic and Atmospheric Administration; National Technical Information Service

Copyright Royalty Tribunal
NOTICES
Jukebox royalty fees:
Distribution proceedings, 12177

Customs Service
RULES
Duty-free status for products imported from U.S. insular possessions; double substantial transformation concept, 12143

Defense Department
See Army Department; Engineers Corps

Economic Regulatory Administration
NOTICES
Natural gas exportation and importation:
Pentex Petroleum, Inc., 12178

Education Department
NOTICES
Meetings:
Education Statistics Advisory Council, 12178

Energy Department
See also Economic Regulatory Administration; Federal Energy Regulatory Commission
RULES
Financial assistance:
Financial assistance awards; restricted eligibility policy revision, 12137
NOTICES
Atomic energy agreements; subsequent arrangements, 12178

Engineers Corps
NOTICES
Environmental statements; availability, etc.:
Lower Granite Resevoir, ID and WA, 12177

Environmental Protection Agency
RULES
Hazardous waste:
Corrective action orders for interim status facilities; issuance and administrative hearings procedures, 12256
Pesticides; tolerances in food, animal feeds, and raw agricultural commodities:
Monocarbamide dihydrogen sulfate, 12151
PROPOSED RULES
Air quality implementation plans; approval and promulgation; various States:
Ohio, 12161
Hazardous waste:
Identification and listing—
Petroleum refining industry, 12162
NOTICES
Pesticide programs:
Pesticide assessment guidelines—
Data reporting addenda, 12186
Registration standards—
Availability, etc., 12187
Pesticides; emergency exemptions, etc.:
Sethoxydim, etc., 12186
Pesticides; temporary tolerances:
ICI Americas, Inc., 12188

Executive Office of the President
See Management and Budget Office; Presidential Documents

Farm Credit Administration
RULES
Farm credit system:
Farm Credit System Capital Corp.—
Charter and organization, 12140
Financial Assistance Corp.
Securities; book entry procedures, 12140

Federal Aviation Administration
RULES
Air carrier certification and operations:
Smoking aboard aircraft, 12358
Airworthiness directives:
SAAB-Fairchild, 12141
NOTICES
Airport noise compatibility program:
Memphis International Airport, TN, 12217
Meetings:
Aeronautics Radio Technical Commission, 12218
(2 documents)

Federal Communications Commission
RULES
Radio services, special:
Private land mobile services—
Trunked specialized mobile radio systems, 12154
Radio stations; table of assignments:
California, 12152
Delaware, 12153
Florida, 12153
Maryland, 12153
Ohio, 12154
South Carolina, 12154
PROPOSED RULES
Radio stations; table of assignments:
Alabama, 12167
California, 12167
(2 documents)
Hawaii, 12168
Iowa, 12168
Kentucky, 12168
New York, 12169
Tennessee, 12169

Federal Election Commission
NOTICES
Special elections; filing dates:
New Jersey, 12188

Federal Emergency Management Agency
RULES
Flood elevation determinations:
Florida, 12152
NOTICES
Radiological emergency; State plans:
Iowa, 12189

Federal Energy Regulatory Commission
NOTICES
Electric rate, small power production, and interlocking directorate filings:
Louisville Gas & Electric Co. et al., 12179
Portland General Electric Co. et al., 12181
Natural Gas Policy Act:
Well category determinations, etc., 12182
Applications, hearings, determinations, etc.:
ANR Pipeline Co., 12182, 12183
(2 documents)
Great Lakes Gas Transmission Co., 12183
Leaderbrand, Ralph L., 12184
Mississippi River Transmission Corp. et al., 12184
National Fuel Gas Supply Corp., 12184
Natural Gas Pipeline Co. of America, 12185
Transcontinental Gas Pipe Line Corp., 12185
United Gas Pipe Line Co., 12185

Federal Highway Administration
RULES
Engineering and traffic operations:
Truck size and weight—
Designated highway networks, 12145
Motor carrier safety regulations:
Financial responsibility minimum levels—
Environmental restoration, 12158

Federal Maritime Commission
NOTICES
Agreements filed, etc., 12189

Federal Register Office
NOTICES
Editorial Note: For list of libraries that have announced availability of **Federal Register** and Code of Federal Regulations, see Reader Aids carried in Part II of this issue., 12230

Federal Register, Administrative Committee
See Federal Register Office

Federal Reserve System
NOTICES
Applications, hearings, determinations, etc.:
Credit & Commerce American Holdings, N.V., et al., 12190
DG Bancshares, Inc., 12190
Home Port Bancorp, Inc.; correction, 12191
Lilly, David B., Jr., et al., 12191
Northern Trust Corp., 12191
Progressive Bank, Inc., et al., 12192
Security National Corp. et al., 12192

Federal Trade Commission
NOTICES
Premerger notification waiting periods; early terminations, 12193

Health and Human Services Department
See Centers for Disease Control; National Institutes of Health

Housing and Urban Development Department
PROPOSED RULES
Low income housing:
Housing assistance payments (Section 8)—
Fair market rent schedules for existing housing, loan management and property disposition, moderate rehabilitation and housing voucher programs, 12278
NOTICES
Agency information collection activities under OMB review, 12195
Low income housing:
Elderly or handicapped housing direct loan program (Section 202); fund availability, 12270

Interior Department
See Land Management Bureau; Minerals Management Service; Surface Mining Reclamation and Enforcement Office

Internal Revenue Service
RULES
Income taxes:
Non-profit organizations; information returns when paying awards of $600 or more to informants; filing exemption, 12149

International Trade Commission
NOTICES
Import investigations:
Knives, 12197
Minoxidil powder, salts, and compositions for use in hair treatment, 12198
Noncontact tonometers, 12199
Nonwoven gas filter elements, 12200

Interstate Commerce Commission
NOTICES
Railroad operation, acquisition, construction, etc.:
Norfolk & Western Railway Co. et al., 12200

Justice Department
See also Antitrust Division
NOTICES
Pollution control; consent judgments:
Blytheville, AR, 12200
B.R. MacKay & Sons, Inc., et al., 12201
Carolawn Co., Inc., et al., 12201
Virginia Electric & Power Co., 12201

Labor Department
See Mine Safety and Health Administration

Land Management Bureau
NOTICES
Meetings:
Susanville District Advisory Council, 12196

Management and Budget Office
NOTICES
Budget rescissions and deferrals, 12244

Mine Safety and Health Administration
PROPOSED RULES
Coal mine safety and health:
Certification and qualification peocedures, 12250
Mobile equipment; backup alarms, 12253
Electric mine lamps other than standard cap lamps; testing and approval, 12250
NOTICES
Meetings:
Diesel-Powered Equipment in Underground Coal Mines Standards and Regulations Review Advisory Committee, 12202

Minerals Management Service
RULES
Outer Continental Shelf; oil, gas, and sulfur operations; revision
Correction, 12227

National Aeronautics and Space Administration
NOTICES
Meetings:
Aeronautics Advisory Committee, 12203

National Archives and Records Administration
See also Federal Register Office
RULES
Privacy Act; implementation, 12150

National Highway Traffic Safety Administration
NOTICES
Motor vehicle safety standards; exemption petitions, etc.:
Wirth, Timothy E., 12218

National Institute for Occupational Safety and Health
See Centers for Disease Control

National Institutes of Health
NOTICES
Meetings:
National Heart, Lung, and Blood Institute, 12195

National Oceanic and Atmospheric Administration
PROPOSED RULES
Marine mammals:
Incidental taking to oil and gas exploratory activities, 12169

National Technical Information Service
NOTICES
Patent licenses, exclusive:
Extraction Technology Corp., 12176

Nuclear Regulatory Commission
NOTICES
Environmental statements; availability, etc.:
Florida Power & Light Co., 12203
Applications, hearings, determinations, etc.:
Florida Power & Light Co., 12203
Froehling & Robertson, Inc., 12206
Northern States Power Co., 12209
Philadelphia Electric Co. et al., 12210
Virginia Electric & Power Co., 12210

Office of Management and Budget
See Management and Budget Office

Pension Benefit Guaranty Corporation
NOTICES
Agency information collection activities under OMB review, 12211

Presidential Documents
PROCLAMATIONS
Special observances:
Child Care Awareness Week, National (Proc. 5792), 12365
Pan American Day and Pan American Week (Proc. 5793), 12367
John Muir Day (Proc. 5794), 12369

Public Health Service
See Centers for Disease Control; National Institutes of Health

Research and Special Programs Administration
NOTICES
Hazardous materials:
Applications; exemptions, renewals, etc., 12220, 12222 (2 documents)

Securities and Exchange Commission
NOTICES
Self-regulatory organizations; proposed rule changes:
Pacific Stock Exchange, 12212
Self-regulatory organizations; unlisted trading privileges:
Cincinnati Stock Exchange, Inc., 12214
Midwest Stock Exchange, Inc., 12215
Applications, hearings, determinations, etc.:
Public utility holding company filings, 12215

Surface Mining Reclamation and Enforcement Office
NOTICES
Surface coal mining operations; unsuitable lands; petitions, designations, etc.:
Tennessee, 12196

Transportation Department
See also Federal Aviation Administration; Federal Highway Administration; National Highway Traffic Safety Administration; Research and Special Programs Administration; Urban Mass Transportation Administration
NOTICES
Aviation proceedings:
Intra-Alaska bush service mail rates investigation, 12216

Treasury Department
See also Customs Service; Internal Revenue Service
NOTICES
Notes, Treasury:
F-1995 series, 12224

Urban Mass Transportation Administration
NOTICES
Buy American requirements:
Waiver, 12223, 12224
(2 documents)

Separate Parts In This Issue

Part II
Reader Aids, List of Libraries, 12230

Part III
Office of Management and Budget, 12244

Part IV
Department of Labor, Mine Safety and Health Administration, 12250

Part V
Environmental Protection Agency, 12256

Part VI
Department of Housing and Urban Development, 12270

Part VII
Department of Housing and Urban Development, 12278

Part VIII
Department of Transportation, Federal Aviation Administration, 12358

Part IX
The President, 12365

Reader Aids
Additional information, including a list of public laws, telephone numbers, and finding aids, appears in the Reader Aids section at the end of this issue.

VOL 53 ISS 71 AP 13 1988 UMI

CFR PARTS AFFECTED IN THIS ISSUE

A cumulative list of the parts affected this month can be found in the Reader Aids section at the end of this issue.

3 CFR
Proclamations:
5792 12365
5793 12367
5794 12369

10 CFR
600 12137

12 CFR
611 12140
615 12140

14 CFR
39 12141
121 12358
135 12358

19 CFR
7 12143

23 CFR
658 12145

24 CFR
Proposed Rules:
888 12278

26 CFR
1 12149

30 CFR
250 12227
256 12227
Proposed Rules:
20 12250
75 12250
77 (2 documents) 12250, 12253

36 CFR
1202 12150
1258 12150

40 CFR
22 12256
24 12256
180 12151
Proposed Rules:
52 12161
261 12162

44 CFR
67 12152

47 CFR
73 (6 documents) 12152–12154
90 12154
Proposed Rules:
73 (8 documents) 12167–12169

49 CFR
387 12158

50 CFR
Proposed Rules:
228 12169

VOL
53
ISS
71
AP
13
1988
UMI

Rules

This sectio
contains r
general ap
of which a
the Code
published
U.S.C. 151
The Code
by the Su
Prices of
first FEDE
week.

DEPARTI

Office of

10 CFR P

Financial
on Restri
Assistanc

AGENCY: I

ACTION: F

SUMMARY
today by t
(DOE) am
Financial
an additio
eligibility
assistance
appropria
to a single
additiona
document
noncompe
reflect the
commitme
of DOE's
providing
situations
awards ca

EFFECTIVE
and this r
applicatio

FOR FURTH
Edward F
Financi
U.S. De
Washin
Christoph
Assista
Procure
U.S. De
Washin

SUPPLEME

Table of Co

I. Introduct
II. Changes
III. Discuss
Rule

Rules and Regulations

Federal Register
Vol. 53, No. 71
Wednesday, April 13, 1988

This section of the FEDERAL REGISTER contains regulatory documents having general applicability and legal effect, most of which are keyed to and codified in the Code of Federal Regulations, which is published under 50 titles pursuant to 44 U.S.C. 1510.
The Code of Federal Regulations is sold by the Superintendent of Documents. Prices of new books are listed in the first FEDERAL REGISTER issue of each week.

DEPARTMENT OF ENERGY

Office of the Secretary

10 CFR Part 600

Financial Assistance; Revised Policy on Restricting Eligibility for Financial Assistance Awards

AGENCY: Department of Energy.

ACTION: Final rule.

SUMMARY: The final rule being issued today by the Department of Energy (DOE) amends Subparts A and B of the Financial Assistance Rules to establish an additional method by which eligibility to receive a DOE financial assistance award may, under appropriate circumstances, be restricted to a single applicant and to provide additional guidance concerning the documentation required for noncompetitive awards. These changes reflect the Department's continuing commitment of fully informing the public of DOE's awarding decisions while providing for more flexibility in the situations in which non-competitive awards can be made.

EFFECTIVE DATE: Effective May 13, 1988 and this revision will apply to applications received after May 13, 1988.

FOR FURTHER INFORMATION CONTACT:
Edward F. Sharp, Business and Financial Policy Division (MA-422), U.S. Department of Energy, Washington, DC 20585, (202) 586-8192.
Christopher Smith, Office of the Assistant General Counsel for Procurement and Finance (GC-34), U.S. Department of Energy, Washington, DC 20585, (202) 586-1526.

SUPPLEMENTARY INFORMATION:

Table of Contents

I. Introduction
II. Changes to 10 CFR Part 600
III. Discussion of Comments on Proposed Rule
IV. Review under Executive Order 12291
V. Review under the Regulatory Flexibility Act
VI. Review under the Paperwork Reduction Act
VII. Review under the National Environmental Policy Act

I. Introduction

With this final rule, DOE is amending its Financial Assistance Rules to provide an additional circumstance under which noncompetitive financial assistance awards (grants and cooperative agreements) can be made and to include more specific guidance related to those awards.

DOE prefers to award discretionary financial assistance on the basis of solicitations which provide for the maximum amount of competition feasible (see § 600.6(b)). While that continues to be the preference, it is DOE's experience that competition cannot always be assured and that administratively controlled methods of funding noncompetitively must be available to the Department.

At present, the Financial Assistance Rules explicitly provide two methods by which the Department may make a financial assistance award under circumstances of restricted eligibility: acceptance of an unsolicited application on the basis of selection criteria oriented to a research project (§ 600.14(e)), or in response to applications received under a solicitation which restricts eligibility to a class(es) of eligible applicants (§ 600.7(b)) (limited competition), e.g., a solicitation to which only universities having nuclear reactors could respond. These two categories of restricted eligibility do not, however, provide a clear basis for restricting eligibility and making an award to only one applicant (noncompetitive), when competition is not practical. Over the years, DOE has found it necessary to occasionally restrict eligibility to one applicant. Therefore, DOE is establishing administrative review criteria which are to be used in situations where it is necessary or appropriate to restrict eligibility noncompetitively to only one applicant. The criteria applicable to circumstances in which eligibility is restricted to a single applicant will be contained in a determination of noncompetitive financial assistance (DNCFA). In addition, a change is being made to the provision concerning unsolicited applications in order to expand and clarify the requirements related to accepting an unsolicited application.

II. Changes to 10 CFR Part 600

Section 600.6 is amended by revising paragraph (a) and adding a new paragraph (b) to distinguish the bases for making new and renewal discretionary financial assistance awards. Paragraph (a)(2) is revised to clarify that the selection criteria found at § 600.14(e)(1) must be satisfied in order for a new award to be made under that authority. In addition, § 600.6 is revised by adding new paragraphs (a)(5) and (a)(6) which identify the applications which use a DNCFA as a basis for making a discretionary financial assistance award.

Section 600.7(b) is revised by redesignating existing paragraph (b) as paragraph (b)(1) and by creating a new paragraph (b)(2) which sets forth the management controls over the added category of authorized noncompetitive assistance awards. Those controls include justification criteria and documentation, signature, and publication requirements (including the addition of a 14-day public comment period).

Section 600.14 is amended by correcting a typographical error in paragraph (e)(1)(ii) and by the redesignation of existing paragraph (f) as paragraph (g), and existing paragraph (g) as paragraph (h) and by inserting a new paragraph (f) to specify the documentation, signature, and publication requirements (including a 14-day public comment period) for the justification for acceptance of an unsolicited application. DOE believes that it is desirable that the public be aware of these requirements.

Section 600.106 is amended by revising paragraph (c) to reflect the policies of § 600.7(b)(2) for determinations of noncompetitive financial assistance.

III. Discussion of Comments on Proposed Rule

On September 17, 1987 (52 FR 35111), DOE published proposed rules to change some procedures regarding justifying restricted eligibility grants. Written comments were to be submitted by October 19, 1987. No public comments

BEST COPY AVAILABLE

were received. Minor changes have been made based on comments by DOE staff.

IV. Review Under Executive Order 12291

This rule has been reviewed under Executive Order 12291 (February 17, 1981). DOE has concluded that it is not a "major rule" because its promulgation will not result in: (1) An annual effect on the economy of $100 million or more; (2) a major increase in costs or prices for consumers, individual industries, Federal, State, or local government agencies, or geographic regions; or (3) significant adverse effects on competition, employment, investment, productivity, innovation, or on the ability of United States based enterprises to compete in domestic or export markets. In accordance with requirements of the Executive Order, this rulemaking has been reviewed by the Office of Management and Budget (OMB).

V. Review Under the Regulatory Flexibility Act

This rule was reviewed under the Regulatory Flexibility Act of 1980, Pub. L. 96-354, 94 Stat. 1164, which requires preparation of a regulatory flexibility analysis for any regulation that will have a significant economic impact on a substantial number of small entities; i.e., small businesses, small organizations, and small governmental jurisdictions. DOE has concluded that the rule would only affect small entities as they apply for and receive grants and does not create significant economic impacts on small entities because it involves narrow revisions to existing regulations on non-competitive awards which will not impose costly compliance burdens and which will neither advantage nor disadvantage small entities in terms of obtaining financial assistance. DOE certifies that the rule will not have a significant economic impact on a substantial number of small entities and, therefore, no regulatory flexibility analysis has been prepared.

VI. Review Under the Paperwork Reduction Act

No information collection or recordkeeping requirements are imposed upon the public by this rule. Accordingly, no OMB clearance is required under the Paperwork Reduction Act of 1980, 44 U.S.C. 3501, *et seq.*, or OMB's implementing regulations at 5 CFR Part 1320.

VII. Review Under the National Environmental Policy Act

DOE has concluded that promulgation of these wholly procedural rules clearly would not represent a major Federal action having significant impact on the human environment under the National Environmental Policy Act (NEPA) of 1969 (42 U.S.C. 4321, *et seq.* (1976)), the Council on Environmental Quality Regulations (40 CFR Parts 1500-1508), and the DOE guidelines (10 CFR Part 1021) and, therefore, does not require an environmental impact statement pursuant to NEPA.

List of Subjects in 10 CFR Part 600

Administrative practice and procedure, Cooperative agreements/energy , Copyright, Debarment and suspension, Educational institutions, Energy, Grants/energy, Hospitals, Indian tribal governments, Individuals, Inventions and patents, Nonprofit organizations, Reporting requirements, Small businesses.

In consideration of the foregoing, the Department of Energy hereby amends Chapter II of Title 10 of the Code of Federal Regulations by amending Part 600 as set forth below.

Berton J. Roth,

Director, Procurement and Assistance Management Directorate.

PART 600—[AMENDED]

For the reasons set out in the preamble, Part 600 of Chapter II, Title 10 of the Code of Federal Regulations is amended as follows:

1. The authority citation for Part 600 continues to read as follows:

Authority: Sec. 644 and 646, Pub. L. 95-91, 91 Stat. 599 (42 U.S.C. 7254 and 7256); Pub. L. 97-258, 96 Stat. 1003-1005 (31 U.S.C. 6301-6308).

2. Section 600.6 is revised to read as follows:

§ 600.6 Discretionary awards.

(a) DOE may make new discretionary financial assistance awards on the basis of:

(1) Applications submitted in response to a financial assistance solicitation (See § 600.9);

(2) Unsolicited applications satisfying the selection criteria of § 600.14(e)(1);

(3) Applications submitted in response to a Program Opportunity Notice (PON) (see 48 CFR 917.72 for the submission, evaluation, and selection procedures to be used for a PON. When it is anticipated that a PON will result in a financial assistance award(s), the procedures in 48 CFR 917.72 shall be supplemented by the provisions set forth in §§ 600.9 and 600.10 to cover those solicitation and application requirements which are specific to financial assistance and for which there is no alternative coverage in 48 CFR 917.72; e.g., presubmission reviews and clearances, preaward assurances, etc.);

(4) Applications submitted in response to a Program Research and Development Announcement (see 48 CFR 917.73) if, after an application is selected for award, DOE determines that a grant or cooperative agreement is the appropriate award instrument;

(5) An application for an award to be made on a noncompetitive basis under § 600.7(b)(2); or

(6) Unsolicited applications which do not satisfy the selection criteria of § 600.14(e)(1)(ii) if such applications do satisfy one or more of the selection criteria of § 600.7(b)(2)(i).

(b) DOE may make renewal discretionary financial assistance awards on the basis of:

(1) Applications submitted in response to a financial assistance solicitation; or

(2) An application from an incumbent recipient if the award has been justified in accordance with § 600.7(b)(2).

(c) DOE shall solicit applications for discretionary financial assistance in a manner which provides for the maximum amount of competition feasible.

3. Section 600.7 is amended by revising paragraph (b) to read as follows:

§ 600.7 Eligibility.

* * * * *

(b)(1) *Restricted eligibility.* If DOE restricts eligibility in a solicitation or program rule to less than all otherwise eligible applicants under paragraph (a) of this section, an explanation of why the restriction of eligibility is considered necessary shall be included in the solicitation or program rule. If the aggregate amount of DOE funds available for award under such a solicitation other than a program rule exceeds $250,000, such restriction of eligibility shall be supported by a written determination initiated by the responsible program office, which has been:

(i) Approved by the responsible program Assistant Secretary or his or her designee, who shall be at an organizational level not less than two levels above that of the project officer, and the Contracting Officer for the awarding office issuing the solicitation and

(ii) Concurred in by local legal counsel.

If the aggregate amount of DOE funds available for award is $250,000 or less, the written determination is to be approved by the Head of Contracting Activity (HCA) for the awarding office that will be issuing the solicitation and

the Contracting Officer. Concurrence may be waived for a particular award or class of awards of $250,000 or less by local legal counsel, if they so elect.

(2) *Noncompetitive financial assistance.* DOE may award a grant or cooperative agreement on a noncompetitive basis (other than as a result of the acceptance of an unsolicited application meeting the selection criteria of § 600.14(e)(1)(ii) or an application for a continuation award in accordance with § 600.106(b)) only if the application satisfies one or more of the selection criteria in paragraph (b)(2)(i) of this section and is supported by a written determination of noncompetitive financial assistance prepared in accordance with the provisions of paragraphs (b)(2) (ii) and (iii) of this section. In addition, an announcement of the intent to make a noncompetitive financial assistance award and an explanation of why a noncompetitive financial assistance award is necessary shall be published in the **Federal Register** at least 14 calendar days prior to making an award. Public comments (or inquiries) to this announcement must be resolved by the DOE office issuing such announcement. Any such noncompetitive financial assistance is not subject to the solicitation requirements of § 600.9.

(i) *Criteria for justifying noncompetitive financial assistance.* In order for a noncompetitive award to be made under the authority of paragraph (b)(2) of this section, it must satisfy one or more of the following selection criteria in addition to the types of factors listed in § 600.14(d):

(A) The activity to be funded is necessary to the satisfactory completion of, or is a continuation or renewal of, an activity presently being funded by DOE or another Federal agency, and for which competition for support would have a significant adverse effect on continuity or completion of the activity.

(B) The activity(ies) is (are) being or would be conducted by the applicant using its own resources or those donated or provided by third parties; however, DOE support of that activity would enhance the public benefits to be derived and DOE knows of no other entity which is conducting or is planning to conduct such an activity(ies).

(C) The applicant is a unit of government and the activity to be supported is related to performance of a governmental function within the subject jurisdiction, thereby precluding DOE provision of support to another entity.

(D) The applicant has exclusive domestic capability to perform the activity successfully, based upon unique equipment, proprietary data, technical expertise, or other such unique qualifications.

(E) The applicant implements an agreement between the United States Government and a foreign government to fund a foreign applicant.

(F) Time constraints associated with a public health, safety, or welfare or national security requirement preclude competition.

(G) The responsible Assistant Secretary, with the approval of the Director, determines that a noncompetitive award is in the public interest. This authority may not be delegated.

(ii) *Documentation requirements.* A determination of noncompetitive financial assistance (normally prepared by the responsible program official (project officer)) is required to explain the basis for the proposed noncompetitive award. The determination, the purpose of which is to justify funding on a noncompetitive basis, shall be placed in the award file and must, as a minimum, include the following information:

(A) Name of the sponsoring program office and the awarding office, the type of award proposed (grant or cooperative agreement), and the proposed recipient.

(B) A description of the nature of the financial assistance to be provided (e.g. research grant, conference grant, etc.), the amount and availability of DOE funds required, any cost sharing proposed or required, and the statutory authority for the proposed award.

(C) A statement of whether the application was solicited or unsolicited and the nature of any significant preapplication contact between the applicant and the Department. If received on an unsolicited basis, a statement of why the application does not meet the selection criteria of § 600.14(e)(1).

(D) To the extent relevant, a discussion of the programmatic evaluation conducted and the results of that evaluation, including the overall merit and relevance to the DOE mission, the anticipated objectives and probability of success in meeting them, the quality of the applicant's personnel and facilities, and the appropriateness and adequacy of the proposed budget.

(E) A brief description of the public purpose of support or stimulation to be served by the proposed award and, in nontechnical terms, identification of any particular significance or specialized character of the activity proposed to be funded.

(F) A statement of which one(s) of the criteria in paragraph (b)(2)(i) of this section is (are) being relied upon to justify the action and an explanation in general, nontechnical detail why each such criterion applies.

(iii) *Approval requirements.* Except as provided below, all determinations of noncompetitive financial assistance under paragraph (b)(2) of this section must be:

(A) Approved, prior to award, by the initiating program official (project officer), the responsible program Assistant Secretary or his or her designee, who shall be not less than two organizational levels above that of the project officer, and the Contracting Officer for the awarding office issuing the solicitation, and

(B) Concurred in by local legal counsel.

Where the amount of DOE funds is $100,000 or less for a noncompetitive financial assistance award under any program for which the HCA has been formally assigned cognizance, the determination shall be approved by the HCA and the Contracting Officer. Concurrence for a particular award or class of awards of $100,000 or less may be waived by local legal counsel, if they so elect.

* * * * *

4. Section 600.14 is amended by revising paragraph (e)(1)(ii) and redesignating paragraphs (f) and (g) as (g) and (h) and revising them, and by inserting a new paragraph (f) to read as follows:

§ 600.14 Unsolicited applications.

* * * * *

(e) *Criteria for selection of an unsolicited application.* (1) * * *

(ii) The proposed project represents a unique or innovative idea, method, or approach which would not be eligible for financial assistance under a recent, current, or planned solicitation, or if, as determined by DOE, a competitive solicitation would be inappropriate.

* * * * *

(f) *Justification for acceptance of an unsolicited application.* Prior to making an award on the basis of acceptance of an unsolicited application, a justification document, which describes the results of the general evaluation conducted in accordance with paragraph (d) of this section and which addresses the selection criteria in paragraph (e)(1) of this section, must be prepared and completed for the award file. The justification must be prepared and signed by the initiating program official (project officer), and approved by the responsible program Assistant Secretary or his or her designee, and the contracting officer. If the amount of DOE funds is $100,000 or less for a proposed noncompetitive financial assistance

award under any program for which the HCA has been formally assigned cognizance, the justification shall be approved by the HCA and the Contracting Officer. Concurrence for a particular award or class of awards of $100,000 or less may be waived by local legal counsel, if they so elect. Further, an announcement of the intent to award based on an unsolicited application and an explanation of why such an award is being made shall be published for public comment in the **Federal Register** at least 14 calendar days prior to making an award.

(g) *Funding.* An award based on an unsolicited application may be made only if sufficient appropriated funds are available.

(h) *Unsuccessful applications.* DOE shall promptly notify in writing each applicant whose application does not satisfy the requirements of this section. DOE will return unsuccessful unsolicited applications only if requested by the applicant. This request may be made at the time of application or up to 30 days after the date of the written notification required by this paragraph.

5. Section 600.106 is amended by revising paragraph (c) to read as follows:

§ 600.106 Funding.

* * * * *

(c) *Renewal awards.* Discretionary renewal awards may be made either on the basis of a solicitation or on a noncompetitive basis. If DOE proposes to restrict eligibility for a discretionary renewal award to the incumbent grantee, the noncompetitive award must be justified in accordance with § 600.7(b)(2). Renewal applications must be submitted no later than 5 months prior to the scheduled expiration of the project period unless a program rule or other published instruction establishes a different application deadline. Before DOE may make a renewal award for a formula grant, the grantee must submit a revised or amended state plan in accordance with program rules or other instructions from DOE.

[FR Doc. 88-7932 Filed 4-12-88; 8:45 am

BILLING CODE 6450-01-D

FARM CREDIT ADMINISTRATION

12 CFR Part 611

Organization; Farm Credit System Capital Corp.

AGENCY: Farm Credit Administration.

ACTION: Final rule; withdrawal.

SUMMARY: In accordance with sections 201 and 207 of the Agricultural Credit Act of 1987 (Pub. L. 100-233) which provide for the termination of the Farm Credit System Capital Corporation (Capital Corporation), the Farm Credit Administration withdraws regulations 12 CFR 611.1140-611.1142 relating to the organization and operation of the Capital Corporation.

EFFECTIVE DATE: April 13, 1988.

FOR FURTHER INFORMATION CONTACT: Gary L. Norton, Senior Attorney, Office of the General Counsel, Farm Credit Administration, McLean, Virginia 22102-5090, (703) 883-4020, TDD (703) 883-4444.

SUPPLEMENTARY INFORMATION: The Farm Credit Administration (FCA) published final regulations 12 CFR 611.1140-611.1142 (51 FR 8665, March 13, 1986), final amendments (52 FR 12135, April 15, 1987) applicable to the Capital Corporation. These regulations implemented the provisions of the Farm Credit Amendments Act of 1985 (Pub. L. 99-205) which provided for the creation and operation of the Capital Corporation. On January 6, 1988 the Agricultural Credit Act of 1987 was enacted. Section 207 of the 1987 Act repealed the provisions of Part D1 of title IV of the 1971 Act, under which the Capital Corporation was chartered and operated. In addition, section 201 of the 1987 Act provided for the creation of the Farm Credit System Assistance Board (Assistance Board) and provided that the Assistance Board would succeed to the assets and liabilities of the Capital Corporation. On January 21, 1988, the FCA chartered the Assistance Board and dissolved and revoked the charter of the Capital Corporation (53 FR 4072, February 11, 1988). To complete the implementation of these provisions of the 1987 Act, the FCA now withdraws its regulations governing the operations of the Capital Corporation.

The FCA finds with good cause that, in accordance with 5 U.S.C. 553(b)(B) and (d)(3), notice and comment and a delayed effective date are unnecessary and contrary to the public interest. Since the statutory authority for 12 CFR 611.1140-611.1142 has been repealed, revocation of these regulations constitutes a technical amendment mandated by Congress, and public notice and comment is unnecessary. For the same reasons and because it is necessary to immediately clarify that the authorities contained in these regulations may no longer be exercised by the Capital Corporation or any other party, in accordance with section 5.17(c)(2) of the Act, these regulations are withdrawn prior to the expiration of the 30-day congressional review period.

Accordingly, the FCA withdraws all of its regulations relating to the operation of the Capital Corporation

List of Subjects in 12 CFR Part 611

Agriculture, Banks, Banking, Organization and functions (Government agencies), Rural areas.

As stated in the preamble, Part 611 of Chapter VI, Title 12, of the Code of Federal Regulations, is amended as follows:

PART 611—ORGANIZATION

Subpart J—Farm Credit System Capital Corporation

1. The authority citation for Part 611 is revised to read as follows:

Authority: 12 U.S.C. 2031, 2091, 2182, 2183, 2243, 2244, 2250, 2252.

2. Subpart J consisting of §§ 611.1140-611.1142 is removed and reserved.

§§ 611.1140-611.1142 (Subpart J) [Removed and reserved]

Date: April 7, 1988.

David A. Hill,

Secretary, Farm Credit Administration Board.

[FR Doc. 88-8025 Filed 4-12-88; 8:45 am]

BILLING CODE 6705-01-M

---

12 CFR Part 615

Funding and Fiscal Affairs, Loan Policies and Operations, and Funding Operations

AGENCY: Farm Credit Administration.

ACTION: Final rule with request for comments.

SUMMARY: On January 11, 1988, the Farm Credit Administration (FCA) chartered the Farm Credit System Financial Assistance Corporation (Financial Assistance Corporation) (53 FR 1679, January 21, 1988) pursuant to section 6.20 of the Farm Credit Act of 1971, as added by the Agricultural Credit Act of 1987, Pub. L. 100-233 (1987). The Financial Assistance Corporation will issue debt securities in the capital markets to provide capital to institutions of the Farm Credit System which are experiencing financial difficulty. The Farm Credit Administration Board (Board) adopts final regulations and requests comments thereon, regarding the issuance of Financial Assistance Corporation securities and book-entry procedures applicable to such securities.

DATES: This regulation is effective April 13, 1988. Written comments must be received on or before May 13, 1988.

ADDRESS: Submit any comments in writing (in triplicate) to Anne E. Dewey, General Counsel, Farm Credit Administration, McLean, Virginia 22102-5090. Copies of all communications received will be available for examination by interested parties in the Office of General Counsel, Farm Credit Administration.

FOR FURTHER INFORMATION CONTACT:

Michael J. LaVerghetta, Financial and Credit Standards Division, Farm Credit Administration, McLean, VA 22102-5090, (703) 883-4498, TDD (703) 883-4444

or

James M. Morris, Office of the General Counsel, Farm Credit Administration, McLean, VA 22102-5090, (703) 883-4020, TDD (703) 883-4444.

SUPPLEMENTARY INFORMATION: Section 6.20 of the Farm Credit Act of 1971 (Act), as amended by section 201 of the Agricultural Credit Act of 1987, provides that the Farm Credit Administration shall charter the Farm Credit System Financial Assistance Corporation (Financial Assistance Corporation), as an institution of the Farm Credit System (System). Section 15 of the Federal Reserve Act (12 U.S.C. 393), as amended by section 5.41 of the Act, provides that Federal Reserve Banks are authorized to act as depositories for and fiscal agents of all of the institutions of the System.

On January 11, 1988, the FCA chartered the Financial Assistance Corporation (53 FR 1679, January 21, 1988). The authority of the Financial Assistance Corporation to issue securities is set forth in section 6.26 of the Act. The purpose of the Financial Assistance Corporation is to carry out a program to provide capital to institutions of the System that are experiencing financial difficulty.

The Farm Credit Administration Board (Board) adopts regulations that authorize Federal Reserve Banks to apply the book-entry procedures that are applicable to consolidated and systemwide obligations of other Farm Credit System institutions (12 CFR Part 615, Subpart O) to the bonds, notes, debentures, or other obligations issued by the Financial Assistance Corporation. The new regulation at 12 CFR 615.5560 will make the relevant provisions of Subpart O of Part 615, as they may be amended from time to time, applicable to Financial Assistance Corporation securities.

The FCA believes that issuance of Financial Assistance Corporation securities in book-entry form will benefit investors, the Financial Assistance Corporation, the Farm Credit System, the FCA and the financing community by (1) reducing the risk of loss due to theft, mishandling, and counterfeiting; (2) decreasing the cost of issuing, storing, and delivering physical certificates; and (3) minimizing the paperwork created by the growing volume of debt transactions.

The Farm Credit Administration Board finds, in accordance with 5 U.S.C. 553(b), that this regulation, which conforms existing System bank book-entry procedures to Financial Assistance Corporation securities, is a technical rule for which notice and public procedure are unnecessary. In addition, this regulation must be effective immediately so that the Financial Assistance Corporation can begin to issue its debt securities as expeditiously as possible. These securities must be issued to fully implement the financial assistance mechanism enacted by the 1987 Act. Accordingly, in accordance with 5 U.S.C. 553(d)(3) the Board finds good cause for these regulations to be effective immediately upon publication.

In consideration of the immediate need for the Financial Assistance Corporation to be able to issue bonds to provide financial assistance to some System institutions, the Board finds, in accordance with section 5.17(c)(2) of the Act, that an emergency exists which requires that these regulations be effective prior to expiration of the 30-day Congressional review period.

List of Subjects in 12 CFR Part 615

Accounting, Agriculture, Banks, Banking, Government securities, Investments, Rural areas.

As stated in the preamble, Part 615 of Chapter VI, Title 12, Code of Federal Regulations, is amended as follows:

PART 615—FUNDING AND FISCAL AFFAIRS, LOAN POLICIES AND OPERATIONS, AND FUNDING OPERATIONS

1. The authority citation for Part 615 is revised to read as follows:

Authority: 12 U.S.C. 2154, 2243, 2252; Pub. L. 100-233 (1987).

2. Part 615 is amended by adding a new Subpart R, § 615.5560, to read as follows:

Subpart R—Farm Credit System Financial Assistance Corporation Securities

§ 615.5560 Book-entry Procedure for Farm Credit System Financial Assistance Corporation Securities.

(a) The Farm Credit System Financial Assistance Corporation (Financial Assistance Corporation) is a federally chartered instrumentality of the United States, and an institution of the Farm Credit System, subject to the examination and regulation of the Farm Credit Administration.

(b) Subject to the approval of the Farm Credit System Assistance Board, the Financial Assistance Corporation is authorized by section 6.26 of the Act to issue uncollateralized bonds, notes, debentures, and similar obligations, guaranteed as to the timely payment of principal and interest by the Secretary of the Treasury, for a term of 15 years (Financial Assistance Corporation securities). The Financial Assistance Corporation may prescribe the forms, the denominations, the rates of interest, the conditions, the manner of issuance and the prices of such Financial Assistance Corporation obligations.

(c) Financial Assistance Corporation securities shall be governed by §§ 615.5465, 615.5470, 615.5475, 615.5480, 615.5485, 615.5490, 615.5492 and 615.5494. In interpreting those sections for purposes of this section, the term "Financial Assistance Corporation securities" shall be read for "Farm Credit securities," and "Financial Assistance Corporation" shall be read for "Banks of the Farm Credit System," and "Farm Credit bank."

Date: April 7, 1988.

David A. Hill,

Secretary, Farm Credit Administration Board.

[FR Doc. 88-8026 Filed 4-12-88; 8:45 am]

BILLING CODE 6705-01-M

DEPARTMENT OF TRANSPORTATION

Federal Aviation Administration

14 CFR Part 39

[Docket No. 88-NM-24-AD; Amdt. 39-5894]

Airworthiness Directives; SAAB Fairchild Corporation Model SF-340A Series Airplanes

AGENCY: Federal Aviation Administration (FAA), DOT.

ACTION: Final rule.

SUMMARY: This amendment revises an existing airworthiness directive (AD), applicable to SAAB Fairchild Corporation Model SF-340A series airplanes, which currently requires repetitive inspection and replacement of the engine power control cable attach pins if wear tolerances are exceeded. This amendment changes the compliance time for the initial inspection, reduces the repetitive inspection interval from 500 flight hours

to 200 flight hours, and requires replacement of the engine power control cable assembly if axial play is detected. This action is prompted by a report that an engine power cable failed at 426 flight hours from the last required inspection, indicating that more frequent repetitive inspections are necessary to detect a worn cable before failure. This condition, if not corrected, could result in a propeller/engine overspeed condition and can cause a reduction in airplane control or cause engine/propeller failure, or a combination of these conditions.

EFFECTIVE DATE: May 2, 1988.

ADDRESSES: The applicable service information may be obtained from SAAB Scania, Product Support, S-58188, Linkoping, Sweden. This information may be examined at the FAA, Northwest Mountain Region, 17900 Pacific Highway South, Seattle, Washington, or the Seattle Aircraft Certification Office, 9010 East Marginal Way South, Seattle, Washington.

FOR FURTHER INFORMATION CONTACT: Mark Quam, Standardization Branch, ANM-113; telephone (206) 431-1978. Mailing address: FAA, Northwest Mountain Region, 17900 Pacific Highway South, C-68966, Seattle, Washington 98168.

SUPPLEMENTARY INFORMATION: On December 23, 1987, the FAA issued AD 87-24-51, Amendment 39-5822 (53 FR 12; January 4, 1988), to require an initial inspection of the engine power control cable attach pins within the next 100 flight hours, repetitive inspections of the pins at intervals not to exceed 500 flight hours, and replacement of the pins if certain wear tolerances are exceeded. The actions are to be accomplished in accordance with SAAB-Scania AB Alert Service Bulletin SF340-76A-024, dated November 20, 1987.

That action was prompted by reports that, during two recent events when the engine power was reduced for descent, the propeller RPM increased. In both cases, the affected engine was shut down and a safe landing made. It was determined that the overspeed condition was caused by sheared pins in the power control cable located between the Hydro Mechanical Engine Control Unit (HMC) and the Propeller Control Unit (PCU). It was further determined that if the power lever in the control quadrant is retarded to flight idle the power lever on the PCU may move to the Beta-Range. As a result, propeller ovespeed beyond controlled limits may occur. This could result in a reduction of airplane control, or cause propeller/engine overspeed and subsequent propeller/engine failure, or a combination of these failure conditions.

Since issuance of that AD, an engine power control cable failed at 426 flight hours from the last required 500 flight hour inspection. As a result of the failure mentioned above, SAAB-Scania AB incorporated the following changes into Alert Service Bulletin SF340-26A-024, Revision 2, dated February 15, 1988:

(1) The initial inspection compliance time was reduced from 100 flight hours to 25 flight hours.

(2) The axial play tolerance was eliminated.

(3) The repetitive inspection interval of 500 flight hours was reduced to 200 flight hours.

Revision 2, to Service Bulletin SF340-26A-024 was classified as mandatory by the Swedish Airworthiness Authority on February 16, 1988.

This airplane model is manufactured in Sweden and type certificated in the United States under the provisions of § 21.29 of the Federal Aviation Regulations and the applicable bilateral airworthiness agreement.

Since this situation is likely to exist or develop on airplanes of the same type design registered in the United States, this amendment revises AD 87-24-51 to require the accomplishment of the initial inspection within 25 hours time-in-service after the effective date of this amendment, repetitive inspections at intervals of 200 hours time-in-service, and replacement of the engine power control cable assembly if axial play is detected, in accordance with Revision 2 of the service bulletin previously mentioned.

Since a situation exists, that requires immediate adoption of this regulation, it is found that notice and public procedure hereon are impracticable, and good cause exists for making this amendment effective in less than 30 days.

The FAA has determined that this regulation is an emergency regulation that is not considered to be major under Executive Order 12291. It is impracticable for the agency to follow the procedures of Order 12291 with respect to this rule since the rule must be issued immediately to correct an unsafe condition in the aircraft. It has been further determined that this document involves an emergency regulation under DOT Regulatory Policies and Procedures (44 FR 11034; February 29, 1979). If this action is subsequently determined to involve a significant/major regulation, a final regulatory evaluation or analysis, as appropriate, will be prepared and placed in the regulatory docket (otherwise, an evaluation or analysis is not required).

List of Subjects in 14 CFR Part 39

Aviation safety, Aircraft.

Adoption of the Amendment

Accordingly, pursuant to the authority delegated to me by the Administrator, the Federal Aviation Administration amends § 39.13 of Part 39 of the Federal Aviation Regulations as follows:

PART 39—[AMENDED]

1. The authority citation for Part 39 continues to read as follows:

Authority: 49 U.S.C. 1354(a), 1421 and 1423; 49 U.S.C. 106(g) (Revised Pub. L. 97-449, January 12, 1983); and 14 CFR 11.89.

§ 39.13 [Amended]

2. By revising AD 87-24-51, Amendment 39-5822 (53 FR 12; January 4, 1988) to read as follows:

Saab-Fairchild: Applies to all Model SF-340A series airplanes, certificated in any category. Compliance is required as indicated, unless previously accomplished.

To prevent a reduction in airplane controllability or propeller/engine overspeed due to sheared engine power control cable pins, accomplish the following:

A. Prior to the accumulation of 25 flight hours time-in-service after the effective date of this amendment, unless accomplished within the last 175 flight hours time-in-service, and thereafter at intervals not to exceed 200 flight hours time-in-service, inspect the engine power control cables, part numbers C82146-1 or C82146-2, located between the hydro mechanical engine control units and the propeller control units, for axial play, in accordance with SAAB Service Bulletin SF340-76A-024, Revision 2, dated February 15, 1988.

B. If axial play is detected during the inspection required by paragraph A., above, replace the cable with an airworthy cable assembly prior to further flight, and repeat the inspections required by paragraph A. at intervals not to exceed 200 flight hours time-in-service.

C. An alternate means of compliance or adjustment of the compliance time, which provides an acceptable level of safety and which has the concurrence of an FAA Principal Maintenance Inspector, may be used when approved by the Manager, Standardization Branch, ANM-113, FAA, Northwest Mountain Region.

D. Special flight permits may be issued in accordance with FAR 21.197 and 21.199 to operate airplanes to a base for the accomplishment of the requirements of this AD.

All persons affected by this directive who have not already received the appropriate service document from the manufacturer may obtain copies upon request to SAAB Scania, Product

Support, S-58188, Linkoping, Sweden. This document may be examined at the FAA, Northwest Mountain Region, 17900 Pacific Highway South, Seattle, Washington, or the Seattle Aircraft Certification Office, 9010 East Marginal Way South, Seattle, Washington.

This amendment becomes effective May 2, 1988.

Issued in Seattle, Washington, on April 4, 1988.

Wayne J. Barlow,

Director, Northwest Mountain Region.

[FR Doc. 88-7997 Filed 4-12-88; 8:45 am]

BILLING CODE 4910-13-M

DEPARTMENT OF THE TREASURY

Customs Service

19 CFR Part 7

[T.D. 88-17]

Application of Double Substantial Transformation Test in Determining Foreign Value Content for Products Imported From U.S. Insular Possessions

AGENCY: U.S. Customs Service, Department of the Treasury.

ACTION: Final interpretive rule.

SUMMARY: This document gives notice that Customs has determined that the double substantial transformation concept is applicable to products of U.S. insular possessions for the purpose of determining whether the products meet the value requirement entitling them to free entry under General Headnote 3(a), Tariff Schedules of the U.S. (TSUS). General Headnote 3(a) provides for free entry into the U.S. of products of its insular possessions which do not contain foreign materials equal in value to more than 70 percent of their total value or more than 50 percent of their total value if the articles are ineligible for duty-free entry under the Caribbean Basin Initiative. Allowing the double substantial transformation concept to be applied means that the value of foreign material (that is, material that does not originate in an insular possession) may be considered as the value of material produced in the insular possession for the purpose of the 70 or 50 percent value determination if the foreign material is transformed in the insular possession through a substantial processing operation into a new and different product with a different name, character or use, and the new and different product is then transformed into yet another new and different product which is exported to the U.S.

EFFECTIVE DATE: April 13, 1988.

FOR FURTHER INFORMATION CONTACT: Daniel Gluck, Commercial Rulings Division (202 566-2938).

SUPPLEMENTARY INFORMATION:

Background

General Headnote 3(a), Tariff Schedules of the U.S. (TSUS; 19 U.S.C. 1202), permits products of the insular possessions of the U.S. to be imported into the U.S. free of duty if certain qualifications are met. The insular possessions include the U.S. Virgin Islands, Guam, American Samoa, the Northern Mariana Islands, Midway Islands, Wake Island, Johnston Island, and Kingman Reef. The purpose of General Headnote 3(a) is to promote the economic development of the insular possessions. Regulations concerning the insular possessions are set forth in Part 7, Customs Regulations (19 CFR Part 7).

Duty-free entry is provided for products of the insular possessions if the products do not exceed a specified foreign value limitation. The products must not contain foreign material equal in value to more than 70 percent of their total value or more than 50 percent of their total value if the articles are ineligible for duty-free entry under the Caribbean Basin Initiative (CBI). All products of the insular possessions are eligible for duty-free treatment under Genral Headnote 3(a) if they qualify.

The Generalized System of Preferences (GSP) (19 U.S.C. 2461 *et seq.*) and the CBI (19 U.S.C. 2701 *et seq.*), other programs implemented by Coingress to promote economic development in certain parts of the world by permitting duty-free entry of certain products from designated countries if they meet certain qualifications, also both require products to meet a local value-added criterion to qualify for duty-free treatment. This means, that after it is determined that an article is a product of a beneficiary designated country (BDC), it then must be determined that a certain percentage of the cost of the product is attributable to direct costs of processing in the BDC and/or the costs of material produced in that country. In determining whether products meet the value-added criterion in both these programs, a concept known as double substantial transformation is used.

According to the double substantial transformation concept, the value of foreign material (that is, material that does not originate in a designated country) may be considered as the value of material produced in the designated country for the purpose of the value-added criterion, if the foreign material is transformed in the designated country through a substantial processing operation into a new and different product with a different name, character or use, and the new and different product is then transformed into yet another new and different product which is exported to the U.S.

Customs application of the double substantial transformation requirement in the context of GSP received judicial approval in *The Torrington Company v. United States*, 596 F. Supp. 1083, 1086 (1984), Aff'd. 764 F. 2d. 1563 (C.A.F.C. 1985). The Court of International Trade, after affirming Customs application of the double substantial transformation concept, said:

> Regulations promulgated by Customs define the term "material produced" to include materials from third countries that are substantially transformed in the BDC into a new and different article of commerce. 19 CFR 10.177(a)(2). It is not enough to transform substantially the non-BDC constituent materials into the final article, as the material utilized to produce the final article would remain non-BDC material. There must first be a substantial transformation of the non-BDC material into a new and different article of commerce which becomes "materials produced," and these materials produced in the BDC must then be substantially transformed into a new and different article of commerce. It is noted that 19 CFR 10.176(a) distinguishes between "merchandise produced in a BDC" and the cost or value of the "materials produced in the BDC" which demonstrates the contemplation of a dual substantial transformation requirement.

The double substantial transformation concept has not as yet been applied in determining whether products of the insular possessions meet the applicable foreign value limitation. Recognizing the interrelationship between GSP, CBI and General Headnote 3(a) programs, and the parallel intent of the three programs, Customs believes that the concept should apply to General Headnote 3(a) as well as to GSP and CBI.

Because application of the double substantial transformation concept to the insular possessions had not been previously considered by Customs and because the issue is of significant interest to certain segments of domestic industry and to importers, Customs decided that comments should be solicited before making a determination. Accordingly, on July 13, 1987, Customs published in the **Federal Register** (52 FR 26154), a notice proposing to apply the double substantial transformation concept to products of the insular possessions for the purpose of determining whether such products meet the foreign value limitation entitling

VOL 53 ISS 71 AP 13 1988 UMI

them to free entry under General Headnote 3(a).

Discussion of Comments

Twelve comments were received in response to the notice, seven of which strongly supported Customs' proposal.

Favorable Comments

Four commenters stated that the Congressional intent of General Headnote 3(a), to ensure the economic development of the U.S. insular possessions, would be supported by adoption of the double substantial transformation concept.

Several commenters pointed to the language added to General Headnote 3(a) after enactment of CBI and GSP as evidence that the double substantial transformation concept should apply to insular possessions. Language was added in General Headnote 3(a)(iv) stating that articles imported into the U.S. from an insular possession must receive no less favorable duty treatment than the treatment afforded such articles when imported from a CBI or GSP beneficiary country. It was claimed that because double substantial transformation applies in GSP and CBI cases, resulting in non-beneficiary material being transformed into material of the beneficiary country for the purpose of meeting the minimum value added requirement, not applying the concept to products of insular possessions would result in less favorable duty treatment to similar products of the insular possessions. One commenter stated that the added language demonstrates Congress intended to maintain the competitive position of the insular possessions relative to CBI and GSP beneficiaries. This intent, the commenter stated, is further demonstrated by the fact that while certain products are not eligible for CBI duty-free treatment, the same products are entitled to duty-free treatment from the insular possessions if they meet the no more than 50 percent foreign value requirement.

One commenter endorsed adoption of the proposed interpretive rule because the duty-free treatment afforded insular possessions by General Headnote 3(a) represents the only opportunity the insular possessions have to compete with foreign producers (who are unfettered by the immigration, minimum wage and environmental laws which govern insular possessions). Accordingly, it was argued that failure to apply the double substantial transformation concept under the Headnote would severely limit the effectiveness of the Headnote and undermine the competitiveness of the possessions. This position was supported by another commenter who stated that the adoption of the proposed interpretive rule would allow the higher labor cost operations in insular possessions to compete with lower cost operations of foreign suppliers.

Another commenter endorsed the proposed rule on grounds of public policy, fairness, and equity in that its adoption would encourage economic growth and independence, create jobs and restore the competitive position of insular possessions recently imperiled by, among other things, the unstable condition of the dollar.

One commenter stated the proposed interpretive rule is consistent with the legislative purpose of favored treatment of insular possessions under General Headnote 3(a) and with the language of General Headnote 3(a). He argued that, by its terms, the Headnote expressly provides that foreign materials which are substantially transformed in insular possessions become materials which are the "growth, product or manufacture" of the insular possessions. These substantially transformed materials may then be further substantially transformed into new and different articles of commerce which, under the second category under the Headnote, qualify as products of insular possessions not containing foreign materials.

The same commenter cited *Torrington Co.* for the proposition that the Court of Appeals, in affirming the Court of International Trade's decision, recognized the double substantial transformation concept in the context of GSP. Because the "materials produced" language in the GSP statute is conceptually identical to the language in the General Headnote 3(a), the commenter concluded, the double substantial transformation concept should be applied, as a matter of law, to products of the insular possessions.

Unfavorable Comments

The commenters who objected set forth the following arguments:

(1) Applying the concept would grant a significant economic advantage to insular possessions, thereby damaging competing businesses which are not located in the insular possessions.

(2) Certain materials such as petroleum materials and others that are excluded from duty-free treatment under the CBI should be specifically excluded from the proposed rule. Without this exclusion, the insular possessions would receive a distinct economic advantage. For example, refiners in the possessions would have an advantage over domestic refiners who must pay duty on foreign crude oil and petroleum product imports.

(3) Adoption of the proposed rule would, in some way, deprive articles that are otherwise entitled to duty-free treatment under General Headnote 3(a) standards from receiving that treatment.

(4) The explanation of the double substantial transformation concept set forth in the proposal could lead to unnecessary confusion between origin quota regulations and the rules of interpretation concerning duty rates. Application by Customs of textile country of origin quota regulations to the rules interpreting rates of duty under General Headnote 3(a) could preclude the inclusion, for value content purposes, of the value of certain foreign textile materials imported into an insular possession, processed there into a constituent material and then processed into a foreign article.

Customs Response

Customs generally agrees with the commenters supporting the proposal. Regarding the four comments opposing the proposal, Customs responds as follows:

(1) The insular possessions do receive a signifcant economic advantage by General Headnote 3(a). Customs believes that it was the intent of Congress to give the insular possessions an economic advantage when it enacted General Headnote 3(a). When the GSP and CBI programs were enacted, Congress also amended General Headnote 3(a), by the addition thereto of subparagraphs (iii) and (iv), respectively, to provide that articles imported under the Headnote shall receive duty treatment "no less favorable" than that afforded under the GSP or CBI. These Headnote amendments were inserted specifically to maintain the competitive position of the possessions relative to GSP and CBI beneficiaries. (With regard to the purpose of the amendment made in connection with the CBI, see House Report No. 266, 1983 U.S. Code Cong. & Ad. News, at 652.)

Inasmuch as the double substantial transformation concept is applied to GSP and CBI beneficiary countries, failure to apply the concept under General Headnote 3(a) would, as a practical matter, place insular possessions at a disadvantage in relation to GSP and CBI countries. While General Headnote 3(a) appears to afford insular possessions a distinct duty-free advantage over GSP and CBI countries, considering the liberal value requirements, in reality, without recourse to the double substantial

transformation concept, this Headnote value requirement could actually be more difficult to satisfy than the current GSP or CBI value requirement. In additon, insular possessions face several impediments in their efforts to effectively compete with foreign producers. Their lack of natural resources and heavy industrial facilities and their increased production costs (due to strict immigration, minimum wage and environmental laws imposed by the U.S. Government) make insular possession producers dependent on imported manufactured materials. Without application of the double substantial transformation concept, a majority of processing operations, consisting of assembly and light manufacturing operations, could fail to meet the value content requirement of the Headnote. The double substantial transformation concept is, therefore, vital to the effective achievement of the Congressional intent of the Headnote 3(a) program of promoting the economic development of the insular possessions.

(2) We are of the opinion that the double substantial transformation concept should be applied to the insular possessions for all products, even those that are ineligible for duty-free treatment under CBI such as petroleum. When General Headnote 3(a) was amended by the CBI statute (Pub. L. 98-67, section 3214(a)), the 70 percent value requirement was adopted for all products other than those not eligible for CBI duty-free treatment and the 50 percent requirement was retained for products not eligible for duty-free treatment under the CBI. It could not have escaped Congressional notice that product coverage under General Headnote 3(a) is broader than that under CBI. The fact that after two specific amendments were made to the Headnote (effected by the CBI statute), Congress has not seen fit to limit product coverage demonstrates an intention to afford insular possessions a unique position in relation to CBI beneficiaries. Furthermore, it is also clear that by retaining the 50 percent requirement for CBI-excluded products, Congress intended to provide the insular possessions with the advantage over CBI countries of being able to import these products into the U.S. duty-free. Customs believes that as it is Congressional intent that the double substantial transformation concept should be applied to the insular possessions, it would be inappropriate for Customs to restrict application of the concept to only those products eligible for CBI duty-free treatment. The proper avenue for such a determination would be Congressional action.

(3) and (4) Customs believes that perhaps its proposal was not entirely clear. The double substantial transformation concept is only applicable to determine whether an article which is already determined to be a product of an insular possession meets the foreign value limitation. Application of the concept would not in any way deprive an article otherwise entitled to receive duty-free treantment under General Headnote 3(a) from receiveing that treatment. Customs will still be determining whether an article is a product of the insualr possessions in the same manner it always has. Application of the double substantial transformation concept, in fact, could only help certain articles that are determined to be products of the insular possessions meet the foreign value limitation and thereby qualify for duty-free treatment. Applying the double substantial transformation concept would permit, contrary to the fourth comment, the value of foreign textile materials imported into an insular possession, substantially transformed there into a new and different product, and then processed into a foreign article, to be included in the non-foreign portion of the foreign value calculation.

Other Comment

One commenter stated that there are more insular possessions entitled to the benefits offered under General Headnote 3(a) than are mentioned in the background of the proposed rule. Customs recognized that the list of insular possessions in the background section may not be all-inclusive. However, it is not within the scope of this document to set out a definitive list of insular possessions.

Conclusion

After extensive review and careful consideration of the comments, Customs has concluded that the double substantial transformation concept should apply to the insular possessions for the purpose of determining whether products of the insular possessions meet the foreign value limitation entitling than to free entry under General Headnote 3(a), TSUS. If foreign material (material not originating in an insular possession) is transformed into a new and different product in an insular possession and then that product is transformed again in that insular possession to yet another new and different product which is imported into the U.S., its cost will be considered part of the value of materials produced in the insular possession.

Drafting Information

The principal author of this document was Harold M Singer, Regulations and Disclosure Law Branch, U.S. Customs Service. However, personnel from other offices participated in its development.

William von Raab,
Commissioner of Customs.

Approved: March 25, 1988.

Francis A. Keating II,
Assistant Secretary of the Treasury.

[FR Doc. 88-8060 Filed 4-12-88; 8:45 am]

BILLING CODE 4820-02-M

DEPARTMENT OF TRANSPORTATION

Federal Highway Administration

23 CFR Part 658

[FHWA Docket No 83-14]

Truck Size and Weight; Tandem Truck Safety Act

AGENCY: Federal Highway Administration (FHWA), DOT.

ACTION: Final rule.

SUMMARY: This rule amends various sections of 23 CFR Part 658, which implements the truck size and weight provisions contained in the Surface Transportation Assistance Act of 1982 (STAA), in response to amendments of the STAA contained in the Tandem Truck Safety Act of 1984 (TTSA). These amendments address: (1) Conditions under which segments of the National System of Interstate and Defense Highways may be deleted from the National Network for trucks, (2) conditions affecting the designation of new routes on the Federal-aid Primary System as part of the National Network, and (3) new access provisions for 102-inch wide, 28-foot long semitrailers.

EFFECTIVE DATE: April 13, 1988.

FOR FURTHER INFORMATION CONTACT: Mr. Kevin E. Heanue, Office of Planning, (202) 366-2951, Mr. C. John MacGowan, Office of Motor Carrier Information Management and Analysis, (202) 366-4032, or Mr. David C. Oliver, Office of the Chief Counsel, (202) 366-1354, Federal Highway Administration, 400 Seventh Street SW., Washington, DC 20590. Office hours are from 7:45 a.m. to 4:15 p.m., e.t., Monday through Friday, except legal holidays.

SUPPLEMENTARY INFORMATION: On October 30, 1984, the TTSA (Pub. L. 98-554, 98 Stat. 2829) amending the STAA (Pub. L. 97-424, 96 Stat. 2097) became law. On September 18, 1985, FHWA issued a Notice of Proposed Rulemaking

(NPRM) that addressed various provisions added by the TTSA (50 FR 37970, September 18, 1985). Comments were received from 10 State governments, 3 trade associations, 2 industry representatives, and one each from a city government and a private citizen. These submissions contained a combined total of 31 comments: 14 on Interstate deletion; 11 on reasonable access; 2 on addition of primary routes; and 4 on other issues.

Interstate Deletion

The TTSA amends sections 411 and 416 of the STAA to authorize the exemption of specific segments of Interstate routes from the requirements of these two sections. We have characterized the approval of such an exemption as a "deletion" from the "National Network." The National Network is the system of Interstate and other designated Primary Routes that are open to the vehicles described in the STAA; e.g., 102-inch wide, 48-foot semitrailers when used in a truck tractor-semitrailer combination and 28-foot semitrailers or trailers when used in a truck tractor-semitrailer-trailer combination (49 FR 23302, June 5, 1984). Interstate deletions may be approved at the request of the Governor of the State or upon the FHWA's own initiative if a segment is not capable of safely accommodating the longer trucks or combinations or the 102-inch wide vehicles (other than buses) as authorized by the STAA. The amendments further require the Governor to consult with local jurisdictions within the State served by the Interstate segment and the Governors of adjacent States which might be affected by the deletion. As part of this consultation, consideration is to be given to safety, alternative routes and the impact on transportation service provided to the area.

Four factors which must be considered in a request for deletion are set forth in the Senate Committee report:

> The Committee intends that the Secretary consider four factors in making an exemption determination pursuant to this legislation: (1) the effect of an exemption on transportation safety, (2) the effect of an exemption on interstate commence, (3) the presence and suitability of an alternative route or routes, and (4) the effect on other segments of the Interstate and Defense Highway System and other highways. It is unequivocally the Committee's intent that highway safety, the first factor, be the Secretary's primary concern.

Fourteen comments concerned Interstate deletion. Of these, 7 were from the trucking industry and associations, 6 from State governments, and one from a private citizen. Nearly half of these comments were directed toward operating restrictions and, in particular, limitations on hours of service. The NPRM suggested the use of operating restrictions in lieu of deletion as an additional factor for consideration. This would allow the continued use of the segment by STAA vehicles, but with restraints such as peak hour use limitations and/or lane use requirements. One comment favored such restrictions. One State echoed a common concern that restricting hours of service could have regional impact, necessitating ample notification and discussion among neighboring localities and States. Essentially, comments from the industry asserted that operating restrictions constitute a partial deletion and, therefore, should not be imposed unless approved after consideration of the same four factors considered for a full deletion. This rationale received endorsement in a recent U.S. District Court memorandum opinion issued in the case of *New York Motor Truck Ass'n Inc.* v. *The City of New York*, 654 F. Supp. 1521 (1987) (appeal pending). FHWA has carefully considered the comments and the court case and is amending the rule to require that requests for use restrictions upon STAA vehicles as a class on Interstate highways must be submitted pursuant to and in conformance with the requirements of the TTSA, which are set out in new paragraph (d) of § 658.11. The FHWA, however, continues the policy that certain types of routine restrictions on Interstate segments, such as those related to structural or clearance deficiencies, are not subject to Federal approval. Conforming changes have also been made to § 658.11(g) (former § 658.11(f) *Restrictions.*) to make that subsection applicable only to non-Interstate Federal-aid primary routes on the National Network.

One comment raised the issue of restrictions on Interstate segments that prohibit all trucks at all times. Segments with such total truck bans are subject to the TTSA exemption requirements, unless the bans were in effect and the segments were open to traffic on January 6, 1983. This position is based on the court case cited above and reanalysis of applicable Federal law. The provision for exception from the National Network under § 658.11(f), as redesignated, has been revised accordingly. States desiring to impose total truck bans or continue total truck bans that became operationally effective after January 6, 1983, must submit a request for FHWA approval as deletions from the National Network under new paragraph (d) of § 658.11 in the same manner as requests for deletions and use restrictions affecting only STAA vehicles.

In other comments, one State recommended eliminating the factor requiring consideration of the effect of a deletion on interstate commerce. The intent of the STAA, in part, is to promote the safe and economic transportation of goods. This mandates that the impact on interstate commerce be considered in analyzing a proposed restriction. Another comment suggested that highway capacity should be considered as a factor. Any impacts on highway capacity should be considered within the context of the existing four factors.

Finally, five comments suggested procedural changes with which FHWA agrees. One recommended the total deletion of a segment regardless of whether the principal safety impact is due to vehicle length or vehicle width. The second advocated considering the same four factors regardless of whether a proposal for deletion is initiated by a State Governor or the Secretary. The third comment requested acceptance of an endorsement of an authorized representative acting on behalf of a Governor in lieu of the Governor's endorsement and that language to that effect be used consistently throughout the regulation. The fourth comment requested that any specific action required of a Governor regarding deletions or additions be explicitly stated in the regulation for all instances where action is necessary. The fifth comment stated that there should be an explicit requirement for an analysis of the effect on overall safety and alternate routes, accompanying any Interstate deletion request. The FHWA has incorporated the changes in this final rule to facilitate more efficient and effective administration of the requirements.

A conforming amendment to the definition of the National Network has been made to reflect the fact that certain Interstate segments may have been excepted or deleted from the National Network. The FHWA will amend Appendix A to Part 658 to reflect the excluded segments.

National Network Additions

The TTSA amends section 416 of the STAA to provide that subsequent to the June 5, 1984, rule (23 CFR Part 658), the designation of additional Federal-aid Primary highways other than an Interstate highway in a State must be agreed to by the Governor of the State in which the highway is located.

Two comments, specific to network additions, were received. One is in favor of the provision for designating additional highways on the basis that it would permit better service by the trucking industry. The other comment urges interpretation of the amending phrase "with the agreement of the Governor of the State in which the highway is located" so that responsible individuals or groups would be permitted to submit analyses of needs for additions.

Any group or individual may suggest or petition a route for inclusion accompanied by an analysis of suitability. The FHWA considered allowing submission of suggestions or petitions for additions along with the proper justification directly to FHWA prior to seeking the Governor's concurrence. FHWA has not adopted this process, however, because it would have the potential of causing needless FHWA consideration of an addition which may not be agreed to by the Governor. Therefore, notwithstanding the origins of such suggestions or petitions, a proposal must be submitted with the agreement of the Governor of the State in which the highway is located and in accordance with the procedures in this final rule before a route can be considered for addition.

As noted in the **Federal Register** of April 1, 1985 (50 FR 12825), the TTSA clarified FHWA's authority to designate highways with less than 12-foot wide lanes. Conforming language is therefore being added to the lane width criterion in § 658.9(b)(5) of the rule.

Reasonable Access

The TTSA amended section 412 of the STAA to extend the provisions requiring reasonable access to points of loading and unloading, previously afforded household goods carriers, to truck tractor-semitrailer combinations where the semitrailer does not exceed 28½ feet in length and 102 inches in width (so-called "pups"). The TTSA further provides that these vehicles may have reasonable restrictions imposed by any State or local government if such restrictions are based on safety conditions. A State cannot restrict access without a reasonable safety-related justification.

Eleven comments were received regarding reasonable access. Of these, eight were from States, one from a local government, one from a trade association, and one from an industry representative.

Several comments related to the use of both 28-foot and 28½-foot semitrailer lengths in the law. The TTSA clearly requires that reasonable access to the points of loading and unloading must be afforded to semitrailers of 28 feet or less in length and therefore preempts local restrictions on access by pups. However, the STAA, as amended by the TTSA, further recognizes the grandfather rights for access to points of loading and unloading afforded to specific 28½-foot semitrailers which were actually and lawfully operating on December 1, 1982.

Two comments questioned the meaning of a new amending paragraph. The new amending paragraph allows a State or local government to impose access restrictions on pups if based on safety.

Two comments were concerned with access for loading and unloading of longer semitrailers. The TTSA, while requiring such access for pup semitrailers, does not change access requirements for longer semitrailers.

This rule does not address the broad issue of reasonable access for all STAA vehicles. Rather it revises the wording of existing access provisions to more closely reflect the legislative wording contained in the STAA and reiterates the extended access provisions statutorily granted to "pups" by TTSA.

The broader issue of reasonable access for all STAA vehicles has generated extensive interest and is being addressed separately through a series of related actions. Specifically, the FHWA published an Advance Notice of Proposed Rulemaking (ANPRM) on January 5, 1987 (52 FR 298), addressing reasonable access. The ANPRM described a petition for additional rulemaking by the National Industrial Transportation League and solicited comments and data on several issues to develop a factual basis for response. On April 2, 1987 Congress enacted the Surface Transportation and Uniform Relocation Assistance Act of 1987 Section 158 of which mandated a study to be completed in 30 months by the Transportation Research Board (TRB), including nationwide reasonable access policy.

Most recently the Conference Committee on the Department of Transportation and Related Agencies Appropriations Act of 1988 (Pub. L. 100-202, 101 Stat. 1329) accelerated the time table for the reasonable access portion of the TRB Study by directing TRB to complete its study and report as early as March 1989, but no later than June 1989. It further directed the DOT to "* * * refrain from issuing a final rule on this issue until after the Board has issued its report" and to "* * * accord substantial weight to the findings and recommendations contained in the Board report * * *." (H.R. Rep. No. 498, 100th Cong., 1st Sess. 1131 (1988)). However, the report states that the Department may proceed with a notice of proposed rulemaking on this issue. As a result, the FHWA will soon publish an NPRM which identifies the issues raised by its earlier ANPRM and includes its proposed rulemaking on reasonable access. Comments received on the NPRM, as well as the previous ANPRM, will be provided to TRB to assist in its study. The FHWA will utilize the comments on the NPRM and the results of the reasonable access portion of the TRB Study in preparing a final rule on the broad issue of reasonable access.

Other Comments

There were four other comments of the 31 received which either were not specific to one of the foregoing subheadings or did not explicitly address this rulemaking. The first of these suggested the term "Federal-aid Primary—Other than Interstate" in § 658.11(b)(1) of the NPRM be changed to "Federal-Aid Qualifying Routes—Other than on the Interstate System" for purposes of clarity and to remove any problems in States that have other Federal-aid System routes on the National Network. This suggestion is not incorporated as it is inconsistent with statutory language; the STAA and 23 CFR Part 658 (June 5, 1984) are quite explicit in specifying that the National Network may contain only the National System of Interstate and Defense Highways and other segments of qualifying Federal-aid Primary System highways. While a State may permit the STAA vehicles to operate on other routes, they are not part of the National Network.

The three remaining comments did not explicitly address this rulemaking. The first comment suggested signs on trucks to inform motorists as to whether the truck is carrying cargo. The second comment pertained to the 12-foot lane width issue which is covered under previous rulemaking (51 FR 8511, March 12, 1986). The third comment stated that the 102-inch width should be applicable to buses, which is already provided for under Section 416 of the STAA.

This notice amends 23 CFR as described above.

Regulatory Impact

The FHWA has considered the impacts of this notice and has determined that it is not a major rulemaking action within the meaning of E.O. 12291. However, this rulemaking action has been included in DOT's Regulatory Program for significant rulemakings. These determinations by

the FHWA are based on the nature of the rulemaking. The FHWA has determined that this rulemaking action technically amends the June 5 final rule by incorporating revisions mandated by the TTSA. The revisions address procedures for additions and deletions to the system and the degree of local access afforded to 102-inch wide trailing units of twin trailers as well as clarifying current law as opposed to substantively revising the current regulations or changing the impacts initially projected. A Regulatory Impact Analysis was prepared for the June 5, 1984, rulemaking and is available for inspection in the Headquarters Office of FHWA, 400 Seventh Street, SW., Washington, DC. Copies may be obtained by contacting Mr. Kevin E. Heanue, Mr. C. John MacGowan or Mr. David C. Oliver at the address provided under the heading **"FOR FURTHER INFORMATION, CONTACT."**

For the same reasons, and under the criteria of the Regulatory Flexibility Act, FHWA hereby certifies that this action will not have a significant economic impact on a substantial number of small entities.

In consideration of the foregoing, the FHWA is amending Chapter I of Title 23, Code of Federal Regulations, by amending Part 658 as set forth below.

[Catalog of Federal Domestic Assistance Program Number 20.205, Highway Planning and Construction. The regulations implementing Executive Order 12372 regarding intergovernmental consultation and Federal programs and activities apply to this program]

List of Subjects in 23 CFR Part 658

Grant programs—transportation, Highways and roads, Motor carriers—size and weight.

Issued on April 8, 1988.

Robert E. Farris,

Deputy Administrator, Federal Highway Administration.

PART 658—TRUCK SIZE AND WEIGHT ROUTE DESIGNATIONS—LENGTH, WIDTH, AND WEIGHT LIMITATIONS AMENDED

1. The authority citation for 23 CFR Part 658 is revised to read as follows:

Authority: Secs. 133, 411, 412, 413, and 416 of Pub. L. 97–424, 96 Stat. 2097 (23 U.S.C. 127; 49 U.S.C. 2311, 2312, 2313; 49 U.S.C. App. 2316), as amended by Pub. L. 98–17, 97 Stat. 59, and Pub. L. 98–554, 98 Stat. 2829; 23 U.S.C. 315; and 49 CFR 1.48.

2. Section 658.1 is revised to read as follows:

§ 658.1 Purpose.

The purpose of this part is to identify a National Network of highways available to vehicles authorized by provisions of the Surface Transportation Assistance Act of 1982 (STAA) (Pub. L. 97–424, 96 Stat. 2097), as amended by Pub. L. 98–17, 97 Stat. 59, and Pub. L. 98–554, 98 Stat. 2829, and to prescribe national policies that govern truck size and weight.

§ 658.5 [Amended]

3. In § 658.5, paragraph (f), *National Network*, is amended to add ", exclusive of those portions excepted under § 658.11(f) or deleted under § 658.11(d)," after the words "The network in each State includes the Interstate System."

4. In § 658.9, paragraph (b)(5) is revised to read as follows:

§ 658.9 National Network criteria.

* * * * *

(b) * * *

(5) The route consists of lanes designed to be a width of 12 feet or more or is otherwise consistent with highway safety.

* * * * *

5. In § 658.11, paragraph (a) and the heading of paragraph (b) are revised; paragraph (f) is redesignated as paragraph (g) and revised; paragraph (e) is redesignated as paragraph (f) and revised; paragraph (c) is redesignated as paragraph (e); paragraph (d) is redesignated as paragraph (c) and the heading is revised; new paragraph (d) is added to read as follows:

§ 658.11 Additions, deletions, exceptions, and restrictions.

* * * * *

(a) *Additions.* (1) Requests for additions to the National Network, including justification, shall have the endorsement of the Governor or the Governor's authorized representative, and be submitted in writing to the appropriate FHWA Division Office. Proposals for addition of routes to the National Network shall be accompanied by an analysis of suitability based on the criteria in § 658.9.

(2) Proposals for additions that meet the criteria of § 658.9 and have the endorsement of the Governor or the Governor's authorized representative will be published in the **Federal Register** for public comment as a notice of proposed rulemaking (NPRM), and if found acceptable, as a final rule.

(b) *Deletions—Federal-aid primary—other than interstate.*

* * * * *

(c) *Requests for deletion—Federal-aid primary—other than interstate.*

* * * * *

(d) *Deletions and use restrictions—Federal-aid interstate.* (1) The deletion of, or imposition of use restrictions on, any specific segment of the Interstate Highway System on the National Network, except as otherwise provided in this part, must be approved by the FHWA. Such action will be initiated on the FHWA's own initiative or on the request of the Governor or the Governor's authorized representative of the State in which the Interstate segment is located. Requests from the Governor or the Governor's authorized representative shall be submitted along with justification for the deletion or restriction, in writing, to the appropriate FHWA Division Office for transmittal to Washington Headquarters.

(2) The justification accompanying a request shall be based on the following:

(i) Analysis of evidence of safety problems supporting the deletion or restriction as identified in § 658.11(c).

(ii) Analysis of the impact on interstate commerce.

(iii) Analysis and recommendation of any alternative routes that can safely accommodate commercial motor vehicles of the dimensions and configurations described in §§ 658.13 and 658.15 and serve the area in which such segment is located.

(iv) Evidence of consultation with the local governments in which the segment is located as well as the Governor or the Governor's authorized representative of any adjacent State that might be directly affected by such a deletion or restriction.

(3) Actions to ban all commercial vehicles on portions of the Interstate System not expected under § 658.11(f) are considered deletions subject to the requirements of subsection (d) of this section.

(4) Reasonable restrictions on the use of Interstate routes on the National Network by STAA-authorized vehicles related to specific travel lanes of multi-lane facilities, construction zones, adverse weather conditions or structural or clearance deficiencies are not subject to the requirements of paragraph (d) of this section.

(5) Proposed deletions or restrictions will be published in the **Federal Register** as an NPRM, except in the case of an emergency deletion as prescribed in § 658.11(e). The FHWA will consider the factors set out in paragraph (d)(2) of this section and the comments of interested parties. Any approval of deletion or restriction will be published as a final rule. A deletion of or restriction on a segment for reasons ascribable to dimensions of commercial motor vehicles described in either § 658.13 or

§ 658.15 shall result in a deletion or restriction for the purposes of both §§ 658.13 and 658.15.

* * * * *

(f) *Exceptions.* Those portions of the Interstate System which were open to traffic and on which all commercial motor vehicles were banned on January 6, 1983, are not included in the National Network.

(g) *Restrictions—Federal-aid primary—other than interstate.* (1) Reasonable restrictions on the use of non-Interstate Federal-aid Primary routes on the National Network by STAA-authorized vehicles may be imposed during certain peak hours of travel or on specific travel lanes of multi-lane facilities. Restrictions related to construction zones, seasonal operation, adverse weather conditions or structural or clearance deficiencies may be imposed.

(2) All restrictions on the use of the National Network based on hours of use by vehicles authorized by the STAA require prior FHWA approval. Requests for such restrictions on the National Network shall be submitted in writing to the appropriate FHWA Division Office. Approval of requests for restrictions will be contingent on the ability to justify significant negative impact on safety, the environment and/or operational efficiency.

6. Section 658.19 is revised to read as follows:

§ 658.19 Reasonable access.

(a) No State may enact or enforce any law denying reasonable access to vehicles with dimensions authorized by the STAA between the National Network and terminals and facilities for food, fuel, repairs, and rest. In addition, no State may enact or enforce any law denying reasonable access between the National Network and points of loading and unloading to household goods carriers and any truck tractor-semitrailer combination in which the semitrailer has a length not to exceed 28 feet (28½ feet where allowed pursuant to § 658.13(b)(5)) and which generally operates as part of a vehicle combination described in §§ 658.13(b)(5) and 658.15(a).

(b) All States shall make available to commercial motor vehicle operators information regarding their reasonable access provisions to and from the National Network.

(c) Nothing in this section shall be construed as preventing any State or local government from imposing any reasonable restriction, based on safety considerations, on access to points of loading and unloading by any truck tractor-semitrailer combination in which the semitrailer has a length not to exceed 28½ feet and which generally operates as part of a vehicle combination described in §§ 658.13(b)(5) and 658.15(a).

[FR Doc. 88-8082 Filed 4-12-88; 8:45 am]

BILLING CODE 4910-22-M

DEPARTMENT OF THE TREASURY

Internal Revenue Service

26 CFR Part 1

[T.D. 8193]

Income Taxes; Exemption for Certain Non-Profit Organizations From Filing Information Returns When Paying Awards of $600 or More to Informants

AGENCY: Internal Revenue Service, Treasury.

ACTION: Final regulations.

SUMMARY: This document contains final regulations that provide an exception for certain non-profit organizations from filing information returns when paying awards of $600 or more to informants. Non-profit organizations pay awards to informants who provide information relating to criminal law enforcement. It is felt that the effectiveness of the programs of the non-profit organizations will be enhanced if these organizations are exempt from the reporting requirements. In order to allow informants to maintain confidentiality and to enhance the effectiveness of informant programs.

DATES: The regulations are effective January 1, 1988, and shall apply to information return filing requirements with respect to award payments made after December 31, 1987.

FOR FURTHER INFORMATION CONTACT: David Selig of the Legislation and Regulations Division, Office of Chief Counsel, Internal Revenue Service, 1111 Constitution Avenue, NW., Washington, DC 20224 (Attention: CC:LR:T) (202-566-3459, not a toll-free call).

SUPPLEMENTARY INFORMATION:

Background

This document contains final regulations under section 6041 of the Internal Revenue Code of 1954 to provide an exemption for certain section 501(c)(3) organizations from the reporting requirements of section 6041. It was determined that no notice and public comment procedure is necessary since this document will not be detrimental to any taxpayer.

Explanation of Provisions

Section 6041 requires a person engaged in a trade or business, who pays compensation of $600 or more to another person, to provide an information return to the Secretary describing the transaction to such extent as may be provided by the Secretary. Section 1.6041-3(n) currently provides that the United States, a State, Territory, or political subdivision thereof, or the District of Columbia, or any agency or instrumentality of any one or more of the foregoing is exempt from the reporting requirements of section 6041(a) with respect to a payment of a type determined by the Commissioner to be paid as an award to an informer or other payment of a similar character. This exemption allows informants to maintain confidentiality and aids the foregoing governmental entities in obtaining information in connection with law enforcement activities.

Certain non-profit organizations also pay awards to informants who provide information relating to criminal law enforcement. It is felt that the effectiveness of the programs of the non-profit organizations will be enhanced if these organizations are also exempt from the reporting requirements of section 6041(a) with respect to payments of awards.

In order to allow informants to maintain confidentiality and to enhance the effectiveness of informant programs. This Treasury decision amends § 1.6041-3(n) to extend the exemption from the reporting requirements of section 6041(a) to certain section 501(c)(3) organizations with respect to payments of awards.

Special Analyses

A general notice of proposed rulemaking is not required by 5 U.S.C. 553 for final regulations subject to 5 U.S.C. 553(b)(B). Accordingly, the final regulations do not constitute regulations subject to the Regulatory Flexibility Act (5 U.S.C. chapter 6).

The Commissioner of Internal Revenue has determined that this final rule is not a major rule as defined in Executive Order 12291 and that a regulatory impact analysis therefore is not required.

Drafting Information

The principal author of these final regulations is David Selig of the Legislation and Regulations Division of the Office of Chief Counsel, Internal Revenue Service. However, personnel from other offices of the Internal Revenue Service and Treasury Department participated in developing

the regulations, on matters of both substance and style.

List of Subjects in 26 CFR 1.6001-1—1.6109-2

Income taxes, Administration and procedure, Filing requirements.

Adoption of Amendments to the Regulations

Accordingly, 26 CFR Part 1 is amended as follows:

PART 1—[AMENDED]

Paragraph 1. The authority for Part 1 continues to read in part:

Authority: 26 U.S.C. 7805. * * * Section 1.6041-3 also issued under 26 U.S.C. 6041(a).

Par. 2. Section 1.6041-3(n) is revised to read as follows:

§ 1.6041-3 Payments for which no return of information is required under section 6041.

* * * * *

(n) A payment to an informer as an award, fee, or reward for information relating to criminal activity, but only if such payment is made by the United States, a State, Territory, or political subdivision thereof, or the District of Columbia, or any agency or instrumentality of any one or more of the foregoing, or, with respect to payments made after December 31, 1987, by an organization that is described in section 501(c)(3) and that makes such payments in furtherance of a charitable purpose to lessen the burdens of government within the meaning of § 1.501(c)(3)-1(d)(2).

* * * * *

Lawrence B. Gibbs,

Commissioner of Internal Revenue.

Approved: April 4, 1988.

O. Donaldson Chapoton,

Assistant Secretary of the Treasury.

[FR Doc. 88-8036 Filed 4-12-88; 8:45 am]

BILLING CODE 4830-01-M

NATIONAL ARCHIVES AND RECORDS ADMINISTRATION

36 CFR Parts 1202 and 1258

NARA Fee Schedule

AGENCY: National Archives and Records Administration (NARA).

ACTION: Final rule.

SUMMARY: This rule revises fees charged by the National Archives and Records Administration (NARA) for reproduction of records created by other Federal agencies and transferred to the custody of the Archivist of the United States, donated historical materials, and records filed with the Office of the Federal Register. This regulation also sets fees for reproductions made pursuant to Privacy Act requests for NARA administrative records and to FOIA requests for accessioned records. The fees are changed to reflect the current costs of providing the reproduction services.

EFFECTIVE DATE: May 1, 1988.

FOR FURTHER INFORMATION CONTACT: Adrienne C. Thomas or Nancy Allard at 202-523-3214 (FTS 523-3214).

SUPPLEMENTARY INFORMATION: NARA issued a notice of proposed rulemaking on December 21, 1987 (52 FR 48280) on the proposed revision to the NARA fee schedule. One comment was received from a group representing the media. The comment urged NARA to reduce its fees for FOIA reproductions of accessioned records, claiming that the per page charge is exorbitant. Fees for reproduction of archival records are set in accordance with 44 U.S.C. 2116(c), a statute which supercedes the fee-setting provisions of the Freedom of Information Reform Act of 1987. Section 2116(c) provides that reproduction fees shall be set to recover, so far as practicable, all cost elements for making copies of materials transferred to the custody of the Archivist of the United States. The NARA fees include the following cost components: The direct labor and equipment costs for making the copy; archival handling of the order, which includes preparing the records for reproduction and packaging the reproductions for mailing; the cost of processing order payments; and postage. NARA receives no appropriated funds for its reproduction services. Fees for reproductions are paid into the National Archives Trust Fund, and used to finance the reproductions. Since the Trust Fund is a revolving fund, it must be self-sustaining. We are, therefore, unable to reduce the fees as recommended by the commenter.

The commenter also suggested that NARA ask the agencies who transferred the records to the National Archives to absorb part of the cost of providing reproductions of accessioned records in response to FOIA rquests. When records are accessioned into the National Archives, they are transferred to NARA's legal custody. The transferring agency is not authorized to provide reimbursement for FOIA reproductions for a third party.

This final rule makes two changes to Part 1202, Regulations Implementing the Privacy Act of 1974. First, we have determined that the fee for electrostatic copies of NARA administrative records made under the Privacy Act should be no higher than the fee charged for copies of administrative records under the Freedom of Information Act. Accordingly, we have modified § 1202.50 to reduce the fee for electrostatic copies made by NARA to 20 cents per page. This final rule also makes a minor correction to § 1202.54 to change the payment address for reproductions made in response to Privacy Act requests.

We have corrected the fee for oversized electrostatic copies, which was erroneously listed as $2.15 per foot in the proposed rule. All other fees remain as shown in the proposed rule.

This rule is not a major rule for the purposes of Executive Order 12291 of February 17, 1981. As required by the Regulatory Flexibility Act, it is hereby certified that this proposed rule will not have a significant impact on small business entities.

List of Subjects

36 CFR Part 1202

Privacy Act.

36 CFR Part 1258

Archives and records

For the reasons set forth in the preamble, Chapter XII of Title 36 of the Code of Federal Regulations is amended to read as follows:

PART 1202—REGULATIONS IMPLEMENTING THE PRIVACY ACT OF 1974

1. The authority citation for Part 1202 continues to read as follows:

Authority: 44 U.S.C. 2104(a); 5 U.S.C. 552a.

2. Section 1202.50 is revised to read as follows:

§ 1202.50 Records available at a fee.

The system manager shall provide one electrostatic copy of a record to a requester at a fee of $0.20 per page if NARA makes the copy or $0.10 per page if the requester makes the copy on a NARA self-service copier.

3. Section 1202.54 is revised to read as follows:

§ 1202.54 Form of payment.

Payment shall be by check or money order payable to the National Archives and Records Administration and shall be addressed to the system manager.

PART 1258—FEES

4. The authority citation for Part 1258 continues to read as follows:

Authority: 44 U.S.C. 2116(c).

5. Section 1258.2 is amended by revising paragraph (a) and adding paragraph (c)(10) as follows:

§ 1258.2 Applicability.

(a) Except as otherwise provided in this section, fees for the reproduction of NARA archival records, donated historical materials, and records filed with the Office of the Federal Register are as set forth in § 1258.12.

* * * * *

(c) * * *

(10) The fees for reproductions of archival records made in response to FOIA requests are set forth in § 1258.11.

6. Section 1258.11 is added to read as follows:

§ 1258.11 Fees for reproduction of archival records in response to FOIA requests.

(a) *Electrostatic copies.*

(1) Paper to paper (up to 11 in. by 17 in.):

NARA makes the copy	$0.35
Customer makes the copy on a NARA self-service copier	$0.10

(2) Oversized electrostatic copies (per foot): $1.60 (plus $0.20 per foot for vellum paper)

(3) Microfilm to paper:

	Up to 11 in. by 17 in.	18 in by 24 in.
Work done by customer	$0.30	$0.80
NARA performs the work:		
First copy per roll	1.85	2.35
Next consecutive frame or duplicate	.80	1.30
Next nonconsecutive frame	.95	1.50

(b) *Other processes.*

Fees for other reproduction processes not listed in § 1258.11 are computed upon request.

7. Section 1258.12 is revised to read as follows:

§ 1258.12 Fee schedule.

(a) *Authentication:* $2.00

(b) *Still photography:*

(1) Copy negatives (Black & White):

4 in. by 5 in	$4.40
8 in. by 10 in	6.00

(2) Copy negatives (Color):

4 in. by 5 in	$10.85
8 in. by 10 in	23.30

(3) Slides (from an existing negative):

2 in. by 2 in. (Black & White)	$2.00
2 in. by 2 in. (Color)	2.45

(4) Aerial photographic reproductions:

10 in. by 10 in. direct duplicate negative	6.95
10 in. by 10 in. contact print	5.50
14 in. by 14 in	8.70
18 in. by 18 in	9.20
20 in. by 24 in	10.20
24 in. by 30 in	13.25
40 in. by 41 in	19.55

(c) *Electrostatic copying:*

(1) Paper to paper (up to 11 in. by 17 in.):

Customer makes the copy at a NARA self-service copier	$0.10
NARA makes the copy	.35

(2) Oversized electrostatic copies (per foot): $1.60

Add per foot for vellum paper: .20

(3) Red-line copies: 1.15

(4) Microfilm to paper:

From positive—	Up to 11 in. by 17 in.	18 in by 24 in.
Work done by customer	$0.30	$0.80
NARA performs the work:		
First copy per roll	1.85	2.35
Next consecutive frame or duplicate	.80	1.30
Next nonconsecutive frame	.95	1.50

(e) *Microfilm:*

	16mm Rotary	16mm Planetary	35mm Planetary	35mm Oversize
(1) Negative (per frame)	0.28	0.36	0.37	0.43
(2) Next generation (per foot)		.31	.33	
(3) Direct duplicate (per foot)		.32	.34	

(f) *Diazo microfiche duplication (per fiche):* $1.05

(g) *Technical services:*

	Regular	Overtime
Photographer (per hour)	$11.00	$16.50
Microfilm preparation (per hour)	9.50	14.25
Sound and video recordings (per hour)	11.50	17.25

(h) *Preservation of records.* In order to preserve certain records which are in poor physical condition, NARA may restrict customers to a choice of photostatic or microfilm copies instead of electrostatic copies.

(i) *Unlisted processes.* Fees for reproduction processes not listed in § 1258.12 are computed upon request.

5. Section 1258.16 is revised to read as follows:

§ 1258.16 Effective date.

The fees in § 1258.12 are effective on May 1, 1988.

Dated: February 26, 1988.

Don W. Wilson,

Archivist of the United States.

[FR Doc. 88-8030 Filed 4-12-88; 8:45 am]

BILLING CODE 7515-01-M

ENVIRONMENTAL PROTECTION AGENCY

40 CFR Part 180

[OPP-00257; FRL-3365-2]

Monourea-Sulfuric Acid Adduct; Technical Amendment—Monocarbamide Dihydrogen Sulfate

AGENCY: Environmental Protection Agency (EPA).

ACTION: Final rule; Technical amendment.

SUMMARY: This technical amendment revises the chemical name in 40 CFR 180.1084. This change in nomenclature is being made to conform to the International Union of Pure and Applied Chemistry (IUPAC) name for the chemical. No new regulatory requirements are being added.

EFFECTIVE DATE: April 13, 1988.

FOR FURTHER INFORMATION CONTACT: Robert Taylor, Product Manager (PM) 25, Registration Division, Office of Pesticide Programs, Environmental Protection Agency, 401 M St., SW., Washington, DC 20460.

Office location and telephone number: Rm. 245, CM #2, 1921 Jefferson Davis Highway, Arlington, VA 22202, (703)-577-1800.

SUPPLEMENTARY INFORMATION: In the **Federal Register** of March 13, 1985 (50 FR 10007), EPA added § 180.1084, an exemption from the requirement of a tolerance for monourea sulfuric acid adduct. EPA is revising the chemical name in the heading and the text to "monocarbamide dihydrogen sulfate" to conform to the IUPAC name for the chemical. The change is merely one of nomenclature: No new regulatory requirements are being set forth, and advance notice and public comment are not necessary.

List of Subjects in 40 CFR Part 180

Administrative practice and procedure, Agricultural commodities, Pesticides and pests, Reporting and recordkeeping requirements.

Dated: April 5, 1988.

Douglas D. Campt,

Director, Office of Pesticide Programs.

Therefore, Part 180 is amended as follows:

PART 180—[AMENDED]

1. The authority citation for Part 180 continues to read as follows:

Authority: 21 U.S.C. 346a.

2. Section 180.1084, including the chemical name in the heading and text, is revised to read as follows:

§ 180.1084 Monocarbamide dihydrogen sulfate; exemption from the requirement of a tolerance.

Monocarbamide dihydrogen sulfate is exempted from the requirement of a tolerance when used as a herbicide or desiccant in or on all raw agricultural commodities.

[FR Doc. 88-8039 Filed 4-12-88; 8:45 am]

BILLING CODE 6560-50-M

FEDERAL EMERGENCY MANAGEMENT AGENCY

44 CFR PART 67

Final Flood Elevation Determinations; Florida

AGENCY: Federal Emergency Management Agency.

ACTION: Final rule.

SUMMARY: Final base (100-year) flood elevations are determined for the communities listed below.

The base (100-year) flood elevations are the basis for the floodplain management measures that the community is required to either adopt or show evidence of being already in effect in order to qualify or remain qualified for participation in the National Flood Insurance Program (NFIP).

EFFECTIVE DATE: The date of issuance of the Flood Insurance Rate Map (FIRM) showing base (100-year) flood elevations, for the community. This date may be obtained by contacting the office where the maps are available for inspection indicated on the table below.

ADDRESSES: See table below.

FOR FURTHER INFORMATION CONTACT: John L. Matticks, Chief, Risk Studies Division, Federal Insurance Administration, Federal Emergency Management Agency, Washington, DC 20472, (202) 646-2767.

SUPPLEMENTARY INFORMATION: The Federal Emergency Management Agency gives notice of the final determinations of flood elevations for each community listed. Proposed base flood elevations or proposed modified base flood elevations have been published in the **Federal Register** for each community listed.

This final rule is issued in accordance with section 110 of the Flood Disaster Protection Act of 1968 (Title XIII of the Housing and Urban Development Act of 1968 (Pub. L. 90-448)), 42 U.S.C. 4001-4128, and 44 CFR Part 67. An opportunity for the community or individuals to appeal proposed determination to or through the community for a period of ninety (90) days has been provided.

The Agency has developed criteria for floodplain management in flood-prone areas in accordance with 44 CFR Part 60.

Pursuant to the provisions of 5 U.S.C. 605(b), the Administrator, to whom authority has been delegated by the Director, Federal Emergency Management Agency, hereby certifies for reasons set out in the proposed rule that the final flood elevation determinations, if promulgated, will not have a significant economic impact on a substantial number of small entities. Also, this rule is not a major rule under terms of Executive Order 12291, so no regulatory analyses have been prepared. It does not involve any collection of information for purposes of the Paperwork Reduction Act.

List of Subjects in 44 CFR Part 67

Flood Insurance, Flood plains.

The authority citation for Part 67 continues to read as follows:

Authority: 42 U.S.C. 4001 *et seq.*, Reorganization Plan No. 3 of 1978, E.O. 12127.

Interested lessees and owners of real property are encouraged to review the proof Flood Insurance Study and Flood Insurance Rate Map available at the address cited below for each community.

The base (100-year) flood elevations are finalized in the communities listed below. Elevations at selected locations in each community are shown. No appeal was made during the ninety-day period and the proposed base flood elevations have not been changed.

Source of flooding and location	# Depth in feet above ground. * Elevation in feet (NGVD)
Florida	
Nassau County (Unincorporated Areas) (FEMA Docket No. 6923)	
Atlantic Ocean:	
Just northwest of U.S. Route 17 bridge over Nassau River	*8
Just north of Fort Clinch	*16
Maps available for inspection at the County Engineer's Office, Five Points Building, Fernandina Beach, Florida.	

Harold T. Duryee,

Administrator, Federal Insurance Administration.

Issued: April 7, 1988.

[FR Doc. 88-8014 Filed 4-12-88; 8:45 am]

BILLING CODE 6718-21-M

FEDERAL COMMUNICATIONS COMMISSIONS

47 CFR Part 73

[MM Docket No. 86-488; RM-5537]

Radio Broadcasting Services; Paradise, CA

AGENCY: Federal Communications Commission.

ACTION: Final rule.

SUMMARY: This document substitutes FM Channel 276B1 for Channel 224A at Paradise, California, and modifies the Class A license for Station KRIJ(FM), in response to a petition filed by JIBO Broadcasting Corporation. With this action, the proceeding is terminated.

EFFECTIVE DATE: May 16, 1988.

FOR FURTHER INFORMATION CONTACT: Nancy Joyner, Mass Media Bureau, (202) 634-6530.

SUPPLEMENTARY INFORMATION: This is a summary of the Commission's Report and Order, MM Docket No. 86-488, adopted March 4, 1988, and released April 4, 1988. The full text of this Commission decision is available for inspection and copying during normal business hours in the FCC Dockets Branch (Room 230), 1919 M Street, NW., Washington, DC. The complete text of this decision may also be purchased from the Commission's copy contractors, International Transcription Service, (202) 857-3800, 2100 M Street, NW., Suite 140, Washington, DC 20037.

List of Subjects in 47 CFR Part 73

Radio broadcasting.

PART 73—[AMENDED]

1. The authority citation for Part 73 continues to read as follows:

Authority: 47 U.S.C. 154, 303.

§ 73.202 [Amended]

2. Section 73.202(b), the Table of FM Allotments, is amended under California by removing Channel 224A and adding Channel 278B1 at Paradise.

Federal Communications Commission.

Steve Kaminer,

Deputy Chief, Policy and Rules Division, Mass Media Bureau.

[FR Doc. 88-8067 Filed 4-12-88; 8:45 am]

BILLING CODE 6712-01-M

---

47 CFR Part 73

[MM Docket No. 87-230; RM-5707]

Radio Broadcasting Services; Georgetown, DE

AGENCY: Federal Communications Commission.

ACTION: Final rule.

SUMMARY: This document substitutes Channel 228B1 for Channel 228A at Georgetown, Delaware, and modifies the Class A license for Station WSEA(FM) to specify Channel 228B1, at the request of the licensee, Pottstown Broadcasting Company. With this action, this proceeding is terminated.

EFFECTIVE DATE: May 16, 1988.

FOR FURTHER INFORMATION CONTACT: Montrose H. Tyree, Mass Media Bureau, (202) 634-6530.

SUPPLEMENTARY INFORMATION: This is a summary of the Commission's Report and Order, MM Docket No. 87-230, adopted March 4, 1988, and released April 4, 1988. The full text of this Commission decision is available for inspection and copying during normal business hours in the FCC Dockets Branch (Room 230), 1919 M Street NW., Washington, DC. The complete text of this decision may also be purchased from the Commission's copy contractors, International Transcription Service, (202) 857-3800, 2100 M Street NW., Suite 140, Washington, DC 20037.

List of Subjects in 47 CFR Part 73

Radio broadcasting.

PART 73—[AMENDED]

1. The authority citation for Part 73 continues to read as follows:

Authority: 47 U.S.C. 154, 303.

§ 73.202 [Amended]

2. Section 73.202(b), the Table of FM Allotments is amended for Georgetown, Delaware by adding Channel 228B1 and removing Channel 228A.

Federal Communications Commission.

Steve Kaminer,

Deputy Chief, Policy and Rules Division, Mass Media Bureau.

[FR Doc. 88-8070 Filed 4-12-88; 8:45 am]

BILLING CODE 6712-01-M

---

47 CFR Part 73

[MM Docket No. 87-374; RM-5726]

Radio Broadcasting Services; Stuart, FL

AGENCY: Federal Communications Commission.

ACTION: Final rule.

SUMMARY: This document substitutes Channel 224C2 for Channel 224A at Stuart, Florida, and modifies the Class A license for Station WZZR(FM) to specify the Class C2 channel, at the request of the licensee, CRB of Florida, Inc. With this action, this proceeding is terminated.

EFFECTIVE DATE: May 16, 1988.

FOR FURTHER INFORMATION CONTACT: Montrose H. Tyree, Mass Media Bureau, (202) 634-6530.

SUPPLEMENTARY INFORMATION: This is a summary of the Commission's Report and Order, MM Docket No. 87-374, adopted March 2, 1988, and released April 4, 1988. The full text of this Commission decision is available for inspection and copying during normal business hours in the FCC Dockets Branch (Room 230), 1919 M Street NW., Washington, DC. The complete text of this decision may also be purchased from the Commission's copy contractors, International Transcription Service, (202) 857-3800, 2100 M Street NW., Suite 140, Washington, DC 20037.

List of Subjects in 47 CFR Part 73

Radio broadcasting.

PART 73—[AMENDED]

1. The authority citation for Part 73 continues to read as follows:

Authority: 47 U.S.C. 154, 303.

§ 73.202 [Amended]

2. Section 73.202(b), the Table of FM Allotments is amended for Florida by adding Channel 224C2 at Stuart and removing Channel 224A.

Federal Communication Commission.

Steve Kaminer,

Deputy Chief, Policy and Rules Division, Mass Media Bureau.

[FR Doc. 88-8071 Filed 4-12-88; 8:45 am]

BILLING CODE 6712-01-M

---

47 CFR Part 73

[MM Docket No. 86-454; RM-5499 and RM-5830]

Radio Broadcasting Services; Frostburg and Grantsville, MD

AGENCY: Federal Communications Commission.

ACTION: Final rule.

SUMMARY: This document allots commercial FM Channel *246A to Frostburg, Maryland and reserves it for noncommercial educational FM use. It was determined that none of the 20 FM channels reserved for noncommercial educational use would be available due to the proximity of Station WJAC-TV, Channel 6, Johnstown, Pennsylvania. This document also dismisses a counterproposal by WJAC, Incorporated, licensee of Station WJAC-TV, proposing that Channel *246A be allotted to Grantsville, Maryland in lieu of existing noncommercial educational Channel 212B. This proposal was dismissed because there was no party expressing an interest in a Class A channel in Grantsville. With this action, this proceeding is terminated.

EFFECTIVE DATE: May 16, 1988.

FOR FURTHER INFORMATION CONTACT: Robert Hayne, Mass Media Bureau, (202) 634-6530.

SUPPLEMENTARY INFORMATION: This is a summary of the Commission's Report and Order, MM Docket No. 86-454, adopted March 4, 1988, and released April 1, 1988. The full text of this Commission decision is available for inspection and copying during normal business hours in the FCC Dockets Branch (Room 230), 1919 M Street, NW, Washington, DC. The complete text of this decision may also be purchased from the Commission's copy contractors, International Transcription Service, (202) 857-3800, 2100 M Street NW., Suite 140, Washington, DC 20037.

List of Subjects in 47 CFR Part 73

Radio broadcasting.

PART 73—[AMENDED]

1. The authority citation for Part 73 continues to read as follows:

Authority: 47 U.S.C. 154, 303.

§ 73.202 [Amended]

2. Section 73.202(b), the Table of FM Allotments, is amended under Maryland, by adding Channel *246A to Frostburg.

Federal Communications Commission.

Steve Kaminer,

Deputy Chief, Policy and Rules Division, Mass Media Bureau.

[FR Doc. 88-8074 Filed 4-12-88; 8:45 am]

BILLING CODE 6712-01-M

---

47 CFR Part 73

[MM Docket No. 87-408; RM-6004]

Radio Broadcasting Services; Chillicothe, OH

AGENCY: Federal Communications Commission.

ACTION: Final rule.

SUMMARY: The Commission, at the request of Wyandot Radio Corporation, substitutes Channel 232B1 for Channel 232A at Chillicothe, Ohio, and modifies its license for Station WFCB-FM to specify operation on the higher powered channel. Channel 232B1 can be allocated to Chillicothe in compliance with the Commission's minimum distance separation requirements with a site restriction of 6.6 kilometers (4.1 miles) east to avoid a short-spacing to Stations WWNK-FM, Cincinnati, Ohio, and WSNY, Columbus, Ohio. Canadian concurrence in the allotment has been received. With this action, this proceeding is terminated.

EFFECTIVE DATE: May 16, 1988.

FOR FURTHER INFORMATION CONTACT: Leslie K. Shapiro, Mass Media Bureau, (202) 634-6530.

SUPPLEMENTARY INFORMATION: This is a summary of the Commission's Report and Order, MM Docket No. 87-408, adopted March 4, 1988, and released April 4, 1988. The full text of this Commission decision is available for inspection and copying during normal business hours in the FCC Dockets Branch (Room 230), 1919 M Street NW., Washington, DC. The complete text of this decision may also be purchased from the Commission's copy contractor, International Transcription Service, (202) 857-3800, 2100 M Street NW., Suite 140, Washington, DC 20037.

List of Subjects in 47 CFR Part 73

Radio broadcasting.

PART 73—[AMENDED]

1. The authority citation for Part 73 continues to read as follows:

Authority: 47 U.S.C. 154, 303.

§ 73.202 [Amended]

2. Section 73.202(b), the FM Table of Allotments is amended by revising the entry for Chillicothe, Ohio, by deleting Channel 232A and adding Channel 232B1.

Federal Communications Commission.

Steve Kaminer,

Deputy Chief, Policy and Rules Division, Mass Media Bureau.

[FR Doc. 88-8075 Filed 4-12-88; 8:45 am]

BILLING CODE 6712-01-M

---

47 CFR Part 73

[MM Docket No. 87-202; RM-5701]

Radio Broadcasting Services; Georgetown, SC

AGENCY: Federal Communications Commission.

ACTION: Final rule.

SUMMARY: This document, at the request of Ocean Communications, Inc., substitutes Channel 249C2 for Channel 249A at Georgetown, South Carolina, and modifies its license for Station WGMB to specify the higher powered channel. Channel 249C2 can be allocated to Georgetown in compliance with the Commission's minimum distance separation requirements and can be used at Station WGMB's present transmitter site. With this action, this proceeding is terminated.

EFFECTIVE DATE: May 16, 1988.

FOR FURTHER INFORMATION CONTACT: Leslie K. Shapiro, Mass Media Bureau, (202) 634-6530.

SUPPLEMENTARY INFORMATION: This is a summary of the Commission's Report and Order, MM Docket No. 87-202, adopted February 23, 1988, and released April 4, 1988. The full text of this Commission decision is available for inspection and copying during normal business hours in the FCC Dockets Branch (Room 230), 1919 M Street NW., Washington, DC. The complete text of this decision may also be purchased from the Commission's copy contractor, International Transcription Service, (202) 857-3800, 2100 M Street NW., Suite 140, Washington, DC 20037.

List of Subjects in 47 CFR Part 73

Radio broadcasting.

PART 73—[AMENDED]

1. The authority citation for Part 73 continues to read as follows:

Authority: 47 U.S.C. 154, 303.

§ 73.202 [Amended]

2. Section 73.202(b), the FM Table of Allotments for Georgetown, South Carolina, is amended by deleting Channel 249A and adding Channel 249C2.

Federal Communications Commission.

Steve Kaminer,

Deputy Chief, Policy and Rules Division, Mass Media Bureau.

[FR Doc. 88-8076 Filed 4-12-88; 8:45 am]

BILLING CODE 6712-01-M

---

47 CFR Part 90

[PR Docket No. 86-404, FCC 88-69]

Private Land Mobile Radio Services; Trunked SMR Systems

AGENCY: Federal Communications Commission.

ACTION: Final rule.

SUMMARY: The Commission has adopted rules to provide greater flexibility and enhanced service options for SMR licensees and end users. These rules address six major issues raised in the *Notice* to this proceeding (51 FR 45025, December 16, 1986): SMR end user eligibility; transfer of Subpart M trunked channels to the Subpart S trunked pool; processing and assignment procedures; loading; partial assignments; and technical standards.

EFFECTIVE DATE: April 13, 1988.

FOR FURTHER INFORMATION CONTACT: Ron Netro, Chief, Rules Branch, Land Mobile and Microwave Division, Private Radio Bureau, (202) 634-2443.

SUPPLEMENTARY INFORMATION: This is a summary of the Commission's *Report and Order*, PR Docket No. 86-404, adopted February 25, 1988, and released March 30, 1988.

The full text of this Commission decision is available for inspection and copying during normal business hours in the FCC Dockets Branch (Room 230), 1919 M Street NW., Washington, DC 20554. The complete text of this decision may also be purchased from the Commission's copy contractor, International Transcription Service, (202) 857-3800, 2100 M Street NW., Suite 140, Washington, DC 20037.

Summary of Report and Order

1. We will summarize the issues raised and resolved in this proceeding in six paragraphs below, discussing, respectively, SMR end user eligibility; the transfer of Subpart M trunked channels to the SMR pool; processing and assignment procedures; loading;

partial assignments; and technical standards.

2. *SMR End User Eligiblity.* Currently, SMR licensees may only serve those end users who would individually qualify for licensing under Part 90 of the rules, i.e., eligibles in the public safety, special emergency, industrial, and land transportation radio services. The Commission decided to expand the eligibility of SMR end users to include individuals and federal government agencies.

3. *Transfer of Subpart M Trunked Channels to the SMR Pool.* The merger of Subpart M into Subpart S required that the Commission decide what regulatory treatment to afford the 200 trunked channels now governed by Subpart M. Subpart M allocations were based on technology employed (i.e., trunked vs. conventional operations), while Subpart S allocations are based on broad radio service categories or pools. The *Notice* proposed transferring the 200 trunked Subpart M channels into the SMR pool of Subpart S. Observing that the vast majority of systems now operating on the Subpart M channels are SMR systems, the Commission decided to transfer the 200 trunked channels into the Subpart S SMR pool. The few non-SMR systems now licensed on these channels will be grandfathered indefinitely.

4. *Processing and Assignment Procedures.* Waiting lists are used in the assignment of channels now governed by Subpart M. Under Subpart S, the Commission processes SMR applications as they are filed with us. When required, lotteries are conducted to determine grants for Subpart S channels. The *Notice* proposed to establish a unified waiting list procedure for all SMR channels. Based on its experience and the comments received, the Commission decided that waiting lists would expedite reassignment of channels by eliminating the delay associated with lottery procedures. Separate waiting lists for 800 MHz and 900 MHz SMR systems will be established because equipment cannot operate over both bands. The Commission further decided in implementing this unified waiting list to assign the same preference status for fully-loaded systems now described in Subpart M.

5. *Loading.* Loading standards have been a valuable tool for, among other things, determining eligibility for system expansion, evaluating intercategory sharing requests, and promoting spectrum efficiency. The current rules contain three loading standards applicable to systems above 800 MHz. Upon consideration of the comments in this proceeding, the Commission has decided to adopt one loading standard, essentially the standard now contained in Subpart M. The Commission has decided, however, to make certain adjustments in its use of this standard. In this merger of Subpart M into Subpart S, the Commission has decided to combine features of the loading provisions in both subparts. Specifically, the Commission will impose a five-year loading requirement of 70 mobiles per channel for any system licensed before June 1, 1993. Systems licenses after that date will not be required to meet any loading requirements to retain their channels. A 70 mobiles per channel loading requirement will continue to be imposed upon licensees of existing trunked systems seeking to acquire additional channels for expansion. That is, should an existing trunked system licensee want to apply directly to the Commission for additional channels, or apply to obtain additional channels on an intercategory sharing basis, or apply to obtain channels assigned from another licensee, it must first have its existing trunked system loaded to 70 mobiles per channel. The Commission further decided, with respect to trunked systems in rural areas, that there is no clear public benefit to requiring that such rural trunked SMR systems meet a threshold loading standard before they can expand their systems. Accordingly, the Commission will allow a rural SMR system to add up to five additional channels to its system regardless of its loading.

6. *Partial Assignments.* A partial assignment is an assignment of less than the full number of channels for which a licensee is authorized. Current rules prohibited the partial assignment of an 800 MHz or 900 MHz SMR trunked system authorization. In light of several factors, the *Notice* proposed to eliminate the prohibition on partial assignments. Upon consideration of the comments, the Commission has decided to permit licensees to make partial assignments either to a new system licensee or to an existing trunked system that has already met the 70 mobiles per channel loading standard necessary for the grant of additional channels.

7. *Technical Standards.* The *Notice* in this proceeding proposed to allow SMR licensees operating at both 800 MHz and 900 MHz to use non-standard channel widths and modulation schemes without prior notification and approval. It was also proposed to remove the requirement that 900 MHz SMR licensees use trunked technology and permit them to choose conventional technology systems as well. Upon review of the comments and its existing rules, the Commission has decided that current regulations provide sufficient flexibility to SMR licensees. The existing rule does not now require prior Commission approval to permit SMR licensees (and other exclusive licensees) to use non-standard bandwidths within their assigned channels. The Commission has also decided to permit operation of 900 MHz SMR channels using modes of operation that are as efficient as trunking.

Regulatory Flexibility Act Final Analysis

8. Pursuant to the Regulatory Flexibility Act of 1980, 5 U.S.C. 604, a final regulatory flexibility analysis has been prepared. It is available for public viewing as part of the full text of this decision, which may be obtained from the Commission or its copy contractor.

9. The Secretary shall cause a copy of this *Report and Order*, including the Final Regulatory Flexibility Analysis, to be sent to the Chief Counsel for Advocacy of the Small Business Administration, in accordance with section 603(a) of the Regulatory Flexibility Act (Pub. L. 96–354, 94 Stat. 1164, 5 U.S.C. 601 *et seq.*), (1981).

Paperwork Reduction Act Statement

10. The action contained herein has been analyzed with respect to the Paperwork Reduction Act of 1980 and found to contain no new or modified form, information collection and/or recordkeeping, labelling, disclosure, or record retention requirements and should decrease burden hours imposed on the public by allowing applicants to file once for the waiting list rather than submitting repetitive filings for filing windows and lotteries.

Ordering Clauses

11. Accordingly, *it is ordered*, pursuant to sections 4(i) and 303(r) of the Communications Act of 1934, as amended, 47 U.S.C. 154(i) and 303(r), that Part 90 of the Commission's Rules *is amended* as set forth below. *It is further ordered* that these Rules, as amended, shall be effective immediately upon publication in the **Federal Register** because they are either essentially procedural or relieve a restriction. *See* 5 U.S.C. 553(d). *It is further ordered* that the September 1, 1987, Petition for Interim Relief filed by Brown and Schwaninger *is dismissed.*

12. *It is further ordered* that this proceeding *is terminated.*

List of Subjects in 47 CFR Part 90

Radio, specialized mobile radio service.

Amendatory Text

A. 47 CFR Part 90 is amended as follows:

PART 90—[AMENDED]

1. The authority citation for Part 90 continues to read as follows:

Authority: Sec. 4, 303, 48 Stat., as amended, 1066, 1082; 47 U.S.C. 154, 303 unless otherwise noted.

2. 47 CFR 90.7 is amended by adding the following definition:

§ 90.7 Definitions

* * * * *

Specialized Mobile Radio Service. A radio service in which licensees provide land mobile communications services in the 800 MHz and 900 MHz bans on a commercial basis to entities eligible to be licensed under this part, federal government entities, and individuals.

* * * * *

3. 47 CFR 90.179 is amended by revising the section heading and introductory paragraph to read as follows:

§ 90.179 Shared use of radio stations in the frequency bands below 800 MHz.

Licensees of radio stations below 800 MHz authorized under this rule part may share the use of their facilities. A station is shared when persons not licensed for the station control the station for their own purposes pursuant to the licensee's authorization. Shared use of a radio station below 800 MHz may be either on a non-profit, cost-shared basis or on a for-profit private carrier basis. Shared use of an authorized station below 800 MHz is subject to the following conditions and limitations:

* * * * *

§§ 90.350–90.390 (Subpart M) [Removed and reserved]

4. Subpart M (§§ 90.350 through 90.390) is removed in its entirety and the word "Reserved" substituted.

5. 47 CFR 90.601 is revised to read as follows:

§ 90.601 Scope.

This subpart sets out the regulations governing the licensing and operations of all systems operating in the 806.824/851–869 MHz and 896–901/935–940 MHz bands. This subpart also governs the use of frequencies in the 806–821/851–866 MHz bands along the Mexican and Canadian border areas in accordance with existing agreements. It includes eligibility requirements, application procedures, operational and technical standards for stations licensed in these bands. The rules in this subpart are to be read in conjunction with the applicable requirements contained elsewhere in this part; however, in case of conflict, the provisions of this subpart shall govern with respect to licensing and operation in these frequency bands.

6. 47 CFR 90.603 is amended by revising paragraph (c) to read as follows:

§ 90.603 Eligibility.

* * * * *

(c) Any person, except wire line telephone common carriers, eligible under this part and proposing to provide on a commercial basis base station and ancillary facilities as a Specialized Mobile Radio System operator, for the use of individuals, Federal Government agencies and persons eligible for licensing under Subparts B, C, D, or E of this part.

7. 47 CFR 90.609 is amended by revising paragraph (c) to read as follows:

§ 90.609 Special limitations on amendment of applications for assignment or transfer of authorizations for radio systems used to provide service to persons other than the licensee.

* * * * *

(c) Licensees of constructed systems are permitted to make partial assignments of an authorized grant to an applicant proposing to create a new system or to an existing licensee that has loaded its system to 70 mobiles per channel and is expanding that system. An applicant authorized to expand an existing system or to create a new system with channels it obtains through partial assignment will receive the assignor's existing license expiration date and loading deadline. A licensee that makes a partial assignment will not be authorized to obtain additional channels for that same system for a period of one year from the date of the partial assignment.

8. 47 CFR 90.611 is amended by revising paragraph (b), by redesignating existing paragraphs (c), (d), and (e) as new paragraphs (d), (e), and (f) respectively, by adding a new paragraph (c), and by revising newly designated paragraph (d) to read as follows:

§ 90.611 Processing of applications.

* * * * *

(b) All applications in pending status will be processed in the order in which they are received, determined by the date on which the application was received by the Commission in its Gettysburg, PA office, or the address set forth at § 0.401(b) for applications requiring the fees established in Part 1, Subpart G of this chapter.

(c) Each application will be reviewed to determine whether it can be granted. Applications for channels in he Public Safety/Special Emergency, Industrial/Land Transportation, and Business categories, as well as the 150 channels available for conventional use in § 90.615, must specify the intended frequency (or frequencies) of operation. Applications for channels in the SMRS category may either specify the intended frequency (or frequencies) of operation in accordance with the provisions of § 90.621 or request the Commission to perform the selection.

(d) Applications that cannot be granted due to a lack of available channels in a particular area will be placed on a waiting list for that area. Waiting lists will consist of two groups. The first group will be comprised of applications from existing licensees who, in the area corresponding to the particular waiting list, operate trunked systems with 70 or more mobile units per channel. The second group will be comprised of applications to establish new systems or to obtain additional channels for conventional systems. Applications will be placed in the appropriate group according to filing dates, with the earliest date receiving the highest ranking. All applications in the first group will receive priority over any application in the second group regardless of filing date. When channels become available, the highest ranking application(s) will be granted based on the site specified and the Commission's mileage separation standards. Trunked systems that have had authorized channels cancelled due to failure to meet the loading requirements in § 90.631 will not be permitted on the waiting list for a period of 6 months from the date of the issuance of the superseding license.

* * * * *

9. 47 CFR 90.617 is amended by revising paragraph (d) introductory text, amending Table 4A by revising the entry for Group No. 228 and adding new entries for Group Nos. 401–440, revising the heading for Table 4B and creating a new Table 4C to read as follows:

§ 90.617 Frequencies in the 809.750–816/854.750–861 MHz, 821–824/866–869 MHz, and 896–901/935–940 MHz bands available for trunked or conventional system use in non-border areas.

* * * * *

(d) The channels listed in Tables 4A and 4B are available only for eligibles in the SMR category which consists of Specialized Mobile Radio (SMR) stations and eligible end users. This paragraph deals with the assignment of frequencies only in areas farther than 110 km (68.4 miles) from the U.S./

Mexicio border and farther than 140 km (87 miles) from the U.S./Canada border. See § 90.619 for the assignment of SMR frequencies in these border areas. For stations located within 70 miles of Chicago, channels 401–600 will be assigned in groups as outlined in Table 4C.

TABLE 4A.—SMR CATEGORY 806–821/851–866 MHz BAND CHANNELS (280 CHANNELS)

Group No.	Channel Nos.
* * *	* *
228	228-268-308-348-388
401	401-441-481-521-561
402	402-442-482-522-562
403	403-443-483-523-563
404	404-444-484-524-564
405	405-445-485-525-565
406	406-446-485-526-566
407	407-447-487-527-567
408	408-448-488-528-568
409	409-449-489-529-569
410	410-450-490-530-570
411	411-451-491-531-571
412	412-452-492-532-572
413	413-453-493-533-573
414	414-454-494-534-574
415	415-455-495-535-575
416	416-456-496-536-576
417	417-457-497-537-577
418	418-458-498-538-578
419	419-459-499-539-579
420	420-460-500-540-580
421	421-461-501-541-581
422	422-462-502-542-582
423	423-463-503-543-583
424	424-464-504-544-584
425	425-465-505-545-585
426	426-466-506-546-586
427	427-467-507-547-587
428	428-468-508-548-588
429	429-469-509-549-589
430	430-470-510-550-590
431	431-471-511-551-591
432	432-472-512-552-592
433	433-473-513-553-593
434	434-474-514-554-594
435	435-475-515-555-595
436	436-476-516-556-596
437	437-477-517-557-597
438	438-478-518-558-598
439	439-479-519-559-599
440	440-480-520-560-600

Table 4B–SMR Category 896–901/935–940 MHz Band—Channels (200 Channels):

* * * * *

TABLE 4C–SMR CATEGORY—CHICAGO PLAN [2, 3]

Group No.	Channel Nos.
401 [1]	401 through 410
411	411-447-483-519-555
412	412-448-484-520-556
413	413-449-485-521-557
414	414-450-486-522-558
415	415-451-487-523-559
416	416-452-488-524-560
417	417-453-489-525-561
418	418-454-490-526-562

TABLE 4C–SMR CATEGORY—CHICAGO PLAN [2, 3]—Continued

Group No.	Channel Nos.
419	419-455-491-527-563
420	420-456-492-528-564
421	421-457-493-529-565
422	422-458-494-530-566
423	423-459-495-531-567
424	424-460-496-532-568
425	425-461-497-533-569
426	426-462-498-534-570
427	427-463-499-535-571
428	428-464-500-536-572
429	429-465-501-537-573
430	430-466-502-538-574
431	431-467-503-539-575
432	432-468-504-540-576
433	433-469-505-541-577
434	434-470-506-542-578
435	435-471-507-543-579
436	436-472-508-544-580
437	437-473-509-545-581
438	438-474-510-546-582
439	439-475-511-547-583
440	440-476-512-548-584
441	441-477-513-549-585
442	442-478-514-550-586
443	443-479-515-551-587
444	444-480-516-552-588
445	445-481-517-553-589
446	446-482-518-554-590
591	591-592-593-594-595
596	596-597-598-599-600

[1] Reserved for contiguous assignments or as a frequency pool for assignments to systems with odd number of channels.

[2] These frequencies will be authorized only in the area encompassed by a 70 mile radius centered at 41°52'28" N, 87°38'22" W.

[3] All stations located beyond the 70 mile distance authorized on or before August 16, 1982 to use these frequencies may continue to do so. Stations beyond the 70 mile distance authorized after August 16, 1982 shall employ frequencies listed in Table 4A subject to the provisions of § 90.621 (b) or (c) as applicable.

* * * * *

10. 47 CFR 90.627 is amended by revising paragraph (b)(2) to read as follows:

§ 90.627 Limitation on the number of frequency pairs that may be assignable for trunked systems and on the number of trunked systems.

* * * * *

(b) * * *

* * * * *

(2) The licensee's existing trunked system is loaded to at least 70 mobile and control stations per channel; or,

* * * * *

11. 47 CFR 90.631 is amended by revising the section heading and paragraph (b); by redesignating existing paragraphs (c), (d), (e), and (f) to new paragraphs (e), (f), (g), and (h), respectively; and by adding new paragraphs (c) and (d) to read as follows:

§ 90.631 Trunked systems loading, construction and authorization requirements.

* * * * *

(b) Each applicant for a trunked system shall certify that a minimum of 70 mobiles for each channel authorized will be placed in operation within five years of the initial license grant. If at the end of five years a trunked system is not loaded to the prescribed levels and all channels in the licensee's category are assigned in the system's geographic area, authorization for channels not loaded to 100 mobile stations per channel cancels automatically. All licensees who are authorized initially before June 1, 1993, and are within their original license term are subject to this condition. A licensee that has had authorized channels cancelled due to failure to meet the above loading requirements will not be authorized to obtain additional channels to expand that same system for a period of six months from the date of cancellation.

(c) Except as provided in paragraph (d) of this section, an applicant seeking to expand a trunked system by requesting additional channels from the Commission, or through intercategory sharing, or through an assignment must have a loading level of 70 mobiles per channel on the existing system that is the subject of the expansion request.

(d) In rural areas, a licensee of a trunked system may request to increase its system capacity by five more channels than it has constructed without meeting the loading requirements specified in paragraphs (b) and (c) of this section. A rural area is defined for purposes of this section as being beyond a 100-mile radius of the designated centers of the following urbanized areas, as well as those areas that have a waiting list. (Rural areas may be different for 800 and 900 MHz channels since the Commission maintains separate waiting lists for these frequency bands.) The identified urbanized areas are: New York, NY; Los Angeles, CA; Chicago, IL; Philadelphia, PA; San Francisco, CA; Detroit, MI; Boston, MA; Houston, TX; Washington, DC; Dallas-Fort Worth, TX; Miami, FL; Cleveland, OH; St. Louis, MO; Atlanta, GA; Pittsburgh, PA; Baltimore, MD; Minneapolis-St. Paul, MN; Seattle, WA; San Diego, CA; and Tampa-St. Petersburg, FL. The coordinates for the centers of these areas are those referenced in § 90.635, except that the coordinates for Tampa-St. Petersburg are latitude 28°00'00" N, longitude 82°27'00" W. Where waiting lists determine whether an area is rural, the designated centers of those areas will be identified on the actual waiting lists released by the Commission. If a waiting list is later established in a rural area, licensees who have acquired additional

BEST COPY AVAILABLE

channels pursuant to this paragraph will be subject to the automatic cancellation provisions in paragraph (b) of this section at the end of one year from the date the area first appears on a Commission waiting list, or at the end of their license term, whichever is longer.

12. 47 CFR 90.637 is amended by revising paragraph (a) as follows:

§ 90.637 Restrictions on operational fixed stations.

(a) Except for control stations, operational fixed operations will not be authorized in the 806–824 MHz, 851–869 MHz, 896–901 MHz, or 935–940 MHz bands. This does not preclude secondary fixed tone signaling and alarm operations authorized in § 90.235 or in paragraph (c) of this section.

* * * * *

13. 47 CFR 90.655 is revised as follows:

§ 90.655 Special licensing requirements for Specialized Mobile Radio systems.

All end users of conventional or trunked Special Mobile Radio systems must be licensed for any associated control points, control stations and mobile radio stations and only licensed end users are authorized to use those systems.

Federal Communications Commission.

H. Walker Feaster III,

Acting Secretary.

[FR Doc. 88–7844 Filed 4–12–88; 8:45 am]

BILLING CODE 6712-01-M

DEPARTMENT OF TRANSPORTATION

Federal Highway Administration

49 CFR Part 387

[FHWA Docket No. MC-126]

Minimum Levels of Financial Responsibility For Motor Carriers; Environmental Restoration

AGENCY: Federal Highway Administration (FHWA), DOT.

ACTION: Final rule.

SUMMARY: This final rule amends the Minimum Levels of Financial Responsibility regulations to make permanent an amendment contained in an interim rule published in the **Federal Register** on September 23, 1986. This change makes clear that motor carriers are required to provide evidence of financial responsibility to satisfy claims for damage to human health and to the environment including necessary environmental restoration costs, but not for potential or speculative damages for which they would not otherwise be found liable.

EFFECTIVE DATE: This rule is effective April 13, 1988.

FOR FURTHER INFORMATION CONTACT: Mr. Thomas P. Kozlowski, Office of Motor Carrier Standards, (202) 366–4049, or Paul L. Brennan, Office of the Chief Counsel, (202) 366–1350, Federal Highway Administration, Department of Transportation, 400 Seventh Street SW., Washington, DC 20590. Office hours are from 7:45 a.m. to 4:15 p.m., ET, Monday through Friday, except on legal holidays.

SUPPLEMENTARY INFORMATION: The FHWA published an interim final rule (Docket No. MC–126; Amdt. No. 83–19) in the **Federal Register** on September 23, 1986 (51 FR 33854), deleting the phrase "or potential for damage" from the definition of "environmental restoration" in 49 CFR 387.5. The rulemaking was in response to a joint petition filed by the American Insurance Association (AIA) and the American Trucking Associations, Inc. (ATA). In amending this section of the Federal Motor Carrier Safety Regulations (FMCSRs), the FHWA deleted a phrase from the definition which required liability coverage for the "potential for damage" to the environment. This action was intended to reduce the uncertainty as to the extent of liability of the insured and the insurer by clarifying that the evidence of financial responsibility did not need to cover potential or speculative damage for which the motor carrier would not otherwise be found liable.

Comments

The FHWA received 13 comments to the public docket in response to the interim final rule. Eleven commenters supported the adoption of the interim final rule as a final rule. One commenter opposed the adoption and one comment was not germane to the rulemaking.

The Regular Common Carrier Conference (RCCC), in its support of the adoption as a final rule, echoed the comments of many of the supporters for adoption. The RCCC asserted that insurers view the request to insure motor carriers for environmental restoration claims as a request to provide bondless coverage.

The National-American Wholesale Grocers' Association (NAWGA) argued that obtaining liability insurance has become increasingly difficult for virtually all its members, but those policies which can be purchased are often accompanied by substantial increased premiums. The NAWGA contends that this dramatic increase in premium rates is at least partially due to the vagueness of the "potential for damage" language contained in the previous definition of "environmental restoration."

The Transportation Committee of the Rubber Manufacturers Association, Inc. (RMA), opposed the amendment. It stated its "concern that the FHWA's proposed rules will have the unintended result of permitting motor carriers to carry an insufficient amount of insurance to cover all of their liability currently imposed under federal law," and that, "* * * the insurance crisis affecting all sections of commerce should not be allowed to undermine basic elements of financial responsibility."

The RMA asserted that, "* * * the FHWA does not address the fact that carriers are liable for potential environmental restoration costs under Federal law. Specifically, no consideration is given to the fact that under the Comprehensive Environmental Response, Compensation, and Liability Act of 1980 (CERCLA), 42 U.S.C. § 9601 *et seq.* (as amended 1986), once there has been a accidental discharge of hazardous material by a carrier, the carrier is considered to be a generator or transporter of hazardous waste. As a generator of waste, the carrier's liability includes liability for the costs of potential environmental restoration costs."

Based on the CERCLA requirements, RMA argued that, "By ignoring the liability of carriers under CERCLA, and eliminating the requirement for insurance to cover potential environmental restoration, the FHWA succeeds only in ensuring that motor carriers are not likely to have adequate insurance to cover their liability under CERCLA in case of accidential spills." Thus, "* * * whereas carriers are liable under CERCLA for potential environmental restoration, the statutory scheme provides for financial responsibility for that liability under the Motor Carrier Act of 1980. The FHWA's proposed action would remove the insurance requirement, but certainly would not remove the carriers' liability under CERCLA."

Rebuttal comments were received from the American Insurance Association (AIA) and from the National Tank Truck Carriers, Inc. (NTTC).

The AIA believes that the RMA misconstrues the scope of liability imposed by CERCLA and that "the minimum dollar amount of insurance * * * required under Section 30 and the maximum liability imposed under CERCLA are not coextensive, nor was that intended by Congress."

The AIA argued that carriers wishing to transport a limited category of hazardous materials need only carry $5 million worth of liability coverage under section 30, whereas $50 million in liability coverage is required under section 107(c)(1)(c) of CERCLA. The AIA notes that "Section 108(b)(5) of CERCLA defers to Section 30 the requirements of minimum financial responsibility for motor carriers. In addition, CERCLA neither preempts nor imposes a damage cap upon the common law theories which may be argued in pursuit of a claim for bodily injury or property damage resultant from the transportation of a hazardous waste or substance."

In a final argument, the AIA restated its original comments from their petition that injuries will occur and that they will be compensated. But, "* * * on the other hand, by helping to dispel the insurance industry's fears and concerns caused by the current definition, the insurance unavailability and pricing problems currently being experienced by motor carriers can be ameliorated."

The thrust of the rebuttal comments by the National Tank Truck Carriers, Inc., centered on the objections raised in 1981 by underwriters when the Secretary published the definition of the term "environmental restoration." They found that underwriters were correct in objecting to the definition on an economic basis, "the Secretary's 'definition' would bind a underwriter to reserve expenses for damages which might not be claimed either: (1) for several years in the future; or, (2) after the expiration of a policy period. Thus, computation of a sound actuarially-based premium was impossible." From this, the NTTC concluded that, "beginning in 1984, 'environmental restoration' coverages were withdrawn by the reinsurance community or provided at prohibitive dollar levels."

Discussion

The FHWA issued an interim final rule to amend the definition of "environmental restoration" in order to address the serious problems of affordability and availability of insurance facing motor carriers. The AIA and the ATA, in petitioning the FHWA for this change, identified the inclusion of the phrase "or potential for damage" as contributing to the insurance problems facing motor carriers. They argued that the inclusion of this phrase led insurers to conclude that they were being asked to insure for unknown and unknowable potential damages which were merely speculative. They further argued that the definition of "environmental restoration" unintentionally expanded the scope of recompensable liability.

In adopting its interim final rule, the FHWA stated its belief that, "Section 30 of the Motor Carrier Act of 1980 was not intended to create a new basis for finding liability, but rather was intended to provide assurances that motor carriers found liable for damages under other law (e.g., State law or the common law) would have the financial means to pay for those damages." 51 FR 33854 (1986).

The FHWA has carefully considered the arguments made by the RMA, as well as the rebuttal arguments made by the AIA and the NTTC, and the comments made by others. The RMA has stated in its comments that the FHWA did not address the issue of motor carrier liability for potential environmental restoration costs under Federal law, i.e., under the Comprehensive Environmental Response, Compensation, and Liability Act of 1980, as amended (CERCLA or Superfund), 42 U.S.C. 9601. The RMA further states that it believes that the FHWA's action in redefining "environmental restoration" will have the "unintended result of permitting motor carriers to carry an insufficient amount of insurance to cover all of their liability currently imposed under federal law."

Section 30 of the Motor Carrier Act of 1980 does not define the term "environmental restoration," although it requires motor carriers to maintain evidence of financial responsibility to cover such costs. The FHWA has found it necessary to define this term, and has attempted to do so in such a way that it would be clear that, in order to comply with the requirements of section 30, motor carriers are required to maintain a minimum amount of financial responsibility to satisfy any claims for which motor carriers would be liable under existing law. This would include section 107 of CERCLA. However, the FHWA has attempted to be equally clear that it was not creating any new source of liability for motor carriers. The FHWA believes that its amended definition of liability for the term "environmental restoration" is sufficiently broad to include any liability for environmental costs for which a motor carrier is found liable, including liability under CERCLA. We agree with the RMA that this change does not affect a carrier's liability for environmental response costs under CERCLA. However, we disagree that a result of the change will be to eliminate coverage for liabilities under CERCLA. We never intended such an effect and believe that the environmental restoration coverage required by 49 CFR Part 387, as revised, is sufficiently broad so as to cover liability for environmental response costs under CERCLA.

Section 107 of CERCLA does not use the term "environmental restoration," nor does it provide that motor carriers will be liable for "potential damages." The FHWA does not believe that anything in CERCLA limits the FHWA's flexibility to define the term "environmental restoration" under section 30 as was done in the interim final rule. It is the position of the FHWA that the financial responsibility coverage required under Section 30 would cover liability which has been determined under CERCLA, up to the amount of the coverage evidenced by the required MCS-90 endorsement form in those instances when a motor carrier satisfies its financial responsibility requirement with insurance.

The CERCLA provides that a motor carrier's liability might reach $50 million for each release of a hazardous substance. Clearly, the minimum level of financial responsibility to be required under section 30 of the Motor Carrier Act of 1980 or section 108 of CERCLA need not be at such a high level. In establishing its minimum levels of financial responsibility requirements, the FHWA recognized that it should not require a minimum dollar level which would cover all possible losses, including those resulting from catastrophic incidents. Based on the enabling legislation, the FHWA was required to set levels of financial responsibility of $750,000 for nonhazardous property, $1,000,000 for most hazardous materials, and $5,000,000 for certain "extra-hazardous" materials. The FHWA recognizes that it is possible that a motor carrier may be found liable for damages which exceed the amount of coverage required by the FHWA. However, we believe that such catastrophic losses will be extremely rare and that the cost of requiring all motor carriers to maintain financial responsibility to satisfy such rare catastrophic losses is not justified by available accident and loss data. Accordingly, the FHWA does not believe that a motor carrier's potential liability of "not to exceed $50 million" under section 107 of CERCLA is a reason for establishing higher financial responsibility limits or for including "potential for damage" in the definition of environmental restoration.

As stated above, in rebuttal comments, the National Tank Truck Carriers, Inc., argued that the deletion of the words "or potential for damage"

would relieve insurers of covering expenses for damages which might not be claimed: (1) For several years in the future; or (2) after the expiration of a policy period. The FHWA does not agree with this interpretation. As stated in the **Federal Register** notice of September 23, 1986 (51 FR 33856): "We believe that any damage for which a motor carrier is found to be liable remains covered under the revised definition. The change is not intended to relieve the insurers of the obligation to pay for such damages. While the term 'environmental restoration' is not intended to create liability, it is intended to guarantee that motor carriers are covered for damage claims for which they may be liable."

The FHWA has determined that this action does not constitute a major rule under Executive Order 12291 or a significant regulation under the regulatory policies and procedures of the Department of Transportation.

The FHWA believes it is clarifying the definition of the term "environmental restoration" so as to quiet the concern of insurers, without making a substantive change in the required financial responsibility coverage or reducing public protection. This amendment was subjected to public comment by way of the September 23, 1986, interim final rule and those comments have been duly considered. Therefore, the FHWA believes the provisions for prior notice and opportunity for comment under the Administrative Procedures Act, 5 U.S.C. 553(b) have been satisfied. For reasons stated above, the FHWA finds good cause to make this amendment final without a 30-day delay in effective date.

The FHWA is confident that the economic impact which results from this regulatory action will be generally beneficial. No reduction in public protection or in the protection afforded the environment will result from this change. This change could, however, make insurance more readily available and more affordable to many motor carriers by better enabling insurers to assess risk and establish prices which are reasonable in light of the coverage requested.

Because the classes of motor carrier operations subject to the FHWA's financial responsibility requirements under section 30 of the Motor Carrier Act of 1980 are somewhat different from the classes regulated for safety under the agency's other statutory authorities, and because the FHWA did not impose a reporting requirement of motor carriers subject to its jurisdiction, the FHWA is uncertain of the number of motor carriers subject to the regulations and upon which this rule will have an impact. Estimates by the FHWA indicate that approximately 1 million commercial motor vehicles (trucks only) are subject to the requirements of the regulations promulgated under Section 30. It is further estimated that motor carriers currently pay approximately $7.1 billion in annual insurance premiums for personal injury, property damage, and environmental restoration coverage for these vehicles.

Accordingly, the interim final rule amending 49 CFR 387.5 and 387.15 which was published in the **Federal Register** at 51 FR 33854 on September 23, 1986, is adopted as a final rule without change.

List of Subjects in 49 CFR Part 387

Highways and roads, Insurance, Motor carriers, Surety bonds.

(Catalog of Federal Domestic Assistance Program Number, 20.217 Motor Carrier Safety)

(49 U.S.C. 10927 note, 49 CFR 1.48)

Issued on April 8, 1988.

Robert E. Farris,

Deputy Administrator, Federal Highway Administration.

[FR Doc. 88-8060 Filed 4-12-88; 8:45 am]

BILLING CODE 4910-22-M

Proposed Rules

Federal Register
Vol. 53, No. 71
Wednesday, April 13, 1988

This section of the FEDERAL REGISTER contains notices to the public of the proposed issuance of rules and regulations. The purpose of these notices is to give interested persons an opportunity to participate in the rule making prior to the adoption of the final rules.

ENVIRONMENTAL PROTECTION AGENCY

40 CFR Part 52

[FRL-3285-2]

Approval and Promulgation of Implementation Plans; Ohio

AGENCY: U.S. Environmental Protection Agency (USEPA).

ACTION: Proposed rulemaking.

SUMMARY: USEPA is proposing to disapprove two site-specific revisions to the ozone portion of the Ohio State Implementation Plan (SIP). These revisions are: (1) A permanent relaxation for two fabric coating lines at B.F. Goodrich Company (B.F. Goodrich); and (2) a permanent relaxation for two fabric coating lines at the Goodyear Tire and Rubber Plant I (Goodyear Plant I). These facilities are all located in Summit County, Ohio.

USEPA today is proposing to disapprove these SIP revisions because these sources are all located in an area (Summit County) lacking a current federally approved ozone attainment demonstration. Under USEPA's SIP revision policy, sources which are located in areas lacking current federally approved ozone attainment demonstrations cannot be considered for relaxations until the SIP has been revised to demonstrate attainment and maintenance of the national ambient air quality standard (NAAQS) for ozone. In addition, the State must demonstrate that reasonable further progress (RFP) will be maintained in the area.

DATE: Comments on this revision and on the proposed USEPA action must be received by May 13, 1988.

ADDRESSES: Copies of the SIP revision are available at the following addresses for review: (It is recommended that you telephone Uylaine E. McMahan, at (312) 886-6031, before visiting the Region V Office.)

U.S. Environmental Protection Agency, Region V, Air and Radiation Branch (5AR-26), 230 South Dearborn Street, Chicago, Illinois 60604

Ohio Environmental Protection Agency, Office of Air Pollution Control, 361 East Broad Street, Columbus, Ohio 43216.

Comments on this proposed rule should be addressed to: (Please submit an original and six copies, if possible.) Gary Gulezian, Chief, Regulatory Analysis Section, Air and Radiation Branch, USEPA, Region V, 230 South Dearborn Street, Chicago, Illinois 60604.

FOR FURTHER INFORMATION CONTACT: Uylaine E. McMahan (312) 886-6031.

SUPPLEMENTARY INFORMATION:

USEPA approved Ohio's RACT I and RACT II rules as meeting the Clean Air Act RACT requirements on October 31, 1980 (45 FR 72122), and June 29, 1982 (47 FR 28097), respectively. In lieu of the requirements mentioned above, OEPA has requested two site-specific SIP revisions comprised of an extended compliance schedule for a relaxation for B.F. Goodrich, and a relaxation for the Goodyear Plant I. These are described below:

B.F. Goodrich

On August 19, 1983, OEPA submitted a proposed site-specific VOC revision to its ozone SIP for B.F. Goodrich's two fabric coating lines (K001-K002), which are located at the B.F. Goodrich facility in Summit County, Ohio. The proposed revision consists of a facility-specific redefinition of RACT, which would be a relaxation from the present SIP limits. Under this proposed revision, the combined emissions from sources K001 and K002 can neither exceed 500 pounds per day, nor 50 tons per year.

Under the existing federally approved SIP, each fabric coating line (K001-K002) at B.F. Goodrich is subject to the control requirements contained in OAC Rule 3745-21-09(G) of 2.9 pounds of VOC/gallon of coating. OAC Rule 3745-21-04(C)(6) required final compliance by April 1, 1982.

Goodyear Plant I

On September 19, 1983, OEPA submitted a proposed site-specific VOC revision to its ozone SIP for Goodyear Plant I's seven fabric coating lines (K001-K007), which are located at Goodyear Plant I's facility in Summit County, Ohio. The revision consists of a permanent relaxation from the SIP limit by combining VOC emissions from sources K001 through K007. The combined emissions can neither exceed 1550 pounds of VOC per day, nor 202 tons per year.

Under the existing federally approved SIP, each fabric coating line (K001-K007) at Goodyear Plant I is subject to the control requirements contained in OAC Rule 3745-21-09(G) of 2.9 pounds of VOC/gallon of coating. OAC Rule 3745-21-04(C)(6) required final compliance by April 1, 1982.

SIP Deficiency—Summit County

On February 24, 1984, the USEPA notified the Governor of Ohio, pursuant to Section 110(a)(2)(H) of the Clean Air Act, that the Ohio SIP is inadequate to achieve the NAAQS for ozone in Summit County. The basis for the finding of inadequacy is USEPA's conclusion that, even though this area is covered by a fully approved Part D Plan which was to assure attainment of the ozone NAAQS by 1983, Summit County is still experiencing ozone NAAQS violations. In the SIP inadequacy letter, USEPA called upon the State to cure the inadequacies by revising the SIP within 1 year from the date of the letter. To date, the State of Ohio does not have a re-approved SIP for Summit County.

SIP Deficiency—Goodyear and B.F. Goodrich

Under USEPA's July 29, 1983, SIP revision policy memorandum entitled "Source Specific SIP Revisions" from Sheldon Meyers, Director of the Office of Air Quality Planning and Standards, sources which are located in areas lacking current federally approved ozone attainment demonstrations cannot be considered for relaxations, until the SIP has been revised to demonstrate attainment and maintenance of the national ambient air quality standard (NAAQS) for ozone. In addition, the State must demonstrate that RFP will be maintained in the area.

On September 1, 1983, USEPA returned to OEPA a number of draft and final SIP revision requests for sources which are located in urban nontainment areas lacking current attainment demonstrations. Because these were requests to change applicable SIP requirements in areas lacking current attainment demonstrations, the requests were considered incomplete.

In a letter dated February 28, 1985, USEPA requested that OEPA notify the

Region V Office of its preferred disposition of each submittal within 2 weeks. If the OEPA elected to withdraw the revisions, USEPA stated it would take no further action on them. If, on the other hand, the State did not withdraw them, USEPA stated that it would have to propose to disapprove them because they were requests to change applicable SIP requirements in areas lacking current attainment demonstrations. On April 4, 1985, the State notified USEPA that is still considered each of these SIP revision requests pending, and requested USEPA to approve them. Therefore, USEPA is proposing to disapprove these SIP revisions relaxation requests for the B.F. Goodrich, and Goodyear Plant I facilities in Summit County, Ohio.

USEPA is providing a 30-day comment period on this notice of proposed rulemaking. Public comments received on or before May 13, 1988 will be considered in USEPA's final rulemaking. All comments will be available for inspection during normal business hours at the Region V Office, address provided at the front of this notice.

Under 5 U.S.C. 605(b), I certify that this SIP disapproval will not have a significant economic impact on a substantial number of small entities, because the effect of this disapproval is to leave in effect existing emissions limitations. Therefore, there is no change or any impact on any source or community.

Under Executive Order 12291, today's action is not "Major". It has been submitted to the Office of Management and Budget (OMB) for review.

Authority: 42 U.S.C. 7401–7642.

Dated: February 11, 1987.

Valdas V. Adamkus,

Regional Administrator.

Editorial Note: This document was received at the Office of the Federal Register on April 8, 1988.

[FR Doc. 88–8054 Filed 4–12–88; 8:45 am]

BILLING CODE 6560-50-M

---

40 CFR Part 261

[FRL-3364-6]

Hazardous Waste Management System; Identification and Listing of Hazardous Waste

AGENCY: Environmental Protection Agency.

ACTION: Notice of availability of data and request for comment.

SUMMARY: On November 12, 1980, the Environmental Protection Agency proposed to amend the listings for two of the hazardous wastes generated by the petroleum refining industry; these listings were promulgated in final form in that same issue of the **Federal Register**. Specifically, the Agency proposed to amend the listing of API separator sludge (K051) to read "Primary oil/solids/water separation sludge from the petroleum refining industry" and the listing of dissolved air flotation float (K048) to read "Secondary (emulsified) oil/solids/water separator sludge from the petroleum refining industry".

On February 11, 1985, the Agency noticed additional analytical information on wastes covered by the amended listings and published a clarification that the intended scope of the proposed listings was limited to primary, rather than secondary treatment. EPA has subsequently obtained additional waste composition data on these sludges; in addition, the American Petroleum Institute (API) has provided information relevant to further clarifying the scope of the proposed listings. Thus, EPA is today noticing the additional data and approaches to clarifying the proposed listings, and requesting comment on that data. The API data would distinguish primary separation and secondary separation (primary treatment) from secondary treatment based upon phenolic removal efficiencies, while the other approach is based on the physical and chemical properties of the sludges themselves. EPA is requesting comment on these alternative approaches for clarifying the scope of the proposed listings. Finally, EPA is soliciting comment on whether to include organic constituents, which the new data indicate are present in the primary treatment sludges, as additional listing criteria.

DATES: Comments on this notice of data availability must be received on or before May 31, 1988.

ADDRESSES: The public must send an original and two copies of their comments to: EPA RCRA Docket (S–212) (WH–562), U.S. Environmental Protection Agency, 401 M Street SW., Washington, DC 20460. Place the Docket Number F–88–PTSA–5F on your comments. The Office of Solid Waste (OSW) docket is located in the sub-basement at the above address, and is open from 9:00 to 4:00, Monday through Friday, excluding Federal holidays. The public must make an appointment to review docket materials by calling (202) 475–9327. The public may copy a maximum of 50 pages of material from any one regulatory docket at no cost; additional copies cost $0.20 per page. Copies of the non-CBI version of sampling data and other support information are available for *viewing and copying only* in the OSW docket.

FOR FURTHER INFORMATION CONTACT: The RCRA/Superfund Hotline at (800) 424–9346 or at (202) 382–3000. For technical information, contact Ben Smith, Office of Solid Waste (WH–562B), U.S. Environmental Protection Agency, 401 M Street SW., Washington, DC 20460 or by phone at (202) 382–4791.

SUPPLEMENTARY INFORMATION:

I. Background

On May 19, 1980, as part of its final and interim final regulations implementing section 3001 of RCRA, EPA published (in interim final form) a list of hazardous wastes (Subpart D of 40 CFR 261.32), which included five wastes generated by the petroleum refining industry (see 45 FR 33123). Among the listed petroleum refining wastes were "Dissolved Air Flotation (DAF) Float from the Petroleum Refining Industry" (K048) and "API Separator Sludge from the Petroleum Refining Industry" (K051). These wastes are generated as a result of the primary treatment of oily wastewaters. These particular listings were promulgated in final form on November 12, 1980 (45 FR 74884).

Subsequent to the May 1980 rulemaking, a rulemaking petition was submitted by Envirex, Inc. which argued that any petroleum refining sludge resulting from primary or secondary oil/solids/water separation (both of which are primary treatment) should be included in the listing because all such sludges would be similar in composition regardless of the equipment or method used in the separation step. After evaluating the rulemaking petition, the Agency proposed (also on November 12, 1980 at 45 FR 74893) that the K048 and K051 listings be amended to read, respectively: "Secondary (emulsified) oil/solids/water separator sludge in the petroleum refining industry"; and "Primary oil/solids/water separation sludge in the petroleum refining industry".

Commenters on the 1980 proposal expressed two major areas of concern. First, they believed the proposed amendment to the K048 (secondary separation) listing to be sufficiently vague that the proposal could be read to apply to biological treatment systems (which are considered secondary treatment), not just to sedimentation and flocculation systems. Secondly, commenters believed that the Agency had not demonstrated that the various categories of units potentially subject to the expanded listing possessed lead and

chromium at levels of concern. Based on these concerns, the Agency embarked on a comprehensive methods-development and waste-characterization effort to further substantiate the bases for expanding the listings. In order to conserve Agency resources and to minimize the information gathering burden on the regulated community, EPA simultaneously gathered data on the levels of toxic organics which would be found in the wastes subject to the proposed listing.

After the passage of the Hazardous and Solid Waste Amendments (HSWA) of 1984, the organic constituent data became even more valuable. In particular, HSWA requires all petitioners interested in delisting a hazardous waste to test the waste for all Appendix VIII (hazardous) constituents. Inclusion in the listing of all constituents that are typically present at levels of concern facilitates petitioner identification of the types of pretreatment which might successfully render a waste non-hazardous and delistable.

Having gathered the necessary information, the Agency published a Notice of Data availability on February 11, 1985. These data consisted of organics and metals analyses on wastewater treatment sludges from the following sources:

Storm runoff ponds,
Primary settling ponds,
Flocculation tanks,
Sumps,
Emulsion tanks,
Induced air flotation tanks,
Evaporation ponds,
Equalization ponds,
Clarifiers,
Cleaning chemical pits,
Ponds with an oil skimmer

The data from these sources showed sludges with lead and chromium levels similar to the levels found in sludges from API separators and DAF units. In addition, the organic constituents, found included benzene and toluene at concentrations as high as 4600 and 11000 ppm (dry basis) respectively, and benzo(a)pyrene, chrysene, and pyrene at maximum concentrations ranging from 600 to 1700 ppm.

The Agency also took advantage of the opportunity afforded by the notice to reaffirm the scope of the listing and to solicit further comment on the clarity of the listings, stating that the final listings would apply only to wastes from primary wastewater treatment processes, and not to wastes from secondary wastewater treatment such as sludges from biological oxidation. The notice indicated that this listing definition would be accomplished in the final rulemaking by consolidating the K048 and K051 listings to read, "sludge from primary wastewater treatment in the Petroleum Refining industry". This would eliminate possible confusion of secondary separation as secondary treatment. In so doing, the Agency was not altering the scope of the proposal, nor abandoning either listing. Rather, the Agency was pointing out the equivalency of the two activities generating the proposed wastes (i.e., primary and secondary oil/water/solids separation) to the activities which might be known as primary treatment at a petroleum refinery.

Comment received on the Notice of Data Availability suggested that the Agency had not provided information on units which were "incidental" generators of sludge (e.g. ditches and flow equalization basins), which might be covered by the proposed listing. Commenters also expressed concern that the clarification presented in the 1985 notice could be erroneously construed to expand the scope of the proposed listing to ponds used for secondary and tertiary treatment in those systems where biological treatment was not clearly defined. Their confusion derived, in large part, from the tendency of many refineries to use serial settling/oxidation ponds that could be considered primary or secondary treatment, depending on the quality of the preceding primary treatment units and how conscientious the refinery was in keeping suspended and emulsified oil out of the units. All of these comments will be addressed in the final rule.

Subsequent to the 1985 notice, the Agency conducted additional sampling in an attempt to identify and characterize differences between settling/oxidation ponds being used for primary and secondary treatment. From the sampling data, the Agency hoped to identify an indicator parameter (e.g., per cent oil and grease, or biochemical or chemical oxygen demand of the sludge or waste) that would define when a unit was predominantly secondary treatment.

The American Petroleum Institute (API) expressed considerable interest in this approach to resolving confusion over the scope of the listing. At the Agency's request, API provided information on phenolic removal efficiencies achieved in various categories of wastewater treatment units. Specifically, API provided data which suggested that a total phenolic removal efficiency of 80% or higher would indicate biological treatment. Because primary treatment units appeared to have only minimal levels of biological activity, API believed this delineation to offer a clean indication of when secondary treatment had commended in a particular system. API thus suggested that EPA adopt a definition of primary versus secondary treatment based upon phenolic removal efficiency.

Believing that the API proposal had considerable potential, the Agency initiated another sampling program in the Fall of 1987. The purpose of today's notice is to describe the data gathered from this and all other sampling efforts subsequent to the February, 1985 notice, and to solicit public comment upon the data and upon the alternative approaches to distinguishing primary from secondary treatment in order to implement the 1980 proposal. The first of these two approaches is based on the API definition of secondary treatment by phenolic removal efficiency. The second approach distinguishes secondary treatment by reference to the oil content of the sludges, computed on a dry basis.

II. Availability of Data

Since the close of the comment period on the February, 1985 notice, the Agency has gathered additional compositional information on process wastewater treatment units, stormwater ponds, ditches and other sources of sludge at petroleum refineries. The data collected by the Agency were gathered from the wastewater treatment facilities of 16 refineries. These data clearly demonstrate that lead and chromium levels in the primary treatment units are greater than the levels of those two constituents in the samples considered in the promulgation of the original K048 and K051 listings. In fact, regardless of the type of unit generating the sludge, lead and chromium levels were higher than those observed in the original study that supported the listings of API Separator Sludge and DAF Float. Table 1 summarizes this information; in addition, this Table also summarizes some of the data obtained on the presence of various toxic organic constituents in the various sludges. Based on this data, the Agency solicits comment on whether the toxic organic constituents should be included as additional bases for listing these sludges. The data, which supplement all previously noticed data, are available for public inspection in the RCRA Docket which is located in the sub-basement of the EPA Headquarters at 401 M Street.

Also available in the docket are flow charts summarizing the analytical

information on the sludges and wastewaters sampled at each refinery. Limited data on ground water quality from downgradient wells also have been included, as have all other available data on the sludges. The Agency has also included data submitted by API on phenolic removal efficiencies and the results of sampling conducted by the Agency to test the API approach.

III. Clarification of Scope of the Proposed Listing

In proposing to amend the original K048 and K051 listings, the Agency had a clear concept of a primary oil/water/solids separation sludge and of secondary oil/solids/water separator sludge. The former applied to all "bottoms" generated in the primary treatment system associated with the treatment of oily process wastewaters while the latter applied to all "floats" generated in the primary system. The intent of the proposal was to extend regulatory coverage to "* * * other petroleum wastes with similar compositions generated from processes and equipment other than API separators and DAF equipment." (See 45 FR 74893, November 12, 1980.)

TABLE 1.—AVERAGE CONSTITUENT CONCENTRATIONS

[Mg/kg, dry weight basis]

Category	Lead	Chromium	Benzene	Benzo(a) pyrene	Chrysene
Original Listing Data K048+K051	25	165	NR	<2	NR
Post 1983 Sampling Data K048+K051	390	580	110	16	45
Primary Treatment Sludges [1]	300	400	34	12	34

NR=Not reported due to unavailability of methods.

[1] Including oily stormwater ponds.

Commenters on the 1985 Notice of Data Availability requested that the Agency provide additional clarification of the scope of this proposed listing. The confusion on the part of the commenters seems to derive from three points. The first point relates to a misunderstanding about the Agency's definition of oily wastewaters for the purpose of these listings. Hence, when the Agency (see 50 FR 5637, February 11, 1985) indicated that storm runoff ponds were captured by the listing, some commenters concluded that non-contaminated surface runoff was included; this was not the case. The proposed listing has always been intended to apply only to sludges generated in the storage, transport, or treatment of oily wastewaters. The oily wastewaters generated at petroleum refineries are generally derived from process wastewaters (e.g. condensates, spent caustics, desalter waters, pump gland cooling water), tank drawoffs, cooling waters (from C6 and heavier service), process area drainage and ballast waters. While the Agency's subsequent sampling has shown that other units can be contaminated with the hazardous constituents, they were and are not within the scope of the proposal and will be considered for listing at a later date.

The second source of commenter confusion derives from the fact that primary treatment sludges may be deposited in parts of the treatment system that are not normally considered sludge generators. For instance, at certain refineries process wastewaters and storm waters are routed to a flow equalization basin without first passing through an API separator. This can result in the accumulation of appreciable amounts of primary treatment sludge in the basin. Some commenters are confused about the scope of the listing due to the erroneous belief that the intent to deposit the sludge is required before the sludge can be a primary treatment sludge. Their belief is contrary to the rationale clearly put forth in the original proposal. the primary purpose of the proposal is to identify listings which would capture the sludges regardless of where they were generated in the system. Consequently, primary treatment sludges are intended to be subject to the listing, even if they are generated in a ditch carrying the raw wastewater to the first oil/water/solids separator.

The third area of commenter confusion centers around the industry's multiple uses of the term "secondary" as it applies to wastewater treatment at petroleum refineries. Clarifying the Agency's utilization of this term is an important motivation for this clarification of the proposed listing. Clarifying the proposed rules's definition is best accomplished by considering a generic example of a refinery wastewater treatment system.

Typically, refinery wastewater treatment systems consist of three stages, each of which has a discrete objective. The first of these steps, suspended oil and solids removal, is what the Agency refers to as primary oil/water/solids separation. This activity is generally conducted in one, or more, units. These units are characterized by the use of gravity separation and in place equipment for the removal of separated oil (e.g., slotted pipes and other skimmers, drums, and ropes, as opposed to booms). However, intermediate units may exist in this treatment category which are intended to provide only solids removal or flow equalization capability. Primary oil/water/solids separation may be conducted in separators located exclusively at the central wastewater treatment plant or in combination with regionally located units that service only selected areas of the refinery. All units located upstream of a primary separation unit are also considered primary separation units.

The second stage of most refinery wastewater treatment systems is secondary oil/water/solids removal. The objective of this stage in the treatment process is to remove solids and emulsified oil that have low separation velocities. In a well designed system, this function is typically performed by an air flotation unit. Unfortunately, many more systems exist where this activity is performed in a series of ponds. This is unfortunate because these units are not efficient separators of the emulsified oil and solids. As a consequence, large amounts of acreage are dedicated to a function which might be achievable with a single unit and result in the generation of much less solid waste.

The third stage of refinery wastewater treatment is secondary, or biological, treatment. The objective of this treatment is the degradation of dissolved oil and other pollutants to levels suitable for water reuse or discharge. In a well designed system, this activity is conducted in an activated sludge or similar unit. However, some refineries use additional oxidation ponds to perform this function.

When one considers refinery wastewater treatment systems in the above context, the source of confusion become clear. Some commenters are confusing secondary oil/water/solids separation sludges with biological treatment sludges. The latter, although they may contain hazardous constituents at significant levels, were never intended by the Agency to be a part of this particular proposal. It is the sludges and floats generated by the first two categories of refinery wastewater treatment—namely, primary and secondary oil/water/solids separation sludges—that are the subject of the proposed listing.

The Agency did not itemize the factors which distinguish secondary oil/water/solids separation from biological oxidation because the distinction was believed to be clear for most refineries. Subsequent comment seems to suggest that the distinction is not clear to the commenters, especially at facilities where the oil and solids removal systems are not very efficient. While some of the factors in determining how many units perform primary treatment in these instances are clear (*e.g.*, extent to which refinery contains oils and solids in the process areas, efficacy of oil traps and skimmers), there are also a wide variety of subtle factors that can come into play (*e.g.*, prevailing wind direction, pond depth, short circuiting). The net effect of these many variables can be to inhibit the deposition of the primary treatment sludges and separation of the suspended and emulsified oils from the wastewaters.

Failure to remove oils and emulsions prolongs the primary treatment process since the presence of significant quantities of oil in the wastewaters inhibits bacterial growth and delays the onset of biological treatment. As a consequence, multiple units covering many acres may be used for primary treatment. Past and present data demonstrate that regardless of the number of acres and/or units dedicated to primary treatment, all units will continue to generate oily sludges which are similarly composed to the currently listed wastes. Because only the primary treatment units are covered by the original proposal, it is critical that individual refineries have a clear picture of where biological treatment commences in their systems. To address industry uncertainties surrounding which units will be subject to the listing contemplated by the 1980 proposal, the Agency is considering two approaches for describing the scope of the primary treatment sludge listing.

The first approach is based, in part, on a suggestion by API. API believes that secondary treatment is characterized by much greater levels of phenolic compound removal than will occur primary treatment. They further believe that the upper bound of the range of phenolic removal efficiencies for primary treatment units will consistently be beneath the lower bound of the range of phenol removal efficiencies for secondary treatment units. Therefore, the approach recommends that commencement of secondary (or biological) treatment in the oily wastewater system be defined by the first wastewater treatment unit to achieve an intermediate level of phenolic removal efficiency, probably in the 60–70 percent range. Total phenolic compounds would be measured by the 4–AAP method (SW–846 Method 9065).

Provided with the suggested approach, and included in the docket, are API data showing marked reductions in sludge benzene levels in secondary treatment units. The approach should work since phenolics (with their high water solubility) would not be removed by the physical treatment processes typically encountered at petroleum refineries. Significant phenol removals would not be seen until the water was exposed to the much larger bacterial populations of the secondary treatment basin. The suggested approach presumes a one time demonstration on the part of each refinery, unless the refining or treatment process is changed. However, since wastewater phenolic levels could be quite variable in the first steps of treatment, API has suggested that the demonstration be conducted over an extended period of time that reflects at least 25 independent residence times. The API believes that this volume of analytical effort should not be overly burdensome to refineries since nearly all refineries are already performing some on-site analysis of phenolics in wastewater.

The API did not provide details on recordkeeping. The Agency believes that the API approach would require that records reflecting the testing of the current system be maintained on-site by the refinery for as long as the wastewater treatment system is operational. Sampling records must include the following information: The name and address of the facility sample; the names and qualifications of the persons sampling the wastes; the dates of sampling; a description of the units and location from which the samples were taken; methodologies and equipment used to obtain representative samples; and a description of the sample handling techniques, including techniques used for containerization, preservation, and chain of custody of the samples.

Testing records would include the name and address of the on-site or independent laboratory performing the tests of the wastes, the names and qualifications of the persons testing the wastes; the dates of analyses; and a description of the tests performed, with the results of the tests.

The Agency conducted additional sampling activities after receipt of the API proposal to independently verify its consistency with the Agency's originally proposed definition. Those data are included in the docket to facilitate commenter evaluation of the definition. Total phenolic removal efficiencies of up to 56 percent were observed in the primary treatment units. When total phenolic levels were in excess of 200 micrograms/liter, the initial biological treatment units achieved removal efficiencies in excess of 83 percent. Based on this information, the Agency would consider a total phenolic removal efficiency of 70 percent to be most consistent with the definition in the original proposal.

Unaddressed by API's approach are: Treatment of phenolic levels beneath the detection limit; and the treatment of stormwater devices, evaporation ponds, and units wherein chemical treatment is being performed. The Agency believes that maximum consistency with the proposal is ensured by addressing these potential issues in the following manner.

With respect to the treatment of phenolic levels near the analytical detection limit, wastewaters treated to this level are generally biologically treated wastewaters. Therefore, it is recommended that these levels be considered as indicative of a biologically treated wastewater and the unit considered a secondary treatment unit, unless the device is clearly a multipurpose one. An example of a multipurpose device would be a surface impoundment that has some portion of its surface sectioned off by weirs or other oil containment devices and a subsequent section with aeration to perform biological treatment. Treatment of such leterogeneous units under the API approach requires clarification.

The purpose of the original proposal is to expand the listing to primary treatment sludges, regardless of where they are generated. Multipurpose units are found at some refineries that perform both primary and secondary treatment. The Agency believes that consistency with the proposal is ensured by treating such units as if they were

multiple wastewater treatment units. In the case of the two section unit suggested above, testing would be conducted at the oil barrier and considered to be the effluent from the first unit and also the influent to the second unit. If the first section of the unit failed the phenol removal efficiency test, the impoundment would be considered a generator of the listed waste. If the first section passed the phenol removal test, then biological treatment would have commenced.

API's definition of secondary treatment does not directly apply to stormwater containment devices or to zero discharge units (e.g., evaporation ponds). API did address the subject of stormwater units separately. API's suggestion, which is consistent with the Agency's interpretation of the original proposal, is that units which do not receive any wastewater flows during dry weather are stormwater units and not oily wastewater treatment units. Evaporation ponds, on the other hand, may be a part of the primary treatment system. The Agency believes that the final determination with respect to these units should be linked to the amount of pretreatment upstream of these devices. Consequently, zero discharge ponds which are downstream of properly designed and operated air flotation units, or other forms of secondary oil/water/solids separation, are not primary treatment units.

The other categories of treatment not addressed by the API proposal are chemical treatment and carbon adsorption. Treatment with oxidizing agents (e.g., hydrogen peroxide and chlorine) has been demonstrated to achieve over 99 percent removal of phenolic compounds. Likewise, the use of activated carbon can greatly increase phenolic compound removal. Refineries using these techniques generally use them for wastewater treatment subsequent to biological treatment. However, it is possible for a refinery to use these techniques in the primary treatment system to temporarily boost phenolic removal efficiency to the level of the performance standard suggested by the API approach. The Agency believes that implementation of the API approach necessitates the testing of units in the absence of the two abovementioned types of treatment.

Comment is requested on the clarity and utility of the use of the above described phenolic removal efficiency approach to implement the 1980 proposal to list primary treatment sludges.

The second approach to clarifying the scope of the listing relates more directly to the properties of the separated sludges and floats. The main feature which distinguishes a primary from a secondary treatment sludge is the presence of proportionally greater amounts of oil and emulsions in the wastes. Furthermore, the oily sludges uniformly contain the constituents of concern. The Agency's intent in the 1980 proposal was to modify the listings "* * * to reflect the hazardous character of the wastes themselves, rather than the type of equipment or process generating the waste." In other words, to regulate primary treatment sludges, regardless of where they separated from the wastewater in the system. Data are provided in the docket that illustrate the strong correlation between similar hazardous constituent levels in primary treatment sludges and the relative levels of dry weight basis oil in the sludges.

Data collected in support of the 1980 proposal also illustrate that all of the primary treatment sludges at a given refinery will contain distinctly higher levels of oil on a mass basis than will be found in the secondary treatment sludges at the same refinery. The Agency believes that the determination as to whether, or not, appreciable amounts of primary treatment sludge are contained in any unit must be made based on a review of the whole system. To identify all units which contain primary treatment sludges, one must first determine the percent oil content of all sludges at the facility which are clearly primary oil/water/solids separation sludges. As stated previously, primary oil/water/solids separation sludges are all sludges generated upstream of and including the last unit with stationary equipment for oil removal. In order to ensure consistent application of the test, all percent oil determinations would be made on a dry weight basis (i.e., less water content). Sludges generated in any subsequent units of the oily wastewater treatment system which have oil contents in excess of the minimum observed in the primary oil/water/solids separation units would be considered secondary oil/water/solids separation sludges and, hence, also covered by the primary treatment sludge listing.

Data are presented in the docket to illustrate the utility of this approach to characterizing the primary treatment sludge listing proposal. The data also demonstrate the high correlation of the relative oil levels in primary and secondary separation sludges with lead and chromium levels. Since a single method is not presented in SW-846 (*Test Methods for Evaluating Solid Waste, Physical/Chemical Methods*) for the analysis of oil, solids and water content, a variety of SW-846 methods were examined. These data are provided in the docket. The Agency believes that implementation of the dry basis oil approach to characterize primary treatment sludges is best performed when oil, water and solids are determined in the following manner. Oil and grease is determined in the sludge sample by Method 9071 in SW-846. Percent solids are determined as the mass in the Soxhlet residue of Method 3540 using sequential tetrahydrofuran and toluene extractions. Water is determined by performing ASTM Method D-4377 on another aliquot of the original sample. A copy of the exact protocol followed is included in the docket.

If implemented, this alternative would be applied as a tool for ascertaining whether, or not, the sludges and floats generated in a unit were secondary oil/water/solids separation sludge, or a secondary treatment sludge. The test would be applied to all sludges and floats generated in the oily wastewater treatment system, exclusive of those generated in units which were clearly part of the primary oil/water/solids separation or biological treatment systems. In other words, units up to, and inclusive of, the last unit with stationary oil removal equipment are not an object of the comparison, but rather the basis for comparison of dry basis oil levels. All other wastewater treatment units in the oily wastewater treatment system would be tested, including intermittent recipients of oily wastewaters like combined stormwater basins. All sludges would be tested independently since a large number of factors can contribute to produce intervening units which do not contain a primary treatment sludge.

Because the purpose of the test is to distinguish between categories of treatment sludges, it would not be applied to units used exclusively for biological treatment. Units which the Agency considers to perform a clearly biological function are activated sludge systems, trickling filters and biodiscs. Units downstream of units which were clearly biological would not be tested, unless they received other inflows.

As was the case with the phenolic removal efficiency approach discussed previously, records on sludge testing and analysis would be maintained by the facility. Determination of the baseline dry basis oil level in the primary oil/water/solids separation sludges would be conducted on an annual basis, with records maintained for a period of three years. Other units

would require testing on a three year frequency and at interim points, if sludge is removed from the unit. Oil, water and solids testing and recordkeeping for sludges and units downstream of the primary oil/water/solids separation system is only required for those units which are not considered primary treatment units and those sludges which will not be managed as primary treatment sludges. The records to be maintained by the refinery are the same as specified previously in this notice for the phenolic removal efficiency approach.

Comment is requested on the clarity and utility of this approach to implement the 1980 proposal to list primary treatment sludges.

The Agency solicits comments specifically on the above data and clarifications. All comments must be received by May 31, 1988.

Date: April 7, 1988.

J.W. McGraw,

Acting Assistant Administrator.

[FR Doc. 88-8041 Filed 4-12-88; 8:45 am]

BILLING CODE 6560-50-M

FEDERAL COMMUNICATIONS COMMISSION

47 CFR Part 73

[MM Docket No. 87-618, RM-6133]

Radio Broadcasting Services; Fort Rucker, AL

AGENCY: Federal Communications Commission.

ACTION: Order.

SUMMARY: This document extends the time for filing comments and reply comments in a proceeding involving the proposed deletion of FM Channel 226A at Fort Rucker, Alabama. Cheryl Swaim, an intended applicant for the Fort Rucker allocation requested the additional time to conform with the window application closing date therefor to allow incorporation by reference of her application in comments she intends to file in the proceeding.

DATES: Comments must be filed on or before April 8, 1988, and reply comments on or before April 22, 1988.

ADDRESS: Federal Communications Commission, Washington, DC 20554.

FOR FURTHER INFORMATION CONTACT: Nancy Joyner, Mass Media Bureau, (202) 634-6530.

SUPPLEMENTARY INFORMATION:

List of Subjects in 47 CFR Part 73

Radio broadcasting.

Federal Communications Commission.

Steve Kaminer,

Deputy Chief, Policy and Rules Division, Mass Media Bureau.

[FR Doc. 88-8077 Filed 4-12-88; 8:45 am]

BILLING CODE 6712-01-M

---

47 CFR Part 73

[MM Docket No. 88-123, RM-5939]

Radio Broadcasting Services; Grover City, CA

AGENCY: Federal Communications Commission.

ACTION: Proposed rule.

SUMMARY: This document requests comments on a petition by R & L Broadcasters, licensee of Station KOSZ(FM), Grover City, California, proposing the substitution of FM Channel 297B for Channel 297B1 and modification of its Class B1 license accordingly, to provide that community with a wider coverage area FM service.

DATES: Comments must be filed on or before May 26, 1988, and reply comments on or before June 10, 1988.

ADDRESS: Federal Communications Commission, Washington, DC 20554. In addition to filing comments with the FCC, interested parties should serve the petitioner, as follows: R & L Broadcasters, Attn: Rod B. Funston, 1234 Ramona Avenue, Grover City, CA 93433-2217.

FOR FURTHER INFORMATION CONTACT: Nancy Joyner, Mass Media Bureau, (202) 634-6530.

SUPPLEMENTARY INFORMATION: This is a summary of the Commission's Notice of Proposed Rule Making, MM Docket No. 88-123, adopted February 25, 1988, and released April 5, 1988. The full text of this Commission decision is available for inspection and copying during normal business hours in the FCC Dockets Branch (Room 230), 1919 M Street NW., Washington, DC. The complete text of this decision may also be purchased from the Commission's copy contractors, International Transcription Service, (202) 857-3800, 2100 M Street NW., Suite 140, Washington, DC 20037.

Provisions of the Regulatory Flexibility Act of 1980 do not apply to this proceeding.

Members of the public should note that from the time a Notice of Proposed Rule Making is issued until the matter is no longer subject to Commission consideration or court review, all *ex parte* contacts are prohibited in Commission proceedings, such as this one, which involve channel allotments. See 47 CFR 1.1231 for rules governing permissible *ex parte* contact.

For information regarding proper filing procedures for comments, see 47 CFR 1.415 and 1.420.

List of Subjects in 47 CFR Part 73

Radio broadcasting.

Federal Communications Commission.

Steve Kaminer,

Deputy Chief, Policy and Rules Division, Mass Media Bureau.

[FR Doc. 88-8066 Filed 4-12-88; 8:45 am]

BILLING CODE 6712-01-M

---

47 CFR Part 73

[MM Docket No. 85-335; RM-4853]

Radio Broadcasting Services; Mt. Laguna, CA

AGENCY: Federal Communications Commission.

ACTION: Proposed rule; dismissal of proposal.

SUMMARY: This document dismisses a petition filed by Family Stations, Inc., seeking the allotment of a noncommercial educational FM channel at Mt. Laguna, California, based on the Commission's recent amendment of its Rules to provide for a "demand" system for such services located within 199 miles of the United States-Mexico border area. As a result, the Mt. Laguna proposal may be considered in the application context rather than the rule making process. With this action, the proceeding is terminated.

ADDRESS: Federal Communications Commission, Washington, DC 20554.

FOR FURTHER INFORMATION CONTACT: Nancy Joyner, Mass Media Bureau, (202) 634-6530. Questions related to the application filing process should be addressed to the Audio Services Division, FM Branch, Mass Media Bureau, (202) 632-0394.

SUPPLEMENTARY INFORMATION: This is a summary of the Commission's Report and Order, MM Docket No. 85-335, adopted March 4, 1988, and released April 1, 1988. The full text of this Commission decision is available for inspection and copying during normal business hours in the FCC Dockets Branch (Room 230), 1919 M Street NW., Washington, DC.

The complete text of this decision may also be purchased from the Commission's copy contractors International Transcription Service,

(202) 857-3800, 2100 M Street NW., Suite 140, Washington, DC 20037.

List of Subjects in 47 CFR Part 73

Radio broadcasting.

Federal Communications Commission.

Steve Kaminer,

Deputy Chief, Policy and Rules Division, Mass Media Bureau.

[FR Doc. 88-8061 Filed 4-12-88; 8:45 am]

BILLING CODE 6712-01-M

---

47 CFR Part 73

[MM Docket No. 88-125, RM-6140]

Radio Broadcasting Services; Kailua-Kona, HI

AGENCY: Federal Communications Commission.

ACTION: Proposed rule.

SUMMARY: This document requests comments on a petition by Fakas Broadcasting, permittee of Station KLUA(FA), Kailua-Kona, Hawaii, which proposes to substitute Channel 230C1 for Channel 228A at Kailua-Kona, and to modify its Class A permit to specify the new channel.

DATES: Comments must be filed on or before May 26, 1988, and reply comments must be filed on or before June 10, 1988.

ADDRESS: Federal Communications Commission, Washington, DC 20554. In addition to filing comments with the FCC, interested parties should serve the petitioner, or its counsel or consultant, as follows:

Jerome S. Silber, Fly, Shuebruk, Gaguine, Boros and Braun, 45 Rockefeller Plaza, New York, New York 10111, (Counsel for petitioner).

FOR FURTHER INFORMATION CONTACT: Montrose H. Tyree, Mass Media Bureau, (202) 634-6530.

SUPPLEMENTARY INFORMATION: This is a summary of the Commission's Notice of Proposed Rule Making, MM Docket No. 88-125 adopted March 4, 1988, and released April 5, 1988. The full text of this Commission decision is available for inspection and copying during normal business hours in the FCC Dockets Branch (Room 230), 1919 M Street NW., Washington, DC. The complete text of this decision may also be purchased from the Commission's copy contractors, International Transcription Service, (202) 857-3800, 2100 M Street NW., Suite 140, Washington, DC 20037.

Provisions of the Regulatory Flexibility Act of 1980 do not apply to this proceeding.

Members of the public should note that from the time a Notice of Proposed Rule Making is issued until the matter is no longer subject to Commission consideration or court review, all *ex parte* contracts are prohibited in Commission proceedings, such as this one, which involve channel allotments. See 47 CFR 1.1231 for rules governing permissible *ex parte* contact.

For information regarding proper filing procedures for comments, see 47 CFR 1.415 and 1.420.

List of Subjects in 47 CFR Part 73

Radio broadcasting.

Federal Communications Commission.

Steve Kaminer,

Deputy Chief, Policy and Rules Division, Mass Media Bureau.

[FR Doc. 88-8068 Filed 4-12-88; 8:45 am]

BILLING CODE 6712-01-M

---

47 CFR Part 73

[MM Docket No. 87-365; RM-5777]

Radio Broadcasting Services; Pella, IA

AGENCY: Federal Communications Commission.

ACTION: Proposed rule; dismissal of.

SUMMARY: The Commission dismissed the request of GBA, Inc. to substitute Channel 277C for Channel 277C1 at Pella, Iowa, and modify its license for Station KFMD(FM) to specify the higher powered channel. With this action, this proceeding is terminated.

FOR FURTHER INFORMATION CONTACT: Leslie K. Shapiro, Mass Media Bureau, (202) 634-6530.

SUPPLEMENTARY INFORMATION: This is a summary of the Commission's Report and Order, MM Docket No. 87-365, adopted March 4, 1988, and released April 4, 1988. The full text of this Commission decision is available for inspection and copying during normal business hours in the FCC Dockets Branch (Room 230), 1919 M Street NW., Washington, DC. The complete text of this decision may also be purchased from the Commission's copy contractor, International Transcription Service, (202) 857-3800, 2100 M Street NW., Suite 140, Washington, DC 20037.

Federal Communications Commission.

Steve Kaminer,

Deputy Chief, Policy and Rules Division, Mass Media Bureau.

[FR Doc. 88-8072 Filed 4-12-88; 8:45 am]

BILLING CODE 6712-01-M

---

47 CFR Part 73

[MM Docket No. 88-126, RM-6142]

Radio Broadcasting Services; Philpot, KY

AGENCY: Federal Communications Commission.

ACTION: Proposed rule.

SUMMARY: This document requests comments on a petition by Ted H. Johnson, which proposes to allot Channel 264A to Philpot, Kentucky, as its first local FM service.

DATES: Comments must be filed on or before May 26, 1988, and reply comments on or before June 10, 1988.

ADDRESS: Federal Communications Commission, Washington, DC 20554. In addition to filing comments with the FCC, interested parties should serve the petitioner, or its counsel or consultant, as follows: Ted H. Johnson, 210 Belle Lake Drive, Nashville, Tennessee 37221 (Petitioner).

FOR FURTHER INFORMATION CONTACT: Montrose H. Tyree, Mass Media Bureau, (202) 634-6530.

SUPPLEMENTARY INFORMATION: This is a summary of the Commission's Notice of Proposed Rule Making, MM Docket No. 88-126, adopted March 4, 1988, and released April 5, 1988. The full text of this Commission decision is available for inspection and copying during normal business hours in the FCC Dockets Branch (Room 230), 1919 M Street NW., Washington, DC. The complete test of this decision may also be purchased from the Commission's copy contractors, International Transcription Service, (202) 857-3800,

2100 M Street NW., Suite 140, Washington, DC 20037.

Provisions of the Regulatory Flexibility Act of 1980 do not apply to this proceeding.

Members of the public should note that from the time a Notice of Proposed Rule Making is issued until the matter is no longer subject to Commission consideration or court review, all *ex parte* contacts are prohibited in Commission proceedings, such as this one, which involve channel allotments. See 47 CFR 1.1231 for rules governing permissible *ex parte* contact.

For information regarding proper filing procedures for comments, see 47 CFR 1.415 and 1.420.

List of Subjects in 47 CFR Part 73

Radio broadcasting.

Federal Communications Commission.

Steve Kaminer,

Deputy Chief, Policy and Rules Division, Mass Media Bureau.

[FR Doc. 88-8069 Filed 4-12-88; 8:45 am]

BILLING CODE 6712-01-M

---

47 CFR Part 73

[MM Docket No. 88-129, RM-6199]

Radio Broadcasting Services; Bridgeport, NY

AGENCY: Federal Communications Commission.

ACTION: Proposed rule.

SUMMARY: The Commission requests comments on a petition by Programmed Communications, Inc. requesting the allocation of Channel 258A to Bridgeport, New York, as the community's first local FM service. Channel 258A can be allocated to Bridgeport in compliance with the Commission's minimum distance separation requirements with a site restriction of 3.0 kilometers (1.9 miles) east to avoid a short-spacing to Station WOKW, Channel 260B, Cortland, New York. Canadian concurrence in the allotment is required since Bridgeport is located within 320 kilometers of the U.S.-Canadian border.

DATES: Comments must be filed on or before May 26, 1988, and reply comments on or before June 10, 1988.

ADDRESS: Federal Communications Commission, Washington, DC 20554. In addition to filing comments with the FCC, interested parties should serve the petitioner, or its counsel or consultant, as follows: Timothy Kuhl, President, Programmed Communications, Inc., 101 Cottage Grove Drive, Minoa, New York 13116 (Petitioner).

FOR FURTHER INFORMATION CONTACT: Leslie K. Shapiro, Mass Media Bureau, (202) 634-6530.

SUPPLEMENTARY INFORMATION: This is a summary of the Commission's Notice of Proposed Rule Making, MM Docket No. 88-129, adopted March 4, 1988, and released April 5, 1988. The full text of this Commission decision is available for inspection and copying during normal business hours in the FCC Dockets Branch (Room 230), 1919 M Street NW., Washington, DC. The complete text of this decision may also be purchased from the Commission's copy contractor, International Transcription Service, (202) 857-3800, 2100 M Street NW., Suite 140, Washington, DC 20037.

Provisions of the Regulatory Flexibility Act of 1980 do not apply to this proceeding.

Members of the public should note that from the time a Notice of Proposed Rule Making is issued until the matter is no longer subject to Commission consideration of court review, all *ex parte* contacts are prohibited in Commission proceedings, such as this one, which involve channel allotments. See 47 CFR 1.1231 for rules governing permissible *ex parte* contact.

For information regarding proper filing procedures for comments, see 47 CFR 1.415 and 1.420.

List of Subjects in 47 CFR Part 73

Radio broadcasting.

Federal Communications Commission.

Steve Kaminer,

Deputy Chief, Policy and Rules Division, Mass Media Bureau.

[FR Doc. 88-8078 Filed 4-12-88; 8:45 am]

BILLING CODE 6712-01-M

---

47 CFR Part 73

[MM Docket No. 88-127, RM-5824]

Radio Broadcasting Services; Lebanon, TN

AGENCY: Federal Communications Commission.

ACTION: Proposed rule.

SUMMARY: This document requests comments on a petition by William O. Barry proposing the allotment of Channel 255A to Lebanon, Tennessee, as that community's second local FM service. The proposal requires a site restriction 9.6 kilometers (6.0 miles) north of the city (36-17-28; 86-16-14).

DATES: Comments must be filed on or before May 26, 1988, and reply comments on or before June 10, 1988.

ADDRESS: Federal Communications Commission, Washington, DC 20554. In addition to filing comments with the FCC, interested parties should serve the petitioners, or their counsel or consultant, as follows: John L. Tierney, Esquire, Ann Bavender, Esquire, Tierney & Swift, 1200 Eighteenth Street NW., Suite 210, Washington, DC 20036 (Counsels for petitioner).

FOR FURTHER INFORMATION CONTACT: Patricia Rawlings, (202) 634-6530.

SUPPLEMENTARY INFORMATION: This is a summary of the Commission's Notice of Proposed Rule Making, MM Docket No. 88-127, adopted March 4, 1988, and released April 5, 1988. The full text of this Commission decision is available for inspection and copying during normal business hours in the FCC Dockets Branch (Room 230), 1919 M Street NW., Washington, DC. The complete text of this decision may also be purchased from the Commission's copy contractors, International Transcription Service, (202) 857-3800, 2100 M Street NW., Suite 140, Washington, DC 20037.

Provisions of the Regulatory Flexibility Act of 1980 do not apply to this proceeding.

Members of the public should note that from the time a Notice of Proposed Rule Making is issued until the matter is no longer subject to Commission consideration or court review, all *ex parte* contacts are prohibited in Commission proceedings, such as this one, which involve channel allotments. See 47 CFR 1.1231 for rules governing permissible *ex parte* contact.

For information regarding proper filing procedures for comments, see 47 CFR 1.415 and 1.420.

List of Subjects in 47 CFR Part 73

Radio broadcasting.

Federal Communications Commission.

Steve Kaminer,

Deputy Chief, Policy and Rules Division, Mass Media Bureau.

[FR Doc. 88-8065 Filed 4-12-88; 8:45 am]

BILLING CODE 6712-01-M

DEPARTMENT OF COMMERCE

National Oceanic and Atmospheric Administration

50 CFR Part 228

Incidental Take of Marine Mammals

AGENCY: National Marine Fisheries Service (NMFS), NOAA, Commerce.

ACTION: Notice of receipt of request for rulemaking and request for information.

SUMMARY: The National Marine Fisheries Service (NMFS) has received a request from 6 exploration companies to allow the harassment of bowhead whales and gray whales incidental to oil and gas exploratory activities in the Beaufort and Chukchi Seas off the Alaska Coast. The Marine Protection Act of 1972 (NMPA) directs the Secretary (Commerce or Interior) to allow the incidental talk of small number of marine mammals if the Secretary makes certain findings and issues regulations that include permissible methods and requirements for monitoring and reporting. NMFS requesting information, suggestions, and comments on the structure and contents of the regulations and whether it is appropriate to issue them.

DATE: Comments and information should be received by June 13, 1988.

ADDRESS: Dr. Nancy Foster, Director, Office of Protected Resources and Habitat Programs, National Marine Fisheries Service, National Oceanic and Atmospheric Administration, Washington, DC 20235.

FOR FURTHER INFORMATION CONTACT: Margaret Lorenz, Office of Protected Resources, NMFS, Washington, DC 20235 (tel. 202/673–5349) or Ted Meyers, Habitat Conservation Division, Alaska Region, NMFS, P.O. Box 1668, Juneau, AK 99802 (tel. 907/586–7235).

SUPPLEMENTARY INFORMATION:

Background

Section 101(a)(5) of the MMPA (16 U.S.C. 1371 *et seq.*) directs the Secretary to allow, on request, the incidental, but not intentional, taking of small numbers of marine mammals by U.S. citizens who engage in a specified activity (other than commercial fishing) within a specified geographical region. This permission may be granted for periods of 5 years or less if the Secretary finds that the total taking will have a "negligible impact" on the species or stock and will not have an "unmitigable adverse impact" on the species or stock for subsistence uses. In 1986, section 101(a)(5) of the MMPA was amended to allow a take of depleted marine mammals. Prior to this amendment, only non-depleted animals could be taken. Section 7(b)(4) of the Endangered Species Act also was amended to conform to the changes in the MMPA.

On March 15, 1988, NMFS and the U.S. Fish and Wildlife Service published a proposed rule to implement these amendments. The proposed regulations are procedural and, by themselves, do not authorize the taking of depleted species. Each activity requires separate, specific regulations * * * a process that takes about one year from the time the authorization is requested.

Description of Request

NMFS has received a request from Doyle and Savit, Attorneys representing Amoco Production Co. Inc., Chevron U.S.A., Inc., Exxon Co. U.S.A., Shell Western E&P, Inc., Unocal Corp., and Western Geophysical Co. of America. The taking is described as incidental and unintentional harassment of bowhead and gray whales during pre-lease and post-lease exploration for oil and gas resources in Alaska State Waters and on the Outer Continental Shelf. No mortalities are anticipated. Activities likely to be undertaken include geological and geophysical surveys, drilling of stratigraphic test wells, exploratory drilling for oil and gas, and associated support activities. Potential sources of incidential taking are noise, unpermitted discharge (oil spills) and physical obstruction. This request does not concern activities involved in the development or production of offshore oil and gas fields. Also, the spring lead system through which bowhead whales migrate from mid-April to early June in the Chukchi Sea and the Beaufort Sea to Point Barrow is excluded from the scope of the petition. The requested period of the regulations is for five years.

When a request is made for an incidental take of depleted marine mammals, the requirements of both the MMPA and the ESA must be met. The activities included in the petition (with the exception of pre-lease geophysical exploration) were recently addressed by NMFS in biological opinions concerning Outer Continental Shelf lease sales 97 and 109. The biological opinions concluded that exploration activities resulting from those lease sales would not jeopardize the continued existence of bowhead an gray whales as measured by rates of recruitment and survival.

The information required by 50 CFR 228.4 was provided by Doyle and Savit in its request. Copies of the request and biological opinions may be obtained from the Office of Protected Resources, NMFS, Washington, DC 20235 (tel. 202/673–5349).

Information Solicited

NMFS requests interested persons to submit comments, information, and suggestions concerning the request and the structure and content of regulations to allow the taking. NMFS will consider this information in developing an environmental assessment, and, if appropriate, proposed regulations allowing the taking by harassment of bowhead whales and gray whales incidental to oil and gas exploration activities in the Beaufort and Chukchi Seas. If NMFS proposes regulations to allow this take, interested parties will be given ample time and opportunity to comment.

Date: April 4, 1988.

James E. Douglas, Jr.,

Acting Assistant Administrator for Fisheries.

[FR Doc. 88–8069 Filed 4–12–88; 8:45 am]

BILLING CODE 3510-22-M

Notices

Federal Register
Vol. 53, No. 71
Wednesday, April 13, 1988

This section of the FEDERAL REGISTER contains documents other than rules or proposed rules that are applicable to the public. Notices of hearings and investigations, committee meetings, agency decisions and rulings, delegations of authority, filing of petitions and applications and agency statements of organization and functions are examples of documents appearing in this section.

ACTION

Senior Companion Program; Availability of New Project Funds

AGENCY: ACTION.

The Office of Older American Volunteer Programs, ACTION, announces the availability of funds in fiscal year 1988 to initiate grants for the homebound elderly under the Senior Companion Program authorized by the Domestic Volunteer Service Act of 1973, as amended (Pub. L. 93–113, Title II, Part C, 42 U.S.C. 5013).

New Project funds appropriated by Congress for the Senior Companion Program, approximately $4,500,000, shall be available for the start-up of in-home volunteer placements recently authorized under Pub. L. 100–202. Grants will be awarded on a national competitive basis. Applications for new projects should be developed not to exceed a maximum of 60 volunteer service years in size.

Publication of this announcement does not obligate ACTION to award any specific number of grants. Application kits and technical assistance are available from ACTION State Offices listed below. New projects will be awarded according to the guidance described below. One signed original and two copies of all completed applications must be received in the appropriate ACTION State Office no later than 5:00 p.m. on Monday, June 10, 1988. Applications postmarked 5 days before the deadline date will also be accepted for consideration.

New Projects Criteria

The Senior Companion Program (SCP) projects will focus on Senior Companion service to assist homebound elderly to remain in their own homes. New projects will be located in areas both urban and rural with concentrations of homebound elderly citizens.

I. Eligibility

A. Potential sponsor must have proven management capability, program experience with the problems of older persons and be able to comply with other elements in SCP Regulations, guidance, and Public Law 93–113, Title II, Part C.

B. Co-location with FGP (Foster Grandparent Program) projects or other projects for low income older persons may be acceptable, but should be discussed with ACTION during the early stages of proposal development to assure there are enough low income older people in the project service area.

C. State-wide grants may be acceptable but should be discussed with ACTION during the early stages of proposal development to insure provision is made for the supervision of SCP placements in scattered sites.

II. Selection

A. General Criteria

1. Projects should be developed for a size not to exceed 60 VSYs.

2. Each project should have a minimum of two volunteer stations. Projects have the option to select stations which conform to criteria in one or more of the seven emphasis areas categories.

B. Special Criteria.

1. Selection will be based on the applicant's:

a. Adherence to SCP Regulations and guidance;

b. Identification of needs to be addressed;

c. Defined goals, detail of activities designed to reach the goals, and realistic time schedule for attainment;

d. Inclusion of Letters of Intent as outlined in Section VII B 3. Special Features—Sponsor Development of Volunteer Stations.

III. Grant Review Process

A. All applications will follow established ACTION procedure for new projects. These include:

1. All project applications must be received in the appropriate ACTION State Office no later than 5:00 p.m. local time on Friday, June 10, 1988. Applications postmarked 5 days before the deadline date will also be accepted for consideration.

2. ACTION Headquarters Review Panel will make the final decision on funding of applications. Comments from State an Regional office will be considered in ACTION Headquarters analyses of the quality of the applications.

3. Regional offices will notify project applicants of award decisions. Once grants are awarded, potential volunteer stations identified in the applications cannot be changed without ACTION concurrence.

IV. Reporting Requirements

A. Sponsor Quarterly Progress Reports on the project must be concurrently submitted to ACTION State Offices and ACTION-Headquarters. Examples of Companion-client interaction should be attached to the progress report.

B. Quarterly Financial Status Reports are to be submitted to ACTION State Offices.

V. Basic Program Elements

A. Development of volunteer service opportunities that foster the independence of Senior Companions;

B. Assignment of Senior Companions to volunteer stations which fully utilize their skills, training and life experiences;

C. Integration of all Senior Companions into individualized written care plans that address the social and health needs of clients. This is based on the philosophy that Companions can be most effective as advocates of their clients when they are involved in the implementation of a preventive and/or rehabilitative plan of care;

D. Assignments that foster greater participation of hard to reach minority, ethnic, and isolated older people, as Senior Companion volunteers.

E. Development of Senior Companions projects are to serve clients who are:

1. Scheduled for discharge from acute care hospitals (Section VIII.A.);

2. Homebound and served by caregivers in need of respite to prevent a breakdown in household capability to prevent institutionalization (Section VIII.B.);

3. Homebound living alone at risk of being institutionalized (Section VIII.C);

4. Psychologically disabled (Section VIII.D);

5. Home substance abusers (Section VIII E);

6. Terminally ill and living at home (Section VIII.F);

7. Visually handicapped and living at home (Section VIII G).

VI. Operational Program Element

A. Active involvement of a non-stipended Community Volunteer Trainer in a range of case management activities (see definition Section VII A 6a).

VII. Highlighted Sponsor Responsibilities

A. General Features:

1. Projects will be governed by ACTION regulations and Pub. L. 93-113.

2. Projects must obtain Letters of Intent from potenital stations.

3. Homebound elderly clients served by these stations will have one or more of the following impairments:

a. Not fully ambulatory;

b. Unable to take care of personal needs unassisted;

c. Disabled from disease(s) likely to cause increased impairment.

B. Special Features

a. *Recruitment of Senior Companions.* a. Special efforts will be directed to recruit males and hard-to-reach minority, ethnic, isolated and disabled older people.

2. *Sponsor Placement of Senior Companions—Service Activities.* a. Give support to older clients through person-to-person assignments;

b. Participate in and monitor initial and continuing client needs assessments and appropriate in-home services contained in written care plans.

3. *Sponsor Development of Volunteer Stations.* a. Volunteer Stations may be community direct health care providers or social service organizations with direct links to health care providers;

b. Nursing homes, adult day care and board and care settings may not be volunteer stations.

c. *Volunteer Station Responsibilities.* (1) Client needs assessments, care plan development, supervision of SCs, special transportation arrangements.

(2) Applications must include Letters of Intent containing specific statements that:

a. detail provisions of daily supervision;

b. identify potential volunteers support resources;

c. assure sufficient clients are available to utilize volunteers 20 hours per week.

4. *Description of Clients Served.* a. Clients will be older adults with physical, emotional and/or mental health problems who need the help of a Senior Companion to maintain independent or semi-independent living arrangements in their homes.

b. Young and middle aged adults with developmental disabilities are not included in "at risk" populations for these projects nor are older adults who reside in group living settings.

5. *Service Area.* In cases of large service areas, especially in rural areas, program activities must be focused where volunteer support is available.

6. *Orientation and In-Service Training.* a. Projects are encouraged to use Community Volunteer Trainers. These are active professionals or retired persons with health and social service skills able to train Senior Companions in monitoring initial and continuing needs and appropriate in-home services for their clients. Trainers do not supervise Senior Companions. They serve without compensation.

VIII. Specific Criteria for Volunteer Stations

Each project is required to have two or more volunteer stations. Projects have the option to select stations which conform to criteria in one or more of the seven emphasis areas listed below:

A. Acute Care Hospitals/Discharge Planning

1. Purpose. To assign Senior Companions to older acute care hospital clients discharged to their homes and scheduled to receive home care.

2. *Volunteer Stations.*

a. Type

(1) Acute Care hospitals;

(2) Social service discharge planning, outpatient or home health divisions of hospitals;

(3) Certified home health agencies with links to acute care hospitals;

(4) Aging/social service organizations with home case management capabilities with links to acute care hospitals;

(5) City, county and district public health departments with links to acute care hospitals;

3. *Program Elements.* a. Senior Companion services to clients include participation in patient discharge and home health continuity of care programs. These are developed under the supervision of skilled health and social service professionals who may or may not be employed by hospitals.

b. Assignment activities include, but are not limited to:

(1) Household management;

(2) Personal care service;

(3) Coordination of needed services with community health and social service agencies;

(4) Advocacy for the personal needs of clients;

(5) Peer support.

c. Arrangements should be made to provide special training, support and alternating placements for Senior Companions service acute care patients.

B. Respite Care

1. *Purpose.* To assign Senior Companions to older homebound clients who need their support and that of a prime caregiver to delay or prevent premature institutionalization. Companion services will be directed to one primary client per household and to caregivers, secondarily.

2. *Voluntary Stations*—a. *Type (partial listing).* (1) City/county family social service agencies.

(2) Private nonprofit family social service agencies.

(3) Senior Centers with case management staff specialists.

(4) Visiting Nurse Associations.

(5) Adult day health care service organizations with home care service supervision;

(6) Home health agencies.

b. *Station Elements.* (1) Provide special training to caregivers to enhance their ability to be effective service providers;

(2) Monitor the status of clients and caregivers and arrange for institutionalization of clients, if appropriate.

c. A minimum number of three Senior Companions must be assigned to each volunteer station.

3. *Program Elements.* a. In order to serve the neediest persons, clients served should have at least one of the following characteristics:

(1) Not fully ambulatory;

(2) Unable to take care of personal needs:

(3) Disease(s) likely to cause increased impairment.

b. The caregiver must live in the home and be available to provide 24 hour care.

c. Priority will be given to a client with an elderly spouse or an elderly offspring who is the primary caregiver.

d. A client in need of respite services should have caregivers who have reached the stage where the burden of caregiving poses threats to their ability to maintain stable social lives and a positive mental attitude.

e. Care plans will:

(1) Define separate activities for Senior Companion and caregiver;

(2) Include Senior Companion activities critical to the client's well being;

(3) Retain the flexibility to accommodate different caregiving needs during respite periods.

f. Prior to assignment, each Companion will spend a minimum of four (4) hours in the home with the client and caregiver observing routine care.

g. Neither clients nor caregivers may employ enrolled Companions or be charged for Companion services.

h. Companions may *not*:

(1) Do housework that ordinarily would be performed by household members, homemakers or paid domestic help such as scrubbing walls and floors, or washing windows;

(2) Provide personal services to family members apart from client-related activities; or

(3) Simply "sit with" a client while a primary caregiver is out of the house.

C. Homebound Clients Living Alone

1. *Purpose.* To assign Senior Companions to older homebound clients who:

a. Live alone and are at risk of institutionalization;

b. Have at least two of the following characteristics:

(1) Disease(s) likely to cause increased impairment;

(2) Not fully ambulatory;

(3) Unable to take care of personal needs unassisted;

(4) Acute home management problems;

(5) History of frequent hospitalizations.

2. *Volunteer Stations.* a. Type (Partial listing)

(1) Public health departments.

(2) Aging/Social service organizations with home case management capabilities.

(3) Home health agencies.

b. A minimum number of five Senior Companions must be assigned to each station.

3. *Program Elements.* a. Senior Companion services are directed to older homebound persons, living alone, at risk of institutionalization.

b. Senior Companion activities emphasis is on:

(1) Personal care needs;

(2) Home management;

(3) Relief of social isolation;

(4) Coordination of needed services with community health and social service agencies;

(5) Assistance with exercise and therapy;

(6) Establishment and encouragement of links with relatives and close friends.

c. This emphasis area is to be used only for clients with multiple health and social problems, and at high risk of institutionalization, who do not fit into other special population categories:

D. Mental Health

1. *Purpose.* To assign Senior Companions to psychologically disabled older persons.

2. *Volunteer Stations.* a. Type (Partial Listing)

(1) City/county/community mental health centers.

(2) Outpatient psychiatric hospital clinics.

(3) Never institutionalized having chronic mental health problems. This includes persons able to function outside the home as well as the homebound.

(4) Homeless.

b. Senior Companion services to clients include:

(1) Development of supportive living and socialization arrangements;

(2) Assisting institutionalized older patients prepare for re-entry and return to the community;

(3) Providing care to clients with depression disorders that make them vulnerable to hospitalization;

(4) Monitoring medication;

(5) Reality orientation;

(6) Active listening;

(7) Coordination of client needs with community health and social service agencies.

c. Senior Companions provide backup support to families and other caregivers.

E. Substance Abuse

1. Purpose. To assist older persons with past or present drug or alcohol-related problems.

2. *Volunteer Stations.* a. Type (Partial Listing)

(1) City/county public health departments.

(2) Alcoholics Anonymous.

(3) Detoxification units of veterans or acute care hospitals.

(4) Hospital outpatients clinics.

(5) Area councils on alcoholism and drug abuse.

b. *Station Elements.* (1) Specialized training should be provided to Senior Companions before assigning them to clients.

c. A minimum number of three Senior Companions must be assigned to each station.

3. *Program Elements.* a. Senior Companion activities may include:(1) Providing information to clients on the use, mis-use and abuse of prescription drugs and alcohol;

(2) Accompanying clients to Alcoholics Anonymous and similar peer support meetings:

(3) Encouraging spouse or other caregivers to attend Al-Anon and similar peer support meetings.

F. Care of the Terminally Ill

1. *Purpose.* To serve terminally ill elderly clients in their homes.

2. *Volunteer Stations.* a Type (Partial Listing)

(1) Free standing hospice with home care unit.

(2) Medical institution with a home-based program.

(3) Licensed/certified home health agency.

(4) Public health department.

b. A minimum of two Senior Companions must be assigned to each station.

(1) Specialized training on subjects related to the care of the terminally ill must be provided to Senior Companions. Training must be provided within two weeks of assignments of Senior Companions to the volunteer station. Any exception must be approved in advance by ACTION.

(2) To be a station, it should have a client caseload large enough to utilize Senior Companions for the 20-hour weekly service schedules.

3. *Program Elements.* a. Only persons with a special interest in serving terminally ill clients should be selected.

b. Volunteers who have the emotional stamina and the desire to serve only terminally ill clients may do so. However, volunteers may also serve clients who are not terminally ill through:

(1) the assigned volunteer station; or

(2) a second volunteer station; This may not be an institution.

c. Senior Companions must be monitored for emotional stability during training, through the assignment and interviewed after each termination of assignment to a terminally ill client.

d. Senior Companion may not be the prime caregiver.

e. Senior Companion may serve family members during bereavement period.

f. Senior Companion has the option of attending the client's funeral. Attendance, in this case, is allowable in the 20-hour weekly schedule.

g. Hospice Care.

(1) Companions must be assigned to a licensed/certified hospice care organization;

(2) Senior Companions must be integrated into the hospice care team, included in team meetings and receive team support.

h. Non-Hospice Care.

(1) Clients must be determined by a licensed physician to be in the final stages of terminal illness.

(2) Senior Companions must be closely supervised and given emotional support by the volunteer station Supervisor.

G. Alzheimer's

1. *Purpose.* To serve the elderly suffering from Alzheimer's disease.

2. *Volunteer Stations.* a. Type (Partial Listing).

(1) Medical institution with a home based program.

(2) Licensed/certified home health agency.

(3) Public health department.

b. A minimum of two Senior Companions must be assigned to each station.

c. Arrangements should be made to provide special training, support, and alternating placements for Senior Companions serving Alzheimer patients.

H. Visually Impaired

1. *Purpose.* To assign Senior Companions to blind/visually impaired older persons.

2. *Volunteer Stations.* a. Type (Partial Listing).

(1) Independent Living Centers for the visually disabled.

(2) Community-based rehabilitation/treatment agencies.

(3) City, county and district public health agencies.

(4) Certified home health agencies.

3. *Program Elements.* a. Clients served must experience functional/visual loss due to at least one of the following:

(1) Muscular Degeneration;

(2) Glaucoma;

(3) Cataracts;

(4) Diabetic Retinopathy;

(5) Accidents or injuries;

(6) Damage to optic nerves from strokes, tumors, etc.;

(7) Dry Eye Syndrome.

b. *Senior Companion Services* to clients include:

(1) Re-enforcement of mobility, orientation and compensatory rehabilitation techniques;

(2) Reading and transportation assistance;

(3) Home management;

(4) Coordination of needed services with community health and social service agencies;

(5) Peer counseling/companionship.

Following is an address list of ACTION Regional Offices along with the addresses of ACTION State Offices under their jurisdiction:

Region I

ACTION Regional Office, 10 Causeway Street, Room 473, Boston, MA 02222-1039, 671/565-7000.

ACTION State Office, Abraham Ribicoff Fed. Bldg., 450 Main St., Rm 524, Hartford, CT 06103-3002, 203/240-3237.

ACTION State Office, Federal Bldg., Rm 305, 76 Pearl Street, Portland, ME 04101-4188, 207/780-3314.

ACTION State Office, 10 Causeway Street, Room 473, Boston, MA 02222-1038, 617/565-7015.

(New Hampshire/Vermont). ACTION State Office, Federal Post Office & Courthouse, 55 Pleasant Street, Rm 316, Concord, NH 03301-3939, 603/225-1450.

ACTION State Office, John E. Fogarty Bldg., Rm. 200, 24 Weybosset Street, Providence, RI 02903-2802, 401/528-5424.

Region II

ACTION Regional Office, 6 World Trade Center, Room 758, New York, NY 10048-0206, 212/466-3481.

ACTION State Office, 402 East State St., Room 428, Trenton, NJ 08608-1507, 609/989-2243.

(Metropolitan New York). ACTION State Office, 6 World Trade Center, Room 758, New York, NY 10048-0206, 212/466-4471.

(Upstate New York). ACTION State Office, U.S. Courthouse & Federal Bldg., 445 Broadway, Room 103, Albany, NY 12207-2923, 518/472-3004.

(Puerto Rico/Virgin Islands). ACTION State Office, Frederico DeGetau Federal Ofc. Bldg., Carlos Chardon Avenue, Suite 662, Hato Rey, PR 00918-2241, 809/753/4189-

Region III

ACTION Regional Office, U.S. Customs House, 2nd & Chestnut St., Rm 108, Philadelphia, PA 19106-2912, 215/597-9972.

ACTION State Office, Federal Building, Room 372-D, 600 Federal Place, Louisville, KY 40202-2230, 502/582-6384.

(Delaware/Maryland). ACTION State Office, Federal Building, 31 Hopkins Plaza, Room 1125, Baltimore, MD 21201-2814, 301/962-4443.

ACTION State Office, Federal Building, Room 500, 85 Marconi Blvd., Columbus, OH 43215-2868, 614/469-7441.

ACTION State Office, US Customs House, Room 108, 2nd & Chestnut Streets, Philadelphia, PA 19106-2990, 215/597-3543.

(Virginia/Dist. of Columbia). ACTION State Office, 400 North 8th Street, P.O. Box 10066, Richmond, VA 23240-1832, 804/771-2197.

ACTION State Office, 603 Morris Street, 2nd Floor, Charleston, WV 25301-1409, 304/347-5246.

Region IV

ACTION Regional Office, 101 Marietta St., NW., Suite 1003, Atlanta, GA 30323-2301, 404/331-2859.

ACTION State Office, 2121 8th Avenue North, Rm 722, Birmingham, AL 35203-2307, 205/254-1931.

ACTION State Office, 930 Woodcock Road, Suite 221, Orlando, FL 32803-3750, 305/648-6117.

ACTION State Office, 75 Piedmont Ave., NE, Suite 412, Atlanta, GA 30303-2587, 404/331-4646.

ACTION State Office, Federal Building, Rm 1005-A, 100 West Capital Street, Jackson, MS 39269-1002, 601/965-5664.

ACTION State Office, Federal Bldg., P.O. Century Station, 300 Fayetteville Street Mall, Rm 131, Raleigh, NC 27601-1739, 919/856-4731.

ACTION State Office, Federal Building, Room 872, 1835 Assembly Street, Columbia, SC 29201-2430, 803/765-5771.

ACTION State Office, Federal Bldg./U.S. Courthouse, 801 Broadway, Room 246, Nashville, TN 37203-3889, 615/736-5951.

Region V

ACTION Regional Office, 10 West Jackson Blvd., 6th Floor, Chicago, IL 60604-3964, 312/353-5107.

ACTION State Office, 10 West Jackson Blvd., 6th Floor, Chicago, IL 60604-3964, 312/353-3622.

ACTION State Office, 46 East Ohio Street, Room 457, Indianapolis, IN 46204-1922, 317/269-5724.

ACTION State Office, Federal Building, Rm 339, 210 Walnut, Des Moines, IA 50309-2195, 515/284-4817.

ACTION State Office, Federal Bldg., Room 658, 231 West Lafayette Blvd., Detroit, MI 48226-2799, 313/226-7848.

ACTION State Office, Old Federal Bldg., Room 126, 212 Third Avenue South, Minneapolis, MN 55401-2586, 612/349-3630.

ACTION State Office, 517 East Wisconsin Ave., Rm 601, Milwaukee, WI 53202-4507, 414/291-1118.

Region VI

ACTION Regional Office, 1100 Commerce, Rm 6B11, Dallas, TX 75242-0696 214/767-9494.

ACTION State Office, Federal Building, Room 2506, 700 West Capitol Street, Little Rock, AR 72201-3291, 501/378-5234.

ACTION State Office, Federal Building, Room 248, 444 S.E. Quincy, Topeka, KS 66603-3501, 913/295-2540.

ACTION State Office, 628 Main Street, Suite 102, Baton Rouge, LA 70801-1910, 505/389-0471.

	ACTION State Office, Federal Building, 911 Walnut, Room 1701, Kansas City, MO 64106-2009, 816/426-5256.
	ACTION State Office, Federal Building, Cathedral Place, Room 129, Santa Fe, NM 87501-2026, 505/988-6577.
	ACTION State Office, 200 NW 5th, Suite 912, Oklahoma City, OK 73102-6093, 405/231-5201.
	ACTION State Office, 611 East Sixth Street, Suite 107, Austin, TX 78701-3747, 512/482-5671.
Region VIII (No Region VII)	
ACTION Regional Office, Executive Tower Building, 1405 Curtis Street, Denver, CO 80202-2349, 303/844-2671.	ACTION State Office, Columbine Bldg., Room 301, 1845 Sherman Street, Denver, CO 80203-1167, 303/866-1070.
	ACTION State Office, Federal Bldg., Room 8036, 2120 Capitol Avenue, Cheyenne, WY 82001-3649, 307/772-2385.
	ACTION State Office, Federal Bldg., Drawer 10051, 301 South Park, Rm 192, Helena, MT 59626-0101, 406/449-5404.
	ACTION State Office, Federal Bldg., Room 293, 100 Centennial Mall North, Lincoln, NE 68508-3896, 402/471-5493.
(North & South Dakota).	ACTION State Office, Federal Building, Room 213, 225 S. Pierre Street, Pierre, SD 57501-2452, 605/224-5996.
	ACTION State Office, U.S. Post Office & Courthouse, 350 South Main St., Room 484, Salt Lake City, UT 84101-2198, 801/524-5411.
Region IX	
ACTION Regional Office, 211 Main Street, Rm 530, San Francisco, CA 94105-1914, 415/974-0073.	ACTION State Office, 522 North Central, Room 205-A, Phoenix, AZ 85004-2190, 602/261-4825.
	ACTION State Office, 211 Main Street, Room 534, San Francisco, CA 94105-1974, 415/974-0000.
	ACTION State Office, Federal Bldg., Room 14218, 11000 Wilshire Blvd., Los Angeles, CA 90024-3671, 213/209-7421.
(Hawaii/Guam/American Samoa).	ACTION State Office, Federal Building, P.O. Box 50024, Honolulu, HI 96850, 808/541-2833.
	ACTION State Office, 4600 Kietzke Lane, Suite E-141, Reno, NV 89502-1206, 702/784-5314.
Region X	
ACTION Regional Office, Federal Office Building, 909 First Avenue, Ste. 3039, Seattle, WA 98174-1103, 206/442-1550.	ACTION State Office, The Alaska Center, Suite 340, 1020 Main Street, Boise, ID 83702-5745, 208/334-1707.
(Alaska)	ACTION State Office, Suite 3039, Federal Office Bldg., 909 First Avenue, Seattle, WA 98174-1103, 206/442-4975.
	ACTION State Office, Federal Bldg., Room 647, 511 N.W. Broadway, Portland, OR 97209-3416, 503/221-2261.

(42 U.S.C. 5013; 5042)

Dated in Washington, DC on April 11, 1988.

Donna M. Alvarado,

Director, ACTION.

[FR Doc. 88-8176 Filed 4-12-88; 8:45 am]

BILLING CODE 6050-28-M

DEPARTMENT OF AGRICULTURE

Office of the Secretary

Privacy Act of 1974; System of Records

AGENCY: Department of Agriculture.

ACTION: Notice of revision of Privacy Act System of Records.

SUMMARY: An important provision of the Debt Collection Act of 1982 (Pub. L. No. 97-365) authorized a Federal employee's salary to be offset to satisfy debts owed the Government. To implement a salary offset program which allows the Agricultural Stabilization and Conservation Service (ASCS), United States Department of Agriculture (USDA), to offset salaries to collect delinquent debts owed to Agricultural Stabilization and Conservation Service/Commodity Credit Corporation (ASCS/CCC) by Federal employees, ASCS, USDA, must participate in a computer match of its claims data base system of records against Federal agency payroll files. This match, which will be conducted in accordance with the Office of Management and Budget (OMB) Revised Supplemental Guidelines for Conducting Matching Programs (47 FR 21656, May 19, 1982), will identify delinquent debtors who are current or former Federal employees and who are indebted to ASCS/CCC. Matches will be preformed by the United States Postal Service (USPS), and during the matching process certain information concerning ASCS/CCC delinquent debtors will be disclosed to USPS. Therefore, USDA hereby provides notice of intent to disclose to the United States Postal Service certain information on delinquent debts in the USDA/ASCS-28 Privacy Act system of records, entitled "Claims Data Base (Automated) USDA/ASCS".

EFFECTIVE DATE: This notice will be adopted without further publication in the **Federal Register** on May 13, 1988, unless modified by a subsequent notice to incorporate comments received from the public. Any interested party may submit written comments about the revision to the system of records to the contact person listed below on or before May 13, 1988.

FOR FURTHER INFORMATION CONTACT: Joanne Szafran, Department of Agriculture, Agricultural Stabilization and Conservation Service, Fiscal Division, P.O. Box 2415, Washington, DC 20013, telephone (202) 447-4986.

SUPPLEMENTARY INFORMATION: The ASCS, USDA, in coordination with other Federal agencies, plans to participate in a computer matching program of its claims data base system of records against Federal agency payroll files to identify delinquent debtors who are current or former Federal employees. This matching program is a procedure involving the use of a computer to compare a substantial number of records in a Federal system of records with records in one or more other systems of records.

The claims data base system contains data on delinquent debts of agricultural producers. The purpose of this system is to provide the ASCS Fiscal Division with the necessary information to ensure collection of the overdue debts of agricultural producers. Maintenance and use of this system is intended to increase the efficiency of the Fiscal Division in collecting these overdue debts.

By enacting the Debt Collection Act, Congress acted to "increase the efficiency of Government-wide efforts to collect debts owed the United States and to provide additional procedures for the collection of debts." An important provision of that Act authorizes a Federal employee's salary to be offset to satisfy debts owed the Government.

The ASCS claims data base system of records presently contains a routine use statement published at 53 FR 2517, January 28, 1988, that meets OMB guidelines for computer match operations by the Defense Manpower Data Center (DMDC), Department of Defense (DOD). A new routine use statement must be added to disclose

information for the matches with the USPS and to use information generated by the matches.

A "routine use" means, with respect to the disclosure of a record, the use of such record for a purpose which is compatible with the purpose for which the record was collected. The purpose of this proposed routine use is to permit the release of limited information about delinquent debtors, such as name, social security number, delinquent amount, and claim number, for use in the proposed computer matching program. The ASCS, USDA, will be the source agency and the United States Postal Service will be the matching agency under this computer matching program.

In accordance with requirements of the Debt Collection Act and USDA implementing regulations, the creditor agency, ASCS, USDA, will notify the debtor of his/her due process rights with respect to the debt and give the individual the opportunity to resolve the claim through repayment of the debt on an installment basis before salary offset is initiated.

The computer matches will be conducted in accordance with the OMB Revised Supplemental Guidelines for Conducting Matching Programs (47 FR 21656, May 19, 1982). The USDA has signed an agreement with the matching agency requiring that the information disclosed by USDA under this computer matching program be used only for making computer matches. The parties have also agreed to safeguard the information provided from unauthorized disclose.

This proposed routine use is compatible with the USDA purpose of providing the ASCS Fiscal Division with information necessary to ensure efficient collection of overdue debts of agricultural producers. It also is compatible with the authority provided at section 5 of the Debt Collection Act.

The following routine use is being added to the system of records, USDA/ASCS-28 entitled "Claims Data Base (Automated) USDA/ASCS" last published at 51 FR 46697, December 24, 1986, as amended at 53 FR 2517.

USDA/ASCS-28

SYSTEM NAME:

Claims Data Base (Automated), USDA/ASCS.

* * * * *

ROUTINE USES OF RECORDS MAINTAINED IN THE SYSTEM INCLUDING CATEGORIES OF USERS AND THE PURPOSES OF SUCH USE:

* * * * *

(9) Referral of information regarding indebtedness to the United States Postal Service for the purpose of conducting computer matching programs to identify and locate individuals receiving Federal salary or benefit payments and who are delinquent in their repayment of debts owed to the U.S. Government under certain programs administered by ASCS/CCC in order to collect debts under the provisions of the Debt Collection Act of 1982 (Public. L. No. 97-365) by voluntary repayment, administrative or salary offset procedures, or by collection agencies.

* * * * *

Signed at Washington, DC, on April 5, 1988.

Orville G. Bentley,

Acting Secretary of Agriculture.

[FR Doc. 88-7836 Filed 4-8-88; 8:45 am]

BILLING CODE 3410-05-M

Office of the Under Secretary for Small Community and Rural Development

Rural Development Town Meeting

Name: Rural Development Town Meeting
Date: Monday, April 25, 1988
Time: 12:00 noon to 2:00 p.m.
Location: City Hall Broken Bow, Nebraska 68822
Type of Meeting: Open public participation as time and space permit
Comments: Written comments may be filed before or after meeting with listed contact.
Purpose: To gather information relative to rural economic development, revitalization and diversification.
Contact: Rob Richards, Confidential Assistant, Office of the Under Secretary for Small Community and Rural Development, U.S. Department of Agriculture, Room 219-A Administration Building, Washington, DC 20250, (202) 447-2261.

Done at Washington, DC, this 8 day of April, 1988.

Roland R. Vautour,

Under Secretary for Small Community and Rural Development.

[FR Doc. 88-8107 Filed 4-12-88; 8:45 am]

BILLING CODE 3410-01-M

Forms Under Review by Office of Management and Budget

April 8, 1988.

The Department of Agriculture has submitted to OMB for review the following proposals for the collection of information under the provisions of the Paperwork Reduction Act (44 U.S.C. Chapter 35) since the last list was published. This list is grouped into new proposals, revisions, extensions, or reinstatements. Each entry contains the following information:

(1) Agency proposing the information collection; (2) Title of the information collection; (3) Form number(s), if applicable; (4) How often the information is requested; (5) Who will be required or asked to report; (6) An estimate of the number of responses; (7) An estimate of the total number of hours needed to provide the information; (8) An indication of whether section 3504(h) of Pub. L. 96-511 applies; (9) Name and telephone number of the agency contact person.

Questions about the items in the listing should be directed to the agency person named at the end of each entry. Copies of the proposed forms and supporting documents may be obtained from: Department Clearance Officer, USDA, OIRM, Room 404-W Admin. Bldg., Washington, DC 20250, (202) 447-2118.

Comments on any of the items listed should be submitted directly to: Office of Information and Regulatory Affairs, Office of Management and Budget, Washington, DC 20503, Attn: Desk Officer for USDA.

If you anticipate commenting on a submission but find that preparation time will prevent you from doing so promptly, you should advise the OMB Desk Officer of your intent as early as possible.

Extension

- Foreign Agricultural Service
  Export Product Review Application for Label Clearance
  FAS-633
  On occasion
  Businesses or other for-profit; 200 responses; 66 hours; not applicable under 3504(h)
  Audrey B. Talley, (202) 475-3408

Donald E. Hulcher,

Acting Departmental Clearance Officer.

[FR Doc. 88-8043 Filed 4-12-88; 8:45 am]

BILLING CODE 3410-01-M

DEPARTMENT OF COMMERCE

National Technical Information Service

Intent To Grant Exclusive Patent License; Extraction Technology Corp.

The National Technical Information Service (NTIS), U.S. Department of Commerce, intends to grant to Extraction Technology Corporation having a place of business in Gulfport, Mississippi an exclusive license in the United States to practice the inventions

entitled "Selective Recovery of Nickel, Cobalt, Manganese from Sea Nodules with Sulfurous Acid," U.S. Patent No. 4,138,465 and "Recovery of Metals from Atlantic Sea Nodules," U.S. Patent No. 4,208,379. The patent rights in this invention have been assigned to the United States of America, as represented by the Secretary of Commerce.

The proposed exclusive license will be royalty-bearing and will comply with the terms and conditions of 35 U.S.C. 209 and 37 CFR 404.7. The proposed license may be granted unless, within sixty days from the date of this published Notice, NTIS receives written evidence and argument which establishes that the grant of the intended license would not serve the public interest.

Inquiries, comments and other materials relating to the intended license must be submitted to Charles A. Bevelacqua, Office of Federal Patent Licensing, NTIS, Box 1423, Springfield, VA 22151.

Douglas J. Campion,

Associate Director, Office of Federal Patent Licensing, National Technical Information Service, U.S. Department of Commerce.

[FR Doc. 88-8006 Filed 4-12-88; 8:45 am]

BILLING CODE 3510-04-M

COPYRIGHT ROYALTY TRIBUNAL

[Docket No. 88-1-86JD]

1986 Jukebox Royalty Distribution Proceeding

AGENCY: Copyright Royalty Tribunal.

ACTION: Notice.

FOR FURTHER INFORMATION CONTACT: Robert Cassler, General Counsel, Copyright Royalty Tribunal, 1111 20th St. NW., Suite 450, Washington, DC 20036, (202) 653-5175.

SUPPLEMENTARY INFORMATION: Under the procedures adopted by the Tribunal for this proceeding, the Tribunal resolved to determine whether Asociacion de Compositores y Editores de Musica Latino-americana (ACEMLA) was a copyright owner or a performing rights society in 1986 prior to requiring the production of written direct cases on entitlement.

Accordingly, the Tribunal has concluded based upon the record established in this proceeding that ACEMLA was a copyright owner in 1986. Therefore, the Tribunal directs that ACEMLA shall produce on May 4, 1988 its written direct case on entitlement, and that the three performing rights societies in this proceeding, ASCAP, BMI, and SESAC, having resolved their differences, are not required to enter their proofs.

This is an interlocutory decision of the Tribunal. In accordance with 17 U.S.C. 803(b), a full and complete statement of the Tribunal's findings of fact and conclusions of law will be included in the Tribunal's final determination. This notice does not constitute a "final determination" pursuant to 17 U.S.C. 803(b) of a "final decision" under 17 U.S.C. 804(e) or 810.

Edward W. Ray,

Acting Chairman.

Dated: April 8, 1988.

[FR Doc. 88-8056 Filed 4-12-88; 8:45 am]

BILLING CODE 1410-09-M

DEPARTMENT OF DEFENSE

Department of the Army

Army Science Board; Closed Meeting

In accordance with section 10(a)(2) of the Federal Advisory Committee (Pub. L. 92-463), announcement is made of the following Committee Meetings:

Name of the Committee: Army Science Board (ASB).

Dates of Meeting: 3 and 4 May 1988.

Times of Meeting: 0830-1630 hours, 3 May 1988.

0830-1600 hours, 4 May 1988.

Place: Fort Belvoir, Virginia.

Agenda: The Army Science Board Ad Hoc Subgroup on U.S. Army Belvoir Research, Development and Engineering Center effectiveness review will visit the Center for the purpose of gathering data. Follow-up meetings will be held with each directorate to gather further information covering their work program. Briefings will be presented by selected customers of the RD&E Center. In addition, one-on-one interviews will be conducted with a cross section of the RD&E Center staff. The panel will meet in executive session to discuss observations as a result of the briefings and interviews. This meeting will be closed to the public in accordance with section 552b(c) of Title 5, U.S.C., specifically subparagraph (1) thereof, and Title 5, U.S.C., Appendix 2, subsection 10(d). The classified and unclassified matters and proprietary information to be discussed are so inextricably intertwined so as to preclude opening any portion of the meeting. Contact the Army Science Board Administrative Office, Sally Warner, for further information at (202) 695-3039 or 695-7046.

Sally A. Warner,

Administrative Officer, Army Science Board.

[FR Doc. 88-8027 Filed 4-12-88; 8:45 am]

BILLING CODE 3710-08-M

Army Science Board; Open Meeting

In accordance with section 10a(a)(2) of the Federal Advisory Committee Act (Pub. L. 92-463), announcement is made of the following Committee Meeting:

Name of the Committee: Army Science Board (ASB)

Dates of Meeting: 4 and 5 May 1988

Time: 0830-1600 hours each day

Place: Fort Monmouth, New Jersey

Agenda: The Army Science Board Ad Hoc Subgroup on Electronic Technology and Devices Laboratory will hold their second meeting, the purpose of which is to gather data to conduct an effectiveness review of ETDL. This meeting is open to the public. Any interested person may attend, appear before, or file statements with the committee at the time and in the manner permitted by the committee. The ASB Administrative Officer, Sally Warner, may be contacted for further information at (202)695-3039/7046.

Sally A. Warner,

Administrative Officer, Army Science Board.

[FR Doc. 88-8028 Filed 4-12-88; 8:45 am]

BILLING CODE 3710-08-M

Corps of Engineers, Department of the Army

Intent to Prepare a Draft Supplement to the Lower Granite Final Environmental Impact Statement for a Proposed Flood Control and Navigation Dredging Project, Lower Granite Reservoir, Idaho and Washington

AGENCY: U.S. Army Corps of Engineers, DOD.

ACTION: Notice to intent.

SUMMARY:

1. The Corps of Engineers proposes to engage to flood control and navigation maintenanace dredging in Lower Granite Reservoir during the interim period 1989-1994. The project will require annual dredging of river sediments from an area at or near the confluence of the Clearwater and Snake Rivers, Washington and Idaho. An integral part of this project would be a five-year test of in-water disposal of dredged sediments in the lower reservoir. The in-water disposal test is considered to be a critical element of an on-going Corps study to develop a long-term solution to sedimentation in Lower Granite Reservoir. In addition, upland disposal of sediments is also being considered for the Wilma Habitat Management Unit.

BEST COPY AVAILABLE

2. Alternatives to be investigated include:

a. Dredging with in-water disposal.

b. Dredging with upland disposal.

c. No action.

3. Significant issues to be addressed in the draft supplement include effects of the alternatives on water quality, wildlife, fisheries, endangered species, cultural resources, and socioeconomics. The project will be reviewed under all applicable Federal, state, and local statutes.

4. Affected Federal, state, and local agencies, affected Indian tribes, and other interested organizations and parties are invited to participate in scoping for the draft supplement. A formal scoping meeting is not planned, however, comments should be directed to the address given below.

5. The draft supplement will be available on or about June 1, 1988. Comments concerning the project and draft SEIS should be addressed to Chief, Environmental Resources Branch, Corps of Engineers, Walla Walla District, Walla Walla, Washington 99362-9265. Comments or questions can be telephoned to Mr. Robert L. Palmer at 509-522-6927.

Dated: April 1, 1988.

Richard M. Ely,

LTC, CE, Acting Commander.

[FR Doc. 88-8029 Filed 4-12-88; 8:45 am]

BILLING CODE 3710-GC-M

DEPARTMENT OF EDUCATION

Office of Educational Research and Improvement

Advisory Council on Education Statistics (ACES); Meeting

AGENCY: Advisory Council on Education Statistics (ACES), Education.

ACTION: Notice of meeting.

SUMMARY: This notice sets forth the schedule and proposed agenda of a forthcoming meeting of the Advisory Council on Education Statistics. This notice also describes the functions of the Council. Notice of this meeting is required under section 10(a)(2) of the Federal Advisory Committee Act. This document is intended to notify the general public of their opportunity to attent.

DATE: May 23-24, 1988.

ADDRESS: 555 New Jersey Avenue NW., Room 326, Washington, DC 20208.

FOR FURTHER INFORMATION CONTACT: Iris Silverman, Executive Director, Advisory Council on Education Statistics, 555 New Jersey Avenue, Room 400J, Washington, DC 20208, Telephone: (202) 357-6831.

SUPPLEMENTARY INFORMATION: The Advisory Council on Education Statistics is established under section 406(c)(1) of the Education Amendments of 1974, Pub. L. 93-380. The Council is established to review general policies for the operation of the Center for Education Statistics (CES) in the Office of Educational Research and improvement and is responsible for establishing standards to insure that statistics and analyses disseminated by the Center are of high quality and are not subject to political influence. The meeting of the Council is open to the public. The proposed agenda includes the following:

- Elementary-Secondary Redesign
- Legislative Activity
- Statistical Standards Program
- Dropouts
- Council Business

Records are kept of all Council proceedings and are available for public inspection at the office of the Executive Director, Advisory Council on Education Statistics, 555 New Jersey Avenue, NW., Room 400J, Washington, DC 20208.

Date: April 6, 1988.

Henry L. Curry,

Acting Assistant Secretary for Education Research and Improvement.

[FR Doc. 88-8042 Filed 4-12-88; 8:45 am]

BILLING CODE 4000-01-M

DEPARTMENT OF ENERGY

Assistant Secretary for International Affairs and Energy Emergencies

Proposed Subsequent Arrangement; Atomic Energy Agreement With European Atomic Energy Community

Pursuant to section 131 of the Atomic Energy Act of 1954, as amended (42 U.S.C. 2160) notice is hereby given of a proposed "subsequent arrangement" under the Additional Agreement for Cooperation between the Government of the United States of America and the European Atomic Energy Community (ERUATOM) concerning Peaceful Uses of Atomic Energy, as amended.

The subsequent arrangment to be carried out under the above-mentioned agreement involves approval of the following sale:

Contract Number S-EU-936, for the sale of 0.0996 grams of uranium, containing 0.099 grams of uranium-235 to the University of Regensburg, the Federal Republic of Germany, for use as standard reference material.

In accordance with section 131 of the Atomic Energy Act of 1954, as amended, it has been determined that this subsequent arrangement will not be inimical to the common defense and security.

This subsequent arrangement will take effect no sooner than fifteen days after the date of publication of this notice.

For the Department of Energy.

Date: April 8, 1988.

George J. Bradley, Jr.,

Principal Deputy Assistant Secretary for International Affairs and Energy Emergencies.

[FR Doc. 88-8057 Filed 4-12-88; 8:45 am]

BILLING CODE 6450-01-M

Economic Regulatory Administration

[ERA Docket No. 88-13-NG]

Pentex Petroleum, Inc.; Application To Import Natural Gas From Canada

AGENCY: Economic Regulatory Administration, DOE.

ACTION: Notice of application for blanket authorization to import natural gas.

SUMMARY: The Economic Regulatory Administration (ERA) of the Department of Energy (DOE) gives notice of receipt on March 21, 1988, of an application from Pentex Petroleum, Inc. (Pentex) for blanket authorization to import Canadian natural gas for short-term and spot market sales to various end-users located in New York and Pennsylvania to satisfy Pentex's gas supply contract obligations. Authorization is requested to import up to 10,000 Mcf per day of natural gas or up to 3.65 Bcf per year over a two-year term beginning on the date of approval by the ERA. Pentex proposes to use the blanket authorization requested during the first year to import gas purchased from Septre Resources Limited, an Alberta Corporation (Septre), at an initial base price for April 1988, of $2.13 per MMBtu, subject to monthly redetermination.

The application is filed with the ERA pursuant to section 3 of the Natural Gas Act and DOE Delegation Order No. 0204-111. Protests, motions to intervene, notices of intervention and written comments are invited.

DATE: Protests, motions to intervene, or notices of intervention, as applicable, requests for additional procedures and written comments are to be filed no later than May 13, 1988.

FOR FURTHER INFORMATION CONTACT:

Stanley C. Vass, Natural Gas Division, Economic Regulatory Administration, Forrestal Building, Room GA-076, 1000 Independence Avenue, SW., Washington, DC 20585, (202) 586-9482

Michael T. Skinker, Natural Gas and Mineral Leasing, Office of General Counsel, U.S. Department of Energy, Forrestal Building, Room 6E-042, 1000 Independence Avenue, SW., Washington, DC 20585, (202) 586-6667.

SUPPLEMENTARY INFORMATION: On March 21, 1988, Pentex filed an application for blanket authorization to import up to 10,000 Mcf per day of Canadian natural gas, or up to 3.65 Bcf per year for a two-year period beginning on date of approval by the ERA. Pentex, a Texas Corporation, is a subsidiary of ENDEVCO, Inc., Dallas, Texas, with its principal office in Pittsburgh, Pennsylvania. Pentex is conducting business as a natural gas marketer selling gas offered for off-system sales by local distribution companies (LDCs) and currently has contractual obligations to supply up to 11,684 Mcf per day of gas to end-users in New York and Pennsylvania on a best-efforts basis. The applicant states that the Canadian gas would be imported at Niagara Crossing, New York, via existing pipeline facilities to help satisfy its contractual obligations to supply gas to various end-users served by the gas systems of the following LDCs: New York State Electric & Gas Company, National Fuel Gas Supply Corporation, Pennsylvania Gas & Water Company, Consolidated Gas Transmission Corporation and The Peoples Natural Gas Company. The balance of Pentex's gas supply contract obligations would be met from domestic gas supply sources.

During the first year, Pentex proposes to use the import authorization requested to import gas supplied by Septre Resources Limited, an Alberta Corporation (Septre), pursuant to a one-year gas purchase and sales contract dated March 11, 1988, between Septre and Pentex, which contract is subject to month-to-month extension. Under the Pentex-Septre contract, the initial base price of $2.13 per MMBtu of natural gas is subject to monthly redetermination upon request by either Pentex or Septre. There are no take-or-pay or minimum take provisions. The applicant asserts that the price of the gas will be competitive with other sources of spot market gas.

Further, under the initial gas supply arrangement, the Canadian gas would be delivered by TransCanada PipeLines, Ltd. to Tennessee Gas Pipeline Company who would deliver the gas to the LDCs for redelivery to end-users located on the LDCs gas systems.

The decision on this application will be made consistent with the DOE's gas import policy guidelines, under which the competitiveness of an import arrangement in the markets served is the primary consideration in determining whether it is in the public interest (49 FR 6684, February 22, 1984). Parties that may oppose this application should comment in their responses on the issue of competitiveness as set forth in the policy guidelines. The applicant asserts that this import arrangement is competitive. Parties opposing the arrangement bear the burden of overcoming this assertion.

All parties should be aware that if the ERA approves this requested blanket import, it may designate a total amount of authorized volumes for the term rather than a daily or annual limit, in order to provide the applicant with maximum flexibility of operation. ERA will also condition the authorization on the filing of quarterly reports to facilitate ERA monitoring of the operation and effectiveness of the blanket program.

Public Comment Procedures

In response to this notice, any person may file a protest, motion to intervene or notice of intervention, as applicable, and written comments. Any person wishing to become a party to the proceeding and to have the written comments considered as the basis for any decision on the application must, however, file a motion to intervene or notice of intervention, as applicable. The filing of a protest with respect to this application will not serve to make the protestant a party to the proceeding, although protests and comments received from persons who are not parties will be considered in determining the appropriate action to be taken on the application. All protests, motions to intervene, notices of intervention, requests for additional procedures, and written comments must meet the requirements that are specified by the regulations in 10 CFR Part 590. They should be filed with the Natural Gas Division, Office of Fuels Programs, Economic Regulatory Administration, Room GA-076, RG-23, Forrestal Building, 1000 Independence Avenue, SW., Washington, DC. 20585, (202) 586-9478. They must be filed no later than 4:30 p.m. e.d.t., May 13, 1988.

The Administrator intends to develop a decisional record on the application through responses to this notice by parties, including the parties' written comments and replies thereto. Additional procedures will be used as necessary to achieve a complete understanding of the facts and issues. A party seeking intervention may request that additional procedures be provided, such as additional written comments, an oral presentation, a conference, or trial-type hearing. Any request to file additional written comments should explain why they are necessary. Any request for an oral presentation should identify the substantial question of fact, law, or policy at issue, show that it is material and relevant to a decision in the proceeding, and demonstrate why an oral presentation is needed. Any request for a conference should demonstrate why the conference would materially advance the proceeding. Any request for a trial-type hearing must show that there are factual issues genuinely in dispute that are relevant and material to a decision and that a trial-type hearing is necessary for a full and true disclosure of the facts.

If an additional procedure is scheduled, the ERA will provide notice to all parties. If no party requests additional procedures, a final opinion and order may be issued based on the official record, including the application and responses filed by parties pursuant to this notice, in accordance with 10 CFR 590.316.

A copy of Pentex's application is available for inspection and copying in the Natural Gas Division Docket Room, GA-076-A at the above address. The docket room is open between the hours of 8:00 a.m. and 4:30 p.m., Monday through Friday, except Federal holidays.

Issued in Washington, DC., April 5, 1988.

Constance L. Buckley,

Director, Natural Gas Division, Office of Fuels Programs, Economic Regulatory Administration.

[FR Doc. 88-8104 Filed 4-12-88; 8:45 am]

BILLING CODE 6450-01-M

Federal Energy Regulatory Commission

[Docket Nos. ER88-324-00 et al.]

Louisville Gas and Electric Co. et al.; Electric Rate, Small Power Production, and Interlocking Directorate Filings

April 8, 1988.

Take notice that the following filings have been made with the Commission:

1. Louisville Gas and Electric Co.

[Docket No. ER88-324-000]

Take notice that on April 4, 1988, Louisville Gas and Electric Company (Louisville) tendered for filing the initial Interconnection Agreement between Louisville and Wabash Valley Power Association, Inc. (Wabash Valley) dated February 3, 1988.

The purpose of this filing is to provide the parties with a coordinated, interconnected operation that provides for the sale, purchase and interchange of electric power.

Copies of the filing were served on Wabash Valley and the Public Service Commission of Kentucky.

The Interconnection Agreement provides for service schedules that are designated:

I. Service Schedule A—Emergency Energy
II. Service Schedule B—Interchange Energy
III. Service Schedule C—Seasonal Power
IV. Service Schedule D—Short Term Power
V. Service Schedule E—Limited Term Power
VI. Service Schedule F—Diversity Power

Comment date: April 25, 1988, in accordance with Standard Paragraph E at the end of this notice.

2. Pacific Power & Light Co., an assumed business name of PacificCorp

[Docket No. ER88-322-000]

Take notice that on April 4, 1988, Pacific Power & Light Company, and assumed business name of PacificCorp tendered for filing, in accordance with section 35 of the Commission's Regulations, a Revised Exhibit B, dated October 1, 1987 to the May 29, 1981 Transmission Agreement (Pacific's Rate Schedule FERC No. 213), between Pacific, Deseret Generation & Transmission Co-Operative (Deseret), and Bridger Valley Electric Association, Inc. (Bridger Valley).

Exhibit B to the Transmission Agreement is revised annually in accordance with Article 12(ii) of the Agreement, and specifies the projected maximum integrated demand in kilowatts which Deseret desires to have transmitted to Bridger Valley for a four-year rolling period.

Pacific respectfully requests, pursuant to § 35.11 of the Commission's Regulations, that a waiver of prior notice be granted and an effective date of October 1, 1987, be assigned, this date being consistent with the effective date shown on Exhibit B.

Copies of this filing were supplied to Deseret, Bridger Valley, and the Wyoming Public Service Commission.

Comment date: April 25, 1988, in accordance with Standard Paragraph E at the end of this notice.

3. Arkansas Power & Light Co.

[Docket No. ER88-321-000]

Take notice that on April 4, 1988, Arkansas Power & Light Company (AP&L) tendered for filing redetermined rates pursuant to a transmission agreement between AP&L and the Louisiana Energy & Power Authority. AP&L requests an effective date of March 1, 1988 for the redetermined rates.

Comment date: April 25, 1988, in accordance with Standard Paragraph E at the end of this notice.

4. Arkansas Power & Light Co.

[Docket No. ER88-320-000]

Take notice that on April 4, 1988, Arkansas Power & Light Company (AP&L) tendered for filing redetermined rates pursuant to a Letter Agreement dated December 23, 1986, between AP&L and the Cajun Electric Power Cooperative, Inc. (CAJUN) for transmission service. AP&L requests an effective date of March 1, 1988 for the redetermined rates.

Comment date: April 25, 1988, in accordance with Standard Paragraph E at the end of this notice.

5. Pacific Power & Light Co., an assumed business name of PacificCorp

[Docket No. ER88-323-000]

Take notice that on April 4, 1988, Pacific Power & Light Company, an assumed business name of PacificCorp tendered for filing, in accordance with section 35 of the Commission's Regulations, Exhibit A, Revision No. 11, dated December 1, 1987 to the February 25, 1976 Transmission Agreement (Pacific's Rate Schedule FPC No. 123), between Pacific and Tri-State Generation and Transmission Association, Inc. (Tri-State).

Exhibit A to the Transmission Agreement is revised annually in accordance with Article 6(b) of the Agreement, and specifies the projected maximum integrated demand in kilowatts which Tri-State desires to have transmitted to the respective Points of Delivery for a four-year rolling period.

Pacific respectfully requests, pursuant to § 35.11 of the Commission's Regulations, that a waiver of prior notice be granted and an effective date of September 30, 1987, be assigned, this date being consistent with the provisions of Article 6(b) of the Transmission Agreement.

Copies of this filing were supplied to Tri-State and the Wyoming Public Service Commission.

Comment date: April 25, 1988, in accordance with Standard Paragraph E at the end of this document.

6. Arizona Public Service Co.

[Docket No. ER88-326-000]

Take notice that on April 4, 1988, Arizona Public Service Company (APS) tendered for filing Supplemental Capacity Sale Agreements (Agreements) between the Roosevelt Irrigation District (RID), McMullen Valley Water Conservation and Drainage District (MVWCDD), Electrical District No. 8 (ED-8), Wellton-Mohawk Irrigation & Drainage District (Wellton-Mohawk), Aguila Irrigation District (AID), Maricopa County Municipal Water Conservation District No. 1 (MCM), Citizens Utilities Company (Citizens), the Town of Wickenburg (Wickenburg), (collectively referred to as the Customers or Parties) and APS.

The Agreements provide for the sale of supplemental capacity and associated energy, on a firm basis by APS to the Parties. The proposed sale is generally for the summer period of June 1, 1988 through September 30, 1988, only. However, three customers have negotiated for, and APS has agreed to provide slightly different periods of service.

The Parties recognize their obligation to provide for the supplemental load thereafter.

APS, with the concurrence of the Parties, has also filed Notices of Cancellation to be effective at midnight September 30, 1988, for all of the Parties except Wellton-Mohawk, which has negotiated for service until October 30, 1988.

APS and the parties request that the normal notice requirements be waived so that these Agreements may become effective June 1, 1988, except for Wickenburg Wellton-Mohawk and Citizens which have negotiated May 1, May 15 and August 1, 1988 effective dates, respectively.

A copy of this filing has been served upon the Parties, and the Arizona Corporation Commission.

Comment date: April 25, 1988, in accordance with Standard Paragraph E at the end of this notice.

7. San Diego Gas & Electric Co.

[Docket No. ER88-325-000]

Take notice that on April 4, 1988, San Diego Gas & Electric Company (SDG&E) tendered for filing rate schedule changes to the following agreements between SDG&E and Southern California Edison Company (Edison):

1. Short Term Firm Transmission Service Agreement, Rate Schedule FERC No. 58.
2. Interruptible Transmission Service Agreement, Rate Schedule FERC No. 59.
3. Firm Transmission Service Agreement, Rate Schedule FERC No. 60.

Under the terms of the agreements, SDG&E will make available to Edison firm and interruptible transmission

service between points near the U.S.-Mexico border and San Onofre.

SDG&E has requested an effective date of January 1, 1988 and therefore, SDG&E is requesting a waiver of the prior notice requirements.

Comment date: April 25, 1988, in accordance with Standard Paragraph E at the end of this notice.

8. Exxon Company, USA

[Docket No. QF88-323-000]

On March 30, 1988, Exxon Company, USA, (Applicant), of 225 West Hillcrest Drive, Thousand Oaks, California 91359, submitted for filing an application for certification of a facility as a qualifying cogeneration facility pursuant to § 292.207 of the Commission's regulations. No determination has been made that the submittal constitues a complete filing.

The topping-cycle cogeneration facility (Santa Ynez Facility) will be located in Las Flores Canyon, approximately twenty-five miles west of Santa Barbara, California. The facility will consist of a back-pressure steam turbine generator, a combustion turbine generator, and a heat recovery steam generator. Thermal energy recovered from the facility will be used to provide process heat to an oil treating plant and a stripping gas treatment plant. Primary energy source will be natural gas. The net electric power production capacity of the facility will be 48.3 MW. Startup of the new facility is expected to begin in the first quarter of 1990.

Comment date: Thirty days from publication in the **Federal Register**, in accordance with Standard Paragraph E at the end of this notice.

Standard Paragraph

E. Any person desiring to be heard or to protest said filing should file a motion to intervene or protest with the Federal Energy Regulatory Commission, 825 North Capitol Street, NE., Washington, DC 20426, in accordance with Rules 211 and 214 of the Commission's Rules of Practice and Procedure [18 CFR 385.211 and 385.214]. All such motions or protests should be filed on or before the comment date. Protests will be considered by the Commission in determining the appropriate action to be taken, but will not serve to make protestants parties to the proceeding. Any person wishing to become a party must file a motion to intervene. Copies of this filing are on file with the Commission and are available for public inspection.

Lois D. Cashell,

Acting Secretary.

[FR Doc. 88-8093 Filed 4-12-88; 8:45 am]

BILLING CODE 6717-01-M

[Docket Nos. ER88-316-000 et al.]

Portland General Electric Co. et al., Electric rate, Small power production, and Interlocking Directorate filings

April 6, 1988.

Take notice that the following filings have been made with the Commission:

1. Portland General Electric Co.

[Docket No. ER88-316-000]

Take notice that on April 1, 1988, Portland General Electric Company (PGE) tendered for filing its revised average System Cost (ASC) which reflects PGE's Power Cost Adjustment (PCA) rate change which became effective with meter readings on and after September 1, 1987. This filing includes a revised Schedule 4 to Appendix 1, Exhibit C of the Residential Purchase and Sale Agreement along with the authorization to implement this rate change from the Public Utility Commission of Oregon.

PGE states that the filing shows that the third quarter PCA adjustment to the current base ASC is 0.89 mills/kWh, which when added with the base ASC results in a net ASC rate effective for this period.

Comment date: April 21, 1988, in accordance with Standard Paragraph E at the end of this notice.

2. Orange and Rockland Utilities, Inc.

[Docket No. ER88-317-000]

Take notice that on April 1, 1988, Orange and Rockland Utiliites, Inc (Orange and Rockland) tendered for filing pursuant to Federal Energy Regulatory Commission's order issued January 15, 1988 in Docket No. ER88-112-000, an executed Service Agreement between Orange and Rockland and KW Control Systems (KW Control).

Comment date: April 21, 1988, in accordance with Standard Paragraph E at the end of this notice.

3. Commonwealth Edison Co.

[Docket No. ER88-318-000]

Take notice that on April 1, 1988, Commonwealth Edison Company (Edison) tendered for filing Rate 79B, Wholesale Service to the City of Rochelle, an unexecuted Rate 79B Electric Service Contract dated October 1, 1988, between Edison and the City of Rochelle, Illinois (Rochelle) and revised Rider Nos. 6, 11 and 20A. Edison also tendered for filing a revised Index of Purchasers under Edison's FERC Electric Tariff and a revised Table of Contents for Edison's FERC Electric Tariff. Edison's present electric service contract with Rochelle terminates October 1, 1988. Under the proposed Rate 79B Electric Service Contract and proposed Rate 79B, Edison proposes to continue service to Rochelle at the same rates under which service is now being provided. Edison proposes that the changes in rate schedules filed herewith be made effective within 60 days, but that the effectiveness of such changes be suspended and that the changed rate schedules be permitted to take effect on and after October 1, 1988.

Comment data: April 21, 1988, in accordance with Standard Paragraph E at the end of this notice.

4. Empire District Electric Co.

[Docket No. ER88-319-000]

Take notice that on April 1, 1988, Empire District Electric Company tendered for filing proposed changes in its contract for Wholesale Electric Service with the City of Mount Vernon, Missouri.

The proposed changes would allow the terms and conditions of the present contract to remain in effect until March 8, 2008.

Copies of the filing were served upon the city of Mt. Vernon, Missouri.

Comment date: April 21, 1988, in accordance with Standard Paragraph E at the end of this notice.

5. Iowa Public Service Co.

[Docket No. ER88-308-000]

Take notice that on February 3, 1988, Iowa Public Service Company tendered for filing a Notice of Cancellation of FERC No. 80.

A copy of this filing has been served upon St. Joseph Light & Power Company and the Iowa Utilities Board.

Comment date: April 21, 1988, in accordance wtih Standard Paragraph E at the end of this notice.

6. Public Service Company of New Mexico

[Docket No. ER88-315-000]

Take notice that on April 1, 1988, Pubic Service Company of New Mexico (PNM) tendered for filing the following:

(1) Notice of Termination of the 236 MW San Juan Contingent Capacity Agreement between PNM and San Diego Gas & Electric Company (SDG&E) (San Juan Agreement); and

(2) Notice of Termination of the PNM-SDG&E Agreement for Sale and

Purchase of Precommercial Energy from Palo Verde Nuclear Generating Station (PVNGS) Unit 3 (Precommercial Energy Agreement).

PNM states that the San Juan Agreement (PNM Rate Schedule FERC No. 39) expires by its own terms on April 30, 1988. Consistent with the intent of the parties, PNM therefore requests waiver of the notice requirements of 18 CFR 35.15 to permit the proposed termination to be effective as of April 30, 1988.

PNM also states that the Precommercial Energy Agreement (PNM Rate Schedule FERC No. 71) expires by its own terms on the date PVNGS Unit 3 is declared in firm operation. The Date of Firm Operation for Unit 3 has been determined to be January 7, 1988 for Project accounting purposes. Accordingly, consistent with the intent of the parties, PNM therefore requests waiver of the notice requirements of 18 CFR section 35.15 to permit the proposed termination to effective as of January 7, 1988.

Comment date: April 21, 1988, in accordance with Standard Paragraph E at the end of this notice.

7. Chevron U.S.A. Inc.

[Docket No. QF88-317-000]

On March 25, 1988, Chevron U.S.A. Inc. of 1515 Poydras, New Orleans, LA 70112 and Chevron Pipe Line Company of 3520 General DeGaulle, New Orleans, LA 70114 jointly submitted for filing an application for certification of a facility as a qualifying cogeneration facility pursuant to § 292.207 of the Commission's regulations. No determination has been made that the submittal constitutes a complete filing.

The topping-cycle cogeneration facility will be located in Lafourche Parish, Louisiana. The facility will consist of a combustion turbine generating unit and a heat recovery steam generator. Steam produced by the facility will be used to treat crude oil. The electric power production capacity of the facility will be 3.5 MW. The primary energy source will be natural gas. Installation of the facility will begin in the third quarter of 1988.

Comment date: Thirty days from publication in the **Federal Register**, in accordance with Standard Paragraph E at the end of this notice.

Standard Paragraph

E. Any person desiring to be heard or to protest said filing should file a motion to intervene or protest with the Federal Energy Regulatory Commission, 825 North Capitol Street, NE., Washington, DC 20426, in accordance with Rules 211 and 214 of the Commission's Rules of Practice and Procedure (18 CFR 385.211 and 385.214). All such motions or protests should be filed on or before the comment date. Protests will be considered by the Commission in determining the appropriate action to be taken, but will not serve to make protestants parties to the proceeding. Any person wishing to become a party must file a motion to intervene. Copies of this filing are on file with the Commission and are available for public inspection.

Lois D. Cashell,

Acting Secretary.

[FR Doc. 88-8090 Filed 4-12-88; 8:45 am]

BILLING CODE 6717-01-M

[Docket No. GP88-17-000]

El Paso Natural Gas Co.; Petition To Reopen and Vacate Well Category Determinations

April 8, 1988.

Take notice that on March 10, 1988, El Paso Natural Gas Company (El Paso) filed a petition requesting the Commission to reopen and vacate 1) a determination that the Wilcox Lobo Sands Formation (Lobo Sands) in the State of Texas qualifies as a tight sands formation, and 2) certain individual well category determinations for wells on the La Perla Ranch that are completed in the Lobo Sands. These wells are operated by TransAmerica Natural Gas Corporation. El Paso states that the Lobo Sands designation, which was recommended by the Texas Railroad Commission (Texas) and approved by this Commission, enabled production from the above-mentioned wells to qualify for incentive prices as high-cost natural gas under section 107(c)(5) of the Natural Gas Policy Act of 1978 (NGPA).

El Paso asserts that during the 1980 tight formation proceeding, core and flow data were withheld from Texas, and that the Lobo Sands would not have qualified as a tight formation if this data had not been withheld. El Paso argues that this withholding of data constitutes an omission of material fact, warranting reopening and vacating the subject well-category determinations pursuant to section 503(d) of the NGPA. Furthermore, El Paso contends that the Commission violated § 271.703(c)(2)(i) of the Commission's regulations by adopting Texas' recommendation based upon median *in situ* gas permeability levels rather than arithmetic mean permeability levels. Even if the Commission does not vacate the determinations heretofore made, El Paso asserts that future wells on the La Perla Ranch which are completed in the Lobo Sands should not qualify for section 107(c)(5) treatment. El Paso requests a hearing if the Commission needs additional data pertaining to the subject determinations.

Any person desiring to be heard or to protest this petition should file a motion to intervene or protest in accordance with Rules 214 or 211 of the Commission's rules of practice and procedure. 18 CFR 385.214 and 385.211 (1987). All motions to intervene or protests should be submitted to the Federal Energy Regulatory Commission, 825 North Capitol Street, NE., Washington, DC 20426, not later than 30 days following publication of this notice in the **Federal Register**. All protests will be considered by the Commission but will not serve to make protestants parties to the proceeding. Any person wishing to become a party must file a motion to intervene in accordance with Rule 214. Copies of this petition are on file with the Commission and are available for public inspection.

Lois D. Cashell,

Acting Secretary.

[FR Doc. 88-8098 Filed 4-12-88; 8:45 am]

BILLING CODE 6717-01-M

ANR Pipeline Co.; Notice of Proposed Changes

[Docket No. RP86-169]

April 7, 1988.

Take notice that on April 1, 1988 ANR Pipeline Company ("ANR") tendered for filing, pursuant to section 4 of the Natural Gas Act the following tariff sheets to its FERC Gas Tariff:

Description	Effective date
Original Volume No. 1:	
Substitute Fifteenth Revised Sheet No. 18.	Apr. 1, 1988.
Substitute Sixteenth Revised Sheet No. 18.	May 1, 1988.
Original Volume No. 1-A:	
Fourth Revised Sheet Nos. 5 and 6.	Apr. 1, 1988.
Third Revised Sheet Nos. 7 and 8.	Do.
Original Volume No. 2:	
Third Revised Sheet Nos. 16, 17, 18 & 19.	Do.
Fifth Revised Sheet No. 20	Do.
Fourth Revised Sheet No. 21	Do.

ANR states that this filing is made in accordance with the Commission's Order issued on March 28, 1988 approving the Settlement Agreement in the referenced docket and reflects a reduction in rates applicable to the elimination of cash working and the removal of uncertificated facilities from its cost of service.

ANR requests that these tariff sheets be made effective as indicated.

Any person desiring to be heard or to protest said filing should file a motion to intervene or to protest with the Federal Energy Regulatory Commission, 825 North Capitol Street, NE., Washington, DC 20426. In accordance with Rule 211 or Rule 214 of the Commission's Rules of Practice and Procedure (18 CFR 385.211, 385.214). All such motions or protests should be filed before April 14, 1988. Protests will be considered by the Commission in determining the appropriate action to be taken but will not serve to make protestants parties to the proceeding. Any person wishing to become a party to the proceeding must file a motion to intervene. Copies of this filing are on file with the Commission and are available for public inspection.

Lois D. Cashell,

Acting Secretary.

[FR Doc. 88-8019 Filed 4-12-88; 8:45 am]

BILLING CODE 6717-01-M

[Docket No. TA88-3-48-000]

ANR Pipeline Co.; PGA Rate Change Filing

April 7, 1988.

Take notice that on March 31, 1988, ANR Pipeline Company ("ANR"), pursuant to section 15 of the General Terms and Conditions of its F.E.R.C. Gas Tariff, Original Volume No. 1, tendered for filing with the Federal Energy Regulatory Commission ("Commission") the following tariff sheet:

Sixteenth Revised Sheet No. 18

ANR states that Sixteenth Revised Sheet No. 18 of its FERC Gas Tariff, Original Volume No. 1, reflects a 17.98¢ per dekatherm ("dth") increase in the gas cost component of the commodity rate of ANR's CD-1/MC-1 Rate Schedules, a decrease of $0.149 in the monthly D-1 demand rate and an increase of 1.08¢ in the D-2 demand rate applicable to the CD-1/MC-1 Rate Schedules. The instant filing further reflects increases in ANR's one-part rates applicable to Rate Schedules SGS-1 and LVS-1 of 19.15¢ and 18.85¢ respectively, per dth.

ANR states that copies of the filing were served upon all of its jurisdictional customers and interested state commissions.

Any person desiring to be heard or to protest said filing should file a motion to intervene or protest with the Commission, 825 North Capitol Street, NE., Washington, DC 20426, in accordance with Rules 211 and 214 of the Commission's Rules and Practice and Procedure (18 CFR 385.211, 385.214). All such motions or protests should be filed on or before April 14, 1988. Protests will be considered by the Commission in determining the appropriate action to be taken, but will not serve to make protestants parties to the proceeding. Any person wishing to become a party must file a motion to intervene. Copies of this filing are on file with the Commission and are available for public inspection.

Lois D. Cashell,

Acting Secretary.

[FR Doc. 88-8023 Filed 4-12-88; 8:45 am]

BILLING CODE 6717-01-M

[Docket No. TA88-5-51-000]

Great Lakes Gas Transmission Co.; Proposed Changes in FERC Gas Tariff Under Purchased Gas Adjustment Clause Provisions

April 7, 1988.

Take notice that Great Lakes Gas Transmission Company ("Great Lakes"), on April 1, 1988, tendered for filing the following tariff sheets to its FERC Gas Tariff.

Tariff Sheets Effective January 1, 1988

First Revised Volume No. 1
- Substitute Thirteenth Revised Sheet No. 1
- Substitute Seventh Revised Sheet No. 52
- Fifth Revised Sheet No. 53
- Substitute Eighth Revised Sheet No. 54
- Fifth Revised Sheet No. 54-A
- Sixth Revised Sheet No. 55
- Third Revised Sheet No. 56
- Second Revised Sheet No. 56-A
- Second Revised Sheet No. 56-B
- Substitute Sixteenth Revised Sheet No. 57-A

Original Volume No. 2
- Substitute Nineteenth Revised Sheet No. 1
- Substitute Eighth Revised Sheet No. 53-B
- Fifth Revised Sheet No. 53-C
- Substitute Fourth Revised Sheet No. 78-B
- Fifth Revised Sheet No. 78-C
- Ninth Revised Sheet No. 123

First Revised Volume No. 2
- Substitute Original Sheet No. 467
- Substitute Original Sheet No. 468

Tariff Sheets Effective April 1, 1988

First Revised Volume No. 1
- Twelfth Revised Sheet No. 57(i)
- Twelfth Revised Sheet No. 57(ii)

Tariff Sheet Effective May 1, 1988

First Revised Volume No. 1
- Thirteenth Revised Sheet No. 57(i)
- Thirteenth Revised Sheet No. 57(ii)

Great Lakes states that the tariff sheets with an effective date of Jan. 1, 1988 reflect the elimination of the incremental pricing surcharge provisions in Great Lakes' tariff. These tariff changes were filed pursuant to Commission Order No. 478, issued on July 27, 1987, which rescinded incremental pricing effective January 1, 1988 and directed natural gas pipeline companies to eliminate the incremental pricing tariff provisions of their FERC Gas Tariff in their first PGA filing of 1988.

Great Lakes states that Twelfth Revised Sheet Nos. 57(i) and 57(ii), to be effective April 1, 1988, reflect changes in the price of natural gas purchased by Great Lakes from TransCanada PipeLines Ltd. ("TransCanada") for resale to certain customers and for volumes purchased for company use gas. These changes are in accordance with gas pricing provisions which were agreed upon between TransCanada and the resale customer for the resale gas and between Great Lakes and TransCanada for the company use gas.

Great Lakes states that Thirteenth Revised Sheet No. 57(i) and 57(ii) reflect a gas cost surcharge resulting from maintaining unrecovered purchased gas cost accounts for the period commencing September 1, 1987 and ending February 29, 1988. These tariff sheets also reflect the above-mentioned gas purchase price changes along with minor current adjustments resulting from changes in the heat content of the gas purchased and updated allocation factors for assigning company use gas costs to the various Gas Purchase Contract Groups.

Great Lakes has requested waiver of the 30 day notice requirement of the provisons of § 154.38(d)(4)(iv)(a) of the Commission's Regulations and any other necessary waivers so as to permit Twelfth Revised Sheet Nos. 57(i) and 57(ii) to become effective on April 1, 1988.

Any person desiring to be heard or to protest said filing should file a Motion to Intervene or protest with the Federal Energy Regulatory Commission, 825 North Capitol Street, NE., Washington, DC 20426, in accordance with Rules 211 and 214 of the Commission's Rules of Practice and Procedure. All such protests or protests should be filed on or

before April 14, 1988. Protests will be considered by the Commission in determining the appropriate action to be taken, but will not serve to make protestants parties to the proceeding. Copies of this filing are on file with the Commission and are available for public inspeciton.

Lois Cashell,

Acting Secretary.

[FR Doc. 88-8022 Filed 4-12-88; 8:45 am]

BILLING CODE 6717-01-M

[Docket No. SA88-9-000]

Ralph L. Leaderbrand; Notice of Petition for Adjustment

April 8, 1988.

Take notice that on March 9, 1988, Ralph L. Leaderbrand filed a petition for adjustment pursuant to section 502(c) of the Natural Gas Policy Act of 1978 (NGPA). Leaderbrand seeks adjustment relief so that it will not be required to refund the difference between the NGPA section 108 stripper well price it collected and the section 104 price that it should have collected for gas sold from the Bodcaw No. 1, the Bank of Minden No. 1, the Crichton A No. 1, and the Crichton B No. 1 wells located in the Sibley Field, Webster Parish, Louisiana. Leaderbrand also requests that money not yet received for production from each of these wells from November 1987 forward be based on the NGPA section 108 price for enhanced recovery wells.

Leaderbrand states that on February 6, 1979, Louisiana determined that the Bodcaw well qualified for NGPA section 108 status, and that on several dates in July 1980 the other three wells also qualified for section 108 status. These wells subsequently disqualified for NGPA section 108 status because of overproduction. Leaderbrand seeks authorization to retail all revenues collected from February 1979 through October 1987 for production from the Bodcaw well, and from July 1980 through October 1987 for production from the other three wells. According to Leaderbrand, its purchaser, United Gas Pipe Line Company, did not notify it of the wells' overproduction until November 24, 1987. Leaderbrand states that these wells now qualify as section 108 enhanced recovery wells.

Leaderbrand asserts that its cost and revenue data, submitted in support of its petition, demonstrate that if adjustment relief is denied, it will suffer losses, inequity, and hardship. Finally, Leaderbrand requests authorization to collect the enhanced recovery section 108 price, retroactive to the dates that these wells were initially determined to qualify for section 108 status.

The procedures applicable to the conduct of this proceeding are set forth in Rules 1101-1117 (Subpart K) of the Commission's rules of practice and procedure. Any person desiring to participate in this proceeding must file a motion to intervene in accordance with Rule 1105. All motions to intervene must be filed within 15 days after publication of this notice in the **Federal Register.**

Lois D. Cashell,

Acting Secretary.

[FR Doc. 88-8099 Filed 4-12-88; 8:45 am]

BILLING CODE 6717-23-M

[Docket No. RP72-149-023, et al.]

Mississippi River Transmission Corp. et al.; Filing of Pipeline Refund Reports and Refund Plans

April 8, 1988.

Take notice that the pipelines listed in the Appendix hereto have submitted to the Commission for filing proposed refund reports. The date of filing and docket number are also shown on the Appendix.

Any person wishing to do so may submit comments in writing concerning the subject refund reports. All such comments should be filed with the Federal Energy Regulatory Commission, 825 North Capitol Street, NE., Washington, DC 20426, on or before April 29, 1988. Copies of the respective filings are on file with the Commission and available for public inspection.

Lois D. Cashell,

Acting Secretary.

Appendix

Filing date	Company	Docket No.
Feb. 19, 1988	Mississippi River Transmission Corp.	RP72-149-023
Mar. 14, 1988	Enron (Northern Natural Gas Company).	RP82-71-023
Mar. 16, 1988	Panhandle Eastern Pipe Line Co.	RP86-116-018
Mar. 23, 1988	Texas Eastern Transmission Corp.	RP85-177-051

[FR Doc. 88-8096 Filed 4-12-88; 8:45 am]

BILLING CODE 6717-01-M

[Docket No. RP88-98-000]

National Fuel Gas Supply Corp.; Petition for Authority to Institute Direct Billing Procedure for Retroactive Order No. 473 Payments

April 7, 1988.

Take notice that on March 31, 1988, National Fuel Gas Supply Corporation (National) filed a petition for authority to institute a direct billing procedure to recover from its customers retroactive payments for production-related costs made by National pursuant to Order No. 473.

National states that under the proposal it will bill each customer directly and without reference to its current level of gas purchase for its share of all production-related cost payments made by National. National proposes to directly bill each of its customers for its *pro rata* share of the retroactive Order No. 473 costs either paid by National to its producers or directly billed and paid by National to its pipeline suppliers. National states that such amounts will include paid and accrued interest. National states that direct bills would be rendered within 45 days of the date this petition is finally approved or, for payments made after this petition is approved within 45 days of the date National pays a retroactive Order No. 473 amount. National believes that this billing program results in a much more equitable allocation of costs among customers than would occur from including the retroactive Order No. 473 amounts in the PGA.

National requests that the Commission grant any waivers of its regulations and National's tariff as may be required to make the direct billing proposal effective as proposed.

National requests that the above-described direct billing proposal for compression costs is in the public interest and should be authorized as expeditiously as possible.

Any person desiring to be heard or to protest said filing should file a motion to intervene or a protest with the Federal Energy Regulatory Commission, 825 North Capitol Street, NE., Washington, DC 20426, in accordance with Rules 214 and 211 of the Commission's Rules of Practice and Procedure (18 CFR 385.214, 385.211). All such motions or protests should be filed on or before April 14, 1988. Protests will be considered by the Commission in determining the appropriate action to be taken, but will not serve to make protestants parties to the proceeding. Any person wishing to become a party must file a motion to intervene. Copies of this filing are on file

with the Commission and are available for public inspection.

Lois D. Cashell,

Acting Secretary.

[FR Doc. 88-8020 Filed 4-12-88; 8:45 am]

BILLING CODE 6717-01-M

[Docket No. RP85-150-104]

Natural Gas Pipeline Company of America; Filing of Supplemental Report of Distribution of Refunds

April 8, 1988.

Take notice that on March 31, 1988, Natural Gas Pipeline Company of America (Natural) tendered for filing its Supplemental Report of Distribution of Refunds reflecting revisions to the June 26, 1987, refund in the above dockets. The report also reflects refunds relating to Docket Nos. RP86-162 and CP86-582.

Any person desiring to be heard or to protest said filing should file a motion to intervene or protest with the Federal Energy Regulatory Commission, 825 North Capitol Street, NW., Washington, DC 20426, in accordance with §§ 385.214 and 385.211. All such motions or protests must be filed on or before April 29, 1988. Protests will be considered by the Commission in determining the appropriate action to be taken, but will not serve to make protestants parties to the proceeding. Any person wishing to become a party must file a motion to intervene. Copies of this filing are on file with the Commission and are available for public inspection.

Lois D. Cashell,

Acting Secretary.

[FR Doc. 88-8097 Filed 4-12-88; 8:45 am]

BILLING CODE 6717-01-M

[Docket No. RP 88-99-000]

Transcontinental Gas Pipe Line Corp.; Tariff Filing

April 8, 1988.

Take notice that on April 5, 1988, Transcontinental Gas Pipe Line Corporation ("Transco") tendered for filing Second Revised Sheet Nos. 114, 126, 178, and First Revised Sheet Nos. 114A, 126A, and 178A to its FERC Gas Tariff, Second Revised Volume No. 1.

The proposed effective date of the revised tariff sheets is May 1, 1988.

Transco states that the purpose of the filing is to revise its currently effective Rate Schedules GSS, LGA and LSS to remove the existing 15% restriction and daily and total quantity injections of gas purchased from third-party sellers into storage pursuant to the provisions of each such storage rate schedule for customers who convert in excess of 15% of their firm purchase entitlement from Transco to firm transportation effective on or before May 1, 1988. Such customers' injections of gas quantities not purchased from Transco would be limited on a daily and total quantity basis to the permanent conversion percentage exercised on or before May 1, 1988.

Transco states that copies of the filing have been served upon its customers, state commissions, and other interested parties.

Any person desiring to be heard or to protest said filing should file a motion to intervene or protest with the Federal Energy Regulatory Commission, 825 North Capitol Street, NW., Washington, D.C. 20426, in accordance with Rules 211 and 214 of the Commission's Rules of Practice and Procedure (18 CFR 385.211 and 385.214). All such motions or protest should be filed on or before April 15, 1988. Protests will be considered by the Commission in determining the appropriate action to be taken, but will not serve to make protestants parties to the proceeding. Any person wishing to become a party must file a motion to intervene. Copies of this filing are on file with the Commission and are available for public inspection.

Lois D. Cashell,

Acting Secretary.

[FR Doc. 88-8100 Filed 4-12-88; 8:45 am]

BILLING CODE 6717-01-M

[Docket No. RA88-92-000]

United Gas Pipe Line Co., Notice of Proposed Changes in FERC Gas Tariff

April 7, 1988.

Take notice that on March 31, 1988, United Gas Pipe Line Company (United) tendered for filing proposed changes to its FERC Gas Tariff, First Revised Volume No. 1, to be effective May 1, 1988.

United states that this filing provide for a level of rates and charges required to recover its increased operating costs. United states that the proposed new rates, when compared to the currently effective rates at Docket No. RP85-209, will result in an annual jurisdictional revenue increase of approximately $30 million.

United states that modified fixed-variable (MFV) principal of cost classification, allocation and rate design have been applied to all jurisdictional customers. United also proposes to eliminate or discontinue enforcing the "full requirements" provisions contained in currently effective service agreements effective as of the date the proposed tariff sheets are allowed to become effective. United states that customers desiring to continue purchasing gas under a one-part rate subject to a full requirements clause will be provided that right under a new rate schedule proposed concurrently with the subject rate filing.

United states that in order to coordinate its rights to adjust its rates under section 4 of the Natural Gas Act with the possibility that certain of United's sales customers may seek to abandon their rights to purchase gas from United, a change in section 5.2 of the General Terms and Conditions of its FERC Gas Tariff is proposed to ensure that a firm sales customer's demand charge responsibility continues to apply for a nine-month notice period when and as any such customer is authorized to abandon its rights to purchase gas from United.

United also states that it is proposing to (1) eliminate zones and mileage based distinctions for sales and transportation service, including a postage-stamp rate design with a winter period adjustment for onshore interruptible transportation service, and (2) reflect a demand-commodity rate structure for all sales customers.

United states that three of its pipeline sales customers have filed for abandonment of all or a portion of their rights to purchase gas from United under the PL Rate Schedule. United states that rates have been filed under the assumptions that (1) the three pipeline sales customers will be successful in abandoning purchase obligations under Rate Schedule PL service agreements, either by Commission grant of the abandonment applications, without conditions or pursuant to claimed authority under Order No. 490 (the "Primary Rates") and (2) the Commission will take no action on any of the pending abandonment applications and no abandonment will be accomplished pursuant to Order No. 490 (the "Abandonment Rates"), and that rates under both assumptions are reflected on Sheet No. 4. United states that upon the expiration of the suspension period, United will file revised tariff sheets to reflect the action taken by the Commission, if any, during the suspension period that has an effect upon the Primary Rates.

In addition, United states that it is proposing to change sections 19 and 24 of the General Terms and Conditions of its FERC Gas Tariff to reflect (1) a change from the unit-of-sales to the unit-of-purchase methodology for determining United's current and deferred purchased gas costs, and (2) the institution of a mechanism to

provide United's sales customers with a credit for net revenues received by United, as a result of transportation service performed for third-parties through United's capacity in other pipeline systems.

United states that it is also proposing to implement an experimental interruptible storage service under new Rate Schedule UIS which will be available to any qualified shipper on a first-come, first-served basis.

United states that it proposes to return excess deferred income taxes (resulting from the Tax Reform Act of 1986) through a "Reverse South Georgia" Method. In addition, United is proposing to reclassify certain gas plant and related accumulated reserve and operating expenses, previously associated with the gathering function, to the transmission function.

United is also to eliminate certain obsolete tariff provisions that affect the Discount Rate Schedule, the PLE Rate Schedules, and the "T" Rate Schedule. Finally, United is proposing to eliminate certain provisions of Rate Schedules FTS and ITS that currently provide for a separately stated incremental offshore transportation charge.

Any person desiring to be heard or to protest said filing should file a motion to intervene or protest with the Federal Energy Regulatory Commission, 825 North Capitol Street NE., Washington, DC 20426, in accordance with 18 CFR 385.214 and 385.211. All such motions or protest must be filed on or before April 14, 1988. Protests will be considered by the Commission in determining the appropriate action to be taken, but will not serve to make protestants parties to the proceeding. Any person wishing to become a party must file a motion to intervene. Copies of this filing are on file with the Commission and are available for public inspection.

Lois D. Cashell,

Acting Secretary.

[FR Doc. 88-8021 Filed 4-12-88; 8:45 am]

BILLING CODE 6717-01-M

ENVIRONMENTAL PROTECTION AGENCY

[OPP-180766; FRL; 3364-4]

Emergency Exemptions

AGENCY: Environmental Protection Agency (EPA).

ACTION: Notice.

SUMMARY: EPA has granted specific exemptions for the control of various pests to the five States and the United States Department of Agriculture, as listed below. Also listed is a quarantine exemption grants to the Territory of Guam, Office of the Governor. These exemptions, issued during the months of December and January, are subject to application and timing restrictions and reporting requirements designed to protect the environment to the maximum extent possible. Information on these restrictions is available from the EPA contact person listed below.

DATES: See each specific and quarantine exemption for its effective date.

FOR FURTHER INFORMATION CONTACT: See each emergency exemption for the name of the contact person: The following information applies to all contact persons: By mail: Registration Division (TS-767C), Office of Pesticide Programs, Environmental Protection Agency, 401 M St. SW., Washington, DC 20460.

Office location and telephone number: Rm 716, CM#2, 1921 Jefferson Davis Highway, Arlington, VA, (703-557-1806).

SUPPLEMENTARY INFORMATION: EPA has granted specific exemptions to the:

1. California Department of Food and Agriculture for the use of sethoxydim on broccoli, lettuce, and cauliflower to control watergrass; December 23, 1987, to December 31, 1987. California had initiated a crisis exemption for this use. (Robert Forrest)

2. California Department of Food and Agriculture for the use of methidathion on kiwi fruit to control scale; January 1, 1988, to March 31, 1988. (Robert Forrest)

3. California Department of Food and Agriculture for the use of metalaxyl on blackberries, boysenberries, youngberries, evergreen, thornless berries, and caneberries to control downy mildew; December 1, 1987, to April 30, 1988. (Robert Forrest)

4. Illinois Department of Agriculture for the use of Harmony on wheat to control wild garlic; January 25, 1988, to April 30, 1988. Solicitation of public comment was published in the **Federal Register** of December 16, 1987 (52 FR 47755). This exemption was issued on the basis that an emergency condition exists and the use will not cause unreasonable adverse effects to the environment. (Robert Forrest)

5. North Carolina Department of Agricultrue for the use of Harmony on wheat and barley to control wild garlic; January 25, 1988, to April 30, 1988. Solicitation of public comment was published in the **Federal Register** of January 13, 1988 (53 FR 793). This exemption was issued on the basis that an emergency condition exists and the use will not cause unreasonable adverse effects to the environment. (Robert Forrest)

6. Texas Department of Agriculture for the use of permethrin on kale, kolhrabi, mustard greens and turnip greens to control cabbage looper; December 1, 1987, to April 30, 1988. Texas had initiated a crisis exemption for this use. (Don Stubbs)

7. Virginia Department of Agriculture and Consumer Services for the use of Harmony of barley and wheat to control wild garlic; January 25, 1988, to April 15, 1988. Solicitation of public comment was published in the **Federal Register** of December 16, 1987 (52 FR 47755). This exemption was issued on the basis that an emergency condition exists and the use will not cause unreasonable adverse effects to the environment. (Robert Forrest)

8. United States Department of Agriculture for the use of methyl bromide on oak logs to control oak wilt fungus; December 23, 1987, to December 23, 1988. (Robert Forrest)

9. United States Department of Agriculture for the use of fluvalinate in bee colonies to control Varroa mite; December 23, 1987, to October 19, 1990. USDA had initiated a crisis exemption for this use (Libby Pemberton)

Two quarantine exemptions were granted to the:

Territory of Guam, Office of the Governor, for the use of methyl bromide on broccoli, cauliflower, lettuce, celery, and spinach to control western flower thrips and cabbage aphid; January 12, 1988, to January 11, 1991. (Libby Pemberton)

Authority: 7 U.S.C. 136.

Dated: April 1, 1988.

Douglas D. Campt,

Director, Office of Pesticide Programs.

[FR Doc. 88-7940 Filed 4-12-88; 8:45 am]

BILLING CODE 6560-50-M

[OPP-36155; FRL-3361-9]

Publication of Addenda on Data Reporting To Pesticide Assessment Guidelines

AGENCY: Environmental Protection Agency (EPA).

ACTION: Notice of availability.

SUMMARY: Addenda to the Pesticide Assessment Guidelines for certain studies have been finalized and are now available to the public from the National Technical Information Service (NTIS). The studies involved are: Eye Irritation, Dermal Irritation, Dermal Sensitization, Acute and Subchronic Delayed Neurotoxicity, Hydrolysis, Photolysis, Aerobic Soil Metabolism, and Leaching and Adsorption/Desorption. The

addenda supersede paragraphs in the Guidelines on data reporting and provide a format for the preparation of study reports by those submitting data to EPA. While these Guidelines are not mandatory at this time, data submitters are strongly encouraged to follow the formats so that reports will be consistent, thereby increasing the efficiency of pesticide registration and other regulatory activities.

ADDRESS: Guidelines can be ordered from: National Technical Information Service, Attn: Order Desk, 5285 Port Royal Road, Springfield, VA 22161 (703-487-4650).

FOR FURTHER INFORMATION CONTACT:

Elizabeth M.K. Leovey, Hazard Evaluation Division (TS-769C), Office of Pesticide Programs, Environmental Protection Agency, 401 M Street SW., Washington, DC 20460

Office location and telephone number: Room 703B, Crystal Mall #2, 1921 Jefferson Davis Highway, Arlington, VA (703-557-2162).

SUPPLEMENTARY INFORMATION: The specific addenda currently available from NTIS, with NTIS order number and price, are as follows:

Document title	NTIS accession No.	EPA document No.	Hardcopy [1] price
Pesticide Assessment Guidelines, Subdivision F, Hazard Evaluation: Human and Domestic Animals, Series 81-4, Eye Irritation, Addendum 2 on Data Reporting.	PB88-162292	540/09-88-023	59.95
Pesticide Assessment Guidelines, Subdivision F, Hazard Evaluation: Human and Domestic Animals, Series 81-5, Dermal Irritation, Addendum 3 on Data Reporting.	PB88-161179	540/09-88-024	9.95
Pesticide Assessment Guidelines, Subdivision F, Hazard Evaluation: Human and Domestic Animals, Series 81-6, Dermal Sensitization, Addendum 4 on Data Reporting.	PB88-162227	540/09-88-028	9.95
Pesticide Assessment Guidelines, Subdivision F, Hazard Evaluation: Human and Domestic Animals, Series 81-7 and 82-5, Acute Delayed Neurotoxicity of Organophosphorous Substances and Subchronic Delayed Neurotoxicity (90-day Study), Addendum 5 on Data Reporting.	PB88-162219	540/09-88-029	9.95
Pesticide Assessment Guidelines, Subdivision N, Chemistry: Environmental Fate, Series 161-1, Hydrolysis Studies, Addendum 3 on Data Reporting.	PB88-159892	540/09-88-022	12.95
Pesticide Assessment Guidelines, Subdivision N, Chemistry: Environmental Fate, Series 161-2 and 161-3, Photolysis Studies, Addendum 4 on Data Reporting.	PB88-159900	540/09-88-021	12.95
Pesticide Assessment Guidelines, Subdivision N, Chemistry: Environmental Fate, Series 162-1, Aerobic Soil Metabolism Studies, Addendum 5 on Data Reporting.	PB88-161187	540/09-88-025	12.95
Pesticide Assessment Guidelines, Subdivision N, Chemistry: Environmental Fate, Series 163-1, Leaching and Adsorption/Desorption Studies, Addendum 6 on Data Reporting.	PB88-161195	540/09-88-026	12.95

[1] Also available in microfiche at $6.95 each.

This is the fourth set of Data Reporting Guidelines published by the Agency. Publication of the previous sets were announced in the **Federal Register** of November 26, 1986 (51 FR 42931); September 23, 1987 (52 FR 35766); and January 28, 1988 (53 FR 2535). These documents were reviewed by the U.S. Department of Agriculture, the Food and Drug Administration, and other organizations within EPA. They underwent public comment announced in the **Federal Register** of October 15, 1986 (51 FR 36753) and March 25, 1987 (52 FR 9536). The documents were revised to reflect consideration of these comments and the public comments are addressed in the documents.

Orders may be placed by mail or telephone. All orders should specify whether the document is requested in hard copy or microfiche form since prices vary for hard copy but are a consistent $6.95 for the microfiche. There is an additional $3.00 handling charge for each order. Payment may be made by charging against an NTIS deposit account; charging to VISA, MasterCard, or American Express; or by check or money order. In all orders, the document title, NTIS order number of the document, desired form of the document (microfiche or hard copy), and the price must be stated.

Data Reporting Guidelines for the remaining major studies in the Pesticide Assessment Guidelines will also be published. Publication will be announced in the **Federal Register**.

Dated: March 21, 1988.

Anne L. Barton,

Acting Director, Hazard Evaluation Division, Office of Pesticide Programs.

[FR Doc. 88-7640 Filed 4-12-88; 8:45 am]

BILLING CODE [illegible]

[OPP-36156; FRL-3364-3]

Pesticide Registration Standard; Availability for Comment

AGENCY: Environmental Protection Agency (EPA).

ACTION: Notice of availability of draft standard for comment.

SUMMARY: This notice announces the availability of a draft pesticide Registration Standard document for comment. The Agency has completed a review of the listed pesticide and is making available a document describing its regulatory conclusions and actions.

DATE: Written comments on the Registration Standard should be submitted on or before June 13, 1988.

ADDRESSES: Three copies of comments identified with the docket number listed with the Registration Standard should be submitted to: By mail: Information Services Section, Program Management and Support Division (TS-757C), Office of Pesticide Programs, Environmental Protection Agency, 401 M St., SW., Washington, DC 20460. In person, deliver comments to: Rm. 236, CM #2, 1921 Jefferson Davis Highway, Arlington, VA.

Information submitted as a comment in response to this notice may be claimed confidential by marking any part or all of that information as "Confidential Business Information" (CBI). Information so marked will not be disclosed except in accordance with procedures set forth in 40 CFR Part 2. A copy of the comment that does not contain CBI must be submitted for inclusion in the public docket. Information not marked confidential will be included in the public docket without prior notice. The public docket and docket index will be available for public inspection in Rm. 236 at the address given above, from 8 a.m. to 4 p.m., Monday through Friday, excluding legal holidays.

FOR FURTHER INFORMATION CONTACT: To request a copy of a Registration Standard, contact Frances Mann of the Information Services Section, in Rm. 236 at the address given above (703-557-3262). Requests should be submitted no later than May 13, 1988, to allow sufficient time for receipt before the close of the comment period.

For technical questions related to the Registration Standard, contact the Product Manager listed for that Standard, at the phone number given.

SUPPLEMENTARY INFORMATION: The Environmental Protection Agency conducts a systematic review of pesticides to determine whether they meet the criteria for continued registration under section 3(c)(5) of the Federal Insecticide, Fungicide, and Rodenticide Act (FIFRA). That review culminates in the issuance of a Registration Standard, a document describing the Agency's regulatory conclusions and positions on the continued registrability of the pesticide. In accordance with 40 CFR 155.34(c), before issuing certain Registration Standards, the Agency makes the draft document available for public comment.

A draft Registration Standard for the following pesticide is now available:

Name of pesticide	Docket No.	Contact person
Metalaxyl	57837-19-1	Lois Rossi, Product Manager 21, 703-557-1900.

Copies of the Registration Standard may be obtained from the Agency at the address listed under **FOR FURTHER INFORMATION CONTACT.** Because of the length of the Standard and the limited number of copies available for distribution, only one copy can be provided by mail to any one individual or organization. The Registration Standard is also available for inspection and copying in EPA Regional offices at the addresses listed below after May 13, 1988.

List of EPA Regional Offices

Pesticides and Toxic Substances Branch, EPA—Region I, JFK Federal Building, Boston, MA 02203, Contact person: Marvin Rosenstein

Pesticides and Toxic Substances Branch, EPA—Region II, Woodbridge Avenue, Edison, NJ 08837, Contact person: Ernest Regna

Toxics and Pesticides Branch, EPA—Region III, 6th and Walnut Sts., Philadelphia, PA 19106, Contact person: Larry Miller

Pesticide and Toxic Substances Branch, EPA—Region IV, 345 Courtland St., NE, Atlanta, GA 30365, Contact person: Acting Chiefd

Pesticides and Toxic Substances Branch, EPA—Region V, 230 South Dearborn St., Chicago, IL 60604, Contact person: Phyllis Reed

Pesticide and Toxic Substances Branch, EPA—Region VI, 1201 Elm St., Dallas, TX 75270, Contact person: Norman Dyer

Pesticide and Toxic Substances Branch, EPA—Region VII, 324 East 11th St., Kansas City, MO 64106, Contact person: Leo alderman

Toxic Substances Branch, EPA—Region VIII, 1860 Lincoln St., Suite 900, Denver, CO 80295, Contact person: C. Alvin York

Pesticides and Toxics Branch, EPA—Region IX, 215 Fremont St., San Francisco, CA 94105, Contact person: RIch Vaille

Pesticides and Toxic Substances Branch, EPA—Region X; 1200 6th Ave., Seattle, WA 98101, Contact person: Anita Frankel

Dated: April 1, 1988.

Douglas D. Campt,

Director, Office of Pesticide Programs.

[FR Doc. 88-7939 Filed 4-12-88; 8:45 am]

BILLING CODE 6560-50-M

[PF 494; FRL-3362-2]

ICI America's Inc.; Amended Pesticide Tolerance Petition

AGENCY: Environmental Protection Agency (EPA).

ACTION: Notice.

SUMMARY: EPA gives notice of an amended pesticide petition submitted by the ICI Americas, Inc., for the insecticide tefluthrin.

ADDRESS: By mail, submit written comments to: Information Services Section, Program Management and Support Division (TS-757C), Office of Pesticide Programs, Environmental Protection Agency, 401 M St., SW., Washington, DC 20460. In person, bring comments to: Rm. 246, CM #2, 1921 Jefferson Davis Highway, Arlington, VA 22202.

Information submitted as a comment concerning this notice may be claimed confidential by marking any part or all of that information as "Confidential Business Information" (CBI). Information so marked will not be disclosed except in accordance with procedures set for in 40 CFR Part 2. A copy of the comment that does not contain CBI must be submitted for inclusion in the public record. Information not marked confidential may be disclosed publicly by EPA without prior notice. All written comments will be available for public inspection in Rm. 246 at address given above, from 8 a.m. to 4 p.m., Monday through Friday, excluding legal holidays.

FOR FURTHER INFORMATION CONTACT: By mail: George LaRocca, Product manager (PM) 15, Registration Division (TS-767C), Office of Pesticide Programs, Environmental Protection Agency, 401 M St., SW., Washington, DC 20460. Office location and telephone number: Rm. 227, CM #2, 1921 Jefferson Davis Highway, Arlington, VA 22202, (703)-557-1900.

SUPPLEMENTARY INFORMATION: EPA issued a notice, published in the **Federal Register** of August 5, 1987 (52 FR 29061), that announced that ICI Americas, Inc., Agricultural Products Group, Registration and Regulatory Affairs, Wilmington, DE 19897, had submitted pesticide petition 7F3521 to the Agency proposing to amend 40 CFR 180.407 by establishing tolerances for the residues of the insecticide tefluthrin (2,3,5,6-tetrafluoro-4-methylbenzyl cis-3-[(*Z*)-2-chloro-3,3,3-trifluoroprop-l-enyl]-2,2-dimethylcyclopropanecarboxylate) in or on the raw agricultural commodity field corn at 0.01 ppm; and corn grain, pop, at 0.01 ppm.

ICI has amended the petition by revising tolerances to include the combined residues of tefluthrin and its metabolites (*Z*)-3-(2-chloro-3,3,3-trifluoroprop-l-enyl)-2,2-dimethylcyclopropanecarboxylic acid and 2,3,5,6-tetrafluoro-4-hydroxymethylbenzoic acid in or on corn grain, field and pop, at 0.1 ppm and corn, forage and fodder, field and pop at 0.1 ppm. The proposed analytical method for determining residues is liquid chromatography.

Authority: 21 U.S.C. 346a.

Dated: March 20, 1988.

Edwin F. Tinsworth,

Director, Registration Division, Office of Pesticide Programs.

[FR Doc. 88-7639 Filed 4-12-88; 8:45 am]

BILLING CODE 6560-50-M

FEDERAL ELECTION COMMISSION

[Notice 1988-6]

Filing Dates for New Jersey Special Elections

AGENCY: Federal Election Commission.

ACTION: Notice of filing dates for New Jersey Special Elections.

SUMMARY: Committees required to file reports in connection with only the Special Primary Election to be held in the 3rd Congressional District of New Jersey on June 7, 1988, should file a 12-day Pre-Primary Report by May 26, 1988. Committees required to file reports in connection with *both* the Special Primary and Special General Election to be held on November 8, 1988, must file a 12-day Pre-Primary Report, a 12-day Pre-General Report by October 27, 1988, and

a 30-day Post-General Report by December 8, 1988.

FOR FURTHER INFORMATION CONTACT: Ms. Bobby Werfel, Public Information Office, 999 E Street, NW., Washington, DC 20463, Telephone: (202) 376-3120; Toll-Free (800) 424-9530.

Notice of Filing Dates for Special Elections 3rd Congressional District, New Jersey

All Principal Campaign Committee of candidates in the Special Primary Election and all other political committees not filing monthly, which support candidates in the Special Primary shall file a 12-day Pre-Primary Report by May 26, 1988, with coverage dates from the last report filed through May 18, 1988. Committees must also file a July Quarterly Report, with coverage dates from May 19, 1988, through June 30, 1988, due on July 15, 1988; and an October Quarterly Report, with coverage dates from July 1, 1988, through September 30, 1988, due October 15, 1988.

All principal campaign committees of candidates in the Special General Election and all other political committees which support candidates in this election shall file a 12-day Pre-General Election Report due on October 27, 1988, with coverage dates from October 1, 1988, through October 19, 1988, and a 30-day Post-General Report due on December 8, 1988, with coverage dates from October 20, 1988, through November 28, 1988. Committees must also file a Year-End Report due January 31, 1989.

Dated: April 7, 1988.

Thomas J. Josefiak,

Chairman, Federal Election Commission.

[FR Doc. 88-8024 Filed 4-12-88; 8:45 am]

BILLING CODE 6715-01-M

FEDERAL EMERGENCY MANAGEMENT AGENCY

[Docket No. FEMA-REP-7-IA-3]

Iowa State and Local Offsite Radiological Emergency Response Plans Site-Specific to the Duane Arnold Energy Center

AGENCY: Federal Emergency Management Agency (FEMA).

ACTION: Notice of finding on offsite radiological emergency response planning for the Duane Arnold Energy Center.

SUMMARY: This Finding is the result of an ongoing review of Iowa State and local plans site-specific to the Duane Arnold Energy Center by the Federal Emergency Management Agency (FEMA) Region VII staff and the Regional Assistance Committee (RAC).

Background

A FEMA review of offsite planning for Duane Arnold in February 1987, revealed that areas of the Cities of Cedar Rapids and Marion, Iowa, beyond the identified 10-mile plume emergency planning zone (EPZ), were not included in the offsite emergency planning effort. This was contrary to written information indicating that these areas were actually included which had been provided to the public by the Iowa Electric Light and Power (IELP) Company and contrary to the documentation that had been forwarded by the State of Iowa and the local jurisdictions to FEMA to support the review of plans and preparedness under FEMA Rule 44 CFR 350.7. The emergency information brochures distributed to the public provided instructions for the evacuation of residents for those areas of Cedar Rapids and Marion beyond the 10-mile EPZ; however, these areas had not been provided alerting coverage nor was there planning in existence to implement protective actions in these areas.

Subsequent to the identification of these problems, the State of Iowa and local governments, IELP, FEMA, and the Nuclear Regulatory Commission (NRC) Region III all agreed that an expansion of planning efforts to include all of Cedar Rapids and Marion, Iowa was warranted. As a result, the Iowa Disaster Services Division was notified on April 9, 1987, that eight overall planning inadequancies associated with the inclusion of Cedar Rapids and Marion would have to be corrected in the appropriate offsite plans and all affected parties were in agreement that corrected plans would be submitted to FEMA for review by December 31, 1987.

Revised plans were submitted by the State of Iowa by the end of December 1987 as agreed; however, a review of these plans by FEMA Region VII and the RAC have disclosed that of the original planning problems identified, significant inadequacies encompassing the school evacuation procedures, the Reception/Host Counties Plans, the Evacuation Time Study, radiological monitoring, the Emergency Broadcast System (EBS), the mobility impaired, and others, still exist.

The Iowa Disaster Services Division was notified of these remaining inadequacies in correspondence in January, February, and March 1988, and in consideration of the seriousness of these issues, they were requested to address and correct each one.

In consideration of the seriousness of the planning inadequacies identified, the amount of time that has been available for the correction of these inadequacies, and the failure of the State of Iowa and Linn County to complete satisfactory revisions to the plans to correct the inadequcies, there is no longer reasonable assurance that the offsite radiological emergency planning site-specific to the Duane Arnold Energy Center is adequate to protect the health and safety of the public in the event of an accident at the site.

For further details with respect to this action refer to Docket File FEMA-REP-7-IA-3 maintained by the Regional Director, FEMA Region VII, 911 Walnut Street, 2nd Floor, Kansas City, Missouri 64106 (816-283-7060).

For the Federal Emergency Management Agency.

Joseph A. Moreland,

Acting Associate Director, State and Local Programs and Support.

[FR Doc. 88-8013 Filed 4-12-88; 8:45 am]

BILLING CODE 6718-20-M

FEDERAL MARITIME COMMISSION

Agreement(s) Filed

The Federal Maritime Commission hereby gives notice of the filing of the following agreement(s) pursuant to section 5 of the Shipping Act of 1984.

Interested parties may inspect and obtain a copy of each agreement at the Washington, DC Office of the Federal Maritime Commission, 1100 L Street NW., Room 10325. Interested parties may submit comments on each agreement to the Secretary, Federal Maritime Commission, Washington, DC 20573, within 10 days after the date of the **Federal Register** in which this notice appears. The requirements for comments are found in § 572.603 of Title 46 of the Code of Federal Regulations. Interested persons should consult this section before communicating with the Commission regarding a pending agreement.

Agreement No.: 203-011075-005.

Title: Central America Discussion Agreement.

Parties:

United States/Central America Liner Association
Marine bulk Carrier, Inc.
Nordana Line, Inc.
Nexos Line
Concorde Shipping Inc.
Thompson Shipping Co., Inc.
Maritima Juno, S.A.

Synopsis: The proposed amendment would add Transportees Navieros Equatorianos as a party to the agreement. The parties have requested a shortened review period.

Agreement No.: 232-011188.

Title: The Mitsui O.S.K. Lines, Ltd. and Nippon Yusen Kaisha Space Charter and Sailing Agreement in the Far East-U.S. Pacific Northwest Trades.

Parties:

Mitsui O.S.K. Lines, Ltd.
Nippon Yusen Kaisha

Synopsis: The proposed agreement would permit the parties to charter space aboard one another's vessels and to rationalize their sailings in the trade between ports in the Far East and ports on the U.S. Pacific Northwest Coast, including Alaska and inland points via such ports. The parties would each contribute up to 3 vessels to the agreement service, each vessel with a capacity of up to 3,000 TEU's.

By Order of the Federal Maritime Commission.

Joseph C. Polking,

Secretary.

Dated: April 8, 1988.

[FR Doc. 88-8058 Filed 4-12-88; 8:45 am]

BILLING CODE 6730-01-M

FEDERAL RESERVE SYSTEM

Credit and Commerce American Holdings, N.V. et al., Applications To Engage de Novo in Permissible Nonbanking Activities

The companies listed in this notice have filed an application under § 225.23(a)(1) of the Board's Regulation Y (12 CFR 225.23(a)(1)) for the Board's approval under section 4(c)(8) of the Bank Holding Company Act (12 U.S.C. 1843(C)(8)) and § 225.21(a) of Regulation Y (12 CFR 225.21(a)) to commence or to engage *de novo*, either directly or through a subsidiary, in a nonbanking activity that is listed in § 225.25 of Regulation Y as closely related to banking and permissible for bank holding companies. Unless otherwise noted, such activities will be conducted throughout the United States.

Each application is available for immediate inspection at the Federal Reserve Bank indicated. Once the application has been accepted for processing, it will also be avialable for inspection at the office of the Board Governors. Interested persons may express their views in writing on the question whether consummation of the proposal can "reasonably be expected to produce benefits to the public, such as greater convenience, increased competition, or gains in efficiency, that outweigh possible adverse effects, such as undue concentration of resources, decreased or unfair competition, conflicts of interests, or unsound banking practices." Any request for a hearing on this question must be accompanied by a statement of the reasons a written presentation would not suffice in lieu of a hearing, identifying specifically any questions of fact that are in dispute, summarizing the evidence that would be presented at a hearing, and indicating how the party commenting would be aggrieved by approval of the proposal.

Unless otherwise noted, comments regarding the applications must be received at the Reserve Bank indicated or the office of the Board of Governors not later than April 28, 1988.

A. Federal Reserve Bank of Richmond (Lloyd W. Bostian, Jr., Vice President) 701 East Byrd Street, Richmond, Virginia 23261:

1. *Credit and Commerce American Holdings, N.V.*, Curacao, Netherlands Antilles; Credit and Commerce American Investment, B.V., Amstedam, Netherlands; First American Corporation, Washignton, DC; and First American Bankshares, Inc., Washington, DC; to engage *de novo* through their subsidiary, 1stA Mortgage Corporation, Washignton, DC, in making, acquiring, and servicing, for its own account or for the account of others, loans secured principally by first and/or second mortgages on real property pursuant to §225.25(b)(1)(iii), and acting as an agent in the sale of credit life insurance and accident, health, and unemployment insurance in connection with such loans to § 225.25(bv)(8)(i) of the Board's Regulations Y.

B. Federal Reserve Bank of Atlanta (Robert E. Heck, Vice President) 104 Marietta Street, NW., Atlanta, Georgia 30303:

1. *Southeast Banking Corporation*, Miami, Florida; to engage *de novo* through its subsidiary, Southeast Mortgage Company, Miami, Florida, in providing to insurance companies certain servicing and adminsitrative services in connection with the insurance company's mailing solicitations for credit insurance including: (1) Providing to insurance companies access to its customer mailing lists; (2) Providing an endorsement letter as permitted by state law: (3) distributing to insured borrowers the insurance company's policies or certificates, claims forms and other forms nor notices; (4) billing, receiving and accounting kfor all premiums received from insured borrowers; (5) maintaining a separate account to hold premiums received from insured borrowers until remitted to the insurance company; and (6) performing clerical functions, including the mailing of insurance policies or certificates, endorsements, cancellations, premium due statements, termination notices, and performing such other related administrative funcitions pursuant to §§ 225.25(b)(1) and 225.25(b)(8) of the Board's Regulation Y. These activities will be conducted throughout the State of Florida.

C. Federal Reserve Bank of Chicago (David S. Epstein, Vice President) 230 South LaSalle Street, Chicago, Illinois 60690:

1. *The Marine Corporation*, Milwaukee, Wisconsin; to engage *de novo* through its subsidiary, The Marine Trust Company, N.A., Milwaukee, Wisconsin, in trust company activities and to expand the geographic scope of these activities to the entire State of Wisconsin pursuant to § 225.25(b)(3) of the Board's Regulation Y. Comments on this application must be received by May 4, 1988.

Board of Governors of the Federal Reserve System, April 7, 1988.

James McAfee,

Associate Secretary of the Board.

[FR Doc. 88-8002 Filed 4-12-88; 8:45 am]

BILLING CODE 6210-01-M

DG Bancshares, Inc.; Formation of, Acquisition by, or Merger of Bank Holding Companies

The company listed in this notice has applied for the Board's approval under section 3 of the Bank Holding Company Act (12 U.S.C. 1842) and section 225.14 of the Board's Regulation Y (12 CFR 225.24) to become a bank holding company or to acquire a bank or bank holding company. The factors that are considered in acting on the applications are set forth in section 3(c) of the Act (12 U.S.C. 1842(c)).

The application is available for immediate inspection at the Federal Reserve Bank indicated. Once the application has been accepted for processing, it will also be available for inspection at the offices of the Board of Governors. Interested persons may express their views in writing to the Reserve Bank indicated for that application or to the offices of the Board of Governors. Any comment on an application that requests a hearing must include a statement of why a written presentation would not suffice in lieu of a hearing, identifying specifically any questions of fact that are in dispute and

summarizing the evidence that would be presented at a hearing.

Comments regarding this application must be received not later than April 28, 1988.

A. **Federal Reserve Bank of Dallas** (W. Arthur Tribble, Vice President) 400 South Akard Street, Dallas, Texas 75222:

1. *DG Bankshares, Inc.*, Dallas, Texas; to become a bank holding company by acquiring 100 percent of the voting shares of Deposit Guaranty Bank, Dallas, Texas, a *de novo* bank.

In connection with this application, DG II Inc., Wilmington, Delaware, has applied to become a bank holding company.

Board of Governors of the Federal Reserve System, April 11, 1988.

James McAfee,

Associate Secretary of the Board.

[FR Doc. 88-8242 Filed 4-12-88; 8:45 am]

BILLING CODE 6210-01-M

Home Point Bancorp, Inc., et al.; Formations of; Acquisitions by; and Mergers of Bank Holding Companies; Correction

This notice corrects a previous **Federal Register** notice (FR Doc. 88-5556) published at page 8504 of the issue for Tuesday, March 15, 1988.

Under the Federal Reserve Bank of Boston, the entry for Home Point Bancorp, Inc. is revised to read as follows:

A. **Federal Reserve Bank of Boston** (Robert M. Brady, Vice President) 600 Atlantic Avenue, Boston, Massachusetts 02106:

1. *Home Port Bancorp, Inc.*, Nantucket, Massachusetts; to become a bank holding company by acquiring 100 percent of the voting shares of Nantucket Savings Bank, Nantucket, Massachusetts.

Comments on this application must be received by April 27, 1988.

Board of Governors of the Federal Reserve System, April 7, 1988.

James McAfee,

Associate Secretary of the Board.

[FR Doc. 88-7999 Filed 4-12-88; 8:45 am]

BILLING CODE 6210-01-M

Change in Bank Control; Acquisitions of Shares of Banks or Bank Holding Companies; David B. Lilly, Jr. et al.

The notificants listed below have applied under the Change in Bank Control Act (12 U.S.C. 1817(j)) and § 225.41 of the Board's Regulation Y (12 CFR 225.41) to acquire a bank or bank holding company. The factors that are considered in acting on the notices are set forth in paragraph 7 of the Act (12 U.S.C. 1817(j)(7)).

The notices are available for immediate inspection at the Federal Reserve Bank indicated. Once the notices have been accepted for processing, they will also be available for inspection at the offices of the Board of Governors. Interested persons may express their views in writing to the Reserve Bank indicated for that notice or to the offices of the Board of Governors. Comments must be received not later than April 29, 1988.

A. **Federal Reserve Bank of Richmond** (Lloyd W. Bostian, Jr., Vice President) 701 East Byrd Street, Richmond, Virginia 23261:

1. *David B. Lilly, Jr.*, Middleburg, Virginia; to acquire up to 16.5 percent of the voting shares of Harvest Bancorp, Inc., Hamilton, Virginia, and thereby indirectly acquire The Farmers & Merchants National Bank of Hamilton, Hamilton, Virginia.

B. **Federal Reserve Bank of Chicago** (David S. Epstein, Vice President) 230 South LaSalle Street, Chicago, Illinois 60690:

1. *Richard & Mary Omdahl:* Mary Omdahl, custodian for Sarah Omdahl; Timothy Rennes; Shirley Rosera, and Kopish, Miron, Boyle, Topel and Miron Profit Sharing Trust; to acquire 41.05 percent of the voting shares of Peshtigo National Bancorporation, Inc., Peshtigo, Wisconsin, and thereby indirectly acquire The Peshtigo National Bank, Peshtigo, Wisconsin.

C. **Federal Reserve Bank of St. Louis** (Randall C. Sumner, Vice President) 411 Locust Street, St. Louis, Missouri 63166:

1. *First National Bank of Phillips County Employee Stock Ownership Plan*, Helena, Arkansas, and its trustees, Bart R. Lindsey, Henry M. Richmond, and James A. Early; to acquire 15.42 percent of the voting shares of First Delta Corporation, Helena, Arkansas, and thereby indirectly acquire First National Bank of Phillips County, Helena, Arkansas.

D. **Federal Reserve Bank of Kansas City** (Thomas M. Hoenig, Senior Vice President) 925 Grand Avenue, Kansas City, Missouri 64198:

1. *Charles C. McKelvey*, Lawton, Oklahoma; to acquire 1.43 percent of the voting shares of B.O.E. Bancshares, Inc., Elgin, Oklahoma, and thereby indirectly acquire Bank of Elgin, Elgin, Oklahoma.

E. **Federal Reserve Bank of Dallas** (W. Arthur Tribble, Vice President) 400 South Akard Street, Dallas, Texas 75222:

1. *LBT Corporation Employee Stock Ownership Plan*, Shreveport, Louisiana; to acquire 14.95 percent of the voting shares of LBT Corporation, Shreveport, Louisiana, and thereby indirectly acquire Louisiana Bank & Trust.

Board of Governors of the Federal Reserve System, April 7, 1988.

James McAfee,

Associate Secretary of the Board.

[FR Doc. 88-8003 Filed 4-12-88; 8:45 am]

BILLING CODE 6210-01-M

Northern Trust Corp.; Acquisition of Company Engaged in Nonbanking Activities

The organization listed in this notice has applied under § 225.23 (a) or (f) of the Board's Regulation Y (12 CFR 225.23 (a) or (f)) for the Board's approval under section 4(c)(8)) of the Bank Holding Company Act (12 U.S.C. 1843(c)(8)) and § 225.21(a) of Regulation Y (12 CFR 225.21(a)) to acquire or control voting securities or assets of a company engaged in a nonbanking activity. Unless otherwise noted, such activities will be conducted throughout the United States.

The application is available for immediate inspection at the Federal Reserve Bank indicated. Once the application has been accepted for processing, it will also be available for inspection at the offices of the Board of Governors. Interested persons may express their views in writing on the question whether consummation of the proposal can "reasonably be expected to produce benefits to the public, such as greater convenience, increased competition, or gain in efficiency, that outweigh possible adverse effects, such as undue concentration of resources, decreased or unfair competition, conflicts of interests, or unsound banking practices." Any request for a hearing on this question must be accompanied by a statement of the reasons a written presentation would not suffice in lieu of a hearing, identifying specifically any questions of fact that are in dispute, summarizing the evidence that would be presented at a hearing, and indicating how the party commenting would be aggrieved by approval of the proposal.

Comments regarding the application must be received at the Reserve Bank indicated or the offices of the Board of Governors not later than April 28, 1988.

A. **Federal Reserve Bank of Chicago** (David S. Epstein, Vice President) 230 South LaSalle Street, Chicago, Illinois 60690:

1. *Northern Trust Corporation*, Chicago, Illinois; to engage *de novo* through its subsidiary, Northern Investment Management, Chicago, Illinois, in providing investment

advisory services with respect to futures contracts on stock indexes and options on such futures contracts as permitted by Order. *Citicorp*, 73 Federal Reserve Bulletin 220 (1987).

Board of Governors of the Federal Reserve System, April 7, 1988.

James McAfee,

Associate Secretary of the Board.

[FR Doc. 88-8004 Filed 4-12-88; 8:45 am]

BILLING CODE 6210-01-M

Progressive Bank, Inc. et al.; Acquisitions of Companies Engaged in Permissible Nonbanking Activities

The organizations listed in this notice have applied under § 225.23(a)(2) or (f) of the Board's Regulation Y (12 CFR 225.23(a)(2) or (f)) for the Board's approval under section 4(c)(8) of the Bank Holding Company Act (12 U.S.C. 1843(c)(8)) and § 225.21(a) of Regulation Y (12 CFR 225.21(a)) to acquire or control voting securities or assets of a company engaged in a nonbanking activity that is listed in § 225.25 of Regulation Y as closely related to banking and permissible for bank holding companies. Unless otherwise noted, such activities will be conducted throughout the United States.

Each application is available for immediate inspection at the Federal Reserve Bank indicated. Once the application has been accepted for processing, it will also be available for inspection at the offices of the Board of Governors. Interested persons may express their views in writing on the question whether consummation of the proposal can "reasonably be expected to produce benefits to the public, such as greater convenience, increased competition, or gains in efficiency, that outweigh possible adverse effects, such as undue concentration of resources, decreased or unfair competition, conflicts of interests, or unsound banking practices." Any request for a hearing on this question must be accompanied by a statement of the reasons a written presentation would not suffice in lieu of a hearing, identifying specifically any questions of fact that are in dispute, summarizing the evidence that would be presented at a hearing, and indicating how the party commenting would be aggrieved by approval of the proposal.

Unless otherwise noted, comments regarding each of these applications must be received at the Reserve Bank indicated for the application or the offices of the Board of Governors not later than April 29, 1988.

A. Federal Reserve Bank of New York (William L. Rutledge, Vice President) 33 Liberty Street, New York, New York 10045:

1. *Progressive Bank, Inc.*, Pawling, New York; to acquire Lakewood Associates, Millbrook, New York, and thereby engage in performing appraisals of real estate pursuant to § 225.25(b)(13) of the Board's Regulation Y.

B. Federal Reserve Bank of Cleveland (John J. Wixted, Jr., Vice President) 1455 East Sixth Street, Cleveland, Ohio 44101:

1. *Banc One Corporation*, Columbus, Ohio; to acquire First Municipal Leasing Corporation, Denver, Colorado, and thereby engage in leasing, lending, and servicing leases and loans pursuant to §§ 225.25(b)(1) and (b)(5) of the Board's Regulation Y.

C. Federal Reserve Bank of Chicago (David S. Epstein, Vice President) 230 South LaSalle Street, Chicago, Illinois 60690:

1. *Manufacturers National Corporation*, Detroit, Michigan; to acquire Wilson, Kemp & Associates, Inc., Detroit, Michigan, and thereby engage in providing investment and/or financial advice to individuals, pensions, trusts, estates, charitable organizations, profit sharing plans, corporations and other business entities pursuant to § 225.25(b)(4) of the Board's Regulation Y.

D. Federal Reserve Bank of Kansas City (Thomas M. Hoenig, Senior Vice President) 925 Grand Avenue, Kansas City, Missouri 64198:

1. *United Community Corporation*, Oklahoma City, Oklahoma; to acquire 50 percent of the voting shares of Unitech, Inc., Oklahoma City, Oklahoma, and thereby engage in data processing activities through a joint-venture arrangement with Unitech, Inc., pursuant to § 225.25(b)(7) of the Board's Regulation Y.

Board of Governors of the Federal Reserve System, April 7, 1988.

James McAfee,

Associate Secretary of the Board.

[FR Doc. 88-8000 Filed 4-12-88; 8:45 am]

BILLING CODE 6210-01-M

Security National Corp. et al.; Formations of; Acquisitions by; and Mergers of Bank Holding Companies

The companies listed in this notice have applied for the Board's approval under section 3 of the Bank Holding Company Act (12 U.S.C. 1842) and § 225.14 of the Board's Regulation Y (12 CFR 225.14) to become a bank holding company or to acquire a bank or bank holding company. The factors that are considered in acting on the applications are set forth in section 3(c) of the Act (12 U.S.C. 1842(c)).

Each application is available for immediate inspection at the Federal Reserve Bank indicated. Once the application has been accepted for processing, it will also be available for inspection at the offices of the Board of Governors. Interested persons may express their views in writing to the Reserve Bank or to the offices of the Board of Governors. Any comment on an application that requests a hearing must include a statement of why a written presentation would not suffice in lieu of a hearing, identifying specifically any questions of fact that are in dispute and summarizing the evidence that would be presented at a hearing.

Unless otherwise noted, comments regarding each of these applications must be received not later than May 4, 1988.

A. Federal Reserve Bank of Atlanta (Robert E. Heck, Vice President) 104 Marietta Street, NW., Atlanta, Georgia 30303:

1. *Security National Corporation*, Maitland, Florida; to acquire 100 percent of the voting shares of Security National Bank of Osceola, Kissimmee, Florida, a *de novo* bank.

2. *Southern Bancorp, Inc.*, Miami, Florida; to become a bank holding company by acquiring 57 percent of the voting shares of Alliance National Bank, Miami, Florida. Comments on this application must be received by April 29, 1988.

B. Federal Reserve Bank of Chicago (David S. Epstein, Vice President) 230 South LaSalle Street, Chicago, Illinois 60690:

1. *Lamoine Bancorp, Inc.*, LaHarpe, Illinois; to become a bank holding company by acquiring 100 percent of the voting shares of State Bank of LaHarpe, LaHarpe, Illinois.

2. *St. Francis Bancshares, Inc.*, St. Francis, Wisconsin; to become a bank holding company by acquiring 78.20 percent of the voting shares of St. Francis State Bank, St. Francis, Wisconsin.

C. Federal Reserve Bank of St. Louis (Randall C. Sumner, Vice President) 411 Locust Street, St. Louis, Missouri 63166:

1. *Douglas County Bancshares, Inc.*, Ava, Missouri; to become a bank holding company by acquiring at least 92.5 percent of the voting shares of Douglas County National Bank, Ava, Missouri.

D. Federal Reserve Bank of Minneapolis (James M. Lyon, Vice President) 250 Marquette Avenue, Minneapolis, Minnesota 55480:

1. *Minnesota-Wisconsin Bancshares, Inc.*, Newport, Minnesota; to merge with Carver County Bancshares, Inc., Chaska,

Minnesota, and thereby indirectly acquire Carver County State Bank, Chaska, Minnesota. Comments on this application must be received by April 29, 1988.

2. *Taylor Bancshares, Inc.*, North Mankato, Minnesota; to acquire 99.10 percent of the voting shares of Fidelity State Bank of Fairfax, Fairfax, Minnesota.

3. *Taylor Bancshares, Inc.*, North Mankato, Minnesota; to acquire 99.47 percent of the voting shares of Fidelity State Bank of Hector, Hector, Minnesota.

E. **Federal Reserve Bank of Kansas City** (Thomas M. Hoenig, Senior Vice President) 925 Grand Avenue, Kansas City, Missouri 64198:

1. *DB Holding Company*, Omaha, Nebraska; to become a bank holding company by acquiring 91.9 percent of the voting shares of Omaha State Corporation, Omaha, Nebraska, and thereby indirectly acquire Omaha State Bank, Omaha, Nebraska. Comments on this application must be received by May 2, 1988.

2. *Southwest Missouri Bancshares, Inc.*, to acquire The Bank of Jasper, Jasper, Missouri.

F. **Federal Reserve Bank of Dallas** (W. Arthur Tribble, Vice President) 400 South Akard Street, Dallas, Texas 75222:

1. *Central Bancorp, Inc.*, Garland, Texas; to become a bank holding company by acquiring 100 percent of the voting shares of Central Bank, Garland, Texas.

Board of Governors of the Federal Reserve System, April 7, 1988.

James McAfee,

Associate Secretary of the Board.

[FR Doc. 88-8001 Filed 4-12-88; 8:45 am]

BILLING CODE 6210-01-M

FEDERAL TRADE COMMISSION

Granting of Request for Early Termination of the Waiting Period Under the Premerger Notification Rules

Section 7A of the Clayton Act, 15 U.S.C. 18a, as added by Title II of the Hart-Scott-Rodino Antitrust Improvements Act of 1976, requires persons contemplating certain mergers or acquisitions to give the Federal Trade Commission and the Assistant Attorney General advance notice and to wait designated periods before consummation of such plans. Section 7A(b)(2) of the Act permits the agencies, in individual cases, to terminate this waiting period prior to its expiration and requires that notice of this action be published in the Federal Register.

The following transactions were granted early termination of the waiting period provided by a law and the premerger notification rules. The grants were made by the Federal Trade Commission and the Assistant Attorney General for the Antitrust Division of the Department of Justice. Neither agency intends to take any action with respect to these proposed acquisitions during the applicable waiting period:

TRANSACTIONS GRANTED EARLY TERMINATION BETWEEN: 032288 AND 040188

Name of Acquiring person, Name of Acquired person, Name of Acquired entity	PMN No.	Date terminated
Paloma Industries, Ltd., Manufacturing Acquisition Associates, LP, Pace Industries, Inc	88-1047	03/22/88
American Exploration Company, Kirby Exploration Company, Inc., Kirby Exploration Company, Inc	88-1159	03/22/88
Banc Homes Savings Association, DeRose Industries, Inc., DeRose Industries, Inc	88-0174	03/23/88
Kenneth R. Thomson, Ms. Jean L. Scudder, Tri-County Newspapers, Inc., c/o MediaNews Group, Inc	88-0995	03/23/88
Pablo Brener, RFS Equity Partners, Boys Markets, Inc	88-1128	03/23/88
Carlton Communications Plc, Modern Video Productions, Inc., Modern Video Productions, Inc	88-1131	03/24/88
Roderick M. Bryden, BCE Inc., Rolph-Clark-Stone Packaging Corporation	88-1132	03/24/88
Affiliated Publications, Inc., Tichi Wilkerson Kassel, H.R. Industries, Inc	88-1144	03/24/88
Chemical New York Corporation, Temple-Inland Inc., AFCO Industries, Inc	88-1189	03/24/88
CSX Corporation, ECON Associates Limited Partnership, ECON Associates Limited Partnership	89-0927	03/25/88
Wolseley plc, Thomas Stern, Familian Northwest, Inc	88-1058	03/25/88
T&N plc, Raychem Corporation, The Bentley-Harris Manufacturing Co	88-1085	03/25/88
MAXXAM Group Inc., KaiserTech Limited, KaiserTech Limited	88-1089	03/25/88
McCain Inc., Peter J. Taggares, Sr., Chef-Reddy Foods Corporation, et al	88-1091	03/25/88
Merrill Lynch & Co., Inc., The Equitable Life Assurance Society of the U.S., Tandem Financial Group, Inc	88-1116	03/25/88
RLC Corp., Baggett Transportation Company, Baggett Transportation Company	88-1145	03/25/88
The Retail Property Trust, Menlo Park Associates, Menlo Park Associates	88-1150	03/25/88
Alexander & Baldwin, Inc., Pacific Resources, Inc., Pacific Resources, Inc	88-1152	03/25/88
Clayton & Dubilier Private Equity Fund III Ltd. P'ship, The B.F. Goodrich Company, Goodrich Tire, Inc. & Automotive Proving Grounds, Inc	88-1161	03/25/88
American Home Products Corporation, R. Hugh Uhlmann and Paul Uhlmann, Jr., The Uhlmann Company	88-1166	03/25/88
Norfolk Capital Group PLC, Peter John de Savary, St. James's Club California Inc	88-1176	03/25/88
Consolidated Natural Gas Company, Transco Energy Company, TXP Operating Company	88-1180	03/25/88
Infinity Broadcasting Corporation, Metropolitan Broadcasting Holding Company, Metropolitan Broadcasting Corporation of Detroit	88-1184	03/25/88
Pyro Energy Corp., Jim R. Smith, J. Smith Coal, Inc	88-1185	03/25/88
Nestle S.A., Wailea Beach Hotel Partners, Wailea Beach Hotel Partners	88-1186	03/25/88
The Newhall Land and Farming Company, Newhall Resources, a California Limited Partnership, Newhall Resources, a California Limited Partnership	88-1187	03/25/88
QMS, Inc., Imagen Corporation, Imagen Corporation	88-1104	03/28/88
Sonoco Products Company, Federal Paper Board Company, Inc., a paperboard mill	88-1137	03/28/88
Corning Glass Works, International Clinical Laboratories, Inc., International Clinical Laboratories, Inc	88-1142	03/28/88
Martis S. A., Grolier Incorporated, Grolier Incorporated	88-1157	03/28/88
Monsanto Company, The Andersons, The Andersons	88-1158	03/28/88
Ply-Gem Industries, Inc., Wolverine Technologies Inc., Wolverine Technologies Inc	88-1169	03/29/88
Whirlpool Corporation, Roper Corporation, Roper Corporation	88-1068	03/30/88
Whirlpool Corporation, Roper Corporation, Roper Corporation	88-1069	03/30/88
Compagnie Generale de Eaux, Sierra Spring Water Company, Sierra Spring Water Company	88-1071	03/30/88
The BOC Group plc, Robert E. White, Southeastern Management Corporation	88-1079	03/30/88
Societe Nationale Elf Aquitaine, Metco North America, Inc., Metco North American, Inc	88-1080	03/30/88
Mitsubishi Rayon Company, Limited, Metco North America, Inc., Metco North American, Inc	88-1081	03/30/88
General Electric Company, Roper Corporation, Roper Corporation	88-1121	03/30/88
Menasha Corporation, FL Industries Holdings, Inc., The Thermotech Division of FL Industries, Inc	88-1125	03/30/88

TRANSACTIONS GRANTED EARLY TERMINATION BETWEEN: 032288 AND 040188—Continued

Name of Acquiring person, Name of Acquired person, Name of Acquired entity	PMN No.	Date terminated
Meredith Corporation, Walter and Karen Strauss, Craftways Corporation	88-1138	03/30/88
Lincoln National Corporation, Covenant Mutual Insurance Company, Covenant Corporation	88-1201	03/30/88
The British Petroleum Company plc, Lear Petroleum Corporation, Lear Petroleum Corporation	88-1028	03/31/88
The Perkin/ Elmer Corporation, Nelson Analytical, Inc., Nelson Analytical, Inc	88-1088	03/31/88
IFINT S.A., Korody-Colyer Corporation, Korody-Colyer Corporation	88-1163	03/31/88
Lincoln Management Company, Inc., Estate of Howard R. Hughes, Jr., Hughes Properties, Inc	88-1182	03/31/88
Eastern Utilities Associates, David F. LaRoche, NECO Enterprises, Inc	88-0808	04/01/88
Mason Best Company, Mason Best Company, Somerset House Corporation	88-1073	04/01/88
Georgia-Pacific Corporation, AFP Holdings, L.P., A California Limited Partnership, AFP Holdings, L.P. & Amador Central Railroad	88-1135	04/01/88
The Seagram Company, Ltd., BCI Associates, L.P., Tropicana Products, Inc	88-1147	04/01/88
Kooperativa forbundet, Saratoga Partners, L.P., Capital City Products Company	88-1156	04/01/88
Guy W. Millner, Ronald Berman, Cosmopolitan Care Corporation	88-1198	04/01/88
Christopher C. Skase, HRI Group, Inc., HRI Group, Inc	88-1206	04/01/88
Gulf + Western Inc., Advanta Corp, Advanta Corp	88-1217	04/01/88
TPI Enterprises, Inc., Shoney's South, Inc., Shoney's South Inc	88-1239	04/01/88
Trump Capital Corporation, Crown Auto, Inc., Crown Auto, Inc	88-1240	04/01/88
Prudential-Bache Energy Income Ltd. Partnership VP-20, Martin D. Gruss, Pegasus Holding Corp	88-1253	04/01/88
Prudential-Bache Energy Income Ltd. Partnership VP-21, Martin D. Gruss, Pegasus Holding Corp	88-1254	04/01/88
Amerada Hess Corporation, Martin D. Gruss, Pegasus Holding Corp. and Jogruss Oil Corp	88-1258	04/01/88

FOR FURTHER INFORMATION CONTACT: Sandra M. Peay, Contract Representative, Premerger Notification Office, Bureau of Competition, Room 301, Federal Trade Commission, Washington, DC 20580, (202) 326-3100.

By direction of the Commission.

Benjamin I. Berman,

Acting Secretary.

[FR Doc. 88-8019 Filed 4-12-88 8:45 am]

BILLING CODE 6750-01-M

DEPARTMENT OF HEALTH AND HUMAN SERVICES

Centers for Disease Control

Cooperative Agreements; Preventive Health Services-Tuberculosis Control; Availability of Funds for Fiscal Year 1988

Introduction

The Centers for Disease Control (CDC) announces the availability of funds for Fiscal Year 1988 for Cooperative Agreements for Tuberculosis Control Programs. The funds received by these programs are directed primarily to: (1) Support of outreach activities necessary for effective prevention and control of tuberculosis in high incidence population groups and selected geographical areas and (2) support of surveillance activities and epidemiologic studies with respect to the impact of human immunodeficiency virus (HIV) infection and acquired immunodeficiency syndrome (AIDS) on tuberculosis.

Authority

This program is authorized by the Public Health Service Act: section 301(a) (42 U.S.C. 241(a)), as amended; and section 317(a) (42 U.S.C. 247b(a)). Regulations governing programs for preventive health services are codified at 42 CFR Part 51b. Subpart A contains general provisions relating to these programs. The Catalog of Federal Domestic Assistance Number is 13.116.

Eligible Applicants

Eligible applicants for this program are the official public health agencies of State and local governments, including the District of Columbia, the Commonwealth of Puerto Rico, the Virgin Islands, Guam, the Northern Mariana Islands, the Federated States of Micronesia, the Republic of the Marshall Islands, the Republic of Palau, and American Samoa. Although new applications from States and local areas will be considered, priority for funding will be given to currently funded cooperative agreements. New awards to local areas, if any, will be limited to those local public health agencies which are not currently receiving assistance directly or as a sub-recipient under a cooperative agreement and which are serving a high-priority urban area with a city of at least 250,000 population which reported 200 or more new cases of tuberculosis in each of the years 1985 and 1986 or had an incidence rate greater than the rate for United States cities over 250,000 population in 1985 (19.5 per 100,000 population) for both 1985 and 1986. In order to ensure effective coordination of State/local/Federal resources, applications for funding from local areas will only considered if there is no existing State assisted program and the State does not apply for funds under this announcement.

Availability of Funds

Approximately $8,000,000 is available in Fiscal Year 1988 to fund up to 67 competing cooperative agreements. Although new applications will be considered, priority for funding will be given to continuation of existing programs. Funding estimates outlined below may vary and are subject to change.

1. Approximately $6,600,000 is available to fund up to 67 awards for outreach activities necessary for effective prevention and control of tuberculosis in high incidence population groups. Awards are expected to range from $20,000 to $470,000 with an average award of $100,000.

2. Approximately $400,000 is available to fund up to 67 awards to match tuberculosis and AIDS registries for cases of both diseases. Awards are expected to range from $1,000 to $50,000 with an average award of $6,000.

3. Approximately $700,000 is available to fund 1 to 3 HIV/AIDS/TB epidemiologic studies with awards ranging from $150,000 to 350,000 with an average award of $230,000.

4. Approximately $300,000 is available to fund up to 39 seroprevalence studies in those areas not currently participating in the CDC funded HIV Seroprevalence Family of Surveys. Awards are expected to range from $2,500 to $25,000 with an average award of $7,500.

Other Submission and Review Requirements

Applications are subject to review as governed by Executive Order 12372, Intergovernmental Review of Federal Programs.

Application Submission and Deadline

The original and two copies of the application must be submitted to Nancy C. Bridger, Grants Management Specialist, Grants Management Branch, Procurement and Grants Office, Centers for Disease Control, 255 East Paces Ferry Road, NE., Room 300, Atlanta, Georgia 30305 on or before April 15, 1988.

Information

Information on application procedures, copies of application forms, and other material may be obtained from Marsha Driggans, Grants Management Specialist, Grants Management Branch, Procurement and Grants Office, Centers for Disease Control, 255 East Paces Ferry Road, NE., Room 300, Atlanta, Georgia 30305, telephone (404) 842-6575 or FTS 236-6575.

Technical assistance may be obtained from John J. Seggerson or Chris Hayden, Division of Tuberculosis Control, Center for Prevention Services, Centers for Disease Control, Atlanta, Georgia 30333, telephone (404) 639-2519 or FTS 236-2519.

Dated: April 8, 1988.

Robert L. Foster,

Acting Director, Office of Program Support, Centers for Disease Control.

[FR Doc. 88-8156 Filed 4-12-88; 8:45 am]

BILLING CODE 4160-18-M

National Institutes of Health

National Heart, Lung, and Blood Institute; Meeting

Notice is hereby given of the meeting of the National Cholesterol Education Program Coordinating Committee, sponsored by the National Heart, Lung, and Blood Institute, on May 17, 1988, from 9 a.m. to 3 p.m., at the Holiday Inn Bethesda, 8120 Wisconsin Avenue, Bethesda, Maryland 20814, (301) 652-2000.

The meeting is open to the public. The Coordinating Committee is meeting to define the priorities, activities, and needs of the participating groups in the National Cholesterol Education Program. Attendance by the public will be limited to space available.

For the agenda, list of participants, and meetings summary, contact: Dr. James I. Cleeman, Coordinator, National Cholesterol Education Program, Office of Prevention, Education, and Control, National Heart, Lung, and Blood Institute, National Institutes of Health, C-200, Bethesda, Maryland 20892, (301) 496-0554.

Dated: April 4, 1988.

James B. Wyngaarden,

Director, NIH.

[FR Doc. 88-8105 Filed 4-12-88; 8:45 am]

BILLING CODE 4140-01-M

DEPARTMENT OF HOUSING AND URBAN DEVELOPMENT

Office of Administration

[Docket No. N-88-1790]

Submission of Proposed Information Collections to OMB

AGENCY: Office of Administration, HUD.

ACTION: Notices.

SUMMARY: The proposed information collection requirements described below have been submitted to the Office of Management and Budget (OMB) for review, as required by the Paperwork Reduction Act. The Department is soliciting public comments on the subject proposals.

ADDRESS: Interested persons are invited to submit comments regarding these proposals. Comments should refer to the proposal by name and should be sent to: John Allison, OMB Desk Officer, Office of Management and Budget, New Executive Office Building, Washington, DC 20503.

FOR FURTHER INFORMATION CONTACT: David S. Cristy, Reports Management Officer, Department of Housing and Urban Development, 451 7th Street, Southwest, Washington, DC 20410; telephone (202) 755-6050. This is not a toll-free number. Copies of the proposed forms and other available documents submitted to OMB may be obtained from Mr. Cristy.

SUPPLEMENTARY INFORMATION: The Department has submitted the proposals for the collection of information, as described below, to OMB for review, as required by the Paperwork Reduction Act (44 U.S.C. Chapter 35).

The Notices list the following information: (1) The title of the information collection proposal; (2) the office of the agency to collect the information; (3) the description of the need for the information and its proposed use; (4) the agency form number, if applicable; (5) what members of the public will be affected by the proposal; (6) how frequently information submissions will be required; (7) an estimate of the total numbers of hours needed to prepare the information submission; (8) whether the proposal is new or an extension, reinstatement, or revision of an information collection requirement; and (9) the names and telephone numbers of an agency official familiar with the proposal and of the OMB Desk Officer for the Department.

Authority: Section 3507 of the Paperwork Reduction Act, 44 U.S.C. 3507; Section 7(d) of the Department of Housing and Urban Development Act, 42 U.S.C. 3535(d).

Date: March 31, 1988.

John T. Murphy,

Director, Information Policy and Management Division.

Proposal: Property Disposition Handbook—Multifamily Properties
Office: Housing
Description of the Need for the Information and its Proposed Use: As owner or mortgagee-in-possession of an apartment project, HUD hires an independent contractor to act as project manager to collect certain information. This information is submitted to HUD so that the status can be checked on how the project is being managed. The information is used to determine whether or not a former tenant may be held responsible for damage to the vacated apartment.
Form Number: HUD Handbook 4315.1
Respondents: Individuals or Households, Businesses or Other For-Profit, and Small Businesses or Organizations
Frequency of Respondents: On Occasion and Other
Estimated Burden Hours: 9,855
Status: Reinstatement
Contact: Richard E. Harrington, HUD, (202) 755-7220; John Allison, OMB, (202) 395-6880.

Date: March 31, 1988.

Proposal: Pet Ownership in Assisted Rental Housing for the Elderly or Handicapped
Office: Public and Indian Housing
Description of the Need for the Information and Its Proposed Use: Public housing agencies (PHAs) are required to give written notices to elderly or handicapped applicants that pets are permitted, working animals excluded from regulation requirements. A copy of pet rules and a written notice must be given to each applicant when offered a unit. Leases that prohibit pets may be amended upon tenants' request
Form Number: None
Respondents: State or Local Governments
Frequency of Respondents: On Occasion
Estimated Burden Hours: 250
Status: Reinstatement
Contact: Joyce Anne Bassett, HUD, (202) 426-0744; John Allison, OMB, (202) 395-6880

Date: March 28, 1988.

Proposal: Monitoring and Technical Assistance Handbook for the Congregate Housing Services Program (CHSP), Handbook 4640.1
Office: Housing
Description of the Need for the Information and its Proposed Use: This information is needed for regular reporting for bennial renewals, no-cost extensions, updates, and narratives needed to meet grant terms. This report must be filled out by tenants in order for grantees to determine their eligibility for benefits. The information is used by HUD to monitor reports and guidelines
Form Number: None
Respondents: Non-Profit Institutions and Small Businesses or Organizations
Frequency of Respondents: On Occasion, Monthly, Quarterly, and Annually
Estimated Burden Hours: 1,403
Status: Reinstatement
Contact: Jerold S. Nachison, HUD, (202) 755-5866; John Allison, OMB, (202) 395-6880.

Date: March 12, 1988.

Proposal: Local Appeals to Single Family Mortgage Limits
Office: Housing
Description of the Need for the Information and its Proposed Use: The FHA single family maximum mortgage limits is $67,500. Section 404 of the Housing and Community Development Act of 1987 permits HUD to raise the maximum mortgage amount up to $101,250 in areas with high prevailing housing sales prices to reflect regional difference in the cost of housing. HUD will raise the limits above $67,500 if housing sales price data is received from interested parties (primarily homebuilders, mortgage lenders, and realtors) which justifies an increase
Form Number: None
Respondents: Businesses or Other For-Profit
Frequency of Respondents: On Occasion
Estimated Burden Hours: 3,200
Status: Revision
Contact: Joseph C. Bates, HUD, (202) 426-7212; John Allison, OMB, (202) 395-6880.

Date: March 9, 1988.

[FR Doc. 88-8101 Filed 4-12-88; 8:45 am]

BILLING CODE 4210-01-M

DEPARTMENT OF THE INTERIOR

Bureau of Land Management

[CA-020-08-4050-90]

California; Susanville District Advisory Council Meeting and Tour

AGENCY: Bureau of Land Management, Interior, Susanville District Advisory Council, Susanville, California 96130.

ACTION: Notice of meeting and tour.

SUMMARY: Notice is hereby given, in accordance with Pub. L. 94-579 (FLPMA), that a District Advisory Council meeting and tour will be held on Wednesday, May 11, 1988. The meeting will begin at 8:00 a.m. at the CDF Fire Station, Bieber California. The agenda will include discussions on Winter Range, Nevada Water Rights, Riparian Initiative, and Wild Horse Issues. The meeting is open to the public, and interested persons may make oral statements to the Council, or file a written statement for the Council's consideration.

Anyone wishing to make an oral statement must notify the Bureau of Land Management, Susanville District Manager, 705 Hall Street, Susanville, California 96130, by May 4, 1988. Depending upon the number of persons wishing to make oral statements, a person time limit may be established.

After the meeting, the DAC will tour the Malacha Power Project. The tour will be from 11:00 a.m. to 3:30 p.m.

Summary of minutes of the Council meeting will be maintained in the Susanville District Office, and will be available for public inspection and reproduction (during regular business hours) within 30 days following the meeting.

For further information contact: John Tyson, Public Affairs Office at (916-257-5381).

John W. Bosworth,
Acting, District Manager.

[FR Doc. 88-8135 Filed 4-12-88; 8:45 am]

BILLING CODE 4310-40-M

Office of Surface Mining Reclamation and Enforcement

Availability of Decision and Statement of Reasons for Decision on North Chickamauga Creek Unsuitability Petition

AGENCY: Office of Surface Mining Reclamation and Enforcement, Interior.

ACTION: Availability of decision and statement of reasons for decision on North Chickamauga Creek unsuitability petition.

SUMMARY: The Director of the Office of Surface Mining Reclamation and Enforcement (OSMRE) has reached a decision on a petition to designate lands as unsuitable for surface coal mining operations in the North Chickamauga Creek area of Tennessee.

ADDRESS: Copies of the Statement of Decision and the Statement of Reasons for the Decisions may be obtained from Willis L. Gainer, Office of Surface Mining Reclamation and Enforcement, 530 Gay Street SW., Suite 500, Knoxville, Tennessee 37902; telephone 615/673-4348.

FOR FURTHER INFORMATION CONTACT: Willis L. Gainer, Office of Surface Mining Reclamation and Enforcement, 530 Gay Street SW., Suite 500, Knoxville, Tennessee 37902; telephone 615/673-4348.

SUPPLEMENTARY INFORMATION: The Guardians of North Chickamauga Creek, Inc., and the Sierra Club filed a petition with OSMRE on April 30, 1986, to designate approximately 52,227 acres of land in the North Chickamauga Creek watershed area (in Hamilton and Sequatchie Counties, Tennessee) as unsuitable for surface coal mining operations. The petition was filed in accordance with section 522 of the Surface Mining Control and Reclamation Act of 1977 (SMCRA) and its implementing regulations at 30 CFR 942.764. The petition alleges that the area under consideration should be designated as unsuitable for all types of surface coal mining operations because (1) such operations will be incompatible with existing state and local land-use plans and programs; (2) such operations will affect fragile and historic lands and could result in significant damage to important historic and cultural values; (3) such operations could result in significant damage to important esthetic values and natural systems, including rare and endangered species; (4) such operations could result in a substantial loss or reduction of long-range productivity of water supply; and (5) because most of the existing public roads in the watershed are inadequate for use as haulroads.

Pursuant to 30 CFR 942.764, OSMRE analyzed the allegations of the petition and, on April 30, 1987, held a public hearing. OSMRE published statement (PED/EIS) in September 1987 (52 FR 34416).

A copy of the Statement of Decision signed by the Director appears as an appendix to this notice. Additional copies of the Statement of Decision and copies of the Statement of Reasons (not attached to this notice) are available at

no cost from the offices listed above under **ADDRESSES**. OSMRE has sent copies of these documents to all interested parties of record.

Additional information on the petition can be found in **Federal Register** notices of September 2, 1986 (Notice of Intent to Prepare a Draft Combined Petition Evaluation Document and Environmental Evaluation Document and Environmental Impact Statement, including Holding a Scoping Meeting, 50 FR 31177); March 27, 1987 (Notice of Availability of Draft PED/EIS and Public Hearing, 52 FR 10174); and September 4, 1987 (Availability of Final Petition Evaluation Document/Environmental Impact Statement, 52 FR 33659).

Date: March 17, 1988.

Jed D. Christensen,

Director, Office of Surface Mining Reclamation and Enforcement.

Petition To Designate Certain Lands in the North Chickamauga Creek Watershed, Tennessee, as Unsuitable for Surface Coal Mining Operations

Decision

Under section 522 of the Surface Mining Control and Reclamation Act of 1977 (SMCRA), the Office of Surface Mining Reclamation and Enforcement (OSMRE) has been petitioned by the Guardians of North Chickamauga Creek, Inc., Hixson, Tennessee, and the Sierra Club, Chattanooga, Tennessee, to designate certain private lands in the North Chickamauga Creek watershed, Hamilton and Sequatchie Counties, Tennessee, as unsuitable for all surface coal mining operations.

As required by sections 522 (c) and (d) of SMCRA, public comments on the North Chickamauga Creek unsuitability petition were sought; a public hearing was held near the petition area in Hixson, Tennessee; and a detailed petition evaluation/environmental impact statement (PED/EIS), was prepared by OSMRE. The PED/EIS evaluated the petition, potential impacts from OSMRE-developed scenarios to represent surface coal mining operations in the petition area, and the impacts of alternative petition decisions available to the decisionmaker on the entire range of resource elements in the social and physical environment.

I have considered the following information in the course of making this decision on the petition: The draft PED/EIS and final PED/EIS documents, the allegations of the petitioners, and the comments in the form of oral testimony at the public hearing and written submissions received during the comment period (which ended June 1, 1987) of Federal agencies, State agencies, local agencies, and members of the public and industry. On the basis of all information that is in the record of this proceeding and the information contained in the public record of the Rock Creek watershed petition, including the final petition evaluation/environmental impact statement (OSMRE PE-6/EIS-22), I have reached the following decision:

I do not designate any part of the petition area as unsuitable for surface coal mining and reclamation operations.

A "Statement of Reasons," which accompanies this decision, explains the basis for any conclusion not to designate the North Chickamauga Creek watershed petition area as unsuitable for surface coal mining operations.

Copies of this decision will be sent to all parties in this proceeding. The decision will become final on the date the "Statement of Reasons" is issued. Any appeal from this decision must be filed within 60 days from that date in the United States District Court for the District of Tennessee, as required by SMCRA section 526(a)(1).

Jed D. Christensen,

Director, Office of Surface Mining Reclamation and Enforcement.

Date: March 17, 1988.

[FR Doc. 88-8012 Filed 4-12-88; 8:45 am]

BILLING CODE 4310-05-M

INTERNATIONAL TRADE COMMISSION

[Investigation No. TA-201-61]

Import Investigations; Certain Knives

AGENCY: International Trade Commission.

ACTION: Institution of an investigation under section 201 of the Trade Act of 1974 (19 U.S.C. 2251) and scheduling of hearings on injury and remedy.

SUMMARY: Following receipt of a petition filed on March 25, 1988, on behalf of the American Cutlery Manufacturers Association, the United States International Trade Commission instituted investigation No. TA-201-61 under section 201 of the Trade Act of 1974 to determine whether the following knives are being imported into the United States in such increased quantitites as to be a substantial cause of serious injury, or the threat thereof, to the domestic industry producing articles like or directly competitive with the imported articles:

Pen knives, pocket knives, and other knives (except razor blade type knives), all the foregoing which have folding blades or other than fixed blades or attachments, provided for in items 649.71, 649.73, 649.75, 649.77, 649.79, 649.81, and 649.83, of the Tariff Schedules of the United States (TSUS); [1]

Cleavers with their handles, provided for in TSUS item 650.03; [2]

Kitchen and butcher knives with their handles, provided for in TSUS items 650.13, 650.15, and 650.21; [3]

Steak knives with their handles, provided for in TSUS items 650.13, 650.15, 650.17, and 650.21; [4]

Hunting knives and sheath-type knives with their handles, provided for in TSUS items 650.13, 650.17, 650.19, and 650.21. [5]

The Commission will make its determination in this investigation by September 20, 1988 (see section 201(d)(2) of the act (19 U.S.C. 2251(d)(2))).

For further information concerning the conduct of this investigation, hearing procedures, and rules of general application, consult the Commission's Rules of Practice and Procedure, Part 206, subparts A and B (19 CFR Part 206), and Part 201, Subparts A through E (19 CFR Part 201).

EFFECTIVE DATE: March 25, 1988.

FOR FURTHER INFORMATION CONTACT: Brian Walters (202-252-1198), Office of Investigations, U.S. International Trade Commission, 500 E Street SW., Washington, DC 20436. Hearing-impaired individuals are advised that information on this matter can be obtained by contacting the Commission's TDD terminal on 202-252-1809. Persons with mobility impairments who will need special assistance in gaining access to the Commission should contact the Office of the Secretary at 202-252-1000.

SUPPLEMENTARY INFORMATION:

Participation in the Investigation

Persons wishing to participate in the investigation as parties must file an entry of appearance with the Secretary to the Commission, as provided in § 201.11 of the Commission's rules (19 CFR 201.11), not later than twenty-one (21) days after publication of this notice in the **Federal Register**. Any entry of appearance filed after this date will be referred to the Chairman, who will determine to accept the late entry for

[1] These articles are provided for in subheading 8211.93.00 in the proposed Harmonized Tariff Schedule of the United States (USITC Pub. 2030).

[2] These articles are provided for in subheading 8214.90.30 in the proposed Harmonized Tariff Schedule of the United States (USITC Pub. 2030).

[3] These articles are provided for in subheading 8211.92.20 and 8211.92.80 in the proposed Harmonized Tariff Schedule of the United States (USITC Pub. 2030).

[4] These articles are provided for in subheading 8211.91.50 and 8211.91.80 in the proposed Harmonized Tariff Schedule of the United States (USITC Pub. 2030).

[5] These articles are provided for in subheading 8211.92.40, 8211.92.60, and 8211.92.80 in the proposed Harmonized Tariff Schedule of the United States (USITC Pub. 2030).

BEST COPY AVAILABLE

good cause shown by the person desiring to file the entry.

Service List

Pursuant to § 201.11(d) of the Commission's rules (19 CFR 201.11(d)), the Secretary will prepare a service list containing the names and addresses of all persons, or their representatives, who are parties to this investigation upon the expiration of the period for filing entries of appearance. In accordance with § 201.16(c) of the rules (19 CFR 201.16(c)), each document filed by a party to the investigation must be served on all other parties to the investigation (as identified by the service list), and a certificate of service must accompany the document. The Secretary will not accept a document for filing without a certificate of service.

Injury Phase

The Commission will hold a hearing in connection with the injury phase of this investigation beginning at 9:30 a.m. on June 21, 1988, at the U.S. International Trade Commission Building, 500 E Street SW., Washington, DC. Requests to appear at the hearing should be filed in writing with the Secretary to the Commission not later than the close of business (5:15 p.m.) on June 10, 1988. All persons desiring to appear at the hearing and make oral presentations, with the exception of public officials and persons not represented by counsel, should file prehearing briefs and attend a prehearing conference to be held at 9:30 a.m. on June 15, 1988, in the main Commission hearing room (room 101) of the U.S. International Trade Commission Building. The deadline for filing prehearing briefs is June 16, 1988. Posthearing briefs must be submitted not later than the close of business on June 28, 1988. Confidential material should be filed in accordance with the procedures described below.

Parties are encouraged to limit their testimony at the hearing on injury and the hearing on remedy (see discussion of remedy phase below) to a nonconfidential summary and analysis of material contained in prehearing briefs and to information not available at the time the prehearing brief was submitted. Any written materials submitted at these hearings must be filed in accordance with the procedures described below and any confidential materials must be submitted at least three (3) working days prior to the hearing (see § 201.6(b)(2) of the Commission's rules (19 CFR 201.6(b)(2))).

Remedy Phase

In the event that the Commission makes an affirmative injury determination in this investigation, the Commission will hold a hearing on the issue of remedy beginning at 9:30 a.m. on August 18, 1988, at the U.S. International Trade Commission Building, 500 E Street SW., Washington, DC. Requests to appear at the hearing should be filed in writing with the Secretary to the Commission not later than the close of business (5:15 p.m.) on August 5, 1988. All persons desiring to appear at the hearing and make oral presentations, with the exception of public officials and persons not represented by counsel, should file prehearing briefs and attend a prehearing conference to be held at 9:30 a.m. on August 11, 1988, in the main Commission hearing room (room 101) of the U.S. International Trade Commission Building. The deadline for filing prehearing remedy briefs is August 12, 1988. Posthearing remedy briefs must be submitted not later than the close of business on August 23, 1988. Remedy briefs must conform with the requirements of § 201.6 of the Commission's rules.

Written Submissions

As mentioned, parties to this investigation may file prehearing and posthearing briefs by the dates shown above. In addition, any person who has not entered an appearance as a party to the investigation may submit a written statement of information pertinent to the subject of the injury phase of this investigation on or before June 28, 1988. Such statements pertinent to the remedy phase must be submitted on or before August 23, 1988. A signed original and fourteen (14) copies of each submission must be filed with the Secretary to the Commission in accordance with § 201.8 of the Commission's rules (19 CFR 201.8). All written submissions except for confidential business data will be available for public inspection during regular business hours (8:45 a.m. to 5:15 p.m.) in the Office of the Secretary to the Commission.

Any business information for which confidential treatment is desired shall be submitted separately. The envelope and all pages of such submissions must be clearly labeled "Confidential Business Information." Confidential submissions and requests for confidential treatment must conform with the requirements of § 201.6 of the Commission's rules (19 CFR 201.6).

Authority: This investigation is being conducted under the authority of section 201 of the Trade Act of 1974. This notice is published pursuant to § 201.10 of the Commission's rules (19 CFR 201.10).

By order of the Commission.

Kenneth R. Mason,

Secretary.

Issued: April 7, 1988.

[FR Doc. 88-8091 Filed 4-12-88; 8:45 am]

BILLING CODE 7020-02-M

[Investigation No. 337-TA-267]

Certain Minoxidil Power, Salts and Compositions for Use in Hair Treatment; Decision To Review Initial Determination

AGENCY: International Trade Commission.

ACTION: Review of initial determination.

SUMMARY: Notice is given that the Commission has determined to review portions of the presiding administrative law judge (ALJ's) initial determination (ID) that there is a violation of section 337 of the Tariff Act of 1930 (19 U.S.C. 1337) in the above-captioned investigation.

FOR FURTHER INFORMATION CONTACT: Wayne W. Herrington, Esq., Office of the General Counsel, U.S. International Trade Commission, 500 E Street SW., Washington, DC 20436, telephone 202-252-1092.

SUPPLEMENTARY INFORMATION: This action is taken pursuant to Commission rules 210.53-210.56 (19 CFR 210.53-210.56). On February 16, 1988, the ALJ issued an ID finding a violation of section 337. The Commission investigative attorney (IA) filed a petition for review. Complainant The Upjohn Company filed a response to the IA's petition. No government agency comments were received.

Having examined the record in this investigation, including the ID, the petition for review, and the response thereto, the Commission concluded that review of portions of the ID is warranted. Specifically, the Commission will review the following issues relating to industry, prevention, and injury:

1. Whether sufficient evidence exists in the record to show that the Food and Drug Administration (FDA) will approve complainant The Upjohn Company's new drug application for its topical minoxidil compositions which are the subject of this investigation, and when.

2. Whether an "industry * * * in the United States" can be found to exist within the meaning of section 337, where that "industry" is not presently authorized to make sales as a result of a regulatory scheme, such as the FDA regulatory scheme involved here.

3. Whether, assuming an "industry * * * in the United States" can not be found to exist within the meaning of section 337, such an

industry is prevented from being established in this case as a result of infringing imports.

4. Whether it is possible, as a matter of law, in this case, to find that allegedly infringing imports have a tendency to substantially injure a domestic industry which is not authorized to make sales.

5. Whether sufficient evidence, particularly of a quantitative nature, exists in the record to show a tendency to substantially injure, and where in the record such evidence can be found.

If the Commission finds that a violation of section 337 has occurred, it may issue (1) an order which could result in the exclusion of the subject articles from entry into the United States and/or (2) cease and desist orders which could result in one or more respondents being required to cease and desist from engaging in unfair acts in the importation and sale of such articles. Accordingly, the Commission is interested in receiving written submissions which address the form of remedy, if any, which should be ordered.

If the Commission concludes that a violation of section 337 has occurred and contemplates some form of remedy, it must consider the effect of that remedy upon the public interest. The factors which the Commission will consider include the effect that an exclusion order and/or cease and desist order(s) would have upon (1) the public health and welfare, (2) competitive conditions in the U.S. economy, (3) the U.S. production of articles which are like or directly competitive with those which are the subject to the investigation, and (4) U.S. consumers. The Commission is therefore interested in receiving written submissions which address the aforementioned public interest factors in the context of this investigation.

If the Commission finds that a violation of section 337 has occurred and orders some form of remedy, the President has 60 days to approve or disapprove the Commission's action. During this period, the subject articles would be entitled to enter the United States under a bond in an amount determined by the Commission and prescribed by the Secretary of the Treasury. The Commission is therefore interested in receiving written submissions concerning the amount of the bond which should be imposed.

Written Submissions

The parties to the investigation and interested government agencies are encouraged to file written submissions on the issues under review and on the issues of remedy, the public interest, and bonding. Complainant and the Commission investigative attorney are also requested to submit a proposed exclusion order and/or proposed cease and desist order(s) for the Commission's consideration. Persons other than the parties and government agencies may file written submissions addressing the issues of remedy, the public interest, and bonding. Written submissions must be filed by April 14, 1988. Reply submissions must be filed by April 21, 1988.

Additional Information

Persons submitting written submissions must file the original document and 14 true copies thereof with the Office of the Secretary on or before the deadlines stated above. Any person desiring to submit a document (or portion thereof) to the Commission in confidence must request confidential treatment unless the information has already been granted such treatment during the proceedings. All such requests should be directed to the Secretary to the Commission and must include a full statement of the reasons why the Commission should grant such treatment. *See* 19 CFR 201.6. Documents containing confidential information approved by the Commission for confidential treatment will be treated accordingly. All nonconfidential written submissions will be available for public inspection at the Office of the Secretary.

Copies of the nonconfidential version of the ID and all other nonconfidential documents filed in connection with this investigation are available for inspection during official business hours (8:45 a.m. to 5:15 p.m.) in the Office of the Secretary, U.S. International Trade Commission, 500 E Street SW., Washington, DC 20436, telephone 202-252-1000.

Hearing-impaired individuals are advised that information on this matter can be obtained by contacting the Commission's TDD terminal on 202-252-1810.

By order of the Commission.

Kenneth R. Mason,

Secretary.

Issued: April 5, 1988.

[FR Doc. 88-8092 Filed 4-12-88; 8:45 am]

BILLING CODE 7020-02-M

[Investigation No. 337-TA-270]

Certain Noncontact Tonometers; Commission Determination Not To Review an Initial Determination

AGENCY: International Trade Commission.

ACTION: Nonreview of an initial determination ("ID") finding no violation of section 337 of the Tariff Act of 1930 (19 U.S.C. 1337).

SUMMARY: Notice is hereby given that the U.S. International Trade Commission has determined not to review an ID finding no violation of section 337 in the above-referenced investigation, except that the Commission takes no position with respect to two parts of the ID.

FOR FURTHER INFORMATION CONTACT: Timothy M. Reif, Esq., Office of the General Counsel, U.S. International Trade Commission, telephone 202-252-1061.

SUPPLEMENTARY INFORMATION: On June 18, 1987, Cambridge Instruments, Inc. ("Cambridge") of Buffalo, New York, a domestic manufacturer of noncontact tonometers, filed a complaint and a motion for temporary relief, alleging a violation of section 337 of the Tariff Act of 1930 in the unlawful importation and sale of certain noncontact tonometers that allegedly infringe claims 3 and 4 of U.S. Letters Patent 3,585,849 (the " '849 patent"), claim 1 of U.S. Letters Patent 3,756,073 (the "073 patent"), and claim 1 of U.S. Letters Patent 4,386,611 (the " '611 patent"), the effect or tendency of which is to destroy or substantially injure an industry, efficiently and economically operated, in the United States.

The Commission instituted an investigation of Cambridge's complaint and published a notice of investigation in the **Federal Register** on July 22, 1987 (52 FR 27,595). The respondents named in the notice of investigation were: Tokyo Optical Co., Ltd., Topcon Instrument Corporation of America, Keeler Instruments Inc., Keeler Holdings, Ltd., Keeler, Ltd., and PA Consulting Services, Ltd. On January 5, 1988, the Commission determined not to review an ID terminating PA Consulting Services, Ltd. as a respondent on the basis of a settlement agreement.

On December 29, 1987, the presiding administrative law judge (the "ALJ") issued an ID granting a Cross-Motion for Partial Termination With Prejudice, terminating the investigation as to the '073 and '611 patents. On January 28, 1988, the Commission determined not to review that ID. The investigation as to the '073 and '611 patents was thereby terminated with prejudice, leaving only the '849 patent subject to investigation.

On February 12, 1988, the ALJ issued an ID in the investigation finding no violation of section 337. Complainant submitted a petition for review, and responses were received from the Commission investigative attorney and from the respondents. No agency comments were received. The Commission determined not to review

the ID, thereby adopting the ALJ's determination, except that the Commission took no position with respect to two statements in the ID. First, the Commission took no position with respect to the ALJ's statements on infringement under the doctrine of equivalents (ID at 80), because such infringement was not alleged by the complainant and the ALJ did not analyze the issued in the ID. In addition, the Commission does not necessarily agree with the ALJ's statements concerning (1) the scope and effect of §§ 210.54 and 210.56 of the Commission's rules, 19 CFR 210.54 and 210.56, and (2) the decision of the U.S. Court of Appeals for the Federal Circuit in *Beliot Corp. v. U.S.I.T.C.* (ID at pages 10–11, *erratum*).

Copies of the nonconfidential version of the ALJ's ID and all other nonconfidential documents filed in connection with this investigation are available for inspection during official business hours (8:45 a.m. to 5:15 p.m.) in the Office of the Secretary, U.S. International Trade Commission, 500 E Street, SW., Washington, DC 20436, telephone 202–252–1000. Hearing impaired persons are advised that information on the matter can be obtained by contacting the Commission's TTD terminal on 202–252–1810.

By order of the Commission.

Kenneth R. Mason,

Secretary.

Issued: April 1, 1988.

[FR Doc. 88–8094 Filed 4–12–88; 8:45 am]

BILLING CODE 7020-02-M

[Investigation No. 337-TA-275]

Certain Nonwoven Gas Filter Elements; Nonreview of Initial Determination

AGENCY: International Trade Commission.

ACTION: Notice of Commission decision not to review an initial determination granting complainant's motion for summary determination on certain issues.

SUMMARY: Notice is hereby given that the Commission has determined not to review an initial determination (ID) issued by the presiding administrative law judge (ALJ) in the above-captioned investigation granting complainant Freudenberg Nonwovens Limited Partnership's motion for summary determination that the importation and sale of repsondent's nonwoven gas filter elements have the effect or tendency to substantially injure an efficiently and economically operated domestic industry.

FOR FURTHER INFORMATION CONTACT: Tim Yaworski, Esq., Office of the General Counsel, telephone 202–252–1096. Hearing impaired individuals may obtain information on this matter by contacting the Commission's TDD terminal at 202–252–1810.

SUPPLEMENTARY INFORMATION: The Commission's action was taken pursuant to authority contained in 19 U.S.C. 1337 and 19 CFR 210.53.

The subject investigation is being conducted to determine whether there is a violation of section 337 of the Tariff Act of 1930 (19 U.S.C. 1337) in the importation or sale of certain nonwoven gas filter elements which allegedly infringe claims 1–4 and 6–9 of U.S. Letters Patent 4,056,375. Complainant is the patent owner, Freudenberg Nonwovens Limited Partnership. The respondents are Filtrair, B.V., the Dutch manufacturer and exporter of the accused gas filter elements, and APB Corp., the U.S. importer and distributor of those elements. *See* 52 FR 32182 (Aug. 26, 1987) as amended by 52 FR 44234 (Nov. 16, 1987).

On February 5, 1988, complainant filed a motion for a summary determination that the alleged unfair acts of respondents have the effect or tendency to destroy or substantially injure an efficiently operated domestic industry (Motion No. 275–4). Respondents did not contest the motion. On March 1, 1988, the ALJ issued an ID (Order No. 13) granting complainant's motion.

No petitions for review of the ID or government agency comments were received.

Nonconfidential copies of the ALJ's ID and all other nonconfidential documents filed in connection with this investigation are available for inspection during official business hours (8:45 a.m. to 5:15 p.m.) in the Office of the Secretary, U.S. International Trade Commission, 500 E Street SW., Room 112, Washington, DC 20436, telephone 202–252–1802.

By order of the Commission.

Kenneth R. Mason,

Secretary.

Issued: April 1, 1988.

[FR Doc. 88–8095 Filed 4–12–88; 8:45 am]

BILLING CODE 7020-02-M

INTERSTATE COMMERCE COMMISSION

[Finance Docket No. 31239]

Norfolk and Western Railway Co. and Wabash Railroad Co. Renewal of Lease Exemption

Norfolk and Western Railway Company (NW) and Wabash Railroad Company (Wabash) have agreed to renew and extend a lease by NW of the properties of Wabash for an additional term of 8 years to commence October 16, 1988. The Wabash properties are located in Michigan, Ohio, Indiana, Illinois, Missouri, and Iowa. NW and Wabash have agreed to amend the existing lease of the Wabash properties under a sixth amendment to the intial lease of 8 years, which was authorized by the Commission in Finance Docket No. 21510 *et al., Norfolk & W. Ry. Co. and New York, C. & St. L. RY. Co. Merger,* 324 I.C.C. 1 (1964). The Commission has twice approved 8-year extensions of the initial lease. *See* Finance Docket No. 21511, *Norfolk and Western Railway Company-Lease-Wabash Railroad Company, et al.,* Fourth Supplemental Decision (not printed), served August 19, 1980, and Fifth Supplemental Decision (not printed), served September 3, 1980.

NW and Wabash expect to execute the sixth amendment extending the lease on or about April 1, 1988.

This notice is filed under 49 CFR 1180.2(d)(4). Petitions to revoke the exemption under 49 U.S.C. 10505(d) may be filed at any time. The filing of a petition to revoke will not stay the transaction.

As a condition to sue of this exemption, any employees affected by the lease transaction will be protected pursuant to *Mendocino Coast Ry., Inc.—Lease and Operate,* 354 I.C.C. 732 (1978) and 360 I.C.C. 653 (1980).

Dated: April 7, 1988.

By the Commission, Joseph H. Dettmar, Acting Director, Office of Proceedings.

Noreta R. McGee,

Secretary.

[FR Doc. 88–8033 Filed 4–12–88; 8:45 am]

BILLING CODE 7035-01-M

DEPARTMENT OF JUSTICE

Lodging of Consent Decree Pursuant to Clean Water Act; Blytheville, AK

In accordance with Departmental policy, 28 CFR 50.7, notice is here given that on April 5, 1988, a proposed Consent Decree in *United States* v. *City of Blytheville, Arkansas and the State of Arkansas,* was lodged with the United

States District Court for the Eastern District of Arkansas. This agreement resolves a judicial enforcement action brought by the United States against the city of Blytheville which alleged violations of the Clean Water Act, Blytheville's National Pollutant Discharge Elimination System (NPDES) permits and Environmental Protection Agency Administrative Orders issued against Blytheville at the three Blytheville municipal wastewater treatment plants.

The consent decree provides for the design and construction of additional or upgraded wastewater treatment facilities necessary to obtain and maintain compliance with Blytheville's final effluent limitations by July 1, 1988, and compliance with interim effluent limits until then. The agreement further provides for stipulated penalties for failure to comply with the provisions of the decree and for the payment of a civil penalty of $37,500 for past violations of the Clean Water Act.

The Department of Justice will receive for a period of thirty (30) days from the date of this publication, comments relating to the proposed Decree. Comments should be addressed to the Assistant Attorney General of the Land and Natural Resources Division, Department of Justice, Washington, DC 20530, and should refer to: *United States v. City of Blytheville, Arkansas and the State of Arkansas*, D.J. Ref. 90-5-1-1-2350.

The proposed Consent Decree may be examined at the office of the United States Attorney or the regional office of the Environmental Protection Agency as follows:

U.S. Attorney

U.S. Attorney, Eastern District of Arkansas, Box #1129, Little Rock, Arkansas 70501

EPA

Office of Regional Counsel, Region VI, 1201 Elm Street, Dallas, Texas 75270

A copy of the Consent Decree may be examined at the Environmental Enforcement Section, Land and Natural Resources Division of the Department of Justice, Room 1515, Ninth Street and Pennsylvania Avenue, NW., Washington, DC 20530. A copy of the proposed Consent Decree may be obtained by mail from the Environmental Enforcement Section, Land and Natural Resources Division of the Department of Justice. In requesting a copy of the Decree, please enclose a check payable to the Treasury of the United States in the amount of $1.90 for reproduction costs.

Roger J. Marzulla,

Assistant Attorney General, Land and Natural Resources Division.

[FR Doc. 88-8007 Filed 4-12-88; 8:45 am]

BILLING CODE 4410-01-M

Lodging of Consent Decree Under Comprehensive Environmental Response, Compensation and Liability Act; B.R. MacKay & Sons, etc.

In accordance with Departmental policy, notice is hereby given that on April 5, 1988, a proposed Consent Decree in *United States v. B.R. MacKay and Sons, Inc., et al.*, Civil Action No. 85 C 6925, was lodged with the United States District Court for the Northern District of Illinois. The proposed Consent Decree provides for the recovery of certain costs incurred by the Environmental Protection Agency under section 104 of the Comprehensive Environmental Response, Compensation and Liability Act, 42 U.S.C. 9604, in responding to the release of cyanide-contaminated film chips at various locations in Cook and Lee Counties, Illinois.

The Department of Justice will receive for a period of thirty (30) days from the date of this publication comments relating to the proposed Consent Decree. Comments should be addressed to the proposed Consent Decree. Comments should be addressed to the Assistant Attorney General of the Land and Natural Resources Division, Department of Justice, Washington, DC 20530, and should refer to *United States v. B.R. MacKay and Sons, Inc., et al.*, D.J. reference # 90-11-3-77.

The proposed Consent Decree may be examined at the office of the United States Attorney, Northern District of Illinois, 219 South Dearborn Street, Chicago, Illinois 60604, at the Region V office of the United States Environmental Protection Agency, 230 South Dearborn Street, Chicago, Illinois 60604, and at the Environmental Enforcement Section, Land and Natural Resources Division of the Department of Justice, Room 1515, 9th Street and Pennsylvania Avenue NW., Washington, DC 20530. A copy of the proposed Consent Decree may be obtained in person or by mail from the Environmental Enforcement Section, Land and Natural Resources Division of the Department of Justice. In requesting a copy, please enclose a check in the amount of $2.00 payable to the Treasurer of the United States.

Roger J. Marzulla,

Acting Assistant Attorney General, Land and Natural Resources Division.

[FR Doc. 88-8008 Filed 4-12-88; 8:45 am]

BILLING CODE 4410-01-M

[Civil Action No. 83-2162-0]

Lodging of Consent Decree; Carolawn Co., Inc. et al.

United States of America, Plaintiff, v. Carolawn Company, Inc.; Et Al. Defendants.

Pursuant to 28 CFR 50.7, section 122(d)(2) of the Comprehensive Environmental Response, Compensation, and Liability Act of 1980 ("CERCLA"), 42 U.S.C. 9622(d)(2), and section 7003(d) of the Resource Conservation and Recovery Act ("RCRA"), 42 U.S.C. 9673(d), a proposed Consent Decree has been lodged on March 30, 1988 with the Court in this civil action, after having been concurred to and signed by all parties. These regulations and statutes require that the United States provide public notice and an opportunity for comment on the propopsed Consent Decree. After the requisite **Federal Register** notice is published, the time period for comments has run, and the comments, if any have been evaluated, the Court will be further advised as to any action which may be required by the Court at that time. During the pendency of the **Federal Register** notice comment period no action is required of the Court.

Quentin C. Pair,

Attorney-in-Charge for the United States, Environmental Enforcement Section, United States Department of Justice, P.O. Box 7611, Ben Franklin Station, Washington, D.C. 20044 (202) 633-2593.

[FR Doc. 88-8005 Filed 4-12-88; 8:45 am]

BILLING CODE 4410-01-M

Lodging of Consent Decree Pursuant to the Comprehensive Environmental Response, Compensation and Liability Act; Virginia Electric and Power Co.

In accordance with Department policy, 28 CFR 50.7, notice is hereby given that on April 6, 1988 a proposed consent decree was lodged with the United States District Court for the Eastern District of Virginia in *United States v. Virginia Electric and Power Company*, Civil Action No. 88-40-NN. The proposed consent decree addresses groundwater contamination and threatened surface water contamination

at and in the vicinity of several fly ash disposal pits located in York County, Virginia (the "Site"). The decree requires defendant Virginia Electric and Power Company ("Virginia Power") to take steps to remedy existing groundwater contamination and to prevent further contamination of both groundwater and surface water at and in the vicinity of the Site. The decree also requires Virginia Power to reimburse the United States for response costs incurred in connection with the Site.

The Department of Justice will receive comments relating to the proposed consent decree for a period of thirty (30) days from the date of this publication. Comments should be addressed to the Assistant Attorney General, Land and Natural Resources Division, Department of Justice, Washington, DC 20530, and should refer to *United States v. Virginia Electirc and Power Company*, DJ Ref. 90-11-2-239.

The proposed consent decree may be examined at the Office of the United States Attorney, Eastern District of Virginia, Room 409, United States Post Office & Courthouse, Granby Street, Norfolk, Virginia, and at the Region III office of the Environmental Protection Agency, 841 Chestnut Building, Philadelphia, Pennsylvania. Copies of the consent decree may be examined at the offices of the Environmental Enforcement Section, Land and Natural Resources Division, Department of Justice, Room 1515, Ninth Street and Pennsylvania Avenue, NW., Washington, DC 20530. A copy of the consent decree may be obtained in person or by mail from the Environmental Enforcement Section, Land and Natural Resources Division, Department of Justice. In requesting a copy, please enclose a check in the amount of $1.80 (10 cents per page reproduction cost) payable to the Treasurer of the United States.

Roger J. Marzulla,

Acting Assistant Attorney General, Land and Natural Resources Division.

[FR Doc. 88-8010 Filed 4-12-88; 8:45 am]

BILLING CODE 4410-01-M

Antitrust Division

National Cooperative Research Act of 1984; Joint Venture To Conduct Research on Trap-Based Diesel Emission Control System; Engine Manufacturers Association

Notice is hereby given that, pursuant to section 6(a) of the National Cooperative Research Act of 1984, 15 U.S.C. 4301 *et seq* ("the Act"), that Engine Manufacturers Association ("EMA") has filed written notification on behalf of EMA and the Ontario Research Foundation ("ORF") simultaneously with the Attorney General and the Federal Trade Commission disclosing a change in the membership of the project. The notifications were filed for the purpose of invoking the Act's provisions limiting the recovery of antitrust plaintiffs to actual damages under specified circumstances. Specifically, MMC Services, Inc. became a participant in the Project.

Accordingly, at present the members of the EMA are those companies listed below:

Briggs & Stratton Corporation
Caterpillar, Inc.
Cummins Engine Company, Inc.
Deere & Company
Detroit Diesel Corporation
Deutz Corporation
Ford Motor Company
Hercules Engines, Inc.
Iveco Trucks of North America
Kohler Company
Mack Trucks, Inc.
Mercedes-Benz Truck Company
MMC Services, Inc.
Navistar International Transportation Corp.
Onan Corporation
Perkins Engines, Inc.
Saab-Scania of America, Inc.
Teledyne Total Power
Volvo GM Heavy Duty Truck Corporation
Waukesha Engine Division, Dresser Industries, Inc.

With the exception of Briggs & Stratton Corporation, Kohler Company, Teledyne Total Power, and Waukesha Engine Division Dresser Industris, Inc., all current members of EMA are participants in the project.

On June 9, 1986, EMA filed its original notification pursuant to section 6(a) of the Act. The Department of Justice published a notice in the **Federal Register** pursuant to section 6(b) of the Act on July 17, 1986, 51 FR 25956.

Joseph H. Widmar,

Director of Operations, Antitrust Division.

[FR Doc. 88-8009 Filed 4-12-88; 8:45 am]

BILLING CODE 4410-01-M

DEPARTMENT OF LABOR

Mine Safety and Health Administration

Advisory Committee on Standards and Regulations for Diesel-Powered Equipment in Underground Coal Mines; Meeting

AGENCY: Mine Safety and Health Administration, Labor.

ACTION: Notice of advisory committee meeting.

SUMMARY: This notice provides the date, time, place, and agenda summary for the fourth meeting of the Mine Safety and Health Administration Advisory Committee on Standards and Regulations for Diesel-Powered Equipment in Underground Coal Mines.

FOR FURTHER INFORMATION CONTACT: Patricia W. Silvey, Director, Office of Standards, Regulations and Variances, Mine Safety and Health Administration, Room 631, Ballston Tower No. 3, 4015 Wilson Boulevard, Arlington, Virginia 22203; phone (703) 235-1910.

SUPPLEMENTARY INFORMATION: Pursuant to the authority contained in sections 101 and 102(c) of the Federal Mine Safety and Health Act of 1977, a public meeting of the Adivisory Committee on Standards and Regulations for Diesel-Powered Equipment in Underground Coal Mines will be held between the hours of 8:30 a.m. and 5:00 p.m. on May 2, 1988, at the Inhalation Toxicology Research Institute, Lovelace Biomedical and Environmental Research Institute, Building 9200, Kirtland Air Force Base East, Albuquerque, New Mexico. Those persons planning to attend the meeting on May 2 should notify Ms. Jennifer Pitts, Mine Safety and Health Administration, Office of Technical Support, Room 937, 4015 Wilson Boulevard, Arlington, Virginia 22203; phone (703) 235-1582.

On May 3, a public meeting of the Advisory Committee will be held between the hours of 8:30 a.m. and 5:00 p.m. at the Albuquerque Marriott Hotel, 2101 Louisiana Boulevard NE., Albuquerque, New Mexico 87110, phone (505) 881-6800.

This nine-member advisory committee was formed to advise and make recommendations to the Secretary of Labor on safety and health standards and regulations related to the use of diesel equipment in underground coal mines.

The agenda for this meeting will include discussions on the Mine Safety and Health Administration draft standards for diesel equipment operated outby the last open cross-cut. Safety

requirements for diesel equipment which may be included under 30 CFR Part 75 will also be discussed.

Official records of the meeting will be available for public inspection at the Office of Technical Support, Mine Safety and Health Administration, Room 913A, 4015 Wilson Boulevard, Arlington, Virginia 22203; phone (703) 235-1570.

Signed at Arlington, Virginia this 8th day of April, 1988.

David C. O'Neal,

Deputy Assistant Secretary for Mine Safety and Health.

[FR Doc. 88-8061 Filed 4-12-88; 8:45 am]

BILLING CODE 4510-43-M

NATIONAL AERONAUTICS AND SPACE ADMINISTRATION

[88-35]

NASA Advisory Council (NAC), Aeronautics Advisory Commitee (AAC); Meeting Change

AGENCY: National Aeronautics and Space Administration.

ACTION: Notice of meeting change.

Federal Register Citation of Previous Announcement: 53 FR 8707, Notice Number 88-24, March 16, 1988.

Previously Announced Times and Dates of Meeting: April 7, 1988, 9:30 a.m. to 4 p.m.

Changes in the Meeting: Date changed to May 3, 1988, 9:30 a.m. to 4 p.m.

CONTACT PERSON FOR INFORMATION: Mr. Doug Kirkpatrick, Office of Aeronautics and Space Technology, National Aeronautics and Space Administration, Washington, DC 20546, 202/453-2803.

John F. Duggan,

Director, General Management Division.

April 6, 1988.

[FR Doc. 88-8032 Filed 4-12-88; 8:45 am]

BILLING CODE 7510-01-M

NUCLEAR REGULATORY COMMISSION

Florida Power and Light Co.; Environmental Assessment and Finding of No Significant Impact

[Docket Nos. 50-250 and 50-251]

The U.S. Nuclear Regulatory Commission (the Commission) is considering issuance of license amendments to revise the Technical Specifications regarding D.C. Power Sources for the Turkey Point Plant, Units Nos. 3 and 4, located in Dade County, Florida.

Environmental Assessment

Identification of Proposed Action: The amendments would revise the surveillance and test requirements for station batteries and battery chargers to assure that the equipment operates as required. The revised surveillance and test requirements would be closer to those of a modern plant and would approach the requirements of the Standard Technical Specifications.

The Need for the Proposed Action: The revised surveillance and test requirements would upgrade the Turkey Point plant requirements. The revised requirements are more extensive, provide additional operational controls, are more in line with the battery manufacturer's recommendations, and are, on balance, a safety improvement.

Environmental Impacts of the Proposed Action: The proposed amendments affect only the frequency of surveillance tests and do not affect previously analyzed accidents. Thus, post-accident radiological releases will not differ from those previously determined and the proposed amendments do not otherwise affect facility radiological effluents, or any significant occupational exposures. Likewise, the amendments do not affect facility nonradiological effluents and have no other environmental impact. Therefore, the Commission concludes there are no measurable radiological or nonradiological environmental impacts associated with the proposed amendments.

Alternatives to the Proposed Action: Since the Commission has concluded there is no measurable environmental impact associated with the proposed amendments, any alternatives either will have no environmental impact or will have a greater environmental impact. The principal alternative to the amendments would be to deny the request for amendments. Such an action would result in environmental impacts which are equal to or greater than the proposed action.

Alternative Use of Resources: The action involves no use of resources not previously considered in the Final Environmental Statement (operating licenses) for the Turkey Point Plant, Unit Nos. 3 and 4, dated July 1972.

Agencies and Persons Consulted: The NRC staff did not consult with any other agencies or persons.

Finding of No Significant Impact

Based upon the foregoing environmental assessment, we conclude that the proposed action will not have a significant effect on the quality of the human environment. The Commission has, therefore, determined not to prepare an environmental impact statement for the proposed amendments.

For further details with respect to this actoin, see the application for amendments dated December 22, 1987, and supplemented March 17, 1988, which are available for public inspection at the Commission's Public Document Room, 1717 H. Street, NW. Washington, DC, and at the Environmental and Urban Affairs Library, Florida International University, Miami, Florida 33199.

Dated at Rockville, Maryland, this 7th day of April, 1988.

For the Nuclear Regulatory Commission.

Herbert N. Berkow,

Director, Project Directorate II-2, Division of Reactor Projects-I/II, Office of Nuclear Reactor Regulation.

[FR Doc. 88-8045 Filed 4-12-88; 8:45 am]

BILLING CODE 7590-01-M

[Docket No. 50-250 and 251]

Florida Power and Light Co.; Consideration of Issuance of Amendments to Facility Operating Licenses and Proposed No Significant Hazards Consideration Determination and Opportunity for Hearing

The U.S. Nuclear Regulatory Commission (the Commission) is considering issuance of amendments to Facility Operating License Nos. DPR-31 and DPR-41, issued to the Florida Power and Light Company (the licensee), for operation of the Turkey Point Plant, Units 3 and 4, located in Dade County, Florida.

The amendments would revise Technical Specification (TS) 3.4.4 to: (1) Require applicability in Modes 1, 2, 3, and 4, (2) allow one Component Cooling Water (CCW) heat exchanger to be out of service for 72 hours instead of the current 24 hours, (3) revise the action requirements to be consistent with the operational modes specified in Table 1.1 of the TS, and (4) reduce the time allowed to go from hot standby to cold shutdown to be consistent with the Standard TS. In addition, the format would be revised to be consistent with NUREG-0452, Standard Technical Specifications for Westinghouse Pressurized Water Reactors (STS).

By letter dated April 4, 1988, the licensee proposed processing the amendment on an emergency basis. While the justification provided in the April 4, 1988 letter did not meet the requirements in 10 CFR 50.91(a)(5) for an emergency amendment, the Commission finds that exigent circumstances exist

(see 10 CFR 50.91(a)(6)) based on the justification provided below.

As described in the licensee's letter dated November 18, 1987, Florida Power and Light (FPL) has modified the Unit 3 CCW heat exchanges to provide an on-line mechanical tube cleaning capability. FPL had planned to modify the Unit 4 heat exchangers during the Unit 4 refueling outage scheduled for late 1988 or early 1989. FPL would like to implement those modifications on Unit 4 prior to the coming summer months to ensure acceptable heat exchanger performance without the need for extensive repetitive heat exchanger cleaning. Installation of the tube cleaning system is expected to be accomplished under the provisions of 10 CFR 50.59.

Based on their experience with CCW heat exchangers during the summer of 1987, FPL has determined that the best course of action is to install the continuous tube cleaning system on Unit 4 before this summer. FPL indicates this installation process will require a 72-hour period with a heat exchanger out of service for installation of a spool piece prior to putting the heat exchanger back in service. After approximately a 2-month period for system construction, additional 72-hour out-of-service periods will be required to put the system into operation.

According to FPL, if this work can start by April 15, 1988, the final out-of service period of the installation would fall in mid-June. For this schedule to be successful, the remaining two inservice heat exchangers must be cleaned sufficiently to ensure that design basis heat loads can be carried for the out-of-service period. The time required to process a regular TS amendment request would drive the final out-of-service period for installation into mid-July or later. The licensee cannot ensure that two inservice heat exchangers could support installation during the time period based on their estimate of cooling canal temperatures. This would require shutdown of the unit to install the system.

Installation of the system during the April-June time frame will also allow completion of the optimization testing before next summer.

Before issuance of the proposed license amendments, the Commission will have made findings required by the Atomic Energy Act of 1954, as amended (the Act) and the Commission's regulations.

The Commission has made a proposed determination that the amendment request involves no significant hazards considerations. Under the Commission's regulations in 10 CFR 50.92, this means that operation of the facility in accordance with the proposed amendments would not (1) involve a significant increase in the probability or consequences of an accident previously evaluated; or (2) create the possibility of a new or different kind of accident from any accident previously evaluated; or (3) involve a significant reduction in a margin of safety.

The licensee has provided an analysis to address the no significant hazards considerations. The relevant text of the licensee's analysis follows:

Operation of Turkey Point Units 3 and 4 in accordance with the proposed amendment would *not*:

(1) Involve a significant increase in the probability or consequences of an accident previously evaluated. The proposed change introduces no new mode of operation nor does it involve a physical modification to the plant. The proposed increase in allowed out of service time would not invalidate the assumptions used in the accident analysis regarding CCW system capability, or affect the ability of the two operable heat exchangers to remove 100 percent of the design basis accident heat loads. CCW heat exchanger operability is determined by a surveillance program which considers a number of factors including flow rates, intake cooling water inlet temperature, and heat exchanger tube cleanliness. The probability of a passive failure of one of the two operable heat exchangers during the 72 hours one heat exchanger is out of service is sufficiently small that operation with the heat exchanger out of service will not involve a significant increase in the probability or consequences of an accident previously analyzed.

(2) Create the possibility of a new or different kind of accident from any accident previously evaluated, since no new mode of operation or physical modification to the plant is involved in this specific change.

(3) Involve a significant reduction in a margin of safety. The basis for the TS states that one pump and two heat exchangers meet the requirements of the safety analysis. With one heat exchanger out of service, the two operable heat exchangers are capable of removing the design basis accident heat loads. CCW heat exchanger operability is determined by a surveillance program which considers a number of factors including flow rates, intake cooling water inlet temperature, and heat exchanger tube cleanliness.

In addition, the Commission has provided guidance for the application of the criteria in 10 CFR 50.92 specified above by providing examples of changes that are not likely to involve a significant hazards consideration (51 FR 7751).

Example (i): A purely administrative change to technical specifications: for example, a change to achieve consistency throughout the technical specifications, correction of an error, or change in nomenclature.

Example (ii): A change that constitutes an additional limitation, restriction, or control not presently included in the technical specifications, e.g., a more stringent surveillance requirement.

The reformatting to be consistent with the STS is an administrative change and is similar to example (i). The requirement that the CCW system be operable in Modes 1 through 4, and the revised action statements are more restrictive requirements, and are similar to example (ii).

Therefore, operation of the facility in accordance with the proposed amendment[s] would pose no threat to the public health and safety, and would not involve a significant hazards consideration.

The staff agrees with the licensee's conclusion that the amendment request involves no significant hazards considerations for the following reasons:

(1) The specification of applicable modes is more restrictive than the current TS which does not specify modes. The applicable modes proposed include all operating modes when the reactor core is critical and when the reactor coolant temperature is greater than the 200°F; i.e., the operating modes in which the CCW heat exchanger has most significance for reactor safety.

(2) The relaxation of permissible outage time for one CCW heat exchanger from the current 24 hours to the proposed 72 hours is insignificant to safety. Only two heat exchangers are required to meet the design basis heat removal requirement. Each Turkey Point Unit has three heat exchangers. Should the two operating heat exchangers show degraded performance while the third heat exchanger is out of service, this can be accommodated by reducing power and shutting the plant down. Operational experience in the industry with heat exchangers, which are considered passive components, shows they rarely, if ever, fail catastrophically in a way that would threaten safety, but instead their usual failure modes are gradual degradation of heat removal surfaces due to silt or chemicals in the coolant, or small random leaks in individual tubes. In a meeting summary on this subject, dated March 29, 1988, the staff indicated no requirement is necessary for allowed outage time for the third CCW heat exchanger at Turkey Point Units 3 and 4.

(3) Revision of the action requirements to be consistent with applicable modes is an administrative change with no safety significance.

(4) Reduction of the time to go to cold shutdown is a more restrictive requirement and should enhance safety slightly.

(5) Reformatting to be consistent with Standard TS is a safety improvement because the current Standard TS have improved organization and logic in their

structure compared to the older (and current) Turkey Point TS.

Accordingly, the Commission proposes to determine that this change does not involve significant hazards considerations.

The Commission is seeking public comments on this proposed determination. Any comments received within 15 days after the date of publication of this notice will be considered in making any final determination. The Commission will not normally make a final determination unless it receives a request for a hearing.

Written comments may be submitted by mail to the Rules and Procedures Branch, Division of Rules and Records, Office of Administration and Resources Management, U.S. Nuclear Regulatory Commission, Washington, DC 20555, and should cite the publication date and page number of the **Federal Register** notice.

Written comments may also be delivered to Room 4000, Maryland National Bank Building, 7735 Old Georgetown Road, Bethesda, Maryland from 8:15 a.m. to 5:00 p.m. Copies of written comments received may be examined at the NRC Public Document Room, 1717 H Street, NW., Washington, DC. The filing of requests for hearing and petitions for leave to intervene is discussed below.

By May 13, 1988, the licensee may file a request for a hearing with respect to issuance of the amendments to the subject facility operating licenses and any person whose interest may be affected by this proceeding and who wishes to participate as a party in the proceeding must file a written request for hearing and a petition for leave to intervene. Requests for a hearing and petitions for leave to intervene shall be filed in accordance with the Commission's "Rule of Practice for Domestic Licensing Proceedings" in 10 CFR Part 2. If a request for a hearing or petition for leave to intervene is filed by the above date, the Commission or an Atomic Safety and Licensing Board, designated by the Commission or by the Chairman of the Atomic Safety and Licensing Board Panel, will rule on the request and/or petition; and the Secretary or the designated Atomic Safety and Licensing Board will issue a notice of hearing or an appropriate order.

As required by 10 CFR 2.714, a petition for leave to intervene shall set forth with particularity the interest of the petitioner in the proceeding, and how that interest may be affected by the results of the proceeding. The petition should specifically explain the reasons why intervention should be permitted with particular reference to the following factors: (1) The nature of the petitioner's right under the Act to be made a party to the proceeding; (2) the nature and extent of the petitioner's property, financial, or other interest in the proceeding; and (3) the possible effect of any order which may be entered in the proceeding on the petitioner's interest. The petition should also identify the specific aspect(s) of the subject matter of the proceeding as to which petitioner wishes to intervene. Any person who has filed a petition for leave to intervene or who has been admitted as a party may amend the petition without requesting leave of the Board up to fifteen (15) days prior to the first prehearing conference scheduled in the proceeding, but such an amended petition must satisfy the specificity requirements described above.

Not later than fifteen (15) days prior to the first prehearing conference scheduled in the proceeding, a petitioner shall file a supplement to the petition to intervene, which must include a list of the contentions that are sought to be litigated in the matter, and the bases for each contention set forth with reasonable specificity. Contentions shall be limited to matters within the scope of the amendment under consideration. A petitioner who fails to file such a supplement which satisfies these requirements with respect to at least one contention will not be permitted to participate as a party.

Those permitted to intervene become parties to the proceeding, subject to any limitations in the order granting leave to intervene, and have the opportunity to participate fully in the conduct of the hearing, including the opportunity to present evidence and cross-examine witnesses.

If the amendments are issued before the expiration of 30-days, the Commission will make a final determination on the issue of no sigificant hazards considerations. If a hearing is requested, the final determination will serve to decide when the hearing is held.

If the final determination is that the amendment request involves no significant hazards considerations, the Commission may issue the amendments and make them effective, notwithstanding the request for a hearing. Any hearing held would take place after issuance of the amendments.

If the final determination is that the amendment request involves significant hazards considerations, any hearing held would take place before the issuance of any amendments.

Normally, the Commission will not issue the amendments until the expiration of the 15-day notice period. However, should circumstances change during the notice period, such that failure to act in a timely way would result, for example, in derating or shutdown of the facility, the Commission may issue the license amendments before the expiration of the 15-day notice period, provided that its final determination is that the amendments involve no significant hazards considerations. The final determination will consider all public and State comments received. Should the Commission take this action, it will publish a notice of issuance. The Commission expects that the need to take this action will occur very infrequently.

A request for a hearing or a petition for leave to intervene must be filed with the Secretary of the Commission, U.S. Nuclear Regulatory Commission, Washington, DC 20555, Attention: Docketing and Service Branch, or may be delivered to the Commission's Public Document Room, 1717 H Street, NW., Washington, DC, by the above date. Where petitions are filed during the last ten (10) days of the notice period, it is requested that the petitioner promptly so inform the Commission by a toll-free telephone call to Western Union at (800) 325-6000 (in Missouri (800) 342-6700). The Western Union operator should be given Datagram Identification Number 3737 and the following message addressed to Herbert N. Berkow: Petitioner's name and telephone number; date petition was mailed; plant name; and publication date and page number of this **Federal Register** notice. A copy of the petition should also be sent to the Office of the General Counsel, U.S. Nuclear Regulatory Commission, Washington, DC 20555, and to Harold F. Reis, Esquire, Newman and Holtzer, P.C., 1615 L Street, NW., Washington, DC 20036.

Nontimely filings of petitions for leave to intervene, amended petitions, supplemental petitions and/or requests for hearing will not be entertained absent a determination by the Commission, the presiding officer or the presiding Atomic Safety and Licensing Board that the petition and/or request should be granted based upon a balancing of the factors specified in 10 CFR 2.714(a)(1)(i)-(v) and 2.714(d).

For further details with respect to this action, see the application for amendments dated April 4, 1988, which is available for public inspection at the Commission's Public Document Room, 1717 H Street, NW., Washington, DC

20555, and at the Local Public Document Room, Environmental and Urban Affairs Library, Florida International University, Miami, Florida 33199.

Dated at Rockville, Maryland, this 8th day of April, 1988.

For the Nuclear Regulatory Commission.

Gordon E. Edison,

Senior Project Manager, Project Directorate II-2, Division of Reactor Projects I/II, Office of Nuclear Reactor Regulation.

[FR Doc. 88-8046 Filed 4-12-88; 8:45 am]

BILLING CODE 7590-01-M

[Docket No. 030-06579, License Nos. 45-08890-01 and 45-08890-02, EA 87-128]

Froehling & Robertson, Inc.; Order Imposing Civil Monetary Penalty

I

Froehling & Robertson, Inc., Richmond, Virginia, (licensee) is the holder of Materials License No. 45-08890-01 issued by the Nuclear Regulatory Commission (NRC/Commission) on February 21, 1963. The license authorized the licensee to use radioactive materials for industrial radiography in accordance with the conditions specified therein.

II

A routine unannounced inspection of the licensee's activities was conducted on June 18, 1987, and a special inspection of the licensee's activities was conducted on July 13, 1987. The results of these inspections indicated that the licensee had not conducted its activities in full compliance with NRC requirements. A written Notice of Violation and Proposed Imposition of Civil Penalty was served upon the licensee by letter dated November 6, 1987. The Notice stated the nature of the violations, the provisions of the NRC's requirements that the licensee had violated, and the amount of the civil penalty proposed for the violations. The licensee responded to the Notice of Violation and Proposed Imposition of Civil Penalty by two letters both dated December 1, 1987. In its letters, the licensee admits the violations, but presents new information regarding violations A, B.1, B.3.b, B.3.c, B.3.d, B.3.e, and C.1, and requests that the proposed civil penalty be mitigated.

III

After consideration of the licensee's responses and the statements of fact, explanation, and argument for mitigation contained therein, the Deputy Executive Director for Regional Operations has determined as set forth in the Appendix to this Order that violations B.3.c and B.3.e should be withdrawn in their entirety; that portions of violations B.3.b and C.1 should be withdrawn; that the remaining portions of violations B.3.b and C.1 and the remaining violations occurred as stated; and, that the penalty proposed for the violations designated in the Notice of Violation and Proposed Imposition of Civil Penalty should be reduced by 16 percent and imposed.

In view of the foregoing and pursuant to section 234 of the Atomic Energy Act of 1954, as amened (Act), 42 U.S.C. 2282, and 10 CFR 2.205, *It is Hereby Ordered That:*

The licensee pay a civil penalty in the amount of Four Thousand Two Hundred Dollars ($4,200) within 30 days of the date of this Order, by check, draft, or money order, payable to the Treasurer of the United States and mailed to the Director, Office of Enforcement, U.S. Nuclear Regulatory Commission, ATTN: Document Control Desk, Washington, DC 20555.

The licensee may request a hearing within 30 days of the date of this Order. A request for a hearing should be clearly marked as a "Request for an Enforcement Hearing" and shall be addressed to the Director, Office of Enforcement, U.S. Nuclear Regulatory Commission, ATTN: Document Control Desk, Washington, DC 20555, with a copy to the Regional Administrator, Region II, 101 Marietta St., NW., Suite 2900, Atlanta, Georgia 30323.

If a hearing is requested, the Commission will issue an Order designating the time and place of the hearing. If the licensee fails to request a hearing within 30 days of the date of this Order, the provisions of this Order shall be effective without further proceedings. If payment has not been made by that time, the matter may be referred to the Attorney General for collection.

Having admitted the violations, in the event the licensee requests a hearing as provided above, the issues to be considered at such hearing shall be:

Whether, on the basis of such violations, this Order should be sustained.

For the Nuclear Regulatory Commission.

James M. Taylor,

Deputy Executive Director for Regional Operations.

Dated at Bethesda, Maryland, this 5th day of April 1988.

Appendix—Evaluations and Conclusions

On November 6, 1987, a Notice of Violation and Proposed Imposition of Civil Penalty (Notice) was issued for violations identified during routine and special NRC inspections. Froehling & Robertson, Inc. responded to the Notice on December 1, 1987. In its responses, the licensee admits the violations, but presents new information regarding Violations A, B.1, B.3.b, B.3.c, B.3.d, B.3.e, and C.1, and requests that the proposed civil penalty be mitigated. The NRC's evaluation and conclusion regarding the licensee's arguments are as follows:

Restatement of Violation A

10 CFR 20.201(b) requires, in part, a licensee to make such surveys as may be necessary to comply with the regulations in 10 CFR Part 20. A "survey" is defined in 10 CFR 20.201(a) as an evaluation of the radiation hazards incident to the production, use, release, disposal, or presence of radioactive materials or other sources of radiation under a specific set of circumstances.

10 CFR 20.101 specifies radiation dose standards for individuals in restricted areas.

License Condition 16 requires the licensee to conduct its program in accordance with the statements, representations, and procedures contained in documents including its license application dated May 28, 1986 and letter dated July 15, 1986, including any enclosures.

Section 5.3.1.5 of the license application requires, in part, that the licensee issue film badges for periods of two weeks or one month. At the end of the effective period, new badges are to be duly assigned. The old badge must then be returned to the Radiation Safety Officer (RSO) or his representative for transmittal to the health physics agency utilized for film badge measurements.

Contrary to the above, the licensee did not conduct such surveys as were necessary to determine the radiation doses of three employees located at the Richmond Branch location for the period between September 25, 1986 and January 15, 1987. The film badges worn by the three employees were not returned to the film badge vendor in a timely manner, and therefore the film badge vendor could not process the three employees' film badges due to the aging effects on the film from the delay in submitting the film badges. Also, the licensee did not conduct such surveys as were necessary to determine the radiation doses of six employees located at the Richmond Branch location for the period between January 15, 1986 and April 18, 1986. In this case, the film badges were not submitted to the film badge vendor for processing on a monthly frequency as specified in

Section 5.3.1.5 of the license application. In neither case was a further evaluation made nor was an appropriate estimated radiation dose assigned to these individuals for these periods.

Summary of Licensee's Response

The licensee admists that the two individuals, who were assigned film badges under NRC License No. 45-08890-01 for one month periods beginning January 15, 1986, August 15, 1986, September 15, 1986, and January 15, 1987, returned their film badges to the supplier too late for radiation exposure processing.

However, the licensee contends that the "three" and "six" employees referred to in the Notice of Violation actually applied to only two individuals working for one month periods under this particular license. The licensee states that radiation exposure data from pocket dosimeters was available for the two individuals during the period in question and that the radiation dose limits for the two individuals were not exceeded.

NRC Evaluation of Licensee's Response

During the inspections conducted on June 18 and July 13, 1987, the licensee's RSO stated that three radiography employees were employed by the licensee between September 25, 1986 and January 15, 1987. Seimens monthly film badge reports (process numbers C02, K95, M99, and O24 with report print dates of September 25, 1986; December 9, 1986; January 12, 1987; and January 15, 1987, respectively) were printed and sent to Froehling & Robertson between September 25, 1986 and January 15, 1987. These film badge reports stated that monthly radiation exposures for a total of 42 film badges could not be determined during this period of time. Badges worn by three radiographers employed by Froehling & Robertson were included in the 42 film badges which could not be analyzed due to the aging effect of the film.

During the inspections, the RSO also stated that at least six radiographers were employed by the licensee between January 15 and April 18, 1986. The Seimens Radiation Exposure Report for this period (process #498—dated April 25, 1986—Richmond Branch) listed 54 individual film badges which were issued to Froehling & Robertson by Seimens on January 15, 1986. These 54 film badges were not received by Seimens for exposure processing until April 18, 1986. Included in the 54 film badges were film badges for six radiographers which were employed by Froehling & Robertson.

The licensee contends that the "three" and "six" employees referred to in the Notice of Violation actually applied to only two individuals working for one month periods under license no. 45-08890-01. Whether only two individuals were involved as the licensee contends, or three or six, as found by the NRC, is not at issue. The violations occurred regardless of the number of employees for whom film badges were not promptly submitted. The fact that film badges for one or more individuals were not processed as required is not disputed by the licensee. The NRC is aware that the licensee currently possesses two byproduct material licenses (license nos. 45-08890-01 and 45-08890-02). Although the licensee may only employ two individuals to work under license no. 45-08890-01, the licensee is also responsible for assuring compliance for all individuals who work with radioactive material as defined in 10 CFR 20, including individuals who work under license no. 45-08890-02. The NRC is amending its records to reflect that the violations occurred under both licenses.

At the time of the inspections, no other evaluation of the radiation exposures that may have been received by the employees during the periods in question had been performed by the licensee. Pocket dosimeter reports, without film or TLD badge reports, do not constitute an adequate evaluation of radiation hazards as defined in 10 CFR 20.201(a) and (b). The routine use of pocket dosimeters is required under License Condition 16, (Section 5.3 of the May 28, 1987 license application), but in conjunction with, rather than in lieu of, film badges.

Restatement of Violation B.1

B. License Condition 16 requires the licensee to conduct its program in accordance with the statements, representations, and procedures contained in documents including its license application dated May 28, 1986 and letter dated July 15, 1986, including any enclosures.

1. Section 14.6 of the license application requires the Primary Radiation Safety Officer (RSO), at least once per quarter, to evaluate the overall Radiological Safety Program in order to ensure that all areas are sufficient for the safe and efficient control of both personnel and material.

Contrary to the above, between June 18, 1984 and June 18, 1987, the Primary RSO did not evaluate the overall Radiological Safety Program.

Summary of Licensee's Response

The licensee asserts that it only failed to record rather than perform quarterly evaluations required. The licensee states that the evaluations were made on a continuing basis, but the need for maintaining records regarding the evaluations was mistakenly considered unnecessary.

NRC Evaluation of Licensee's Response

The Primary RSO (individual W.B.) stated at the time of the inspection that he was not aware of the requirement to re-evaluate the overall radiological safety program at least once per quarter as specified in the licensee's application. Consequently, the NRC has concluded that violation B.1 occurred as stated.

Restatement of Violation B.3.b

B. License Condition 16 requires the licensee to conduct its program in accordance with the statements, representations, and procedures contained in documents including its license application dated Mayh 28, 1986 and letter dated July 15, 1986, including any enclosures.

3. Section 4.7 of the license application requires the licensee to record and maintain, in the form of utilization records (Form 605), complete records of all radiographic operations. This should include a sketch of the area and show placement of the source, signs, ropes, etc. The report should also contain all pertinent information concerning by-product material, survey meters, location and date(s) of operation, radiographic personnel involved, etc.

Contrary to the above:

b. On June 9, 1987, at the Roanoke Branch operation, the licensee did not maintain a complete record of radiographic operations in that it did not record a survey of the iridium-192 radiographic exposure device (Model 520, Serial No. 720) when the device was removed from storage for use after the last exposure at the radiography site and after the radiographic exposure device was placed back in a storage area.

Summary of Licensee's Reponse

The licensee agrees that the utilization log (Form 605) was not used to record the survey of the exposure device on June 9, 1987. However, the licensee contends that a survey was performed of the exposure device upon removal from the storage area and was recorded on another form (Form 603).

NRC Evaluation of Licensee's Response

The NRC has determined that a survey of the radiographic exposure device was performed and recorded on another form (Form 603) upon removal of the device from storage for use after the last exposure on June 9, 1987. Therefore, this portion of the violation is withdrawn. However, as stated in violation B.3.b, the licensee did fail to record a survey of the radiographic device after the device was placed back in storage. The NRC has concluded that this portion of the violation occurred as stated.

Restatement of Violation B.3.c

B. License Condition 16 requires the licensee to conduct its program in accordance with the statements, representations, and procedures contained in documents including its license application dated May 28, 1986 and letter dated July 15, 1986, including any enclosures.

3. Section 4.7 of the license application requires the licensee to record and maintain, in the form of utilization records (Form 605), complete records of all radiographic operations. This should include a sketch of the area and show placement of the source, signs, ropes, etc. The report should also contain all pertinent information concerning by-product material, survey meters, location and date(s) of operation, radiographic personnel involved, etc.

Contrary to the above,

c. On June 9, 1987, at the Roanoke Branch operation, the licensee did not maintain a complete record of radiographic operations in that it did not record a survey of the radiography vehicle's exterior surface or passenger compartment once the radiographic exposure device was placed in the radiography vehicle for transport.

Summary of Licensee's Response

The licensee agrees that the utilization log (Form 605) was not used to record the survey of the vehicle's exterior surface or passenger compartment on June 9, 1987. However, the licensee contends that a survey was performed and recorded on another form (Form 603).

NRC Evaluation of Licensee's Response

The NRC has determined that a survey of the vehicle's exterior surface and passenger compartment was performed and recorded on another form (Form 603) on June 9, 1987. Therefore, the NRC withdraws violation B.3.c.

Restatement of Violation B.3.d

B. License Condition 16 requires the licensee to conduct its program in accordance with the statements, representations, and procedures contained in documents including its license application dated May 28, 1986 and letter dated July 15, 1986, including any enclosures.

3. Section 4.7 of the license application requires the licensee to record and maintain, in the form of utilization records (Form 605), complete records of all radiographic operations. This should include a sketch of the area and show placement of the source, signs, ropes, etc. The report should also contain all pertinent information concerning by-product material, survey meters, location and date(s) of operation, radiographic personnel involved, etc.

Contrary to the above:

d. On June 9, 1987, a licensee's radiographer of the Roanoke Branch operation did not record a sketch of radiographic operations at a radiography site in Blacksburg, Virginia on the utilization record.

Summary of Licensee's Response

The licensee states that the sketch was made, but that no radiation exposure levels were noted.

NRC Evaluation of Licensee Response

The sketch provided on the form was incomplete. It indicated only the location of the source. Warning signs, ropes, barricades, objects affecting the area, radiation levels, distances from the source, and the approximate exposure time were not included as required by Form 605. Therefore, the NRC has concluded that violation B.3.d occurred as stated in the Notice.

Restatement of Violation B.3.e

B. License Condition 16 requires the licensee to conduct its program in accordance with the statements, representations, and procedures contained in documents including its license application dated May 28, 1986 and letter dated July 15, 1986, including any enclosures.

3. Section 4.7 of the license application requires the licensee to record and maintain, in the form of utilization records (Form 605), complete records of all radiographic operations. This should include a sketch of the area and show placement of the source, signs, ropes, etc. The report should also contain all pertinent information concerning by-product material, survey meters, location and date(s) of operation, radiographic personnel involved, etc.

Contrary to the above:

e. On January 7 and May 19, 1987, the licensee's Richmond Branch operation did not record on the utilization record the serial number and calibration date of the survey meter used during the radiographic operations.

Summary of Licensee's Response

The licensee agrees that the utilization log (Form 605) was not used to record the serial number and calibration date of the survey meter used during radiographic operations on January 7 and May 19, 1987. However, the licensee contends that pertinent survey meter information was recorded on another form (Form 604).

NRC Evaluation of Licensee's Response

The NRC has determined that the serial number and calibration date of the survey meter used during radiographic operations on January 7 and May 19, 1987, were recorded on another form (Form 604). Therefore, the NRC withdraws violation B.3.e.

Restatement of Violation C.1

C. 10 CFR 71.5(a) requires that each licensee who transports licensed material outside of the confines of its plant or other place of use, or who delivers licensed material to a carrier for transport, shall comply with the applicable requirements of the DOT regulations in 49 CFR Parts 170 through 189 appropriate to the mode of transport.

49 CFR 172.200(a) requires that each person who offers a hazardous material for transportation shall describe the hazardous material on the shipping paper in the manner required by this subpart.

1. 49 CFR 172.203(d)(1)(iii) requires the licensee's description for a shipment of radioactive material to include the activity contained in each package of the shipment in terms of curies, millicuries, or microcuries.

Contrary to the above, the licensee did not include, on shipping papers, the activity of iridium-192 sources (Radioactive Materials N.O.S. NA 9182 UN 2974, Special Form Type B) shipped from the Richmond Branch on April 28 and June 14, 1987.

Summary of Licensee's Response

The licensee denies one example (April 28, 1987) of violation C.1, and asserts that offsite transport of iridium-192 source(s) did not occur on that particular date. With regard to the transport on June 14, 1987, the licensee asserts that although the activity of the

source was not recorded on the shippers certification portion of the Utilization Record, it was recorded under the Equipment section of that form.

NRC Evaluation of Licensee Response

The NRC has determined that no offsite transport of iridium-192 sources occurred on April 28, 1987. However, the licensee did not include, on the shippers certification portion of the Utilization Record of the shipping papers, the activity of iridium-192 sources shipped from the Richmond Branch on June 14, 1987. Therefore, the NRC staff has concluded that the April 28, 1987, example should be withdrawn and that the June 14, 1987, example occurred as stated. Our records will be revised accordingly.

Licensee's Arguments for Mitigation of the Civil Penalty

The licensee argues that given its prior good performance, the absence of repetitive violations and the full extent of its corrective action, including involvement of corporate management in reviewing proper documentation, establishing a computer data base for maintenance of data, and discipline of personnel, the proposed civil penalty should be mitigated. In addition, the licensee notes that violations B.1 and B.2 had not been identified for correction in previous NRC inspections; that violations B.3. b, c, and d correspond with a single use on June 9, 1987, that the incident was an exception; that the general impact of the violations was not realized until the Notice of Violation was received; and that the Enforcement Conference of July 15, 1987, did not reflect the apparent gravity of the violations.

NRC Evaluation of Licensee's Response

The licensee's prior performance and corrective actions were considered prior to issuance of the Notice. While the licensee's corrective actions were adequate, they were not so prompt and extensive as to warrant mitigation of the civil penalty, but, rather, were those that would be expected of a licensee. Similarly, the licensee's prior performance, while adequate, was not such as would warrant mitigation. With regard to the licensee's argument that its lack of repetitive violations merits mitigation, under the Enforcement Policy, while the existence of repetitive violations may result in escalation of a civil penalty, the lack of repetitive violations does not necessitate that the penalty be mitigated.

The NRC agrees that violations B.1 and B.2 were not identified by the NRC during previous inspections. However, NRC inspections are only a partial audit of a licensee's operation. The licensee is responsible for identifying violations and complying with NRC regulations and the conditions of its license.

While violations B.3. b, c, and d may involve a single incident, the NRC does not agree that this incident constitutes an exception. Rather, the Notice cites several examples of the licensee's failure to maintain complete records. Therefore, the NRC does not believe that reduction of the civil penalty is warranted for this reason.

With regard to the licensee's argument that the Enforcement Conference did not reflect the gravity of the violations, the NRC notes that during the Enforcement Conference, the licensee was made aware of the reasons for the conference as well as the policies regarding escalated enforcement actions, and each apparent violation was reviewed and discussed. Moreover, the letter transmitting NRC Inspection Report No. 45-08890-01/87-01 issued to the licensee on August 11, 1987, explained that escalated enforcement action was being considered as a result of the NRC inspections. Consequently, the NRC contends that the licensee was made aware of the implications of the violations and the possibility of escalated enforcement action during the Enforcement Conference and through subsequent correspondence.

NRC Conclusion

The NRC staff has concluded that violations B.3.c and B.3.e should be withdrawn in their entirety, that portions of violations B.3.b and C.1 should be withdrawn, that remaining portions of violations B.3.b and C.1 and the remaining violations occurred as stated in the Notice, and that an adequate basis has not been provided for complete reduction of the proposed civil penalty amount. Because violations B.3.c and B.3.e have been withdrawn in their entirety and because the proposed civil penalty was assessed equally among the violations, the proposed civil penalty amount has been reduced by approximately 2/13ths or 16 percent ($800). Therefore, the NRC staff has concluded that a civil penalty in the amount of $4,200 should be imposed.

[FR Doc. 88-8047 Filed 4-12-88; 8:45 am]

BILLING CODE 7590-01-M

[Docket Nos. 50-282 and 50-306]

Northern States Power Co.; Consideration of Issuance of Amendments to Facility Operating Licenses and Opportunity for Hearing

The United States Nuclear Regulatory Commission (the Commission) is considering issuance of amendments to Facility Operating Licenses Nos. DPR-42 and DPR-60, issued to the Northern States Power Company (the licensee), for operation of the Prairie Island Nuclear Generating Plant, Units Nos. 1 and 2, located in Goodhue, Minnesota.

In accordance with the licensee's application for amendments dated September 28, 1987, the amendments would change the surveillance test frequency in the Technical Specifications of the turbine stop valves, governor valves and the intercept valve associated with turbine overspeed protection. Surveillance testing of these valves is necessary to assure the performance of their safety function in protecting against the consequences of a turbine missile ejection accident. Specifically, the surveillance test frequency would be changed from monthly to a test interval consistent with the methodology for evaluating the reduction in turbine valve test frequency set forth in Westinghouse Topical Report WCAP-11525, that meets the established NRC acceptance criteria for the probability of a missile ejection incident of 1.0×10^{-5} per year. The turbine valve test interval will not exceed one year.

Prior to issuance of the proposed license amendments, the Commission will have made findings required by the Atomic Energy Act of 1954, as amended (the Act) and the Commission's regulations.

By May 13, 1988, the licensee may file a request for a hearing with respect to issuance of the amendments to the subject facility operating licenses and any person whose interest may be affected by this proceeding and who wishes to participate as a party in the proceeding must file a written request for hearing or a petition for leave to intervene. Requests for a hearing and petitions for leave to intervene shall be filed in accordance with the Commission's "Rules of Practice for Domestic Licensing Proceedings" in 10 CFR Part 2. If a request for a hearing or petition for leave to intervene is filed by the above date, the Commission or an Atomic Safety and Licensing Board, designated by the Commission or by the Chairman of the Atomic Safety and Licensing Board Panel, will rule on the

request and/or petition, and the Secretary or the designated Atomic Safety and Licensing Board will issue a notice of hearing or an appropriate order.

As required by 10 CFR 2.714, a petition for leave to intervene shall set forth with particularity the interest of the petitioner in the proceeding and how that interest may be affected by the results of the proceeding. The petition should specifically explain the reasons why intervention should be permitted with particular reference to the following factors: (1) The nature of the petitioner's right under the Act to be made a party to the proceeding; (2) the nature and extent of the petitioner's property, financial, or other interest in the proceeding; and (3) the possible effect of any order which may be entered in the proceeding on the petitioner's interest. The petition should also identify the specific aspect(s) of the subject matter of the proceeding as to which petitioner wishes to intervene. Any person who has filed a petition for leave to intervene or who has been admitted as a party may amend the petition without requesting leave of the Board up to fifteen (15) days prior to the first prehearing conference scheduled in the proceeding, but such an amended petition must satisfy the specificity requirements described above.

Not later than fifteen (15) days prior to the first prehearing conference scheduled in the proceeding, a petitioner shall file a supplement to the petition to intervene, which must include a list of the contentions that are sought to be litigated in the matter and the bases for each contention set forth with reasonable specificity. Contentions shall be limited to matters within the scope of the amendments under consideration. A petitioner who fails to file such a supplement which satisfies these requirements with respect to at least one contention will not be permitted to participate as a party.

Those permitted to intervene become parties to the proceeding, subject to any limitations in the order granting leave to intervene, and have the opportunity to participate fully in the conduct of the hearing, including the opportunity to present evidence and cross-examine witnesses.

A request for a hearing or a petition for leave to intervene must be filed with the Secretary of the Commission, U.S. Nuclear Regulatory Commission, Washington, DC 20555, Attention: Docketing and Service Branch, or may be delivered to the Commission's Public Document Room 1717 H Street, NW., Washington, DC, by the above date. Where petitions are filed during the last ten (10) days of the notice period, it is requested that the petitioner promptly so inform the Commission by a toll-free telephone call to Western Union at 1-800-325-6000 (in Missouri 1-800-342-6700). The Western Union operator should be given Datagram Identification Number 3737 and the following message addressed to Martin J. Virgilio: (petitioner's name and telephone number); (date petition was mailed); (plant name); and (publication date and page number of this **Federal Register** notice). A copy of the petition should also be sent to the Office of the General Counsel, U.S. Nuclear Regulatory Commission, Washington, DC 20555, and to Jay Silberg, Esq., Shaw, Pittman, Potts and Trowbridge, 2300 N Street, NW., Washington, DC 20037.

Nontimely filings of petitions for leave to intervene, amended petitions, supplemental petitions and/or requests for hearing will not be entertained absent a determination by the Commission, the presiding officer or the presiding Atomic Safety and Licensing Board that the petition and/or request should be granted based upon a balancing of the factors specified in 10 CFR 2.714(a)(1)(i)-(v) and 2.714(d).

If a request for hearing is received, the Commission's staff may issue the amendment after it completes its technical review and prior to the completion of any required hearing if it publishes a further notice for public comment of its proposed finding of no significant hazards consideration in accordance with 10 CFR 50.91 and 50.92.

For further details with respect to this action, see the application for amendment dated September 28, 1988, which is available for public inspection at the Commission's Public Document Room, 1717 H Street, NW., Washington, DC 20555, and at the Technology and Science Department, Minneapolis Public Library, 300 Nicollet Mall, Minneapolis, Minnesota 55401.

Dated at Rockville, Maryland, this 5th day of April 1988.

For the Nuclear Regulatory Commission.

Martin J Virgilio,

Director, Project Directorate III-1, Division of Reactor Projects III, IV, V & Special Projects.

[FR Doc. 88-8048 Filed 4-12-88; 8:45 am]

BILLING CODE 7590-01-M

[Docket Nos. 50-277-OLA and 50-278-OLA; ASLBP No. 88-569-06-OLA]

Philadelphia Electric Co. et al.; Establishment of Atomic Safety and Licensing Board

Pursuant to delegation by the Commission dated December 29, 1972, published in the **Federal Register**, 37 FR 28710 (1972), and §§ 2.105, 2.700, 2.702, 2.714, 2.714a, 2.717 and 2.721 of the Commission's Regulations, all as amended, an Atomic Safety and Licensing Board is being established to preside over the following proceeding.

Philadelphia Electric Company et al.

Peach Bottom Atomic Power Station, Units 2 and 3

Facility Operating License Nos. DPR-44 and DPR-56

This Atomic Safety and Licensing Board is being designated pursuant to the provisions of an Order issued by the Commission on April 1, 1988 with respect to its proposed issuance of amendments to licenses held by the Philadelphia Electric Company, *e al.* ("PECO") for operation of the Peach Bottom Atomic Power Station, Units 2 and 3. 52 FR 48583. The proposed amendments would modify Section 6 of the facility Technical Specifications to reflect (1) a new corporate and a new plant staff organizational structure, (2) a revised composition of the Plant Operations Review Committee and (3) several administrative changes, as requested in PECO's application for amendment dated November 19, 1987.

The Board is comprised of the following administrative judges:

John H. Frye, III, Chairman, Atomic Safety and Licensing Board Panel, U.S. Nuclear Regulatory Commission, Washington, DC 20555

Glenn O. Bright, Atomic Safety and Licensing Board Panel, U.S. Nuclear Regulatory Commission, Washington, DC 20555

Richard F. Cole, Atomic Safety and Licensing Board Panel, U.S. Nuclear Regulatory Commission, Washington, DC 20555

B. Paul Cotter, Jr.,

Chief Administrative Judge, Atomic Safety and Licensing Board Panel.

Issued at Bethesda, Maryland, this 6th day of April 1988.

[FR Doc. 88-8011 Filed 4-12-88; 8:45 am]

BILLING CODE 7590-01-M

[Docket Nos. 50-280 and 50-281]

Virginia Electric and Power Co.; Consideration of Issuance of Amendments to Facility Operating Licenses and Opportunity for Hearing

The United States Nuclear Regulatory Commission (the Commission) is considering issuance of amendments to Facility Operating License No. DPR32 and to Facility Operating License No. DPR-37, issued to Virginia Electric and

Power Company (the licensee), for operation of the Surry Power Station, Unit Nos. 1 and 2, located in Surry County, Virginia.

The amendments would revise Technical Specification Section 3.1.B of the Surry Units 1 and 2 Technical Specifications by revising the heatup and cooldown limits on reactor coolant temperature and pressure and the reactor coolant system components, except the pressurizer. The revised curves are more restrictive than the curves currently included in the Technical Specifications for low termperatures. The amendments would also revise the setpoints on power-operated relief valves (PORV) for providing overpressure protection when the reactor coolant system average temperature is lower than 350°F. Finally, the amendments would delete the reactor vessel surveillance capsule withdrawal schedule contained in Table 4.2–1, as well as the associated discussion in the Bases section, and would include the appropriate discussion in the Bases section for the heatup and cooldown limits in the Technical Specifications for both Surry units.

Prior to issuance of the proposed license amendments, the Commission will have made findings required by the Atomic Energy Act of 1954, as amended (the Act) and the Commission's regulations.

By May 13, 1988, the licensee may file a request for a hearing with respect to issuance of the amendments to the subject facility operating licenses and any person whose interest may be affected by this proceeding and who wishes to participate as a party in the proceeding must file a written request for hearing and a petition for leave to intervene. Requests for a hearing and petitions for leave to intervene shall be filed in accordance with the Commission's "Rules of Practice for Domestic Licensing Proceedings" in 10 CFR Part 2. If a request for a hearing or petition for leave to intervene is filed by the above date, the Commission or an Atomic Safety and Licensing Board, designated by the Commission or by the Chairman of the Atomic Safety and Licensing Board Panel, will rule on the request and/or petition, and the Secretary or the designated Atomic Safety and Licensing Board will issue a notice of hearing or an appropriate order.

As reqiured by 10 CFR 2.714, a petition for leave to intervene shall set forth with particularity the interest of the petitioner in the proceeding, and how that interest may be affected by the results of the proceeding. The petition should specifically explain the reasons why intervention should be permitted with particular reference to the following factors (1) The nature of the petitioner's right under the Act to be made a party to the proceeding; (2) the nature and extent of the petitioner's property, financial, or other interest in the proceeding; and (3) the possible effect of any order which may be entered in the proceeding on the petitioner's interest. The petition should also identify the specific aspect(s) of the subject matter of the proceeding as to which petitioner wishes to intervene. Any person who has filed a petition for leave to intervene or who has been admitted as a party may amend the petition without requesting leave of the Board up to fifteen (15) days prior to the first pre-hearing conference scheduled in the proceeding, but such an amended petition must satisfy the specificity requirements described above.

Not later than fifteen (15) days prior to the first prehearing conference scheduled in the proceeding, a petitioner shall file a supplement to the petition to intervene, which must include a list of the contentions that are sought to be litigated in the matter, and the bases for each contention set forth with reasonable specificity. Contentions shall be limited to matters within the scope of the amendment under consideration. A petitioner who fails to file such a supplement which satisfies these requirements with respect to at least one contention will not be permitted to participate as a party.

Those permitted to intervene become parties to the proceeding, subject to any limitations in the order granting leave to intervene, and have the opportunity to participate fully in the conduct of the hearing, including the opportunity to present evidence and cross-examine witnesses.

A request for a hearing or a petition for leave to intervene must be filed with the Secretary of the Commission, United States Nuclear Regulatory Commission, Washington, DC 20555, Attention: Docketing and Service Branch, or may be delivered to the Commission's Public Document Room, 1717 H Street, NW., Wasington, DC, by the above date. Where petitions are filed during the last (10) days of the notice period, it is requested that the petitioner or representative for the petitioner promptly so inform the Commission by a toll-free telephone call to Western Union at (800) 325–6000 (in Missouri (800) 342–6700). The Western Union operator should be given Datagram Identification Number 3737 and the following message addressed to Herbert N. Berkow: (petitioner's name and telephone number); (date Petition was mailed); (plant name); and (publication date and page number of this Federal Register notice). A copy of the petition should also be sent to the Office of the General Counsel, U.S. Nuclear Regulatory Commission, Washington, DC 20555, and to Michael W. Maupin, Esq., Hunton and Williams, Post Office Box 1535, Richmond, Virginia 23185.

Nontimely filings of petitions for leave to intervene, amended petitions, supplemental petitions and/or requests for hearing will not be entertained absent a determination by the Commission, the presiding officer or the presiding Atomic Safety and Licensing Board, that the petition and/or request should be granted based upon a balancing of the factor specified in 10 CFR 2.714(a)(1)(i)-(v) and 2.14(d).

If a request for hearing is received, the Commission's staff may issue the amendments after it completes its technical review and prior to the completion of any required hearing if it publishes a further notice for public comment of its proposed finding of no significant hazards considerations in accordance with 10 CFR 50.91 and 50.92.

For further details with respedct to this action, see the application for amendments dated January 29, 1988, which is available for public inspection at the Commission's Public Document Room, 1717 H Street, NW., Washington, DC 20555, and at the Swem Library, College of William and Mary, Wiliamsburg, Virginia 23185.

Dated at Rockville, Maryland, this 7th day of April 1988.

For the Nuclear Regulatory Commission.

Herbert N. Berkow,

Director, Project Directorate II–2, Division of Reactor Projects I/II, Office of Nuclear Reactor Regulation.

[FR Doc. 88–8049 Filed 4–12–88; 8:45 am]

BILLING CODE 7590-01-M

PENSION BENEFIT GUARANTY CORPORATION

Request for OMB Approval of Collection of Information; PBGC Annual Premium Payment Package

AGENCY: Pension Benefit Guaranty Corporation.

ACTION: Notice of collection of information submitted for OMB approval.

SUMMARY: The Pension Benefit Guaranty Corporation ("PBGC") has requested approval by the Office of Management and Budget of a revised PBGC Annual Premium Payment

Package, including forms and instructions. This package will be used by pension plan administrators to make premium payments to the PBGC. The Pension Protection Act (Subtitle D of Title IX of the Omnibus Budget Reconciliation Act of 1987) establishes a new premium structure for single-employer plans, consisting of a flat rate per capita amount plus an additional amount based on the value of a plan's unfunded vested benefits. A revised Form 1 plus a new Schedule A to that form are needed to accommodate these statutory changes. The effect of this notice is to advise the public that the PBGC has requested OMB approval of the revised Annual Premium Payment Package and that, for the reasons set forth below, the PBGC has requested expedited consideration by OMB.

ADDRESSES: All written comments (at least three copies) should be addressed to the Office of Information and Regulatory Affairs of OMB, Attention: Desk Officer for the Pension Benefit Guaranty Corporation, 3208 New Executive Office Building, Washington, DC 20503, with a copy to the Pension Benefit Guaranty Corporation, Office of the General Counsel (Code 22500), 2020 K Street NW., Washington, DC 20006. The request for approval will be available for public inspection at the PBGC Communications and Public Affairs Department, Suite 7100, 2020 K Street, NW., Washington, DC 20006, between the hours of 9:00 a.m. and 4:00 p.m.

FOR FURTHER INFORMATION CONTACT: Renae R. Hubbard, Special Counsel, Office of the General Counsel (Code 22500), 2020 K Street, NW., Washington, DC 20006; telephone 202-778-8851 (202-778-8859 for TTY and TDD) (not toll-free numbers).

SUPPLEMENTARY INFORMATION: The Paperwork Reduction Act (44 U.S.C. Chapter 35) establishes policies and procedures for controlling the paperwork burdens imposed by Federal agencies on the public. Under the provisions of the Act and its implementing regulations, agencies are required to submit information collection requests to the Office of Management and Budget for review and approval, and to publish a notice in the **Federal Register** notifying the public of the submission.

The Pension Benefit Guaranty Corporation ("PBGC") is required by sections 4006 and 4007 of the Employee Retirement Income Security Act of 1974 (ERISA) to collect premiums from pension plans covered under the termination insurance program that it administers. Information to determine the amount of and record the payment of such premiums is necessary for the PBGC to fulfil that legal requirement. Premiums currently are paid with the filing of PBGC Form 1 and PBGC Form 1-ES, approved for use through December 31, 1990 (OMB No. 1212-0009).

The Pension Protection Act ("PPA") (Subtitle D of Title IX of the Omnibus Budget Reconciliation Act of 1987, Pub. L. No. 100-203, 101 Stat. 1330 (Dec. 22, 1987)) amended sections 4006 and 4007 of ERISA to establish a new premium structure for single-employer plans, consisting of a flat rate per capita amount (as under prior law) plus an additional variable rate amount based on the value of a plan's unfunded vested benefits ("UVB"). The statutory changes require revisions to the PBGC Form 1 and instructions and a new Schedule A to Form 1 that is used to calculate the variable rate portion of the premium.

This notice advises the public that the PBGC has requested OMB review and approval of the revised Annual Premium Payment Package, including Form 1 and Schedule A and Form 1-ES. This notice further advises the public that the PBGC has requested expedited consideration by OMB because of PPA is effective for plan years beginning in 1988 and the premium payment forms are urgently needed to facilitate the calculation and payment of the premium in compliance with the PPA.

The PBGC forms will be filed annually by administrators of plans covered by the PBGC termination insurance program. The forms will be used to determine the premium owed and to report and pay the premium to the PBGC, as required under ERISA sections 4006 and 4007. The PBGC estimates that the aggregate annual burden imposed on plan administrators in filing the PBGC forms is 116,527 hours and a total cost of $17,497,050. The burden hours for filing Form 1-ES are estimated at 4,497, based on an estimated 8,994 filings (1,415 multiemployer and 7,579 single-employer), with a cost of $674,550. The burden hours for filing Form 1 only or filing Form 1 with a simplified or no UVB calculation are estimated at 51,830, based on an estimated 103,660 filings (1,085 multiemployer and 102,575 single-employer), with a cost of $7,774,500. The burden hours for Filing Form 1 with a complete UVB calculation are estimated at 60,200, based on an estimated 7,525 single-employer filings, with a cost of $9,030,000.

Issued at Washington, DC, this 7th day of April, 1988.

Joseph A. Vasquez, Jr.,

Acting Executive Director, Pension Benefit Guaranty Corporation.

[FR Doc. 88-8106 Filed 4-12-88; 8:45 am]

BILLING CODE 7708-01-M

SECURITIES AND EXCHANGE COMMISSION

[Release No. 25549; File No. SR-PSE-88-01]

Self-Regulatory Organizations; Pacific Stock Exchange, Relating to the Constitution and the Certificate of Incorporation

Pursuant to section 19(b)(1) of the Securities Exchange Act of 1934 ("Act"), 15 U.S.C. 78s(b)(1), notice is hereby given that on March 7, 1988, the Pacific Stock Exchange Incorporated ("PSE" or "Exchange") filed with the Securities and Exchange Commission the proposed rule change as described in Items I, II and III below, which Items have been prepared by the self-regulatory organization. The Commission is publishing this notice to solicit comments on the proposed rule change from interested persons.

I. Self-Regulatory Organization's Statement of the Terms of Substance of the Proposed Rule Change

The Exchange pursuant to Rule 19(b)-4 of the Act, hereby proposes the following changes to the Certificate of Incorporation and the articles of the constitution of the PSE:

Certificate of Incorporation, Ninth Article

Ninth. The Corporation may provide indemnification for members of its Board of Governors and of committees of the Board of Governors and of other committees of the Corporation, its officers, agents and employees, and those serving another corporation, partnership, joint venture, trust or other enterprise at the request of the Corporation, within the limits permitted by Delaware law, to safeguard such persons from expense and liability for actions they take in any such capacity in good faith in furtherance of, or without belief that such actions are opposed to, the best interests of the Corporation and its members. *To the fullest extent permitted by Delaware law, or any other applicable laws, the members of the Board of Governors shall not be liable to the Corporation or its members for monetary damages for breach of fiduciary duty as a Governor.*

Constitution

Article II, Section 7

[Transition Provision]

[Sec. 7. At the first annual meeting following the effectiveness of the amendments to the Constitution approved at the Special Meeting on October 17, 1979 ("1979 Amendments"), a Vice Chairman elect shall be elected to serve for a term of one year from the date of election and until his successor is elected and qualified. If the 1979 Amendments become effective before the Annual Meeting in 1980, until such time as the position of Chairman is filled or until the 1980 Annual Meeting, whichever is earlier, the person who is presently Chairman would retain the title of Chairman, and would perform the duties of Chairman, as such duties were constituted prior to the effectiveness of the 1979 Amendments, and the person who is presently Vice Chairman would retain the title of Vice Chairman and would perform the duties of Vice Chairman as those duties were constituted prior to the effectiveness of the 1979 Amendments, but at such time as the position of Chairman is filled the person who is presently Chairman would be Vice Chairman, with the duties of that office as provided in the 1979 Amendments, and such person would become Vice Chairman at the 1980 Annual Meeting. If the 1979 Amendments become effective after the 1980 Annual Meeting and the position of Chairman has not yet been filled, until such time as the position of Chairman is filled the Vice Chairman (who, after the 1980 Annual Meeting, would be the person who is presently Vice Chairman) would have the title of Chairman and would perform the duties of Chairman, as such duties were constituted prior to the effectiveness of the 1979 Amendments, but at such time as the position of Chairman is filled the titles and duties of the Vice Chairman and Vice Chairman elect would be as provided in the 1979 Amendments. Until the position of Chairman is filled the President will be the Chief Executive Officer as well as the Chief Operating Officer.]

Article V, Section I

Number of Memberships

Sec. 1. The number of authorized memberships in the Exchange shall [be 516] *not exceed 552.* * * * (No change is proposed with respect to the remainder of this section).

Article VI, Section 2

Application for Membership & Election

Sec. 2. Application for membership in the Exchange must be made in accordance with [the rules] *Rule IX* of the Board of Governors. [After the Board of Governors of the Exchange has cleared the applicant for membership,] *Upon approval,* the name of the applicant shall forthwith be posted with all members of the Exchange for a period of ten days.

Article VII, Section 4

Payment Purchase Price

Sec. 4. [At least four days prior] *Prior* to the effective date of admission to membership of the transferee, any purchase price being paid for such transfer shall be paid to the Exchange. * * * (No change is proposed for the remainder of this section.)

Article VIII, Section 4

Exchange Membership Asset of Firm

Sec. 4. The membership of every member of the Exchange who has conferred his membership privileges on any firm shall be deemed to be an asset of such firm *only* to the extent necessary to protect [its creditors, subject to the provisions of] *claimants under* Article VII as to the disposition of such proceeds.

II. Self-Regulatory Organization's Statement of the Purpose of, and Statutory Basis for the Proposed Rule Change

In its filing with the Commission, the self-regulatory organization included statements concerning the purpose of and basis for the proposed rule change. The text of these statements may be examined at the places specified in Item IV below. The self-regulatory organization has prepared summaries, set forth in Sections (A), (B) and (C) below, of the most significant aspect of such statements.

(A) Self-Regulatory Organization's Statement of the Purpose of, and Statutory Basis for the Proposed Rule Change

The purpose of each of the proposed rule changes is as follows:

1. Certificate of Incorporation, *Ninth Article*

This proposed amendment is based on a change in Delaware law (the PSE is incorporated under the laws of the state of Delaware). Delaware Corporations Code, section 102(b)(7), (added 1986), states that a Certificate of Incorporation may include a provision eliminating or limiting a director's personal liability to the corporation for monetary damages for breach of fiduciary duty as a director. Many Boards of Delaware Corporations have adopted similar provisions in 1987. The new law:

(a) does *not* permit the elimination or limitation of a director's liability for breach of its duty of loyalty, for acts or omissions not in good faith, for intentional misconduct, or for any transaction from which the director derived an improper personal benefit,

(b) does *not* eliminate the fiduciary duty, it merely prevents the imposition of monetary damages in the event of breach. Other legal remedies such as rescission and injunction remain available,

(c) applies to a breach of fiduciary duty (standard of care) only, and does not extend to other duties owed by the directors to the Corporation (standard of loyalty).[1]

2. PSE Constitution, Article II, Section 7, Transition Provision

This provision was added as part of the constitutional amendments in 1979. Its purpose was to provide that there would be a Chairman and Vice Chairman at all times whether the 1979 amendments became effective prior to or subsequent to the 1980 annual meeting.

This section is now obsolete and the Exchange membership has voted to delete the section entirely.

3. Article V, Section 1, *Number of Memberships*

In April 1987, the creation of 36 additional members via a rights offering was approved by the SEC after approval by the PSE Board and members. The amendment will reflect this increase in the number of memberships.

4. Article VI, Section 2, *Application for Membership and Election*

The purpose of this change is to provide reference to Rule IX which contains a more detailed description of procedures for eligibility, application, and approval for membership.

[1] The Commission requests commentators to address the question of whether, as a matter of public policy or law, it is appropriate for a corporation operating as a national securities exchange with substantial self-regulatory responsibilities under the federal securities laws to adopt a provision that would completely exempt members of the PSE's Board of Governors from monetary liability to the corporation or its members for breach of fiduciary duty, including situations where the breach constitutes gross negligence.

5. Article VII, Section 6, *Payment Purchase Price*

Currently, admission to membership is effective almost immediately after payment of the purchase price. Deleting the first four words of this sections "at least four days prior" more accurately reflects that current practice. Holding admission up for four days after payment is no longer required.

6. Article VIII, Section 4, *Exchange Membership Asset of Firm*

Under this section, as it now stands, confusion is created by the use of the word "asset". Questions arise as to whether a member may use its membership as collateral, or whether a lien by one other than a member may be placed on a membership.

This is the only section that refers to membership as an asset. Throughout the constitution and the rules, membership is referred to as a privilege that creates no vested rights in the member. Because membership is only a privilege, revocable at will by the PSE, it is not personal property and cannot be subject to an external lien, nor used as collateral.

The proposed change will clarify that the use of membership as an "asset" refers only to claims arising under Article VII. It is believed that this change reflects the true intent of the section.

(B) Self-Regulatory Organization's Statement on Burden on Competition

The Exchange does not believe that the proposed rule changes impose a burden on competition.

(C) Self-Regulatory Organization's Statement on Comments on the Proposed Rule Change Received from Members, Participants or Others

The proposed rule changes were sent to each member and approved by over a 2/3 majority vote of the general membership at the annual meeting on January 28, 1988.

III. Date of Effectiveness of the Proposed Rule Change and Timing for Commission Action

Within 35 days of the date of the publication of this notice in the **Federal Register** or within such longer period, (i) as the Commission may designate up to 90 days of such date if it finds such longer period to be appropriate and publishes its reasons for so finding, or (ii) as to which the self-regulatory organization consents, the Commission will:

(A) By order approve such proposed rule changes; or

(B) Institute proceedings to determine whether the proposed rule changes or any rule change should be disapproved.

IV. Solicitation of Comments

Interested persons are invited to submit written data, views and arguments concerning the foregoing. Persons making written submissions should file six copies thereof with the Secretary, Securities and Exchange Commission, 450 Fifth Street, NW., Washington, DC 20549. Copies of the submission, all subsequent amendments, all written statements with respect to the proposed rule change that are filed with the Commission, and all written communications relating to the proposed rule changes between the Commission and any person, other than those that may be withheld from the public in accordance with the provisions of 5 U.S.C. 55, will be available for inspection and copying in the Commission's Public Reference Section, 450 Fifth Street, N.W., Washington, DC 20549. Copies of such filing will also be available for inspection and copying at the principal office of the PSE. All submissions should refer to File No. SR-PSE-88-01 and should be submitted within May 4, 1988.

For the Commission by the Division of Market Regulation, pursuant to delegated authority.

Dated: April 6, 1988.

Jonathan G. Katz,

Secretary.

[FR Doc. 88-8065 Filed 4-12-88; 8:45 am]

BILLING CODE 8010-01-M

Self-Regulatory Organizations; Applications for Unlisted Trading Privileges and of Opportunity for Hearing; Cincinnati Stock Exchange, Inc.

April 6, 1988.

The above named national securities exchange has filed applications with the Securities and Exchange Act of 1934 and Rule 12f-1 thereunder, for unlisted trading privileges in the following securities:

AAR Corporation
  Common Stock, $1.00 Par Value (File No. 7-3181)
Armtek Corporation
  Common Stock, $1.00 Par Value (File No. 7-3182)
Best Buy Co., Inc.
  Common Stock, $.10 Par Value (File No. 7-3183)
Beverly Investment Properties
  Common Stock, $.10 Par Value (File No. 7-3184)
BRT Realty Trust
  Shares of Beneficial Interest, $3.00 Par Value (File No. 7-3185)
DCNY Corporation
  Common Stock, $.50 Par Value (File No. 7-3186)
Eldon Industries, Inc.
  Common Stock, $.01 Value (File No. 7-3187)
Furr/Bishops' Cafeterias
  Common Stock, No Par Value (File No. 7-3188)
Gallagher (Arthur J.) & Co.
  Common Stock, $1.00 Par Value (File No. 7-3189)
Hotel Investor Trust
  Shares of Beneficial Interest, $1.00 Par Value (File No. 7-3190)
Hunt Manufacturing Co.
  Common Stock, $.10 Par Value (File No. 7-3191)
Lea-Ronal, Inc.
  Common Stock, $1.00 Par Value (File No. 7-3192)
Lomas Mortgage Co.
  Common Stock, $.01 Par Value (File No. 7-3193)
Montedison
  American Depository Shares (File No. 7-3194)
Munsingwear Inc.
  Common Stock, $1.00 Par Value (File No. 7-3195)
New Plan Realty Trust
  Shares of Beneficial Interest, No Par Value (File No. 7-3196)
Nuveen CA Municipal Value Fund
  Common Stock, $1.00 Par Value (File No. 7-3197)
Progressive Corporation (Ohio)
  Common Stock, $1.00 Par Value (File No. 3198)
Strategic Mortgage Investors, Inc.
  Common Stock, $.01 Par Value (File No. 7-3199)
Sun Distributors, L.P.
  Common Stock, No Par Value (File No. 7-3200)
Sun Energy Partners
  Common Stock, No Par Value (File No. 7-3201)
Wallace Computer Services, Inc.
  Common Stock, $1.00 Par Value (File No. 7-3202)
Weingarten Realty Inc.
  Common Stock, $.03 Par Value (File No. 7-3203)
Weis Markets Inc.
  Common Stock, No Par Value (File No. 7-3204)
USAcafes, L.P.
  Common Stock, $.10 Par Value (File No. 7-3205)

These securities are listed and registered on one or more other national securities exchange and are reported in the consolidated transaction reporting system.

Interested persons are invited to submit on or before April 27, 1988, written data, views and arguments concerning the above-referenced applications. Persons desiring to make written comments should file three copies thereof with the Secretary of the Securities and Exchange Commission, Washington, DC 20549. Following this opportunity for hearing, the Commission will approve the applications if it finds, based upon all the information available to it, that the extensions of unlisted trading privileges pursuant to such applications are consistent with the maintenance of fair and orderly markets and the protection of investors.

For the Commission, by the Division of Market Regulation, pursuant to delegated authority.

Jonathan G. Katz,

Secretary.

[FR Doc. 88-8018 Filed 4-12-88; 8:45 am]

BILLING CODE 8010-01-M

Self-Regulatory Organizations; Applications for Unlisted Trading Privileges and of Opportunity for Hearing; Midwest Stock Exchange, Inc.

April 6, 1988.

The above named national securities exchange has filed applications with the Securities and Exchange Commission pursuant to section 12(f)(1)(B) of the Securities Exchange Act of 1934 and Rule 12f-1 thereunder, for unlisted trading privileges in the following stocks:

MGI Properties
  Common Stock, $1.00 Par Value (File No. 7-3175)
EMC Corporation
  Common Stock, $.01 Par Value (File No. 7-3176)
Colonial Government Trust
  Shares of Beneficial Interest, No Par Value (File No. 7-3177)
Oppenheimer Multi-Sector Income Trust
  Shares of Beneficial Interest, $.01 Par Value (File No. 7-3178)
Daniel Industries, Inc.
  Common Stock, $1.25 Par Value (File No. 7-3179)
Equimark Corporation
  Common Stock, $1.00 Par Value (File No. 7-3180)

These securities are listed and registered on one or more other national securities exchange and are reported in the consolidated transaction reporting system.

Interested persons are invited to submit on or before April 27, 1988, written data, views and arguments concerning the above-referenced applications. Persons desiring to make written comments should file three copies thereof with the Secretary of the Securities and Exchange Commission, Washington, DC 20549. Following this opportunity for hearing, the Commission will approve the applications if it finds, based upon all the information available to it, that the extensions of unlisted trading privileges pursuant to such applications are consistent with the maintenance of fair and orderly markets and the protection of investors.

For the Commission, by the Division of Market Regulation, pursuant to delegated authority.

Jonathan G. Katz,

Secretary.

FR Doc. 88-8017 Filed 4-12-88; 8:45 am]

BILLING CODE 8010-01-M

[Release No. 35-24619]

Filings Under the Public Utility Holding Company Act of 1935 ("Act")

April 7, 1988.

Notice is hereby given that the following filing(s) has/have been made with the Commission pursuant to provisions of the Act and rules promulgated thereunder. All interested persons are referred to the application(s) and/or declaration(s) for complete statements of the proposed transaction(s) summarized below. The application(s) and/or declaration(s) and any amendment(s) thereto is/are available for public inspection through the Commission's Office of Public Reference.

Interested persons wishing to comment or request a hearing on the application(s) and/or declaration(s) should submit their views in writing by May 2, 1988 to the Secretary, Securities and Exchange Commission, Washington, DC 20549, and serve copy on the relevant applicant(s) and/or declarant(s) at the address(es) specified below. Proof of service (by affidavit or, in case of an attorney at law, by certificate) should be filed with the request. Any request for hearing shall identify specifically the issues of fact or law that are disputed. A person who so requests will be notified of any hearing, if ordered, and will receive a copy of any notice or order issued in the matter. After said date, the application(s) and/or declaration(s), as filed or as amended, may be granted and/or permitted to become effective.

Kentucky Power Company (70-7496)

Kentucky Power Company ("KPCo"), 1701 Central Avenue, P.O. Box 1428, Ashland, Kentucky 41101, a subsidiary of American Electric Power Company, Inc., a registered holding company, has filed a declaration pursuant to sections 6(a) and 7 of the Act and Rules 50(a)(2) and (5) thereunder.

KPCo proposes to issue and sell, from time to time through December 31, 1989, up to $75 million principal amount of unsecured promissory notes with a maturity of not less than two years nor more than ten years ("Notes") to one or more commercial banks or other financial institutions pursuant to a proposed term loan agreement. The term loan agreement would provide that the Notes bear interest at a fixed rate per annum, not to exceed 250 basis points above the yield to maturity of United States Treasury obligations of comparable maturity at the time of issuance of the Notes. A placement fee or not more than 0.5% of the principal amount borrowed may be incurred. In the event such a placement fee is incurred, KPCo requests that the Commission authorize an exception from the competitive bidding requirements of Rule 50(b) pursuant to Rule 50(a)(5).

Any proceeds realized from the sale of the Notes will be used to refinance borrowings under KPCo's Revolving Credit Agreement, to repay unsecured short-term indebtedness of KPCo at or prior to maturity and for other corporate purposes.

Holyoke Water Power Company, et al. (70-7495)

Holyoke Water Power Company ("HWP"), One Canal Street, Holyoke, Massachusetts 01040, a subsidiary of Northeast Utilities, a registered holding company, has filed a declaration with this Commission pursuant to sections 6(a) and 7 of the Act and Rule 50(a)(5) thereunder.

HWP proposes to refinance the outstanding portion of the $12 million City of Holyoke, Massachusetts Collateralized Pollution Control Revenue Bonds ("1981 Bonds"), the proceeds of which were used by HWP to pay certain costs of acquiring, constructing, and installing certain pollution control facilities at HWP's Mt. Tom Station. The City of Holyoke, Massachusetts, acting by and through its Industrial Development Financing Authority ("Issuer") will issue pollution control revenue bonds ("Bonds") in the principal amount of not more than $8 million to provide funds for the refinancing. The Bonds will be issued under a Trust Agreement between the Issuer and a trustee named therein. Pursuant to a Loan Agreement between HWP and the Issuer, the Issuer will loan the proceeds of the Bonds to HWP.

HWP will agree to make payments corresponding to the amounts needed to pay the principal of, premium, if any, and interest on, the Bonds as they become due. The Bonds will be issued with variable interest rates as floating rate demand bonds and will mature in not more than twenty years. At the option of HWP, the interest rate on the Bonds may be converted to a fixed interest rate. In no event will the interest rate on the Bonds exceed 15% per annum. Prior to fixing rates, the Bonds may be tendered for payment by holders on seven days' notice. If the Bonds cannot be remarketed, the Trustee may draw upon an irrevocable letter of credit issued by a bank to pay tendering bondholders. HWP will be required to pay a redemption premium equal to 0.5% of the principal amount of the 1981 Bonds redeemed.

HWP has requested an exception from the competitive bidding requirements of Rule 50(b) under Rule (a)(5) in order that it may begin negotiations with potential underwriters of the Bonds. They may do so.

Noverco Inc. et al. (70-7303; 31-828)

Noverco Inc. ("Noverco"), 1170 Peel Street, Suite 410, Montreal, Quebec H3B 4P2, Canada, has filed an amended application pursuant to sections 9(a) and 10 of the Act to acquire certain securities and an application for exemption pursuant to section 3(a)(5) of the Act. The two matters have been consolidated.

Noverco is a Canadian public-utility holding company and is exempt from the Act by virtue of having filed an application for exemption pursuant to section 3(a)(5) on June 24, 1987. It is a publicly held corporation with 51,933,615 shares of capital stock outstanding at September 30, 1987. Noverco has not issued or sold its capital stock or any other of its securities in the United States, nor is its stock publicly traded in the United States.

2425-4526 Quebec Inc., a Quebec corporation, and SOQUIP, a Quebec joint stock company created by statute whose sole shareholder is the Quebec Government, respectively own 19.88% and 15.36% of the common stock of Noverco. Caisse de depot et placement due Quebec, a Quebec corporation created by statute and an agent of the Quebec Government, owns 2.38% of the common stock of Noverco and exercises the voting rights attached to an additional 13.21% of such stock. These three companies are claiming exemption from the Act pursuant to Rule 10(a)(4) based upon Noverco's pending application for exemption. They have joined in Noverco's application under sections 9(a) and 10 of the Act.

Noverco's principal subsidiary, wholly owned, is Gaz Metropolitain, Inc. ("GMI"), a Quebec corporation that distributes natural gas in Quebec, including Montreal. In fiscal year 1987, GMI accounted for about 95% of Noverco's consolidated revenues of approximately $743 (U.S.) million. Noverco's consolidated assets at year-end were about $1 (U.S.) billion, and net property, plant, and equipment totaled about $697 (U.S.) million. Noverco has certain nonutility subsidiary companies doing business in Canada.

Noverco proposes to acquire the outstanding common stock of Northern New England Gas Corporation ("NNEG"), a Vermont corporation which owns the outstanding common stock of Vermont Gas System, Inc. (VGS"), a gas utility company and a Vermont corporation. VGS provides gas distribution service to communities in the northwest part of Vermont, including the greater Burlington area. It currently owns and operates 55 miles of transmission mains, extending from the Canadian border at Phillipsburg, Quebec/Highgate Springs, Vermont, to Burlington, and 266 miles of distribution lines. It holds an exclusive franchise to provide natural gas throughout the entire state of Vermont. Its exclusive supplier is TransCanada Pipelines, Ltd., which also is the major supplier of GMI. For the fiscal year 1987, VGS' utility revenues were about $24.3 million, its total assets at year-end were about $24.6 million, and its net utility plant was about $17.2 million.

VGS has outstanding 100 shares of common stock, $1 par value, all owned, by NNEG, which was organized in 1983 to acquire the VGS common stock. The VGS acquisition was financed by loans of $12 million to NNEG and by the sale of 5,000 shares of its common stock, $1 par value, to Energy Future Limited Partnership ("EFLP"), a Vermont limited partnership, for $750,000. Both NNEG and EFLP are exempt intrastate holding companies under section 3(a)(1) of the Act in accordance with Rule 2 under the Act. The limited partnership interests in EFLP constitute 99% of the partnership interests of EFLP. On December 30, 1986, the limited partnership interests were acquired by Noverco from its owners for $10,395,000. It is proposed that upon the contemplated dissolution of EFLP and upon payment of $105,000 to the general partner for his interest, Noverco will acquire and own directly the common stock of NNEG. Noverco has filed an amendment to its application for an order of exemption under section 3(a)(5) as a holding company over NNEG and VGS.

Eastern Edison Company (70-7373)

Eastern Edison Company ("Eastern Edison"), 110 Mulberry Street, Brockton, Massachusetts 02043, a wholly owned electric utility subsidiary of Eastern Utilities Associates ("EUA"), a registered holding company, has filed a post-effective amendment to its application under sections 6(b), 9(a) and 10 of the Act and Rules 42(a) and 50 thereunder.

By an order dated June 12, 1987 (HCAR No. 24411) Eastern Edison was authorized to issue and sell, in one or more series, from time to time through April 30, 1988, by competitive bidding not more than $100 million aggregate principal amount of first mortgage and collateral trust bonds ("New Bonds"). The maturity date for each series of bonds will be from five to thirty years from the first day of the month of issuance.

Easter Edison has requested that the time during which it is authorized to issue the New Bonds be extended through the period ending May 31, 1988.

For the Commission, by the Division of Investment Management, pursuant to delegated authority.

Jonathan G. Katz,

Secretary.

[FR Doc. 88-8088 Filed 4-12-88; 8:45 am]

BILLING CODE 8010-01-M

DEPARTMENT OF TRANSPORTATION

Office of the Secretary

[Order 88-4-27; Docket No. 44445]

Intra-Alaska Bush Service Mail Rates Investigation

AGENCY: Department of Transportation.

ACTION: Notice of order proposing new final bush service mail rates.

SUMMARY: The Department of Transportation is advising all interested persons that we are proposing new final Intra-Alaska bush service mail rates to be effective on the service date of the order. The order also proposes to make final on the service date of the order those temporary mail rates which have been in effect since October 29, 1986.

DATES: Notices of objection will be due April 28, 1988, and should be filed in Docket 44445. Objections should be addressed to the Documentary Services Division, Department of Transportation, 400 7th Street SW., Washington, DC 20590 and should be served on the

parties listed in Appendix D to the order.

FOR FURTHER INFORMATION CONTACT: James E. Gardner, Fares and Rates Division, Department of Transportation, 400 7th Street SW, Washington, DC 20590, (202) 366-2438.

Dated: April 7, 1988.

Matthew V. Scocozza,

Assistant Secretary for Policy and International Affairs.

[FR Doc. 88-8050 Filed 4-12-88; 8:45 am]

BILLING CODE 4910-62-M

Federal Aviation Administration

Approval of Noise Compatibility Program; Memphis, International Airport, Memphis, TN

AGENCY: Federal Aviation Administration, DOT.

ACTION: Notice.

SUMMARY: The Federal Aviation Administration (FAA) announces its findings on the noise compatibility program submitted by the Memphis-Shelby County Airport Authority (MSCAA) under the provisions of Title I of the Aviation Safety and Noise Abatement Act of 1979 (Pub. L. 96-193) and 14 CFR Part 150. These findings are made in recognition of the description of Federal and non-Federal responsibilities in Senate Report No. 96-52 (1980). On September 10, 1987, the FAA determined that the noise exposure maps submitted by MSCAA under Part 150 were in compliance with applicable requirements. On February 20, 1988, the Administrator approved the Memphis International Airport noise compatibility program. Some of the recommendations of the program were approved.

EFFECTIVE DATE: The effective date of the FAA's approval of the Memphis International Airport noise compatibility program is February 20, 1988.

FOR FURTHER INFORMATION CONTACT: Otis T. Welch, Principal Planner/Programmer; Airports District Office; 3973 Knight Arnold Road, Suite 105; Memphis, Tennessee 38118-3004; telephone number 901/521-3495. Documents reflecting this FAA action may be reviewed at this same location.

SUPPLEMENTARY INFORMATION: This notice announces that the FAA has given its overall approval to the noise compatibility program for Memphis International Airport, effective date February 20, 1988.

Under section 104(a) of the Aviation Safety and Noise Abatement Act of 1979 (hereinafter referred to as "the Act"), an airport operator who has previously submitted a noise exposure map may submit to the FAA a noise compatibility program which sets forth the measures taken or proposed by the airport operator for the reduction of existing noncompatible land uses and prevention of additional noncompatible land uses within the area covered by the noise exposure maps. The Act requires such programs to be developed in consultation with interested and affected parties including local communities, government agencies, airport users, and FAA personnel.

Each airport noise compatibility program developed in accordance with Federal Aviation Regulations (FAR) Part 150 is a local program, not a Federal program. The FAA does not substitute its judgment for that of the airport proprietor with respect to which measures should be recommended for action. The FAA's approval or disapproval of FAR Part 150 program recommendations is measured according to the standards expressed in Part 150 and the Act, and is limited to the following determinations:

a. The noise compatibility program was developed in accordance with the provisions and procedures of FAR Part 150;

b. Program measures are reasonably consistent with achieving the goals of reducing existing noncompatible land uses around the airport and preventing the introducion of additional noncompatible land uses;

c. Program measures would not create an undue burden on interstate of foreign commerce, unjustly discriminate against types or classes of aeronautical uses, violate the terms of airport grant agreements, or intrude into areas preempted by the Federal Government; and

d. Program measures relating to the use of flight procedures can be implemented within the period covered by the program without derogating safety, adversely affecting the efficient use and management of the navigable airspace and air traffic control systems, or adversely affecting other powers and responsibilities of the Administrator prescribed by law.

Specific limitations with respect to the FAA's approval of an airport noise compatibility program are delineated in FAR Part 150, § 150.5. Approval is not a determination concerning the acceptability of land uses under Federal, state, or local law. Approval does not by itself constitute an FAA implementing action. A request for Federal action or approval to implement specific noise compatibility measures may be required, and an FAA decision on the request may require an environmental assessment of the proposed action. Approval does not constitute a commitment by the FAA to financially assist in the implementation of the program nor a determination that all measures covered by the program are eligible for grant-in-aid funding from the FAA. Where Federal funding is sought, requests for project grants must be submitted to the FAA Airports District Office in Memphis, Tennessee.

The MSCAA submitted to the FAA on September 29, 1986, noise exposure maps, descriptions and other documentation produced during the noise compatibility planning study conducted from July 1984 to September 1986. The Memphis International Airport noise exposure maps were determined by the FAA to be in compliance with applicable requirements on September 10, 1987. Notice of this determination was published in the **Federal Register** on September 24, 1987.

The Memphis International Airport study contains a proposed noise compatibility program comprised of actions designed for phased implementation by airport management and adjacent jurisdictions from the date of study completion to beyond the year 1990. It was requested that the FAA evaluate and approve this material as a noise compatibility program as described in section 104(b) of the Act. The FAA began its review of the program on September 10, 1987, and was required by a provision of the Act to approve or disapprove the program within 180 days (other than the use of new flight procedures for noise control). Failure to approve or disapprove such program within the 180-day period shall be deemed to be an approval of such program.

The submitted program contained twenty-six proposed actions for noise mitigation on and off the airport, as applicable. The FAA completed its review and determined that the procedural and substantive requirements of the Act and FAR Part 150 have been satisfied. The overall program, therefore, was approved by the Administrator effective February 20, 1988.

Approval was granted for seven of the specific program elements. No approval was taken on nineteen of the program elements, because additional study was indicated by the Airport Authority. The approved actions are summarized as:

Noise Abatement Action #4, The Authority and FAA Tower should continue to restrict nighttime departures to the east on runway 9-27, maximize nighttime departures to the south on 18L-36R.

BEST COPY AVAILABLE

Noise Abatement Action #5, The Authority and FAA Tower should continue to use noise abatement departures flight tracks to the south.

Noise Abatement Action #10, The Authority should establish a noise compatibility staff.

Noise Mitigation Action #11, The Authority should establish a noise compatibility committee.

Noise Mitigation Action #1, The Authority should acquire property developed in residential or other incompatible uses.

Noise Mitigation Action #7, The Authority should consider acquiring undeveloped property to use as a noise buffer.

Noise Mitigation Action #8, The Authority should consider purchasing development rights on undeveloped property.

These determinations are set forth in detail in a Record of Approval endorsed by the Administrator on February 20, 1988. The Record of Approval, as well as other evaluation materials and the documents comprising the submittal, are available for review at the FAA office listed above and at the administrative offices of the Memphis-Shelby County Airport Authority.

Issued in Memphis, Tennessee, March 9, 1988.

John M. Dempsey,

Manager, Memphis Airport District Office.

[FR Doc. 88-7994 Filed 4-12-88; 8:45 am]

BILLING CODE 4910-13-M

Radio Technical Commission for Aeronautics (RTCA) Special Committee 147 (25th Meeting), Traffic Alert and Collision Avoidance System; Meeting

Pursuant to section 10(a)(2) of the Federal Advisory Committee Act (Pub. L. 92-463; 5 U.S.C. App. I) notice is hereby given of a meeting of RTCA Special Committee 147 on Traffic Alert and Collision Avoidance System to be held on May 3-5, 1988, in the RTCA Conference Room, One McPherson Square, 1425 K Street, NW., Suite 500, Washington, DC commencing at 9:30 a.m.

The Agenda for this meeting is as follows: (1) Chairman's introductory remarks; (2) Approval of minutes of the twenty-fourth meeting held on February 9-11, 1988; (3) TCAS Program status reports; (4) Reports on TCAS III activities; (5) Reports on TCAS Technical Studies; (6) Discussion of SC-147 plans and schedule; (7) TCAS II Logic Working Group Meeting in separate session; (8) Other business; (9) Date and place of next meeting.

Attendance is open to the interested public but limited to space available. With the approval of the Chairman, members of the public may present oral statements at the meeting. Persons wishing to present statements or obtain information should contact the RTCA Secretariat, One McPherson Square, 1425 K Street NW. Suite 500, Washington, DC 20005; (202) 682-0266. Any member of the public may present a written statement to the committee at any time.

Issued in Washington, DC, on April 6, 1988.

Herbert P. Goldstein,

Designated Officer.

[FR Doc. 88-7995 Filed 4-12-88; 8:45 am]

BILLING CODE 4910-13-M

Radio Technical Commission for Aeronautics (RTCA) Special Committee 156 (18th Meeting), Potential Interference to Aircraft Electronic Equipment from Devices Carried Aboard; Meeting

Pursuant to section 10(a)(2) of the Federal Advisory Committee Act (Pub. L. 92-463; 5 U.S.C. App. I), notice is hereby given of a meeting of RTCA Special Committee 156 on Potential Interference to Aircraft Electronic Equipment from Devices Carried Aboard to be held on May 10-11, 1988, in the RTCA Conference Room, One McPherson Square, 1425 K Street, NW., Suite 500, Washington, DC., commencing at 9:30 a.m.

The Agenda for this meeting is as follows: (1) Chairman's remarks; (2) Approval of the minutes of the 17th meeting minutes; (3) Review of task assignments identified at last meeting; (4) Review of 6th draft of the Vol I and first draft of Vol II of the committee report; (5) Other business; (6) Task assignments; and (7) Date and place of next meeting.

Attendance is open to the interested public but limited to space available. With the approval of the Chairman, members of the public may present oral statements at the meeting. Persons wishing to present statements or obtain information should contact the RTCA Secretariat, One McPherson Square, 1425 K Street NW., Suite 500, Washington, DC 20005; (202) 682-0266. Any member of the public may present a written statement to the committee at any time.

Issued in Washington, DC, on April 6, 1988.

Herbert P. Goldstein,

Designated Officer.

[FR Doc. 88-7996 Filed 4-12-88; 8:45 am]

BILLING CODE 4910-13-M

National Highway Traffic Safety Administration

Denial of Motor Vehicle Defect Petition; Thomas E. Wirth

This notice sets forth the reasons for the denial of a petition submitted to NHTSA under section 124 of the National Traffic and Motor Vehicle Safety Act of 1966, as amended (15 U.S.C. 1381 *et seq.*).

In September 1986, Senator (then Representative) Timothy E. Wirth petitioned NHTSA to undertake rulemaking and other actions relating to motor vehicle rollover resistance. The rulemaking petition asked the agency to initiate rulemaking to establish a Federal motor vehicle safety standard to limit the rollover propensity of passenger cars, utility vehicles and pickup trucks by requiring that those vehicles have a minimum "stability factor" (defined in the petition as one-half of a vehicle's track width divided by the height of the vehicle's center of gravity). Senator Wirth also petitioned NHTSA to open a defect investigation of existing passenger cars, utility vehicles and pickup trucks whose stability factor is lower than the minimum suggested in his petition for rulemaking on the same subject. On December 29, 1987, NHTSA published in the **Federal Register** its denial of the part of Senator Wirth's petition that requested a rulemaking action, but the agency stated that it would continue its research activities regarding the rollover tendencies of utility vehicles and that it would also continue its efforts to inform drivers of utility vehicles of the special handling characteristics of these vehicles. 52 FR 49033 (Dec. 29, 1987).

The agency now denies the petition for a defect investigation. Because the petition asks the agency to investigate and order the recall of *all* passenger automobiles, utility vehicles and pickup trucks that have a specified design characteristic, granting the petition would have the effect of rulemaking without the required notice and opportunity for public comment. A commitment to investigate all vehicles which do not meet specified design criteria potentially establishes those criteria as a safety standard of general applicability to all vehicles, but does not follow the statutory procedures and guidelines for setting such standards as specified by section 103 of the National Traffic and Motor Vehicle Safety Act, 15 U.S.C. 1394. Moreover, a recall order to the manufacturers of all those vehicles could be regarded as a retroactive application of such a standard. The

agency views its defect investigative authority under the Safety Act as limited to a case by case investigative process. Recall orders resulting from this investigative authority have no effect on vehicles other than those that are the subjects of these investigations, and they do not result in prospective standards of general applicability.

NHTSA also denies the petition because it cannot justify the substantial resources which would be needed to conduct an investigation of the scope and complexity that would be required to develop evidence sufficient to determine whether the vehicles covered by the petition contain a safety-related defect within the meaning of the Safety Act. The agency has in the past devoted considerable resources to investigating alleged rollover instability in Jeep CJ–5's and CJ–7's, many of which are also the subject of this petition, as well as allegations that the rollbars installed in some of the Jeep CJ's as a means of occupant protection were defective. In the course of these examinations of the problem, NHTSA conducted its own vehicle testing and analyzed a large body of data including accident data and other tests of these vehicles. However, NHTSA was unable to conclude that either the Jeep CJ vehicles or the rollbars installed thereon contained a safety-related defect within the meaning of the Act, largely because the information available did not show that the accidents were caused by a defect in the vehicle rather than by driver and/or environmental factors. Resolution of such issues in the extremely broad investigation sought by this petition would require the agency to make resource commitments that might impede other more viable investigations.

The information submitted in support of the present petition does not support a finding of reasonable possibility that a new investigation would result in a recall order. 49 CFR 552.8. To support a determination that vehicles contain a safety-related defect, the Act requires that NHTSA be able to prove that a *defect in the vehicle* or vehicle equipment is the cause of an unreasonable risk to safety. The Act defines "defect" as "any *defect* in performance, construction, components or materials *in motor vehicles* or motor vehicle equipment." 15 U.S.C. 1391(11) (emphasis added). It defines "motor vehicle safety" as "the performance of motor vehicles * * * in such a manner that the public is protected against unreasonable risk of *accidents occurring as a result of the design construction or performance of motor vehicles* * * *." 15 U.S.C. 1391(1) (emphasis added).

After reviewing the analysis attached to Senator Wirth's petition, prepared by Leon S. Robertson and A. Benjamin Kelley, NHTSA has concluded that the analysis does not provide a sufficient basis for believing that further investigation of this matter will enable it to identify a safety-related defect within these statutory definitions that affects all vehicles having some predetermined stability factor.

The Robertson-Kelley analysis purports to show that the cause of the subject vehicles' apparent disproportionate involvement in single-vehicle rollover-initiated fatal crashes is the low "stability factor" of these vehicles. Its conclusion depends heavily on a statistical regression analysis which compares the stability factor for each vehicle in the study to a calculated percentage of all crashes reported in the NHTSA Fatal Accident Reporting System (FARS) for the same vehicle that included reports of rollover. Among the vehicles in the study, there was a high correlation between the stability factor and the percentage of crashes that involve rollovers. The analysis then attempts to show that the involvement of factors extrinsic to the vehicle (such as driver age, alcohol involvement, road conditions, etc.) does not significantly affect the correlation between the stability factor and the percentage of fatal crashes that involve rollovers.

The agency presented a discussion of the limitations of the Robertson-Kelley statistical analysis in its notice of denial of the petition for rulemaking, and this discussion also applies to the issues presented by the petition for a defect investigation. In addition to the reasons cited by the agency in the rulemaking petition denial for its reservations concerning the predictive value of the stability factor, the agency must always exercise great caution in the use of police reported accident statistics in defects cases. This is so because these statistics are heavily influenced by driver and environmental causes that tend to obscure vehicle causes. The Robertson-Kelley regression analysis does not necessarily overcome this difficulty with such data.

The Robertson-Kelley regression analysis appears to show that some driver and environment characteristics are no more likely to contribute to the rate of rollover incidents occurring among crashes in vehicles with low stability factors than they contribute to the rate of such occurrences in other vehicles. This does not, however, prove that these factors were not present in the crashes involving the low stability factor vehicles; and it does not eliminate such factors as primary causes of a substantial number of the rollover-initiated crashes in which those vehicles are involved. To the contrary, crash data available to NHTSA show that driver behavior and the driving environment generally predominate over vehicle defects by an overwhelming margin as the cause of crashes. In particular, an agency analysis of rollover accident data from the Fatal Accident Reporting System files for 1975–80, done as part of its earlier examination of alleged defects causing rollover in CJ–5 vehicles, showed that over 80 percent of fatal rollover accidents involving those vehicles also involved one or more of the following kinds of driver behavior: Excessive speed, reckless driving, alcohol, drugs and/or sleep. It is also significant that the Robertson-Kelley analysis includes driver characteristics such as prior conviction, sex and age, but does not include driver behavior during the crash sequence that might be expected to contribute to the incident, such as speed and last maneuver before the crash.

In addition to driver and environmental factors, vehicle conditions outside the manufacturers' responsibility may also have contributed to some of the reported rollover accidents. In the agency's earlier examination of the problem, it found evidence that some rollover accidents may have been caused in part by owner-installed modifications, such as oversized tires and modified suspensions to raise the vehicles' bodies, that could have aggravated a vehicle's rollover tendency. The Robertson-Kelley report does not take this factor into account at all in its analysis.

When it denied that part of this petition that requested a rulemaking action, the agency noted that in its 1987 report to Congress on "Light Truck and Van Safety," it had observed a significantly higher rate of rollover crashes among pickup trucks and multipurpose passenger vehicles than among passenger cars, and it described its research activities regarding this problem as well as the crashworthiness of open-bodied multipurpose passenger vehicles. However, the rulemaking petition denial went on to say that, while the agency recognized this problem of higher rollover rate in these vehicles, the stability factor analysis was not a sound basis for rulemaking because of the presence of other vehicle factors in the rollover phenomenon, the lack of predictiveness of the stability factor for vehicle rollover involvement, and statutory limitations that may

preclude standards that have the effect of eliminating classes of motor vehicles. *See* 52 FR 49037 (December 29, 1987).

Similarly, the stability factor distinction does not appear to be an appropriate method of conducting a defect investigation analysis, apart from the difficulty, cited above, that such an approach may have the effect of potentially establishing a standard of general applicability without notice and comment. In its defect investigation process, the agency usually gathers evidence that may indicate that a significant number of failures posing an unreasonable risk to safety have occurred or are likely to occur in a group of vehicles, usually a model or vehicle line made by the same manufacturer. The agency must then consider whether such failures may have been caused by unforeseeable owner abuse, which can be a defense to an order requiring a manufacturer to conduct a recall. *See United States v. General Motors Corp. (Wheels).* 518 F. 2d 420 (D.C. Cir. 1975). Assuming that there were a high rollover rate among some vehicles which also have low stability factors, this might appear to be evidence of significant numbers of failures. However, the presence of driver and environmental factors among the cause of the rollover incidents raises not only the issue of whether these incidents are in fact vehicle failures, but also the question of whether they may in any event be caused by unforeseeable owner abuse.

In denying this petition, the agency does not decide that all of the kinds of driver behavior or driving environmental conditions that appear to contribute to rollover crashes in low stability factor vehicles may be regarded as unforeseeable owner abuse, as that term was used by the court in the *Wheels* case. However, the agency finds that the defect investigation that Senator Wirth has requested would require a resolution of the issue of owner abuse, and that the analysis of accident statistics contained in the Robertson-Kelly report and in other analyses performed by agency personnel would not provide enough information for such a resolution. Based on its past examinations of this matter, NHTSA has learned that the pricipal sources of information about rollover crashes (such as FARS, police-reported accident data and products liability litigation) often do not contain all of the information about the driver, environmental and vehicle factors involved in a crash that is needed to make a sound judgment on this question. Moreover, NHTSA's file owner reports (on which the agency relies as a major source of information identifying possible safety-related defects) does not contain a body of complaints or reports describing significant numbers of rollover crashes for vehicles that have stability factors below the threshold suggested by the petition and occurring in normal driving conditions. In the absence of such a body of evidence the agency is unable to predict what steps would be sufficient to produce evidence that would allow it to resolve this issue.

Despite the fact that the petition does not provide a basis for deciding that there is a reasonable possibility that further investigation would result in an order requiring manufacturers to recall all passenger and utility vehicles and light trucks with stability factors below a specified level to provide improved occupant protection in rollover accidents, it does point out the usefulness of disseminating information about safe operation of utility vehicles. The agency believes that the safety of drivers and occupants of these vehicles can be enhanced by making available information about special precautions that drivers should take because of the lower stability and different handling characteristics of utility vehicles, the additional hazards posed by modifications that further reduce stability (such as use of over-size tires), and the occupant protection benefits of rollbars and rollcages. NHTSA has therefore prepared and issued a consumer information pamphlet on these subjects.

Accordingly, NHTSA denies Senator Wirth's petition for a defect investigation, but has issued the consumer pamphlet described above.

Authority: Sec. 124, Pub. L. 93-492; 88 Stat. 1470 (15 U.S.C. 1410a; delegations of authority at 49 CFR 1.50 and 501.8.

Issued on April 6, 1988.

George L. Parker,

Associate Administrator for Enforcement.

[FR Doc. 88-8053 Filed 4-8-88; 4:09 pm]

BILLING CODE 4910-59-M

Research and Special Programs Administration

Applications for Renewal or Modification of Exemptions or Applications to Become a Party to an Exemption

AGENCY: Research and Special Programs Administration, DOT.

ACTION: List of applications for renewal or modification of exemptions or application to become a party to an exemption.

SUMMARY: In accordance with the procedures governing the application for, and the processing of, exemptions from the Department of Transportation's Hazardous Materials Regulations (49 CFR Part 107, Subpart B), notice is hereby given that the Office of Hazardous Materials Transportation has received the applications described herein. This notice is abbreviated to expedite docketing and public notice. Because the sections affected, modes of transportation, and the nature of application have been shown in earlier **Federal Register** publications, they are not repeated here. Except as otherwise noted, renewal applications are for extension of the exemption terms only. Where changes are requested (e.g. to provide for additional hazardous materials, packaging design changes, additional mode of transportation, etc.) they are described in footnotes to the application number. Application numbers with the suffix "X" denote renewal; application numbers with the suffix "P" denote party to. These applications have been separated from the new applications for exemptions to facilitate processing.

DATES: Comment period closes April 28, 1988.

ADDRESS COMMENTS TO: Dockets Branch, Research and Special Progams Administration, U.S. Department of Transportation, Washington, DC 20590. Comments should refer to the application number and be submitted in triplicate.

FOR FURTHER INFORMATION: Copies of the applications are available for inspection in the Dockets Branch, Room 8426, Nassif Building, 400 7th Street SW., Washington, DC.

Application No.	Applicant	Renewal of exemption
970-X	Callery Chemical Company, Pittsburgh, PA.	970
2462-X	ETI Explosives Technologies International Inc., Wilmington, DE.	2462
2462-X	E. I. du Pont de Nemours & Company, Inc., Wilmington, DE.	2462
3187-X	PPG Industries, Incorporated, Pittsburgh, PA.	3187
3187-X	Silor Optical of Florida, Inc., St. Petersburg, FL.	3187
3216-X	Pennwalt Corporation, King of Prussia, PA.	3216
3216-X	E. I. du Pont de Nemours & Company, Inc., Wilmington, DE.	3216
5232-X	E. I. du Pont de Nemours & Company, Inc., Wilmington, DE.	5232
5704-X	IRECO, Incorporated, Salt Lake City, UT.	5704

Application No.	Applicant	Renewal of exemption
6016-X	Huber Supply Company, Mason City, IA.	6016
6016-X	Kentucky Airgas, Inc. d/b/a Southern Welding Supply, Bowling Green, KY.	6016
6250-X	U.S. Department of Defense, Falls Church, VA.	6250
6263-X	Amtrol, Incorporated, West Warwick, RI (See Footnote 1).	6263
6309-X	Insta-Foam Products, Inc., Joliet, IL.	6309
6418-X	J.R. Simplot Company, Pocatello, ID.	6418
6543-X	Airco, The BOC Group, Inc., Murray Hill, NJ.	6543
6556-X	Castle & Cooke, Inc., San Francisco, CA.	6556
6610-X	Catalyst Resources, Inc., Elyria, OH.	6610
6670-X	E. I. du Pont de Nemours & Company, Inc., Wilmington, DE.	6670
6670-X	Airco, The BOC Group, Inc., Murray Hill, NJ.	6670
6694-X	Eurotainer, S.A., Paris, France.	6694
6694-X	Compagnie des Containers Reservoirs, Paris, France.	6694
6694-X	Arbel-Fauvet-Rail, Paris, France.	6694
6772-X	Thomas Gray & Associates, Inc., Orange, CA.	6772
6772-X	Monsanto Chemical Company, St. Louis, MO.	6772
6859-X	Pyronetics Devices, Incorporated, Denver, CO.	6859
6906-X	U.S. Department of Defense, Falls Church, VA.	6906
6927-X	Bromine Compounds, Limited, Beer-Sheva, Israel 84101.	6927
6932-X	Arbel-Fauvet-Rail, Paris, France.	6932
6999-X	U.S. Department of Defense, Falls Church, VA.	6999
7024-X	Greenwood Motor Lines, Inc., Greenwood, SC.	7024
7024-X	Avondale Mills, Sylacauga, AL.	7024
7032-X	Polaroid Corporation, Needham Heights, MA.	7032
7052-X	General Electric Company, Philadelphia, PA.	7052
7052-X	Priebe Electronics, Redmond, WA.	7052
7052-X	Clifton Precision, Springfield, PA.	7052
7255-X	U.S. Department of Defense, Falls church, VA.	7255
7259-X	FMC Corporation, Philadelphia, PA.	7259
7259-X	Stauffer Chemical Company, Westport, CT.	7259
7259-X	Monsanto Chemical Company, St. Louis, MO.	7259
7259-X	Exxon Chemical Americas, Houston, TX.	7259
7275-X	Express Airways, Inc., Sanford, FL.	7275
7285-X	Arbel-Fauvet-Rail, Paris, France.	7285
7544-X	Eastman Kodak Company, Rochester, NY.	7544
7573-X	U.S. Department of Defense, Falls Church, VA.	7573
7640-X	Mauser Packaging, Limited, Litchfield, CT.	7640
7700-X	U.S. Department of Agriculture, Forest Service, Washington, DC.	7700
7891-X	Reliance Electric Company, Cleveland, OH.	7891
7971-X	Walter Kidde, Wilson, NC.	7971
8009-X	CP Industries, Incorporated, McKeesport, PA (See Footnote 2).	8009
8016-X	U.S. Department of Agriculture, Forest Service, Washington, DC.	8016
8059-X	EFI Corporation, d/b/a EFIC, San Jose, CA.	8059
8091-X	Restor Communications, Inc., Florence, KY.	8091
8111-X	U.S. Department of Energy, Washington, DC.	8111
8125-X	Arbel-Fauvet-Rail, Paris, France.	8125
8127-X	Union Explosivos Rio Tinto, S.A., Madrid, Spain.	8127
8127-X	Hercules, Incorporated, Wilmington, DE.	8127
8131-X	National Aeronautics and Space Administration, Washington, DC (See Footnote 3).	8131
8141-X	Boeing Aerospace Company, Seattle, WA.	8141
8168-X	Container Corporation of America, Wilmington, DE (See Footnote 4).	8168
8196-X	GCS Container Service, SA, Chiasso, Switzerland.	8196
8248-X	Cerametals, Inc., New York, NY.	8248
8248-X	C.M. China Trade, Inc., New York, NY.	8248
8248-X	China Metallurgical Import & Export Corporation, Shanghai, China.	8248
8337-X	Industrial & Municipal Engineering, Inc., Galva, IL.	8337
8426-X	Crosby & Overton, Inc., Long Beach, CA.	8426
8436-X	Pennwalt Corporation, Buffalo, NY.	8436
8445-X	McDonnell Douglas Corporation, St. Louis, MO.	8445
8467-X	Compagnie des Containers Reservoirs, Paris, France.	8467
8582-X	Illinois Central Gulf Railroad Company, Chicago, IL.	8582
8582-X	Southern Pacific Transportation Company, San Francisco, CA.	8582
8582-X	Chicago South Shore & South Bend Railroad Company, Michigan City, IN.	8582
8582-X	Chicago, Missouri & Western Railway Company, Michigan City, IN.	8582
8582-X	Consolidated Rail Corporation, Philadelphia, PA.	8582
8674-X	Thermex Energy Coproration, Dallas, TX.	8674
8706-X	Petro-Steel Division of Prairie State Equipment, Sioux Falls, SD.	8706
8820-X	Arbel-Fauvet-Rail, St Laurent Blangy, France.	8820
8822-X	Certified Tank Manufacturing, Inc., Compton, CA.	8822
8854-X	Arbel-Fauvet-Rail, Neuilly-Sur-Seine, France.	8854
8862-X	ABERCO Inc., Seabrook, MD.	8862
8932-X	Catalyst Resources, Inc., Elyria, OH.	8932
9064-X	Corning Glass Works, Corning, NY (See Footnote 5).	9064
9166-X	Comptank, Corporation, Bothwell, Ontario, CN.	9166
9172-X	CECOS International, Inc., Buffalo, NY.	9172
9211-X	Maersk Line, Limited, Madison, NJ.	9211
9213-X	Bulk-Pack, Inc., West Monroe, LA.	9213
9222-X	Bryson Industrial Services, Inc., Lexington, SC.	9222
9233-X	Occidental Chemical Corporation, Dallas TX.	9233
9245-X	Contico Container, Norwalk, CA.	9245
9262-X	Owen Oil Tools, Inc. Fort Worth, TX.	9262
9266-X	National Refrigerants, Inc., Radnor, PA.	9266
9266-X	Eurotainer, S.AS., Paris, France.	9266
9266-X	Compagnie des Containers Reservoirs, Paris, France.	9266
9366-X	Gulf Central Storage & Terminal Company, Tulsa, OK.	9366
9400-X	Poly Processing Company, Inc., Monroe, LA.	9400
9485-X	Chem-Tech, Limited, Des Moines, IA (See Footnote 6).	9485
9549-X	Owen Oil Tools, Inc., Fort Worth, TX.	9549
9595-X	IRECO, Incorporated, Salt Lake City, UT.	9595
9612-X	PPG Industries, Incorporated, Pittsburgh, PA.	9612
9617-X	Explosives Technologies International, Inc., Wilmington, DE.	9617
9638-X	Allied-Signal Aerospace Company, Tempe, AZ.	9638
9694-X	All Pure Chemical Company, Inc., Tracy, CA (See Footnote 7).	9694
9704-X	Western Atlas International (formerly Dresser), Houston, TX (See Footnote 8).	9704
9761-X	Systron Doner, Safety Systems Division, Concord, CA.	9761
9791-X	Pressed Steel Tank Company, Inc., Milwaukee, WI (See Footnote 9).	9791
9851-X	Trans World Airlines, Inc., Kansas City, MO.	9851
9851-X	Northwest Airlines, Incorporation, St. Paul, MN.	9851
9856-X	Shadyside Hospital Pittsburgh, PA (See Footnote 10).	9856
9907-X	General Defense Corporation, York, PA.	9907
9940-X	G.E. Reuter-Stokes, Twinsburg, OH (See Footnote 11).	9940

(1) To authorize non-DOT specification welded, cylindrical or spherical steel tanks with greater working pressures that are tested to greater pressures as additional packagings.

(2) To authorize an increase in the maximum hardness value from HB262 to HB269 for the exempted packaging when harness tested.

(3) To authorize a greater service life, from 5 years to 15 years, or a greater number of pressurizations, from 200 to 300, for the exempted packaging.

(4) To authorize an alternative type of closure for the exempted packaging.

(5) To authorize Titanium tetrachloride, classed as Corrosive material, as an additional material in the exempted composite packaging.

(6) To authorize an increase in total vapor pressure for mixtures shipped under the exemption, from 140 psig at 130 degrees F to 286 psig at 130 degrees F.

(7) To authorize an alternative value assembly for the exempted cargo tank.

(8) Identification of an additoinal packaging.

(9) To authorize a change in the Charpy impact test and in the wet magnetic particle method inspection required by the exemption.

(10) to reissue exemption orginally inssued on an emergency basics to authorize either specification or non-sepcification packagings (oxygen systems) for use by patients on board a passenger ship.

(11) To issue exemption originally issued on emergency basis to authorize shipment of non-DOT specification hermetically sealed electron tube devices containing certain nonflammable gases.

Application No.	Applicant	Parties to exemption
6614-P	Arco Industries, Inc., Milwaukee, WI.	6614
7052-P	Lockheed Aeronautical Systems Company.	7052
7052-P	Tracor Applied Sciences, Inc., Rockville, MD.	7052
7052-P	Tauber Electronics, Inc., San Diego, CA.	7052
7607-P	Hanson Engineers, Incorporated, Springfield, IL.	7607
8127-P	General Plastics & Chemical Company, Natick, MA.	8127
8308-P	American Courier Express Corporation, Miramar, FL.	8303
8445-P	Rhone-Poulenc AG Company, Research Triangle Park, NC.	8445
8451-P	The Potomac Edison Company, Hagerstown, MD.	8451
8489-P	Transnitro, Inc., Tampa, FL	8489
8551-P	Parham Industrial Service Incorporation, Gonzales, LA.	8551
8554-P	Geenen Explosives, Incorporation, Kaukauna, WI.	8554
8554-P	Ramac Explosives, of Pennsylvania, Incorporation, Allentown, PA.	8554
8582-P	Soo Line Railroad Company, Minneapolis, MN.	8582
9487-P	Chem-Tech, Limited, Des Moines, IA.	9487
9785-P	Independent Container Line Ltd., Richmond, VA.	9785
9833-P	Wacker Chemie, GmbH, Munich 22, West Germany, CT (See Footnote 1).	9833
9941-P	McDonnell Douglas Astronautics Company, Huntington, Beach, CA.	9941

[1] To authorize party status to the exemption and change water capacity from 4887 U.S. gallons to 4887 nominal U.S. gallons.

This notice of receipt of applications for renewal of exemptions and for party to an exemption is published in accordance with section 107 of the Hazardous Materials Transportations Act (49 U.S.C. 1806; 49 CFR 1.53(e)).

Issued in Washington, DC, on April 7, 1988.

J. Suzanne Hedgepeth,

Chief, Exemptions Branch, Office of Hazardous Materials Transportation.

[FR Doc. 88-8051 Filed 4-12-88; 8:45 am]

BILLING CODE 4910-60-M

Applications for Exemptions

AGENCY: Research and Special Programs Administration, DOT.

ACTION: List of applicants for exemptions.

SUMMARY: In accordance with the procedures governing the application for, and the processing of, exemptions from the Department of Transportation's Hazardous Materials Regulations (49 CFR Part 107, Subpart B), notice is hereby given that the Office of Hazardous Materials Transportation has received the applications described herein. Each mode of transportation for which a particular exemption is requested is indicated by a number in the "Nature of Application" portion of the table below as follows: 1—Motor vehicle, 2—Rail freight, 3—Cargo vessels, 4—Cargo-only aircraft, 5—Passenger-carrying aircraft.

DATES: Comment period closes May 12, 1988.

ADDRESS COMMENTS TO: Dockets Branch, Research and Special Programs, Administration, U.S. Department of Transportation, Washington, DC 20590.

Comments should refer to the application number and be submitted in triplicate.

FOR FURTHER INFORMATION CONTACT: Copies of the applications are available for inspection in the Dockets Branch, Room 8426, Nassif Building, 400 7th Street, SW., Washington, DC.

New Exemptions

Application No.	Applicant	Regulation(s) Affected	Nature of exemption thereof
9942-N	E.I. duPont de Nemours & Company, Wilmington, DE	49 CFR 172.101	To authorize shipment of nitrogen padded, unstabilized monochloroacetone with a proposed description of Poison liquid, n.o.s. classed as Poison B in DOT specification MC 312 cargo tanks. (mode 1)
9943-N	Nalco Chemical Company, Naperville, IL	49 CFR 173.32, Part 107, Subpart B, Appendix B.	To authorize loading and unloading of materials classified flammable liquid, combustible liquid and Corrosive material in portable tanks secured to a motor vehicle. (mode 1)
9944-N	Sotralentz, S.A., Drulingen, France, FR	49 CFR 173.119, 173.125, 173.245, 173.249, 173.249a, 173.250a, 173.256, 173.257, 173.262, 173.263, 173.264, 173.265, 173.266, 173.269, 173.272, 173.276, 173.277, 173.283, 173.287, 173.288, 173.289, 173.292, 173.297, 173.299a.	To authorize manufacture, marketing and sale of non-DOT specification polyethylene, wire-frame enclosed tank generally meeting DOT Specification 34 packaging requirements for the shipment of certain materials classed as Corrosive material, Oxidizer and Flammable liquid. (modes 1,2,3)
9945-N	Westflite, Inc., Houston, TX	49 CFR 171.11, 172.101, 172.204, 173.27, 175.3, 175.30, 175.320.	To authorize carriage of certain Class A, B and C explosives that are forbidden for transportation by air or are in quantities greater than prescribed for air transportation. (mode 4)
9946-N	Union Carbide—Linde Division, Danbury, CT	49 CFR 173.327	To authorize use of pneumatically operated, packless valves in packagings containing Poison A materials in lieu of the required packless valve having a handwheel. (modes 1, 2, 3)
9947-N	Sonoco Products Company, Hartsville, SC	49 CFR 173.132	To authorize shipment of adhesives and cements, classed as flammable liquid, in non-DOT Specification acrylonitrile copolymer packagings. (modes 1, 2)

NEW EXEMPTIONS—Continued

Application No.	Applicant	Regulation(s) Affected	Nature of exemption thereof
9948-N	PPG Industries, Inc., Pittsburgh, PA	49 CFR 173.124, 173.31(d)	To authorize shipment of Ethyl chloride classed as Flammable liquid, in DOT106A500 specification multi unit tank car tanks that require retesting. (mode 1)
9949-N	Olin Rocket Research Company, Redmond, WA	49 CFR 173.87	To authorize shipment of certain Class C explosives packed with packages of non-hazardous materials in the same outer container (mode 1)
9950-N	Pyronetics Devices, Inc., Denver, CO	49 CFR 173.302(a)(1), 173.34(d), 175.3.	To authorize shipment of a specially designed device containing a nonflammable gas mixture and an actuating cartridge, explosive valve. (modes 1, 2, 3, 4)
9951-N	General Defense Corporation, York, PA	49 CFR 173.56(b)	To authorize shipment of Explosive projectile, Class A explosive, in a specially designed package (pallet top, skidded bottom configuration). (modes 1, 2)
9952-N	Greif Bros. Corporation, Springfield, NJ	49 CFR 173.131, Party 173	To authorize manufacture, making and sale of non-DOT Specification steel drums that generally meet the requirements for DOT Specification 37A steel drums except the covers are plastic, for the shipment of those materials authorized in DOT 37A drums. (modes 1, 2, 3)
9953-N	North Star Transport, Inc., Eagan, MN	49 CFR 173.834(L)(2)(i)	To authorize transport of packages containing materials classed as Flammable liquid or Flammable gas in temperature controlled vehicles. (mode 1)
9954-N	Cook Inlet Pipe Line Company, Dallas, TX	49 CFR 172.101, 175.3, 175.30	To authorize shipment of Hydrogen peroxide solution by cargo aircraft in DOT Specification 34 polyethylene drums. (mode 4)

This notice of receipt of applications for new exemptions is published in accordance with section 107 of the Hazardous Materials Transportation Act (49 U.S.C. 1806; 49 CFR 1.53)).

Issued in Washington, DC, on April 7, 1988.

J. Suzanne Hedgepeth,

Chief, Exemptions Branch, Office of Hazardous Materials Transportation.

[FR Doc. 88-8052 Filed 4-12-88; 8:45 am]

BILLING CODE 4910-60-M

Urban Mass Transportation Administration

[Docket No. 88-A]

Request for Public Interest Waiver of Buy America Requirements

AGENCY: Urban Mass Transportation Administration, DOT.

ACTION: Notice; request for comments.

SUMMARY: The Urban Mass Transportation Administration (UMTA) is seeking comments on whether a public interest waiver to the "Buy America" requirements should be granted to permit the procurement of bus tires produced at several locations in Europe by Michelin Tire Corporation in order to allow increased competition in the bus tire supply industry.

DATE: Comments must be received by May 13, 1988.

ADDRESS: Comments should be submitted to UMTA Docket No. 88-A, Urban Mass Transportation Administration, Room 9316, 400 Seventh Street SW., Washington, DC 20590. All comments and suggestions received will be available for examination at the above address between 9:00 a.m. and 5:00 p.m., Monday through Friday.

FOR FURTHER INFORMATION CONTACT: Edward J. Gill, Jr., Office of the Chief Counsel, Room 9316, 400 Seventh Street SW., Washington, DC 20590, (202) 366-4063.

SUPPLEMENTARY INFORMATION: Section 165(a) of the Surface Transportation Assistance Act of 1982 (STAA) provides that Federal funds may not be obligated for the purchase of manufactured products unless such products are produced in the United States. Section 165(b)(1) of the STAA provides that the general requirements of section 165(a) may be waived in their application would be inconsistent with the public interest. The implementing regulations at 49 CFR 661.7(b) provide that "[i]n determining whether th[e] exception will be granted, [UMTA] will consider all appropriate factors on a case by case basis."

In the preamble to the "Buy America" regulations published in the **Federal Register** on September 15, 1983 (48 FR 41462), UMTA indicated that in certain circumstances in which a public interest waiver is ought under section 165(b)(1), the proposed waiver would be published in the **Federal Register** for comment. Such a procedure is not mandatory before a public interest waiver is granted, but UMTA uses the procedure where the public interest waiver involves important policy considerations or is controversial. It is UMTA's position that these circumstances exist in this case.

On June 24, 1987, UMTA published a Notice (52 FR 23735) seeking comments on whether a "Buy America" waiver, authorized by section 165(b)(1) should be granted to permit the procurement of bus tires produced in Canada in order to allow increased competition in the bus tire supply industry. The waiver had been requested by Firestone Tire and Rubber Company.

In the June 24, 1987, Notice, UMTA also had indicated that Michelin Tire Corporation produced bus tires in Canada, and that UMTA was also considering granting a "public interest" waiver to Michelin. In its comments to the docket, dated August 12, 1987, Michelin indicated that it does not manufacture bus tires for urban or intra-city use in Canada. Michelin further indicated that it does manufacture such tires in several locations in Europe, and requested that UMTA consider granting a "Buy America" public interest waiver to permit the procurement of these tires. Since this request is substantially different than the original request submitted by Firestone, UMTA is publishing this Notice requesting comments on whether a "public interest" waiver should be granted to permit the procurement of tires produced in Europe by Michelin.

Michelin argues that if the "Buy America" requirements are applied to its bus tires manufactured in various locations in Europe, Michelin is effectively excluded from the U.S. marketplace. Michelin argues that

granting a waiver to permit the procurement of Michelin tires produced in Europe would foster competition in the marketplace, and increase the possibility of reduced prices for tires to the recipients of Federal grant funds. In addition, Michelin argues that such a waiver would allow UMTA grant recipients to take advantage of technological advances in the bus tire industry by being able to acquire radial tires as well as the traditional bias-ply tires manufactured in the United States by other companies.

Before determining whether a "public interest" waiver under section 165(b)(1) should be issued, UMTA is seeking public comment from all interested parties. Because the decision to grant or deny the waiver will have nationwide consequences, UMTA seeks to have all available information prior to rendering a decision.

Dated: April 8, 1988.

Edward J. Babbitt,

Chief Counsel.

[FR Doc. 88-8084 Filed 4-12-88; 8:45 am]

BILLING CODE 4910-57-M

[Docket No. 87-A]

Withdrawal of Request for Public Interest Waiver of Buy America Requirements

AGENCY: Urban Mass Transportation Administration, DOT.

ACTION: Notice.

SUMMARY: In this Notice, the Urban Mass Transportation Administration (UMTA) announces that Firestone Tire and Rubber Company has withdrawn its request for a public interest waiver of the "Buy America" requirements applicable to the procurement of bus tires produced in Canada. Pursuant to the withdrawal, UMTA will not take any further action on the waiver request.

FOR FURTHER INFORMATION CONTACT: Edward J. Gill, Jr., Office of the Chief Counsel, Room 9316, 400 Seventh Street SW., Washington, DC 20590, (202) 366-4063.

SUPPLEMENTARY INFORMATION: On June 24, 1987, the Urban Mass Transportation Administration (UMTA) published a Notice (52 FR 23735) seeking comments on whether a "Buy America" waiver, authorized by section 165(b)(1) of the Surface Transportation Assistance Act of 1982, should be granted to permit the procurement of bus tires produced in Canada in order to allow increased competition in the bus tire supply industry. The waiver had been requested by Firestone Tire and Rubber Company. Firestone Tire and Rubber Company had argued that if the "Buy America" requirements of the Surface Transportation Assistance Act of 1982 were applied to its bus tires manufactured in Canada, Firestone would be effectively excluded from the U.S. marketplace.

Firestone submitted comments to the Docket on August 12, 1987, and informed UMTA that it had decided to close its tire plant in Hamilton, Ontario, Canada, and to transfer its bus tire production to a facility in Des Moines, Iowa. To facilitate this transfer, Firestone had sought a limited pubilc interest waiver to allow the procurement of Firestone tires produced in Canada until January 31, 1988.

By letter, dated October 20, 1987, Firestone informed UMTA that the re-establishment of bus tire production at the Des Moines facility had proceeded to the point that Firestone could comply with the applicable "Buy America" requirements. Accordingly, Firestone requested that its petition of August 12, 1987, be withdrawn. In addition, since Firestone has indicated that it will comply with the "Buy America" requirements, UMTA will take no further action on the general "public interest" waiver for Firestone for which UMTA originally sought comments.

In the June 24, 1987, Notice, UMTA indicated that Michelin Tire Corporation also produced bus tires in Canada, and that UMTA was also considering granting a "public interest" waiver to Michelin. In its comments to the docket, dated August 12, 1987, Michelin indicated that it does not manufacture bus tires for urban or intra-city use in Canada. Michelin further indicated that it does manufacture such tires in several locations in Europe, and requested that UMTA consider granting a "Buy America" public interest waiver to permit the procurement of these tires. Since this request is substantially different than the original request submitted by Firestone, UMTA will publish a separate Notice requesting comments on whether a "public interest" waiver should be granted to tires produced in Europe by Michelin. This Notice appears elsewhere in this **Federal Register**.

Therefore, the proceeding to consider granting a "public interest" waiver to bus tires produced by Firestone and Michelin in Canada is hereby terminated, and UMTA will take no further actions on these requests.

Dated: April 8, 1988.

Edward J. Babbitt,

Chief Counsel.

[FR Doc. 88-8087 Filed 4-12-88; 8:45 am]

BILLING CODE 4910-57-M

DEPARTMENT OF THE TREASURY

Office of the Secretary

[Dept. Circ.—Public Debt Series No. 9-88]

Treasury Notes of April 15, 1995; Series F-1995

April 6, 1988.

1. Invitation for Tenders

1.1. The Secretary of the Treasury, under the authority of Chapter 31 of Title 31, United States Code, invites tenders for approximately $6,250,000,000 of the United States securities, designated Treasury Notes of April 15, 1995, Series F-1995 (CUSIP No. 912827 WB 4), hereafter referred to as Notes. The Notes will be sold at auction, with bidding on the basis of yield. Payment will be required at the price equivalent of the yield of each accepted bid. The interest rate on the Notes and the price equivalent of each accepted bid will be determined in the manner described below. Additional amounts of the Notes may be issued to Government accounts and Federal Reserve Banks for their own account in exchange for maturing Treasury securities. Additional amounts of the Notes may also be issued at the average price to Federal Reserve Banks, as agents for foreign and international monetary authorities.

2. Description of Securities

2.1. The Notes will be dated April 15, 1988, and will accrue interest from that date, payable on a semiannual basis on October 15, 1988, and each subsequent 6 months on April 15 and October 15 through the date that the principal becomes payable. They will mature April 15, 1995, and will not be subject to call for redemption prior to maturity. In the event any payment date is a Saturday, Sunday, or other nonbusiness day, the amount due will be payable (without additional interest) on the next business day.

2.2. The Notes are subject to all taxes imposed under the Internal Revenue Code of 1954. The Notes are exempt from all taxation now or hereafter imposed on the obligation or interest thereof by any State, any possession of the United States, or any local taxing authority, except as provided in 31 U.S.C. 3124.

2.3. The Notes will be acceptable to secure deposits of Federal public monies. They will not be acceptable in payment of Federal taxes.

2.4. The Notes will be issued only in book-entry form in denominations of $1,000, $5,000, $10,000, $100,000, and $1,000,000, and in multiples of those

amounts. They will not be issued in registered definitive or in bearer form.

2.5. The Department of the Treasury's general regulations governing United States securities, i.e., Department of the Treasury Circular No. 300, current revision (31 CFR Part 306), as to the extent applicable to marketable securities issued in book-entry form, and the regulations governing book-entry Treasury Bonds, Notes, and Bills, as adopted and published as a final rule to govern securities held in the TREASURY DIRECT Book-Entry Securities System in 51 FR 18260, *et seq.* (May 16, 1986), apply to the Notes offered in this circular.

3. Sale Procedures

3.1. Tenders will be received at Federal Reserve Banks and Branches and at the Burea of the Public Debt, Washington, DC 20239, prior to 1:00 p.m., Eastern Daylight Saving time, Tuesday, April 12, 1988. Noncompetitive tenders as defined below will be considered timely if postmarked no later than Monday, April 11, 1988, and received no later than Friday, April 15, 1988.

3.2. The par amount of Notes bid for must be stated on each tender. The minimum bid is $1,000, and larger bids must be in multiples of that amount. Competitive tenders must also show the yield desired, expressed in terms of an annual yield with two decimals, e.g., 7.10%. Fractions may not be used. Noncompetitive tenders must show the term "noncompetitive" on the tender form in lieu of a specified yield.

3.3. A single bidder, as defined in Treasury's single bidder guidelines, shall not submit noncompetitive tenders totaling more than $1,000,000. A noncompetitive bidder may not have entered into an agreement, nor make an agreement to purchase or sell or otherwise dispose of any noncompetitive awards of this issue prior to the deadline for receipt of tenders.

3.4. Commercial banks, which for this purpose are defined as banks accepting demand deposits, and primary dealers, which for this purpose are defined as dealers who make primary markets in Government securities and are on the list of reporting dealers published by the Federal Reserve Bank of New York, may submit tenders for accounts of customers if the names of the customers and the amount for each customer are furnished. Others are permitted to submit tenders only for their own account.

3.5. Tenders for their own account will be received without deposit from commercial banks and other banking institutions; primary dealers, as defined above; Federally-insured savings and loan associations; States, and their political subdivisions or instrumentalities; public pension and retirement and other public funds; international organizations in which the United States holds membership; foreign central banks and foreign states; Federal Reserve Banks; and Government accounts. Tenders from all others must be accompanied by full payment for the amount of Notes applied for, or by a guarantee from a commercial bank or a primary dealer of 5 percent of the par amount applied for.

3.6. Immediately after the deadline for receipt of tenders, tenders will be opened, followed by a public announcement of the amount and yield range of accepted bids. Subject to the reservations expressed in Section 4, noncompetitive tenders will be accepted in full, and then competitive tenders will be accepted, starting with those at the lowest yields, through successively higher yields to the extent required to attain the amount offered. Tenders at the highest accepted yield will be prorated if necessary. After the determination is made as to which tenders are accepted, an interest rate will be established, at a ⅛ of one percent increment, which results in an equivalent average accepted price close to 100.000 and a lowest accepted price above the original issue discount limit of 98.250. That stated rate of interest will be paid on all of the Notes. Based on such interest rate, the price on each competitive tender allotted will be determined and each successful competitive bidder will be required to pay the price equivalent to the yield bid. Those submitting noncompetitive tenders will pay the price equivalent to the weighted average yield of accepted competitive tenders. Price calculations will be carried to three decimal places on the basis of price per hundred, e.g., 99.923, and the determinations of the Secretary of the Treasury shall be final. If the amount of noncompetitive tenders received would absorb all or most of the offering, competitive tenders will be accepted in an amount sufficient to provide a fair determination of the yield. Tenders received from Government accounts and Federal Reserve Banks will be accepted at the price equivalent to the weighted average yield of accepted competitive tenders.

3.7. Competitive bidders will be advised of the acceptance of their bids. Those submitting noncompetitive tenders will be notified only if the tender is not accepted in full, or when the price at the average yield is over par.

4. Reservations

4.1. The Secretary of the Treasury expressly reserves the right to accept or reject any or all tenders in whole or in part, to allot more or less than the amount of Notes specified in Section 1, and to make different percentage allotments to various classes of applicants when the Secretary considers it in the public interest. The Secretary's action under this Section is final.

5. Payment and Delivery

5.1. Settlement for the Notes allotted must be made at the Federal Reserve Bank or Branch or at the Bureau of the Public Debt, wherever the tender was submitted. Settlement on Notes allotted to institutional investors and to others whose tenders are accompanied by a guarantee as provided in Section 3.5. must be made or completed on or before Friday, April 15, 1988. Payment in full must accompany tenders submitted by all other investors. Payment must be in cash; in other funds immediately available to the Treasury; in Treasury bills, notes, or bonds maturing on or before the settlement date but which are not overdue as defined in the general regulations governing United States securities; or by check drawn to the order of the institution to which the tender was submitted, which must be received from institutional investors no later than Wednesday, April 13, 1988. In addition, Treasury Tax and Loan Note Option Depositaries may make payment for the Notes allotted for their own accounts and for accounts of customers by credit to their Treasury Tax and Loan Note Accounts on or before Friday, April 15, 1988. When payment has been submitted with the tender and the purchase price of the Notes allotted is over par, settlement for the premium must be completed timely, as specified above. When payment has been submitted with the tender and the purchase price is under par, the discount will be remited to the bidder.

5.2. In every case where full payment has not been completed on time, an amount of up to 5 percent of the par amount of Notes allotted shall, at the discretion of the Secretary of the Treasury, be forfeited to the United States.

5.3. Registered definitive securities tendered in payment for the Notes allotted and to be held in TREASURY DIRECT are not required to be assigned if the inscription on the registered definitive security is identical to the registration of the note being purchased. In any such case, the tender form used to place the Notes allotted in

TREASURY DIRECT must be completed to show all the information required thereon, or the TREASURY DIRECT account number previously obtained.

5. General Provisions

5.1. As fiscal agents of the United States, Federal Reserve Banks are authorized, as directed by the Secretary of the Treasury, to receive tenders, to make allotments, to issue such notices as may be necessary, to receive payment for, and to issue, maintain, service, and make payment on the Notes.

5.2. The Secretary of the Treasury may at any time supplement or amend provisions of this circular if such supplements or amendments do not adversely affect existing rights of holders of the Notes. Public announcement of such changes will be promptly provided.

5.3. The Notes issued under this circular shall be obligations of the United States, and, therefore, the faith of the United States Government is pledged to pay, in legal tender, principal and interest on the Notes.

Marcus W. Page,

Acting Fiscal Assistant Secretary.

[FR Doc. 88-8148 Filed 4-11-88; 11:00 am]

BILLING CODE 4810-40-M

Corrections

Federal Register
Vol. 53, No. 71
Wednesday, April 13, 1988

This section of the FEDERAL REGISTER contains editorial corrections of previously published Presidential, Rule, Proposed Rule, and Notice documents and volumes of the Code of Federal Regulations. These corrections are prepared by the Office of the Federal Register. Agency prepared corrections are issued as signed documents and appear in the appropriate document categories elsewhere in the issue.

DEPARTMENT OF THE INTERIOR

Minerals Management Service

30 CFR Parts 250 and 256

Oil and Gas and Sulphur Operations in the Outer Continental Shelf; Outer Continental Shelf Minerals and Rights-of-Way Management, General; and Outer Continental Shelf Orders for All Regions of the Outer Continental Shelf

Correction

In rule document 88-6532 beginning on page 10596 in the issue of Friday, April 1, 1988, make the following corrections:

§ 250.1 [Corrected]

1. On page 10693, in the first column, in the introductory text of § 250.1, in the sixth and seventh lines, remove "[*Insert date of Federal Register approval*]" and insert "May 31, 1988".

§ 250.51 [Corrected]

2. On page 10714, in the third column, in § 250.51(b)(1) remove "[*Insert date 1 year from the effective date of these regulations*]" and insert "May 31, 1989".

3. On the same page, in the same column, in § 250.51(b)(2) remove "[*Insert 1 year from the effective date of these regulations*]" and insert "May 31, 1989".

§ 250.123 [Corrected]

4. On page 10736, in the second column, in the introductory text of § 250.123(b)(1) remove "June 30, 1988" and insert "August 29, 1988".

§ 250.126 [Corrected]

5. On page 10739, in the first column, in § 250.126(b)(1), the first sentence should read as follows:

"(b)(1) By August 29, 1988, each lessee shall submit to the Deputy Associate Director for Offshore Operations a list of all certified and noncertified SSV's (both actuator and valve), USV's (both actuator and valve), and SSSV's (including safety valve locks and landing nipples) in the lessee's inventory as of April 1, 1988."

§ 250.153 [Corrected]

6. On page 10757, in the first column, in § 250.153(a)(4) remove "[Insert date of publication in the **Federal Register**]" in both places it occurs and insert "April 1, 1988" in both places.

7. On page 10777, in the third column, in the file line at the end of the document, "FR Doc. 88-6523" should read "FR Doc. 88-6532".

BILLING CODE 1505-01-D

VOL
53
ISS
71
AP
13
1988
UMI

federal register

Wednesday
April 13, 1988

Part II

Reader Aids

List of Libraries That Have Announced Availability of Federal Register and Code of Federal Regulations

LIST OF LIBRARIES THAT HAVE ANNOUNCED AVAILABILITY OF FEDERAL REGISTER AND CODE OF FEDERAL REGULATIONS

In order to better serve the public the Office of the Federal Register is publishing a list of libraries where the *Federal Register* and *Code of Federal Regulations* are available for examination free of charge. This list contains only those Government depository libraries and other libraries that specifically have chosen to be included. A complete listing of *Government Depository Libraries* is available without charge from The Library, U.S. Government Printing Office, 5236 Eisenhower Avenue, Alexandria, VA 22304.

The Office of the Federal Register's list will be updated annually unless public interest requires more frequent publication. Any library that maintains these publications, makes them available to the public, and wishes to be included on future lists should write to the Director of the Federal Register, National Archives and Records Administration, Washington, DC 20408, or phone (202) 523-5227 giving the name and address of the library. (*FR only. †CFR only.)

ALABAMA

Birmingham:
Government Documents Department
Birmingham Public Library
2020 Park Place
Birmingham, AL 35203
(205) 254-2551

Gadsden:
Gadsden Public Library
254 College Street
Gadsden, AL 35901
(205) 547-1611

Mobile:
Governmental Information Division
Mobile Public Library
564 Davis Avenue
Mobile, AL 36603
(205) 438-7092

Government Documents Department
University of South Alabama Library
Mobile, AL 36688
(205) 460-7024

Montgomery:
Alabama Public Library Service
6030 Monticello Drive
Montgomery, AL 36130
(205) 277-7330

Tuscaloosa:
University of Alabama Library
Reference Department
Box S
University, AL 35486
(205) 348-6046

ALASKA

Anchorage:
Alaska Resources Library
U.S. Department of the Interior
701 C Street, Box 36
Anchorage, AK 85513

Office of the Solicitor, Law Library
U.S. Department of the Interior
701 C Street, Box 34
Mod. G, Room 1126
Anchorage, AK 99513

Fairbanks:
Bureau of Land Management
Library
Fairbanks District Office
P.O. Box 1150
North Post of Ft. Waynewright
Fairbanks, AK 99707

Rasmuson Library
Government Documents Section
University of Alaska
Fairbanks, AK 99701

Juneau:
Alaska State Library
8th Floor, New State Office Bldg.
Pouch G
Juneau, AK 99811
(907) 465-2920

ARIZONA

Flagstaff:
Government Documents Department
Northern Arizona University Library
Flagstaff, AZ 86011
(602) 523-2171

Glendale:
Velma Teague Library
7010 N. 58th Avenue
Glendale, AZ 85301
(602) 931-5576

Phoenix:
Phoenix Public Library
Business, Science & Technology—Documents
12 E. McDowell Road
Phoenix, AZ 85004
(602) 262-6451

Tempe:
Arizona State University
College of Law Library
Government Documents
Tempe, AZ 85281

Government Documents Department
Arizona State University Library
Tempe, AZ 85281

ARKANSAS

Little Rock
Government Documents Department
UALR Library
University of Arkansas at Little Rock
33rd and University Avenue
Little Rock, AR 72204
(501) 569-3120

Searcy:
Beaumont Memorial Library
Harding University
P.O. Box 928
Searcy, AR 72143
(501) 268-6161

CALIFORNIA

Anaheim:
Anaheim Public Library
500 W. Broadway Avenue
Anaheim, CA 92805
(714) 999-1880

Arcata:
Documents Department
The Library
Humboldt State University
Arcata, CA 95521

Burlingame:
The San Mateo Foundation*
1204 Burlingame Avenue
P.O. Box 627
Burlingame, CA 94010
(415) 342-2477

Carson:
Carson Library
151 East Carson Street
Carson, CA 90745
(213) 830-0901

Compton:
Compton Library
240 West Compton Boulevard
Compton, CA 90220
(213) 637-0202, ext. 25

Culver City:
Culver City Library
4975 Overland Avenue
Culver City, CA 90230
(213) 559-1676

Gardena:
Gardena Library
1731 West Gardena Boulevard
Gardena, CA 90247
(213) 323-6363

Glendale:
City of Glendale
Glendale Public Library
222 East Harvard Street
Glendale, CA 91205

Huntington Park:
Huntington Park Library
6518 Miles Avenue
Huntington Park, CA 90255
(213) 583-1461

Inglewood:
Inglewood Public Library
101 West Manchester Blvd.
Inglewood, CA 90301
(213) 649-7397

La Jolla:
Government Documents, Maps, Microforms Department
Central University Library C-075-P
University of California, San Diego
La Jolla, CA 92093
(714) 452-3338

CALIFORNIA—Continued

Lakewood:
Angelo M. Iacoboni Library
4990 Clark Avenue
Lakewood, CA 90712
(213) 866–1777

Lancaster:
Lancaster Regional Library
1150 West Avenue J
Lancaster, CA 93534
(805) 948–5029

Long Beach:
Government Publications
Long Beach Public Library and Information Center
101 Pacific Avenue
Long Beach, CA 90802
(213) 437–2949, ext. 40

Long Beach Safety Council Library
121 Linden Avenue
Long Beach, CA 90802

Menlo Park:
U.S. Geological Survey Library
345 Middlefield Road
Menlo Park, CA 94025

Montebello:
Montebello Library
1550 Beverly Boulevard
Montebello, CA 90640
(213) 722–6551

Norwalk:
Norwalk Library
12350 Imperial Highway
Norwalk, CA 90650
(213) 868–0775

Oakland:
Holy Names College Library
3500 Mountain Blvd.
Oakland, CA 94619

Orange:
Thurmond Clarke Memorial Library
Chapman College
333 North Glassell Street
Orange, CA 92666

Pasadena:
City of Pasadena
Pasadena Public Library
285 E. Walnut Street
Pasadena, CA 91101
(213) 577–4054

Pleasant Hill:
Contra Costa County Library
Documents Section
1750 Oak Park Boulevard
Pleasant Hill, CA 94523
(415) 944–3423

Redding:
Shasta County Library
1855 Shasta Street
Redding, CA 96001
(916) 225–5754

Redwood City:
Redwood City Public Library
881 Jefferson Avenue
Redwood City, CA 94063
(415) 369–6251, ext. 288

San Mateo County Superintendent of Schools Office
Educational Resources Center
333 Main Street
Redwood City, CA 94063
(415) 364–5600

Richmond:
Richmond Public Library
Civic Center Plaza
Richmond, CA 94804

Riverside:
Riverside City and County Public Library
(Current CFR only)
3581 Seventh Street
P.O. Box 468
Riverside, CA 92502
(714) 787–7203

Sacramento:
Law Library
California State Library
P.O. Box 2037
Sacramento, CA 95809
(916) 445–8833

San Bernardino:
San Bernardino County Library
104 West Fourth Street
San Bernardino, CA 92415

San Diego:
Western State University
College of Law
1333 Front Street
San Diego, CA 92101
(714) 231–0300

San Francisco:
University of California
Hastings College of the Law Library
198 McAllister Street
San Francisco, CA 94102

San Rafael:
Marin County Free Library
Civic Center Administration Building
San Rafael, CA 94903
(415) 499–6051

Valencia:
Valencia Regional Library
23743 Valencia Boulevard
Valencia, CA 91355
(805) 259–8942

Vallejo:
California Maritime Academy*
P.O. Box 1392
Vallejo, CA 94590
(707) 644–5601

West Covina:
West Covina Regional Library
1601 West Covina Parkway
West Covina, CA 91790
(818) 962–3541, ext. 16

COLORADO

Denver:
Bureau of Land Management
Denver Service Center Library
Building 50
Denver Federal Center
Denver, CO 80225

Bureau of Reclamation Library
Engineering and Research Center
P.O. Box 25007, Denver Federal Center
Denver, CO 80225

Colorado State Library
1362 Lincoln Street
Denver, CO 80203

Regional Solicitor, Law Library
U.S. Department of the Interior
Room 1400, Bldg. 67, Denver Federal Center
P.O. Box 25007
Denver, CO 80225

Rocky Mountain Regional Office Library
National Park Service
655 Parfect Street
P.O. Box 25287
Denver, CO 80225

Fort Collins:
Documents Department
The Libraries
Colorado State University
Fort Collins, CO 80523

Greeley:
James A. Michener Library
Government Publications Service
University of Northern Colorado
Greeley, CO 80639

Lakewood:
Villa Library*
455 South Pierce Street
Lakewood, CO 80226
(303) 936–7407

Pueblo:
Pueblo Regional Planning Commission Library*
No. 1 City Hall Place
Pueblo, CO 81003
(303) 543–6006

CONNECTICUT

Bloomfield:
Prosser Public Library
1 Tunxis Avenue
Bloomfield, CT 06002

Danielson:
Quinebaug Valley Community College
P.O. Box 59
Danielson, CT 06239
774–1130

East Haven:
Hagaman Memorial Library*
227 Main Street
East Haven, CT 06512
(203) 468–3223

Fairfield:
Nyselius Library
Fairfield University
North Benson Road
Fairfield, CT 06430
(203) 255–5411, Ext. 2451

CONNECTICUT—Continued

Hartford:
The Stanley Osborne Library*
Third Floor
The Connecticut State Department of Health Services
79 Elm Street
Hartford, CT 06115
(203) 566-2198

Middletown:
Olin Library
Wesleyan University
Middletown, CT 06457

New Haven:
Yale University
Government Documents Center
Seeley G. Mudd Library
38 Mansfield Street
P.O. Box 2491 Yale Station
New Haven, CT 06520
(203) 432-3209

Stamford:
Ferguson Library
96 Broad Street
Stamford, CT 06901

Storrs:
Government Publications Department
University of Connecticut Library
University of Connecticut
Storrs, CT 06268

Waterbury:
Silas Bronson Public Library
Business, Industry & Technology Department
267 Grand Street
Waterbury, CT 06702

Wethersfield:
Wethersfield Public Library
515 Silas Deane Highway
Wethersfield, CT 06109

DELAWARE

Wilmington:
The Delaware Law School Library
Widener University
P.O. Box 7475 Concord Pike
Wilmington, DE 19803
(302) 478-5280
Ext. 247

DISTRICT OF COLUMBIA

Natural Resources Library
U.S. Department of the Interior
Washington, DC 20240

Office of the Federal Register
1100 L Street, N.W.
Room 8301
Washington, DC 20408
(202) 523-5240

FLORIDA

Clearwater:
Clearwater Public Library
100 North Osceola Avenue
Clearwater, FL 33515

Daytona Beach:
Volusia County Library Center
City Island
Daytona Beach, FL 32014
(904) 255-3765

Fort Lauderdale:
Broward County Main Library
100 S. Andrews Avenue
Fort Lauderdale, FL 33301
(305) 357-7444

Melbourne:
Government Documents Department
Florida Institute of Technology Library
University Blvd.
Melbourne, FL 32901
(305) 723-3701

Miami:
Social Science Department
Miami Dade Public Library
101 West Flagler Street
Miami, FL 33130
(305) 375-2665

North Miami Beach:
North Miami Beach Library
1601 N.E. 164 Street
North Miami Beach, FL 33162
(305) 948-2970

Orlando:
Orange County Library System
General Information Department
10 N. Rosalind Avenue
Orlando, FL 32801
(305) 425-4694

Sarasota:
Selby Public Library
1001 Boulevard of the Arts
Sarasota, FL 33577
(813) 951-5501

The University of Sarasota
2080 Ringling Blvd.
Sarasota, FL 33577
(813) 955-4228

Tallahassee:
Documents Section
State Library of Florida
R. A. Gray Building
Tallahassee, FL 32301
(904) 487-2651

Tampa:
Tampa-Hillsborough County Public Library
900 North Ashley Street
Tampa, FL 33602
(813) 223-8969

GEORGIA

Athens:
University of Georgia Libraries
Government Reference Department
Athens, GA 30602

Atlanta:
Documents Center
Robert W. Woodruff Library
Emory University
Atlanta, GA 30322
(404) 727-6880

Office of the Regional Solicitor, Law Library
U.S. Department of the Interior
148 Cain Street, N.E., Suite 405
Atlanta, GA 30303

Dublin:
Laurens County Library
801 Bellevue Ave.
Dublin, GA 31021

Elberton:
Southeastern Power Administration
Law Library
U.S. Department of Energy
Samuel Elbert Building
Elberton, GA 30635

Savannah:
Chatham-Effingham-Liberty Regional Library
2002 Bull Street
Savannah, GA 31499
(912) 234-5127

IDAHO

Boise:
Field Solicitor, Law Library
U.S. Department of the Interior
Federal Building, U.S. Courthouse
Box 20
Boise, ID 83724

Pocatello:
The Library
Idaho State University
Pocatello, ID 83209

ILLINOIS

Bloomington:
Illinois Wesleyan University Library
Bloomington, IL 61701

Chicago:
Government Publications Department
Chicago Public Library
425 N. Michigan Avenue
Chicago, IL 60611
(312) 269-3002

University of Chicago Law Library
1121 East 60th Street
Chicago, IL 60637

Documents Department
University of Illinois at Chicago Circle
The Library, P.O. Box 8198
Chicago, IL 60680
(312) 996-2716/996-2738

Dekalb:
Government Publications Department
Northern Illinois University
Founders Library
Dekalb, IL 60115
(815) 753-1932

Evanston:
Northwestern University Library
Government Publications Department
Evanston, IL 60201
(312) 491-3130

Lake Forest:
Lake Forest College Library
Lake Forest, IL 60045
(312) 234-3100, ext. 410

Lockport:
Lewis University
Route 53
Lockport, IL 60441
(815) 838-0500

ILLINOIS—Continued

Macomb:
Government Publications and Legal Reference Library
Western Illinois University
Macomb, IL 61455
(309) 298-2411

Niles:
Niles Public Library District
6960 Oakton Street
Niles, IL 60648
(312) 967-8554

Normal:
Milner Library
Illinois State University
Normal, IL 61761

Oak Park:
Oak Park Public Library
834 Lake Street
Oak Park, IL 60301
(312) 383-8200

Rockford:
Rockford Public Library
215 North Wyman Street
Rockford, IL 61101
(815) 965-6731

Springfield:
Energy Information Library*
Illinois Institute of Natural Resources, Room 300
325 W. Adams Street
Springfield, IL 62706

Streamwood:
Government Documents Department
Poplar Creek Public Library
1405 S. Park Blvd.
Streamwood, IL 60103
(312) 837-6800

Waukegan:
County of Lake
Law Library
18 North County Street
Waukegan, IL 60085
(312) 689-6654

INDIANA

Fort Wayne:
The Public Library of Fort Wayne and Allen County
900 Webster Street
Fort Wayne, IN 46802
(219) 424-7241

Indianapolis:
Reference and Loan Division
Indiana State Library
140 N. Senate Ave.
Indianapolis, IN 46204
(317) 232-3675

Muncie:
Ball State University Library
Government Publications Service
Muncie, IN 47305
(317) 285-6195

South Bend:
Indiana University at South Bend
1700 Mishawaka Avenue
South Bend, IN 46615
(219) 237-4440

IOWA

Ames:
Library—Government Publications Department
Iowa State University
Ames, IA 50010
(515) 294-2834

Des Moines:
State Library Commission of Iowa Law Library
Capitol Building
Des Moines, IA 50319
(515) 281-5125

State Library Commission of Iowa
Historical Building
East 12th & Grand
Des Moines, IA 50319

Dubuque:
Carnegie-Stout Public Library
Eleventh and Bluff Streets
Dubuque, IA 52001
(319) 583-9197

Wahlert Memorial Library
Loras College
1450 Alta Vista
Dubuque, IA 52001

KANSAS

Colby:
H. F. Davis Memorial Library
Colby Community College
1255 South Range
Colby, KS 67701
(913) 462-3984

Emporia:
William Allen White Library
Emporia State University
Emporia, KS 66801
(316) 343-1200

Hutchinson:
Hutchinson Public Library
901 N. Main
Hutchinson, KS 67501
(316) 663-5441

Lawrence:
University of Kansas Law Library
Green Hall
Lawrence, KS 66045
(913) 864-3025

Pittsburg:
Leonard H. Axe Library
Pittsburg State University
Pittsburg, KS 66762
(316) 231-7000, ext. 4889

Salina:
Memorial Library
Kansas Wesleyan
100 East Claflin
Salina, KS 67401-6196
(913) 827-5541, ext. 298

Topeka:
Kansas State Library
Third Floor
State House
Topeka, KS 66612
(913) 296-3296

Washburn University of Topeka
School of Law Library
Topeka, KS 66621
(913) 295-6660

KENTUCKY

Bowling Green:
Western Kentucky University
Helm-Cravens Library
Bowling Green, KY 42101

Frankfort:
Government Document Section
State Library Division
Kentucky Department of Library & Archives
Berry Hill
Frankfort, KY 40602
(502) 564-2480

Highland Heights
Northern Kentucky University Library
Government Documents Department
Highland Heights, KY 41076

Lexington:
University of Kentucky Libraries
Government Publications Department
Lexington, KY 40506

Law Library
University of Kentucky
Lexington, KY 40506

Louisville:
University of Louisville
The Library
Louisville, KY 40208

Pikeville:
CITAC Library
Pikeville College
Armington Science Center
Pikeville, KY 41501
(606) 432-9396

LOUISIANA

Baton Rouge:
Library, Department of Urban & Community Affairs
5790 Florida Boulevard
Baton Rouge, LA 70806

Louisiana State Library
P.O. Box 131
760 N. Riverside Mall
Baton Rouge, LA 70821
(504) 389-6651

Lafayette:
University of Southwestern Louisiana
University Libraries
Lafayette, LA 70501

New Orleans:
U.S. Court of Appeals Library
5th Circuit
600 Camp Street
Room 106
New Orleans, LA 70130
(504) 589-6510

MAINE

Lewiston:
George and Helen Ladd Library
Bates College
Lewiston, ME 04240

MAINE—Continued
Portland:
Donald L. Garbrecht Law Library
246 Deering Avenue
Portland, ME 04102
(207) 780–4350

MARYLAND
Aberdeen:
Department of the Army
U.S. Army Environmental Hygiene Agency
ATTN: Librarian, Bldg. E–2100
Aberdeen Proving Ground, MD 21010
Annapolis:
Maryland State Law Library
Courts of Appeal Building
361 Rowe Boulevard
Annapolis, MD 21401
Baltimore:
Enoch Pratt Free Library
400 Cathedral Street
Baltimore, MD 21201
Cumberland:
Allegany Community College Library
Willow Brook Road
P.O. Box 1695
Cumberland, MD 21502
(301) 724–7700, ext. 36
Oakland:
Garrett County Planning Office*
323 East Oak Street
Oakland, MD 21550
(301) 334–4200
Rockville:
Medical Library
Food & Drug Administration
5600 Fishers Lane
Room 11B40
Rockville, MD 20857

Department of Public Libraries
Montgomery County
99 Maryland Avenue
Rockville, MD 20850
(301) 279–1966

MASSACHUSETTS
Boston:
Government Documents Department
Boston Public Library
Copley Square
Boston, MA 02117
Gloucester:
Gloucester Lyceum and Sawyer Free Library*
General Reference Section
2 Dale Avenue
Gloucester, MA 01930
(617) 283–0376
Newton Corner:
Office of the Regional Solicitor, Law Library
Suite 612
1 Gateway Center
Newton Corner, MA 02158
(617) 965–5100, ext. 258
Springfield:
The City Library
Central Library
220 State Street
Springfield, MA 01103
Woburn:
Commonwealth of Massachusetts
Trial Court of the Commonwealth
District Court Department
Fourth Eastern Middlesex Division
Woburn, MA 01801
(617) 935–4000

MICHIGAN
Ann Arbor:
Washtenaw Community College
4800 East Huron River Drive
Ann Arbor, MI 48106
(313) 973–3300
Detroit:
Downtown Library*
Detroit Public Library
121 Gratiot
Detroit, MI 48226

Detroit Public Library
5201 Woodward Avenue
Detroit, MI 48202

Municipal Reference Library
Detroit Public Library
1004 City–County Building
Detroit, MI 48226

Arthur Neef Law Library
Wayne State University
468 W. Ferry Mall
Detroit, MI 48202
(313) 577–3925
East Lansing:
Documents Department
Michigan State University Library
East Lansing, MI 48824
Flint:
Flint Public Library
General Reference Department
1026 E. Kearsley Street
Flint, MI 48502
(313) 232–7111
Lansing:
Thomas M. Cooley Law School Library
U.S. Documents Collection
217 South Capitol Avenue
Lansing, MI 48901
(517) 371–5140
Marquette:
Government Documents Department
Olson Library
Northern Michigan University
Marquette, MI 49855
(906) 227–2112
Mount Clemens:
Macomb County Library
16480 Hall Road
Mount Clemens, MI 48044
469–5300
Mt. Pleasant:
Library – Documents Department
Central Michigan University
Mt. Pleasant, MI 48859
(517) 774–3414
Pontiac:
Adams–Pratt Oakland County Law Library
1200 N. Telegraph Road
Pontiac, MI 48053

Oakland Schools Library*
2100 Pontiac Lake Road
Pontiac, MI 48054
Rochester:
Kresge Library
Documents Department
Oakland University
Squirrel/Walton
Rochester, MI 48063
(313) 377–2476
Saginaw:
Public Libraries of Saginaw
505 Janes
Saginaw, MI 48605
(517) 755–0904
Traverse City:
Mark Osterlin Library
Documents Department
Northwestern Michigan College
1701 East Front Street
Traverse City, MI 49684
(616) 946–5650, ext. 540
University Center:
Learning Resources Center
Delta College
University Center, MI 48710

MINNESOTA
Bemidji:
Documents Section
A. C. Clark Library
Bemidji State University
Bemidji, MN 56601
(218) 755–2958
Blaine:
Anoka County Library
707 Highway 10
Blaine, MN 55434
Cambridge:
East Central Regional Library*
Cambridge, MN 55008
Duluth:
Duluth Public Library
520 W. Superior Street
Duluth, MN 55802
(218) 723–3804
Edina:
Southdale–Hennepin Area Library
7001 York Avenue South
Edina, MN 55435
(612) 830–4900
Mankato:
Memorial Library
Mankato State University
Box 19
Mankato, MN 56001
(507) 389–6201
Minneapolis:
Minnesota Hospital Association Library
2333 University Ave. S.E.
Minneapolis, MN 55414
(612) 331–5571

Government Publications Division
409 Wilson Library
University of Minnesota
Minneapolis, MN 55455
(612) 373–7813

MINNESOTA—Continued

St. Paul:
Minnesota State Law Library
117 University Avenue
St. Paul, MN 55155
(612) 296–2775

Government Publications Office
St. Paul Public Library
90 West Fourth Street
St. Paul, MN 55102
292–6178

Stillwater:
Stillwater Public Library
223 North Fourth Street
Stillwater, MN 55082
439–1675

Twin Cities:
Field Solicitor, Law Library
U.S. Department of the Interior
686 Federal Building, Fort Snelling
Twin Cities, MN 55111

Winona:
Maxwell Library
Government Documents
Winona State University
Winona, MN 55987
(507) 457–5148

MISSISSIPPI

Gulfport:
Harrison County Law Library
1st Judicial Courthouse
1801 23rd Avenue
Gulfport, MS 39501
(601) 864–5161 ext. 336

Jackson:
H. T. Sampson Library
Jackson State University
Jackson, MS 39217

MISSOURI

Cape Girardeau:
Kent Library
Southeast Missouri State University
Cape Girardeau, MO 63701
(314) 651–2000

Columbia:
Ellis Library
University of Missouri–Columbia
Columbia, MO 65201
(314) 882–6733

University of Missouri–Columbia
Law Library
Tate Hall
Columbia, MO 65211
(314) 882–4597

Fulton:
Reeves Library
Westminster College
Fulton, MO 65251
(314) 642–3361

Jefferson City:
Missouri State Library
308 E. High Street
P.O. Box 387
Jefferson City, MO 65102
(314) 751–4552

Joplin:
Spiva Library
Missouri Southern State College
Newman & Duquesne Roads
Joplin, MO 64801
(417) 625–9386

Kansas City:
Kansas City Public Library
311 East 12th Street
Kansas City, MO 64106
(816) 221–2685

Government Documents Department
General Library
University of Missouri–Kansas City
5100 Rockhill Road
Kansas City, MO 64110
(816) 276–1536

Kirksville:
Pickler Memorial Library
Northeast Missouri State University
Kirksville, MO 63501
(816) 785–4534

Liberty:
Charles F. Curry Library
Government Documents
William Jewell College
Liberty, MO 64068
(816) 781–3806, ext. 293

Maryville:
B. D. Owens Library
Northwest Missouri State University
Maryville, MO 64468

Rolla:
Curtis Laws Wilson Library
University of Missouri–Rolla
Rolla, MO 65401
(314) 341–4227

St. Charles:
Butler Library
Lindenwood College
St. Charles, MO 63301
(314) 946–6912, ext. 329

St. Joseph:
St. Joseph Public Library
Tenth and Felix Streets
St. Joseph, MO 64501
(816) 232–7729

St. Louis:
Maryville College Library
Government Documents
13550 Conway Rd.
St. Louis, MO 63141
(314) 576–9300

Missouri Botanical Garden*
(back issues held 1 year)
2345 Tower Grove Avenue
St. Louis, MO 63110
(314) 772–7600

St. Louis County Library
1640 S. Lindbergh Blvd.
St. Louis, MO 63131
(314) 994–3300

Documents Department
St. Louis Public Library
1301 Olive Street
St. Louis, MO 63103
(314) 241–2288, ext. 375

Documents Department
Pius XII Memorial Library
St. Louis University
3655 West Pine Boulevard
St. Louis, MO 63108
(314) 658–3105

Thomas Jefferson Library
University of Missouri–St. Louis
8001 Natural Bridge Road
St. Louis, MO 63144
(314) 453–5954

Washington University Law Library
Documents Department
Campus Box 1120
St. Louis, MO 63130
(314) 889–6484

Sedalia:
State Fair Community College Library
1900 Clarendon Road
Sedalia, MO 65301

Springfield:
Walker Library
Drury College
Springfield, MO 65802

Southwest Missouri State University
The Library
Springfield, MO 65802
(417) 831–1561

Warrensburg:
Ward Edwards Library
Central Missouri State University
Warrensburg, MO 64093
(816) 429–4149

MONTANA

Billings:
Bureau of Land Management
Library
P.O. Box 30157
Billings, MT 59107

Field Solicitor, Law Library
U.S. Department of the Interior
P.O. Box 1538
Billings, MT 59103

NEBRASKA

Kearney:
Calvin T. Ryan Library
Kearney State College
Kearney, NE 68847

Lincoln:
Nebraska Library Commission
1420 P Street
Lincoln, NE 68508
(402) 471–2045

University of Nebraska–Lincoln
Libraries
Lincoln, NE 68588

Norfolk:
Northeast Technical Community
College
801 E. Benjamin Avenue
Norfolk, NE 68701
(402) 371–2020

Omaha
Creighton University Law Library
25th and California Streets
Omaha, NE 68178
(402) 280–2875

NEBRASKA—Continued

Omaha Public Library
Business, Science, and Technology Department
215 S. Fifteenth Street
Omaha, NE 68102
(402) 444-4815

University of Nebraska at Omaha Library
60th and Dodge Streets
Omaha, NE 68182
(402) 554-2661

Wayne
U. S. Conn Library
Wayne State College
Wayne, NE 68787
(402) 375-2200, ext. 213

NEVADA

Carson City:
Nevada State Library
Capitol Complex
Carson City, NV 89710
(702) 885-5160

Reno:
Government Publications Department
University of Nevada Library
Reno, NV 89557
(702) 784-6579

NEW HAMPSHIRE

Concord:
Law Division, State Library
Supreme Court Building
Loudon Road
Concord, NH 03301
(603) 271-3777

New London:
Fernald Library
Colby-Sawyer College
New London, NH 03257

NEW JERSEY

Bloomfield:
Bloomfield Public Library
90 Broad Street
Bloomfield, NJ 07003
(201) 429-9292

Bridgeton:
Cumberland County Library
800 East Commerce Street
Bridgeton, NJ 08302

East Orange:
East Orange Public Library
21 South Arlington Avenue
East Orange, NJ 07018

Elmer:
Arthur P. Schalick High School
Elmer-Centerton Road
R.D. 1
Elmer, NJ 08318

Hackensack:
Johnson Free Public Library
Hackensack Area Reference Library
275 Moore Street
Hackensack, NJ 07601

Jersey City:
Hudson Health Systems Agency Library
871 Berger Avenue
Jersey City, NJ 07306

Lawrenceville:
Franklin F. Moore Library
Rider College
Lawrenceville, NJ 08648
(609) 896-5115

Mahwah:
Ramapo College Library
505 Ramapo Valley Road
Mahwah, NJ 07430

Montclair:
Montclair Public Library
50 S. Fullerton Avenue
Montclair, NJ 07042
(201) 744-0500

Newark:
Newark Public Library
5 Washington Street
P.O. Box 630
Newark, NJ 07101
(201) 733-7782

Paterson:
Paterson Free Public Library
250 Broadway
Paterson, NJ 07501
(201) 881-3750

Pomona:
Stockton State College
Pomona, NJ 08240
(609) 652-1776, ext. 266

Toms River:
Ocean County College
Learning Resources Center
College Drive
Toms River, NJ 08753
(201) 255-4000 ext. 385

Trenton:
New Jersey State Law Library
185 West State Street
P.O. Box 1898
Trenton, NJ 08625
(609) 292-6230

Voorhees:
Camden County Library
Echelon Urban Center
Laurel Road
Voorhees, NJ 08043
(609) 772-1636

Wayne:
Wayne Public Library
475 Valley Road
Wayne, NJ 07470
(201) 694-4272

NEW MEXICO

Albuquerque:
The University of New Mexico
General Library
Albuquerque, NM 87131
(505) 277-4241 and 277-5441

The University of New Mexico
School of Law Library
1117 Stanford NE
Albuquerque, NM 87131
(505) 277-6236

Las Vegas:
New Mexico Highlands University
Donnelly Library
Las Vegas, NM 87701

Portales:
Golden Library
Documents Department
Eastern New Mexico University
Portales, NM 88130

Santa Fe:
New Mexico State Library
300 Don Gaspar
Santa Fe, NM 87503
(505) 827-2033

Office of the Solicitor, Law Library
U.S. Department of the Interior
U.S. Courthouse, Room 224
P.O. Box 1042
Santa Fe, NM 87501

Silver City:
Miller Library
Western New Mexico University
Silver City, NM 88061

NEW YORK

Albany:
The New York State Library
The State Education Department
Cultural Education Center
Empire State Plaza
Albany, NY 12230
(518) 474-5943

Brooklyn:
Brooklyn Public Library
Business Library
280 Cadman Plaza West
Brooklyn, NY 11201
(212) 780-7800

Corning:
The Arthur A. Houghton, Jr. Library
Corning Community College
Corning, NY 14830
(607) 962-9251

Garden City:
Adelphi University
Swirbul Library
South Avenue
Garden City, NY 11530
(516) 294-8700 ext. 7345

Geneseo:
State University of New York at Geneseo
Milne Library
Government Documents
Geneseo, NY 14454

Greenvale:
C. W. Post Center—Long Island University
B. Davis Schwartz Memorial Library
Greenvale, NY 11548

New Paltz:
Government Documents Department
Sojourner Truth Library
State University College
New Paltz, NY 12561
(914) 257-2252

Niagara Falls:
Niagara Falls Public Library
1425 Main Street
Niagara Falls, NY 14305
(716) 278-8113

NEW YORK—Continued

Oswego:
State University of New York at Oswego
Oswego, NY 13126
(315) 341–4267

Rochester:
Rochester Public Library
Business and Social Science Division
115 South Avenue
Rochester, NY 14604
(716) 428–7342

Schenectady:
Schenectady County Public Library
Liberty and Clinton Streets
Schenectady, NY 12305

Syracuse:
Reference Department
Onondaga County Public Library
335 Montgomery Street
Syracuse, NY 13202
475–8458

Uniondale:
Nassau Library System
900 Jerusalem Avenue
Uniondale, NY 11553
(516) 292–8920

NORTH CAROLINA

Asheboro:
Asheboro Public Library
201 Worth Street
Asheboro, NC 27203
(919) 629–3329

Asheville:
Asheville–Buncombe Public Library
67 Haywood Street
Asheville, NC 28801
(704) 252–8701

D. Hiden Ramsey Library
University of North Carolina at Asheville
1 University Heights
Asheville, NC 28804
(704) 251–6434

Boone:
Regional Information Center
Region D Council of Governments
P.O. Box 1820
Boone, NC 28607

Chapel Hill:
University of North Carolina
Law Library
Van Hecke–Wettach Building 064–A
Chapel Hill, NC 27514
(919) 962–1194)

Charlotte:
Public Librarty of Charlotte and Mecklenburg County
310 N. Tryon Street
Charlotte, NC 28202
(704) 374–2540

Durham:
William Perkins Library
Public Documents Department
Duke University
Durham, NC 27706
(919) 684–2380

Gastonia:
Gaston County Public Library*
Headquarters: Gaston–Lincoln Regional Library
1555 East Garrison Boulevard
Gastonia, NC 28052
(704) 865–3418

Greenville:
J. Y. Joyner Library
East Carolina University
Greenville, NC 27834

Greensboro:
Greensboro Public Library
201 N. Green Street
Greensboro, NC 27401
(919) 373–2471

Raleigh:
Documents Department
The D. H. Hill Library
North Carolina State University
Box 5007
Raleigh, NC 27650

North Carolina Department of Cultural Resources
Division of State Library
Documents Branch
109 East Jones Street
Raleigh, NC 27611
(919) 733–3343

North Carolina Supreme Court Library
2 East Morgan Street
P.O. Box 28006
Raleigh, NC 27611
(919) 733–3425

Winston–Salem:
Forsyth County Public Library
660 West Fifth Street
Winston–Salem, NC 27101
(919) 727–2220

NORTH DAKOTA

Bismarck:
Bismarck Junior College*
Schafer Heights
Bismarck, ND 58501

North Dakota State Library
Highway 83 North
Bismarck, ND 58505
224–2490

Office of Program Planning*
All Nations Circle – Bldg. 35
United Tribes Educational Technical Center
3315 South Airport Road
Bismarck, ND 58501

OHIO

Athens:
Government Documents Department
Ohio University Library
Athens, OH 45701
(614) 594–5604

Cincinnati:
Municipal Reference Library
224 City Hall
Cincinnati, OH 45202

National Institute for Occupational Safety and Health
Division of Technical Services
Robert A. Taft Laboratories
4676 Columbia Parkway
Cincinnati, OH 45226

Cleveland:
Cleveland Public Library
325 Superior Avenue
Cleveland, OH 44114

Cleveland Regional Sewer District*
Library
Administrative Offices
801 Rockwell Avenue
Cleveland, OH 44114
(216) 781–6600 ext. 219

Cleveland Heights:
Cleveland Heights—University Heights Public Library
2345 Lee Road
Cleveland Heights, OH 44118
(216) 932–3600

Columbus
The State Library of Ohio
65 South Front Street
Columbus, OH 43215
(614) 466–2694

Dayton:
University Library
Wright State University
Dayton, OH 45435

Findlay:
Marathon Oil Company
Law Library, Room 854–M
539 South Main Street
Findlay, OH 45840
(419) 422–2121 ext. 3376

Shafer Library
Findlay College
1000 N. Main Street
Findlay, OH 45840
(419) 422–8313

Marion:
Marion Public Library*
445 E. Church Street
Marion, OH 43302
(614) 387–0992

Toledo:
Toledo–Lucas County Public Library
Social Science Department
325 Michigan Street
Toledo, OH 43624
(419) 255–7055 ext. 221

Wooster:
Andrews Library
The College of Wooster
Wooster, OH 44691

OKLAHOMA

Aradarko:
Field Solicitor, Law Library
U.S. Department of the Interior
P.O. Box 397
Aradarko, OK 73005

BEST COPY AVAILABLE

OKLAHOMA—Continued
Norman:
Law Library
University of Oklahoma
300 Timberdell
Norman, OK 73019
Oklahoma City:
Metropolitan Library System
Main Library
131 Dean A. McGee Avenue
Oklahoma City, OK 73102
(405) 631–1149
Oklahoma Department of Libraries
U.S. Documents Regional Depository
200 N.E. 18th Street
Oklahoma City, OK 73105
(405) 521–2502
Pawhuska:
Field Solicitor, Law Library
U.S. Department of the Interior
c/o Osage Agency
Pawhuska, OK 74056
Stillwater:
Documents Department
Edmon Low Library
Oklahoma State University
Stillwater, OK 74074
(405) 624–6546
Tulsa:
Office of the Regional Solicitor, Law Library
U.S. Department of the Interior
P.O. Box 3156
Tulsa, OK 74101

OREGON
Eugene:
University of Oregon Library
Government Documents Section
Eugene, OR 97403
(503) 686–3070
Portland:
Library Association of Portland
(Multnomah County Library)
801 S.W. 10th Avenue
Portland, OR 97205
223–7201
Salem:
Oregon State Library
State Library Building
Salem, OR 97310
(503) 378–4276

PENNSYLVANIA
Aliquippa:
B.F. Jones Memorial Library*
Aliquippa District Center
663 Franklin Avenue
Aliquippa, PA 15001
(412) 375–7174
Allentown:
The John A. W. Haas Library
Muhlenberg College
Allentown, PA 18104
Dallas:
Library
College Misericordia
Dallas, PA 18612
Harmony:
Library
Seneca Valley Senior High School*
Southwest Butler County School District
R.D. 2
Harmony, PA 16037
Harrisburg:
State Library of Pennsylvania
Box 1601
Harrisburg, PA 17126
(717) 787–7343
Hazleton:
Hazleton Area Public Library
Church and Maple Streets
Hazleton, PA 18201
454–2961/454–0244
Johnstown:
Cambria County Library System
248 Main Street
Johnstown, PA 15901
(814) 536–5131
Lancaster:
Fackenthal Library
Franklin and Marshall College
P.O. Box 3003
Lancaster, PA 17604
(717) 291–4210
Loretto:
Pius XII Memorial Library
Saint Francis College
Loretto, PA 15940
Millersville:
Millersville State College
Millersville, PA 17551

Vein
Stayer R & L Center
Millersville State College
Millersville, PA 17551
(717) 872–5411 ext. 552, 542
Newtown:
The Library
Bucks County Community College
Newtown, PA 18940
Philadelphia:
Government Publications Department
Free Library of Philadelphia
Logan Square
Philadelphia, PA 19103
Pittsburgh:
Baldwin Borough Public Library
3344 Churchview Avenue
Pittsburgh, PA 15227

U.S. Bureau of Mines
Library
4800 Forbes Avenue
Pittsburgh, PA 15213
Shippensburg:
Ezra Lehman Memorial Library
Shippensburg State College
Shippensburg, PA 17257
Somerset:
Somerset State Hospital Library
Box 631
Somerset, PA 15501
(814) 445–6501, ext. 216
Swarthmore:
The Swarthmore College Library
The McCabe Library
Swarthmore, PA 19081
(215) KI 4–7900
Warren:
Warren Library Association
205 Market Street
Warren, PA 16365
Washington:
Washington County Law Library
Courthouse
Washington, PA 15301
(412) 228–6747
West Chester:
Francis Harvey Green Library*
West Chester State College
West Chester, PA 19380
(215) 436–2869
Wilkes–Barre:
Institute of Regional Affairs*
Wilkes College
Wilkes–Barre, PA 18703

RHODE ISLAND
Kingston:
Government Publications Office
University of Rhode Island
Library
Kingston, RI 02881
(401) 792–2602
Providence:
Brown University Library
Documents Department
Providence, RI 02912
(401) 863–2522

Providence Public Library
150 Empire Street
Providence, RI 02903
(401) 521–7722

Rhode Island College
James P. Adams Library
Documents Department
600 Mt. Pleasant Avenue
Providence, RI 02908
(401) 274–4900 ext. 331
Warwick:
Warwick Public Library
600 Sandy Lane
Warwick, RI 02886
(401) 739–5440

SOUTH CAROLINA
Charleston:
Baptist College of Charleston
P. O. Box 10087
Charleston, SC 29411

Charleston County Library
404 King Street
Charleston, SC 29403

Citadel
Charleston, SC 29409

College of Charleston
66 George Street
Charleston, SC 29401

SOUTH CAROLINA—Continued

Clemson:
Clemson University
Clemson, SC 29631

Columbia:
Benedict College
Blanding & Harden Streets
Columbia, SC 29204

Richland County Public Library
1400 Sumter Street
Columbia, SC 29201

South Carolina State Library
1500 Senate Street
Columbia, SC 29201

University of South Carolina
Columbia, SC 29208

Conway:
Coastal Carolina (of University of SC)
Route 6
Conway, SC 29526

Due West:
Erskine College*
Due West, SC 29639

Florence:
Florence County Library
319 S. Irby Street
Florence, SC 29501

Francis Marion College
Florence, SC 29501

Greenville:
Furman University
Greenville, SC 29613

Greenville County Library
300 College Street
Greenville, SC 29601

Greenwood:
Larry A. Jackson Library
Lander College
Greenwood, SC 29646

Orangeburg:
South Carolina State College
College Avenue
Orangeburg, SC 29117

Rock Hill:
Winthrop College
Rock Hill, SC 29733

Spartanburg:
Spartanburg County Library
P. O. Box 2409
333 S. Pine Street
Spartanburg, SC 29304

Sumter:
Sumter County Library
111 North Harvin Street
Sumter, SC 29150
773–7273

SOUTH DAKOTA

Brookings:
H. M. Briggs Library
South Dakota State University
Brookings, SD 57007
(605) 688–5106

Rapid City:
Devereaux Library
South Dakota School of Mines & Technology
Rapid City, SD 57701
(605) 394–2418

Sioux Falls:
Sioux Falls Public Library
201 N. Main Avenue
Sioux Falls, SD 57101

TENNESSEE

Chattanooga:
Hamilton County Bicentennial Library
Business, Science and Technology Department
1001 Broad Street
Chattanooga, TN 37402
(615) 757–5312

Clarksville:
Woodward Library
Austin Peay State University
Clarksville, TN 37040
(615) 648–7346

Martin:
Paul Meek Library
University of Tennessee at Martin
Martin, TN 38238
(901) 587–7065

Nashville:
Documents Unit
Joint University Libraries
Nashville, TN 37203

Tennessee State Library
Tennessee State Library and Archives
403 Seventh Avenue North
Nashville, TN 37219
(615) 741–2451

TEXAS

Amarillo:
Amarillo Public Library*
City of Amarillo
P.O. Box 2171
413 E. 4th
Amarillo, TX 79189

Field Solicitor
U.S. Department of the Interior
P.O. Box H–4393, Herring Plaza
Amarillo, TX 79101

Austin:
The State Law Library
Supreme Court Building
P.O. Box 12367, Capitol Station
Austin, TX 78711
(512) 475–3807

College Station:
Documents Division
University Libraries
Texas A & M University
College Station, TX 77843

Dallas:
Dallas County Law Library
Government Center
Dallas, TX 75202
749–8481

U.S. Environmental Protection Agency
Region VI
1201 Elm Street
Dallas, TX 75270

Denton:
Texas Woman's University Library
Box 23715, TWU Station
Denton, TX 76204
(817) 566–6415

El Paso:
El Paso Public Library
Documents Section
501 North Oregon Street
El Paso, TX 79901
(915) 543–3808

Hurst:
Hurst Public Library
901 Precinct Line Road
Hurst, TX 76053
(817) 485–5320

Killeen:
Oveta Culp Hobby Library
American Educational Complex
U.S. Hwy 190 W.
Killeen, TX 76541
(817) 526–1237

Lubbock:
School of Law Library
Texas Tech University
Lubbock, TX 79409

Victoria:
Documents Department
VC/UHVC Library
2602 N. Ben Jordan
Victoria, TX 77901
(512) 576–3151, ext. 201
(512) 573–3291

UTAH

Cedar City:
Southern Utah State College Library
Cedar City, UT 84720

Ephraim:
Lucy A. Phillips Library
Snow College
Ephraim, UT 84627

Logan:
Documents Department
Merrill Library, UMC 30
Utah State University
Logan, UT 84322

Ogden:
Weber State College Library
Ogden, UT 84403

Provo:
Harold B. Lee Library
Documents and Maps Section
Brigham Young University
Provo, UT 84602

Law Library
Brigham Young University
Provo, UT 84602

Salt Lake City:
Regional Solicitor
U.S. Department of the Interior
Suite 6201, Federal Building
125 South State Street
Salt Lake City, UT 84138

Supreme Court Library
State Capitol
Salt Lake City, UT 84114

College of Law Library
University of Utah
Salt Lake City, UT 84112

Government Documents
Eccles Health Sciences Library
University of Utah, Bldg. 89
Salt Lake City, UT 84112

UTAH—Continued
Government Documents Division
Marriott Library
University of Utah
Salt Lake City, UT 84112

Utah State Library Commission
2150 South 300 West, Suite 16
Salt Lake City, UT 84115

VERMONT
Burlington:
Bailey/Howe Library
Documents Department
University of Vermont
Burlington, VT 05405
Middlebury:
Egbert Starr Library
Government Documents Department
Middlebury College
Middlebury, VT 05753
South Royalton:
Law Library
Vermont Law School
South Royalton, VT 05068
(802) 763–8303

VIRGINIA
Alexandria:
Alexandria Library*
717 Queen Street
Alexandria, Va. 22314
(703) 838–4555
Arlington:
Office of Hearings and Appeals Library
U.S. Department of the Interior
4015 Wilson Boulevard
Arlington, VA 22203
Chesapeake:
Chesapeake Public Library
300 Cedar Road
Chesapeake, VA 23320
(804) 547–6591
Danville:
Danville Community College Library
1009 Bonner Avenue
Danville, VA 24541
(804) 797–3553
Fairfax:
Fairfax City Central Library
3915 Chain Bridge Road
Fairfax, VA 22030
(703) 691–2741

Fenwick Library
George Mason University
4400 University Drive
Fairfax, VA 22030
Lynchburg
The Library
Lynchburg College
Lynchburg, VA 24501
Norfolk:
Norfolk Public Library System
301 East City Hall Avenue
Norfolk, VA 23510
Reston:
U.S. Geological Survey
Library
National Center, Mail Stop 950
Reston, VA 22092
Richmond:
Learning Resources Center
Parham Road Campus
J. Sargeant Reynolds Community College
P.O. Box 12084
Richmond, VA 23241
(804) 264–3220

Municipal Library
County of Henrico
Hungary Springs & Parham Roads
Richmond, VA 23228

Virginia State Library
11th & Capitol Streets
Richmond, VA 23219
Roanoke:
Roanoke Law Library
210 Campbell Avenue, SW
Roanoke, VA 24011
Virginia Beach:
Public Law Library
Municipal Center
City of Virginia Beach
Virginia Beach, VA 23456
Williamsburg:
Documents Department
Earl Gregg Swem Library
College of William and Mary
Williamsburg, VA 23185

WASHINGTON
Bellingham:
Documents Division, Wilson Library
Western Washington University
516 High Street
Bellingham, WA 98225
(206) 676–3075
Cheney:
Eastern Washington University
The Library
Cheney, WA 99004
(509) 359–2475
Everett:
Everett Public Library
2702 Hoyt Avenue
Everett, WA 98201
(206) 259–8857

Snohomish County Law Library
County Courthouse
Everett, WA 98201
(206) 259–5326
Midway:
Highline Community College
Library 25–2
Midway, WA 98032
(206) 878–3710, ext. 232
Olympia:
Washington State Law Library
Temple of Justice
Olympia, WA 98504

Washington State Library
Document Section
Olympia, WA 98504
(206) 753–4027
Port Angeles:
North Olympic Library System
207 So. Lincoln
Port Angeles, WA 98362
Spokane:
Gonzaga University Law Library
E. 600 Sharp Avenue
P.O. Box 3528
Spokane, WA 99220

Spokane Public Library
West 906 Main Avenue
Spokane, WA 99201
(509) 838–3361

WEST VIRGINIA
Beckley:
National Mine Health and Safety Academy
Learning Resources Center
P.O. Box 1166
Beckley, WV 25801
Charleston:
Kanawha County Public Library
123 Capitol Street
Charleston, WV 25301
(304) 343–4646
Montgomery:
Vining Library
West Virginia Institute of Technology
Montgomery, WV 25136
Weirton:
Mary H. Weir Public Library
3442 Main Street
Weirton, WV 26062
(304) 748–7070

WISCONSIN
Appleton:
Appleton Public Library
121 South Oneida Street
Appleton, WI 54911
734–7171
Green Bay:
University of Wisconsin—Green Bay
Library Learning Center
Government Publications
Green Bay, WI 54302
Kenosha:
Library/Learning Center
University of Wisconsin–Parkside
Wood Road
Kenosha, WI 53141
Ladysmith:
Mount Senario College Library
Ladysmith, WI 54848
Madison:
Madison Public Library
201 W. Mifflin Street
Madison, WI 53703
(608) 266–6363

VOL 53 ISS 71 AP 13 1988 UMI

WISCONSIN—Continued
Milwaukee:
Milwaukee County
Law Library
Courthouse, Room 307
901 North 9th Street
Milwaukee, WI 53233
278–4900

WYOMING
Gillette:
George Amos Memorial Library
412 S. Gillette Avenue
Gillette, WY 82716
(307) 682–3223

Laramie:
Coe Library—Documents Division
University of Wyoming
Box 3334, University Station
Laramie, WY 82071
(307) 766–2174

VOL
53
ISS
71
AP
13
1988
UMI

federal register

Wednesday
April 13, 1988

Part III

Office of Management and Budget

Cumulative Report on Rescissions and Deferrals; Notice

OFFICE OF MANAGEMENT AND BUDGET

Cumulative Report on Rescissions and Deferrals

April 1, 1988.

This report is submitted in fulfillment of the requirements of section 1014(e) of the Impoundment Control Act of 1974 (Pub. L. 93–344). Section 1014(e) provides for a monthly report listing all budget authority for this fiscal year for which, as of the first day of the month, a special message has been transmitted to the Congress.

This report gives the status as of April 1, 1988 of 22 deferrals contained in the three special messages of FY 1988. There have been no rescissions proposed. These messages were transmitted to the Congress on October 1 and 29, 1987 and February 19, 1988.

Rescissions (Table A and Attachment A)

As of April 1, 1988, there were no rescission proposals pending before the Congress.

Deferrals (Table B and Attachment B)

As of April 1, 1988, $6,385.9 million in budget authority was being deferred from obligation. Attachment B shows the history and status of each deferral reported during FY 1988.

Information from Special Messages

The special messages containing information on the deferrals covered by this cumulative report are printed in the **Federal Registers** listed below:

Vol. 52, FR p. 37739, Thursday, October 8, 1987

Vol. 52, FR p. 42400, Wednesday, November 4, 1987

Vol. 53, FR p. 6734, Wednesday, March 2, 1988

James C. Miller III,

Director.

BILLING CODE 3110-01-M

TABLE A

STATUS OF 1988 RESCISSIONS

	Amount (In millions of dollars)
Rescissions proposed by the President	0
Accepted by the Congress	0
Rejected by the Congress	0
Pending before the Congress	0

****

TABLE B

STATUS OF 1988 DEFERRALS

	Amount (In millions of dollars)
Deferrals proposed by the President	9,310.0
Routine Executive releases through April 1, 1988 (OMB/Agency releases of $2,930.9 million and cumulative adjustments of $6.8 million)	-2,924.1
Overturned by the Congress	0
Currently before the Congress	6,385.9

Attachments

Attachment A - Status of Rescissions - Fiscal Year 1988

As of April 1, 1988 Amounts in Thousands of Dollars Agency/Bureau/Account	Rescission Number	Amount Previously Considered by Congress	Amount Currently before Congress	Date of Message	Amount Rescinded	Amount Made Available	Date Made Available	Congressional Action
NONE								

Attachment B - Status of Deferrals - Fiscal Year 1988

As of April 1, 1988 Amounts in Thousands of Dollars Agency/Bureau/Account	Deferral Number	Amount Transmitted Original Request	Amount Transmitted Subsequent Change	Date of Message	Cumulative OMB/Agency Releases	Congressionally Required Release	Congressional Action	Cumulative Adjustments	Amount Deferred as of 4-1-88
FUNDS APPROPRIATED TO THE PRESIDENT									
International Security Assistance									
Foreign military sales credit	D88-20	2,949,000		2-19-88	865,000				2,084,000
Economic support fund	D88-1	40,000		10-1-87					
	D88-1A		1,960,727	2-19-88	192,950				1,807,777
Military assistance	D88-21	608,186		2-19-88	202,346				405,840
International disaster assistance	D88-22	13,479		2-19-88	6,200				7,279
Special Assistance for Central America									
Promotion of stability and security in Central America	D88-2	1,000		10-1-87					1,000
DEPARTMENT OF AGRICULTURE									
Forest Service									
Expenses, brush disposal	D88-3	120,425		10-1-87					
	D88-3A		10,529	2-19-88					130,954
Timber salvage sales	D88-4	34,841		10-1-87	10,456				24,385
Cooperative work	D88-5	628,025		10-1-87	157,084				470,941
Gifts, donations, and bequests for forest and rangeland research	D88-6	104		10-1-87	60				44
DEPARTMENT OF DEFENSE - MILITARY									
Military Construction									
Military construction, Defense	D88-7	900		10-1-87					
	D88-7A		1,297,848	2-19-88	1,297,848				900
Family Housing									
Family housing, Defense	D88-8	51,015		10-1-87					
	D88-8A		135,940	2-19-88	186,955				0
DEPARTMENT OF DEFENSE - CIVIL									
Wildlife Conservation, Military Reservations									
Wildlife conservation, Defense	D88-9	636		10-1-87					
	D88-9A		149	2-19-88					785

Attachment 3 - Status of Deferrals - Fiscal Year 1988

As of April 1, 1988 Amounts in Thousands of Dollars Agency/Bureau/Account	Deferral Number	Amount Transmitted Original Request	Amount Transmitted Subsequent Change	Date of Message	Cumulative OMB/Agency Releases	Congressionally Required Releases	Congressional Action	Cumulative Adjustments	Amount Deferred as of 4-1-88
DEPARTMENT OF ENERGY									
Power Marketing Administration									
Alaska Power Administration, Operation and maintenance	D88-14	120		10-29-87					120
Southeastern Power Administration, Operation and maintenance	D88-15	2,000		10-29-87	2,000				0
Southwestern Power Administration, Operation and maintenance	D88-16	6,000		10-29-87					
	D88-16A		7,200	2-19-88					13,200
Western Area Power Administration, Construction, rehabilitation, operation and maintenance	D88-17	774		10-29-87					
	D88-17A		2,426	2-19-88	3,200				0
DEPARTMENT OF HEALTH AND HUMAN SERVICES									
Office of Assistant Secretary for Health									
Scientific activities overseas (special foreign currency program)	D88-18	2,391		10-29-87					
	D88-18A		569	2-19-88					2,960
Social Security Administration									
Limitation on administrative expenses (construction)	D88-10	6,171		10-1-87					
	D88-10A		36	2-19-88					6,207
DEPARTMENT OF JUSTICE									
Office of Justice Programs									
Crime victims fund	D88-19	85,000		10-29-87	6,800		6,800		85,000
DEPARTMENT OF STATE									
Bureau for Refugee Programs									
United States emergency refugee and migration assistance fund, executive	D88-11	11,638		10-1-87					11,638

Attachment B - Status of Deferrals - Fiscal Year 1988

As of April 1, 1988 Amounts in Thousands of Dollars Agency/Bureau/Account	Deferral Number	Amount Transmitted Original Request	Amount Transmitted Subsequent Change	Date of Message	Cumulative OMB/Agency Releases	Congressionally Required Releases	Congressional Action	Cumulative Adjustments	Amount Deferred as of 4-1-88
DEPARTMENT OF TRANSPORTATION									
Federal Aviation Administration									
Facilities and equipment (Airport and airway trust fund)	D88-12	879,049		10-1-87					
	D88-12A		450,858	2-19-88					1,329,907
DEPARTMENT OF THE TREASURY									
Office of Revenue Sharing									
Local government fiscal assistance trust fund	D88-13	2,933		10-1-87					2,933
TOTAL, DEFERRALS		5,443,688	3,866,281		2,930,899	0		6,800	6,385,870

[FR Doc. 88-8055 Filed 4-12-88; 8:45 am]

BILLING CODE 3110-01-C

federal register

Wednesday
April 13, 1988

Part IV

Department of Labor

Mine Safety and Health Administration

30 CFR Parts 20, 75 and 77
Mandatory Safety Standards; Proposed Rules

DEPARTMENT OF LABOR

Mine Safety and Health Administration

30 CFR Part 20

Electric Mine Lamps Other Than Standard Cap Lamps

AGENCY: Mine Safety and Health Administration (MSHA), Labor.

ACTION: Proposed rule.

SUMMARY: This proposal would amend 30 CFR Part 20 by revising the requirements for the testing and approval of electric mine lamps, other than standard cap lamps, used in underground mines. These amendments would allow MSHA to approve lamps with different designs that would be as safe as lamps approved under the existing rules. The proposal would not affect lamps which have been or could be approved under the existing rules.

DATES: Comments on the proposal must be received by June 13, 1988.

ADDRESS: Send written comments to the Office of Standards, Regulations and Variances; MSHA; Room 631; Ballston Tower No. 3; 4015 Wilson Boulevard; Arlington, Virginia 22203.

FOR FURTHER INFORMATION CONTACT: Patricia W. Silvey, Director, Office of Standards, Regulations and Variances, MSHA; phone: (703) 235-1910.

SUPPLEMENTARY INFORMATION: Under the existing rules, MSHA investigates and approves lamps which meet the design, construction and test requirements set forth in Part 20 of Title 30 of the Code of Federal Regulations (CFR). These rules do not recognize lamps and flashlights that incorporate new or newly-applied technology. As a result, MSHA has not approved lamps and flashlights with innovative improvements.

The proposal would amend Part 20 to enable MSHA to issue approvals for electric lamps and flashlights incorporating new designs if, after testing, they are found to be safe for their intended use and provide, at a minimum, the same degree of safety as lamps currently approved under the existing rules. At a future date, and under a separate rulemaking, MSHA will review Part 20 to determine the appropriateness of incorporating it into the Agency's proposed Part 7 program (Testing by Applicant or Third Party, 51 FR 4686).

I. Discussion of the Proposed Rule

Under the proposal, § 20.1(c) would be amended to provide that MSHA may approve electric lamps and flashlights that incorporate technology for which the requirements of Part 20 are not applicable if the Agency determines by testing that the electric lamps or flashlights perform as safely as those which meet the requirements of Part 20. With this provision, MSHA would be able to modify design, construction or test requirements in order to permit investigation and approval of lamps or flashlights which incorporate technological improvements that were not available or not applied when Part 20 was originally promulgated.

Consistent with this amendment, the proposal would revise § 20.8(a)(1) to allow MSHA to investigate and approve lamps that are designed and constructed to prevent bulb breakage, thus preventing exposure of the filament and possible ignition of an explosive atmosphere. Under the proposal, this design would be an alternative to the existing requirement for a safety device to prevent exposure of the filament. Typically, the safety device used in approved electric mine lamps ejects the bulb automatically when the lamp lens is broken. MSHA is aware that there are lamps currently being designed and constructed which use breakage-resistant material to prevent exposure of the filament by protecting the bulb from breakage. This proposal would authorize MSHA to approve these types of lamps, provided that they are as safe as currently approved lamps.

II. Executive Order 12291 and the Regulatory Flexibility Act

MSHA has determined that the proposal would not result in major cost increases nor have an incremental effect of $100 million or more on the economy. Therefore, the proposal is not a major rule under Executive Order 12291, and a Regulatory Impact Analysis is not required. The proposal would remove restrictions in MSHA's Approval and Certification requirements for electric mine lamps, other than standard cap lamps. It would not include any new requirements nor result in additional costs. For these reasons the Agency has not conducted a regulatory flexibility analysis and, in accordance with section 605(b) of the Regulatory Flexibility Act, certifies that the proposal, if promulgated, will not have a significant economic impact on a substantial number of small entities.

III. Paperwork Reduction Act

This proposal does not contain information collection requirements subject to the Paperwork Reduction Act of 1980.

List of Subjects in 30 CFR Part 20

Mine safety and health, Electric mine lamps.

David C. O'Neal,

Deputy Assistant Secretary for Mine Safety and Health.

Date: April 8, 1988.

Accordingly, it is proposed to amend Part 20, Subchapter O, Chapter I, of Title 30 of the Code of Federal Regulations as follows:

PART 20—ELECTRIC MINE LAMPS OTHER THAN STANDARD CAP LAMPS

1. The authority citation to Part 20 would continue to read as follows:

Authority: 30 U.S.C. 957, 961.

2. Section 20.1 is proposed to be amended by redesignating paragraph (c) as (c)(1) and adding a new paragraph (c)(2) to read as follows:

§ 20.1 Purpose.

* * * * *

(c) * * *

(2) MSHA may approve electric lamps and flashlights that incorporate technology for which the requirements of this part are not applicable if MSHA determines by testing that the electric lamps or flashlights perform as safely as those which meet the requirements of this part.

* * * * *

3. Section 20.8 is proposed to be amended by revising paragraph (a)(1) to read as follows:

§ 20.8 Class 1 lamps.

(a) * * *

(1) *Safety device or design.* The lighting unit shall have a safety device to prevent the ignition of explosive mixtures of methane and air if the bulb glass surrounding the filament is broken. Alternatively, if the lamp is designed and constructed to prevent the ignition of explosive mixtures of methane and air by protecting the bulb from breakage and preventing exposure of the hot filament, no separate safety device is required.

* * * * *

[FR Doc. 88-8062 Filed 4-12-88; 8:45 am]

BILLING CODE 4510-43-M

30 CFR Parts 75 and 77

Certified and Qualified Persons

AGENCY: Mine Safety and Health Administration, Labor.

ACTION: Proposed rule.

SUMMARY: This proposed rule would revise certain parts of the Mine Safety and Health Administration's (MSHA) existing procedures concerning temporary qualification and certification of persons who work at coal mines. Existing procedures limit temporary qualifications and certifications to six months, after which time reapplication must be made. The proposal would permit persons to be qualified or certified for as long as they continue to satisfy the requirements needed to obtain the certification or qualification, fulfill any applicable retraining requirements, and remain employed at the same coal mine or by the same independent contractor. The proposal would eliminate the six-month recertification requirement under certain circumstances, thereby, eliminating the unnecessary paperwork involved in the routine reapplication for certification and qualification of persons.

DATES: Written comments must be submitted on or before June 13, 1988.

ADDRESSES: Send written comments to MSHA, Office of Standards, Regulations and Variances, Room 631, Ballston Tower No. 3, 4015 Wilson Boulevard, Arlington, Virginia 22203.

FOR FURTHER INFORMATION CONTACT: Patricia W. Silvey, Director, Office of Standards, Regulations and Variances, MSHA; phone: (703) 235-1910.

SUPPLEMENTARY INFORMATION:

I. Background Information

The Mine Safety and Health Administration is proposing to revise its existing procedures for temporary qualification or certification of persons at underground and surface coal mines. Under the Federal Mine Safety and Health Act of 1977 (Mine Act) and MSHA standards, persons who perform tasks related to miner safety and health which require specialized expertise are required to be either "certified" or "qualified" to carry out these duties. This proposal would affect certified persons who have the following job responsibilities: Mine foreman; assistant mine foreman; and preshift examiner. Qualified persons who operate steam and electric hoists would also be affected by this proposal.

Existing procedures and requirements for certified and qualified persons are set forth in §§ 75.100, 75.155, 77.100 and 77.105 of the Code of Federal Regulations (CFR). These existing standards recognize state certification and qualification programs. Thus, persons holding state-issued certification or qualification cards are authorized to perform the duties prescribed for certified or qualified persons. However, where state programs are not available, the existing standards provide for MSHA to temporarily certify or qualify certain miners with special job responsibilities. Temporary certification or qualification is valid for six months.

Under the existing standards, persons must meet certain minimum experience requirements. Depending on the type of certification or qualification applied for, one to two years of general employment experience at a coal mine is required. For certified and qualified persons at underground mines, six months of that experience must have been in a specific job category and that experience must have immediately preceded the filing of the application. Applications for temporary certification and qualification must be made in writing to MSHA and must certify that the experience requirements have been satisfied. After initial certification or qualification, reapplication must be made twice a year in order for certified and qualified persons to continue to be authorized to perform their duties.

II. Discussion of the Proposed Rule

The proposed rule would delete the existing six-month limitation and would permit persons to be certified or qualified for as long as they continue to satisfy the requirements needed to obtain the certification or qualification, fulfill any applicable retraining requirements, and remain employed at the same coal mine or by the same independent contractor. This change would eliminate repetitive and unnecessary paperwork involved with reapplication. Under the proposal, when employment at a particular mine or with a particular independent contractor ends, the person's certification or qualification would lapse. At this point, the proposal would require that reapplication be made in order to assure that the experience requirements, as contained in proposed §§ 75.100(c)(1), 75.155 (a)(2) and (b)(2), 77.100(b)(2) and 77.105(a)(2) for qualified and certified persons are met. The proposal does not change the experience requirements for certification or qualification.

MSHA anticipates that some independent contractors would need to obtain an identification number from MSHA before they could submit persons they employ for certification or qualification. However, this impact should be minimal because most independent contractors, who submit applications for certification or qualification of persons, already have identification numbers. The Agency specifically solicits comment on this issue.

In addition to these revisions, editorial changes would be made for consistency and clarity.

III. Executive Order 12291 and the Regulatory Flexibility Act

In accordance with Executive Order 12291, MSHA has considered the potential costs and benefits associated with the proposal in general and as they specifically impact small entities as required by the Regulatory Flexibility Act. Because the proposal would reduce paperwork burden hours and would make no substantive change to the requirements for certification or qualification, MSHA has determined that the proposal is not within the criteria for a major rule and a Regulatory Impact Analysis is not required.

The Regulatory Flexibility Act requires that agencies evaluate and include, wherever possible, compliance alternatives that minimize adverse impact on small businesses when developing regulatory proposals. The proposal would revise current reporting requirements to eliminate cumulative and burdensome paperwork concerning qualified and certified persons, which would directly benefit small as well as large coal mining operations while maintaining miner safety. For these reasons the Agency has not conducted a regulatory flexibility analysis and, in accordance with section 605(b) of the Regulatory Flexibility Act, certifies that the proposal, if promulgated, will not have a significant economic impact on a substantial number of small entities.

IV. Paperwork Reduction Act

The proposal contains information collection requirements subject to the Paperwork Reduction Act of 1980. Under the existing requirements MSHA is receiving approximately 2,800 applications from mine operators annually. The cost to the government is approximately $4,160 annually to process these applications. Mine operators spend approximately 1,400 hours annually preparing these applications.

Under the proposal, annual burden hours for mine operator compliance would be reduced by approximately 1025 hours. As a result of this reduction, costs to the government for processing applications would also be substantially reduced.

The collection of information requirements contained in this proposed rule have been submitted to the Office

of Management and Budget (OMB) in accordance with section 3504(h) of the Paperwork Reduction Act of 1980 (Title 44, U.S.C., Chapter 35). Comments regarding the collection of information requirements contained in this proposal should be sent to OMB, Office of Information and Regulatory Affairs, Room 3208 New Executive Office Building, Washington, DC 20503, Attention: Desk Officer for MSHA.

List of Subjects in 30 CFR Parts 75 and 77

Mine safety and health, Qualified and certified persons, Surface coal mines and surface work areas of underground coal mines, Underground coal mines.

David C. O'Neal,

Deputy Assistant Secretary for Mine Safety and Health.

Date: April 8, 1988.

It is proposed that Title 30, Chapter I, Subchapter O, Parts 75 and 77 of the Code of Federal Regulations be amended as follows:

PART 75—MANDATORY SAFETY STANDARDS—UNDERGROUND COAL MINES

1. The authority citation for Part 75 would continue to read as follows:

Authority: 30 U.S.C. 811, 957 and 961.

2. It is proposed to amend § 75.100 by revising paragraphs (c)(1) and (c)(2) as set forth below:

Subpart B—Qualified and Certified Persons

§ 75.100 Certified person.

* * * * *

(c)(1) The Secretary may certify persons in the categories of mine foreman, assistant mine foreman, and preshift examiner whenever the State in which persons are presently employed in these categories does not provide for such certification. A person's initial certification by MSHA is valid for as long as the person continues to satisfy the requirements necessary to obtain the certification and is employed at the same coal mine or by the same independent contractor. The mine operator or independent contractor shall make an application which satisfactorily shows that each such person has had at least 2 years underground experience in a coal mine, and has held the position of mine foreman, assistant mine foreman, or preshift examiner for a period of 6 months immediately preceding the filing of the application, and is qualified to test for methane and for oxygen deficiency. Applications for Secretarial certification should be submitted in writing to the Health and Safety Activity, Mine Safety and Health Administration, Certification and Qualification Center, P.O. Box 25367, Denver Federal Center, Denver, Colorado 80225.

(2) A person certified by the Secretary under this paragraph will be a certified person, within the meaning of the provisions of Subpart D of this part and § 75.1106 referred to in paragraph (a) of this section, as long as that person continues to satisfy the requirements needed to obtain the qualification or certification and is employed at the same coal mine or by the same independent contractor.

* * * * *

3. It is proposed to amend § 75.155 by revising paragraphs (a)(2) and (b)(2) as set forth below:

§ 75.155 Qualified hoisting engineer; qualifications.

(a) * * *

(2) If a State has no program for qualifying persons as steam-hoisting engineers, the Secretary may qualify persons for this purpose if the operator of the coal mine in which such persons are employed, or the independent contractor, makes an application and a satisfactory showing that each such person has had 1 year experience in operating steam-driven hoists and has held the position of hoisting engineer for a period of 6 months immediately preceding the application. A person's qualification is valid for as long as this person continues to satisfy the requirements necessary to obtain the qualification and is employed at the same coal mine or by the same independent contractor.

(b) * * *

(2) If a State has no program for qualifying person as electric-hoisting engineers, the Secretary may qualify persons for this purpose if the operator of the coal mine in which such persons are employed, or the independent contractor, makes an application and a satisfactory showing that each such persons has had 1 year experience in operating electric-driven hoists and has held the position of hoisting engineer for a period of 6 months immediately preceding the application. A person's qualification is valid for as long as this person continues to satisfy the requirements necessary to obtain the qualification and is employed at the same coal mine or by the same independent contractor.

* * * * *

PART 77—MANDATORY SAFETY STANDARDS—SURFACE COAL MINES AND SURFACE AREAS OF UNDERGROUND COAL MINES

1. The authority citation for Part 77 is proposed to be revised to read as follows:

Authority: 30 U.S.C. 811, 957 and 961.

2. It is proposed to amend § 77.100 by revising paragraph (b)(2) as set forth below:

Subpart B—Qualified and Certified Persons

§ 77.100 Certified person.

* * * * *

(b) * * *

(2) If this person has been certified for such purpose by the Secretary. A person's initial certification is valid for as long as the person continues to satisfy the requirements necessary to obtain the certification and is employed at the same coal mine or by the same independent contractor. The mine operator or independent contractor shall make an application which satisfactorily shows that each such person has had at least 2 years experience at a coal mine or equivalent experience, and that each such person demonstrates to the satisfaction of an authorized representative of the Secretary that such person is able and competent to test for oxygen deficiency with a permissible flame safety lamp and to test for methane with a portable methane detector approved by the Bureau of Mines, MESA, or MSHA, and Part 22 of this Chapter (Bureau of Mines Schedule 8c), and to perform such other duties for which application for certification is made. Applications for certification by the Secretary should be submitted in writing to the Mine Safety and Health Administration, Certification and Qualification Center, P.O. Box 25367, Denver, Colorado 80225.

* * * * *

3. It is proposed to amend § 77.105 by revising paragraph (a)(2) as set forth below:

§ 77.105 Qualified hoistman; slope or shaft-sinking operation; qualifications.

(a) * * *

(2) If a State has no program for qualifying persons as hoistmen, the Secretary may qualify persons if the operator of the slope or shaft-sinking operation makes an application and a satisfactory showing that the person has had 1 year of experience operating hoists. A person's qualification is valid for as long as the person continues to satisfy the requirements necessary to

obtain the qualification and is employed at the same coal mine or by the same independent contractor.

* * * * *

[FR Doc. 88-8064 Filed 4-12-88; 8:45 am]
BILLING CODE 4510-43-M

---

30 CFR Part 77

Mobile Equipment; Automatic Warning Devices

AGENCY: Mine Safety and Health Administration, Labor.

ACTION: Proposed rule.

SUMMARY: The proposal would revise the Mine Safety and Health Administration's (MSHA) existing safety rule requiring devices on mobile equipment to automatically sound an audible warning when the equipment is operated in reverse (backup alarms). The proposal would clarify the existing rule to recognize the Agency policy and corresponding industry practice of not applying the standard to pickup trucks, provided that the driver of the vehicle has an unobstructed rear view. The proposal would also revise the existing standard to recognize the use of alternatives to audible automatic warning devices.

DATES: Comments on the proposal must be received by June 13, 1988.

ADDRESSES: Send written comments to the Office of Standards, Regulations and Variances, MSHA; Room 631, Ballston Tower No. 3; 4015 Wilson Boulevard, Arlington, Virginia 22203.

FOR FURTHER INFORMATION CONTACT: Patricia W. Silvey, Director, Office of Standards, Regulations and Variances, MSHA; phone: (703) 235-1910.

SUPPLEMENTARY INFORMATION:

I. Background

The existing rule, 30 CFR 77.410, was promulgated on May 22, 1971. It requires that mobile equipment, such as front-end loaders, forklifts, tractors, and graders, be equipped with an automatic warning device which gives an audible alarm when the equipment is operated in reverse (backup alarm). The existing rule includes "trucks" and makes no mention of how the standard applies to pickup trucks.

MSHA has consistently applied the existing rule to large mobile equipment commonly used at mine sites. Most earth-moving haulage equipment used at coal mines has an appreciable area to the rear of the equipment that cannot be seen from the equipment operator's position. In some instances this area may be as much as 3,000 square feet. A primary function of backup alarms is to compensate for this "blind spot" by warning persons who may be in that area that the operator is preparing to maneuver the equipment in reverse.

Pickup trucks have only a small area immediately behind the tailgate that cannot be seen from the driver's location. Therefore, it has consistently been MSHA policy to apply the backup alarm requirement to pickup trucks only when the equipment operator has an obstructed rear view.

The Agency is also proposing to allow two alternatives to traditional automatic warning devices. The alternatives would recognize the use of strobe lights in darkened conditions rather than audible warnings, and the use of devices which trigger audible warnings when obstructions are detected in the backup area. As discussed below, MSHA believes that the recognition of these alternatives has the potential to improve safety as well as provide flexibility in addressing the hazards presented when mining vehicles must be operated in reverse.

II. Discussion of the Proposed Rule

The proposal would modify the existing rule for backup alarms by allowing an exception for pickup trucks with an unobstructed rear view. This exception would not be applicable when an obstruction such as a large tool chest or other fixture is mounted on the pickup in a fashion that blocks the driver's rear view. The proposal would retain the requirement for audible automatic warning devices to be provided on mobile equipment such as forklifts, front-end loaders, tractors and graders and trucks.

In addition to clarifying operator compliance responsibilities, the proposed change would conform with MSHA's belief that unnecessary use of backup alarms at a mine site can detract from the overall safety purpose of the rule. The safety purpose of a backup alarm is to warn persons behind the mobile equipment that it will be operating in reverse. At a surface mine, or a surface area of an underground mine, a variety of large loading and haulage equipment is often present. Normal operation of this equipment typically involves frequent backup maneuvers, creating an environment in which the sound of backup alarms is regularly heard. Under these conditions, MSHA believes that the constant sounding of backup alarms in pickup trucks with an unobstructed rear view may contribute to persons becoming so accustomed to the sound of the alarms that the devices lose their intended effect of alerting persons to potential danger.

Consistent with this approach, the Agency is also considering revision of this standard to recognize the use of alternatives to traditional backup alarms. These alternatives would reduce the amount of noise produced by traditional backup alarms and should provide equally effective safety protections.

Paragraph (a)(2) would allow use of discriminating backup alarms, commonly referred to as proximity devices. Recent advances in backup alarm technology have resulted in alarm systems which use infrared light, ultrasonics or radar to activate the alarm when a person or object is detected in the obstructed area of view. One of the advantages of these new systems is the fact that the alarm is only sounded when a hazard exists, instead of the constant-sounding conventional alarm system. To accommodate other advances in technology, the proposal would also permit the use of devices that are equally effective. Additional information on discriminating backup alarms is available from the U.S. Department of the Interior, Bureau of Mines, 2401 E Street NW., Washington, DC 20241 (see Technology News Bulletin No. 255, dated August 1986, and Information Circular No. 9079).

Paragraph (b) of the proposal would allow the use of a strobe light instead of an audible alarm when mobile equipment is operated at night. Many mines operate multiple shifts and, in some cases, the use of backup alarms may be restricted by local noise ordinances. MSHA believes that the use of a strobe light under darkened conditions can provide an effective safety alternative to audible warning devices.

MSHA seeks comment on the appropriateness of these alternative warning devices, and solicits further information on discriminating backup alarm systems or other types of backup alarms which may provide appropriate warning.

III. Executive Order 12291 and the Regulatory Flexibility Act

This rulemaking would not result in major cost increases or have an incremental effect of $100 million or more on the industry. Therefore, the proposal is not a major rule under Executive Order 12291, and a Regulatory Impact Analysis is not required.

The Regulatory Flexibility Act requires that agencies evaluate and include, whenever possible, compliance alternatives that minimize adverse

impact on small businesses when developing regulatory proposals. The proposal incorporates alternatives to assist small mines. For these reasons the Agency has not conducted a regulatory flexibility analysis and, in accordance with section 605(b) of the Regulatory Flexibility Act, certifies that the proposal, if promulgated, will not have a significant economic impact on a substantial number of small entities.

IV. Paperwork Reduction Act

This proposal does not contain collection of information requirements subject to the Paperwork Reduction Act of 1980.

List of Subjects in 30 CFR Part 77

Mine safety and health, Automatic warning devices, Mobile equipment.

David C. O'Neal,

Deputy Assistant Secretary for Mine Safety and Health

Date: April 8, 1988.

Accordingly, Part 77, Subchapter O, Chapter I, Title 30 of the Code of Federal Regulations is proposed to be amended as follows:

PART 77—MANDATORY SAFETY STANDARDS, SURFACE COAL MINES AND SURFACE WORK AREAS OF UNDERGROUND COAL MINES

1. The authority citation for Part 77 is proposed to be revised to read as follows:

Authority: 30 U.S.C. 811, 957 and 961.

2. Section 77.410 is proposed to be revised to read as follows:

§ 77.410 Mobile equipment; automatic warning devices.

(a) Mobile equipment such as front-end loaders, forklifts, tractors, graders, and trucks, except pickup trucks with an unobstructed rear view, shall be equipped with a warning device that:

(1) Gives an audible alarm when the equipment is put in reverse; or

(2) Uses infrared light, ultrasonic waves, radar, or other effective devices to detect objects or persons at the rear of the equipment, and sounds an audible alarm when an obstruction is detected. This type of alarm shall include a device which indicates to the driver that it is operational.

(b) An automatic reverse-activated strobe light can be substituted for an audible alarm when mobile equipment is operated at night.

[FR Doc. 88-8083 Filed 4-12-88; 8:45 am]

BILLING CODE 4510-43-M

VOL 53 ISS 71 APR 13 1988 UMI

federal register

Wednesday
April 13, 1988

Part V

Environmental Protection Agency

40 CFR Parts 22 and 24

Issuance of and Administrative Hearings on RCRA Section 3008(h) Corrective Action Orders for Hazardous Waste Management; Final Rule

ENVIRONMENTAL PROTECTION AGENCY

40 CFR Parts 22 and 24

[FRL-3315-9]

Issuance of and Administrative Hearings on RCRA Section 3008(h) Corrective Action Orders for Hazardous Waste Management Facilities

AGENCY: Environmental Protection Agency (EPA).

ACTION: Final rule.

SUMMARY: This rule establishes procedures which are to govern the conduct of administrative hearings requested, pursuant to section 3008(b) of the Solid Waste Disposal Act, as amended by the Resource Conservation and Recovery Act (RCRA), by recipients of interim status corrective action orders issued under authority contained in section 3008(h) of RCRA.

EFFECTIVE DATE: This rule becomes effective on April 13, 1988.

FOR FURTHER INFORMATION CONTACT: Steve Botts, Mail Code LE-134S, Office of Enforcement and Compliance Monitoring, Waste Division, U.S. Environmental Protection Agency, 401 M Street SW., Washington, DC 20460, Phone (202) 382-5787.

SUPPLEMENTARY INFORMATION:

I. Authority

Today's final rule has been issued under authority of sections 2002 and 3008 of RCRA, as amended by the Hazardous and Solid Waste Amendments of 1984, 42 U.S.C. 6912 and 6928.

II. Background

In 1984 Congress enacted the Hazardous and Solid Waste Amendments (HSWA) to RCRA. Included in 3008(h) of RCRA, as amended, was new authority for EPA to issue orders requiring corrective action or such other response measures as the Agency deems necessary to protect human health and the environment to interim status facilities treating, storing, or disposing of hazardous waste, at which releases of hazardous waste or constituents occur. Under section 3008(b) of RCRA a 3008(h) order becomes final and effective unless within 30 days of service of the order, the recipient requests a hearing. Today EPA promulgates a final rule containing procedures which govern the issuance of RCRA section 3008(h) orders and, with certain exceptions noted in § 24.01 of the rule, the conduct of administrative hearings requested by the recipients of such orders.

A proposed version of this rule was published in the **Federal Register** on August 6, 1987, along with an invitation to interested members of the public to comment on the proposed rule. The proposed rule established a two-tiered set of procedures for administrative hearings on 3008(h) orders. These procedures contemplate hearings generally less formal than the full adjudicatory hearings currently required by 40 CFR Part 22 (Part 22) on compliance orders issued pursuant to RCRA section 3008(a). Where the initial 3008(h) order in question directs respondent to undertake (1) studies of the nature and extent of releases of hazardous waste/constituents or (2) studies of the available alternatives for remediating such releases, either alone or in conjunction with certain limited interim corrective measures, the procedures appearing in Subpart B of the rule are to govern the conduct of the hearing. Where the initial 3008(h) order requires respondent to undertake specified corrective measures (other than certain limited interim corrective measures alluded to above), either alone or in conjunction with investigatory studies, the procedures appearing in Subpart C of the rule are controlling. The Subpart B and C procedures are similar. However, the Subpart C procedures make more formal provision than the Subpart B procedures for submission of evidence/argument before and at a hearing and afford respondent an opportunity (not available under Subpart B) to pose written questions on disputed factual matters to the EPA office issuing the initial order.

III. Major Revisions to the Rule

A number of comments on the proposed rule were received from representatives of the regulated community, trade associations, and environmental interest groups. While the basic approach and structure of the rule remains unaltered, the public comments have prompted EPA to make several important changes in the language of the rule. Perhaps the most significant change entailed adoption of an explicit requirement that the entire administrative record underlying the initial order be made available in the appropriate EPA Regional or Headquarters office for inspection by respondent (and the public) as of the date the initial order is served. While this requirement had already been incorporated into guidance issued by the Agency, the proposed rule left the impression that the administrative record was not to be made available for review until the hearing. The final rule also makes clear that the administrative record must contain all information considered by the Agency in the process of developing the order, regardless of whether the information does or does not support the conclusions reached and relief sought by the Agency in the order.

Other important revisions have been made in the rule. For example, the final rule now affords the parties an opportunity to comment on the recommended decision of the Presiding Officer. Although the hearings provided for in this rule are not required by statute to be "on the record," will be informal in nature, and hence are not subject to the requirements of the Administrative Procedure Act (APA), the decision to allow the parties to comment on the recommended decision comports generally with the practice required under section 557 of the APA and is calculated to eliminate errors in Agency decisionmaking by insuring that the parties are given the chance to identify possible errors in the recommended decision and bring them to the Agency's attention before a final decision is issued.

Additional changes in the rule made in response to public comment include elimination of the requirement that respondent make all factual representations in the proceeding by affidavit, inclusion of a prohibition on ex parte discussions between the Presiding Officer and the parties, and adoption of language designed to further ensure the neutrality of the Presiding Officer. Further details on these and other revisions in the rule are contained in the summary of and responses to the public comments which follow (See IV of the Preamble).

In addition to changes made in response to public comment the Agency has made two technical changes in the regulations. First, a provision has been added requiring the respondent to briefly indicate in its response to the initial order the basis upon which it disputes any given factual or legal determination or relief provision in the order. This was done principally to ensure that in a Subpart B proceeding, where respondent chooses not to file pre-hearing submissions, the Agency would have some notice prior to hearing of the reasons why respondent is challenging the order. Secondly, a provision has been inserted which would allow the Presiding Officer in a Subpart B hearing to pose questions to representatives of either party. This was done to correct an inadvertent omission in the proposed rule and to clarify the Presiding Officer's authority to pursue

legal or factual issues which the parties have not fully developed at the hearing.

IV. Responses to Comments

Need for Full Adjudicatory Hearings

1. *Comment:* In order to satisfy the requirements of procedural due process, full adjudicatory hearings are required on orders issued under RCRA section 3008(h) seeking to compel a respondent to either undertake investigations or implement corrective measures. This is true because such orders will place substantial property interests at stake and will raise issues of material fact (e.g., regarding existence of a release, need for specified corrective measures, fate and transport of contaminants, hydrogeology at the site, etc.), which can only be resolved through discovery and cross-examination of witnesses. The suggestion in the preamble to the proposed rule that issues of material fact will not generally be presented in hearings on 3008(h) orders is false and is contradicted by the statement elsewhere in the preamble that "legal, policy, and technical issues" will be presented in such hearings. In weighing (as it did in the preamble to the proposed rule) the factors set forth in *Matthews* v. *Eldridge*, 424 U.S. 319 (1976) (which establish how much process is due a respondent in an administrative hearing) it is inappropriate for EPA to place considerations of convenience to the Agency above the need to provide a full and fair hearing to respondent.

Response: As noted in the preamble to the proposed rule the question of whether due process demands full adjudicatory hearings on 3008(h) orders requires the Agency to weigh the factors cited in *Matthews* v. *Eldridge*. As here pertinent, those factors are, on the one hand, EPA's interest in avoiding (1) the resource outlay and (2) delay in providing response to releases of hazardous waste/constituents necessitated by preparation for and participation in full adjudicatory hearings and, on the other, (1) the costs to respondent of undertaking corrective action and (2) the risks that respondent might be forced to unnecessarily incur such costs because the rules promulgated here today do not contain adequate provision for the resolution of those factual disputes, which are likely to arise at hearing.

Looking first at the potential burden on and risks to respondent, EPA notes that the costs of corrective action to be imposed on respondent can be expected to range from the relatively minor costs associated with implementation of certain corrective measures (e.g., erection of a fence around the contamination) or small studies of the nature and extent of contamination produced by limited releases of hazardous waste/constituents to the very high costs (which will sometimes be measured in the millions of dollars) of implementing technically complex remedies at highly contaminated sites.

As commenters have pointed out and the Agency acknowledged in the preamble to the proposed rule, EPA anticipates that 3008(h) proceedings will certainly present some factual issues for resolution. However, EPA believes that 3008(h) cases will present fewer factual issues than the typical case involving an RCRA section 3008(a) compliance order, where questions as to whether certain events or violations occurred, the timing of such events/violations, the seriousness of the violation, the economic benefit to respondent of the violation, etc. are routinely raised. More importantly, EPA believes that the factual disputes arising in the course of a 3008(h) proceeding will relate almost entirely to technical (or policy) matters of just the type highlighted by commenters (e.g., has a release of hazardous waste/constituents occurred? Are the corrective measures proposed by EPA warranted? Where has contamination migrated? Is EPA's characterization of hydrogeological conditions at the site accurate?). In resolving such technical disputes there will be little need to establish witness veracity or credibility through observation of a witness's demeanor on cross-examination. On the contrary, we believe, and the structure of these rules is premised on our belief, that such technical questions can just as easily (perhaps more effectively) be resolved through analysis of the administrative record and the written submissions and oral statements of the parties. By the same token, formal discovery will not be necessary because, as explained later, respondent will have access to the entire administrative record (exclusive of certain privileged materials) underlying the Agency's order.

Turning now to the Agency's interest in expediting cleanups and minimizing the costs it incurs in participating in 3008(h) proceedings, EPA notes first that, in order to protect human health and the environment, cleanups compelled pursuant to RCRA section 3008(h) will often have to be expedited in just the way that "removal" actions (and less often "remedial" actions) conducted pursuant to the provisions of the Comprehensive Environmental Response, Compensation and Liability Act of 1980, as amended (CERCLA), are expedited. Lengthy administrative proceedings, which include extensive discovery and cross-examination, are not only unnecessary from a due process standpoint; they are also incompatible with the need to accomplish cleanups quickly before contamination spreads or adverse health/environmental impacts occur.

EPA also anticipates that the resource burden that would otherwise be imposed on the Agency by the need to prepare for and participate in full adjudicatory hearings will be substantially eased by adoption and use of the instant hearing procedures. In the full adjudicatory hearings held on RCRA section 3008(a) orders, EPA must often produce expert witnesses (e.g., toxicologists, hydrogeologists, financial analysts) and Agency employees to testify as to how inspections were conducted, records compiled and other similar matters. These witnesses must be paid to travel to hearings, must be prepared for hearing, and will be lost for other useful purposes during the period when they must be available for hearing. The attorneys representing the Agency in such adjudicatory hearings must devote considerable time to preparing witnesses, preparing direct and cross-examination, and other activities not required for the informal hearings provided for herein. Similar travel, witness, hearing preparation, and related costs would be required if the Agency were to provide a Part 22 hearing to the recipient of a 3008(h) order. It is projected that roughly half of the cost to the Agency of participating in full adjudicatory hearings will be saved by holding hearings under the procedures we promulgate today. These projections are based not only on Agency experience with RCRA and other administrative hearings conducted pursuant to Part 22 but also on Agency experience under CERCLA. Recent amendments to CERCLA permit the Agency to submit the administrative record supporting the Agency's remedy selection decisions to a court in lieu of presenting the stream of Agency employees and experts needed to substantiate such remedy selection decisions in the past. The savings in litigation costs to the Agency from adoption of this new procedure have been substantial—on the order of 50 percent or more of previous totals.

Accordingly, it is not simply considerations of convenience to the Agency that have prompted us to adopt less formal hearing procedures for 3008(h) proceedings. Rather, that decision was based on (1) the need to respond quickly to releases of hazardous waste/constituents, (2) the

BEST COPY AVAILABLE

fact that the costs to the Agency of adopting formal adjudicatory procedures would be such as to significantly impair the Agency's ability to enforce the provisions of RCRA section 3008(h), and (3) our conviction that the factual issues presented in such proceedings will be technical in nature and hence susceptible to resolution through the written procedures and informal hearing provided for under the rules.

2. *Comment:* The language of and legislative history surrounding RCRA section 3008(h) require that the same kind of hearing be held on RCRA section 2008(a) and 3008(h) orders. The statement in RCRA section 3008(b) that the Agency may issue subpoenas for the attendance of witnesses and production of documents and may promulgate discovery procedures indicates that Congress intended that full adjudicatory hearings would be held on all 3008 orders.

Response: The plain language of section 3008(b) requires nothing more than a "public hearing." The only relevant piece of legislative history is the statement of Senator Chafee, sponsor of the new languge in HSWA amending 2008(b), that "that procedures set forth in subsection (b) [of section 2008] are made applicable to orders issued under [section 2008(h)]." This statement does not (as commenters suggest) refer to the Part 22 hearing procedures promulgated by EPA pursuant to authority contained in section 3008(b) but rather merely indicates that those procedures in 3008(b) making orders final unless within 30 days of issuance respondent requests a hearing have been extended to 3008(h) orders as well as 3008(a) orders.

As to the suggestion that Congress intended full adjudicatory hearings, it should be sufficient to point out that Congress said in 3008(b) that the Agency "may" promulgate discovery rules, clearly suggesting that hearing which did not contain this feature most commonly associated with adjudicatory hearings would also be acceptable. Since subpoenas are routinely employed in legislative as well as adjudicatory hearings, the affirmation (in section 3008(b)) of the Agency's right to issue subpoenas also in no way implies a Congressional preference for full adjudicatory hearings. Thus, EPA continues to believe that the less formal procedure promulgated today is fully consistent with the statutory language of section of section 3008 and Congressional intent.

3. *Comment:* Given the potentially high cost of conducting a remedial investigation and implementing interim corrective measures, there is no basis for affording respondent less process in Subpart B ("study order") hearings than in Subpart C ("remedy order") hearings.

Response: The changes made in response to comments narrow the differences between Subpart B and C hearings. The principal remaining distinction is that the Subpart C procedures permit respondent to pose written questions to EPA, whereas the Subpart B procedures do not. The Subpart C procedures also require the filing of certain pre-hearing submissions, while the Subpart B procedures make this optional. The Subpart B respondent is thus allowed fewer opportunities than the Subpart C respondent to ask questions relating to material factual issues and the explore the basis for the order.

EPA believes this distinction is warranted because at the stage of a 3008(h) proceeding at which a remedial investigation or interim corrective measures are ordered there is generally very little known about the nature and extent of contamination at the facility and thus very little for the parties to argue over. Factual disputes at this stage can be expected to focus on the question of whether a release has occurred. By the same token an Agency order directing a respondent to undertake a Corrective Measures Study (which will simply explore and compare remedial alternatives) is expected to raise few issues of fact. The opportunities afforded respondent to review the order and administrative record, make written pre-hearing submissions, request an informal settlement conference at which the basis for the Agency order can be explored in some depth, make oral presentations at hearing, and (with the Presiding Officer's permission) pose questions to the Agency's representative(s) at hearing should in combination be sufficient to (1) thoroughly inform respondent as to the basis of the Agency's order, and (2) permit respondent to respond in detail to the factual and legal arguments which underlie the Agency's order. Also, EPA expects that the orders which will be the subject of a Subpart B hearing will ordinarily have a less significant impact on respondent's property interests than the remedial orders subject to the Subpart C procedures.

Jury Trial

4. *Comment:* The recent Supreme Court decision in *Tull* v. *United States*, 95 L. Ed. 2d 365 (1987) requires that respondent be afforded a jury trial in any proceeding in which a civil penalty is sought.

Response: Footnote 4 to the opinion of the court in *Tull* reads as follows: "The court has also considered the practical limitations of a jury trial and its functional compatibility with proceedings outside traditional courts of law in holding that the Seventh Amendment is not applicable to administrative proceedings." *Id* at 373, n.4. Accordingly, the decision in *Tull* has no bearing on the requirement in the rule that hearings on 3008(h) orders seeking penalties be held under the existing hearing procedures contained in Part 22.

Issuance of the Initial Order

5. *Comment:* The rules should spell out more clearly which EPA official will issue the initial 3008(h) order.

Response: The unspoken but apparent concern of the commenter is that a low-level Agency official acting without proper review might be permitted under the rules to issue an initial 3008(h) order. The pertinent Agency RCRA delegation (No. 8–32) empowers the Regional Administrator and Assistant Administrator for Solid Waste and Emergency Response to issue initial 3008(h) orders and allows these individuals to redelegate that authority. Given the fact that authority conferred on Regional Administrators to issue RCRA section 3008(h) orders has uniformly been reposed (by redelegation) in individuals at or above the Hazardous Waste Division Director level, we believe that there is no cause for concern that Regional Administrators or the Assistant Administrator will redelegate authority to issue corrective action orders to low-level Agency officials. Accordingly, we have decided that the actual designation of the official who will issue initial 3008(h) orders should continue to be left in the rules, as it is in the pertinent Agency delegation, to the Regional Administrators and the Assistant Administrator for Solid Waste and Emergency Response. This approach comports with that now followed in the Part 22 hearing procedures.

Service of Orders, Decisions, Rulings, and Documents

6. *Comment:* In order to eliminate the possibility that orders, decisions, or other documents might be served on low-level corporate officials, the rules should require that service be made upon that representative of respondent designated to receive service of process, not simply on respondent's "representative."

Response: The rules as revised follow the Part 22 procedure, under which

service is to be made upon respondent, his representative, or, in the case of a corporation, partnership, or unincorporated association, upon an officer, partner, managing or general agent, or other person authorized by appointment or Federal or State law to receive service of process.

Choice of Hearing Procedures

7. *Comment:* The rules should employ a clearer standard for determining when hearings on 3008(h) orders directing respondent to undertake studies and interim corrective measures are to be held under the Subpart B or Subpart C procedures. The respondent should have input into the decision as to which hearing procedures are to be utilized.

Response: The rules currently provide that hearings on orders requiring respondent to undertake studies and interim corrective measures are to be held under the Subpart B procedures, if such interim measures are neither costly nor technically complex and are needed to protect human health and the environment prior to development of a permanent remedy. The thought behind adoption of this standard was that a hearing which would otherwise be conducted under the Subpart B procedures should not be required to be held under the more time-consuming and formal Subpart C procedures, merely because the order in question directed respondent to implement certain limited corrective measures which did not place major property interests at stake and were not fraught with complex technical questions for which the Subpart C procedures would be more appropriate. EPA continues to believe that these criteria provide the appropriate basis for determining which hearing procedures to employ. The fact that these criteria require the decisionmaker to make occasional subjective judgments is not in itself grounds for abandoning or modifying the criteria.

In order to answer the commenter's concern that respondent have a role in the selection of the proper hearing procedures, the rules have been amended (1) to require that the Agency indicate in the initial order which hearing procedures it believes to be appropriate and the reasons therefore, and (2) to permit respondent to provide its views on this question with its response to the initial order and request for hearing. The Presiding Officer can then weigh the positions of both parties in deciding which procedures to employ. The Presiding Officer can inform the parties which hearing procedures will be used at the same time that he transmits to them information concerning the date, time, location, and agenda for the hearing.

Deadlines Established in the Rule

8. *Comment:* The deadlines established in the rule (and in particular the provision which permits EPA responses to written questions to come in as late as 7 days before hearing) do not afford respondent adequate time to prepare for a hearing.

Response: The time frames within which respondent must prepare its case do not seem unduly tight. Respondent does not even have to request a hearing for 30 days after service of the initial order. Respondent thus has 30 days plus the period between receipt of its hearing request and the hearing date to prepare for hearing. If the Presiding Officer determines that respondent's ability to prepare is unfairly prejudiced by any deadline other than that for requesting a hearing or by the fact that EPA responses to written questions will come in too late to permit proper review and response by respondent before hearing, the rules permit the Presiding Officer to adjust the pre-hearing schedule accordingly or postpone the hearing date.

9. *Comment:* The rules should be changed so as to permit, where good cause is shown, extensions in the time period within which a hearing must be requested.

Response: Since RCRA section 3008(b) provides that orders issued under section 3008 shall become final unless no later than 30 days from service respondent requests a hearing, the Agency is not at liberty to extend this particular deadline.

Qualifications of the Presiding Officer

10. *Comment:* The rules should require that the Presiding Officer always be an Administrative Law Judge or at least an attorney and should contain additional guarantees of the neutrality of the Presiding Officer. The rules as drafted are unfair in that they would permit an EPA enforcement attorney (including one with intimate prior contact with a proceeding short of drafting the initial order) to serve as the Presiding Officer in either a Subpart B or C hearing.

Response: In view of (1) the fact that the Presiding Officer will be called upon to prepare a recommended decision which, in the case where it is adopted and signed by the Regional Administrator, may in effect constitute the Agency's final decision, and (2) the need to ensure for purposes of appeal that the final decision accurately reflects the legal and factual basis for the Agency's decision, EPA has on reconsideration revised the rule to require that the Presiding Officer in a Subpart B hearing be an attorney. EPA believes that an attorney would generally be more effective and comfortable than a non-attorney both ruling and drafting decisions on legal issues and conducting a hearing, albeit and informal one.

To further ensure the neutrality of the Presiding Officer in both Subpart B and C hearings, the rule has been revised to require that the Presiding Officer always be an individual with no prior connection to the case before him. The Agency has determined that a decision to require that only non-enforcement attorneys serve as Presiding Officers is precluded by the fact that many EPA Regional offices employ no attorneys who do not have enforcement responsibilities. Expected cost savings would be negated if the Agency were required to pay the travel and subsistence costs necessary to make non-enforcement attorneys from Headquarters or Regions employing them available where they were needed as Presiding Officers. EPA does not, in any event, regard prior involvement in any enforcement work as grounds for disqualifying an individual from serving as a hearing officer.

The Agency's decision to employ Agency attorneys rather than Administrative Law Judges as hearing officers is based in part on resource concerns but is principally grounded on our belief that Administrative Law Judges, whose experience is in conducting formal adjudicatory hearings, are not needed to preside over the informal hearings contemplated by these rules.

Use of Affidavits

11. *Comment:* The rules are unfair in that they require respondent to submit all factual representations by affidavit but impose no such requirement on EPA.

Response: EPA agrees and has stricken from the rules those provisions requiring respondent to make factual representations by affidavit. We have instead adopted the procedure specified in the Part 22 procedures, under which the original of any pleading, letter, or other document (other than exhibits) must be signed by the party offering it or his representative. This signature is held to constitute a representation by the signer that he has read the document and that to the best of his knowledge, information, and belief the statements made therein are true. It should nevertheless be noted that, whenever a party makes factual representations in a document, the weight to be accorded that evidence may be affected by the

fact that no knowledgeable source has attested to the accuracy of or basis for that factual representation.

Discovery

12. *Comment:* It is unfair that, while EPA has the right to elicit information from respondent under RCRA section 3007, respondent has no right to discovery under the proposed rules.

Response: Respondent may (with the Presiding Officer's permission) pose written questions to EPA prior to a Subpart C hearing and oral questions to EPA representatives at a Subpart B hearing. Respondent also has access to the entire administrative record from the time an initial order is issued forward. It is on the basis of information contained in the administrative record that EPA will have framed the initial order. The rules also required EPA to indicate in an initial order the legal authority and factual basis upon which the order is premised. EPA believes that the above-cited features of the rules will ensure that respondent understands EPA's theory of the case and has access to all relevant information upon which EPA relied in developing the order. In these circumstances we believe that further discovery is unnecessary. To permit formal discovery (additional interrogatories, depositions, requests for admission, etc.) as requested would be to extend the time frame for the pre-hearing process dramatically and the scope of discovery beyond what is now provided for in the formal adjudicatory procedures contained in Part 22.

3007 is comparable to many other provisions in the law which confer on agencies charged with enforcing the law authority to gather information relating to potential violations of the law. Without such authority many violations of RCRA would go unidentified. We regard the fact that EPA has been given a statutory tool to enable it to enforce the law as irrelevant to a decision as to whether due process or other considerations require that respondent be permitted to engage in additional discovery in 3008(h) administrative proceedings.

13. *Comment:* The proscription in the rules on written questions relating to matters of "policy" and "privileged internal communications" is inappropriate, since these terms are undefined and questions relating to the application of policy to the specific facts of a case will often be critical to the dispute.

Response: The underlying rationale for the proscription in the rule on "policy" questions was that written questions only serve a useful function (from the standpoint of satisfying due process requirements) when they relate to disputed matters of fact. After further consideration, however, we are persuaded that, as commenters suggest, there may be situations in which questions as to the application of policy to certain facts may be appropriate. We have therefore removed the ban on policy questions from the rule.

The prohibition on questions relating to "privileged internal communications" is designed to protect from disclosure information which the Agency would not under applicable law be required or permitted to release in response to a request for information made pursuant to the Freedom of Information Act (FOIA). Such information will most often include, but is not limited to, trade secrets, attorney-client communications, attorney work product, and deliberative materials. Because such material is protected from disclosure, questions on such issues will not be permitted. The scope of this limitation is not undefined, since it reflects the extensive case law concerning these exemptions under FOIA.

14. *Comment:* The rules should require, not just permit, the Presiding Officer to direct EPA to respond to written questions propounded under the Subpart C procedures, if he determines that this is "required for full disclosure and adequate resolution of the facts."

Response: Because it was inartfully drafted, the language of the proposed rule left the impression that the Presiding Officer could find that responses to written questions were required for full disclosure and adequate resolution of the facts but could nevertheless decline to order responses to such questions. The offending language has been revised so as to dispel this impression.

15. *Comment:* The Subpart C procedure for posing written questions to the Agency will not provide respondent with adequate discovery, because experience with interrogatories indicates that responses to written questions are often incomplete.

Response: In a case where the Presiding Officer determines that EPA's responses to written questions are incomplete, he may exercise (1) the authority he has always had in § 24.14(e) of the proposed rule to compel the Agency "to submit additional information in whatever form he deems appropriate", (2) the authority he has to ask questions under § 24.15(a) of the rule to compel a fuller response from the Agency's representative(s) at hearing, or (3) new authority inserted into § 24.14(e) to require that the Agency (or both parties) submit post-hearing briefs on issues which have not been fully developed as of the close of the hearing. We believe the cited provisions of the rule can be invoked as needed by the Presiding Officer to ensure that the Agency provides a full response to any proper question.

Conduct of the Hearing

16. *Comment:* The Presiding Officer should be required to serve the hearing agenda on the parties prior to hearing.

Response: Both the Subpart B and Subpart C procedures have been rewritten to require that the Presiding Officer provide the parties with a hearing agenda at the time at which he announces to them the date, time, and location of the hearing.

17. *Comment:* The hearing procedures are deficient in that they do not require knowledgeable witnesses from both sides to be present.

Response: While the rules do not accord the parties the right to cross-examine the opposition's representatives and thus do not contemplate that "witnesses", as that term applies to full adjudicatory hearings, would attend the hearing, the rules do allow the Presiding Officer and (with his permission) the parties in a Subpart B hearing to pose questions to a party's representative(s) at hearing. In recognition of this fact the rules have been revised to explicitly require what was only implicit in the proposed rule—that each party must be represented at hearing by a representative(s) capable of responding to questions and articulating that party's position on the law and facts of the case.

18. *Comment:* The fact that the rules permit a tape recording of a hearing in lieu of a transcript is problematical in that tape recordings are usually of poor quality and make identification of the speaker difficult.

Response: Although a stenographically transcribed record of a hearing may, generally speaking, be more reliable than a tape recording, we nevertheless believe that a tape recording will provide an adequate record of the hearing and that, in light of the additional cost to the Agency of providing for stenographically transcribed records, the decision to permit tape recordings is justified.

Administrative Record

19. *Comment:* The rules should require that the entire administrative record underlying an order (including materials which do and do not support the Agency's theory of the case and remedial decisions) be served upon or made available to respondent upon service of the initial order. The rules

currently suggest that only that portion of the administrative record supporting the order is to be made available and then not until the hearing is held. EPA should certify the completeness of the administrative record.

Response: As explained above, the rule has been revised to accommodate this comment by explicitly requiring that the entire administrative record be made available for review in the appropriate Regional (or Headquarters) office as of the date of service of the initial order. The administrative record should include all information (excluding privileged material) considered by the Agency in the process of developing and issuing the order, including material which does not support the Agency's view of the case and remedial decisions. We believe that it would place an undue administrative and financial burden on the Agency to copy and serve on the respondent the entire administrative record, which may often consist of thousands of pages of information. Since the rules require that the entire administrative record be made available for inspection, we believe it would be redundant to have an Agency official certify the completeness of the administrative record.

Burden and Standard of Proof

20. *Comment:* By depriving respondent of access to the administrative record until hearing and by failing to require that the initial order contain an explanation of the basis upon which it was issued, the rules force respondent to guess at the Agency's theory of the case and effectively transfer the burden to respondent to demonstrate that a release of hazardous waste has not occurred and that the ordered corrective action is not necessary to protect human health and the environment.

Response: Guidance issued to the Regions on February 19, 1987, directs the EPA Regional office issuing an initial order to make the administrative record underlying the order available for review in the appropriate Regional office as of the date the initial order is served. By way of clarifying the Agency's intentions in this regard, this requirement from guidance has, as noted, been incorporated into the rule. The rule has also been revised to explicitly require that the Agency disclose in the initial order the legal and factual bases upon which the order was issued.

21. *Comment:* Rather than simply demonstrating, as the proposed rule now requires, that there is "adequate support" in the record for the order, EPA should have to prove by a preponderance of the evidence that a release occurred and that the required corrective action is necessary to protect human health and the environment.

Response: While EPA believes that "adequate support" is a comparable standard, we believe that "preponderance of the evidence" carries a more widely understood meaning. Accordingly, EPA has amended the rule to require that the Presiding Officer recommend that the order be withdrawn or modified and issued in a form supported by the record, whenever he finds any relief provision in the order is not supported by a preponderance of the evidence in the record.

Decisional Process

22. *Comment:* The rule should be revised to prohibit ex parte contacts entirely.

Response: The decision was made in the proposed rule to permit ex parte contacts because it was thought that the Presiding Officer should have the ability to contact either party for clarification of their positions or to obtain answers to questions about difficult technical or legal matters. On further consideration the Agency has concluded that the proper way for the Presiding Officer to obtain answers to such questions is by convening the parties for a status conference or teleconference. This is a slightly more cumbersome procedure but one calculated to remove even the appearance of undue influence which might arise in the case of an ex parte contact.

The rule has been revised to prohibit ex parte discussion of the case between the Presiding Officer and any of the parties. We have retained language from the proposed rule which would require that, in the event that ex parte contact between the Presiding Officer and a party occurs, the opposing party be provided with a summary of the communication and an opportunity to comment on matters which were the subject of the ex parte communication. This approach comports generally with that followed in Part 22.

23. *Comment:* The final order and any summary of the hearing prepared by the Presiding Officer should contain a statement as to the legal and factual basis upon which the order was issued.

Response: Commenter's concern here appears to be that a final order could not properly be appealed into Federal court, if the legal and factual basis for the order was not known. As indicated above, the rules have been modified to explicitly require that the initial order contain a statement as to the legal and factual basis upon which the order was issued. Thus, if an initial order becomes final by virtue of the fact that no hearing is requested within 30 days of service, the final order will contain a statement of the legal and factual basis upon which it was ordered.

The proposed rule already required that any recommended decision prepared by the Presiding Officer provide support from information contained in the record or adduced at hearing for any decision to affirm, modify, or withdraw the initial order. This language has been retained. Thus, if the Regional Administrator signs the recommended decision, the final decision will contain a justification (that prepared by the Presiding Officer) for such final decision. The rules have also been modified to explicitly require that, where the Regional Administrator modifies the recommended decision of the Presiding Officer, he ensure that the final decision indicate the legal and factual basis for the decision as modified.

While the rules require the order to be modified before issuance as a final order so as to comport with a final decision modifying the initial order, it is not contemplated that the portion of the body of the order containing a justification for the order would necessarily have to be modified. That justification for issuance of the final order (to the extent it is important to know it for purposes of an appeal into Federal court) should be contained in the final decision.

24. *Comment:* The rule should require that the hearing summary prepared by the Presiding Officer more completely address the positions and arguments of both parties, not just those of respondent.

Response: The provision in question (§ 24.12(a)) only establishes minimum requirements for the hearing summary. Since § 24.02 has been amended to require that the Agency articulate in the initial order the legal and factual basis for the initial order, we believe that at the time the hearing summary is prepared the Agency's views will generally already be a matter of record. To the extent that this is not the case the summary should also address EPA's positions.

The recommended decision, which the Presiding Officer is required to prepare, must still address all arguments raised by respondent and provide support for any recommendation to affirm, modify, or withdraw the order. In preparing this statement the Presiding Officer must necessarily address material aspects of EPA's position in the case to the extent required to explain why respondent's arguments have been accepted or

rejected and why EPA's order should be affirmed, modified, or withdrawn.

25. *Comment:* Respondent and EPA should each be served with a copy of the Presiding Officer's recommended decision and should have the opportunity to comment on the recommended decision before the Regional Administrator issues a final decision.

Response: Since (1) the proposed change allows the parties a final opportunity to identify, and the Regional Administrator a last chance to hear from the parties about, factual and legal errors in the recommended decision, and (2) the procedures do not allow an administrative appeal from the Regional Administrator's final decision and thus contain no other mechanism for discovering or reversing error, EPA has amended the rules to provide that the recommended decision be served on the parties and that the parties be given 3 weeks from service to comment on the recommended decision.

Public Participation

26. *Comment:* The rules should make provision for public participation in hearings. The public should receive notice of the hearing request and should have rights virtually coextensive with respondent's to present evidence and argument before, at, and after the hearing.

Response: Guidance issued by the Agency accords the public the right to participate prior to hearing in remedy selection, which is the critical issued and matter of greatest public concern in a RCRA 3008(h) proceeding. The public will be given an opportunity to comment on the proposed plan for corrective measures developed by EPA after completion of the RCRA Facility Investigation and Corrective Measures Study and will receive notice of the Agency's final plan for corrective measures prior to implementation. EPA believes that to permit additional public participation in the hearing process would be redundant and inconsistent with the Agency's objective of streamlining the hearing.

Specificity of the Rules

27. *Comment:* The Part 22 hearing procedures are superior to the proposed procedures in that they spell out the details of the hearing more precisely and leave less to the discretion of the Presiding Officer. The Part 22 procedures are sufficiently flexible to allow for an abbreviated hearing if, in fact, the 3008(h) proceeding in question involves only a few factual issues.

Response: The proposed procedures have intentionally left more to the discretion of the Presiding Officer than Part 22 does, so as to permit a flexible approach to hearings on orders which may request relief ranging from small studies of limited spills or inexpensive interim corrective measures (e.g., erection of a fence or warning signs), on the one hand, to complex and expensive remedies, on the other. The procedures as amended are nevertheless specific enough to ensure that, regardless of the costs or complexity of the requested relief, respondent is afforded (1) an opportunity to learn the legal and factual basis upon which the order was issues, (2) a hearing before a neutral hearing officer, and (3) the opportunity to present its views on relevant factual and legal issues.

The formalized hearing procedures contained in Part 22 would require that, even in the most straightforward cases involving requests for the most limited corrective actions, certain expensive, time consuming, and unnecessary procedural minimums be observed. These include but are not limited to (1) a hearing before an Administrative Law Judge, (2) a written transcript, (3) a formal complaint and answer meeting certain specific requirements, (4) oral examination of witnesses (at least to the extent that any issue of material fact is presented), (5) filing of post-hearing briefs, and (6) many means by which issuance of an administratively final decision may be delayed, including a motion to reopen the hearing, appeal of the final decision to the Administrator (Chief Judicial Officer) and a motion to reconsider the final order. Part 22 also establishes procedures for discovery, prehearing conferences, and intervention and generally contemplates a more extended hearing process than that provided for in the instant rule. Observance of the Part 22 procedural requirements would inevitably impair the Agency's ability to compel a rapid response to releases of hazardous waste and constituents under 3008(h).

V. Regulatory Analyses

A. Executive Order No. 12291

Under Executive Order No. 12291, the Agency must judge whether a regulation is "major" and thus subject to the requirement to prepare a Regulatory Impact Analysis. The notice published today is not major because the rule will not result in an effect on the economy of $100 million or more, will not result in increased costs or prices, will not have significant adverse effects on competition, employment, investment, productivity, and innovation, and will not significantly disrupt domestic or export markets. Therefore, the Agency has not prepared a Regulatory Impact Analysis under the Executive Order.

This regulation was submitted to the Office of Management and Budget (OMB) for review as required by Executive Order No. 12291.

B. Regulatory Flexibility Analysis

Pursuant to the Regulatory Flexibility Act, 5 U.S.C. 601 *et seq.*, whenever an agency is required to publish a notice of rulemaking for any proposed or final rule, it must prepare and make available for public comment a regulatory flexibility analysis that describes the effect of the rule on small entities (i.e., small businesses, small organizations, and small governmental jurisdictions). This analysis is unnecessary, however, if the agency's administrator certifies that the rule will not have a significant economic effect on a substantial number of small entities.

EPA has examined the rule's potential effects on small entities as required by the Regulatory Flexibility Act. This proposed rule establishes hearing procedures and has no significant economic impact on a substantial number of small entities. EPA certifies that today's final rule will not have a significant economic effect on a substantial number of small entities.

VI. Effective Date of the Rule

Since the instant rule is manifestly one with which the regulated community does not need six months (or, for that matter, any time) to come into compliance, see 42. U.S.C. 6930(b)(1), it will take effect immediately. By making the rule effective immediately EPA intends to eliminate any confusion which might otherwise exist as to what procedures to follow in hearings on any such orders.

List of Subjects

40 CFR Part 22

Administrative practice and procedure, Hazardous materials, Penalties, Waste treatment disposal.

40 CFR Part 24

Administrative practice and procedure, Corrective action, Hazardous materials, Penalties, Revocation of operating authority.

Dated: April 5, 1988.

Lee M. Thomas,

Administrator.

For the reasons set out in the Preamble, Title 40 of the Code of Federal Regulations is amended as follows:

PART 22—CONSOLIDATED RULES OF PRACTICE GOVERNING THE ADMINISTRATIVE ASSESSMENT OF CIVIL PENALTIES AND THE REVOCATION OR SUSPENSION OF PERMITS

1. The authority citation for Part 22 continues to read as follows:

Authority: 15 U.S.C. sec. 2615; 42 U.S.C. secs. 7545 and 7601; 7 U.S.C. secs. 136(l) and (w); 33 U.S.C. secs. 1415 and 1418; 42 U.S.C. secs. 6912, 6928, and 6991(e).

2. Section 22.01 is amended by revising paragraph (a)(4) to read as follows:

§ 22.01 Scope of these rules.

(a) * * *

(4) The issuance of a compliance order, the issuance of a corrective action order, the suspension or revocation of authority to operate pursuant to section 3005(e) of the Solid Waste Disposal Act, or the assessment of any civil penalty under sections 3008 and 9006 of the Solid Waste Disposal Act, as amended (42 U.S.C. 6928 and 6991(e)), except as provided in 40 CFR Parts 24 and 124.

* * * * *

3. New Part 24 is added to read as follows:

PART 24—RULES GOVERNING ISSUANCE OF AND ADMINISTRATIVE HEARINGS ON INTERIM STATUS CORRECTIVE ACTION ORDERS

Subpart A—General

Sec.
24.01 Scope of these rules.
24.02 Issuance of initial orders; definition of final orders and orders on consent.
24.03 Maintenance of docket and official record.
24.04 Filing and service of orders, decisions, and documents.
24.05 Response to the initial order; request for hearing.
24.06 Designation of Presiding Officer.
24.07 Informal settlement conference.
24.08 Selection of appropriate hearing procedures.

Subpart B—Hearings on Orders Requiring Investigations or Studies

24.09 Qualifications of Presiding Officer; ex parte discussion of the proceeding.
24.10 Scheduling the hearing; pre-hearing submissions by respondent.
24.11 Hearing; oral presentations and written submissions by the parties.
24.12 Summary of hearing; Presiding Officer's recommendation.

Subpart C—Hearings on Orders Requiring Corrective Measures

24.13 Qualifications of Presiding Officer; ex parte discussion of the proceeding.
24.14 Scheduling the hearing; pre-hearing submissions by the parties.
24.15 Hearing; oral presentations and written submissions by the parties.
24.16 Transcript or recording of hearing.
24.17 Presiding Officer's recommendation.

Subpart D—Post-Hearing Procedures

24.18 Final decision.
24.19 Final order.
24.20 Final agency action.

Authority: 42 U.S.C. sections 6912, 6928.

Subpart A—General

§ 24.01 Scope of these rules.

(a) These rules establish procedures governing issuance of administrative orders for corrective action pursuant to section 3008(h) of the Solid Waste Disposal Act, as amended by the Resource Conservation and Recovery Act (the Act), and conduct of administrative hearings on such orders, except as specified in § 24.01(b) below.

(b) The hearing procedures appearing at 40 CFR Part 22 govern administrative hearings on any order issued pursuant to section 3008(h) of the Act which:

(1) Is contained within an administrative order that includes claims under section 3008(a) of the Act; or

(2) Includes a suspension or revocation of authorization to operate under section 3005(e) of the Act; or

(3) Seeks penalties under section 3008(h)(2) of the Act for non-compliance with a section 3008(h) order.

(c) Questions arising at any stage of the proceeding which are not addressed in these rules shall be resolved at the discretion of the Regional Administrator or Presiding Officer, as appropriate.

§ 24.02 Issuance of initial orders; definition of final orders and orders on consent.

(a) An administrative action under section 3008(h) of the Act shall be commenced by issuance of an administrative order. When the order is issued unilaterally, the order shall be referred to as an initial administrative order and may be referenced as a proceeding under section 3008(h). When the order has become effective, either after issuance of a final order following a final decision by the Regional Administrator, or after thirty days from issuance if no hearing is requested, the order shall be referred to as a final administrative order. Where the order is agreed to by the parties, the order shall be denominated as a final administrative order on consent.

(b) The initial administrative order shall be executed by an authorized official of EPA (petitioner), other than the Regional Administrator or the Assistant Administrator for the Office of Solid Waste and Emergency Response. For orders issued by EPA Headquarters, rather than by a Regional office, all references in these procedures to the Regional Administrator shall be understood to be to the Assistant Administrator for Solid Waste and Emergency Response or his delegatee.

(c) The initial administrative order shall contain:

(1) A reference to the legal authority pursuant to which the order is issued,

(2) A concise statement of the factual basis upon which the order is issued, and

(3) Notification of respondent's right to request a hearing with respect to any issue of material fact or the appropriateness of the proposed corrective action.

§ 24.03 Maintenance of docket and official record.

(a) A Clerk shall be designated by the Regional Administrator to receive all initial orders, final orders, decisions, responses, memoranda, and documents regarding the order and to maintain the official record and docket.

(b) On or before the date the initial order is served on respondent the EPA office issuing the order shall deliver to the Clerk (a copy of) the administrative record supporting the findings of fact, determinations of law, and relief sought in the initial administrative order. This record shall include all relevant documents and oral information (which has been reduced to writing), which the Agency considered in the process of developing and issuing the order, exclusive of privileged internal communications. The administrative record delivered to the Clerk must have an index and be available for review in the appropriate Agency Regional or Headquarters office during normal business hours after the order is issued.

§ 24.04 Filing and service of orders, decisions, and documents.

(a) *Filing of orders, decisions, and documents.* The original and one copy of the initial administrative order, the recommended decision of the Presiding Officer, the final decision and the final administrative order, and one copy of the administrative record and an index thereto must be filed with the Clerk designated for section 3008(h) orders. In addition, all memoranda and documents submitted in the proceeding shall be field with the Clerk.

(b) *Service of orders, decisions, and rulings.* The Clerk (or in the case of the initial administrative order, any other designated EPA employee) shall arrange for the effectuation of service of the initial administrative order, the

recommended decision of the Presiding Officer, the final decision, and final administrative order. Service of a copy of the initial administrative order together with a copy of these procedures, the recommended decision of the Presiding Officer, the final decision, or a final administrative order, shall be made personally or by certified mail, return receipt requested or, if personal service cannot be effectuated or certified mail is returned refused or unsigned, by regular mail, on the respondent or his representative. The Clerk shall serve other documents from the Presiding Officer by regular mail.

(c) *Service of documents filed by the parties.* Service of all documents, filed by the parties, shall be made by the parties or their representatives on other parties or their representatives and may be regular mail, with the original filed with the Clerk. The original of any pleading, letter, or other document (other than exhibits) shall be signed by the party filing or by his counsel or other representative. The signature constitutes a representation by the signer that he has read the pleading, letter, or other document, that to the best of his knowledge, information, and belief, the statements made therein are true, and that it is not interposed for delay.

(d) *Service in general.* Service of orders, decisions, rulings, or documents by either the Clerk or the parties shall, in the case of a domestic or foreign corporation, a partnership, or other unincorporated association, which is subject to suit under a common name, be made, as prescribed in § 24.04 (b) and (c), upon an officer, partner, managing or general agent, or any person authorized by appointment or by Federal or State law to receive service of process.

(e) *Effective date of service.* Service of the initial administrative order and final administrative order is complete upon receipt by respondent (or the respondent's agent, attorney, representative or other person employed by respondent and receiving such service), personally or by certified mail, or upon mailing by regular mail, if personal service or service by certified mail cannot be accomplished, in accordance with § 24.04(b). Service of all other pleadings and documents is complete upon mailing, except as provided in §§ 24.10(b) and 24.14(e).

§ 24.05 Response to the initial order; request for hearing.

(a) The initial administrative order becomes a final administrative order thirty (30) days after service of the order, unless the respondent files with the Clerk within thirty (30) days after service of the order, a response to the initial order and requests a hearing.

(b) The response to the initial order and request for a hearing must be in writing and mailed to, or personally served on, the Clerk of the Regional office which issued the order.

(c) The response to the initial order shall specify each factual or legal determination, or relief provision in the initial order the respondent disputes and shall briefly indicate the basis upon which it disputes such determination or provision.

(d) Respondent may include with its response to the initial order and request for a hearing a statement indicating whether it believes the Subpart B or Subpart C hearing procedures should be employed for the requested hearing and the reason(s) therefore.

§ 24.06 Designation of Presiding Officer.

Upon receipt of a request for a hearing, the Regional Administrator shall designate a Presiding Officer to conduct the hearing and preside over the proceedings.

§ 24.07 Informal settlement conference.

The respondent may request an informal settlement conference at any time by contacting the appropriate EPA employee, as specified in the initial administrative order. A request for an informal conference will not affect the respondent's obligations to timely request a hearing. Whether or not the respondent requests a hearing, the parties may confer informally concerning any aspect of the order. The respondent and respondent's representatives shall generally be allowed the opportunity at an informal conference to discuss with the appropriate Agency technical and legal personnel all aspects of the order, and in particular the basis for the determination that a release has occurred and the appropriateness of the ordered corrective action.

§ 24.08 Selection of appropriate hearing procedures.

If the initial order directs the respondent—

(a) To undertake only a RCRA Facility Investigation and/or Corrective Measures Study, which may include monitoring, surveys, testing, information gathering, analyses, and/or studies (including studies designed to develop recommendations for appropriate corrective measures), or

(b) To undertake such investigations and/or studies and interim corrective measures, and if such interim corrective measures are neither costly nor technically complex and are necessary to protect human health and the environment prior to development of a permanent remedy,

the hearing procedures set forth in Subpart B of this part shall be employed for any requested hearing. If the respondent seeks a hearing on an order directing that corrective measures or such corrective measures together with investigations/studies be undertaken, the hearing procedures set forth in Subpart C of this part shall be employed. The procedures contained in Subparts A and D of this part shall be followed regardless of whether the initial order directs respondent to undertake an investigation or implement corrective measures.

Subpart B—Hearings on Orders Requiring Investigations or Studies

§ 24.09 Qualifications of Presiding Officer; ex parte discussion of the proceeding.

The Presiding Officer shall be either the Regional Judicial Officer (as described in 40 CFR 22. 04(b)) or another attorney employed by the Agency, who has had no prior connection with the case, including the performance of any investigative or prosecuting functions. At no time after issuance of the initial administrative order and prior to issuance of the final order shall the Regional Administrator, Presiding Officer, or any person who will advise these officials in the decision on the case, discuss ex parte the merits of the proceeding with any interested person outside the Agency, with any Agency staff member who performs a prosecutorial or investigative function in such proceeding or a factually related proceeding, or with any representative of such person. If, after issuance of the initial order and prior to issuance of the final order, the Regional Administrator, Presiding Officer, or any person who will advise these officials in the decision on the case receives from or on behalf of any party in an ex parte communication information which is relevant to the decision on the case and to which other parties have not had an opportunity to respond, a summary of such information shall be served on all other parties, who shall have an opportunity to reply to same within ten (10) days of service of the summary.

§ 24.10 Scheduling the hearing; pre-hearing submissions by respondent.

(a) *Date and time for hearing.* The Presiding Officer shall establish the date, time, location, and agenda for the requested public hearing and transmit this information to the parties. Subject to § 24.10(c), the hearing shall be

scheduled and held within thirty (30) days of the Agency's receipt of the request for a public hearing.

(b) *Pre-hearing submissions by respondent.* At any time up to five (5) business days before the hearing respondent may, but is not required to, submit for inclusion in the administrative record information and argument supporting respondent's positions on the facts, law and relief, as each relates to the order in question. A copy of any information or argument submitted by respondent shall be served such that the Clerk and petitioner receive same at least five (5) business days before hearing.

(c) *Postponment of hearing.* The Presiding Officer may grant an extension of time for the conduct of the hearing upon written request of either party, for good cause shown, and after consideration of any prejudice to other parties. The Presiding Officer may not extend the date by which the request for hearing is due under § 24.05(a).

(d) *Location of hearing.* The hearing shall be held in the city in which the relevant EPA Regional Office is located, unless the Presiding Officer determines that there is good cause to hold it in another location.

§ 24.11 Hearing; oral presentations and written submissions by the parties.

The Presiding Officer shall conduct the hearing in a fair and impartial way, taking action as needed to avoid unnecessary delay, exclude redundant material and maintain order during the proceedings. Representatives of EPA shall introduce the administrative record and be prepared to summarize the basis for the order. The respondent shall have a reasonable opportunity to address relevant issues and present its views through legal counsel or technical advisors. The Presiding Officer may also allow technical and legal discussions and interchanges between the parties, including responses to questions to the extent deemed appropriate. It is not the Agency's intent to provide EPA or respondent an opportunity to engage in direct examination or cross-examination of witnesses. The Presiding Officer may address questions to the respondent's or EPA's representative(s) during the hearing. Each party shall insure that a representative(s) is (are) present at the hearing, who is (are) capable of responding to questions and articulating that party's position on the law and facts at issue. Where respondent can demonstrate that through no fault of its own certain documents supportive of its position could not have been submitted before hearing in accordance with the requirements of § 24.10(b), it may submit such documents at the hearing. Otherwise no new documentary support may be submitted at hearing. The Presiding Officer may upon request grant petitioner leave to respond to submissions made by respondent pursuant to this section or § 24.10(b). The Presiding Officer shall have the discretion to order either party to submit additional information (including but not limited to posthearing briefs on undeveloped factual, technical, or legal matters) in whatever form he deems appropriate either at or after the hearing.

§ 24.12 Summary of hearing; Presiding Officer's recommendation.

(a) As soon as practicable after the conclusion of the hearing a written summary of the proceeding shall be prepared. This summary shall, at a minimum, identify:

(1) The dates of and known attendees at the hearing; and

(2) The bases upon which the respondent contested the terms of the order.

The summary must be signed by the Presiding Officer.

(b) The Presiding Officer will evaluate the entire administrative record and, on the basis of that review and the representations of EPA and respondent at the hearing, shall prepare and file a recommended decision with the Regional Administrator. The recommended decision must address all material issues of fact or law properly raised by respondent, and must recommend that the order be modified, withdrawn or issued without modification. The recommended decision must provide an explanation with citation to material contained in the record for any decision to modify a term of the order, to issue the order without change, or to withdraw the order. The recommended decision shall be based on the administrative record. If the Presiding Officer finds that any contested relief provision in the order is not supported by a preponderance of the evidence in the record, the Presiding Officer shall recommend that the order be modified and issued on terms that are supported by the record or withdrawn.

(c) At any time within twenty-one (21) days of service of the recommended decision on the parties, the parties may file comments on the recommended decision with the Clerk. The Clerk shall promptly transmit any such comments received to the Regional Administrator for his consideration in reaching a final decision.

Subpart C—Hearings on Orders Requiring Corrective Measures

§ 24.13 Qualifications of Presiding Officer; ex parte discussion of the proceeding.

(a) *Qualifications of Presiding Officer.* The Presiding Officer shall be either the Regional Judicial Officer (as described in 40 CFR 22.04(b)) of another attorney employed by the Agency, who has had no prior connection with the case, including the performance of any investigative or prosecuting functions.

(b) *Ex parte discussion of the proceeding.* At no time after issuance of the initial administrative order and prior to issuance of the final order shall the Regional Administrator, Presiding Officer, or any person who will advise these officials in the decision on the case, discuss ex parte the merits of the proceeding with any interested person outside the Agency, with any Agency staff member who performs a prosecutorial or investigative function in such proceeding or a factually related proceeding, or with any representative of such person. If, after issuance of the initial order and prior to issuance of the final order, the Regional Administrator, Presiding Officer, or any person who will advise these officials in the decision on the case receives from or on behalf of any party in an ex parte communication information which is relevant to the decision on the case and to which other parties have not had an opportunity to respond, a summary of such information shall be served on all other parties, who shall have an opportunity to reply to same within ten (10) days of service of the summary.

§ 24.14 Scheduling the hearing; pre-hearing submissions by the parties.

(a) The Presiding Officer shall establish an expeditious schedule for:

(1) The submission by respondent of a memorandum, with appropriate affidavits and exhibits, stating and supporting respondent's position on the facts, law and relief, specifying the bases upon and manner in which such determinations or relief provisions, if erroneous, require modification or withdrawal of the order:

(2) Submission of a response by EPA; and

(3) A public hearing.

Subject to § 24.14(b), a hearing shall be scheduled within 45 days of the order setting the schedule. The Presiding Officer shall establish the date, time, location and agenda for the hearing and shall transmit this information to the parties along with the schedule for the hearing.

(b) *Postponement of the hearing.* The Presiding Officer, as appropriate, may grant an extension of time for the filing of any document, other than a request for a hearing under § 24.05(a), or may grant an extension of time for the conduct of the hearing, upon written request of either party, for good cause shown and after consideration of any prejudice to other parties.

(c) *Respondent's pre-hearing submission.* In accordance with the schedule set by the Presiding Officer, the respondent shall file a memorandum stating and supporting respondent's position on the facts, law and relief. The memorandum must identify each factual allegation and all issues regarding the appropriateness of the terms of the relief in the initial order that respondent contests and for which respondent requests a hearing. The memorandum must clearly state respondent's position with respect to each such issue. Respondent must also include any proposals for modification of the order. The memorandum shall also present any arguments on the legal conclusions contained in the order.

(d) *Written questions to EPA.* The respondent may file a request with the Presiding Officer for permission to submit written questions to the EPA Regional Office issuing the order concerning issues of material fact in the order.

(1) Requests shall be accompanied by the proposed questions. In most instances, no more than twenty-five (25) questions, including subquestions and subparts, may be posed. The request and questions must be submitted to the Presiding Officer at least twenty-one (21) days before the hearing.

(2) The Presiding Officer may direct EPA to respond to such questions as he designates. In deciding whether or not to direct the Agency to respond to written questions the Presiding Officer should consider whether such responses are required for full disclosure and adequate resolution of the facts. No questions shall be allowed regarding privileged internal communications. The Presiding Officer shall grant, deny, or modify such requests expeditiously. If a request is granted the Presiding Officer may revise questions and may limit the number and scope of questions. Questions may be deleted or revised in the discretion of the Presiding Officer for reasons, which may include the fact that he finds the questions to be irrelevant, redundant, unnecessary, or an undue burden on the Agency. The Presiding Officer shall transmit the questions as submitted or as modified to EPA. EPA shall respond to the questions within fourteen (14) calendar days of service of the questions by the Presiding Officer, unless an extension is granted.

(e) *Submission of additional information.* The Presiding Officer shall have the discretion to order either party to submit additional information (including but not limited to post-hearing briefs on undeveloped factual, technical, or legal matters) in whatever form he deems appropriate either before, at, or after the hearing. The Presiding Officer may issue subpoenas for the attendance and testimony of persons and the production of relevant papers, books and documents. Since these hearing procedures provide elsewhere that the parties are not to engage in direct or cross-examination of witnesses, the subpoena power is to serve only as an adjunct to the Presiding Officer's authority to ask questions and otherwise take steps to clarify factual matters which are in dispute. Upon request of the respondent the Presiding Officer may, in his discretion, allow submittal by the respondent of additional information in support of its claim, if it is received by the Clerk and petitioner at least five (5) business days before the hearing.

(f) *Location of hearing.* The hearing shall be held in the city in which the relevant EPA Regional Office is located, unless the Presiding Officer determines that there is good cause to hold it in another location.

§ 24.15 Hearing; oral presentations and written submissions by the parties.

(a) The Presiding Officer shall conduct the hearing in a fair and impartial manner, take action to avoid unnecessary delay in the disposition of the proceedings, and maintain order. The Presiding Officer shall permit oral statements on behalf of the respondent and EPA. The Presiding Officer may address questions to the respondent's or the EPA's representative(s) during the hearing. Each party shall ensure that a representative(s) is (are) present at the hearing, who is (are) capable of responding to questions and articulating that party's position on the law and facts at issue. Apart from questions by the Presiding Officer, no direct examination or cross-examination shall be allowed.

(b) Upon commencement of the hearing, a representative of EPA shall introduce the order and record supporting issuance of the order, and summarize the basis for the order. The respondent may respond to the administrative record and offer any facts, statements, explanations or documents which bear on any issue for which the hearing has been requested. Any such presentation by respondent may include new documents only to the extent that respondent can demonstrate that, through no fault of its own, such documents could not have been submitted before hearing in accordance with the requirements of § 24.14 (c) and (e). The Agency may then present matters solely in rebuttal to matters previously presented by the respondent. The Presiding Officer may allow the respondent to respond to any such rebuttal submitted. The Presiding Officer may exclude repetitive or irrelevant matter. The Presiding Officer may upon request grant petitioner leave to respond to submissions made by respondent pursuant to this paragraph or § 24.14(e).

§ 24.16 Transcript or recording of hearing.

(a) The hearing shall be either transcribed stenographically or tape recorded. Upon written request, such transcript or tape recording shall be made available for inspection or copying.

(b) The transcript or recording of the hearing and all written submittals filed with the Clerk by the parties subsequent to initial issuance of the order including post-hearing submissions will become part of the administrative record for the proceeding, for consideration by the Presiding Officer and Regional Administrator.

§ 24.17 Presiding Officer's recommendation.

(a) The Presiding Officer will, as soon as practicable after the conclusion of the hearing, evaluate the entire administrative record and, on the basis of the administrative record, prepare and file a recommended decision with the Regional Administrator. The recommended decision must address all material issues of fact or law properly raised by respondent, and must recommend that the order be modified, withdrawn or issued without modification. The recommended decision must provide an explanation, with citation to material contained in the record for any decision to modify a term of the order, to issue the order without change or to withdraw the order. The recommended decision shall be based on the administrative record. If the Presiding Officer finds that any contested relief provision in the order is not supported by a preponderance of the evidence in the record, the Presiding Officer shall recommend that the order be modified and issued on terms that are supported by the record, or withdrawn.

(b) At any time within twenty-one (21) days of service of the recommended

VOL 53 ISS 71 AP 13 1988 UMI

decision on the parties, the parties may file comments on the recommended decision with the Clerk. The Clerk shall promptly transmit any such comments received to the Regional Administrator for his consideration in reaching a final decision.

Subpart D—Post-Hearing Procedures

§ 24.18 Final decision.

As soon as practicable after receipt of the recommended decision, the Regional Administrator will either sign or modify such recommended decision, and issue it as a final decision. If the Regional Administrator modifies the recommended decision, he shall insure that the final decision indicates the legal and factual basis for the decision as modified. The Regional Administrator's decision shall be based on the administrative record.

§ 24.19 Final order.

If the Regional Administrator does not adopt portions of the initial order, or finds that modification of the order is necessary, the signatory official on the initial administrative order shall modify the order in accordance with the terms of the final decision and file and serve a copy of the final administrative order. If the Regional Administrator finds the initial order appropriate as originally issued, the final decision shall declare the initial administrative order to be a final order, effective upon service of the final decision. If the Regional Administrator declares that the initial order must be withdrawn, the signatory official on the initial administrative order will file and serve a withdrawal of the initial administrative order. This may be done without prejudice.

§ 24.20 Final agency action.

The final decision and the final administrative order are final agency actions that are effective on filing and service. These actions are not appealable to the Administrator.

[FR Doc. 88-7936 Filed 4-12-88; 8:45 am]

BILLING CODE 6560-50-M

VOL
53
ISS
71
AP
13
1988
UMI

federal register

Wednesday
April 13, 1988

Part VI

Department of Housing and Urban Development

Office of Assistant Secretary for Housing—Federal Housing Commissioner

Section 202 Loans for Housing for the Elderly or Handicapped; Announcement of Fund Availability for Fiscal Year 1988; Notice

DEPARTMENT OF HOUSING AND URBAN DEVELOPMENT

Office of Assistant Secretary for Housing—Federal Housing Commissioner

[Docket No. N-88-1790; FR 2479]

Section 202 Loans for Housing for the Elderly or Handicapped; Announcement of Fund Availability; Fiscal Year 1988

AGENCY: Office of the Assistant Secretary for Housing—Federal Housing Commissioner, HUD.

ACTION: Notice of fund availability.

SUMMARY: HUD is announcing the availability of Fiscal Year 1988 loan authority under the section 202 Housing for the Elderly or Handicapped Direct Loan Program. The loan authority will be used to provide direct Federal loans for a maximum term of 40 years under section 202 of the Housing Act of 1959 to assist private, nonprofit corporations and nonprofit consumer cooperatives in the development of housing and related facilities to serve the elderly or handicapped. The Department of Housing and Urban Development—Independent Agencies Appropriations Act, 1988 (Pub. L. 100-202, approved December 22, 1987) (Fiscal Year 1988 Appropriations Act) requires that 25 percent of the direct loan authority appropriated for Fiscal Year 1988 shall be used only to provide housing for the handicapped. In order to meet the 25 percent requirement and to facilitate administration of the program, submission and review requirements have been modified as set forth below.

EFFECTIVE DATE: April 13, 1988.

FOR FURTHER INFORMATION CONTACT: The HUD Field Office for your jurisdiction.

SUPPLEMENTARY INFORMATION: Notice is hereby given under Title 24 Code of Federal Regulations Part 885, that the Department of Housing and Urban Development will be accepting Applications for Fund Reservations from eligible Sponsors (see 24 CFR 885.5 for the definition of "Sponsor" and other terms) for direct loans for the construction or substantial rehabilitation of housing and related facilities for dwelling use by elderly or handicapped families under the provisions of section 202 of the Housing Act of 1959. Applications will also be accepted for loans for acquisition, with or without moderate rehabilitation, of housing and related facilities for use as group homes for the nonelderly handicapped.

The Assistant Secretary for Housing is assigning Fiscal Year 1988 Section 202 loan fund authority to the HUD Field Offices identified below in conformance with the provisions of section 213(d) of the Housing and Community Development Act of 1974. While the precise number of units to be funded depends upon the number of approvable applications received, the following distribution plan shows the estimated numbers of units and Fiscal Year 1988 loan authority under which applications may be funded in each Field Office jurisdiction identified below.

FISCAL YEAR 1988 SECTION 202 DISTRIBUTION PLAN BY HUD FIELD OFFICE JURISDICTION

	Estimated number of units	Estimated loan authority
Boston Regional Office:		
Boston	315	$18,806,000
Hartford	138	7,260,000
Manchester (Maine, New Hampshire, Vermont)	143	6,851,000
Providence	52	2,600,000
Total	648	35,517,000
New York Regional Office:		
Buffalo	268	10,775,000
Caribbean	145	5,670,000
Newark	338	19,334,000
New York	702	44,858,000
Total	1,453	80,637,000
Philadelphia Regional Office:		
Baltimore	117	5,850,000
Charleston	86	3,991,000
Philadelphia (Delaware)	313	16,934,000
Pittsburgh	181	9,050,000
Richmond	146	6,839,000
Washington, DC (Portion of Maryland and Virginia)	101	5,252,000
Total	946	47,916,000
Atlanta Regional Office:		
Atlanta	245	10,609,000
Birmingham	207	7,349,000
Columbia	160	6,120,000
Greensboro	266	11,262,000
Jackson	169	6,102,000
Jacksonville	464	21,020,000
Louisville	166	7,850,000
Knoxville	95	3,031,000
Nashville	133	4,802,000
Total	1,967	78,145,000
Chicago Regional Office:		
Chicago	472	25,300,000
Cincinnati	85	3,724,000
Cleveland	203	8,892,000
Columbus	118	4,638,000
Detroit	185	8,918,000
Grand Rapids	103	3,925,000

FISCAL YEAR 1988 SECTION 202 DISTRIBUTION PLAN BY HUD FIELD OFFICE JURISDICTION—Continued

	Estimated number of units	Estimated loan authority
Indianapolis	220	7,480,000
Milwaukee	223	7,917,000
Minneapolis/St. Paul	162	6,432,000
Total	1,771	77,226,000
Fort Worth Regional Office:		
Fort Worth (New Mexico)	230	9,592,000
Houston	136	4,624,000
Little Rock	200	5,901,000
New Orleans	136	5,604,000
Oklahoma City	143	4,448,000
San Antonio	126	4,549,000
Total	971	34,718,000
Kansas City Regional Office:		
Des Moines	128	5,146,000
Kansas City (portion of Missouri)	199	6,528,000
Omaha	76	2,464,000
St. Louis	150	5,956,000
Total	553	20,094,000
Denver Regional Office:		
Denver (Montana, North Dakota, South Dakota, Utah and Wyoming)	226	9,312,000
Total	226	9,312,000
San Francisco Regional Office:		
Honolulu (Guam)	49	2,421,000
Los Angeles	627	34,235,000
Phoenix	123	4,626,000
Sacramento	84	3,764,000
San Francisco (Nevada)	333	16,817,000
Total	1,216	61,863,000
Seattle Regional Office:		
Portland (Idaho)	143	4,984,000
Seattle	139	5,588,000
Total	282	10,572,000
National total	10,033	456,000,000

The foregoing distribution plan is a guide for prospective Sponsors. It estimates the loan authority that is expected to be available in each HUD Field Office jurisdiction. However, these unit and loan estimates are subject to change by Regional or Field Offices. Changes may be necessary to assure that there is enough loan authority in each Field Office to support housing projects of feasible size. Each HUD Field Office receiving Fiscal Year 1988 loan authority will publish one Invitation for

Applications for Section 202 Fund Reservation (Invitation) for its jurisdiction indicating the amount of loan authority and the maximum number of units this amount is expected to assist, as well as the total number of units available for metropolitan and nonmetropolitan areas. Whether an area is "metropolitan" or "nonmetropolitan" will be determined in accordance with the redefinitions of metropolitan statistical areas announced by the Office of Management and Budget, effective June 30, 1983.

(See OMB Public Affairs Issuance 83-20, June 27, 1983, and subsequent changes made June 27, 1984, June 27, 1985 and October 18, 1986.)

To provide equitable geographic distribution of the limited number of Section 202 units, a Field Office may establish a maximum number of units that may be requested under any one application. This unit limitation will vary by Field Office, depending on the number of units available for either the metropolitan or nonmetropolitan category of funds. However, the size limits for projects for the chronically mentally ill and nonelderly handicapped set forth in Paragraphs (11) and (12) below, or for projects for the elderly set forth in Paragraph (15), will apply.

Priority Categories For Selection

The purpose of the priority system for the Section 202 program is to assure that applications from localities that have been relatively underfunded over the years receive priority consideration and are treated in an equitable manner and to assure that 25 percent of the direct loan authority will be used to fund projects for the handicapped as required by the Fiscal Year 1988 Appropriations Act.

In view of the limited funds for projects in Fiscal Year 1988, and in order to assure open competition, Field Offices will not suballocate funds within their jurisdiction. However, 20–25 percent of available funds will be allocated to nonmetropolitan areas to meet rural housing needs. Field Office Invitations will identify the total number of units available for metropolitan and for nonmetropolitan areas of the jurisdiction. Applications received for projects in metropolitan areas will compete against each other; applications received for projects in nonmetropolitan areas will similarly compete against each other. At the time of end-of-year selection determinations, the Department may transfer unused authority from Field Offices that are without sufficient approvable applications to other Field Offices within the same State where there is not sufficient authority for all approvable applications. Where a Field Office jurisdiction covers more than one State, separate metropolitan or nonmetropolitan allocation areas may be established, to the extent practicable, for each State's part of the jurisdiction. Any amounts allocated to a State or to areas or communities within a State will not be reallocated for use in another State unless the Department determines that other areas or communities in the same State cannot use the amounts within that same fiscal year.

In order to assure that applications are funded in the areas of greatest need, approvable applications will be divided into two categories, each of which shall have two subcategories. The categories and subcategories are as follows:

Category A—Applications for projects for the handicapped, and for elderly projects which will be located in localities which have previously been underfunded relative to their needs and the funding needs of other localities.

(1) Such applications for elderly projects which are in localities within jurisdictions having rental vacancy rates of 5 percent or less or for projects for the handicapped;

(2) Such applications for elderly projects which are in localities within jurisdictions having rental vacancy rates in excess of 5 percent.

(Note: All projects for the handicapped will automatically be placed in Category A1.)

Category B—Applications for elderly projects which will be located in localities which have *not* been underfunded relative to their needs and the funding needs of other localities.

(1) Such applications which are in localities within jurisdictions having rental vacancy rates of 5 percent or less;

(2) Such applications which are in localities within jurisdictions having rental vacancy rates in excess of 5 percent.

Applications shall be selected for funding first from Category A(1), second from Category A(2), third from Category B(1), and finally from Category B(2). An application in a lower subcategory which is judged clearly superior to one in the next higher subcategory, i.e., its final score is at least 10 points higher, may be selected for funding. For example, if an application in Category A(1) has a final score of 57, and an application in Category A(2) has a score of 67, the higher-scored application may be selected over the lower-scored application. The rule would not apply to projects that are more than one subcategory apart, as for example, a higher-scored project in either B(1) or B(2) could not be selected over a lower-scored project in A(1).

Schedule For Section 202 Invitations, Workshops and Applications Deadline

All applications for Section 202 Fund Reservations submitted by eligible Sponsors must be filed with the appropriate HUD Field Office and must contain all exhibits and additional information as required by 24 CFR 885.210, except as modified by this Notice.

In April 1988, HUD Field Offices will publish a one-time Invitation in newspapers of general circulation, and in any minority newspapers serving the Field Office jurisdiction. Field Offices will accept applications after publication of the Invitation. No application will be accepted after the regular closing time of the appropriate Field Office on June 15, 1988 unless that time is extended by Notice published in the **Federal Register**. Applications that are mailed may be accepted provided they bear a postmark date or receipt of mailing that is no later than the regular closing time of the appropriate Field Office on June 15, 1988.

Organizations interested in applying for a Section 202 Fund Reservation should provide the appropriate Field Office with their names, addresses and telephone numbers, advise the Field Office whether they wish to attend the workshop described in the following paragraph, and secure the program handbook and Application Package. HUD encourages minority organizations to participate in this program as Sponsors. Field Offices will conduct workshops during April 1988 to explain the Section 202 Program and the Seed Money Loan program under section 106(b) of the Housing and Urban Development Act of 1968. Under this latter program, HUD makes direct, interest-free loans to approved nonprofit Section 202 eligible Borrowers to cover certain preconstruction expenses. At the workshops, Application Packages will be distributed, application procedures and requirements (including the Department's equal opportunity, design and cost containment requirements and required exhibits) will be discussed, and concerns such as local market conditions, building codes, zoning and housing costs will be addressed. HUD strongly recommends that prospective applicants attend the local Field Office workshop. More detailed information covering the time and place of the particular workshops will be set out in the Field Office Invitation. Interested disabled persons should contact the Field Office to assure that any

necessary arrangements can be made for them to be able to attend and participate in the workshop.

Additional Information

(1) Part 885 currently requires the Borrower to be in existence when the application for the Section 202 fund reservation is submitted, and requires the application to include specific information concerning the Borrower. Due to time constraints affecting the obligation of funds in Fiscal Year (FY) 1986, the FY 1986 NOFA for the Section 202 program permitted the Sponsor to delay the formation and submission of information on the Borrower until after the issuance of the fund reservation. Based on this experience, HUD has determined that the deferral of the formation of the Borrower results in more and better applications, reduces the costs to Sponsors that are not funded, and reduces HUD processing time and effort thus helping to meet the tight deadline for application processing. Accordingly, the formation of the Borrower corporation will not be a prerequisite to submission of an Application for Fund Reservation this fiscal year. The submission requirement for Borrowers described in § 885.210(b) (9), (12) and (13) may be satisfied with all application requirements with respect to the Sponsor, and in addition, the requirements imposed on the Borrower under § 885.210(b) (3), (4), (5), (7) and (8).

Because the formation of the Borrower corporation is not required at the application stage, the applicants will be the Sponsors and the applications will be reviewed and rated solely on the qualifications of the Sponsor, as well as other program requirements, as modified by this NOFA. If a Sponsor submits information on the Borrower, the information will not be reviewed, and approval of the application will NOT constitute approval of the Borrower.

The requirements under § 885.225 for issuance of the fund reservation to the Borrower are modified to provide that the fund reservation shall be issued to the Sponsor and transferred to a separate single purpose Borrower corporation upon satisfactory compliance by the Borrower with all submission requirements and approval of its Conditional Commitment Application.

The request for direct loan financing and Conditional Commitment Application under § 885.400 shall be submitted by an eligible single purpose Borrower corporation created by the Sponsor receiving a fund reservation which shall submit with such Application evidence of compliance with the requirements waived at the fund reservation application submission stage. Any information below that makes reference to an eligible Borrower corporation is provided as guidance for use at the Conditional Processing stage.

(2) Because of the concern as expressed by Congress for the homeless chronically mentally ill, Sponsors serving primarily the homeless deinstitutionalized mentally ill are encouraged to submit applications under this NOFA.

(3) In evaluating applications for Section 202 Fund Reservations, the Department's equal opportunity and cost containment requirements are significant factors in the ranking process. Further, in order to eliminate minimally qualified applications, only those proposals that meet certain threshold scores on the standard ranking format will be considered for funding. However, Headquarters may waive the threshold score for the non-elderly handicapped proposals in order to fund them from the Headquarters Reserve to the extent necessary to meet the requirement that not less than 25 percent of the loan authority be reserved for applications for the nonelderly handicapped. These requirements will be included in the Section 202 Application Package available at the local HUD Field Office. The Section 202 workshops will include discussions of these and other application requirements.

(4) Religious bodies may serve as project Sponsors, but must establish a Borrower corporation as a separate legal entity to be the owner, prior to the submission of a Conditional Commitment Application. When the Borrower corporation is created, no reference to religion or religious purposes may be included in the Articles of Incorporation or By-Laws of that corporation. The mere recital in a Borrowers Articles of Incorporation that it is organized exclusively for religious, charitable, scientific, literary or educational purposes within the meaning of section 501(c)(3) of the Internal Revenue Code will not by itself make a Borrower ineligible. However, the dissolution clause must provide that, upon dissolution or winding up of the corporation, its assets remaining after payment of all debts and liabilities, shall be distributed to a nonprofit fund, foundation or corporation other than one created for a religious purpose, which has established its tax exempt status under section 501(c)(3) of the Internal Revenue Code.

(5) Borrower corporations will not be permitted to engage in any other business or activity, including the operation of any other rental project, or to incur any liability or obligation not in connection with the proposed project. The intent of this requirement is to give HUD sole claim to the assets of the Borrower corporation in case of default under the Regulatory Agreement.

(6) Sponsors, including churches, must have a current tax exemption ruling under section 501 of the IRS Code.

(7) Applications will be accepted only from eligible Sponsors which must be eligible entities as defined in 24 CFR 855.5.

(8) Because of the nonprofit nature of the Section 202 program, no officer or director of the Sponsor or Borrower, or trustee, member, stockholder or authorized representative of the Borrower is permitted to have any financial interest in any contract in connection with the provision of services, the provision of goods or supplies, project management, procurement of furnishings and equipment, construction of the project, procurement of the site or other matters whatsoever, except that this prohibition does not apply to any management contracts (or management fees associated therewith) entered into by the Borrower with the Sponsor or its nonprofit affiliate.

(9) Where the proposed project site is being optioned or acquired from a general contractor or its affiliate, the Section 202 Borrower will be prohibited from selecting that contractor to construct the project for which an Application for funding is being made. Further, the proposed contractor may not be the attorney, architect, housing consultant or management agent for the project. This prohibition extends to any firm or subsidiary having an identity of interest with the contractor.

(10) In cases involving sites to be acquired from a local public body, satisfactory evidence of site control consists of evidence that the public body (a) possesses clear title to the land and (b) has entered into a legally binding commitment to the sponsor to convey the property to a Borrower corporation created by the Sponsor upon its receiving Section 202 funding. A mere recitation of intent to convey the land to a Borrower to be created by the Sponsor made by an official of the public body to the Sponsor or preliminary actions on the part of the public body are not adequate evidence of site control.

(11) Projects designed exclusively for the chronically mentally ill are eligible under the same conditions and criteria as other projects designed solely for the nonelderly handicapped, except that (a)

only group homes for up to 15 persons and independent living complexes to serve up to 20 persons may be proposed for the chronically mentally ill and (b) Borrowers proposing housing for the chronically mentally ill will be required to complete a Service Program Description, describing how their proposed projects will be linked to supportive services needed to maintain chronically mentally ill persons in the community. Since funds for such services cannot be provided from the Section 8 subsidy, evidence of other funding sources must be provided, with assurances that the funds will be secured by the time the project is ready for occupancy and will continue to be available for a reasonable time thereafer. Borrowers are placed on notice that if at any time these supporting funds are not available, the project will have to be converted to occupany by elderly or handicapped persons or families capable of living independently without the supportive services.

To assist HUD in evaluating the applicant's capabilities with regard to supportive services for the residents of group homes or independent living complexes, HUD will invite a representative from the State Mental Health Authority (SMHA) to evaluate and make recommendations about the Service Program Description. To this end, prospective Sponsors may be required to submit a copy of the Application to the SMHA. The HUD Field Office will advise prospective Sponsors of further details in this regard. Since the review and evaluation is at the option of the State Mental Health Authority, HUD will conduct its own independent review of those States that do not wish to participate.

(12) HUD unit limits for housing for the nonelderly handicapped (other than the chronically mentally ill) permit group homes to serve up to 15 persons on one site, and independent living complexes to include up to 40 units on one site. Although up to 40 units are permitted, HUD limits independent living complexes comprised of three or more bedorrm units to one or two parents with children. These complexes may not be develped to serve large numbers of single unrelated persons. In an independent living complex, no more than 40 households may be served on any one site. For purposes of this requirement, a household is a family or any individual. Two unrelated individuals sharing a two bedroom unit will be counted as two households in calculating the 40 household limit.

(13) Sponsors proposing group homes for the nonelderly handicapped are reminded that if a unit is to be occupied by one person, its size will be limited by the 0-bedroom square footage of up to 449 square feet, using the 0-bedroom fair market rent and unit cost limits. If the unit will be occupied by two persons, the size may be increased to the one-bedroom square footage of from 450 to 540 square feet, using the one-bedroom fair market rent and cost limits.

(14) Under 24 CFR 885.215, no single Sponsor may submit an Applications or Application in any HUD Region for more than 300 units.

(15) Reservations for projects intended primarily for the elderly will not be approved for more than 200 units, including units for the elderly already on or near the site, as well as the units being requested. This policy is intended to expand the number of areas in the community where the elderly can live in housing specifically designed to meet their needs. This limitation does not rule out housing for the elderly in submarket areas of major cities where privately or publicly financied housing for the elderly already exists, but is designed to discourage additional housing for the elderly in proximity to existing privately or publicly financied facilities where the additional units would result in a concentration of over 200 units. However, the Field Office Manager may waive the requirement in a given area or locality, if, for example, there are no other suitable sites available for housing for the elderly.

(16) Section 202 loans may be used for the acquisition of existing housing and related facilities, with or without moderate rehabilitation ("acquisition") for group homes for the nonelderly handicapped. Proposals involving housing units already owned and operated by the Sponsor as group homes for the handicapped at the time Applications are submitted (often referred to as "refinancing") are not eligible for acquisition or rehabilitation under the Section 202 program.

(17) To be responsive to the Invitation, Sponsors must not request more units than advertised for the respective metropolitan or nonmetropolitan areas designated in the Invitation, and the number of units applies for must not exceed any maximum number of units per Application that may be established by the local Field Office. Applications exceeding these limits will be rejected.

(18) If the Sponsor elects to use a housing consultant, it should be careful to select a consultant who is knowledgeable about the Section 202 housing program. Failure to meet program requirements will be a cause for rejection of the application, whether or not a housing consultant is used by the Sponsor. Sponsors may wish to contact previous groups which have used the consultant under consideration in order to make a determination as to the consultant's qualifications.

(19) Deficiency letters will be issued by the Field Offices and the Sponsors will be allowed 14 calendar days from the date of the letter to submit the identified missing information or to explain inconsistencies in the application submission. No amendments or corrections to applications will be permitted after the June 15, 1988 application filing deadline. Further, all necessary actions (e.g., adoption of corporate resolutions) must have been taken on or before the deadline date for filing applications.

(20) HUD will make contract authority and budget authority under Section 8 of the United States Housing Act of 1937 available for successful Sponsors, subject to the availability of funds.

(21) A notice of approval will be sent to the Sponsors selected in accordance with the requirements of 24 CFR 885.220 (Review of Application for Fund Reservation) and on the basis of information furnished by the Sponsors as set forth in the Field Office Application Package.

(22) To be considered for Fiscal Year 1988 funding, new applications must be submitted under this Notice of Fund Availability.

(23) 24 CFR 885.410(j) contains a minimum capital investment requirement. This requirement applies to all Section 202 projects receiving fund reservations in Fiscal Year 1988. The minimum capital investment is currently established at one-half of 1 percent (0.5%) of the total HUD-approved mortgage amount, not to exceed $10,000. Section 106(b) Seed Money Loan Funds, under 24 CFR Part 271, may not be used to satisfy the mimimum capital investment requirement.

(24) HUD's regulations at 24 CFR Part 885 do not reflect several recent changes made to the Section 202 program that may be of relevance to Sponsors making applications under this NOFA. These changes were contained in the Housing and Community Development Act of 1987 (Pub. L. 100–242, approved February 5, 1988) (1987 Act); the Housing and Urban Rural Recovery Act of 1983 (Pub. L. 98–181), approved November 30, 1983) (HURRA); and the Fiscal Year 1988 Appropriations Act.

The 1987 Act made many changes to the Section 202 program, including the creation of a new subsidy program for

Section 202 projects for the nonelderly handicapped, the revision of interest rate computation provisions, and the addition of requirements governing the cancellation of Section 202 loan authority reserved for a Sponsor.

The Department's regulations require significant revisions to reflect these statutory provisions. Rules making appropriate changes are currently under development at HUD. Pending the issuance of these rules, applicants should be aware that the statutory changes governing the calculation of the loan interest rate were effective upon enactment and apply to applications under this NOFA. An interim rule implementing these changes will be issued shortly.

Applicants should also be aware that the priority of funding contained in section 161(f) of the 1987 Act will apply to applications under this NOFA. Section 161(f) amended Section 202(a) to state that in reviewing applications for loans, the Department shall give a priorty to any project that will provide housing designed to replace a structure that is owned by a public housing agency, contains not less than 100 dwelling units, is used for housing only elderly families, and is to be demolished. In order to provide the priority as specified herein, any proposal which fully meets the foregoing specifications will be awarded 10 bonus points over and above those which it may receive in the rating process plus any special needs points to which it may be entitled. This requirement is not applicable after September 30, 1988.

Three statutory changes made in section 223(e) of HURRA have not, as yet, been covered by HUD's regulations. The statutory changes include:

—HURRA added a provision specifying that, unless otherwise requested by the Sponsor, a maximum of 25 percent of the units in a project may be efficiency units, subject to a HUD determination that such units are appropriate for the elderly and handicapped population residing in the vicinity of the project or to be served by the project. The Department, in its annual housing notice governing each fiscal year's program, states that all projects for the elderly must include 25 percent efficiency units, unless a Sponsor can demonstrate that there is an insufficient market for such units. It also allows a Sponosor to choose to pay the additional cost of providing all one-bedroom units. (At its discretion, a Sponsor may also elect to include more than 25 percent efficiency units.) In a final rule revising Part 885 published August 5, 1987 (52 FR 29010), HUD indicated that this change would be incorporated into a pending proposed rule. HUD now intends to incorporate this HURRA requirement with a proposed rule that addresses certain 1988 Act changes.

—HURRA also added a provision prohibiting the Secretary from denying any Sponsor the opportunity voluntarily to pay for amenities or design features not included in the loan. The annual housing notice specifies that a Sponsor may elect to pay for excess amenities that would not be permitted under the Department's cost containment guidelines or, if the Department denies a request for a waiver of the 25 percent efficiency unit requirement, may elect to pay the additional cost of one-bedroom units.

Note: Payment for excess amenities is permissible only if the residential characteristic of the proposal is not altered).

This change will also be incorporated in a proposed rule making the 1988 Act changes.

—Finally, HURRA added a provision requiring the Secretary to take into account special design features necessary for housing for the elderly and handicapped and to adjust cost limits at least once annually to reflect changes in construction costs. The Department modifies the base cost limits published in 24 CFR 885.410, as necessary, by adjusting upward or downward the high cost percentages for each base locality. HUD annually reviews the high costs percentages to assure that adjustments are made to reflect changes in construction costs. In addition, special design features provided by Section 202, such as multi-purpose space, central dining rooms, etc., are not included in the calculations for the Section 202 per unit cost limits. In FR–2445 (published March 16, 1988, 53 FR 8874) HUD issued a final rule revising the base unit costs for various programs, including the base unit costs for the Section 202 program.

The FY–1988 Appropriations Act specifies that 25 percent of the direct loan authority provided in Fiscal Year 1988 shall be used for the purpose of providing loans for projects for the nonelderly handicapped. In order to comply with this requirement, the Department has chosen not to distribute the mandated percentage to all the HUD field offices. To do so would result in such small dollar allocations in some field offices that feasible projects could not be developed. Rather, priority will be given to nonelderly handicapped proposals by placing all of these applications in the A(1) priority category and awarding them 10 extra points for qualifying under Item 25(B) of this Notice (see below). Finally, the Headquarters discretionary funds will be utilized, to the extent necessary, to satisfy any shortfall which may occur in the initial Regional Office selections for funding. Should all of these efforts fail due to there being insufficient approvable applications for housing for the handicapped to meet the 25 percent requirement, the unspent funds may not be transferred to fund housing for the elderly.

(25) To the extent that funds are available to fund new projects from the Headquarters Reserve (which Reserve shall constitute no more than 15 percent of the total Section 202 Fiscal Year 1988 loan authority), applications which are otherwise approvable but not funded by the Regional Offices from the field allocation may be considered for Headquarters funding, provided they meet at least one of the conditions set forth in Section 213(d)(4) of the Housing and Community Development Act of 1974, as amended:

(A) Unforeseeable housing needs, especially those brought on by natural disasters or special relocation requirements;

(B) Support for the needs of the handicapped (only if exclusively for the nonelderly handicapped);

(C) Support for minority enterprise;

(D) Providing assisted housing as a result of the settlement of litigation;

(E) Small research and demonstration projects;

(F) Lower-income housing needs described in housing assistance plans; or

(G) Innovative housing programs or alternative methods for meeting lower-income housing needs approved by the Secretary.

(26) Sponsors are invited to submit applications for Section 202 Fund Reservation in accordance with this Notice and with 24 CFR Part 885.

A finding of No Significant Impact with respect to the environment has been made in accordance with HUD regulations which implement section 102(2)(C) of the National Environmental Policy Act of 1969, 42 U.S.C. 4332. The finding of No Significant Impact is available for public inspection during business hours in the Office of the Rules Docket Clerk, Office of General Counsel, Room 10276, Department of Housing and Urban Development, 451 Seventh Street, Southwest, Washington, DC 20410.

VOL 53 ISS 71 APR 13 1988 UMI

In accordance with the Paperwork Reduction Act of 1980 (44 U.S.C. 3501–220), the information collection requirements contained in these Section 202 application requirements have been assigned OMB control number 2502–0267.

The Catalog of Federal Domestic Assistance Program title and number is 14.157, Housing for the Elderly or Handicapped.

(Sec. 202, Housing Act of 1959 (12 U.S.C. 1701q), sec. 7(d), Department of Housing and Urban Development Act (42 U.S.C. 3535(d))

Dated: April 6, 1988.

James E. Schoenberger,

General Deputy Assistant Secretary for Housing—Federal Housing Commissioner.

[FR Doc. 88–8103 Filed 4–12–88; 8:45 am]

BILLING CODE 4210-27-M

VOL
53

ISS
71

AP
13

1988

UMI

federal register

Wednesday
April 13, 1988

Part VII

Department of Housing and Urban Development

Office of the Assistant Secretary for Housing-Federal Housing Commissioner

24 CFR Part 888

Section 8 Housing Assistance Payments Program; Fair Market Rent Schedules for Use in the Existing Housing Certificate Program, Loan Management and Property Disposition Programs, Moderate Rehabilitation Program and Housing Voucher Program; Proposed Notice

BEST COPY AVAILABLE

DEPARTMENT OF HOUSING AND URBAN DEVELOPMENT

Office of the Assistant Secretary for Housing-Federal Housing Commissioner

24 CFR Part 888

[Docket No. N-88-1789; FR-2494]

Section 8 Housing Assistance Payments Program; Fair Market Rent Schedules for Use in the Existing Housing Certificate Program, Loan Management and Property Disposition Programs, Moderate Rehabilitation Program and Housing Voucher Program

AGENCY: Office of the Assistant Secretary for Housing-Federal Housing Commissioner, HUD.

ACTION: Proposed notice.

SUMMARY: Section 8(c)(1) of the United States Housing Act of 1937 requires the Secretary to publish Fair Market Rents periodically, but not less frequently than annually, and that Fair Market Rents must be made effective by October 1 of each year. The Department's regulations at 24 CFR Part 888 provide a notice and comment process for developing Fair Market Rents. Today's document proposes new Fair Market Rents for FY-1989. The proposal would amend Fair Market Rent schedules for the Section 8 Existing Housing Certificate Program (Part 882, Subparts A and B), including space rentals by owners of manufactured homes under the Section 8 Existing Housing Certificate Program (Part 882, Subpart F), the Section 8 Moderate Rehabilitation Program (Part 882, Subparts D and E), and Section 8 existing housing assisted under Part 886, Subparts A and C (Section 8 loan management and property disposition programs). In addition, FMRs are used to determine payment standard schedules in the Housing Voucher Program.

DATE: Comments are due June 13, 1988.

ADDRESSES: Interested persons are invited to submit comments to the Rules Docket Clerk, Office of General Counsel, Room 10276, Department of Housing and Urban Development, 451 Seventh Street SW., Washington, DC 20410-0500. Each comment should include the commenter's name and address and must refer to the docket number indicated in the heading of this notice. To expedite processing, each commenter is requested to simultaneously submit a copy of its comments to the Economic and Market Analysis Staff in the appropriate HUD Field Office. A copy of each comment submitted to the Rules Docket Clerk will be available for public inspection during regular business hours at the above address.

FOR FURTHER INFORMATION CONTACT: Cecelia D. Livingston, Housing Voucher Division, Office of Elderly and Assisted Housing, telephone (202) 755-6477. For technical information on the development of schedules for specific areas or the method used for the rent calculations, contact Michael R. Allard, Economic and Market Analysis Division, Office of Economic Affairs, telephone (202) 755-5577. (These are not toll-free numbers.)

SUPPLEMENTARY INFORMATION:

I. Background

Section 8 of the United States Housing Act of 1937 (the Act) (42 U.S.C. 1437f) authorizes a housing assistance program to aid lower income families in renting decent, safe, and sanitary housing. Assistance Payments are limited by Fair Market Rents (FMRs) (or payment standards based on FMRs in the Housing Voucher Program) established by HUD for different areas.

In general, the FMR for an area is the amount that would be needed to rent privately owned, decent, safe, and sanitary rental housing of a modest (non-luxury) nature with suitable amenities.

The FMRs proposed in this notice govern the following Section 8 Housing Assistance Payments Programs: The Section 8 Existing Housing Certificate Program under Part 882 (Subparts A and B), including space rentals by owners of manufactured homes (Subpart F), the Moderate Rehabilitation Program under Part 882 (Subparts D and E), the Section 8 Housing Assistance Program for Projects with HUD-insured or HUD-held Mortgages under Part 886 (Subpart A), as well as for existing housing under the Section 8 Housing Assistance Program for the Disposition without Substantial Rehabilitation of HUD-owned projects under Part 886 (Subpart C). In addition, FMRs are used to establish payment standards for the Housing Voucher Program.

II. Procedures for the Development of FMRs

Section 8(c) of the Act requires the Secretary of HUD to publish FMRs periodically, but not less frequently than annually. The Department's regulations provide that HUD will develop FMRs by publishing proposed FMRs for public comment, analyzing the public comment, and publishing final FMRs. (See 24 CFR 888.115.)

Today's announcement of proposed FMRs comes less than a year after the announcement of proposed FY-1988 FMRs. This schedule is necessary to meet the October 1, 1988 deadline for effective FY-1989 FMRs, as required by section 8(c)(1) of the United States Housing Act of 1937, as amended by section 142(a) of the Housing and Community Development Act of 1987 (Pub. L. 100-242, approved February 5, 1988).

III. Fair Market Rent Schedules

This document proposes revised Fair Market Rents, which reflect estimated rent levels as of April 1, 1989. Schedules at the end of this document list the FMR levels for Existing Housing (Schedule B) and Manufactured Home Spaces in the Section 8 Existing Housing Certificate Program (Schedule D). FMRs for the Moderate Rehabilitation Program are 120 percent of the Schedule B Existing Housing Fair Market Rents (see 24 CFR 882.408(a) and 888.113(e)(1)). The FMR for a Single Room Occupancy (SRO) unit in the Section 8 Existing Housing Certificate Program is 75 percent of the zero-bedroom FMR listed in Schedule B. The FMR for an SRO unit in the Moderate Rehabilitation program is 75 percent of the Moderate Rehabilitation FMR for a zero-bedroom unit. For an SRO in the Housing Voucher Program, the PHA may request HUD approval of a payment standard amount within the range of 75 to 100 percent of the zero-bedroom FMR listed in Schedule B or the HUD approved community-wide exception rent.

IV. Method Used to Develop FMRs

The elements used by HUD in developing the FMRs are: (1) The 45th percentile rent (that is, the rent below which 45 percent of the standard quality rental housing units are distributed); (2) Rents based on units occupied by recent movers (households who moved within two years before the date of the survey data used in these calculations); and (3) Exclusion from the data base of public housing units and recently completed housing (units built within two years of the survey dates). (See 24 CFR 888.113.)

In establishing the proposed FMRs, HUD uses the most accurate data available. Data used to compute the FY-1989 FMRs include the 1980 Census data, post-1980 American Housing Survey (AHS) data and reliable area specific data submitted by public commenters in the development of the FY-1986, FY-1987 and FY-1988 FMRs.

This year's proposed FMRs were calculated by updating last year's final FMRs one additional year to April 1, 1989 based on the most recent CPI data available on average annual changes for

rents and utilities. The FMRs have been calculated for each Primary Metropolitan Statistical Area (PMSA), Metropolitan Statistical Area (MSA), and nonmetropolitan county. In accordance with section 142(b) of the Housing and Community Development Act of 1987 (Pub. L. 100-242, approved February 5, 1988), separate FMRs are also established for Westchester County, NY. (The Department published separate FY-1988 FMRs for Westchester County on March 18, 1988 (53 FR 8888). The comment period for these FMRs ends on May 17, 1988. If the Westchester County FY-1988 FMRs are modified as a result of these public comments, the final FY-1989 FMRs for Westchester County will also incorporate appropriate revisions.)

As a result of decreases in local CPIs, the FMRs for five areas in Texas are proposed for modest decreases. These FMR areas are: The Dallas, TX PMSA; the Fort Worth-Arlington, TX PMSA; the Houston, TX PMSA; the Galveston-Texas City, TX PMSA; and the Brazoria, TX PMSA. All FMR areas in the State of Alaska are proposed for a 10 percent decrease, based on a reduction in the Anchorage, AL CPI which is used to adjust FMRs for the entire State. No changes are proposed for the Denver CO PMSA and the Boulder-Longmont CO PMSA, based on local CPI data. Proposed FMRs for Puerto Rico and the Virgin Islands will remain at last year's level, based on the advice of HUD's Caribbean Field Office.

This year's proposed FMRs incorporate the results of the 1984 AHS data for eleven metropolitan areas. Based on a case-by-case analysis of these surveys, HUD has proposed to modify the base FMRs for some areas. As a result, HUD has proposed to decrease FMRs for the Birmingham, AL MSA by six percent and to decrease FMRs for the Cleveland, OH PMSA by eight percent. For three other areas, the Memphis, TN MSA, the Norfolk-Virginia Beach-Newport News, VA MSA, and the San Jose, CA PMSA, the Department has proposed FMRs that are higher than those that would have been made using CPI adjustments. In four areas, the Buffalo, NY PMSA, the Niagara Falls, NY PMSA, the Providence, RI PMSA, and the Pawtucket-Woonsocket-Attleboro, RI PMSA, the Department will continue to base proposed FMRs on the local rental surveys submitted in 1986 and 1987. Finally, the Department will continue to base FMRs for the Oklahoma City, OK MSA on the 1980 Census because HUD believes that these data, with CPI updates, best reflect the current rental market conditions for the area.

The special circumstances of these areas are consistent with the Department's efforts to "use the most accurate data available" and to describe the additional data in the publication of proposed FMRs. (See 24 CFR 888.113(d).)

This year's proposed FMRs for manufactured home spaces were calculated by updating last year's FMRs to April 1, 1989, using the most current average annual change in the CPI residential rent index (with heating costs included in the rent factored out). As a result of decreases in the CPI, FMRs for the following areas are proposed for decrease: the Dallas, TX PMSA; the Fort Worth-Arlington, TX PMSA; the Houston, TX PMSA; the Galveston-Texas City, TX PMSA; the Brazoria, TX PMSA; and all areas in the State of Alaska. In addition, proposed FMRs for the Denver, CO PMSA and the Boulder-Longmont, CO PMSA remain at the FY-1988 level, based on local CPI data. Proposed FMRs for fourteen other areas remain at the FY-1988 level as a result of definitional changes of metropolitan areas.

V. Request for Comments

The Department seeks public comment on FMR levels for specific areas. Comments on FMR levels must include sufficient information (including local data and a full description of the methodology used) to justify any proposed changes. Changes may be proposed in all or any of the unit sizes on the schedule. Recommendations and supporting data must reflect the rent levels that exist within the entire market area (Metropolitan Statistical Area, Primary Metropolitan Statistical Area, or nonmetropolitan county).

Local rental market surveys must show the 45th percentile rent levels. To be representative, the local data must exclude units built within the last two years of the survey, should include only standard quality rental housing units, should not be drawn solely from vacant units, and should approximate the same proportion of units by structure type (for example, highrise or single family detached) and date of construction as exists in the total local inventory. Since the Department's data base includes only recent movers, where possible, commenters may wish to submit surveys based only on recent movers.

Local rental market surveys may be conducted to cover all bedroom sizes, or only selected bedroom sizes. Surveys that cover only two-bedroom units are acceptable if rent proposals for other size units are consistent with established HUD differentials by bedroom size, or if other pertinent data are supplied to support the proposals for other size units. Where three- and four-bedroom units are surveyed, the following procedure must be used to determine appropriate FMR proposals: (1) Determine the 45th percentile rents for the three- and four-bedroom units surveyed, (2) multiply the 45th percentile three-bedroom rent by 1.087 to determine the three-bedroom FMR, and (3) multiply the four-bedroom rent by 1.077 to determine the four-bedroom FMR. The use of these factors will produce the same upward adjustments in the rent differentials by bedroom size as those applied to the rent differentials for three- and four-bedroom units in the HUD methodology.

For areas where gross rents have increased significantly as a result of taxes or the costs of fuel and utilities applicable to a major portion of the FMR area, data relating to these increased costs may be submitted to justify revision of the FMRs. Data must be adequately described in order to facilitate evaluation and comparison with the cost data used in the Department's FMR calculations. Such descriptions must include the time periods in which the increased costs were applicable. All information provided must be representative of the rental inventory.

VI. Other Matters

A Finding of No Significant Impact with respect to the environment required by the National Environmental Policy Act (42 U.S.C. 4321-4374) is unnecessary, since the statutorily required establishment and review of fair market rents is categorically excluded from the Department's National Environment Policy Act procedures under 24 CFR 50.20(1).

Under 5 U.S.C. 605(b) (the Regulatory Flexibility Act), the Undersigned hereby certifies that this Notice does not have a significant economic impact on a substantial number of small entities because FMRs reflect the rents for similar quality units in the area. Therefore, FMRs do not change the rent from that which would be charged if the

project were not in the Section 8 program.

This document does not constitute a "major rule" as that term is defined in section 1(b) of Executive Order 12291 on Federal Regulation issued on February 17, 1981. Analysis of the document indicates that it does not (1) have an annual effect on the economy of $100 million or more; (2) cause a major increase in costs or prices for consumers, individual industries, Federal, State or local government agencies, or geographic regions; or (3) have a significant adverse effect on competition, employment, investment, productivity, innovation, or on the ability of United States-based enterprises to compete with foreign-based enterprises in domestic or export markets.

The Catalog of Federal Domestic Assistance program number is 14.156, Lower-Income Housing Assistance Program (Section 8).

Accordingly, the Fair Market Rent Schedules are proposed to be amended as follows:

Date: April 6, 1988.

James E. Schoenberger,

General Deputy Assistant Secretary for Housing—Federal Housing Commissioner.

Section 8 Fair Market Rent Schedules for Use in the Existing Housing Certificate Program, Loan Management and Property Disposition Programs, Moderate Rehabilitation Program and Housing Voucher Program Schedules B & D—General Explanatory Notes

1. Geographic Coverage

a. Except as described in paragraph (c) below, FMRs for Existing Housing (Schedule B) are established for all Metropolitan Statistical Areas (MSAs), Primary Metropolitan Statistical Areas (PMSAs), nonmetropolitan counties, and county equivalents in the United States, District of Columbia, Puerto Rico, the Virgin Islands, and Guam. FMRs also are established for nonmetropolitan parts of counties in the New England States.

b. Except as described in paragraph (c) below, FMRs for Manufactured Home Spaces in the Section 8 Certificate Program (Schedule D) are established for all MSAs, PMSAs, selected nonmetropolitan counties, and the residual nonmetropolitan portion of each State.

c. FMRs for Existing Housing (Schedule B) and Manufactured Home Spaces in the Section 8 Certificate program (Schedule D) are also established for Westchester County, NY.

d. The current 338 MSAs and PMSAs are those established by the Office of Management and Budget effective October 18, 1986.

2. Arrangement of FMR Areas and Identification of Constituent Parts.

a. The FMR areas in Schedules B and D are listed alphabetically by MSA–PMSA and nonmetropolitan county within each State.

b. The constituent counties (and New England towns and cities) included in each MSA and PMSA are listed immediately following the MSA–PMSA names in each State listed in Schedule B. All of the constituent parts of an MSA that are in more than one State can be identified by consulting the listings for each applicable State.

c. Two nonmetropolitan counties are listed alphabetically on each line of the nonmetropolitan county listings.

d. The New England towns and cities included in a nonmetropolitan part of a county are listed immediately following the county name.

e. The FMRs are listed by dollar amount on the first line beginning with the FMR area name.

BILLING CODE 4210-27-M

VOL 53 ISS 71 AP 13 1988 UMI

SCHEDULE B - FAIR MARKET RENTS FOR EXISTING HOUSING 031688

S T A T E: ALABAMA

	0 BEDROOMS	1 BEDROOM	2 BEDROOMS	3 BEDROOMS	4 BEDROOMS
ANNISTON, AL MSA	232	281	330	415	464
COUNTY(IES): CALHOUN					
BIRMINGHAM, AL MSA	260	315	370	465	520
COUNTY(IES): BLOUNT, JEFFERSON, ST CLAIR, SHELBY, WALKER					
COLUMBUS, GA-AL MSA	240	289	342	428	481
COUNTY(IES): RUSSELL					
DOTHAN, AL MSA	271	327	386	482	540
COUNTY(IES): DALE, HOUSTON					
FLORENCE, AL MSA	245	299	353	437	490
COUNTY(IES): COLBERT, LAUDERDALE					
GADSDEN, AL MSA	213	259	306	383	429
COUNTY(IES): ETOWAH					
HUNTSVILLE, AL MSA	273	330	389	487	545
COUNTY(IES): MADISON					
MOBILE, AL MSA	282	342	401	503	565
COUNTY(IES): BALDWIN, MOBILE					
MONTGOMERY, AL MSA	249	304	357	447	501
COUNTY(IES): AUTAUGA, ELMORE, MONTGOMERY					
TUSCALOOSA, AL MSA	261	318	375	468	525
COUNTY(IES): TUSCALOOSA					

NONMETROPOLITAN COUNTIES

	0 BEDROOMS	1 BEDROOM	2 BEDROOMS	3 BEDROOMS	4 BEDROOMS		0 BEDROOMS	1 BEDROOM	2 BEDROOMS	3 BEDROOMS	4 BEDROOMS
BARBOUR	196	238	281	351	393	BIBB	190	232	274	342	382
BULLOCK	200	243	286	358	400	BUTLER	204	247	291	364	408
CHAMBERS	194	236	278	348	389	CHEROKEE	194	236	278	348	389
CHILTON	190	232	274	342	382	CHOCTAW	213	259	306	383	429
CLARKE	213	259	306	383	429	CLAY	194	236	278	348	389
CLEBURNE	194	236	278	348	389	COFFEE	196	238	281	351	393
CONECUH	213	259	306	383	429	COOSA	194	236	278	348	389
COVINGTON	196	238	281	351	393	CRENSHAW	200	243	286	358	400
CULLMAN	237	288	340	425	476	DALLAS	213	259	306	383	429
DE KALB	224	272	319	398	448	ESCAMBIA	180	220	257	323	361
FAYETTE	190	232	274	342	382	FRANKLIN	190	231	272	340	380
GENEVA	196	238	281	351	393	GREENE	190	232	274	342	382
HALE	190	232	274	342	382	HENRY	196	238	281	351	393
JACKSON	224	272	319	398	448	LAMAR	190	232	274	342	382
LAWRENCE	237	288	340	425	476	LEE	243	295	348	435	488
LIMESTONE	201	245	289	361	404	LOWNDES	200	243	286	358	400
MACON	213	258	305	381	427	MARENGO	213	259	306	383	429
MARION	190	231	272	340	380	MARSHALL	209	254	298	370	414
MONROE	213	259	306	383	429	MORGAN	237	288	340	425	476
PERRY	213	259	306	383	429	PICKENS	190	232	274	342	382
PIKE	213	258	305	381	427	RANDOLPH	194	236	278	348	389

NOTE: THE FMRS FOR UNIT SIZES LARGER THAN FOUR-BEDROOMS ARE CALCULATED BY ADDING 15 PERCENT TO THE FOUR-BEDROOM FMR FOR EACH ADDITIONAL BEDROOM. TO ILLUSTRATE, THE FMR FOR A FIVE-BEDROOM UNIT IS 1.15 TIMES THE FOUR-BEDROOM FMR, AND THE CALCULATION OF THE FMR FOR A SIX-BEDROOM UNIT IS 1.30 TIMES THE FOUR-BEDROOM FMR, ETC.

SCHEDULE B - FAIR MARKET RENTS FOR EXISTING HOUSING 031688

S T A T E: ALABAMA

NONMETROPOLITAN COUNTIES

	0 BEDROOMS	1 BEDROOM	2 BEDROOMS	3 BEDROOMS	4 BEDROOMS		0 BEDROOMS	1 BEDROOM	2 BEDROOMS	3 BEDROOMS	4 BEDROOMS
SUMTER	213	259	306	383	429	TALLADEGA	194	236	278	348	389
TALLAPOOSA	194	236	278	348	389	WASHINGTON	213	259	306	383	429
WILCOX	213	259	306	383	429	WINSTON	190	231	272	340	380

S T A T E: ALASKA

	0 BEDROOMS	1 BEDROOM	2 BEDROOMS	3 BEDROOMS	4 BEDROOMS
ANCHORAGE, AK MSA..... COUNTY(IES): ANCHORAGE	402	489	576	720	806

NONMETROPOLITAN COUNTIES

	0 BEDROOMS	1 BEDROOM	2 BEDROOMS	3 BEDROOMS	4 BEDROOMS		0 BEDROOMS	1 BEDROOM	2 BEDROOMS	3 BEDROOMS	4 BEDROOMS
ALEUTIAN I.	478	580	683	854	956	BETHEL	478	580	683	854	956
BRISTOL BAY	478	580	683	854	956	DILLINGHAM	478	580	683	854	956
FAIRBKS-N.ST	393	478	562	703	788	HAINES	478	580	683	854	956
JUNEAU	478	580	683	854	956	KENAI-PENIN	393	478	562	703	788
KETCH-GATEWY	478	580	683	854	956	KOBUK	478	580	683	854	956
KODIAK ISLND	478	580	683	854	956	MATANUSKA-SU	393	478	562	703	788
NOME	478	580	683	854	956	NORTH SLOPE	478	580	683	854	956
P.WLS-O.KTCH	478	580	683	854	956	SITKA	478	580	683	854	956
SKGWY-YKT-AN	478	580	683	854	956	SE FAIRBANKS	393	478	562	703	788
VALDEZ-CORDO	393	478	562	703	788	WADE HAMPTON	478	580	683	854	956
WRNGLL-PTRBR	478	580	683	854	956	YKN-KOYKK	478	580	683	854	956

S T A T E: ARIZONA

	0 BEDROOMS	1 BEDROOM	2 BEDROOMS	3 BEDROOMS	4 BEDROOMS
PHOENIX, AZ MSA..... COUNTY(IES): MARICOPA	389	470	554	695	775
TUCSON, AZ MSA..... COUNTY(IES): PIMA	369	450	529	662	741

NONMETROPOLITAN COUNTIES

	0 BEDROOMS	1 BEDROOM	2 BEDROOMS	3 BEDROOMS	4 BEDROOMS		0 BEDROOMS	1 BEDROOM	2 BEDROOMS	3 BEDROOMS	4 BEDROOMS
APACHE	270	328	386	483	541	COCHISE	275	335	393	492	552
COCONINO	342	416	489	613	686	GILA	277	338	399	498	556
GRAHAM	275	335	393	492	552	GREENLEE	275	335	393	492	552
LAPAZ	347	423	498	622	697	MOHAUE	347	423	498	622	697
NAUAJO	270	328	386	483	541	PINAL	277	338	399	498	556
SANTA CRUZ	275	335	393	492	552	YAVAPAI	342	416	489	613	686
YUMA	347	423	498	622	697						

NOTE: THE FMRS FOR UNIT SIZES LARGER THAN FOUR-BEDROOMS ARE CALCULATED BY ADDING 15 PERCENT TO THE FOUR-BEDROOM FMR FOR EACH ADDITIONAL BEDROOM. TO ILLUSTRATE, THE FMR FOR A FIVE-BEDROOM UNIT IS 1.15 TIMES THE FOUR-BEDROOM FMR, AND THE CALCULATION OF THE FMR FOR A SIX-BEDROOM UNIT IS 1.30 TIMES THE FOUR-BEDROOM FMR, ETC.

SCHEDULE B - FAIR MARKET RENTS FOR EXISTING HOUSING 031688

S T A T E: ARKANSAS

	0 BEDROOMS	1 BEDROOM	2 BEDROOMS	3 BEDROOMS	4 BEDROOMS
FAYETTEVILLE-SPRINGDALE, AR MSA	255	308	363	454	509
COUNTY(IES): WASHINGTON					
FORT SMITH, AR-OK MSA	246	300	353	442	495
COUNTY(IES): CRAWFORD, SEBASTIAN					
LITTLE ROCK-NORTH LITTLE ROCK, AR MSA	294	356	419	525	588
COUNTY(IES): FAULKNER, LONOKE, PULASKI, SALINE					
MEMPHIS, TN-AR-MS MSA	285	345	405	505	565
COUNTY(IES): CRITTENDEN					
PINE BLUFF, AR MSA	243	297	350	438	490
COUNTY(IES): JEFFERSON					
TEXARKANA, TX-TEXARKANA, AR MSA	244	296	349	437	489
COUNTY(IES): MILLER					

NONMETROPOLITAN COUNTIES

	0 BEDROOMS	1 BEDROOM	2 BEDROOMS	3 BEDROOMS	4 BEDROOMS		0 BEDROOMS	1 BEDROOM	2 BEDROOMS	3 BEDROOMS	4 BEDROOMS
ARKANSAS	207	250	296	369	414	ASHLEY	197	238	281	352	395
BAXTER	234	285	337	420	472	BENTON	243	295	344	423	472
BOONE	234	285	337	420	472	BRADLEY	197	238	281	352	395
CALHOUN	198	243	284	356	398	CARROLL	234	285	337	420	472
CHICOT	197	238	281	352	395	CLARK	217	264	309	388	435
CLAY	220	268	314	394	441	CLEBURNE	230	280	330	412	462
CLEVELAND	204	247	292	364	408	COLUMBIA	198	243	284	356	398
CONWAY	203	246	291	363	406	CRAIGHEAD	259	312	368	460	517
CROSS	208	255	300	370	414	DALLAS	198	243	284	356	398
DESHA	197	238	281	352	395	DREW	197	238	281	352	395
FRANKLIN	183	222	262	327	366	FULTON	230	280	330	412	462
GARLAND	217	264	309	388	435	GRANT	204	247	292	364	408
GREENE	220	268	314	394	441	HEMPSTEAD	202	243	288	361	404
HOTSPRING	217	264	309	388	435	HOWARD	202	243	288	361	404
INDEPENDENCE	230	280	330	412	462	IZARD	230	280	330	412	462
JACKSON	230	280	330	412	462	JOHNSON	203	246	291	363	406
LAFAYETTE	202	243	288	361	404	LAWRENCE	220	268	314	394	441
LEE	208	255	300	370	414	LINCOLN	197	238	281	352	395
LITTLE RIVER	202	243	288	361	404	LOGAN	183	222	262	327	366
MADISON	234	285	337	420	472	MARION	234	285	337	420	472
MISSISSIPPI	238	291	342	427	479	MONROE	177	216	255	318	355
MONTGOMERY	217	264	309	388	435	NEVADA	202	243	288	361	404
NEWTON	234	285	337	420	472	OUACHITA	198	240	282	354	398
PERRY	203	246	291	363	406	PHILLIPS	208	255	300	370	414
PIKE	217	264	309	388	435	POINSETT	220	268	314	394	441
POLK	219	266	312	391	438	POPE	203	246	291	363	406
PRAIRIE	177	216	255	318	355	RANDOLPH	220	268	314	394	441
ST FRANCIS	208	255	300	370	414	SCOTT	183	222	262	327	366

NOTE: THE FMRS FOR UNIT SIZES LARGER THAN FOUR-BEDROOMS ARE CALCULATED BY ADDING 15 PERCENT TO THE FOUR-BEDROOM FMR FOR EACH ADDITIONAL BEDROOM. TO ILLUSTRATE, THE FMR FOR A FIVE-BEDROOM UNIT IS 1.15 TIMES THE FOUR-BEDROOM FMR, AND THE CALCULATION OF THE FMR FOR A SIX-BEDROOM UNIT IS 1.30 TIMES THE FOUR-BEDROOM FMR, ETC.

SCHEDULE B - FAIR MARKET RENTS FOR EXISTING HOUSING 031688

S T A T E: ARKANSAS

NONMETROPOLITAN COUNTIES

	0 BEDROOMS	1 BEDROOM	2 BEDROOMS	3 BEDROOMS	4 BEDROOMS		0 BEDROOMS	1 BEDROOM	2 BEDROOMS	3 BEDROOMS	4 BEDROOMS
SEARCY	234	285	337	420	472	SEVIER	202	243	288	361	404
SHARP	230	280	330	412	462	STONE	230	280	330	412	462
UNION	198	243	284	356	398	VAN BUREN	230	280	330	412	462
WHITE	230	280	330	412	462	WOODRUFF	230	280	330	412	462
YELL	203	246	291	363	406						

S T A T E: CALIFORNIA

	0 BEDROOMS	1 BEDROOM	2 BEDROOMS	3 BEDROOMS	4 BEDROOMS
ANAHEIM-SANTA ANA, CA PMSA	553	671	790	987	1106
COUNTY(IES): ORANGE					
BAKERSFIELD, CA MSA	378	458	540	675	756
COUNTY(IES): KERN					
CHICO, CA MSA	331	403	474	592	663
COUNTY(IES): BUTTE					
FRESNO, CA MSA	344	419	493	616	690
COUNTY(IES): FRESNO					
LOS ANGELES-LONG BEACH, CA PMSA	491	588	684	876	990
COUNTY(IES): LOS ANGELES					
MERCED, CA MSA	324	394	464	597	677
COUNTY(IES): MERCED					
MODESTO, CA MSA	362	440	519	649	726
COUNTY(IES): STANISLAUS					
OAKLAND, CA PMSA	539	654	772	965	1080
COUNTY(IES): ALAMEDA, CONTRA COSTA					
OXNARD-VENTURA, CA PMSA	472	574	675	844	946
COUNTY(IES): VENTURA					
REDDING, CA MSA	344	419	493	616	690
COUNTY(IES): SHASTA					
RIVERSIDE-SAN BERNARDINO, CA PMSA	401	473	552	714	804
COUNTY(IES): RIVERSIDE, SAN BERNADIN					
SACRAMENTO, CA MSA	364	434	519	754	800
COUNTY(IES): EL DORADO, PLACER, SACRAMENTO, YOLO					
SALINAS-SEASIDE-MONTEREY, CA MSA	413	502	589	739	827
COUNTY(IES): MONTEREY					
SAN DIEGO, CA MSA	450	552	647	810	906
COUNTY(IES): SAN DIEGO					
SAN FRANCISCO, CA PMSA	590	716	848	1056	1182
COUNTY(IES): MARIN, SAN FRANCISC, SAN MATEO					
SAN JOSE, CA PMSA	590	715	840	1050	1175
COUNTY(IES): SANTA CLARA					
SANTA BARBARA-SANTA MARIA-LOMPOC, CA MSA	467	567	668	836	936
COUNTY(IES): SANTA BARBAR					
SANTA CRUZ, CA PMSA	528	641	756	944	1058
COUNTY(IES): SANTA CRUZ					

NOTE: THE FMRS FOR UNIT SIZES LARGER THAN FOUR-BEDROOMS ARE CALCULATED BY ADDING 15 PERCENT TO THE FOUR-BEDROOM FMR FOR EACH ADDITIONAL BEDROOM. TO ILLUSTRATE, THE FMR FOR A FIVE-BEDROOM UNIT IS 1.15 TIMES THE FOUR-BEDROOM FMR, AND THE CALCULATION OF THE FMR FOR A SIX-BEDROOM UNIT IS 1.30 TIMES THE FOUR-BEDROOM FMR, ETC.

SCHEDULE B - FAIR MARKET RENTS FOR EXISTING HOUSING 031688

S T A T E: CALIFORNIA

	0 BEDROOMS	1 BEDROOM	2 BEDROOMS	3 BEDROOMS	4 BEDROOMS
SANTA ROSA-PETALUMA, CA PMSA	465	564	665	831	931
COUNTY(IES): SONOMA					
STOCKTON, CA MSA	320	386	455	582	670
COUNTY(IES): SAN JOAQUIN					
VALLEJO-FAIRFIELD-NAPA, CA PMSA	432	493	580	837	903
COUNTY(IES): NAPA, SOLANO					
VISALIA-TULARE-PORTERVILLE, CA MSA	321	391	460	667	730
COUNTY(IES): TULARE					
YUBA CITY, CA MSA	284	346	407	536	601
COUNTY(IES): SUTTER, YUBA					

NONMETROPOLITAN COUNTIES

	0 BEDROOMS	1 BEDROOM	2 BEDROOMS	3 BEDROOMS	4 BEDROOMS		0 BEDROOMS	1 BEDROOM	2 BEDROOMS	3 BEDROOMS	4 BEDROOMS
ALPINE	378	458	540	675	756	AMADOR	378	458	540	675	756
CALAVERAS	378	458	540	675	756	COLUSA	285	347	409	513	575
DEL NORTE	344	419	493	616	690	GLENN	285	347	409	513	575
HUMBOLDT	355	431	508	635	712	IMPERIAL	358	435	512	640	716
INYO	378	458	540	675	756	KINGS	312	379	445	557	624
LAKE	344	419	493	616	690	LASSEN	316	383	451	563	633
MADERA	312	379	445	559	624	MARIPOSA	378	458	540	675	756
MENDOCINO	344	419	533	674	690	MODOC	316	383	451	563	633
MONO	378	458	540	675	756	NEVADA	423	515	605	757	847
PLUMAS	316	383	451	563	633	SAN BENITO	312	379	477	613	687
SAN LUIS OBI	427	519	612	765	855	SIERRA	423	515	605	757	847
SISKIYOU	316	383	451	563	633	TEHAMA	316	383	451	563	633
TRINITY	344	419	493	616	690	TUOLUMNE	378	458	540	675	756

S T A T E: COLORADO

	0 BEDROOMS	1 BEDROOM	2 BEDROOMS	3 BEDROOMS	4 BEDROOMS
BOULDER-LONGMONT, CO PMSA	378	460	542	677	758
COUNTY(IES): BOULDER					
COLORADO SPRINGS, CO MSA	307	372	439	549	615
COUNTY(IES): EL PASO					
DENVER, CO PMSA	360	426	502	624	700
COUNTY(IES): ADAMS, ARAPAHOE, DENVER, DOUGLAS, JEFFERSON					
FORT COLLINS-LOVELAND, CO MSA	353	430	505	632	708
COUNTY(IES): LARIMER					
GREELEY, CO MSA	306	371	437	547	613
COUNTY(IES): WELD					
PUEBLO, CO MSA	305	369	435	545	611
COUNTY(IES): PUEBLO					

NONMETROPOLITAN COUNTIES

	0 BEDROOMS	1 BEDROOM	2 BEDROOMS	3 BEDROOMS	4 BEDROOMS		0 BEDROOMS	1 BEDROOM	2 BEDROOMS	3 BEDROOMS	4 BEDROOMS
ALAMOSA	305	369	435	545	611	ARCHULETA	305	369	435	545	611

NOTE: THE FMRS FOR UNIT SIZES LARGER THAN FOUR-BEDROOMS ARE CALCULATED BY ADDING 15 PERCENT TO THE FOUR-BEDROOM FMR FOR EACH ADDITIONAL BEDROOM. TO ILLUSTRATE, THE FMR FOR A FIVE-BEDROOM UNIT IS 1.15 TIMES THE FOUR-BEDROOM FMR, AND THE CALCULATION OF THE FMR FOR A SIX-BEDROOM UNIT IS 1.30 TIMES THE FOUR-BEDROOM FMR, ETC.

SCHEDULE B - FAIR MARKET RENTS FOR EXISTING HOUSING 031688

S T A T E: COLORADO

NONMETROPOLITAN COUNTIES

	0 BEDROOMS	1 BEDROOM	2 BEDROOMS	3 BEDROOMS	4 BEDROOMS		0 BEDROOMS	1 BEDROOM	2 BEDROOMS	3 BEDROOMS	4 BEDROOMS
BACA	266	321	372	466	523	BENT	266	321	372	466	523
CHAFFEE	338	410	482	604	676	CHEYENNE	261	317	372	466	523
CLEAR CREEK	338	410	482	604	676	CONEJOS	305	369	435	545	611
COSTILLA	305	369	435	545	611	CROWLEY	266	321	372	466	523
CUSTER	338	410	482	604	676	DELTA	403	487	574	718	805
DELORES	305	369	435	545	611	EAGLE	403	487	574	718	805
ELBERT	261	317	372	466	523	FREMONT	338	410	482	604	676
GARFIELD	383	465	548	686	767	GILPIN	338	410	482	604	676
GRAND	403	487	574	718	805	GUNNISON	403	487	574	718	805
HINSDALE	403	487	574	718	805	HUERFANO	305	369	435	545	611
JACKSON	403	487	574	718	805	KIOWA	266	321	372	466	523
KIT CARSON	261	317	372	466	523	LAKE	338	410	482	604	676
LA PLATA	339	407	480	599	672	LAS ANIMAS	305	369	435	545	611
LINCOLN	266	321	372	466	523	LOGAN	261	317	372	466	523
MESA	383	465	548	686	767	MINERAL	305	369	435	545	611
MOFFAT	383	465	548	686	767	MONTEZUMA	305	369	435	545	611
MONTROSE	403	487	574	718	805	MORGAN	261	317	372	466	523
OTERO	266	321	372	466	523	OURAY	403	487	574	718	805
PARK	338	410	482	604	676	PHILLIPS	261	317	372	466	523
PITKIN	403	487	574	718	805	PROWERS	256	321	372	466	523
RIO BLANCO	383	465	548	686	767	RIO GRANDE	305	369	435	545	611
ROUTT	403	487	574	718	805	SAGUACHE	305	369	435	545	611
SAN JUAN	305	369	435	545	611	SAN MIGUEL	403	487	574	718	805
SEDGWICK	261	317	372	466	523	SUMMIT	403	487	574	718	805
TELLER	338	410	482	604	676	WASHINGTON	261	317	372	466	523
YUMA	261	317	372	466	523						

S T A T E: CONNECTICUT

	0 BEDROOMS	1 BEDROOM	2 BEDROOMS	3 BEDROOMS	4 BEDROOMS
BRIDGEPORT-MILFORD, CT PMSA.....	424	515	608	758	851
COUNTY: FAIRFIELD TOWNS OF BRIDGEPORT, EASTON, FAIRFIELD, MONROE SHELTON, STRATFORD, TRUMBULL					
COUNTY: NEW HAVEN TOWNS OF ANSONIA, BEACON FALLS, DERBY, MILFORD OXFORD, SEYMOUR					
BRISTOL, CT PMSA.....	352	427	503	629	706
COUNTY: HARTFORD TOWNS OF BRISTOL, BURLINGTON					
COUNTY: LITCHFIELD TOWNS OF PLYMOUTH					
DANBURY, CT PMSA.....	459	559	650	823	922
COUNTY: FAIRFIELD TOWNS OF BETHEL, BROOKFIELD, DANBURY, NEW FAIRFIEL NEWTOWN, REDDING, RIDGEFIELD, SHERMAN					

NOTE: THE FMRS FOR UNIT SIZES LARGER THAN FOUR-BEDROOMS ARE CALCULATED BY ADDING 15 PERCENT TO THE FOUR-BEDROOM FMR FOR EACH ADDITIONAL BEDROOM. TO ILLUSTRATE, THE FMR FOR A FIVE-BEDROOM UNIT IS 1.15 TIMES THE FOUR-BEDROOM FMR, AND THE CALCULATION OF THE FMR FOR A SIX-BEDROOM UNIT IS 1.30 TIMES THE FOUR-BEDROOM FMR, ETC.

SCHEDULE B - FAIR MARKET RENTS FOR EXISTING HOUSING 031688

S T A T E: CONNECTICUT

	0 BEDROOMS	1 BEDROOM	2 BEDROOMS	3 BEDROOMS	4 BEDROOMS
COUNTY: LITCHFIELD TOWNS OF BRIDGEWATER, NEW MILFORD					
HARTFORD, CT PMSA	423	516	603	760	847
COUNTY: HARTFORD TOWNS OF AVON, BLOOMFIELD, CANTON, EAST GRANBY EAST HARTFOR, EAST WINDSOR, ENFIELD, FARMINGTON GLASTONBURY, GRANBY, HARTFORD, MANCHESTER MARLBOROUGH, NEWINGTON, ROCKY HILL, SIMSBURY SOUTH WINDSO, SUFFIELD, WEST HARTFOR, WETHERSFIELD WINDSOR, WINDSOR LOCK					
COUNTY: LITCHFIELD TOWNS OF BARKHAMSTED, NEW HARTFORD					
COUNTY: MIDDLESEX TOWNS OF EAST HADDAM					
COUNTY: NEW LONDON TOWNS OF COLCHESTER					
COUNTY: TOLLAND TOWNS OF ANDOVER, BOLTON, COLUMBIA, COVENTRY ELLINGTON, HEBRON, SOMERS, STAFFORD, TOLLAND, VERNON WILLINGTON					
MIDDLETOWN, CT PMSA	356	434	511	640	716
COUNTY: MIDDLESEX TOWNS OF CROMWELL, DURHAM, EAST HAMPTON, HADDAM MIDDLEFIELD, MIDDLETOWN, PORTLAND					
NEW BRITAIN, CT PMSA	377	458	535	674	756
COUNTY: HARTFORD TOWNS OF BERLIN, NEW BRITAIN, PLAINVILLE SOUTHINGTON					
NEW HAVEN-MERIDEN, CT MSA	456	555	653	817	915
COUNTY: MIDDLESEX TOWNS OF CLINTON, KILLINGWORTH					
COUNTY: NEW HAVEN TOWNS OF BETHANY, BRANFORD, CHESHIRE, EAST HAVEN GUILFORD, HAMDEN, MADISON, MERIDEN, NEW HAVEN NORTH BRANFO, NORTH HAVEN, ORANGE, WALLINGFORD WEST HAVEN, WOODBRIDGE					
NEW LONDON-NORWICH, CT-RI MSA	405	493	579	724	812
COUNTY: NEW LONDON TOWNS OF BOZRAH, EAST LYME, FRANKLIN, GRISWOLD GROTON, LEDYARD, LISBON, MONTVILLE, NEW LONDON NORTH STONIN, NORWICH, OLD LYME, PRESTON, SALEM SPRAGUE, STONINGTON, WATERFORD					
COUNTY: WINDHAM TOWNS OF CANTERBURY					
NORWALK, CT PMSA	489	594	699	873	979
COUNTY: FAIRFIELD TOWNS OF NORWALK, WESTON, WESTPORT, WILTON					
STAMFORD, CT PMSA	590	716	843	1054	1180
COUNTY: FAIRFIELD TOWNS OF DARIEN, GREENWICH, NEW CANAAN, STAMFORD					
WATERBURY, CT MSA	367	445	524	655	734
COUNTY: LITCHFIELD TOWNS OF BETHLEHEM, THOMASTON, WATERTOWN WOODBURY					
COUNTY: NEW HAVEN TOWNS OF MIDDLEBURY, NAUGATUCK, PROSPECT SOUTHBURY, WATERBURY, WOLCOTT					

NONMETROPOLITAN COUNTIES OR PARTS OF COUNTIES	0 BEDROOMS	1 BEDROOM	2 BEDROOMS	3 BEDROOMS	4 BEDROOMS
HARTFORD COUNTY TOWNS OF HARTLAND	352	427	503	629	706
LITCHFIELD COUNTY TOWNS OF CANAAN, COLEBROOK, CORNWALL, GOSHEN HARWINTON, KENT, LITCHFIELD, MORRIS, NORFOLK, NORTH CANAAN ROXBURY, SALISBURY, SHARON, TORRINGTON, WARREN, WASHINGTON WINCHESTER	390	473	556	696	780

NOTE: THE FMRS FOR UNIT SIZES LARGER THAN FOUR-BEDROOMS ARE CALCULATED BY ADDING 15 PERCENT TO THE FOUR-BEDROOM FMR FOR EACH ADDITIONAL BEDROOM. TO ILLUSTRATE, THE FMR FOR A FIVE-BEDROOM UNIT IS 1.15 TIMES THE FOUR-BEDROOM FMR, AND THE CALCULATION OF THE FMR FOR A SIX-BEDROOM UNIT IS 1.30 TIMES THE FOUR-BEDROOM FMR, ETC.

SCHEDULE B - FAIR MARKET RENTS FOR EXISTING HOUSING 031688

S T A T E: CONNECTICUT

NONMETROPOLITAN COUNTIES OR PARTS OF COUNTIES	0 BEDROOMS	1 BEDROOM	2 BEDROOMS	3 BEDROOMS	4 BEDROOMS
MIDDLESEX COUNTY TOWNS OF CHESTER, DEEP RIVER, ESSEX, OLD SAYBROOK WESTBROOK	437	529	623	779	872
NEW LONDON COUNTY TOWNS OF LEBANON, LYME, VOLUNTOWN	312	380	447	560	627
TOLLAND COUNTY TOWNS OF MANSFIELD, UNION	422	513	603	755	846
WINDHAM COUNTY TOWNS OF ASHFORD, BROOKLYN, CHAPLIN, EASTFORD, HAMPTON KILLINGLY, PLAINFIELD, POMFRET, PUTNAM, SCOTLAND, STERLING THOMPSON, WINDHAM, WOODSTOCK	373	453	534	667	748

S T A T E: DELAWARE

	0 BEDROOMS	1 BEDROOM	2 BEDROOMS	3 BEDROOMS	4 BEDROOMS
WILMINGTON, DE-NJ-MD PMSA COUNTY(IES): NEW CASTLE	380	455	541	676	804

NONMETROPOLITAN COUNTIES	0 BEDROOMS	1 BEDROOM	2 BEDROOMS	3 BEDROOMS	4 BEDROOMS
KENT	273	330	389	492	545
SUSSEX	273	330	389	492	545

S T A T E: DIST. OF COLUMBIA

	0 BEDROOMS	1 BEDROOM	2 BEDROOMS	3 BEDROOMS	4 BEDROOMS
WASHINGTON, DC-MD-VA MSA COUNTY(IES): WASHINGTON	470	570	671	838	939

S T A T E: FLORIDA

	0 BEDROOMS	1 BEDROOM	2 BEDROOMS	3 BEDROOMS	4 BEDROOMS
BRADENTON, FL MSA COUNTY(IES): MANATEE	342	416	490	612	686
DAYTONA BEACH, FL MSA COUNTY(IES): VOLUSIA	331	401	472	591	662
FORT LAUDERDALE-HOLLYWOOD-POMPANO BEACH, FL PMSA COUNTY(IES): BROWARD	371	450	530	663	742
FORT MYERS-CAPE CORAL, FL MSA COUNTY(IES): LEE	352	427	502	629	705
FORT PIERCE, FL MSA COUNTY(IES): MARTIN, ST LUCIE	352	427	502	629	705
FORT WALTON BEACH, FL MSA COUNTY(IES): OKALOOSA	235	285	335	420	470
GAINESVILLE, FL MSA COUNTY(IES): ALACHUA, BRADFORD	298	362	426	533	596
JACKSONVILLE, FL MSA COUNTY(IES): CLAY, DUVAL, NASSAU, ST JOHNS	311	378	446	557	625
LAKELAND-WINTER HAVEN, FL MSA COUNTY(IES): POLK	280	342	402	503	564

NOTE: THE FMRS FOR UNIT SIZES LARGER THAN FOUR-BEDROOMS ARE CALCULATED BY ADDING 15 PERCENT TO THE FOUR-BEDROOM FMR FOR EACH ADDITIONAL BEDROOM. TO ILLUSTRATE, THE FMR FOR A FIVE-BEDROOM UNIT IS 1.15 TIMES THE FOUR-BEDROOM FMR, AND THE CALCULATION OF THE FMR FOR A SIX-BEDROOM UNIT IS 1.30 TIMES THE FOUR-BEDROOM FMR, ETC.

SCHEDULE B - FAIR MARKET RENTS FOR EXISTING HOUSING 031688

S T A T E: FLORIDA

	0 BEDROOMS	1 BEDROOM	2 BEDROOMS	3 BEDROOMS	4 BEDROOMS
MELBOURNE-TITUSVILLE-PALM BAY, FL MSA	322	386	455	569	638
COUNTY(IES): BREVARD					
MIAMI-HIALEAH, FL PMSA	379	452	529	567	743
COUNTY(IES): DADE					
NAPLES, FL MSA	361	437	516	646	723
COUNTY(IES): COLLIER					
OCALA, FL MSA	260	316	371	464	520
COUNTY(IES): MARION					
ORLANDO, FL MSA	344	419	492	599	669
COUNTY(IES): ORANGE, OSCEOLA, SEMINOLE					
PANAMA CITY, FL MSA	249	304	358	448	500
COUNTY(IES): BAY					
PENSACOLA, FL MSA	278	340	399	499	559
COUNTY(IES): ESCAMBIA, SANTA ROSA					
SARASOTA, FL MSA	370	450	530	661	742
COUNTY(IES): SARASOTA					
TALLAHASSEE, FL MSA	294	356	420	525	587
COUNTY(IES): GADSDEN, LEON					
TAMPA-ST. PETERSBURG-CLEARWATER, FL MSA	308	374	440	551	618
COUNTY(IES): HERNANDO, HILLSBOROUGH, PASCO, PINELLAS					
WEST PALM BEACH-BOCA RATON-DELRAY BEACH, FL MSA	359	429	499	610	672
COUNTY(IES): PALM BEACH					

NONMETROPOLITAN COUNTIES

	0 BEDROOMS	1 BEDROOM	2 BEDROOMS	3 BEDROOMS	4 BEDROOMS
BAKER	227	274	323	404	454
CHARLOTTE	340	414	487	608	682
COLUMBIA	233	283	332	416	466
DIXIE	208	255	300	374	420
FRANKLIN	192	233	273	343	384
GLADES	340	414	487	608	682
HAMILTON	208	255	300	374	420
HENDRY	340	414	487	608	682
HOLMES	223	270	319	399	447
JACKSON	200	242	285	357	400
LAFAYETTE	208	255	300	374	420
LEVY	260	316	371	464	520
MADISON	208	255	300	374	420
OKEECHOBEE	244	297	349	436	490
SUMTER	260	314	371	464	520
TAYLOR	208	255	300	374	420
WAKULLA	221	268	316	396	442
WASHINGTON	223	272	320	401	448

	0 BEDROOMS	1 BEDROOM	2 BEDROOMS	3 BEDROOMS	4 BEDROOMS
CALHOUN	192	233	273	343	384
CITRUS	260	314	371	464	520
DE SOTO	244	297	349	436	490
FLAGLER	262	317	374	468	525
GILCHRIST	208	255	300	374	420
GULF	192	233	273	343	384
HARDEE	244	297	349	436	490
HIGHLANDS	244	297	349	436	490
INDIAN RIVER	352	427	502	629	705
JEFFERSON	192	233	273	343	384
LAKE	273	332	390	489	548
LIBERTY	192	233	273	343	384
MONROE	399	484	641	766	832
PUTNAM	262	317	374	468	525
SUWANNEE	208	255	300	374	420
UNION	208	255	300	374	420
WALTON	261	316	373	467	523

NOTE: THE FMRS FOR UNIT SIZES LARGER THAN FOUR-BEDROOMS ARE CALCULATED BY ADDING 15 PERCENT TO THE FOUR-BEDROOM FMR FOR EACH ADDITIONAL BEDROOM. TO ILLUSTRATE, THE FMR FOR A FIVE-BEDROOM UNIT IS 1.15 TIMES THE FOUR-BEDROOM FMR, AND THE CALCULATION OF THE FMR FOR A SIX-BEDROOM UNIT IS 1.30 TIMES THE FOUR-BEDROOM FMR, ETC.

SCHEDULE B - FAIR MARKET RENTS FOR EXISTING HOUSING 031688

S T A T E: GEORGIA

	0 BEDROOMS	1 BEDROOM	2 BEDROOMS	3 BEDROOMS	4 BEDROOMS
ALBANY, GA MSA	258	311	368	461	516
COUNTY(IES): DOUGHERTY, LEE					
ATHENS, GA MSA	266	325	382	477	534
COUNTY(IES): CLARKE, JACKSON, MADISON, OCONEE					
ATLANTA, GA MSA	372	451	529	662	740
COUNTY(IES): BARROW, BUTTS, CHEROKEE, CLAYTON, COBB, COWETA, DE KALB DOUGLAS, FAYETTE, FORSYTH, FULTON, GWINNETT, HENRY NEWTON, PAULDING, ROCKDALE, SPALDING, WALTON					
AUGUSTA, GA-SC MSA	271	327	382	477	534
COUNTY(IES): COLUMBIA, MCDUFFIE, RICHMOND					
CHATTANOOGA, TN-GA MSA	289	351	413	517	580
COUNTY(IES): CATOOSA, DADE, WALKER					
COLUMBUS, GA-AL MSA	240	289	342	428	481
COUNTY(IES): CHATTAHOOCHE, COLUMBUS					
MACON-WARNER ROBINS, GA MSA	267	327	386	481	536
COUNTY(IES): BIBB, HOUSTON, JONES, PEACH					
SAVANNAH, GA MSA	271	330	389	485	544
COUNTY(IES): CHATHAM, EFFINGHAM					

NONMETROPOLITAN COUNTIES

	0 BEDROOMS	1 BEDROOM	2 BEDROOMS	3 BEDROOMS	4 BEDROOMS		0 BEDROOMS	1 BEDROOM	2 BEDROOMS	3 BEDROOMS	4 BEDROOMS
APPLING	222	270	319	398	446	ATKINSON	209	254	298	373	419
BACON	209	254	298	373	419	BAKER	217	264	306	385	430
BALDWIN	212	258	303	379	425	BANKS	200	244	287	358	401
BARTON	225	274	324	404	454	BEN HILL	220	267	314	394	440
BERRIEN	220	267	314	394	440	BLECKLEY	217	264	306	385	425
BRANTLEY	209	254	298	373	419	BROOKS	220	267	314	394	440
BRYAN	257	298	352	439	493	BULLOCH	222	270	319	398	446
BURKE	213	259	304	382	427	CALHOUN	217	264	306	385	430
CAMDEN	246	298	352	439	493	CANDLER	222	270	319	398	446
CARROLL	257	309	364	456	509	CHARLTON	217	263	306	378	419
CHATTOOGA	225	274	324	404	454	CLAY	217	264	306	385	430
CLINCH	209	254	298	373	419	COFFEE	209	254	298	373	419
COLQUITT	215	261	306	384	430	COOK	220	267	314	394	440
CRAWFORD	180	219	258	323	360	CRISP	215	261	306	384	430
DAWSON	203	250	291	361	401	DECATUR	217	264	306	385	430
DODGE	217	264	306	385	425	DOOLY	217	264	306	385	430
EARLY	217	264	306	385	430	ECHOLS	220	267	314	394	440
ELBERT	205	249	293	367	411	EMANUEL	213	259	304	382	427
EVANS	222	270	319	398	446	FANNIN	241	293	344	431	483
FLOYD	225	274	324	404	454	FRANKLIN	200	244	287	358	401
GILMER	241	293	344	431	483	GLASCOCK	213	259	304	382	427
GLYNN	246	298	352	439	493	GORDON	225	274	324	404	454
GRADY	217	264	306	385	430	GREENE	203	246	290	362	405

NOTE: THE FMRS FOR UNIT SIZES LARGER THAN FOUR-BEDROOMS ARE CALCULATED BY ADDING 15 PERCENT TO THE FOUR-BEDROOM FMR FOR EACH ADDITIONAL BEDROOM. TO ILLUSTRATE, THE FMR FOR A FIVE-BEDROOM UNIT IS 1.15 TIMES THE FOUR-BEDROOM FMR, AND THE CALCULATION OF THE FMR FOR A SIX-BEDROOM UNIT IS 1.30 TIMES THE FOUR-BEDROOM FMR, ETC.

SCHEDULE B - FAIR MARKET RENTS FOR EXISTING HOUSING 031688

S T A T E: GEORGIA

NONMETROPOLITAN COUNTIES

	0 BEDROOMS	1 BEDROOM	2 BEDROOMS	3 BEDROOMS	4 BEDROOMS
HABERSHAM	224	272	322	401	450
HANCOCK	217	264	306	385	425
HARRIS	219	267	309	386	430
HEARD	238	290	341	427	478
JASPER	217	264	306	385	425
JEFFERSON	213	259	304	382	427
JOHNSON	217	264	306	385	425
LANIER	220	267	314	394	440
LIBERTY	246	298	352	439	493
LONG	246	298	352	439	493
LUMPKIN	203	250	291	361	401
MACON	217	264	306	385	430
MERIWETHER	238	290	341	427	478
MITCHELL	217	264	306	385	430
MONTGOMERY	219	268	314	388	430
MURRAY	241	293	344	431	483
PICKENS	241	293	344	431	483
PIKE	199	241	285	356	398
PULASKI	217	264	306	385	425
QUITMAN	215	261	306	384	430
RANDOLPH	217	264	306	385	430
SCREVEN	219	268	314	388	430
STEPHENS	235	289	337	423	471
SUMTER	240	294	347	433	486
TALIAFERRO	213	259	304	382	427
TAYLOR	217	264	306	385	430
TERRELL	217	264	306	385	430
TIFT	220	267	314	394	440
TOWNS	203	250	291	361	401
TROUP	244	294	345	430	479
TWIGGS	180	219	258	323	360
UPSON	199	241	285	356	398
WARREN	213	259	304	382	427
WAYNE	222	270	319	398	446
WHEELER	217	264	306	385	425
WHITFIELD	241	293	344	431	483
WILKES	213	259	304	382	427
WORTH	217	264	306	385	430

	0 BEDROOMS	1 BEDROOM	2 BEDROOMS	3 BEDROOMS	4 BEDROOMS
HALL	289	347	412	514	579
HARALSON	225	274	324	404	454
HART	200	244	287	358	401
IRWIN	220	267	314	394	440
JEFF DAVIS	222	270	319	398	446
JENKINS	213	259	304	382	427
LAMAR	199	241	285	356	398
LAURENS	212	258	303	379	425
LINCOLN	213	259	304	382	427
LOWNDES	220	267	314	394	440
MCINTOSH	246	298	351	439	493
MARION	219	267	309	386	430
MILLER	217	264	306	385	430
MONROE	180	219	258	323	360
MORGAN	203	246	290	362	405
OGLETHORPE	203	246	290	362	405
PIERCE	209	254	298	373	419
POLK	225	276	324	404	454
PUTNAM	217	264	306	385	425
RABUN	203	250	291	361	401
SCHLEY	219	267	309	386	430
SEMINOLE	217	264	305	385	430
STEWART	219	267	309	386	430
TALBOT	215	261	306	384	430
TATTNALL	222	270	319	398	446
TELFAIR	217	264	306	385	425
THOMAS	251	304	358	450	503
TOOMBS	222	270	319	398	446
TREUTLEN	217	264	306	385	425
TURNER	220	267	314	394	440
UNION	203	250	291	361	401
WARE	209	254	298	373	419
WASHINGTON	217	264	306	385	425
WEBSTER	219	267	309	386	430
WHITE	203	250	291	361	401
WILCOX	217	264	306	385	425
WILKINSON	217	264	306	385	425

NOTE; THE FMRS FOR UNIT SIZES LARGER THAN FOUR-BEDROOMS ARE CALCULATED BY ADDING 15 PERCENT TO THE FOUR-BEDROOM FMR FOR EACH ADDITIONAL BEDROOM. TO ILLUSTRATE, THE FMR FOR A FIVE-BEDROOM UNIT IS 1.15 TIMES THE FOUR-BEDROOM FMR, AND THE CALCULATION OF THE FMR FOR A SIX-BEDROOM UNIT IS 1.30 TIMES THE FOUR-BEDROOM FMR, ETC.

SCHEDULE B - FAIR MARKET RENTS FOR EXISTING HOUSING 031688

S T A T E: HAWAII

	0 BEDROOMS	1 BEDROOM	2 BEDROOMS	3 BEDROOMS	4 BEDROOMS
HONOLULU, HI MSA..... COUNTY(IES): HONOLULU	433	527	619	779	873

NONMETROPOLITAN COUNTIES

	0 BEDROOMS	1 BEDROOM	2 BEDROOMS	3 BEDROOMS	4 BEDROOMS
HAWAII	421	510	599	751	841
MAUI	421	510	599	751	841
KAUAI	421	510	599	751	841

S T A T E: IDAHO

	0 BEDROOMS	1 BEDROOM	2 BEDROOMS	3 BEDROOMS	4 BEDROOMS
BOISE CITY, ID MSA..... COUNTY(IES): ADA	356	433	510	637	714

NONMETROPOLITAN COUNTIES

	0 BEDROOMS	1 BEDROOM	2 BEDROOMS	3 BEDROOMS	4 BEDROOMS
ADAMS	277	338	397	496	557
BEAR LAKE	288	350	412	516	578
BINGHAM	290	353	412	516	578
BOISE	277	338	397	496	557
BONNEVILLE	311	377	445	556	623
BUTTE	311	377	445	556	623
CANYON	277	338	397	496	557
CASSIA	295	358	422	527	591
CLEARWATER	288	350	412	516	578
ELMORE	277	338	397	496	557
FREMONT	311	377	445	556	623
GOODING	295	358	422	527	591
JEFFERSON	311	377	445	556	623
KOOTENAI	288	350	412	516	578
LEMHI	311	377	445	556	623
LINCOLN	295	358	422	527	591
MINIDOKA	295	358	422	527	591
ONEIDA	288	350	412	516	578
PAYETTE	277	338	397	496	557
SHOSHONE	288	350	412	516	578
TWIN FALLS	295	358	422	527	591
WASHINGTON	277	338	397	496	557
BANNOCK	290	353	412	516	578
BENEWAH	288	350	412	516	578
BLAINE	295	358	422	527	591
BONNER	288	350	412	516	578
BOUNDARY	288	350	412	516	578
CAMAS	295	358	422	527	591
CARIBOU	290	353	412	516	578
CLARK	311	377	445	556	623
CUSTER	311	377	445	556	623
FRANKLIN	288	350	412	516	578
GEM	277	338	397	496	557
IDAHO	288	350	412	516	578
JEROME	295	358	422	527	591
LATAH	288	350	412	516	578
LEWIS	288	350	412	516	578
MADISON	311	377	445	556	623
NEZ PERCE	288	350	412	516	578
OWYHEE	277	338	397	496	557
POWER	290	353	412	516	578
TETON	311	377	445	556	623
VALLEY	277	338	397	496	557

NOTE: THE FMRS FOR UNIT SIZES LARGER THAN FOUR-BEDROOMS ARE CALCULATED BY ADDING 15 PERCENT TO THE FOUR-BEDROOM FMR FOR EACH ADDITIONAL BEDROOM. TO ILLUSTRATE, THE FMR FOR A FIVE-BEDROOM UNIT IS 1.15 TIMES THE FOUR-BEDROOM FMR, AND THE CALCULATION OF THE FMR FOR A SIX-BEDROOM UNIT IS 1.30 TIMES THE FOUR-BEDROOM FMR, ETC.

SCHEDULE B - FAIR MARKET RENTS FOR EXISTING HOUSING

031688

S T A T E ILLINOIS

	0 BEDROOMS	1 BEDROOM	2 BEDROOMS	3 BEDROOMS	4 BEDROOMS
AURORA-ELGIN, IL PMSA	413	504	594	742	833
COUNTY(IES) KANE, KENDALL					
BLOOMINGTON-NORMAL, IL MSA	305	372	437	546	612
COUNTY(IES): MCLEAN					
CHAMPAIGN-URBANA-RANTOUL, IL MSA	297	360	425	533	595
COUNTY(IES): CHAMPAIGN					
CHICAGO, IL PMSA	403	496	580	729	815
COUNTY(IES): COOK, DU PAGE, MCHENRY					
DAVENPORT-ROCK ISLAND-MOLINE, IA-IL MSA	326	396	466	582	652
COUNTY(IES): HENRY, ROCK ISLAND					
DECATUR, IL MSA	297	360	425	533	595
COUNTY(IES): MACON					
JOLIET, IL PMSA	416	506	598	746	838
COUNTY(IES): GRUNDY, WILL					
KANKAKEE, IL MSA	294	356	420	525	589
COUNTY(IES): KANKAKEE					
LAKE COUNTY, IL PMSA	426	518	608	764	855
COUNTY(IES): LAKE					
PEORIA, IL MSA	344	418	491	615	688
COUNTY(IES): PEORIA, TAZEWELL, WOODFORD					
ROCKFORD, IL MSA	312	380	447	558	625
COUNTY(IES): BOONE, WINNEBAGO					
ST. LOUIS, MO-IL MSA	310	378	445	559	626
COUNTY(IES): CLINTON, JERSEY, MADISON, MONROE, ST CLAIR					
SPRINGFIELD, IL MSA	313	381	448	560	627
COUNTY(IES): MENARD, SANGAMON					

NONMETROPOLITAN COUNTIES

	0 BEDROOMS	1 BEDROOM	2 BEDROOMS	3 BEDROOMS	4 BEDROOMS		0 BEDROOMS	1 BEDROOM	2 BEDROOMS	3 BEDROOMS	4 BEDROOMS
ADAMS	233	282	333	416	466	ALEXANDER	215	261	309	385	431
BOND	255	312	366	458	513	BROWN	233	282	333	416	466
BUREAU	283	345	407	508	569	CALHOUN	260	316	373	465	521
CARROLL	263	319	377	471	527	CASS	267	320	379	468	521
CHRISTIAN	269	326	384	481	539	CLARK	255	312	366	458	513
CLAY	240	291	344	429	482	COLES	255	312	366	458	513
CRANFORD	240	291	344	429	482	CUMBERLAND	255	312	366	458	513
DE KALB	307	373	438	548	614	DE WITT	255	312	366	458	513
DOUGLAS	255	312	366	458	513	EDGAR	255	312	366	458	513
EDWARDS	233	282	333	416	466	EFFINGHAM	240	291	344	429	482
FAYETTE	240	291	344	429	482	FORD	267	323	381	478	535
FRANKLIN	272	329	389	487	545	FULTON	283	345	407	508	569
GALLATIN	215	261	309	385	431	GREENE	260	316	373	465	521
HAMILTON	233	282	333	416	466	HANCOCK	249	303	356	447	501
HARDIN	215	261	309	385	431	HENDERSON	249	303	356	447	501
IROQUOIS	267	323	381	478	535	JACKSON	272	329	389	487	545

NOTE: THE FMRS FOR UNIT SIZES LARGER THAN FOUR-BEDROOMS ARE CALCULATED BY ADDING 15 PERCENT TO THE FOUR-BEDROOM FMR FOR EACH ADDITIONAL BEDROOM. TO ILLUSTRATE, THE FMR FOR A FIVE-BEDROOM UNIT IS 1.15 TIMES THE FOUR-BEDROOM FMR, AND THE CALCULATION OF THE FMR FOR A SIX-BEDROOM UNIT IS 1.30 TIMES THE FOUR-BEDROOM FMR, ETC.

SCHEDULE B - FAIR MARKET RENTS FOR EXISTING HOUSING 031688

S T A T E ILLINOIS

NONMETROPOLITAN COUNTIES

	0 BEDROOMS	1 BEDROOM	2 BEDROOMS	3 BEDROOMS	4 BEDROOMS		0 BEDROOMS	1 BEDROOM	2 BEDROOMS	3 BEDROOMS	4 BEDROOMS
JASPER	240	291	344	429	482	JEFFERSON	262	317	378	471	525
JO DAVIESS	263	319	377	471	527	JOHNSON	215	261	309	385	431
KNOX	276	335	393	493	553	LA SALLE	321	390	459	575	644
LAWRENCE	240	291	344	429	482	LEE	321	390	459	575	644
LIVINGSTON	267	323	381	478	535	LOGAN	267	320	379	468	521
MCDONOUGH	255	311	362	451	501	MACOUPIN	269	326	384	481	539
MARION	240	291	344	429	482	MARSHALL	283	345	407	508	569
MASON	267	320	379	468	521	MASSAC	215	261	309	385	431
MERCER	249	303	356	447	501	MONTGOMERY	269	326	384	481	539
MORGAN	267	320	379	468	521	MOULTRIE	269	326	384	481	539
OGLE	263	319	377	471	527	PERRY	255	312	366	458	513
PIATT	255	312	366	458	513	PIKE	233	282	333	416	466
POPE	215	261	309	385	431	PULASKI	215	261	309	385	431
PUTNAM	283	345	407	508	569	RANDOLPH	255	312	366	458	513
RICHLAND	240	291	344	429	482	SALINE	215	261	309	385	431
SCHUYLER	233	282	333	416	466	SCOTT	267	320	379	468	521
SHELBY	269	326	384	481	539	STARK	283	345	407	508	569
STEPHENSON	263	319	377	471	527	UNION	215	261	309	385	431
VERMILION	267	323	381	478	535	WABASH	233	282	333	416	466
WARREN	255	311	362	451	501	WASHINGTON	255	312	366	458	513
WAYNE	233	282	333	416	466	WHITE	233	282	333	416	466
WHITESIDE	321	390	459	575	644	WILLIAMSON	272	329	389	487	545

S T A T E: INDIANA

	0 BEDROOMS	1 BEDROOM	2 BEDROOMS	3 BEDROOMS	4 BEDROOMS
ANDERSON, IN MSA.....	254	310	363	456	511
COUNTY(IES): MADISON					
BLOOMINGTON, IN MSA.....	275	334	393	493	551
COUNTY(IES): MONROE					
CINCINNATI, OH-KY-IN PMSA.....	269	329	388	485	540
COUNTY(IES): DEARBORN					
ELKHART-GOSHEN, IN MSA.....	269	325	384	480	538
COUNTY(IES): ELKHART					
EVANSVILLE, IN-KY MSA.....	283	336	394	495	553
COUNTY(IES): POSEY, VANDERBURGH, WARRICK					
FORT WAYNE, IN MSA.....	283	341	397	499	553
COUNTY(IES): ALLEN, DE KALB, WHITLEY					
GARY-HAMMOND, IN PMSA.....	332	402	473	592	664
COUNTY(IES): LAKE, PORTER					
INDIANAPOLIS, IN MSA.....	285	350	410	515	575
COUNTY(IES): BOONE, HAMILTON, HANCOCK, HENDRICKS, JOHNSON, MARION					

NOTE: THE FMRS FOR UNIT SIZES LARGER THAN FOUR-BEDROOMS ARE CALCULATED BY ADDING 15 PERCENT TO THE FOUR-BEDROOM FMR FOR EACH ADDITIONAL BEDROOM. TO ILLUSTRATE, THE FMR FOR A FIVE-BEDROOM UNIT IS 1.15 TIMES THE FOUR-BEDROOM FMR, AND THE CALCULATION OF THE FMR FOR A SIX-BEDROOM UNIT IS 1.30 TIMES THE FOUR-BEDROOM FMR, ETC.

SCHEDULE B - FAIR MARKET RENTS FOR EXISTING HOUSING 031688

S T A T E INDIANA

	0 BEDROOMS	1 BEDROOM	2 BEDROOMS	3 BEDROOMS	4 BEDROOMS
MORGAN, SHELBY					
KOKOMO, IN MSA	280	342	400	502	562
COUNTY(IES) HOWARD, TIPTON					
LAFAYETTE-WEST LAFAYETTE, IN MSA	296	360	424	530	594
COUNTY(IES) TIPPECANOE					
LOUISVILLE, KY-IN MSA	258	312	366	457	512
COUNTY(IES): CLARK, FLOYD, HARRISON					
MUNCIE, IN MSA	244	294	346	429	480
COUNTY(IES) DELAWARE					
SOUTH BEND-MISHAWAKA, IN MSA	277	335	391	485	540
COUNTY(IES) ST JOSEPH					
TERRE HAUTE, IN MSA	251	306	357	443	493
COUNTY(IES) CLAY, VIGO					

NONMETROPOLITAN COUNTIES

	0 BEDROOMS	1 BEDROOM	2 BEDROOMS	3 BEDROOMS	4 BEDROOMS		0 BEDROOMS	1 BEDROOM	2 BEDROOMS	3 BEDROOMS	4 BEDROOMS
ADAMS	250	303	353	441	495	BARTHOLOMEW	282	344	404	506	567
BENTON	239	291	344	429	480	BLACKFORD	226	275	323	404	454
BROWN	282	344	404	506	567	CARROLL	239	291	344	429	480
CASS	248	302	355	443	498	CLINTON	239	291	344	429	480
CRAWFORD	207	251	295	371	416	DAVIESS	233	282	334	418	467
DECATUR	282	344	404	506	567	DUBOIS	207	251	295	371	416
FAYETTE	243	293	344	429	480	FOUNTAIN	239	291	344	429	480
FRANKLIN	243	293	344	429	480	FULTON	232	281	331	416	465
GIBSON	269	325	384	480	538	GRANT	226	275	323	404	454
GREENE	233	282	334	418	467	HENRY	226	275	323	404	454
HUNTINGTON	247	301	353	441	495	JACKSON	282	344	404	506	567
JASPER	250	304	357	447	501	JAY	226	275	323	404	454
JEFFERSON	269	325	384	480	538	JENNINGS	282	344	404	506	567
KNOX	239	287	334	418	467	KOSCIUSKO	256	310	364	449	501
LAGRANGE	256	311	365	458	513	LA PORTE	272	330	388	485	545
LAWRENCE	259	316	372	465	520	MARSHALL	250	304	357	447	501
MARTIN	233	282	334	418	467	MIAMI	248	302	355	443	498
MONTGOMERY	239	291	344	429	480	NEWTON	250	304	357	447	501
NOBLE	255	311	365	458	513	OHIO	269	325	384	480	538
ORANGE	207	251	295	371	416	OWEN	274	333	391	490	549
PARKE	239	291	344	429	480	PERRY	207	251	295	371	416
PIKE	269	325	384	480	538	PULASKI	250	304	357	447	501
PUTNAM	248	302	354	443	497	RANDOLPH	226	275	323	404	454
RIPLEY	269	325	384	480	538	RUSH	239	291	344	429	480
SCOTT	256	312	367	460	515	SPENCER	207	251	295	371	416
STARKE	250	304	357	447	501	STEUBEN	255	311	365	458	513
SULLIVAN	239	291	344	429	480	SWITZERLAND	269	325	384	480	538

NOTE: THE FMRS FOR UNIT SIZES LARGER THAN FOUR-BEDROOMS ARE CALCULATED BY ADDING 15 PERCENT TO THE FOUR-BEDROOM FMR FOR EACH ADDITIONAL BEDROOM. TO ILLUSTRATE, THE FMR FOR A FIVE-BEDROOM UNIT IS 1.15 TIMES THE FOUR-BEDROOM FMR, AND THE CALCULATION OF THE FMR FOR A SIX-BEDROOM UNIT IS 1.30 TIMES THE FOUR-BEDROOM FMR, ETC.

SCHEDULE B - FAIR MARKET RENTS FOR EXISTING HOUSING 031688

S T A T E INDIANA

NONMETROPOLITAN COUNTIES

	0 BEDROOMS	1 BEDROOM	2 BEDROOMS	3 BEDROOMS	4 BEDROOMS		0 BEDROOMS	1 BEDROOM	2 BEDROOMS	3 BEDROOMS	4 BEDROOMS
UNION	243	293	344	429	480	VERMILLION	248	301	351	436	483
WABASH	232	281	331	416	465	WARREN	239	291	344	429	480
WASHINGTON	277	337	396	497	556	WAYNE	244	294	346	429	480
WELLS	252	304	354	443	495	WHITE	239	291	344	429	480

S T A T E IOWA

	0 BEDROOMS	1 BEDROOM	2 BEDROOMS	3 BEDROOMS	4 BEDROOMS
CEDAR RAPIDS, IA MSA	317	383	451	566	635
COUNTY(IES): LINN					
DAVENPORT-ROCK ISLAND-MOLINE, IA-IL MSA.....	326	396	466	582	652
COUNTY(IES): SCOTT					
DES MOINES, IA MSA.....	314	382	450	565	632
COUNTY(IES): DALLAS, POLK, WARREN					
DUBUQUE, IA MSA.....	293	354	417	522	585
COUNTY(IES): DUBUQUE					
IOWA CITY, IA MSA.....	332	404	475	594	665
COUNTY(IES): JOHNSON					
OMAHA, NE-IA MSA...	288	349	411	515	578
COUNTY(IES): POTTAWATTAMI					
SIOUX CITY, IA-NE MSA....	285	346	408	510	572
COUNTY(IES): WOODBURY					
WATERLOO-CEDAR FALLS, IA MSA.....	318	384	453	568	637
COUNTY(IES): BLACK HAWK, BREMER					

NONMETROPOLITAN COUNTIES

	0 BEDROOMS	1 BEDROOM	2 BEDROOMS	3 BEDROOMS	4 BEDROOMS		0 BEDROOMS	1 BEDROOM	2 BEDROOMS	3 BEDROOMS	4 BEDROOMS
ADAIR	240	292	343	430	481	ADAMS	240	292	343	430	481
ALLAMAKEE	253	307	363	453	508	APPANOOSE	240	292	343	430	481
AUDUBON	254	309	365	455	510	BENTON	248	301	354	444	497
BOONE	290	350	413	517	579	BUCHANAN	253	307	362	453	508
BUENA VISTA	249	302	356	445	500	BUTLER	253	307	363	453	508
CALHOUN	254	309	365	455	510	CARROLL	254	309	365	455	510
CASS	261	317	372	466	522	CEDAR	283	343	405	506	568
CERRO GORDO	251	305	360	449	504	CHEROKEE	254	309	365	455	510
CHICKASAW	253	307	363	453	508	CLARKE	240	292	343	430	481
CLAY	249	302	356	445	500	CLAYTON	253	307	363	453	508
CLINTON	283	343	405	506	568	CRAWFORD	254	309	365	455	510
DAVIS	240	292	343	430	481	DECATUR	240	292	343	430	481
DELAWARE	283	343	405	506	568	DES MOINES	266	324	380	476	534
DICKINSON	249	302	356	445	500	EMMET	249	302	356	445	500
FAYETTE	253	307	363	453	508	FLOYD	251	305	360	449	504
FRANKLIN	251	305	360	449	504	FREMONT	261	317	372	466	522

NOTE: THE FMRS FOR UNIT SIZES LARGER THAN FOUR-BEDROOMS ARE CALCULATED BY ADDING 15 PERCENT TO THE FOUR-BEDROOM FMR FOR EACH ADDITIONAL BEDROOM. TO ILLUSTRATE, THE FMR FOR A FIVE-BEDROOM UNIT IS 1.15 TIMES THE FOUR-BEDROOM FMR, AND THE CALCULATION OF THE FMR FOR A SIX-BEDROOM UNIT IS 1.30 TIMES THE FOUR-BEDROOM FMR, ETC

SCHEDULE B - FAIR MARKET RENTS FOR EXISTING HOUSING 031688

S T A T E: IOWA

NONMETROPOLITAN COUNTIES

	0 BEDROOMS	1 BEDROOM	2 BEDROOMS	3 BEDROOMS	4 BEDROOMS		0 BEDROOMS	1 BEDROOM	2 BEDROOMS	3 BEDROOMS	4 BEDROOMS
GREENE	254	309	365	455	510	GRUNDY	253	307	363	453	508
GUTHRIE	254	309	365	455	510	HAMILTON	254	309	365	455	510
HANCOCK	251	305	360	449	504	HARDIN	264	321	377	472	530
HARRISON	261	317	372	466	522	HENRY	266	324	380	476	534
HOWARD	253	307	363	453	508	HUMBOLDT	254	309	365	455	510
IDA	254	309	365	455	510	IOWA	248	301	354	444	497
JACKSON	283	343	405	506	568	JASPER	269	327	383	480	538
JEFFERSON	265	322	378	474	531	JONES	248	301	354	444	497
KEOKUK	249	302	356	445	499	KOSSUTH	251	305	360	449	504
LEE	266	324	380	476	534	LOUISA	266	324	380	476	534
LUCAS	240	292	343	430	481	LYON	249	302	356	445	500
MADISON	268	327	383	480	538	MAHASKA	240	292	343	430	481
MARION	268	327	383	480	538	MARSHALL	264	321	377	472	530
MILLS	261	317	372	466	522	MITCHELL	251	305	360	449	504
MONONA	254	309	365	455	510	MONROE	240	292	343	430	481
MONTGOMERY	261	317	372	466	522	MUSCATINE	266	324	380	476	534
O BRIEN	249	302	356	445	500	OSCEOLA	249	302	356	445	500
PAGE	261	317	372	466	522	PALO ALTO	249	302	356	445	500
PLYMOUTH	254	309	365	455	510	POCAHONTAS	254	309	365	455	510
POWESHIEK	264	321	377	472	530	RINGGOLD	240	292	343	430	481
SAC	254	309	365	455	510	SHELBY	261	317	372	466	522
SIOUX	249	302	356	445	500	STORY	290	350	413	517	579
TAMA	264	321	377	472	530	TAYLOR	240	292	343	430	481
UNION	240	292	343	430	481	VAN BUREN	240	292	343	430	481
WAPELLO	283	342	404	505	566	WASHINGTON	248	301	354	444	497
WAYNE	240	292	343	430	481	WEBSTER	254	309	365	455	510
WINNEBAGO	251	305	360	449	504	WINNESHIEK	253	307	363	453	508
WORTH	251	305	360	449	504	WRIGHT	254	309	365	455	510

S T A T E: KANSAS

	0 BEDROOMS	1 BEDROOM	2 BEDROOMS	3 BEDROOMS	4 BEDROOMS
KANSAS CITY, MO-KS MSA..... COUNTY(IES). JOHNSON, LEAVENWORTH, MIAMI, WYANDOTTE	303	368	433	541	605
LAWRENCE, KS MSA..... COUNTY(IES): DOUGLAS	319	387	456	570	639
TOPEKA, KS MSA..... COUNTY(IES): SHAWNEE	289	352	413	518	579
WICHITA, KS MSA..... COUNTY(IES): BUTLER, HARVEY, SEDGWICK	308	374	445	553	617

NOTE: THE FMRS FOR UNIT SIZES LARGER THAN FOUR-BEDROOMS ARE CALCULATED BY ADDING 15 PERCENT TO THE FOUR-BEDROOM FMR FOR EACH ADDITIONAL BEDROOM. TO ILLUSTRATE, THE FMR FOR A FIVE-BEDROOM UNIT IS 1.15 TIMES THE FOUR-BEDROOM FMR, AND THE CALCULATION OF THE FMR FOR A SIX-BEDROOM UNIT IS 1.30 TIMES THE FOUR-BEDROOM FMR, ETC.

BEST COPY AVAILABLE

SCHEDULE B - FAIR MARKET RENTS FOR EXISTING HOUSING 031688

S T A T E: KANSAS

NONMETROPOLITAN COUNTIES

	0 BEDROOMS	1 BEDROOM	2 BEDROOMS	3 BEDROOMS	4 BEDROOMS		0 BEDROOMS	1 BEDROOM	2 BEDROOMS	3 BEDROOMS	4 BEDROOMS
ALLEN	202	244	288	360	405	ANDERSON	202	244	288	360	405
ATCHISON	233	282	333	416	466	BARBER	234	284	335	418	468
BARTON	234	284	335	418	468	BOURBON	202	244	288	360	405
BROWN	233	282	333	416	466	CHASE	254	310	365	456	510
CHAUTAUQUA	202	244	288	360	405	CHEROKEE	213	260	306	383	429
CHEYENNE	204	247	291	365	409	CLARK	240	291	343	429	482
CLAY	254	310	365	456	510	CLOUD	252	307	361	453	506
COFFEY	254	310	365	456	510	COMANCHE	234	284	335	418	468
COWLEY	202	244	288	360	405	CRAWFORD	213	260	306	383	429
DECATUR	204	247	291	365	409	DICKINSON	254	310	365	456	510
DONIPHAN	233	282	333	416	466	EDWARDS	234	284	335	418	468
ELK	202	244	288	360	405	ELLIS	204	247	291	365	409
ELLSWORTH	252	307	361	453	506	FINNEY	240	291	343	429	482
FORD	240	291	343	429	482	FRANKLIN	221	268	315	393	441
GEARY	254	310	365	456	510	GOVE	204	247	291	365	409
GRAHAM	204	247	291	365	409	GRANT	240	291	343	429	482
GRAY	240	291	343	429	482	GREELEY	240	291	343	429	482
GREENWOOD	254	310	365	456	510	HAMILTON	240	291	343	429	482
HARPER	234	284	335	418	468	HASKELL	240	291	343	429	482
HODGEMAN	240	291	343	429	482	JACKSON	233	282	333	416	466
JEFFERSON	221	269	316	394	443	JEWELL	252	307	361	453	506
KEARNY	240	291	343	429	482	KINGMAN	234	284	335	418	468
KIOWA	234	284	335	418	468	LABETTE	213	260	306	383	429
LANE	240	291	343	429	482	LINCOLN	252	307	361	453	506
LINN	202	244	288	360	405	LOGAN	204	247	291	365	409
LYON	254	310	365	456	510	MCPHERSON	269	326	385	482	538
MARION	254	310	365	456	510	MARSHALL	254	310	365	456	510
MEADE	240	291	343	429	482	MITCHELL	252	307	361	453	506
MONTGOMERY	213	260	306	383	429	MORRIS	254	310	365	456	510
MORTON	240	291	343	429	482	NEMAHA	233	282	333	416	466
NEOSHO	213	260	306	383	429	NESS	240	291	343	429	482
NORTON	204	247	291	365	409	OSAGE	221	269	316	394	443
OSBORNE	204	247	291	365	409	OTTAWA	252	307	361	453	506
PAWNEE	234	284	335	418	468	PHILLIPS	204	247	291	365	409
POTTAWATOMIE	254	310	365	456	510	PRATT	234	284	335	418	468
RAWLINS	204	247	291	365	409	RENO	269	326	385	482	538
REPUBLIC	252	307	361	453	506	RICE	269	326	385	482	538
RILEY	254	310	365	456	510	ROOKS	204	247	291	365	409
RUSH	234	284	335	418	468	RUSSELL	204	247	291	365	409

NOTE: THE FMRS FOR UNIT SIZES LARGER THAN FOUR-BEDROOMS ARE CALCULATED BY ADDING 15 PERCENT TO THE FOUR-BEDROOM FMR FOR EACH ADDITIONAL BEDROOM. TO ILLUSTRATE, THE FMR FOR A FIVE-BEDROOM UNIT IS 1.15 TIMES THE FOUR-BEDROOM FMR, AND THE CALCULATION OF THE FMR FOR A SIX-BEDROOM UNIT IS 1.30 TIMES THE FOUR-BEDROOM FMR, ETC.

SCHEDULE B - FAIR MARKET RENTS FOR EXISTING HOUSING 031688

S T A T E: KANSAS

NONMETROPOLITAN COUNTIES

	0 BEDROOMS	1 BEDROOM	2 BEDROOMS	3 BEDROOMS	4 BEDROOMS
SALINE	252	307	361	453	506
SEWARD	240	291	343	429	482
SHERMAN	204	247	291	365	409
STAFFORD	234	284	335	418	468
STEVENS	240	291	343	429	482
THOMAS	204	247	291	365	409
WABAUNSEE	254	310	365	456	510
WASHINGTON	252	307	361	453	506
WILSON	202	244	288	360	405
SCOTT	240	291	343	429	482
SHERIDAN	204	247	291	365	409
SMITH	204	247	291	365	409
STANTON	240	291	343	429	482
SUMNER	234	284	335	418	468
TREGO	204	247	291	365	409
WALLACE	204	247	291	365	409
WICHITA	240	291	343	429	482
WOODSON	202	244	288	360	405

S T A T E: KENTUCKY

	0 BEDROOMS	1 BEDROOM	2 BEDROOMS	3 BEDROOMS	4 BEDROOMS
CINCINNATI, OH-KY-IN PMSA	269	329	388	485	540
COUNTY(IES): BOONE, CAMPBELL, KENTON					
CLARKSVILLE-HOPKINSVILLE, TN-KY MSA	267	336	421	511	567
COUNTY(IES): CHRISTIAN					
EVANSVILLE, IN-KY MSA	283	336	394	495	553
COUNTY(IES): HENDERSON					
HUNTINGTON-ASHLAND, WV-KY-OH MSA	286	347	409	512	575
COUNTY(IES): BOYD, CARTER, GREENUP					
LEXINGTON-FAYETTE, KY MSA	299	363	427	535	599
COUNTY(IES): BOURBON, CLARK, FAYETTE, JESSAMINE, SCOTT, WOODFORD					
LOUISVILLE, KY-IN MSA	258	312	366	457	512
COUNTY(IES): BULLITT, JEFFERSON, OLDHAM, SHELBY					
OWENSBORO, KY MSA	234	284	335	418	469
COUNTY(IES): DAVIESS					

NONMETROPOLITAN COUNTIES

	0 BEDROOMS	1 BEDROOM	2 BEDROOMS	3 BEDROOMS	4 BEDROOMS
ADAIR	220	268	312	386	432
ANDERSON	274	335	393	491	550
BARREN	234	284	336	418	471
BELL	238	291	342	427	479
BRACKEN	220	267	314	394	441
BRECKINRIDGE	217	264	309	388	434
CALDWELL	235	286	339	423	474
CARLISLE	225	273	321	402	451
CASEY	216	262	308	386	432
CLINTON	220	268	312	386	432
CUMBERLAND	220	268	312	386	432
ELLIOTT	203	246	291	363	407
FLEMING	220	267	314	394	441
ALLEN	185	225	265	331	371
BALLARD	225	273	321	402	451
BATH	220	267	314	394	441
BOYLE	267	323	382	477	534
BREATHITT	226	274	323	404	453
BUTLER	185	225	265	331	371
CALLOWAY	225	273	321	402	451
CARROLL	226	275	323	405	453
CLAY	203	246	290	362	406
CRITTENDON	235	286	339	423	474
EDMONSON	185	225	265	331	371
ESTILL	267	323	382	477	534
FLOYD	239	292	343	429	481

NOTE: THE FMRS FOR UNIT SIZES LARGER THAN FOUR-BEDROOMS ARE CALCULATED BY ADDING 15 PERCENT TO THE FOUR-BEDROOM FMR FOR EACH ADDITIONAL BEDROOM. TO ILLUSTRATE, THE FMR FOR A FIVE-BEDROOM UNIT IS 1 15 TIMES THE FOUR-BEDROOM FMR, AND THE CALCULATION OF THE FMR FOR A SIX-BEDROOM UNIT IS 1.30 TIMES THE FOUR-BEDROOM FMR, ETC.

SCHEDULE B - FAIR MARKET RENTS FOR EXISTING HOUSING 031688

S T A T E: KENTUCKY

NONMETROPOLITAN COUNTIES

	0 BEDROOMS	1 BEDROOM	2 BEDROOMS	3 BEDROOMS	4 BEDROOMS		0 BEDROOMS	1 BEDROOM	2 BEDROOMS	3 BEDROOMS	4 BEDROOMS
FRANKLIN	274	335	393	491	550	FULTON	225	273	321	402	451
GALLATIN	226	275	323	405	453	GARRARD	267	323	382	477	534
GRANT	226	275	323	405	453	GRAVES	225	273	321	402	451
GRAYSON	217	264	309	388	434	GREEN	220	268	312	386	432
HANCOCK	228	277	327	409	457	HARDIN	245	299	351	439	492
HARLAN	238	291	342	427	479	HARRISON	199	241	284	356	400
HART	185	225	265	331	371	HENRY	202	245	288	361	404
HICKMAN	225	273	321	402	451	HOPKINS	235	286	339	423	474
JACKSON	203	246	290	362	406	JOHNSON	239	292	343	429	481
KNOTT	226	274	323	404	453	KNOX	209	255	299	389	418
LARUE	217	264	309	388	434	LAUREL	203	283	356	370	406
LAWRENCE	203	246	291	363	407	LEE	226	274	323	404	453
LESLIE	226	274	323	404	453	LETCHER	226	274	323	404	453
LEWIS	220	267	314	394	441	LINCOLN	267	323	382	477	534
LIVINGSTON	204	247	292	364	408	LOGAN	236	288	340	425	476
LYON	204	247	292	364	408	MCCRACKEN	235	276	326	402	451
MCCREARY	220	268	312	386	432	MCLEAN	228	277	327	409	457
MADISON	267	323	385	477	534	MAGOFFIN	239	292	343	429	481
MARION	217	264	309	388	434	MARSHALL	235	276	326	402	451
MARTIN	239	292	343	429	481	MASON	220	267	314	394	441
MEADE	245	299	351	439	492	MENIFEE	220	268	314	394	441
MERCER	274	335	393	491	550	METCALFE	185	225	265	331	371
MONROE	185	225	265	331	371	MONTGOMERY	220	267	314	394	441
MORGAN	220	268	314	394	441	MUHLENBERG	235	286	339	423	474
NELSON	217	264	309	388	434	NICHOLAS	199	241	284	356	400
OHIO	228	277	327	409	457	OWEN	226	275	323	405	453
OWSLEY	226	274	323	404	453	PENDLETON	226	275	323	405	453
PERRY	226	274	323	404	453	PIKE	239	292	343	429	481
POWELL	199	241	284	356	400	PULASKI	220	268	312	386	432
ROBERTSON	220	267	314	394	441	ROCKCASTLE	203	246	290	362	406
ROWAN	220	267	314	394	441	RUSSELL	216	262	308	386	432
SIMPSON	236	288	340	425	476	SPENCER	202	245	288	361	404
TAYLOR	220	268	312	386	432	TODD	204	247	292	364	408
TRIGG	204	247	292	364	408	TRIMBLE	202	245	288	361	404
UNION	228	277	327	409	457	WARREN	236	288	340	425	476
WASHINGTON	217	264	309	388	434	WAYNE	220	268	312	386	432
WEBSTER	228	277	327	409	457	WHITLEY	238	291	342	427	479
WOLFE	226	274	323	404	453						

NOTE: THE FMRS FOR UNIT SIZES LARGER THAN FOUR-BEDROOMS ARE CALCULATED BY ADDING 15 PERCENT TO THE FOUR-BEDROOM FMR FOR EACH ADDITIONAL BEDROOM. TO ILLUSTRATE, THE FMR FOR A FIVE-BEDROOM UNIT IS 1.15 TIMES THE FOUR-BEDROOM FMR, AND THE CALCULATION OF THE FMR FOR A SIX-BEDROOM UNIT IS 1.30 TIMES THE FOUR-BEDROOM FMR, ETC.

SCHEDULE B - FAIR MARKET RENTS FOR EXISTING HOUSING 031688

S T A T E LOUISIANA

	0 BEDROOMS	1 BEDROOM	2 BEDROOMS	3 BEDROOMS	4 BEDROOMS
ALEXANDRIA, LA MSA	252	306	361	451	504
COUNTY(IES): RAPIDES					
BATON ROUGE, LA MSA	317	384	452	565	633
COUNTY(IES): ASCENSION, E BATON ROUG, LIVINGSTON, W BATON ROUG					
HOUMA-THIBODAUX, LA MSA	280	340	400	500	561
COUNTY(IES): LAFOURCHE, TERREBONNE					
LAFAYETTE, LA MSA	317	384	452	565	633
COUNTY(IES): LAFAYETTE, ST MARTIN					
LAKE CHARLES, LA MSA	255	307	359	447	500
COUNTY(IES) CALCASIEU					
MONROE, LA MSA	251	305	359	449	502
COUNTY(IES): OUACHITA					
NEW ORLEANS, LA MSA	348	424	499	623	698
COUNTY(IES): JEFFERSON, ORLEANS, ST BERNARD, ST CHARLES, ST JOHN THE ST TAMMANY					
SHREVEPORT, LA MSA	285	346	409	511	572
COUNTY(IES) BOSSIER, CADDO					

NONMETROPOLITAN COUNTIES

	0 BEDROOMS	1 BEDROOM	2 BEDROOMS	3 BEDROOMS	4 BEDROOMS		0 BEDROOMS	1 BEDROOM	2 BEDROOMS	3 BEDROOMS	4 BEDROOMS
ACADIA	217	264	311	388	435	ALLEN	173	211	249	312	348
ASSUMPTION	188	228	267	335	376	AVOYELLES	214	260	307	384	430
BEAUREGARD	173	211	249	312	348	BIENVILLE	223	273	321	400	449
CALDWELL	197	238	281	346	387	CAMERON	173	211	249	312	348
CATAHOULA	214	260	307	384	430	CLAIBORNE	223	273	321	400	449
CONCORDIA	214	260	307	384	430	DE SOTO	223	273	321	400	449
EAST CARROLL	172	210	247	309	345	E FELICIANA	180	218	257	322	361
EVANGELINE	208	252	296	372	416	FRANKLIN	172	210	247	309	345
GRANT	214	260	307	384	430	IBERIA	256	313	367	459	514
IBERVILLE	180	218	257	322	361	JACKSON	172	210	247	309	345
JEFFERSON DA	173	211	249	312	348	LA SALLE	214	260	307	384	430
LINCOLN	223	273	321	400	449	MADISON	172	210	247	309	345
MOREHOUSE	172	210	247	309	345	NATCHITOCHES	223	273	321	400	449
PLAQUEMINES	315	381	449	562	628	POINTE COUPE	180	218	257	322	361
RED RIVER	223	273	321	400	449	RICHLAND	172	210	247	309	345
SABINE	223	273	321	400	449	ST HELENA	180	218	257	322	361
ST JAMES	188	228	267	335	376	ST LANDRY	208	252	296	372	416
ST MARY	256	313	367	459	514	TANGIPAHOA	203	247	290	363	407
TENSAS	172	210	247	309	345	UNION	172	210	247	309	345
VERMILION	217	264	311	388	435	VERNON	214	260	307	384	430
WASHINGTON	203	247	290	363	407	WEBSTER	194	236	278	347	389
WEST CARROLL	172	210	247	309	345	W FELICIANA	180	218	257	322	361
WINN	214	260	307	384	430						

NOTE THE FMRS FOR UNIT SIZES LARGER THAN FOUR-BEDROOMS ARE CALCULATED BY ADDING 15 PERCENT TO THE FOUR-BEDROOM FMR FOR EACH ADDITIONAL BEDROOM. TO ILLUSTRATE, THE FMR FOR A FIVE-BEDROOM UNIT IS 1.15 TIMES THE FOUR-BEDROOM FMR, AND THE CALCULATION OF THE FMR FOR A SIX-BEDROOM UNIT IS 1.30 TIMES THE FOUR-BEDROOM FMR, ETC.

SCHEDULE B - FAIR MARKET RENTS FOR EXISTING HOUSING 031688

S T A T E MAINE

	0 BEDROOMS	1 BEDROOM	2 BEDROOMS	3 BEDROOMS	4 BEDROOMS
BANGOR, ME MSA	313	381	447	560	628
COUNTY: PENOBSCOT TOWNS OF BANGOR, BREWER, EDDINGTON, GLENBURN HAMPDEN, HERMON, HOLDEN, KENDUSKEAG, OLD TOWN, ORONO ORRINGTON, PENOBSCOT IN, VEAZIE					
COUNTY: WALDO TOWNS OF WINTERPORT					
LEWISTON-AUBURN, ME MSA	329	392	443	495	563
COUNTY: ANDROSCOGGIN TOWNS OF AUBURN, GREENE, LEWISTON, LISBON MECHANIC FAL, POLAND, SABATTUS					
PORTLAND, ME MSA	384	489	618	693	833
COUNTY: CUMBERLAND TOWNS OF CAPE ELIZABE, CUMBERLAND, FALMOUTH FREEPORT, GORHAM, GRAY, NORTH YARMOU, PORTLAND RAYMOND, SCARBOROUGH, SOUTH PORTLA, STANDISH WESTBROOK, WINDHAM, YARMOUTH					
COUNTY: YORK TOWNS OF BUXTON, HOLLIS, OLD ORCHARD					
PORTSMOUTH-DOVER-ROCHESTER, NH-ME MSA	413	503	590	738	827
COUNTY: YORK TOWNS OF BERWICK, ELIOT, KITTERY, NORTH BERWIC SOUTH BERWIC, WELLS, YORK					
NONMETROPOLITAN COUNTIES OR PARTS OF COUNTIES	0 BEDROOMS	1 BEDROOM	2 BEDROOMS	3 BEDROOMS	4 BEDROOMS
ANDROSCOGGIN COUNTY TOWNS OF DURHAM, LEEDS, LIVERMORE, LIVERMORE FA MINOT, TURNER, WALES	286	338	399	489	540
AROOSTOOK COUNTY	291	353	417	520	583
CUMBERLAND COUNTY TOWNS OF BALDWIN, BRIDGTON, BRUNSWICK, CASCO HARPSWELL, HARRISON, NAPLES, NEW GLOUCEST, POWNAL, SEBAGO	322	391	460	572	636
FRANKLIN COUNTY	303	343	408	483	548
HANCOCK COUNTY	305	363	425	531	592
KENNEBEC COUNTY	305	371	437	548	612
KNOX COUNTY	295	359	422	529	592
LINCOLN COUNTY	291	352	416	520	582
OXFORD COUNTY	303	343	408	483	548
PENOBSCOT COUNTY TOWNS OF ALTON, ARGYLE, BRADFORD, BRADLEY, BURLINGTON CARMEL, CARROLL, CHARLESTON, CHESTER, CLIFTON, CORINNA, CORINTH DEXTER, DIXMONT, DREW, EAST MILLINO, EDINBURG, ENFIELD, ETNA EXETER, GARLAND, GRAND FALLS, GREENBUSH, GREENFIELD, HOWLAND HUDSON, KINGMAN, LAGRANGE, LAKEVILLE, LEE, LEVANT, LINCOLN LOWELL, MATTAWAMKEAG, MAXFIELD, MEDWAY, MILFORD, MILLINOCKET MOUNT CHASE, NEWBURGH, NEWPORT, NORTH PENOBS, PASSADUMKEAG PATTEN, PLYMOUTH, PRENTISS, SEBOEIS, SPRINGFIELD, STACYVILLE STETSON, SUMMIT, TWOMBLY, WEBSTER, WHITNEY, WINN, WOODVILLE	300	363	422	529	592
PISCATAQUIS COUNTY	261	305	360	452	505
SAGADAHOC COUNTY	333	448	483	563	660
SOMERSET COUNTY	291	352	416	520	582
WALDO COUNTY TOWNS OF BELFAST, BELMONT, BROOKS, BURNHAM, FRANKFORT FREEDOM, ISLESBORO, JACKSON, KNOX, LIBERTY, LINCOLNVILLE MONROE, MONTVILLE, MORRILL, NORTHPORT, PALERMO, PROSPECT SEARSMONT, SEARSPORT, STOCKTON SPR, SWANVILLE, THORNDIKE, TROY UNITY, WALDO	295	359	422	529	592
WASHINGTON COUNTY	295	359	422	529	592

NOTE. THE FMRS FOR UNIT SIZES LARGER THAN FOUR-BEDROOMS ARE CALCULATED BY ADDING 15 PERCENT TO THE FOUR-BEDROOM FMR FOR EACH ADDITIONAL BEDROOM. TO ILLUSTRATE, THE FMR FOR A FIVE-BEDROOM UNIT IS 1.15 TIMES THE FOUR-BEDROOM FMR, AND THE CALCULATION OF THE FMR FOR A SIX-BEDROOM UNIT IS 1.30 TIMES THE FOUR-BEDROOM FMR, ETC.

SCHEDULE B - FAIR MARKET RENTS FOR EXISTING HOUSING 031688

S T A T E: MAINE

NONMETROPOLITAN COUNTIES OR PARTS OF COUNTIES	0 BEDROOMS	1 BEDROOM	2 BEDROOMS	3 BEDROOMS	4 BEDROOMS
YORK COUNTY TOWNS OF ACTON, ALFRED, ARUNDEL, BIDDEFORD, CORNISH; DAYTON KENNEBUNK, KENNEBUNKPOR, LEBANON, LIMERICK, LIMINGTON, LYMAN NEWFIELD, PARSONSFIELD, SACO, SANFORD, SHAPLEIGH, WATERBORO	368	434	548	563	683

S T A T E: MARYLAND

	0 BEDROOMS	1 BEDROOM	2 BEDROOMS	3 BEDROOMS	4 BEDROOMS
BALTIMORE, MD MSA	355	432	508	635	712
COUNTY(IES): ANNE ARUNDEL, BALTIMORE, CARROLL, HARFORD, HOWARD QUEEN ANNES, BALTIMORE					
COLUMBIA, MD	451	548	645	805	903
COUNTY(IES): COLUMBIA					
CUMBERLAND, MD-WV MSA	262	312	365	451	504
COUNTY(IES): ALLEGANY					
HAGERSTOWN, MD MSA	293	356	420	525	587
COUNTY(IES): WASHINGTON					
WASHINGTON, DC-MD-VA MSA	470	570	671	838	939
COUNTY(IES): CALVERT, CHARLES, FREDERICK, MONTGOMERY, PRINCE GEORG					
WILMINGTON, DE-NJ-MD PMSA	380	455	541	676	804
COUNTY(IES): CECIL					

NONMETROPOLITAN COUNTIES

	0 BEDROOMS	1 BEDROOM	2 BEDROOMS	3 BEDROOMS	4 BEDROOMS		0 BEDROOMS	1 BEDROOM	2 BEDROOMS	3 BEDROOMS	4 BEDROOMS
CAROLINE	277	332	391	490	549	DORCHESTER	284	345	407	509	570
GARRETT	263	320	377	470	527	KENT	289	352	414	519	580
ST MARYS	365	441	515	645	714	SOMERSET	284	345	407	509	570
TALBOT	317	385	453	567	634	WICOMICO	338	413	484	510	570
WORCESTER	286	349	407	509	570						

S T A T E MASSACHUSETTS

	0 BEDROOMS	1 BEDROOM	2 BEDROOMS	3 BEDROOMS	4 BEDROOMS
BOSTON, MA PMSA	560	681	803	1002	1123
COUNTY: BRISTOL TOWNS OF MANSFIELD, NORTON, RAYNHAM					
COUNTY: ESSEX TOWNS OF LYNN, LYNNFIELD, NAHANT, SAUGUS					
COUNTY MIDDLESEX TOWNS OF ACTON, ARLINGTON, ASHLAND, AYER, BEDFORD BELMONT, BOXBOROUGH, BURLINGTON, CAMBRIDGE, CARLISLE CONCORD, EVERETT, FRAMINGHAM, GROTON, HOLLISTON HOPKINTON, HUDSON, LEXINGTON, LINCOLN, LITTLETON MALDEN, MARLBOROUGH, MAYNARD, MEDFORD, MELROSE NATICK, NEWTON, NORTH READIN, READING, SHERBORN SHIRLEY, SOMERVILLE, STONEHAM, STOW, SUDBURY TOWNSEND, WAKEFIELD, WALTHAM, WATERTOWN, WAYLAND WESTON, WILMINGTON, WINCHESTER, WOBURN					
COUNTY: NORFOLK TOWNS OF BELLINGHAM, BRAINTREE, BROOKLINE, CANTON COHASSET, DEDHAM, DOVER, FOXBOROUGH, FRANKLIN HOLBROOK, MEDFIELD, MEDWAY, MILLIS, MILTON, NEEDHAM					

NOTE: THE FMRS FOR UNIT SIZES LARGER THAN FOUR-BEDROOMS ARE CALCULATED BY ADDING 15 PERCENT TO THE FOUR-BEDROOM FMR FOR EACH ADDITIONAL BEDROOM. TO ILLUSTRATE, THE FMR FOR A FIVE-BEDROOM UNIT IS 1.15 TIMES THE FOUR-BEDROOM FMR, AND THE CALCULATION OF THE FMR FOR A SIX-BEDROOM UNIT IS 1.30 TIMES THE FOUR-BEDROOM FMR, ETC

SCHEDULE B - FAIR MARKET RENTS FOR EXISTING HOUSING 031688

S T A T E: MASSACHUSETTS

	0 BEDROOMS	1 BEDROOM	2 BEDROOMS	3 BEDROOMS	4 BEDROOMS
NORFOLK, NORWOOD, QUINCY, RANDOLPH, SHARON STOUGHTON, WALPOLE, WELLESLEY, WESTWOOD, WEYMOUTH WRENTHAM					
COUNTY: PLYMOUTH TOWNS OF CARVER, DUXBURY, HANOVER, HANSON, HINGHAM HULL, KINGSTON, LAKEVILLE, MARSHFIELD, MIDDLEBOROUG NORWELL, PEMBROKE, PLYMOUTH, PLYMPTON, ROCKLAND SCITUATE					
COUNTY: SUFFOLK TOWNS OF BOSTON, CHELSEA, REVERE, WINTHROP					
COUNTY: WORCESTER TOWNS OF BERLIN, BOLTON, HARVARD, HOPEDALE LANCASTER, MENDON, MILFORD, SOUTHBOROUGH, UPTON					
BROCKTON, MA PMSA	418	505	633	768	861
COUNTY: BRISTOL TOWNS OF EASTON					
COUNTY: NORFOLK TOWNS OF AVON					
COUNTY: PLYMOUTH TOWNS OF ABINGTON, BRIDGEWATER, BROCKTON EAST BRIDGEW, HALIFAX, WEST BRIDGEW, WHITMAN					
FALL RIVER, MA-RI PMSA	366	436	524	607	670
COUNTY: BRISTOL TOWNS OF FALL RIVER, SOMERSET, SWANSEA, WESTPORT					
FITCHBURG-LEOMINSTER, MA MSA	401	485	572	715	802
COUNTY: MIDDLESEX TOWNS OF ASHBY					
COUNTY: WORCESTER TOWNS OF ASHBURNHAM, FITCHBURG, LEOMINSTER LUNENBURG, WESTMINSTER					
LAWRENCE-HAVERHILL, MA-NH PMSA	447	544	652	745	829
COUNTY: ESSEX TOWNS OF AMESBURY, ANDOVER, BOXFORD, GEORGETOWN GROVELAND, HAVERHILL, LAWRENCE, MERRIMAC, METHUEN NEWBURY, NEWBURYPORT, NORTH ANDOVE, SALISBURY WEST NEWBURY					
LOWELL, MA-NH PMSA	430	523	610	739	843
COUNTY: MIDDLESEX TOWNS OF BILLERICA, CHELMSFORD, DRACUT, DUNSTABLE LOWELL, PEPPERELL, TEWKSBURY, TYNGSBOROUGH, WESTFORD					
NEW BEDFORD, MA MSA	373	419	496	607	670
COUNTY: BRISTOL TOWNS OF ACUSHNET, DARTMOUTH, FAIRHAVEN, FREETOWN NEW BEDFORD					
COUNTY: PLYMOUTH TOWNS OF MARION, MATTAPOISETT, ROCHESTER					
PAWTUCKET-WOONSOCKET-ATTLEBORO, RI-MA PMSA	355	430	506	621	709
COUNTY: BRISTOL TOWNS OF ATTLEBORO, NORTH ATTLEB, REHOBOTH, SEEKONK					
COUNTY: NORFOLK TOWNS OF PLAINVILLE					
COUNTY: WORCESTER TOWNS OF BLACKSTONE, MILLVILLE					
PITTSFIELD, MA MSA	370	449	525	653	736
COUNTY: BERKSHIRE TOWNS OF CHESHIRE, DALTON, HINSDALE, LANESBOROUGH LEE, LENOX, PITTSFIELD, RICHMOND, STOCKBRIDGE					
SALEM-GLOUCESTER, MA PMSA	499	605	713	890	997
COUNTY: ESSEX TOWNS OF BEVERLY, DANVERS, ESSEX, GLOUCESTER, HAMILTON IPSWICH, MANCHESTER, MARBLEHEAD, MIDDLETON, PEABODY ROCKPORT, ROWLEY, SALEM, SWAMPSCOTT, TOPSFIELD WENHAM					
SPRINGFIELD, MA MSA	379	460	537	670	752
COUNTY: HAMPDEN TOWNS OF AGAWAM, CHICOPEE, EAST LONGMEA, HAMPDEN HOLYOKE, LONGMEADOW, LUDLOW, MONSON, MONTGOMERY					

NOTE: THE FMRS FOR UNIT SIZES LARGER THAN FOUR-BEDROOMS ARE CALCULATED BY ADDING 15 PERCENT TO THE FOUR-BEDROOM FMR FOR EACH ADDITIONAL BEDROOM. TO ILLUSTRATE, THE FMR FOR A FIVE-BEDROOM UNIT IS 1.15 TIMES THE FOUR-BEDROOM FMR, AND THE CALCULATION OF THE FMR FOR A SIX-BEDROOM UNIT IS 1.30 TIMES THE FOUR-BEDROOM FMR, ETC.

SCHEDULE B - FAIR MARKET RENTS FOR EXISTING HOUSING 031688

S T A T E MASSACHUSETTS

	0 BEDROOMS	1 BEDROOM	2 BEDROOMS	3 BEDROOMS	4 BEDROOMS
PALMER, RUSSELL, SOUTHWICK, SPRINGFIELD, WESTFIELD WEST SPRINGF, WILBRAHAM					
COUNTY HAMPSHIRE TOWNS OF BELCHERTOWN, EASTHAMPTON, GRANBY HUNTINGTON, NORTHAMPTON, SOUTHAMPTON, SOUTH HADLEY					
WORCESTER, MA MSA	384	472	553	694	775
COUNTY WORCESTER TOWNS OF AUBURN, BARRE, BOYLSTON, BROOKFIELD CHARLTON, CLINTON, DOUGLAS, DUDLEY, EAST BROOKFI GRAFTON, HOLDEN, LEICESTER, MILLBURY, NORTHBOROUGH NORTHBRIDGE, NORTH BROOKF, OXFORD, PAXTON, PRINCETON RUTLAND, SHREWSBURY, SPENCER, STERLING, SUTTON UXBRIDGE, WEBSTER, WESTBOROUGH, WEST BOYLSTO WORCESTER					

NONMETROPOLITAN COUNTIES OR PARTS OF COUNTIES	0 BEDROOMS	1 BEDROOM	2 BEDROOMS	3 BEDROOMS	4 BEDROOMS
BARNSTABLE COUNTY	496	612	700	875	981
BERKSHIRE COUNTY TOWNS OF ADAMS, ALFORD, BECKET, CLARKSBURG, EGREMONT FLORIDA, GREAT BARRIN, HANCOCK, MONTEREY, MOUNT WASHIN NEW ASHFORD, NEW MARLBORO, NORTH ADAMS, OTIS, PERU, SANDISFIELD SAVOY, SHEFFIELD, TYRINGHAM, WASHINGTON, WEST STOCKBR WILLIAMSTOWN, WINDSOR	326	396	466	583	653
BRISTOL COUNTY TOWNS OF BERKLEY, DIGHTON, TAUNTON	361	436	514	617	687
DUKES COUNTY	496	612	700	875	981
FRANKLIN COUNTY	379	449	524	659	734
HAMPDEN COUNTY TOWNS OF BLANDFORD, BRIMFIELD, CHESTER, GRANVILLE HOLLAND, TOLLAND, WALES	341	414	487	610	683
HAMPSHIRE COUNTY TOWNS OF AMHERST, CHESTERFIELD, CUMMINGTON, GOSHEN HADLEY, HATFIELD, MIDDLEFIELD, PELHAM, PLAINFIELD, WARE WESTHAMPTON, WILLIAMSBURG, WORTHINGTON	443	514	630	758	880
NANTUCKET COUNTY	496	612	700	875	981
PLYMOUTH COUNTY TOWNS OF WAREHAM	361	427	501	619	689
WORCESTER COUNTY TOWNS OF ATHOL, GARDNER, HARDWICK, HUBBARDSTON NEW BRAINTRE, OAKHAM, PETERSHAM, PHILLIPSTON, ROYALSTON SOUTHBRIDGE, STURBRIDGE, TEMPLETON, WARREN, WEST BROOKFI WINCHENDON	361	426	514	630	700

S T A T E MICHIGAN

	0 BEDROOMS	1 BEDROOM	2 BEDROOMS	3 BEDROOMS	4 BEDROOMS
ANN ARBOR, MI PMSA	394	479	565	706	791
COUNTY(IES) WASHTENAW					
BATTLE CREEK, MI MSA	265	322	378	475	592
COUNTY(IES) CALHOUN					
BENTON HARBOR, MI MSA	295	359	420	526	589
COUNTY(IES) BERRIEN					
DETROIT, MI PMSA	367	441	514	642	715
COUNTY(IES) LAPEER, LIVINGSTON, MACOMB, MONROE, OAKLAND, ST CLAIR WAYNE					

NOTE. THE FMRS FOR UNIT SIZES LARGER THAN FOUR-BEDROOMS ARE CALCULATED BY ADDING 15 PERCENT TO THE FOUR-BEDROOM FMR FOR EACH ADDITIONAL BEDROOM. TO ILLUSTRATE, THE FMR FOR A FIVE-BEDROOM UNIT IS 1.15 TIMES THE FOUR-BEDROOM FMR, AND THE CALCULATION OF THE FMR FOR A SIX-BEDROOM UNIT IS 1.30 TIMES THE FOUR-BEDROOM FMR, ETC.

SCHEDULE B - FAIR MARKET RENTS FOR EXISTING HOUSING 031688

S T A T E MICHIGAN

	0 BEDROOMS	1 BEDROOM	2 BEDROOMS	3 BEDROOMS	4 BEDROOMS
FLINT, MI MSA	279	339	401	501	560
COUNTY(IES) GENESEE					
GRAND RAPIDS, MI MSA	313	384	450	562	635
COUNTY(IES) KENT, OTTAWA					
JACKSON, MI MSA	292	353	416	520	583
COUNTY(IES) JACKSON					
KALAMAZOO, MI MSA	304	366	430	529	589
COUNTY(IES) KALAMAZOO					
LANSING-EAST LANSING, MI MSA	319	382	448	556	621
COUNTY(IES) CLINTON, EATON, INGHAM					
MUSKEGON, MI MSA	259	314	371	464	519
COUNTY(IES) MUSKEGON					
SAGINAW-BAY CITY-MIDLAND, MI MSA	288	347	408	511	572
COUNTY(IES) BAY, MIDLAND, SAGINAW					

NONMETROPOLITAN COUNTIES

	0 BEDROOMS	1 BEDROOM	2 BEDROOMS	3 BEDROOMS	4 BEDROOMS		0 BEDROOMS	1 BEDROOM	2 BEDROOMS	3 BEDROOMS	4 BEDROOMS
ALCONA	231	282	332	415	465	ALGER	228	277	328	409	458
ALLEGAN	268	327	383	480	538	ALPENA	231	282	332	415	465
ANTRIM	290	350	413	517	579	ARENAC	254	309	365	455	510
BARAGA	237	287	338	423	475	BARRY	270	329	387	484	542
BENZIE	290	350	413	517	579	BRANCH	270	329	387	484	542
CASS	263	319	375	470	526	CHARLEVOIX	290	350	413	517	579
CHEBOYGAN	231	282	332	415	465	CHIPPEWA	228	277	328	409	458
CLARE	254	309	365	455	510	CRAWFORD	231	282	332	415	465
DELTA	228	277	328	409	458	DICKINSON	237	300	353	442	496
EMMET	290	350	413	517	579	GLADWIN	254	309	365	455	510
GOGEBIC	237	287	338	423	475	GRD TRAVERSE	290	350	413	517	579
GRATIOT	291	352	414	519	581	HILLSDALE	288	348	411	515	577
HOUGHTON	237	287	338	423	475	HURON	261	317	372	466	522
IONIA	271	328	385	481	538	IOSCO	254	309	365	455	510
IRON	237	287	338	423	475	ISABELLA	291	352	414	519	581
KALKASKA	290	350	413	517	579	KEWEENAW	237	287	338	423	475
LAKE	266	324	380	476	534	LEELANAU	290	350	413	517	579
LENAWEE	288	348	411	515	577	LUCE	228	277	328	409	458
MACKINAC	228	277	328	409	458	MANISTEE	290	350	413	517	579
MARQUETTE	290	350	413	517	579	MASON	266	324	380	476	534
MECOSTA	266	324	380	476	534	MENOMINEE	290	350	413	517	579
MISSAUKEE	290	350	413	517	579	MONTCALM	268	327	383	480	538
MONTMORENCY	231	282	332	415	465	NEWAYGO	266	324	380	476	534
OCEANA	258	312	369	462	517	OGEMAW	254	309	365	455	510
ONTONAGON	237	287	338	423	475	OSCEOLA	266	324	380	476	534
OSCODA	231	282	332	415	465	OTSEWO	231	282	332	415	465

NOTE: THE FMRS FOR UNIT SIZES LARGER THAN FOUR-BEDROOMS ARE CALCULATED BY ADDING 15 PERCENT TO THE FOUR-BEDROOM FMR FOR EACH ADDITIONAL BEDROOM. TO ILLUSTRATE, THE FMR FOR A FIVE-BEDROOM UNIT IS 1.15 TIMES THE FOUR-BEDROOM FMR, AND THE CALCULATION OF THE FMR FOR A SIX-BEDROOM UNIT IS 1.30 TIMES THE FOUR-BEDROOM FMR, ETC.

SCHEDULE B - FAIR MARKET RENTS FOR EXISTING HOUSING 031688

S T A T E: MICHIGAN

NONMETROPOLITAN COUNTIES

	0 BEDROOMS	1 BEDROOM	2 BEDROOMS	3 BEDROOMS	4 BEDROOMS		0 BEDROOMS	1 BEDROOM	2 BEDROOMS	3 BEDROOMS	4 BEDROOMS
PRESQUE ISLE	231	282	332	415	465	ROSCOMMON	254	309	365	455	510
ST JOSEPH	270	329	387	484	542	SANILAC	261	317	372	466	522
SCHOOLCRAFT	228	277	328	409	458	SHIAWASSEE	287	347	410	512	575
TUSCOLA	261	317	372	466	522	VAN BUREN	263	319	375	470	526
WEXFORD	290	350	413	517	579						

S T A T E MINNESOTA

	0 BEDROOMS	1 BEDROOM	2 BEDROOMS	3 BEDROOMS	4 BEDROOMS
DULUTH, MN-WI MSA	296	352	415	520	583
COUNTY(IES): ST LOUIS					
FARGO-MOORHEAD, ND-MN MSA	296	360	423	531	595
COUNTY(IES): CLAY					
MINNEAPOLIS-ST. PAUL, MN-WI MSA	367	445	528	660	737
COUNTY(IES): ANOKA, CARVER, CHISAGO, DAKOTA, HENNEPIN, ISANTI RAMSEY, SCOTT, WASHINGTON, WRIGHT					
ROCHESTER, MN MSA	313	380	448	560	627
COUNTY(IES): OLMSTED					
ST. CLOUD, MN MSA	299	363	427	535	598
COUNTY(IES): BENTON, SHERBURNE, STEARNS					

NONMETROPOLITAN COUNTIES

	0 BEDROOMS	1 BEDROOM	2 BEDROOMS	3 BEDROOMS	4 BEDROOMS		0 BEDROOMS	1 BEDROOM	2 BEDROOMS	3 BEDROOMS	4 BEDROOMS
AITKIN	268	327	384	481	539	BECKER	267	326	382	479	537
BELTRAMI	258	313	368	460	517	BIG STONE	238	291	342	429	479
BLUE EARTH	299	362	419	518	573	BROWN	254	309	364	455	509
CARLTON	270	329	384	481	539	CASS	252	305	361	451	505
CHIPPEWA	238	291	342	429	479	CLEARWATER	258	313	368	460	517
COOK	268	327	384	481	539	COTTONWOOD	238	291	342	429	479
CROW WING	252	305	382	473	526	DODGE	242	294	345	432	484
DOUGLAS	267	326	382	479	537	FARIBAULT	254	309	364	455	509
FILLMORE	247	300	355	443	495	FREEBORN	292	355	418	522	585
GOODHUE	258	313	366	455	509	GRANT	267	326	382	479	537
HOUSTON	247	300	355	443	495	HUBBARD	258	313	368	460	517
ITASCA	270	329	384	481	539	JACKSON	246	297	347	432	480
KANABEC	268	327	384	481	539	KANDIYOHI	281	342	402	504	563
KITTSON	256	313	368	460	517	KOOCHICHING	269	327	384	481	539
LAC QUI PARL	238	291	342	429	479	LAKE	268	327	384	481	539
LAKE OF WOOD	258	313	368	460	517	LE SUEUR	279	340	399	499	559
LINCOLN	246	297	347	432	480	LYON	246	297	347	432	480
MCLEOD	281	342	402	504	563	MAHNOMEN	258	313	368	460	517
MARSHALL	258	313	363	460	517	MARTIN	254	309	364	455	509
MEEKER	281	342	402	504	563	MILLE LACS	268	327	384	481	539

NOTE. THE FMRS FOR UNIT SIZES LARGER THAN FOUR-BEDROOMS ARE CALCULATED BY ADDING 15 PERCENT TO THE FOUR-BEDROOM FMR FOR EACH ADDITIONAL BEDROOM. TO ILLUSTRATE, THE FMR FOR A FIVE-BEDROOM UNIT IS 1.15 TIMES THE FOUR-BEDROOM FMR, AND THE CALCULATION OF THE FMR FOR A SIX-BEDROOM UNIT IS 1.30 TIMES THE FOUR-BEDROOM FMR, ETC.

SCHEDULE B - FAIR MARKET RENTS FOR EXISTING HOUSING 031688

S T A T E MINNESOTA

NONMETROPOLITAN COUNTIES

	0 BEDROOMS	1 BEDROOM	2 BEDROOMS	3 BEDROOMS	4 BEDROOMS		0 BEDROOMS	1 BEDROOM	2 BEDROOMS	3 BEDROOMS	4 BEDROOMS
MORRISON	252	305	361	451	505	MOWER	247	300	355	443	495
MURRAY	246	297	347	432	480	NICOLLET	279	340	399	499	559
NOBLES	246	297	347	432	480	NORMAN	258	313	368	460	517
OTTER TAIL	267	326	382	479	537	PENNINGTON	258	313	368	460	517
PINE	268	327	384	481	539	PIPESTONE	246	297	347	432	480
POLK	258	313	368	460	517	POPE	267	326	382	479	537
RED LAKE	258	313	368	460	517	REDWOOD	238	291	342	429	479
RENVILLE	281	342	402	504	563	RICE	292	355	418	522	585
ROCK	246	297	347	432	480	ROSEAU	258	313	368	460	517
SIBLEY	279	340	399	499	559	STEELE	292	355	418	522	585
STEVENS	267	326	382	479	537	SWIFT	238	291	342	429	479
TODD	252	305	361	451	505	TRAVERSE	267	326	382	479	537
WABASHA	258	313	366	455	509	WADENA	252	305	361	451	505
WASECA	254	309	364	455	509	WATONWAN	254	309	364	455	509
WILKIN	267	326	382	479	537	WINONA	249	300	355	443	495
YELLOW MEDIC	238	291	342	429	479						

S T A T E. MISSISSIPPI

	0 BEDROOMS	1 BEDROOM	2 BEDROOMS	3 BEDROOMS	4 BEDROOMS
BILOXI-GULFPORT, MS MSA.....	249	304	358	448	501
COUNTY(IES): HANCOCK, HARRISON					
JACKSON, MS MSA.....	317	385	454	568	637
COUNTY(IES): HINDS, MADISON, RANKIN					
MEMPHIS, TN-AR-MS MSA.....	285	345	405	505	565
COUNTY(IES) DE SOTO					
PASCAGOULA, MS MSA.....	273	330	388	488	547
COUNTY(IES) JACKSON					

NONMETROPOLITAN COUNTIES

	0 BEDROOMS	1 BEDROOM	2 BEDROOMS	3 BEDROOMS	4 BEDROOMS		0 BEDROOMS	1 BEDROOM	2 BEDROOMS	3 BEDROOMS	4 BEDROOMS
ADAMS	219	254	299	396	429	ALCORN	218	264	311	388	436
AMITE	182	221	260	325	365	ATTALA	183	223	261	327	367
BENTON	204	248	293	367	411	BOLIVAR	211	256	302	377	422
CALHOUN	239	291	343	428	484	CARROLL	183	223	261	327	367
CHICKASAW	246	291	343	432	481	CHOCTAW	236	275	322	404	453
CLAIBORNE	182	221	260	325	365	CLARKE	237	288	336	421	471
CLAY	236	275	322	404	453	COAHOMA	221	267	314	392	442
COPIAH	192	234	276	345	386	COVINGTON	185	225	265	331	371
FORREST	237	289	340	424	476	FRANKLIN	182	221	260	325	365
GEORGE	185	225	265	331	371	GREENE	185	225	265	331	371
GRENADA	183	223	261	327	367	HOLMES	183	223	261	327	367

NOTE: THE FMRS FOR UNIT SIZES LARGER THAN FOUR-BEDROOMS ARE CALCULATED BY ADDING 15 PERCENT TO THE FOUR-BEDROOM FMR FOR EACH ADDITIONAL BEDROOM. TO ILLUSTRATE, THE FMR FOR A FIVE-BEDROOM UNIT IS 1 15 TIMES THE FOUR-BEDROOM FMR, AND THE CALCULATION OF THE FMR FOR A SIX-BEDROOM UNIT IS 1.30 TIMES THE FOUR-BEDROOM FMR, ETC

SCHEDULE B - FAIR MARKET RENTS FOR EXISTING HOUSING 031688

S T A T E: MISSISSIPPI

NONMETROPOLITAN COUNTIES

	0 BEDROOMS	1 BEDROOM	2 BEDROOMS	3 BEDROOMS	4 BEDROOMS		0 BEDROOMS	1 BEDROOM	2 BEDROOMS	3 BEDROOMS	4 BEDROOMS
HUMPHREYS	211	256	302	377	422	ISSAQUENA	211	256	302	377	422
ITAWAMBA	225	273	321	402	450	JASPER	237	288	336	421	471
JEFFERSON	182	221	260	325	365	JEFFERSON DA	185	225	265	331	371
JONES	239	278	313	356	396	KEMPER	237	288	336	421	471
LAFAYETTE	239	291	343	428	481	LAMAR	237	289	340	424	476
LAUDERDALE	235	285	336	421	471	LAWRENCE	182	221	260	325	365
LEAKE	201	245	290	363	407	LEE	238	291	341	426	476
LEFLORE	239	265	312	407	438	LINCOLN	182	221	260	325	365
LOWNDES	260	322	370	495	516	MARION	237	289	340	424	476
MARSHALL	204	248	293	367	411	MONROE	225	273	321	402	450
MONTGOMERY	183	223	261	327	367	NESHOBA	201	245	290	363	407
NEWTON	201	245	290	363	407	NOXUBEE	226	275	322	404	453
OKTIBBEHA	226	275	322	404	453	PANOLA	221	267	314	392	442
PEARL RIVER	237	289	340	424	476	PERRY	185	225	265	331	371
PIKE	219	254	299	396	429	PONTOTOC	246	291	343	432	481
PRENTISS	204	248	293	367	411	QUITMAN	221	267	314	392	442
SCOTT	201	245	290	363	407	SHARKEY	211	256	302	377	422
SIMPSON	192	234	276	345	386	SMITH	201	245	290	363	407
STONE	237	289	340	424	476	SUNFLOWER	211	256	302	377	422
TALLAHATCHIE	221	267	314	392	442	TATE	221	267	314	392	442
TIPPAH	204	248	293	367	411	TISHOMIGO	204	248	293	367	411
TUNICA	221	267	314	392	442	UNION	246	291	343	432	481
WALTHALL	182	221	260	325	365	WARREN	267	325	382	479	536
WASHINGTON	211	256	302	377	422	WAYNE	185	225	265	331	371
WEBSTER	236	275	322	404	453	WILKINSON	182	221	260	325	365
WINSTON	236	275	322	404	453	YALOBUSHA	183	223	261	327	367
YAZOO	267	325	382	479	536						

S T A T E: MISSOURI

	0 BEDROOMS	1 BEDROOM	2 BEDROOMS	3 BEDROOMS	4 BEDROOMS
COLUMBIA, MO MSA.....	289	351	415	519	582
COUNTY(IES): BOONE					
JOPLIN, MO MSA.....	223	272	320	401	449
COUNTY(IES): JASPER, NEWTON					
KANSAS CITY, MO-KS MSA.....	303	368	433	541	605
COUNTY(IES): CASS, CLAY, JACKSON, LAFAYETTE, PLATTE, RAY					
ST. JOSEPH, MO MSA.....	238	288	340	424	477
COUNTY(IES): BUCHANEN					
ST. LOUIS, MO-IL MSA.....	310	378	445	559	626
COUNTY(IES): FRANKLIN, JEFFERSON, ST CHARLES, ST LOUIS, ST. LOUIS					

NOTE: THE FMRS FOR UNIT SIZES LARGER THAN FOUR-BEDROOMS ARE CALCULATED BY ADDING 15 PERCENT TO THE FOUR-BEDROOM FMR FOR EACH ADDITIONAL BEDROOM. TO ILLUSTRATE, THE FMR FOR A FIVE-BEDROOM UNIT IS 1.15 TIMES THE FOUR-BEDROOM FMR, AND THE CALCULATION OF THE FMR FOR A SIX-BEDROOM UNIT IS 1.30 TIMES THE FOUR-BEDROOM FMR, ETC.

SCHEDULE B - FAIR MARKET RENTS FOR EXISTING HOUSING

031688

S T A T E: MISSOURI

	0 BEDROOMS	1 BEDROOM	2 BEDROOMS	3 BEDROOMS	4 BEDROOMS
SPRINGFIELD, MO MSA..... COUNTY(IES): CHRISTIAN, GREENE	248	303	356	446	498

NONMETROPOLITAN COUNTIES

	0 BEDROOMS	1 BEDROOM	2 BEDROOMS	3 BEDROOMS	4 BEDROOMS
ADAIR	226	274	323	406	454
ATCHISON	214	261	307	384	430
BARRY	209	253	300	375	419
BATES	204	247	291	364	409
BOLLINGER	240	292	343	428	482
CALDWELL	214	261	308	384	430
CAMDEN	229	278	326	409	458
CARROLL	220	268	316	393	443
CEDAR	204	247	291	364	409
CLARK	226	274	323	406	454
COLE	251	305	359	450	503
CRAWFORD	219	267	313	392	441
DALLAS	209	253	300	375	419
DE KALB	214	261	307	384	430
DOUGLAS	198	241	283	353	396
GASCONADE	219	267	313	392	441
GRUNDY	226	274	323	406	454
HENRY	204	247	291	364	409
HOLT	214	261	307	384	430
HOWELL	198	241	283	353	396
JOHNSON	229	279	328	411	459
LACLEDE	229	278	326	409	458
LEWIS	224	271	320	399	444
LINN	226	274	323	406	454
MCDONALD	209	253	300	375	419
MADISON	240	292	343	428	482
MARION	224	271	320	399	444
MILLER	229	278	326	409	458
MONITEAU	251	305	359	450	503
MONTGOMERY	219	267	313	392	441
NEW MADRID	198	241	283	353	396
OREGON	198	241	283	353	396
OZARK	198	241	283	353	396
PERRY	240	292	343	428	482
PHELPS	255	309	364	461	517
POLK	209	253	300	375	419

	0 BEDROOMS	1 BEDROOM	2 BEDROOMS	3 BEDROOMS	4 BEDROOMS
ANDREW	238	288	340	424	477
AUDRAIN	251	305	359	450	503
BARTON	204	247	291	364	409
BENTON	204	247	291	364	409
BUTLER	198	241	286	357	399
CALLAWAY	251	305	359	450	503
CAPE GIRARDE	240	292	343	428	482
CARTER	198	241	286	357	399
CHARITON	220	268	316	393	443
CLINTON	214	261	307	384	430
COOPER	251	305	359	450	503
DADE	209	253	300	375	419
DAVIESS	214	261	308	384	430
DENT	219	267	313	392	441
DUNKLIN	198	241	283	353	396
GENTRY	214	261	307	384	430
HARRISON	214	261	308	384	430
HICKORY	204	247	291	364	409
HOWARD	251	305	359	450	503
IRON	240	292	343	428	482
KNOX	226	274	323	406	454
LAWRENCE	209	253	300	375	419
LINCOLN	219	267	313	392	441
LIVINGSTON	226	274	323	406	454
MACON	219	267	313	392	441
MARIES	219	267	313	392	441
MERCER	214	261	308	384	430
MISSISSIPPI	198	241	283	353	396
MONROE	219	267	313	392	441
MORGAN	229	278	326	409	458
NODAWAY	222	261	316	384	430
OSAGE	251	305	359	450	503
PEMISCOT	198	241	283	353	396
PETTIS	220	268	316	393	443
PIKE	219	267	313	392	441
PULASKI	229	278	326	409	458

NOTE: THE FMRS FOR UNIT SIZES LARGER THAN FOUR-BEDROOMS ARE CALCULATED BY ADDING 15 PERCENT TO THE FOUR-BEDROOM FMR FOR EACH ADDITIONAL BEDROOM. TO ILLUSTRATE, THE FMR FOR A FIVE-BEDROOM UNIT IS 1.15 TIMES THE FOUR-BEDROOM FMR, AND THE CALCULATION OF THE FMR FOR A SIX-BEDROOM UNIT IS 1.30 TIMES THE FOUR-BEDROOM FMR, ETC.

SCHEDULE B - FAIR MARKET RENTS FOR EXISTING HOUSING 031688

S T A T E: MISSOURI

NONMETROPOLITAN COUNTIES

	0 BEDROOMS	1 BEDROOM	2 BEDROOMS	3 BEDROOMS	4 BEDROOMS		0 BEDROOMS	1 BEDROOM	2 BEDROOMS	3 BEDROOMS	4 BEDROOMS
PUTNAM	226	274	323	406	454	RALLS	224	271	320	399	444
RANDOLPH	219	267	313	392	441	REYNOLDS	198	241	283	353	396
RIPLEY	198	241	286	357	399	ST CLAIR	204	247	291	364	409
STE GENEVIEV	240	292	343	428	482	ST FRANCOIS	240	292	343	428	482
SALINE	220	268	316	393	443	SCHUYLER	226	274	323	406	454
SCOTLAND	226	274	323	406	454	SCOTT	240	292	343	428	482
SHANNON	198	241	283	353	396	SHELBY	219	267	313	392	441
STODDARD	198	241	283	353	396	STONE	209	253	300	375	419
SULLIVAN	226	274	323	406	454	TANEY	209	253	300	375	419
TEXAS	198	241	283	353	396	VERNON	204	247	291	364	409
WARREN	219	267	313	392	441	WASHINGTON	219	267	313	392	441
WAYNE	198	241	286	357	399	WEBSTER	209	253	300	375	419
WORTH	214	261	307	384	430	WRIGHT	198	241	283	353	396

S T A T E: MONTANA

	0 BEDROOMS	1 BEDROOM	2 BEDROOMS	3 BEDROOMS	4 BEDROOMS
BILLINGS, MT MSA..... COUNTY(IES): YELLOWSTONE	343	418	492	614	688
GREAT FALLS, MT MSA..... COUNTY(IES): CASCADE	296	359	424	530	593

NONMETROPOLITAN COUNTIES

	0 BEDROOMS	1 BEDROOM	2 BEDROOMS	3 BEDROOMS	4 BEDROOMS		0 BEDROOMS	1 BEDROOM	2 BEDROOMS	3 BEDROOMS	4 BEDROOMS
BEAVERHEAD	295	358	422	527	591	BIG HORN	277	337	397	497	557
BLAINE	275	334	393	492	551	BROADWATER	295	358	422	527	591
CARBON	277	337	397	497	557	CARTER	277	337	397	497	557
CHOUTEAU	275	334	393	492	551	CUSTER	277	337	397	497	557
DANIELS	275	334	393	492	551	DAWSON	277	337	397	497	557
DEER LODGE	295	358	422	527	591	FALLON	277	337	397	497	557
FERGUS	277	337	397	497	557	FLATHEAD	301	366	430	539	604
GALLATIN	325	399	472	585	658	GARFIELD	277	337	397	497	557
GLACIER	275	334	393	492	551	GOLDEN VALLE	277	337	397	497	557
GRANITE	295	358	422	527	591	HILL	275	334	393	492	551
JEFFERSON	295	358	422	527	591	JUDITH BASIN	277	337	397	497	557
LAKE	301	366	430	539	604	LEWIS+ CLARK	337	416	490	607	686
LIBERTY	275	334	393	492	551	LINCOLN	301	366	430	539	604
MCCONE	277	337	397	497	557	MADISON	295	358	422	527	591
MEAGHER	295	358	422	527	591	MINERAL	301	366	430	539	604
MISSOULA	301	366	430	539	604	MUSSELSHELL	277	337	397	497	557
PARK	295	358	422	527	591	PETROLEUM	277	337	397	497	557

NOTE: THE FMRS FOR UNIT SIZES LARGER THAN FOUR-BEDROOMS ARE CALCULATED BY ADDING 15 PERCENT TO THE FOUR-BEDROOM FMR FOR EACH ADDITIONAL BEDROOM. TO ILLUSTRATE, THE FMR FOR A FIVE-BEDROOM UNIT IS 1.15 TIMES THE FOUR-BEDROOM FMR, AND THE CALCULATION OF THE FMR FOR A SIX-BEDROOM UNIT IS 1.30 TIMES THE FOUR-BEDROOM FMR, ETC.

SCHEDULE B - FAIR MARKET RENTS FOR EXISTING HOUSING

031688

S T A T E: MONTANA

NONMETROPOLITAN COUNTIES

	0 BEDROOMS	1 BEDROOM	2 BEDROOMS	3 BEDROOMS	4 BEDROOMS
PHILLIPS	275	334	393	492	551
POWDER RIVER	277	337	397	497	557
PRAIRIE	277	337	397	497	557
RICHLAND	277	337	397	497	557
ROSEBUD	277	337	397	497	557
SHERIDAN	275	334	393	492	551
STILLWATER	277	337	397	497	557
TETON	275	334	393	492	551
TREASURE	277	337	397	497	557
WHEATLAND	277	337	397	497	557
YL-ST-NT-PK	295	358	422	527	591

	0 BEDROOMS	1 BEDROOM	2 BEDROOMS	3 BEDROOMS	4 BEDROOMS
PONDERA	275	334	393	492	551
POWELL	295	358	422	527	591
RAVALLI	301	366	430	539	604
ROOSEVELT	275	334	393	492	551
SANDERS	301	366	430	539	604
SILVER BOW	295	358	422	527	591
SWEET GRASS	277	337	397	497	557
TOOLE	275	334	393	492	551
VALLEY	275	334	393	492	551
WIBAUX	277	337	397	497	557

S T A T E: NEBRASKA

	0 BEDROOMS	1 BEDROOM	2 BEDROOMS	3 BEDROOMS	4 BEDROOMS
LINCOLN, NE MSA..... COUNTY(IES): LANCASTER	293	356	419	524	587
OMAHA, NE-IA MSA..... COUNTY(IES): DOUGLAS, SARPY, WASHINGTON	288	349	411	515	578
SIOUX CITY, IA-NE MSA..... COUNTY(IES): DAKOTA	285	346	408	510	572

NONMETROPOLITAN COUNTIES

	0 BEDROOMS	1 BEDROOM	2 BEDROOMS	3 BEDROOMS	4 BEDROOMS
ADAMS	262	319	375	470	525
ARTHUR	222	270	317	397	444
BLAINE	215	261	307	384	432
BOX BUTTE	244	295	350	438	490
BROWN	215	261	307	384	432
BURT	235	286	336	421	472
CASS	232	282	332	414	466
CHASE	222	270	317	397	444
CHEYENNE	215	261	307	384	432
COLFAX	235	286	336	421	472
CUSTER	215	261	307	384	432
DAWSON	222	270	317	397	444
DIXON	254	309	365	454	511
DUNDY	222	270	317	397	444
FRANKLIN	262	319	375	470	525
FURNAS	222	270	317	397	444
GARDEN	215	261	307	384	432

	0 BEDROOMS	1 BEDROOM	2 BEDROOMS	3 BEDROOMS	4 BEDROOMS
ANTELOPE	254	309	365	454	511
BANNER	215	261	307	384	432
BOONE	235	286	336	421	472
BOYD	215	261	307	384	432
BUFFALO	262	319	375	470	525
BUTLER	232	282	332	414	466
CEDAR	254	309	365	454	511
CHERRY	215	261	307	384	432
CLAY	262	319	375	470	525
CUMING	235	286	336	421	472
DAWES	215	261	307	384	432
DEUEL	215	261	307	384	432
DODGE	235	286	336	421	472
FILLMORE	232	282	332	414	466
FRONTIER	222	270	317	397	444
GAGE	257	311	367	459	514
GARFIELD	215	261	307	384	432

NOTE: THE FMRS FOR UNIT SIZES LARGER THAN FOUR-BEDROOMS ARE CALCULATED BY ADDING 15 PERCENT TO THE FOUR-BEDROOM FMR FOR EACH ADDITIONAL BEDROOM. TO ILLUSTRATE, THE FMR FOR A FIVE-BEDROOM UNIT IS 1.15 TIMES THE FOUR-BEDROOM FMR, AND THE CALCULATION OF THE FMR FOR A SIX-BEDROOM UNIT IS 1.30 TIMES THE FOUR-BEDROOM FMR, ETC.

SCHEDULE B - FAIR MARKET RENTS FOR EXISTING HOUSING 031688

S T A T E: NEBRASKA

NONMETROPOLITAN COUNTIES

	0 BEDROOMS	1 BEDROOM	2 BEDROOMS	3 BEDROOMS	4 BEDROOMS		0 BEDROOMS	1 BEDROOM	2 BEDROOMS	3 BEDROOMS	4 BEDROOMS
GOSPER	222	270	317	397	444	GRANT	222	270	317	397	444
GREELEY	215	261	307	384	432	HALL	262	319	375	470	525
HAMILTON	262	319	375	470	525	HARLAN	262	319	375	470	525
HAYES	222	270	317	397	444	HITCHCOCK	222	270	317	397	444
HOLT	219	269	315	393	438	HOOKER	222	270	317	397	444
HOWARD	262	319	375	470	525	JEFFERSON	232	282	332	414	466
JOHNSON	232	282	332	414	466	KEARNEY	262	319	375	470	525
KEITH	222	270	317	397	444	KEYA PAHA	219	269	315	393	438
KIMBALL	215	261	307	384	432	KNOX	254	309	365	454	511
LINCOLN	222	270	317	397	444	LOGAN	222	270	317	397	444
LOUP	215	261	307	384	432	MCPHERSON	222	270	317	397	444
MADISON	254	309	365	454	511	MERRICK	262	319	375	470	525
MORRILL	215	261	307	384	432	NANCE	235	286	336	421	472
NEMAHA	232	282	332	414	466	NUCKOLLS	262	319	375	470	525
OTOE	232	282	332	414	466	PAWNEE	232	282	332	414	466
PERKINS	222	270	317	397	444	PHELPS	262	319	375	470	525
PIERCE	254	309	365	454	511	PLATTE	235	286	336	421	472
POLK	232	282	332	414	466	RED WILLOW	222	270	317	397	444
RICHARDSON	232	282	332	414	466	ROCK	219	269	315	393	438
SALINE	232	282	332	414	466	SAUNDERS	232	282	332	414	466
SCOTTS BLUFF	250	301	350	435	484	SEWARD	232	282	332	414	466
SHERIDAN	215	261	307	384	432	SHERMAN	215	261	307	384	432
SIOUX	215	261	307	384	432	STANTON	254	309	365	454	511
THAYER	232	282	332	414	466	THOMAS	222	270	317	397	444
THURSTON	235	286	336	421	472	VALLEY	215	261	307	384	432
WAYNE	254	309	365	454	511	WEBSTER	262	319	375	470	525
WHEELER	215	261	307	384	432	YORK	232	282	332	414	466

S T A T E: NEVADA

	0 BEDROOMS	1 BEDROOM	2 BEDROOMS	3 BEDROOMS	4 BEDROOMS
LAS VEGAS, NV MSA..... COUNTY(IES): CLARK	417	506	596	746	836
RENO, NV MSA..... COUNTY(IES): WASHOE	514	624	736	919	1031

NONMETROPOLITAN COUNTIES

	0 BEDROOMS	1 BEDROOM	2 BEDROOMS	3 BEDROOMS	4 BEDROOMS		0 BEDROOMS	1 BEDROOM	2 BEDROOMS	3 BEDROOMS	4 BEDROOMS
CHURCHILL	367	441	519	648	727	DOUGLAS	367	441	519	648	727
ELKO	367	441	519	648	727	ESMERALDA	363	441	519	648	727
EUREKA	363	441	519	648	727	HUMBOLDT	367	441	519	648	727

NOTE: THE FMRS FOR UNIT SIZES LARGER THAN FOUR-BEDROOMS ARE CALCULATED BY ADDING 15 PERCENT TO THE FOUR-BEDROOM FMR FOR EACH ADDITIONAL BEDROOM. TO ILLUSTRATE, THE FMR FOR A FIVE-BEDROOM UNIT IS 1.15 TIMES THE FOUR-BEDROOM FMR, AND THE CALCULATION OF THE FMR FOR A SIX-BEDROOM UNIT IS 1.30 TIMES THE FOUR-BEDROOM FMR, ETC.

SCHEDULE B - FAIR MARKET RENTS FOR EXISTING HOUSING 031688

S T A T E: NEVADA

NONMETROPOLITAN COUNTIES

	0 BEDROOMS	1 BEDROOM	2 BEDROOMS	3 BEDROOMS	4 BEDROOMS		0 BEDROOMS	1 BEDROOM	2 BEDROOMS	3 BEDROOMS	4 BEDROOMS
LANDER	367	441	519	648	727	LINCOLN	363	441	519	648	727
LYON	367	441	519	648	727	MINERAL	367	441	519	648	727
NYE	363	441	519	648	727	PERSHING	367	441	519	648	727
STOREY	367	441	519	648	727	WHITE PINE	363	441	519	648	727
CARSON CITY	367	441	519	648	727						

S T A T E: NEW HAMPSHIRE

	0 BEDROOMS	1 BEDROOM	2 BEDROOMS	3 BEDROOMS	4 BEDROOMS
LAWRENCE-HAVERHILL, MA-NH PMSA.....	447	544	652	745	829
COUNTY: ROCKINGHAM TOWNS OF ATKINSON, BRENTWOOD, DANVILLE, DERRY EAST KINGSTO, HAMPSTEAD, KINGSTON, NEWTON, PLAISTOW SALEM, SANDOWN, SEABROOK, WINDHAM					
LOWELL, MA-NH PMSA.....	430	523	610	739	843
COUNTY: HILLSBOROUGH TOWNS OF PELHAM					
MANCHESTER, NH MSA.....	398	484	569	711	798
COUNTY: HILLSBOROUGH TOWNS OF BEDFORD, GOFFSTOWN, MANCHESTER					
COUNTY: MERRIMACK TOWNS OF ALLENSTOWN, HOOKSETT					
COUNTY: ROCKINGHAM TOWNS OF AUBURN, CANDIA					
NASHUA, NH PMSA.....	449	545	642	804	900
COUNTY: HILLSBOROUGH TOWNS OF AMHERST, BROOKLINE, HOLLIS, HUDSON LITCHFIELD, MERRIMACK, MILFORD, MONT VERNON, NASHUA WILTON					
COUNTY: ROCKINGHAM TOWNS OF LONDONDERRY					
PORTSMOUTH-DOVER-ROCHESTER, NH-ME MSA.....	413	503	590	738	827
COUNTY: ROCKINGHAM TOWNS OF EXETER, GREENLAND, HAMPTON, NEW CASTLE NEWFIELDS, NEWINGTON, NEWMARKET, NORTH HAMPTO PORTSMOUTH, RYE, STRATHAM					
COUNTY: STRAFFORD TOWNS OF BARRINGTON, DOVER, DURHAM, FARMINGTON LEE, MADBURY, MILTON, ROCHESTER, ROLLINSFORD SOMERSWORTH					

NONMETROPOLITAN COUNTIES OR PARTS OF COUNTIES	0 BEDROOMS	1 BEDROOM	2 BEDROOMS	3 BEDROOMS	4 BEDROOMS
BELKNAP COUNTY	346	417	486	602	674
CARROLL COUNTY	342	415	488	610	684
CHESHIRE COUNTY	388	469	554	692	765
COOS COUNTY	319	387	456	569	638
GRAFTON COUNTY	355	433	509	635	712
HILLSBOROUGH COUNTY TOWNS OF ANTRIM, BENNINGTON, DEERING, FRANCESTOWN GREENFIELD, GREENVILLE, HANCOCK, HILLSBOROUGH, LYNDEBOROUGH MASON, NEW BOSTON, NEW IPSWICH, PETERBOROUGH, SHARON, TEMPLE WEARE, WINDSOR	437	531	624	780	863
MERRIMACK COUNTY TOWNS OF ANDOVER, BOSCAWEN, BOW, BRADFORD, CANTERBURY CHICHESTER, CONCORD, DANBURY, DUNBARTON, EPSOM, FRANKLIN HENNIKER, HILL, HOPKINTON, LOUDON, NEWBURY, NEW LONDON NORTHFIELD, PEMBROKE, PITTSFIELD, SALISBURY, SUTTON, WARNER	426	517	609	763	853

NOTE: THE FMRS FOR UNIT SIZES LARGER THAN FOUR-BEDROOMS ARE CALCULATED BY ADDING 15 PERCENT TO THE FOUR-BEDROOM FMR FOR EACH ADDITIONAL BEDROOM. TO ILLUSTRATE, THE FMR FOR A FIVE-BEDROOM UNIT IS 1.15 TIMES THE FOUR-BEDROOM FMR, AND THE CALCULATION OF THE FMR FOR A SIX-BEDROOM UNIT IS 1.30 TIMES THE FOUR-BEDROOM FMR, ETC.

SCHEDULE B - FAIR MARKET RENTS FOR EXISTING HOUSING 031688

S T A T E: NEW HAMPSHIRE

NONMETROPOLITAN COUNTIES OR PARTS OF COUNTIES	0 BEDROOMS	1 BEDROOM	2 BEDROOMS	3 BEDROOMS	4 BEDROOMS
WEBSTER, WILMOT					
ROCKINGHAM COUNTY TOWNS OF CHESTER, DEERFIELD, EPPING, FREMONT HAMPTON FALL, KENSINGTON, NORTHWOOD, NOTTINGHAM, RAYMOND SOUTH HAMPTO	437	531	624	780	863
STRAFFORD COUNTY TOWNS OF MIDDLETON, NEW DURHAM, STRAFFORD	387	472	556	696	768
SULLIVAN COUNTY	346	417	487	607	681

S T A T E: NEW JERSEY

	0 BEDROOMS	1 BEDROOM	2 BEDROOMS	3 BEDROOMS	4 BEDROOMS
ALLENTOWN-BETHLEHEM, PA-NJ MSA	317	385	450	567	632
COUNTY(IES): WARREN					
ATLANTIC CITY, NJ MSA	380	463	543	679	762
COUNTY(IES): ATLANTIC, CAPE MAY					
BERGEN-PASSAIC, NJ PMSA	535	649	770	962	1078
COUNTY(IES): BERGEN, PASSAIC					
JERSEY CITY, NJ PMSA	369	449	528	660	739
COUNTY(IES): HUDSON					
MIDDLESEX-SOMERSET-HUNTERDON, NJ PMSA	495	602	708	886	992
COUNTY(IES): HUNTERDON, MIDDLESEX, SOMERSET					
MONMOUTH-OCEAN, NJ PMSA	446	540	635	795	892
COUNTY(IES): MONMOUTH, OCEAN					
NEWARK, NJ PMSA	416	505	595	743	832
COUNTY(IES): ESSEX, MORRIS, SUSSEX, UNION					
PHILADELPHIA, PA-NJ PMSA	360	435	511	639	714
COUNTY(IES): BURLINGTON, CAMDEN, GLOUCESTER					
TRENTON, NJ PMSA	454	551	649	811	908
COUNTY(IES): MERCER					
VINELAND-MILLVILLE-BRIDGETON, NJ PMSA	364	442	520	651	729
COUNTY(IES): CUMBERLAND					
WILMINGTON, DE-NJ-MD PMSA	380	455	541	676	804
COUNTY(IES): SALEM					

S T A T E: NEW MEXICO

	0 BEDROOMS	1 BEDROOM	2 BEDROOMS	3 BEDROOMS	4 BEDROOMS
ALBUQUERQUE, NM MSA	345	419	492	616	691
COUNTY(IES): BERNALILLO					
LAS CRUCES, NM MSA	274	332	391	489	548
COUNTY(IES): DONA ANA					
SANTA FE, NM MSA	401	487	575	717	804
COUNTY(IES): LOS ALAMOS, SANTE FE					

NONMETROPOLITAN COUNTIES

	0 BEDROOMS	1 BEDROOM	2 BEDROOMS	3 BEDROOMS	4 BEDROOMS		0 BEDROOMS	1 BEDROOM	2 BEDROOMS	3 BEDROOMS	4 BEDROOMS
CATRON	247	300	354	442	495	CHAVES	269	326	384	480	538

NOTE: THE FMRS FOR UNIT SIZES LARGER THAN FOUR-BEDROOMS ARE CALCULATED BY ADDING 15 PERCENT TO THE FOUR-BEDROOM FMR FOR EACH ADDITIONAL BEDROOM. TO ILLUSTRATE, THE FMR FOR A FIVE-BEDROOM UNIT IS 1.15 TIMES THE FOUR-BEDROOM FMR, AND THE CALCULATION OF THE FMR FOR A SIX-BEDROOM UNIT IS 1.30 TIMES THE FOUR-BEDROOM FMR, ETC.

SCHEDULE B - FAIR MARKET RENTS FOR EXISTING HOUSING 031688

S T A T E: NEW MEXICO

NONMETROPOLITAN COUNTIES

	0 BEDROOMS	1 BEDROOM	2 BEDROOMS	3 BEDROOMS	4 BEDROOMS		0 BEDROOMS	1 BEDROOM	2 BEDROOMS	3 BEDROOMS	4 BEDROOMS
CIBOLA	247	300	354	442	495	COLFAX	255	310	365	457	511
CURRY	255	310	365	457	511	DE BACA	255	310	365	457	511
EDDY	295	359	424	529	592	GRANT	247	300	354	442	495
GUADALUPE	255	310	365	457	511	HARDING	255	310	365	457	511
HIDALGO	247	300	354	442	495	LEA	295	359	424	529	592
LINCOLN	269	326	384	480	538	LUNA	247	300	354	442	495
MCKINLEY	343	416	490	614	687	MORA	255	310	365	457	511
OTERO	269	326	384	480	538	QUAY	255	310	365	457	511
RIO ARRIBA	230	279	328	410	460	ROOSEVELT	255	310	365	457	511
SANDOVAL	290	353	415	519	582	SAN JUAN	343	416	490	614	687
SAN MIGUEL	255	310	365	457	511	SIERRA	269	326	384	480	538
SOCORRO	269	326	384	480	538	TAOS	275	333	392	490	550
TORRANCE	255	310	365	457	511	UNION	255	310	365	457	511
VALENCIA	247	300	354	442	495						

S T A T E: NEW YORK

	0 BEDROOMS	1 BEDROOM	2 BEDROOMS	3 BEDROOMS	4 BEDROOMS
ALBANY-SCHENECTADY-TROY, NY MSA	324	389	459	578	643
COUNTY(IES): ALBANY, GREENE, MONTGOMERY, RENSSELAER, SARATOGA SCHENECTADY					
BINGHAMTON, NY MSA	292	351	415	513	576
COUNTY(IES): BROOME, TIOGA					
BUFFALO, NY PMSA	289	350	413	516	577
COUNTY(IES): ERIE					
ELMIRA, NY MSA	295	359	423	529	593
COUNTY(IES): CHEMUNG					
GLENS FALLS, NY MSA	305	371	436	545	612
COUNTY(IES): WARREN, WASHINGTON					
NASSAU-SUFFOLK, NY PMSA	527	640	753	942	1053
COUNTY(IES): NASSAU, SUFFOLK					
NEW YORK, NY PMSA	396	481	566	709	794
COUNTY(IES): BRONX, KINGS, NEW YORK, PUTNAM, QUEENS, RICHMOND ROCKLAND					
WESTCHESTER, NY	472	572	674	842	942
COUNTY(IES): WESTCHESTER					
NIAGARA FALLS, NY PMSA	277	336	395	495	554
COUNTY(IES): NIAGARA					
ORANGE COUNTY, NY PMSA	393	478	561	702	787
COUNTY(IES): ORANGE					
POUGHKEEPSIE, NY MSA	443	538	634	792	888
COUNTY(IES): DUTCHESS					
ROCHESTER, NY MSA	347	425	500	625	696
COUNTY(IES): LIVINGSTON, MONROE, ONTARIO, ORLEANS, WAYNE					

NOTE: THE FMRS FOR UNIT SIZES LARGER THAN FOUR-BEDROOMS ARE CALCULATED BY ADDING 15 PERCENT TO THE FOUR-BEDROOM FMR FOR EACH ADDITIONAL BEDROOM. TO ILLUSTRATE, THE FMR FOR A FIVE-BEDROOM UNIT IS 1.15 TIMES THE FOUR-BEDROOM FMR, AND THE CALCULATION OF THE FMR FOR A SIX-BEDROOM UNIT IS 1.30 TIMES THE FOUR-BEDROOM FMR, ETC.

SCHEDULE B - FAIR MARKET RENTS FOR EXISTING HOUSING 031688

S T A T E: NEW YORK

	0 BEDROOMS	1 BEDROOM	2 BEDROOMS	3 BEDROOMS	4 BEDROOMS
SYRACUSE, NY MSA	306	366	429	536	601
COUNTY(IES): MADISON, ONONDAGA, OSWEGO					
UTICA-ROME, NY MSA	266	324	381	477	534
COUNTY(IES): HERKIMER, ONEIDA					

NONMETROPOLITAN COUNTIES

	0 BEDROOMS	1 BEDROOM	2 BEDROOMS	3 BEDROOMS	4 BEDROOMS		0 BEDROOMS	1 BEDROOM	2 BEDROOMS	3 BEDROOMS	4 BEDROOMS
ALLEGANY	261	312	366	458	514	CATTARAUGUS	257	311	366	458	514
CAYUGA	305	371	436	545	612	CHAUTAUQUA	274	333	392	491	549
CHENANGO	302	366	431	539	603	CLINTON	291	347	408	507	557
COLUMBIA	287	348	411	514	576	CORTLAND	312	380	448	560	627
DELAWARE	280	342	402	501	562	ESSEX	278	337	395	495	555
FRANKLIN	277	337	395	495	555	FULTON	248	303	355	446	498
GENESEE	284	344	406	507	568	HAMILTON	277	337	395	495	555
JEFFERSON	311	379	446	556	624	LEWIS	295	362	426	532	597
OTSEGO	280	342	402	501	562	ST LAWRENCE	284	344	406	507	568
SCHOHARIE	280	342	402	501	562	SCHUYLER	287	348	411	514	576
SENECA	305	371	436	545	612	STEUBEN	287	348	411	514	576
SULLIVAN	302	369	434	531	606	TOMPKINS	312	380	448	560	627
ULSTER	358	434	512	639	717	WYOMING	285	344	406	507	568
YATES	285	346	408	511	570						

S T A T E: NORTH CAROLINA

	0 BEDROOMS	1 BEDROOM	2 BEDROOMS	3 BEDROOMS	4 BEDROOMS
ASHEVILLE, NC MSA	258	314	370	461	517
COUNTY(IES): BUNCOMBE					
BURLINGTON, NC MSA	312	379	446	558	626
COUNTY(IES): ALAMANCE					
CHARLOTTE-GASTONIA-ROCK HILL, NC-SC MSA	288	347	407	508	568
COUNTY(IES): CABARRUS, GASTON, LINCOLN, MECKLENBURG, ROWAN, UNION					
FAYETTEVILLE, NC MSA	246	299	353	442	495
COUNTY(IES): CUMBERLAND					
GREENSBORO--WINSTON-SALEM--HIGH POINT, NC MSA	269	328	385	483	542
COUNTY(IES): DAVIDSON, DAVIE, FORSYTH, GUILFORD, RANDOLPH, STOKES YADKIN					
HICKORY, NC MSA	236	286	337	422	474
COUNTY(IES): ALEXANDER, BURKE, CATAWBA					
JACKSONVILLE, NC MSA	244	298	351	439	492
COUNTY(IES): ONSLOW					
RALEIGH-DURHAM, NC MSA	309	376	443	554	620
COUNTY(IES): DURHAM, FRANKLIN, ORANGE, WAKE					
WILMINGTON, NC MSA	258	314	370	461	517
COUNTY(IES): NEW HANOVER					

NOTE: THE FMRS FOR UNIT SIZES LARGER THAN FOUR-BEDROOMS ARE CALCULATED BY ADDING 15 PERCENT TO THE FOUR-BEDROOM FMR FOR EACH ADDITIONAL BEDROOM. TO ILLUSTRATE, THE FMR FOR A FIVE-BEDROOM UNIT IS 1.15 TIMES THE FOUR-BEDROOM FMR, AND THE CALCULATION OF THE FMR FOR A SIX-BEDROOM UNIT IS 1.30 TIMES THE FOUR-BEDROOM FMR, ETC.

BEST COPY AVAILABLE

SCHEDULE B - FAIR MARKET RENTS FOR EXISTING HOUSING 031688

S T A T E: NORTH CAROLINA

NONMETROPOLITAN COUNTIES

	0 BEDROOMS	1 BEDROOM	2 BEDROOMS	3 BEDROOMS	4 BEDROOMS
ALLEGHANY	233	281	329	412	452
ASHE	233	281	329	412	452
BEAUFORT	258	314	370	461	517
BLADEN	249	304	357	447	500
CALDWELL	233	282	332	417	465
CARTERET	242	295	347	435	488
CHATHAM	309	376	443	554	620
CHOWAN	249	299	349	434	483
CLEVELAND	233	281	329	412	452
CRAVEN	242	295	347	435	488
DARE	249	299	349	434	483
EDGECOMBE	242	295	347	435	488
GRAHAM	201	245	290	363	407
GREENE	226	274	322	404	452
HARNETT	226	274	322	404	452
HENDERSON	254	310	365	456	511
HOKE	219	265	312	389	437
IREDELL	234	361	421	485	543
JOHNSTON	239	291	343	428	481
LEE	239	291	343	428	481
MCDOWELL	233	281	329	412	452
MADISON	254	310	365	456	511
MITCHELL	242	292	343	428	470
MOORE	235	282	329	413	461
NORTHAMPTON	242	295	347	435	488
PASQUOTANK	249	299	349	434	483
PERQUIMANS	249	299	349	434	483
PITT	258	314	370	461	517
RICHMOND	235	282	329	413	461
ROCKINGHAM	234	284	334	419	469
SAMPSON	226	274	322	404	452
STANLY	231	281	331	415	463
SWAIN	201	245	290	363	407
TYRRELL	249	299	349	434	483
WARREN	224	272	319	400	448
WATAUGA	332	400	469	586	644
WILKES	279	335	393	492	539
YANCEY	260	313	368	459	505

	0 BEDROOMS	1 BEDROOM	2 BEDROOMS	3 BEDROOMS	4 BEDROOMS
ANSON	235	282	329	413	461
AVERY	242	292	343	428	469
BERTIE	258	314	370	461	517
BRUNSWICK	234	285	335	420	470
CAMDEN	249	299	349	434	483
CASWELL	234	284	334	419	469
CHEROKEE	201	245	290	363	407
CLAY	201	245	290	363	407
COLUMBUS	244	297	350	437	490
CURRITUCK	284	341	391	485	535
DUPLIN	219	265	312	389	437
GATES	249	299	349	434	483
GRANVILLE	224	272	319	400	448
HALIFAX	242	295	347	435	488
HAYWOOD	234	285	336	421	472
HERTFORD	258	314	370	461	517
HYDE	249	299	349	434	483
JACKSON	242	295	347	435	486
JONES	242	295	347	435	488
LENOIR	242	295	347	435	488
MACON	254	309	365	456	512
MARTIN	258	314	370	461	517
MONTGOMERY	235	282	329	413	461
NASH	248	303	356	446	499
PAMLICO	242	295	347	435	488
PENDER	214	260	353	440	494
PERSON	224	272	319	400	448
POLK	233	281	329	412	452
ROBESON	209	272	302	373	418
RUTHERFORD	233	281	329	412	452
SCOTLAND	209	253	299	373	418
SURRY	221	268	315	394	442
TRANSYLVANIA	254	310	365	456	511
VANCE	224	272	319	400	448
WASHINGTON	249	299	349	434	483
WAYNE	226	274	322	404	452
WILSON	248	303	356	446	499

NOTE: THE FMRS FOR UNIT SIZES LARGER THAN FOUR-BEDROOMS ARE CALCULATED BY ADDING 15 PERCENT TO THE FOUR-BEDROOM FMR FOR EACH ADDITIONAL BEDROOM. TO ILLUSTRATE, THE FMR FOR A FIVE-BEDROOM UNIT IS 1.15 TIMES THE FOUR-BEDROOM FMR, AND THE CALCULATION OF THE FMR FOR A SIX-BEDROOM UNIT IS 1.30 TIMES THE FOUR-BEDROOM FMR, ETC.

SCHEDULE B - FAIR MARKET RENTS FOR EXISTING HOUSING 031688

S T A T E: NORTH DAKOTA

	0 BEDROOMS	1 BEDROOM	2 BEDROOMS	3 BEDROOMS	4 BEDROOMS
BISMARCK, ND MSA..... COUNTY(IES): BURLEIGH, MORTON	296	360	424	530	595
FARGO-MOORHEAD, ND-MN MSA..... COUNTY(IES): CASS	296	360	423	531	595
GRAND FORKS, ND MSA..... COUNTY(IES): GRAND FORKS	282	342	404	503	565

NONMETROPOLITAN COUNTIES

	0 BEDROOMS	1 BEDROOM	2 BEDROOMS	3 BEDROOMS	4 BEDROOMS		0 BEDROOMS	1 BEDROOM	2 BEDROOMS	3 BEDROOMS	4 BEDROOMS
ADAMS	250	305	359	450	502	BARNES	257	312	367	459	516
BENSON	257	312	367	459	516	BILLINGS	250	305	359	450	502
BOTTINEAU	250	305	359	450	502	BOWMAN	250	305	359	450	502
BURKE	250	305	359	450	502	CAVALIER	257	312	367	459	516
DICKEY	257	312	367	459	516	DIVIDE	250	305	359	450	502
DUNN	250	305	359	450	502	EDDY	257	312	367	459	516
EMMONS	226	274	323	406	453	FOSTER	257	312	367	459	516
GOLDEN VALLY	250	305	359	450	502	GRANT	226	274	323	406	453
GRIGGS	257	312	367	459	516	HETTINGER	250	305	359	450	502
KIDDER	226	274	323	406	453	LA MOORE	257	312	367	459	516
LOGAN	257	312	367	459	516	MCHENRY	250	305	359	450	502
MCINTOSH	257	312	367	459	516	MCKENZIE	250	305	359	450	502
MCLEAN	226	274	323	406	453	MERCER	226	274	323	406	453
MOUNTRAIL	250	305	359	450	502	NELSON	257	312	367	459	516
OLIVER	226	274	323	406	453	PEMBINA	257	312	367	459	516
PIERCE	250	305	359	450	502	RAMSEY	257	312	367	459	516
RANSOM	233	283	334	417	466	RENVILLE	250	305	359	450	502
RICHLAND	233	283	334	417	466	ROLETTE	257	312	367	459	516
SARGENT	233	283	334	417	466	SHERIDAN	226	274	323	406	453
SIOUX	226	274	323	406	453	SLOPE	250	305	359	450	502
STARK	250	305	359	450	502	STEELE	233	283	334	417	466
STUTSMAN	257	312	367	459	516	TOWNER	257	312	367	459	516
TRAILL	233	283	334	417	466	WALSH	257	312	367	459	516
WARD	250	305	359	450	502	WELLS	257	312	367	459	516
WILLIAMS	250	305	359	450	502						

S T A T E: OHIO

	0 BEDROOMS	1 BEDROOM	2 BEDROOMS	3 BEDROOMS	4 BEDROOMS
AKRON, OH PMSA..... COUNTY(IES): PORTAGE, SUMMIT	291	353	416	521	583
CANTON, OH MSA..... COUNTY(IES): CARROLL, STARK	257	312	367	459	516
CINCINNATI, OH-KY-IN PMSA..... COUNTY(IES): CLERMONT, HAMILTON, WARREN	269	329	388	485	540

NOTE: THE FMRS FOR UNIT SIZES LARGER THAN FOUR-BEDROOMS ARE CALCULATED BY ADDING 15 PERCENT TO THE FOUR-BEDROOM FMR FOR EACH ADDITIONAL BEDROOM. TO ILLUSTRATE, THE FMR FOR A FIVE-BEDROOM UNIT IS 1.15 TIMES THE FOUR-BEDROOM FMR, AND THE CALCULATION OF THE FMR FOR A SIX-BEDROOM UNIT IS 1.30 TIMES THE FOUR-BEDROOM FMR, ETC.

SCHEDULE B - FAIR MARKET RENTS FOR EXISTING HOUSING

C31688

S T A T E: OHIO

	0 BEDROOMS	1 BEDROOM	2 BEDROOMS	3 BEDROOMS	4 BEDROOMS
CLEVELAND, OH PMSA	275	335	395	495	555
COUNTY(IES): CUYAHOGA, GEAUGA, LAKE, MEDINA					
COLUMBUS, OH MSA	293	352	418	522	587
COUNTY(IES): DELAWARE, FAIRFIELD, FRANKLIN, LICKING, MADISON PICKAWAY, UNION					
DAYTON-SPRINGFIELD, OH MSA	271	331	385	484	537
COUNTY(IES): CLARK, GREENE, MIAMI, MONTGOMERY					
HAMILTON-MIDDLETOWN, OH PMSA	302	368	433	541	606
COUNTY(IES): BUTLER					
HUNTINGTON-ASHLAND, WV-KY-OH MSA	286	347	409	512	575
COUNTY(IES): LAWRENCE					
LIMA, OH MSA	272	331	389	488	547
COUNTY(IES): ALLEN, AUGLAIZE					
LORAIN-ELYRIA, OH PMSA	285	348	410	513	574
COUNTY(IES): LORAIN					
MANSFIELD, OH MSA	246	301	352	442	494
COUNTY(IES): RICHLAND					
PARKERSBURG-MARIETTA, WV-OH MSA	268	325	383	481	537
COUNTY(IES): WASHINGTON					
STEUBENVILLE-WEIRTON, OH-WV MSA	275	335	392	492	553
COUNTY(IES): JEFFERSON					
TOLEDO, OH MSA	312	380	448	560	627
COUNTY(IES): FULTON, LUCAS, WOOD					
WHEELING, WV-OH MSA	269	327	386	482	540
COUNTY(IES): BELMONT					
YOUNGSTOWN-WARREN, OH MSA	272	331	389	488	547
COUNTY(IES): MAHONING, TRUMBULL					

NONMETROPOLITAN COUNTIES

	0 BEDROOMS	1 BEDROOM	2 BEDROOMS	3 BEDROOMS	4 BEDROOMS		0 BEDROOMS	1 BEDROOM	2 BEDROOMS	3 BEDROOMS	4 BEDROOMS
ADAMS	244	294	344	428	482	ASHLAND	269	328	385	483	539
ASHTABULA	287	349	412	516	576	ATHENS	255	314	370	461	517
BROWN	244	294	344	428	482	CHAMPAIGN	260	316	373	465	522
CLINTON	248	303	356	446	498	COLUMBIANA	255	309	365	456	511
COSHOCTON	222	271	320	396	446	CRAWFORD	247	301	354	444	496
DARKE	248	303	356	446	498	DEFIANCE	278	337	396	496	557
ERIE	281	341	402	501	563	FAYETTE	248	303	356	446	498
GALLIA	268	325	383	481	537	GUERNSEY	263	319	376	469	527
HANCOCK	264	320	377	470	529	HARDIN	264	320	377	470	529
HARRISON	247	301	354	444	496	HENRY	278	337	396	496	557
HIGHLAND	244	294	344	428	482	HOCKING	237	287	339	423	475
HOLMES	261	318	374	467	524	HURON	247	301	354	444	496
JACKSON	240	292	343	428	482	KNOX	240	292	343	428	482
LOGAN	264	320	377	470	529	MARION	240	292	343	428	482
MEIGS	237	287	339	423	475	MERCER	248	303	356	446	498
MONROE	266	323	380	477	533	MORGAN	268	323	380	477	533

NOTE: THE FMRS FOR UNIT SIZES LARGER THAN FOUR-BEDROOMS ARE CALCULATED BY ADDING 15 PERCENT TO THE FOUR-BEDROOM FMR FOR EACH ADDITIONAL BEDROOM. TO ILLUSTRATE, THE FMR FOR A FIVE-BEDROOM UNIT IS 1.15 TIMES THE FOUR-BEDROOM FMR, AND THE CALCULATION OF THE FMR FOR A SIX-BEDROOM UNIT IS 1.30 TIMES THE FOUR-BEDROOM FMR, ETC.

SCHEDULE B - FAIR MARKET RENTS FOR EXISTING HOUSING 031688

S T A T E: OHIO

NONMETROPOLITAN COUNTIES

	0 BEDROOMS	1 BEDROOM	2 BEDROOMS	3 BEDROOMS	4 BEDROOMS		0 BEDROOMS	1 BEDROOM	2 BEDROOMS	3 BEDROOMS	4 BEDROOMS
MORROW	240	292	343	428	482	MUSKINGUM	248	301	354	444	496
NOBLE	266	323	380	477	533	OTTAWA	281	341	402	501	563
PAULDING	278	337	396	496	557	PERRY	237	287	339	423	475
PIKE	240	292	343	428	482	PREBLE	270	329	386	485	541
PUTNAM	268	325	383	481	537	ROSS	248	303	356	446	498
SANDUSKY	281	341	402	501	563	SCIOTO	240	292	343	428	482
SENECA	247	301	354	444	496	SHELBY	248	303	356	446	498
TUSCARAWAS	261	318	374	467	524	VAN WERT	268	325	383	481	537
VINTON	268	325	383	481	537	WAYNE	269	328	385	483	539
WILLIAMS	278	337	396	496	557	WYANDOT	247	301	354	444	496

S T A T E: OKLAHOMA

	0 BEDROOMS	1 BEDROOM	2 BEDROOMS	3 BEDROOMS	4 BEDROOMS
ENID, OK MSA.....	296	361	425	531	595
COUNTY(IES): GARFIELD					
FORT SMITH, AR-OK MSA.....	246	300	353	442	495
COUNTY(IES): SEQUOYAH					
LAWTON, OK MSA.....	255	310	366	457	512
COUNTY(IES): COMANCHE					
OKLAHOMA CITY, OK MSA.....	322	387	455	558	628
COUNTY(IES): CANADIAN, CLEVELAND, LOGAN, MCCLAIN, OKLAHOMA POTTAWATOMIE					
TULSA, OK MSA.....	323	392	462	577	647
COUNTY(IES): CREEK, OSAGE, ROGERS, TULSA, WAGONER					

NONMETROPOLITAN COUNTIES

	0 BEDROOMS	1 BEDROOM	2 BEDROOMS	3 BEDROOMS	4 BEDROOMS		0 BEDROOMS	1 BEDROOM	2 BEDROOMS	3 BEDROOMS	4 BEDROOMS
ADAIR	199	244	285	355	395	ALFALFA	225	275	324	403	454
ATOKA	174	213	251	313	350	BEAVER	225	275	324	403	454
BECKHAM	220	267	315	394	442	BLAINE	225	275	324	403	454
BRYAN	210	255	300	376	421	CADDO	209	254	298	374	419
CARTER	210	255	300	376	421	CHEROKEE	199	244	285	355	395
CHOCTAW	174	213	251	313	350	CIMARRON	225	275	324	403	454
COAL	174	213	251	313	350	COTTON	209	254	298	374	419
CRAIG	253	308	362	453	508	CUSTER	220	267	315	394	442
DELAWARE	197	241	282	352	395	DEWEY	225	275	324	403	454
ELLIS	225	275	324	403	454	GARVIN	210	255	300	376	421
GRADY	209	254	298	374	419	GRANT	261	317	374	467	523
GREER	220	267	315	394	442	HARMON	220	267	315	394	442
HARPER	225	275	324	403	454	HASKELL	174	213	251	313	350
HUGHES	203	247	290	363	406	JACKSON	220	267	315	394	442
JEFFERSON	209	254	298	374	419	JOHNSTON	210	255	300	376	421

NOTE. THE FMRS FOR UNIT SIZES LARGER THAN FOUR-BEDROOMS ARE CALCULATED BY ADDING 15 PERCENT TO THE FOUR-BEDROOM FMR FOR EACH ADDITIONAL BEDROOM. TO ILLUSTRATE, THE FMR FOR A FIVE-BEDROOM UNIT IS 1.15 TIMES THE FOUR-BEDROOM FMR, AND THE CALCULATION OF THE FMR FOR A SIX-BEDROOM UNIT IS 1.30 TIMES THE FOUR-BEDROOM FMR, ETC.

SCHEDULE B - FAIR MARKET RENTS FOR EXISTING HOUSING 031688

S T A T E: OKLAHOMA

NONMETROPOLITAN COUNTIES

	0 BEDROOMS	1 BEDROOM	2 BEDROOMS	3 BEDROOMS	4 BEDROOMS		0 BEDROOMS	1 BEDROOM	2 BEDROOMS	3 BEDROOMS	4 BEDROOMS
KAY	261	317	374	467	523	KINGFISHER	261	317	374	467	523
KIOWA	220	267	315	394	442	LATIMER	174	213	251	313	350
LE FLORE	174	213	251	313	350	LINCOLN	250	303	356	446	500
LOVE	210	255	300	376	421	MCCURTAIN	221	270	318	396	444
MCINTOSH	203	247	290	363	406	MAJOR	225	275	324	403	454
MARSHALL	210	255	300	376	421	MAYES	262	318	376	469	525
MURRAY	210	255	300	376	421	MUSKOGEE	203	247	290	363	406
NOBLE	261	317	374	467	523	NOWATA	253	308	362	453	508
OKFUSKEE	203	247	290	363	406	OKMULGEE	203	247	290	363	406
OTTAWA	253	308	362	453	508	PAWNEE	250	303	356	446	500
PAYNE	250	303	356	446	500	PITTSBURG	174	213	251	313	350
PONTOTOC	210	255	300	376	421	PUSHMATAHA	174	213	251	313	350
ROGER MILLS	220	267	315	394	442	SEMINOLE	208	253	298	369	410
STEPHENS	209	254	298	374	419	TEXAS	225	275	324	403	454
TILLMAN	209	254	298	374	419	WASHINGTON	253	308	362	453	508
WASHITA	220	267	315	394	442	WOODS	225	275	324	403	454
WOODWARD	225	275	324	403	454						

S T A T E OREGON

	0 BEDROOMS	1 BEDROOM	2 BEDROOMS	3 BEDROOMS	4 BEDROOMS
EUGENE-SPRINGFIELD, OR MSA. COUNTY(IES) LANE	363	442	521	651	729
MEDFORD, OR MSA COUNTY(IES) JACKSON	361	439	517	646	724
PORTLAND, OR PMSA COUNTY(IES) CLACKAMAS, MULTNOMAH, WASHINGTON, YAMHILL	308	376	468	619	685
SALEM OR MSA COUNTY(IES) MARION, POLK	339	414	487	608	681

NONMETROPOLITAN COUNTIES

	0 BEDROOMS	1 BEDROOM	2 BEDROOMS	3 BEDROOMS	4 BEDROOMS		0 BEDROOMS	1 BEDROOM	2 BEDROOMS	3 BEDROOMS	4 BEDROOMS
BAKER	331	402	473	592	663	BENTON	337	410	484	604	676
CLATSOP	322	392	461	575	645	COLUMBIA	322	392	461	575	645
COOS	346	420	495	618	693	CROOK	351	426	501	628	702
CURRY	346	420	495	618	693	DESCHUTES	351	426	501	628	702
DOUGLAS	346	420	495	618	693	GILLIAM	331	402	473	592	663
GRANT	331	402	473	592	663	HARNEY	316	384	453	566	634
HOOD RIVER	351	426	501	628	702	JEFFERSON	351	426	501	628	702
JOSEPHINE	346	420	495	618	693	KLAMATH	316	384	453	566	634
LAKE	316	384	453	566	634	LINCOLN	322	392	461	575	645
LINN	337	410	484	604	676	MALHEUR	316	384	453	566	634

NOTE: THE FMRS FOR UNIT SIZES LARGER THAN FOUR-BEDROOMS ARE CALCULATED BY ADDING 15 PERCENT TO THE FOUR-BEDROOM FMR FOR EACH ADDITIONAL BEDROOM. TO ILLUSTRATE, THE FMR FOR A FIVE-BEDROOM UNIT IS 1.15 TIMES THE FOUR-BEDROOM FMR, AND THE CALCULATION OF THE FMR FOR A SIX-BEDROOM UNIT IS 1.30 TIMES THE FOUR-BEDROOM FMR, ETC.

SCHEDULE B - FAIR MARKET RENTS FOR EXISTING HOUSING 031688

S T A T E: OREGON

NONMETROPOLITAN COUNTIES

	0 BEDROOMS	1 BEDROOM	2 BEDROOMS	3 BEDROOMS	4 BEDROOMS		0 BEDROOMS	1 BEDROOM	2 BEDROOMS	3 BEDROOMS	4 BEDROOMS
MORROW	331	402	473	592	663	SHERMAN	351	426	501	628	702
TILLAMOOK	322	392	461	575	645	UMATILLA	331	402	473	592	663
UNION	331	402	473	592	663	WALLOWA	331	402	473	592	663
WASCO	351	426	501	628	702	WHEELER	331	402	473	592	663

S T A T E: PENNSYLVANIA

	0 BEDROOMS	1 BEDROOM	2 BEDROOMS	3 BEDROOMS	4 BEDROOMS
ALLENTOWN-BETHLEHEM, PA-NJ MSA	317	385	450	567	632
COUNTY(IES): CARBON, LEHIGH, NORTHAMPTON					
ALTOONA, PA MSA	282	342	403	503	564
COUNTY(IES): BLAIR					
BEAVER COUNTY, PA PMSA	291	351	412	517	578
COUNTY(IES): BEAVER					
ERIE, PA MSA	324	394	463	580	650
COUNTY(IES): ERIE					
HARRISBURG-LEBANON-CARLISLE, PA MSA	336	403	476	594	665
COUNTY(IES): CUMBERLAND, DAUPHIN, LEBANON, PERRY					
JOHNSTOWN, PA MSA	273	333	391	489	549
COUNTY(IES): CAMBRIA, SOMERSET					
LANCASTER, PA MSA	339	412	484	607	679
COUNTY(IES): LANCASTER					
PHILADELPHIA, PA-NJ PMSA	360	435	511	639	714
COUNTY(IES): BUCKS, CHESTER, DELAWARE, MONTGOMERY, PHILADELPHIA					
PITTSBURGH, PA PMSA	305	371	436	545	611
COUNTY(IES): ALLEGHANY, FAYETTE, WASHINGTON, WESTMORELAND					
READING, PA MSA	317	386	453	567	635
COUNTY(IES): BERKS					
SCRANTON--WILKES-BARRE, PA MSA	257	317	369	455	516
COUNTY(IES): COLUMBIA, LACKAWANNA, LUZERNE, MONROE, WYOMING					
SHARON, PA MSA	300	364	430	538	603
COUNTY(IES): MERCER					
STATE COLLEGE, PA MSA	362	440	519	648	726
COUNTY(IES): CENTRE					
WILLIAMSPORT, PA MSA	273	333	391	489	549
COUNTY(IES): LYCOMING					
YORK, PA MSA	305	371	436	546	612
COUNTY(IES): ADAMS, YORK					

NONMETROPOLITAN COUNTIES

	0 BEDROOMS	1 BEDROOM	2 BEDROOMS	3 BEDROOMS	4 BEDROOMS		0 BEDROOMS	1 BEDROOM	2 BEDROOMS	3 BEDROOMS	4 BEDROOMS
ARMSTRONG	315	382	450	563	631	BEDFORD	254	309	364	455	509
BRADFORD	261	318	374	468	523	BUTLER	313	381	448	561	627
CAMERON	265	322	379	474	531	CLARION	258	315	370	462	519
CLEARFIELD	270	328	387	483	541	CLINTON	265	320	376	470	525
CRAWFORD	268	324	383	479	537	ELK	265	322	379	474	531

NOTE: THE FMRS FOR UNIT SIZES LARGER THAN FOUR-BEDROOMS ARE CALCULATED BY ADDING 15 PERCENT TO THE FOUR-BEDROOM FMR FOR EACH ADDITIONAL BEDROOM. TO ILLUSTRATE, THE FMR FOR A FIVE-BEDROOM UNIT IS 1.15 TIMES THE FOUR-BEDROOM FMR, AND THE CALCULATION OF THE FMR FOR A SIX-BEDROOM UNIT IS 1.30 TIMES THE FOUR-BEDROOM FMR, ETC.

SCHEDULE B - FAIR MARKET RENTS FOR EXISTING HOUSING 031688

S T A T E: PENNSYLVANIA

NONMETROPOLITAN COUNTIES

	0 BEDROOMS	1 BEDROOM	2 BEDROOMS	3 BEDROOMS	4 BEDROOMS		0 BEDROOMS	1 BEDROOM	2 BEDROOMS	3 BEDROOMS	4 BEDROOMS
FOREST	258	315	370	462	519	FRANKLIN	290	353	414	520	581
FULTON	254	309	364	455	509	GREENE	270	328	387	483	541
HUNTINGDON	254	309	364	455	509	INDIANA	315	382	450	563	631
JEFFERSON	270	328	387	483	541	JUNIATA	262	319	375	470	525
LAWRENCE	268	324	383	479	537	MCKEAN	265	322	379	474	531
MIFFLIN	262	319	382	470	525	MONTOUR	270	328	387	483	541
NORTHUMBRLND	282	328	387	483	541	PIKE	303	354	437	543	591
POTTER	265	322	379	474	531	SCHUYLKILL	293	344	417	505	550
SNYDER	262	319	375	470	525	SULLIVAN	261	318	374	468	523
SUSQUEHANNA	261	318	374	468	523	TIOGA	261	318	374	468	523
UNION	303	355	437	543	591	VENANGO	258	315	370	462	519
WARREN	268	324	383	479	537	WAYNE	291	354	416	522	585

S T A T E: RHODE ISLAND

	0 BEDROOMS	1 BEDROOM	2 BEDROOMS	3 BEDROOMS	4 BEDROOMS
FALL RIVER, MA-RI PMSA.....	366	436	524	607	670
COUNTY: NEWPORT TOWNS OF LITTLE COMPT, TIVERTON					
NEW LONDON-NORWICH, CT-RI MSA.....	405	493	579	724	812
COUNTY: WASHINGTON TOWNS OF HOPKINTON, WESTERLY					
PAWTUCKET-WOONSOCKET-ATTLEBORO, RI-MA PMSA.....	355	430	506	621	709
COUNTY: PROVIDENCE TOWNS OF BURRILLVILLE, CENTRAL FALL, CUMBERLAND, LINCOLN, NORTH SMITHF, PAWTUCKET, SMITHFIELD WOONSOCKET					
PROVIDENCE, RI PMSA.....	376	448	525	656	733
COUNTY: BRISTOL TOWNS OF BARRINGTON, BRISTOL, WARREN					
COUNTY: KENT TOWNS OF COVENTRY, EAST GREENWI, WARWICK, WEST WARWICK					
COUNTY: NEWPORT TOWNS OF JAMESTOWN					
COUNTY: PROVIDENCE TOWNS OF CRANSTON, EAST PROVIDE, FOSTER GLOCESTER, JOHNSTON, NORTH PROVID, PROVIDENCE SCITUATE					
COUNTY: WASHINGTON TOWNS OF EXETER, NARRAGANSETT, NORTH KINGST RICHMOND, SOUTH KINGST					

NONMETROPOLITAN COUNTIES OR PARTS OF COUNTIES	0 BEDROOMS	1 BEDROOM	2 BEDROOMS	3 BEDROOMS	4 BEDROOMS
KENT COUNTY TOWNS OF WEST GREENWI	338	411	484	605	678
NEWPORT COUNTY TOWNS OF MIDDLETOWN, NEWPORT, PORTSMOUTH	442	537	632	790	885
WASHINGTON COUNTY TOWNS OF CHARLESTOWN, NEW SHOREHAM	338	411	484	605	678

NOTE: THE FMRS FOR UNIT SIZES LARGER THAN FOUR-BEDROOMS ARE CALCULATED BY ADDING 15 PERCENT TO THE FOUR-BEDROOM FMR FOR EACH ADDITIONAL BEDROOM. TO ILLUSTRATE, THE FMR FOR A FIVE-BEDROOM UNIT IS 1.15 TIMES THE FOUR-BEDROOM FMR, AND THE CALCULATION OF THE FMR FOR A SIX-BEDROOM UNIT IS 1.30 TIMES THE FOUR-BEDROOM FMR, ETC.

SCHEDULE B - FAIR MARKET RENTS FOR EXISTING HOUSING 031688

S T A T E: SOUTH CAROLINA

	0 BEDROOMS	1 BEDROOM	2 BEDROOMS	3 BEDROOMS	4 BEDROOMS
ANDERSON, SC MSA	234	284	333	419	468
COUNTY(IES): ANDERSON					
AUGUSTA, GA-SC MSA	271	327	382	477	534
COUNTY(IES): AIKEN					
CHARLESTON, SC MSA	289	352	415	517	580
COUNTY(IES): BERKELEY, CHARLESTON, DORCHESTER					
CHARLOTTE-GASTONIA-ROCK HILL, NC-SC MSA	288	347	407	508	568
COUNTY(IES): YORK					
COLUMBIA, SC MSA	292	356	420	524	586
COUNTY(IES): LEXINGTON, RICHLAND					
FLORENCE, SC MSA	237	288	340	425	476
COUNTY(IES) FLORENCE					
GREENVILLE-SPARTANBURG, SC MSA	255	310	366	457	513
COUNTY(IES) GREENVILLE, PICKENS, SPARTANBURG					

NONMETROPOLITAN COUNTIES

	0 BEDROOMS	1 BEDROOM	2 BEDROOMS	3 BEDROOMS	4 BEDROOMS		0 BEDROOMS	1 BEDROOM	2 BEDROOMS	3 BEDROOMS	4 BEDROOMS
ABBEVILLE	206	250	296	366	406	ALLENDALE	214	261	307	385	431
BAMBERG	214	261	307	385	431	BARNWELL	214	261	307	385	431
BEAUFORT	265	323	381	476	533	CALHOUN	220	268	318	389	435
CHEROKEE	206	249	294	368	414	CHESTER	206	249	294	368	414
CHESTERFIELD	205	248	292	366	411	CLARENDON	232	281	330	415	464
COLLETON	265	323	381	476	533	DARLINGTON	205	248	292	366	411
DILLON	205	248	292	366	411	EDGEFIELD	201	245	289	361	404
FAIRFIELD	201	245	289	361	404	GEORGETOWN	248	302	355	444	498
GREENWOOD	206	250	296	366	406	HAMPTON	265	323	381	476	533
HORRY	248	302	355	444	498	JASPER	265	323	381	476	533
KERSHAW	232	281	330	415	464	LANCASTER	221	271	319	394	440
LAURENS	206	250	296	366	406	LEE	232	281	330	415	464
MCCORMICK	201	245	289	361	404	MARION	205	248	292	366	411
MARLBORO	205	248	292	366	411	NEWBERRY	201	245	289	361	404
OCONEE	253	309	364	455	510	ORANGEBURG	214	261	307	385	431
SALUDA	201	245	289	361	404	SUMTER	232	281	330	415	464
UNION	206	249	294	368	414	WILLIAMSBURG	248	302	355	444	498

NOTE. THE FMRS FOR UNIT SIZES LARGER THAN FOUR-BEDROOMS ARE CALCULATED BY ADDING 15 PERCENT TO THE FOUR-BEDROOM FMR FOR EACH ADDITIONAL BEDROOM. TO ILLUSTRATE, THE FMR FOR A FIVE-BEDROOM UNIT IS 1.15 TIMES THE FOUR-BEDROOM FMR, AND THE CALCULATION OF THE FMR FOR A SIX-BEDROOM UNIT IS 1.30 TIMES THE FOUR-BEDROOM FMR, ETC.

SCHEDULE B - FAIR MARKET RENTS FOR EXISTING HOUSING 031688

S T A T E SOUTH DAKOTA

	0 BEDROOMS	1 BEDROOM	2 BEDROOMS	3 BEDROOMS	4 BEDROOMS
RAPID CITY, SD MSA..... COUNTY(IES): PENNINGTON	270	325	379	470	526
SIOUX FALLS, SD MSA..... COUNTY(IES): MINNEHAHA	285	346	407	510	571

NONMETROPOLITAN COUNTIES

	0 BEDROOMS	1 BEDROOM	2 BEDROOMS	3 BEDROOMS	4 BEDROOMS		0 BEDROOMS	1 BEDROOM	2 BEDROOMS	3 BEDROOMS	4 BEDROOMS
AURORA	243	293	343	429	480	BEADLE	243	293	343	426	474
BENNETT	220	267	315	394	441	BON HOMME	240	291	343	429	480
BROOKINGS	238	287	335	417	471	BROWN	259	314	367	460	514
BRULE	240	291	343	429	480	BUFFALO	220	267	315	394	441
BUTTE	262	319	375	470	526	CAMPBELL	220	267	315	394	441
CHARLES MIX	240	291	343	429	480	CLARK	215	258	308	382	424
CLAY	240	291	343	429	480	CODINGTON	238	287	335	417	471
CORSON	220	267	315	394	441	CUSTER	262	319	375	470	526
DAVISON	243	293	343	429	480	DAY	232	284	334	419	469
DEUEL	215	258	308	382	424	DEWEY	220	267	315	394	441
DOUGLAS	240	291	343	429	480	EDMUNDS	232	284	334	419	469
FALL RIVER	262	319	375	470	526	FAULK	232	284	334	419	469
GRANT	238	287	335	417	471	GREGORY	220	267	315	394	441
HAAKON	220	267	315	394	441	HAMLIN	215	258	308	382	424
HAND	243	293	343	426	474	HANSON	243	293	343	429	480
HARDING	262	319	375	470	526	HUGHES	287	352	411	514	574
HUTCHINSON	240	291	343	429	480	HYDE	220	267	315	394	441
JACKSON	220	267	315	394	441	JERAULD	243	293	343	429	480
JONES	220	267	315	394	441	KINGSBURY	209	254	298	374	419
LAKE	209	254	298	374	419	LAWRENCE	262	319	375	470	526
LINCOLN	243	293	343	429	480	LYMAN	220	267	315	394	441
MCCOOK	209	254	298	374	419	MCPHERSON	232	284	334	419	469
MARSHALL	232	284	334	419	469	MEADE	270	325	379	470	526
MELLETTE	220	267	315	394	441	MINER	209	254	298	374	419
MOODY	209	254	298	374	419	PERKINS	220	267	315	394	441
POTTER	220	267	315	394	441	ROBERTS	232	284	334	419	469
SANBORN	243	293	343	429	480	SHANNON	220	267	315	394	441
SPINK	232	284	334	419	469	STANLEY	287	352	411	514	574
SULLY	220	267	315	394	441	TODD	220	267	315	394	441
TRIPP	220	267	315	394	441	TURNER	243	293	343	429	480
UNION	240	291	343	429	480	WALWORTH	220	267	315	394	441
YANKTON	240	291	343	429	480	ZIEBACH	220	267	315	394	441

NOTE: THE FMRS FOR UNIT SIZES LARGER THAN FOUR-BEDROOMS ARE CALCULATED BY ADDING 15 PERCENT TO THE FOUR-BEDROOM FMR FOR EACH ADDITIONAL BEDROOM. TO ILLUSTRATE, THE FMR FOR A FIVE-BEDROOM UNIT IS 1.15 TIMES THE FOUR-BEDROOM FMR, AND THE CALCULATION OF THE FMR FOR A SIX-BEDROOM UNIT IS 1.30 TIMES THE FOUR-BEDROOM FMR, ETC.

SCHEDULE B - FAIR MARKET RENTS FOR EXISTING HOUSING 031688

S T A T E. TENNESSEE

	0 BEDROOMS	1 BEDROOM	2 BEDROOMS	3 BEDROOMS	4 BEDROOMS
CHATTANOOGA, TN-GA MSA..... COUNTY(IES). HAMILTON, MARION, SEQUATCHIE	289	351	413	517	580
CLARKSVILLE-HOPKINSVILLE, TN-KY MSA. COUNTY(IES) MONTGOMERY	267	336	421	511	567
JACKSON, TN MSA..... COUNTY(IES): MADISON	262	315	374	466	525
JOHNSON CITY-KINGSPORT-BRISTOL, TN-VA MSA..... COUNTY(IES) CARTER, HAWKINS, SULLIVAN, UNICOI, WASHINGTON	242	294	346	433	485
KNOXVILLE, TN MSA.. COUNTY(IES): ANDERSON, BLOUNT, GRAINGER, JEFFERSON, KNOX, SEVIER UNION	266	325	381	477	534
MEMPHIS, TN-AR-MS MSA. COUNTY(IES) SHELBY, TIPTON	285	345	405	505	565
NASHVILLE, TN MSA.. COUNTY(IES) CHEATHAM, DAVIDSON, DICKSON, ROBERTSON, RUTHERFORD SUMNER, WILLIAMSON, WILSON	316	386	454	566	636

NONMETROPOLITAN COUNTIES

	0 BEDROOMS	1 BEDROOM	2 BEDROOMS	3 BEDROOMS	4 BEDROOMS		0 BEDROOMS	1 BEDROOM	2 BEDROOMS	3 BEDROOMS	4 BEDROOMS
BEDFORD	227	286	325	404	454	BENTON	214	260	306	384	429
BLEDSOE	237	289	340	425	476	BRADLEY	237	289	340	425	476
CAMPBELL	193	235	279	347	386	CANNON	214	262	309	386	433
CARROLL	214	260	306	384	429	CHESTER	233	285	335	419	469
CLAIBORNE	193	235	279	347	386	CLAY	185	228	270	338	375
COCKE	216	262	307	386	432	COFFEE	227	286	325	404	454
CROCKETT	218	264	310	390	436	CUMBERLAND	214	262	309	386	433
DECATUR	233	285	335	419	469	DE KALB	214	262	309	386	433
DYER	218	264	310	390	436	FAYETTE	223	272	320	400	448
FENTRESS	214	262	309	386	433	FRANKLIN	257	309	364	456	509
GIBSON	218	264	310	390	436	GILES	227	286	325	404	454
GREENE	212	258	302	378	425	GRUNDY	237	289	340	425	476
HAMBLEN	224	272	322	401	450	HANCOCK	212	258	302	378	425
HARDEMAN	233	285	335	419	469	HARDIN	233	285	335	419	469
HAYWOOD	223	280	320	400	448	HENDERSON	233	285	335	419	469
HENRY	214	260	306	384	429	HICKMAN	227	286	325	404	454
HOUSTON	197	239	282	352	394	HUMPHREYS	197	239	282	352	394
JACKSON	185	228	270	338	375	JOHNSON	206	251	295	369	413
LAKE	218	264	310	390	436	LAUDERDALE	223	280	320	400	448
LAWRENCE	227	286	325	404	454	LEWIS	225	274	324	404	454
LINCOLN	257	309	364	456	509	LOUDON	227	280	327	409	458
MCMINN	237	289	340	425	476	MCNAIRY	233	285	335	419	469
MACON	214	262	309	386	433	MARSHALL	227	286	325	404	454
MAURY	227	286	325	404	454	MEIGS	237	289	340	425	476
MONROE	227	280	327	409	458	MOORE	227	286	325	404	454

NOTE: THE FMRS FOR UNIT SIZES LARGER THAN FOUR-BEDROOMS ARE CALCULATED BY ADDING 15 PERCENT TO THE FOUR-BEDROOM FMR FOR EACH ADDITIONAL BEDROOM. TO ILLUSTRATE, THE FMR FOR A FIVE-BEDROOM UNIT IS 1.15 TIMES THE FOUR-BEDROOM FMR, AND THE CALCULATION OF THE FMR FOR A SIX-BEDROOM UNIT IS 1.30 TIMES THE FOUR-BEDROOM FMR, ETC

SCHEDULE B - FAIR MARKET RENTS FOR EXISTING HOUSING 031688

S T A T E: TENNESSEE

NONMETROPOLITAN COUNTIES

	0 BEDROOMS	1 BEDROOM	2 BEDROOMS	3 BEDROOMS	4 BEDROOMS		0 BEDROOMS	1 BEDROOM	2 BEDROOMS	3 BEDROOMS	4 BEDROOMS
MORGAN	193	235	279	347	386	OBION	221	272	310	392	436
OVERTON	214	262	309	386	433	PERRY	225	274	324	404	454
PICKETT	214	262	309	386	433	POLK	237	289	340	425	476
PUTNAM	220	267	314	394	440	RHEA	237	289	340	425	476
ROANE	227	280	327	409	458	SCOTT	193	235	279	347	386
SMITH	214	262	309	386	433	STEWART	197	239	282	352	394
TROUSDALE	214	262	309	386	433	VAN BUREN	220	267	314	394	440
WARREN	220	267	314	394	440	WAYNE	225	274	324	404	454
WEAKLEY	214	260	306	384	429	WHITE	220	267	314	394	440

S T A T E. TEXAS

	0 BEDROOMS	1 BEDROOM	2 BEDROOMS	3 BEDROOMS	4 BEDROOMS
ABILENE, TX MSA	288	351	413	517	580
COUNTY(IES): TAYLOR					
AMARILLO, TX MSA	266	323	381	475	532
COUNTY(IES): POTTER, RANDALL					
AUSTIN, TX MSA	341	409	482	603	675
COUNTY(IES): HAYS, TRAVIS, WILLIAMSON					
BEAUMONT-PORT ARTHUR, TX MSA	306	371	437	547	612
COUNTY(IES): HARDIN, JEFFERSON, ORANGE					
BRAZORIA, TX PMSA	305	370	436	545	610
COUNTY(IES): BRAZORIA					
BROWNSVILLE-HARLINGEN, TX MSA	271	329	387	484	543
COUNTY(IES): CAMERON					
BRYAN-COLLEGE STATION, TX MSA	359	437	513	642	720
COUNTY(IES): BRAZOS					
CORPUS CHRISTI, TX MSA	313	380	447	560	627
COUNTY(IES): NUECES, SAN PATRICIO					
DALLAS, TX PMSA	292	359	421	528	590
COUNTY(IES): COLLIN, DALLAS, DENTON, ELLIS, KAUFMAN, ROCKWALL					
EL PASO, TX MSA	268	324	382	477	535
COUNTY(IES): EL PASO					
FORT WORTH-ARLINGTON, TX PMSA	292	359	421	528	590
COUNTY(IES): JOHNSON, PARKER, TARRANT					
GALVESTON-TEXAS CITY, TX PMSA	284	346	407	509	570
COUNTY(IES): GALVESTON					
HOUSTON, TX PMSA	272	330	388	486	544
COUNTY(IES): FORT BEND, HARRIS, LIBERTY, MONTGOMERY, WALLER					
KILLEEN-TEMPLE, TX MSA	264	320	377	471	528
COUNTY(IES): BELL, CORYELL					
LAREDO, TX MSA	249	304	356	446	501
COUNTY(IES): WEBB					
LONGVIEW-MARSHALL, TX MSA	302	366	431	537	603
COUNTY(IES): GREGG, HARRISON					

NOTE: THE FMRS FOR UNIT SIZES LARGER THAN FOUR-BEDROOMS ARE CALCULATED BY ADDING 15 PERCENT TO THE FOUR-BEDROOM FMR FOR EACH ADDITIONAL BEDROOM. TO ILLUSTRATE, THE FMR FOR A FIVE-BEDROOM UNIT IS 1.15 TIMES THE FOUR-BEDROOM FMR, AND THE CALCULATION OF THE FMR FOR A SIX-BEDROOM UNIT IS 1.30 TIMES THE FOUR-BEDROOM FMR, ETC.

SCHEDULE B - FAIR MARKET RENTS FOR EXISTING HOUSING

031688

S T A T E: TEXAS

	0 BEDROOMS	1 BEDROOM	2 BEDROOMS	3 BEDROOMS	4 BEDROOMS
LUBBOCK, TX MSA COUNTY(IES): LUBBOCK	224	281	368	467	515
MC ALLEN-EDINBURG-MISSION, TX MSA COUNTY(IES): HIDALGO	270	328	385	482	541
MIDLAND, TX MSA COUNTY(IES): MIDLAND	346	421	495	620	694
ODESSA, TX MSA COUNTY(IES): ECTOR	344	419	492	615	689
SAN ANGELO, TX MSA COUNTY(IES): TOM GREEN	290	353	416	521	584
SAN ANTONIO, TX MSA COUNTY(IES): BEXAR, COMAL, GUADALUPE	295	354	420	527	586
SHERMAN-DENISON, TX MSA COUNTY(IES): GRAYSON	265	321	379	473	530
TEXARKANA, TX-TEXARKANA, AR MSA COUNTY(IES): BOWIE	244	296	349	437	489
TYLER, TX MSA COUNTY(IES): SMITH	305	370	436	545	610
VICTORIA, TX MSA COUNTY(IES): VICTORIA	372	451	531	666	745
WACO, TX MSA COUNTY(IES): MCLENNAN	252	302	354	440	490
WICHITA FALLS, TX MSA COUNTY(IES): WICHITA	274	333	393	490	550

NONMETROPOLITAN COUNTIES

	0 BEDROOMS	1 BEDROOM	2 BEDROOMS	3 BEDROOMS	4 BEDROOMS		0 BEDROOMS	1 BEDROOM	2 BEDROOMS	3 BEDROOMS	4 BEDROOMS
ANDERSON	231	280	330	412	463	ANDREWS	198	240	281	352	396
ANGELINA	269	325	384	480	537	ARANSAS	255	311	366	456	512
ARCHER	221	270	317	397	444	ARMSTRONG	241	291	344	431	482
ATASCOSA	237	288	341	427	476	AUSTIN	273	331	390	488	547
BAILEY	223	273	322	399	445	BANDERA	237	288	341	427	476
BASTROP	235	285	336	422	472	BAYLOR	221	270	317	397	444
BEE	255	311	366	456	512	BLANCO	217	266	312	390	438
BORDEN	217	266	312	390	437	BOSQUE	203	247	289	364	408
BREWSTER	198	240	281	352	396	BRISCOE	241	291	344	431	482
BROOKS	255	311	366	456	512	BROWN	223	273	322	399	445
BURLESON	237	287	339	424	474	BURNET	217	266	312	390	438
CALDWELL	235	285	336	422	472	CALHOUN	249	304	356	446	501
CALLAHAN	229	278	326	408	459	CAMP	212	257	305	380	427
CARSON	241	291	344	431	482	CASS	244	296	348	437	488
CASTRO	241	291	344	431	482	CHAMBERS	282	343	403	505	565
CHEROKEE	231	280	330	412	463	CHILDRESS	221	270	317	397	444
CLAY	221	270	317	397	444	COCHRAN	223	273	322	399	445
COKE	207	252	296	371	414	COLEMAN	223	273	322	399	445

NOTE: THE FMRS FOR UNIT SIZES LARGER THAN FOUR-BEDROOMS ARE CALCULATED BY ADDING 15 PERCENT TO THE FOUR-BEDROOM FMR FOR EACH ADDITIONAL BEDROOM. TO ILLUSTRATE, THE FMR FOR A FIVE-BEDROOM UNIT IS 1.15 TIMES THE FOUR-BEDROOM FMR, AND THE CALCULATION OF THE FMR FOR A SIX-BEDROOM UNIT IS 1.30 TIMES THE FOUR-BEDROOM FMR, ETC.

SCHEDULE B - FAIR MARKET RENTS FOR EXISTING HOUSING

031688

S T A T E: TEXAS

NONMETROPOLITAN COUNTIES

	0 BEDROOMS	1 BEDROOM	2 BEDROOMS	3 BEDROOMS	4 BEDROOMS
COLLINGSWORT	241	291	344	431	482
COMANCHE	229	278	326	408	459
COOKE	254	309	364	454	510
CRANE	198	240	281	352	396
CROSBY	223	273	322	399	445
DALLAM	241	291	344	431	482
DEAF SMITH	241	291	344	431	482
DE WITT	249	304	356	446	501
DIMMIT	214	262	308	384	431
DUVAL	255	311	366	456	512
EDWARDS	220	270	316	389	433
FALLS	203	247	289	364	406
FAYETTE	235	285	336	422	472
FLOYD	223	273	322	399	445
FRANKLIN	244	296	348	437	488
FRIO	237	288	341	427	476
GARZA	223	273	322	399	445
GLASSCOCK	217	266	312	390	437
GONZALES	249	304	356	446	501
GRIMES	237	287	339	424	474
HALL	241	291	344	431	482
HANSFORD	241	291	344	431	482
HARTLEY	241	291	344	431	482
HEMPHILL	241	291	344	431	482
HILL	252	303	354	444	497
HOOD	273	331	390	488	547
HOUSTON	240	290	343	430	481
HUDSPETH	198	240	281	352	396
HUTCHINSON	241	291	344	431	482
JACK	221	270	317	397	444
JASPER	255	311	366	456	512
JIM HOGG	243	293	347	435	486
JONES	229	278	326	408	459
KENDALL	237	288	341	427	476
KENT	229	278	326	408	459
KIMBLE	207	252	296	371	414
KINNEY	220	270	316	389	433
KNOX	223	273	322	399	445
LAMB	223	273	322	399	445

	0 BEDROOMS	1 BEDROOM	2 BEDROOMS	3 BEDROOMS	4 BEDROOMS
COLORADO	273	331	390	488	547
CONCHO	207	252	296	371	414
COTTLE	221	270	317	397	444
CROCKETT	207	252	296	371	414
CULBERSON	198	240	281	352	396
DAWSON	217	266	312	390	437
DELTA	244	296	348	437	488
DICKENS	223	273	322	399	445
DONLEY	241	291	344	431	482
EASTLAND	229	278	326	408	459
ERATH	229	278	326	408	459
FANNIN	254	309	364	454	510
FISHER	229	278	326	408	459
FOARD	221	270	317	397	444
FREESTONE	203	247	289	364	406
GAINES	198	240	281	352	396
GILLESPIE	237	288	341	427	476
GOLIAD	249	304	356	446	501
GRAY	241	291	344	431	482
HALE	223	273	322	399	445
HAMILTON	217	266	312	390	438
HARDEMAN	221	270	317	397	444
HASKELL	229	278	326	408	459
HENDERSON	231	280	330	412	463
HOCKLEY	221	270	317	397	444
HOPKINS	244	296	348	437	488
HOWARD	217	266	312	390	437
HUNT	254	309	364	454	510
IRION	207	252	296	371	414
JACKSON	249	304	356	446	501
JEFF DAVIS	198	240	281	352	396
JIM WELLS	255	311	366	456	512
KARNES	195	237	279	349	391
KENEDY	255	311	366	456	512
KERR	237	288	341	427	476
KING	223	273	322	399	445
KLEBERG	255	311	366	456	512
LAMAR	244	296	348	437	488
LAMPASAS	217	266	312	390	438

NOTE: THE FMRS FOR UNIT SIZES LARGER THAN FOUR-BEDROOMS ARE CALCULATED BY ADDING 15 PERCENT TO THE FOUR-BEDROOM FMR FOR EACH ADDITIONAL BEDROOM. TO ILLUSTRATE, THE FMR FOR A FIVE-BEDROOM UNIT IS 1.15 TIMES THE FOUR-BEDROOM FMR, AND THE CALCULATION OF THE FMR FOR A SIX-BEDROOM UNIT IS 1.30 TIMES THE FOUR-BEDROOM FMR, ETC.

SCHEDULE B - FAIR MARKET RENTS FOR EXISTING HOUSING 031688

S T A T E: TEXAS

NONMETROPOLITAN COUNTIES

	0 BEDROOMS	1 BEDROOM	2 BEDROOMS	3 BEDROOMS	4 BEDROOMS		0 BEDROOMS	1 BEDROOM	2 BEDROOMS	3 BEDROOMS	4 BEDROOMS
LA SALLE	214	262	308	384	431	LAVACA	249	304	355	446	501
LEE	235	285	336	422	472	LEON	245	296	349	437	489
LIMESTONE	203	247	289	364	406	LIPSCOMB	241	291	344	431	482
LIVE OAK	255	311	366	456	512	LLANO	217	266	312	390	438
LOVING	198	240	281	352	396	LYNN	223	273	322	399	445
MCCULLOCH	223	273	322	399	445	MCMULLEN	255	311	366	456	512
MADISON	245	296	349	437	489	MARION	212	257	305	380	427
MARTIN	217	266	312	390	437	MASON	207	252	296	371	414
MATAGORDA	273	331	390	488	547	MAVERICK	220	270	316	389	433
MEDINA	237	288	341	427	476	MENARD	207	252	296	371	414
MILAM	235	285	336	422	472	MILLS	223	273	322	399	445
MITCHELL	229	278	326	408	459	MONTAGUE	221	270	317	397	444
MOORE	241	291	344	431	482	MORRIS	244	296	348	437	488
MOTLEY	223	273	322	399	445	NACOGDOCHES	269	325	384	480	537
NAVARRO	203	247	289	364	406	NEWTON	255	311	366	456	512
NOLAN	229	278	326	408	459	OCHILTREE	241	291	344	431	482
OLDHAM	241	291	344	431	482	PALO PINTO	229	278	326	408	459
PANOLA	231	280	330	412	463	PARMER	241	291	344	431	482
PECOS	198	240	281	352	396	POLK	269	325	384	480	537
PRESIDIO	198	240	281	352	396	RAINS	219	269	314	388	429
REAGAN	207	252	296	371	414	REAL	220	270	316	389	433
RED RIVER	244	296	348	437	488	REEVES	198	240	281	352	396
REFUGIO	255	311	366	456	512	ROBERTS	241	291	344	431	482
ROBERTSON	237	287	339	424	474	RUNNELS	223	273	322	399	445
RUSK	231	280	330	412	463	SABINE	211	257	304	380	425
SAN AUGUSTIN	211	257	304	380	425	SAN JACINTO	269	325	384	480	537
SAN SABA	223	273	322	399	445	SCHLEICHER	207	252	296	371	414
SCURRY	229	278	326	408	459	SHACKLEFORD	229	278	326	408	459
SHELBY	211	257	304	380	425	SHERMAN	241	291	344	431	482
SOMERVELL	203	247	289	364	406	STARR	211	256	303	377	423
STEPHENS	229	278	326	408	459	STERLING	207	252	296	371	414
STONEWALL	229	278	326	408	459	SUTTON	207	252	296	371	414
SWISHER	241	291	344	431	482	TERRELL	198	240	281	352	396
TERRY	223	273	322	399	445	THROCKMORTON	229	278	326	408	459
TITUS	244	296	348	437	488	TRINITY	245	308	363	452	508
TYLER	245	296	349	437	489	UPSHUR	212	257	305	380	427
UPTON	217	266	312	390	437	UVALDE	220	270	316	389	433
VAL VERDE	220	270	316	389	433	VAN ZANDT	219	269	314	388	429
WALKER	278	339	399	500	559	WARD	198	240	281	352	396

NOTE: THE FMRS FOR UNIT SIZES LARGER THAN FOUR-BEDROOMS ARE CALCULATED BY ADDING 15 PERCENT TO THE FOUR-BEDROOM FMR FOR EACH ADDITIONAL BEDROOM. TO ILLUSTRATE, THE FMR FOR A FIVE-BEDROOM UNIT IS 1.15 TIMES THE FOUR-BEDROOM FMR, AND THE CALCULATION OF THE FMR FOR A SIX-BEDROOM UNIT IS 1.30 TIMES THE FOUR-BEDROOM FMR, ETC.

SCHEDULE B - FAIR MARKET RENTS FOR EXISTING HOUSING 031688

S T A T E: TEXAS

NONMETROPOLITAN COUNTIES

	0 BEDROOMS	1 BEDROOM	2 BEDROOMS	3 BEDROOMS	4 BEDROOMS		0 BEDROOMS	1 BEDROOM	2 BEDROOMS	3 BEDROOMS	4 BEDROOMS
WASHINGTON	245	296	349	437	489	WHARTON	273	331	390	488	547
WHEELER	241	291	344	431	482	WILBARGER	221	270	317	397	444
WILLACY	255	311	366	456	512	WILSON	195	237	279	349	391
WINKLER	198	240	281	352	396	WISE	273	331	390	488	547
WOOD	212	257	305	380	427	YOAKUM	223	273	322	399	445
YOUNG	221	270	317	397	444	ZAPATA	211	256	303	377	423
ZAVALA	220	270	316	389	433						

S T A T E: UTAH

	0 BEDROOMS	1 BEDROOM	2 BEDROOMS	3 BEDROOMS	4 BEDROOMS
PROVO-OREM, UT MSA.....	282	343	402	503	565
COUNTY(IES): UTAH					
SALT LAKE CITY-OGDEN, UT MSA.....	325	390	460	575	645
COUNTY(IES): DAVIS, SALT LAKE, WEBER					

NONMETROPOLITAN COUNTIES

	0 BEDROOMS	1 BEDROOM	2 BEDROOMS	3 BEDROOMS	4 BEDROOMS		0 BEDROOMS	1 BEDROOM	2 BEDROOMS	3 BEDROOMS	4 BEDROOMS
BEAVER	308	375	442	551	617	BOX ELDER	284	345	407	508	570
CACHE	284	345	407	508	570	CARBON	352	427	502	629	704
DAGGETT	352	427	502	629	704	DUCHESNE	352	427	502	629	704
EMERY	352	427	502	629	704	GARFIELD	308	375	442	551	617
GRAND	352	427	502	629	704	IRON	308	375	442	551	617
JUAB	308	375	442	551	617	KANE	308	375	442	551	617
MILLARD	308	375	442	551	617	MORGAN	352	427	502	629	704
PIUTE	308	375	442	551	617	RICH	284	345	407	508	570
SAN JUAN	352	427	502	629	704	SANPETE	308	375	442	551	617
SEVIER	308	375	442	551	617	SUMMIT	352	427	502	629	704
TOOELE	284	345	407	508	570	UINTAH	352	427	502	629	704
WASATCH	352	427	502	629	704	WASHINGTON	337	405	478	596	670
WAYNE	308	375	442	551	617						

S T A T E: VERMONT

	0 BEDROOMS	1 BEDROOM	2 BEDROOMS	3 BEDROOMS	4 BEDROOMS
BURLINGTON, VT MSA.....	405	493	579	724	812
COUNTY: CHITTENDEN TOWNS OF BURLINGTON, CHARLOTTE, COLCHESTER, ESSEX HINESBURG, JERICHO, MILTON, RICHMOND, ST. GEORGE SHELBURNE, SOUTH BURLIN, WILLISTON, WINOOSKI.					
COUNTY: FRANKLIN TOWNS OF GEORGIA					
COUNTY: GRAND ISLE TOWNS OF GRAND ISLE, SOUTH HERO					
NONMETROPOLITAN COUNTIES OR PARTS OF COUNTIES	0 BEDROOMS	1 BEDROOM	2 BEDROOMS	3 BEDROOMS	4 BEDROOMS

NOTE: THE FMRS FOR UNIT SIZES LARGER THAN FOUR-BEDROOMS ARE CALCULATED BY ADDING 15 PERCENT TO THE FOUR-BEDROOM FMR FOR EACH ADDITIONAL BEDROOM. TO ILLUSTRATE, THE FMR FOR A FIVE-BEDROOM UNIT IS 1.15 TIMES THE FOUR-BEDROOM FMR, AND THE CALCULATION OF THE FMR FOR A SIX-BEDROOM UNIT IS 1.30 TIMES THE FOUR-BEDROOM FMR, ETC.

SCHEDULE B - FAIR MARKET RENTS FOR EXISTING HOUSING 031688

S T A T E: VERMONT

NONMETROPOLITAN COUNTIES OR PARTS OF COUNTIES	0 BEDROOMS	1 BEDROOM	2 BEDROOMS	3 BEDROOMS	4 BEDROOMS
ADDISON COUNTY	325	394	464	579	649
BENNINGTON COUNTY	330	405	475	592	667
CALEDONIA COUNTY	277	335	395	494	554
CHITTENDEN COUNTY TOWNS OF BOLTON, BUELS, HUNTINGTON, UNDERHILL WESTFORD	375	457	538	673	754
ESSEX COUNTY	277	335	395	494	554
FRANKLIN COUNTY TOWNS OF BAKERSFIELD, BERKSHIRE, ENOSBURG, FAIRFAX FAIRFIELD, FLETCHER, FRANKLIN, HIGHGATE, MONTGOMERY, RICHFORD ST. ALBANS, ST. ALBANS, SHELDON, SWANTON	301	366	428	534	597
GRAND ISLE COUNTY TOWNS OF ALBURG, ISLE LA MOTT, NORTH HERO	277	335	395	494	554
LAMOILLE COUNTY	277	335	395	494	554
ORANGE COUNTY	301	366	428	534	597
ORLEANS COUNTY	277	335	395	494	554
RUTLAND COUNTY	313	392	449	563	629
WASHINGTON COUNTY	330	405	475	592	667
WINDHAM COUNTY	313	381	449	563	629
WINDSOR COUNTY	313	381	449	563	629

S T A T E: VIRGINIA

	0 BEDROOMS	1 BEDROOM	2 BEDROOMS	3 BEDROOMS	4 BEDROOMS
CHARLOTTESVILLE, VA MSA..... COUNTY(IES): ALBEMARLE, FLUVANNA, GREENE, CHARLOTTESVI	335	408	479	600	671
DANVILLE, VA MSA..... COUNTY(IES): PITTSYLVANIA, DANVILLE	257	311	366	458	513
JOHNSON CITY-KINGSPORT-BRISTOL, TN-VA MSA..... COUNTY(IES): SCOTT, WASHINGTON, BRISTOL	242	294	346	433	485
LYNCHBURG, VA MSA..... COUNTY(IES): AMHERST, CAMPBELL, LYNCHBURG	276	343	395	482	553
NORFOLK-VIRGINIA BEACH-NEWPORT NEWS, VA MSA..... COUNTY(IES): GLOUCESTER, JAMES CITY, YORK, CHESAPEAKE, HAMPTON NEWPORT NEWS, NORFOLK, POQUOSON, PORTSMOUTH, SUFFOLK VIRGINIA BEA, WILLIAMSBURG	335	405	475	595	665
RICHMOND-PETERSBURG, VA MSA..... COUNTY(IES): CHARLES CITY, CHESTERFIELD, DINWIDDIE, GOOCHLAND HANOVER, HENRICO, NEW KENT, POWHATAN, PRINCEGEORGE COLONIAL HEI, HOPEWELL, PETERSBURG, RICHMOND	306	368	430	539	604
ROANOKE, VA MSA..... COUNTY(IES): BOTETOURT, ROANOKE, ROANOKE, SALEM	269	327	384	481	539
WASHINGTON, DC-MD-VA MSA..... COUNTY(IES): ARLINGTON, FAIRFAX, LOUDOUN, PRINCEWILLIA, STAFFORD ALEXANDRIA, FAIRFAX, FALLS CHURCH, MANASSAS MANASSAS PRK	470	570	671	838	939

NONMETROPOLITAN COUNTIES

	0 BEDROOMS	1 BEDROOM	2 BEDROOMS	3 BEDROOMS	4 BEDROOMS		0 BEDROOMS	1 BEDROOM	2 BEDROOMS	3 BEDROOMS	4 BEDROOMS
ACCOMACK	254	305	355	438	490	ALLEGHANY	268	326	383	479	537

NOTE: THE FMRS FOR UNIT SIZES LARGER THAN FOUR-BEDROOMS ARE CALCULATED BY ADDING 15 PERCENT TO THE FOUR-BEDROOM FMR FOR EACH ADDITIONAL BEDROOM. TO ILLUSTRATE, THE FMR FOR A FIVE-BEDROOM UNIT IS 1.15 TIMES THE FOUR-BEDROOM FMR, AND THE CALCULATION OF THE FMR FOR A SIX-BEDROOM UNIT IS 1.30 TIMES THE FOUR-BEDROOM FMR, ETC.

SCHEDULE B - FAIR MARKET RENTS FOR EXISTING HOUSING

031688

S T A T E: VIRGINIA

NONMETROPOLITAN COUNTIES

	0 BEDROOMS	1 BEDROOM	2 BEDROOMS	3 BEDROOMS	4 BEDROOMS		0 BEDROOMS	1 BEDROOM	2 BEDROOMS	3 BEDROOMS	4 BEDROOMS
AMELIA	222	269	316	397	445	APPOMATTOX	271	326	381	477	534
AUGUSTA	268	326	383	479	537	BATH	268	326	383	479	537
BEDFORD	231	281	332	414	464	BLAND	226	274	323	405	453
BRUNSWICK	210	255	299	375	420	BUCHANAN	257	311	366	458	514
BUCKINGHAM	222	269	316	397	445	CAROLINE	316	385	453	565	635
CARROLL	226	274	323	405	453	CHARLOTTE	222	269	316	397	445
CLARKE	269	327	384	481	539	CRAIG	210	255	299	374	419
CULPEPER	279	339	400	499	559	CUMBERLAND	222	269	316	397	445
DICKENSON	239	278	329	411	460	ESSEX	243	297	350	437	490
FAUQUIER	279	339	400	499	559	FLOYD	267	325	381	477	534
FRANKLIN	231	281	332	414	464	FREDERICK	269	327	384	481	539
GILES	267	325	381	477	534	GRAYSON	226	274	323	405	453
GREENSVILLE	210	255	299	375	420	HALIFAX	222	269	316	397	445
HENRY	269	327	384	480	538	HIGHLAND	268	326	383	479	537
ISLE OFWIGHT	217	264	306	383	420	KING + QUEEN	243	297	350	437	490
KING GEORGE	316	385	453	565	635	KING WILLIAM	243	297	350	437	490
LANCASTER	243	297	350	437	490	LEE	229	278	329	411	460
LOUISA	283	342	400	499	559	LUNENBURG	222	269	316	397	445
MADISON	283	342	400	499	559	MATHEWS	243	297	350	437	490
MECKLENBURG	210	255	299	375	420	MIDDLESEX	243	297	350	437	490
MONTGOMERY	326	395	464	583	651	NELSON	235	285	336	420	471
NORTHAMPTON	254	305	355	438	490	NORTHUMBERLD	243	297	350	437	490
NOTTOWAY	222	269	316	397	445	ORANGE	283	342	400	499	559
PAGE	269	327	384	481	539	PATRICK	231	281	332	414	464
PRINCEEDWARD	222	269	316	397	445	PULASKI	267	325	381	477	534
RAPPAHANNOCK	279	339	400	499	559	RICHMOND	243	297	350	437	490
ROCKBRIDGE	268	326	383	479	537	ROCKINGHAM	268	326	383	479	537
RUSSELL	257	311	366	458	514	SHENANDOAH	269	327	384	481	539
SMYTH	226	274	323	405	453	SOUTHAMPTON	217	264	306	383	420
SPOTSLYVANIA	316	385	453	565	635	SURRY	217	264	306	383	420
SUSSEX	210	255	299	375	420	TAZEWELL	257	311	366	458	514
WARREN	269	327	384	481	539	WESTMORELAND	243	297	350	437	490
WISE	259	312	368	460	516	WYTHE	245	298	346	428	478
BEDFORD	231	281	332	414	464	BUENA VISTA	268	326	383	479	537
CLIFTON FORG	268	326	383	479	537	COVINGTON	268	326	383	479	537
EMPORIA	210	255	299	375	420	FRANKLIN	210	255	299	375	420
FREDERICKBUR	316	385	453	565	635	GALAX	226	274	323	405	453
HARRISONBURG	268	326	383	479	537	LEXINGTON	268	326	383	479	537
MARTINSVILLE	269	327	384	480	538	NORTON	258	311	367	459	515

NOTE: THE FMRS FOR UNIT SIZES LARGER THAN FOUR-BEDROOMS ARE CALCULATED BY ADDING 15 PERCENT TO THE FOUR-BEDROOM FMR FOR EACH ADDITIONAL BEDROOM. TO ILLUSTRATE, THE FMR FOR A FIVE-BEDROOM UNIT IS 1.15 TIMES THE FOUR-BEDROOM FMR, AND THE CALCULATION OF THE FMR FOR A SIX-BEDROOM UNIT IS 1.30 TIMES THE FOUR-BEDROOM FMR, ETC.

SCHEDULE B - FAIR MARKET RENTS FOR EXISTING HOUSING 031688

S T A T E: VIRGINIA

NONMETROPOLITAN COUNTIES

	0 BEDROOMS	1 BEDROOM	2 BEDROOMS	3 BEDROOMS	4 BEDROOMS		0 BEDROOMS	1 BEDROOM	2 BEDROOMS	3 BEDROOMS	4 BEDROOMS
RADFORD	326	395	464	583	651	SOUTH BOSTON	222	269	316	397	445
STAUNTON	268	326	383	479	537	WAYNESBORO	268	326	383	479	537
WINCHESTER	269	327	384	481	539						

S T A T E: WASHINGTON

	0 BEDROOMS	1 BEDROOM	2 BEDROOMS	3 BEDROOMS	4 BEDROOMS
BELLINGHAM, WA MSA	342	418	491	627	690
COUNTY(IES): WHATCOM					
BREMERTON, WA MSA	345	420	493	616	692
COUNTY(IES): KITSAP					
OLYMPIA, WA MSA	357	433	510	638	715
COUNTY(IES): THURSTON					
RICHLAND-KENNEWICK-PASCO, WA MSA	402	490	576	721	807
COUNTY(IES): BENTON, FRANKLIN					
SEATTLE, WA PMSA	339	412	481	622	685
COUNTY(IES): KING, SNOHOMISH					
SPOKANE, WA MSA	301	357	421	538	595
COUNTY(IES): SPOKANE					
TACOMA, WA PMSA	292	355	417	543	606
COUNTY(IES): PIERCE					
VANCOUVER, WA PMSA	264	321	420	555	615
COUNTY(IES): CLARK					
YAKIMA, WA MSA	314	381	448	561	629
COUNTY(IES): YAKIMA					

NONMETROPOLITAN COUNTIES

	0 BEDROOMS	1 BEDROOM	2 BEDROOMS	3 BEDROOMS	4 BEDROOMS		0 BEDROOMS	1 BEDROOM	2 BEDROOMS	3 BEDROOMS	4 BEDROOMS
ADAMS	256	311	364	457	512	ASOTIN	331	401	473	591	663
CHELAN	308	374	442	551	618	CLALLAM	333	404	476	595	668
COLUMBIA	331	401	473	591	663	COWLITZ	310	376	442	554	622
DOUGLAS	309	374	442	551	618	FERRY	256	311	364	457	512
GARFIELD	331	401	473	591	663	GRANT	256	311	364	457	512
GRAYS HARBOR	333	404	476	595	668	ISLAND	339	414	486	608	680
JEFFERSON	333	404	476	595	668	KITTITAS	282	341	403	505	565
KLICKITAT	310	376	442	554	622	LEWIS	310	376	442	554	622
LINCOLN	256	311	364	457	512	MASON	333	404	476	595	668
OKANOGAN	282	341	403	505	565	PACIFIC	333	404	476	595	668
PEND OREILLE	256	311	364	457	512	SAN JUAN	339	414	486	608	680
SKAGIT	339	414	486	608	680	SKAMANIA	310	376	442	554	622
STEVENS	256	311	364	457	512	WAHKIAKUM	310	376	442	554	622
WALLA WALLA	331	401	473	591	663	WHITMAN	331	401	473	591	663

NOTE: THE FMRS FOR UNIT SIZES LARGER THAN FOUR-BEDROOMS ARE CALCULATED BY ADDING 15 PERCENT TO THE FOUR-BEDROOM FMR FOR EACH ADDITIONAL BEDROOM. TO ILLUSTRATE, THE FMR FOR A FIVE-BEDROOM UNIT IS 1.15 TIMES THE FOUR-BEDROOM FMR, AND THE CALCULATION OF THE FMR FOR A SIX-BEDROOM UNIT IS 1.30 TIMES THE FOUR-BEDROOM FMR, ETC.

SCHEDULE B - FAIR MARKET RENTS FOR EXISTING HOUSING 031688

S T A T E: WEST VIRGINIA

	0 BEDROOMS	1 BEDROOM	2 BEDROOMS	3 BEDROOMS	4 BEDROOMS
CHARLESTON, WV MSA	347	421	496	620	695
COUNTY(IES): KANAWHA, PUTNAM					
CUMBERLAND, MD-WV MSA	262	312	365	451	504
COUNTY(IES): MINERAL					
HUNTINGTON-ASHLAND, WV-KY-OH MSA	286	347	409	512	575
COUNTY(IES): CABELL, WAYNE					
PARKERSBURG-MARIETTA, WV-OH MSA	268	325	383	481	537
COUNTY(IES): WOOD					
STEUBENVILLE-WEIRTON, OH-WV MSA	275	335	392	492	553
COUNTY(IES): BROOKE, HANCOCK					
WHEELING, WV-OH MSA	269	327	386	482	540
COUNTY(IES): MARSHALL, OHIO					

NONMETROPOLITAN COUNTIES

	0 BEDROOMS	1 BEDROOM	2 BEDROOMS	3 BEDROOMS	4 BEDROOMS		0 BEDROOMS	1 BEDROOM	2 BEDROOMS	3 BEDROOMS	4 BEDROOMS
BARBOUR	249	302	356	446	498	BERKELEY	238	291	342	428	479
BOONE	248	300	354	442	495	BRAXTON	218	265	311	391	437
CALHOUN	288	337	391	508	560	CLAY	248	300	354	442	495
DODDRIDGE	242	296	349	435	488	FAYETTE	228	277	327	408	458
GILMER	265	318	386	478	526	GRANT	238	291	342	428	479
GREENBRIER	228	277	327	408	458	HAMPSHIRE	238	291	342	428	479
HARDY	238	291	342	428	479	HARRISON	288	337	391	508	560
JACKSON	288	337	391	508	560	JEFFERSON	238	291	342	428	479
LEWIS	249	302	356	446	498	LINCOLN	239	291	342	428	479
LOGAN	239	291	342	428	479	MCDOWELL	231	282	331	414	465
MARION	294	357	420	526	588	MASON	239	291	342	428	479
MERCER	234	288	337	421	472	MINGO	239	291	342	428	479
MONONGALIA	294	357	420	526	588	MONROE	239	288	337	421	472
MORGAN	238	291	342	428	479	NICHOLAS	228	277	327	408	458
PENDLETON	238	291	342	428	479	PLEASANTS	211	256	300	374	420
POCAHONTAS	228	277	327	408	458	PRESTON	294	357	420	526	588
RALEIGH	239	288	332	414	465	RANDOLPH	249	302	356	446	498
RITCHIE	211	256	300	374	420	ROANE	288	337	391	508	560
SUMMERS	239	288	337	421	472	TAYLOR	242	296	349	435	488
TUCKER	249	302	356	446	498	TYLER	211	256	300	374	420
UPSHUR	249	302	356	446	498	WEBSTER	228	277	327	408	458
WETZEL	252	305	360	450	504	WIRT	211	256	300	374	420
WYOMING	239	288	332	414	465						

S T A T E: WISCONSIN

	0 BEDROOMS	1 BEDROOM	2 BEDROOMS	3 BEDROOMS	4 BEDROOMS
APPLETON-OSHKOSH-NEENAH, WI MSA	268	326	385	481	538
COUNTY(IES): CALUMET, OUTAGAMIE, WINNEBAGO					

NOTE: THE FMRS FOR UNIT SIZES LARGER THAN FOUR-BEDROOMS ARE CALCULATED BY ADDING 15 PERCENT TO THE FOUR-BEDROOM FMR FOR EACH ADDITIONAL BEDROOM. TO ILLUSTRATE, THE FMR FOR A FIVE-BEDROOM UNIT IS 1.15 TIMES THE FOUR-BEDROOM FMR, AND THE CALCULATION OF THE FMR FOR A SIX-BEDROOM UNIT IS 1.30 TIMES THE FOUR-BEDROOM FMR, ETC.

SCHEDULE B - FAIR MARKET RENTS FOR EXISTING HOUSING 031688

S T A T E: WISCONSIN

	0 BEDROOMS	1 BEDROOM	2 BEDROOMS	3 BEDROOMS	4 BEDROOMS
DULUTH, MN-WI MSA	296	352	415	520	583
COUNTY(IES): DOUGLAS					
EAU CLAIRE, WI MSA	265	324	382	476	534
COUNTY(IES): CHIPPEWA, EAU CLAIRE					
GREEN BAY, WI MSA	268	326	387	481	538
COUNTY(IES): BROWN					
JANESVILLE-BELOIT, WI MSA	296	361	425	531	595
COUNTY(IES): ROCK					
KENOSHA, WI PMSA	322	393	461	578	646
COUNTY(IES): KENOSHA					
LA CROSSE, WI MSA	317	385	453	566	634
COUNTY(IES): LA CROSSE					
MADISON, WI MSA	317	387	461	559	644
COUNTY(IES): DANE					
MILWAUKEE, WI PMSA	320	385	455	570	635
COUNTY(IES): MILWAUKEE, OZAUKEE, WASHINGTON, WAUKESHA					
MINNEAPOLIS-ST. PAUL, MN-WI MSA	367	445	528	660	737
COUNTY(IES): ST CROIX					
RACINE, WI PMSA	301	366	431	539	604
COUNTY(IES): RACINE					
SHEBOYGAN, WI MSA	275	333	393	491	551
COUNTY(IES): SHEBOYGAN					
WAUSAU, WI MSA	268	326	385	481	538
COUNTY(IES): MARATHON					

NONMETROPOLITAN COUNTIES

	0 BEDROOMS	1 BEDROOM	2 BEDROOMS	3 BEDROOMS	4 BEDROOMS		0 BEDROOMS	1 BEDROOM	2 BEDROOMS	3 BEDROOMS	4 BEDROOMS
ADAMS	274	331	391	489	549	ASHLAND	240	292	344	430	482
BARRON	260	317	372	466	523	BAYFIELD	240	292	344	430	482
BUFFALO	247	299	354	441	496	BURNETT	240	292	344	430	482
CLARK	260	317	372	466	523	COLUMBIA	250	302	357	446	500
CRAWFORD	235	287	336	422	472	DODGE	250	302	357	446	500
DOOR	246	296	349	430	481	DUNN	260	317	372	466	523
FLORENCE	235	287	336	422	472	FOND DU LAC	294	355	403	502	549
FOREST	255	310	364	457	510	GRANT	246	298	352	439	493
GREEN	255	310	362	450	499	GREEN LAKE	268	326	385	481	538
IOWA	246	298	352	439	493	IRON	240	292	344	430	482
JACKSON	247	299	354	441	496	JEFFERSON	286	347	408	510	573
JUNEAU	274	331	391	489	549	KEWAUNEE	246	296	349	430	481
LAFAYETTE	246	298	352	439	493	LANGLADE	255	310	364	457	510
LINCOLN	255	310	364	457	510	MANITOWOC	246	296	349	430	481
MARINETTE	240	289	338	424	472	MARQUETTE	240	292	344	430	482
MENOMINEE	240	292	344	430	482	MONROE	247	299	354	441	496
OCONTO	235	287	336	422	472	ONEIDA	255	310	364	457	510
PEPIN	247	299	354	441	496	PIERCE	247	299	354	441	496

NOTE: THE FMRS FOR UNIT SIZES LARGER THAN FOUR-BEDROOMS ARE CALCULATED BY ADDING 15 PERCENT TO THE FOUR-BEDROOM FMR FOR EACH ADDITIONAL BEDROOM. TO ILLUSTRATE, THE FMR FOR A FIVE-BEDROOM UNIT IS 1.15 TIMES THE FOUR-BEDROOM FMR, AND THE CALCULATION OF THE FMR FOR A SIX-BEDROOM UNIT IS 1.30 TIMES THE FOUR-BEDROOM FMR, ETC.

BEST COPY AVAILABLE

SCHEDULE B - FAIR MARKET RENTS FOR EXISTING HOUSING 031688

S T A T E: WISCONSIN

NONMETROPOLITAN COUNTIES

	0 BEDROOMS	1 BEDROOM	2 BEDROOMS	3 BEDROOMS	4 BEDROOMS		0 BEDROOMS	1 BEDROOM	2 BEDROOMS	3 BEDROOMS	4 BEDROOMS
POLK	260	317	372	466	523	PORTAGE	274	331	391	489	549
PRICE	240	292	344	430	482	RICHLAND	246	298	352	439	493
RUSK	240	292	344	430	482	SAUK	273	332	391	488	547
SAWYER	240	292	344	430	482	SHAWANO	240	292	344	430	482
TAYLOR	240	292	344	430	482	TREMPEALEAU	247	299	354	441	496
VERNON	235	287	336	422	472	VILAS	255	310	364	457	510
WALWORTH	286	347	408	510	573	WASHBURN	240	292	344	430	482
WAUPACA	240	292	344	430	482	WAUSHARA	240	292	344	430	482
WOOD	274	331	391	489	549						

S T A T E: WYOMING

	0 BEDROOMS	1 BEDROOM	2 BEDROOMS	3 BEDROOMS	4 BEDROOMS
CASPER, WY MSA.....	394	480	563	705	790
COUNTY(IES): NATRONA					
CHEYENNE, WY MSA.....	326	394	467	586	654
COUNTY(IES): LARAMIE					

NONMETROPOLITAN COUNTIES

	0 BEDROOMS	1 BEDROOM	2 BEDROOMS	3 BEDROOMS	4 BEDROOMS		0 BEDROOMS	1 BEDROOM	2 BEDROOMS	3 BEDROOMS	4 BEDROOMS
ALBANY	252	310	366	457	507	BIG HORN	259	315	372	462	518
CAMPBELL	252	310	366	457	507	CARBON	252	310	366	457	507
CONVERSE	252	310	366	457	507	CROOK	252	315	372	462	518
FREMONT	252	310	366	457	507	GOSHEN	252	310	366	457	507
HOT SPRINGS	259	315	372	462	518	JOHNSON	252	310	366	457	507
LINCOLN	252	310	366	457	507	NIOBRARA	252	310	366	457	507
PARK	259	315	372	462	518	PLATTE	252	310	366	457	507
SHERIDAN	349	427	502	626	705	SUBLETTE	252	310	366	457	507
SWEETWATER	252	310	366	457	507	TETON	332	399	472	592	665
UINTA	252	310	366	457	507	WASHAKIE	259	315	372	462	518
WESTON	259	315	372	462	518						

S T A T E: GUAM

NONMETROPOLITAN COUNTIES

	0 BEDROOMS	1 BEDROOM	2 BEDROOMS	3 BEDROOMS	4 BEDROOMS
GUAM	411	494	584	730	821

NOTE: THE FMRS FOR UNIT SIZES LARGER THAN FOUR-BEDROOMS ARE CALCULATED BY ADDING 15 PERCENT TO THE FOUR-BEDROOM FMR FOR EACH ADDITIONAL BEDROOM. TO ILLUSTRATE, THE FMR FOR A FIVE-BEDROOM UNIT IS 1.15 TIMES THE FOUR-BEDROOM FMR, AND THE CALCULATION OF THE FMR FOR A SIX-BEDROOM UNIT IS 1.30 TIMES THE FOUR-BEDROOM FMR, ETC.

SCHEDULE B - FAIR MARKET RENTS FOR EXISTING HOUSING 031688

S T A T E: PUERTO RICO

	0 BEDROOMS	1 BEDROOM	2 BEDROOMS	3 BEDROOMS	4 BEDROOMS
AGUADILLA, PR MSA	225	275	325	405	455
ARECIBO, PR MSA	330	400	470	590	660
CAGUAS, PR PMSA	275	330	390	490	545
MAYAGUEZ, PR MSA	225	275	325	405	455
PONCE, PR MSA	320	390	460	575	645
SAN JUAN, PR PMSA	320	390	460	575	645

NONMETROPOLITAN COUNTIES

	0 BEDROOMS	1 BEDROOM	2 BEDROOMS	3 BEDROOMS	4 BEDROOMS
ALL OTHER	215	265	310	390	435

S T A T E: VIRGIN ISLANDS

NONMETROPOLITAN COUNTIES

	0 BEDROOMS	1 BEDROOM	2 BEDROOMS	3 BEDROOMS	4 BEDROOMS
-CHAR.AMALIE	355	435	510	640	715

	0 BEDROOMS	1 BEDROOM	2 BEDROOMS	3 BEDROOMS	4 BEDROOMS
ST. CROIX	300	365	430	540	600

NOTE: THE FMRS FOR UNIT SIZES LARGER THAN FOUR-BEDROOMS ARE CALCULATED BY ADDING 15 PERCENT TO THE FOUR-BEDROOM FMR FOR EACH ADDITIONAL BEDROOM. TO ILLUSTRATE, THE FMR FOR A FIVE-BEDROOM UNIT IS 1.15 TIMES THE FOUR-BEDROOM FMR, AND THE CALCULATION OF THE FMR FOR A SIX-BEDROOM UNIT IS 1.30 TIMES THE FOUR-BEDROOM FMR, ETC.

SCHEDULE D- FAIR MARKET RENTS FOR MANUFACTURED HOME SPACES (SECTION 8 EXISTING HOUSING PROGRAM) 040588

	SINGLE WIDE SPACE	DOUBLE WIDE SPACE
NON METRO STATE: ALABAMA	67	77
MSA: ANNISTON, AL	70	78
MSA: BIRMINGHAM, AL	99	109
MSA: COLUMBUS, GA-AL	90	99
MSA: DOTHAN, AL	65	74
MSA: FLORENCE, AL	78	84
MSA: GADSDEN, AL	70	78
MSA: HUNTSVILLE, AL	99	109
MSA: MOBILE, AL	79	85
MSA: MONTGOMERY, AL	79	84
MSA: TUSCALOOSA, AL	92	105
EXCEPTION COUNTY: LIMESTONE	81	89
EXCEPTION COUNTY: MARSHALL	81	89
NON METRO STATE: ALASKA	173	173
MSA: ANCHORAGE, AK	192	192
EXCEPTION COUNTY: KETCHIKAN	173	183
NON METRO STATE: ARIZONA	96	122
MSA: PHOENIX, AZ	134	159
MSA: TUCSON, AZ	96	134
NON METRO STATE: ARKANSAS	38	42
MSA: FAYETTEVILLE-SPRINGDALE, AR	62	66
MSA: FORT SMITH, AR-OK	35	38
MSA: LITTLE ROCK-NORTH LITTLE ROCK, AR	53	55
MSA: MEMPHIS, TN-AR-MS	91	91
MSA: PINE BLUFF, AR	28	30
MSA: TEXARKANA, TX-TEXARKANA, AR	108	121
EXCEPTION COUNTY: BENTON	53	55
EXCEPTION COUNTY: LITTLE RIVER	88	99
NON METRO STATE: CALIFORNIA	150	197
PMSA: ANAHEIM-SANTA ANA, CA	357	357
MSA: BAKERSFIELD, CA	141	215
MSA: CHICO, CA	150	197
MSA: FRESNO, CA	215	242
PMSA: LOS ANGELES-LONG BEACH, CA	174	291
MSA: MERCED, CA	150	197
MSA: MODESTO, CA	224	242
PMSA: OAKLAND, CA	246	321

NOTE: TO IDENTIFY COUNTIES (AND NEW ENGLAND TOWNS) IN EACH MSA, SEE SCHEDULE B

SCHEDULE D- FAIR MARKET RENTS FOR MANUFACTURED HOME SPACES (SECTION 8 EXISTING HOUSING PROGRAM) 040588

	SINGLE WIDE SPACE	DOUBLE WIDE SPACE
PMSA: OXNARD-VENTURA, CA	223	336
MSA: REDDING, CA	150	197
PMSA: RIVERSIDE-SAN BERNARDINO, CA	147	242
MSA: SACRAMENTO, CA	173	206
MSA: SALINAS-SEASIDE-MONTEREY, CA	215	270
MSA. SAN DIEGO, CA	259	283
PMSA: SAN FRANCISCO, CA	263	343
PMSA: SAN JOSE, CA	313	365
MSA: SANTA BARBARA-SANTA MARIA-LOMPOC, CA	177	270
PMSA: SANTA CRUZ, CA	229	286
PMSA: SANTA ROSA-PETALUMA, CA	229	275
MSA: STOCKTON, CA	224	242
PMSA: VALLEJO-FAIRFIELD-NAPA, CA	238	272
MSA: VISALIA-TULARE-PORTERVILLE, CA	150	197
MSA: YUBA.CITY, CA	150	197
EXCEPTION COUNTY: SAN LUIS OBI	205	242
NON METRO STATE: COLORADO	N/A	N/A
PMSA: BOULDER-LONGMONT, CO	222	243
MSA: COLORADO SPRINGS, CO	141	159
PMSA: DENVER, CO	253	273
MSA: FORT COLLINS-LOVELAND, CO	134	150
MSA: GREELEY, CO	134	150
MSA: PUEBLO, CO	134	150
EXCEPTION COUNTY: ALAMOSA	112	134
EXCEPTION COUNTY: ARCHULETA	134	150
EXCEPTION COUNTY: BACA	112	134
EXCEPTION COUNTY: BENT	112	134
EXCEPTION COUNTY: CHAFFEE	134	150
EXCEPTION COUNTY: CHEYENNE	112	134
EXCEPTION COUNTY: CLEAR CREEK	134	150
EXCEPTION COUNTY: CONEJOS	112	134
EXCEPTION COUNTY: COSTILLA	112	134
EXCEPTION COUNTY: CROWLEY	112	134
EXCEPTION COUNTY: CUSTER	134	150
EXCEPTION COUNTY: DELTA	134	150
EXCEPTION COUNTY: DELORES	134	150
EXCEPTION COUNTY: EAGLE	216	242
EXCEPTION COUNTY: ELBERT	112	134
EXCEPTION COUNTY: FREMONT	134	150
EXCEPTION COUNTY: GARFIELD	216	242
EXCEPTION COUNTY: GILPIN	164	189
EXCEPTION COUNTY: GRAND	134	150
EXCEPTION COUNTY: GUNNISON	134	150
EXCEPTION COUNTY: HINSDALE	134	150

NOTE: TO IDENTIFY COUNTIES (AND NEW ENGLAND TOWNS) IN EACH MSA, SEE SCHEDULE B

SCHEDULE D- FAIR MARKET RENTS FOR MANUFACTURED HOME SPACES (SECTION 8 EXISTING HOUSING PROGRAM) 040588

	SINGLE WIDE SPACE	DOUBLE WIDE SPACE
EXCEPTION COUNTY: HUERFANO	112	134
EXCEPTION COUNTY: JACKSON	134	150
EXCEPTION COUNTY: KIOWA	112	134
EXCEPTION COUNTY: KIT CARSON	112	134
EXCEPTION COUNTY: LAKE	134	150
EXCEPTION COUNTY: LA PLATA	134	150
EXCEPTION COUNTY: LAS ANIMAS	112	134
EXCEPTION COUNTY: LINCOLN	112	134
EXCEPTION COUNTY: LOGAN	112	134
EXCEPTION COUNTY: MESA	134	150
EXCEPTION COUNTY: MINERAL	112	134
EXCEPTION COUNTY: MOFFAT	216	242
EXCEPTION COUNTY: MONTEZUMA	134	150
EXCEPTION COUNTY: MONTROSE	134	150
EXCEPTION COUNTY: MORGAN	112	134
EXCEPTION COUNTY: OTERO	112	134
EXCEPTION COUNTY: OURAY	134	150
EXCEPTION COUNTY: PARK	134	150
EXCEPTION COUNTY: PHILLIPS	112	134
EXCEPTION COUNTY: PITKIN	216	242
EXCEPTION COUNTY: PROWERS	112	134
EXCEPTION COUNTY: RIO BLANCO	216	242
EXCEPTION COUNTY: RIO GRANDE	112	134
EXCEPTION COUNTY: ROUTT	216	242
EXCEPTION COUNTY: SAGUACHE	112	134
EXCEPTION COUNTY: SAN JUAN	134	150
EXCEPTION COUNTY: SAN MIGUEL	134	150
EXCEPTION COUNTY: SEDGWICK	112	134
EXCEPTION COUNTY: SUMMIT	216	242
EXCEPTION COUNTY: TELLER	112	134
EXCEPTION COUNTY: WASHINGTON	112	134
EXCEPTION COUNTY: YUMA	112	134
NON METRO STATE: CONNECTICUT	143	143
PMSA: BRIDGEPORT-MILFORD, CT	186	186
PMSA: BRISTOL, CT	143	143
PMSA: DANBURY, CT	142	142
PMSA: HARTFORD, CT	156	156
PMSA: MIDDLETOWN, CT	156	156
PMSA: NEW BRITAIN, CT	156	156
MSA: NEW HAVEN-MERIDEN, CT	140	140
MSA: NEW LONDON-NORWICH, CT-RI	133	133
PMSA: NORWALK, CT	175	175
PMSA: STAMFORD, CT	175	175
MSA: WATERBURY, CT	143	143

NOTE: TO IDENTIFY COUNTIES (AND NEW ENGLAND TOWNS) IN EACH MSA, SEE SCHEDULE B

SCHEDULE D- FAIR MARKET RENTS FOR MANUFACTURED HOME SPACES (SECTION 8 EXISTING HOUSING PROGRAM) 040588

	SINGLE WIDE SPACE	DOUBLE WIDE SPACE
NON METRO STATE: DELAWARE	68	68
PMSA: WILMINGTON, DE-NJ-MD	128	128
NON METRO STATE: DIST. OF COLUMBIA	N/A	N/A
MSA: WASHINGTON, DC-MD-VA	172	172
NON METRO STATE: FLORIDA	84	84
MSA: BRADENTON, FL	121	121
MSA: DAYTONA BEACH, FL	108	108
PMSA: FORT LAUDERDALE-HOLLYWOOD-POMPANO BEACH, FL	173	173
MSA: FORT MYERS-CAPE CORAL, FL	113	113
MSA: FORT PIERCE, FL	82	82
MSA: FORT WALTON BEACH, FL	84	84
MSA: GAINESVILLE, FL	84	84
MSA: JACKSONVILLE, FL	78	91
MSA: LAKELAND-WINTER HAVEN, FL	84	84
MSA: MELBOURNE-TITUSVILLE-PALM BAY, FL	99	99
PMSA: MIAMI-HIALEAH, FL	137	137
MSA: NAPLES, FL	84	84
MSA: OCALA, FL	84	84
MSA: ORLANDO, FL	99	99
MSA: PANAMA CITY, FL	84	84
MSA: PENSACOLA, FL	84	84
MSA: SARASOTA, FL	113	113
MSA: TALLAHASSEE, FL	78	78
MSA. TAMPA-ST. PETERSBURG-CLEARWATER, FL	113	113
MSA: WEST PALM BEACH-BOCA RATON-DELRAY BEACH, FL	143	143
EXCEPTION COUNTY: BAKER	76	89
EXCEPTION COUNTY: COLUMBIA	84	84
EXCEPTION COUNTY: WAKULLA	76	89
NON METRO STATE: GEORGIA	61	61
MSA: ALBANY, GA	54	57
MSA: ATHENS, GA	61	61
MSA: ATLANTA, GA	98	105
MSA: AUGUSTA, GA-SC	82	84
MSA: CHATTANOOGA, TN-GA	54	78
MSA: COLUMBUS, GA-AL	90	99
MSA: MACON-WARNER ROBINS, GA	55	60
MSA: SAVANNAH, GA	68	78
EXCEPTION COUNTY: BRYAN	61	64
EXCEPTION COUNTY: TWIGGS	54	59

NOTE: TO IDENTIFY COUNTIES (AND NEW ENGLAND TOWNS) IN EACH MSA, SEE SCHEDULE B

SCHEDULE D- FAIR MARKET RENTS FOR MANUFACTURED HOME SPACES (SECTION 8 EXISTING HOUSING PROGRAM) 040588

	SINGLE WIDE SPACE	DOUBLE WIDE SPACE
NON METRO STATE: HAWAII	N/A	N/A
MSA: HONOLULU, HI	N/A	N/A
NON METRO STATE: IDAHO	112	112
MSA: BOISE CITY, ID	120	140
NON METRO STATE: ILLINOIS	106	114
PMSA: AURORA-ELGIN, IL	207	223
MSA: BLOOMINGTON-NORMAL, IL	119	119
MSA: CHAMPAIGN-URBANA-RANTOUL, IL	97	97
PMSA: CHICAGO, IL	219	234
MSA: DAVENPORT-ROCK ISLAND-MOLINE, IA-IL	131	137
MSA: DECATUR, IL	131	131
PMSA: JOLIET, IL	219	234
MSA: KANKAKEE, IL	95	95
PMSA: LAKE COUNTY, IL	207	223
MSA: PEORIA, IL	177	194
MSA: ROCKFORD, IL	174	185
MSA: ST. LOUIS, MO-IL	99	115
MSA: SPRINGFIELD, IL	114	121
NON METRO STATE: INDIANA	58	76
MSA: ANDERSON, IN	65	65
MSA: BLOOMINGTON, IN	61	61
PMSA: CINCINNATI, OH-KY-IN	114	119
MSA: ELKHART-GOSHEN, IN	84	84
MSA: EVANSVILLE, IN-KY	77	82
MSA: FORT WAYNE, IN	72	97
PMSA: GARY-HAMMOND, IN	106	122
MSA: INDIANAPOLIS, IN	91	104
MSA: KOKOMO, IN	84	96
MSA: LAFAYETTE-WEST LAFAYETTE, IN	78	115
MSA: LOUISVILLE, KY-IN	82	90
MSA: MUNCIE, IN	62	70
MSA: SOUTH BEND-MISHAWAKA, IN	96	101
MSA: TERRE HAUTE, IN	61	76
EXCEPTION COUNTY: ADAMS	58	76
EXCEPTION COUNTY: BLACKFORD	66	76
EXCEPTION COUNTY: GIBSON	60	76
EXCEPTION COUNTY: GRANT	66	76
EXCEPTION COUNTY: HENRY	66	76
EXCEPTION COUNTY: JAY	66	76

NOTE: TO IDENTIFY COUNTIES (AND NEW ENGLAND TOWNS) IN EACH MSA, SEE SCHEDULE B

SCHEDULE D- FAIR MARKET RENTS FOR MANUFACTURED HOME SPACES (SECTION 8 EXISTING HOUSING PROGRAM) 040588

	SINGLE WIDE SPACE	DOUBLE WIDE SPACE
EXCEPTION COUNTY: MARSHALL	74	78
EXCEPTION COUNTY: RANDOLPH	66	76
EXCEPTION COUNTY: SULLIVAN	59	71
EXCEPTION COUNTY: VERMILLION	59	71
EXCEPTION COUNTY: WAYNE	66	76
EXCEPTION COUNTY: WELLS	55	76
NON METRO STATE: IOWA	91	98
MSA: CEDAR RAPIDS, IA	104	121
MSA: DAVENPORT-ROCK ISLAND-MOLINE, IA-IL	131	137
MSA: DES MOINES, IA	112	119
MSA: DUBUQUE, IA	104	129
MSA: IOWA CITY, IA	104	119
MSA: OMAHA, NE-IA	98	114
MSA: SIOUX CITY, IA-NE	101	101
MSA: WATERLOO-CEDAR FALLS, IA	104	121
NON METRO STATE: KANSAS	80	91
MSA: KANSAS CITY, MO-KS	97	119
MSA: LAWRENCE, KS	82	94
MSA: TOPEKA, KS	80	91
MSA: WICHITA, KS	94	100
EXCEPTION COUNTY: JEFFERSON	77	88
EXCEPTION COUNTY: OSAGE	77	88
NON METRO STATE: KENTUCKY	74	81
PMSA: CINCINNATI, OH-KY-IN	114	119
MSA: CLARKSVILLE-HOPKINSVILLE, TN-KY	78	84
MSA: EVANSVILLE, IN-KY	74	80
MSA: HUNTINGTON-ASHLAND, WV-KY-OH	84	84
MSA: LEXINGTON-FAYETTE, KY	92	106
MSA: LOUISVILLE, KY-IN	80	87
MSA: OWENSBORO, KY	85	102
NON METRO STATE: LOUISIANA	79	92
MSA: ALEXANDRIA, LA	78	91
MSA: BATON ROUGE, LA	91	108
MSA: HOUMA-THIBODAUX, LA	77	90
MSA: LAFAYETTE, LA	84	99
MSA: LAKE CHARLES, LA	90	106
MSA: MONROE, LA	78	91
MSA: NEW ORLEANS, LA	96	111

NOTE: TO IDENTIFY COUNTIES (AND NEW ENGLAND TOWNS) IN EACH MSA, SEE SCHEDULE B

SCHEDULE D- FAIR MARKET RENTS FOR MANUFACTURED HOME SPACES (SECTION 8 EXISTING HOUSING PROGRAM) 040588

	SINGLE WIDE SPACE	DOUBLE WIDE SPACE
MSA: SHREVEPORT, LA	84	99
EXCEPTION COUNTY: GRANT	76	89
EXCEPTION COUNTY: WEBSTER	79	92
NON METRO STATE: MAINE	127	146
MSA: BANGOR, ME	127	146
MSA: LEWISTON-AUBURN, ME	97	97
MSA: PORTLAND, ME	158	180
MSA: PORTSMOUTH-DOVER-ROCHESTER, NH-ME	127	146
NON METRO STATE: MARYLAND	122	122
MSA: BALTIMORE, MD	187	187
MSA: CUMBERLAND, MD-WV	122	122
MSA: HAGERSTOWN, MD	154	154
MSA: WASHINGTON, DC-MD-VA	172	172
PMSA: WILMINGTON, DE-NJ-MD	128	128
EXCEPTION COUNTY: ST MARYS	167	167
NON METRO STATE: MASSACHUSETTS	156	156
PMSA: BOSTON, MA	149	161
PMSA: BROCKTON, MA	149	149
PMSA: FALL RIVER, MA-RI	97	97
MSA: FITCHBURG-LEOMINSTER, MA	116	116
PMSA: LAWRENCE-HAVERHILL, MA-NH	141	151
PMSA: LOWELL, MA-NH	141	151
MSA: NEW BEDFORD, MA	134	134
PMSA: PAWTUCKET-WOONSOCKET-ATTLEBORO, RI-MA	133	133
MSA: PITTSFIELD, MA	144	144
PMSA: SALEM-GLOUCESTER, MA	149	161
MSA: SPRINGFIELD, MA	114	114
MSA: WORCESTER, MA	100	100
NON METRO STATE: MICHIGAN	114	127
PMSA: ANN ARBOR, MI	164	178
MSA: BATTLE CREEK, MI	99	114
MSA: BENTON HARBOR, MI	114	127
PMSA: DETROIT, MI	161	172
MSA: FLINT, MI	139	139
MSA: GRAND RAPIDS, MI	104	113
MSA: JACKSON, MI	114	114
MSA: KALAMAZOO, MI	120	123
MSA: LANSING-EAST LANSING, MI	134	155

NOTE: TO IDENTIFY COUNTIES (AND NEW ENGLAND TOWNS) IN EACH MSA, SEE SCHEDULE B

SCHEDULE D- FAIR MARKET RENTS FOR MANUFACTURED HOME SPACES (SECTION 8 EXISTING HOUSING PROGRAM) 040588

	SINGLE WIDE SPACE	DOUBLE WIDE SPACE
MSA: MUSKEGON, MI	104	106
MSA: SAGINAW-BAY CITY-MIDLAND, MI	121	121
EXCEPTION COUNTY: BARRY	94	109
EXCEPTION COUNTY: IONIA	114	127
EXCEPTION COUNTY: OCEANA	100	102
EXCEPTION COUNTY: SHIAWASSEE	133	133
EXCEPTION COUNTY: VAN BUREN	114	118
NON METRO STATE: MINNESOTA	82	82
MSA: DULUTH, MN-WI	84	95
MSA: FARGO-MOORHEAD, ND-MN	128	145
MSA: MINNEAPOLIS-ST. PAUL, MN-WI	164	164
MSA: ROCHESTER, MN	118	118
MSA: ST. CLOUD, MN	104	104
EXCEPTION COUNTY: POLK	125	142
NON METRO STATE: MISSISSIPPI	79	92
MSA: BILOXI-GULFPORT, MS	91	108
MSA: JACKSON, MS	99	121
MSA: MEMPHIS, TN-AR-MS	91	91
MSA: PASCAGOULA, MS	78	91
EXCEPTION COUNTY: STONE	79	92
NON METRO STATE: MISSOURI	54	71
MSA: COLUMBIA, MO	91	98
MSA: JOPLIN, MO	64	71
MSA: KANSAS CITY, MO-KS	97	119
MSA: ST. JOSEPH, MO	94	101
MSA: ST. LOUIS, MO-IL	99	115
MSA: SPRINGFIELD, MO	66	72
EXCEPTION COUNTY: ANDREW	89	96
NON METRO STATE: MONTANA	N/A	N/A
MSA: BILLINGS, MT	167	186
MSA: GREAT FALLS, MT	141	159
EXCEPTION COUNTY: BEAVERHEAD	134	150
EXCEPTION COUNTY: BIG HORN	134	150
EXCEPTION COUNTY: BLAINE	96	112
EXCEPTION COUNTY: BROADWATER	134	150
EXCEPTION COUNTY: CARBON	134	150
EXCEPTION COUNTY: CARTER	96	112
EXCEPTION COUNTY: CHOUTEAU	96	112

NOTE: TO IDENTIFY COUNTIES (AND NEW ENGLAND TOWNS) IN EACH MSA, SEE SCHEDULE B

SCHEDULE D- FAIR MARKET RENTS FOR MANUFACTURED HOME SPACES (SECTION 8 EXISTING HOUSING PROGRAM) 040588

	SINGLE WIDE SPACE	DOUBLE WIDE SPACE
EXCEPTION COUNTY: CUSTER	134	150
EXCEPTION COUNTY: DANIELS	96	112
EXCEPTION COUNTY: DAWSON	134	150
EXCEPTION COUNTY: DEER LODGE	134	150
EXCEPTION COUNTY: FALLON	96	112
EXCEPTION COUNTY: FERGUS	96	112
EXCEPTION COUNTY: FLATHEAD	134	150
EXCEPTION COUNTY: GALLATIN	134	150
EXCEPTION COUNTY: GARFIELD	96	112
EXCEPTION COUNTY: GLACIER	96	112
EXCEPTION COUNTY: GOLDEN VALLE	96	112
EXCEPTION COUNTY: GRANITE	134	150
EXCEPTION COUNTY: HILL	96	112
EXCEPTION COUNTY: JEFFERSON	134	150
EXCEPTION COUNTY: JUDITH BASIN	96	112
EXCEPTION COUNTY: LAKE	134	150
EXCEPTION COUNTY: LEWIS+ CLARK	134	150
EXCEPTION COUNTY: LIBERTY	96	112
EXCEPTION COUNTY: LINCOLN	134	150
EXCEPTION COUNTY: MCCONE	96	112
EXCEPTION COUNTY: MADISON	134	150
EXCEPTION COUNTY: MEAGHER	134	150
EXCEPTION COUNTY: MINERAL	134	150
EXCEPTION COUNTY: MISSOULA	134	150
EXCEPTION COUNTY: MUSSELSHELL	134	150
EXCEPTION COUNTY: PARK	134	150
EXCEPTION COUNTY: PETROLEUM	96	112
EXCEPTION COUNTY: PHILLIPS	96	112
EXCEPTION COUNTY: PONDERA	96	112
EXCEPTION COUNTY: POWDER RIVER	134	150
EXCEPTION COUNTY: POWELL	134	150
EXCEPTION COUNTY: PRAIRIE	96	112
EXCEPTION COUNTY: RAVALLI	134	150
EXCEPTION COUNTY: RICHLAND	96	112
EXCEPTION COUNTY: ROOSEVELT	96	112
EXCEPTION COUNTY: ROSEBUD	134	150
EXCEPTION COUNTY: SANDERS	134	150
EXCEPTION COUNTY: SHERIDAN	96	112
EXCEPTION COUNTY: SILVER BOW	134	150
EXCEPTION COUNTY: STILLWATER	96	112
EXCEPTION COUNTY: SWEET GRASS	96	112
EXCEPTION COUNTY: TETON	96	112
EXCEPTION COUNTY: TOOLE	96	112
EXCEPTION COUNTY: TREASURE	134	150
EXCEPTION COUNTY: VALLEY	96	112
EXCEPTION COUNTY: WHEATLAND	96	112

NOTE: TO IDENTIFY COUNTIES (AND NEW ENGLAND TOWNS) IN EACH MSA, SEE SCHEDULE B

SCHEDULE D- FAIR MARKET RENTS FOR MANUFACTURED HOME SPACES (SECTION 8 EXISTING HOUSING PROGRAM) 040588

	SINGLE WIDE SPACE	DOUBLE WIDE SPACE
EXCEPTION COUNTY: WIBAUX	96	112
EXCEPTION COUNTY: YL-ST-NT-PK	134	150
NON METRO STATE: NEBRASKA	83	102
MSA: LINCOLN, NE	113	119
MSA: OMAHA, NE-IA	98	114
MSA: SIOUX CITY, IA-NE	101	101
NON METRO STATE: NEVADA	106	122
MSA: LAS VEGAS, NV	224	250
MSA: RENO, NV	224	250
NON METRO STATE: NEW HAMPSHIRE	115	127
PMSA: LAWRENCE-HAVERHILL, MA-NH	141	151
PMSA: LOWELL, MA-NH	141	151
MSA: MANCHESTER, NH	131	143
PMSA: NASHUA, NH	161	161
MSA: PORTSMOUTH-DOVER-ROCHESTER, NH-ME	127	145
NON METRO STATE: NEW JERSEY	118	118
MSA: ALLENTOWN-BETHLEHEM, PA-NJ	116	116
MSA: ATLANTIC CITY, NJ	181	181
PMSA: BERGEN-PASSAIC, NJ	246	247
PMSA: JERSEY CITY, NJ	239	239
PMSA: MIDDLESEX-SOMERSET-HUNTERDON, NJ	280	280
PMSA: MONMOUTH-OCEAN, NJ	215	259
PMSA: NEWARK, NJ	231	239
PMSA: PHILADELPHIA, PA-NJ	201	201
PMSA: TRENTON, NJ	177	177
PMSA: VINELAND-MILLVILLE-BRIDGETON, NJ	156	156
PMSA: WILMINGTON, DE-NJ-MD	128	128
NON METRO STATE: NEW MEXICO	100	115
MSA: LAS CRUCES, NM	100	115
MSA: ALBUQUERQUE, NM	112	130
MSA: SANTA FE, NM	100	115
EXCEPTION COUNTY: SANDOVAL	106	120
NON METRO STATE: NEW YORK	137	137
MSA: ALBANY-SCHENECTADY-TROY, NY	171	171

NOTE: TO IDENTIFY COUNTIES (AND NEW ENGLAND TOWNS) IN EACH MSA, SEE SCHEDULE B

SCHEDULE D- FAIR MARKET RENTS FOR MANUFACTURED HOME SPACES (SECTION 8 EXISTING HOUSING PROGRAM) 040588

	SINGLE WIDE SPACE	DOUBLE WIDE SPACE
MSA: BINGHAMTON, NY	102	102
PMSA: BUFFALO, NY	123	123
MSA: ELMIRA, NY	110	110
MSA: GLENS FALLS, NY	137	137
PMSA: NASSAU-SUFFOLK, NY	188	243
PMSA: NEW YORK, NY	195	195
PMSA: NIAGARA FALLS, NY	118	118
PMSA: ORANGE COUNTY, NY	135	135
MSA: POUGHKEEPSIE, NY	177	177
MSA: ROCHESTER, NY	156	156
MSA: SYRACUSE, NY	127	127
MSA: UTICA-ROME, NY	116	116
EXCEPTION COUNTY: WESTCHESTER	231	231
NON METRO STATE: NORTH CAROLINA	55	68
MSA: ASHEVILLE, NC	78	91
MSA: BURLINGTON, NC	78	91
MSA: CHARLOTTE-GASTONIA-ROCK HILL, NC-SC	78	91
MSA: FAYETTEVILLE, NC	78	91
MSA: GREENSBORO--WINSTON-SALEM--HIGH POINT, NC	78	91
MSA: HICKORY, NC	55	68
MSA: JACKSONVILLE, NC	55	68
MSA: RALEIGH-DURHAM, NC	78	91
MSA: WILMINGTON, NC	78	91
EXCEPTION COUNTY: BRUNSWICK	64	76
EXCEPTION COUNTY: CURRITUCK	101	101
EXCEPTION COUNTY: MADISON	64	76
NON METRO STATE: NORTH DAKOTA	103	119
MSA: BISMARCK, ND	146	162
MSA: FARGO-MOORHEAD, ND-MN	129	145
MSA: GRAND FORKS, ND	112	138
NON METRO STATE: OHIO	75	75
PMSA: AKRON, OH	111	111
MSA: CANTON, OH	80	80
PMSA: CINCINNATI, OH-KY-IN	114	119
PMSA: CLEVELAND, OH	119	119
MSA: COLUMBUS, OH	104	121
MSA: DAYTON-SPRINGFIELD, OH	80	80
PMSA: HAMILTON-MIDDLETOWN, OH	92	95
MSA: HUNTINGTON-ASHLAND, WV-KY-OH	87	87
MSA: LIMA, OH	104	104

NOTE: TO IDENTIFY COUNTIES (AND NEW ENGLAND TOWNS) IN EACH MSA, SEE SCHEDULE B

SCHEDULE D- FAIR MARKET RENTS FOR MANUFACTURED HOME SPACES (SECTION 8 EXISTING HOUSING PROGRAM) 040588

	SINGLE WIDE SPACE	DOUBLE WIDE SPACE
PMSA: LORAIN-ELYRIA, OH	127	127
MSA: MANSFIELD, OH	98	98
MSA: PARKERSBURG-MARIETTA, WV-OH	87	87
MSA: STEUBENVILLE-WEIRTON, OH-WV	78	78
MSA: TOLEDO, OH	131	177
MSA: WHEELING, WV-OH	80	80
MSA: YOUNGSTOWN-WARREN, OH	98	98
EXCEPTION COUNTY: CHAMPAIGN	75	78
EXCEPTION COUNTY: OTTAWA	100	134
EXCEPTION COUNTY: PREBLE	75	75
EXCEPTION COUNTY: PUTNAM	81	81
EXCEPTION COUNTY: VAN WERT	81	81
NON METRO STATE: OKLAHOMA	76	82
MSA: ENID, OK	76	82
MSA: FORT SMITH, AR-OK	35	38
MSA: LAWTON, OK	77	84
MSA: OKLAHOMA CITY, OK	79	87
MSA: TULSA, OK	84	91
EXCEPTION COUNTY: LE FLORE	34	37
EXCEPTION COUNTY: MAYES	76	82
NON METRO STATE: OREGON	142	150
MSA: EUGENE-SPRINGFIELD, OR	167	172
MSA: MEDFORD, OR	142	150
PMSA: PORTLAND, OR	186	206
MSA: SALEM, OR	167	172
NON METRO STATE: PENNSYLVANIA	82	82
MSA: ALLENTOWN-BETHLEHEM, PA-NJ	116	116
MSA: ALTOONA, PA	107	107
PMSA: BEAVER COUNTY, PA	90	90
MSA: ERIE, PA	107	107
MSA: HARRISBURG-LEBANON-CARLISLE, PA	121	121
MSA: JOHNSTOWN, PA	107	107
MSA: LANCASTER, PA	111	111
PMSA: PHILADELPHIA, PA-NJ	201	201
PMSA: PITTSBURGH, PA	93	93
MSA: READING, PA	111	111
MSA: SCRANTON--WILKES-BARRE, PA	98	98
MSA: SHARON, PA	82	82
MSA: STATE COLLEGE, PA	82	82
MSA: WILLIAMSPORT, PA	82	82

NOTE: TO IDENTIFY COUNTIES (AND NEW ENGLAND TOWNS) IN EACH MSA, SEE SCHEDULE B

SCHEDULE D- FAIR MARKET RENTS FOR MANUFACTURED HOME SPACES (SECTION 8 EXISTING HOUSING PROGRAM) 040588

	SINGLE WIDE SPACE	DOUBLE WIDE SPACE
MSA: YORK, PA	111	111
EXCEPTION COUNTY: SUSQUEHANNA	82	82
NON METRO STATE: RHODE ISLAND	127	127
PMSA: FALL RIVER, MA-RI	97	97
MSA: NEW LONDON-NORWICH, CT-RI	133	133
PMSA: PAWTUCKET-WOONSOCKET-ATTLEBORO, RI-MA	133	133
PMSA: PROVIDENCE, RI	133	133
NON METRO STATE: SOUTH CAROLINA	61	61
MSA: ANDERSON, SC	61	61
MSA: AUGUSTA, GA-SC	82	84
MSA: CHARLESTON, SC	78	78
MSA: CHARLOTTE-GASTONIA-ROCK HILL, NC-SC	78	91
MSA: COLUMBIA, SC	58	78
MSA: FLORENCE, SC	61	61
MSA: GREENVILLE-SPARTANBURG, SC	65	68
NON METRO STATE: SOUTH DAKOTA	88	103
MSA: RAPID CITY, SD	88	103
MSA: SIOUX FALLS, SD	124	139
NON METRO STATE: TENNESSEE	61	61
MSA: CHATTANOOGA, TN-GA	54	78
MSA: CLARKSVILLE-HOPKINSVILLE, TN-KY	78	84
MSA: JACKSON, TN	61	61
MSA: JOHNSON CITY-KINGSPORT-BRISTOL, TN-VA	84	84
MSA: KNOXVILLE, TN	68	68
MSA: MEMPHIS, TN-AR-MS	91	91
MSA: NASHVILLE, TN	91	108
NON METRO STATE: TEXAS	66	82
NON METRO STATE: TEXAS	55	82
MSA: ABILENE, TX	57	64
MSA: AMARILLO, TX	106	111
MSA: AUSTIN, TX	95	113
MSA: BEAUMONT-PORT ARTHUR, TX	89	113
PMSA: BRAZORIA, TX	104	122
MSA: BROWNSVILLE-HARLINGEN, TX	78	91

NOTE: TO IDENTIFY COUNTIES (AND NEW ENGLAND TOWNS) IN EACH MSA, SEE SCHEDULE B

SCHEDULE D- FAIR MARKET RENTS FOR MANUFACTURED HOME SPACES (SECTION 8 EXISTING HOUSING PROGRAM) 040588

	SINGLE WIDE SPACE	DOUBLE WIDE SPACE
MSA: BRYAN-COLLEGE STATION, TX	96	108
MSA: CORPUS CHRISTI, TX	82	108
PMSA: DALLAS, TX	82	104
MSA: EL PASO, TX	110	124
PMSA: FORT WORTH-ARLINGTON, TX	82	104
PMSA: GALVESTON-TEXAS CITY, TX	101	114
PMSA: HOUSTON, TX	108	126
MSA: KILLEEN-TEMPLE, TX	99	108
MSA: LAREDO, TX	68	84
MSA: LONGVIEW-MARSHALL, TX	91	105
MSA: LUBBOCK, TX	105	108
MSA: MC ALLEN-EDINBURG-MISSION, TX	90	108
MSA: MIDLAND, TX	108	113
MSA: ODESSA, TX	108	113
MSA: SAN ANGELO, TX	91	99
MSA: SAN ANTONIO, TX	78	91
MSA: SHERMAN-DENISON, TX	84	99
MSA: TEXARKANA, TX-TEXARKANA, AR	108	121
MSA: TYLER, TX	84	89
MSA: VICTORIA, TX	66	82
MSA: WACO, TX	87	99
MSA: WICHITA FALLS, TX	61	68
EXCEPTION COUNTY: CALLAHAN	56	62
EXCEPTION COUNTY: CLAY	60	66
EXCEPTION COUNTY: HOOD	70	88
EXCEPTION COUNTY: JONES	56	62
EXCEPTION COUNTY: WISE	70	88
NON METRO STATE: UTAH	N/A	N/A
MSA: PROVO-OREM, UT	134	150
MSA: SALT LAKE CITY-OGDEN, UT	150	167
EXCEPTION COUNTY: BEAVER	96	112
EXCEPTION COUNTY: BOX ELDER	96	112
EXCEPTION COUNTY: CACHE	96	112
EXCEPTION COUNTY: CARBON	134	150
EXCEPTION COUNTY: DAGGETT	96	112
EXCEPTION COUNTY: DUCHESNE	96	112
EXCEPTION COUNTY: EMERY	134	150
EXCEPTION COUNTY: GARFIELD	96	112
EXCEPTION COUNTY: GRAND	134	150
EXCEPTION COUNTY: IRON	96	112
EXCEPTION COUNTY: JUAB	96	112
EXCEPTION COUNTY: KANE	96	112
EXCEPTION COUNTY: MILLARD	96	112
EXCEPTION COUNTY: MORGAN	96	112

NOTE: TO IDENTIFY COUNTIES (AND NEW ENGLAND TOWNS) IN EACH MSA, SEE SCHEDULE B

SCHEDULE D- FAIR MARKET RENTS FOR MANUFACTURED HOME SPACES (SECTION 8 EXISTING HOUSING PROGRAM) 040588

	SINGLE WIDE SPACE	DOUBLE WIDE SPACE
EXCEPTION COUNTY: PIUTE	96	112
EXCEPTION COUNTY: RICH	96	112
EXCEPTION COUNTY: SAN JUAN	96	112
EXCEPTION COUNTY: SANPETE	96	112
EXCEPTION COUNTY: SEVIER	96	112
EXCEPTION COUNTY: SUMMIT	96	112
EXCEPTION COUNTY: TOOELE	108	120
EXCEPTION COUNTY: UINTAH	134	150
EXCEPTION COUNTY: WASATCH	96	112
EXCEPTION COUNTY: WASHINGTON	96	112
EXCEPTION COUNTY: WAYNE	96	112
NON METRO STATE: VERMONT	119	138
MSA: BURLINGTON, VT	123	141
EXCEPTION COUNTY: FRANKLIN	123	141
EXCEPTION COUNTY: ORANGE	133	154
EXCEPTION COUNTY: WASHINGTON	123	141
EXCEPTION COUNTY: WINDHAM	176	203
EXCEPTION COUNTY: WINDSOR	189	217
NON METRO STATE: VIRGINIA	87	87
MSA: CHARLOTTESVILLE, VA	87	87
MSA: DANVILLE, VA	87	87
MSA: JOHNSON CITY-KINGSPORT-BRISTOL, TN-VA	84	84
MSA: LYNCHBURG, VA	78	78
MSA: NORFOLK-VIRGINIA BEACH-NEWPORT NEWS, VA	123	123
MSA: RICHMOND-PETERSBURG, VA	121	121
MSA: ROANOKE, VA	84	84
MSA: WASHINGTON, DC-MD-VA	172	172
EXCEPTION COUNTY: APPOMATTOX	76	76
EXCEPTION COUNTY: CRAIG	82	82
NON METRO STATE: WASHINGTON	122	142
MSA: BELLINGHAM, WA	122	158
MSA: BREMERTON, WA	122	158
MSA: OLYMPIA, WA	122	158
MSA: RICHLAND-KENNEWICK-PASCO, WA	167	167
PMSA: SEATTLE, WA	154	217
MSA: SPOKANE, WA	134	150
PMSA: TACOMA, WA	138	163
PMSA: VANCOUVER, WA	173	191
MSA: YAKIMA, WA	134	141
NON METRO STATE: WEST VIRGINIA	84	84

NOTE: TO IDENTIFY COUNTIES (AND NEW ENGLAND TOWNS) IN EACH MSA, SEE SCHEDULE B

SCHEDULE D- FAIR MARKET RENTS FOR MANUFACTURED HOME SPACES (SECTION 8 EXISTING HOUSING PROGRAM) 040588

	SINGLE WIDE SPACE	DOUBLE WIDE SPACE
MSA: CHARLESTON, WV	91	91
MSA: CUMBERLAND, MD-WV	122	122
MSA: HUNTINGTON-ASHLAND, WV-KY-OH	84	84
MSA: PARKERSBURG-MARIETTA, WV-OH	84	84
MSA: STEUBENVILLE-WEIRTON, OH-WV	76	76
MSA: WHEELING, WV-OH	76	76
EXCEPTION COUNTY: WIRT	82	82
NON METRO STATE: WISCONSIN	91	98
MSA: APPLETON-OSHKOSH-NEENAH, WI	114	121
MSA: DULUTH, MN-WI	84	95
MSA: EAU CLAIRE, WI	106	115
MSA: GREEN BAY, WI	112	119
MSA: JANESVILLE-BELOIT, WI	112	119
PMSA: KENOSHA, WI	120	129
MSA: LA CROSSE, WI	101	110
MSA: MADISON, WI	158	176
PMSA: MILWAUKEE, WI	130	137
MSA: MINNEAPOLIS-ST. PAUL, MN-WI	164	164
PMSA: RACINE, WI	122	129
MSA: SHEBOYGAN, WI	91	98
MSA: WAUSAU, WI	91	98
NON METRO STATE: WYOMING	N/A	N/A
MSA: CASPER, WY	224	242
MSA: CHEYENNE, WY	134	160
EXCEPTION COUNTY: ALBANY	134	160
EXCEPTION COUNTY: BIG HORN	134	160
EXCEPTION COUNTY: CAMPBELL	224	242
EXCEPTION COUNTY: CARBON	224	242
EXCEPTION COUNTY: CONVERSE	224	242
EXCEPTION COUNTY: CROOK	134	160
EXCEPTION COUNTY: FREMONT	224	242
EXCEPTION COUNTY: GOSHEN	134	160
EXCEPTION COUNTY: HOT SPRINGS	134	160
EXCEPTION COUNTY: JOHNSON	134	160
EXCEPTION COUNTY: LARAMIE	134	160
EXCEPTION COUNTY: LINCOLN	134	160
EXCEPTION COUNTY: PARK	134	160
EXCEPTION COUNTY: PLATTE	134	160
EXCEPTION COUNTY: SHERIDAN	224	242
EXCEPTION COUNTY: SUBLETTE	134	160
EXCEPTION COUNTY: SWEETWATER	224	242
EXCEPTION COUNTY: TETON	134	160

NOTE: TO IDENTIFY COUNTIES (AND NEW ENGLAND TOWNS) IN EACH MSA, SEE SCHEDULE B

SCHEDULE D- FAIR MARKET RENTS FOR MANUFACTURED HOME SPACES (SECTION 8 EXISTING HOUSING PROGRAM) 040588

	SINGLE WIDE SPACE	DOUBLE WIDE SPACE
EXCEPTION COUNTY: UINTA	134	160
EXCEPTION COUNTY: WASHAKIE	134	160
EXCEPTION COUNTY WESTON	134	160

NOTE: TO IDENTIFY COUNTIES (AND NEW ENGLAND TOWNS) IN EACH MSA, SEE SCHEDULE B

$BRKPT PRINT$

[FR Doc. 88-8102 Filed 4-12-88; 8:45 am]

BILLING CODE 4210-27-C

federal register

Wednesday
April 13, 1988

Part VIII

Department of Transportation

Federal Aviation Administration
14 CFR Parts 121 and 135
Smoking Aboard Aircraft; Final Rule

BEST COPY AVAILABLE

DEPARTMENT OF TRANSPORTATION

Federal Aviation Administration

14 CFR Parts 121 and 135

[Docket No. 25590; Amdt. Nos. 121-196 and 135-25]

Smoking Aboard Aircraft

AGENCY: Federal Aviation Administration (FAA), DOT.

ACTION: Final rule.

SUMMARY: This rule requires the no smoking sign to be turned on at all times on scheduled airline flights, except for flights between the United States and other countries, which are scheduled to be 2 hours or less in duration. This rule carries out a ban on smoking on such flights mandated by Pub. L. 100-202. The rule also makes minor changes in other, related sections of Parts 121 and 135 which affect smoking aboard air carrier aircraft during flights not covered by a total ban. Smoking in lavatories is prohibited on all air carrier flights. By December 31, 1988, aircraft lavatories must have placards which notify passengers that tampering with smoke detectors is prohibited by Federal law. Finally, the required passenger briefing must include more detailed instructions on smoking, including all these changes and the new statutory ban on tampering with smoke alarms in aircraft lavatories.

DATES: *Effective Date:* April 23, 1988.

Comments By: May 31, 1988.

ADDRESSES: Send comments on the rule in duplicate to: Federal Aviation Administration, Office of the Chief Counsel, Attention: Rules Docket (AGC-204), Docket No. 25590, 800 Independence Avenue, SW., Washington, DC 20591. One may deliver comments in duplicate to FAA Rules Docket, Room 915G, 800 Independence Avenue, SW., Washington, DC. All comments must be marked "Docket No. 25590." Comments may be examined in the Rules Docket weekdays, except Federal holidays, between 8:30 a.m. and 5 p.m.

FOR FURTHER INFORMATION CONTACT: John Craig Weller, Operations Law Branch (AGC-220), Regulations and Enforcement Division, Office of the Chief Counsel, Federal Aviation Administration, 800 Independence Avenue, SW., Washington, DC 20591, Telephone (202) 267-8756; Gary E. Davis, Project Development Branch (AFS-240), Air Transportation Division, Office of Flight Standards, Federal Aviation Administration, 800 Independence Avenue, SW., Washington, DC 20591, Telephone (202) 267-8094.

SUPPLEMENTARY INFORMATION:

Comments Invited

Interested persons are invited to participate in this rulemaking by submitting written data, views, or arguments and by commenting on the possible environmental, energy, federalism, or economic impact of this proposal. The comment should identify the regulatory docket or amendment number and be submitted in duplicate to the address above. All comments received, as well as a report summarizing any substantive contact with FAA personnel on this rulemaking, will be filed in the docket. The docket is available for public inspection both before and after the closing date for making comments.

The Administrator will consider any comment made on or before the closing date for comments. This final rule may be amended in light of comments received.

The FAA will acknowledge receipt of a comment if the commenter submits with the comment a pre-addressed, stamped postcard on which the following statement is made: "Comment to Docket No. 25590." When the comment is received, the postcard will be dated, time stamped, and returned to the commenter.

Availability of Final Rule

Any person may obtain a copy of this final rule by submitting a request to the Federal Aviation Administration, Office of Public Affairs, Attention: Public Inquiry Center (APA-430), 800 Independence Avenue, SW., Washington, DC 20591, or by calling (202) 267-3484. Requests should be identified by the docket number of this rule. Persons interested in being placed on a mailing list for future rulemaking actions should be request a copy of Advisory Circular 11-2A, Notice of Proposed Rulemaking Distribution System, which describes the application procedure.

Background

Smoking aboard air carrier aircraft has been regulated for some time for reasons of consumer protection, passenger comfort, and safety. Regulation of smoking for consumer protection and passenger comfort reasons has been based on the consumer protection provisions of section 404 of the Federal Aviation Act (Act) which requires air carriers to provide safe and adequate service. Section 404 is contained in Title IV of the Act, which regulates the economic and consumer protection aspects of air transportation. The first such rules concerning smoking aboard air carrier aircraft were adopted by the Civil Aeronautics Board (CAB) in 1973 (ER-800, 38 FR 12207, May 10, 1973). Those rules required certificated air carriers to set aside nonsmoking seats on each of their flights and to offer nonsmoking seats, if available, to passengers. Subsequently, the CAB amended its smoking rules to require that all passengers who requested a nonsmoking seat be given one (as long as the passenger complied with the carrier's usual check-in requirements), even if that meant the nonsmoking section had to be expanded (ER-1245, 46 FR 45934, September 16, 1981).

In 1984, the CAB reexamined its smoking rules. It considered requiring a ban on smoking on all air carrier flights of 2 hours duration or less, but eventually decided not to adopt such a ban. It did, however, ban smoking entirely on air carrier aircraft with fewer than 30 passenger seats (except for on-demand air taxi operations) because of the less-effective cabin ventilation systems on these aircraft and because flights in these aircraft were typically of short duration. The CAB reasoned that the short duration of the flight would ensure that any burden on smokers was minimized, while providing nonsmokers with a smoke-free flight. At the same time, the CAB adopted a total ban on smoking while an aircraft was on the ground because it found that aircraft ventilation systems typically are less effective there (ER-1383, 49 FR 25408, June 20, 1984).

When the CAB ceased to exist at the end of 1984 because of airline economic deregulation, the remaining economic regulatory functions were transferred to the Office of the Secretary of Transportation (OST). The consumer protection and passenger comfort rules on smoking aboard air carrier aircraft continue to be administered by OST (14 CFR Part 252).

While OST regulates air carrier economic and consumer issues under Title IV of the Act, the Federal Aviation Administration (FAA) regulates the safety aspects of air carrier operations under the authority of Title VI of the Act. FAA rules for the operation of air carrier airplanes with more than 30 seats are contained in Part 121 of the Federal Aviation Regulations (FAR) (14 CFR Part 121). Rules for the operation of air carrier aircraft with 30 seats or less are contained in Part 135 of the FAR (14 CFR Part 135). Some additional certification rules for all air carriers are contained in Special Federal Aviation Regulation (SFAR) 38-2.

Currently, there are few FAA rules which regulate smoking on air carrier aircraft for safety reasons. Section 121.317 of the FAR requires that each airplane be equipped with no smoking signs that must be turned on for each takeoff and landing, and at any other time deemed necessary by the pilot in command. No one may smoke when these signs are turned on. As a matter of practice, most carriers turn these signs on before passenger boarding and usually leave them on until after takeoff, turn them on again when the airplane is on final approach for landing, and then leave them on until the passengers have deplaned. Section 121.571(a)(1) of the FAR also requires that passengers be briefed on smoking before takeoff.

Section 135.177(a)(3) requires that aircraft having more than 19 passenger seats be equipped with no smoking signs which must be turned on for each landing and takeoff, and any other time considered necessary by the pilot in command. There is no requirement that smaller aircraft have no smoking signs. However, § 135.117(a)(1) requires that passengers on all aircraft operated under Part 135 of the FAR be given a briefing on smoking before takeoff.

New Legislative Requirement

In December 1987, Congress enacted a number of changes to the Act. One of the actions was an amendment to section 404 of the Act which mandates a total ban on smoking "in the passenger cabin or lavatory on any scheduled airline flight in intrastate, interstate, or overseas air transportation, if such flight is scheduled for 2 hours or less in duration." (Section 404(d)(1)(A)). This ban takes effect on April 23, 1988, and lasts for a period of 2 years. Section 404(d)(1)(B) directs the Secretary of Transportation to issue any regulations necessary to carry out the ban.

At the same time, Congress also added section 404(d)(2) which provides for a civil penalty of up to $2,000 for any passenger who tampers with, disables, or destroys a smoke detector in the lavatory of an air carrier aircraft. This provision took effect immediately and has no expiration date.

Currently, smoke detectors installed in aircraft lavatories are not required to be resistant to tampering. However, such a requirement might prevent or discourage attempts to tamper with or disable lavatory smoke detectors. The FAA solicits comments on whether it should consider such a requirement and on the associated costs and benefits.

As already mentioned, the current consumer protection rules regulating smoking on air carrier aircraft are contained in Part 252 of the economic regulations administered by OST. These rules were adopted under the "safe and adequate service" provisions of section 404 of the Act. The new smoking ban adopted by Congress is also contained in section 404 of the Act. The Secretary of Transportation has decided that rules to carry out the new, congressionally-mandated ban on smoking aboard flights of 2 hours or less should be administered by the FAA instead of OST. This decision is based on the fact that the passenger information signs aboard aircraft, which tell passengers when they may not smoke, are required by the safety rules in the FAR. The times when these signs must be turned on are also prescribed by the FAR. Ensuring compliance with the signs is also the responsibility of the FAA. Since passengers are accustomed to these signs and to complying with them, it is logical to use them to notify passengers that smoking is prohibited on a particular flight. In addition, because the signs are already in place on most air carrier aircraft, using them to notify passengers of the smoking ban will entail no additional cost for the airlines. For aircraft which are not required to have signs, the safety briefing already required by the FAR can be used to inform passengers when the 2-hour ban will be in effect. Therefore, the Secretary has delegated the authority under section 404(d) of the Act, as amended by section 328(a) of the Department of Transportation and Related Agencies Appropriations Act of 1988, Pub. L. 100–202, to the Administrator of the FAA. (Amendment 1–223, 53 FR 10250, March 30, 1988).

Discussion of the Rule

"Scheduled Flights"

Neither Part 121 nor Part 135 contains a definition of "scheduled flight." The term "schedule operation" is defined in SFAR 38–2 (50 FR 23944, June 7, 1985) as:

> Operations that are conducted in accordance with a published schedule for passenger operations which includes dates or times (or both) that is openly advertised or otherwise made readily available to the general public.

The FAA has determined that this definition of "schedule operation" should not be used to determine which flights operated by an air carrier should be included in the 2-hour smoking ban. Since the adoption of this definition in 1985, there have been complaints to the FAA and OST that it is too broad and includes flights which are legitimate "charter" flights. Many such flights are advertised in newspapers, flyers, and compilations of schedules with only dates of operation and cities served, without specific departure and arrival times or flight numbers. Passengers who reserve seats on these flights are usually only given specific departure and arrival times shortly before the actual date of departure. The FAA has concluded that it would be impractical to apply the 2-hour smoking ban to these flights, and it also concludes that Congress did not intend for them to be included.

The Official Airline Guide (OAG) is widely regarded as an authoritative source of information on scheduled airline flights throughout the world. The FAA has determined that the North American Edition of this publication should be used to determine which flights are included in the 2-hour smoking ban. At present, the operations of all air carriers offering scheduled flights are listed in the OAG. While it is conceivable that a carrier might remove its flights from the OAG to escape the 2-hour ban, the FAA believes that competitive and marketing pressures make such defections unlikely. The FAA invites comment on this conclusion.

Duration of Covered Flights

Pub. L. 100–202 bans smoking on a scheduled airline flight that is "scheduled for 2 hours or less in duration," except a flight between a point in the United States and a foreign country. The conference report on the legislation makes it clear that Congress intended that the ban apply to a flight which is scheduled for 2 hours or less, regardless of the actual duration of the flight. Scheduled duration of a flight will be determined by the elapsed time shown in the current North American Edition of the OAG. The FAA has decided that the OAG should be used as the reference for scheduled time, instead of airline computer reservation systems (CRS) because of the much wider availability of the OAG. CRS are not directly available to the public; information they contain usually may be obtained only through an airline or a travel agency. The OAG is available at airline offices and ticket counters, and at travel agencies, but it is also available in many libraries and may be purchased from the publisher. The schedule information contained in the OAG is nearly identical to that in airline CRS, although it is not updated quite so frequently because of publishing schedules. Nevertheless, its wider availability makes it a better reference source for determining the duration of a flight and whether the flight is covered by the smoking ban. It will be readily available to passengers who want to determine if smoking will be prohibited on a particular flight and to FAA

inspectors who must verify compliance with the 2-hour ban.

For the purposes of the smoking ban, each segment of a multistop flight will be considered as a separate "flight." For example, a flight consisting of two segments—A to B with a duration of 90 minutes and B to C also with a duration of 90 minutes—would be considered two flights of less than 2 hours duration rather than one flight of 3 hours duration. Thus, smoking would be prohibited on both segments. On the other hand, on a flight consisting of two segments—A to B with a duration of 90 minutes and B to C with a duration of 3 hours—smoking would be banned only on the first segment.

Part 121

All airplanes used in operations under Part 121 of the FAR are currently required by § 121.317 to be equipped with passenger information signs which can be turned on and off by the crew. These signs tell passengers when to fasten their seat belts and when smoking is prohibited. Passengers are accustomed to these signs and to complying with their instructions. The no smoking signs are thus a good means for informing passengers when smoking is prohibited on a particular flight because it is of 2 hours duration or less. However, the FAA solicits comments on any problems this might cause and alternative means of carrying out the 2-hour ban on smoking. Section 121.317 currently requires that the no smoking sign (and the seat belt sign) be turned on for each landing and takeoff, and at any other time considered necessary by the pilot in command. This section is amended to include a new paragraph § 121.317(c)(1), which specifies that the no smoking sign must be turned on at all times during flight segments scheduled to last 2 hours or less, except for flights between the United States and a foreign point. Scheduled times will be determined by reference to the current OAG. Section 121.317(i) provides that this requirement will cease to be effective on April 24, 1990, since the statutory 2-hour ban expires on that date. New paragraph § 121.317(c)(2), which applies to all flights not included in the total ban on smoking, continues the current requirements for when the no smoking light must be turned on.

Currently, § 121.317(c) prohibits smoking whenever the no smoking light is turned on. This requirement is moved to a new paragraph § 121.317(g). This paragraph includes an exception which will allow the pilot in command to permit smoking in the cockpit even when the no smoking sign is necessary because the 2-hour ban applies only to the passenger cabin and lavatory. Smoking in the lavatory is prohibited at all times by new paragraph § 121.317(h). This added language clarifies the existing requirement that lavatories be equipped with placards prohibiting smoking and carries out the new statutory ban on smoking in lavatories.

In addition, new § 121.317(e) requries that each airplane lavatory have a sign or placard which reads: "Federal law provides for a penalty of up to $2,000 for tampering with the smoke detector installed in this lavatory." These notices, which must be in place by December 31, 1988, will help to notify passengers about the new civil penalty provision of the Act applicable to persons who tamper with lavatory smoke detectors. They will supplement the briefing that passengers receive on this provision of the Act.

The existing provisions of § 121.317 are rearranged and some editorial changes are made for clarity. An obsolete compliance date is removed.

Section 121.571(a)(1)(i) is revised to expand the required passenger briefing on smoking. The briefing must include the pertinent requirements of the FAR and of Part 252 of the economic regulations. Most carriers now include the applicable requirements of both in their briefings. The required briefing must also include a specific statement advising passengers that the FAR require compliance with no smoking signs and placards, and that the Act bans tampering with smoke alarms in lavatories. Of course, carriers are free to include more information if they desire. For example, during the briefing on a flight segment of less than 2 hours, a carrier might choose to include information on smoking on a subsequent segment which is longer than 2 hours.

Part 135

In contrast to airplanes operated under Part 121, not all aircraft operated under Part 135 are required to have passenger information signs. Section 135.177(a)(3) requires such signs only on aircraft with more than 19 passenger seats. For those aircraft, a new § 135.127 is added with requirements similar to those in Part 121. No smoking signs will have to be turned on at all times on scheduled flight segments of 2 hours or less, as shown in the current OAG. As in Part 121, this provision will expire on April 24, 1990. For other flights, the current requirement in § 135.177(a)(3) that no smoking signs be turned on for takeoff and landing, and at any other time considered necessary by the pilot in command is moved to a new § 135.127(a)(2). New § 135.127(b) prohibits smoking while the no smoking sign is turned on, although it also includes an exception that allows smoking in the cockpit at the discretion of the pilot in command, provided the cockpit is physically separated from the passenger cabin. This means that the cockpit must be separated from the passenger cabin by a solid bulkhead, or a similar barrier, with a door that may be closed during flight. Smoking may only be permitted in the cockpit when this door is closed. Section 135.127(c) prohibits smoking in lavatories on aircraft and § 135.127(d) requries placards or signs like those required by § 121.317(e) to be installed by December 31, 1988, in aircraft lavatories equipped with smoke detectors.

Section 135.117(a)(1) concerning the required passenger briefing on smoking is amended to be substantially identical to the briefing requirement in Part 121. This briefing will serve to inform passengers on aircraft with 19 or fewer seats, which are not required to have passenger information signs, of the statutory smoking ban as well as carrier rules prohibiting smoking adopted under Part 252 of OST's rules. In fact, the new ban should have little impact on passengers on most scheduled flights operated under Part 135 because carriers, other than air taxi operators, are already required by § 252. 3 of OST's economic regulations to prohibit smoking on aircraft with fewer than 30 passenger seats.

Compliance

Under the current smoking regulations administered by OST, air carriers (excepts for air taxi operators) are required to adopt and enforce various rules concerning smoking. Passengers are not subject to penalties for failure to comply with these carrier rules concerning smoking, although carriers are subject to civil penalties for failure to enforce their rules. In contrast, passengers who fail to observe the new 2-hour smoking ban may be subject to a civil penalty for smoking while the no smoking sign is lighted. Carriers will remain subject to the duty to enforce their rules on smoking imposed by Part 252 of OST's rules. In addition, the FAA also expects carriers to diligently enforce the prohibition on smoking when the no smoking light is turned on. If they do not, the FAA will consider further rulemaking on this issue. Of course, carriers remain free to adopt more strigent rules on smoking than prescribed by the FAR (or Part 252), including a total ban on all smoking on all flights. Alternatively, a carrier might choose to ban smoking on all flights in selected markets. Such a ban might help

eliminate confusion in markets where some flights were scheduled for just under 2 hours in duration and others were scheduled to be slightly more than 2 hours in duration because of adverse wind conditions, for example.

Analysis of Benefits and Costs

The FAA has estimated the costs and benefits associated with this rule by analyzing it section-by-section.

This rule incorporates the provisions which carry out Pub. L. 100-202 into the FAR and, as such, is incorporated into the Code of Federal Regulations at 14 CFR Part 121 and Part 135. The FAA's responsibility in this regard has been to devise and promulgate a set of procedures to carry out the statutory mandate that bans smoking in the passenger cabin or lavatory on any scheduled airline flight in intrastate, interstate, or overseas air transportation, if such flight is scheduled for 2 hours or less in duration. The FAA is similarly respondible with regard to the Act's new civil penalty provision which is applicable to persons who tamper with lavatory smoke detectors. The rule also adopts, in other related sections of Part 121 and 135, clarifying changes which embody current industry practice regarding smoking aboard air carrier aircraft during flight not covered by the total ban.

This rule provides a set of procedures to carry out the statutory mandate of Pub. L. 100-202, and incorporates changes that clarify current industry-wide requirements regarding smoking aboard aircraft. The costs of these procedures have been kept to a minimum, negligible amount because the FAA has employed a set of procedures that uses the duration of time the no smoking sign is lighted, the currently required safety briefing, and a simple sign or placard as the principal devices for carrying out the statutory mandate. The total cost of these requirements is negligible—the most expensive component cost being approximately one dollar to install a simple sign in a lavatory that has a smoke detector. The benefit of this rule is that the procedures give passengers an awareness of the provisions of the law regarding smoking aboard aircraft. Since passenger compliance with the law is contingent upon an awareness of the law, these procedures may be expected to increase passenger acceptance of constraints on smoking by providing timely and adequate information, thus reducing potential confusion and hostility which, in some cases, could have safety implications. This intangible benefit is not quantifiable in monetary terms.

Each change in Parts 121 and 135 is identified and explained in the detailed section by section analysis contained in the full Regulatory Evaluation placed in the Docket.

Regulatory Flexibility Determination

Since there is little or no cost associated with this rule, the FAA has determined that the rule will not have a significant economic impact on a substantial number of small entities.

Trade Impact Statement

Since this rule affects only U.S. air carriers which conduct scheduled flights of 2 hours or less in duration in intrastate, interstate, or overseas air transportation, and otherwise embodies current industry practice regarding smoking aboard aircraft, the FAA has determined that these regulations will not have an impact on international trade.

Need for Immediate Adoption

The majority of the changes made in this amendment merely carry out the prohibition on smoking on scheduled airline flights of 2 hours or less that was enacted by Congress. The change which prohibits smoking in lavatories on aircraft is partly in response to this same legislative action and in part is merely clarifying because lavatories are already placarded to prohibit smoking. The requirement for signs or placards in lavatories also carries out the new statutory ban on tampering with lavatory smoke detectors. Similarly, the expanded smoking briefing requirement is merely clarifying in nature, and largely reflects what is already the practice of most certificate holders.

Therefore, public comment on this amendment before its adoption is not likely to be helpful and could delay the effectiveness of the amendment past the effective date of the statutory ban on smoking. Such a delay is likely to cause confusion and would not be in the public interest. Comments received after the adoption of the amendment will be fully considered and any required changes in the rule will be made. For the same reasons, the FAA also finds good cause for making this amendment effective less than 30 days after publication.

Conclusion

The FAA has determined that this amendment is not major under Executive Order 12291 and that it is not significant under the Department of Transportation Regulatory Policies and Procedures (44 FR 11034, February 26, 1979). For the reasons discussed above, it also has been determined that the rule will not have a significant economic impact on a substantial number of small entities. A copy of the full Regulatory Evaluation is filed in the docket.

The regulation set forth in this amendment is being adopted pursuant to authority in the Federal Aviation Act of 1958, as amended (49 U.S.C. 1301, *et seq.*). That statute is construed to preempt State law regulating the same subject. Thus, in accordance with Executive Order 12612, it is determined that this amendment does not have federalism implications warranting the preparation of a Federalism Assessment.

List of Subjects in 14 CFR Parts 121 and 135

Air carriers, Air taxis, Aircraft, Airmen, Airplanes, Air transportation, Aviation safety, Airworthiness directives and standards, Charter flights, Common carriers, Crashworthiness, Emergency evacuation, Reporting and recordkeeping requirements, Smoking, Transportation.

PART 121—CERTIFICATION AND OPERATIONS DOMESTIC, FLAG, AND SUPPLEMENTAL AIR CARRIERS, AND COMMERCIAL OPERATORS OF LARGE AIRCRAFT

1. The authority citation for Part 121 is amended to read as follows:

Authority: 49 U.S.C. 1354(a), 1355, 1356, 1357, 1374(d) (as amended by Pub. L. 100-202), 1401, 1421-1430, 1472, 1485, and 1502; 49 U.S.C. 106(g) (Revised, Pub. L. 97-449, January 12, 1983).

2. Section 121.317 is amended by revising paragraph (a), revising paragraph (b) and redesignating it as (d), revising paragraph (c) and redesignating it as (f), and adding new paragraphs (b), (c), (e), (g), (h), and (i) to read as follows:

§ 121.317 Passenger information.

(a) No person may operate an airplane unless it is equipped with passenger information signs that meet the requirements of § 25.791 of this chapter. The signs must be constructed so that the crewmembers can turn them on and off.

(b) The seat belt sign shall be turned on for each landing and takeoff, and at any other time considered necessary by the pilot in command.

(c) The no smoking sign shall be turned on:

(1) During flight time on flight segments which are scheduled in the current North American Edition of the Official Airline Guide to be 2 hours or less in duration, except those flight segments between a point in the United States and a point in another country, or

(2) On flight segments other than those described in paragraph (c)(1) of this section, for each takeoff and landing, and at any other time considered necessary by the pilot in command.

(d) No person may operate a passenger-carrying airplane unless there is affixed to each forward bulkhead and each passenger seat back a sign or placard that reads "Fasten Belt While Seated." These signs or placards need not meet the requirements of paragraph (a) of this section.

(e) After December 31, 1988, no person may operate an airplane unless there is installed in each lavatory a sign or placard that reads: "Federal law provides for a penalty of up to $2,000 for tampering with the smoke detector installed in this lavatory." These signs or placards need not meet the requirements of paragraph (a) of this section.

(f) Each passenger shall fasten that passenger's seat belt and keep it fastened while the seat belt sign is lighted.

(g) No person may smoke while a no smoking sign is lighted, except that the pilot in command may authorize smoking on the flight deck except during landings and takeoffs.

(h) No person may smoke in any airplane lavatory.

(i) The provisions of paragraph (c)(1) of this section shall cease to be effective on April 24, 1990.

3. Section 121.571 is amended by revising paragraph (a)(1)(i) to read as follows:

§ 121.571 Briefing passengers before takeoff.

(a) * * *

(1) * * *

(i) *Smoking.* Each passenger shall be briefed on when, where, and under what conditions smoking is prohibited (including, but not limited to, the pertinent requirements of Part 252 of this title). This briefing shall include a statement that the Federal Aviation Regulations require passenger compliance with the lighted passenger information signs and posted placards. The briefing shall also include a statement that Federal law prohibits tampering with, disabling, or destroying any smoke detector in an airplane lavatory.

PART 135—AIR TAXI OPERATORS AND COMMERCIAL OPERATORS

4. The authority citation for Part 135 is revised to read as follows:

Authority: 49 U.S.C. 1354(a), 1355(a), 1374(d), (as amended by Pub. L. 100–202), 1421 through 1431, and 1502; 49 U.S.C. 106(g) (Revised Pub. L. 97–449, January 12, 1983).

5. Section 135.117 is amended by revising paragraph (a)(1) to read as follows:

§ 135.117 Briefing of passengers before flight.

(a) * * *

(1) *Smoking.* Each passenger shall be briefed on when, where, and under what conditions smoking is prohibited (including, but not limited to, the pertinent requirements of Part 252 of this title). This briefing shall include a statement that the Federal Aviation Regulations require passenger compliance with the lighted passenger information signs (if such signs are required) and posted placards. The briefing shall also include a statement (if the aircraft is equipped with a lavatory) that Federal law prohibits tampering with, disabling, or destroying any smoke detector installed in an aircraft lavatory.

* * * * *

6. A new § 135.127 is added to read as follows:

§ 135.127 Passenger information.

(a) The no smoking signs required by § 135.177(a)(3) of this part must be turned on:

(1) During flight time on flight segments which are scheduled in the current North American Edition of the Official Airline Guide to be 2 hours or less in duration, except those flight segments between a point in the United States and a point in another country; or

(2) On flight segments other than those described in paragraph (a)(1) of this section, for each takeoff and landing, and at any other time considered necessary by the pilot in command.

(b) No person may smoke while a no smoking sign is lighted, except that the pilot in command may authorize smoking on the flight deck (if it is physically separated from the passenger cabin) except during takeoff and landing.

(c) No person may smoke in any aircraft lavatory.

(d) After December 31, 1988, no person may operate an aircraft with a lavatory equipped with a smoke detector unless there is in that lavatory a sign or placard which reads: "Federal law provides for a penalty of up to $2,000 for tampering with the smoke detector installed in this lavatory."

(e) The provisions of paragraph (a)(1) of this section shall cease to be effective on April 24, 1990.

7. Section 135.177(a)(3) is revised to read as follows:

§ 135.177 Emergency equipment requirements for aircraft having a passenger seating configuration of more than 19 passengers.

(a) * * *

(3) Signs that are visible to all occupants to notify them when smoking is prohibited and when safety belts should be fastened. The signs must be constructed so that they can be turned on and off by a crewmember. Seat belt signs must be turned on for each takeoff and landing, and at other times considered necessary by the pilot in command. No smoking signs shall be turned on when required by § 135.127 of this part.

* * * * *

Issued in Washington, DC, on April 11, 1988.

T. Allan McArtor,

Administrator.

[FR Doc. 88–8204 Filed 4–11–88; 4:04 pm]

BILLING CODE 4910-13-M

VOL 53 ISS 71 APR 13 1988 UMI

federal register

Wednesday
April 13, 1988

Part IX

The President

Proclamation 5792—National Child Care Awareness Week, 1988

Proclamation 5793—Pan American Day and Pan American Week, 1988

Proclamation 5794—John Muir Day, 1988

VOL
53
ISS
71
AP
13
1988
UMI

Federa
Vol. 53
Wedne

Title

The

Federal Register
Vol. 53, No. 71
Wednesday, April 13, 1988

Presidential Documents

Title 3—

The President

Proclamation 5792 of April 11, 1988

National Child Care Awareness Week, 1988

By the President of the United States of America

A Proclamation

Caring for children is the primary responsibility of a parent. It is the task around which family life is organized, a major factor in every decision parents make about their own and their family's future, from choice of jobs and schools and neighborhoods to the selection of books, films, and every other form of instructional material or entertainment that will influence the development of the child's character and personality. Child care is also an organizing principle of society, for it is the primary means of transmitting knowledge, traditions, and moral and religious values from one generation to the next.

Sound public policy must support the family in its mission of child care. To do so effectively, public policy must increase and strengthen, not narrow and dilute, the variety of child care options open to families. It must help ensure that child care serves as an adjunct and buttress to parental guidance and love; that it reflects as far as possible the actual preferences of parents for the personal care of their precious offspring; and that it is inherently flexible, to avoid the establishment of practices or programs that defeat these ends and undermine either the well-being of children or the health of the economy.

Heightened interest in child care is a result of tremendous growth and change in the U.S. work force. Between 1982 and 1986, American business created two and one-half times as many new jobs as Japan and the major industrial countries of Europe combined. Our country is well into its sixth consecutive year of expansion—a peacetime record. Women, particularly, are moving into the salaried labor force in large numbers, and their unemployment rate has dropped nearly a full percentage point in the past year alone. According to the Bureau of Labor Statistics, nearly half of all mothers with a child under one year of age work. Today one family in six is headed by a single, divorced, or widowed woman.

Americans have responded to these changes in a number of ways, reflecting the many options parents desire and need. Family members—a sibling or grandparents—and students provide both full- and part-time day care. Churches have developed effective day care programs that supplement custodial care with the religious atmosphere many parents seek. State-licensed facilities managed by public agencies or private entities have rapidly expanded, as have corporate child care programs. Moreover, the landmark tax reform bill I signed in 1986 included a provision beneficial to all families facing child care decisions: the near doubling—to $2,000 by 1989, with indexing thereafter—of the per-child personal exemption. This measure has restored at least a fraction of the exemption's original worth to families and more realistically reflects the rising cost of caring for children.

To be fair to all families, child care policy analysis must recognize the contributions of women who work, those who would prefer to work part-time rather than full-time jobs, and homemakers who forego employment income altogether to raise children at home. Surely all of these are "working mothers." As policy options are reviewed and implemented, we must also continue to assess carefully the growing body of research data on the effects of various

forms of child care on the emotional, psychological, and intellectual development of children.

I ask all Americans to join with me in honoring the parents, relatives, schools, churches, and institutional child care providers who take on the enormously important task of child care. Theirs is a sacred trust gladly assumed for the future of our Nation. National Child Care Awareness Week affords us a welcome opportunity to offer them recognition and encouragement.

The Congress, by Senate Joint Resolution 260, has designated the week beginning April 10, 1988, as "National Child Care Awareness Week" and authorized and requested the President to issue a proclamation in observance of this week.

NOW, THEREFORE, I, RONALD REAGAN, President of the United States of America, do hereby proclaim the week beginning April 10, 1988, as National Child Care Awareness Week.

IN WITNESS WHEREOF, I have hereunto set my hand this eleventh day of April, in the year of our Lord nineteen hundred and eighty-eight, and of the Independence of the United States of America the two hundred and twelfth.

Ronald Reagan

[FR Doc. 88-8262
Filed 4-12-88; 10:54 am]
Billing code 3195-01-M

VOL 53 ISS 71 AP 13 1988 UMI

Presidential Documents

Proclamation 5793 of April 11, 1988

Pan American Day and Pan American Week, 1988

By the President of the United States of America

A Proclamation

For nearly six decades, observance of the annual Pan American Day has told the world that the nations of the Western Hemisphere share a unique harmony of ideals—the love of liberty, independence, and democracy; the willingness to seek these treasures and to preserve them wherever they are found; and firm and profound opposition to totalitarianism. Each year the United States joins with countries throughout the Americas in pledging fidelity to these ideals so vital to our future.

Almost a century ago, in Washington, D.C., the First International Conference of American States made the idea of hemispheric unity a reality by establishing the International Union of American Republics, the predecessor of the Organization of American States (OAS). The common aspirations of the peoples of the Americas for freedom, independence, democracy, peace, security, and prosperity inspire the OAS, which is charged with upholding and defending these critical objectives within the Inter-American System.

The past decade has witnessed several victories for freedom and democracy in the Americas. Ten years ago, the great majority of Latin Americans lived under oppression; today, more than 90 percent of the people of the Americas live under democratic government. We can all be truly grateful for these transformations to democracy.

On April 30, the OAS will celebrate the 40th Anniversary of the signing of its Charter in Bogota in 1948—a Charter that declares, "the solidarity of the American States and the high aims which are sought through it require the political organization of those States on the basis of the effective exercise of representative democracy." This principle continues to encourage brave men and women in the fight for liberty and democracy.

The OAS Charter establishes the basis for hemispheric cooperation in the peaceful settlement of disputes, economic and social development, education, and the protection of human rights. In recent years, the OAS has added a new dimension to its regional problem-solving by creating the OAS Drug Abuse Control Commission to combat narcotics trafficking and drug abuse. The United States of America accords special priority to the crucial work of the OAS in the fields of human rights and narcotics control.

The foundations of the Inter-American System emerged from the Americas' independence movements, but its consolidation dates from the signing of the OAS Charter; so it is especially fitting that we renew our commitment to the principles of the Organization of American States and its Specialized Agencies on Pan American Day this year as 40th Anniversary celebrations take place.

NOW, THEREFORE, I, RONALD REAGAN, President of the United States of America, by virtue of the authority vested in me by the Constitution and laws of the United States, do hereby proclaim Thursday, April 14, 1988, as Pan American Day, and the week of April 10 through April 16, 1988, as Pan American Week. I urge the Governors of the fifty States, the Governor of the Commonwealth of Puerto Rico, and officials of other areas under the flag of the United States of America to honor these observances with appropriate ceremonies and activities.

IN WITNESS WHEREOF, I have hereunto set my hand this eleventh day of April, in the year of our Lord nineteen hundred and eighty-eight, and of the Independence of the United States of America the two hundred and twelfth.

Ronald Reagan

[FR Doc. 88-8283
Filed 4-12-88; 10:55 am]
Billing code 3195-01-M

VOL 53 ISS 71 AP 13 1988 UMI

Presidential Documents

Proclamation 5794 of April 11, 1988

John Muir Day, 1988

By the President of the United States of America

A Proclamation

April 21 is the 150th Anniversary of the birth of John Muir, naturalist, explorer, conservationist, author, champion of the American wilderness, and proponent of national parks. This Sesquicentennial Celebration reminds us of our debt to this native of Scotland who traversed our country, our continent, and the world to study and describe mountain and forest and glacier and glade, and who left us a vision of utmost respect for the wilderness and all it embodies.

After studying at the University of Wisconsin and revealing an aptitude for mechanical invention, Muir decided to embark on "the study of the inventions of God"—in the "university of the wilderness." Both observant and eloquent, he began journeys and journal-keeping to investigate nature. Success as a horticulturalist near Martinez, California, gave him the wherewithal to travel and study for a lifetime. He walked throughout his beloved Golden State, all America, and many other lands to record his observations and wrote books and articles on natural phenomena and especially on the forests he loved.

John Muir understood, and helped others to see, the significance and beauty of the wilderness—and to realize that it should be protected for future generations. The establishment of our tremendous national park system, and the practice of sound conservation policies by industry, government, and private citizens, owe much to this pioneer, who along with Robert Underwood Johnson led the fight for the creation in 1890 of what is now Yosemite National Park; who in 1903 hosted President Theodore Roosevelt in Yosemite; who wrote, "The forests of America, however slighted by man, must have been a great delight to God; for they were the finest He ever created."

Let all who revere America's natural heritage, and see in it a timeless treasure dependent upon our stewardship, pause on April 21 in grateful remembrance of John Muir, a man who forever expressed his credo in the words, "In God's wildness lies the hope of the world . . ."

The Congress, by Senate Joint Resolution 245, has designated April 21, 1988, as "John Muir Day" and authorized and requested the President to issue a proclamation in observance of this event.

NOW, THEREFORE, I, RONALD REAGAN, President of the United States of America, do hereby proclaim April 21, 1988, as John Muir Day, and I call upon the people of the United States to observe this day with appropriate ceremonies and activities.

IN WITNESS WHEREOF, I have hereunto set my hand this eleventh day of April, in the year of our Lord nineteen hundred and eighty-eight, and of the Independence of the United States of America the two hundred and twelfth.

Ronald Reagan

[FR Doc. 88-8284
Filed 4-12-88; 10:56 am]
Billing code 3195-01-M

VOL
53
ISS
71
AP
13
1988
UMI

Read

INFORMA

Federal

Index, fi
Public in
Correctio
Documen
Machine

Code of

Index, fi
Printing

Laws

Public L
Addition

Presiden

Executiv
Public P
Weekly

The Unif

General

Other S

Data ba
Guide to
Legal st
Library
Privacy
Public L
TDD for

FEDERA

10519-10
10869-11
11031-11
11239-11
11487-11
11633-11
11815-11
11991-12
12137-12

Reader Aids

Federal Register

Vol. 53, No. 71

Wednesday, April 13, 1988

INFORMATION AND ASSISTANCE

Federal Register

Index, finding aids & general information	523-5227
Public inspection desk	523-5215
Corrections to published documents	523-5237
Document drafting information	523-5237
Machine readable documents	523-5237

Code of Federal Regulations

Index, finding aids & general information	523-5227
Printing schedules	523-3419

Laws

Public Laws Update Service (numbers, dates, etc.)	523-6641
Additional information	523-5230

Presidential Documents

Executive orders and proclamations	523-5230
Public Papers of the Presidents	523-5230
Weekly Compilation of Presidential Documents	523-5230

The United States Government Manual

General information	523-5230

Other Services

Data base and machine readable specifications	523-3408
Guide to Record Retention Requirements	523-3187
Legal staff	523-4534
Library	523-5240
Privacy Act Compilation	523-3187
Public Laws Update Service (PLUS)	523-6641
TDD for the deaf	523-5229

FEDERAL REGISTER PAGES AND DATES, APRIL

10519-10868 1
10869-11030 4
11031-11238 5
11239-11486 6
11487-11632 7
11633-11814 8
11815-11990 11
11991-12136 12
12137-12370 13

CFR PARTS AFFECTED DURING APRIL

At the end of each month, the Office of the Federal Register publishes separately a List of CFR Sections Affected (LSA), which lists parts and sections affected by documents published since the revision date of each title.

3 CFR

Proclamations:
5784 10519
5785 10521
5786 10523
5787 11031
5788 11489
5789 11809
5790 11811
5791 11813
5792 12365
5793 12367
5794 12369

Executive Orders:
12634 11041
12635 12134

Administrative Orders:

Memorandums:
Mar. 31, 1988 11039

Presidential Determinations:
No. 88-10 of February 29, 1988 11487

5 CFR

831 11633
842 11633
1633 11815

Proposed Rules:
1632 11864
2431 10885

7 CFR

2 11636
300 10525
301 11825
400 10526
910 ..... 10527, 11636
911 11830
917 11832
946 11043
1032 11637
1064 11590
1126 11638
1421 11239
3600 11639
3601 11639

Proposed Rules:
6 11091
53 10545
54 10545
449 11299
917 11669
918 11867
949 10887
1030 10894
1106 11092
1497 11474
1498 11474
1530 11098
1700 11511
1701 10545

8 CFR

Proposed Rules:
3 11300
208 11300
236 11300
242 11300
253 11300

9 CFR

77 11491
92 11043

Proposed Rules:
78 12019

10 CFR

430 10869
600 12137
1010 11240

Proposed Rules:
2 11310
50 11311

12 CFR

202 11044
205 11046
226 ..... 11047, 11055
229 11832
265 11640
563 ..... 11242, 11243
611 12140
615 12140

14 CFR

Ch. III 11004
39 ..... 11246, 11641-11643, 11837, 11838, 12141
71 ..... 10528, 11020, 11060, 11061, 11839-11841
97 11062
121 12358
135 12358

Proposed Rules:
Ch. I 11868
21 11869
23 11869
27 ..... 10826, 11162
29 ..... 10826, 11162
39 ..... 11674-11676, 11678, 11871
71 ..... 10546, 11100, 11101
73 11102

16 CFR

13 11247

17 CF

30 11491
230 11841
240 11841

18 CFR

37 11191

154 ... 11191
157 ... 11644, 11845

19 CFR

7 ... 12143

20 CFR

10 ... 11594

Proposed Rules:

10 ... 11596

21 CFR

184 ... 11247
340 ... 11731
510 ... 11492
520 ... 11063
522 ... 11064, 11493
524 ... 11064
540 ... 11492
558 ... 11065, 11251
561 ... 11938
800 ... 11251
803 ... 11251
807 ... 11251
808 ... 11251
809 ... 11251
812 ... 11251
813 ... 11251
820 ... 11251
860 ... 11251
861 ... 11251
862 ... 11645
864 ... 11251
866 ... 11251
876 ... 11251
895 ... 11251
1002 ... 11251
1005 ... 11251
1010 ... 11251
1020 ... 11251
1030 ... 11251
1040 ... 11251
1050 ... 11251
1308 ... 10834, 10861, 10869

Proposed Rules:

133 ... 11312
175 ... 11402
176 ... 11402
177 ... 11402
178 ... 11402
193 ... 11938
561 ... 11313

22 CFR

120 ... 11494, 12099
121 ... 11494, 12099
122 ... 11494, 12099
123 ... 11494, 12099
124 ... 11494, 12099
125 ... 11494, 12099
126 ... 11494, 12099
127 ... 11494, 12099
128 ... 11494, 12099
514 ... 10528
602 ... 10529
706 ... 11992

Proposed Rules:

204 ... 11872

23 CFR

650 ... 11065
658 ... 12145
771 ... 11065
1204 ... 11255
1205 ... 11255

Proposed Rules:

625 ... 11875
626 ... 11875
1309 ... 11679

24 CFR

50 ... 11224
200 ... 11270
201 ... 11997
203 ... 10529, 11997
221 ... 11224
234 ... 11997
236 ... 11224
241 ... 11224
248 ... 11224

Proposed Rules:

35 ... 11164
200 ... 11164
510 ... 11164
511 ... 11164
570 ... 11164
882 ... 11164
886 ... 11164
888 ... 12278
941 ... 11164
965 ... 11164
968 ... 11164

25 CFR

61 ... 11271

26 CFR

1 ... 11002, 11066, 11162, 11731, 12000, 12149
602 ... 11066, 11162, 11731, 12000

Proposed Rules:

1 ... 11103, 11876

27 CFR

Proposed Rules:

4 ... 12024
12 ... 12024

28 CFR

0 ... 10870, 10871, 11645
66 ... 12099
71 ... 11645

29 CFR

102 ... 10872
1907 ... 12102
1910 ... 11414, 12102
2610 ... 10530
2622 ... 10530
2644 ... 10531

Proposed Rules:

516 ... 11590
530 ... 11590
1910 ... 11511
1915 ... 11511
1917 ... 11511
1918 ... 11511
2550 ... 11886
2580 ... 11886

30 CFR

75 ... 11395
250 ... 10596, 12227
256 ... 10596, 12227
773 ... 11606
934 ... 11500

Proposed Rules:

20 ... 12250
75 ... 12250
77 ... 12250, 12253
785 ... 11685
823 ... 11685
935 ... 11887
948 ... 11888

31 CFR

Proposed Rules:

103 ... 11513

32 CFR

388 ... 10876

Proposed Rules:

45 ... 12034

33 CFR

84 ... 10532
100 ... 11502
117 ... 10533, 10534

Proposed Rules:

100 ... 11515
110 ... 11395, 11515
117 ... 11516, 11517

34 CFR

99 ... 11942
600 ... 11208
657 ... 10820
668 ... 11208

Proposed Rules:

105 ... 10808

36 CFR

1202 ... 12150
1258 ... 12150

38 CFR

36 ... 11502

39 CFR

Proposed Rules:

111 ... 11685

40 CFR

22 ... 12256
24 ... 12256
52 ... 11068, 11273, 11655, 11847
60 ... 11590, 12008, 12009
180 ... 11071, 11274, 11938, 12151

Proposed Rules:

52 ... 11314, 11686, 11688, 12161
116 ... 11889
117 ... 11889
180 ... 10895
261 ... 12162
264 ... 11742
265 ... 11742
268 ... 11742
271 ... 11742
302 ... 11889, 11890
372 ... 12035
761 ... 11104
763 ... 10546
796 ... 11104

41 CFR

101-25 ... 11847
101-40 ... 11849

Proposed Rules:

201-33 ... 11518

42 CFR

405 ... 11504, 12010
413 ... 12016
416 ... 11504
418 ... 11504
434 ... 12010
442 ... 11504
482 ... 11504

Proposed Rules:

405 ... 12037

43 CFR

Proposed Rules:

3160 ... 11318

Public Land Orders:

6670 ... 10535

44 CFR

67 ... 11510, 12152
80 ... 11275
82 ... 11275
83 ... 11275

Proposed Rules:

61 ... 10547

45 CFR

36 ... 11279
79 ... 11656
96 ... 11656
1611 ... 12017

Proposed Rules:

303 ... 12041
606 ... 10896

46 CFR

572 ... 11072

Proposed Rules:

Ch. I ... 11440

47 CFR

0 ... 11849
1 ... 11851
2 ... 10878, 11855
15 ... 11861
22 ... 11855
73 ... 11668, 11863, 12152-12154
90 ... 11849, 12154
94 ... 11855

Proposed Rules:

Ch. I ... 10549, 10550
73 ... 10905, 11690, 12167-12169

48 CFR

15 ... 10828
25 ... 12128
31 ... 10828, 12128
52 ... 10828, 12128
215 ... 11073
227 ... 10780
242 ... 11073
252 ... 10780, 11073

Proposed Rules:

43 ... 11795
47 ... 11795
52 ... 11795
916 ... 11318
931 ... 11318
952 ... 11318
1505 ... 11519
1506 ... 11519

49 CFR

387 ... 12158
533 ... 11074
571 ... 11280

1160 10536

Proposed Rules:

171 11320
173 11320
177 11618
192 10906
571 11105
840 11520

50 CFR

17 ..... 10879, 11609, 11612
285 11510
301 10536
672 11297

Proposed Rules:

18 12043
228 12169
644 11321
658 12046

LIST OF PUBLIC LAWS

Note: No public bills which have become law were received by the Office of the Federal Register for inclusion in today's **List of Public Laws.**

Last List April 6, 1988

VOL 53 ISS 71 AP 13 1988 UMI

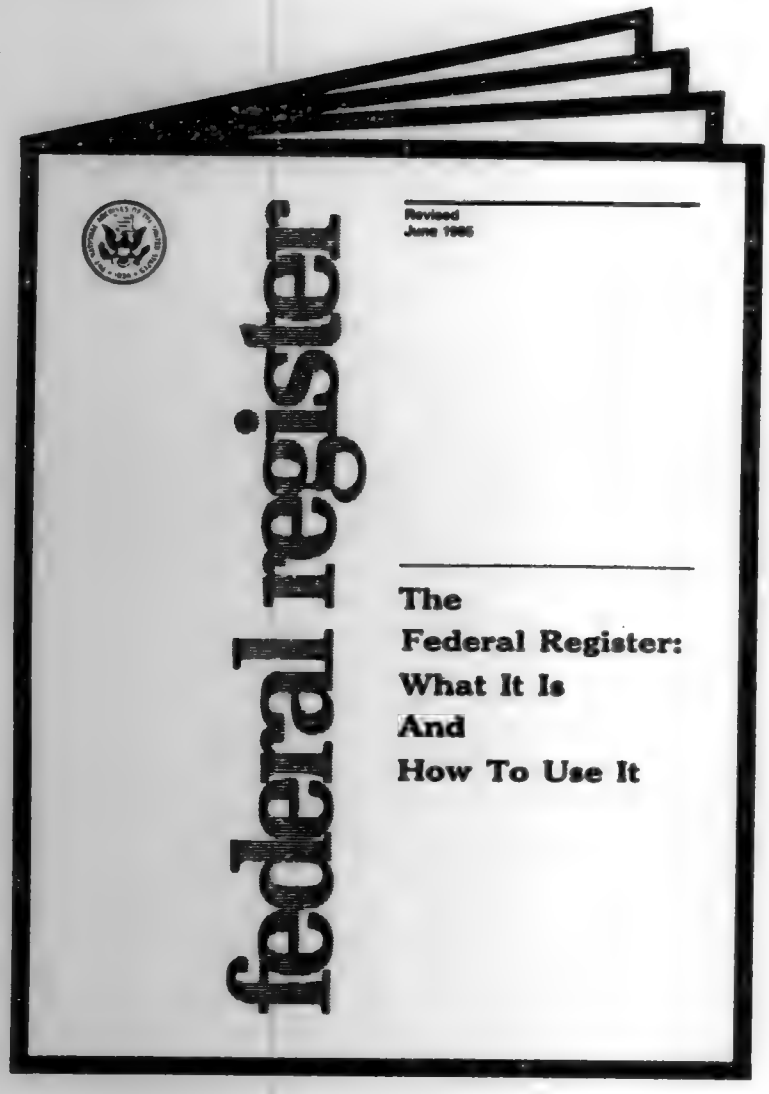

Announcing the Latest Edition

The Federal Register: What It Is and How to Use It

A Guide for the User of the Federal Register—Code of Federal Regulations System

This handbook is used for the educational workshops conducted by the Office of the Federal Register. For those persons unable to attend a workshop, this handbook will provide guidelines for using the *Federal Register* and related publications, as well as an explanation of how to solve a sample research problem.

Price $4.50

Order Form

Mail To: Superintendent of Documents, U.S. Government Printing Office, Washington, DC 20402

Enclosed is $ _____ ☐ check, ☐ money order, or charge to my Deposit Account No.

☐☐☐☐☐☐☐ – ☐

Order No. _____

MasterCard and VISA accepted.

VISA MasterCard

Credit Card Orders Only
Total charges $ _____
Fill in the boxes below.

Customer's Telephone Nos.
Area Code Home — Area Code Office

Credit Card No. ☐☐☐☐☐☐☐☐☐☐☐☐☐☐☐☐☐☐☐☐

Expiration Date Month / Year ☐☐☐☐

Charge orders may be telephoned to the GPO order desk at (202) 783-3238 from 8:00 a.m. to 4:00 p.m eastern time, Monday - Friday (except holidays)

Please send me _____ copies of **The Federal Register - What It Is and How To Use It,** at $4.50 per copy, Stock No. 022-003-01116-1

Please Print or Type

Name - First, Last

Company name or additional address line

Street address

City State ZIP Code

(or Country)

(Rev. 11 – 85)

ion

t

r–

to
vide
d
tion
.

0402

order
p.m

-1

VOL
53

ISS
71

AP
13

1988

UMI

VOL
53
ISS
72
AP
14
1988
UMI

4-14-
Vol. 5

Unite
Gove
Printi
SUPERI
OF DOC
Washing
OFFICIA
Penalty

4-14-88
Vol. 53 No. 72

federal register

Thursday
April 14, 1988

United States
Government
Printing Office
SUPERINTENDENT
OF DOCUMENTS
Washington, DC 20402

OFFICIAL BUSINESS
Penalty for private use, $300

**********5-DIGIT 48106
A FR SERIA300S NOV 88 R
SERIALS PROCESSING
UNIV MICROFILMS INTL
300 N ZEEB RD
ANN ARBOR MI 48106

SECOND CLASS NEWSPAPER
Postage and Fees Paid
U.S. Government Printing Office
(ISSN 0097-6326)

VOL
53

ISS
72

AP
14

1988

UMI

4-14-
Vol. 5
Pages

4-14-88
Vol. 53 No. 72
Pages 12371-12508

federal register

Thursday
April 14, 1988

BEST COPY AVAILABLE

FEDERAL REGISTER Published daily, Monday through Friday, (not published on Saturdays, Sundays, or on official holidays), by the Office of the Federal Register, National Archives and Records Administration, Washington, DC 20408, under the Federal Register Act (49 Stat. 500, as amended; 44 U.S.C. Ch. 15) and the regulations of the Administrative Committee of the Federal Register (1 CFR Ch. I). Distribution is made only by the Superintendent of Documents, U.S. Government Printing Office, Washington, DC 20402.

The **Federal Register** provides a uniform system for making available to the public regulations and legal notices issued by Federal agencies. These include Presidential proclamations and Executive orders and Federal agency documents having general applicability and legal effect, documents required to be published by act of Congress and other Federal agency documents of public interest. Documents are on file for public inspection in the Office of the Federal Register the day before they are published, unless earlier filing is requested by the issuing agency.

The **Federal Register** will be furnished by mail to subscribers for $340.00 per year, or $170.00 for 6 months in paper form, or $188.00 per year, or $94.00 for six months in microfiche form, payable in advance. The charge for individual copies is $1.50 for each issue, or $1.50 for each group of pages as actually bound. Remit check or money order, made payable to the Superintendent of Documents, U.S. Government Printing Office, Washington, DC 20402, or charge to your GPO Deposit Account or VISA or Mastercard.

There are no restrictions on the republication of material appearing in the **Federal Register**.

How To Cite This Publication: Use the volume number and the page number. Example: 52 FR 12345.

SUBSCRIPTIONS AND COPIES

PUBLIC

Subscriptions:

Paper or fiche	202-783-3238
Magnetic tapes	275-3328
Problems with public subscriptions	275-3054

Single copies/back copies:

Paper or fiche	783-3238
Magnetic tapes	275-3328
Problems with public single copies	275-3050

FEDERAL AGENCIES

Subscriptions:

Paper or fiche	523-5240
Magnetic tapes	275-3328
Problems with Federal agency subscriptions	523-5240

For other telephone numbers, see the Reader Aids section at the end of this issue

Contents

Federal Register
Vol. 53, No. 72
Thursday, April 14, 1988

Administrative Conference of the United States
NOTICES
Courts of Appeals decisions; nonacquiescence, 12444

Agricultural Marketing Service
RULES
Almonds grown in California, 12374
Cranberries grown in Massachusetts et al., 12373
Oranges (navel and Valencia) grown in Arizona and California, 12371
PROPOSED RULES
Milk marketing orders:
Nebraska-Western Iowa, 12424
Potatoes (Irish) grown in Washington, 12423

Agriculture Department
See Agricultural Marketing Service; Soil Conservation Service

Arms Control and Disarmament Agency
PROPOSED RULES
Freedom of Information Act; implementation:
Predisclosure notification procedures for confidential commercial information, 12430

Army Department
See Engineers Corps

Blind and Other Severely Handicapped, Committee for Purchase From
See Committee for Purchase From the Blind and Other Severely Handicapped

Civil Rights Commission
NOTICES
Civil rights aspects of public health policies and initiatives to control AIDS; consultation/hearing, 12445
Meetings; Sunshine Act, 12495

Coast Guard
RULES
Drawbridge operations:
Louisiana, 12416
North Carolina, 12417
Ports and waterways safety:
Chesapeake Bay and tributaries, MD; ice navigation season regulated navigation area, 12417
Regattas and marine parades:
Barnegat Bay Classic, 12415
PROPOSED RULES
Drawbridge operations
North Carolina, 12434
Regattas and marine parades:
Sacramento Water Festival, 12434
NOTICES
Meetings:
National Boating Safety Advisory Council, 12492, 12493 (3 documents)

Commerce Department
See Foreign-Trade Zones Board; International Trade Administration

Committee for Purchase From the Blind and Othe Severely Handicapped
NOTICES
Procurement list, 1988:
Additions and deletions; correction, 12497

Defense Department
See also Engineers Corps
PROPOSED RULES
Federal Acquisition Regulation (FAR):
FMS contracts; double recoupment of taxes, 12501
NOTICES
Meetings:
Science Board task forces, 12447 (2 documents)

Economic Regulatory Administration
NOTICES
Natural gas exportation and importation
National Energy Systems, Inc., 12454

Education Department
NOTICES
Grants; availability, etc.:
Discretionary grant program—
National school volunteer programs, 12448
Meetings:
International Education Programs National Advisory Board, 12449

Employment Standards Administration
See Wage and Hour Division

Energy Department
See also Economic Regulatory Administration; Federal Energy Regulatory Commission; Hearings and Appeals Office, Energy Department
RULES
Conflict of interests:
Financial reporting requirement exemptions
Correction, 12497
NOTICES
Atomic energy agreements; subsequent arrangements, 12449
Environmental statements; availability, etc.:
Hanford Site, WA, 12449
Grant and cooperative agreement awards:
Ohio State University, 12453
Meetings:
Nuclear Facility Safety Advisory Committee, 12453

Engineers Corps
NOTICES
Environmental statements; availability, etc.:
Crawford and Seneca Counties, OH, 12447
Johnson County, IA, 12448

Environmental Protection Agency
RULES
Air pollution; standards of performance for new stationary sources:
Total gaseous nonmethane organic emissions as carbon determination
Correction, 12498

Air quality implementation plans; approval and promulgation; various States:
Missouri, 12417
Pesticides; tolerances in food, animal feeds, and raw agricultural commodities:
Paper fiber, 12418
PROPOSED RULES
Air quality implementation plans; approval and promulgation; various States:
Louisiana, 12435
NOTICES
Agency information collection activities under OMB review, 12460

Export Administration
See International Trade Administration

Federal Aviation Administration
RULES
Airworthiness directives:
Boeing, 12376
Standard instrument approach procedures, 12377
PROPOSED RULES
Airworthiness directives:
Boeing, 12427

Federal Deposit Insurance Corporation
NOTICES
Meetings; Sunshine Act, 12495

Federal Election Commission
NOTICES
Meetings; Sunshine Act, 12495

Federal Energy Regulatory Commission
NOTICES
Natural gas certificate filings:
Tennessee Gas Pipline Co. et al., 12455

Federal Highway Administration
PROPOSED RULES
Motor carrier safety regulations:
Commercial driver's license program, 12504

Federal Home Loan Bank Board
NOTICES
Federal Savings and Loan Insurance Corporation:
Insurance premium, 12460

Federal Maritime Commission
PROPOSED RULES
Practice and procedure:
Special docket application filings, 12440
NOTICES
Investigations, hearings, petitions, etc.:
Virginia International Terminals, Inc., 12461

Federal Trade Commission
RULES
Prohibited trade practices:
B.F. Goodrich Co. et al., 12379

Fish and Wildlife Service
RULES
Endangered Species Convention.
Appendix III listings; procedural change
Correction 12497

Food and Drug Administration
RULES
Human drugs:
Antibiotic drugs--
Erythromycin topical gel, 12414
NOTICES
Human drugs:
Patent extension; regulatory review period determinations—
Bactroban, 12462
Deursil, 12463
Spectamine, 12464

Foreign-Trade Zones Board
NOTICES
Applications, hearings, determinations, etc.:
North Carolina, 12446

General Services Administration
PROPOSED RULES
Federal Acquisition Regulation (FAR):
FMS contracts; double recoupment of taxes, 12501
NOTICES
Meetings:
FTS 2000 Procurement Advisory Committee, 12462

Health and Human Services Department
See Food and Drug Administration; Health Resources and Services Administration; Human Development Services Office

Health Resources and Services Administration
NOTICES
Grants and cooperative agreements:
Acquired Immune Deficiency Syndrome (AIDS)—
Service demonstration projects, 12465
Meetings; advisory committees:
June, 12468

Hearings and Appeals Office, Energy Department
NOTICES
Special refund procedures; implementation, 12457

Housing and Urban Development Department
PROPOSED RULES
Mortgage and loan insurance programs:
Single and multifamily programs; appraisals and property inspections, 12431
NOTICES
Agency information collection activities under OMB review, 12468
HUD-administered small cities program for fiscal 1988; submission dates, 12469
Interstate land sales registration:
Administrative proceedings, 12469

Human Development Services Office
PROPOSED RULES
Adoption assistance program; nonrecurring expenses, 12436

Infant Mortality, National Commission to Prevent
See National Commission to Prevent Infant Mortality

Interior Department
See also Fish and Wildlife Service; Land Management Bureau; Minerals Management Service
NOTICES
School facilities; new construction applications, 12470

Internal Revenue Service
PROPOSED RULES
Income taxes:
Passive activity losses and credits; limitations. 12433

International Trade Administration
NOTICES
Applications, hearings, determinations, etc.:
University of Alaska et al., 12446

Interstate Commerce Commission
PROPOSED RULES
Practice and procedure:
Interlocking directorates; exemptions, 12443
NOTICES
Railroad operation, acquisition, construction, etc.:
CSX Transportation, Inc., 12480

Justice Department
See also Parole Commission
RULES
Acquisition regulations:
Ratification of unauthorized commitments and prompt payment, 12421

Labor Department
See Mine Safety and Health Administration; Veterans Employment and Training, Office of Assistant Secretary; Wage and Hour Division

Land Management Bureau
RULES
Public land orders:
Alaska, 12419, 12420
(3 documents)
NOTICES
Agency information collection activities under OMB review, 12471
Environmental statements; availability, etc.:
Lower Gila South planning area, AZ, 12479
Rock Springs District and Bridger-Teton National Forest, WY, 12471
Fossils, gems and minerals collection prohibition:
California, 12472
Meetings:
Bakersfield District Advisory Council, 12479
Ukiah District Advisory Council, 12472
Oil and gas leases:
Alaska, 12473
Realty actions; sales, leases, etc.:
Arizona, 12473, 12474
(4 documents)
California, 12474
Oregon, 12476
Survey plat filings:
Florida, 12476
Oregon and Washington, 12476, 12477
(2 documents)
Withdrawal and reservation of lands:
Idaho, 12477
(2 documents)
Washington, 12478
Wyoming, 12478

Mine Safety and Health Administration
RULES
Coal mine safety and health:
Underground coal mining—
Self-contained self-rescue devices; correction, 12415

NOTICES
Safety standard petitions:
HICO Coal Co., 12480
Wolf-Creek Collieries Co., 12481

Minerals Management Service
NOTICES
Outer Continental Shelf; development operations coordination:
ODECO Oil & Gas Co., 12479
Tenneco Oil Exploration and Production, 12480

National Aeronautics and Space Administration
PROPOSED RULES
Federal Acquisition Regulation (FAR):
FMS contracts; double recoupment of taxes, 12501

National Commission to Prevent Infant Mortality
NOTICES
Meetings, 12482

National Science Foundation
NOTICES
Committees; establishment, renewal, termination, etc.:
Advanced Scientific Computing Program Advisory Panel and Networking and Communications Research and Infrastructure Advisory Panel, 12482
Meetings:
Atmospheric Sciences Advisory Committee, 12482
Cellular Physiology Advisory Panel, 12482
Computer and Computation Research Advisory Committee, 12484
Ethics and Values Studies Advisory Panel, 12483
International Programs Advisory Committee, 12483
Plant Science Centers Advisory Panel, 12484
Women, Minorities and the Handicapped in Science and Technology Task Force, 12483

Nuclear Regulatory Commission
PROPOSED RULES
Rulemaking petitions:
Izaak Walton League et al.; Porter County Chapter, 12425
NOTICES
Environmental statements; availability, etc.:
Boston Edison Co., 12484
Applications, hearings, determinations, etc.:
Commonwealth Edison Co., 12485
Georgia Power Co. et al.; correction, 12485

Panama Canal Commission
NOTICES
Privacy Act; system of records; correction, 12498

Parole Commission
NOTICES
Meetings; Sunshine Act, 12495

Public Health Service
See Food and Drug Administration; Health Resources and Services Administration

Research and Special Programs Administration
PROPOSED RULES
Hazardous materials:
Performance-oriented packaging standards, 12442

Securities and Exchange Commission
RULES
Interpretative, no-action, and certain exemption letters; expedited publication, 12412
PROPOSED RULES
Interpretative, no-action, and certain exemption letters; expedited publication, 12429
NOTICES
Meetings; Sunshine Act, 12495
Self-regulatory organizations; proposed rule changes:
Chicago Board Options Exchange, Inc., 12486
Pacific Stock Exchange, Inc., 12488
Philadelphia Stock Exchange, Inc., 12489
Self-regulatory organizations; unlisted trading privileges:
Cincinnati Stock Exchange, Inc., 12487
Philadelphia Stock Exchange, Inc., 12490
Applications, hearings, determinations, etc.:
Allied-Signal Inc., 12491
Standard Logic, Inc., 12491

Small Business Administration
NOTICES
Agency information collection activities under OMB review, 12492
Applications, hearings, determinations, etc.:
Alabama Small Business Investment Co., Inc., 12492

Soil Conservation Service
NOTICES
Environmental statements; availability, etc.:
Pecos Arroyo Watershed, NM, 12445

Tennessee Valley Authority
NOTICES
Agency information collection activities under OMB review, 12492

Transportation Department
See Coast Guard; Federal Aviation Administration; Federal Highway Administration; Research and Special Programs Administration

Treasury Department
See also Internal Revenue Service
PROPOSED RULES
Government Securities Act; implementation, 12428
NOTICES
Foreign insurance companies conducting life insurance business in the United States; instructions for computing estimated tax and installment payments of estimated 1988 tax, 12493

United States Information Agency
NOTICES
Art objects, importation for exhibition:
Masterworks from Munich, 12494

Veterans Employment and Training, Office of Assistant Secretary
NOTICES
Meetings:
Veterans' Employment Committee, 12481

Wage and Hour Division
PROPOSED RULES
Homeworkers; employment industries
Correction, 12497

Separate Parts In This Issue

Part II
Department of Defense, General Services Administration, National Aeronautics and Space Administration, 12501

Part III
Department of Transportation, Federal Highway Administration, 12504

Reader Aids
Additional information, including a list of public laws, telephone numbers, and finding aids, appears in the Reader Aids section at the end of this issue.

CFR PARTS AFFECTED IN THIS ISSUE

A cumulative list of the parts affected this month can be found in the Reader Aids section at the end of this issue.

7 CFR
907 12371
908 12371
929 12373
981 12374
Proposed Rules:
946 12423
1065 12424

10 CFR
1010 12497
Proposed Rules:
50 12425

14 CFR
39 12376
97 12377
Proposed Rules:
39 12427

16 CFR
13 12379

17 CFR
200 12412
Proposed Rules:
Ch. IV 12428
200 12429

21 CFR
452 12414

22 CFR
Proposed Rules:
602 12430

24 CFR
Proposed Rules:
200 12431

26 CFR
Proposed Rules:
1 12433

29 CFR
Proposed Rules:
516 12497
530 12497

30 CFR
48 12415

33 CFR
100 12415
117 (2 documents) 12416, 12417
165 12417
Proposed Rules:
100 12434
117 12434

40 CFR
52 12417
60 12498
180 12418
Proposed Rules:
52 12435

43 CFR
Public Land Orders:
6671 12419
6672 12420
6673 12420

45 CFR
Proposed Rules:
1356 12436

46 CFR
Proposed Rules:
502 12440

48 CFR
2804 12421
2832 12421
2852 12421
Proposed Rules:
52 12501

49 CFR
Proposed Rules:
171 12442
172 12442
173 12442
174 12442
175 12442
176 12442
177 12442
178 12442
179 12442
383 12504
391 12504
1185 12443

50 CFR
23 12497

VOL
53

ISS
72

AP
14

1988

UMI

Rul

This se
contains
general
of which
the Cod
publishe
U.S.C. 1
The Co
by the
Prices c
first FE
week.

DEPAR

Agricul

7 CFR

Navel C
Design
Orange
Design
Admini
(Repor

AGENCY
USDA.

ACTION

SUMMA
for repo
Valenci
in the a
regulati
navel a
orders.
rules ar
provide
Valenci
by rail
N.O.A.
are Cer
Allotme
orange
contain
of shipr
These r
and Va
Commi
respons
of the o
require
and co
investig
such re
is not a
This ru
and Va
shipme
with th
signed
docume

Rules and Regulations

Federal Register
Vol. 53, No. 72
Thursday, April 14, 1988

This section of the FEDERAL REGISTER contains regulatory documents having general applicability and legal effect, most of which are keyed to and codified in the Code of Federal Regulations, which is published under 50 titles pursuant to 44 U.S.C. 1510.
The Code of Federal Regulations is sold by the Superintendent of Documents. Prices of new books are listed in the first FEDERAL REGISTER issue of each week.

DEPARTMENT OF AGRICULTURE

Agricultural Marketing Service

7 CFR Parts 907 and 908

Navel Oranges Grown in Arizona and Designated Part of California; Valencia Oranges Grown in Arizona and Designated Part of California; Administrative Rules and Regulations (Reporting Rail Shipments)

AGENCY: Agricultural Marketing Service, USDA.

ACTION: Final rule.

SUMMARY: This rule amends procedures for reporting rail shipments of navel and Valencia oranges, which are contained in the administrative rules and regulations of the California-Arizona navel and Valencia orange marketing orders. Currently, the administrative rules and regulations of the orders provide that all handling of navel and Valencia oranges, other than shipments by rail car, must be accompanied by N.O.A.C./V.O.A.C. Forms No. 8, which are Certificates of Assignment of Allotment covering each quantity of oranges so handled. These forms contain, among other information, proof of shipment by truck of such oranges. These reports also provide the Navel and Valencia Orange Administrative Committees (Committees), the agencies responsible for the local administration of the orders, with the information required to successfully conduct audits and compile data during an investigation of possible violations of such regulations. Presently, similar data is not available for rail car shipments. This rule will require handlers of navel and Valencia oranges to report all rail shipments of such oranges by submitting with their daily manifest reports, a signed bill of lading or other documentation acceptable to the Committees for each rail shipment to substantiate shipments of such oranges.

EFFECTIVE DATE: May 16, 1988.

FOR FURTHER INFORMATION CONTACT: Jacquelyn R. Schlatter, Marketing Specialist, Marketing Order Administration Branch, F&V, AMS, USDA, Room 2525, South Building, P.O. Box 96456, Washington, DC. 20090-6456; telephone: (202) 447-5120.

SUPPLEMENTARY INFORMATION: This final rule is issued under Marketing Order Nos. 907 and 908 (7 CFR Parts 907 and 908), as amended, regulating the handling of navel and Valencia oranges grown in Arizona and designated parts of California. These orders are effective under the Agricultural Marketing Agreement Act of 1937, as amended, (7 U.S.C. 601-674), hereinafter referred to as the Act.

This final rule has been reviewed under Executive Order 12291 and Departmental Regulation 1512-1 and has been determined to be a "non-major" rule under criteria contained therein.

Pursuant to requirements set forth in the Regulatory Flexibility Act (RFA), the Administrator of the Agricultural Marketing Service (AMS) has considered the economic impact of this action on small entities.

The purpose of the RFA is to fit regulatory actions to the scale of business subject to such actions in order that small businesses will not be unduly or disproportionately burdened. Marketing orders issued pursuant to the Act, and rules issued thereunder, are unique in that they are brought about through group action of essentially small entities acting on their own behalf. Thus, both statutes have small entity orientation and compatability.

There are approximately 123 handlers of navel oranges and 115 handlers of Valencia oranges subject to regulation under the respective orders, and approximately 4,065 producers of navel oranges and 3,500 producers of Valencia oranges in California and Arizona. Small agricultural producers have been defined by the Small Business Administration (13 CFR 121.2) as those having average gross annual revenues for the last three fiscal years of less than $500,000, and small agricultural service firms are defined as those whose gross annual receipts are less than $3,500,000. The majority of California-Arizona navel and Valencia orange producers and handlers may be classified as small entities.

The Committees meet each week during their respective marketing seasons and may recommend to the Secretary a quantity of navel or Valencia oranges which may be handled in each prorate district during a specified week. If the Secretary finds that this quantity will tend to effectuate the declared policy of the Act, the Committees then allocate allotments to each handler for that week. A handler's weekly allotment is an amount equivalent to the product of the handler's prorate base (the amount of oranges under the handler's control in a prorate district as compared to the total volume of oranges available for shipment in that district) and the total quantity of oranges grown in such prorate district fixed by the Secretary as the toal quantity of oranges which may be handled during such week.

Sections 907.112 and 908.112 of the administrative rules and regulations of the orders currently provide that all handling of navel and Valencia oranges, other than shipments by rail car, must be accompanied by N.O.A.C./V.O.A.C. Forms No. 8, which are Certificates of Assignment of Allotment covering each quantity of oranges so handled. These forms contain, among other information, proof of shipment by truck of such oranges.

These certificates are used by the Committees' field staff to verify daily reports filed by handlers and thereby to ascertain compliance with volume regulations. These reports provide the Committees with the information required to successfully conduct audits and compile data during an investigation of possible violations of such regulations.

Presently, similar data is not available for rail car shipments. When the above rules were put into effect, handler reports of rail shipments were unnecessary as the U.S. Department of Agriculture's Marketing Field Office in California provided this data to the Committees after reviewing railroad manifests and recording the necessary information. The Committees later took over this task. However, railroad companies no longer provide this documentation.

The Committees need documentation to substantiate shipments by rail, as currently provided for truck shipments.

BEST COPY AVAILABLE

While daily manifest reports (N.O.A.C./V.O.A.C. Forms No. 3), which are submitted to the Committees within 24 hours after shipment is made by a handler, do list rail shipments, these forms provide no documentation as to when the rail shipments actually occurred. Handlers are also required to file with the Committees, no later than 10 days following bulk rail shipments, information satisfactory to the Committees which substantiates and shows the derivation of the amount of equivalent cartons in the shipment (the number of 38.5 pound cartons shipped). However, a handler could overship a weekly allotment by not reporting a rail shipment until a later week and not be charged with the overshipment. A handler could also, in a week when such handler undershipped a weekly allotment, report a previously shipped rail shipment rather than forfeit or attempt to loan the allotment. Allotment which is not offered for loan and not forfeited is creditable against overshipments of other handlers. Thus, such misreporting could be inequitable to those handlers. Inclusion of a signed bill of lading or other documentation acceptable to the Committees with the daily manifest report will provide verification of such shipments.

The amendments to §§ 907.141 and 908.141 will add a requirement that handlers furnish a signed bill of lading or other documentation acceptable to the Committees for each rail shipment to accompany the daily manifest report. The changes will apply to all handlers. However, these changes will not place a burden on handlers as the documentation is already available to handlers.

Based on available information, the Administrator of the AMS has determined that issuance of this final rule will not have a significant economic impact on a substantial number of small entities.

In accordance with the Paperwork Reduction Act of 1980 (44 U.S.C. 3504), the information collection provisions that are included in §§ 907.141 and 908.141 of this final rule have been approved by the Office of Management and Budget (OMB) and assigned OMB Nos. 0581-0116 and 0581-0121, respectively.

This action revised §§ 907.141 and 908.141 and is based on unanimous recommendations of the Committees and other information. A proposed rule revising §§ 907.141 and 908.141 was published in the February 8, 1988, issue of the **Federal Register** (53 FR 3600). Comments on the proposed rule were invited from interested persons until March 9, 1988. No comments were received.

After consideration of the information and recommendations submitted by the committees and other available information, it is found that this final rule will tend to effectuate the declared policy of the Act.

List of Subjects in 7 CFR Parts 907 and 908

Arizona, California, Marketing agreements and orders, Navels, Oranges, and Valencia.

For the reasons set forth in the preamble, 7 CFR Parts 907 and 908 are proposed to be amended as follows:

Note.—These sections will appear in the Code of Federal Regulations.

1. The authority citation for 7 CFR Parts 907 and 908 continues to read as follows:

Authority: Secs. 1-19, 48 Stat. 31, as amended; 7 U.S.C. 601-674.

PART 907—NAVEL ORANGES GROWN IN ARIZONA AND DESIGNATED PART OF CALIFORNIA

Subpart—Rules and Regulations

2. Section 907.141 is revised to read as follows:

§ 907.141 Manifest reports.

(a) Within 24 hours after shipment is made by a handler, the handler shall submit to the committee, on N.O.A.C. Form No. 3, a manifest report of all oranges so shipped. Such report shall show the rail car number or the serial number of the Certificate of Assignment of Allotment for each shipment, together with the quantity by sizes per carton, of each shipment made within the United States or to Canada, or to Alaska. If the shipment was made under a size regulation and was covered by an exemption certificate, the certificate number shall also be shown. All manifest reports shall be certified by the handler to the United States Department of Agriculture and to the Navel Orange Administrative Committee as to the correctness of the information shown thereon.

(b) Each handler shall submit to the committee a signed bill of lading or other documentation satisfactory to the committee which substantiates each rail car shipment. This documentation shall accompany N.O.A.C. Form No. 3, a daily manifest report, and shall be submitted within 24 hours after shipment is made by the handler.

(c) If the shipment was by rail and contained oranges not packed in cartons or in bags, the handler shall file with the committee, no later than 10 days following the shipment, information satisfactory to the committee which substantiates, and which shows the derivation of the amount of equivalent cartons, by sizes, contained in the shipment and reported on the manifest report.

PART 908—VALENCIA ORANGES GROWN IN ARIZONA AND DESIGNATED PART OF CALIFORNIA

Subpart—Rules and Regulations

3. Section 908.141 is revised to read as follows:

§ 908.141 Manifest reports.

(a) Within 24 hours after shipment is made by a handler, the handler shall submit to the committee, on V.O.A.C. Form No. 3, a manifest report of all oranges so shipped. Such report shall show the rail car number or the serial number of the Certificate of Assignment of Allotment for each shipment, together with the quantity by sizes per carton, of each shipment made within the United States or to Canada, or to Alaska. If the shipment was made under a size regulation and was covered by an exemption certificate, the certificate number shall also be shown. All manifest reports shall be certified by the handler to the United States Department of Agriculture and to the Valencia Orange Administrative Committee as to the correctness of the information shown thereon.

(b) Each handler shall submit to the committee a signed bill of lading or other documentation satisfactory to the committee which substantiates each rail car shipment. This documentation shall accompany V.O.A.C. Form No. 3, a daily manifest report, and shall be submitted within 24 hours after shipment is made by the handler.

(c) If the shipment was by rail and contained oranges not packed in cartons or in bags, the handler shall file with the committee, no later than 10 days following the shipment, information satisfactory to the committee which substantiates, and which shows the derivation of the amount of equivalent cartons, by sizes, contained in the shipment and reported on the manifest report.

Dated: April 11, 1988.

Robert C. Keeney,

Deputy Director, Fruit and Vegetable Division.

[FR Doc. 88-8232, Filed 4-13-88; 8:45 am]

BILLING CODE 3410-02-M

7 CFR Part 929

Cranberries Grown in the States of Massachusetts, Rhode Island, Connecticut, New Jersey, Wisconsin, Michigan, Minnesota, Oregon, Washington, and Long Island in the State of New York; Amendments to the Administrative Rules and Regulations

AGENCY: Agricultural Marketing Service, USDA.

ACTION: Final rule.

SUMMARY: This final rule amends the administrative rules and regulations of the cranberry marketing order. The changes will: (1) Require handlers to file inventory reports at earlier dates and add a fourth reporting date; (2) increase the total quantity of cranberries exempt from program assessments from 75 to not more than 300 barrels per year; and (3) delete portions of applicable sections that currently contain the Cranberry Marketing Committee's (CMC) old office address. The CMC is the agency responsible for local administration of the cranberry marketing order.

EFFECTIVE DATE: May 16, 1988.

FOR FURTHER INFORMATION CONTACT: Patricia A. Petrella, Marketing Specialist, Marketing Order Administration Branch, Fruit and Vegetable Division, AMS, USDA, Room 2525-S, P.O. Box 96456, Washington, DC 20090-6456; telephone: (202) 447-2491.

SUPPLEMENTARY INFORMATION: This final rule is issued under Marketing Order No. 929 (7 CFR Part 929), as amended, regulating the handling of cranberries grown in 10 states. This order is effective under the Agricultural Marketing Agreement Act of 1937, as amended, (7 U.S.C. 601-674), hereinafter referred to as the Act.

This rule has been reviewed under Executive Order 12291 and Departmental Regulation 1512-1 and has been determined to be a "non-major" rule under criteria contained therein.

Pursuant to requirements set forth in the Regulatory Flexibility Act (RFA), the Administrator of the Agricultural Marketing Service (AMS) has considered the economic impact of this action on small entities.

The purpose of the RFA is to fit regulatory actions to the scale of business subject to such actions in order that small businesses will not be unduly or disproportionately burdened. Marketing orders issued pursuant to the Act, and rules issues thereunder, are unique in that they are brought about through group action of essentially small entities acting on their own behalf. Thus, both statutes have small entity orientation and compatibility.

There are approximately 31 handlers of cranberries subject to regulation under the cranberry marketing order, and approximately 950 producers in the regulated area. Small agricultural producers have been defined by the Small Business Administration (13 CFR 121.2) as those having gross annual revenues for the last three years of less than $500,000, and small agricultural service firms are defined as those whose gross annual receipts are less than $3,500,000. The majority of handlers and producers of cranberries may be classified as small entities.

This final rule amends the administrative rules and regulations of the cranberry marketing order. The changes will: (1) Require handlers to file inventory reports at earlier dates and add a fourth reporting date; (2) increase the total quantity of cranberries exempt from program assessments from 75 to not more than 300 barrels per year; and (3) delete portions of applicable sections that currently contain the CMC's old office address.

The first change will require handlers to file handler inventory reports five days earlier than currently required, and will add a fourth reporting period with a September 5 deadline. Currently, handlers are required to file such reports no later than the 10th day of February, May, and August of each fiscal period. The change will require handlers to file such reports no later than the 5th day of the above mentioned months and add a fourth reporting period with a September 5 deadline. The impact of this regulation on handlers will not be significant. This action will simply require these reports to be filed earlier and at one additional date and any potential costs to handlers would appear to be significantly offset when compared to the potential benefits to the industry. These reports contain important information essential to the CMC in formulating marketing policies and recommendations on marketable quantity regulations and base allotment percentages. The CMC management staff needs more time to compile and analyze the information before distribution at CMC meetings, and this action will allow the CMC that additional time.

The second change will increase the minimum handling exemption from 75 to not more than 300 barrels per year. This change will relieve handlers of certain marketing order requirements by not requiring them to pay assessments if they handle not more than 300 barrels of cranberries per year. This change will also exempt handlers who handle not more than 300 barrels of cranberries per year from the set aside provisions of the order. These provisions have not been used since 1972. The CMC reports that it is costly and burdensome to collect assessments on such small shipments of cranberries. These handlers will still have to file receipt, inventory, and handling reports to the CMC, as required by the order. The impact of this action on affected handlers will be beneficial because the change will expand the minimum handling exemption while reducing the burden on the CMC.

The last change will delete the listing of the CMC's previous office address from applicable sections in the rules and regulations. The CMC office has relocated to Wareham, Massachusetts and its old address should not appear in the rules and regulations.

Notice of this action was published in the February 3, 1988, issue of the **Federal Register** (53 FR 3037). Comments on the proposed rule were invited from interested persons until March 4, 1988. No comments were received.

Based on available information, the Administrator of the AMS has determined that the issuance of this final rule will not have a significant economic impact on a substantial number of small entities.

In accordance with the Paperwork Reduction Act of 1980 (44 U.S.C. 3507), the informaiton collection provision contained in this final rule has been approved by the Office of Management and Budget (OMB) under OMB No. 0581-0103.

After consideration of all relevant matters presented, including the CMC's recommendations and other available information, it is found that the regulations, as hereinafter set forth, will tend to effectuate the declared policy of the Act.

List of Subjects in 7 CFR Part 929

Marketing agreements and orders, Cranberries, Massachusetts, Rhode Island, Connecticut, New Jersey, Wisconsin, Michigan, Minnesota, Oregon, Washington, and Long Island in the State of New York.

For the reasons set forth in the preamble, 7 CFR Part 929 is amended as follows:

PART 929—CRANBERRIES GROWN IN THE STATES OF MASSACHUSETTS, RHODE ISLAND, CONNECTICUT, NEW JERSEY, WISCONSIN, MICHIGAN, MINNESOTA, OREGON, WASHINGTON, AND LONG ISLAND IN THE STATE OF NEW YORK

Subpart—Rules and Regulations

1. The authority citation for 7 CFR Part 929 continues to read as follows:

Note.—These sections will appear in the Code of Federal Regulations.

Authority: Secs. 1–19, 48 Stat. 31, as amended; 7 U.S.C. 601–674.

2. Section 929.101 is revised to read as follows:

§ 929.101 Minimum exemption.

The requirements of § 929.41 *Assessments* and § 929.54 *Withholding* shall not apply to any handler in a fiscal year during which the handler handles not more than a total of 300 barrels of cranberries.

3. Section 929.105 is revised to read as follows:

§ 929.105 Reporting.

(a) Each report required to be filed with the committee pursuant to §§ 929.6 and 929.48 shall be mailed to the committee office or delivered to that office. If the report is mailed, it shall be deemed filed when postmarked.

(b) Certified reports shall be filed with the committee, on a form provided by the committee, by each handler not later than the 5th day of February, May, and August of each fiscal period and the 5th day of September of the succeeding fiscal period showing: (1) The total quantity of cranberries the handler acquired and the total quantity of cranberries the handler handled from the beginning of the reporting period indicated through January 31, April 30, July 31, and August 31 respectively, and (2) the respective quantities of cranberries and cranberry products held by the handler on February 1, May 1, August 1, and August 31 of each fiscal period.

4. Section 929.160 is amended by revising paragraph (c) to read as follows:

§ 929.160 Public member eligibility requirements and nomination procedures.

* * * * *

(c) Names of candidates together with evidence of qualification for public membership on the Cranberry Marketing Committee shall be submitted to the committee at its business office.

* * * * *

Dated: April 11, 1988.

Robert C. Keeney,

Deputy Director, Fruit and Vegetable Division.

[FR Doc. 88–8230 Filed 4–13–88; 8:45 am]

BILLING CODE 3410–02–M

---

7 CFR Part 981

Expenses and Assessment Rate for California Almond Marketing Order

AGENCY: Agricultural Marketing Service, USDA.

ACTION: Final rule.

SUMMARY: This final rule authorizes expenditures and establishes an assessment rate for the 1987–88 marketing year under Marketing Order No. 981 for California almonds. Funds to administer this program are derived from assessments on handlers.

EFFECTIVE DATES: July 1, 1987, through June 30, 1988.

FOR FURTHER INFORMATION CONTACT: Allen Belden, Marketing Specialist, Marketing Order Administration Branch, Room 2525, South Building, F&V, AMS, USDA, P.O. Box 96456, Washington, DC 20090–6456; telephone: (202) 447–2491.

SUPPLEMENTARY INFORMATION: This final rule is issued under Marketing Order No. 981, as amended (7 CFR Part 981), regulating the handling of almonds grown in California. The order is effective under the Agricultural Marketing Agreement Act of 1937, as amended (7 U.S.C. 601–674), hereinafter referred to as the Act.

This final rule has been reviewed under Executive Order 12291 and Departmental Regulation 1512–1 and has been determined to be a "non-major" rule under criteria contained therein.

Pursuant to requirements set forth in the Regulatory Flexibility Act (RFA), the Administrator of the Agricultural Marketing Service has considered the economic impact of this action on small entities.

The purpose of the RFA is to fit regulatory actions to the scale of business subject to such actions in order that small businesses will not be unduly or disproportionately burdened. Marketing orders issued pursuant to the Act, and rules issued thereunder, are unique in that they are brought about through group action of essentially small entities acting on their own behalf. Thus, both statutes have small entity orientation and compatibility.

There are an estimated 105 handlers of almonds subject to regulation under the marketing order for California almonds during the current season. There are approximately 7,500 producers in the regulated area. Small agricultural producers have been defined by the Small Business Administration (13 CFR 121.2) as those having average gross annual revenues for the last three years of less than $500,000, and small agricultural service firms are defined as those whose gross annual receipts are less than $3,500,000. The majority of handlers and producers of California almonds may be classified as small entities.

This action revises § 981.336 under Marketing Agreement and Order No. 981, both as amended (7 CFR Part 981), regulating the handling of almonds grown in California. Section 981.336 was established by a final rule published in the **Federal Register** December 1, 1987, (52 FR 45611). Section 981.336 currently states that an assessment rate for the crop year ending June 30, 1988, payable by each handler, shall be established in accordance with § 981.81 of the order, less any amount credited pursuant to § 981.41, but not to exceed 2.5 cents per pound of almonds (kernelweight basis).

Section 981.41 provides that the Almond Board of California (Board) may give handlers credit against their assessment obligations for their own direct expenditures for authorized marketing promotion, including paid advertising activities. Thus, § 981.336 has already established the maximum amount of 1987–88 crop year handler assessments that may be credited at 2.5 cents per pound of almonds (kernelweight basis).

This action revises § 981.336 to authorize Board expenses for the crop year ending June 30, 1988, of $15,995,334 and establish an assessment rate for that crop year of 2.8 cents per pound (kernelweight basis), while retaining the 2.5 cents per pound creditable rate.

The 2.8 cent per pound 1987–88 assessment rate compares with a 1986–87 assessment rate of 2.6 cents per pound. While the 2.5 cents per pound creditable rate is the same as the 1986–87 rate, the .3 cent per pound non-creditable portion of the total assessment, which handlers must pay to the Board, is higher than the .1 cent per pound 1986–87 rate. The 1986–87 rate was exceptionally low due to an accumulation of reserve funds by the Board. Such reserve funds were used for Board expenses in 1986–87, in lieu of a higher handler assessment rate.

Expenses of $15,995,334 for 1987–88 compare with 1986–87 budgeted expenses of $7,400,088. Budget categories for 1987–88 are $676,097 for administrative expenses, $256,837 for production research, $758,300 for public relations, and $54,100 for the 1988 crop estimate. Comparable actual expenditures for the 1986–87 crop year were $411,597, $185,734, $349,835, and $51,600, respectively. The remaining $14,250,000 of proposed 1987–88 expenses is the estimated amount which handlers will spend on their own marketing promotion activities based on a projected 1987–88 marketable production of 570,000,000 kernelweight pounds and assumes that all handlers receive full credit against the 2.5 cent per pound creditable assessment obligation. For the 1986–87 crop year,

$6,100,000 was budgeted for handler marketing promotion activities based on a projected marketable production of 244,000,000 kernelweight pounds. Actual expenditures for 1986–87 handler marketing promotion activities were $5,550,996. The Board believes that the much larger 1987–88 crop will result in proportionately higher handler expenditures for marketing promotion. These additional expenditures are deemed appropriate in view of the estimated size of the 1987–88 crop.

Income for 1987–88 is expected to total $1,606,500, including assessments of $1,551,500, debt collection of $50,000, and interest income of $5,000. Most of the remainder of the $15,995,334 is expected to be offset by handlers' creditable advertising and promotion activities. Handlers who do not receive credit for their own advertising and promotion activities would be required to pay the creditable portion of the assessment to the Board.

Marketing Order No. 981 requires that the assessment rate for a particular marketing year shall apply to all almonds received by handlers for their own accounts from the beginning of such year. An annual budget of expenses is prepared by the Board, which was established under the order for the purpose of administering the program, and submitted to the Department of Agriculture for approval. Members of the Board are handlers and producers of California almonds. This is appropriate because they are familiar with the Board's needs and with the costs for goods, services, and personnel in their area and are, thus, in a position to formulate an appropriate budget recommendation. The budget is formulated and discussed in public meetings; thus, all directly affected persons have an opportunity to participate and provide input.

The assessment rate recommended by the Board is derived by dividing anticipated expenses by the number of kernelweight pounds of almonds expected to be received by handlers for their own accounts. That rate is applied to actual receipts to produce income sufficient to pay the Board's expected expenses.

While this action may impose some additional costs on handlers, including small entities, the costs will be in the form of uniform assessments on all handlers which will not have a significant economic impact on the entities involved. Some of the additional costs may be passed on to producers. However, these costs will be significantly offset by the benefits derived from the operation of the marketing order.

Based on the above, the Administrator of the Agricultural Marketing Service has determined that the issuance of this final rule will not have a significant economic impact on a substantial number of small entities.

Notice of this action was published in the **Federal Register** on January 7, 1988 (53 FR 415). Written comments were invited from interested persons until January 19, 1988. Comments were received from Brian C. Leighton and Sharon Wiggin for Wiggin Farms and Asa & Edith Wiggins, Inc.

Mr. Leighton requested in his comment that the non-creditable portion of the 1987–88 assessment rate be established at .1 cent or .15 cents per pound rather than the .3 cents per pound established by this final rule. The non-creditable portion of the assessment is used by the Board to pay its administrative expenses, production research and crop estimate projects and generic public relations program. The Board has budgeted $1,745,334 for these expenses for the 1987–88 crop year, and the Department believes that these expenses are justified. Based on the projected 1987 marketable crop production of 570,000,000 pounds, a .3 cent per pound non-creditable assessment rate would provide the Board with income of $1,710,000. This amount, along with other income from several minor sources, should be sufficient to meet Board expenses. A .15 cent per pound or lower rate, however, would fall far short of the amount required for anticipated Board expenses.

Mr. Leighton objects to the fact that the budgeted level of expenses for 1987–88 production research activities are above actual expenditures for the previous year. However, budgeted levels for 1987–88, at $256,837, are actually $8,651 less than the $265,488 budgeted for production research in the 1986–87 crop year. Mr. Leighton also states that no justification has been provided by the Board for spending $256,837 on production research for almonds. However, the Board submitted to the Department detailed proposals for 20 production research projects designed to improve horticultural practices or to research disease and pest problems affecting the California almond industry. The Department believes that these projects, conducted primarily by researchers from the University of California, are in conformance with both the order and the Act.

Another concern Mr. Leighton addresses in his comment is the level of funds budgeted for generic public relations. This item is budgeted at $758,300 for the 1987–88 crop year, compared with 1986–87 actual expenses of $349,835. Budgeted expenses for 1986–87 were $458,000. Mr. Leighton states that he sees no justification for the higher level of expenses for generic public relations in the 1987–88 crop year. However, the Board submitted a detailed proposal for a $758,300 generic promotion program designed to increase the domestic consumption of California almonds by developing consumer, food service, and industrial markets. This program is conducted by a professional consumer relations agency, and the Department finds that this project is in conformance with both the order and the Act. The Department also believes that the higher level of expenditures for consumer relations is warranted due to the record large 1987–88 almond crop.

The commenter requests in his comment that no creditable advertising assessment be established for the 1987–88 crop year. The commenter believes that such an assessment would require handlers to advertise a branded product when they may not market almonds under their own brand name. However, handlers may receive credit against their advertising assessments for activities other than brand advertising. Handlers may receive credit for generic advertising and for the following three types of marketing promotion expenditures: (1) The distribution of sample packages of almonds to charitable and educational outlets, (2) the purchase of promotional materials from the Board, and (3) certain costs related to mail order promotions. Alternatively, handlers may receive 150 percent credit against their advertising assessments for direct payments to the Board, for use by the Board to pay its own generic public relations program. The commenter objects that this money paid to the Board is not spent specifically on advertising, but the Board believes that its generic public relations program provides an effective complement to individual handler advertising.

The commenter believes that the creditable advertising assessment only benefits handlers who have a brand name. However, the Department believes that handler brand advertising, as well as handler generic advertising and marketing promotion activities, benefits all handlers and growers by increasing demand for all almonds.

Mr. Leighton points out paragraph 981.41(d)(3) of the order which states that "No promotion or advertising shall be undertaken without reason to believe that returns to producers will be improved by such activity." Mr. Leighton states that neither the Board's generic public relations program nor handler

creditable advertising and promotion are in conformance with this section of the order.

Section 981.41(d) of the order was added in 1972 (37 FR 3984) to provide the Board with general guidelines for its promotion and advertising activities. Advertising and other forms of promotion have been used as an effective means to benefit handlers and growers by increasing demand for many commodities under the Agricultural Marketing Agreement Act of 1937 and various research and promotion programs under separate authorities. The Board, composed of growers and handlers, many of whom are competitors, has recommended the expenditure of sums of money for such activities with a reasonable expectation of improved returns to producers.

In fact, the Board's 1987–88 generic promotion program is designed to increase the domestic consumption of almonds by developing consumer, food service, and industrial markets. The objective of the consumer program is to build and maintain positive consumer attitudes towards almonds, encourage present users of almonds to broaden the scope of their usage, and encourage occasional almond users to increase their almond usage. The objective of the food service program is to increase the use of almonds in school lunch menus. The objective of the industrial program is to increase the use of almonds and almond products by industrial manufacturers, increase awareness of the high quality of California almonds, and communicate the product's nutritional advantages.

Mr. Leighton objects to the requirement that reserve almonds, as well as salable almonds, be assessed. As stated previously, the order requires that the assessment rate for a particular marketing year shall apply to all almonds received by handlers for their own accounts. All almonds are assessed whether salable or reserve. Reserve almonds may be disposed of pursuant to the provisions of the order and regulations.

Finally, Mr. Leighton objects to issuing the notice of proposed rulemaking on this action in January. The commenter objects to the application of assessments for the entire crop year. The crop year begins on July 1 and ends on June 30. However, the order does provide that the assessment rate as established for the crop year shall apply to all almonds received by handlers for their own accounts.

Commenter Sharon Wiggin opposes the increase in the non-creditable portion of the assessment to .3 cents per pound from last year's rate of .1 cent per pound. This commenter also states that advertising is a useless expense for Wiggin Farms, the handler and producer which the commenter represents.

The commenter believes that the increase in the non-creditable assessment will ultimately be passed back to the grower. While neither the order nor the rules and regulations established under the order regulate price negotiations between handlers and growers, activities engaged in under marketing orders, including advertising and promotion, are intended to improve returns to growers. Even though handlers may pass the cost of some of these activities back to their growers, growers would be expected to receive benefits from such activities in excess of any such costs.

The commenter also claims that the current creditable advertising rules and regulations established under the order are too restrictive and should be broadened to include a wider range of marketing activities. These rules have been expanded several times in recent years and may be amended in the future, if deemed appropriate.

Therefore, for the reasons stated, the comments of Brian C. Leighton and Sharon Wiggin are denied.

After consideration of all relevant matter presented, including the Board's recommendations, the comments received, and other available information, it is found that this regulation, as hereinafter set forth, will tend to effectuate the declared policy of the Act.

This budget and assessment rate should be expedited because the Board needs to have sufficient funds to pay their expenses, which are incurred on a continuous basis. The expenses and assessment rate established by this final rule apply to the entire 1987–88 crop year, which began July 1, 1987. In addition, handlers are aware of this action, which was recommended by the Board at a public meeting. Therefore, good cause is found for not postponing the effective date of this action until 30 days after publication in the **Federal Register** (5 U.S.C. 553).

List of Subjects in 7 CFR Part 981

Marketing agreements and orders, Almonds, and California.

For the reasons set forth in the preamble, 7 CFR 981.336 is revised as follows:

PART 981—[AMENDED]

1. The authority citation for 7 CFR Part 981 continues to read as follows:

Authority: Secs. 1–19, 48 Stat. 31, as amended; 7 U.S.C. 601–674.

2. Section 981.336 is revised to read as follows [*the following section prescribes the annual expenses and assessment rate and will not be published in the Code of Federal Regulations*]:

Almonds Grown in California

§ 981.336 Expenses and assessment rate.

Expenses of $15,995,334 by the Almond Board of California are authorized for the crop year ending June 30, 1988. An assessment rate for that crop year payable by each handler in accordance with § 981.81 is fixed at 2.8 cents per pound of almonds (kernelweight basis) less any amount credited pursuant to § 981.41, but not to exceed 2.5 cents per pound of almonds (kernelweight basis).

Dated: April 11, 1988.

Robert C. Keeney,

Deputy Director, Fruit and Vegetable Division, Agricultural Marketing Service.

[FR Doc. 88–8231 Filed 4–13–88; 8:45 am]

BILLING CODE 3410–02–M

DEPARTMENT OF TRANSPORTATION

Federal Aviation Administration

14 CFR Part 39

[Docket No. 88–NM–21–AD; Amdt. 39–5895]

Airworthiness Directives; Boeing Model 757 Series Airplanes

AGENCY: Federal Aviation Administration (FAA), DOT.

ACTION: Final rule.

SUMMARY: This amendment adopts a new airworthiness directive (AD), applicable to certain Boeing Model 757 series airplanes, which requires operational testing of fuel boost pump bypass valves. This amendment is prompted by the determination that small amounts of water in the valves may freeze and prevent valve operation. This condition, if not corrected, could result in loss of both engines in the event of an electrical power failure.

EFFECTIVE DATE: May 4, 1988.

ADDRESSES: The applicable service information may be obtained from the Boeing Commercial Airplane Company, P.O. Box 3707, Seattle, Washington 98124. This information may be examined at FAA, Northwest Mountain Region, 17900 Pacific Highway South, Seattle, Washington, or Seattle Aircraft Certification Office, FAA, Northwest Mountain Region, 9010 East Marginal Way South, Seattle, Washington.

FOR FURTHER INFORMATION CONTACT: Mr. C.D. Engebretson, Propulsion

Branch, ANM-14OS; telephone (206) 431-1974. Mailing address: FAA, Northwest Mountain Region, 17900 Pacific Highway South, C-68966, Seattle, Washington 98168.

SUPPLEMENTARY INFORMATION: During the course of an investigation into two separate incidents of unexplained engine flameouts on Boeing Model 737 airplanes in cruise conditions, it was determined that small accumulations of water in the fuel boost pump bypass valve may freeze, preventing fuel flow to the engine while on suction feed (boost pump off). The present design of the fuel system is such that water in the fuel feed line is able to collect at the bypass values. Since this water can be loaded as a contaminant in fuel, and since both main tanks are normally fueled simultaneously from the same source, both tanks may be expected to be contaminated. This condition is normally undetectable. In the event of an alternating current electrical failure at altitude, power to all boost pumps could be lost, causing both engines to flame out due to fuel starvation resulting from the frozen bypass valves. It has been determined that the fuel boost pump bypass valves of the Model 757 are similar to the design of the Model 737 and are subject to the same failure mode.

The FAA has reviewed and approved Boeing Alert Service Bulletin 757-28A0017, dated February 11, 1988, which describes procedures to operationally test and purge the fuel boost pump bypass line of water on a scheduled basis.

Since this condition is likely to exist or develop on other airplanes of similar type design, this AD requires repetitive operational tests of the bypass valve in accordance with the service bulletin previously mentioned.

Since a situation exists that requires immediate adoption of this regulation, it is found that notice and public procedure hereon are impracticable, and good cause exists for making this amendment effective in less than 30 days.

The FAA has determined that this regulation is an emergency regulation that is not considered to be major under Executive Order 12291. It is impracticable for the agency to follow the procedures of Order 12291 with respect to this rule since the rule must be issued immediately to correct an unsafe condition in aircraft. It has been further determined that this document involves an emergency regulation under DOT Regulatory Policies and Procedures (44 FR 11034; February 26, 1979). If this action is subsequently determined to involve a significant/major regulation, a final regulatory evaluation or analysis, as appropriate, will be prepared and placed in the regulatory docket (otherwise, an evaluation is not required).

List of Subjects in 14 CFR Part 39

Aviation Safety, Aircraft.

Adoption of the Amendment

Accordingly, pursuant to the authority delegated to me by the Administrator, the Federal Aviation Administration amends § 39.13 of Part 39 of the Federal Aviation Regulations (14 CFR 39.13) as follows:

PART 39—[AMENDED]

1. The authority citation for Part 39 continues to read as follows:

Authority: 49 U.S.C. 1354(a) 1421 and 1423; 49 U.S.C. 106(g) (Revised Pub. L. 97-449, January 12, 1983); and 14 CFR 11.89.

§ 39.13 [Amended]

2. By adding the following new airworthiness directive:

Boeing: Applies to Model 757 series airplanes, listed in Boeing Alert Service Bulletin 757-28A0017, dated February 11, 1988, certificated in any category. Compliance required as indicated, unless previously accomplished.

To prevent engine flame out due to boost pump bypass valve freezing, accomplish the following:

A. Prior to accumulation of 150 flight hours after the effective date of this AD, unless previously accomplished within the last 150 flight hours, and thereafter at intervals not to exceed 300 flight hours, perform an operational test of the fuel boost pump bypass valves in accordance with Boeing Alert Service Bulletin 757-28A0017, dated February 11, 1988, or later FAA-approved revisions.

B. An alternate means of compliance or adjustment of the compliance time, which provides an acceptable level of safety, and which has the concurrence of an FAA Principal Maintenance Inspector, may be used when approved by the Manager, Seattle Aircraft Certification Office, FAA, Northwest Mountain Region.

C. Modification of fuel boost pump bypass valve in a manner approved by the Manager, Seattle Aircraft Certification Office, FAA, Northwest Mountain Region, will constitute terminating action for the repetitive tests required by paragraph A., above.

All persons affected by this directive who have not already received the appropriate service information from the manufacturer may obtain copies upon request to the Boeing Commercial Airplane Company, P.O. Box 3707, Seattle, Washington 98124. This information may be examined at FAA, Northwest Mountain Region, 17900 Pacific Highway South, Seattle, Washington, or Seattle Aircraft Certification Office, FAA, Northwest Mountain Region, 9010 East Marginal Way South, Seattle, Washington.

This amendment becomes effective May 4, 1988.

Issued in Seattle, Washington, on April 6, 1988.

Frederick M. Isaac,

Acting Director, Northwest Mountain Region.

[FR Doc. 88-8211 Filed 4-13-88; 8:45 am]

BILLING CODE 4910-13-M

---

14 CFR Part 97

[Docket No. 25584; Amdt. No. 1371]

Standard Instrument Approach Procedures; Miscellaneous Amendments

AGENCY: Federal Aviation Administration (FAA), DOT.

ACTION: Final rule.

SUMMARY: This amendment establishes, amends, suspends, or revokes Standard Instrument Approach Procedures (SIAPs) for operations at certain airports. These regulatory actions are needed because of the adoption of new or revised criteria, or because of changes occurring in the National Airspace System, such as the commissioning of new navigational facilities, addition of new obstacles, or changes in air traffic requirements. These changes are designed to provide safe and efficient use of the navigable airspace and to promote safe flight operations under instrument flight rules at the affected airports.

DATES: *Effective:* An effective date for each SIAP is specified in the amendatory provisions.

Incorporation by reference—approved by the Director of the Federal Register on December 31, 1980, and reapproved as of January 1, 1982.

ADDRESSES: Availability of matters incorporated by reference in the amendment is as follows:

For Examination—

1. FAA Rules Docket, FAA Headquarters Building, 800 Independence Avenue SW., Washington, DC 20591;

2. The FAA Regional Office of the region in which the affected airport is located; or

3. The Flight Inspection Field Office which originated the SIAP.

For Purchase—

Individual SIAP copies may be obtained from:

1. FAA Public Inquiry Center (APA-200), FAA Headquarters Building, 800 Independence Avenue SW., Washington, DC 20591; or

2. The FAA Regional Office of the region in which the affected airport is located.

By Subscription—

Copies of all SIAPs, mailed once every 2 weeks, are for sale by the Superintendent of Documents, U.S. Government Printing Office, Washington, DC 20402.

FOR FURTHER INFORMATION CONTACT: Donald K. Funai, Flight Procedures Standards Branch (AFS-230), Air Transportation Division, Office of Flight Standards, Federal Aviation Administration, 800 Independence Avenue SW., Washington, DC 20591; telephone (202) 267-8277.

SUPPLEMENTARY INFORMATION: This amendment to Part 97 of the Federal Aviation Regulations (14 CFR Part 97) prescribes new, amended, suspended, or revoked Standard Instrument Approach Procedures (SIAPs). The complete regulatory description of each SIAP is contained in official FAA form documents which are incorporated by reference in this amendment under 5 U.S.C. 552(a), 1 CFR Part 51, and § 97.20 of the Federal Aviation Regulations (FARs). The applicable FAA Forms are identified as FAA Forms 8260-3, 8260-4, and 8260-5. Materials incorporated by reference are available for examination or purchase as stated above.

The large number of SIAPs, their complex nature, and the need for a special format make their verbatim publication in the **Federal Register** expensive and impractical. Further, airmen do not use the regulatory text of the SIAPs, but refer to their graphic depiction on charts printed by publishers of aeronautical materials. Thus, the advantages of incorporation by reference are realized and publication of the complete description of each SIAP contained in FAA form document is unnecessary. The provisions of this amendment state the affected CFR (and FAR) sections, with the types and effective dates of the SIAPs. This amendment also identifies the airport, its location, the procedure identification and the amendment number.

This amendment to Part 97 is effective on the date of publication and contains separate SIAPs which have compliance dates stated as effective dates based on related changes in the National Airspace System or the application of new or revised criteria. Some SIAP amendments may have been previously issued by the FAA in a National Flight Data Center (FDC) Notice to Airmen (NOTAM) as an emergency action of immediate flight safety relating directly to published aeronautical charts. The circumstances which created the need for some SIAP amendments may require making them effective in less than 30 days. For the remaining SIAPs, an effective date at least 30 days after publication is provided.

Further, the SIAPs contained in this amendment are based on the criteria contained in the U.S. Standard for Terminal Instrument Approach Procedures (TERPs). In developing these SIAPs, the TERPS criteria were applied to the conditions existing or anticipated at the affected airports. Because of the close and immediate relationship between these SIAPs and safety in air commerce, I find that notice and public procedure before adopting these SIAPs is unnecessary, impracticable, and contrary to the public interest and, where applicable, that good cause exists for making some SIAPs effective in less than 30 days.

The FAA has determined that this regulation only involves an established body of technical regulations for which frequent and routine amendments are necessary to keep them operationally current. It, therefore—(1) is not a "major rule" under Executive Order 12291; (2) is not a "significant rule" under DOT Regulatory Policies and Procedures (44 FR 11034; February 26, 1979); and (3) does not warrant preparation of a regulatory evaluation as the anticipated impact is so minimal. For the same reason, the FAA certifies that this amendment will not have a significant economic impact on a substantial number of small entities under the criteria of the Regulatory Flexibility Act.

List of Subjects in 14 CFR Part 97

Approaches, Standard Instrument, Incorporation by reference.

Issued in Washington, DC on April 1, 1988.

Robert L. Goodrich,

Director of Flight Standards.

Adoption Of The Amendment

Accordingly, pursuant to the authority delegated to me, Part 97 of the Federal Aviation Regulations (14 CFR Part 97) is amended by establishing, amending, suspending, or revoking Standard Instrument Approach Procedures, effective at 0901 G.m.t. on the dates specified, as follows:

PART 97—[AMENDED]

1. The authority citation for Part 97 continues to read as follows:

Authority: 49 U.S.C. 1348, 1354(a), 1421, and 1510; 49 U.S.C. 106(g) (revised, Pub. L. 97-449, January 12, 1983; and 14 CFR 11.49(b)(2)).

By amending: § 97.23 VOR, VOR/DME, VOR or TACAN, and VOR/DME or TACAN; § 97.25 LOC, LOC/DME, LDA, LDA/DME, SDF, SDF/DME; § 97.27 NDB, NDB/DME; § 97.29 ILS, ILS/DME, ISMLS, MLS, MLS/DME, MLS/RNVA; § 97.31 RADAR SIAPs; § 97.33 RNAV SIAPs; and § 97.35 COPTER SIAPs, identified as follows:

** * * Effective June 30, 1988*

Alliance, NE—Alliance Muni, VOR RWY 12, Amdt. 1
Alliance, NE—Alliance Muni, VOR RWY 30, Amdt. 1
Alliance, NE—Alliance Muni, NDB RWY 30, Amdt. 7
Norfolk, NE—Karl Stefan Memorial, VOR RWY 1, Amdt. 5
Norfolk, NE—Karl Stefan Memorial, VOR RWY 13, Amdt. 5
Norfolk, NE—Karl Stefan Memorial, VOR RWY 19, Amdt. 5
Norfolk, NE—Karl Stefan Memorial, VOR RWY 31, Amdt. 5
Norfolk, NE—Karl Stefan Memorial, ILS RWY 1, Amdt. 2
Charlotte, NC—Charlotte/Douglas Intl, LOC BC RWY 23, Amdt. 7
Charlotte, NC—Charlotte/Douglas Intl, NDB RWY 5, Amdt. 31
Charlotte, NC—Charlotte/Douglas Intl, ILS RWY 5, Amdt. 33
Charlotte, NC—Charlotte/Douglas Intl, ILS RWY 36L, Amdt. 11
Charlotte, NC—Charlotte/Douglas Intl, ILS RWY 36R, Amdt. 3
Southern Pines, NC—Moore County VOR-A, Amdt. 2

** * * Effective June 2, 1988*

Lafayette, IN—Aretz, VOR-C, Amdt. 1
Logansport, IN—Logansport Muni, VOR-A, Amdt. 6
Peru, IN—Peru Muni, VOR RWY 1, Amdt. 4
Bangor, ME—Bangor Intl, RADAR-1, Amdt. 3
Muskegon, MI—Muskegon County, RADAR-1, Amdt. 12
Muskegon, MI—Muskegon County, ILS RWY 24, Amdt. 1
Petersburg, MI—Lada, VOR-A, Amdt. 5, CANCELLED
Lakewood, NJ—Lakewood, VOR RWY 6, Amdt. 3
Carrollton, OH—Carroll County-Tolson, NDB RWY 25, Amdt. 5

** * * Effective May 5, 1988*

Burlington, CO—Kit Carson County, NDB RWY 15, Orig.
Denver, CO—Jeffco, ILS RWY 29R, Amdt. 11
Grand Junction, CO—Walker Field, VOR RWY 11, Orig.
Atlanta, GA—Charlie Brown County, RNAV RWY 26L Amdt. 1, CANCELLED
Atlanta, GA—Fulton County Airport-Brown Field, NDB RWY 8, Amdt. 2

Atlanta, GA—Fulton County Airport-Brown Field, ILS RWY 8, Amdt. 13
Lihue, HI—Lihue, VOR/DME or TACAN RWY 21, Amdt. 2
Portland, OR—Portland Intl, VOR-A Amdt. 8
Portland, OR—Portland Intl, VOR-B, Orig.
Portland, OR—Portland Intl, VOR RWY, 28R Orig.
Portland, OR—Portland Intl, LOC BC RWY 10L, Amdt. 12
Portland, OR—Portland Intl, NDB RWY 28R, Amdt. 9
Portland, OR—Portland Intl, ILS RWY 10R, Amdt. 28
Portland, OR—Portland Intl, ILS RWY 28R, Amdt. 11
Vancouver, WA—Pearson Airpark, LDA BC RWY 8, Amdt. 3

* * * *Effective March 29, 1988*

Worcester, MA—Worcester Muni, NDB RWY 11, Amdt. 17
Worcester, MA—Worcester Muni, NDB RWY 29, Amdt. 9
Worcester, MA—Worcester Muni, ILS RWY 11, Amdt. 18

* * * *Effective March 25, 1988*

Boston, MA—General Edward Lawrence Logan Intl, VOR/DME RWY 33L, Orig.

[FR Doc. 88-8210 Filed 4-13-88; 8:45 am]

BILLING CODE 4910-13-M

FEDERAL TRADE COMMISSION

16 CFR Part 13

[Dkt. 9159]

The B.F. Goodrich Company et al.; Prohibited Trade Practices and Affirmative Corrective Actions

AGENCY: Federal Trade Commission.

ACTION: Final order.

SUMMARY: This Final Order requires Goodrich, a corporation with its principal place of business in Akron, Ohio, to divest the vinyl cloride monomer (VCM) plant, in La Porte, Texas, at no mimimum price, to a Commission-approved acquirer and must also provide all supporting material to the acquirer. Diamond Shamrock Chemicals Company is prohibited from interfering with the divestiture and, for five years, must continue to supply all utilities, services, and supplies to the acquirer. In addition, Goodrich must, for 10 years, receive FTC approval before acquiring any interest in any producer of VCM located in the United States. The Commission also dismissed part of the complaint concerning the polyvinyl chloride (PVC) market.

DATES: Complaint issued January 4, 1982. Final Order issued March 15, 1988.[1]

FOR FURTHER INFORMATION CONTACT: Rhett Krulla, FTC/S-3302, Washington, DC 20580. (202) 326-2608.

SUPPLEMENTARY INFORMATION: In the Matter of the B.F. Goodrich Company, a corporation, Diamond Shamrock Chemicals Company, a corporation, and Diamond Shamrock Plastics Corporation, a corporation. The prohibited trade practices and/or corrective actions, as codified under 16 CFR Part 13, are as follows: Subpart—Acquiring Corporate Stock Or Assets: Section 13.5 Acquiring corporate stock or assets; S.13.5-20 Federal Trade Commission Act. Subpart—Corrective Actions And/Or Requirements: S.13.533 Corrective actions and/or requirements; S.13.533-45 Maintain records; S.13.533-45(k) Records, in general; S.13.533-50 Maintain means of communication.

List of Subjects in 16 CFR Part 13

Plastics, Trade practices.

(Sec. 6, 38 Stat. 721; 15 U.S.C. 46. Interpret or apply sec. 5, 38 Stat. 719, as amended; sec. 7, 38 Stat. 731, as amended; 15 U.S.C. 45, 18)

Before Federal Trade Commission

[Docket No. 9159]

Final Order

Commissioners: Daniel Oliver, Chairman, Patricia P. Bailey, Terry Calvani, Mary L. Azcuenaga, Andrew J. Strenio, Jr.

In the matter of The B.F. Goodrich Company a corporation, Diamond Shamrock Chemicals Company, a corporation, and Diamond Shamrock Plastics Corporation, a corporation.

This matter has been heard by the Commission upon the appeal of complaint counsel from the initial decision and upon briefs and oral argument in support of and in opposition to the appeal. For the reasons stated in the accompanying opinion, the Commission has determined to deny the appeal in part and to grant the appeal in part. Accordingly,

It is ordered, that the findings of fact and initial decision of the Administrative Law Judge be adopted insofar as not inconsistent with the findings of fact and conclusions contained in the accompanying opinion.

It is further ordered, that the following order be and the same hereby is entered:

[1] Copies of the Complaint, Initial Decision, Opinions etc. are available from the Commission's Public Reference Branch, H-130, 6th St.& Pa. Ave., NW., Washington, DC 20580. (202) 326-2222.

I

Definitions

It is ordered that for purposes of this Order the following definitions shall apply:

A. "Goodrich" means The B.F. Goodrich Company, a corporation organized under the laws of New York with its principal place of business in Akron, Ohio, and its directors, officers, agents, and employees, and its subsidiaries, divisions, affiliates, successors, and assigns.

B. "Diamond Shamrock" means Diamond Shamrock Chemicals Company, a corporation organized under the laws of Delaware with its principal place of business in Dallas, Texas, and its directors, officers, agents, employees, subsidiaries, divisions, affiliates, successors, and assigns.

C. "La Porte VCM Plant" means the VCM manufacturing facility located at La Porte, Texas, and all assets, titles, properties, interests, rights and privileges, tangible and intangible, related to the VCM business, that were acquired by Goodrich from Diamond Shamrock pursuant to the January 4, 1982, agreement between Goodrich and Diamond Shamrock, together with all improvements thereto.

D. "VCM" means vinyl chloride monomer, a gaseous, reactive, acyclic intermediate chemical, with chemical identity $CH_2=CHCl$, also called chloroethylene or monochloroethylene.

II

It is ordered that within twelve (12) months from the date this Order becomes final, Goodrich shall divest, absolutely and in good faith, at no minimum price, the La Porte VCM Plant. The purpose of the divestiture is to establish the La Porte VCM Plant as a viable competitor in VCM, by insuring its continuation as an ongoing, viable enterprise in the VCM industry; and to remedy the lessening of competition resulting from the acquisition of the La Porte VCM Plant by Goodrich. The divestiture shall be made only to an acquirer or acquirers, and only in a manner, that receives the prior approval of the Federal Trade Commission.

Pending divestiture, Goodrich shall take all measures necessary to maintain the La Porte VCM Plant in its present condition and to prevent any deterioration, except for normal wear and tear, of any part of the La Porte VCM Plant, so as not to impair the La Porte VCM Plant's present operating viability or market value.

III

It is further ordered that at the time of the divestiture required by this Order, Goodrich shall provide to the acquirer of the La Porte VCM Plant, on a nonexclusive basis, all VCM technology (including patent licenses and know-how) used by Goodrich, or developed by Goodrich, for use in the La Porte VCM Plant; and

For a period of one (1) year following the divestiture required by this Order, Goodrich shall provide the acquirer of the La Porte VCM Plant, if the acquirer so requests, such additional know-how as may reasonally be required to enable such acquirer to manufacture and sell VCM. Goodrich shall charge the acquirer no more than its own costs for providing such additional know-how.

IV

It is further ordered that at the time of the divestiture required by this Order, Goodrich shall assign to the acquirer of the La Porte VCM Plant all chlorine and ethylene feedstock supply agreements; all VCM supply, sales, toll, or exchange agreements; and all VCM customer records and files relating to VCM produced in (or supplied by Goodrich at any time since January 1, 1985 from) the La Porte VCM Plant.

V

It is further ordered that if Goodrich has not divested the La Porte VCM Plant within the twelve-month period provided in Paragraph II of this Order, the Federal Trade Commission may appoint a trustee to effect the divestiture. The trustee shall be a person with experience and expertise in acquisitions and divestitures. Neither the appointment of a trustee nor a Commission decision not to appoint a trustee under this Paragraph V of the Order shall preclude the Commission from seeking civil penalties and other relief available to it, including a court-appointed trustee, for any failure by Goodrich to comply with this Order.

Any trustee appointed by the Commission pursuant to this Paragraph V shall have the following powers, authority, duties, and responsibilities:

A. The trustee shall have the exclusive power and authority, subject to the prior approval of the Commission, to divest the La Porte VCM Plant. The trustee shall have twelve (12) months from the date of appointment to accomplish the divestiture. If, however, at the end of the twelve-month period, the trustee has submitted a plan of divestiture or believes that divestiture can be accomplished within a reasonable time, the divestiture period may be extended by the Commission.

B. The trustee shall have full and complete access to the personnel, books, records and facilities of the La Porte VCM Plant, and Goodrich shall develop such financial or other information relevant to the La Porte VCM Plant as the trustee may reasonably request. Goodrich and Diamond Shamrock shall cooperate with the trustee, and shall take no action to interfere with or impede the trustee's accomplishment of the divestiture. Any delays in divestiture caused by Goodrich or Diamond Shamrock shall extend the time for divestiture under this Paragraph V in an amount equal to the delay, as determined by the Commission.

C. The power and authority of the trustee to divest shall be at the most favorable price and terms available consistent with this Order's absolute and unconditional obligation to divest at no minimum price, and with the purposes of the divestiture as stated in Paragraph II of this Order, subject to the prior approval of the Commission.

D. The trustee shall serve, without bond or other security, at the cost and expense of Goodrich on such reasonable and customary terms and conditions as the Commission may set. The trustee shall shall have authority to retain, at the cost and expense of Goodrich, such consultants, attorneys, investment bankers, business brokers, accountants, appraisers, and other representatives and assistants as are reasonably necessary to assist in the divestiture. The trustee shall account for all monies derived from the divestiture and for all expenses incurred. After approval by the Commission of the account of the trustee, including fees for his or her services, all remaining monies shall be paid to Goodrich, and the trustee's power shall be terminated. The trustee's compensation shall be based at least in significant part on a commission arrangement contingent on the trustee divesting the La Porte VCM Plant.

E. Goodrich shall indemnify the trustee and hold the trustee harmless against any losses, claims, damages, or liabilities arising in any manner out of, or in connection with, the trustee's duties under this Order, unless the Commission determines that such losses, claims, damages, or liabilities arose out of the misfeasance, gross negligence, or the willful or wanton acts or bad faith of the trustee.

F. Promptly upon appointment of the trustee and subject to the approval of the Federal Trade Commission, Goodrich shall, subject to the Federal Trade Commission's prior approval and consistent with provisions of this Order, transfer to the trustee all rights and powers necessary to permit the trustee to effect the divestiture required by this Order.

G. If the trustee ceases to act or fails to act diligently, the Commission may appoint a substitute trustee.

H. The Commission may on its own initiative or at the request of the trustee issue such additional orders or directions as may be necessary or appropriate to accomplish the divestiture required by this Order.

I. The trustee shall have no obligation or authority to operate or maintain the La Porte VCM Plant.

J. The trustee shall report in writing to Goodrich and to the Commission every sixty (60) days concerning the trustee's efforts to accomplish divestiture.

VI

It is further ordered that Diamond Shamrock shall take no action that may interfere with the divestiture required by this Order and shall assert no right or claim, arising by contract or otherwise, against the stock or assets of the La Porte VCM Plant that may impair its operating abilities or market value; and

For a period of five (5) years from the date this Order becomes final, Diamond Shamrock shall:

A. Provide to the La Porte VCM Plant all utilities, services, and feedstock supplies (including chlorine or ethylene) requested for operation of the La Porte VCM Plant, to the same extent and on the same terms and conditions that such utilities, services or feedstock supplies were supplied by Diamond Shamrock to Goodrich at any time after January 1, 1982; and

B. Make available to the La Porte VCM Plant without charge, for its use in connection with any purchase, toll, sale, or exchange incident to the ordinary operation of a VCM plant all pipelines for transporting VCM, chlorine, or ethylene, that are connected to the La Porte VCM Plant and that are owned by Diamond Shamrock.

VII

It is further ordered that for a period of ten (10) years from the date this Order becomes final, Goodrich shall not directly or indirectly acquire—other than the acquisition of manufactured product in the ordinary course of business—all or any part of the stock or assets of, or any interest in, any producer of VCM located in the United States without the prior approval of the Federal Trade Commission.

VIII

It is further ordered that Goodrich shall, within sixty (60) days after the date this Order becomes final and every sixty (60) days thereafter until it has fully complied with the provisions of Paragraph II of this Order, submit in writing to the Commission a report setting forth in detail the manner and form in which it intends to comply, is complying, or has complied with that provision. Such compliance reports shall include, among other things that may be required from time to time, a full description of all contacts and negotiations relating to the divestiture of the La Porte VCM Plant, including the name and address of all parties contacted, copies of all written communications to and from such parties, and all internal memoranda, reports and recommendations concerning divestiture; and

Goodrich shall submit such further written reports of its compliance as the staff of the Commission may from time to time request in writing.

IX

It is further ordered that any reacquisition of all or any part of the La Porte VCM Plant by Diamond Shamrock from Goodrich shall be subject to the provisions of this Order; and if Diamond Shamrock reacquires the La Porte VCM Plant, it shall:

A. For a period of three years following such reacquisition, maintain the marketability and viability of any such reacquired assets, consistent with Paragraph II of this Order; and

B. For a period of three years following such reacquisition, obtain the prior approval of the Commission before selling all or any part of such reacquired assets, other than the sale of manufactured VCM in the ordinary course of business.

Diamond shall not, for a period of ten (10) years from the date of any such reacquisition, convey any such reacquired assets or any part thereof to Goodrich.

X

It is further ordered that Goodrich and Diamond Shamrock, upon written request and on reasonable notice, for the purpose of securing compliance with this Order, and subject to any legally recognized privilege, shall permit duly authorized representatives of the Commission or of the Director of the Bureau of Competition:

A. Reasonable access during the office hours of Goodrich or Diamond Shamrock, which may have counsel present, to inspect and copy books, ledgers, accounts, correspondence, memoranda, reports, and other records and documents in the possession or control of Goodrich or Diamond Shamrock that relate to any matter contained in this Order; and

B. Subject to the reasonable convenience of Goodrich or Diamond Shamrock, an opportunity to interview officers or employees of Goodrich or Diamond Shamrock, who may have counsel present, regarding such matters.

XI

It is further ordered that Goodrich and Diamond Shamrock shall notify the Federal Trade Commission at least thirty (30) days prior to any proposed corporate change, such as dissolution, assignment or sale resulting in the emergence of a successor corporation, the creation or dissolution of subsidiaries or any other change in the corporation, which may affect compliance with the obligations arising out of this Order.

By the Commission, Chairman Oliver, Commissioner Bailey, and Commissioner Azcuenaga concurring in part and dissenting in part.

Issued: March 15, 1988.

Benjamin I. Berman,

Acting Secretary.

Opinion of the Commission

By Calvani, Commissioner:

This case concerns an acquisition affecting the manufacture of polyvinyl chloride ("PVC") and vinyl chloride monomer ("VCM"). PVC is a thermoplastic resin that, when combined with other ingredients, can be used to produce a wide variety of plastic products, ranging from irrigation pipe to phonograph records.[1] VCM is a gaseous chemical that is an essential and primary input needed to manufacture PVC resin. This case concerns an acquisition affecting the manufacture of both products. Respondent B.F. Goodrich ("Goodrich") is a large New York corporation, headquartered in Akron, Ohio, that manufactures a wide variety of chemicals, plastics, rubber and other products worldwide. In calendar 1980, Goodrich had net sales of $3.08 billion, net income of $61.7 million, and total assets valued at $2.2 billion.[2] Respondent Diamond Shamrock ("Diamond") is a Delaware corporation, headquartered in Dallas, Texas, whose operations include natural gas and crude oil exploration and production; petroleum refining and marketing; coal, chemicals and plastics production; and technology development. In calendar 1980, Diamond Shamrock had revenues of $3.143 billion, net income of $201 million, and total assets valued at $2.8 billion. IDF 4.

In January 1982 Goodrich acquired Diamond's largest PVC plant, its VCM plant, and certain other assets for $125 million. IDF 11 *in camera*. The Federal Trade Commission simultaneously issued the administrative complaint in this matter.[3] The complaint alleges that the acquisition violated section 7 of the Clayton Act, 15 U.S.C. 18, and section 5 of the Federal Trade Commission Act, 15 U.S.C. 45. More particularly, the complaint alleges that the acquisition would eliminate actual competition between Goodrich and Diamond and increase concentration levels in two product markets: the bulk and suspension PVC market and the VCM market. Administrative Law Judge Howder dismissed the complaint with respect to both markets, because in his view "the record shows that competition among producers is ongoing, vigorous and intense." ID at 95.

As explained in detail below, the Commission has concluded that the acquisition may substantially lessen competition in the VCM market, but is unlikely to lessen competition substantially in the PVC market.

---

[1] A thermoplastic resin becomes soft and malleable when heated, and therefore can be fabricated by applying heat and pressure. By contrast, thermosetting plastics do not return to a malleable state upon reheating.

[2] IDF 1. The following abbreviations are used in this opinion:

ID—initial decision page number
IDF—initial decision finding number
Tr.—transcript of testimony page number
CX—complaint counsel's exhibit number
CAB—complaint counsel's appeal brief
CRB—complaint counsel's reply brief
CPF—complaint counsel's proposed finding of fact number
CRF—complaint counsel's reply finding of fact number
RX—respondents' exhibit number
RAB—respondents' answering brief
RPF—respondents' proposed finding of fact number
RRF—respondents' reply finding of fact number

This opinion, and the opinions of Chairman Oliver and Commissioner Azcuenaga, contain some references to material in the *in camera* portion of the record. Pursuant to an order issued on February 8, 1988, the Commission has determined, without objection from the submitting parties, to place these references on the public record of this proceeding.

[3] PVC is currently the subject of another Commission proceeding. In April 1986 the Commission issued an administrative complaint challenging Occidental Petroleum's acquisition of two PVC plants from Tenneco Polymers. The Commission also sought a preliminary injunction against the transaction. The district court denied that application, but its decision was later vacated as moot. *FTC v. Occidental Petroleum Corp.*, 1986-1 Trade Cas. (CCH) ¶ 67,071 (D.D.C. April 29, 1986), *vacated as moot*, No. 86-5254 (D.C. Cir. Oct. 23, 1986).

Accordingly, the Commission affirms the decision of Judge Howder with respect to the PVC market, and reverses with respect to the VCM market.

Table of Contents

I. Statement of Facts
II. Section 7 of the Clayton Act
III. Relevant Markets
A. Relevant Geographic Market
B. Relevant Product Market
1. Bulk and Suspension Polyvinyl Chloride
2. Vinyl Chloride Monomer
IV. Structural Factors
A. Barriers and Impediments to Entry
1. PVC Market
2. VCM Market
B. Concentration Levels
1. PVC Market
2. VCM Market
C. Other Structural Factors
1. Product Homogeneity
2. Price Elasticity of Demand
3. Cost Functions
4. Size Distribution of Purchasers
5. Transaction Characteristics
6. Stability and Predictability of Demand and Supply Conditions
7. Significance of Vertical Integration
D. Conclusion
1. PVC Market
2. VCM Market
V. Performance Factors
A. PVC Market
B. VCM Market
VI. Relief
VII. Conclusion
A. PVC Market
B. VCM Market

I. Statement of Facts

At the time of the acquisition, Goodrich operated bulk or suspension PVC facilities—with a total nameplate capacity of over one billion pounds per year—in Avon Lake, Ohio; Henry, Illinois; Long Beach, California; Louisville, Kentucky; Pedricktown, New Jersey; and Plaquemine, Louisiana. CX 4Z73. It also operated a VCM plant with a nameplate capacity of approximately one billion pounds per year in Calvert City, Kentucky. IDF 3 *in camera*. At the time of the acquisition, Diamond operated several bulk and suspension PVC facilities—with a total nameplate capacity of 590 million pounds per year—in Deer Park, Texas and Delaware City, Delaware. IDF 5 *in camera*. Its Deer Park facilities included several specialty PVC resin plants (plants numbers 1, 3, 4 and 4X), with a combined practical production capacity of 215 million pounds per year; one large commodity PVC resin plant (plant number 5), with a practical production capacity of 260 million pounds per year; and a powder compound plant, with a capacity of 152 million pounds per year. Diamond also operated a VCM facility with a nameplate capacity of one billion pounds per year at LaPorte, Texas, adjacent to its Deer Park facility.[4]

In July 1979 Goodrich announced that it intended to double its PVC capacity by 1986.[5] In 1980, it announced that it would execute that strategy by constructing a 1.6 billion pound per year VCM plant and a 1.1 billion pound year suspension PVC plant at Convent, Louisiana.[6] Goodrich privately described its plans in 1981 as a successful "preemptive" strategy designed to

> freeze the competition into inaction, thereby delaying expansions and forestalling new entrants into the business * * *. This preemptive strategy, reinforced by the 1980 recession, has been quite successful to date * * * No new expansions beyond 1983 have been announced by any competitor. New entries in PVC have been forestalled * * * We have also seen consolidation occurring within the industry * * * the Diamond Shamrock and Air Products PVC businesses are for sale. As a result of all of the above developments, as well as the industry perception of our commitment, we are in an excellent competitive position to move ahead with our plans.[7]

These developments helped Diamond to conclude that its plastics business would not satisfy new corporate financial targets; it also believed that selling the business would provide capital for expansion in other areas.[8] Diamond therefore organized its plastics business into a new subsidiary, Diamond Shamrock Plastics Corporation ("DSPC"). IDF 7. Several firms expressed interest, and between September 1980 and September 1981 Diamond negotiated most actively with [ ] firm. CPF 1.28 *in camera*. In August 1980 Diamond rejected a Goodrich proposal, in part because it believed that such an acquisition would present antitrust problems. However, Diamond subsequently changed its mind, and in August 1981 began negotiating actively with Goodrich.[9] Although Goodrich believed that Diamond duplicated rather than complemented its own PVC capabilities, with "only a suggestion of synergy," it viewed the acquisition as "an attractive defense against acquisition [of Diamond] by another PVC producer."[10]

In the course of their negotiations Goodrich and Diamond agreed that only Diamond's large commodity grade plant (number 5) would be directly transferred to Goodrich, while Diamond would retain the four Deer Park small reactor specialty PVC plants (numbers 1, 3, 4, and 4X) and operate them for Goodrich.[11] At a meeting on September 9, 1981, Goodrich and Diamond discussed the shutdown of Diamond's remaining plants, and tentatively agreed that the Delaware City plant would be shut down as soon as possible, while the remaining Deer Park plants would be operated for "at least a year."[12] In late September 1981, Diamond and Goodrich reached an agreement in principle on the acquisition. Goodrich Admission 297 (CX 4Z12). In January 1982, Goodrich acquired Diamond's Deer Park plant number 5, its VCM plant, and certain other assets for $125 million.[13] Goodrich

[4] IDF 5–6 *in camera;* Goodrich Admissions 1, 15, 21, 23 (CX 4A, C–E); RX 320M, P; CX 11B *in camera*. The record indicates that Diamond continues to hold a fifty percent interest in a 220 million pound per year bulk PVC plant in Alberta, Canada. RX 320S–T.

[5] DiLiddo, Tr. 3335; CX 38C *in camera; see* CX 109D, Z4 *in camera*.

[6] DiLiddo, Tr. 3131, 3135–36, 3176–79; CX 8B; CX 38C *in camera*. A joint venture between Goodrich and Bechtel Petroleum was already constructing a chlor-alkali and ethylene dichloride complex at the same location; that facility was completed in 1981. CX 8B; Goodrich Admission 665 (CX 4Z82); DiLiddo, Tr. 3131; CX 38C *in camera*.

[7] CX 47B; *accord* CX 59D *in camera;* DiLiddo, Tr. 3170–74; CX 49R; CX 56A *in camera;* CX 57C–E *in camera*.

[8] CX 112G–H; CX 541F *in camera;* Diamond Admissions 294, 295, 297 (CX 6M); Becker, Tr. 1342–48; CX 401E; CX 402B; CX 403A–B.

[9] Schaefer, Tr. 1092–93, 1106–07; CX 295Z75–76 *in camera;* Arp, Tr. 3458, 3476.

[10] CX 34A *in camera; see* Klass, Tr. 4983 *in camera*. These statements suggest that the acquisition did not increase efficiency to a significant degree.

[11] CX 60A *in camera;* CX 197A *in camera*.

[12] CX 60A *in camera*. In a September 1981 internal memorandum, Goodrich outlined some of the terms of the transaction as follows: DS will operate DP small poly plant for BFG for two years with option to extend a third year. Upon 6 mos. notice BFG can terminate small poly operations. DS & BFG will jointly develop a shutdown plan.

CX 115C, H *in camera*. Respondents argue that this document was "a summary of the key points of the negotiation," rather than a description of the agreement, and that Goodrich and Diamond did not agree that Deer Park plants 1 through 4X would ultimately be shut down. RRF at 14–16, *citing* DiLiddo, Tr. 3198; Schaefer, Tr. 1183; Becker, Tr. 1357–58. However, the document is dated September 11, 1981, and Diamond and Goodrich reached an agreement in principle in late September. In any event, the Delaware City plant was subsequently sold to Ethyl Corporation, rather than shut down. *See* page 10, *infra*.

[13] IDF 10–11 *in camera*. The other assets Goodrich acquired included Diamond's suspension PVC production technology and formulations; its suspension PVC and powder compound inventories; its PVC and VCM railcars; its research and development resources; and various patents. IDF 12 *in camera*. They also included Diamond's Deer Park powder compound plant, which had been used to supply compounded PVC resin to PVC pipe producers. CX 452. As a part of the sales agreement, Diamond also agreed to supply ethylene and chlorine feedstocks to Goodrich—and to manufacture suspension PVC for Goodrich using Goodrich VCM—on an interim basis. IDF 13 *in camera*.

subsequently cancelled its plan to build a VCM plant at Convent, Louisiana, and wrote off the $27 million it had thus far invested in the project as a loss.[14]

Goodrich and Diamond believed that the sale of Deer Park plant number 5 to Goodrich effectively precluded the sale of plants numbers 1, 3, 4, and 4X to another firm, and that these plants would be closed within two years.[15] However, Diamond agreed to toll needed raw materials from Goodrich and use the plants to supply speciality grades of suspension PVC resin for resale by Goodrich.[16] As a result, Goodrich was able to assume responsibility for supplying specialty resins to Diamond's customers.[17] After Goodrich established itself as the supplier for these accounts, and Diamond dissolved its PVC marketing organization, Goodrich shifted the source of supply from plants 1, 3, 4, and 4X to one of its own plants. *See* CX 570B.

After the first year of the tolling arrangement, Goodrich determined to minimize Diamond's suspension PVC production as much as possible, but to continue to take all the suspension PVC Diamond produced until Diamond shut down the remaining Deer Park plants.[18] Goodrich perceived this strategy as

> the only option that keeps Diamond from being a disruptive force in the market place. Since they have no sales force, if we don't take their resin, they will be able to only sell the resin based on price and this could have a devastating effect on overall industry pricing.

CX 117A. In April 1982 Diamond sold its Delaware City PVC plant to Ethyl Corporation, and by December 1983 Diamond had closed or sold all its remaining PVC plants and disbanded its plastics division. IDF 14 *in camera*.

II. Section 7 of the Clayton Act

Section 7 of the Clayton Act prohibits acquisitions that may substantially lessen competition or tend to create a monopoly; that is, that create a reasonable likelihood of anticompetitive effects.[19] As the Court of Appeals for the Seventh Circuit indicated recently in affirming the Commission decision in *HCA*, the crucial question is

> whether the challenged acquisition is likely to hurt consumers, as by making it easier for the firms in the market to collude, expressly or tacitly, and thereby force price above or farther above the competitive level * * * the ultimate issue is whether the challenged acquisition is likely to facilitate collusion * * * the worry is that [the acquisition] may enable the acquiring firm to cooperate (or cooperate better) with other leading competitors on reducing or limiting output, thereby pushing up the market price.[20]

The Court went on to point out:

> Section 7 does not require proof that a merger or other acquisition has caused higher prices in the affected market. All that is necessary is that the merger create an appreciable danger of such consequences in the future. A predictive judgment, necessarily probabilistic and judgmental rather than demonstrable * * * is called for.[21]

In short, if an acquisition creates an "appreciable danger" of anticompetitive effects such as supracompetitive prices, then it violates section 7 of the Clayton Act.

III. Relevant Markets

The first step in determining whether a particular acquisition satisfies the foregoing standard is to delineate the relevant geographic and product markets.[22] As the Supreme Court has indicated,

> determination of the relevant market is a necessary predicate to a finding of a violation of the Clayton Act because * * * [s]ubstantiality can be determined only in terms of the market affected.[23]

A. Relevant Geographic Market

Relevant geographic markets can be delineated by measuring cross elasticities of supply and demand; that is, by determining the degree to which—within a given period of time—price changes in one area will induce changes in the quantities of the relevant product demanded in and supplied from other areas, with all other factors affecting supply and demand held constant.[24] Thus, the Supreme Court has determined that,

> [t]he area of effective competition in the known line of commerce must be charted by careful selection of the market area in which the seller operates and to which buyers can practicably turn for supplies.[25]

Consistent with that position, the Commission has determined that "the relevant geographic market must be broad enough that buyers would be unable to switch to alternative sellers in sufficient numbers to defeat an exercise of market power by firms in the area."[26] Similarly, the Department of Justice has concluded that an area is probably a relevant geographic market if a firm or a group of colluding firms within the area could "profitably impose a 'small but significant and nontransitory' increase in price"—in most contexts, a five percent increase lasting one year—without (1) inducing a significant number of buyers to shift to firms outside the area, or (2) inducing a significant number of sellers outside the area to begin selling inside the area.[27] It is often difficult to measure these effects directly, either by calculating cross-elasticities of supply and demand, or by calculating the degree to which firms within the area could in fact exercise market power.[28] Surrogates

---

[14] DiLiddo, Tr. 3187–88, 3390.

[15] Schaefer, CX 295 Z97 *in camera*; CX 115C *in camera; see* CX 11J *in camera*.

[16] Under most tolling arrangements, a firm agrees to manufacture product for another firm using raw materials supplied by the other firm. Kienholz, Tr. 845–49.

[17] *See* CX 567; CX 570B.

[18] Beginning in March 1982 Diamond sold over 90 percent of its PVC production to Goodrich, pursuant to the tolling agreement. CX 300Z10 *in camera*; CX 117A–B.

[19] *Hospital Corporation of America*, 106 F.T.C. 361, 464 (1985) (*hereinafter HCA*), *aff'd*, 807 F.2d 1381 (7th Cir. 1986), *cert. denied*, _____ U.S. _____, No. 86–1492 (May 3, 1987); *Echlin Manufacturing Co.*, 105 F.T.C. 410, 483 (1985); *B.A.T. Industries, Ltd.*, 104 F.T.C. 852, 919 (1984).

[20] *Hospital Corporation of America v. FTC*, 807 F.2d 1381, 1386 (7th Cir. 1986), *cert. denied*, _____ U.S. _____, No. 86–1492 (May 3, 1987) (*hereinafter HCA v. FTC*); *accord*, *HCA*, 106 F.T.C. at 477.

[21] *HCA v. FTC*, 807 F.T.C. at 1389 (citation omitted); *accord*, *United States v. General Dynamics Corp.*, 415 U.S. 486, 505 (1974); *HCA*, 106 F.T.C. at 499 ("actual anticompetitive effects need not be shown; an acquisition is unlawful if such an effect is reasonably probable").

[22] As the Commission has noted, one could arrive at relatively precise estimates of market power—without proceeding through the market definition-market structure paradigm—if one could measure "all relevant demand and supply elasticities." *Federal Trade Commission Statement Concerning Horizontal Mergers*, 2 Trade Reg. Rep. (CCH) ¶4516 (June 14, 1982) (*hereinafter FTC Statement*), at 6901–3. However, as the Commission has also noted, such evidence "is rarely, if ever, available, and is not readily susceptible to direct measurement." *Id. But see* Baker and Bresnahan, *The Gains From Merger or Collusion in Product-Differentiated Industries*, 33 J. Indus. Econ. 427 (1985) (direct assessment of market power through residual demand curve estimation).

[23] *United States v. E.I. duPont de Nemours & Co.*, 353 U.S. 586, 593 (1957); *accord United States v. Marine Bancorporation*, 418 U.S. 294,602, 618 (1974); *Brown Shoe Co. v. United States*, 370 U.S. 324 (1962); *Domed Stadium Hotel, Inc. v. Holiday Inn, Inc.* 732 F.2d 480, 491 (5th Cir. 1984); *Weyerhaeuser Co.*, 106 F.T.C. 172, 274 (1985); *American Medical International*, 104 F.T.C. 1, 190–191 (1984) (*hereinafter AMI*).

[24] *Weyerhaeuser Co.*, 106 F.T.C. at 274; *Grand Union Co.*, 102 F.T.C. 812, 1039–40 (1983); *Beatrice Foods Co.*, 101 F.T.C. 733, 836 (1983) (Douglas, Commissioner, and Miller, Chairman, concurring); *FTC Statement*, ¶4516 at 6901–7.

[25] *Tampa Electric Co. v. Nashville Coal Co.*, 365 U.S. 320, 327 (1961); *accord United States v. Philadelphia National Bank*, 374 U.S. 321, 359 (1963).

[26] *HCA*, 106 F.T.C. at 466.

[27] *Justice Department Merger Guidelines*, 2 Trade Reg. Rep. (CCH) ¶4490 *et seq.* (1984) (*hereinafter DOJ Guidelines*) at ¶¶2.11, 2.31.

[28] *But see* Scheffman and Spiller, *Geographic Market Definition Under the United States Department of Justice Merger Guidelines*, 30 J. L. & Econ. 123 (1987) (operationalizes *DOJ Guidelines* market definition algorithm by estimating residual demand elasticities).

such as persistent price differences; price change differences; similarities or differences in price movements; impediments to trade, such as transportation costs that are high relative to product value; shipment patterns and transshipment levels; and industry perceptions therefore may be used.[29] Imports that could profitably enter the market within one year in response to a "small but significant and nontransitory" price increase should also be included.[30]

In this case, the parties have stipulated that the United States as a whole is the relevant geographic market (IDF 15), a delineation that is consistent with the record evidence.

B. Relevant Product Market

A relevant product market can also be delineated by measuring cross-elasticities of supply and demand; that is, by determining the degree to which—within a given period of time—changes in the price of a given product or service will induce changes in the quantities of a second product or service that are demanded or supplied.[31] Thus, the Supreme Court has concluded that both demand and supply substitutability are relevant to determining the contours of a relevant product market.[32] Consistent with that position, the Commission seeks "to define a product or group of products sufficiently distinct that buyers could not defeat an attempted exercise of market power on the part of sellers of those products by shifting purchases to still different products."[33] Similarly, the Justice Department has concluded that a given item constitutes a relevant product if its manufacturer could "profitably impose a 'small but significant and nontransitory' increase in price"—in most contexts, a five percent increase lasting one year—without (1) inducing a significant number of buyers to begin purchasing substitute products, or (2) inducing a significant number of manufacturers of other products to begin producing the product at issue.[34] It is often difficult to measure these effects directly, either by calculating cross-elasticities of supply and demand, or by calculating the degree to which firms within the postulated product market could in fact exercise market power. Surrogates such as distinctive uses or characteristics, industry firm perceptions, and persistent price differences over time may therefore be considered.[35]

1. Bulk and Suspension Polyvinyl Chloride

PVC is manufactured from ethylene, a petroleum compound, and chlorine.[36] These chemicals are first converted into ethylene dichloride, which is then "cracked" to produce vinyl chloride monomer ("VCM"). VCM molecules are then linked into chains ("polymerized") by heating them in the presence of certain catalysts. IDF 17, 19. Approximately 85 percent of all PVC manufactured in the United States is classified as "suspension PVC." IDF 21; Disch, Tr. 627–28. It is produced by adding suspension agents to VCM, in the presence of water and catalysts, thereby producing large PVC particles while using smaller amounts of energy than other processes require. IDF 21; Disch, Tr. 627–29. Approximately 5 percent of all PVC manufactured in the United States is classified as "bulk PVC." It is produced by polymerizing VCM without adding any liquids, producing a purer product suitable for end use applications requiring greater optical clarity, such as packaging materials.[37]

When combined with other ingredients, such as stabilizers, plasticizers or impact modifiers,[38] PVC resin can be used to manufacture a wide variety of products, including pipe and pipe fittings, wire and cable insulation, packaging film for meat and produce, vinyl siding, floor tile, bottles, medical and surgical tubing, records, and vinyl window frame components. IDF 18 *in camera*. In 1981, approximately 5.242 billion pounds of PVC were produced for domestic consumption; by 1983 that total had increased to 5.635 billion pounds.[39] During the 1981–1983 period, approximately 43 to 44 percent of total PVC resin consumed was used to produce pipe and pipe fittings;[40] 20 to 25 percent was used to produce calendered products;[41] 10 percent was used in wire and cable applications (IDF 147); and 6 to 7 percent was used for packaging film and sheet.[42]

The parties have stipulated that the production of bulk and suspension PVC is a relevant product market (IDF 16), a delineation that is consistent with the record evidence. Firms that currently purchase PVC resin to manufacture PVC end use products cannot substitute other inputs in response to a small increase in PVC resin prices; there are simply no substitutes for PVC resin as an input to produce these products.[43] Moreover,

---

[29] *United States v. General Dynamics Corp.*, 415 U.S. 486, 490–91 and n.3 (1974); *Grand Union Co.*, 102 F.T.C. at 1041; *FTC Statement*, ¶4516 at 6901–7; *DOJ Guidelines* at ¶2.32.

[30] *See, e.g., HCA*, 106 F.T.C. at 466–467. On the other hand, imports that could profitably enter the market within twelve months to two years are treated as new entry under the DOJ Guidelines. *DOJ Guidelines* at ¶3.3. Here, in view of the parties' stipulation that the United States constitutes the relevant geographic market, we consider respondents' arguments concerning the impact of imports in our analysis of entry conditions. *See* pages 38–38, 42–43, *infra*.

[31] *Grand Union Co.*, 102 F.T.C. at 1039–40; *Beatrice Foods Co.*, 101 F.T.C. at 830 (Douglas, Commissioner, and Miller, Chairman, concurring); *FTC Statement*, ¶4516 at 6901–6.

[32] *Brown Shoe Co. v. United States*, 370 U.S. 294, 325 and n.42 (1962); *United States v. Columbia Steel Corp.*, 334 U.S. 495, 510–511 (1948); *see also United States v. E. I. dePont de Nemours & Co.*, 351 U.S. 377 (1956).

[33] *HCA*, 106 F.T.C. at 464, 466.

[34] *DOJ Guidelines* at ¶2.11.

[35] *Grand Union Co.*, 102 F.T.C. at 1041; *FTC Statement*, ¶4516 at 6901–6 through 6901–7; *DOJ Guidelines* at ¶2.12.

[36] Chlorine is produced by applying an electrical current to brine; the process yields one pound of chlorine to 1.1 pounds of caustic soda. Chlorine is highly volatile and corrosive, and therefore cannot be stored economically. RPF 45, 46. Ethylene is manufactured by cracking petroleum feedstocks such as ethane, propane, butane or naphtha. RPF 49.

[37] IDF 23; Disch Tr. 629, 633. The remaining 8 to 10 percent of PVC manufactured in the United States is produced through a "dispersion process," in which emulsifying agents are used, in conjunction with an expensive spray drying process, to produce very small PVC particles. IDF 22; Disch, Tr. 630. The complaint also alleged a violation in the dispersion PVC market, but complaint counsel elected not to pursue—and presented no evidence concerning—that allegation at trial. ID at 2 n.2. Bulk and suspension PVC resins have "quite different" applications than dispersion resins. Disch, Tr. 634. In order to simplify the discussion, the term "PVC" in this opinion refers to bulk and suspension PVC, and not to dispersion PVC.

[38] These ingredients are added to PVC resins to produce PVC compounds, which are used in turn to manufacture PVC end use products. Disch, Tr. 655–56.

[39] *See* Tables I and II, *Infra*.

[40] IDF 99; Disch, Tr. 663. This end use includes municipal water pipe (200 million pounds of PVC resin in 1983); rural water pipe (340 million pounds); water services and distribution pipe (280 million pounds); sewer and drain pipe (480 million pounds); drain, waste and vent pipe (450 million pounds); irrigation pipe (150 million pounds); communications duct (280 million pounds); and electrical conduit (120 million pounds). IDF 109, 121, 123, 127, 133, 138, 142, 144 (amounts *in camera*).

[41] IDF 190. Calendered products are produced through "calendering," in which large heated rolls are used to produce wide sheets of PVC material. Rigid calendered sheet is used to manufacture rigid products such as decorative laminates and credit card stock. Flexible calendered sheet is used to manufacture more flexible products such as wall coverings, upholstery, automotive interiors and landau tops, luggage, wallets, raincoats, footwear, and a variety of other products. IDF 190 and ID at 58 n.40.

[42] IDF 152. The remaining approximate percentages of the total over the 1981–1983 period were devoted to vinyl siding and accessories (5 percent); floor tile (3–4 percent); bottles (3–4 percent); medical applications (2 percent); phonograph records (2–3 percent); and windows (1 percent). IDF 154, 165, 169, 179 (and Table I), 185, 189 (and Table I) (percentages *in camera*); Disch, Tr. 664.

[43] There are, of course, substitutes for the end products made from PVC resin. They are discussed in detail in Part IV.C.2.a., *infra*.

firms producing other products are unlikely to switch to producing PVC in response to a small increase in PVC resin prices, because the machinery needed to produce PVC is essentially unique to that application. *See* Disch, Tr. 663.

2. Vinyl Chloride Monomer

VCM is a "gaseous, reactive, acyclic intermediate chemical" under atmospheric temperature and pressure.[44] It is produced by thermally cracking purified ethylene dichloride at high temperatures. Ethylene dichloride is produced, in turn, by either oxyhydrochlorinating or directly chlorinating ethylene. IDF 32; Kienholz, Tr. 757–58. Approximately 0.6 pound of chlorine and 0.49 pound of ethylene are used to manufacture one pound of VCM. CPF 2.18 *in camera;* RPF 41 *in camera.* Small amounts of VCM are used to produce other plastics, but over 95 percent of the VCM consumed in the United States is used to manufacture PVC. IDF 31. Approximately 1.02 to 1.04 pounds of VCM are required to manufacture one pound of PVC. Kaserman, Tr. 2456. A substantial amount of processing—accounting for approximately 37 to 45 percent of the cost of producing PVC—is required to convert VCM into PVC.[45] In 1981, 6.856 billion pounds of VCM were produced for domestic consumption; by 1983 that total had increased to 7.033 billion pounds.[46]

Complaint counsel argued—and Judge Howder agreed—that VCM constitutes a relevant product market. IDF 16; CAB at 7 and n. 11; CRB at 53–56. Respondents agree that "VCM is a product without substitutes, produced by distinct companies utilizing unique facilities." RPF 228 *in camera.* They argue, however, that VCM is not a relevent market "that could be subject to the exercise of market power" because VCM's only utility is in the manufacture of PVC and because VCM is "virtually fully integrated" into PVC by ownership or long term contracts. As a result, according to the respondents, "VCM and PVC producers are engaged in a single business, with the price of PVC determining revenues for all participants."[47]

We conclude that VCM is a relevant product market for the purpose of section 7 analysis. Even if the respondents' analysis were to apply if VCM and PVC were completely integrated, the record shows that the degree of vertical integration by ownership between VCM and PVC is neither complete nor symmetrical. IDF 78. Before the Goodrich acquisition, nonintegrated producers accounted for 46.9 percent of VCM practical production capacity and approximately 44.6 percent of PVC practical production capacity.[48] Accordingly, there is a market in which VCM is bought and sold that could be subject to the exercise of market power. The long term VCM supply contracts to which the respondents refer typically give the firms they cover independent discretion as to the quantity they will buy or sell, and their customers and sources of supply.[49] Moreover, under most VCM supply contracts, neither the price nor the quantity is fixed; instead, both are subject to negotiation on a frequent basis. In addition, contract prices are often closely tied to VCM market prices by meeting competition clauses or specific references to competitors' VCM prices. Furthermore, even firms that are vertically integrated by ownership participate in the VCM market from time to time as either buyers or sellers of VCM, through sales, purchases and exchanges keyed to the market price of VCM. IDF 296–301 *in camera.*

From the perspective of the demand and supply elasticity analysis outlined above, the Commission therefore has concluded that VCM should be classified as a separate product market. A small increase in VCM prices is not likely to induce a significant increase in the quantity of a competing product that is demanded, because there are no substitutes for VCM, which must be used in fixed proportions to produce PVC.[50] In fact, one Goodrich document describes demand for VCM as "absolutely inelastic."[51] Moreover, a small increase in VCM prices is not likely to induce producers of other products to switch to supplying VCM; no plants currently producing other products could be shifted into VCM production.[52] Thus, a group of colluding firms in the VCM market could sustain a price increase of at least five percent for at least one year.

As noted *supra,* a number of PVC producers—including Goodrich and Diamond at the time of the acquisition—also produce VCM. The Commission has determined that "captive production" of this type

> should ordinarily be treated as part of the relevant product market in merger cases when, as the Justice Department has suggested, a "small but significant and nontransitory" price increase in likely to induce vertically integrated firms to increase production of the relevant product, either for outside sales or to increase their own downstream sales.[53]

Under this standard, internally consumed VCM should be treated as part of the VCM market. Integrated VCM producers could respond to VCM price increases initiated by nonintegrated producers by increasing VCM production, either for sale or for producing additional quantities of PVC.[54] VCM producers consider both independent and integrated VCM producers to be competitors in supplying PVC producers, and PVC producers secure VCM from both integrated and nonintegrated sources.[55] Any effort among nonintegrated VCM producers to collude could not succeed without the cooperation or acquiescence of integrated producers.[56]

IV. Structural Factors

The foregoing discussion establishes that the PVC market and the VCM market are relevant product markets, and that the United States is the relevant geographic market. The next step is to determine whether the acquisition at issue may substantially lessen competition by facilitating collusive conduct (or other anticompetitive behavior) among the

---

[44] IDF 30. VCM is normally stored and transported as a liquid under pressure. L. Wheeler, Tr. 917.

[45] *See e.g.,* RX 1213H *in camera.*

[46] *See* Tables IV and V, *infra.*

[47] RAB at 57. However, the respondents' economic expert testified that VCM "may likely meet" the *DOJ Guidelines* criteria for a market "and thus is a market definition concept that I can work with." Klass, Tr. 4473–74.

[48] *See* Table VII, *infra.* In *Weyerhaeuser Co.,* 106 F.T.C. 172, 271 (1985), the Commission found that corrugating medium was a relevant product market, even though only 12 percent of corrugating medium consumed was sold on the open market.

[49] For example, under a contract between Shell and Tenneco, Tenneco may resell any or all of the VCM it purchases from Shell; Shell may sell VCM to other firms; Tenneco may buy VCM from other firms; and Shell controls the factors that determine contract prices. Disch, Tr. 703–04, 726–27.

[50] Kaserman, Tr. 2456; L. Wheeler, Tr. 919 *in camera.*

[51] Lefebvre, CX 296Z *in camera.*

[52] Klass, Tr. 4706–07; Kaserman, Tr. 2455–56; Kienholz, Tr. 821; L. Wheeler, Tr. 980.

[53] *B.A.T Industries, Ltd.,* 104 F.T.C. at 934, *citing DOJ Guidelines at § 2.23; accord Spectrofuge Corp.* v. *Beckman Instruments, Inc.,* 575 F.2d 256, 278 (5th Cir. 1978), *cert. denied,* 440 U.S. 939 (1979); *International Tel. & Tel.* v. *General Tel. & Elecs. Corp.,* 518 F.2d 913, 930 (9th Cir. 1975). *But see Grumman Corp.* v. *LTV Corp.,* 665 F.2d 10, 13–14 (2d Cir. 1981).

[54] Kaserman, Tr. 2456–59.

[55] L. Wheeler, Tr. 932 *in camera;* Kienholz, Tr. 786, 856–57; Klass, Tr. 3996, 4006; Taylor, Tr. 1563–65, 1621.

[56] Kaserman, Tr. 2458–59; *see* Klass, Tr. 1049–52.

firms remaining in the industry. As the Commission has stated, the legal analysis of horizontal mergers "'has focused on the extent to which the mergers * * * enhance the ability of firms to collude, either expressly or tacitly.'"[57] The Seventh Circuit has confirmed that the issue is

> whether the challenged acquisition is likely to facilitate collusion . . . the worry is that [the acquisition] may enable the acquiring firm to cooperate (or cooperate better) with other leading competitors in reducing or limiting output, thereby pushing up the market price.

HCA v. *FTC*, 807 F.2d at 1386.

The effective coordination of price and output strategies requires developing a consensus concerning price and output levels, and a means of enforcing its terms.[58] The first step requires harmonizing the incentives of participating firms and mitigating firm uncertainty concerning rival firms, so that they can effectively coordinate their behavior.[59] The second step requires creating circumstances in which the prospective value to each participating firm of cheating on the consensus does not exceed the prospective loss from rival firm retaliation.[60] In order to create and maintain these circumstances, participating firms must be able to monitor rival firm conduct; that is, they must be able to detect cheating on the consensus. They must also be able to retaliate effectively if and when cheating occurs.

Structural conditions within an industry are crucially important to determining the feasibility of collusion, and consequently to determining whether a particular merger or acquisition is likely to have anticompetitive effects. An industry in which an acquisition is most likely to have anticompetitive effects will be characterized by the following attributes: (1) Relatively high barriers or impediments to entry; (2) a relatively high level of concentration; (3) a low level of product differentiation, and a low level of geographic differentiation occasioned by transportation cost differences; (4) a relatively inelastic demand for industry output at competitive price levels; (5) insignificant intra-industry differences in cost functions; (6) a large number of small buyers; (7) a high degree of transaction frequency and visibility; and (8) relatively stable and predictable demand and supply conditions.[61] Not all of these criteria need to be satisfied in order to establish that an acquisition may substantially lessen competition, but they are all relevant to one degree or another. This part of the Opinion analyzes each of these factors in detail. In addition, it evaluates the competitive significance of vertical integration between the VCM and PVC markets.

A. Barriers and Impediments to Entry

The absence of barriers or impediments to entry makes it highly unlikely that a merger or acquisition will have anticompetitive effects, because any effort to extract supracompetitive prices and profits will induce new entry, which will reduce prices to competitive levels. Even if new entrants are willing to participate in an ongoing effort to coordinate price and output levels, accommodating their conflicting incentives is likely to be difficult. The Supreme Court has therefore recognized that an evaluation of the likely competitive effects of an acquisition should include an appraisal of the potential for competition from firms not currently in the relevant market. For example, in *United States* v. *Falstaff Brewing Corp.*, the Court noted that although Falstaff did not currently sell the relevant product in the relevant geographic market, it clearly possessed the potential to enter relatively easily, and therefore constrained the pricing discretion of incumbent firms.[62]

For similar reasons, the Commission has concluded that in the absence of barriers or impediments to entry, an acquisition cannot have anticompetitive effects, and therefore cannot violate section 7 of the Clayton Act.[63] The Justice Department has taken the same position:

> If entry into a market is so easy that existing competitors could not succeed in raising price for any significant period of time, the Department is unlikely to challenge mergers in that market.

DOJ Guidelines at ¶3.3. By contrast, high entry barriers "increase the probability that market power will result from an acquisition."[64] The Commission has defined entry barriers as additional long-run costs that must be incurred by an entrant, but that were not incurred by incumbent firms.[65] The Commission has noted that a long-run differential could create "a permanent barrier to new entry" that would permit incumbent firms to secure supracompetitive prices and profits indefinitely.[66] Governmental restrictions may create such a barrier,[67] and environmental regulations represent an example.[68] The Commission has

---

[57] *Weyerhaeuser Co.*, 106 F.T.C. at 273–274, *quoting FTC Statement*, ¶4516 at 6901–2. This case does not involve the alternative situation in which an acquisition permits a single firm to acquire or enhance market power approaching monopoly proportions.

[58] *See, e.g.*, R. Posner, *Antitrust Law: An Economic Perspective* 51 (1976); Salop, *Practices That (Credibly) Facilitate Oligopoly Coordination*, in *New Developments In the Analysis of Market Structure* (J. Stiglitz and G. F. Mathewson eds. 1986); Hay, *Oligopoly, Shared Monopoly, and Antitrust Law*, 67 Cornell L. Rev. 439, 445 (1982); Clark, *Price-Fixing Without Collusion: An Economic Analysis of Facilitating Prictices After Ethyl Corp.*, 1983 Wis. L. Rev. 887, 891 (1983).

[59] *E.g.*, Clark, *supra* note 58, at 892.

[60] *E.g.*, *id.* at 893.

[61] *See, e.g.*, *Ethyl Corp.*, 101 F.T.C. 425, 602–03, 607–09 (1983), *rev'd on other grounds sub nom. E.I. du Pont de Nemours & Co.* v. *FTC*, 729 F.2d 128 (2d Cir. 1984); *FTC Statement* ¶4516 at 6901 through 6901–5; *DOJ Guidelines* at ¶3.2; Posner, *supra* note 58, at 55–61; P. Areeda, *Antitrust Analysis* ¶262 (1981); F. Scherer, *Industrial Market Structure and Economic Performance* 171–72 (2d ed. 1980); G. Stigler, *The Organization of Industry* 39–45 (1968); Markham, *The Nature and Significance of Price Leadership*, 41 Amer. Econ. Rev. 891, 901–03 (1951); Clark, *supra* note 58, at 894–99. *See generally United States* v. *Citizens & Southern National Bank*, 422 U.S. 86, 120–22 (1975); *United States* v. *General Dynamics Corp.*, 415 U.S. 486, 503–05 (1974).

[62] *United States* v. *Falstaff Brewing Corp.*, 410 U.S. 526, 531–34 (1973); *accord FTC* v. *Procter & Gamble Co.*, 386 U.S. 568, 581 (1967); *United States* v. *Penn-Olin Chemical Co.*, 378 U.S. 158, 173–74 (1964); *see also United States* v. *Philadelphia National Bank*, 374 U.S. at 367 and n. 44.

[63] *Echlin Manufacturing Co.*, 105 F.T.C. at 484, 487; *accord United States* v. *Waste Management, Inc.*, 743 F.2d 976, 981–984 (2d Cir. 1984); *United States* v. *Calmar Inc.*, 612 F. Supp. 1298, 1305 (D.N.J. 1985); *United States* v. *Tracinda Investment Corp.*, 477 F. Supp. 1093, 1108 (C.D. Cal. 1979); *United States* v. *M.P.M., Inc.*, 397 F. Supp. 78, 92, 94 (D. Colo. 1975); *HCA*, 106 F.T.C. at 489; *FTC Statement*, ¶4516 at 6901–3 ("if entry barriers are very low it is unlikely that market power, whether individually or collectively exercised, will persist for long."); *see B.A.T Industries, Ltd.*, 104 F.T.C. at 919; *Grand Union Co.*, 102 F.T.C. at 1063. Hence, in evaluating the prospect of anticompetitive effects from a particular acquisition, the Commission must first determine whether any barriers or impediments to entry make the sustained exercise of market power feasible.

[64] *Grand Union Co.*, 102 F.T.C. at 1063–64; *accord FTC Statement*, ¶4516 at 6901–3.

[65] *Echlin Manufacturing Co.*, 105 F.T.C. at 485, *citing, e.g.*, G. Stigler, *supra* note 61 at 67; *accord HCA*, 106 F.T.C. at 491; *Weyerhaeuser Co.*, 106 F.T.C. at 286. In the rest of this opinion, the term "barriers to entry" is intended to refer to "Stiglerian" barriers to entry.

[66] *Echlin Manufacturing Co.*, 105 F.T.C. at 485–86.

[67] For example, in *HCA* the Commission noted that both Georgia and Tennessee required prospective or incumbent hospitals to secure "certificates of need" from their respective States before, *inter alia*, establishing new acute care hospitals, expanding the bed capacity of existing hospitals, changing the services they offered, or making significant capital expenditures. *HCA*, 106 F.T.C. at 489–91. Securing these certificates required following elaborate, time-consuming procedures, and the Commission concluded that these procedures represented a classic barrier to entry. *Id.* at 491.

[68] *Weyerhaeuser Co.*, 106 F.T.C. at 287.

determined that the relevant costs for comparison purposes are the "economic costs measured at the time of entry;" that is, the costs that each firm—whether an incumbent or a prospective entrant—confronts at the time of its entry effort.[69]

Impediments to entry that do not rise to the level of absolute barriers to entry may nevertheless permit the exercise of market power for substantial periods of time. The Commission has defined impediments to entry as

> any condition that necessarily delays entry into a market for a significant period of time and thus allows market power to be exercised in the interim.[70]

The Commission has more recently indicated that when new entry is possible only through the construction of a plant that cannot be completed in less than four to four and one half years, that constitutes an impediment to entry.[71] The nature of sales contracts within an industry helps to determine the significance of the delay arising from impediments to entry. If most prices are fixed pursuant to contracts with terms longer than the delay occasioned by impediments to entry, then the impediments may have no competitive significance.

As the time and expenditures needed to overcome barriers and impediments to entry increase, the likelihood that a given acquisition will have anticompetitive effects, *ceteris paribus*, increases as well. In this case, both the PVC and the VCM markets are characterized by substantial barriers and impediments to entry, and fringe firms are unlikely to constrain collusive conduct in either market.

1. *PVC Market*

Under current conditions, four or five years would be required to plan and construct a new bulk or suspension PVC plant, or to expand an existing plant,[72] including one to two years for required environmental permits;[73] at least six months for pre-permit engineering;[74] and two years for actual construction. IDF 65–67; Schaefer, Tr. 1133. Additional time—up to one year—may be needed for prospective entrants to evaluate and secure the technology licenses needed to begin PVC production.[75] Because these factors necessarily delay entry into the PVC market for a substantial period of time, they constitute a substantial impediment to entry. Moreover, because some of the environmental regulations were adopted recently—and have significantly increased the length of time required to enter the PVC market—they constitute a significant barrier to entry.

The environmental restrictions constrain both new entry and expansion by incumbent firms. Air emissions from PVC and VCM plants are subject to a number of air quality restrictions created pursuant to the Clean Air Act, 42 U.S.C. 7401–7642, including specific standards covering vinyl chloride emissions.[76] Therefore, preconstruction permits must be obtained for all new PVC plants, and for major expansions of existing plants, certifying that they will comply with a variety of "Prevention of Serious Deterioration" ("PSD") regulations.[77] The PSD regulations are relatively restrictive in areas that currently meet federal air quality standards—requiring, *inter alia*, preconstruction permits[78]—and even more restrictive in areas that do not currently meet those standards.[79]

Moreover, in 1980 EPA amended its PSD regulations to require the presentation of continuous air monitoring data *prior* to the processing of a permit application. Diamond estimated that this requirement:

> could add up to one year to the time it takes to get a construction permit. This means it will take from one to two years to get a PSD Permit before construction can begin.

CX 446D. Tenneco similarly estimated that one year of ambient air quality monitoring would probably be required before the submission of a preconstruction permit application. CX 574J.

In addition, effluent discharges from VCM and PVC resin plants are subject to the restrictions of the Clean Water Act, as amended by the Federal Water Pollution Control Act, 33 U.S.C. 1251–1376. The EPA has specifically designated vinyl chloride as a toxic pollutant, 33 U.S.C. 1317; 40 CFR 401.15, and PVC plants as pollutant discharge point sources.[80] As a result, new and existing PVC manufacturing facilities must comply with the permit requirements of the National Pollutant Discharge Elimination System. 33 U.S.C. 1342. PVC plants may also be subject to a variety of local regulations such as land use restrictions. IDF 66; ID at 18 n.13.

These requirements have significantly lengthened the lead time and increased the risk associated with new plant construction and plant expansion since 1976. In one internal document, Goodrich noted:

> Complicating the development and implementation of new processes is the long lead time required for plant expansions and constructing grass root PVC plants. *This is now four to five years vs. the three years formerly required* due to the increasing number of local and federal restrictions and necessary approvals. The result is R&D's time table to freeze a plant design is drastically shortened . . . By-passing stages in process development to meet the shorter time tables will significantly increase the risks of long costly plant start-ups and not meeting planned capacity goals.[81]

Recent plant construction efforts confirm these assessments. For example, Formosa—which already had access to the production technology it needed—began a new PVC/VCM plant construction effort in the latter part of 1976, and was not able to start operating

---

[69] *Echlin Manufacturing Co.*, 105 F.T.C. at 486. The fact that an incumbent firm confronts lower costs than a prospective entrant at the time the latter firm attempts to enter is not necessarily relevant. The incumbent's lower current costs may simply represent compensation for the risks it overcame when it entered. *Id.*

[70] *Id.* at 486; *accord Weyerhaeuser Co.*, 106 F.T.C. at 286–87. The economic literature on "strategic entry deterrence" suggests that practices that fall within this characterization may also impede entry. *See generally* Salop, *Strategic Entry Deterrence*, 79 Am. Econ. Rev. 335 (Papers and Proceedings) (1979).

[71] *Weyerhaeuser Co.*, 106 F.T.C. at 287. The Commission found that greenfield entry would require four to four-and-one-half years per plant from beginning to end, including the time required for plant development, site selection, design work, applications for environmental permits, and actual construction. *Id.* Nine recent plant expansions in the relevant market indicated, however, that "existing facilities [could] be upgraded fairly easily, and at relatively low cost." *Id.* at 287–88. The Commission therefore concluded that the consequent "possibility of expanded output by fringe firms" limited "the possibility of anticompetitive behavior." *Id.* at 289. In this case, by contrast, barriers and impediments to both greenfield entry and incumbent plant expansion are high.

[72] IDF 64; CX 15A; CX 16B–Z10 *in camera;* CX 196A *in camera;* CX 439B; CX 446C; *see* Disch, Tr. 653 (3–4 years).

[73] Schaefer, Tr. 1133; CX 38V *in camera;* CX 506B, 592 *in camera;* IDF 66.

[74] DiLiddo, Tr. 3337; IDF 67.

[75] Disch, Tr. 645–47; Schaefer, Tr. 1133; IDF 69.

[76] *National Emissions Standard for Vinyl Chloride*, 40 CFR 61.60–61.68, promulgated pursuant to the *National Emission Standard for Hazardous Air Pollutants*, 42 U.S.C. 7412. Vinyl chloride has been specifically designated as an environmental pollutant; as a result, in 1976 the Environmental Protection Agency promulgated a standard to reduce atmospheric VCM emissions. In 1975, the Occupational Health and Safety Administration determined that VCM is a highly specific cause of liver cancer, and therefore promulgated a standard to reduce worker exposure to residual VCM. Disch, Tr. 649; Kienholz, Tr. 755.

[77] *Prevention of Significant Deterioration*, 40 CFR 51.24(b)(23), 52.21(b)(23).

[78] 42 U.S.C. 7407, 7475; 40 CFR 51.24, 52.21.

[79] 42 U.S.C. 7501–7508; 40 CFR 52.24.

[80] 33 U.S.C. 1316(B)(1)(A); *see* 40 CFR 401.12, 416.10–416.15.

[81] CX 196A *in camera* (emphasis added); *accord* CX 14F *in camera* ("Building permits are being delayed by government regulations, causing longer lead times and/or higher RISKS to build new plants.").

the new facility until December, 1982. IDF 70; ID at 20 n. 15. When Goodrich began its never-completed Convent, Louisiana suspension PVC plant project in July 1979, it had already spent eight months conducting an extensive PVC/VCM strategy and site selection study, and did not expect to bring the plant onstream until the third quarter of 1983. IDF 71. Similarly, in 1981 Diamond projected the lead time for a new suspension PVC plant at Deer Park, using its own technology, to be four to five years "from concept to startup." IDF 72.

In short, newly adopted environmental restrictions may be characterized as a barrier to entry into the PVC market. They substantially slow both the construction of new capacity and the expansion of existing capacity, and represent a new cost that incumbent firms did not have to bear. Some expansion of existing facilities by large incumbent firms has occurred since 1970. However, expansion usually constrains the pricing discretion of incumbent firms only if it is undertaken by a fringe firm that is not likely to be a party to a collusive arrangement.[82] The number of firms that may be characterized as "fringe" PVC producers has been declining steadily. As Tables I and II indicate, in addition to Diamond Shamrock, three fringe firms—Stauffer Chemical, Talleyrand Chemicals, and Great American Chemical—left the PVC market between 1981 and 1983.

Goodrich and other incumbent firms have on a number of occasions recognized that entry into the PVC market is difficult. In one internal assessment, Goodrich concluded that "[r]elatively high barriers to entry should prevent a large number [of] expansions or new entries." [83] Actual entry experience supports this view; no *de novo* entry has occurred since 1975.[84] Mr. Disch of Tenneco testified that he did not expect any new entrants into the PVC market over the next three or four years.[85]

Of course, PVC imports are not constrained by domestic environmental restrictions, and they have increased to some degree over the last few years. In 1977, imports represented only 0.6 percent of U.S. bulk and suspension PVC consumption; in 1984 they accounted for approximately 4 percent of that total.[86] Much of the increase in imports, however, appears to be attributable to extraordinary events affecting domestic PVC supply and currency exchange rates. The dollar increased in value by 66 percent between the third quarter of 1980 and the third quarter of 1984,[87] producing, *ceteris paribus*, a 66 percent increase in domestic PVC prices, in comparison with foreign PVC prices. Even if these exchange fluctuation effects are not considered, domestic prices increased considerably more during the last part of that period than the 5 percent increase that is usually applied to define the relevant market, because freezing weather conditions during the 1983–1984 winter forced several domestic PVC plants to shut down.[88] Thus, imports are a small proportion of domestic PVC consumption and, absent extraordinary conditions, do not appear to constrain domestic prices.

In addition, PVC imports manufactured by domestic producers in other countries are unlikely to constrain collusion among those same domestic producers. Canada and Mexico are the principal sources of PVC imports.[89] Goodrich is the largest PVC producer in Canada,[90] and is a major PVC producer in Mexico.[91] Furthermore, PVC imports from overseas countries must be transported over water in bags, rather than in rail tank cars, at a cost disadvantage—relative to North America PVC—of three to seven cents per pound. H. Wheeler, Tr. 1776–77. This is a substantial disadvantage; three cents per pound represents 9 to 18 percent of the average selling price of "general purpose PVC resin"—17 cents to 35 cents per pound—during the 1981–1983 period. *See* note 179 *infra*. For all of these reasons, we conclude that PVC imports do not significantly constrain domestic pricing discretion.

2. VCM Market

The VCM market is also characterized by a substantial barrier and impediment to entry created by plant construction requirements, and an impediment to entry created by minimum scale requirements. First, substantial lead time—from four to five years—is required to construct a new VCM plant, or to expand an existing plant, including six months to perform required preliminary engineering work; one to two years to secure needed environmental permits (the same ones noted in the PVC discussion, *supra*); six months to evaluate and secure needed VCM manufacturing technology; and one to two years for actual construction. IDF 272–277 *in camera;* Kienholz, Tr. 803–05. For example, as detailed *supra*, it took Formosa—which already had the requisite manufacturing technology in hand—about four and one-half years to construct its PVC/VCM complex. IDF 278. Similarly, Goodrich expected its proposed VCM plant in Louisiana to require approximately four years for construction. IDF 279 *in camera*. Incumbent firms confronted shorter timetables than prospective new entrants would confront now. As noted *supra*, in 1980 the Environmental Protection Agency amended its regulations to require air quality monitoring *prior* to filing permit applications. Diamond and Tenneco documents indicate that this additional requirement would add at least one year to the time needed to construct new plants, or to add capacity to existing plants where continuous air monitoring is not already in effect.[92]

Second, substantial minimum efficient scale requirements are likely to impede entry into the VCM market. If a new entrant must achieve a sales level that is

---

[82] Weyerhaeuser Co., 106 F.T.C. at 287–88 and n. 50.

[83] CX 199Z78; *accord* CX 199Z82; CX 248E *in camera*.

[84] Kaserman, Tr. 2341–44; CS 664C, W *in camera*. Respondents argue that Formosa entered in 1974, "exited and then reentered in 1981" (RAB at 53), but Formosa's efforts are more akin to an expansion than to *de novo* entry.

[85] Disch, Tr. 692–93. At least two other factors may impede efforts to enter the PVC market to some degree. First, an entry effort at minimum efficient scale would apparently require at least 300 million pounds of annual production capacity, at a cost of $100 million. IDF 60; Schaefer, Tr. 1211–12; Diamond Admission 450 (CX 6S). In 1981 that represented 5.8 percent of total PVC production in the United States. *See* Table I, *infra*. It would be difficult to secure that percentage of total market sales without provoking a price response from incumbent firms. *See* Salop, *Measuring Ease of Entry*, 31 Antitrust Bulletin 551 (1986).

Second, sunk costs may represent an impediment to new entry. IDF 63; *see* IDF 73–75. PVC plants are suitable only for manufacturing PVC, and investing in such a plant therefore entails the risk of losing the entire investment. One might ordinarily conclude that incumbent firms faced precisely the same risks when they entered the PVC industry. However, Goodrich believed that its "preemptive strategy" heightened the risks associated with expansion or new entry into the PVC market. *See* CX 47B; CX 59D *in camera; see generally* Salop, *supra* note 70.

[86] RAB at 33 (240 million pounds is 4 percent of estimated domestic consumption of 5.635 billion pounds (*see* Table II, *infra*) in 1983).

[87] *Compare* CX 776E *with* CX 777E. The value of the dollar against other currencies—as measured by the Federal Reserve Board's index of weighted average exchange value—has more recently declined, producing the opposite effect, and making import prices less attractive relative to domestic prices.

[88] Kaserman, Tr. 2249–50; L. Wheeler, Tr. 986–89; DiLiddo, Tr. 3380–81; H. Wheeler, Tr. 1775–76.

[89] Kaserman, Tr. 2248; Taylor, Tr. 1687.

[90] Kaserman, Tr. 2248; CX 299 O–P *in camera;* RX 190D; *see* CX 92K.

[91] Kaserman, Tr. 2249; CX 299 O–P *in camera; see* CX 92K.

[92] CX 446D; CX 574J; CRB at 40–41 n. 53; *see also* Kienholz, Tr. 803–04.

a substantial percentage of total industry output—in order to avoid suffering a significant cost disadvantage relative to other firms—its entry will increase industry supply significantly. If demand does not increase to the same degree, prices are likely to fall, because incumbent firms are more likely to lower prices than to surrender market share. Faced with the prospect of either a substantial cost disadvantage or nonrenumerative prices, a prospective entrant is not likely to enter.

The minimum efficient scale for a VCM plant is generally considered to be 800 million to 1 billion pounds in annual production capacity.[93] When it built its billion pound VCM plant in the 1970's, Diamond "considered it essential to build a plant with a production capacity of one billion pounds of VCM per year" (CX 424B; *accord* CX 445), and estimated that plants ⅔ and ½ as large would respectively suffer cost disadvantages of 0.6 cents and 1.8 cents per pound. CX 445. A Georgia-Pacific plant completed in 1980 similarly has a production capacity of 1 billion pounds. The plant that Formosa completed in 1982 has a capacity of 529 million pounds, but it was sized to match an existing PVC plant on the site, and Formosa was willing to sacrifice some efficiency in order to avoid the costs associated with marketing surplus VCM.[94]

In 1981, prior to the acquisition, 6.856 billion pounds of VCM were produced in the United States. Minimum efficient plant scale (eight hundred million pounds) therefore represented about 11.7 percent of total United States VCM production in that year.[95] It is unlikely that a new entrant could secure that level of sales without provoking a substantial response from incumbent firms, thereby driving prices to lower levels. Indeed, one industry document indicated that VCM "capacity additions [are] disruptive to entire industry because efficient plant size is 1 billion pounds (10% of total U.S. industry size)." RX 90Z62 *in camera; accord,* L. Wheeler, Tr. 991. One witness—a Goodrich employee—testified that a new entrant with a new plant would need to "cut prices very substantially and over a long period of time." [96]

The foregoing analysis establishes that environmental restrictions adopted in 1980 represent a significant barrier to entry into the VCM market, and that the four to five years currently required to construct a new plant or expand an existing plant constitute a substantial impediment to entry. It also establishes that minimum efficient scale—in conjunction with sunk cost effects—represents a substantial impediment to entry into the VCM market. Actual entry experience supports the conclusion that entry into the VCM market would be difficult.[97] It took Formosa four and one-half years to complete its VCM plant, and Goodrich similarly expected its proposed VCM plant to require four years of construction. *See* page 39, *supra.* Imports are not likely to constrain domestic producer pricing discretion. They accounted for only 1.6 percent of the total VCM production of domestic firms in 1981, and only 1.8 percent in 1983. CX 663E *in camera.*

[93] IDF 268 *in camera;* Kaserman, Tr. 2472–73; L. Wheeler, Tr. 928; DiLiddo, Tr. 3290; Taylor, Tr. 2563; *but see* Disch, Tr. 856–859 (350 million to 500 million pounds). In 1981, Goodrich concluded that a "world scale" plant would have a capacity of one billion pounds. CX 44A *in camera.*

[94] Goodrich believed that Formosa might later expand that facility to bring it up to "world scale." RX 153T *in camera.*

[95] *See* Table IV, *infra.* By comparison, minimum efficient scale for PVC plants is considerably lower, representing less than 6 percent of PVC production. *See* note 85, *supra*

[96] DiLiddo, Tr. 3255–56. Demand growth is not likely to make entry on this scale more feasible. Industry members expect demand for VCM to grow at an annual rate of no more than 3 to 4 percent, approximating the rate of growth of the gross national product. IDF 315–16 *in camera;* Kienholz, Tr. 792. Moreover, incumbent firms already possess some excess capacity that could be devoted to accommodating demand growth.

The entry-deterring effects of the minimum efficient scale requirements are accentuated by the fact that VCM plants are highly specialized, with no application other than VCM production. IDF 270. Thus, an investment in an unsuccessful entry effort at minimum efficient scale will be completely lost, or "sunk." *See* IDF 270, 271, 280, 281. Both the Commission and the Department of Justice have recognized that entry efforts requiring the investment of substantial sunk costs are less likely to occur. *B.A.T. Industries, Ltd.,* 104 F.T.C. 852, 935 (1984); *DOJ Guidelines* at ¶ 3.3 n.21.

[97] Kaserman, Tr. 2480–85. Respondents argue that some currently mothballed capacity could be brought back into production in response to supracompetitive prices. For example, Shell mothballed its Norco, Louisiana VCM plant in 1982 because of the decline in demand during the 1981–1982 period. RX 428A *in camera;* RX 822A; L. Wheeler, Tr. 1040–42 *in camera.* Corrosion is a problem with respect to such plants, but if properly maintained they can be brought back into production within six months to a year. Rawson, Oral Argument at 49. However, if a plant is simply mothballed, it will become very expensive to restart within two years. Moreover, even if it is constantly inspected, and deteriorating components are immediately repaired, at substantial expense, corrosion will render it inoperable within four to six years. Kienholz, Tr. 783–84.

In any event, restarting mothballed capacity will usually constrain the pricing discretion of incumbent firms only if undertaken by a fringe firm that is not likely to be a party to a collusive arrangement. *Weyerhaeuser Co.,* 106 F.T.C. at 287–88 and n. 69. As the sixth largest VCM producer, controlling almost 9 percent of VCM practical production capacity, (*see* Table V), Shell cannot be characterized as a fringe firm.

B. Concentration Levels

As the number of firms in an industry declines, and industry concentration increases, *ceteris paribus,* it becomes easier for those firms to coordinate their pricing, and the likelihood of anticompetitive effects from an acquisition consequently increases as well.[98] Conversely, as the *DOJ Guidelines* indicate:

> Other things being equal, [market] concentration affects the likelihood that one firm, or a small group of firms, could successfully exercise market power * * *. As the number of firms necessary to control a given percentage of total supply increases, the difficulties and costs of reaching and enforcing consensus with respect to the control of that supply also increase.[99]

Consistent with this view, in *United States v. Philadelphia National Bank* the Supreme Court indicated that a crucial initial question in merger cases is whether the merger or acquisition at issue

> Produces a firm controlling an undue percentage share of the relevant market, and results in a significant increase in the concentration of firms in that market, [such that] it is * * * inherently likely to lessen competition substantially * * *.[100]

The Court determined that the acquisition at issue was presumptively illegal because it would have created a bank that controlled 36 percent of the relevant market; increased two-firm concentration ("C_2") form 44 percent to 59 percent; and increased four-firm concentration ("C_4") to 78 percent. The Court observed that the presumption illegality could be rebutted by "evidence clearly showing that the merger is not likely to have such anticompetitive effects." [101] Subsequently, in *United States* v. *General Dynamics Corp.,* the Court determined that premerger four-firm concentration ratios of 43 percent and 54.5 percent in two separate relevant markets, coupled with 4.8 percentage point and 8.1 percentage

[98] *HCA v. FTC,* 807 F.2d at 1387; *accord HCA,* 106 F.T.C. at 488–489; Scherer, *supra* note 61 at 199–200; *see also* Posner *supra* note 58 at 52–56; Stigler, *A Theory of Oligopoly,* 72 J. Pol. Econ. 44 (1964).

[99] *DOJ Guidelines* at ¶ 3.1. Several factors support this conclusion. For example, inevitable differences in cost functions—and hence in price preferences—may become more pronounced as the number of firms increases. In this situation, each firm will prefer the level of output and prices that maximizes its own profits, and the difficulty of reaching and sustaining a consensus strategy will increase. *See generally* Scherer, *supra* note 61, at 156–60; Hay, *supra* note 58, at 447; G. Stigler, *The Theory of Price* 233–34 (3d ed. 1966).

[100] *United States v. Philadelphia National Bank,* 374 U.S. 321, 363 (1963); *accord, e.g., Weyerhaeuser Co.,* 106 F.T.C. at 278.

[101] *United States* v. *Philadelphia National Bank,* 374 U.S. at 331, 363–66.

point increases in the acquiring firm's shares in those markets, were sufficient to establish a *prima facie* violation.[102]

The Commission has in the past taken the position that "four-firm market shares ["C_4"] in the range of 50 percent are sufficient to raise concern over the loss of potential competition," and therefore create a rebuttable presumption that the acquisition at issue is likely to have anticompetitive effects.[103] However, the Commission has also determined that the Herfindahl-Hirschman Index ("HHI") provides a better measure of the structural character of a relevant market than concentration ratios.[104] Its principal advantage is that it reflects not only the combined share of the largest firms, but also their shares relative to one another and to all other firms in the industry,[105] and thus provides "a useful tool in interpreting market structure evidence".[106] The Justice Department has taken the same position, and has noted that—according to an empirical study it conducted—HHIs of 1000 and 1800 correspond roughly to four-firm concentration ratios of 50 percent and 70 percent respectively.[107] A number of federal courts have also recently determned that the HHI provides a useful measure of concentration levels.[108]

Finding a *prima facie* violation of section 7 creates a rebuttable presumption of anticompetitive effects and shifts the burden of going forward with evidence to the respondent.[109] The Commission has noted, however, that—

> the analytical soundness of this evidentiary presumption is obviously weaker in cases in which C_4 falls in the 50 percent range (or HHI falls below 1000, for example) than in cases in which C_3 or C_4 exceeds 90 percent (or HHI exceeds, for example, 2500) * * * [T]he Commission will require less evidence to overcome this presumption when only moderate concentration—C_4 levels between 50–70 percent and HHI between 1000 and 1800—is found * * *[110]

More recently, the Commission has reaffirmed that although market share evidence is "an important starting point in merger analysis, it alone is not conclusive in determining the legality of a merger under section 7."[111]

Weyerhaeuser and *HCA* represent the Commission's most recent applications of section 7. In *Weyerhaeuser*, as a result of the challenged acquisition, the respondent had become the largest firm in the relevant market, with a 20.64 percent share that was seven percentage points higher than the share of the second-largest firm. Moreover, the acquisition had increased the market HHI for actual production by 211 points, from 955 to 1166, and had increased four-firm concentration from 48.4 percent to 57.8 percent. The Commission determined that these data were sufficient to "suggest a *prima facie* violation."[112] However, the Commission observed that the acquisition fell

> within the lower end of the mid-range of the Department of Justice Merger Guidelines, and calls for especially careful review of a number of industry characteristics in addition to concentration in order meaningfully to assess the acquisition's effect on competition.[113]

Its analysis of these other factors led the Commission to conclude that the acquisition did not violate section 7 of the Clayton Act.[114]

In *HCA*, by contrast, the Commission considered a market with an HHI of 1900 before the acquisitions at issue that increased to over 2400 after the acquisitions; as a result, four-firm concentration increased to 92 percent. Moreover, HCA's market share increased from 14 percent to 26 percent. The Commission found these figures supported "an inference of harm to competition," *ceteris paribus*, and characterized the increase in concentration "in an already concentrated market to be of serious competitive concern."[115]

1. PVC Market

In 1981, prior to the acquisition, approximately 5.242 billion pounds of bulk and suspension PVC were produced in the United States.[116] In 1983, after the acquisition had been completed, approximately 5.635 billion pounds were produced domestically.[117] The record includes three separate measures of concentration levels in the PVC market: nameplate (or "design") capacity, practical production capacity, and actual production levels.[118] Prior to the acquisition, Goodrich ranked first in all three measures, while Diamond ranked sixth in nameplate capacity,

---

[102] *United States* v. *General Dynamics Corp.*, 415 U.S. 486, 494–98 (1974); *accord, e.g., FTC* v. *Warner Communications, Inc.*, 742 F. 2d 1156, 1163–64 (9th Cir. 1984) (*per curiam*); *Marathon Oil Co.* v. *Mobil Corp.*, 669 F. 2d 378, 383 (6th Cir. 1981), *cert. denied*, 455 U.S. 982 (1982); *Grumman Corp.* v. *LTV Corp.*, 665 F. 2d 10, 12–15 (2d Cir. 1981); *RSR Corp.* v. *FTC*, 602 F. 2d 1317, 1324–25 (9th Cir. 1979), *cert. denied*, 445 U.S. 927 (1980); *FTC* v. *Boss Bros. Enters., Inc.* 1984–1 Trade Cas. (CCH) ¶66,041, at 68,609–11 (N.D. Ohio 1984).

[103] *Grand Union Co.*, 102 F.T.C. at 1054, *quoting Tenneco, Inc.*, 98 F.T.C. 464, 585–85 (1981), *rev'd on other grounds*, 689 F. 2d 346, 352 (2d Cir. 1982).

[104] *Grand Union Co.*, 102 F.T.C., at 1053–54. The Commission has thereby rejected its earlier contrary holding in *Litton Industries*, 82 F.T.C. 793, 904–7, 1010–11 and nn. 33–35 (1973). The HHI is calculated by summing the squares of the individual market shares of all the firms in the market. *HCA*, 106 F.T.C. at 488.

[105] *HCA*, 106 F.T.C. at 488; *Grand Union Co.*, 102 F.T.C. at 1053–54.

[106] *HCA*, 106 F.T.C. at 488; *see* also Stigler, *supra* note 98 at 55. It also provides a basis for estimating the degree to which a small number of firms could assess supracompetitive prices without expressly cooperating with one another. Cowling & Waterson, *Price-Cost Margins and Market Structure*, 43 Economics 267 (1970); Ordover, Sykes & Willig, *Herfindahl Concentration, Rivalry, and Mergers*, 95 Harv. L. Rev. 1857, 1885 (1982).

[107] *DOJ Guidelines* at ¶3.1. However, the presence of a single very large firm will substantially increase the HHI for a given industry, *ceteris paribus*. *See, e.g.*, American Bar Association, *Antitrust Law Developments* 161 n. 115 (2d ed. 1984).

[108] *Tenneco, Inc.* v. *Federal Trade Commission*, 689 F. 2d 346, 359 (2d Cir. 1982) (Mansfield, J., dissenting); *Christian Schmidt Brewing Co.* v. *G. Heileman Brewing Co.*, 600 F. Supp. 1326, 1329–30 n. 3 (E.D. Mich.), *aff'd*, 753 F. 2d 1354 (6th Cir.), *cert. dismissed*, 105 S. Ct. 1155 (1985); *United States* v. *G. Heileman Brewing Co.*, 563 F. Supp. 643, 644 n. 3 (D. Del. 1983); *Vial* v. *First Commerce Corp.*, 1983 Trade Cas. (CCH) 65,692 (E.D. La. 1983); *Marthon Oil Co.* v. *Mobil Corp.*, 530 F. Supp. 315, 323 n. 15 (N.D. Ohio), *aff'd*, 669 F. 2d 378 (6th Cir. 1981), *cert. denied*, 455 U.S. 982 (1982) (not used, however). *But see United States* v. *Black & Decker Mfg. Co.*, 430 F. Supp. 729, 748 n. 38 (D. Md. 1976).

[109] *United States* v. *Citizens & Southern National Bank*, 422 U.S. 86, 120 (1975); *Kaiser Aluminum & Chemical Corp.*, v. *FTC*, 632 F. 2d 1324, 1340 and n. 12 (7th Cir. 1981); *Weyerhaeuser Co.*, 106 F.T.C. at 280 n. 50.

[110] *Grand Union Co.*, 102 F.T.C. at 1055; *see FTC Statement*, ¶4516 at 6901–4. The *DOJ Guidelines* similarly characterize markets with HHI levels between 1000 and 1800 as moderately concentrated, and indicate that the Department of Justice will ordinarily challenge mergers in such markets that increase HHI levels by more than 100 points. *DOJ Guidelines* at ¶3.11. However, the presumption of anticompetitive effects arising from an acquisition that produces an HHI within the 1000–1800 range can be rebutted by evidence concerning any of a variety of other structural factors. *DOJ Guidelines* at ¶3.11(c).

[111] *AMI*, 104 F.T.C. at 200; *accord Weyerhaeuser Co.*, 106 F.T.C. at 278; *see also HCA*, 106 F.T.C. at 474.

[112] *Weyerhaeuser*, 106 F.T.C. at 280.

[113] *Id.*

[114] *Id.*

[115] *HCA*, 106 F.T.C. at 488.

[116] *See* Table I, *infra*.

[117] *See* Table II, *infra*.

[118] A plant's nameplate capacity is the level of capacity that it is designed to achieve, while its practical production capacity is its effective production capacity. CPF 5.22 *in camera*. Practical production capacity thus provides a better measure of actual production constraints. Actual production levels may occasionally exceed capacity estimates if, for example, a firm chooses to reduce inventory levels or produce at a point where marginal cost is very high.

The Justice Department has taken the position that if the relevant product is branded or relatively differentiated, dollar sales provide a better measure of concentration levels. By contrast, if the relevant product is relatively homogeneous, physical capacity may provide a better measure. *DOJ Guidelines* at ¶ 2.4. In this case, VCM is homogeneous, while PVC is more heterogeneous. As a result, two capacity measures and an actual production (in pounds rather than dollars) measure of concentration have been used.

fourth in practical production capacity, and fifth in actual production. IDF 34–35. The following tables depict the market shares and ranks of the eighteen firms in the United States bulk and suspension PVC market—for each of the three concentration measures—prior to the acquisition, and the same data for the fourteen firms still in the industry as of January 1984.

TABLE I.—BULK AND SUSPENSION PVC MARKET SHARES BEFORE THE ACQUISITION (PERCENTAGES) (UNITED STATES) [119]

Firm	Nameplate capacity (Jan. 1982)	Practicial production capacity (Jan. 1982)	Actual production (1981)
Goodrich	18.51 (1st)	17.79 (1st)	16.1 (1st).
Tenneco Polymers	12.35 (2nd)	11.72 (2nd)	12.9 (2nd).
Georgia Pacific	9.94 (3rd)	8.96 (5th)	7.8 (6th).
Shintech	9.37 (4th)	10.75 (3rd)	10.5 (3rd).
Occidental Chemical	8.60 (5th)	8.30 (7th)	7.0 (7th).
Diamond Shamrock:			
Deer Park Plant #5	3.98	4.28	
Deer Park Plants #1–4X	3.08	3.21	
Delaware City Plant	1.28	1.49	
Total	8.33 (6th)	8.99 (4th)	8.3 (5th).
Conoco	8.31 (7th)	8.73 (6th)	8.6 (4th).
Borden	6.25 (8th)	6.27 (8th)	6.8 (8th).
Air Products and Chemicals	5.11 (9th)	4.63 (9th)	5.7 (9th).
CertainTeed	2.66 (10th)	3.28 (10th)	4.3 (10th).
Formosa Plastics	2.56 (11th)	2.93 (11th)	1.9 (14th).
Stauffer Chemical	1.99 (12th)	1.79 (12th)	3.0 (11th).
GenCorp	1.90 (13th)	1.78 (14th)	2.6 (12th).
Ethyl	1.70 (14th)	1.79 (12th)	2.0 (13th).
Great American Chemical Corp	0.99 (15th)	0.90 (15th)	0.3 (17th).
Keysor-Century Corp	0.71 (16th)	0.75 (16th)	0.3 (17th).
Pantasote	0.71 (16th)	0.67 (17th)	1.4 (15th).
Talleyrand Chemicals			0.6 (16th).
Total	7.043 billion pounds	6.700 billion pounds	5.242 billion pounds.

[119] CX 662D–G *in camera*; CX 664–O–V *in camera*; IDF 34–38 *in camera*.

TABLE II.—BULK AND SUSPENSION PVC MARKET SHARES AFTER THE ACQUISITION (PERCENTAGES) (UNITED STATES) [120]

Firm	Nameplate capacity (Jan. 1984)	Practical production capacity (Jan. 1984)	Actual production (1983)
Goodrich	20.6 (1st)	19.4 (1st)	18.4 (1st).
Tenneco Polymers	12.0 (2nd)	11.4 (2nd)	11.8 (3rd).
Georgia Pacific	11.0 (3rd)	10.3 (6th)	8.4 (6th).
Formosa Plastics	10.5 (4th)	11.0 (3rd)	10.2 (5th).
Borden	10.2 (5th)	10.1 (7th)	7.7 (7th).
Conoco	9.9 (6th)	10.4 (4th)	11.0 (4th).
Shintech	9.1 (7th)	10.4 (4th)	12.7 (2nd).
Occidental Chemical	6.2 (8th)	6.1 (8th)	5.6 (8th).
Air Products and Chemicals	5.0 (9th)	4.8 (9th)	3.6 (10th).
CertainTeed	2.6 (10th)	3.2 (10th)	4.0 (9th).
GenCorp	1.7 (11th)	1.6 (11th)	1.7 (12th).
Keysor-Century Corp	0.7 (12th)	0.7 (12th)	0.7 (13th).
Pantasote	0.7 (12th)	0.7 (12th)	0.1 (14th).
Ethyl	0.0	0.0	2.1 (11th).
Total	7.251 billion pounds	6.901 billion pounds	5.635 billion pounds.

[120] CX 664A–V *in camera*; IDF 34–38 *in camera*.

The acquisition generated increases in all three concentration measures. First, it increased the HHI for nameplate capacity by approximately 113 points, to 1098 after the acquisition. IDF 49. After Diamond closed its remaining Deer Park Plants, the HHI for nameplate capacity increased by another 53 points to 1151.[121] By 1985, the HHI for nameplate capacity had increased by an additional 52 points to 1203.[122]

Second, the acquisition increased the HHI for practical production capacity by 112 points, from 967 to 1079. IDF 49. After Diamond closed its Deer Park plants, the HHI increased to 1130.[123] After Diamond closed or sold its remaining plants, the HHI increased by an additional 132 points to 1211.[124] Third and finally, the acquisition—coupled with Diamond's closure of its remaining PVC plants—increased the HHI for actual production by 221 points, from 910 to 1131. The acquisition alone

[121] CPF 5.27 *in camera*. This calculation is based upon treating the Delaware City facility as an independent entity.

[122] IDF 54. The use of post-acquisition structural evidence as a basis for evaluating the likelihood of anticompetitive effects from a merger or acquisition is well-established, as respondents recognize. *See* Rawson, Oral Argument at 46. The use of post-acquisition performance evidence is discussed in Part V, *infra*.

[123] CPF 5.28 *in camera*. This calculation is similarly based upon treating the Delaware City facility as a separate entity.

[124] CPF 5.28 *in camera*.

BEST COPY AVAILABLE

probably increased the HHI for actual production by approximately 110 points, to approximately 1020.[125]

If the later closing of Diamond's other Deer Park plants is not attributed to the acquisition, it increased Goodrich's share of nameplate PVC capacity from 18.5 percent to 22.5 percent, and its share of practical production capacity from 17.8 percent to 22.1 percent. IDF 52 *in camera*; *see* Table I, *supra*. Under the more traditional rubric of earlier cases, the acquisition increased four-firm concentration from 50.2 percent to 54.2 percent in nameplate capacity; from 49.3 percent to 53.6 percent in practical production capacity; and from 48.1 percent to over 50 percent (estimated) in actual production. *See* Table I, *supra*. The following table illustrates contemporaneous industrywide changes in both HHI levels and four-firm concentration levels:[126]

[125] IDF 53 *in camera*, *citing* CX 661Z-16 *in camera*. The record does not provide an explicit basis for assessing the effect of the acquisition of Deer Park plant number 5 alone upon the HHI for actual production levels because it does not indicate the share of actual production for which plant number 5 accounted. Kaserman, Tr. 2271. However, as Table I indicates, Deer Park Plant number 5 accounted for approximately one-half of Diamond's nameplate and practical PVC production capacities. The HHI increase in actual production actually attributable to the Goodrich acquisition is therefore probably only half of the 221 figure—assuming that plant number 5 also accounted for one-half of Diamond's actual production—or approximately 110.

[126] The concentration data in Table III differ to some degree from the data cited in the text because of other events in the industry. Because the acquisition occurred in January 1982, the 1983 capacity data and the 1982 production data, denoted by asterisks, are the first to reflect the effects of the acqusistion.

TABLE III.—CHANGES IN BULK AND SUSPENSION PVC HHI AND FOUR-FIRM CONCENTRATION 1980–1985

Concentration measure	1980	1981	1982	1983	1984	1985
Nameplate capacity [127]	897 (49.2)	928 (48.3)	985 (50.2)	* 1088 (53.3)	1156 (54.1)	1203 (56.1)
Practical production capacity [128]	871 (47.2)	940 (48.2)	987 (49.2)	* 1058 (52.9)	1126 (52.2)	
Actual production [129]	851 (45.6)	910 (48.1)	* 1131 (58.1)	1085 (53.8)		

[127] CX 664F–G *in camera*. The 1985 HHI for nameplate capacity is based on January 1985 capacity estimates, which were derived in turn by adjusting January 1984 capacity to reflect Shintech's expansion of its suspension PVC plant to 1 billion pounds of capacity during 1984; GenCorp's discontinuance of its PVC business in September 1984; and Pentasote's discontinuance of its PVC business in the fourth quarter of 1984. CPF 5.69 *in camera*.

[128] CX 664M–N *in camera*.

[129] CX 664V *in camera*.

As the foregoing data suggest, the PVC market was not particularly concentrated prior to the acquisition, whether judged from the perspective of capacity or that of actual production levels. Under the *DOJ Guidelines*, the market after the acquisition would be classified as "moderately concentrated," but only by the barest of margins. Moreover, the 113 point, 112 point, and estimated 110 point changes in nameplate capacity, practical production capacity, and actual production barely exceed the 100 point threshold specified in the *DOJ Guidelines*.[130] The HHI figures also create only a weak presumption of competitive injury under previous court and Commission cases, particularly if—as the respondents maintain—the closure of the other Deer Park plants and the Delaware City plant should not be attributed to the acquisition. In *Weyerhaeuser*, for example, the Commission considered an acquisition that had increased the relevant HHI for actual production by about 100 points *more* than this acquisition to a level about 100 points *higher* than the post-acquisition HHI actually attributable to the acquisition in the PVC market. The Commission concluded that these effects were barely sufficient to create a weak presumption of anticompetitive effects.[131] *A fortiori*, the concentration data for the PVC market create an even weaker presumption of anticompetitive effects. Even if the closure of the other Deer Park plants *is* attributed to the acquisition, the changes in HHI levels are barely comparable to those that occurred in *Weyerhaeuser*. As a result, the evidence from other structural factors needed to rebut that presumption need not be as strong as it was in *Weyerhaeuser*.

2. VCM Market

The record also includes market share data for nameplate capacity, practical production capacity, and actual production levels for VCM. Before the acquisition, Diamond ranked third along all of these dimensions, while Goodrich ranked third in nameplate capacity (tied with Diamond and Georgia Pacific), fifth in practical production capacity, and fourth in actual production. IDF 250 *in camera*, 251 *in camera*. The following tables depict the market shares of the twelve firms in the United States VCM market, and their ranks, for each of the three concentration measures before the acquisition, and for the nine firms still in the industry as of January, 1984:

[130] In her concurring and dissenting opinion, Commissioner Azcuenaga states that the acquisition increased the actual production HHI by 221 points, to 1131, thereby placing the acquisition in the "moderately concentrated" range under the *DOJ Guidelines*. Opinion of Azcuenaga, Commissioner (*hereinafter Azcuenaga Opinion*), at 1. However, this assumes that the closure of Deer Park Plants numbers 1–4X, and the Delaware City plant, should be attributed to the acquisition, and the respondents vigorously dispute that assumption. The acquisition itself probably actually increased the HHI for actual production by only 110 points. *See* page 55 and note 125, *supra*.

[131] *Weyerhaeuser Co.*, 106 F.T.C. at 280.

TABLE IV.— VCM MARKET SHARES BEFORE THE ACQUISITION (PERCENTAGES) (UNITED STATES)[132]

Firm	Nameplate capacity (Jan. 1982)	Practical production capacity (Jan. 1982)	Actual production (1981)
Dow Chem	22.52 (1st)	21.92 (1st)	22.85 (1st).[133]
Shell Oil	16.39 (2nd)	15.61 (2nd)	17.43 (2nd).
Diamond Shamrock	10.64 (3rd)	12.06 (3rd)	13.44 (3rd).

TABLE IV.— VCM MARKET SHARES BEFORE THE ACQUISITION (PERCENTAGES) (UNITED STATES)[132]—Continued

Firm	Nameplate capacity (Jan. 1982)	Practical production capacity (Jan. 1982)	Actual production (1981)
Goodrich	10.64 (3rd)	10.48 (5th)	11.30 (4th).
Ga. Pacific	10.64 (3rd)	11.27 (4th)	6.91 (6th).
PPG Industries	9.59 (6th)	9.41 (6th)	7.57 (5th).
Borden	6.48 (7th)	5.32 (8th)	4.82 (8th).
Conoco	6.39 (8th)	7.33 (7th)	6.79 (7th).
Ethyl	3.51 (9th)	3.38 (9th)	2.90 (9th).
Formosa Plas	3.19 (10th)	3.22 (10th)	2.76 (10th).
Uniroyal			1.75 (11th).
Stauffer Chem			1.33 (12th).
Imports (Excl. Dow)			0.14.
Total	9.3965 billion pounds	8.873 billion pounds	5.856 billion pounds.

[132] CX 662A–C *in camera*; IDF 250–261 *in camera*.
[133] This share includes imports from Dow Canada accounting for 1.5 percent of the market.

TABLE V.— VCM MARKET SHARES AFTER THE ACQUISITION (PERCENTAGES) (UNITED STATES) [134]

Firm	Nameplate capacity (Jan. 1984)	Practical production capacity (Jan. 1984)	Actual production (1983)
Dow Chemical	23.34 (1st)	22.55 (2nd)	28.25 (1st).[135]
Goodrich	22.61 (2nd)	23.73 (1st)	22.26 (2nd).
Georgia Pacific	11.31 (3rd)	11.87 (3rd)	7.89 (6th).
PPG Industries	10.20 (4th)	9.91 (4th)	9.01 (5th).
Shell Oil	9.50 (5th)	8.96 (6th)	12.85 (3rd).
Formosa Plastics	9.37 (6th)	9.67 (5th)	9.02 (4th).
Borden	6.89 (7th)	5.60 (8th)	2.65 (8th).
Conoco	6.78 (8th)	7.71 (7th)	6.99 (7th).
Ethyl	0.0	0.0	1.07 (9th).
Total	8.844 billion pounds	8.427 billion pounds	7.033 billion pounds.

[134] CX 663A–F *in camera*. The decline in Shell's share occurred because it closed a plant (*see* note 97, *supra*), while the increase in Formosa's share occurred because it opened a plant after approximately five years of construction (*see* pages 34–35, *supra*).
[135] This share includes 128,300 pounds in imports from Dow Canada.

The acquisition increased the HHI for nameplate VCM capacity by 226 points, from 1303 to 1529. IDF 262. By January 1985 the HHI had increased to 1632. IDF 266. The acquisition increased the HHI for practical production capacity by 253 points, from 1299 to 1552. IDF 262. By January 1985 the HHI had increased to 1650. IDF 266. The acquisition increased the HHI for actual production by 304 points, from 1359 to 1663. IDF 262. The following table illustrates contemporaneous industrywide changes in both HHI levels and four-firm concentration levels: [136]

TABLE VI.—CHANGES IN VCM, HHI AND FOUR-FIRM CONCENTRATION 1981–1984

Concentration measure	1981	1982	1983	1984	1985
Nameplate capacity [137]	1316 (61.66)	1313 (60.19)	1433* (66.89)	1559 (67.46)	1632 (____)
Practical production capacity [138]	1293 (61.92)	1299 (60.86)	1488* (68.49)	1575 (68.06)	
Actual production [139]	1330 (65.02)	1761* (76.14)	1741 (72.39		

[137] CX 663A–B *in camera*.
[138] CX 663C–D *in camera*.
[139] CX 663E–F *in camera*.

The foregoing data indicate that the VCM market was substantially more concentrated prior to the acquisition than the PVC market, and that the acquisition produced a substantially greater increase in concentration in the VCM market. Under the *DOJ Guidelines*, the VCM market falls within the upper half of the moderately concentrated range after the acquisition for all three concentration measures. Moreover, the acquisition increased HHI levels along all three measures by 226 to 304 points, well above the 100 point threshold specified by the *DOJ Guidelines*. Under the more traditional rubric of earlier cases, the acquisition increased the four-firm concentration ratio from 60.2 percent to 70.8 percent in nameplate capacity; from 60.9 percent to 71.3 percent in practical production capacity;

[136] The concentration data in Table VI differ to some degree from the data cited in the text because of other events in the industry. The acquisition occurred in January 1982. The 1983 capacity data and the 1982 production data, denoted by asterisks, are therefore the first to reflect the effects of the acquisition.

and from 65 percent to 72.6 percent in actual production. Furthermore, Goodrich increased its share from 10.6 percent to 21.3 percent in nameplate capacity; from 10.5 percent to 22.5 percent in practical production capacity; and from 11.3 percent to 24.7 percent in actual production. *See* Table IV, *supra*. These data are well above those that created a presumption of illegality in *United States v. General Dynamics* and *Weyerhaeuser*. *See* pages 44–48, *supra*. In short, the concentration data create a relatively strong presumption of anticompetitive effects in the VCM market, and relatively strong evidence from other factors is needed to rebut that presumption.

C. Other Structural Factors

1. Product Homogeneity.

The extent to which products in a given industry are homogeneous helps to determine the likelihood of anticompetitive effects from an acquisition. As the *DOJ Guidelines* indicate:

> In a market with a homogeneous and undifferentiated product, a cartel need establish only a single price—a circumstance that facilitates reaching consensus and detecting deviation. As the products which constitute the relevant product market become more numerous, heterogeneous, or differentiated, however, the problems facing a cartel become more complex. Instead of a single price, it may be necessary to establish and enforce a complex schedule of prices corresponding to gradations in actual or perceived quality attributes among the competing products.[140]

Two dimensions of product heterogeneity are particularly relevant.[141] First, differences in product quality may make price differentials necessary to produce a stable market equilibrium, and achieving a consensus on such differentials is likely to be difficult.[142] Moreover, maintaining a consensus becomes more difficult when it must cover full lines of products of varying qualities, because a firm can disguise its efforts to cheat more easily.[143] Second, if transportation costs represent a substantial proportion of total product value, and if firms are located substantial distances from one another, coordination efforts must minimize or eliminate the competitive impact of these differences.[144]

a. *PVC market.* The record provides mixed evidence concerning PVC heterogeneity. Judge Howder characterized the bulk and suspension PVC market as a "commodity" market, where purchasers generally select the lowest priced resin suitable for a particular end use. IDF 90. However, two factors—the presence of a variety of different grades of PVC resin (with perceived differences within particular grades), and the complications arising from differing transportation costs—establish that PVC resin is in fact considerably more heterogeneous. First, there are three broad categories of PVC resin—pipe, general purpose, and specialty. Each category includes a number of PVC resin grades that are distinguished by differences in particle size, molecular weight, and purity.[145] Some PVC resin purchasers perceive differences in a given grade from one producer to another, or even from one plant of a given firm to another. As a result, they insist upon "qualifying" a particular PVC resin grade before purchasing it from a particular PVC producer.[146] The results of the testing, or subsequent use of the resin, on occasion lead purchasers to conclude that the resin grades involved cannot be used.[147] The need to qualify not only *grades* of resin, but also the grade of resin produced by a *particular* firm, makes PVC buyers reluctant to switch suppliers without price or quality concessions.

Pipe, siding and calender grades of PVC resin, also characterized as "commodity" grades, account for about 75 percent of bulk and suspension PVC sales.[148] Service with respect to these grades is considered to be relatively unimportant. The remaining 25 percent of bulk and suspension PVC resins are sold in several grades that differ in particle size, molecular weight, and purity as a function of purchaser end-use requirements.[149] Nevertheless, it is difficult to charge a significant price premium for any given grade of PVC. As one witness testified,

> there is a degree of customer loyalty in this business, but I would characterize it more as one that will give you an opportunity to *meet the price* in most cases rather than a willingness to pay a premium.[150]

Commissioner Azcuenaga relies upon evidence of this sort to conclude that PVC resin buyers are willing to switch suppliers of a given grade in response to small price differences. *Azcuenaga Opinion* at 8. But switching suppliers of a given grade entails signficant costs. *See* page 88, *infra*. Moreover, the fact that a given PVC grade may be relatively homogeneous does not alter the fact that different PVC grades differ significantly from one another.[151]

Second, transportation cost differences are likely to complicate the determination and enforcement of consensus prices. Although several manufacturers operate PVC resin plants along the Gulf Coast, in Texas, Louisiana and Mississippi, others operate PVC resin plants in widely scattered locations. For example, as of October 1983 Air Products' only plant was located in Pensacola, Florida, while Borden's largest plant was in Illinois, and it operated another substantial plant in Massachusetts. Similarly, as of October 1983 Conoco, Formosa, Georgia Pacific, Occidental, and Tenneco respectively operated substantial plants in Oklahoma; Delaware; New Jersey and Pennsylvania; and New Jersey. Finally, as noted above, Goodrich itself operates substantial plants in Ohio, Illinois, California, Kentucky, and New Jersey.[152]

---

[140] *DOJ Guidelines* at ¶3.411; *accord, e.g., HCA v. FTC*, 807 F2d at 1390; *United States v. Container Corp. of America*, 393 U.S. 333, 337 (1969); *United States v. FMC Corp.*, 308 F.Supp. 1106, 1111–12, 1143 (E.D. Pa. 1969); *FTC Statement*, ¶4516 at 6901–4.

[141] *See generally* Scherer, *supra* note 61, at 200–03; Posner, *supra* note 58, at 51.

[142] Scherer, *supra* note 61, at 201. If a significant level of product differentiation exists, each firm will probably confront significantly different demand and marginal revenue curves. Therefore, even if its marginal cost function is identical to those of the other firms in the industry, each firm will prefer to operate at a different point on that function, and hence will prefer a different price than its rivals. *Id.* at 158.

[143] *See* Hay, *supra* note 58, at 448.

[144] Scherer, *supra* note 61, at 201; Haddock, *Basing-Point Pricing: Competitive v. Collusive Theories*, 72 Am. Econ. Rev. 289 (1982); *see DOJ Guidelines* at ¶3.413. For a general discussion of product differentiation, *see* Scherer, *supra* note 61, at 375–405.

[145] Disch, Tr. 632, 634–35; Becker, Tr. 1255–59; Klass, Tr. 4333; RX 2Z11–15.

[146] Becker, Tr. 1330–31, 1332–34; RX 675B *in camera*; RX 222D–E *in camera*; RX 586T; RX 1049A *in camera*; RX 258A *in camera*; RX 537B; RX 541A; *see* H. Wheeler, Tr. 1747–48.

[147] RX 2211 *in camera*; RX 280B *in camera*; RX 545A; RX 1041A.

[148] Weber, Tr. 1795.

[149] IDF 86. For example, medical grade resins are considered to be specialty grades, and command a small price premium over commodity grades. IDF 88. Many customers find technical services offered in conjunction with the sale of specialty grades to be useful. IDF 89.

[150] Schaefer, Tr. 1203 (emphasis added); *accord* Becker, Tr. 1330–1332.

[151] The crucial point about product heterogeneity is that it substantially complicates the determination and enforcement of consensus prices. Instead of establishing a single price for a single homogeneous product, firms must establish and maintain a whole series of prices for a whole series of product grades.

[152] RX 1204G *in camera*; RX 1168A-B *in camera*. Bulk and suspension PVC is generally sold on a delivered price basis (Diamond Admission 475 (CX 6T); Goodrich Admission 432 (CX 4Z28), but it is not clear from the record whether the delivered price is *uniform* throughout the relevant geographic market. If delivered prices are not uniform, then detecting cheating becomes considerably more difficult.

As Commissioner Azcuenaga points out (*Azcuenaga Opinion* at 10), the relevant geographic market is national rather than regional. However,

Continued

b. *VCM Market.* The VCM market is substantially more homogeneous than the PVC market. VCM is produced in only one grade, and there are only minor trace differences in impurity levels from one firm's product to another; there is no customized VCM production. IDF 283, 285. Diamond and Goodrich admit that VCM is an essentially fungible product.[153] Moreover, all except one VCM plant are located along the Gulf Coast, in either Texas or Louisiana. IDF 284 *in camera.* As a result, transportation costs are not a significant source of product differentiation. Furthermore, the VCM industry is technologically stable; significant process or product technological changes are unlikely to occur over the next few years. IDF 285. In addition, VCM firms secure product from one another through exchanges, tolling agreements, and purchases, all for the purpose of resale;[154] that factor supports the conclusion that the product is homogeneous. As one witness testified:

> Most people would say you can't tell [VCM produced by different American manufacturers] apart. It is a true commodity chemical.[155]

2. Price Elasticity of Demand

The price elasticity of demand for a product measures the degree to which a change in its price will produce a change of opposite sign in the quantity of the product that is demanded.[156] As the price elasticity of demand for a product declines, the degree to which an increase in that product's price can be sustained without losing a significant number of sales increases, for two reasons. First, industry firms will find it easier to collude profitably, because an effort to raise prices to supracompetitive levels will not induce as many buyers to switch their purchases to alternative products.[157] Second, industry firms will have a greater incentive to collude, because the additional revenue that any given price increase produces will increase. In particular, when the price elasticity of demand is less than one—with costs held constant—an industrywide price increase will increase rather than reduce industrywide profits.[158]

The likelihood of anticompetitive effects from an acquisition thus increases as the price elasticity of demand for the product at issue declines.[159] Both PVC and VCM are intermediate products, used as inputs in manufacturing final products. As a result, their respective price elasticities increase as (1) the degree to which other inputs can be substituted for them increases; (2) the proportion of total costs for which each accounts increases; and (3) the price elasticity of demand for PVC end products and PVC resin—the products for which they are respectively used—increases.[160]

a. *PVC Market.* Three factors establish that the price elasticity of demand for bulk and suspension PVC resin is relatively low. First, there are no practical substitutes for PVC resin in manufacturing PVC products. IDF 95. PVC resin is the primary raw material input for PVC end use products, and it "imparts essential properties to the product." Much of the fabrication equipment used for bulk and suspension PVC end use products can process only bulk or suspension PVC resins.[161]

Second, with the exception of PVC pipe, bulk and suspension PVC resins account for relatively small proportions of the cost of finished PVC products. All PVC resins must be compounded before they are processed, and at that stage, additives such as heat and light stabilizers, impact modifiers, plasticizers and pigments are added.[162] A variety of manufacturing processes—including extrusion, calendering, blow molding, injection molding and compression molding—must then be used to convert PVC compounds into finished PVC products. IDF 96. The cost of PVC resin accounts for about 55 to 60 precent of the cost of PVC pipe sold to distributors, and a smaller percentage of its final cost installed.[163] However, it accounts for much lower percentages of the cost of all other finished PVC products. For example, it accounts for only about 25 percent of the cost of vinyl siding sold to distributors, and only about 5 percent of its final cost installed.[164] Similarly, it represents only about 13 to 14 cents of the cost of a finished phonograph record. IDF 186–188 *in camera;* Disch, Tr. 659. Finally, it accounts for only a small percentage of the cost of most PVC end products manufactured from calendered PVC resin. IDF 193. For example, it represents 5.6 percent of the retail price of a $7.99 vinyl shower curtain, and 4.5 percent of the retail price of a $1.79 vinyl shower cap.[165] Because there are no substitutes for PVC resin in fabricating PVC end-use products, and because PVC resins generally account for only small percentages of the final costs of fabricating those products, the demand for bulk and suspension PVC resin is less price elastic than the demand for PVC end use products.[166]

---

transportation cost differences need not be large enough to create regional markets in order to complicate the task of developing a single consensus price, particularly given the fact that PVC plants are scattered all over the country.

[153] Goodrich Admission 465 (CX 4Z33); Diamond Admission 505 (CX 6U); Taylor, Tr. 1565; Klass, Tr. 5363.

[154] CPF 24.09, *citing, e.g.,* CX 557Z11 *in camera;* L. Wheeler, Tr. 972–75 *in camera;* CX 86 *in camera.*

[155] Keinholz, Tr. 613. Respondents nevertheless describe VCM as "commercially heterogeneous" because of differences in sales terms from one producer to another, including price, credit terms, method of delivery (pipeline, rail tank car, or tolling arrangement), and contract length (short-term, long-term, or spot). IDF 286 *in camera;* RPF 403 *in camera.* These factors relate to industry performance, rather than structure, however, and performance factors are discussed in Part V, *infra.* In any event, as the Commission has previously indicated, "agreements as to all aspects of competition are not necessary for effective collusion to take place and to have a negative impact on competition." *HCA,* 106 F.T.C. at 508; *accord Catalano, Inc. v. Target Sales, Inc.,* 446 U.S. 643–650 (1980) (agreement to refuse to extend credit *per se* illegal).

[156] More formally, the price elasticity of demand can be expressed as the absolute value of the product of (1) price divided by quantity, and (2) quantity demanded differentiated with respect to price. *E.g.,* Scherer, *supra* note 61, at 157 n. 13.

[157] *HCA v. FTC,* 807 F.2d at 1388; *HCA,* 106 F.T.C. at 466.

[158] *See HCA v. FTC,* 807 F.2d at 1388. A monopolist will ordinarily raise prices until the price elasticity of demand is greater than one. At that point, an increase in prices may or may not increase profits, depending upon whether costs are increasing faster or more slowly than revenues. Kaserman, Tr. 2354–55, 2363–64.

[159] *HCA v. FTC,* 807 F.2d at 1388, 1389; *Marathon Oil Corp. v. Mobile Oil Corp.,* 669 F.2d 378, 381 (6th Cir. 1981), *cert. denied,* 455 U.S. 982 (1982); *FTC Statement,* ¶4516 at 6901–3; *see also United States v. Container Corp. of America,* 393 U.S. at 337; *Wall Products Co. v. National Gypsum Co.,* 326 F. Supp. 295, 300 (N.D. Cal. 1971).

[160] *E.g.,* M. Friedman, *Price Theory* 158 (1976); IDF 287, *citing* Kaserman, Tr. 2369–71.

[161] H. Wheeler, Tr. 1751–52.

[162] For example, flexible PVC compounds used to manufacture wire, cable and flexible sheeting are produced by adding plasticizers to the resins. As a result, they frequently contain only 50 to 70 percent PVC resin by weight. By contrast, rigid PVC compounds do not contain plasticizers, and therefore contain as much as 80 to 95 percent resin by weight. IDF 96; Disch, Tr. 659.

[163] Yu, Tr. 2104; Disch, Tr. 663.

[164] IDF 183 *in camera;* Belt, Tr. 2026–27, 2040–41 *in camera;* CX 756Z59. Similarly, PVC resin accounts for only 15 to 20 percent of the cost of vinyl floor tiles (Disch, Tr. 673–74; IDF 168), and for no more than 30 to 50 percent of the cost of the PVC compounds used to fabricate bottles and wire and cable insulation. Becker, Tr. 1305–07, 1318–19; IDF 178; Disch, Tr. 660–61. It accounts for 15 percent of the price of vinyl window fabricators, and only 3 percent of the price of installed vinyl windows. Belt, Tr. 2058–61 *in camera.*

[165] IDF 193; DiLiddo, Tr. 3376–79.

[166] Kaserman, Tr. 2375–78.

Third, although the price elasticity of demand for different finished PVC products varies substantially, it is relatively low for most such products. It is lowest in the wire and cable segment, the packaging film and sheet segment, the phonograph record segment, and the medical end use segment. These segments together account for 21 to 23 percent of total domestic PVC consumption. *See* pages 18–19 and note 42, *supra*. The price elasticity of demand for PVC pipe, siding, floor tile, and window frames is higher because of competition from products manufactured from alternative materials, but is still relatively low. For example, a 1983 Goodrich analysis indicated:

> PVC pipe manufacturers appear to have plenty of room for price increases before approaching the price levels of most competing materials. (Even if the prices were identical, PVC would still have the added advantage of lower installed cost.)

CX 247A *in camera*. These segments together account for 53 to 55 percent of total domestic PVC consumption. *See* pages 18–19 and note 42, *supra*. Finally, the price elasticity of demand for rigid and flexible calendered products and bottles is considerably higher because of competition from products manufactured from alternative materials. These segments together account for 21 to 27 percent of total domestic PVC consumption. In short, the price elasticity of demand for products accounting for 73 to 79 percent of total domestic PVC consumption is relatively low.

On balance, the price elasticity of demand for most PVC resins appears to be relatively low. There are no practical substitutes in manufacturing PVC products; PVC resin generally accounts for only a small percentage of the final prices of those products; and the price elasticity of demand for most PVC end products is relatively low. One witness confirmed that for the bulk and suspension PVC market overall, there was very little price sensitivity,[167] and another stated that PVC is not a price elastic market.[168]

b. *VCM Market*. The price elasticity of demand for VCM is very low, on the basis of the three criteria discussed *supra*. IDF 287, 288. First, no other input can be substituted in producing PVC.[169] As a result, VCM's price elasticity of demand is necessarily lower than that of PVC.[170] Second, the price elasticity of demand for PVC is itself relatively low. The third criterion is less conclusive; VCM accounts for 50 to 60 percent of the cost of producing PVC.[171] When considered together, these three criteria indicate that the price elasticity of demand for VCM is lower than that of PVC resin, and hence very low in an absolute sense. This analysis is consistent with the views of a number of Goodrich employees and trial witnesses that the demand for VCM is "absolutely inelastic."[172]

3. Cost Functions

The similarity of cost functions among industry firms also affects the likelihood of anticompetitive effects from an acquisition. If cost functions vary widely from one firm to another, each will prefer a different industry price level, and developing a collusive consensus price will consequently be more difficult.[173] If there are only a few firms in the industry, cost differences nevertheless may not prevent firms from accepting price or output levels somewhat different from their optimal levels.

a. *PVC Market*. PVC production costs vary significantly among producers. These cost differences occur in two of three broad cost categories: (1) The cost of converting VCM into PVC; and (2) the cost of transporting PVC to purchasers.[174] First, PVC production costs differ significantly from one firm to another. It is true that the technology needed to produce PVC is widely available to all producers, and no significant patents impede production by any particular firm. IDF 195. Moreover, the clear trend in the industry has been toward larger reactors. A Goodrich employee and another witness estmated that raw materials efficiency in these larger reactors is close to 100 percent.[175] Several industry witnesses testified that producer manufacturing costs using large reactors were similar,[176] and about two-thirds of installed capacity is in the form of larger reactors. IDF 198; Disch, Tr. 641.

Nevertheless, the remainder of industry capacity is in the form of smaller reactors that produce a variety of specialty resins. As a result, production costs vary significantly from one PVC resin grade to another.[177] For example, pipe resins are usually produced in highly efficient large reactors, and require little or no technical customer service. RX 34R; Klass, Tr. 4322. By contrast, specialty resins are costlier to produce, because

---

[167] Becker, Tr. 1325–28; *accord* CX 297z1–Z2 *in camera*.

[168] Schaefer, Tr. 1141; *accord* CX 295Z53–Z54 *in camera*. Respondents' expert testified that very likely were there to be a sustained anticompetitive price increase in PVC, there would be a substantial degree of substitution. Klass, Tr. 4151. However, most of the record evidence supports our conclusion that the price elasticity of demand for PVC is relatively low.

[169] Kaserman, Tr. 2484; Diamond Admission 57 (CX 6D).

[170] Kaserman, Tr. 2484–85; Klass, Tr. 4003–4006, 4533.

[171] In response to a question at oral argument from then-Acting Chairman Calvani, counsel for Goodrich indicated that in 1984, the cost of VCM represented 55.6 to 62.3 percent of the cost of producing suspension resin; 49.6 to 61.3 percent of the cost of producing pipe grade suspension resin; and 49.6 to 61.9 percent of the cost of producing flexible grade suspension resin. Letter from Robert H. Rawson to Acting Chairman Calvani (February 6, 1986), at 2 *in camera*. The Commission hereby makes the Rawson letter—and the response filed by complaint counsel—a part of the *in camera* record in this proceeding.

The Rawson letter estimates are consistent with other record evidence. One study indicates that in January 1983, VCM accounted for 54 to 62 percent—as an average among PVC producers—of the "total cash cost" of producing PVC. RX 1213H *in camera; see* CX 246 *in camera*. A second 1981 study conducted by Air Products suggests that VCM accounts for 65 to 75 percent of total PVC production costs. RX 57A *in camera*.

[172] Lefebvre, CX 296Z72 *in camera; accord* Schaefer, CX 295Z4 *in camera;* Becker, CX 297Z6–7 *in camera; see also* Kienholz, Tr. 611–12; Taylor, Tr. 1705.

[173] *See FTC Statement*, ¶ 4516 at 6901–4. Profit maximization is a function of both marginal cost and marginal revenue. High-cost firms will usually prefer higher umbrella price levels and lower output levels than firms with lower costs. *See, e.g.*, Posner, *supra* note 58, at 51.

[174] The third broad category is the cost of acquiring (or producing) and transporting VCM. Respondents estimate that in 1980, integrated firms' cost of producing VCM varied by up to 3 cents per pound, when the new materials used are valued at market prices. RAB at 42–43. Of course, the allocation of joint costs in integrated firms is necessarily arbitrary, and presents a notoriously difficult accounting problem.

It seems unlikely that VCM cost differences between integrated and nonintegrated producers are either significant or persistent. As complaint counsel point out, the "opportunity cost" of VCM, rather than its actual production cost, should be attributed to vertically integrated PVC producers. The opportunity cost is the price at which an integrated firm could sell VCM if it did not use it internally. *See* Scherer, *supra* note 61, at 305; Stigler, *supra* note 61, at 105. If internal VCM costs were persistently lower than opportunity costs, nonintegrated producers would not be able to compete with integrated producers. *See, e.g.*, *Azcuenaga Opinion* at 13 n.22, *citing* Klass, Tr. 5337–38; IDF 203. One would also expect entry into the PVC market to require simultaneous entry into the VCM market. Respondents make no such claim.

With respect to VCM transportation costs, PVC producers that receive VCM via pipeline realize a cost advantage of 0.5 cents to 1.0 cent per pound. RPF 292 *in camera, citing* RX 57Z62 *in camera*.

[175] DiLiddo, Tr. 3395; Disch, Tr. 641–43.

[176] IDF 199; Disch, Tr. 645; Schaefer, Tr. 1149.

[177] The cost of producing general purpose PVC resin may be as much as [——] cents per pound lower in a large reactor than in a small reactor. RX 875V–W *in camera*. Most firms operate several different sizes of reactor. For example, Tenneco operates some 3,750 gallon reactors at its Burlington, New Jersey plant, and some 34,000 gallon reactors at its Pasadena, Texas plant. Disch, Tr. 636. Reactors with a capacity of 18,000 to 50,000 gallons are classified as large reactors. Disch, Tr. 646.

they tend to be manufactured in less efficient smaller reactors, and require more technical customer services.[178]

Because different firms use reactors of different sizes to produce different PVC resins, their production costs differ significantly. A 1982 Goodrich cost study of eight PVC producers indicated that "total plant operating costs" for producing PVC varied among plants from 14.30 cents per pound to 21.94 cents per pound.[179] These cost differences are accentuated by the fact that different PVC producers emphasize the production of different PVC grades.[180]

Second, as noted *supra*, transportation costs differ to some degree from one PVC producer to another. In particular, significant locational differences mean that PVC producers incur different costs in shipping PVC resin throughout the United States.[181] Complaint counsel maintain that most PVC is sold on a delivered price basis, and that price differences based on location have therefore effectively been eliminated. CPF 7.14. However, although uniform delivered pricing may have this effect, it is unclear whether delivered PVC prices are in fact uniform. Thus, transportation cost differences may further complicate any effort at price and output coordination in the PVC market.[182]

b. *VCM Market.* VCM production costs are much more similar from one VCM producer to another. There are two basic categories of manufacturing costs: (1) The cost of ethylene and chlorine feedstocks; and (2) the cost of converting them into VCM. IDF 290 *in camera*. In addition, transportation costs must be considered. Raw material costs are virtually identical. Virtually all VCM plants produce VCM from ethylene and chlorine feedstocks.[183] Ethylene and chlorine must be used in fixed proportions to produce VCM (60 percent chlorine and 40 percent ethylene), all firms use them in those proportions, both are highly homogeneous products, and VCM producers therefore pay similar prices for them.[184]

Second, all producers have access to similar production technologies, which permit the production of large volumes at low cost, because there are no significant patent barriers. IDF 291. Respondents' expert testified:

> [M]ost producers, if not all, have access to effective production technology which enables them to produce large volumes at low costs.[185]

Another witness testified that in the VCM market, no firm has

> a peculiar proprietary niche or some position that allowed [one firm] to achieve returns or earnings that somebody else couldn't * * *[186]

Furthermore, because VCM manufacturers produce only one grade of VCM, there is no reason—unlike the PVC market—to retain both large and small reactors. As a result, all VCM producers operate large, highly efficient plants. Several witnesses confirmed that all VCM producers have similar manufacturing costs. One estimated that short-run avoidable costs differed by only one-half cent per pound among firms in the industry.[187] Two other witnesses agreed that there is no significant cost disparity from one firm to another.[188] A 1981 Air Products study similarly concluded that VCM processing costs varied little from one VCM firm to another.[189]

Third, transportation costs do not differ significantly from one VCM producer to another, primarily bacause all except one domestic VCM plant are located along the Gulf Coast in Texas and Louisiana.[190] On balance, the record evidence establishes that VCM production costs are relatively similar across firms. Although respondents have identified some minor differences,[191] absolute congruence is not needed to heighten the likelihood of anticompetitive effects from the acquisition.

4. Size Distribution of Purchasers

The size distribution of purchasers of the relevant product may also affect the likelihood of anticompetitive effects from an acquisition. If a small number of buyers accounts for a large percentage of total product purchases, that may constrain the pricing discretion of product manufacturers to some degree.[192] By contrast, a large number of buyers are not likely to be able to constrain manufacturer pricing discretion.

a. *PVC Market.* It seems unlikely that PVC purchasers could, by virtue of their size, constrain the exercise of market power by PVC producers. One 1979 Goodrich study indicated that the largest PVC buyer (Carlon) accounted for less than 7 percent of the PVC market, and that 300 PVC buyers together accounted for 80 percent of the market. The study indicated that the

> customer base is attractive because it is readily identifiable, small enough to be reached by a manageable and economic sales force, yet not so concentrated that one or two customers can put enormous pressure on the suppliers to lower price. The biggest customer in the PVC business (Carlon) accounts for less than 7 percent of the total market.

CX 53J–K; *accord*, CX 64P,S. That pattern is also present in many of the product market segments. For example, Goodrich studies from the late 1970's identify 136 wire and cable purchasers (purchasing 8.4 percent of total PVC production); 166 flexible resin purchasers (18.1 percent); and 263 specialty resin purchasers (2 percent). IDF 216. The pipe segment is somewhat more concentrated on the buyer side. Although 100 buyers purchase pipe resin (accounting for 40 percent of total PVC production), the four largest purchasers

---

[178] Becker, Tr. 1330–32; Arp, Tr. 3519–20; RX 34R; RX 639E. Giles Disch testified that there would be no economic advantage to Tenneco to construct a new small reactor plant today. Disch, Tr. 640. No new small reactor plant has been built in the United States since the late 1960's. Disch, Tr. 642.

[179] RX 1168A–B *in camera*; RX 245–0 *in camera*; RAB at 43, *citing* RPF 280–92; *accord* DiLiddo, Tr. 3224–26. Of course, these differences are not surprising because the plants studied produce a wide variety of PVC resins. During the 1981–1983 period, the average selling price of "general purpose PVC resin" ranged from 17 cents per pound to 35 cents per pound. RPF 291, *citing* CX 671A–C, F–H; RX 244A.

[180] RX 1170A; Klass, Tr. 4321–22.

[181] RPF 295 *in camera*, *citing* RX 1168A; RX 13K; RX 13Z5; McMath, Tr. 1956–57; RX 34Q; RX 284B; RX 325H; RX 945A–O; *see* page 67, *supra*.

[182] Complaint counsel also argue that locational differences "cancel out;" that is, the cost of shipping incoming VCM cancels out the cost of shipping outgoing PVC. IDF 201; ID at 61 n. 42. However, the VCM may originate in a location different and distant from the destination of the PVC into which it is converted.

[183] IDF 292 *in camera*. The one exception is a plant owned by Borden which produces VCM using a much older acetylene process. That plant accounts for only 2 percent of practical production capacity. *Id.*

[184] IDF 293–294 *in camera*; Goodrich Admissions 59–60; CX 41; L. Wheeler, Tr. 917–18.

[185] Klass, Tr. 4009.

[186] Kienholz, Tr. 884.

[187] L. Wheeler, Tr. 936–38.

[188] Kienholz, Tr. 814; Taylor, Tr. 1570.

[189] RX 57Z29, Z131 *in camera*; *accord* RX 877B *in camera*.

[190] RX 57Z6 *in camera*. The only exception is Goodrich's Calvert, Kentucky plant. *Id.*

[191] *See* RPF 410 *in camera*, *citing* RX 877D; RPF 411–412 *in camera*; RAB at 42–43. For example, respondents argue that VCM producers confront dissimilar raw materials costs as a function of whether or not they are integrated upstream into chlorine and caustic soda production. RPF 411 *in camera*. However, as discussed in note 174 *supra*, the appropriate cost at which to evaluate an internally transferred input is its market price (opportunity cost), because that is the value the integrated firm gives up by using the input internally instead of selling it on the open market. Moreover, even if upstream integration could be a source of differentiation, it would have little significance in this case because in 1983 firms accounting for nearly 80 percent of total VCM practical production capacity *were* integrated into chlorine production. Only Borden, Shell and Conoco were not so integrated. RX 246.

[192] *HCA v. FTC*, 807 F.2d at 1391, *citing* Stigler, *supra* note 61 at 39, 43–44; *see FTC Statement*, ¶4516 at 6901–4; *DOJ Guidelines* at ¶3.42.

account for 60 percent of that total, or 24 percent of total PVC production.[193]

b. *VCM Market.* The level of concentration among VCM purchasers is considerably greater. Seven PVC producers—Air Products, CertainTeed, Keysor-Century, Occidental, Pantasote, Shintech and Tenneco—do not produce VCM, and therefore must purchase it from other firms.[194] Nevertheless, concentration levels are substantially higher among VCM producers than among VCM buyers; only three nonintegrated VCM producers accounted for approximately one-half of VCM production in 1982. It therefore seems unlikely that VCM buyers could constrain the pricing discretion of VCM sellers to any significant degree.

5. Transaction Characteristics

The manner in which sales are typically made in an industry also affects the likelihood of anticompetitive effects from an acquisition, for two reasons. First, if most firms make only a few sales each year, their incentives to cheat are likely to be high. Each additional sale contributes substantially to income, and the risk of effective retaliation from competitors is correspondingly reduced. On the other hand, if the typical firm makes many sales each year, the value of cheating on a given transaction is not substantial and the prospect of effective retaliation may be correspondingly greater.[195] Second, when sales are made openly, cheating can be detected quickly and easily, and retaliation by rival firms is consequently more likely. On the other hand, when sales are made through private negotiations, it is much more difficult to detect and punish secret price concessions.[196]

a. *PVC Market.* Approximately 50 to 60 percent of bulk and suspension PVC resin is sold pursuant to written contracts, normally one year in duration.[197] Although the contracts may specify an expected volume for the entire year, buyers typically advise sellers each month of the amount they will purchase the following month.[198] Thus, in practical effect, buyers purchase product on a monthly or even daily basis.[199]

PVC sales contracts also typically do not specify the prices that are to prevail throughout the contract term. Instead, they rely upon "competitive price provisions," in which a buyer notifies the seller when it has

> a competitive offer for equal terms, equal quantities, equal time situations, which allows us as the seller to generally either meet that new criterion or decline * * * [and] not supply that volume stipulated.[200]

In short, pursuant to these clauses, buyers are permitted to cancel purchases if they can secure lower prices elsewhere, but are required to give sellers the opportunity to meet competing offers. IDF 211 *in camera.* The competitive price provisions ensure that PVC sellers quickly discover price concessions offered by competing firms. *See* IDF 237.

A significant proportion of the remaining 40 to 50 percent of PVC sales is made pursuant to an ongoing customer-supplier "handshake" relationship, in which orders are placed and filled on a "current market conditions" basis.[201] These relationships are relatively secure because of certain peculiarities associated with any given brand of PVC resin. A particular supplier's PVC resin must be tested on a customer's fabricating equipment, and the equipment must be adjusted to the resin's formulation before that customer can use it.[202] Customers are therefore reluctant to switch suppliers, and will not do so when competing prices are identical. IDF 220. Moreover, although some firms buy PVC from more than one supplier, they fill their requirements for a given plant from one supplier, in order to ensure plantwide consistency. IDF 221. These considerations lead customers buying on a "handshake" basis to notify their sellers of competitive offers, so that suppliers regularly receive information concerning lower prices from these buyers as well. IDF 237.

These factors together suggest that the frequency and size of transactions in the PVC market increase the likelihood of anticompetitive effects from the acquisition in that market.

b. *VCM Market.* Contracts for the purchase of VCM are typically quite similar to PVC purchase contracts; they are discussed in detail in Part IV.C.7, *infra.* As a result, the frequency and size of VCM purchase transactions similarly increase the likelihood of anticompetitive effects in the VCM market. Of course, a substantial proportion of VCM production is manufactured by firms that are integrated into PVC production. The significance of that fact is also discussed in detail in Part IV.C.7, *infra.*

6. Stability and Predictability of Demand and Supply Conditions

The stability and predictability of demand and supply conditions also help to determine the likelihood of anticompetitive effects from an acquisition. Greater stability and predictability make it easier to create and sustain a collusive arrangement. By contrast, shocks that suddenly alter demand or supply conditions may complicate collusion. In industries in which fixed costs are a high percentage of total costs, the presence of substantial excess capacity—as a result of a sudden decline in demand—may place strong downward pressure on prices.[203] Firms may in the short run be willing to sell at prices below their average total costs, because prices at such levels, in addition to covering all variable costs, cover at least a portion of their fixed costs. However, fixed costs are not a particularly large proportion of total costs in either the PVC or the VCM market. *See* note 171, *supra,* and page 92 and 94, *infra.* Moreover, during periods of demand growth, such as the period beginning in 1983 and continuing today, any pressure to reduce PVC or VCM prices that producers' fixed costs might have created has disappeared, because capacity utilization has returned to high levels.

a. *PVC Market.* Demand for PVC grew rapidly in the 1960's and 1970's, largely because of growth associated with construction applications. In the 1960's the industry grew at an average annual rate of 13 to 15 percent, but that rate declined to 10 to 11 percent in the early 1970's. IDF 233; IDF 234 *in camera.* The average annual growth rate then fell to 8

---

[193] IDF 216–217; Disch. Tr. 683; *see* RPF 336 *in camera, citing* RX 35E; RX 639D; RX 669B.

[194] IDF 78. The remaining five PVC producers—Goodrich, Formosa, Georgia Pacific, Borden and Conoco—are fully integrated upstream into VCM production. *Id.* The three remaining VCM producers are not integrated downstream into PVC production. *Id.*

[195] *DOJ Guidelines* at ¶3.42; Scherer, *supra* note 61, at 220–22; Hay, *supra* note 58, at 450.

[196] Scherer, *supra* note 61, at 222–25; Hay, *supra* note 58, at 450–51.

[197] IDF 211 *in camera,* 219 *in camera;* DiLiddo, Tr. 3253 (Goodrich: 60 percent contract business; 20 percent "handshake type of relationship;" 20 percent "spot basis"); Weber, Tr. 1790 (Diamond: "Well over 50 percent was sold under contract."); Disch, Tr. 685.

[198] *E.g.,* Disch, Tr. 685.

[199] IDF 218; Disch, Tr. 707, 728; McMath, Tr. 1897, 1951; Schaefer, Tr. 1140, 1200; *see* RX 899A.

[200] Disch, Tr. 684; *accord* DiLiddo, Tr. 3254–55; Weber, Tr. 1789–90. On the significance of similar provisions for facilitating collusion, *see generally* Salop, *supra* note 58; Clark, *supra* note 58.

[201] IDF 219 *in camera.* The remaining proportion of PVC sales is made on the spot market.

[202] Yu, Tr. 2159; DiLiddo, Tr. 3371–72; H. Wheeler, Tr. 1747–48.

[203] *See, e.g.* Hay, *supra* note 58 at 450; Scherer, *supra* note 61, at 209.

percent by the end of the 1970's, and since 1979 the industry has grown at an average rate of 3 to 4 percent annually. IDF 234. A number of witnesses testified that PVC resin is a "mature product," and that annual growth will approximate annual GNP growth (3 to 4 percent annually) for the foreseeable future. IDF 235; Disch, Tr. 692.

Capacity utilization levels in the PVC market vary with general economic conditions, particularly conditions in the construction industry. Respondents note that in the 1980's construction has accounted for "well over 50% of PVC consumption.[204] The most relevant measure of capacity is practical production capacity, because it determines the amount of capacity that can be placed in production at little additional marginal cost. Between 1970 and 1974, practical production capacity ranged from 96 percent in 1970 to 94 percent in 1973, and never fell below 93 percent. In 1974, with the onset of the recession, capacity utilization fell to 89 percent, and to 64 percent in 1975, before climbing to 78 percent in 1976, 86 percent in 1977, 94 percent in 1978, and 93 percent in 1979. In 1980, when interest rates rose and construction declined, capacity utilization fell to 80 percent. It remained at 80 percent in 1981, fell with the recession to 75 percent in 1982, increased to 84 percent in 1983, and increased again to an estimated 91 percent in 1984.[205] A number of witnesses testified that capacity utilization levels would continue to increase gradually during the 1980's.[206] Several record documents indicate that an 80 percent capacity utilization level makes PVC resin prices profitable. For example, a 1983 Goodrich document indicates that "industry capacity utilization around 80% * * * [h]istorically * * * has supported price increases * * *"[207]

Respondents argue that there is substantial excess capacity in the PVC industry, as a consequence of producer forecasting errors and the severity of the recent recession. IDF 241–242. Although this was apparently true during the recession, capacity utilization has recently rebounded to a high level. As a result, any incentive to cheat on consensus prices in response to depressed demand is not likely to persist over the next several years. That is particularly true because fixed costs do not generally represent a particularly large percentage of total costs in the PVC market. A 1983 study, for example, estimates that variable costs account for approximately 69 to 76 percent of the total cost of producing PVC resin.[208]

Supply conditions are similarly likely to remain relatively stable and predictable over the next several years. VCM is the primary input used to manufacture PVC, and ethylene and chlorine are in turn the primary inputs used to manufacture VCM. Ethylene is a petroleum compound, and its price is not likely to increase significantly over the next several years, given the fact that petroleum prices have recently declined and are likely to remain low for the foreseeable future. Chlorine prices are also relatively stable, and are likely to remain so for the next several years.

b. *VCM Market.* Because 96 percent of all VCM production is used to produce PVC, demand for VCM is closely tied to demand for PVC. In the 1960's, the VCM market grew at an average annual rate of 12 to 15 percent, but that rate declined to 8 to 10 percent in the early 1970's. IDF 313–14; Kienholz, Tr. 792. Industry witnesses indicated that they expect the VCM growth rate to approximate GNP growth (3 to 4 percent annually) for the foreseeable future. IDF 315 *in camera*; IDF 316; Kienholz, Tr. 792.

Capacity utilization levels in the VCM market also vary with general economic conditions, and in particular with conditions in the construction industry. In 1979 the VCM market operated at 96 percent of its practical production capacity, but that level fell to 83 percent in 1980, 77 percent in 1981, and 74 percent in 1982, before increasing to 75 percent in 1983 and to an estimated 92 percent in 1984.[209] Historically, an 80 percent operating rate has permitted VCM producers to earn small profits, while a 90 percent operating rate has permitted them to achieve "longterm reasonable return objectives." Kienholz, Tr. 807.

Respondents contend that VCM producers currently confront substantial excess capacity, and that it will persist for the foreseeable future. IDF 323. However, several witnesses testified that the excess capacity developed because of the recession; that capacity utilization improved in 1984; and that it is expected to further improve over the next few years to such an extent that new capacity may be needed by 1990. IDF 325 *in camera*; IDF 326; *see* Kienholz, Tr. 796–97. The 1984 capacity utilization data support that conclusion. Moreover, even lower capacity utilization levels are not likely to place strong downward pressure on prices because fixed costs do not represent a very large percentage of total costs. For example, the 1981 Air Products study indicates that at least 50 percent of total VCM production costs are variable costs. *See* RX 57Z30 *in camera.*

Supply conditions are also likely to remain stable for the next few years. As we observed *supra*, chlorine and ethylene are the primary components of VCM, and prices for both are likely to remain relatively stable for the foreseeable future.

7. Significance of Vertical Integration

The degree to which firms within an input ("primary" or "upstream") industry are integrated into a "secondary" (or "downstream") industry may affect both their incentives to create a coordinated price and output strategy, and their ability to maintain that strategy by detecting and punishing efforts to deviate from it. These two concepts are closely related. For example, firm incentives to coordinate prices and output are likely to be higher if firms believe they will be able to monitor the behavior of their competitors. An acquisition involving one or more integrated firms in either the primary or the secondary market may alter that balance for the firms involved, and thereby frustrate or facilitate collusion in either market.[210]

---

[204] RPF 103 *in camera, citing* RX 1173A. Construction applications include pipe, wire and cable, siding, and floor tile. *See* pages 18–19, *supra.*

[205] CX 666H *in camera.* The cited capacity utilization levels are for January of each year cited. The 1984 figure is based upon the assumption that bulk and suspension PVC production increased by 12 percent in 1984, as reported by the Society of the Plastics Industry (*see* CX 778C), while capacity did not increase. CPF 17.06 n. 1 *in camera.*

Nameplate capacity utilization levels exhibit a similar association with economic conditions, ranging from 88 percent in 1970 to a low of 56 percent in 1975, to a peak of 88 percent in 1978, to a low of 71 percent in 1982, and to an estimated high of 87 percent in 1984. CPF 17.03 *in camera, citing* CX 666H *in camera.*

[206] Disch, Tr. 691–92; Schaefer, Tr. 1123; Eades, Tr. 1473–74, 1480; H. Wheeler, Tr. 1736–37; CX 220C.

[207] CX 185Z6–27 *in camera; accord* Schaefer, Tr. 1124; RX 840B.

[208] RX 1213 *in camera; see* RX 428P *in camera.*

[209] CX 665A–F *in camera.* The cited capacity utilization levels are for January of each year cited. The 1984 figure is based upon the assumption that VCM production, like PVC production, increased by 12 percent in 1984. *See* note 205, *supra.* Nameplate VCM capacity utilization levels changed in a similar fashion, from 92 percent in 1979 to a low of 70 percent in 1982 and 1983, and then to an estimated 87 percent in 1984. CX 665A–F *in camera.*

[210] The presence of vertical integration may also affect firm incentives to engage in anticompetitive conduct other than collusion, such as the anticompetitive foreclosure of unintegrated downstream producers from purchasing an input manufactured by previously unintegrated upstream producers. *See* Krattenmaker & Salop, *Anticompetitive Exclusion: Raising Rivals' Costs to Achieve Power Over Price*, 96 Yale L.J. 209 (1986); Salinger, *Vertical Mergers and Market Foreclosure*

Continued

a. *Effects on Firm Incentives to Cooperate.* The effects of vertical integration upon firm incentives to collude will depend upon whether any given integrated firm on balance will benefit from or be harmed by collusion. It is perhaps easiest to appreciate these effects by considering the incentives favoring collusion in the primary (upstream) market—in this case, the VCM market. The foregoing analysis establishes that collusion would be both possible and profitable in the VCM market. Firms that are *not* integrated downstream into the secondary (PVC) market will therefore have a strong incentive to increase primary market prices to supracompetitive levels. VCM producers that *are* integrated downstream are likely to have an equally strong incentive to increase VCM market prices, because they can produce either as much VCM as they need—or more than they need—to supply their PVC operations.

First, if integrated VCM producers can manufacture only enough VCM to supply their own PVC operations, then an industrywide increase in VCM market prices will permit them to increase their PVC prices, because nonintegrated PVC producers will have to increase their prices in order to accommodate the VCM price increase.[211] Thus, these integrated firms may actively participate by *reducing* their own captive production. Alternatively, they may passively welcome collusion in the primary market—in the sense that they will profit from declining to increase VCM production in response to higher VCM prices—thereby allowing unintegrated VCM producers to reduce their output and secure higher VCM prices. Second, if integrated firms can produce more VCM than they need for PVC production—and hence can make some open market VCM sales—they will secure additional revenues from an increase in VCM prices. In both of these situations, therefore, integrated firms will have an incentive to support an increase in VCM market prices, and hence to support a collusive effort in that market.[212] All integrated VCM producers now fall into one of these two categories (*see* Table II and Table V, *supra*), and therefore have the incentive to support a collusive effort to raise VCM market prices.

If, by contrast, an integrated firm produces more of the secondary market product than it can sustain with its own primary market production, and hence must purchase additional primary market inputs from other firms, that may reduce its interest in higher primary market prices, although its secondary market revenues would still benefit from higher primary market prices. Goodrich found itself in this position prior to the acquisition, when it controlled 1.192 billion pounds of PVC practical production capacity, but only 930 million pounds of VCM practical production capacity. *See* Table VII, *infra*. If some integrated firms can produce more of the primary product than they need while others cannot, their incentives with respect to primary product price levels will differ to some degree.[213] None of the integrated VCM producers currently fall in the latter category.

b. *Effects on Firm Monitoring Efforts.* Any firm that participates in a collusive effort—whether it is integrated or not—will prefer to see its competitors keep their prices uniformly and persistently at supracompetitive levels, so that it can both sell its output at supracompetitive prices and secure additional profits by cheating on the consensus. Colluding firms must therefore be able to enforce their consensus by detecting and retaliating against cheating on the consensus.

Vertical integration may affect the extent to which colluding firms can enforce their consensus in two ways. First, if some integrated firms produce more of the primary product than they use internally, nonintegrated primary producers must be able to monitor open market sales of the primary product by integrated firms. This monitoring task is no different from the monitoring required to sustain a collusive arrangement among nonintegrated firms, and conditions in the VCM market permit VCM producers to monitor integrated firm VCM sales.

Second, the colluding firms must be able to monitor secondary market sales by integrated firms, because cheating through "reductions" in the "price" of the primary product that integrated firms use internally can take the form of additional secondary market sales. In general, the colluding firms can rely on the integrated firms as a group to monitor their integrated competitors. More precisely, if several firms accounting for a substantial percentage of primary market output are vertically integrated, each can be expected to monitor carefully the secondary market prices of its integrated competitors, and to retaliate quickly if cheating in that market or in the primary market occurs.[214] The speed with which price reduction information reaches nonintegrated producers will increase as the integrated producers' collective share of secondary market share increases. Integrated VCM producers currently account for approximately 50 percent of VCM production.

A second monitoring mechanism allows information on the downstream behavior of the integrated firms to reach nonintegrated upstream producers, so that the nonintegrated firms may participate in policing secondary market cheating by integrated firms. If the nonintegrated VCM producers observe a reduction in orders from their nonintegrated PVC producer customers—accompanied by customer complaints of a price squeeze (or complaints that their PVC fabrication customers report a price squeeze)—they

(Working Paper No. FB-84-17, Graduate School of Business, Columbia University 1985). We do not need to consider other anticompetitive mechanisms in the present case in view of our finding of liability based upon an increase in the likelihood of collusion in the VCM market. In addition, a vertical acquisition may reduce the type of inefficiency described in the economic literature on successive monopolies. *See, e.g.*, Waterson, *Vertical Integration, Variable Proportions, and Oligopoly*, 92 Econ. J. 129 (1982). However, this case focuses on a horizontal, rather than a vertical, acquisition.

[211] If the price elasticity of demand for the output is low—as it is for both VCM and PVC—then it will be possible to pass along most or all of the increase in input prices. The increase in VCM market prices will not actually increase the VCM costs of integrated firms, except that the opportunity cost of devoting VCM production to captive PVC output instead of VCM open market sales will increase. The cost of diverting VCM production in this fashion may be substantial, however, especially if no excess VCM capacity is available.

[212] If integrated producers have no incentive to compete away primary market price increases, then unintegrated primary market firms can be fairly sure that their integrated rivals will acquiesce in or support collusion by the unintegrated subset. In this situation, collusion is likely if the number of unintegrated firms is small, even if there are a large number of producers when the integrated firms are also counted. Hence, an acquisition that makes an integrated firm more likely to facilitate or passively accept collusion will increase the likelihood of collusion by unintegrated firms in the primary market. *See* Krattenmaker & Salop, *supra* note 210, at 262 (discussing "Frankenstein Monster").

[213] However, when downstream producers cannot substitute other inputs for the upstream product, when downstream production is characterized by constant returns to scale, and when downstream markets are competitive, a firm's incentive to collude in the upstream market will not depend upon its downstream market position. *See* White, *Antitrust and Video Markets: The Merger of Showtime and the Movie Channel As A Case Study*, in *Video Media Competition* (E. Noam ed. 1985) (significance of variable proportions production technology).

[214] Retaliation in the form of increased sales at reduced prices will be most feasible if the retaliating firms are operating along a horizontal section of their marginal cost curves. In that situation, there are no significant capacity constraints upon production increases. Because VCM producers are currently operating at an estimated 90 percent of practical production capacity (*see* page 93, *supra*), there is enough slack—approximately 10 percent of practical production capacity—to make effective retaliation feasible.

can infer that the integrated firms are cheating on the VCM cartel by lowering prices in the PVC market. Moreover, because VCM is such a standardized product, nonintegrated VCM producers are familiar with the cost functions of their integrated rivals, facilitating their ability to distinguish integrated firm cheating from price changes occasioned by changing cost conditions.

c. *The Effects of Vertical Integration Upon the VCM and PVC Markets.* Table VII describes the degree of integration by ownership into PVC production of VCM producers.[215] Prior to the acquisition, firms *not* integrated forward into PVC production controlled 46.9 percent of total VCM practical production capacity (4.165 billion pounds); integrated firms controlled the remaining 53.1 percent. Prior to the acquisition, firms *not* integrated backward into VCM production controlled 44.6 percent of total PVC practical production capacity (2.985 billion pounds); integrated firms controlled the remainder. Prior to the acquisition, Goodrich was the only integrated firm that controlled *less* VCM practical production capacity (930 million pounds) than PVC practical production capacity (1.192 billion pounds).[216] By contrast, Diamond controlled substantially *more* VCM capacity (1.070 billion pounds) than PVC capacity (602 million pounds). After the acquisition, five integrated producers (Diamond and Ethyl exited) accounted for 58.08 percent of total VCM practical production capacity, and 61.2 percent of total PVC practical production capacity. *See* Tables II and V, *supra.*

TABLE VII.—VERTICAL INTEGRATION JANUARY, 1982

Firm [217]	VCM practical production capacity	PVC practical production capacity
Dow	1.945 (1st)	—
Shell	1.385 (2nd)	—
Diamond Shamrock	1.070 (3rd)	0.602 (4th)
Ga. Pacific	1.000 (4th)	0.600 (5th)
Goodrich	0.930 (5th)	1.192 (1st)
PPG	0.835 (6th)	—
Conoco	0.650 (7th)	0.585 (6th)
Borden	0.472 (8th)	0.420 (8th)
Ethyl	0.300 (9th)	0.120 (12th)
Formosa	0.286 (10th)	0.196 (11th)
Tenneco Polymers	—	0.785 (2nd)
Shintech	—	0.720 (3rd)
Occidental Chemical	—	0.556 (7th)
Air Products	—	0.310 (9th)
CertainTeed	—	0.220 (9th)
Other	—	0.394
Total	6.573	6.700

[217] The listed firms are those that were producing VCM and/or PVC as of 1982. The capacity figures are expressed as billions of pounds. The data are derived from Table I and Table IV, *supra.*

The acquisition strengthened the incentives of VCM producers to collude, and improved their ability to enforce such a consensus. Prior to the transaction, Goodrich and Diamond were both vertically integrated producers, but Goodrich was a net VCM buyer—with less VCM capacity than PVC capacity—while Diamond was a net VCM seller—with more VCM capacity than PVC capacity.[218] As a result, Goodrich had a significant interest in somewhat lower VCM prices that conflicted to some degree—but did not override—its interest in higher PVC prices. After the acquisition, Goodrich controlled 23.7 percent of VCM practical production capacity (1.997 billion pounds), and 19.4 percent of PVC practical production capacity (1.34 billion pounds). The merged entity became a substantial net VCM *seller*—with greater VCM capacity than PVC capacity—to an even greater degree than Diamond has been before the acquisition.[219] By removing Goodrich as an integrated net buyer of VCM, and any incentive it might otherwise have had to secure lower VCM prices, the acquisition increased the incentive of the merged entity to collude in the VCM market, or at least to passively welcome collusion by the unintegrated VCM producers.[220] Removing Goodrich's incentive to thwart a collusive VCM price increase is of particular concern because there are only three unintegrated VCM firms. Coordinated action by the unintegrated VCM producers is therefore substantially more likely to occur.

In order the establish that vertical integration will not defeat collusion in the primary market, it is not enough, however, to establish that nonintegrated VCM producers have a strong incentive to collude and that integrated producers have an incentive to actively support or acquiesce in such a collusive effort. In addition, parcticipating firms must be able to enforce the terms of their collusive effort, and as a part of that effort must be able to monitor the conduct of their competitors. As the *DOJ Guidelines* indicate,

> [c]ollusive agreements are more likely to persist if participating firms can quickly detect and retaliate against deviations from the agreed prices or other conditions. Such deviations are easiest to detect, and therefore less likely to occur, in markets where detailed information about specific transactions or individual price or output levels is readily available to competitors.

DOJ Guidelines at ¶ 3.42.

The record evidence suggests that VCM producers could successfully enforce the terms of a collusive arrangement. Nonintegrated and integrated VCM producers can and do successfully monitor VCM market prices. Most VCM is sold pursuant to written long-term contracts at least one year in length.[221] Most such contracts permit the seller to reset the contract price over the contract term, and most of them also require the seller to provide notice of price increases a prescribed number of days in advance.[222] In some

[215] In this industry, the crucial stages of production are (a) the manufacture of ethylene dichloride from ethylene and chlorine, (b) its transformation into VCM, (c) the production of PVC resin, and (d) the fabrication of PVC-based industrial and consumer products. The fabrication stage includes the production of PVC compounds from PVC resins.

The significance of vertical integration for competition in the VCM and the PVC markets need only be evaluated with respect to integration by ownership. Respondents contend that the three unintegrated VCM producers have ceded control over major parts of their VCM capacity to unintegrated PVC producers through long term VCM supply contracts. RAB at 76–77; RPF 372 *in camera.* Although firms can transfer corporate control by contract short of integration by ownership, such a result would require the contractual allocation of the great majority of firm capacity. Functional integration is not created by long term contracts involving much smaller percentages of capacity. *Compare* RPF 371 *in camera with* RPF 374 *in camera.* Moreover, these contracts typically give the firms the cover independent discretion as to the quantities they will buy or sell, and their customers and sources of supply. *See* pages 21–22, *supra.*

[216] Because it takes 1.02 to 1.04 pounds of VCM to produce 1 pound of PVC resin (Disch, Tr. 643), VCM and PVC practical production capacities can be compared essentially on a one for one basis.

[218] In 1981, Goodrich produced 843.962 million pounds of PVC (16.1 percent of 5.242 billion pounds), and 774.728 million pounds of VCM (11.3 percent of 6.856 billion pounds). By contrast, Diamond produced 435 million pounds of PVC (8.3 percent of 5.242 billion), and 921.446 million pounds of VCM. *See* Tables I and IV, *supra.*

[219] In 1983, Goodrich produced 1.0368 billion pounds of PVC (18.4 percent of 5.635 billion pounds), and 1.5655 billion pounds of VCM (22.26 percent of 7.033 billion pounds). *See* Tables II and V, *supra.*

[220] Even if the PVC market were perfectly competitive, anticompetitive conduct in the VCM market could create power over price in the PVC market by in effect creating an involuntary PVC cartel: that is, by forcing all PVC producers to raise price in a coordinated fashion, whether or not a voluntary PVC cartel could have formed. *See generally* Salop and Scheffman, *infra* note 240. In other words, the increase in PVC prices requires a downward slopping *market* demand curve but not downward sloping *firm* demand curves.

[221] IDF 296 *in camera, citing* Taylor Tr. 1663–68; L. Wheeler, Tr. 958 *in camera;* IDF 305 *in camera, citing* Weber, Tr. 1839–40; Kienholz, Tr. 811–812; Taylor, Tr. 1592–93; Schaefer, Tr. 1145.

[222] IDF 296 *in camera, citing* Goodrich Admissions 507, 509; CX 4Z–40; IDF 300 *in camera, citing* Wheeler, Tr. 958–960 *in camera; CX 702; CX 705; CX 707; CX 735; CX 736; CX 739; IDF 317; Taylor, Tr. 1598.*

VCM contracts, the price to be charged in determined with reference to VCM prices charged by other firms in the VCM market.[223] Most VCM contracts also contain meeting competition clauses, pursuant to which a buyer that receives an offer of a lower price from a competing seller is obligated to report that price to the contracting seller and give the contracting seller an opportunity to match it.[224] Moreover, in VCM sales relationships not involving written contracts, buyers frequently permit current suppliers to meet competitive offers. IDF 298. These provisions—whether formally contractual or not—give VCM buyers a strong incentive to monitor industry transactions of price concessions, and increase the likelihood that whenever a seller offers a concession to a buyer, other sellers will discover it and retaliate. Industrywide use of the these clauses therefore discourages price reductions or other concessions in the VCM market.[225] As a result of these contractual provisions, VCM suppliers secure a considerable amount of price information through their customers. IDF 298, *citing* Kienholz, Tr. 810–811.

VCM suppliers also learn of competitive price changes through public announcements in the trade press.[226] In addition, many VCM sales are made pursuant to sales, tolling and exchange agreements between VCM competitors,[227] in part because integrated VCM sellers both buy and sell VCM. These agreements facilitate the exchange of price information among VCM producers.[228] In particular, because VCM contract prices are frequently subject to negotiation based upon changes in market prices, sales, tolling, and exchange agreements between VCM sellers create a forum for discussing industry prices. For example, one Goodrich document indicates that an employee of a competing VCM seller called in late 1982 "to discuss the average VCM prices now prevailing in the marketplace * * *" CX 217C *in camera*.

As a consequence of the wide availability of price information, particularly through meeting competition clauses and supply interrelationships, VCM firms are generally able to secure relatively reliable and accurate VCM price information.[229] Hence, for example, a number of VCM sellers were familiar with the terms of a specific VCM supply contract between Dow and Air Products.[230] Furthermore, VCM producers monitor the market shares, capacity, and changes in capacity of their VCM competitors.[231]

It is conceivable in some industries that purchasing firms will recognize that meeting competition clauses may facilitate seller collusion, and will therefore prefer to switch suppliers—in response to offers of lower prices from rivals—rather than report the offers to existing suppliers. Such conduct is unlikely in the VCM market, primarily because it is costly to switch from one supplier to another. VCM is a highly volatile gaseous chemical. Approximately 50 percent of the VCM sold in the United States is transported by pipeline from suppliers' plants to their customers' premises.[232] Pipeline transportation is cheaper and safer than transportation by barge or tank car.[233] As a result, once such a pipeline is in place, the cost savings it produces make it highly unlikely that a VCM customer will switch to another supplier.[234] The record evidence also establishes that non-pipeline customer/supplier relationships tend to be stable over time.[235] In short, most VCM buyers prefer to stay with their current suppliers.[236] Thus, most VCM buyers will report offers of lower prices to their current suppliers so that they can match them. In conjunction with the supply interrelationships described above, the active assistance of VCM purchasers permits VCM producers easily to detect cheating on *external* VCM prices in the open VCM market by competing VCM producers—whether integrated or not.

Both integrated and nonintegrated VCM producers can also monitor cheating by integrated VCM producers—with respect to *internal* VCM "prices"—by observing the prices of PVC. Because they are intimately familiar with both VCM and PVC production processes, and are participants in both the PVC and VCM markets, integrated firms can easily detect cheating with respect to either VCM or PVC prices by their rivals. Nonintegrated VCM producers can rely upon their customers to quickly detect and report PVC price reductions.[237] As noted *supra*, most PVC is sold pursuant to long term contractual or "handshake" relationships that typically contemplate price and output changes on a monthly basis.[238] These arrangements almost invariably provide—either expressly or implicitly—that PVC purchasers are to notify their suppliers of offers of lower prices by competing suppliers, and are to give their suppliers an opportunity to match those prices.[239] In addition, suppliers are aware of other suppliers' prices because they frequently exchange or toll PVC with one another. CPF 7.15. PVC suppliers are very likely, in turn, to report any PVC price reductions to their VCM suppliers.

Additional upstream or downstream integration on the part of any of these producers might make price and output monitoring somewhat more difficult. However, that does not appear to be the case in this industry. On the upstream side, integration into chlorine production is unlikely to complicate monitoring. In 1983, firms accounting for 80 percent of total VCM practical production capacity were integrated backward into chlorine production; only Borden, Shell and Conoco were not so integrated. RX 246. On the downstream side, it is true that most PVC resin producers have some facilities for compounding and/or fabricating PVC. However, respondents have adduced no evidence indicating that these facilities together account for more than a small proportion of total PVC resin.

In short, both integrated and nonintegrated VCM producers have

---

[223] IDF 297 *in camera, citing* Schaefer, Tr. 1223 *in camera;* CX 88X–Y *in camera.*

[224] IDF 296 *in camera, citing* Wheeler, Tr. 958–960 *in camera;* CX 88X–Y *in camera;* IDF 317; Kienholz, Tr. 811–813; *see* Taylor, Tr. 1596–97.

[225] *See* Kienholz, Tr. 811; *see also* Schaefer, CX 295Z30 *in camera; see generally United States v. FMC Corp.*, 308 F. Supp. 1108, 1112 (E.D. Pa. 1969); Salop, *supra* note 58 at 27–30; Clark, *supra* note 58 At 614–315.

[226] IDF 299, *citing* CX 736; CX 737; CX 739.

[227] L. Wheeler, Tr. 972–75 *in camera;* CX 555Z11 *in camera.*

[228] IDF 301 *in camera, citing* DiLiddo, Tr. 3295 *in camera*, Tr. 3299; CX 88 *in camera;* CX 24 *in camera;* CX 26 *in camera;* CX 206A; CX 208; CX 212; CX213; CX 214; CX 215; CX 217 *in camera.*

[229] IDF 302, *citing* Diamond Admission 535; CX 6V, Z67.

[230] IDF 303, *citing* Kienholz, Tr. 853–56; H. Wheeler, Tr. 1020–24 *in camera;* Schaefer, Tr. 1193–95; DiLiddo, Tr. 3306–09.

[231] IDF 304, *citing* Diamond Admission 523; CX 6V, Z–66; CX 169F; CX 971 *in camera;* CX 146; CX 215; CX 238E; CX 425.

[232] IDF 307, *citing* H. Wheeler, Tr. 989; Taylor, Tr. 1504.

[233] IDF 307, *citing* Kienholz, Tr. 756, 759–60; 789; L. Wheeler, Tr. 980–981; Taylor, Tr. 1563–64; Schaefer, Tr. 1129.

[234] IDF 307, *citing* Kienholz, Tr. 787–88, 790, 866–70; Taylor, Tr. 1566–67.

[235] IDF 308 *in camera, citing* Kaserman, Tr. 2500; Schaefer, Tr. 1145; CX 523T *in camera;* CX 419.

[236] IDF 306 *in camera, citing* Taylor, Tr. 1567–68; Schaefer, Tr. 1145.

[237] As noted *supra*, the fact that integrated producers account for a large percentage of PVC market sales makes it more likely that nonintegrated PVC producers will receive PVC price information concerning integrated producers quickly.

[238] IDF 211 *in camera;* IDF 219 *in camera;* Disch, Tr. 685.

[239] IDF 211 *in camera*, 237 *in camera;* Disch, Tr. 684; DiLiddo, Tr. 3254–55, Weber Tr. 1789–90. PVC buyers are very likely to report such offers to their suppliers because it is costly to switch suppliers, and they will therefore prefer to remain with their current suppliers. *See* page 88 and note 202, *supra.*

strong incentives to create and maintain a collusive arrangement, and can readily detect cheating from that arrangement and retaliate accordingly. In reaching this conclusion, it is important to emphasize and summarize the mechanism through which VCM producers could collude successfully. They collectively control an input that is essential to PVC production; that is highly homogeneous; that has a low price elasticity of demand; and that can be produced pursuant to a standardized technology available to all incumbent producers. In particular, the demand for PVC is sufficiently inelastic to make it likely that an increase in VCM prices can profitably be passed along to PVC customers. Anticompetitive conduct in the VCM market that raises the VCM price to all PVC producers will shift the supply curve of each downstream firm upward, and thereby increase the equilibrium price of PVC, because the demand curve for PVC is downward sloping.[240] This will occur even if the PVC market is perfectly competitive (and the record evidence does not in any event support that view).[241]

As a result, VCM producers can effectively manage a collusive arrangement not only within the VCM market, but within the PVC market as well. This is true despite the fact that it would be difficult to collude successfully in the PVC market alone, for the reasons summarized below. It is therefore incorrect to argue, as the respondents do, that it is impossible to collude in the VCM market because it is impossible to collude in the PVC market. It is rather possible for VCM producers to create and maintain a collusive arrangement in the PVC market, notwithstanding some of its structural characteristics, because it is possible to create and maintain a collusive arrangement in the VCM market.

D. Conclusion

1. PVC Market

The HHIs and four-firm concentration ratios for the PVC market after the acquisition were just barely high enough to surpass the thresholds specified in earlier Supreme Court and Commission cases, as well as the thresholds at the lower end of the "moderately concentrated" range of the *DOJ Guidelines*. The concentration levels therefore create only a weak presumption of anticompetitive effects from the acquisition in the PVC market. We are persuaded that the structural evidence, on balance, rebuts this weak presumption and establishes that the acquisition is unlikely to lessen competition substantially in the PVC market, for three reasons. First, PVC resin is relatively heterogeneous. Several grades of PVC resin are needed for different end use applications, different PVC producers manufacture different amounts of each grade, and an effective collusive strategy would require reaching an agreement on price and output levels for each grade. Moreover, even within any particular PVC resin grade, quality varies from one PVC producer to another, making effective collusion even more difficult.

Second, costs vary significantly from one firm to another, primarily because different firms' operating costs vary as a function of the use of large and small reactors, and the fact that different firms emphasize the production of different PVC resin grades. Transportation cost differences represent an additional complicating factor. Third, although the price elasticity of demand for PVC is, on balance, relatively low, an effort on the part of PVC producers to raise PVC prices to supracompetitive levels may be constrained to some degree by the higher price elasticity of demand for many PVC end use products, and made more difficult by variations in price elasticity from one PVC end product to another.[242]

2. VCM Market

The record evidence indicates that the HHIs and four-firm concentration ratios for the VCM market after the acquisition lay well above the concentration levels specified in earlier Supreme Court and Commission cases, and reached the upper end of the "moderately concentrated" range in the *DOJ Guidelines*. Moreover, the acquisition increased three different measures of HHI levels by 226 to 304 points. The concentration levels therefore create a relatively strong presumption that the acquisition substantially lessened competition in the VCM market.

The structural factors in the VCM market described above strengthen rather than rebut this presumption. First, impediments and one barrier to entry into the VCM market are sufficiently high to permit incumbent firms with market power to sustain supracompetitive prices for several years. Second, VCM is a highly homogeneous product; only one grade is used to produce PVC resin. Third, the price elasticity of demand for VCM is very low. Fourth, cost functions and raw materials and transportation costs do not differ significantly from one VCM producer to another. Fifth, the size and distribution of VCM buyers are not likely to constrain the pricing discretion of VCM producers. Sixth, although contracts in the VCM market typically cover at least one year, prices and output levels are renegotiated frequently—pursuant to both contractual and "handshake" relationships—and meeting competition clauses in the contracts keep sellers informed of the pricing behavior of their rivals. Seventh, although some excess capacity confronted VCM producers during the recession, capacity utilization levels have now approached their pre-recession levels, and most experts expect any remaining disparity to disappear completely by the 1990's. Demand is expected to grow at a relatively healthy annual rate of 3 to 4 percent. As a result, capacity utilization levels are likely to remain well above the 80 percent "break even" level for the foreseeable future. Supply conditions are also likely to remain stable. Finally, vertical integration between VCM and PVC producers is likely to facilitate efforts to collude in the VCM market. These factors strengthen the conclusion that the acquisition is likely to substantially lessen competition in the VCM market.

V. Performance Factors

An important part of the respondents' defense to the allegations in the complaint in this matter is summarized in their answering brief:

Throughout these proceedings an undeniable truth has stymied complaint counsel: the PVC industry was intensely

[240] This is true because, as noted *supra*, all current and potential PVC producers need VCM as an input. *See generally* Krattenmaker & Salop, *supra* note 210; Salop and Scheffman, *Raising Rivals' Costs*, 73 Am. Econ. Rev 267 (1983). *Compare DOJ Vertical Restraints Guidelines* ¶3.21 (facilitating collusion).

[241] Even if the PVC market were perfectly competitive, anticompetitive conduct in the VCM market could create power over price in the PVC market by in effect creating an involuntary PVC cartel; that is, by forcing all PVC producers to raise price in a coordinated fashion, whether or not a voluntary PVC cartel could have formed. *See generally* Salop and Scheffman, *supra* note 240. In other words, the increase in PVC prices requires a downward sloping *market* demand curve but not downward sloping *firm* demand curves.

[242] Commissioner Azcuenaga points out that because the price elasticity of demand for PVC is relatively low, PVC producers—as well as VCM producers—"could pass on a collusive PVC price increase." *Azcuenaga Opinion* at 15. That in fact is an important reason why *VCM* producers could collude successfully. *See* pages 110–111, *supra*. However, the fact that *PVC* producers *could* pass on a cost increase does not mean that they will be able to determine and maintain a set of consensus prices, in light of the heterogeneity of PVC resins, and cost differences from one PVC producer to another.

competitive before The BF Goodrich Company (Goodrich) acquired one polyvinyl chloride (PVC) plant and one vinyl chloride monomer (VCM) plant from Diamond Shamrock Chemicals Company (Diamond) in January 1982 and has been intensely competitive since the acquisition.

RAB at 1. Respondents recognize that a finding of actual anticompetitive effects is not needed to establish that the acquisition violates section 7 of the Clayton Act (*id.* at 2); establishing that the acquisition may substantially lessen competition is sufficient. However, respondents argue that actual post-acquisition evidence of industry performance is sufficient to rebut other evidence satisfying the latter standard. *Id.* at 3–8.

The Commission has concluded that the respondents' performance evidence does not rebut its finding of liability in the VCM market. Post-acquisition performance evidence must be evaluated very carefully, because of its potential for manipulation. Much of the record evidence of competition respondents adduce is not persuasive, particularly with respect to the VCM market. Moreover, there is no guarantee that the limited price competition that respondents have identified will continue now that demand and supply conditions in both the VCM and the PVC markets have improved. Furthermore, whatever probative value respondents' post-acquisition performance evidence might have is outweighed by the probative value of the post-acquisition structural evidence in the record.

The Supreme Court has determined that post-acquisition evidence tending to diminish the probability or impact of anticompetitive effects might be considered in a § 7 case.[243]

However, in making that determination, the Court has noted that the "probative value" of such evidence is "extremely limited." As the Court observed:

If a demonstration that no anticompetitive effects had occurred at the time of trial or of judgment constituted a permissible defense to a § 7 divestiture suit, violators could stave off such actions merely by refraining from aggressive or anticompetitive behavior when such a suit was threatened or pending.[244]

The Seventh Circuit has more recently confirmed that "[p]ost acquisition evidence that is subject to manipulation by the party seeking to use it is entitled to little or no weight." [245] Similarly, the Commission has determined that it is inappropriate to consider "exculpatory post-acquisition evidence of voluntary actions by the acquiring firm" in determining the legality of an acquisition.[246] For similar reasons, the conclusory testimony of industry executives to the effect that their industry is "competitive" is not particularly useful and cannot be given much weight.[247] The probative value of performance evidence is also limited by its susceptibility to transitory economic conditions, such as a recession. For example, the fact that profits are low in an industry with excess capacity does not necessarily mean that industry pricing is competitive.[248] Furthermore, the absence of "concrete anticompetitive symptoms" does not mean that

competition has not already been affected, "for once the two companies are united no one knows what the fate of the acquired company and its competitors would have been but for the merger." [249]

Recent Commission decisions have carefully followed these principles in evaluating post-acquisition performance evidence. In *Champion Spark Plug*, in evaluating a potential competition case, Judge Timony considered evidence suggesting that the acquired firm had been suffering from low and declining profits, but only in conjunction with structural evidence showing that (1) its share of the relevant market had declined from 45.1 percent to 34.3 percent during the same period; and (2) entry barriers were low, and seven new firms had recently entered the relevant market.[250] Similarly, in *BASF Wyandotte Corp.*, another potential competition case, Judge Hyun relied heavily upon structural evidence that "entry of new firms" was unimpeded; small firms in the relevant market were growing rapidly; and the acquisition eliminated only *de minimis* potential competition.[251]

Still more recently, the Commission has confirmed that the presence of some degree of competition does not necessarily refute the inference of the likelihood of anticompetitive effects created by relevant structural and behavioral evidence. In *HCA*, the Commission stated:

It is true that the undisputed evidence shows that more vigorous competition, including more direct price competition, is emerging in the health care industry, but it is a fallacy to conclude that growing competition in health care markets means that these acquisitions pose no threat to that competition. In fact, it is just that emerging competition that must be protected from mergers that facilitate the suppression of such competition.[252]

Similarly, the *DOJ Guidelines* advise that "[t]he fact that the market is currently competitive casts little light on the likely effect of the merger." *DOJ Guidelines* at ¶ 3.45.

A. PVC Market

Judge Howder concluded with respondents that the PVC industry performed in a relatively competitive fashion prior to the acquisition, and has continued to perform in that fashion since the acquisition. For example, Judge Howder noted that in a 1982 document, Goodrich informed its sales people that the

PVC industry is not healthy. Red ink continues to flow.[253]

Respondents similarly maintain that during the recession, the PVC market suffered from "substantial excess capacity and poor financial returns" (RPF 353 *in camera*), and that profits in the PVC industry have been poor since the acquisition.[254] A number of industry witnesses testified that the PVC industry is highly competitive. IDF 248.

Two factors limit the probative value of this evidence. First, repondents' basis for their conclusion that the PVC industry is competitive is for the most part simply the testimony of industry

[243] *United States v. General Dynamics Corp.*, 415 U.S. 486, 504 (1974), *citing FTC v. Consolidated Foods Corp.*, 380 U.S. 592, 598 (1965); *United States v. E.I. du Pont de Nemours & Co.*, 353 U.S. 586, 597 *et seq.*, 602 *et seq.* (1957); *United States v. Continental Can Co.*, 378 U.S. 441, 463 (1964); *accord. Weyerhaeuser Co.*, 106 F.T.C. at 284 n.59.

[244] *United States v. General Dynamics Corp.*, 415 U.S. at 504–05.

[245] *HCA v. FTC*, 807 F.2d at 1384, *citing Lektro-Vend Corp. v. Vendo Co.*, 660 F.2d 255, 276 (7th Cir. 1981).

[246] *HCA*, 106 F.T.C. at 486 n.17.

[247] *British Oxygen Co.*, 86 F.T.C. 1241, 1365 n.26 (1975), *rev'd and remanded on other grounds sub nom. BOC International Ltd. v. FTC*, 557 F.2d 24 (2d Cir. 1977); *see also United States v. Philadelphia National Bank*, 374 U.S. at 366–67.

[248] Klass, Tr. 5725–27; Kaserman, Tr. 2446–48. An additional complication is that the accounting profit data usually available from industry firms is much less accurate measure of industry performance than economic profits data, and frequently diverges quite significantly from economic profit data. *B.A.T. Industries, Ltd.*, 104 F.T.C. 852 (1984).

[249] *United States v. General Dynamics Corp.*, 415 U.S. at 505, *quoting FTC v. Consolidated Foods Corp.*, 380 U.S. at 598.

[250] *Champion Spark Plug*, 103 F.T.C. 546, 628–30 (1984). The Commission adopted Judge Timony's decision and order as its own. *Id.* at 639–40.

[251] *BASF Wyandotte Corp.*, 100 F.T.C. 261, 428–429 (1982).

[252] *HCA*, 106 F.T.C. at 501–02.

[253] IDF 247 *in camera*, *quoting* RX 186F *in camera*.

[254] RPF 355 *in camera*, *citing* CX 527; CX 186F; RX 132C; RX 7160; Disch, Tr. 706–07; H. Wheeler, Tr. 1736; DiLiddo, Tr. 3250, 3419.

representatives. Industry executives, well aware of the antitrust laws, are unlikely to testify otherwise. Second, much if not all of the "excess capacity and poor financial returns" respondents identify is probably attributable to the 1982 recession. *See* IDF 74. There is no guarantee that the price competition that respondents have identified will continue, now that industry demand is expanding again, and PVC producers are once again operating at relatively high capacity levels. *See* IDF 75.

We need not evaluate respondents' performance evidence for the PVC market in any greater detail, however, because we have concluded that the acquisition is not likely to lessen competition substantially in the PVC market.

B. VCM Market

Respondents similarly argue that the VCM market is "highly competitive," and that the VCM business has been characterized by intense competitive pricing, and "has been unprofitable in the recent past." [255] However, respondents' performance evidence does not rebut the Commission's finding of liability in the VCM market, for three reasons. First, respondents' primary basis for these conclusions is the generalized testimony of VCM industry representatives that the industry is competitive and the acquisition "did not enhance the likelihood of anticompetitive behavior." RPF 460–66 *in camera*. Given the interest of industry participants in establishing that their industry is highly competitive, this sort of generalized testimony is not particularly probative.

Second, the dramatic effects of the recession make it difficult to reply upon respondents' performance evidence, because the business downturn probably would have forced even a monopolist to reduce prices. There is no guarantee that the limited competition that respondents assert exists will continue now that demand conditions have improved substantially. Evidence from earlier periods suggests that the recession probably had only transitory effects on price and profit levels. For example, a 1977 Goodrich document states:

> The market conditions are such that the suppliers of EDC [ethylene dichloride] and VCM are in a strong position to control the price and terms under which these materials are purchased.

CX 17Z14 *in camera*. Similarly, a 1978 Occidental document complains about "[s]trong marketplace discipline by the VCM producers." CX 524V *in camera*. And a 1980 Firestone document concludes that

> the Company's monomer [VCM] suppliers were able to demand prices resulting in high profits for themselves regardless of the conditions of the polymer market upon which the Plastics Division was dependent for its profit.

CX 503B.

Third, the post-acquisition structural evidence makes respondents' post-acquisition performance evidence less persuasive. Since the acquisition, the number of firms in the VCM market has declined from eleven to nine; the HHI for nameplate capacity has increased from 1529 to 1632 as of January 1985; and practical production capacity has increased from 1552 to 1650.[256] For these reasons, respondents' performance evidence does not rebut the presumption of anticompetitive effects drawn from the structural data.

VI. Relief

The attached Final Order is designed to remedy the anticompetitive effects arising from the acquisition. More particularly, Paragraph II of the Order directs Goodrich to divest the VCM Plant located at La Porte, Texas—together with associated assets, rights and privileges secured from Diamond, and all additions and improvements added by Goodrich—within one year of the effective date of the Order. Divestiture is to be made subject to the prior approval of the Commission. Paragraph III requires Goodrich to provide the acquirer with technology relating to the plant, and to provide VCM know-how for a period of one year. These requirements are reasonably related to ensuring that the La Porte VCM Plant is reestablished as a viable competitive entity.[257] Paragraph IV requires Goodrich to assign all sales and supply contracts for the plant to the acquirer. Paragraph V provides for the appointment of a trustee to divest the plant if Goodrich fails to comply with the divestiture requirements.

Paragraph VI prohibits Diamond from interfering with the relief the order prescribes, and for a period of five years requires Diamond to continue to provide utilities and other support services previously provided to the La Porte VCM Plant, and to afford the plant continued access to and use of the pipelines connected to the plant. Paragraph VII requires Goodrich—for a ten-year period—to secure Commission approval prior to making certain acquisitions of VCM manufacturing assets in the United States. Paragraph IX provides in particular that prior Commission approval is required prior to retransfer of the VCM plant from Goodrich to Diamond, and—for a period of three years—prior to its divestiture by Diamond to a third party. Finally, Paragraphs VIII, X, and XI impose notification and reporting requirements upon both respondents.

The relief embodied in the order is reasonably related to the violation of section 7 of the Clayton Act that the Commission has identified. In section 7 cases, the principal purpose of relief "is to restore competition to the state in which it existed prior to, and would have continued to exist but for, the illegal merger."[258] In this case, divestiture of the La Porte VCM plant represents the most effective means of achieving that objective.[259] As long as Goodrich continues to operate the La Porte VCM Plant, the anticompetitive effects identified *supra* will persist. For similar reasons, the Commission directed the divestiture of the acquired assets in *AMI* and *HCA*.[260]

A ten-year prior approval provision is warranted in this case with respect to Goodrich because of the structural characteristics of the VCM market. If Goodrich divests the La Porte VCM Plant to a firm not currently in the United States VCM market—the divestiture that would reduce market concentration most significantly—the HHI for nameplate capacity would fall to approximately 1350. *See* Table V, *supra*. Without the La Porte VCM Plant, Goodrich will own one VCM plant—located at Calvert City, Kentucky—with a nameplate capacity of one billion pounds. *See* page 5, *supra*. In 1984, this represented approximately 11 percent of total domestic VCM nameplate capacity. If Goodrich were then to acquire the smallest domestic VCM producer—and in 1984 that was Conoco (now Vista),

---

[255] RPF 460–463 *in camera, citing* RX 428E *in camera:* Disch (Tenneco), Tr. 697–99; Kienholz (PPG), Tr. 849–50; L. Wheeler (Shell), Tr. 991, 1025, 1051; Taylor (Dow), Tr. 1672; H. Wheeler (GenCorp), Tr. 1766–67; DiLiddo (Goodrich), Tr. 3327.

[256] *See* pages 58–61, *supra*; IDF 286.

[257] *See, e.g., Kaiser Alum. & Chem. Corp.*, 93 F.T.C. 764, 855–58 (1979), *remanded on other grounds*, 652 F.2d 1324 (7th Cir. 1981); *Ekco Products Co.*, 65 F.T.C. 1163, 1212–15 (1964), *aff'd*, 347 F.2d 745 (7th Cir. 1965).

[258] *RSR Corp.*, 88 F.T.C. 800, 893 (1976), *aff'd*, 602 F.2d 1317 (9th Cir. 1979), *cert. denied*, 445 U.S. 927 (1980); *see Brunswick Corp.*, 96 F.T.C. 151, 155 (1980), *aff'd sub nom. Yamaha Motor Co., Ltd. v. FTC*, 657 F.2d 971 (8th Cir. 1981), *cert. denied*, 456 U.S. 915 (1982).

[259] *See Ford Motor Co. v. United States*, 405 U.S. 562, 573 (1972); *HCA*, 106 F.T.C. at 513; *AMI*, 104 F.T.C. at 221; *RSR Corp.*, 88 F.T.C. at 893.

[260] *HCA, 106 F.T.C. at 513; AMI*, 104 F.T.C. at 226–27.

with a nameplate capacity of 6.78 percent (*see* Table V, *supra*)—its share would rise to 17.78 percent, and the relevant HHI for nameplate capacity would increase by approximately 150 points, to 1500. Such an acquisition would almost certainly violate section 7 of the Clayton Act, for essentially the same reasons that Goodrich's acquisition of the La Porte VCM plant constitutes a violation of section 7. As the Commission has previously indicated, "it is industry market structure and market conditions * * * that determine the appropriateness of imposing a prior approval requirement in a section 7 case." [261] Here, the prospect that *any* acquisition by Goodrich of any firm in the United States VCM market would almost certainly violate section 7 warrants the prior approval requirement.

Several factors make it essential to require Diamond to comply with certain provisions of the order. Pursuant to the Goodrich/Diamond purchase agreement, a Commission order requiring Goodrich to divest the La Porte VCM plant will permit Goodrich to require Diamond to reacquire the plant. CX3Z505–Z507, cl. 4 *in camera*. The agreement also gives Diamond a right of first refusal to purchase the stock or assets of DSPC, including the La Porte VCM plant, in the event of a divestiture order. *Id.* Diamond has indicated that if it were required to reacquire the assets it sold to Goodrich, it would operate them "only until [it] could resell the assets to someone who is committed to being in the plastics business * * *" [262] Because the La Porte plant is approximately the same size as Goodrich's Calvert City VCM plant, its conveyance to any firm in the VCM market would raise concerns similar to those that would be attributable to any other acquisition by Goodrich in that market. The order therefore requires prior Commission approval of any subsequent divestiture of the La Porte plant by Diamond within three years after Diamond reacquires the plant. The order also prohibits Diamond from interfering with the divestiture because, through its right of first refusal, Diamond could theoretically prevent Goodrich from divesting the La Porte VCM plant to another buyer.[263] Order provisions of this sort—directed against the seller in an acquisition that violates section 7 of the Clayton Act—may be imposed when necessary to implement effective relief.[264]

The Commission believes that the foregoing order provisions lie well within its authority. The general standard is that "the courts will not intervene [with a Commission order] except where the remedy selected has no reasonable relation to the unlawful practices found to exist." [265] Once "the government has successfully borne the considerable burden of establishing a violation of law, all doubts as to the remedy are to be resolved in its favor." [266]

VII. Conclusion

A. PVC Market

The Commission has determined to affirm the decision of Judge Howder with respect to the PVC market. Environmental restrictions have created higher costs for new entrants and expansion than confronted incumbent capacity, and thus constitute a barrier to entry sufficiently substantial to make collusion within the PVC market feasible.[267] However, other structural factors establish that, on balance, the acquisition is not likely to have anticompetitive effects in the PVC market. The acquisition increased market HHIs to only 1098 for nameplate capacity, 1079 for practical production capacity, and an estimated 1020 for actual production levels. *See* pages 54–55, *supra*. As we noted *supra*, these post-acquisition concentration data are only barely sufficient to create a presumption of anticompetitive effects in the PVC market. Because they fall within the lower end of the mid-range of the Department of Justice Merger Guidelines, the Commission must carefully evaluate a number of other industry characteristics in order to determine whether the acquisition may in fact substantially lessen competition. [268]

On balance, other industry characteristics refute the weak presumption of anticompetitive effects in the PVC market created by the concentration data. First, PVC is relatively heterogeneous. Second, costs vary significantly from one PVC producer to another, as a consequence of differing reactor sizes, resin production emphases, and transportation costs. Third, the higher price elasticity of demand for some PVC end products may constrain any effort among PVC producers to collude. These industry characteristics make it unlikely that the acquisition had any anticompetitive effects in the PVC market.

B. VCM Market

The Commission has determined to reverse the decision of Judge Howder with respect to the VCM market. Environmental restrictions that create higher costs for new entrants and expansion than confronted incumbent capacity constitute a barrier to entry. Moreover, the substantial time required to enter, the need to capture a substantial share of industry sales in order to achieve minimum economies of scale, and the sunk character of an entry investment constitute impediments to entry. These contraints are sufficiently substantial to make collusion within the VCM market feasible.[269] Moreover, the acquisition substantially increased concentration in the VCM market: by 226 points to 1529 for nameplate capacity; by 253 points to 1552 for practical production capacity; and by 304 points to 1663 for actual production levels. *See* page 61, *supra*. The acquisition raised four-firm concentration levels to 70.8 percent for nameplate capacity, 71.3 percent for practical production capacity, and 72.59 percent for actual production levels. *See* Table V, *supra*. These concentration data create a relatively strong presumption of anticompetitive effects.[270]

---

[261] *HCA*, 106 F.T.C. at 514; *accord, AMI*, 104 F.T.C. at 221–227.

[262] Diamond Shamrock Chemicals Company Motion for Dismissal and Supporting Argument (Aug. 31, 1984), at 12.

[263] If Diamond has accurately portrayed its disinterest in reacquiring the plant, then it is unlikely, however, to interfere with the sale of the plant to another party.

[264] *See Dean Foods Co.*, 70 F.T.C. 1146, 1293–94 (1966), *modified as to order*, 71 F.T.C. 731 (1967); *see also United States v. Coca Cola*, 575 F.2d 222, 227–31 (9th Cir.), *cert. denied*, 439 U.S. 959 (1978) (sellers may be included in section 7 remedies). There is thus no need to address complaint counsel's alternative argument (*see* CAB at 71) that the agreement to "dismantle" DSPC violated section 5 of the Federal Trade Commission Act.

[265] *Jacob Siegel Co. v. FTC*, 327 U.S. 608, 613 (1946); *accord, e.g., HCA v. FTC*, 807 F.2d at 1393.

[266] *United States v. E.I. DuPont de Nemours & Co.*, 366 U.S. 316, 334 (1961).

[267] *E.g., FTC v. Warner Communications, Inc.*, 742 F. 2d 1156, 1163–64 (9th Cir. 1984); *Marathon Oil Corp. v. Mobil Corp.*, 669 F. 2d 378, 380–81 (6th Cir. 1981); *See Weyerhaeuser Co.*, 106 F.T.C. at 287.

[268] *Weyerhaeuser Co.*, 106 F.T.C. at 280.

[269] *E.g., FTC v. Warner Communications, Inc.*, 742 F. 2d 1156, 1163–64 (9th Cir. 1984); *Marathon Oil Corp. v. Mobil Corp.*, 669 F. 2d 378,380–81 (6th Cir. 1981); *see Weyerhaeuser Co.*, 106 F.T.C. at 287.

[270] *E.g., United States v. Philadelphia National Bank*, 374 U.S. 321, 363 (1963) (increased C_4 to 78 percent); *United States v. Waste Management, Inc.*, 743 F. 2d 976, 981 (increased C_4 to 67.1 percent); *FTC v. Warner Communications, Inc.*, 742 F. 2d 1156, 1163 (9th Cir. 1984) (increased C_4 to 75 percent); *Weyerhaeuser Co., 106 F.T.C. at 279 (increased* C_4 to 57.8 percent); *Grand Union Co.*, 102 F.T.C. at 1056–58 (increased C_4 in thirteen markets to levels ranging from 49 percent to 72 percent) (*dictum*).

The other structural evidence in the record strengthens this presumption. First, a low price elasticity of demand strengthens that inference,[271] and the record evidence establishes that the price elasticity of demand for VCM is low. Second, VCM is a highly homogeneous product, with few if any differences from one firm to another. Third, cost functions for producing VCM are relatively similar from one firm to another. Fourth, the number and size of VCM buyers are not likely to constrain the pricing discretion of VCM producers. Fifth, the frequency, size and public character of VCM transactions are not likely to complicate collusive efforts. Sixth, demand and supply conditions in the VCM market are likely to remain relatively stable over the next few years. Seventh, vertical integration between VCM and PVC producers facilitates efforts to collude in the VCM market.

The foregoing structural factors strengthen the presumption that the acquisition is likely to have anticompetitive effects in the VCM market. The generalized and self-serving testimony of industry members that the industry is competitive does not rebut the strong evidence that the acquisition is likely to have anticompetitive effects. The attached order will remedy the anticompetitive effects of the acquisition by requiring Goodrich to divest the VCM plant it acquired from Diamond.

Issued: March 15, 1988.

CHAIRMAN OLIVER, CONCURRING IN PART AND DISSENTING IN PART

I. Introduction

I concur with the majority in its determination that "the acquisition is not likely to have anticompetitive effects in the PVC market." Although PVC appears to define a relevant antitrust market, a PVC conspiracy is unlikely because, *inter alia*, the PVC market is relatively unconcentrated, PVC is heterogeneous, production cost functions vary from one PVC producer to another, and successful monitoring would necessarily extend to the market for PVC products. Moreover, the acquisition does nothing that would substantially increase the likelihood of a PVC conspiracy.[1] However, I disagree with the majority's conclusion that the Goodrich acquisition may substantially lessen competition by creating an appreciably increased danger of collusion in the VCM market, and would affirm the Administrative Law Judge's order dismissing the case.

The VCM and PVC markets are closely related. PVC can be produced only from VCM, and almost all VCM is used to produce PVC. VCM produced and used by integrated firms is internally produced, internally shipped (often by pipeline) and internally priced. Because some VCM producers are integrated downstream into PVC production and others are not, there are basically three different groups that would be directly affected by collusion in either of these markets. First, there are the integrated VCM/PVC producers.[2] Approximately one half of VCM and PVC production comes from this group. Second, some firms produce only VCM for sale (nonintegrated VCM producers.[3] Third, there are nonintegrated PVC producers that must have a supply of VCM in order to operate.[4]

Tacit collusion in the VCM market would be difficult to achieve or maintain for several reasons. First, the incentives of the two groups of VCM producers in that market, integrated and nonintegrated firms differ materially, despite the majority's assumptions to the contrary.[5] The integrated VCM/PVC producers have a common interest in undercutting the PVC sales of the nonintegrated PVC producers which, if successful, would also erode any cartel price tacitly agreed on by the nonintegrated VCM producers. Second, collusion is only possible where price or output restrictions can be effectively monitored. For a VCM conspiracy to be successful in this case, all participants would have to be assured that the others were not cheating on the cartel price. However, the quantity of VCM produced and used by integrated firms cannot be directly observed by other firms. Levels of VCM output from integrated firms may only be monitored indirectly, from the sales of PVC resins and other PVC end products that the integrated firms market. But many of the same factors that make collusion difficult in the PVC market are also present in the VCM market, making the efforts of the nonintegrated VCM producers to monitor the integrated VCM PVC/VCM producers in their sales of PVC sufficiently difficult to defeat an attempt to cartelize the VCM market.

In evaluating whether a merger may substantially lessen competition,we necessarily attempt to make a prediction of the potential for certain future conduct. We need not achieve complete certainty in this predictive process, but unless we have a plausible theory and credible evidence explaining why a merger is likely to increase substantially the risk of collusion (or the degree of effective collusion) we have no basis under section 7 of the Clayton Act to find the merger illegal. Lacking any theory or evidence apart from somewhat increased levels of concentration, we have no basis for reversing the ALJ's holding that the acquisition is not likely to substantially lessen competition.

II. Incentives of Integrated and Nonintegrated Firms to Collude

The majority opinion concedes that an effective collusive strategy to obtain supracompetitive prices in the VCM market would require the participation of both the integrated VCM/PVC producers and the nonintegrated VCM producers.[6] The majority recognizes, however, that the nonintegrated VCM firms are at a disadvantage in reaching and enforcing tacit collusion because they cannot directly monitor the output or price of VCM that is internally consumed by the integrated VCM/PVC producers.[7] As a result, the majority opinion suggests that the nonintegrated VCM producers "can rely on the integrated firms as a group to monitor their integrated competitors." [8] In effect, then, the majority posits dual cartels, one among the nonintegrated VCM firms and another with the integrated VCM/PVC firms monitoring the PVC sales of one another, reaching overall agreement on VCM prices and output. Because of the adverse effect a collusive agreement would be likely to have on the nonintegrated PVC producers, however, the integrated VCM/PVC producers

---

[271] *Marathon Oil Corp. v. Mobil Corp.*, 669 F. 2d at 381.

[1] When there is no threat of single firm market power, the controlling question is "whether the challenged acquisition is likely to hurt consumers by making it easier for the firms in the market to collude, expressly or tacitly, and therefore force prices above or further above the competitive level." *Hospital Corporation of America*, 106 FTC 361, 464 (1985), *aff'd* 807 F.2d 1381 (7th Cir. 1986), *cert. denied*, ____ U.S. ____, 107 S.Ct. 1975, (1987).

[2] After the acquisition, these included Goodrich, Formosa, Georgia Pacific, Borden and Conoco.

[3] This group included Dow, Shell, and PPG after the acquisition at issue here.

[4] There were eight principal firms in this category after the acquisition: Air Products, CertainTeed, Keysor–Century, Occidental, Pantasote, Shintech, GenCorp, and Tenneco.

[5] *See* Majority Opinion at 94–96, 103–104.

[6] Majority Opinion at 94.

[7] *See* Majority Opinion at 99.

[8] Majority Opinion at 99. In effect, the collusive effort proposed by the majority would include agreement on open market sales among all VCM producers and a separate collusive agreement among the integrated VCM/PVC producers at the PVC level. For the whole scheme to work this latter agreement would have to consist of agreed upon prices and output levels of PVC that incorporated the cartel's "market" price for VCM.

would have a significant incentive to undercut any collusive efforts.[9]

As the majority recognizes, to remain in the market the nonintegrated PVC firms would have to accept increases in the price of VCM imposed by the cartel. Because VCM is used in a fixed proportion with other inputs to produce PVC, and there is no commercially available substitute for VCM, nonintegrated PVC producers could not shift to another imput. They would be forced to pay any supracompetitive price for VCM.[10] Since the demand for PVC is relatively inelastic, the nonintegrated PVC producers would probably be able to pass along much of the price increase. Unless they were able to pass along all of the price increase, however, their profit margins would necessarily decline, as would their sales volume.[11]

The nonintegrated PVC producers compete, of course, with the integrated VCM/PVC producers. Because the integrated VCM/PVC producers need not charge themselves the same VCM prices that would be forced on the nonintegrated PVC producers, they have the ability to undersell the nonintegrated PVC producers.[12] If the price of VCM rose, integrated VCM/PVC firms would have an incentive to raise PVC prices, but by a smaller amount than the nonintegrated PVC producers would have to charge to take account of the higher cartel price of VCM. In this way, integrated producers could enjoy both increased profits per unit and increased market share.

Integrated producers would face such incentives until the conspiracy failed, with nonintegrated PVC producers, squeezed by higher VCM costs and price competition in the PVC market, reducing VCM purchases and PVC sales or exiting the industry. A decrease in the market share of nonintegrated PVC firms would ultimately reduce the market of the nonintegrated VCM firms. As a result, the nonintegrated VCM firms only have an incentive to increase the price of VCM if they can be assured that the integrated VCM/PVC producers will not undersell the nonintegrated PVC producers. Unless there are strong assurances that this will be the case, nonintegrated VCM firms will not undertake a collusive strategy that results in eroding their own market share.

III. Ability of Nonintegrated VCM Firms To Monitor Integrated Firms

In order for a collusive strategy to succeed, VCM producers would not only have to develop a consensus on price and output levels,[13] they must also be able to enforce that tacit agreement. The necessary prerequisite for any retaliatory conduct is the ability to monitor the conduct of competitors and detect cheating on the cartel. The task of monitoring a collusive arrangement in the VCM market would be extremely difficult, and would fail for many of the same reasons the majority concludes that collusion in the PVC market is unlikely in this case.[14] In order to be successful, a VCM cartel would be required to observe the actions of the integrated VCM/PVC producers at three stages of the production process: First, open market sales of VCM; second, sales of PVC; and third, sales of products fabricated from PVC by those firms integrated further downstream into that stage.

Perhaps the easiest task of monitoring involves open market sales of VCM. If a consensus price could be established, nonintegrated VCM firms would be able to detect cheating by integrated firms selling to nonintegrated PVC producers at less than the cartel price. The opposite is also true, however. Integrated firms would be able to determine the market price being charged to nonintegrated PVC producers. To the extent that integrated firms can obtain some of these sales, they can obtain the benefits of the supracompetitive pricing being charged to the nonintegrated PVC producers. Similarly, knowing the market price for VCM, they are in a better position to undercut the price that the nonintegrated PVC firms ultimately charge.

As the majority recognizes, the nonintegrated firms are at a relative disadvantage in monitoring the integrated VCM/PVC producers. Because most of the VCM produced by the integrated firms is not sold on the market but consumed internally,[15] the only recourse of the nonintegrated VCM producers it to attempt to determine whether the integrated VCM/PVC firms are including the consensus VCM price in their PVC prices and producing the appropriate amount of PVC.

This task is likely to be quite difficult for the nonintegrated VCM producers to accomplish. First, there are a large number of purchasers of PVC resin that must be monitored.[16] Moreover, many PVC costs and outputs must be monitored. There are different grades of PVC and different quality levels within grades. In addition, individual plant operating costs and transportation costs vary. Thus the opportunities for the integrated firms to cheat are very great.[17]

The majority suggests that the nonintegrated VCM producers can use

---

[9] Another point where the incentives of the VCM producers vary is in the situation where VCM producers are integrated further upstream into production of chlorine (and caustic soda). Other VCM firms have long term contracts to purchase chlorine at a fixed price.

VCM is produced from ethylene, a petroleum product, and chlorine. Chlorine is itself produced by applying an electrical current to brine, yielding 1.1 pound of caustic soda for every pound of chlorine. When there is a large demand and high price for caustic soda, as there was in 1980, excess chlorine is produced. As a result, chlorine costs for this group of integrated firms (e.g. PPG and Dow) will vary with the demand for caustic soda. *See, e.g.*, RX 57230 (Diamond Shamrock's cost for chlorine estimated to be a negative .1 cents per pound). Chlorine cannot be easily stored, and when excess chlorine is produced there is a strong incentive to use it in VCM production.

VCM production costs may therefore differ significantly between firms that purchase chlorine at prices set in long term contracts and integrated firms subject to fluctuations in chlorine production and chlorine prices. This factor increases the difficulty of colluding on VCM prices and output.

[10] Of course cartels in both the VCM and PVC markets are extremely unlikely to arise, because an entity controlling one stage of a multi-stage production process will earn the largest profit when the other stages perform competitively. *See, e.g.*, R. Posner and F. Easterbrook, *Antitrust Cases, Economic Notes and Other Materials* 803–07, 875–86 (2d ed. 1981).

[11] In the hypothetical case in which the demand for PVC was perfectly inelastic, PVC producers could pass on all of the price increase and would not experience a decline in their sales volume. The majority does not suggest that this hypothetical case exists in the real world.

[12] The integrated VCM/PVC firms also enjoy an advantage over a VCM cartel because they can vary in prices of the different grades of PVC that they sell. The nonintegrated VCM firms, by contrast, must sell all of their VCM at the supracompetitive price, and the nonintegrated PVC firms will have to pay for, and pass along, an increased price for all grades of PVC that they produce.

[13] The majority suggests that the integrated VCM/PVC producers would "passively welcome collusion in the [VCM] market—in the sense that they will profit from declining to increase VCM production in response to higher VCM prices . . . ." Majority Opinion at 98. They might profit even more by increasing their output, a step they are quite likely to take if that output cannot be readily observed.

[14] This presumes that a collusive strategy would be successful in raising prices in the first place. As the majority points out, pp. 85–89, the sales arrangements among the firms in the VCM and PVC market make them very sensitive to price fluctuations. If a group of firms attempted to create a cartel price for VCM, these efforts would be detected very quickly. Even if successful, however, the integrated VCM/PVC firms would still have an incentive to undercut the cartel price in their PVC sales.

[15] The use of pipelines contributes to the difficulty of determining directly the amount of VCM produced by the integrated VCM/PVC firms.

[16] A 1979 Goodrich study indicated that 300 PVC resin buyers accounted for 80% of the market. CX 53J–K.

[17] Even if the integrated firms can determine that other integrated firms are cheating (which may be quite difficult), it is still to their advantage to do so if the nonintegrated firms do not also learn this fact.

VOL 53 ISS 72 APR 14 1988 UMI

the nonintegrated PVC producers to assist in their efforts to monitor the PVC sales of the integrated VCM/PVC firms. However, if the nonintegrated PVC producers learn that they are being undersold, they would be likely to report that fact to the nonintegrated VCM producers. The nonintegrated PVC producers' only alternative to losing market share would be to demand lower prices from the VCM producers, which, if successful, would itself defeat the cartel.[18]

The final stage at which monitoring would be necessary in order to detect cheating on the cartel is in fabrication of products from PVC resins. Four of the five integrated VCM/PVC producers are vertically integrated further downstream into fabrication of products from PVFC.[19] As long as these integrated firms have the capability of substantially increasing their output of PVC fabricated products, successful implicit collusion in the VCM market would have to include agreement on the optimal amount of PVC to be produced, as well as the output and pricing of PVC fabricated products and concomitant monitoring. Unless the nonintegrated VCM producers are able to monitor price cutting by integrated firms at that stage, there is a significant opportunity for the integrated VCM/PVC firms to expand production of those end products and increase market share at the expense of the nonintegrated PVC producers. This is likely to be very difficult to monitor.

As a result, tacit collusion among all VCM producers would fail unless it is possible to monitor not only all open market sales of VCM to nonintegrated PVC producers, but also the PVC output of the integrated VCM/PVC producers, as well as their production of materials fabricated from PVC. The same factors that lead the majority to conclude that collusion is not a threat at the PVC level lead me to conclude that collusion at the VCM level is also not feasible.

IV. Conclusion

Unlike the majority, I believe that the vertical integration present in the VCM and PVC markets makes collusion on VCM extremely difficult, if not impossible. Not only do the integrated VCM/PVC producers have strong incentives to jointly undercut any cartel price for VCM, the process of detecting any cheating would be so complicated that it would not be likely to succeed. I would affirm the ALJ and dismiss the complaint.

Issued: March 15, 1988.

Separate Statement of Commissioner Azcuenaga, With Whom Commissioner Bailey Joins, Concurring in Part and Dissenting in Part

I concur in the opinion of the majority insofar as it finds that the acquisition by B.F. Goodrich of Diamond Shamrock Plastics Corporation from Diamond Shamrock Chemicals Company may substantially lessen competition in the market for vinyl chloride monomer ("VCM") in violation of section 7 of the Clayton Act. Unlike the majority, I would also find liability in the market for polyvinyl chloride ("PVC"). I disagree with the presumptions based on concentration data that the majority employs and with their analysis of competitive conditions in the market for PVC.

As the majority recognizes, the level of and increase in concentration resulting from this acquisition in both the VCM and PVC markets create a rebuttable presumption of anticompetitive effects. The Department of Justice 1984 Merger Guidelines divide the range of concentration as measured by the Herfindahl-Hirschman Index ("HHI") into three tiers: Unconcentrated, moderately concentrated and highly concentrated. Goodrich's acquisition increased the HHI by 221 points to 1131 [1] in the PVC market and by 304 points to 1663 in the VCM market.[2] Both markets fall within the moderately concentrated range (post-acquisition HHI between 1000 and 1800), in which the Department has said it is more likely than not to challenge acquisitions that increase the HHI by 100 points or more. When an acquisition falls in this middle range, the Guidelines anticipate a careful review of competitive conditions, and the Commission has said that an "especially careful review of a number of industry characteristics in addition to concentration" is needed to assess the likely competitive effects of the transaction. *Weyerhaeuser Co.*, 106 F.T.C. 172, 280 (1985).[3]

Having established that the concentration in each market falls within the middle tier, the majority then subdivides that tier and assigns to each segment a different presumption of liability before proceeding to an analysis of other competitive conditions. Although both markets are moderately concentrated, the majority concludes that because the PVC market is moderately concentrated "only by the barest of margins," the presumption of anticompetitive effects in that market is "even weaker." Slip op. at 57–58. The slightly higher numbers in the VCM market create a "relatively strong presumption of anticompetitive effects," according to the majority, which can be rebutted only by "relatively strong evidence from other factors." Slip op. at 63. This emphasis by the majority on relatively minor differences in concentration statistics suggests that the numbers have a scientific predictive value that does not exist.

The Commission often has qualified the significance of concentration data as a predictor of market power, *e.g.*, FTC Statement Concerning Horizontal Mergers, 2 Trade Reg. Rep. (CCH) ¶ 4516, at 6901–3 (June 14, 1982) ("FTC Statement"), and the Merger Guidelines also make clear that "the numerical divisions suggest greater precision than is possible with the available economic tools and information." Section 3.1. We use market share data in a section 7 case "as an important preliminary surrogate measure of market power," FTC Statement at 6901–3, but statistics "provide only the starting point for analyzing the competitive impact of a merger." Merger Guidelines § 3.11. Because of the limited predictive power of market share and concentration data, a careful evaluation of other indicators of market power usually is necessary.

---

[18] The nonintegrated PVC producers have an incentive to seek lower prices in order to maintain or increase their competitive position in any event, and might well claim that they are being undersold even if they are not.

[19] Goodrich estimated that Borden utilized 39% of its PVC capacity internally. RX 200D. Borden's internal use of PVC consisted primarily of the production of PVC film for meat and produce packaging and pallet stretch wrap. Approximately 29% of Borden's 1982 PVC capacity was devoted to this use. The remaining 10% of captive PVC production was utilized in the production of coated fabrics. RX 200E.

Goodrich's own captive PVC production was used to make pipe, windows, packaging, siding, wire and cable. In 1981 Goodrich had 46.6% of the siding market, 15.6% of the pipe market, 16.5% of the window market, 3.4% of the packaging market, and 30.0% of the wire and cable market.

Formosa's captive production of PVC is used to make pipe, film, and sheet. RX 247A.

[1] I.D.F. 53 *in camera;* slip op. at 54 (based on actual production). These figures correctly attribute all of Diamond Shamrock's Deer Park PVC plants to Goodrich, because the sale of Deer Park #5 to Goodrich precluded the sale of the other Deer Park plants to another firm and Diamond agreed, until the plants were closed, to operate them for Goodrich. I.D.F. 10–14; slip op. at 7–10 & n. 12. Goodrich perceived the arrangement as "the only option that keeps Diamond from being a disruptive force in the market place." *Id.* at 10.

[2] I.D.F. 202; slip op. at 61 (based on actual production).

[3] In *Weyerhaeuser*, the challenged acquisition increased the HHI by 211 points to 1166, "within the lower end of the mid-range of the Department of Justice Merger Guidelines." 106 F.T.C. at 280.

Although the Commission has said that "more persuasive" evidence will be needed to rebut a *prima facie* case when a market is highly concentrated than when the market is moderately concentrated, *Grand Union Co.*, 102 F.T.C. 812, 1055 (1983) (dicta),[4] I know of no authority to support the majority's differing presumptions when concentration data in two separate markets, both of which are moderately concentrated, are similar to the two before us. The Merger Guidelines do not establish a different standard of review for mergers with different market share data, except to suggest, as the Commission did in *Grand Union*, that the presumption of anticompetitive effects based on statistics will be difficult to rebut when the market is highly concentrated.[5]

The majority's presumptions add nothing to merger analysis in terms of predictability or ease of application. The majority infers that in the *Weyerhaeuser* case, the Commission decided that the concentration data created only a weak presumption of anticompetitive effects, and the majority suggests that non-statistical evidence to rebut the presumption of illegality in the PVC market "need not be as strong as it was in *Weyerhaeuser*." Slip op. at 58. In *Weyerhaeuser*, the Commission dismissed the complaint based on an evaluation of several market characteristics including, in particular, ease of entry. I see no easy or useful way to compare the weight of evidence in *Weyerhaeuser* concerning industry characteristics such as ease of entry in the west coast market for corrugating medium (a paper product) with the weight of the non-statistical evidence concerning the PVC market, in which the majority finds substantial barriers and impediments to entry. Slip op. at 31. Simply to attempt such a comparison between highly fact-specific cases would complicate merger analysis even further without any apparent off-setting benefits.

The terms used by the majority may well raise more questions than they put to rest. Is the presumption of liability in the market for VCM "relatively strong" only as compared to the "even weaker" presumption in the PVC market? In the context of the Herfindahl-Hirschman Index, does "relatively strong" mean "slightly weak," "somewhat strong," "quite strong" or plain old everyday "average?" How does the "relatively strong" presumption for VCM compare to the presumption that applies when the HHI rises 100 points and exceeds 1800? It might be possible to work through this exercise, but further attempts to refine the presumptions stemming from concentration figures are unlikely to be useful until those figures can be shown to correspond more precisely to market power. The temptation to seek comfort from the apparent certainty of numbers is understandable, but we should be wary of false comforts.

In addition to finding that the PVC and VCM markets are moderately concentrated, the majority finds "substantial barriers and impediments to entry" in both markets and finds that "fringe firms are unlikely to constrain collusive conduct" in either market. Slip op. at 31. The only significant difference between the two markets for the purpose of merger analysis is the number of customers. PVC purchasers number in the hundreds, I.D.F. 216; the only purchasers of 96% of VCM consumed in the United States are the small number of firms that produce PVC. I.D.F. 289. These facts suggest that collusion would be easier in the PVC market than in the VCM market, if, as the majority correctly assumes, slip op. at 84–85, collusion is easier for sellers in markets with a large number of buyers.

The majority nevertheless identifies three reasons (in addition to lower concentration) for concluding that there is no violation in the market for PVC. First, PVC is said to be "relatively heterogeneous." Second, the majority finds that costs "vary significantly" among PVC producers. Finally, although the price elasticity of PVC is "relatively low," the majority concludes that the ability of PVC producers to raise prices "may be constrained to some degree by the higher price elasticity of demand" for PVC end products. Slip op. at 113. None of these conclusions is supported by the record. In fact, PVC is a homogeneous product, the costs of producing PVC do not vary significantly among firms and the elasticity of demand for PVC is low and unlikely to constrain collusion.

We are charged with responsibility for making predictive judgments under section 7 on the basis of all the relevant facts.[6] The fact-specific analysis of the two markets at issue here discloses no material differences between them and shows that anticompetitive effects are likely in each. Indeed, unless one accepts the majority's differing presumptions based on market share and concentration data, the case for liability in the PVC market is at least as strong as the case for liability in the VCM market.[7]

1. Homogeneity of PVC

The majority concludes that PVC is "considerably more heterogeneous" (compared, presumably, to VCM), because it is produced in three grades and because producers face differing transportation costs. Slip op. at 65–66. This heterogeneity, according to the majority, is one of the reasons collusion is unlikely in the PVC market. I disagree. On this record, the PVC market is not one in which product differentiation is important.

In terms of its physical characteristics, PVC is boringly homogeneous. PVC is classified in three general, differently priced categories—pipe, general purpose and specialty PVC. Pipe grade PVC historically has been the lowest priced of the three grades. General purpose PVC sells at a small premium over pipe resin, and specialty resin usually commands a small premium over general purpose PVC.[8] More than 75% of bulk and suspension PVC is considered by industry members to be a "commodity" product, with no significant quality differences among producers. I.D.F. 87 & 90. Although there may be some quality differences among specialty resins produced by different firms, industry witnesses testified that any producer could deliver an acceptable substitute specialty resin.[9]

Industry witnesses also testified that buyers of commodity grade PVC will switch suppliers over small differences in price, I.D.F. 87 & 90; R.A.B. at 36, and that no specialty resin supplier can command a price higher than that of competing suppliers of the same grade. I.D.F. 88. The willingness to switch

[4] In *Grand Union Co.*, the Commission found no Section 7 violation "for reasons other than the level of concentration and . . . market share." 102 F.T.C. at 1000.

[5] Merger Guidelines § 3.11(c). The Commission has said that the value of non-market share evidence will be high when it consistently points in the same direction, particularly when the market shares are in the low and moderate ranges, and that non-market share factors may be given less weight when concentration is high. FTC Statement at 6901–4.

[6] "(C)onsiderations [other than concentration statistics] often do not lend themselves to precise mathematical expression, but they can be more important than quantitative measures of concentration." Echlin Manufacturing Co., 105 F.T.C. 410, 483–84 (1985).

[7] If this were an exercise in prosecutorial discretion, the practical effect of the majority's decision in the PVC market would be to raise the dividing line identified in the Merger Guidelines between unconcentrated and moderately concentrated markets.

[8] H. Wheeler 1750–51; DiLiddo 3260; Schaefer 1076; R.A.B. at 36.

[9] Schaefer 1070; Becker 1331–33.

suppliers over small price differences and the inability of any supplier to obtain a price premium tend to confirm that PVC is homogeneous within grades.[10] Buyers would be unwilling to switch suppliers to gain small price advantages if there were other important differences in the PVC produced by different firms, and firms could command price premiums if they offered a unique product.[11] The record shows that the physical qualities of PVC place it as the homogeneous end of the product spectrum and do not impair the ability of PVC firms to collude.[12]

The majority also treats the cost of transporting PVC as an aspect of heterogeneity and concludes that transportation cost differences among PVC firms are likely to complicate collusion. Slip op. at 68 & 80. To support its conclusion, the majority simply recites the fact that PVC plants are situated in various locations around the country. Slip op. at 68–69.[13] This information, however, tells us nothing, because the record does not show the locations of the PVC customers served by the PVC plants. In fact, the record is largely silent as to the cost of shipping PVC to customers. In more than 5000 pages of testimony, one witness testified that "freight and other things" could provide "small differences in pricing,"[14] and the respondents' economic expert asserted, without citing any supporting material, that locational differences were "likely to affect" the cost of serving customers.[15]

Even if the cost of shipping PVC to customers differs among firms, any differences are unlikely to be sufficient to diminish the likelihood of collusion in the industry. If transportation cost differences were significant, we would expect to see a series of regional markets. Instead, the record shows that the market is national,[16] that PVC producers sell in the national market on the basis of delivered price and that price differences among suppliers are as small as one-quarter to one-half cent per pound. These facts suggest that transportation costs do not cause substantial cost differences among firms that would complicate collusion.

2. Costs of Producing PVC

The majority concludes that the costs of producing PVC vary significantly among firms, making collusion more complicated and, therefore, less likely. The differing costs identified by the majority are the costs of operating reactors of different sizes and the costs of transporting PVC to customers. Slip op. at 77–78. As discussed in the section above, differences in the cost of transporting PVC, which are also treated by the majority as an aspect of heterogeneity, are insignificant. Although operating costs may vary among firms, the record also does not support the majority's conclusion that the differences are significant.

PVC reactors of different sizes have different production costs, but, as the majority recognizes, production costs do not vary within grade but "from one PVC resin grade to another." Slip op. at 79. Commodity PVC, which accounts for about 75% of industry sales, is produced in large reactors. Industry witnesses testified that the costs of producing PVC in large reactors are similar among firms. *See* slip op. at 78–79. Smaller reactors operate at a cost disadvantage when compared to large reactors, but smaller reactors produce specialty PVC resins, which occupy a special niche in the market and enjoy a price premium over commodity PVC resins. Indeed, one of Diamond Shamrock's goals in the PVC market was to occupy the higher priced specialty market niches,[17] and Diamond Shamrock's position in the specialty resin market was an attribute that made the acquisition attractive to B.F. Goodrich.[18] The cost differences related to different size reactors are likely to be significant, but those cost differences are unlikely to frustrate collusion when firms face similar costs for the same grades of PVC.

To show that PVC firms face significantly different operating costs, the majority cites RX 1168A–B, *in camera*. This exhibit is based on a "cost study" prepared by a Goodrich employee, who estimated the costs of other firms but did not have access to actual cost data from any firm except Goodrich itself.[19] Not surprisingly, the study shows a range of operating costs for PVC plants that is virtually identical to the range of actual costs at Goodrich's PVC plants. The range of costs shown for competing firms (and cited by the majority) is 14.30 cents per pound to 21.94 cents per pound. The same document shows that Goodrich's operating costs for its PVC plants ranged from 14.30 cents to 21.53 cents per pound.[20] This document at best supports a conclusion that there may be substantial intra-firm cost variations, but it tells us nothing about cost differences among firms or their impact on competition.[21]

The record shows that PVC producers consistently agree to meet the lower prices of their competitors, which a firm presumably would not do if it suffered a persistent and significant cost disadvantage. On this record, I conclude that although the costs of producing PVC may differ among firms, the differences are not significant and are not likely to make collusion difficult.[22] As the majority observes in discussing the costs of producing VCM, "[a]lthough respondents have identified some minor differences [among firms], absolute congruence is not needed to heighten the likelihood of" collusion. Slip op. at 83.

3. Price Elasticity of Demand for PVC

The majority also concludes that "although the price elasticity of demand for PVC is * * * relatively low," attempts to collude on the price of PVC may be constrained by the elasticity of demand for end products manufactured

[10] DiLiddo 3372; Disch 707–09; Schaefer 1200–02; McMath 1951. These witnesses testified that PVC buyers will change suppliers for price differences as low as one-quarter and one-half cent per pound.

[11] The respondents' economic expert testified that the physical heterogeneity of PVC was "not severe," as evidenced by the lack of systematic price discrimination. Klass 5363.

[12] *See* United States v. Container Corp., 393 U.S. 333, 336 (1969) ("While containers vary as to dimensions, weight, color, and so on, they are substantially identical, no matter who produces them, when made to particular specifications."); FTC v. Bass Brothers Enterprises, Inc., 1984–1 Trade Cas. (CCH) ¶ 66,041, at 68,612 (N.D. Ohio 1984) ("Carbon black is a homogeneous, fungible product. Although it is produced in numerous different grades . . . in fact nearly all of the producers produce basically the same grades and types.").

[13] The majority also cites RX 1168, slip op. at 69 n.152, but this document is based on RX 245 and does not show the actual costs of firms. *See* notes 19 & 21 *infra* & accompanying text.

[14] H. Wheeler 1749; *see also* Weber 1800.

[15] Klass 4311.

[16] The parties stipulated that the appropriate market is national, and the majority found that a national market "is consistent with the record evidence." Slip op. at 15.

[17] Becker 1327–28; Weber 1794–98; Arp 3519.

[18] DiLiddo 3205–06, 3209, 3211–13 *in camera*; *see* slip op. at 8–10.

[19] RX 245 *in camera*, which contains neither calculations nor method of calculation, was based on unspecified information from "public sources" and an employee's "best estimates" from those sources. DiLiddo 3225. RX 1168A–B, cited by the majority to show different PVC production costs, slip op. at 80 n.179, is based on and has the same deficiencies as RX 245.

[20] This difference of 7.64 cents apparently reflects the difference between operating large reactors in which commodity resins are produced and operating smaller reactors in which specialty resins are produced. *See* slip op. at 79 n.177.

[21] Even the respondents' economic expert testified that the numbers provided on RX 245 *in camera* should not be viewed as "hard numbers." Klass 5323.

[22] Nor do differing degrees of vertical integration suggest different production costs. In discussing PVC production costs, the respondents' economic expert said that if costs for integrated firms were clearly lower, then nonintegrated firms would not be able to survive. He concluded that the data in the record "clearly indicate that there is not such a uniform advantage." Klass 5337–38.

BEST COPY AVAILABLE

from PVC. Slip op. at 113.[23] The record, however, shows not only that the elasticity of demand for PVC is low, but also that the price of PVC could be raised above competitive levels without causing the purchasers of end products to switch to other products. Industry witnesses testified that changes in PVC prices do not affect the demand for products made from PVC.[24] For example, a 1983 B.F. Goodrich study, quoted by the majority, slip op. at 74–75, stated:

> PVC pipe manufacturers appear to have plenty of room for price increases before approaching the price levels of most competing materials. (Even if the prices were identical, PVC would still have the added advantage of lower installed cost.)

CX 247A, *in camera*.

At some point, it is no doubt true that an increase in the price of PVC would cause some consumers to substitute cheaper products for products made from PVC, but the record suggests there is ample room before that point is reached for a successful agreement to raise prices above competitive levels.

4. Vertical Integration

The respondents maintain that the different degrees of vertical integration among PVC firms and among VCM firms would make collusion more difficult in either market.[25] Aspects of vertical integration, like other aspects of market structure, may indeed affect the ease of reaching or enforcing a collusive agreement. *See* R. Posner, *Antitrust Law* 60 (1976); F. Scherer, *Industrial Market Structure and Economic Performance* 204–05 (2d ed. 1980). The respondents, however, have not gone appreciably beyond general assertions of theory to show why in this case, where other relevant facts consistently point to the ease of collusion in both the PVC and VCM markets, vertical integration nevertheless makes collusion unlikely.

I find confusing the majority's lengthy response to the respondents' vertical integration argument, which gives the argument more credit than is due.[26] I do agree, however, with the majority's conclusion that both integrated and nonintegrated producers of VCM have strong incentives to collude and could readily detect cheating from a collusive agreement. If, as the majority concludes, PVC firms could accept and pass on to their customers a collusive VCM price increase, slip op. at 111, it must also be true that they could pass on a collusive PVC price increase.[27] The majority opinion therefore suggests, and I agree, that vertical integration does not deter the ability of PVC firms to collude.

An analysis of the record shows conditions that are conducive to collusion in the PVC market and in the VCM market. Although we can speculate on the extent to which the interests of integrated and nonintegrated firms might complicate collusion, the record shows nothing about differing incentives or other differences stemming from vertical integration that suggests that collusion would be unlikely in either market.

With respect to the market for PVC, I dissent.

Issued: March 15, 1988.

[FR Doc. 88–8019 Filed 4–13–88; 8:45 am]

BILLING CODE 6750–01–M

[23] This conclusion is inconsistent with the majority's statements that "the price elasticity of demand for most PVC end products is relatively low," slip op. at 75, and that "the demand for PVC is sufficiently inelastic to make it likely that an increase in VCM prices can profitably be passed along to PVC customers." Slip op. at 111. If PVC producers can pass on a cost increase (such as a VCM price increase), then presumably they could also profitably pass on a collusive PVC price increase.

[24] Schaefer 1141; Disch 664–80; Becker 1325–36; H. Wheeler 1753–54; Weber 1811–12, 1828. The majority is correct in rejecting the assertion of the respondent's expert witness that PVC is price elastic. Slip op. at 75 n.168.

[25] The respondents argue that differing degrees of vertical integration increase the number of areas with respect to which a consensus would have to be reached, complicate price and output monitoring and contribute to an environment of differing goals, incentives, costs and profit opportunities among firms. R.A.B. at 40 & 69.

[26] We are concerned in this case with horizontal market power, the ability to raise price above competitive levels. Vertical integration does not affect horizontal market power, which can be exercised in either or both of the vertically related markets. *See, e.g.*, R. Bork, "Vertical Integration and the Sherman Act: The Legal History of an Economic Misconception," 22 U. Chi. L. Rev. 157, 195–98 (1954).

[27] *See* R. Bork, *supra* note 26, at 196 n.128; F. Warren-Boulton, *Vertical Control of Markets* 51–55 (1978).

SECURITIES AND EXCHANGE COMMISSION

17 CFR Part 200

[Release Nos. 33–6764; 34–25558; 35–24616; 39–2156; IC–16353; IA–1111; File No. S7–32–87]

Expedited Publication of Interpretative, No-Action and Certain Exemption Letters

AGENCY: Securities and Exchange Commission.

ACTION: Final rule.

SUMMARY: The Commission announces the adoption of amendments to its regulations on Information and Requests to provide for publication of interpretative, no-action, and certain exemption letters, except for correspondence related to certain trading practices rules, as soon as practicable after such letters are sent or given to requesting parties unless temporary confidential treatment is granted.

EFFECTIVE DATE: May 16, 1988.

FOR FURTHER INFORMATION CONTACT: Michael Hyatte, (202) 272–2573, Office of Chief Counsel, Division of Corporation Finance, Securities and Exchange Commission, 450 Fifth Street, NW., Washington, DC 20549.

SUPPLEMENTARY INFORMATION: The Commission is adopting revisions to rule 81 under its regulations on Information and Requests.[1]

I. Executive Summary

On September 8, 1987, the Commission proposed for public comment amendments to rule 81 to provide for expedited publication of interpretative, no-action and certain exemption letters.[2] The proposal called for immediate publication of such letters except in cases where confidential treatment had been granted or when the request related to trading practices rules[3] under the Securities Exchange Act of 1934 (Exchange Act).[4] After consideration of comments received from the public,[5] the Commission has determined to adopt the final rule as proposed.

Two commentators suggested to the Commission that the rule should make no exception for trading practices correspondence.[6] In response to these comments, the Commission is today issuing a companion release[7] proposing a further amendment to the rule that would provide for prompt publication of trading practices correspondence and thus treat all correspondence subject to rule 81 under uniform procedures.

[1] 17 CFR 200.81.

[2] Release No. 33–6740 (September 8, 1987) [52 FR 35115].

[3] 17 CFR 240.10b–6, 240.10b–7, 240.10b–8, 240.10b–13, and 240.13e–4. The amendments continue the practice of withholding publication of such requests and the staff's responses for 30 days. All these rules permit the Commission to grant exemptions from their terms without notice and opportunity for hearing.

[4] 15 U.S.C. 78a *et seq.*

[5] Five comment letters were received by the Commission. The letters of comment are available for public inspection at the Commission's Public Reference Room in File No. S7–32–87.

[6] Comment letter from Andrew M. Klein, *et al.*, American Bar Association, Section of Corporation, Business and Banking Law, January 4, 1988; comment letter from Joseph D. Hansen, New York State Bar Association, Banking, Corporation and Business Law Section, November 6, 1987.

[7] Release No. 33–6765 (Companion Release).

II. Discussion of Amendments

Since January 1, 1970, the effective date of rule 81, interpretative and no-action correspondence, reflecting the informal advice of the Commission's staff, has been made available to the public 30 days after the date of the staff's response, except in cases where confidential treatment for up to an additional 90 days has been granted. Recognizing the extent of public interest in this correspondence and the value of more timely publication of the staff's views, the Commission proposed in Release No. 33-6740 to make interpretative, no-action, and certain exemption [8] letters generally available as soon as practicable after the staff's response is sent or given to the requesting party, unless confidential treatment has been afforded. Because of concerns that correspondence under the trading practices rules might more typically involve matters sensitive to premature public disclosure, the Commission proposed that such correspondence would continue to receive delayed publication. The rule as adopted contains such an exception. However, as indicated in the Companion Release, the Commission is reconsidering the exception for trading practices correspondence.

Four of the five comment letters received expressed or implied general support for amendment of the rule to expedite publication of interpretative, no-action, and exemption correspondence.[9] A majority of the commentators shared the Commission's view that the public benefits of prompt publication under rule 81 are significant. As indicated in the proposing release, members of the public interested in federal securities laws rely substantially on this correspondence and in many instances the staff's no-action positions and interpretative views are the most comprehensive secondary source on the application of these laws.[10] Prompt publication as a general rule also avoids the undesirable impression of giving a "requesting party secret guidance from the Government on how to conduct its affairs," [11] where delayed publication may work to the prejudice of other members of the public without prompt access to the staff's views. The comments supporting more timely publication were not unanimous on the question of automatic exceptions to prompt publication for the trading practices rules, a subject discussed in detail in the Companion Release.

For cases where prompt publication of correspondence would adversely affect the business plans of a requesting party, temporary confidential treatment remains available under rule 81(b).[12] The amended rule does not change the procedures, standards or maximum duration of such treatment. No commentator suggested any inadequacy in the terms of rule 81(b). With temporary confidential treatment available under rule 81(b), premature disclosure of business plans may be prevented in an appropriate case, if the party so requests and the Commission's staff concurs.[13] At the same time, the public interest served by the availability of the staff's positions will be met in ordinary cases in which no substantial prejudice to legitimate business purposes arises through public disclosure. This rule's new general standard for prompt disclosure of this correspondence will ease administration of the rule by the Commission's staff, and, because public availability dates will normally be identical to the date of the staff's response, research and citation of this correspondence should be simplified.[14]

III. Cost/Benefit Analysis

The amendments neither impose additional reporting or record-keeping requirements nor significantly increase regulatory compliance costs. The principal benefit associated with the amendments is that they will allow more timely public inspection of requests for interpretative and no-action advice and certain exemption letters and the staff's responses. Expedited publication will assist the public's understanding of significant questions under the federal securities laws.

IV. Statutory Basis

The amended rule is being adopted under section 19 of the Securities Act of 1933; section 23 of the Securities Exchange Act of 1934; section 20 of the Public Utility Holding Company Act of 1935; section 319 of the Trust Indenture Act of 1939; section 38 of the Investment Company Act of 1940; section 211 of the Investment Advisers Act of 1940; and section 1 of the Freedom of Information Act.

List of Subjects in 17 CFR Part 200

Administrative practice and procedure, Freedom of Information Privacy, Securities.

V. Text of Amendment

In accordance with the foregoing, Title 17, Chapter II of the Code of Federal Regulations is amended as follows:

PART 200—ORGANIZATION; CONDUCT AND ETHICS; AND INFORMATION AND REQUESTS

Subpart D—Information and Requests

1. The authority citation for Part 200, Subpart D, continues to read as follows:

Authority: 80 Stat. 383, as amended, 31 Stat. 54, secs. 19, 23, 48, Stat. 85, 901, as amended, sec. 20, 49 Stat. 833, sec. 319, 53 Stat. 1173, secs. 38, 211, 54 Stat. 841, 855; 5 U.S.C. 552, 15 U.S.C. 77s, 78w, 79t, 77sss, 80a-37, 80b-11, unless otherwise noted.

2. 17 CFR 200.81 is amended by revising the section heading and paragraph (a); by removing the words "90 days after the expiration of such 30 days" and replacing them with the words "120 days from the date the response has been sent or given to such

---

[8] The rule as amended codifies the staff's practice of applying rule 81 procedures to exemption letters issued in situations where notice and opportunity for hearing are not required. *See* Release No. 33-6740, 52 FR at 35116.

[9] The Investment Company Institute (ICI) opposed amendment of the rule for administrative reasons. Comment letter from Mary K. Bellamy, Investment Company Institute, October 27, 1987. The reasons cited by the ICI for its opposition include concerns regarding inadvertent, premature release by the Commission staff of correspondence for which confidential treatment was granted and the possibility that under the proposed procedures notice to competitors of the staff's position might be given before the requesting party's actual receipt of the staff's response. These concerns can be addressed through internal staff procedures designed to eliminate inadvertent, premature disclosure of correspondence for which confidential treatment is granted and by the current staff practice of permitting the requesting party to obtain the staff's letter by messenger.

[10] 52 FR at 35115.

[11] Comment letter from Thomas R. Donovan, Chicago Board of Trade, October 6, 1987.

[12] The temporary confidential treatment afforded by rule 81(b), both in its present and amended forms, is not absolute. In the event of a request under the Freedom of Information Act, 5 U.S.C. 552 *et seq.* (FOIA), correspondence with the staff, the staff's response or both would be disclosable to the FOIA requestor at any time prior to publication, except where there is an applicable exemption under the standards of section 552(b) of FOIA.

[13] If the staff intends to deny confidential treatment, the procedure described in rule 81(b) is followed. In such cases, the staff will inform the requesting party of its intent to deny confidential treatment, a determination made without reference to the merits of the substantive request, and allow 30 days for the requesting party to withdraw the letter. This procedure is followed because the request for the staff's advice is voluntary and should not involve the risk of compelled disclosure of the requesting party's business plans without its consent.

[14] Persons submitting correspondence subject to rule 81 are reminded of the procedural requirements set forth in the Note following paragraph (b) of the rule. Matters concerning the appropriate format and number of copies are discussed in Releases No. 33-6253, 45 FR 72844 (October 28, 1980), and 33-6269 (December 23, 1980), both regarding procedures employed by the Divisions of Corporation Finance and Market Regulation. The parallel procedures of the Division of Investment Management are described in Release No. IC-6330, 36 FR 2600 (January 25, 1971).

person" in the first sentence of paragraph (b); by revising the first sentence of the Note to paragraph (b); and adding a sentence to the end of paragraph (c); as follows:

§ 200.81 Publication of interpretative, no-action and certain exemption letters and other written communications.

(a) Except as provided in paragraphs (b) and (c) of this section, every letter or other written communication requesting the staff of the Commission to provide interpretative legal advice with respect to any statute administered by the Commission or any rule or regulation adopted thereunder, or requesting a statement that, on the basis of the facts stated in such letter or other communication, the staff would not recommend that the Commission take any enforcement action, or requesting an exemption, on the basis of the facts stated in such letter, from the provisions of the Securities Exchange Act of 1934 (15 U.S.C. 78a *et seq.*) or any rule or regulation thereunder, where the issuance of an order granting such exemption does not require public notice and an opportunity for hearing, together with any written response thereto, shall be made available for inspection and copying by any person. Letters or other written communications with respect to rules 10b–6, 10b–7, 10b–8, 10b–13 and 13e–4 [§§ 240.10b–6, 240.10b–7, 240.10b–8, 240.10b–13 and 240.13e–4 of this chapter] under the Exchange Act, together with any response thereto, shall be made available for inspection and copying by any person 30 days after the response has been sent or given to the person requesting it. All other letters or written communications, together with the response thereto, shall be made available for inspection and copying by any person as soon as practicable after the response has been sent or given to the person requesting it.

(b) * * *

Note.—All letters or other written communications requesting interpretative advice, a no-action position, or an exemption shall indicate prominently, in a separate caption at the beginning of the request, each section of the Act and each rule to which the request relates. * * *

(c) * * * Further, this section shall not apply to applications or other written communications filed pursuant to § 240.24b–2 that relate to objections to public disclosure of information filed with the Commission or any exchange.

By the Commission.

Jonathan G. Katz,

Secretary.

April 7, 1988.

[FR Doc. 88–8241 Filed 4–13–88; 8:45 am]

BILLING CODE 8010–01–M

DEPARTMENT OF HEALTH AND HUMAN SERVICES

Food and Drug Administration

21 CFR Part 452

[Docket No. 85N-0048]

Antibiotic Drugs; Ertythromycin Topical Gel

AGENCY: Food and Drug Administration.

ACTION: Final rule.

SUMMARY: The Food and Drug Administration (FDA) is amending the antibiotic drug regulations to provide for the inclusion of accepted standards for a new dosage form of erythromycin, erythromycin topical gel. The manufacturer has supplied sufficent data and information to establish its safety and efficacy.

DATES: Effective April 14, 1988; comments, notice of participation, and request for hearing by May 16, 1988; data, information, and analyses to justify a hearing by June 13, 1988.

ADDRESS: Written comments to the Dockets Management Branch (HFA–305), Food and Drug Administration, Rm. 4–62, 5600 Fishers Lane, Rockville, MD 20857.

FOR FURTHER INFORMATION CONTACT: Peter A. Dionne, Center for Drug Evaluation and Research (HFN–815), Food and Drug Administration, 5600 Fishers Lane, Rockville, MD 20857, 301–443–4290.

SUPPLEMENTARY INFORMATION: FDA has evaluated data submitted in accordance with regulations promulgated under section 507 of the Federal Food, Drug, and Cosmetic Act (21 U.S.C. 357), as amended, with respect to a request for approval of a new dosage form of erythromycin, erythromycin topical gel. The agency has concluded that the data supplied by the manufacturer concerning this antibiotic drug are adequate to establish its safety and efficacy when used as directed in the labeling and that the regulations should be amended in 21 CFR Part 452 by adding a new § 452.510e to provide for the inclusion of accepted standards for the product.

Environmental Impact

The agency has determined under 21 CFR 25.24(c)(6) that this action is of a type that does not individually or cumulatively have a significant effect on the human environment. Therefore, neither an environmental assessment nor an environmental impact statement is required.

Submitting Comments and Filing Objections

This final rule announces standards that FDA has accepted in a request for approval of an antibiotic drug. Because this final rule is not controversial and because when effective it provides notice of accepted standards, notice and comment procedure and delayed effective date are found to be unnecessary and not in the public interest. This final rule, therefore, is effective April 14, 1988. However, interested persons may, on or before May 16, 1988, submit written comments to the Dockets Management Branch (address above). Two copies of any comments are to be submitted, except that individuals may submit one copy. Comments are to be identified with the docket number found in brackets in the hearing of this document. Received comments may be seen in the Dockets Management Branch between 9 a.m. and 4 p.m., Monday through Friday.

Any person who will be adversely affected by this final rule may file objections to it and request a hearing. Reasonable grounds for the hearing must be shown. Any person who decides to seek a hearing must file: (1) On or before May 16, 1988, a written notice of participation and request for hearing, and (2) on or before June 13, 1988, the data, information, and analyses on which the person relies to justify a hearing, as specified in 21 CFR 314.300. A request for a hearing may not rest upon mere allegations or denials, but must set forth specific facts showing that there is a genuine and substantial issue of fact that requires a hearing. If it conclusively appears from the fact of the data, information, and factual analyses in the request for hearing that no genuine and substantial issue of fact precludes the action taken by this order, or if a request for hearing is not made in the required format or with the required analyses, the Commissioner of Food and Drugs will enter summary judgment against the person(s) who request(s) the hearing, making findings and conclusions and denying a hearing. All submissions must be filed in three copies, identified with the docket number appearing in the heading of this

order and filed with the Dockets Management Branch.

The procedures and requirements governing this order, a notice of participation and request for hearing, a submission of data, information, and analyses to justify a hearing, other comments, and grant or denial of a hearing are contained in 21 CFR 314.300.

All submissions under this order, except for data and information prohibited from public disclosure under 21 U.S.C. 331(j) or 18 U.S.C. 1905, may be seen in the Dockets Management Branch (address above) between 9 a.m. and 4 p.m., Monday through Friday.

List of Subjects in 21 CFR Part 452

Antibiotics.

Therefore, under the Federal Food, Drug, and Cosmetic Act and under authority delegated to the Commissioner of Food and Drugs, Part 452 is amended as follows:

PART 452—MACROLIDE ANTIBIOTIC DRUGS

1. The authority citation for 21 CFR Part 452 continues to read as follows:

Authority: Sec. 507, 59 Stat. 463 as amended (21 U.S.C. 357); 21 CFR 5.10.

2. Part 452 is amended by adding new § 452.510e to read as follows:

§ 452.510e Erythromycin topical gel.

(a) *Requirements for certification*—(1) *Standards of identify, strength, quality, and purity.* Erythromycin topical gel is erythromycin in a suitable and harmless gel. Each gram contains 20 milligrams of erythromycin. The erythromycin content is satisfactory if it contains not less than 90 percent and not more than 125 percent of the number of milligrams of erythromycin that it is represented to contain. The erythromycin used conforms to the standards prescribed by § 452.10(a)(1), except with respect to heavy metals.

(2) *Labeling.* It shall be labeled in accordance with the requirements of § 432.5 of this chapter.

(3) *Requests for certification; samples.* In addition to complying with the requirements of § 431.1 of this chapter, each request shall contain:

(i) Results of tests and assays on:

(A) The erythromycin used in making the batch for potency, moisture, pH, residue on ignition, identity, and crystallinity.

(B) The batch for erythromycin content.

(ii) Samples, if required by the Director, Center for Drug Evaluation and Research:

(A) The erythromycin used in making the batch: 5 packages, each containing approximately 100 milligrams.

(B) The batch: A minimum of 8 containers.

(b) *Tests and methods of assay; erythromycin content.* Proceed as directed in § 436.105 of this chapter, preparing the sample for assay as follows: Place approximately 1 gram, accurately weighed, of the product into a high-speed glass blender jar containing 200 milliliters of 0.5 percent (volume by volume) polysorbate 80 in 0.1*M* potassium phosphate buffer, pH 8.0 (solution 3), to obtain a stock solution of convenient concentration. Blend for 3 to 5 minutes. Further dilute an aliquot of the stock solution with solution 3 of the reference concentration of 1.0 microgram of erythromycin base per milliliter (estimated).

Dated: April 6, 1988.

Daniel L. Michels,

Director, Office of Compliance, Center for Drug Evaluation and Research.

[FR Doc. 88-8151 Filed 4-13-88; 8:45 am]

BILLING CODE 4160-01-M

DEPARTMENT OF LABOR

Mine Safety and Health Administration

30 CFR Part 48

Self-Contained Self-Rescue Devices; Correction

AGENCY: Mine Safety and Health Administration, Labor.

ACTION: Final rule; correction.

SUMMARY: This notice corrects a typographical error in a final rule amending Part 48 Training and Retraining of Underground Miners, which appeared in the **Federal Register** on March 30, 1988, 53 FR 10332.

FOR FURTHER INFORMATION CONTACT: Patricia W. Silvey, Director, Office of Standards, Regulations and Variances, MSHA, phone (703) 235-1910.

The following correction is made to 30 CFR 48.6(b)(8) which appeared in the **Federal Register** on March 30, 1988 (53 CFR 10332).

§ 48.6 [Amended]

On page 10335 at the bottom of the third column, the first sentence which reads, "The course shall include instruction and demonstration in the use, care, and maintenance of self-rescue and respiratory devices and at the mine," is revised to read as follows:

"The course shall include instruction and demonstration in the use, care, and maintenance of self-rescue and respiratory devices used at the mine."

* * * * *

Dated: April 6, 1988.

Patricia W. Silvey,

Director, Office of Standards, Regulations and Variances.

[FR Doc. 88-8127 Filed 4-13-88; 8:45 am]

BILLING CODE 4510-43-M

DEPARTMENT OF TRANSPORTATION

Coast Guard

33 CFR Part 100

[CGD 05-87-31]

Regatta; Barnegat Bay Classic, Toms River, NJ

AGENCY: Coast Guard, DOT.

ACTION: Final rule.

SUMMARY: The Special Local Regulations 33 CFR 100.502 for the Barnegat Bay Classic powerboat race are being amended. The location of the regulated area and effective period of the regulations are being changed along with change in the events name. This event, sponsored by the Barnegat Bay Power Boat Association, involves competition between high speed powerboats on Barnegat Bay adjacent to the Intracoastal Waterway. The purpose of this regulation is to provide for the safety of participants, spectators and passers-by on navigable waters during the event.

EFFECTIVE DATE: These regulations are effective May 16, 1988.

FOR FURTHER INFORMATION CONTACT: Mr. Billy J. Stephenson, Chief, Boating Affairs Branch, Fifth Coast Guard District, 431 Crawford Street, Portsmouth, Virginia 23704-5004, (804-398-6204).

SUPPLEMENTARY INFORMATION: On April 2, 1987, the Commander, Third Coast Guard District published a notice of proposed rulemaking in the **Federal Register** for these regulations (Vol. 52, No. 63 FR 10593-10594).

Interested persons were requested to submit comments and one comment was received. These regulations are being made effective in less than 30 days from the date of publication. There was not sufficient time remaining in advance of the event to provide for a delayed effective date.

Drafting Information

The drafters of these regulations are Mr. Lucas A. Dlhopolsky, project officer, Chief, Boating Affairs Branch, Boating

Safety Division, Fifth Coast Guard District, and Commander Robert J. Reining, project attorney, Fifth Coast Guard District Legal Staff.

Discussion of Regulations

Since the publication of the notice of proposed rulemaking the Coast Guard has gone through an organization realignment. The Commander, Fifth Coast Guard District assumed responsibility for the waters of Barnegat Bay south of Toms River, New Jersey on April 30, 1987. On July 6, 1987, a rule was published that redesignated § 100.302 of title 33 Code of Federal Regulations as § 100.502 and amended paragraph (b) of that section to delete the reference to the Third Coast Guard District's Local Notice to Mariners. One comment was received in response to the Notice of Proposed Rulemaking. The commenter wrote to commend the sponsors of the Barnegat Bay Classic for cooperating with the commenter's yacht club by moving the powerboat race course location further south on Barnegat Bay. In so doing a conflict with an already scheduled annual sailboat regatta was avoided.

Economic Assessment and Certification

These regulations are considered to be nonmajor under Executive Order 12291 on Federal Regulation and nonsignificant under Department of Transportation regulatory policies and procedures (44 FR 11034; February 26, 1987). The economic impact has been found to be so minimal that a full regulatory evaluation is unnecessary. This event will draw a large number of spectator craft into the area for the duration of the race. This should have a favorable impact on commercial facilities providing services to the spectators. This area is used primarily by recreational boaters; any impact on commercial traffic in the area will be negligible. Since the impact of these regulations is expected to be minimal the Coast Guard certifies that they will not have a significant economic impact on a substantial number of small entities.

List of Subjects in 33 CFR Part 100

Marine safety, Navigation (water).

Final Regulation

In consideration of the foregoing, Part 100 of Title 33, Code of Federal Regulations is amended as follows:

PART 100—[AMENDED.]

1. The authority citation for Part 100 continues to read as follows:

Authority: 33 U.S.C. 1233; 49 CFR 1.46 and 33 CFR 100.35.

2. Part 100 is amended by revising the section heading and paragraphs (a) and (b) of § 100.502 to read as follows:

§100.502 Barnegat Bay Classic, Toms River, New Jersey.

(a) *Regulated Area.* Barnegat Bay, New Jersey in the areas bounded by latitude 39°54′00″ North on the north, latitude 36°49′00″ North on the south, the Intracoastal Waterway (ICW) on the west and Island Beach on the east.

(b) *Effective Dates.* These regulations will be effective annually on the fourth Saturday in August unless otherwise specified in the Coast Guard Local Notice to Mariners and a **Federal Register** Notice. In case of postponement due to weather, the approved rain date is the following day and these regulations are effective for the same time period.

* * * * *

Dated: July 26, 1987.

A. D. Breed,

Rear Admiral, U.S. Coast Guard, Commander, Fifth Coast Guard District.

[FR Doc. 88-8197 Filed 4-13-88; 8:45 am]

BILLING CODE 4910-14-M

---

33 CFR Part 117

[CGD8-87-14]

Drawbridge Operation Regulations; Gulf Intracoastal Waterway, Louisiana

AGENCY: Coast Guard, DOT.

ACTION: Final rule.

SUMMARY: At the request of the St. Mary Parish Council and the Louisiana Department of Transportation and Development, the Coast Guard is changing the regulation governing the operation of the swing span bridge on State Route 319 over the Gulf Intracoastal Waterway, mile 134.0 near Cypremort, St. Mary Parish, Louisiana, by permitting the draw to remain closed to navigation from 6:55 to 7:10 a.m. and 3:50 to 4:05 p.m. Monday through Friday, except holidays, from 15 August to June 5. This change is being made to allow school buses to pass without delays because of bridge openings. This action should accommodate the needs of vehicular traffic and still provide for the reasonable needs of navigation.

EFFECTIVE DATE: This regulation becomes effective on May 16, 1988.

FOR FURTHER INFORMATION CONTACT: Mr. John Wachter, Bridge Administration Branch, Eighth Coast Guard District, Telephone (504) 589-2965.

SUPPLEMENTARY INFORMATION: On 24 December 24, 1987, the Coast Guard published a proposed rule (52 FR 48717) concerning this amendment. The Commander, Eighth Coast Guard District, also published the proposal as a Public Notice dated 6 January 1988. In each notice interested parties were given until 8 February 1988 to submit comments.

Drafting Information

The drafters of this regulation are Mr. John Wachter, project officer, and Lieutenant Commander James Vallone, project attorney.

Discussion of Comments

Five letters of comment were received about the proposed rule change. The National Marine Fisheries Service offered no objection. Three letters received from residents whose small children ride the school buses expressed appreciation and verified the need for the proposed rule. One letter writer objected to the proposal as creating an unsafe condition when a tow pushing an empty barge must stand by for the bridge to open. The Coast Guard has carefully considered the comments. A review of the bridge logs indicates that the bridge opens about once every two days on average during both the proposed 15-minute morning closure period and the proposed 15-minute afternoon closure period. Due to the very short periods that the bridge will be closed to navigation, mariners should be able to adjust their speed when approaching the bridge to avoid the 15-minute closure periods and any hazards that may occur due to full stoppage of their vessels. Therefore, the final rule is unchanged from the proposed rule as published in (52 FR 48717) on 24 December 1987.

Economic Assessment and Certification

This regulation is considered to be non-major under Executive Order 12291 on Federal Regulation and nonsignificant under the Department of Transportation regulatory policies and procedures (44 FR 11034; February 26, 1979). The economic impact of this regulation is expected to be so minimal that a full regulatory evaluation is unnecessary. The basis for this conclusion is that the closure periods are so abbreviated that they are not considered to be significant. Since the economic impact of this regulation is expected to be minimal, the Coast Guard certifies that, if adopted, it will not have a significant economic impact on a substantial number of small entities.

List of Subjects in 33 CFR Part 117

Bridges.

Regulation

In consideration of the foregoing, Part 117 of Title 33, Code of Federal Regulations, is amended as follows:

PART 117—DRAWBRIDGE OPERATION REGULATIONS

1. The authority citation for Part 117 continues to read as follows:

Authority: 33 U.S.C. 499; 49 CFR 1.46 and 33 CFR 1.05–1(g).

2. Section 117.451 is revised by redesignating existing paragraph (d) as paragraph (e), and by adding a new paragraph (d) to read as follows:

§ 117.451 Gulf Intracoastal Waterway.

* * * * *

(d) The draw of the SR319 (Louisa) bridge across the Gulf Intracoastal Waterway, mile 134.0 near Cypremort, shall open on signal; except that from 15 August to 5 June, the draw need not be opened from 6:55 to 7:10 a.m. and from 3:50 to 4:05 p.m. Monday through Friday except holidays.

* * * * *

Date: March 25, 1988.

Peter J. Rots,

Rear Admiral, U.S. Coast Guard, Commander, Eighth Coast Guard District.

[FR Doc. 88–8198 Filed 4–13–88; 8:45 am]

BILLING CODE 4910-14-M

---

33 CFR Part 117

[CGD5-88-16]

Notice of Temporary Deviation From Drawbridge Operation Regulations for Bridge Across Atlantic Intracoastal Waterway at Camp Lejeune, NC

AGENCY: Coast Guard, DOT.

ACTION: Final rule.

SUMMARY: The Coast Guard has granted a temporary deviation from the regulations for the drawbridge across the Atlantic Intracoastal Waterway at mile 240.7 at Camp Lejeune, North Carolina. The purpose of this deviation from the regulations is to allow the project contractor for the United States Marine Corps, the owner of the bridge, to repair the bridge. The mechanical repairs are expected to be completed by April 22, 1988.

EFFECTIVE DATE: This temporary deviation from the regulations becomes effective on April 11, 1988, and terminates on April 22, 1988, or earlier if bridge repairs are completed ahead of schedule.

FOR FURTHER INFORMATION CONTACT: Ann B. Deaton, Bridge Administrator, Commander (ob), Fifth Coast Guard District, 431 Crawford Street, Portmouth, Virginia 23704–5004 or telephone number (804) 398–6222.

SUPPLEMENTARY INFORMATION:

Drafting Information

The drafters of this notice are Merlin R. Roman, project officer, and CDR. Robert J. Reining, project attorney.

List of Subjects in 33 CFR Part 117

Bridges.

Temporary Deviation From Drawbridge Regulations

In consideration of the foregoing, the regulations in § 117.5 of Title 33, Code of Federal Regulations, do not apply to the bridge across the Atlantic Intracoastal Waterway, mile 240.7, at Camp Lejeune, North Carolina, from April 11, 1988, until April 22, 1988, or earlier if bridge repairs are completed ahead of schedule. The bridge may remain closed to vessel traffic from 8:00 a.m. to 5:00 p.m., Monday thru Friday, except that, the bridge shall open from 12:00 noon to 1:00 p.m. for the passage of vessel traffic. At all other times, the bridge shall open on signal.

Authority: 33 U.S.C. 499; 49 CFR 1.46; 33 CFR 1.05 1(g), 117.35(d)

Dated: April 1, 1988.

Alan D. Breed,

Rear Admiral, U.S. Coast Guard, Commander, Fifth Coast Guard District.

[FR Doc. 88–8201 Filed 4–13–88; 8:45 am]

BILLING CODE 4910-14-M

---

33 CFR Part 165

[CGD COTP Baltimore, MD Regulation 88-02]

Regulated Navigation Area Regulations

AGENCY: Coast Guard, DOT.

ACTION: Notice of termination of Ice Navigation Season under 33 CFR 165.503.

SUMMARY: The Ice Navigation Season Regulated Navigation Area on the northern portion of Chesapeake Bay and its tributaries, including the Chesapeake and Delaware Canal, is terminated effective 31 March 1988. The regulation for this Regulated Navigation Area, found in 33 CFR 165.503, state that the Regulated Navigation Area is placed in effect and terminated at the direction of the Captain of the Port, Baltimore, Maryland by notice in the **Federal Register.** The Regulated Navigation Area was placed in effect by a **Federal Register** notice on January 11, 1988 (53 FR 616). The purpose of this Regulated Navigation Area was to enhance the safety of navigation in the affected waters. It required operators of certain vessels to be aware, during their vessel's transit of the Regulated Navigation Area, of currently effective Ice Navigation Season Captain of the Port Orders issued by the Captain of the Port, Baltimore, Maryland. The Regulated Navigation Area is hereby terminated.

EFFECTIVE DATE: *Termination:* March 31, 1988.

FOR FURTHER INFORMATION CONTACT: CWO2 D. L. Hutchinson, USCG, Port Safety Officer, MSO Baltimore, Maryland at (301) 962–5105.

Dated: April 11, 1988.

J.H. Parent,

Captain, U.S. Coast Guard, Captain of the Port, Baltimore, Maryland.

[FR Doc. 88–8199 Filed 4–13–88; 8:45 am]

BILLING CODE 4910-14-M

ENVIRONMENTAL PROTECTION AGENCY

40 CFR Part 52

[FRL-3359-9]

Approval and Promulgation of State Implementation Plans; Missouri

AGENCY: Environmental Protection Agency (EPA).

ACTION: Final rule.

SUMMARY: EPA is approving a new state regulation as a revision to the Air Pollution Control State Implementation Plan (SIP) of the state of Missouri. The purpose of this regulation is to control leaks of volatile organic compounds (VOC) from equipment used to manufacture polymers and synthetic organic chemicals in the St. Louis ozone nonattainment area. EPA's approval would make the regulation's requirements federally enforceable.

EFFECTIVE DATE: This action will be effective June 13, 1988, unless notice is received within 30 days that someone wishes to submit adverse or critical comments.

ADDRESSES: Comments should be sent to the Environmental Protection Agency, 726 Minnesota Avenue, Kansas City, Kansas 66101. A copy of the state's submission is available for review at the above address and at the Environmental Protection Agency, Public Information Reference Unit, 401 M Street SW., Washington, DC; and the Missouri

Department of Natural Resources, 205 Jefferson Street, Jefferson City, Missouri 65101.

FOR FURTHER INFORMATION CONTACT: Larry A. Hacker at (913) 236-2893 or FTS 757-2893.

SUPPLEMENTARY INFORMATION: On November 19, 1986, the State of Missouri submitted rule 10 CSR 10-5.420, Control of Equipment Leaks from Synthetic Organic Chemical and Polymer Manufacturing Plants, to be approved as a revision to the St. Louis ozone SIP. The rule was adopted by the Missouri Air Conservation Commission after proper notice and public hearing, and became effective on September 26, 1986. Two facilities in the St. Louis area are affected by this regulation which establishes inspection and monitoring requirements for pump, valve, and pipe leaks.

The state adopted this regulation in compliance with section 172(b)(2) of the Clean Air Act, which requires SIPs to provide for the implementation of all reasonably available control measures as expeditiously as practicable. For numerous categories of stationary VOC sources, reasonably available control technology (RACT) is prescribed by EPA policy as a presumptive norm developed by EPA and published in a Control Techniques Guideline (CTG) Document. The applicable CTG in this instance is "Control of Volatile Organic Compound Leaks from Synthetic Organic Chemical and Polymer Manufacturing Equipment", published by EPA in March 1984 (EPA-450/3-83-006).

EPA's review of the regulation finds that it meets the control requirements of the CTG and is therefore approvable as part of the SIP. EPA's Technical Support Document provides a detailed review of the regulation and is available for public inspection at the locations listed in the **ADDRESSES** section of this notice.

EPA Action

In today's notice, EPA takes final action to approve rule 10 CSR 10-5.420 as a revision to the Missouri SIP. The Administrator's decision to approve this submission is based on a determination that the revision meets the requirements of sections 110 and 172 of the Clean Air Act and of 40 CFR Part 51, Requirements for Preparation, Adoption, and Submittal of State Implementation Plans.

EPA believes this action is noncontroversial and is approving it without prior proposal. The public is advised that this action is effective 60 days after publication unless we receive written notice within 30 days from today that someone wishes to submit adverse or critical comments. In such cases, this action will be withdrawn and rulemaking will commence again by announcing a proposal of this action and establishing a comment period.

Under section 307(b)(1) of the Clean Air Act, as amended, judicial review of this action is available only by the filing of a petition for review in the United States Court of Appeals for the appropriate circuit within 60 days of today. This action may not be challenged later in proceedings to enforce its requirements.

The Office of Management and Budget has exempted this rule from the requirements of section 3 of Executive Order 12291.

Under 5 U.S.C. 605(b), I certify that this SIP revision will not have a significant economic impact on a substantial number of small entities.

Incorporation by reference of the State Implementation Plan for the state of Missouri was approved by the Director of the Office of the Federal Register on July 1, 1982.

List of Subjects in 40 CFR Part 52

Air pollution control, Ozone, Carbon monoxide, Hydrocarbons, Reporting and recordkeeping requirements, Intergovernmental relations, Incorporation by reference.

Date: March 28, 1988.

Lee M. Thomas,

Administrator.

Part 52 of Chapter I, Title 40 of the Code of Federal Regulations, is amended as follows:

PART 52—[AMENDED]

Subpart AA—Missouri

1. The authority citation for Part 52 continues to read as follows:

Authority: 42 U.S.C. 7401-7642.

2. Section 52.1320 is amended by adding a new paragraph (c)(62) as follows:

§ 52.1320 Identification of plan.

* * * * *

(c) * * *

(62) A new rule, Control of Equipment Leaks from Synthetic Organic Chemical and Polymer Manufacturing Plants, was submitted by the Department of Natural Resources on November 19, 1986.

(i) Incorporation by reference, 10 CSR 10-5.420, Control of Equipment Leaks from Synthetic Organic Chemical and Polymer Manufacturing Plants, effective on September 26, 1986.

[FR Doc. 88-7167 Filed 4-13-88; 8:45 am]

BILLING CODE 6560-50-M

40 CFR Part 180

[OPP-300175A; FRL-3365-8]

Paper Fiber; Tolerance Exemption

AGENCY: Environmental Protection Agency (EPA).

ACTION: Final rule.

SUMMARY: This rule exempts paper fiber from the requirement of a tolerance when used as an inert ingredient (carrier) in pesticide formulations applied to growing crops only. This regulation was requested by Jellinek, Schwartz, Connolly, and Freshman, Inc., on behalf of Edward Lowe Industries, Inc.

EFFECTIVE DATE: Effective on April 14, 1988.

ADDRESS: Written objections may be submitted to the: Hearing Clerk (A-110), Environmental Protection Agency, 401 M Street SW., Washington, DC 20460.

FOR FURTHER INFORMATION CONTACT:

By mail: Rosalind Gross, Registration Support and Emergency Response Branch, Environmental Protection Agency, 401 M Street SW., Washington, DC 20460

Office location and telephone number: Room 716, CM #2, 1921 Jefferson Davis Highway, Arlington, VA 22202, 703-557-7700.

SUPPLEMENTARY INFORMATION: EPA issued a proposed rule, published in the **Federal Register** of January 27, 1986 (53 FR 2238), which announced that Jellinek, Schwartz, Connolly, and Freshman, Inc., 1350 New York Ave., NW., Suite 400, Washington, DC 20005, on behalf of Edward Lowe Industries, Inc., had requested that 40 CFR 180.1001(d) be amended by establishing an exemption from the requirement of a tolerance for paper fiber when used as a carrier in pesticide formulations applied to growing crops only.

Inert ingredients are ingredients that are not active ingredients as defined in 40 CFR 162.3(c), and include, but are not limited to, the following types of ingredients (except when they have a pesticidal efficacy of their own): Solvents such as alcohols and hydrocarbons; surfactants such as polyoxyethylene polymers and fatty acids; carriers such as clay and diatomaceous earth: thickeners such as carageenan and modified cellulose; wetting and spreading agents; propellents in aerosol dispensers; and emulsifiers. The term "inert" is not intended to imply nontoxicity; the ingredient may or may not be chemically active.

EPA has initiated new review procedures for tolerance exemptions for inert ingredients. Under these procedures the Agency conducts a review of the data base supporting any prior clearances, the data available in the scientific literature, and any other relevant data. Based on a review of such data, the Agency has determined that no additional test data will be required to support this regulation.

Based on the above information and review of its use, it has been found that when used in accordance with good agricultural practices this ingredient is useful and does not pose a hazard to humans or the environment. In conclusion, the Agency has determined that the amendment to 40 CFR Part 180 will protect the public health. Therefore, the regulation is being established as set forth below.

There were no comments or requests for referral to an advisory committee received in response to the proposed rule.

Any person adversely affected by this regulation may, within 30 days after publication of this document in the **Federal Register**, file written objections with the Hearing Clerk, at the address given above. Such objections should specify the grounds for the objections. A hearing will be granted if the provisions of the regulation deemed objectionable and the objections are supported by grounds legally sufficient to justify the relief sought.

The Office of Management and Budget has exempted this rule from the requirements of section 3 of Executive Order 12291.

List of Subjects in 40 CFR Part 180

Administrative practice and procedure, Agricultural commodities, Pesticides and pests.

Dated: April 6, 1988.

Douglas D. Campt,

Director, Office of Pesticide Programs.

Therefore, 40 CFR Part 180 is amended as follows:

PART 180—[AMENDED]

1. The authority citation for Part 180 continues to read as follows:

Authority: 21 U.S.C. 346a.

2. Section 180.1001(d) is amended by adding and alphabetically inserting the inert ingredient as follows:

§ 180.1001 Exemptions from the requirement of a tolerance.

* * * * *

(d) * * *

Inert ingredients	Limits	Uses
* * *	* *	*
Paper fiber, produced by the kraft (sulfate) or sulfite pulping processes.	.....	Carrier.
* * *	* *	*

* * * * *

[FR Doc. 88-8182 Filed 4-13-88; 8:45 am]

BILLING CODE 6560-50-M

DEPARTMENT OF THE INTERIOR

Bureau of Land Management

43 CFR Public Land Order 6671

[AK-932-08-4220-10; AA-6994]

Partial Revocation of Public Land Order No. 829 for Selection of Lands by the State of Alaska

AGENCY: Bureau of Land Management, Interior.

ACTION: Public land order.

SUMMARY: This order partially revokes a public land order (PLO) insofar as it affects approximately 150 acres of National Forest System land withdrawn for the Ward Cove Water Supply System. This action also opens the land for selection by the State of Alaska, if such land is otherwise available. The land has been and will remain open to the mineral leasing laws. The land will not be opened to location and entry under the United States mining laws and the nonmineral public land laws, except the Alaska Statehood Act, until a further opening order is published.

EFFECTIVE DATE: April 14, 1988.

FOR FURTHER INFORMATION CONTACT: Sandra C. Thomas, BLM Alaska State Office, 701 C Street, Box 13, Anchorage, Alaska 99513, 907-271-5477.

SUPPLEMENTARY INFORMATION: By virtue of the authority vested in the Secretary of the Interior by section 204 of the Federal Land Policy and Management Act of 1976, 90 Stat. 2751; 43 U.S.C. 1714, it is ordered as follows:

1. Public Land Order No. 829 which withdrew land in the Tongass National Forest for the Ward Cover Water Supply System is hereby revoked insofar as it affects the land withdrawn for the Ward Cove Water Supply System as published in the **Federal Register**, 17 FR 4710, May 23, 1952, excluding those portions lying within PLO No. 3795 and Patent No. 1180771 (U.S. Survey No. 3400). The Ward Cove Water Supply System is described as:

Copper River Meridian (Partially Surveyed)

T. 74 S., R. 90 E.

All national forest land 400 feet in width adjacent to and on the north and west side of a proposed pipeline, beginning at the national forest boundary from which corner No. 9 of U.S. Survey No. 1761 bears N. 55°43′ W., approximately 360 feet; thence:

N. 10°30′ E., 1,100 feet;
S. 84°00′ E., 1,300 feet;
N. 58°30′ E., 2,200 feet;
N. 16°00′ E., 1,500 feet;
N. 84°30′ E., 1,850 feet;
N. 27°30′ E., 500 feet;
N. 33°00′ E., 1,100 feet;
N. 9°00′ E., 1,050 feet;
N. 34°30′ E., 1,000 feet;

and including all national forest land adjacent to and on the south and east sides of above said proposed pipeline and situated between the said pipeline and one-fourth mile west of Ward Creek and Ward Lake, as shown on the map titled "Map of Lake Connell, Lake Ingraham, and Ward Creek, Showing Proposed Reservoirs, Dams, and Pipe Line, Ketchikan Pulp and Paper Company," by William D. Shannon and Associates, dated August 27, 1951, on file in the Bureau of Land Management, Washington, DC 20240.

The area described aggregate approximately 150 acres.

2. Subject to valid existing rights, the land described above is hereby opened for selection by the State of Alaska under the Alaska Statehood Act of July 7, 1958, 72 Stat. 339, et seq.; 48 U.S.C. prec. 21.

3. As provided by section 5(g) of the Alaska Statehood Act, supra, the State of Alaska is provided a preference right of selection for the land described above, for a period of ninety-one (91) days from the date of publication of this order, if the land is otherwise available. Any of the land described herein that is not selected by the State of Alaska will continue to be subject to the terms and conditions of the Tongass National Forest and any other withdrawals of record.

4. The land described in paragraph 1 shall remain closed to location and entry under the United States mining laws and the nonmineral public land laws, except the Alaska Statehood Act, supra, until a further opening order is published.

J. Steven Griles,

Assistant Secretary of the Interior.

April 1, 1988.

[FR Doc. 88-8111 Filed 4-13-88; 8:45 am]

BILLING CODE 4310-JA-M

43 CFR Public Land Order 6672

[AK-932-07-4220-10; AA-6040]

Revocation of Powersite Classification No. 188 for Selection of Land by the State of Alaska, Alaska

AGENCY: Bureau of Land Management, Interior.

ACTION: Public land order.

SUMMARY: This order revokes in its entirety a powersite classification which withdrew approximately 383 acres of National Forest System land for power purposes at Baranof Warm Springs Bay. This action also opens the land for selection by the State of Alaska, if the land is otherwise available. The land has been and will remain open to the mining and mineral leasing laws. The land will not be opened to the nonmineral public land laws, except the Alaska Statehood Act, until a further opening order is published.

EFFECTIVE DATE: April 14, 1988.

FOR FURTHER INFORMATION CONTACT: Sandra C. Thomas, BLM, Alaska State Office, 701 C Street, P.O. Box 13, Anchorage, Alaska 99513, 907-271-5477.

By virtue of the authority vested in the Secretary of the Interior by section 204 of the Federal Land Policy and Management Act of 1976, 90 Stat. 2751; 43 U.S.C. 1714, it is ordered as follows:

1. Powersite Classification No. 188 of September 13, 1927, which withdrew National Forest System land for power purposes is hereby revoke in its entirety:

Copper River Meridan

Tongass National Forest

Located within Sections 13 and 24, T. 55 S., R. 66 E., and Sections 18 and 19, T. 55., R. 67 E., more specifically described as:

All lands lying within one-fourth of a mile of either side of an unnamed creek from its mouth to a point one mile upstream, excluding U.S. Survey Nos. 3874 and 3291A. The mouth of the said unnamed creek flows southerly through U.S. Survey No. 3874 into Warm Springs Bay.

The area described contains approximately 383 acres.

2. Subject to valid existing rights, the land described above is hereby opened for selection by the State of Alaska under the provisions of the Alaska Statehood Act of July 7, 1958, 72 Stat. 339, *et seq.;* 48 U.S.C. prec. 21, if such land is otherwise available.

3. As provided by section 6(g) of the Alaska Statehood Act, supra, the State of Alaska is provided a preference right of selection for the land described above for a period of ninety-one (91) days from the date of publication of this order, if the land is otherwise available. Any of the land described herein that is not selected by the State of Alaska will continue to be subject to the terms and conditions of the Tongass National Forest and any other withdrawals of records.

4. The land described in paragaph 1 shall remain closed to the nonmineral public land laws, except the Alaska Statehood Act, supra, until a further opening order is published.

J. Steven Griles,

Assistant Secretary of the Interior.

April 1, 1988.

[FR Doc. 88-8144 Filed 4-13-88; 8:45 am]

BILLING CODE 4310-JA-M

43 CFR Public Land Order 6673

[AK-932-08-4220-10; A-060246]

Partial Revocation of Public Land Order Nos. 3953 and 4056 for Selection of the Lands by the State of Alaska, Alaska

AGENCY: Bureau of Land Management, Interior.

ACTION: Public land order.

SUMMARY: This order partially revokes two public land orders (PLO's) insofar as they affect approximately 22,865 acres of public land withdrawn for the Corps of Engineers for the Bradley Lake Hydroelectric Project. This action also classifies the lands as suitable for selection by the State of Alaska, if such lands are otherwise available. If the lands are not selected by the State, the lands will continue to be subject to the terms and conditions of PLO No. 5179, as amended.

EFFECTIVE DATE: April 14, 1988.

FOR FURTHER INFORMATION CONTACT: Sandra C. Thomas, BLM Alaska State Office, 701 C Street, Box 13, Anchorage, Alaska 99513, 907-271-5477.

By virtue of the authority vested in the Secretary of the Interior by Section 204 of the Federal Land Policy and Management Act of 1976, 90 Stat. 2751; 43 U.S.C. 1714, and by section 17(d)(1) of the Alaska Native Claims Settlement Act of December 18, 1971, 85 Stat. 708 and 709; 43 U.S.C. 1616(d)(1), it is ordered as follows:

1. Public Land Order Nos. 3953 and 4056, which withdrew public lands for the Bradley Lake Hydroelectric Project are hereby revoked insofar as they affect the following described land:

Seward Meridian

T. 5 S., R. 8 W.,
- Sec. 19, that portion lying outside Powersite Classification No. 436;
- Sec. 20, W½, Those portions lying outside of Powersite Classification No. 436 and Power Project No. 8221;
- Sec. 29, NW¼, that portion lying outside of Power Project No. 8221;
- Sec. 30, that portion lying outside of Powersite Classification No. 436 and Power Project No. 8221;
- Sec. 31, that portion lying outside of Powersite Classification No. 436 and Power Project No. 8221.

T. 6 S., R. 8 W.,
- Sec. 5, SW¼, that portion lying outside of Powersite Classification No. 436;
- Sec. 6, that portion lying outside of Powersite Classification No. 436 and Power Project No. 8221.

T. 4 S., R. 9 W.,
- Sec. 29, those portions lying outside of Powersite Classification No. 436 and Power Project No. 8221;
- Secs. 30 and 31, those portions lying outside of Powersite Classification No. 436, Power Project No. 8221, and lot 1, U.S. Survey No. 2937;
- Sec. 32 and 33, those portions lying outside of Powersite Classification No. 436.

T. 5 S., R. 9 W.,
- Secs. 1 and 2;
- Sec. 3, N½, SW¼, N½SE¼, SW¼SE¼;

Sec. 4;
- Sec. 5, that portion lying outside of Powersite Classification No. 436;
- Secs. 6 to 11, inclusive, those portions lying outside of Powersite Classification No. 436 and Power Project No. 8221;
- Sec. 12;
- Sec. 13, those portions lying outside of Powersite Classification No. 436;
- Secs. 14 to 18, inclusive, those portions lying outside of Powersite Classification No. 436 and Power Project No. 8221;
- Sec. 19, that portion lying outside of Powersite Classification No. 436;
- Secs. 20 and 21;
- Secs. 22 to 26, inclusive, those portions lying outside of Powersite Classification No. 436 and Power Project No. 8221;
- Secs. 27 to 35, inclusive;
- Sec. 36, that portion lying outside of Power Project No. 8221;

T. 4 S., R. 10 W.,
- Sec. 25, that portion lying outside of Powersite Classification No. 436;
- Sec. 36, those portions lying outside of Powersite Classification No. 436 and Power Project No. 8221.

T. 5 S., R. 10 W.,
- Secs. 1 and 2, those portions lying outside of Power Project No. 8221;
- Sec. 3, that portion lying outside of Powersite Classification No. 436 and Power Project No. 8221;
- Secs. 10 and 11, those portions lying outside of Powersite Classification No. 436 and Power Project No. 8221;
- Sec. 12, those portions lying outside of Power Project No. 8221;
- Secs. 13 and 14, those portions lying outside of Powersite Classification No. 436 and Power Project No. 8221;
- Secs. 15 and 24, those portions lying outside of Powersite Classification No. 436.

The areas described aggregate approximately 22,865 acres.

2. Subject to valid existing rights, the lands described above are hereby classified as suitable for and opened to selection by the State of Alaska under either the Alaska Statehood Act of July 7, 1958, 72 Stat. 339, et seq.; 48 U.S.C. prec. 21, or section 906(b) of the Alaska National Interest Lands Conservation Act of December 2, 1980, 94 Stat. 2437–2438, 43 U.S.C. 1635.

3. As provided by section 6(g) of the Alaska Statehood Act, the State of Alaska is provided a preference right of selection for the lands described above for a period of ninety-one (91) days from the date of publication of this order, if the lands are otherwise available. Any of the lands described herein that are not selected by the State of Alaska will continue to be subject to the terms and conditions of Public Land Order No. 5179, as amended, and any other withdrawals of record.

J. Steven Griles,

Assistant Secretary of the Interior.

April 1, 1988.

[FR Doc. 88–8110 Filed 4–13–88; 8:45 am]

BILLING CODE 4310–JA–M

DEPARTMENT OF JUSTICE

48 CFR Parts 2804, 2832, and 2852

[Justice Acquisition Circular 88–1]

Amendments to the Justice Acquisition Regulation (JAR) Regarding Ratification of Unauthorized Commitments and Prompt Payment

AGENCY: Justice Management Division, Office of the Procurement Executive, Justice.

ACTION: Final rule.

SUMMARY: Justice Acquisition Circular (JAC) 88–1 amends the JAR to incorporate Federal Acquisition Regulation coverage regarding ratification of unauthorized commitments and the implementation of the policies and procedures necessary to comply with Office of Management and Budget (OMB) Circular A–125, "Prompt Payment".

EFFECTIVE DATE: April 14, 1988.

FOR FURTHER INFORMATION CONTACT: W. L. Vann, Procurement Executive, Office of the Procurement Executive, (202) 272–8354.

SUPPLEMENTARY INFORMATION:

1. Background

JAC 88–1, Item No. 1

The Federal Procurement Regulations contained guidance on the subject of ratification of unauthorized comments. The coverage was omitted from the Federal Acquisition Regulation (FAR), and accordingly, Department-wide policy was provided in JAC 85–1 dated July 22, 1985. The issuance of Federal Acquisition Circular (FAC) 84–83 has now extended FAR coverage into this area. Item No. 1 of the JAC amends the JAR to reflect this coverage.

JAC 88–1, Item No. 2

Because the FAR did not specifically include coverage on OMB Circular A–125, "Prompt Payment", Department-wide procedures for implementing the Prompt Payment Act (Pub. L. 97–177, May 21, 1982, 31 U.S.C. 1801) and OMB Circular A–125 were provided with the issuance of the JAR on January 30, 1985. FAC 84–33 now provides for uniform coverage in the FAR, and accordingly, Item No. 2 of the JAC amends the JAR to reflect the change.

2. Regulatory Flexibility Act

JAC 88–1

The revisions to the JAR are not expected to impact adversely upon a substantial number of small entities within the meaning of the Regulatory Flexibility Act of 1980, 5 U.S.C. 601 *et seq.*, because very few ratification actions are necessary and the guidance provided by the FAR is consistent with the requirements of OMB Circular A–125.

3. Paperwork Reduction Act

JAC 88–1

The information collection regarding electronic funds transfers contained in Alternate II of the clause at FAR 52.232–25 was approved by the Office of Management and Budget pursuant to a request from the Department of the Treasury. OMB Control No. 151–00056 was assigned to this information collection and to Form TFS 3881, Payment Information Form, which is referenced in the clause. The Paperwork Reduction Act does not apply because the rule did not impose any additional requirements which require the approval of OMB under 44 U.S.C. 3501 *et seq.*

List of Subjects in 48 CFR Parts 2804, 2832, 2852

Government procurement.

Harry H. Flickinger,

Assistant Attorney General for Administration.

1. The authority citation for 48 CFR Part 2804, 2832, and 2852 continues to read as follows:

Authority: 28 U.S.C. 510; 40 U.S.C. 486(c); 28 CFR 0.75(j) and 0.76(j).

PART 2804—ADMINISTRATIVE MATTERS

2804.7001 [Amended]

2. Section 2804.7001 is amended by removing in paragraphs (a) and (b).

3. Section 2804.7002 is revised to read as follows:

2804.7002 Request for ratification.

The HCA may delegate to subordinate individuals approval of ratification requests of $5,000 and below; however, in no case shall the authority be delegated below the level of chief of the contracting office.

PART 2832—CONTRACT FINANCING

4. In subpart 2832.70 the title is amended by removing the word "Act."

5. Section, 2832.7000 is revised to read as follows:

2832.7000 Scope of subpart.

This subpart provides policies and procedures for implementing FAR 32.9—Prompt Payment.

6. Section 2832.7001 is revised to read as follows:

2832.7001 Policy.

The head of each contracting activity is responsible for promulgating procedures to ensure that, when specifying due dates, full consideration will be given to the time reasonably required by Government officials to fulfill their administrative responsibilities under the contract.

2832.7002 [Removed]

7. Section 2832.7002 is removed.

PART 2852—SOLICITATION PROVISIONS AND CONTRACT CLAUSES

2852.232-70 through 2852.232-78 [Removed]

8. The following sections are removed.

2852.232-70 Method of Payment.

2852.232-71 Invoice Requirements (FFP).

2852.232-72 Invoice Requirements (CPFF, T&M, and LH).

2852.232-73 Invoice Requirements (purchase orders).

2852.232-74 Payment Due Date (F.O.B. destination).

2852.232-75 Payment Due Date (F.O.B. origin).

2852.232-76 Payment Due Date (based on delivery).

2852.232-77 Interest on Overdue Payments (contracts).

2852.232-78 Interest on Overdue Payments (purchase orders).

[FR Doc. 88-8114 Filed 4-13-88; 8:45 am]

BILLING CODE 4410-01-M

VOL 53 ISS 72 APR 14 1988 UMI

Prop

This secti
contains r
proposed
regulations
is to give
opportunity
making pr
rules.

DEPARTI

Agricultu

7 CFR Pa

Irish Pot
Propose
Continui
Relax the
for Roun
the Minin

AGENCY:
USDA.

ACTION:

SUMMARY
reduce th
for high q
1½ inche
lower the
from 20 h
hundredw
size requ
imported
months o
these act
for small
potatoes
uninspec
entering

DATE: Co
May 16, 1

ADDRESS
to submi
this prop
Vegetabl
Box 9645
DC 20090
written n
they will
inspectio
Clerk du
comment
page num
Register.

FOR FURT
Todd A.
Adminis
Vegetabl
Box 9645
DC 20090
5610.

Proposed Rules

Federal Register
Vol. 53, No. 72
Thursday, April 14, 1988

This section of the FEDERAL REGISTER contains notices to the public of the proposed issuance of rules and regulations. The purpose of these notices is to give interested persons an opportunity to participate in the rule making prior to the adoption of the final rules.

DEPARTMENT OF AGRICULTURE

Agricultural Marketing Service

7 CFR Part 946

Irish Potatoes Grown in Washington; Proposed Amendment No. 8 to Continuing Handling Regulation To Relax the Minimum Size Requirement for Round Red Potatoes and Reduce the Minimum Quantity Exemption

AGENCY: Agricultural Marketing Service, USDA.

ACTION: Proposed rule.

SUMMARY: This proposed rule would reduce the minimum size requirement for high quality, round red potatoes from 1½ inches to 1 inch in diameter and lower the minimum quantity exemption from 20 hundredweight to 5 hundredweight per day. The reduced size requirement would also apply to imported round red potatoes during the months of July and August. The intent of these actions is to meet current demand for smaller, high quality round red potatoes and to decrease the volume of uninspected, low quality potatoes entering fresh market channels.

DATE: Comments must be received by May 16, 1988.

ADDRESS: Interested persons are invited to submit written comments concerning this proposal to: Docket Clerk, Fruit and Vegetable Division, AMS, USDA, P.O. Box 96456, Room 2085-S, Washington, DC 20090-6456. Three copies of all written material shall be submitted, and they will be made available for public inspection at the Office of the Docket Clerk during regular business hours. All comments should reference the date and page number of this issue of the **Federal Register**.

FOR FURTHER INFORMATION CONTACT: Todd A. Delello, Marketing Order Administration Branch, Fruit and Vegetable Division, AMS, USDA, P.O. Box 96456, Room 2525-S, Washington, DC 20090-6456, telephone (202) 475-5610.

SUPPLEMENTARY INFORMATION: This rule is proposed under Marketing Order No. 946 (7 CFR Part 946), as amended, regulating the handling of Irish potatoes grown in the State of Washington. This order is authorized by the Agricultural Marketing Agreement Act of 1937, as amended (7 U.S.C. 601-674), hereinafter referred to as the Act.

This proposed rule has been reviewed under Executive Order 12291 and Departmental Regulation 1512-1 and has been determined to be a "non-major" rule under criteria contained therein.

Pursuant to requirements set forth in the Regulatory Flexibility Act (RFA), the Administrator of the Agricultural Marketing Service (AMS) has considered the economic impact of this proposal on small entities.

The purpose of the RFA is to fit regulatory actions to the scale of business subject to such actions in order that small businesses will not be unduly or disproportionately burdened. Marketing orders issued pursuant to the Act, and rules issued thereunder, are unique in that they are brought about through group action of essentially small entities acting on their own behalf. Thus, both statutes have small entity orientation and compatibility.

There are approximately 50 handlers of Washington State potatoes subject to regulation under the marketing order, and approximately 360 producers in the production area. There are about 25 potato importers subject to the requirements of the potato import regulation. The Small Business Administration (13 CFR 121.2) has defined small agricultural producers as those having annual gross revenue for the last three years of less than $500,000, and small agricultural service firms are defined as those whose gross annual receipts are less than $3,500,000. The majority of handlers and producers of Washington State potatoes and importers of potatoes may be classified as small entities.

Fresh shipments of Washington round red potatoes have risen from 96,900 hundredweight (cwt.) in 1981-82 to 235,000 cwt. in the 1986-87 season. This increase has been continuous except for a drop in 1985-86. As of January 31, 1988, total fresh shipments of Washington potatoes are down from the previous season; however, fresh round red shipments are up to 285,000 cwt. compared with 216,000 cwt. during a corresponding period last year. Round red potatoes in Washington currently comprise approximately 6 percent of total fresh shipments, and less than 1 percent of total production. Over 97 percent of the round red potato crop is utilized in the fresh market, where consumer preference and demand determine sales. With these potatoes subject to buyer scrutiny, size, shape, and overall quality are of vital importance in meeting the consumer preference.

The handling requirements for fresh Washington potatoes are specified in § 946.336 (46 FR 39116, July 31, 1981; 47 FR 33245, August 2, 1982; 47 FR 38493, September 1, 1982; 48 FR 31851, July 12, 1983; 49 FR 32539, August 15, 1984; 52 FR 15490, April 29, 1987; 52 FR 41946, November 2, 1987). The current requirements for round red potatoes specify that they be shipped under the following conditions. Round red potatoes must grade at least U.S. No. 2 and must have a minimum diameter of 1⅞ inches (47.6 mm) except size "B" (1½ inches minimum diameter) may be shipped if otherwise grading U.S. No. 1. Furthermore, the maturity requirement for round red potatoes is that they shall not be more than "moderately skinned."

This proposed rule would reduce the minimum size requirement for U.S. No. 1 round red potatoes from 1½ inches to 1 inch minimum diameter. This rule also proposes a decrease in the minimum quantity exemption from 20 cwt. to 5 cwt. per day. These changes were recommended by the State of Washington Potato Committee to become effective beginning with the 1988-89 season which commences July 1.

The relaxed size requirement would afford producers and handlers the opportunity to meet current market demand for small, high quality round red potatoes. This change is expected to benefit consumers by providing them with a product they desire, and producers and handlers by increased sales. This relaxation should not adversely affect the market for larger round red potatoes.

Under the current regulation, handlers are able to ship up to 20 cwt. per day without regard to inspection and assessment requirements. The intent of this exemption is to alleviate the burden on handling noncommercial quantities of potatoes and to allow direct marketing of potatoes to operate in more

freedom. The committee believes that the 5 cwt. amount would be adequate to fulfill these objectives. Reducing this minimum quantity exemption to 5 cwt. would address the committee's concern that too many uninspected, low quality potatoes are ending up in fresh market channels. The proposed exemption would be more in line with exempt amounts provided under similar marketing orders covering other major potato producing areas. The purpose of this change would be to lower the amount of low quality potatoes entering fresh market channels.

Other exemptions currently provided would be unchanged. The grade, size, cleanness, maturity, and pack requirements are not applicable to shipments of potatoes for livestock feed, charity, seed, prepeeling, other processing, or export. Shipments to these outlets are also free from inspection requirements.

Section 8e of the Agricultural Marketing Agreement Act of 1937 requires that when certain domestically produced commodities, including Irish potatoes, are regulated under a Federal marketing order, imports of that commodity must meet the same or comparable grade, size, quality, or maturity requirements. Section 8e also provides that whenever two or more marketing orders regulating a commodity produced in different areas of the United States are concurrently in effect the Secretary shall determine which of the areas produces the commodity in most direct competition with the imported commodity. Imports then must meet the quality standards set for that particular area.

In the case of potatoes, the current import regulation [§ 980.1, 34 FR 8043] specifies that import requirements for long types be based on those in effect for potatoes grown in certain designated counties in Idaho, and Malheur County, Oregon (M.O. 945) during each month of the marketing year and that for round white types, they be based on those in effect for potatoes grown in the Southeastern States from June 5 to July 31, and on those in effect for potatoes grown in Colorado Area 3 for the remainder of the year.

The quality standards imposed upon imports of red skinned, round type potatoes are based on that type grown in Washington during the months of July and August. During the remainder of the year, the import requirements are based uon those in effect for potatoes grown in Colorado Area 2.

As proposed, during the July 1 through August 31 period, round red skinned potatoes which are at least one inch in diameter may be imported if they otherwise grade at least U.S. No. 1. No change would be required in the language of § 980.1 or § 946.336(i) *Applicability to imports.*

Based on the above, the Administrator of AMS has determined that this action would not have a significant economic impact on a substantial number of small entities.

A 30-day comment period is provided to allow interested persons sufficient time to respond to this proposal. All written comments timely received will be considered before a final determination is made on this matter.

List of Subjects in 7 CFR Part 946

Marketing agreements and orders, Potatoes, Washington.

For the reasons set forth in the preamble, it is proposed that 7 CFR Part 946 be amended as follows:

PART 946—IRISH POTATOES GROWN IN WASHINGTON

1. The authority citation for 7 CFR Part 946 continues to read as follows:

Authority: Secs. 1–19, 48 Stat. 31, as amended; 7 U.S.C. 601–674.

2. Section 946.336 is amended by revising paragraphs (a)(2)(i) and (f) to read as follows:

§ 946.336 Handling regulation.

* * * * *

(a) * * *

(2) *Size*—(i) *Round varieties*—1⅞ inches (47.6 mm) minimum diameter, except round red varieties may be 1 inch (25.4 mm) minimum diameter, if U.S. No. 1.

* * * * *

(f) *Minimum quantity exemption.* Each handler may ship up to, but not to exceed 6 hundredweight of potatoes per day without regard to the inspection and assessment requirements of this part, but this exception shall not apply to any shipment over 5 hundredweight of potatoes.

* * * * *

Dated: April 11, 1988.

Robert C. Keeney,

Director, Fruit and Vegetable Division, Agricultural Marketing Service.

[FR Doc. 88–8233 Filed 4–13–88; 8:45 am]

BILLING CODE 3410-02-M

---

7 CFR Part 1065

Milk in the Nebraska-Western Iowa Marketing Area; Proposed Suspension of Certain Provisions of the Order

AGENCY: Agricultural Marketing Service, USDA.

ACTION: Proposed suspension of rule.

SUMMARY: This notice invites public comments on a proposal to suspend for the months of April through August 1988 the requirement that a cooperative association deliver 51 percent or more of the producer milk of members of the association to pool distributing plants of other handlers in order to qualify a supply plant operated by the cooperative association for pooling under the Nebraska-Western Iowa order. The action was requested by a cooperative association that represents producers who supply milk for the market. The association claims that this action is necessary to assure that its member dairy farmers who have regularly supplied the market's fluid needs will continue to share in the market's fluid milk sales.

DATE: Comments are due on or before April 21, 1988.

ADDRESS: Comments (two copies) should be sent to: USDA/AMS/Dairy Division, Order Formulation Branch, Room 2968, South Building; P.O. Box 96456, Washington, DC 20090–6456.

FOR FURTHER INFORMATION CONTACT: Constance M. Brenner, Marketing Specialist, USDA/AMS/Dairy Division, Order Formulation Branch, Room 2968, South Building, P.O. Box 96456, Washington, DC 90090–6456, (202) 447–7183.

SUPPLEMENTARY INFORMATION: The Regulatory Flexibility Act (5 U.S.C. 601–612) requires the Agency to examine the impact of a proposed rule on small entities. Pursuant to 5 U.S.C. 605(b), the Administrator of the Agricultural Marketing Service has certified that this proposed action would not have a significant economic impact on a substantial number of small entities. Such action would lessen the regulatory impact of the order on certain milk handlers and would tend to ensure that dairy farmers would continue to have their milk pooled and priced under the order and thereby receive the benefits that accrue from such pricing. This proposed rule has been reviewed under Executive Order 12291 and Departmental Regulation 1512–1 and has been determined to be a "non-major" rule under the criteria contained therein.

Notice is hereby given that, pursuant to the provisions of the Agricultural Marketing Agreement Act of 1937, as amended (7 U.S.C. 601–674), the suspension of the following provisions of the order regulating the handling of milk in the Nebraska-Western Iowa marketing area is being considered for the months of April through August 1988:

In § 1065.7(c), the words "51 percent or more of the".

All persons who want to send written data, views or arguments about the proposed suspension should send two copies of them to:

USDA/AMS/Dairy Division, Order Formulation Branch, Room 2968, South Building, P.O. Box 96456, Washington, DC 20090-6456, by the 7th day after publication of this notice in the **Federal Register.** The period for filing comments is limited to 7 days because a longer period would not provide the time needed to complete the required procedures and include April 1988 in the suspension period.

The comments that are sent will be made available for public inspection in the Dairy Division during normal business hours (7 CFR 1.27(b)).

Statement of Consideration

The proposed suspension would remove for the months of April through August 1988 the requirement that a cooperative association deliver 51 percent or more of the producer milk of members of the association to pool distributing plants of other handlers in order to qualify a supply plant operated by the cooperative association for pooling. The suspension was requested by Mid-America Dairymen, Inc. (Mid-Am), a cooperative association that represents a large number of the market's producers.

According to Mid-Am, the amount of producer milk pooled on the Nebraska-Western Iowa order during 1987 increased 5 percent over the amount pooled under the order during 1986. At the same time, the cooperative states, producer milk used in Class I declined by 2 percent. Mid-Am states that these trends have continued into 1988, with levels of producer milk pooled under the order during the months of January and February increasing by 13 and 11 percent, respectively, from the levels of the same months of 1987.

Mid-Am predicts that the present trends in milk production and Class I use, combined with the decrease in Class I sales that will accompany the closing of schools for the summer, will cause the percentage of the cooperative's milk pooled under the Nebraska-Western Iowa order and shipped to distributing plants to fall below 51 percent during the months for which the suspension is requested. As a consequence, Mid-Am expects the current marketing situation to create difficulties for the cooperative in maintaining the pool status of its member producers who historically have supplied the fluid needs of the Nebraska-Western Iowa market.

As alternatives to depooling some milk of its member producers, the cooperative would have to attempt to pool Nebraska-Western Iowa producer milk on another Federal order or ship milk to distributing plants where the milk would be received, loaded back into the truck and shipped to a manufacturing plant. Either alternative would require the cooperative to move milk in an uneconomic and inefficient manner solely to maintin the pool status of producers who historically have supplied the fluid needs of the Nebraska-Western Iowa marketing area.

Accordingly, it may be appropriate to suspend the 51 percent delivery standard for the months of April through August 1988.

List of Subjects in 7 CFR Part 1065

Milk marketing orders, Milk, Dairy products.

PART 1065—[AMENDED]

The authority citation for 7 CFR Part 1065 continues to read as follows:

Authority: Secs. 1-19, 48 Stat. 31, as amended; 7 U.S.C. 601-674.

Signed at Washington, DC on April 11, 1988.

J. Patrick Boyle,

Administrator, Agricultural Marketing Service.

[FR Doc. 88-8235 Filed 4-13-88; 8:45 am]

BILLING CODE 3410-02-M

NUCLEAR REGULATORY COMMISSION

10 CFR Part 50

[Docket No. PRM-50-25a]

Porter County Chapter of the Izaak Walton League et al.; Denial of Petition for Rulemaking

AGENCY: Nuclear Regulatory Commission.

ACTION: Denial of petition for rulemaking.

SUMMARY: The Nuclear Regulatory Commission is denying a petition for rulemaking submitted by the Porter County Chapter of the Izaak Walton League of America, et al. The petitioner requested a change in the Commission's regulations governing the extension of construction permits.

Specifically the petitioner requested that the Commission not limit its inquiry in granting an extension to those reasons why construction was not timely completed but would require the Commission to consider whether good cause had been shown for continued construction of the reactor in light of all the circumstances at the time the request for an extension was filed. Commission decisions since the filing of the petition have emphasized that the decision to grant an extension should not be used to conduct a broad-based reconsideration of the initial decision to grant a construction permit. Since the petition would, in essence, require such broad-based reconsideration, the Commission has decided to deny the request for the petition.

ADDRESS: Copies of correspondence, the petition, and documents cited below are available for public inspection and copying for a fee at the Commission's Public Document Room at 1717 H Street NW., Washington, DC.

FOR FURTHER INFORMATION CONTACT: Ronald M. Smith, Office of the General Counsel, U.S. Nuclear Regulatory Commission, Washington, DC 20555, Telephone: (301) 492-4396.

SUPPLEMENTARY INFORMATION:

The Petition

In a submittal dated December 20, 1979, the Porter County Chapter of the Izaak Walton League, the Concerned Citizens Against Bailly Nuclear Site, the Businessmen for the Public Interest, Inc., James E. Newman, and Mildred Warner filed with the Commission, petition for rulemaking PRM-50-25a. An identical petition was filed on the same date by the State of Illinois and was denominated petition for rulemaking PRM-50-25. The petitioners requested that the Commission modify 10 CFR 50.55(b) which provides:

> If the proposed construction or modification of the facility is not completed by the latest completion date, the permit shall expire and all rights thereunder shall be forfeited: *Provided, however,* That upon good cause shown the Commission will extend the completion date for a reasonable period of time. The Commission will recognize, among other things, developmental problems attributable to the experimental nature of the facility or fire, flood, explosion, strike, sabotage, domestic violence, enemy action, an act of the elements, and other acts beyond the control of the permit holder, as basis for extending the completion date.

The petitioners sought to amend this section as an alternative to their attempt to intervene in the construction permit proceeding for Northern Indiana Public Service Company's (NIPSCO) Bailly Nuclear Generating Station. NIPSCO canceled the plant and petitioner's desire to inervene became moot as a result of cancellation. However, the petitioners requested that the Commission consider modifying § 50.55(b). Specifically, the petitioners

requested that the good cause determination must consider "whether the permittee has shown good cause for the continued construction of the plant in light of all the circumstances at the time of considering the application [for the extension]." In the view of the petitioners, this rule would prohibit the Commission from limiting the extension proceeding to the reasons why construction was not completed by the latest completion date in the construction permit. The Commission received four comments on the petition from law firms representing various owners and operators of nuclear power plants. The comments were unanimous in their opposition to the petition.

In early 1985, both the State of Illinois and the private citizen groups were contacted by the NRC in order to determine whether the petitioners wanted to withdraw their request in light of the cancellation by NIPSCO of the Bailly Generating Station. On February 28, 1985, the State of Illinois sent a letter to the Secretary of the Commission withdrawing its petition for rulemaking (PRM-50-25). Attorneys for the private citizen petitioners were contacted and they agreed to withdraw the petition (PRM-50-25A). Approximately a year later, the attorney for the private citizens was again contacted and he stated that he would withdraw the petition. Follow-up information was sent on January 31, 1986. No response was forthcoming. Rather than delay further, the Commission will act upon the petition.

Discussion

Subsequent to the filing of the petitions, the Commission clarified the meaning of § 50.55(b). In *Washington Public Power Supply System* (WPPSS Nuclear Project Nos. 1 & 2), CLI-82-29, 16 NRC 1221 (1982), the Commission addressed the scope of the "good cause" determination. First, the Commission noted that the purpose of the extension process was not to engage in an unbridled inquiry into matters already addressed in the initial construction permit hearing. *Id.* at 1227. The Commission then noted that a person who wanted to raise health, safety, or environmental issues could do so in a request for the Commission to institute a show-cause proceeding under 10 CFR 2.206 or, to the extent appropriate, would seek to litigate such issues in the context of an operating license proceeding. The Commission concluded that the approach to deciding whether good cause had been shown was to limit the challenges to the request for an extension to those based on the reasons proffered by the permittee for the delay. *Id.* at 1228. Thus, for example, a challenge to a permittee's need for an extension based on delays due to unusually severe weather could not be based on the need for the facility but only on the severity of the weather as it affected permittee's ability to construct the facility. The Commission again addressed the issue of good cause shown in *Texas Utilities Electric Company* (Comanche Peak Steam Electric Station, Unit 1), CLI-86-15, 24 NRC 397. In that case, the Commission held that a permittee may demonstrate that there was good cause for the past delay in plant completion or a permittee may show that its current and future actions are "good cause" for an allowance of more time for plant completion. This is so even when the delay results from past conduct by the permittee which sought to violate NRC requirements, which then resulted in a requirement to correct safety deficiencies flowing from the past conduct.

In short, if the permittee discarded and repudiated its past policy of violating NRC requirements, "any delays arising from the need to take corrective action would be delays for good cause." *Id* at 403.

The Commission revisited the construction permit extension process in *Public Service Company of New Hampshire* (Seabrook Station Unit 2), CLI-84-6, 19 NRC 975 (1984). The Commission reaffirmed and expanded on the *WPPSS* decision. Specifically, the Commission developed a test for determining whether a contention falls within the perimeter of the construction permit extension process. The contention must show that the applicant is responsible for the delay and has acted intentionally and without a valid business purpose. *Id.* at 978.

The Commission reemphasized the narrow scope of the construction permit extension proceeding in *Texas Utilities Electric Company* (Comanche Peak Steam Electric Station, Unit 1), CLI-86-04, 23 NRC 113 (1986). In *Texas Utilities*, the Commission had to determine whether it could grant an extension of a construction permit after the construction permit had expired. The Commission determined that it could do so. More importantly, the Commission rejected a plea by the Citizens Association for Sound Energy (CASE) for a full-scale hearing on a new construction permit. 23 NRC at 117-120. Rather, the Commission referred the request for a hearing to the Atomic Safety and Licensing Board Panel for appropriate action. In the referral, the Commission limited the scope of any hearing to challenges to Texas Utilities [1] effort to demonstrate the existence of good cause. 23 NRC at 121. By rejecting CASE's plea, the Commission reiterated its policy that the construction extension process is not a forum for the reconsideration of issues addressed in the construction permit hearing; nor is it an avenue for raising issues that can be addressed in a more appropriated forum such as a § 2.206 proceeding or an operating license proceeding. The Commission's determination in this case was upheld by the D.C. Circuit Court of Appeals on June 26, 1987. *See Citizen's Association for Sound Energy v. NRC*, 821 F.2d 725 (D.C. Cir. 1987).

In summary, the Commission has repeatedly rejected attempts to broaden the scope of the construction permit extension proceeding. Avenues exist in which persons can raise safety and environmental concerns. The Commission does not believe that a full-scale relitigation in "a good cause proceeding" of issues addressed elsewhere or that can be raised in a different proceeding would substantially improve the protection of public health and safety.

Denial

Based on the above considerations the Commission hereby denies the petition for rulemaking PRM-50-25a dated December 20, 1979, filed by the Porter County Chapter of the Izaak Walton League, et al.

Pursuant to the 10 CFR 1.49(o), the Executive Director for Operations is authorized to deny petitions for rulemaking of a minor or nonpolicy nature where the grounds for denial do not substantially modify existing precendent. This petition does not raise new policy issues and the grounds for denial of the petition are in accordance with existing precedent. In fact, the Commission has recently addressed this very issue and has seen no reason to modify its existing policy. Thus, denial of the petition falls within the scope of the Executive Director's delegated authority.

Dated at Bethesda, Maryland, this 1st day of April 1988.

For the Nuclear Regulatory Commission.

Victor Stello, Jr.

Executive Director for Operations.

[FR Doc. 88-8168 Filed 4-13-88; 8:45 am]

BILLING CODE 7590-01-M

DEPARTMENT OF TRANSPORTATION

Federal Aviation Administration

14 CFR Part 39

[Docket No. 87-NM-56-AD]

Airworthiness Directives; Boeing Model 747 Airplanes

AGENCY: Federal Aviation Administration (FAA), DOT.

ACTION: Supplemental Notice of Proposed Rulemaking (NPRM); reopening of comment period.

SUMMARY: This document amends an earlier proposed airworthiness directive (AD), applicable to certain Model 747 airplanes, that would have required hydrostatic testing of the leading edge pneumatic ducts and repair or replacement, as necessary. This document amends the NPRM by changing the type and applicability of testing and the compliance time. This action is prompted by additional testing which indicates that the original proposed action would not be completely effective in preventing leading edge duct failures.

DATES: Comments must be received no later than May 10, 1988.

ADDRESSES: Send comments on the proposal in duplicate to the Federal Aviation Administration, Northwest Mountain Region, Office of the Regional Counsel (Attn: ANM-103), Attention: Airworthiness Rules Docket No. 87-NM-56-AD, 17900 Pacific Highway South, C-68966, Seattle, Washington 98168. The applicable service information may be obtained from the Boeing Commercial Airplane Company, P.O. Box 3707, Seattle, Washington 98124. This information may be examined at the FAA, Northwest Mountain Region, 17900 Pacific Highway South, Seattle, Washington, or the Seattle Aircraft Certification Office, 9010 East Marginal Way South, Seattle, Washington.

FOR FURTHER INFORMATION CONTACT: Mr. Robert C. McCracken, Systems and Equipment Branch, ANM-130S; telephone (206) 431-1947. Mailing address: FAA, Northwest Mountain Region, 17900 Pacific Highway South, C-68966, Seattle, Washington 98168.

SUPPLEMENTARY INFORMATION:

Comments Invited

Interested persons are invited to participate in the making of the proposed rule by submitting such written data, views, or arguments as they may desire. Communications should identify the regulatory docket number and be submitted in duplicate to the address specified above. All communications received on or before the closing date for comments specified above will be considered by the Administrator before taking action on the proposed rule. The proposals contained in this Notice may be changed in light of the comments received. All comments submitted will be available, both before and after the closing date for comments, in the Rules Docket for examination by interested persons. A report summarizing each FAA/public contact concerned with the substance of this proposal will be filed in the Rules Docket.

Availability of NPRM

Any person may obtain a copy of this Notice of Proposed Rulemaking (NPRM) by submitting a request to the FAA, Northwest Mountain Region, Office of the Regional Counsel (Attn: ANM-103), Attention: Airworthiness Rules Docket No. 87-NM-56-AD, 17900 Pacific Highway South, C-68966, Seattle, Washington 98168.

Discussion

A Notice of Proposed Rulemaking (NPRM) was published in the **Federal Register** on July 6, 1987 (52 FR 25239), which requested public comment concerning a proposal to require testing of wing leading edge pneumatic ducts, and repair or replacement, as necessary, on Boeing Model 747 series airplanes. The comment period closed August 21, 1987. Comments were received from eight parties.

The Boeing Company requested additional time to complete a test program in which the effects of hydrides on titanium duct durability was being evaluated. The FAA determined that the delay of the Final Rule following the NPRM to allow completion of testing by Boeing was justified to avoid premature issuance of an AD.

During the test program, Boeing has found evidence that the formation of hydrides along heat affected zones in the weld areas of wing leading edge pneumatic ducts contributes to premature duct failure. The study also indicates that stress-relieving the ducts eliminates the residual stresses and local stresses that lead to hydride-caused cracking. The cracks formed by hydrides grow very slowly and are readily detected by penetrant inspection.

Boeing recommends the following program to detect or prevent cracks: For Model 747 airplanes up to line number 574 which have accumulated more than 7,000 landings, within the next 3,000 landings, perform a proof pressure test on the wing leading edge ducts. These airplanes had 160 psia proof pressure tests on the ducts during manufacture; later airplanes had 300 psia proof pressure tests during manufacture and would not require additional pressure testing. For all Model 747 airplanes which have accumulated more than 7,000 landings, within the next 3,000 landings, perform a penetrant inspection of the wing leading edge pneumatic ducts. Repeat the penetrant inspections at intervals not to exceed 7,000 landings. Stress-relieving the ducts has been shown to relieve residual stresses; hence, stress-relieving the ducts has been recommended by Boeing as terminating action for the repetitive inspections.

The FAA has considered the information provided by Boeing and concurs with the recommendations. This proposal constitutes a revision to the original NPRM that is sufficiently different to require amendment of the NPRM and reopening of the comment period.

In addition to the comments from the Boeing Company, several commenters noted that the proposed 6,000 hour initial compliance period would require extensive time out of service for their Model 747 airplanes. In addition, there was concern expressed regarding availability of spare duct sections to replace those that failed during the proposed pressure tests. The amended NPRM, in allowing a longer compliance period, addresses those concerns.

Other commenters suggested accomplishing penetrant tests, leak tests, and visual inspections in lieu of proof pressure tests. The FAA does not concur with these commenters for the airplanes up to line number 574. Problems with weld quality, which prompted the original NPRM, have not been identified prior to duct burst in some cases using the techniques proposed by the commenters. The amended NPRM does, however, require penetrant inspection on airplanes after line number 574.

Two commenters expressed the opinion that the AD was unnecessary, provided existing maintenance procedures are followed. Further, one commenter stated that the unsafe condition addressed in the NPRM was not an inflight safety problem. The FAA does not concur with these comments. Existing maintenance practices have not eliminated the problem. The cases cited in the original NPRM indicate that a burst leading edge duct can lead to substantial damage to the airplane and misleading information to the pilot, either of which reduce the ability of the

flight crew to properly continue safe flight and landing.

One commenter suggested adding other pneumatic ducts to the AD, noting that problems had been experienced in other parts of the duct system. While the FAA concurs that other ducts have burst in service, these failures have not presented the hazard that the failure of the leading edge ducts has shown. The same commenter requested clarification of the X-ray procedure in the service letter called out in the original NPRM. This procedure was not proposed to be required by the NPRM and is not addressed in this supplemental NPRM; therefore, no change is needed.

One commenter stated that paragraph B. of the original NPRM should be dropped in its entirety. The commenter noted that newly-purchased ducts that meet Boeing specifications should not have to be verified. This commenter stated that if a used but serviceable duct was installed on the airplane when replacing a failed duct, inspection and test of the replacement part is accomplished as part of the operator's maintenance program. The FAA agrees with this comment and the original paragraph B. has been deleted from the supplemental NPRM.

The FAA has reviewed and approved Boeing Alert Service Bulletin 747-36A2074, dated February 11, 1988, which describes hydrostatic testing and penetrant inspection of Boeing 747 wing leading edge pneumatic ducts.

After a careful review of the available data, including the comments noted above, an AD is proposed which would require inspections of the wing leading edge pneumatic system ducts on Boeing Model 747 series airplanes in accordance with the aforementioned Boeing Service Bulletin.

It is estimated that 172 airplanes of U.S. registry would be affected by this AD, that it would take approximately 120 manhours per airplane to accomplish the required initial inspection and test, and that the average labor cost would be $40 per manhour. Based on these figures, the total cost impact of the AD on U.S. operators for the initial required action is $825,600. In addition, the required repetitive inspections would take 104 manhours per airplane every 7,000 flight cycles, which is approximately 28,000 flight hours or 9.33 years. The average cost associated with the repetitive inspections is approximately $76,690 per year.

For these reasons, the FAA has determined that this document (1) involves a proposed regulation which is not major under Executive Order 12291 and (2) is not a significant rule pursuant to the Department of Transportation Regulatory Policies and Procedures (44 FR 11034; February 26, 1979); and it is further certified under the criteria of the Regulatory Flexibility Act that this proposed rule, if promulgated, will not have a significant economic impact, positive or negative, on a substantial number of small entities because few, if any, Boeing Model 747 airplanes are operated by small entities. A copy of a draft regulatory evaluation prepared for this action is contained in the regulatory docket.

List of Subjects in 14 CFR Part 39

Aviation safety, Aircraft.

The Proposed Amendment

Accordingly, pursuant to the authority delegated to me by the Administrator, the Federal Aviation Administration proposes to amend § 39.13 of Part 39 of the Federal Aviation Regulations (14 CFR 39.13) as follows:

PART 39—[AMENDED]

1. The authority citation for Part 39 continues to read as follows:

Authority: 49 U.S.C. 1354(a), 1421 and 1423; 49 U.S.C. 106(g) (Revised Pub. L. 97-449, January 12, 1983); and 14 CFR 11.89.

§ 39.13 [Amended]

2. By revising notice of proposed rulemaking, Docket No. 87-NM-56-AD, published in the **Federal Register** on July 6, 1987 (52 FR 25239), to read as follows:

Boeing: Applies to Model 747 series airplanes, certificated in any category, Group 1 and Group 2 airplanes as listed in Boeing Service Bulletin 747-36A2074, dated February 11, 1988. Compliance required as indicated, unless previously accomplished.

To prevent damage to wing panels and electrical wiring as a result of failure of wing leading edge ducts, accomplish the following:

A. For Group 1 airplanes: prior to the accumulation of 7,000 flight cycles, or within the next 3,000 flight cycles, whichever occurs later, after the effective date of this AD, accomplish a proof pressure test and penetrant inspection of the wing leading edge pneumatic ducts in accordance with the Boeing Alert Service Bulletin 747-36A2074, dated February 11, 1988, or later FAA-approved revision.

B. For Group 2 airplanes: prior to the accumulation of 7,000 flight cycles, or within the next 3,000 flight cycles, whichever occurs later, after the effective date of this AD, accomplish a penetrant inspection of the wing leading edge pneumatic ducts in accordance with the Boeing Alert Service Bulletin 747-36A2074, dated February 11, 1988, or later FAA-approved revision.

C. For both Group 1 and Group 2 airplanes, repeat the penetrant inspection required by paragraphs A. and B., above, at intervals not to exceed 7,000 flight cycles.

D. Accomplishing the leading edge duct weld stress relieving procedure in accordance with Boeing Alert Service Bulletin 747-36A2074, dated February 11, 1988, or later FAA-approved revision, constitutes terminating action for the repetitive penetrant inspections required by paragraph C., above.

E. An alternative means of compliance or adjustment of the compliance time, which provides an acceptable level of safety and which has the concurrence of an FAA Principal Maintenance Inspector, may be used when approved by the Manager, Seattle Aircraft Certification Office, FAA, Northwest Mountain Region.

F. For the purpose of complying with this AD, subject to acceptance by the assigned FAA Maintenance Inspector, the number of flight cycles may be determined by dividing each airplane's number of hours time-in-service by the operator's fleet average time from takeoff to landing for the airplane type.

G. Special flight permits may be issued in accordance with FAR 21.197 and 21.199 to operate airplanes to a base for accomplishment of the rework required by this AD.

All persons affected by this directive who have not already received the appropriate service documents from the manufacturer may obtain copies upon request to the Boeing Commercial Airplane Company, P.O. Box 3707, Seattle, Washington 98124-2207. These documents may be examined at the FAA, Northwest Mountain Region, 17900 Pacific Highway South, Seattle, Washington, or the Seattle Aircraft Certification Office, 9010 East Marginal Way South, Seattle, Washington.

Issued in Seattle, Washington, on April 6, 1988.

Frederick M. Isaac,

Acting Director, Northwest Mountain Region.

[FR Doc. 88-8213 Filed 4-13-88; 8:45 am]

BILLING CODE 4910-13-M

DEPARTMENT OF THE TREASURY

Office of the Assistant Secretary

17 CFR Ch. IV

Implementing Regulations for the Government Securities Act of 1986

AGENCY: Office of the Assistant Secretary (Domestic Finance), Treasury.

ACTION: Notice of extension of time for submission of comments.

SUMMARY: This document extends until April 27, 1988, the deadline for the submission of comments on the proposed clarifying amendments to the Treasury's regulations issued under the Government Securities Act of 1986. The notice of proposed rulemaking was published in the **Federal Register** on March 15, 1988 (53 FR 8598) and

comments were to be received on or before April 14, 1988.

DATE: Comments must be submitted on or before April 27, 1988.

ADDRESSES: Comments should be sent to: Government Securities Regulations Staff, Bureau of the Public Debt, Department of the Treasury, Room 209, 999 E Street NW., Washington, DC 20239-0001. Comments received will be avialable for public inspection and copying at the Treasury Department Library, Room 5030, Main Treasury Building, 1500 Pennsylvania Avenue NW., Washington, DC 20220.

FOR FURTHER INFORMATION CONTACT: Anne Meister (Government Security Specialist), Don Hammond (Government Securities Specialist), or Clifford Rones (Attorney-Advisor) at 202-376-4632.

SUPPLEMENTARY INFORMATION: The amendments are being proposed to resolve some technical problems and omissions in the rule, to make conforming changes, and to clarify the Department's intent with respect to certain provisions that have raised questions in the implementing regulations for the Government Securities Act of 1986 (52 FR 27910) issued on July 24, 1987.

The Department has received a request for an extension of the comment period until April 27, 1988, from an association representing approximately 180 banks. The association stated that the original thirty-day comment period does not allow sufficient time for the association and a number of its members to prepare their comments on the proposed amendments to the regulations. Given the limited additional time requested, the Department agrees to extend the comment period until April 27, 1988.

Date: April 11, 1988.

Charles O. Sethness,

Assistant Secretary for Domestic Finance.

[FR Doc. 88-8244 Filed 4-13-88; 8:45 am]

BILLING CODE 4810-10-M

SECURITIES AND EXCHANGE COMMISSION

17 CFR Part 200

[Release Nos. 33-36765; 34-25559; 35-24617; 39-2157; IC-16354; IA-1112; File No. S7-5-88]

Expedited Publication of Interpretative, No-Action, and Certain Exemption Letters

AGENCY: Securities and Exchange Commission.

ACTION: Notice of proposed rulemaking.

SUMMARY: The Commission is publishing for comment additional amendments to its regulations on Information and Requests to provide for publication of all interpretative, no-action, and certain exemption letters as soon as practicable after such letters are sent or given to requesting parties unless temporary confidential treatment is granted.

DATE: Comments should be received on or before May 16, 1988.

ADDRESS: Comments should be submitted in triplicate to Jonathan G. Katz, Secretary, Securities and Exchange Commission, 450 Fifth Street NW., Washington, DC 20549. Comment letters should refer to File No. S7-5-88. All comments received will be available for public inspection and copying in the Commission's Public Reference Room, 450 Fifth Street NW., Washington, DC 20549.

FOR FURTHER INFORMATION CONTACT: Nancy J. Burke, (202) 272-2880, Office of Legal Policy and Trading Practices, Division of Market Regulation, Securities and Exchange Commission, 450 Fifth Street NW., Washington, DC 20549.

SUPPLEMENTARY INFORMATION: In a companion release,[1] the Commission today adopted revisions to rule 81 under its regulations on Information and Requests[2] to provide generally for prompt publication of interpretative, no-action and certain exemption letters unless temporary confidential treatment is granted. The rule as amended excepts correspondence concerning certain trading practices rules[3] under the Securities Exchange Act of 1934[4] from prompt publication. Such correspondence remains unpublished for 30 days after the staff's response is first sent or given to the requesting party, as had been the case under prior practice.

Two public commentators suggested that the distinction between trading practices letters and other correspondence subject to the rule is unwarranted and that a uniform system of publication is preferable. The Commission believes these contentions have merit and accordingly is proposing further amendment to rule 81 that will provide for prompt publication of trading practices correspondence. If adopted this amendment will result in uniform procedures for prompt publication of all interpretative, no-action and exemption correspondence except in cases where confidential treatment is extended under the standards of rule 81(b).

I. Discussion

During the comment process for the amendments to rule 81 proposed on September 8, 1987,[5] and adopted today, two commentators expressing general support for the rule amendments opined that the justification for the exception to prompt publication for the trading practices rules was insufficient when compared to the public benefits resulting from more timely publication of interpretative, no-action and exemption letters.[6] They suggested that, except where temporary confidential treatment is granted, the Commission should make all such correspondence public immediately, without regard to the subject of the request. They further stated that transactions forming the basis for requests under the trading practices rules, such as impending public distributions and tender offers, cannot be said to be intrinsically more sensitive to public disclosure than transactions involving other issues, such as exempted securities or transactions under the Securities Act of 1933. As expressed in one of these comments, "we doubt that all or even most * * * [such] correspondence dealing with the trading practices rules can properly be said to present 'sensitive issues' that would merit grant of confidential treatment under the standard articulted in Rule 81(b)."[7] Therefore, unless a request actually reveals information that, if prematurely disclosed, would inhibit legitimate business activity or have unwarranted effects on the securities market, there is no obvious reason to treat trading practices correspondence differently and automatically delay its publication. Both these comments pointed out that the adverse consequences of premature

---

[1] Release No. 33-6764.

[2] 17 CFR 200.81.

[3] 17 CFR 240.10b-6, 240.10b-7, 240.10b-8, 240.10b-13 and 240.13e-4.

[4] 15 U.S.C. 78a *et seq.*

[5] Release No. 33-6740 [52 FR 35115].

[6] Comment letter from Andrew M. Klein, *et al.*, American Bar Association Section of Corporation, Banking and Business Law, January 4, 1988; *See also* comment letter from Joseph D. Hansen, New York State Bar Association, Banking, Corporation and Business Law Section, November 6, 1987. One other commentator impliedly supported the rule amendment in general but recommended that 30-day confidentiality be maintained for all Williams Act rules on the same grounds that had been suggested for differentiating the trading practices rules in Release No. 33-6740. Comment letter from Henry Lesser, Fried, Frank, Harris, Shriver & Jacobson, October 5, 1987. The Commission believes that, as other commentators observed and Mr. Lesser acknowledged, the availability of confidential treatment under rule 81(b) will adequately address requests involving sensitive, non-public information.

[7] Andrew M. Klein, *et al., op. cit.*, at 3.

publicity may still be avoided in any type of transaction under the confidential treatment procedures of rule 81(b).

The Commission believes these arguments merit consideration. With the adoption of rule 81, the Commission recognized the possibility that premature public disclosure of business plans or transactions under negotiations could be inappropriate in some cases. In circumstances where the consummation of a transaction might be jeopardized, disclosure at too early a stage or unwarranted effects on the public securities markets might be caused, confidential treatment procedures under rule 81(b) have proved adequate to prevent such adverse consequences.[8]

Through rule 81(b), premature publicity may be prevented in appropriate cases at the party's request and with the staff's concurrence. In view of the adequacy of this procedure and in recognition of the argument that a standard of actual, rather than presumed, need for confidential treatment should govern, the Commission is proposing further amendments torule 81 that would elimate the distinction between interpretative, no-action and exemption correspondence based on the subject of the request and provide for prompt publication of all such correspondence.

The uniform standard would render unnecessary the special treatment for requests concerning both the trading practices rules and the other rules administered by the Commission's staff.[9] As a result, administration of the rule would be simplified. Similarly, discrepancies between dates of the staff's responses and public availability dates will be lessened and so provide greater uniformity for convenience of citation.

II. Solicitation of Comments

Any interested persons wishing to submit written comments on the proposed amendments, as well as on other matters that may have an impact on the proposals, are requested to do so. Comments received in response to the request for comments in Release No. 33-6740 will be considered as having been submitted in response to the instant request.

[8] The one commentator opposing the amendments adopted today expressed concern that such consequences might arise from inadvertent failure of a requesting party to seek confidential treatment. Comment letter from Mary K. Bellamy, Investment Company Institute, October 27, 1987, at 2. This concern can be addressed by the attentiveness and judgment of requesting parties and their advisors.

[9] 52 FR at 35116, fn. 10.

III. Cost/Benefit Analysis

The proposed amendments will neither impose additional reporting or record-keeping requirements on nor significantly increase regulatory compliance costs. The principal benefit associated with the amendments is that they would allow more timely public inspection of requests for interpretative, no-action and certain exemptive advice and the staff's responses thereto, thereby assisting the public in its understanding of significant questions arising under the federal securities laws.

IV. Regulatory Flexibility Act Certification

Pursuant to section 605(b) of the Regulatory Flexibility Act, 5 U.S.C. 605(b), the Chairman of the Commission has certified that the amendments proposed herein would not, if adopted, have a significant economic impact on a substantial number of small entities. This certification, including the reasons therefor, is attached to this release.

V. Statutory Basis

The amended rule is being proposed under section 19 of the Securities Act of 1933; section 23 of the Securities Exchange Act of 1934; section 20 of the Public Utility Holding Company Act of 1935; section 319 of the Trust Indenture Act of 1939; section 38 of the Investment Company Act of 1940; section 211 of the Investment Advisers Act of 1940; and section 1 of the Freedom of Information Act.

List of Subjects in 17 CFR Part 200

Administrative practice and procedure, Freedom of Information, Privacy, Securities.

VI. Text of Proposals

In accordance with the foregoing, Title 17, Chapter II of the Code of Federal Regulations is proposed to be amended as follows:

PART 200—ORGANIZATION; CONDUCT AND ETHICS; AND INFORMATION AND REQUESTS

Subpart D—Information and Requests

1. The authority citation for Part 200, Subpart D, continues to read as follows:

Authority: 80 Stat. 383, as amended, 31 Stat. 54, secs. 19, 23, 48 Stat. 85, 901, as amended, sec. 20, 49 Stat. 833, sec. 319, 53 Stat. 1173, secs. 38,211, 54 Stat. 841,855; 5 U.S.C. 552,15 U.S.C. 77s, 78w, 79t, 77sss, 80a-37, 80b-11, unless otherwise noted.

§ 200.81 [Amended]

2. 17 CFR 200.81 is amended by removing from paragraph (a) the words ". Letters or other written communications with respect to rules 10b-6, 10b-7, 10b-8, 10b-13 and 13e-4 [§§ 240.10b-6, 240.10b-7, 240.10b-8, 240.10b-13 and 240.13e-4 of this chapter] under the Exchange Act, together with any response thereto, shall be made available for inspection and copying by any person 30 days after the response has been sent or given to the person requesting it. All other letters or written communications together with the response thereto, shall be made available for inspection and copying by any person".

By the Commission.

Jonathan G. Katz,

Secretary.

Exhibit A—Securities and Exchange Commission Regulatory Flexibility Act Certification

I, David S. Ruder, Chairman of the Securities and Exchange Commission, hereby certify, pursuant to 5 U.S.C. 605(b), that the amendments to Rule 81 pertaining to publication of interpretative and no-action letters and other written communications and to codification of the staff's practice of applying the rule to certain exemption letters will not, if promulgated, have a significant economic impact on a substantial number of small entities. The reasons for this certification are that the proposed amendments will neither impose additional reporting or recordkeeping requirements on nor significantly increase the costs for small entities to request interpretative, no-action and certain exemption letters.

David S. Ruder,

Chairman.

Date: April 7, 1988.

[FR Doc. 88-8234 Filed 4-13-88; 8:45 am]

BILLING CODE 8010-01-M

ARMS CONTROL AND DISARMAMENT AGENCY

22 CFR Part 602

Predisclosure Notification Procedures for Confidential Commercial Information

AGENCY: Arms Control and Disarmament Agency.

ACTION: Proposed rule

SUMMARY: This rule adds provisions to the existing Freedom of Information Act (FOIA) regulations to implement the requirements of Executive Order 12600 of June 23, 1987, that notification be given to parties that have submitted arguably confidential commercial information to an agency whenever a

FOIA request for such information is received by the agency. The procedure is intended to give the submitter an opportunity to object to disclosure of the information and reasonable notice of intent by the agency to disclose the information.

DATE: Comments must be received on or before May 16, 1988.

ADDRESS: Comments may be mailed to Frederick Smith, Jr., Information/Privacy Officer, Room 5731, U.S. Arms Control & Disarmament Agency, 320 21st Street NW., Washington, DC 20451.

FOR FURTHER INFORMATION CONTACT: Frederick Smith, Jr., Information/Privacy Officer, (202) 647-3442.

SUPPLEMENTARY INFORMATION:

List of Subjects in 22 CFR Part 602

Freedom of Information Policy and Procedures.

Title 22, Chapter VI, Part 602 is amended as follows:

PART 602—[AMENDED]

1. The authority citation for 22 CFR Part 602 continues to read as follows:

Authority: Sec. 1, 81 Stat. 54, as amended by sec. 1, 88 Stat. 1561 (5 U.S.C. 552) sec. 41, 75 Stat. 635 (22 U.S.C. 2581); and sec. 501, 65 Stat. 290 (31 U.S.C. 9701).

2. Section 602.19 is added to Subpart B to read as follows:

§ 602.19 Predisclosure notification for confidential commercial information.

(a) *When notification is required.* If a request under the Freedom of Information Act (FOIA), 5 U.S.C. 552, seeks a record that contains information submitted by a person or entity outside the Federal government that arguably is exempt from disclosure under exemption 4 of the Act because disclosure could reasonably be expected to cause substantial competitive harm, the Agency shall notify the submitter that such a request has been made whenever:

(1) The submitter has made a good faith designation of information, less than ten years old, as confidential commercial or financial information, or

(2) The Agency has reason to believe that disclosure of the information could reasonably be expected to cause substantial competitive harm.

(b) *Notification to submitter.* The notice to the submitter shall either describe the exact nature of the business information requested or provide copies of the recoards or portions of records containing the information. The notice shall afford the submitter a reasonable period of time, based on the amount and/or complexity of the information, within which to object to disclosure.

(c) *Objection by submitter.* Any objection by a submitter to disclosure must be made in writing and sent to: Freedom of Information Officer, U.S. Arms Control and Disarmament Agency, Department of State Building, Washington, DC 20451. It should identify the portion(s) of the information to which disclosure is objected, and should include a detailed statement of all claimed grounds for withholding any of the information under the FOIA and, in the case of exemption 4, an explanation of why the information constitutes a trade secret or commercial or financial information that is privileged and confidential, including a specification of any claim of competitive or other business harm that would result from disclosure.

(d) *Notification to requester.* The Agency shall notify the requester in writing when any notification to a submitter is made pursuant to paragraph (a) of this section.

(e) *When notification is not required.* Notification to a submitter is not required if:

(1) The Agency determines that the information requested should not be disclosed;

(2) Disclosure is required by statute (other than the FOIA) or by regulation;

(3) The information has previously been lawfully published or officially made available to the public.

(f) *Notice of intent to disclose.* If the Agency determines that despite the objection of the submitter the requested information should be disclosed, in whole or in part, it shall notify both the requester and the submitter of the decision and shall provide to the submitter in writing:

(1) A brief explanation of why the submitter's objections were not sustained;

(2) A description of the information to be disclosed; and

(3) A specified disclosure date that provides a reasonable period of time between receipt of the notice and the disclosure date.

(g) *Notice of lawsuit.* (1) Whenever a requester brings legal action to compel disclosure of information covered by paragraph (a) of this section the Agency shall promptly notify the submitter in writing.

(2) Whenever a submitter brings legal action to prevent disclosure of information covered by paragraph (a) of this section, the Agency shall promptly notify the requester in writing.

William J. Montgomery,
Administrative Director.

[FR Doc. 88-8116 Filed 4-13-88; 8:45 am]

BILLING CODE 6825-32-M

DEPARTMENT OF HOUSING AND URBAN DEVELOPMENT

Office of Assistant Secretary for Housing—Federal Housing Commissioner

24 CFR Part 200

[Docket No. R-88-1355; FR-2025]

Scope and Nature of FHA Appraisals and Property Inspections

AGENCY: Office of the Assistant Secretary for Housing—Federal Housing Commissioner, HUD.

ACTION: Proposed rule.

SUMMARY: As part of its mortgage insurance underwriting procedure, in both single and multifamily programs, HUD requires that a property be appraised and, in the case of single family properties, requires that a statement of appraised value be delivered to the homebuyer before sale. HUD also requires an inspection of properties involving new construction, repairs or rehabilitation. This rule codifies HUD's longstanding position that: (1) Appraisals are made for the purpose of aiding the Department in determining the maximum insurable mortgage amount, and (2) inspections are required to protect the interests of HUD as mortgage insurer. The appraisals and inspections are not performed for the benefit of purchasers, or otherwise to be regarded as a HUD warranty to purchasers of the value or condition of the property.

DATE: Comment due date June 13, 1988.

ADDRESS: Send comments to the Office of the General Counsel, Rules Docket Clerk, Room 10276, Department of Housing and Urban Development, 451 Seventh Street, SW., Washington, D.C. 20410.

FOR FURTHER INFORMATION CONTACT: John Coonts, Deputy Director, Office of Insured Single Family Housing, Room 9266, Department of Housing and Urban Development, 451 Seventh Street, SW., Washington, DC 20410. Telephone (202) 755-3046. (This is not a toll-free number).

SUPPLEMENTARY INFORMATION: Before issuing a commitment for multifamily or single family mortgage insurance on a

BEST COPY AVAILABLE

newly constructed or existing property, HUD requires that (except for certain refinancing cases) the property be appraised to assist it in determining the maximum insurable mortgage amount. With respect to one to four-family properties, HUD also requires lenders to provide purchasers with a form that advises them of HUD's appraised valuation of their property. This form clearly notifies the purchaser that HUD's appraisal was made for mortgage insurance purposes and its not a warranty as to the value or condition of the property. *See* copy #3 of HUD Form 92800.5B (3–87). HUD also may require that a property be inspected to determine whether construction or other defects exist that would make it ineligible for mortgage insurance. The objective of these required appraisals and inspections is to protect the Government and its insurance funds. This rule sets forth in the Code of Federal Regulations a statement describing the limited function of HUD appraisals and inspections. The rule does not establish new policy, nor does it modify existing policy. It reaffirms and codifies what has always been the position of the Department as to the limited function of the appraisals and inspections it requires. The rule is intended to more fully inform prospective FHA mortgagors and the public of the limited role of HUD ordered appraisals and inspections.

HUD Appraisals

The purpose of the insurance applications submitted to HUD by a HUD-approved mortgagee is to secure a commitment from HUD concerning the maximum mortgage loan which HUD is willing to insure for a particular property. In order for HUD (or a Direct Endorsement Mortgagee or coinsuring lender) to determine this maximum insurable amount, it is necessary that an appraisal be performed and that either the HUD appraisal or VA Certificate of Reasonable Value be sent to either the local FHA field office or to the Direct Endorsement Mortgagee or coinsuring lender who is processing the case. After a HUD appraisal is performed, it must be reviewed by either the local FHA field office, the coinsuring lender, or the Direct Endorsement Mortgagee's underwriter. A Statement of Appraised Value then is issued. This Statement of Appraised Value represents an estimate of value *for mortgage insurance purposes.* In other words, the estimate of value arrived at by the reviewer is the amount of which the maximum insurable mortgage loan is determined. It is not necessarily the appraiser's estimate of value, because the reviewer may amend it if there is sufficient evidence to support a higher or lower value. The appraisal is needed to provide the reviewer with essential facts about the property so that a logical conclusion can be reached as to the estimate of value to be ascribed to a property for purposes of a long-term mortgage loan.

This rule expressly states that the HUD appraissed valuation is being made for purposes of protecting the Government's financial interest and determining the maximum mortgage amount and that the mortgagor is responsibile for making those inspections necessary for protecting its interest in the property.

The Government's financial interest in an accurate appraisal is as follows: First, overvaluation results in an unjustifiably high mortgage amount, which causes higher monthly mortgage payments for the mortgagor and, consequently, greater risk of default. Second, when a purchaser defaults the lender may look to HUD, as insurer of the mortgage, for payment of the loan balance. If default does occur an unjustifiably high mortgage amount causes the Government to pay an unnecessarily high mortgage insurance claim.

HUD Inspections

When HUD insures a mortgage for a property to be constructed, rehabilitated or repaired, the Department requires inspections of the work. In *United States* v. *Neustadt,* 366 U.S. 696 (1961), the Supreme Court held that a statement reporting the results of an inaccurate FHA inspection and appraisal could not be a basis for government tort liability to a purchaser who detrimentally relied on the statement, because such statements are "misrepresentations" which are specifically exempted from the Federal Tort Claims Act's (FTCA) waiver of sovereign immunity. 28 U.S.C. 2680.

In *Block* v. *Neal,* 460 U.S. 289 (1983), the Supreme Court reaffirmed *Neustadt.* However, the Court there also held that The Farmers Home Administration (FmHA) possibly could be sued under the FTCA for damages suffered by a FmHA homebuyer because of FmHA's negligent supervision of construction of her home. In short, the Court distinguished misstatements about the condition of the property (which are exempted from suit under the FTCA) from negligence in performing inspections (which the Court held might be the basis of a suit against FmHA).

In the aftermath of *Block,* purchasers of HUD-insured properties have sought tort damages against HUD, alleging that the Department, in inspecting their property, negligently failed to discover construction defects. The FTCA permits recovery in tort only "under circumstances where the United States, if a private person, would be liable to the claimant in accordance with [State law]." 28 U.S.C. 1346(b).

HUD has successfully defended against these claims on the ground that under applicable State law, HUD owes no duty to purchasers as to the accuracy of its inspections, because the inspections are not for the benefit or protection of the purchaser, but rather are for the financial protection of the Department as prospective mortgage insurer. *See Kynerd* v. *U.S. Department of Housing and Urban Development,* 607 F. Supp. 117 (D. Miss. 1985) *aff'd,* 806 F. 2d 259 (5th Cir. 1986).

In the event of default, and in the absence of assignment of the mortgage, HUD as insurer of the mortgage customarily pays the amount due on the mortgage to the private lender and receives the property in exchange (See 24 CFR 203.355–415). HUD then attempts to sell the property to recoup its financial loss. Obviously, the condition of the property affects the price HUD will receive upon the sale. It is therefore in HUD's financial interest to have a property inspected to help assure that its value corresponds to the amount of the insured mortgage. Indeed, the Supreme Court in *Neustadt* recognized that although purchasers may be incidental beneficiaries of HUD fee inspections, the primary purpose of the inspections is for the financial protection of the government. 366 U.S. at 708–09. HUD recently established a Claims Without Conveyance Procedure (24 CFR 203.368) applicable to single family mortgages insured pursuant to conditional commitments issued on or after November 30, 1983, which changes somewhat the procedure described above. Under it a mortgagee may bid a HUD-adjusted fair market price at the foreclosure sale, restain the property, and be paid an insurance claim in the amount of the difference between the HUD-adjusted price and the amount due on the mortgage. Under this new procedure HUD still has a strong financial interest in the condition and value of the property.

So that the public may be more fully informed and unnecessary litigation avoided, HUD is, through this rule, expressly stating in its regulations that HUD inspections are made for the financial protection of the government, not the mortgagor. The Farmer's Home Administration has already published such a clarifying rule. See 45 FR 39789

(June 12, 1980) (codified at 7 CFR 1924.9(a)).)

Procedural Requirements

This rule does not constitute a "major rule" as that term is defined in section 1(b) of Executive Order 12291 on Federal Regulation issued by the President on February 17, 1981. Analysis of the proposed rule indicates that it does not (1) have an annual effect on the economy of $100 million or more; (2) cause a major increase in cost or prices for consumers, individual industries, Federal, State or local government agencies, or geographic regions; or (3) have a significant adverse effect on competition, employment, investment, productivity, innovation, or on the ability of United States-based enterprises to compete with foreign-based enterprises in domestic or export markets.

Under 5 U.S.C. 605(b) (the Regulatory Flexibility Act), the Undersigned hereby certifies that this rule does not have a significant economic impact on a substantial number of small entities. The rule merely restates existing HUD policy with respect to appraisals and inspections in its mortgage insurance programs.

A Finding of No Significant Impact with respect to the environment has been made in accordance with HUD regulations in 24 CFR Part 50, which implement section 102(2)(C) of the National Environmental Policy Act of 1969. The Finding of No Significant Impact is available for public inspection during regular business hours in the Office of the Rules Docket Clerk, Office of the General Counsel, Room 10276, Department of Housing and Urban Development, 451 Seventh Street, SW., Washington, DC 20410.

The intent of this rule is to make explicit in the Code of Federal Regulations the nature and intent of HUD appraisals and inspections. Although the rule sets forth the position the Department has consistently taken on these matters, reflects longstanding administrative practices, and involves no change or modification of HUD policy or practice, it is being published as a proposed rule in order to provide the public full opportunity, through the public comment procedure, to raise any questions they may have and to receive the benefit of further explanation from the Department where needed. The rule should also serve to prevent unnecessary litigation.

This rule was listed as item H-1-85 (Sequence Number 944) under Office of Housing in the Department's Semiannual Agenda of Regulations published on October 26, 1987 (52 FR 40358) under Executive Order 12291 and the Regulatory Flexibility Act.

List of Subjects in 24 CFR Part 200

Mortgage insurance.

PART 200—[AMENDED]

1. The authority citation for Part 200 continues to read as follows:

Authority: Secs. 2, 211, and 807, National Housing Act (12 U.S.C. 1703, 1715b, and 1748f); sec. 7(d), Dept. of HUD Act (42 U.S.C. 3535(d)); Subpart G is also issued under sec. 214, Housing and Community Development Act of 1980, as amended by sec. 329, Housing and Community Development Amendments of 1981 (42 U.S.C. 1436a).

2. Section 200.145 is amended by adding a new paragraph (c), to read as follows:

§ 200.145 Technical analysis, underwriting processing and inspections.

* * * * *

(c)(1) As part of its underwriting processing for single and multifamily mortgage insurance programs, HUD may require an appraisal and inspection of the property covered by the mortgage. These appraisals and inspections are performed to determine the maximum insurable mortgage amount and to protect the Government and its insurance funds. They neither create nor imply a duty or obligation from HUD to the mortgagor or any other party and are not to be regarded as a warranty by HUD to the mortgagor or any other party of the value or condition of the property. The mortgagor is responsible for making those investigations and inspections it deems necessary for protecting its interests in the property.

(2) In connection with the insurance of mortgages covering single family homes, HUD requires the seller or builder, or such other person as HUD may designate, to deliver to the purchaser before the sale a written statement of appraised value. This estimate of value is used by HUD in determining the maximum mortgage amount it will insure. The written statement of appraised value is not to be regarded as a warranty by HUD to the mortgagor or any other party as to the value or condition of the property. The purchaser must satisfy himself or herself that the price of the property is reasonable and that its condition is acceptable.

Date: November 4, 1987.

Thomas T. Demery,

Assistant Secretary for Housing—Federal Housing Commissioner.

[FR Doc. 88-8239 Filed 4-13-88; 8:45 am]

BILLING CODE 4210-27-M

DEPARTMENT OF THE TREASURY

Internal Revenue Service

26 CFR Part 1

[LR-14-88]

Limitations on Passive Activity Losses and Credits

AGENCY: Internal Revenue Service, Treasury.

ACTION: Proposed rule; extension of time for comments.

SUMMARY: This document provides notice of an extension of time for submitting comments on the notice of proposed rulemaking relating to the limitations on passive activity losses and passive activity credits. The extended deadline for submission of written comments is May 31, 1988.

DATE: Written comments must be delivered or mailed by May 31, 1988.

ADDRESS: Send written comments to: Commissioner of Internal Revenue, Attn: CC:LT:T (LR-14-88) Washington, DC 20224.

FOR FURTHER INFORMATION CONTACT: Michael J. Grace of the Legislation and Regulations Division, Office of Chief Counsel, Internal Revenue Service, 1111 Constitution Avenue NW., Washington, DC 20224, CC:LR:T, telephone 202-566-3288 (not a toll-free call).

SUPPLEMENTARY INFORMATION: By a notice of proposed rulemaking published in the **Federal Register** for Thursday, February 25, 1988 (53 FR 5733), comments and requests for a public hearing with respect to the proposed rules were to be delivered or mailed to the Commissioner of Internal Revenue, Attn: CC:LR:T, (LR-14-88), Washington, DC 20224, by April 25, 1988. The date by which comments with respect to the proposed rules must be delivered or mailed is hereby extended to May 31, 1988. By a notice of public hearing published in the **Federal Register** for Tuesday, March 29, 1988 (53 FR 10,104), the public hearing with respect to the proposed rules was scheduled for Tuesday, June 28, and (if necessary) Wednesday, June 29, 1988. Outlines of oral comments to be presented at the hearing by persons who submit or have submitted comments must be delivered or mailed by Tuesday, June 14, 1988..

Donald E. Osteen,

Director, Legislation and Regulations Division.

[FR Doc. 88-8209 Filed 4-13-88; 8:45 am]

BILLING CODE 4830-01-M

DEPARTMENT OF TRANSPORTATION

Coast Guard

33 CFR Part 100

[CGD11 88-02]

Regatta; Sacramento Water Festival

AGENCY: Coast Guard, DOT.

ACTION: Notice of Proposed Rulemaking.

SUMMARY: The Coast Guard is considering a proposal to amend § 100.1202 of Title 33, Code of Federal Regulations. The purpose is to extend the period of time the Sacramento River is closed during the Sacramento Water Festival.

DATES: Comments must be received on or before May 31, 1988.

ADDRESSES: Comments should be mailed to Eleventh Coast Guard District Boating Safety Division, 400 Oceangate Boulevard, Long Beach, California 90822-5399. The comments and other materials referenced in this notice will be available for inspection and copying at 400 Oceangate Boulevard, Room 914, Long Beach, California. Normal office hours are between 7:30 a.m. and 4:00 p.m., Monday through Friday, except holidays. Comments may also be hand-delivered to this address.

FOR FURTHER INFORMATION CONTACT: LT K.S. Gregory, Eleventh Coast Guard District Boating Affairs Office, 400 Oceangate Boulevard, Long Beach, California 90822-5399, Tel: (213) 499-5318.

SUPPLEMENTARY INFORMATION: Interested pesons are invited to participate in this rulemaking by submitting written views, data or arguments. Persons submitting comments should include their names and addresses, identify this notice [CGD11 88-02] and specific section of the proposal to which their comments apply, and give reasons for each comment.

The regulations may be changed in light of comments received. All comments received before the expiration of the comment period will be considered before final action is taken on this proposal. No public hearing is planned, but one may be held if written requests for a hearing are received and it is determined that the opportunity to make oral presentations will aid the rulemaking process.

Drafting Information

The drafters of this notice are LT K.S. Gregory, project officer, Eleventh Coast Guard Boating Affairs Office, and LT G. R. Wheatley, project attorney, Eleventh Coast Guard District Legal Office.

Discussion of Regulation

The Sacramento Water Festival Association has requested a change in the dates for the Sacramento Water Festival. This Festival is an annual three-day event integrating aquatic activities involving community participation and International Outboard Grand Prix racing. Approximately 125 ski boats, 17 feet in length, are expected to participate in this event and will pose a hazard to navigation.

Economic Assessment and Certification

These proposed regulations are considered to be non-major under Executive Order 12291 on Federal Regulation and nonsignificant under Department of Transportation regulatory policies and procedures (44 FR 11034; February 26, 1979). The economic impact of this proposal is expected to be so minimal that a full regulatory evaluation is deemed necessary. It involves negligible cost and will not have a significant effect on recreational vessels, commercial vessels or other marine interests.

Since the impact of this proposal is expected to be minimal, the Coast Guard certifies that they will not have significant economic impact on a substantial number of small entities.

List of Subjects in 33 CFR Part 100

Marine Safety, Navigation (water).

Proposed Regulations

In consideration of the foregoing, the Coast Guard proposes to amend § 100.1202 of Title 33, Code of Federal Regulations as follows:

1. The authority citation for § 100.1202 continues to read as follows:

Authority: 33 U.S.C. 1233; 49 CFR 1.46 and 33 CFR 100.35.

2. Section 100.1202(a) is revised to read as follows:

§ 100.1202 Sacramento Water Festival.

* * * * *

(a) *Effective dates.* This section is effective from 0900 to 1800 PDT the first Friday, Saturday, and Sunday in July, except for those years when July 4th falls on Monday. In those years, the effective date of these regulations will be the first Saturday, Sunday and Monday in July, as published in the LOCAL NOTICE TO MARINERS.

* * * * *

A. Bruce Beran,

Rear Admiral, U.S. Coast Guard, Commander, Eleventh Coast Guard District.

[FR Doc. 88-8203 Filed 4-13-88; 8:45 am]

BILLING CODE 4910-14-M

---

33 CFR Part 117

[CGD5-88-15]

Drawbridge Operation Regulations; Atlantic Intracoastal Waterway, Sunset Beach, NC

AGENCY: Coast Guard, DOT.

ACTION: Notice of proposed rulemaking.

SUMMARY: At the request of the North Carolina Department of Transportation and the Town of Sunset Beach, North Carolina, the Coast Guard is considering adopting new regulations to govern the operation of the drawbridge across the Atlantic Intracoastal Waterway (AICWW) at mile 337.9, at Sunset Beach, North Carolina, by restricting the number of bridge openings during the boating season. This proposal is being made to alleviate vehicular traffic congestion caused by the steady increase in recreational boats on the AICWW during the boating season, and the resulting increase in bridge openings. This action should accommodate the needs of vehicular traffic, while still providing for the reasonable needs of navigation.

DATE: Comments must be received on or before May 31, 1988.

ADDRESSES: Comments should be mailed to Commander(ob), Fifth Coast Guard District, 431 Crawford Street, Portsmouth, Virginia 23704-5004. The comments and other materials referenced in this notice will be available for inspection and copying at the above address, Room 609, between 8 a.m. and 4 p.m., Monday through Friday, except holidays. Comments may also be hand-delivered to this address.

FOR FURTHER INFORMATION CONTACT: Ann B. Deaton, Bridge Administrator, at (804) 398-6222.

SUPPLEMENTARY INFORMATION: Interested persons are invited to participate in this rulemaking by submitting written views, comments, data, or arguments. Persons submitting comments should include their names and addresses, identify the bridge, and give reasons for concurrence with or any recommended change in the proposal. The Commander, Fifth Coast Guard District, will evaluate all

communications received and determine a course of final action on this proposal. The proposed regulations may be changed in light of comments received.

Drafting Information

The drafters of this notice are Linda L. Gilliam, project officer, and CDR Robert J. Reining, project attorney.

Discussion of Proposed Regulations

The North Carolina Department of Transportation and the Town of Sunset Beach, North Carolina, have requested that the drawbridge be regulated to open on the hour, daily, between 7:00 a.m. and 7:00 p.m., from April 1 through October 31. The bridge currently opens on signal at all times. This request is being made as a result of the steady increase of recreational boat traffic on the AICWW since 1986. The increased boat traffic has resulted in an increase in the number of draw openings, which are causing considerable vehicular traffic backups up to the ocean front (Main Street) and beyond the town limits on Highway 179. Businesses are being impacted by the cross streets being closed off due to traffic jams caused by bridge openings. The Town Council of Sunset Beach has found it necessary to hire two additional traffic control officers to keep the vehicular traffic flowing as a result of bridge openings. The police are having a difficult time clearing the mainland side of Sunset Beach for the through traffic to Calabash and Ocean Isle. Because they have to spend a great deal of their time directing traffic to prevent accidents, they are unable to patrol the beach as much as they feel they should. The Town of Sunset Beach considers this a serious pubic safety problem.

The vehicular traffic volume has increased considerably since 1986 from 320 vehicles per day to 2,100 vehicles per day in 1986. During this same timeframe, the number of bridge openings has increased from 4,524 to 6,530 during the boating season which occurs from April through October. This proposal would amend 33 CFR 117.821. That section was recently revised by a rule published in the Federal Register on March 17, 1988 (53 FR 8751).

Economic Assessment and Certification

These proposed regulations are considered to be non-major under Executive Order 12291 on Federal Regulation and non-significant under the Department of Transportation regulatory policies and procedures (44 FR 11034; February 26, 1979). The economic impact of the proposal is expected to be so minimal that a full regulatory evaluation is unnecessary. This conclusion is based on the fact that the proposed regulation will have no effect on commercial navigation, or on any industries that depend on waterborne transportation. Since the economic impact of this proposal is expected to be minimal, the Coast Guard certifies that, if adopted, it will not have a significant economic impact on a substantial number of small entities.

List of Subjects in 33 CFR Part 117

Bridges.

Proposed Regulations

In consideration of the foregoing, the Coast Guard proposes to amend Part 117 of Title 33, Code of Federal Regulations as follows:

PART 117—DRAWBRIDGE OPERATION REGULATIONS

1. The authority citation for Part 117 continues to read as follows:

Authority: 33 U.S.C. 499; 49 CFR 1.46; 33 CFR 1.05–1(g).

2. The heading of § 117.821 is revised to read as follows:

§ 117.821 Atlantic Intracoastal Waterway, Albemarle Sound to Sunset Beach, North Carolina.

3. In § 117.821, paragraph (b)(7) is added to read as follows:

(b) * * *

(7) NC 50 bridge, mile 337.9, at Sunset Beach, NC, from April 1 to October 31, between 7:00 a.m. to 7:00 p.m., must open if signaled on the hour.

* * * * *

Dated: April 1, 1988.

A.D. Breed,

Rear Admiral, U.S. Coast Guard, Commander, Fifth Coast Guard District.

[FR Doc. 88–8202 Filed 4–13–88; 8:45 am]

BILLING CODE 4910-14-M

ENVIRONMENTAL PROTECTION AGENCY

40 CFR Part 52

[FRL-3365-4]

Louisiana Lead SIP Revision for the Baton Rouge Area

AGENCY: Environmental Protection Agency (EPA).

ACTION: Proposed rulemaking.

SUMMARY: This action proposes approval of a revision to the Louisiana State Implementation Plan (SIP) for lead. On July 28, 1982 (47 FR 32529), EPA approved the Louisiana Lead SIP as submitted to EPA except for the portion dealing with the Baton Rouge area, due to additional modeling required around Ethyl Corporation. On May 1, 1984 (49 FR 18484), EPA published the approval notice for the rest of the Louisiana lead SIP. The State's lead control plan for Ethyl facility was included in a State Compliance Order which was signed into effect October 31, 1983. On July 18, 1986, the Governor of Louisiana submitted to EPA an amended Compliance Order for Ethyl Corporation in order to change the operations of the facility as required in the original October 31, 1983, Compliance Order issued by the State of Louisiana to Ethyl Corporation.

DATE: Comments on this action must be received by June 13, 1988.

ADDRESSES: Written comments on this action should be addressed to Thomas H. Diggs of the EPA Region 6, Air Programs Branch, SIP/New Source Section (address below). Copies of the documents relevant to this action are available for public inspection during normal business hours at the following locations:

Environmental Protection Agency, Region 6, Air, Pesticides and Toxics Division, Air Programs Branch, SIP/New Source Section, 1445 Ross Avenue, Dallas, Texas 75202–2733.

Louisiana Department of Environmental Quality, Air Quality Division, P.O. Box 44096, Baton Rouge, Louisiana 70804.

Environmental Protection Agency, Public Information Reference Unit, 401 M Street SW., Washington, DC 20460.

FOR FURTHER INFORMATION CONTACT: Joe Winkler, EPA Region 6, Air Programs Branch, 1445 Ross Avenue, Dallas, Texas 75202–2733 telephone (214) 655–7214, or (FTS) 255–7214. Reference Docket File Number LA–86–4.

SUPPLEMENTARY INFORMATION:

Background

On October 5, 1978, the National Ambient Air Quality Standard (NAAQS) for lead was promulgated by EPA (43 FR 46246). Both the primary and secondary standards were set at a level of 1.5 micrograms of lead per cubic meter of air (ug lead/m^3) average over a calendar quarter. As required by Section 110 of the Clean Air Act (CAA), and the October 5, 1978 promulgation of the NAAQS for lead, all States must submit a SIP which will provide attainment and maintenance of the lead NAAQS. Louisiana has developed and submitted such as SIP.

On July 28, 1982, (47 FR 32529), EPA approved the Louisiana lead SIP as submitted to EPA except for the part of the SIP concerning the Baton Rouge

area. Due to additional modeling required to correct discrepancies that existed between EPA and State modeling for Ethyl Corporation in Baton Rouge, Louisiana, EPA delayed action on the Baton Rouge area until the State could submit additional information for the Ethyl facility.

On May 1, 1984 (49 FR 18484), EPA published the final approval notice for the rest of the Louisiana lead SIP.

On July 18, 1986, the Governor of Louisiana submitted to EPA a revision to the lead SIP which had been approved previously on May 1, 1984, by EPA. A public hearing was held concerning the State's lead SIP revision on December 18, 1985.

II. Description of the Revision to Louisiana Lead SIP

The July 18, 1986, State submittal consisted of an amended Compliance Order for the Ethyl Corporation facility located in Baton Rouge, Louisiana. It also contained the formulas which Ethyl Corporation committed to use in calculating their emission rates. Also, the atmospheric modeling which determined the magnitude of the source's lead emissions was submitted as part of the SIP revision.

The amendments to the Compliance Order are due to change in operations in the facility. The original Compliance Order was issued to Ethyl Corporation on October 31, 1983. This Compliance Order required the Ethyl facility, in order to meet the emission limitations for lead, to raise the height of the six reverberatory furnace stacks to a height of 179 feet, and to limit the operation of the facility to no more than five reverberatory furnaces operating at any one time.

In the amended Compliance Order, it is noted that Ethyl Corporation informed the Secretary of the Louisiana Department of Environmental Quality (LDEQ) of the cessation of the lead alkyl production as of June 26, 1985. It is also noted that the facility is now in cleaning up operations which involves burning of lead sludge in two of the reverberatory furnaces and the rotary furnace. These operations are in effect for a maximum of eight hours daily. The amended Compliance Order also noted that Ethyl Corporation requested that the requirement for conducting stack sampling of the lead furnaces on or before July 1, 1986, be deleted from the Compliance Order.

The amended Order requires Ethyl Corporation to comply with the following: (1) To immediately cease operations in four of their six reverberatory furnaces, (2) to emit not more than a quarterly average total of 0.22 grams of lead per second from the furnaces in the lead alkyl facility, (3) to submit written annual reports to the LDEQ until operations at the facility are permanently discontinued, (4) to submit emission rates to the LDEQ Air Quality Division as part of the annual report, and (5) to maintain compliance records on site for at least two years for inspection purposes.

Previous air quality analyses submitted by the LDEQ have not provided adequate bases to demonstrate that the proposed control strategy will result in attainment and maintenance of the lead standard in the Baton Rouge area. The modeling submitted in 1983 employed a screening approach where a refined technique was warranted. In another attempt under the original compliance order, the LDEQ submitted a modeling analysis lacking adequate justification for a reduced meteorological data set.

In general, there are four elements considered in the application of an air quality model: (1) Input of the sources of emissions, (2) selection of a meteorological data set which best represents dispersion and transport in the area, (3) identification of receptors, and (4) choice of model options. The review of LDEQ's most recent air quality analysis of February 4, 1987 considered these elements.

The ISCST model, as recommended in EPA's Guideline on Air Quality Models, was used by the LDEQ to evaluate impact of Ethyl Corporation's lead emissions on the ambient air. Source emissions were adequately considered in the analysis including the effects of aerodynamic downwash. The meteorological data set, which includes Baton Rouge surface data and Lake Charles upper air data for the years 1975 through 1979 is adequate. The receptor network is somewhat limited near plant property due to the application of ISCST Version 5.

The most recent version of ISCST, i.e., Version 6, was available at the time LDEQ prepared the air quality modeling analysis, but was not applied. It is believed that the use of Version 5 model options does not result in air quality estimates which are reflective of the technically best analysis ensuring consistency.

Before finalizing this revision to the SIP, the ISCST modeling must be reworked by the State using Version 6. It is judged to be very unlikely that the revised analysis including background lead concentration will show results different from the current analysis which predicts that no concentration will exceed the lead standard in the area.

Proposed Action

EPA has evaluated the revision to the Baton Rouge portion of the Louisiana lead SIP. The proposed SIP revision meets the requirements of EPA regulations and policy; therefore, EPA is proposing approval. EPA believes that the revision to the SIP is adequate to attain and maintain the lead NAAQS throughout Baton Rouge through the implementation of the amended Compliance Order for the Ethyl facility.

Interested persons are invited to submit comments on this proposed approval. EPA will consider all comments received with thirty days of the publication of this notice.

Under 5 U.S.C. 605(b), the Administrator has certified that this SIP revision will not have a significant economic impact on a substantial number of small entities.

The Office of Management and Budget has exempted this rule from the requirements of section 3 of Executive Order 12291.

List of Subjects in 40 CFR Part 52

Air pollution control, Lead, Reporting and recordkeeping requirements.

Authority: 42 U.S.C. 7401–7642.

Date: December 17, 1986.

Frances E. Phillips,

Acting Regional Administrator.

Editorial Note: This document was received at the office of the Federal Register on April 11, 1988.

[FR Doc. 88–8186 Filed 4–13–88; 8:45 am]

BILLING CODE 6560-50-M

DEPARTMENT OF HEALTH AND HUMAN SERVICES

Office of Human Development Services

45 CFR Part 1356

Title IV–E Adoption Assistance Program; Nonrecurring Expenses

AGENCY: Office of Human Development Services, HHS.

ACTION: Notice of proposed rulemaking.

SUMMARY: The Department is issuing this Notice of Proposed Rulemaking (NPRM) in order to implement the changes made in the Adoption Assistance Program under title IV–E of the Social Security Act by the Tax Reform Act of 1986 (Pub. L. 99–514).

This rule proposes to require States to reimburse the nonrecurring adoption expenses of parents who adopt children with special needs. Federal financial

participation (FFP) is available at the matching rate of 50 percent up to a $2,000 expenditure for each adoptive placement. States may set either a lower or a higher maximum and are thus not precluded from spending more or less than $2,000. However, Federal participation is limited to a 50 percent share of up to a $2,000 State expenditure level.

DATE: Comments must be received on or before June 13, 1988.

ADDRESSES: Comments may be mailed to the Associate Commissioner, Children's Bureau, Administration for Children, Youth and Families, P.O. Box 1182, Washington, DC 20013, Attention: Dan Lewis.

Comments received in response to this rule may be reviewed in Room 2030B of the Donohoe Building, 400 Sixth St. SW., Washington, DC between the hours of 9:00 a.m. and 5:30 p.m., Monday through Friday except Federal holidays, beginning two weeks after the date of publication in the **Federal Register.**

FOR FURTHER INFORMATION CONTACT: Beverly Stubbee, (202) 755-7447.

SUPPLEMENTARY INFORMATION:

I. Background of section 1711 of the Tax Reform Act of 1986

The Tax Reform Act of 1986 (Pub. L. 99-514) repealed section 222 of the Internal Revenue Code which permitted an itemized deduction of up to $1,500 of expenses incurred by an individual in the legal adoption of a child with special needs who was eligible for adoption assistance as provided under title IV-E of the Social Security Act (the Act). Deductible expenses included reasonable and necessary adoption fees, court costs and attorney fees.

As an alternative to the repealed section 222 of the Internal Revenue Code, the Tax Reform Act of 1986 amended title IV-E of the Act to require States to make payments of nonrecurring adoption expenses incurred by or on behalf of adopting parents in connection with the adoption of special needs children. The statute provides 50 percent Federal matching funds to a State, as an administrative cost of title IV-E, for payment of such nonrecurring adoption expenses. As set forth in the report of the Committee on Ways and Means of the House of Representatives, the legislative history indicates that Federal benefits for families adopting children with special needs are more appropriately provided through an expenditure program, rather than through an itemized deduction. The Committee recognized that the itemized deduction provided relatively greater benefit to higher income taxpayers who presumably have less need for Federal assistance, and provided no benefit to taxpayers who did not itemize deductions in their tax returns. Further, this statutory change also accomplished another purpose of the Congress, which was to give agencies with responsibility and expertise in the area of adoption assistance direct control over the assistance provided to families that adopt children with special needs. See H.R. Rep. No. 99-426, 99th Cong. 1st Sess. 875 (1985).

These changes made by the Tax Reform Act are effective for tax years beginning on or after January 1, 1987, and for expenditures made after December 31, 1986. Parents who incur nonrecurring expenses of adoption on or after January 1, 1987 may apply for reimbursement of these expenses from their appropriate State agency.

Payments for nonrecurring expenses of adoption must be made available to any adopting parents of a child with special needs as long as the child meets the State's definition of "special needs" based on section 473(c) of the Act and has been placed for adoption in accordance with applicable State and local laws. There must also be a signed agreement between the adopting parents and the State or local agency specifying the amount to be reimbursed by the agency for these nonrecurring expenses of adoption. Payment for nonrecurring expenses shall be made without regard to the adopting parents' income or financial resources. The amount shall be agreed upon between the State agency and the parents.

In order to comply with the revised requirements, some States may need to amend their statutes so that nonrecurring expenses of all adopting parents of children with special needs can be paid by the State and claimed as administrative costs of title IV-E. Such States will have until the close of the second general legislative session following the date of publication of the final rule to make any necessary changes in State statutes. Failure to provide reimbursement for eligible claims from January 1, 1987 will result in a State being considered out of compliance with section 473 of the Act.

II. Program Description

The Adoption Assistance Program under title IV-E of the Act is designed to assist States in placing certain "special needs" children in adoptive homes, thereby providing families and homes for more children and reducing States' foster care caseloads. In order to be eligible for adoption assistance under title IV-E, a child must be eligible for either Aid to Families with Dependent Children (AFDC), title IV-E Foster Care or Supplemental Security Income for the Blind and Disabled (SSI) and meet the definition of "a child with special needs" according to section 473(c) of the Act. A child is considered a child with special needs only when the State has determined (1) that the child cannot or should not be returned to the home of the parents; and (2)(A) that there exists with respect to the child a specific factor or condition (such as his ethnic background, age, or membership in a minority or sibling group, or the presence of factors such as medical conditions or physical, mental, or emotional handicaps) because of which it is reasonable to conclude that the child cannot be placed with adoptive parents without providing assistance, and (B) that, except where it would be against the best interests of the child a reasonable, but unsuccessful, effort has been made to place the child without providing adoption assistance.

The amendment to title IV-E in the Tax Reform Act expanded FFP in adoption assistance to include payments made by States for the nonrecurring expenses of adoption of any child with special needs, not just those who are title IV-E eligible and receiving adoption assistance payments.

III. Summary of Proposed Regulatory Changes

This NPRM proposes a process by which FFP for nonrecurring expenses of adoption shall be made available to any parent who adopts a child with special needs; imposes a limitation on the amount of Federal reimbursement available for expenses borne by the parents; specifies the terms of the nonrecurring expenses agreement; defines the eligibility of the child; and outlines the fiscal requirements that control FFP in the States' payments.

A. Discussion of Proposed Limitation on Federal Reimbursement

1. Limits on Federal Reimbursement

This NPRM proposes to limit Federal matching (at a 50 percent rate) to a maximum State expenditure of $2,000 for each adoptive placement. For States that wish to exceed the $2,000 maximum, FFP will be limited to 50 percent of $2,000. States may also set a reasonable maximum that is less than $2,000, consistent with practices within the State. (See discussion in section 2 below.)

The $2,000 figure was based on information from the field of adoption. We drew heavily on information made available by the National Committee for

Adoption (NCFA) whose member agencies represent private, nonprofit adoption agencies, the majority of which are sectarian in affiliation. The NCFA agencies are located in 45 States across the country and place healthy children as well as children with special needs.

In the March–April 1987 issue of *National Adoption Reports*, a publication of NCFA, the results of a survey of its member agencies were reported. According to the 120 agencies that responded, most of the adoptive placements of children with special needs were arranged without fees of any kind to the adoptive parents. When expenses were borne by the families, they included legal services/fees and some costs of the agencies in the preparation and supervision of the adoptive placement. Average costs were in the $1,500 range.

Although no comparable data are available from proprietary agencies or independent agents, we believe that the number of children with special needs placed by such agents is very small and would not skew the data upon which our estimates are based.

The legislative history of section 1711 contemplated that limits would be set. We believe the limit set is reasonable in terms of the usual types of costs incurred by adopting parents of special needs children.

We recognize that some families might incur higher costs and some may find their expenses less than what was reported by NCFA. We believe that the $2,000 reimbursable by the States to families will be sufficient in most cases to meet the majority of nonrecurring expenses of adoption. We note that under the repealed section of the Internal Revenue Code, the maximum amount realizable by a family would have been $750 (for a family itemizing deductions in the 50 percent tax bracket). We specifically invite comment from the public on the dollar limit being proposed and ask for discussion and information on the expenses incurred by families in their adoption of special needs children.

2. State Option on Limiting the Amount of Reimbursement

The NPRM also proposed to permit States the option of setting a reasonable maximum based on State practice that is less than $2,000 on the amount to be paid to adoptive parents for nonrecurring expenses of adoption. The legislative intent to permit States this authority is clearly stated in the House Committee on Ways and Means Report:

> This general authority for a State to set limits on the amount of assistance to be provided to adoptive parents will also apply under the bill to "nonrecurring" adoption expenses * * *. In other words, as under present adoption assistance agreements, a State may set limits on the amount of the expenses to be financed by the State * * * (See H.R. Rep. No. 99–426, 99th Cong. 1st Sess. 876 (1985))

However, a State maximum lower than $2,000 must not be overly restrictive and must be based on reasonable charges, consistent with State and local practices, for special needs adoption within a State. The basis for setting a lower maximum must be documented and explained.

B. Section by Section Discussion of Proposed Changes in Part 1356

In section 1356.40, Adoption Assistance Program: Administrative requirements to implement section 473 of the Act, the NPRM proposes amending paragraphs (b) (1), (3) and (4) to comport with statutory changes. In paragraph (b)(1) the phrase "* * * at the time of or prior to the interlocutory decree * * *" is rescinded because the statutory amendment removed the reference to an interlocutory decree. Also as a result of the statutory amendment, the work "nature" has been added in paragraph (b)(3) to the language describing the payments, services, and assistance which the adoption assistance agreement must address. The second clause in paragraph (b)(3), however, in relation to eligibility for title XIX of the Act, is applicable only to children eligible for adoption assistance in accordance with section 473(a)(1)(B)(ii).

A technical change has been made to § 1356.40(b) so that it comports with section 475(3)(B) of the Act and section 101(a)(4)(A) of Pub. L. 96–272. The current regulation requires that the adoption agreement remain in effect if a family changes its State of residence. In fact, section 101(a)(4)(A) of Pub. L. 96–272 requires the adoption agreement to remain in effect not only if a family moves to another State, but also if the family adopting the child lives in a State different from the one placing the child. We believe the proposed regulation makes these two situations clear as it requires the adoption agreement to remain in effect "regardless of the State of which the adoptive parents are residents at any given time."

Section 1356.40(c) has been removed since statutory amendments struck out the term "interlocutory decree." Sections 1356.40 (d), (e), (f), and (g) are redesignated as paragraphs (c), (d), (e), and (f), respectively.

A new section, 45 CFR 1356.41, has been added to address nonrecurring expenses of adoption as an expenditure made for the proper and efficient administration of the title IV–E Adoption Assistance Program. Paragraph (a) of § 1356.41 specifies that the amount of payment for nonrecurring expenses of adoption shall be determined through agreement between the State or local agency and the adopting parents.

Paragraph (b) of § 1356.41 proposes to prohibit the imposition of income eligibility requirements (means test) on adopting parents of children with special needs for State payment of nonrecurring expenses of adoption.

Paragraph (c) of § 1356.41 proposes to require that the child for whom nonrecurring expenses of adoption are being paid must be a child with special needs as defined by the State agency in its title IV–E Adoption Assistance Program (section 473(c)), except that the requirement for an effort to place the child with adoptive parents without providing adoption assistance is not applicable.

Paragraph (d) of § 1356.41 proposes, at State option, the payment of nonrecurring expenses of adoption of children with special needs from foreign countries. This provision also requires that a State make clear in its definition of a "child with special needs" whether it will include or exclude such children for the payment of nonrecurring expenses.

Paragraph (e) of § 1356.41 requires the State agency to notify all appropriate courts and all public and licensed private nonprofit adoption agencies within the State of the availability of funds for expenses incurred by or on behalf of families adopting children with special needs. This requirement makes clear the obligation of the State agency to inform all interested parties of the availability of this new program to replace the tax deduction formerly available under the Internal Revenue Code and where and how interested persons may apply for these funds.

Paragraph (f) of § 1356.41 limits the amount of nonrecurring adoption expenses that can qualify for Federal matching to a maximum State expenditure of $2,000 for any adoptive placement. Title IV–E funds are available at the administrative cost matching rate of 50 percent. The limitation on the amount of Federal funds available to reimburse these costs is explained in section III above. Also as discussed above, this provision also permits States to set a reasonable maximum lower than $2,000 on the amount to be paid to adoptive parents for nonrecurring expenses of adoption.

Paragraph (g) of § 1356.41 limits FFP for nonrecurring expenses of adoption incurred by or on behalf of adoptive parents to expenses that are not otherwise reimbursed from other sources. It also provides that such payments shall be made either directly through the State agency or through another public or licensed nonprofit private agency.

Paragraph (h) of § 1356.41 restates the statutory defintion of the term "nonrecurring adoption expenses." It also adds, for specificity, a definition of the term "other expenses" as used in the statutory definition. We propose to define "other expenses" as the costs incurred by or on behalf of the parents for the adoption study, including health and psychological examination and consultation, supervision of the placement prior to completion of adoption, and transportation and reasonable costs of lodging and food for the child and adoptive parents when necessary to complete the placement or adoption process.

Paragraph (i) of § 1356.41 proposes to allow States until the end of their legislative sessions following publication of the final rule to make amendments to their statutes in order to comply with Federal law.

Paragraph (j) of § 1356.41 proposes to define when an expenditure is considered made, in order to determine the period of time during which the State must make its claim for Federal reimbursement.

Finally, paragraph (c) of § 1356.60 of the current regulations will be deleted. The proposed § 1356.41 in accordance with statutory requirements directs States to claim reimbursement for nonrecurring expenses of adoption as administrative costs under title IV–E. Thus, the prohibition on reimbursement of nonrecurring adoption costs and administrative costs set forth in § 1356.60(c)(4) should be deleted.

IV. Impact Analysis

Executive Order 12606: The Family

Executive Order 12606 requires Federal agencies, in formulating and implementing policies and regulations, to assess the impact on family formation, maintenance and general well being. We believe these proposed regulations will serve to strengthen and preserve family life and send a message of support and encouragement to all families who adopt children with special needs. This proposed regulation should have a significant positive impact in matters related to family life. Although no precise figures are available, as many as 20,000 families may recieve reimbursement under this program for costs related to adopting special needs children.

Executive Order 12291

Executive Order 12291 requires that a regulatory impact anlaysis be prepared for major rules, which are defined in the Order as any rule that has an annual effect on the national economy of $100 million or more or certain other specified effects. Nothing in either the statute or the proposed rule is likely to create substantial costs. The Department has determined that these regulations are not major rules within the meaning of the Executive Order because they will not have an effect on the economy of $100 million or more or otherwise meet the threshold criteria.

Regulatory Flexibility Act

Consistent with the Regulatory Flexibility Act of 1980 (5 U.S.C. Ch. 5), the Department tries to anticipate and reduce the impact of rules and paperwork requirements on small businesses. For each rule with a "significant economic impact on a substantial number of small entities" an analysis is prepared describing the rule's impact on small entities. Small entities are defined in the Act to include small businesses, small non-profit organizations, and small governmental entities.

The primary impact of these regulations is on the States, which are not "small entities" within the meaning of the Act. For these reasons, the Secretary certifies that these rules will not have a significant impact on a substantial number of small entities.

Paperwork Reduction Act

Under the Paperwork Reduction Act of 1980, Pub. L. 96–511, all Departments are required to submit to the Office of Management and Budget (OMB) for review and approval any reporting or recordkeeping requirements in a proposed or final rule.

As required by section 3504(h) of the Paperwork Reduction Act of 1980, we will submit a copy of this NPRM to OMB for its review of the information collection requirements. However, we do not believe there are any new information collection requirements as State agencies administering the title IV–E Adoption Assistance Program are already utilizing a format for adoption assistance agreements which may also be used with applicants for reimbursement of nonrecurring expenses of adoption.

Organizations and individuals desiring to submit comments on information collection requirements should direct them to the agency official designated for this purpose whose name appears in this preamble, and to the Office of Information and Regulatory Affairs, OMB, New Executive Office Building (Room 3208), Washington, DC 20503. ATTN: Desk Officer for HHS.

List of Subjects in 45 CFR Part 1356

Adoption assistance, Administrative costs, Nonrecurring expenses of adoption.

(Catalog of Federal Domestic Assistance Program No. 13.659 Adoption Assistance)

Dated: February 4, 1988.

Sydney Olson,

Assistant Secretary for Human Development Services.

Approved: March 14, 1988.

Otis R. Bowen,

Secretary.

For the reasons set forth in the preamble, we are proposing to amend 45 CFR 1356.40 and to add a new section 1356.41 as follows:

PART 1356—REQUIREMENTS APPLICABLE TO TITLE IV-E

1. The authority statement for Part 1356 continues to read as follows:

Authority: Adoption Assistance and Child Welfare Act of 1980, Pub. L. 96–272 as amended, 42 U.S.C. 670 *et seq.*, 94 Stat. 501, 42 U.S.C. 620 *et seq.*, 94 Stat. 516 *et seq.*, section 1102 of the Social Security Act as amended, 42 U.S.C. 1302.

2. Section 1356.40 is amended by revising paragraphs (b)(1), (b)(3) and (b)(4) as follows:

§ 1356.40 [Amended]

* * * * *

(b) The adoption assistance agreement must meet the requirements of section 475(3) of the Act and must:

(1) Be signed and in effect at the time of or prior to the final decree of adoption. A copy of the signed agreement must be given to each party; and

* * * * *

(3) Specify the nature and amount of any payment, services and assistance to be provided under such agreement and, for purposes of eligibility under title XIX of the Act, specify that the child is eligible for Medicaid services; and

(4) Specify, with respect to agreements entered into on or after October 1, 1983 that the agreement shall remain in effect regardless of the State of which the adoptive parents are residents at any given time.

* * * * *

3. Section 1356.40 is further amended by removing paragraph (c) and redesignating paragraphs (d), (e), (f) and (g), respectively as paragraphs (c), (d), (e) and (f).

4. A new § 1356.41 is added to read as follows:

§ 1356.41 Nonrecurring expenses of adoption.

(a) The amount of the payment made for nonrecurring expenses of adoption shall be determined through agreement between the adopting parent(s) and the State or local agency administering the program. The agreement must indicate the nature and amount of the nonrecurring expenses to be paid.

(b) There must be no income eligibility requirement (means test) for adopting parents in determining whether payments for nonrecurring expenses of adoption shall be made.

(c) For purposes of payment of nonrecurring expenses of adoption, the State must determine that the child is a "child with special needs" as defined by the State based on sections 473(c) (1) and (2)(A) of the Act, and that the child has been placed in accordance with applicable State and local laws; the child need not meet the categorical eligibility requirements at section 473 (a)(2) or 473(c)(2)(B).

(d) At State option, the State may pay nonrecurring expenses of the adoption of children with special needs from foreign countries, through a licensed or approved domestic nonprofit adoption agency. Such payments are eligible for FFP up to the maximum amount stated in 45 CFR 1356.41(f) or the State maximum, whichever is lower. The State shall make clear in its definition of "a child with special needs" whether such children will be included or excluded.

(e) The State agency must notify all appropriate courts and all public and licensed private nonprofit adoption agencies of the availability of funds for the nonrecurring expenses of adoption of children with special needs, as well as where and how interested persons may apply for these funds.

(f) Funds expended with respect to nonrecurring adoption expenses incurred by or on behalf of parents who adopt a child with special needs shall be considered an administrative expenditure of the title IV–E Adoption Assistance Program. Federal reimbursement is available at a 50 percent matching rate up to a $2,000 State expenditure for any adoptive placement. States may set a reasonable lower maximum.

(g) Federal financial participation for nonrecurring expenses of adoption is limited to costs incurred by or on behalf of adoptive parents that are not otherwise reimbursed from other sources. Payments for nonrecurring expenses shall be made either directly by the State agency or through another public or licensed nonprofit private agency.

(h) The term "nonrecurring adoption expenses" means reasonable and necessary adoption fees, court costs, attorney fees and other expenses which are directly related to the legal adoption of a child with special needs, which are not incurred in violation of State or Federal law, and which have not been reimbursed from other sources of funds. "Other expenses which are directly related to the legal adoption of a child with special needs" means the costs incurred by or on behalf of the parents for the adoption study, including health and psychological examination or consultation, supervision of the placement prior to adoption as well as transportation and the reasonable costs of lodging and food for the child and/or the adoptive parents when necessary to complete the placement or adoption process.

(i) A State needing to amend its statute so that nonrecurring expenses of *all* adopting parents of children with special needs can be reimbursed by the State will have until the close of the second general legislative session following the date of publication of the final rule to make any necessary changes in State statute. Such legislation must apply to all claims effective January 1, 1987. Failure to provide reimbursement for eligible claims from January 1, 1987 will result in the State being considered out of compliance with the Act.

(j) A State expenditure is considered made in the quarter during which the payment was made by a State agency to a private nonprofit agency, individual or vendor payee.

§ 1356.60 [Amended]

5. Section 1356.60 is amended by removing paragraph (c)(4) and redesignating paragrah (c)(5) as (c)(4).

[FR Doc. 88–8223 Filed 4–13–88; 8:45 am]

BILLING CODE 4130-01-M

FEDERAL MARITIME COMMISSION

46 CFR Part 502

[Docket No. 88–10]

Amendment to Rules of Practice and Procedure

AGENCY: Federal Maritime Commission.

ACTION: Notice of proposed rulemaking.

SUMMARY: The Federal Maritime Commission proposes to amend § 502.92 of its Rules of Practice and Procedure, which governs the filing of special docket applications. The purpose of the amendments is to repeal the requirement for the joinder of conferences in special docket applications filed by their members, to clarify language regarding designation of the appropriate tariff for notice purposes, and to make other changes to conform to the Shipping Act of 1984.

DATE: Comments due on or before May 16, 1988.

ADDRESS: Send comments (original and fifteen copies) to: Joseph C. Polking, Secretary, Federal Maritime Commission, 1110 L Street NW., Washington, DC 20573, (202) 523–5725.

FOR FURTHER INFORMATION CONTACT: Joseph C. Polking, Secretary, Federal Maritime Commission, 1100 L Street NW., Washington, DC 20573, (202) 523–5725.

SUPPLEMENTARY INFORMATION: The Commission rule which governs the filing of special docket applications in the foreign commerce of the United States, is found at 46 CFR 502.92 ("Rule 92"). This rule, which implements the provisions of section 8(e) of the Shipping Act of 1984, 46 U.S.C. app. 1707(e) ("1984 Act"), requires the joinder of conferences in applications for permission to refund or waive collection of a portion of freight charges, filed by their members.[1] Since the adoption of Rule 92, the Commission has treated conferences as indispensable parties in special docket proceedings initiated by their member lines.[2] The joinder is intended to ensure that conferences are appraised of and will proceed in accordance with the actions taken by their member carriers [3] and publish in

---

[1] Section 8(e) reads in part:

Refunds. The Commission may, upon application of a carrier or shipper, permit a common carrier or conference to refund a portion of freight charges from a shipper or to waive the collection of a portion of the charges from a shipper * * *.

[2] Part 502—Rules of Practice and Procedure, 21 F.M.C. 340, 343 (1978). *Application of Hapag Lloyd, AG for the benefit of General Motors Corp., 23 S.R.R. 201, 205–206 (1985); Application of Lykes Bros. S.S. Co., Inc. for the Benefit of Catholic Relief Services,* 23 S.R.R. 1541, 1542 (1986).

[3] Section 8(e)(2), 46 U.S.C. app. 1707(e)(2), provides:

The common carrier or conference has, prior to filing an application for authority to make a refund, filed a new tariff with the Commission that sets forth the rate on which the refund or waiver would be based;

the common tariff the notice required by section 8(e)(3) of the 1984 Act if the application is granted.[4] However, this objective can be accomplished without requiring a conference's participation in the application filed by a member line.[5]

Under the Commission's rules governing the filing of tariffs in the foreign commerce, a conference has a duty to maintain a common tariff for its members.[6] This broad obligation would appear to obviate any need for conference concurrence in a special docket application to meet the requirements of section 8(e)(2) and 8(e)(3) of the 1984 Act. Although the conference tariff is involved, the fact is that, ultimately, the carrier and not the conference is responsible for any permitted refund or waiver or collection of freight charges. The conference's concurrence, therefore, would not appear to be necessary to meet this end. In regard to the section 8(e)(2) "corrected rate" requirement, when the corrected rate is filed pursuant to independent action or in an "open" rate section of the tariff, the conference acts more in the capacity of a publishing agent. Additionally, even when the corrected rate involves a conference rate agreed to by the membership, the very act of filing the corrected conference rate in the tariff prior to the application fulfills the requirement, again rendering concurrence superfluous. Finally, although section 8(e)(3) requires the conference to agree to the filing of "an appropriate notice" if the special docket application is granted, this does not appear to necessitate actual conference joinder in the application in view of the general responsibility of the conference to file tariffs on behalf of its members.

The Commission, therefore, is proposing to repeal the requirement that conferences concur in special docket applications filed by member lines.[7] We propose, however, to require that a conference carrier serve a copy of the application on the conference simultaneously with the filing at the Commission. The carrier would also be required to make a certification to that effect in the application. This would provide additional notice to the conference of the filing. A similar requirement would also be made of shippers filing special docket applications. The proposed rule would obligate a shipper to serve a copy of the application on the conference and/or common carrier and to certify to that effect in the application.

The discussion above focused on the concurrence of a conference in an application filed by a member line. However, there are also situations where a conference itself, and on its own behalf, files a special docket application involving shipments of one or more carrier members.

While section 8(e) of the 1984 Act makes specific provision for the filing of applications by shippers and carriers, it does not expressly provide for such filings by conferences, as did the Shipping Act, 1916, 46 U.S.C. app. 801. However, subparagraphs (2) and (3) of section 8(e) continue to refer to conference participation through the filing of a new tariff and an appropriate notice upon approval of the application by the Commission. The introductory paragraph of section 8(e) also provides that while an application may be filed by a carrier or a shipper, the Commission may "permit a common carrier or *conference* to refund the portion of freight charges collected * * *." (emphasis added)

Therefore, while an arguent could be made that a conference is no longer allowed to file an application, the better approach would appear to be to continue to permit a conference filed application *on behalf of* a carrier member. The application is then considered as that of the carrier member, consistent with the language of the statute. The Commission has always required that the carrier member file a concurrence with a conference application and will continue to do so. Viewed in this manner, conference applications are similar to those submitted by tariff publishing services on behalf of a particular carrier. Therefore, while we are proposing to delete the references to "conference" filings in § 502.92(a) (1) and (2), we are not proposing to prohibit the filing by a conference *on behalf of its member(s)* and we would treat such a filing as actually that of the conference member line which would be required to furnish a concurrence.

Another concern regarding special docket procedures involves the designation of the appropriate tariff for the notice required pursuant to section 8(e)(3). The situation described above regarding a former conference member filing a special docket application, and the role of the conference in the application, also serves as an example of this notice problem. If the carrier was a member of the conference at the time of shipment but has since resigned from the conference, a question arises as to where the notice should be filed. Other situations in which this question arises include a carrier joining a conference after the shipment is made, the dissolution of a conference, or a situation where a conference is superseded by another in the time frame between the tariff error and grant of the application.

It is difficult to formulate a rule of general application for such situations. Accordingly, designation of the appropriate tariff is best left to the presiding Administrative Law Judge ("ALJ") on an ad-hoc basis. However, we believe that additional guidance to the ALJ in this regard is necessary and § 502.92(c) is therefore proposed to be amended to reflect the discretion and responsibility granted to the ALJ in designating the appropriate tariff.

Exhibit No. 1 to Subpart F would also be amended to reflect deletion of conference joinder in the application and other clarifying language.

The Commission has determined that this proposed rule is not a "major rule" as defined in Executive Order 12291, dated February 17, 1981, because it will not result in:

(1) An annual effect on the economy of $100 million or more;

(2) A major increase in costs or prices for consumers, individual industries, Federal, State or local government agencies, or geographical regions; or investment productivity, innovations, or on the ability of the United States-based enterprises to compete with foreign-based enterprises in domestic or export markets.

The Federal Maritime Commission certifies, pursuant to section 605(b) of the Regulatory Flexibility Act, 5 U.S.C.

---

[4] Section 8(e)(3), 46 U.S.C. app. 1707(e)(3), provides:

The common carrier or conference agrees that if permission is granted by the Commission, an appropriate notice will be published in the tariff, or such other steps taken as the Commission may require that give notice of the rate on which the refund or waiver would be based, and additional refunds or waivers as appropriate shall be made with respect to other shipments in the manner prescribed by the Commission in its order approving the application; * * *.

[5] The existing conference concurrence requirement has raised a number of issues regarding interpretation. One example is whether a conference needs to join in the application of a *former* member which applied for relief on a shipment carried before that member's resignation from conference membership. In this instance, the conference would not appear to be a necessary party because the carrier's resignation from the conference ends the conference's obligation to act as a tariff filing agent for the carrier and it could not publish the tariff notice contemplated in section 8(e)(3) of the 1984 Act for the benefit of that carrier.

[6] *See* 46 CFR Part 580—*Publishing and Filing of Tariffs by Common Carriers in the Foreign Commerce of the United States.* § 580.3(j) (1) and (2).

[7] The concurrence under discussion only goes to an agreement to file a corrected tariff and tariff notice. A statement from the conference as to the facts surrounding the application may still be required to be submitted in a particular case to support the application.

605(b), that this rule, if adopted, will not have a significant economic impact on a substantial number of small entities, including small businesses, small organizational units or small governmental organizations.

The Paperwork Reduction Act, 44 U.S.C. 3501–3520, does not apply to this Notice of Proposed Rulemaking because the proposed amendments to Part 502 of Title 46, Code of Federal Regulations, do not impose any additional reporting or recordkeeping requirements or change the collection of information from members of the public which require the approval of the Office of Management and Budget.

List of Subjects in 46 CFR Part 502

Administrative practice and procedure.

Therefore, pursuant to 5 U.S.C. 553 and section 17 of the Shipping Act of 1984, 46 U.S.C. app. 1716(a), Part 502 of Title 46, Code of Federal Regulations, is proposed to be amended as follows:

PART 502—[AMENDED]

1. The authority citation for Part 502 reads as follows:

Authority: 5 U.S.C. 552, 553, 559; 18 U.S.C. 207; secs. 18, 20, 22, 27 and 43 of the Shipping Act, 1916 (46 U.S.C. app. 817, 820, 821, 826, 841a); secs. 6, 8, 9, 10, 11, 12, 14, 15, 16 and 17 of the Shipping Act of 1984 (46 U.S.C. app. 1705, 1707–1711, 1713–1716); sec. 204(b) of the Merchant Marine Act, 1936 (46 U.S.C. app. 1114(b)); and E.O. 11222 of May 8, 1965 (30 FR 6469).

2. Section 502.92 is amended by revising paragraphs (a) (1), (2), (3)(i), and (c) to read as follows:

§ 502.92 Special docket applications and fee.

(a)(1) A common carrier by water in foreign commerce, or a shipper, may file an application for permission to refund or waive collection of a portion of freight charges where it appears that there is (i) an error in the tariff of a clerical of administrative nature or (ii) an error due to inadvertence in failing to file a new tariff. Such refund or waiver must not result in discrimination among shippers, ports, or carriers.

(2) When the application is filed by a carrier, the Commission must have received prior to the filing of the application a new tariff which sets forth the rate on which refund or waiver would be based.

(3)(i) The application for refund or waiver must be filed with the Commission within one hundred eighty (180) days from the date of shipment and served upon other persons involved pursuant to Subpart H of this part. When a rate published in a conference tariff is involved, the carrier or shipper must serve a copy of the application on the conference and so certify in accordance with Rule 117 (46 CFR 502.117) to that service in the application. A shipper must also make a similar service and certification with respect to the common carrier. An application is filed when it is placed in the mail, delivered to a courier, or, if delivered by another method, when it is received by the Commission. Filings by mail or courier must include a certification as to date of mailing or delivery to the courier.

* * * * *

(c) Applications under paragraphs (a) and (b) of this section shall be submitted in an original and three (3) copies to the Office of the Secretary, Federal Maritime Commission, Washington, DC 20573–0001. Each application shall be acknowledged with a reference to the assigned docket number and referred to the Office of Administrative Law Judges. The presiding Administrative Law Judge may, in his or her discretion, require the submission of additional information or oral testimony. Formal proceedings as described in other rules of this part need not be conducted. If the application is granted, the initial decision shall describe the content of the appropriate notice if required to be published, and shall designate the tariff in which it is to appear, or other steps that are required to be taken which give notice of the rate on which such refund or waiver is to be based. The presiding Administrative Law Judge shall issue an initial decision to which the provisions of § 502.227 shall be applicable. [Rule 92].

3. Exhibit No. 1 to Subpart F is amended to remove the reference to "conference" in the introductory paragraph.

4. The requirement for an "Affidavit of Carrier(s) and/or Conference" is amended by removing "and/or Conference" and the language in brackets is amended by removing everything after the word "rate."

By the Commission.

Joseph C. Polking,

Secretary.

[FR Doc. 88–8059 Filed 4–13–88; 8:45 am]

BILLING CODE 6730-01-M

DEPARTMENT OF TRANSPORTATION

Research and Special Programs Administration

49 CFR Parts 171, 172, 173, 174, 175, 176, 177, 178, and 179

[Docket No. 181, Notice No. 87–4]

Performance-Oriented Packaging Standards; Miscellaneous Proposals; Reopening of Comment Period

AGENCY: Research and Special Programs Administration (RSPA), DOT.

ACTION: Proposed rule; reopening of comment period.

SUMMARY: On May 5, 1987, RSPA published a notice of proposed rulemaking (NPRM) (Docket No. HM–181; Notice No. 87–4) in the **Federal Register** (52 FR 16482) concerning performance-oriented packaging standards. On November 6, 1987, RSPA published a supplemental NPRM (52 FR 42772) containing corrections to the initial NPRM and additional proposals. An extension of the comment period from November 2, 1987 to February 26, 1988 was published in the **Federal Register** (52 FR 33906) on September 8, 1987, due to the pending supplemental NPRM and in response to several requests for additional time to submit comments. Due to the size and scope of Notice No. 87–4, several commenters have again indicated that additional time is needed to fully develop their responses to specific proposals. The areas addressed by these commenters included proposed bulk packaging provisions, reclassification of certain materials such as anhydrous ammonia, and non-bulk packaging requirements for poisonous liquids which are toxic by inhalation. RSPA believes that reopening the comment period is consistent with the public interest and, by this notice, is reopening the comment period for Notice No. 87–4 from February 26, 1988 to May 25, 1988.

DATE: Comments must be received on or before May 25, 1988.

ADDRESS: Address comments to the Dockets Unit, Research and Special Programs Administration, Department of Transportation, Washington, DC 20590. Comments should identify the docket and notice number and be submitted in five copies. Persons wishing to receive confirmation of receipt of their comments should include a self-addressed stamped postcard. The

Dockets Unit is located in Room 8426 of the Nassif Building, 400 7th Street SW., Washington, DC 20590. Public dockets may be reviewed between the hours of 8:30 a.m., and 5:00 p.m., Monday through Friday, except holidays.

FOR FURTHER INFORMATION CONTACT: Ann Boylan, Standards Division, Office of Hazardous Materials Transportation, U.S. Department of Transportation, 400 7th Street SW., Washington, DC 20590, telephone (202) 366-4488.

Issued in Washington, DC, on April 8, 1988, under authority delegated in 49 CFR Part 106, Appendix A.

Alan I. Roberts,

Director, Office of Hazardous Materials Transportation.

[FR Doc. 88-8214 Filed 4-13-88; 8:45 am]

BILLING CODE 4910-60-M

INTERSTATE COMMERCE COMMISSION

49 CFR Part 1185

[Ex Parte No. 474]

Certain Interlocking Directorates; Exemption

AGENCY: Interstate Commerce Commission.

ACTION: Notice of proposed rulemaking—exemption.

SUMMARY: The Commission proposes to exempt individuals from the prior approval requirements of 49 U.S.C. 11322(a) when they seek to assume positions as officers or directors of one rail carrier while holding the position of officer or director of another rail carrier, except where both carriers are class I railroads. The Commission believes that the prior approval requirements for this type of transaction are no longer necessary to carry out the national rail transportation policy of 49 U.S.C. 10101a, that these transactions are of limited scope, and that regulation is not necessary to protect shippers from abuse of market power. This action is being proposed to eliminate unwarranted government regulation and the accompanying delay. To accomplish this, the regulations at 49 CFR Part 1185 would be revised and a new § 1185.1, *Scope of exemption,* would be added, as set forth below. Comments are invited on the proposed exemption, as well as on expanding it to encompass interlocking directorates involving two class I railroads.

DATES: An original and 10 copies of comments must be filed by May 16, 1988.

ADDRESS: Comments referring to Ex Parte No. 474 should be addressed to: Office of the Secretary, Case Control Branch, Room 1324, Interstate Commerce Commission, Washington, DC 20423.

FOR FURTHER INFORMATION CONTACT: Joseph H. Dettmar (202) 275-7245. [TDD for hearing impaired: (202) 275-1721]

SUPPLEMENTARY INFORMATION: Additional information is contained in the Commission's decision. To obtain a copy of the full decision, write to the Office of the Secretary, Room 2215, Interstate Commerce Commission Building, Washington, DC 20423, or call (202) 275-7428. (Assistance for the hearing impaired is available through TDD services (202) 275-1721).

This action will not significantly affect either the quality of the human environment or energy conservation.

Regulatory Flexibility Analysis

The Commission certifies that the proposed exemption, if promulated, will not have a significant impact on a substantial number of small entities, because the proposal would merely remove prior approval requirements for individuals in certain circumstances to hold the position of officer or director of more than one carrier. The proposed exemption may have some positive impact on small carriers since it will remove a regulatory barrier to qualified individuals becoming officers or directors of those entities.

List of Subjects in 49 CFR Part 1185:

Administrative practice and procedure, Antitrust, Railroads.

Decided: April 7, 1988.

By the Commission, Chairman Gradison, Vice Chairman Andre, Commissioners Sterrett, Simmons, and Lamboley. Commissioner Simmons dissented with a separate expression.

Noreta R. McGee,

Secretary.

Title 49, Subtitle B, Chapter X, Part 1185 of the Code of Federal Regulations is proposed to be revised as follows:

PART 1185—INTERLOCKING OFFICERS

1. The authority citation for 49 CFR Part 1185 would be revised to read as follows.

Authority: 49 U.S.C 10321, 11322, and 10505; 5 U.S.C. 553 and 559.

§§ 1851.1-1185.10 [Redesignated as §§ 1185.2-1185.11]

2. Sections 1185.1-1185.10 would be redesignated as §§ 1185.2—1185.11 respectively.

3. Section 1185.1 would be added to read as follows:

§ 1185.1 Scope of exemption.

(a) Subject to the exception in paragraph (c) of this section, "interlocking directorates," as defined in paragraph (b) of this section, are exempt from the prior approval requirements of 49 U.S.C. 1132(a).

(b) An "interlocking directorate" exists whenever an individual holds the position of officer (as defined in § 1185.3) or director of one carrier and assumes the position of officer or director of another carrier.

(c) The exemption in paragraph (a) of this section does not apply to those interlocking directorates sought where the carriers are class I railroads. An application under 49 U.S.C. 11322(a) or petition for exemption under 49 U.S.C. 10505 for authority for this type of interlocking arrangement must be filed.

(d) This exemption does not affect the competitive bidding requirements of Section 10 of the Clayton Act (15 U.S.C. 20), as implemented in part in 49 CFR Part 1010.

4. Newly redesignated § 1185.3 would be revised to read as follows:

§ 1185.3 Application of regulations.

The regulations in this part apply to any person authorized by or undertaking for each of two or more class I rail carriers to perform the duties, or any of the duties, ordinarily performed by a director, president, vice president, secretary, treasurer, general counsel, general solicitor, general attorney, comptroller, general auditor, general manager, freight traffic manager, passenger traffic manager, chief engineer, general superintendent, general land and tax agent, or chief purchasing agent of a carrier.

[FR Doc. 88-8173 Filed 4-13-88; 8:45 am]

BILLING CODE 7035-01-M

Notices

Federal Register
Vol. 53, No. 72
Thursday, April 14, 1988

This section of the FEDERAL REGISTER contains documents other than rules or proposed rules that are applicable to the public. Notices of hearings and investigations, committee meetings, agency decisions and rulings, delegations of authority, filing of petitions and applications and agency statements of organization and functions are examples of documents appearing in this section.

ADMINISTRATIVE CONFERENCE OF THE UNITED STATES

Agency Nonacquiescence in Decisions of the Courts of Appeals

AGENCY: Administrative Conference of the United States.

ACTION: Committee on Judicial Review; Request for Public Comments.

SUMMARY: The Administrative Conference's Committee on Judicial Review has under consideration a draft recommendation on federal agency nonacquiescence in decisions of courts of appeals. Interested persons are invited to comment on the draft recommendations.

DATES: Please submit comments by May 4, 1988.

ADDRESS: Send comments to Mary Candace Fowler, Office of the Chairman, Administrative Conference of the United States, Suite 500, 2120 L Street, NW., Washington, DC 20037.

FOR FURTHER INFORMATION CONTACT: Mary Candace Fowler, Office of the Chairman, Administrative Conference of the United States, 2120 L Street, NW., Suite 500, Washington, DC 20037. Telephone: (202) 254-7065.

SUPPLEMENTARY INFORMATION: The Administrative Conference's Committee on Judicial Review has under consideration a draft recommendation on federal agency nonacquiescence in decisions of courts of appeals reviewing agency action. The proposed recommendation is based on a draft report prepared by Professors Samuel Estreicher and Richard Revesz of New York University School of Law. The text of the draft recommendation is printed in full below. Copies of the draft report are available from the Office of the Chairman of the Administrative Conference.

The draft recommendation identifies and defines three types of nonacquiescence: intercircuit nonacquiescence, intracircuit nonacquiescence, and nonacquiescence where the venue for circuit court review of agency action is uncertain. The proposal recommends that agencies not engage in intracircuit nonacquiescence (refusal to follow the case law of a particular court of appeals when the agency action will be reviewable in the same court of appeals) unless certain specified requirements are met. The draft recommendation also suggests that agencies establish procedures for making intracircuit nonacquiescence decisions and for communicating those decisions within the agency and to the public. In addition, it urges courts not to enjoin an agency from pursuing a policy of intercircuit nonacquiescence or of nonacquiescence where venue is uncertain, and to enjoin an agency from engaging in intracircuit nonacquiescence only if the requirements set out in the recommendation have not been met. Since nonacquiescence sometimes occurs because venue is uncertain, the draft proposal recommends that Congress eliminate venue uncertainty except where overriding considerations counsel otherwise.

The Conference's Committee on Judicial Review tentatively plans to meet in early May for further consideration of the draft recommendation in the light of any comments that are received. At that time, the committee will decide whether to approve a draft recommendation for consideration by the Administrative Conference at its Plenary Session scheduled for June 9 and 10, 1988. Comments should be sent to the address given above.

Draft Recommendation: Agency Nonacquiescence in Decisions of the Courts of Appeals

From time to time, federal administrative agencies such as the National Labor Relations Board, the Internal Revenue Service, and the Department of Health and Human Services have practiced "nonacquiescence"—the selective refusal to conduct their internal proceedings in conformity with adverse rulings of the courts of appeals. Believing that they are responsible for a nationally uniform, expert administration of the statutes committed by Congress to their charge, these agencies have, in varying degrees, insisted on the authority to pursue their policies despite contrary circuit court decisions, until the Supreme Court issue a nationally binding resolution. This practice has provoked increasing criticism in recent years, particularly from the courts of appeals.

The term "nonacquiescence" actually refers to three distinct types of agency behavior. First, an agency engages in intercircuit nonacquiescence when it refuses to follow, in its administrative proceedings, the case law of one court of appeals when, under applicable venue provisions, review of the agency's action will lie in a different court of appeals. Second, an agency engages in intracircuit nonacquiescence when the relevant venue provisions establish that review will be to a particular court of appeals and the agency refuses to follow the case law of that circuit. The third category involves cases in which the proper venue for review of agency action is uncertain. Here, the agency refuses to follow the case law of a court of appeals but is not certain whether its decision will be reviewed in that court or in one that has not rejected the agency's position. This category includes cases in which, as a practical matter, it is probable that the case will be heard in one particular circuit, as long as venue in another circuit that has not rejected the agency's position is possible under the applicable statutory provisions.

Intercircuit nonacquiescence is necessary to preserve dialogue among the courts of appeals; such dialogue is likely to produce a more careful and focused consideration of the relevant issues in those courts, as well as to aid the Supreme Court by presenting it with competing approaches to difficult questions. Similar reasons underlie the rejection of intercircuit *star decisis* and of nonmutual collateral estoppel against the government. This recommendation therefore does not seek to limit an agency's exercise of intercircuit nonacquiescence.

Intracircuit nonacquiescence, in contrast, can have negative effects by giving rise to conflicts between an agency and its reviewing court, by creating disuniformity because a more favorable rule is available to parties that seek judicial review, by disadvantaging parties with limited resources for litigation, and by increasing the workload of the federal

courts. At the same time, however, a complete bar against intracircuit nonacquiescence would be inappropriate, as it would constrain intracircuit dialogue, undermine congressional policies in favor of national uniformity, and interfere with the efficient administration of federal law. This recommendation lists the factors that should govern the legitimacy of intracircuit nonacquiescence and sets procedural safeguards for the exercise of such nonacquiescence.

As to the third category, limits on nonacquiescence are undesirable for the same reasons as are limits on intercircuit nonacquiescence; this recommendation therefore does not seek to constrain an agency's ability to engage in nonacquiescence where venue is uncertain. But uncertainty over venue negatively affects an agency's relitigation policy by hampering the agency's ability to press its position in circuits that have not rejected it without having that position challenged in circuits that have rejected it. In addition, venue uncertainty is largely the product of historical happenstance rather than of reasoned choice and in many cases does not produce compelling benefits. For these reasons, this recommendation advocates limitations on venue choice except where overriding considerations (such as the desirability of preserving the specialized role of the United States Court of Appeals for the District of Columbia Circuit) counsel otherwise. *Cf.* ACUS Recommendation 82-3, *Federal Venue Provisions Applicable to Suits Against the Government*, 1 CFR 305.82-3. In order to reduce the agency-court friction caused by intracircuit nonacquiescence, Congress should make clear that by limiting venue choice is not thereby prohibiting nonacquiescence conducted in accordance with this recommendation.

Recommendation

1. Agencies should not engage in intracircuit nonacquiescence unless: (a) the agency has responsibility for securing a nationally uniform policy with respct to the question that was the subject of the adverse judicial decision; (b) the agency is reasonably seeking the vandication of its position both in the courts of appeals and before the Supreme Court, or through the active pursuit of legislative change; and (c) there is a justifiable basis for belief that the agency's position falls within the scope of its delegated discretion. An agency's position does not lack a justifiable basis simply because it was previously rejected by the court of appeals that issued the decision in which the agency does not acquiesce, such a basis is lacking only if no other court of appeals is likely to accept the agency's position.

2. Courts should not impose sanctions on an agency for, or enjoin an agency from, engaging in intracircuit nonacquiescence unless the rquirements in paragraph 1 above have been met. Such measures are inappropriate for intracircuit nonacquiescence and for nonacquiescence where venue is uncertain.

3. Agencies should establish procedures for identifying decisions of the courts of appeals that are contrary to their policies, for making determinations about when to engage in intracircuit nonacquiescence, and for communicating those detrminations to responsible agency personnel such as administrative law judges and enforcement staff. Decisions to engage in intracircuit nonacquiescence should be widely disseminated to the public and to relevant governmental officials, and should be accompanied by a brief statement of reasons. Among the factors that an agency should address in such a statement are the importance of the issue to its programmatic objectives, the strength of the congressional interest in a nationally uniform approach on the issue, the difficulty of differential administration of agency policy, and the fairness of having a favorable outcome in the circuit available only to those parties with sufficient resources to pursue an appeal.

4. Congress should eliminate uncertainty over the proper venue for review of agency action by establishing predictable venue rules unless overriding considerations, such as the desirability of preserving the specialized role of the United States Court of Appeals for the District of Columbia Circuit, counsel otherwise. In limiting venue choice, Congress should make clear that it is not thereby prohibiting agencies from engaging in intracircuit nonacquiescence in accordance with this recommendation.

Dated: April 11, 1988.

Jeffrey S. Lubbers,

Research Director.

[FR Doc. 88-8243 Filed 4-13-88; 8:45 am]

BILLING CODE 4110-01-M

DEPARTMENT OF AGRICULTURE

Soil Conservation Service

Finding of No Significant Imact for Pecos Arroyo Watershed, Site 1, Repairs to Dam San Miguel County, NM

Introduction

The San Jon Flood Prevention Measure is a federally-assisted action authorized for planning under Pub. L. 83-566, Watershed Protection and Flood Prevention. An environmental assessment was prepared in conjunction with the development of the project plan. The assessment is available for public review at:

Soil Conservation Service, 517 Gold Avenue SW., Rm. 3301, Albuquerque, NM 87102.

Recommended Action

A liner will be placed inside the principal outlet conduct and sediments will be excavated from the outlet channel on a structure built in 1964.

The proposed work will prolong the useful life of the structure.

Alternatives

Planning included the analysis of no action, complete removal and replacement of the principal outlet conduct, and the selected alternative.

Conclusion

In consideration of the findings of the environmental assessment, it is determined that environmental impacts will be positive and confined to the treatment areas. The proposed treatments will meet CEQ, USDA, and SCS policies regarding environmental concerns.

Therefore, based upon the above findings, I have determined that an environmental impact statement is not required.

Date: April 6, 1988.

Ronald L. Lauster,

Acting State Conservationist.

[FR Doc. 88-8177 Filed 4-13-88; 8:45 am]

BILLING CODE 3410-16-M

COMMISSION ON CIVIL RIGHTS

Consultation/Hearing on Civil Rights Aspects of Public Health Policies and Initiatives to Control AIDS

Notice is hereby given pursuant to the provisions of the United States

Commission on Civil Rights Act of 1983, Pub. L. 98–183, 97 Stat. 1304, that a public consultation/hearing before the U.S. Commission on Civil Rights will be held on May 16, 17, and 18, 1988, beginning each day at 9:00 a.m., at the Departmental Auditorium of the Department of Health and Human Services, North Building, 330 Independence Avenue, SW., Washington, DC 20201.

The purpose of the consultation/hearing is to receive testimony about civil rights issues in relation to public health policies and initiatives to control AIDS.

The Commission is an independent, bipartisan factfinding agency authorized to study, collect, and disseminate information and to appraise the laws and policies of the Federal government, and to study and collect information concerning legal developments, with respect to discrimination or denials of equal protection of the laws under the Constitution because of color, race, religion, sex, age, handicap, or national origin, or in the administration of justice.

Dated at Washington, DC, April 11, 1988.

Clarence M. Pendleton, Jr.,

Chairman.

[FR Doc. 88–8153 Filed 4–13–88; 8:45 am]

BILLING CODE 6335–01–M

DEPARTMENT OF COMMERCE

Foreign-Trade Zones Board

[Order No. 377]

Approach for Expansion of Foreign-Trade Zone No. 66, Wilmington, North Carolina, Within the Wilmington Customs Port of Entry

Pursuant to its authority under the Foreign-Trade Zones Act of June 18, 1934, as amended (19 U.S.C. 81a-81u), and the Foreign-Trade Zones Board Regulations (15 CFR Part 400), the Foreign-Trade Zones Board (the Board) adopts the following order:

Whereas, the North Carolina Department of Commerce, Grantee of Foreign-Trade Zone No. 66, Wilmington, North Carolina, has applied to the Board for authority to expand its general-purpose zone to include the entire Wilmington port terminal complex (390 acres), within the Wilmington Customs port of entry;

Whereas, the application was filed on July 18, 1986, and notice inviting public comment was given in the **Federal Register** on July 30, 1986 (Docket No. 25–86, 51 FR 27232);

Whereas, an examiner's committee has investigated the application in accordance with the Board's regulations and recommends approval based on a finding that the expansion would improve zone services in the Wilmington area; and,

Whereas, the Board has found that the requirements of the Foreign-Trade Zones Act, as amended, and the Board's regulations are satisfied, and that approval of the application is in the public interest;

Now, therefore, the Board hereby orders:

That the Grantee is authorized to expand its zone in accordance with the application filed July 18, 1986. The grant does not include authority for manufacturing operations, and the Grantee shall notify the Board for approval prior to the commencement of any manufacturing or assembly operations. The authority given in this Order is subject to settlement locally by the District Director of Customs and the District Army Engineer regarding compliance with their respective requirements relating to foreign-trade zones.

Signed at Washington, DC this 7th day of April, 1988.

Gilbert B. Kaplan,

Acting Assistant Secretary of Commerce for Import Administration, Chairman, Committee of Alternates, Foreign-Trade Zones Board.

John J. Da Ponte,

Executive Secretary.

[FR Doc. 88–8216 Filed 4–13–88; 8:45 am]

BILLING CODE 3510–DS–M

International Trade Administration

Applications for Duty-Free Entry of Scientific Instruments

Pursuant to section 6(c) of the Educational, Scientific and Cultural Materials Importation Act of 1966 (Pub. L. 89–651; 80 Stat. 897; 15 CFR Part 301), we invite comments on the question of whether instruments of equivalent scientific value, for the purposes for which the instruments shown below are intended to be used, are being manufactured in the United States.

Comments must comply with §§ 301.5(a) (3) and (4) of the regulations and be filed within 30 days with the Statutory Import Programs Staff, U.S. Department of Commerce, Washington, DC. 20230. Applications may be examined between 8:30 a.m. and 5:00 p.m. in Room 1523, U.S. Department of Commerce, 14th and Constitution Avenue, NW., Washington, DC.

Docket Number: 87–262R. *Applicant:* University of Alaska, Petroleum Development Laboratory, 437 Duckerring Building, Fairbanks, AK 99775–1260. *Instruments:* JEFRI High Pressure Recombination Apparatus and High Temperature High Pressure Miscibility Apparatus. *Manufacturer:* D. B. Robinson & Associates, Canada. Original notice of this resubmitted application was published in the **Federal Register** of August 31, 1987.

Docket Number: 88–024R. *Applicant:* Virginia Polytechnic Institute and State University, Physics Department, Robeson Hall, Blacksburg, VA 24061. *Instrument:* FTI Interferometer, DA3.16. *Manufacturer:* Bomem, Canada. Original notice of this resubmitted application was published in the **Federal Register** of December 9, 1987.

Docket Number: 88–103. *Applicant:* University of Louisville, Department of Anatomy, Louisville, KY 40292. *Instrument:* Electron Microscope, Model CM10. *Manufacturer:* N.V. Philips, The Netherlands. *Intended Use:* The instrument will be used for high resolution ultrastructural studies of biological materials. Specific projects will involve studies of the following:

(1) Membrane changes associated with the decrease in pump site density on dysfunctional corneal endothelium,

(2) The role of individual molecules as differentiation mediators to understand the mechanisms of action, and

(3) Studies on the distribution of ultrastructural components during neuronal development focus on changes in microtubular distribution during cell division.

In most of the ongoing studies the major objectives are to determine the structure function relationships of cellular mechanisms. The instrument will also be used for training graduate and medical students in electron microscope techniques. *Application Received by Commissioner of Customs:* February 16, 1988.

Docket Number: 88–104. *Applicant:* The University of Illinois, 506 S. Wright Street, Urbana, IL 61801. *Instrument:* Electron Microscope with Accessories, Model CM12/STEM. *Manufacturer:* N.V. Philips, The Netherlands. *Intended Use:* The instrument will be used in rapid solidification processing of metals and alloys and characterization of the resulting refined microstructures. The other area of research involves studies of layered superlattices of electronic materials. *Application Received By Commissioner of Customs:* February 16, 1988.

Docket Number: 88–105. APPLICANT: University of Colorado, Health Sciences Center, Division of Hematology, Campus Box B170, 4200 E. 9th Ave., Denver, CO 80262. *Instrument:* Gas Chromatograph/Mass Spectrometer Model TS–250.

Manufacturer: VG Tritech, United Kingdom. *Intended use*: The instrument will be used for the study of a number of cobalamin and folate analogues, samples of animal and human blood, cerebrospinal fluid, urine, tissues, feces, and various chemicals or metabolites, such as methylmalonic acid and homocysteine, that are involved in biochemical pathways involving cobalamin and/or folic acid. Experiments will be conducted to learn more about the structure, function, and levels of various cobalamin and folate analogues and related metabolites in animals and humans under various conditions. *Application Received by Commissioner of Customs*: February 18, 1988.

Docket Number: 88-106. *Applicant*: Nathan Kline Institute, Orangeburg, NY 10962. *Instrument*: Electron Microscope, Model CM10/PC. *Manufacturer*: N.V. Philips, The Netherlands. *Intended use*: The instrument will be used for studies of biological tissues in order to understand the basic mechanisms determining and regulating (1) the structure and function of a particular subcellular structure called the peroxisome which is instrumental in lipid metabolism and the failure of which is correlated with neurologic disease and (2) the function of membrane components involved in membrane recycling to elucidate the mechanisms of membrane assembly, the breakdown of which leads to neurological dysfunction. *Application Received by Commissioner of Customs:* February 18, 1988.

Frank W. Creel,

Director, Statutory Import Programs Staff.

[FR Doc. 88-8217 Filed 4-13-88; 8:45 am]

BILLING CODE 3510-DS-M

DEPARTMENT OF DEFENSE

Office of the Secretary

Defense Science Board Task Force on B-1B Defensive Avionics; Closed Meeting

ACTION: Notice of Advisory Committee Meetings.

SUMMARY: The Defense Science Board Task Force on B-1B Defensive Avionics will meet in closed session on May 13, 1988 at Eaton, AIL Division, Deer Park, New York.

The mission of the Defense Science Board is to advise the Secretary of Defense and the Under Secretary of Defense for Acquisition on scientific and technical matters as they affect the perceived needs of the Department of Defense. At this meeting the Task Force will evaluate the status of the Air Force B-1B Defensive Avionics Program.

In accordance with section 10(d) of the Federal Advisory Committee Act, Pub. L. No. 92-463, as amended (5 U.S.C. App. II, (1982)), it has been determined that this DSB Task Force meeting, concerns matters listed in 5 U.S.C. 552b(c)(1) (1982), and that accordingly this meeting will be closed to the public.

Linda M. Bynum,

Alternate OSD Federal Register Liaison Officer, Department of Defense.

April 11, 1988.

[FR Doc. 88-8219 Filed 4-13-88; 8:45 am]

BILLING CODE 3810-01-M

Defense Science Board Task Force on Tactical Directed Energy Weapons—Revisit; Cancelled Meeting

ACTION: Cancellation of meeting.

SUMMARY: The meeting notice for the Defense Science Board Task Force on Tactical Directed Energy Weapons—Revisit for March 30, 1988 as published in the **Federal Register** (Vol. 53, No. 45, Page 7387, Tuesday, March 8, 1988, FR Doc. 88-5057.) has been cancelled.

Linda M. Bynum,

Alternate OSD Federal Register Liaison Officer, Department of Defense.

April 11, 1988.

[FR Doc. 88-8220 Filed 4-13-88; 8:45 am]

BILLING CODE 3810-01-M

Corps of Engineers, Department of the Army

Intention To Prepare a Draft Environmental Impact Statement (DEIS) for Proposed Local Flood Protection Projects; Sandusky River, Ohio

AGENCY: U.S. Army Corps of Engineers, Buffalo District, DOD.

ACTION: Notice of intent to prepare a Draft Environmental Impact Statement (DEIS).

SUMMARY:

1. *Proposed Action:* The proposed action would alleviate flood damages along the Sandusky River in the cities of Bucyrus in Crawford County and Tiffin in Seneca County, Ohio. The following alternative plans will be evaluated for the city of Bucyrus:

a. *Plan 3 (Bridge Clean-Out and Ring Levee).* A ring-shaped levee would be constructed north of the river surrounding both sides of North Sandusky Avenue at East River Street. In addition, shoals under the Mansfield Street bridge would be cleared, and bank improvements would be made.

b. *Plan 4 (Bridge Clean-Out Only).* Shoals under the Mansfield Street bridge would be cleared, and bank improvements would be made.

c. *Plan 7 (Floodproofing).* Thrity-three houses north of the river on North Lane, and Clinton and Water Streets would be raised above or near the 100-year floodplain level.

The following plans will be evaluated for the city of Tiffin:

a. *Plan 2 (Levee—Duchess Lane Area).* This plan would consist of constructing a levee around the floodprone portions of Duchess Lane (i.e., those portions nearest the river) and a floodwall along the tributary nearest intersection of U.S. Route 224 and State Route 53.

b. *Plan 8 (Floodproofing—Mechanicsburg Area).* Ninety-one houses in the Mechanicsburg area would be raised above or near the 100-year floodplain level. The streets included would be: Martha, Union, Front, Charlotte, Russell, Second, and Third.

c. *Plan 9 (Floodproofing—Duchess Lane Area).* Twenty-nine houses in the Duchess Lane area would be raised above or near the 100-year floodplain level. The streets included would be: Duchess Lane, South Duchess Lane, and Riverside Park Lane.

2. *Scoping Process:* Scoping for the DEIS will include continued coordination with affected Federal, State, and local agencies, as well as other interested parties. Formal scoping meetings are not planned at this time, however, all interested parties are urged to actively participate in the study by submitting in writing any concerns or recommendations to the Buffalo District.

Significant issues to be addressed in the DEIS include, but are not limited to fish and wildlife habitat, water quality, recreation, aesthetic values, cultural resources, health and safety, community growth and cohesion, and public facilities and services. A Draft Fish and Wildlife Coordination Act Report will be completed by the Columbus Field Office of the U.S. Fish and Wildlife Service in August 1988. A Cultural Resources Reconnaissance of the study area will also be completed.

3. *Availability:* The DEIS is expected to be available for public and agency review in March/April 1989.

ADDRESS: Questions about the proposed action and DEIS can be answered by: Mr. William E. Butler, Environmental Analysis Branch, U.S. Army Corps of Engineers, Buffalo District, 1776 Niagara Street, Buffalo, NY 14207-3199.

Dated: April 5, 1988.

Bruce W. Haigh

Lieutenant Colonel, U.S. Army, Acting Commander.

[FR Doc. 88-8128 Filed 4-13-88; 8:45 am]

BILLING CODE 3710-GF-M

Intent To Prepare a Draft Supplemental Environmental Impact Statement (DEIS) for Operation and Maintenance of Coralville Lake, Iowa River, Johnson County, IA

AGENCY: Army Corps of Engineers, DOD.

ACTION: Notice of intent.

SUMMARY:

1. Description of Proposed Action

A draft SEIS will be prepared to present information on the effects resulting from changes in the Regulation Manual and Water Control Plan for Coralville Lake. Information will be presented to supplement the original Environmental Impact Statement (EIS) prepared in 1977. The Coralville Lake project encompasses 24,332 acres of fee title land and 5,136 acres of flowage easement land in Johnson County, Iowa. The project, completed in 1958, was built for flood control and low-flow augmentation (conservation storage). Fish and Wildlife receive equal consideration to other authorized project purposes, as provided by the Fish and Wildlife Coordination Act of 1958. Recreation, as a project purpose, is authorized by the Flood Control Act of 1944. Changes in the conservation pool are required to account for the conservation storage lost as a result of sedimentation.

2. Alternatives for the Proposed Action

Preliminary estimates indicate that a conservation pool elevation of about 686 feet National Geodetic Vertical Datum (NGVD) may be required to ensure adequate storage (90 to 95 percent reliability) for low-flow or drought events. In anticipation of a change in pool elevation, certain changes in the regulation, operation, and maintenance of the Coralville Lake project will be necessary. At this time, alternative development has centered around the target elevation of 686 NGVD with varying seasonal elevations. The concept of variable seasonal pool elevations was provided during a project initiation meeting involving the Corps and agency representatives with direct management responsibilities on project lands. While not specifically required by Corps regulation in the case of an EIS supplement, this meeting aided the process of scoping in preliminary alternative development: agency staff highlighted concerns for adequate flood control, public safety, fisheries, wildlife, and recreation. The development of the SEIS will be used to analyze alternatives to the current regulation plan in accordance with the National Environmental Policy Act (NEPA) of 1969, as amended (42 U.S.C. 4371 et seq.), NEPA regulations (40 CFR Parts 1500–1508, 33 CFR Parts 230 and 325), and other appropriate Federal regulations. The final SEIS will accompany a decision document identifying the preferred regulation plan.

3. Public Involvement

A public information paper was distributed on 29 January 1988, to solicit public input concerning alteration of the conservation pool and lake outflows. A press release also was issued in conjunction with the information paper. This notice further solicits input and assistance from the interested public and invites participation by affected Federal and State agencies having special jurisdiction and/or expertise as cooperating agencies. Public meeting(s) will be scheduled following circulation of the Draft SEIS, currently planned for December 1988. Locations and dates of any scheduled meeting(s) will be announced approximately 30 days in advance by area press release.

4. Significant Issues to be Addressed

Impacts to natural, social, economic and cultural resources resulting from a change in reservoir regulation will be addressed. Portions of the reservoir pool area to be inundated are managed for wildlife by the State of Iowa, under license for fish and wildlife management pursuant to the General Plan. Changes in flood frequencies and durations are also issues to be addressed.

5. Public Availability

The final SEIS is anticipated to be completed by May 1989.

Additional information concerning the proposed project may be requested from: District Engineer, U.S. Army Engineer District, Rock Island, ATTN: Planning Division, Clock Tower Building—P.O. Box 2004, Rock Island, Illinois 61204–2004.

Date: March 30, 1988.

Donald J. Hejna,

LTC, EN, Acting Commander.

[FR Doc. 88-8142 Filed 4-13-88; 8:45 am]

BILLING CODE 3710-HV-M

DEPARTMENT OF EDUCATION

[CFDA No. 84.122B]

Notice Inviting Applications for New Awards under the Secretary's Discretionary Program for Fiscal Year 1988

Purpose: To invite applications to conduct national school volunteer programs.

Deadline for Transmittal of Applications: June 17, 1988.

Applications Available: April 21, 1988.

Available Funds: $383,000.

Estimated Range of Awards: $100,000–$383,000.

Estimated Average Size of Awards: $200,000.

Estimated Number of Awards: 1–3.

Project Period: 12 Months.

Applicable Regulations: (a) The Secretary's Discretionary Program Regulations, 34 CFR Part 760; and (b) the Education Department General Administrative Regulations, 34 CFR Parts 74, 75, 77, and 78.

Absolute Priority: Title III of Pub. L. 100–202, which provides for continuing appropriations for fiscal year 1988, specifies that $383,000 of the funds appropriated for the Secretary's Discretionary Program shall be used for national school volunteer programs. In accordance with Pub. L. 100–202, and 34 CFR 75.105(b) and (c)(3), only applications proposing to conduct national school volunteer programs will be considered under this competition.

Within this absolute priority, the Secretary is particularly interested in applications to expand the number and strengthen the quality or organized school volunteer activities.

The Secretary encourages applications that provide training activities to establish or strengthen school volunteer programs in the States; develop improved training materials for school volunteers; and strengthen the nationwide network of school programs. However, these examples are only suggestions. Applicants are encouraged to propose activities other than these examples.

For Applications or Information Contact: The Secretary's Discretionary Fund, U.S. Department of Education, 400 Maryland Avenue SW., Room 4132, Washington, DC 20202. Telephone (202) 732-3566.

Program Authority: 20 U.S.C. 3851.

Dated: April 8, 1988.

Henry L. Curry,

Acting Assistant Secretary.

[FR Doc. 88-8216 Filed 4-13-88; 8:45 am]

BILLING CODE 4000-01-M

National Advisory board on International Education Programs; Open Meeting

AGENCY: National Advisory Board on International Education Programs.

ACTION: Notice of meeting.

SUMMARY: This notice sets forth the schedule of a forthcoming meeting of the National Advisory Board on International Education Programs. Notice of this meeting is required under section 10(a)(2) of the Federal Advisory Committee Act. This document is also intended to notify the general public of their opportunity to attend.

Date: April 19, 1988.

Location: The Hyatt-Arlington Hotel, 1325 Wilson Boulevard, Arlington, Virginia 22209, Telephone: 703–525–1234.

FOR FURTHER INFORMATION CONTACT: Harry M. Gardner, Executive Director, NABIEP, Postsecondary Relations Staff, 7th & D Streets SW., Room 4907, Washington, DC 20202, Telephone: 202–732–1862.

SUPPLEMENTARY INFORMATION: The National Advisory Board on International Education Programs is established under section 621 of the Higher Education Act of 1965, as amended by the Education Amendments of 1986 (Pub. L. 99–498; 20 U.S.C. 1131). Its mandate is to advise the Secretary of Education on the conduct of programs under this title.

This meeting of the National Advisory Board on International Education Programs is open to the public.

The agenda includes: Update on Grants and the Center for International Education Programs; Continuation of Discussion Concerning the Federal Role in International Education; and General Board Business for 1988.

Records are kept on the Board's proceedings and are available for public inspection at the Office of Postsecondary Relations Staff, from 8 a.m. to 4 p.m., ROB–3, 7th & D Streets SW., Roomn 4907, Washington, DC.

Signed in Washington, DC on April 11, 1988.

Kenneth D. Whitehead,

Acting Assistant Secretary for Postsecondary Education.

[FR Doc. 88–8187 Filed 4–13–88; 8:45 am]

BILLING CODE 4000–01–M

DEPARTMENT OF ENERGY

Assistant Secretary for International Affairs and Energy Emergencies

Proposed Subsequent Arrangement; Atomic Energy

Pursuant to section 131 of the Atomic Energy Act of 1954, as amended (42 U.S.C. 2160) notice is hereby given of a proposed "subsequent arrangement" under the Addtiional Agreement for Cooperation between the Government of the United States of America and the European Atomic Energy Community (EURATOM) concerning Peaceful Uses of Atomic Energy, as amended, and the Agreement for Cooperation between the Government of the United States of America and the Government of Japan concerning Civil Uses of Atomic Energy, as amended.

The subsequent arrangement to be carried out under the above-mentioned agreements involves approval for the following retransfer:

RTD/EU(JA)–111, for the transfer from Japan to Kernforschungsanlage Juelich GmbH, the Federal Republic of Germany, 3 fission counters containing 0.03 grams of uranium enriched to 93.16 percent in the isotope uranium-235, for use in neutron flux measurements for study of instrumentation in high temperature gas cooled reactors.

In accordance with section 131 of the Atomic Energy Act of 1954, as amended, it has been determined that this subsequent arrangement will not be inimical to the common defense and security.

This subsequent arrangement will take effect no sooner than fifteen days after the date of publication of this notice.

For the Department of Energy.

Date: April 11, 1988.

George J. Bradley, Jr.,

Principal Deputy Assistant Secretary For International Affairs and Energy Emergencies.

[FR Doc. 88–8207 Filed 4–13–88; 8:45 am]

BILLING CODE 6450–01–M

Disposal of Hanford Defense High-Level, Transuranic, and Tank Wastes, Hanford Site, Richland, Washington; Record of Decision (ROD)

This Record of Decision has been prepared pursuant to the Council on Environmental Quality Regulations for Implementing the Procedural Provisions of the National Environmental Policy Act (NEPA) (40 CFR Parts 1500–1508) and the Department of Energy NEPA Guidelines (52 FR 47662, December 15, 1987). It is based on DOE's "Environmental Impact Statement for the Disposal of Hanford Defense High-Level, Transuranic, and Tank Wastes" (DOE/EIS–0113) and consideration of all public and agency comments received on the Environmental Impact Statement (EIS).

Decision

The decision is to implement the "Preferred Alternative" as discussed on DOE/EIS–0113 (hereafter referred to as the HDW–EIS). The Department of Energy (DOE) has decided to proceed with disposal activities for the following defense wastes at the Hanford Site: double-shell tank wastes, retrievably stored and newly generated transuranic (TRU) waste, the only pre-1970 buried suspect TRU-contaminated solid waste site outside the central (200 Area) plateau, and strontium and cesium encapsulated wastes.

To process existing and future wastes from the double-shell storage tanks at Hanford for final disposal, the DOE will design, construct, and operate the Hanford Waste Vitrification Plant (HWVP); complete the necessary pretreatment modifications and operate the pretreatment facility, currently planned to be the Hanford B-Plant; and utilize the Hanford Transportable Grout Facility. The radioactive high-level waste fraction will be processed into a borosilicate glass waste form and stored at the HWVP until a geologic repository is built and ready to receive this waste. The low-activity fraction will be solidified as a cement-based grout and disposed of near surface at Hanford in preconstructed, lined concrete vaults. Existing and future double-shell tank waste will be characterized for hazardous chemical constituents, as well as other chemical constituents that might affect glass or grout formulation, before processing.

A facility will be designed, constructed and operated at Hanford to sort, process and repackage retrievably stored and newly generated TRU solid waste for shipment to the Waste Isolation Pilot Plant (WIPP) located approximately 26 miles from Carlsbad, New Mexico. The only pre-1970 buried suspect TRU-contaminated solid waste site outside the central (200 Area) plateau will be removed to the 200 Area plateau for processing for disposal as solid TRU waste.

Encapsulated cesium and strontium wastes will continue to be stored safely until such time as a geologic repository is ready to receive this waste for disposal. Prior to shipment to a geologic repository, these wastes will be packaged in accordance with repository waste acceptance specifications.

For the remainder of the waste classes covered in the HDW-EIS (single-shell tank wastes, TRU-contaminated soil sites and pre-1970 buried suspect TRU-contaminated solid waste within the 200 Area plateau), the DOE has decided to conduct additional development and evaluation before making decisions on final disposal. This development and evaluation effort will focus both on methods to retrieve and process these wastes for disposal as well as to stabilize and isolate the wastes near surface. Results from this work will be publicly available. Prior to decisions on final disposal of these wastes, the alternatives will be analyzed in subsequent environmental documentation, including a supplement to the HDW-EIS for decisions on disposal of the single-shell tank wastes.

Background

The Hanford Site, near Richland, Washington, is a DOE installation involved in production of nuclear materials for the national defense of this country, defense nuclear waste management, research and development and related activities. In 1943, the U.S. Army Corps of Engineers selected the area, encompassing about 600 square miles, to build the first plutonium production reactors and processing facilities to assist in ending World War II. This site has been dedicated ever since to the production of national defense nuclear materials, to research, and to defense nuclear waste management activities.

The Hanford production and interim waste management operations have resulted in a number of different types of waste. These include:

- Single-shell and double-shell tank wastes in the form of sludge, slurry, saltcake, and liquid.
- Encapsulated cesium and strontium.
- Solid wastes in drums and burial boxes.
- Contaminated soils and sediments from liquid effluents disposed of in cribs, ponds, and ditches.

The HDW-EIS addresses high-level, TRU, and a third category of wastes called tank wastes. Low-level wastes specifically resulting from processing high-level, TRU, or tank wastes for final disposal are also covered in the HDW-EIS. High-level waste has relatively high radioactivity and requires long-term isolation. TRU waste consists of wastes contaminated to greater than 100 nCi/gm with elements that have atomic numbers greater than that of uranium; for example, certain isotopes of neptunium, plutonium, americium, and curium. These radionuclides are very long-lived, so TRU waste also requires long-term isolation. TRU-contaminated solid wastes were either buried with low-level waste before 1970 or retrievably stored on storage pads after 1970.

Intermixed with the radioactive wastes in the tanks are nonradioactive chemicals, some of which are considered hazardous. The use of tanks to store radioactive waste generated by the operation of processing plants began with the nuclear defense program in the 1940's. Until the early 1970's most of the processing wastes at Hanford were stored in underground, concrete encased, single-shell steel tanks. Since 1970, newly generated processing wastes have been stored in underground, concrete encased, double-shell steel tanks; and by 1981 most of the liquid wastes in single-shell tanks were removed and placed in double-shell tanks. Tank wastes, which come from a number of sources at Hanford, have been processed and transferred among tanks resulting in significant changes in the waste characteristics. Some strontium and cesium (removed from single-shell tanks to remove heat generating radionuclides) were solidified, sealed in capsules, and are presently stored in water basins or leased for beneficial use.

Interim waste management operations were evaluated in the "Final Environmental Statement—Waste Management Operations, Hanford Reservation, Richland, WA" (ERDA-1538, 1975) and DOE/EIS-0063, "Supplement to ERDA-1538" (1980). In addition, the National Academy of Sciences' Committee on Radioactive Waste Management evaluated present operations in "Radioactive Wastes at the Hanford Reservation—A Technical Review" (1978). These documents concluded that interim operations were being carried out in a safe and responsible manner, but that the DOE should move ahead with the final disposal of Hanford wastes. In 1977, a report was prepared on "Alternatives for Long-Term Management of Defense High-Level Radioactive Waste, Hanford Reservation" (ERDA-77-44). This document, along with several follow-on documents, established the basis for the alternatives evaluated in the Draft HDW-EIS.

The Notice of Intent (NOI) to prepare the HDW-EIS was published in the **Federal Register** at 48 FR 14029 (April 1, 1983). The Draft HDW-EIS was issued for a 120-day public review period starting April 11, 1986, and ending August 9, 1986. Approximately 1,450 copies of the Draft HDW-EIS were distributed. In addition, the DOE sponsored seven general public open houses in the Pacific Northwest in February 1986, and seven information workshops in May and June 1986 to introduce the HDW-EIS. Four public hearings were held in July 1986 to obtain comments. In addition, 243 comment letters were received which contained approximately 2,000 individual comments. After reviewing and incorporating these public and agency comments, as well as a review of previously completed analyses, the Preferred Alternative described in the Final HDW-EIS was developed. The Final HDW-EIS was issued on December 18, 1987, and a Notice of Availability was published in the **Federal Register** at 52 FR 49504 (December 31, 1987).

Actions to implement this decision will comply with all applicable Federal, State and local statutes, regulations, standards, and permit requirements.

Description of Alternatives Considered

As described in the HDW-EIS, a number of alternatives were considered for disposing of Hanford defense high-level, TRU, and tank wastes. The three disposal alternatives evaluated in the Draft HDW-EIS were:

- Geologic Disposal of most of the wastes (98 percent of the radioactivity).
- In-Place Stabilization and Disposal of all wastes.
- Reference Alternative that combines features of both the Geologic Disposal and In-Place Stabilization and Disposal alternatives.

In addition, a No Disposal Action Alternative, continuation of present storage programs for wastes, was analyzed in accordance with the Council on Environmental Quality NEPA regulations.

A Preferred Alternative was developed after review of public and agency comments on the Draft HDW-EIS. This alternative consists of proceeding with disposal actions described in the Reference Alternative for some waste classes but deferral of disposal decisions for three other waste classes until additional development and evaluation are completed. The impacts of this alternative are analyzed in the Final HDW-EIS.

Geologic Disposal Alternative

The Geologic Disposal Alternative involves retrieval, segregation, processing, packaging, transportation, and placement of most (98 percent by radioactivity) of Hanford's defense high-

level, TRU, and tank wastes in geologic repositories.

For the high-level waste repository, two hypothetical locations were evaluated. One was assumed to be at the Hanford Site and the second at an unspecified location somewhere in the United States, about 3,000 miles from the Hanford Site. This latter repository location was chosen to bound all reasonable distances and, therefore, to bound possible impacts of shipping wastes to an offsite repository. For calculational purposes, all transuranic wastes were assumed to be shipped to the WIPP site in New Mexico for disposal.

Under this alternative, existing and future wastes from both single-shell and double-shell tanks would be separated into two fractions. The high-level fraction, containing the majority of the strontium-90, cesium-137, plutonium-239, technetium-99, and other radionuclides, would be made into a borosilicate glass, packaged in suitable canisters and transported to a geologic repository for disposal. The bulk of the remaining tank waste, containing small quantities of carbon-14, iodine-129, and other radionuclides, is comparable to commercial Class C (low-level) waste as defined by the Nuclear Regulatory Commission and would be made into a cement-based grout and disposed of in near-surface vaults on the Hanford Site. A protective barrier would be placed over these near-surface vaults and the emptied tanks, which would contain small amounts of residual waste. Encapsulated strontium and cesium waste would be packaged and disposed of in a geologic repository. TRU-contaminated soil sites, pre-1970 buried suspect-TRU contaminated solid waste, and retrievably stored and newly generated TRU-solid waste would be retrieved and appropriately packaged to meet repository acceptance criteria and transported to WIPP for disposal.

In-Place Stabilization and Disposal Alternative

Under this alternative, all Hanford existing and newly generated high-level, TRU, and tank wastes would be permanently disposed of near the surface, but well above the water table, using a protective barrier and marker system. There would be very little processing or treatment of wastes except for those stored in double-shell tanks. All sites would be covered with a protective barrier and marker system that would limit moisture from reaching the waste and would reduce the likelihood of intrusion.

Double-shell tank waste would be retrieved, processed as necessary, solidified in a grout waste form and disposed of near surface. Cesium and strontium capsules could be safely stored until 2010, then transferred to a packaging facility, packaged and disposed of in near-surface drywells covered with a protective barrier and marker system. Wastes in single-shell tanks would be dried and some tanks would be provided with interim heat-removal systems. All tanks would be filled to prevent subsidence and covered with a protective barrier and marker system.

Reference Alternative

The Reference Alternative combines the geologic disposal and in-place stabilization and disposal options for the various waste classes. Disposal in geologic repositories would be implemented for encapsulated strontium and cesium waste, highly radioactive portions of existing and future double-shell tank waste, and retrievably stored and newly generated transuranic solid waste. This would result in about 70 percent (by radioactivity) of the high-level and TRU wastes being disposed of in repositories. The low-level fraction of double-shell tank waste would be made into cement-based grout and disposed of in near-surface vaults.

Single-shell tank waste would be disposed of by in-place stabilization and isolated from the biosphere with the protective barrier and marker system. The previously disposed TRU-contaminated soil sites and pre-1970 buried suspect TRU-contaminated solid waste sites would be further isolated to minimize possibilities of any future migration by use of a protective barrier and marker system. The only pre-1970 buried suspect TRU-contaminated solid waste not located on the 200 Area plateau would be retrieved and processed for disposal as solid TRU waste. Retrievably stored and newly generated TRU solid wastes would be processed and shipped to WIPP for disposal.

No Disposal Action Alternative

The No Disposal Action Alternative is continued storage of Hanford defense wastes. Under this alternative, the waste storage sites would be monitored and maintained, but no disposal actions would be taken. Ongoing activities such as reduction of liquids in single-shell tanks would continue. Double-shell tank wastes would be transferred to new tanks about every 50 years to stay within the minimum design life for double-shell tanks. Cesium and strontium capsules would be placed in drywell storage with continued surveillance. Retrievably stored TRU waste would be reclassified as buried solid TRU waste after the 20-year retrievability period has passed. TRU-contaminated soil sites and buried suspect TRU-contaminated solid waste sites would continue to be monitored and maintained.

Preferred Alternative

The Preferred Alternative, presented in the Final HDW-EIS, consists of proceeding with disposal actions described in the Reference Alternative for some waste classes but deferral of disposal decisions for three other waste classes until additional development and evaluation are completed.

Existing and future double-shell tank waste will be pretreated to separate the waste into two fractions. The high-level fraction will be process in the HWVP and disposed of in a geologic repository, and the remaining low-activity fraction grouted and disposed of near surface in preconstructed lined concrete vaults. Design, construction, and operation of HWVP, completion of pretreatment modifications and operation of the pretreatment facility, currently planned to be at B-Plant, and construction and operation of grout vaults will be implemented. A protective barrier will be placed over the vaults prior to final closure. Mixed waste disposal will conform with the Resource Conservation and Recovery Act (RCRA) requirements.

Retrievably stored and newly generated TRU-contaminated solid waste will be retrieved, processed as necessary, and sent to WIPP for disposal. Encapsulated cesium and strontium wastes will continue to be stored safely until such time as a geologic repository is ready to receive this waste for disposal. Prior to shipment to a geologic repository, these wastes will be packaged in accordance with repository waste acceptance specifications.

Decisions on final disposition will be postponed on three waste types (single-shell tank waste, pre-1970 buried suspect TRU-contaminated solid waste, and TRU-contaminated soil sites) until additional development and evaluation are completed. The one exception is that in order to consolidate the waste DOE will proceed with exhuming and processing the only pre-1970 buried suspect TRU-contaminated solid waste site (known as the 618–11 site) located outside the 200 Area plateau.

Storage of single-shell tank waste will be continued. Prior to a decision on disposal of this waste, additional development and evaluation will be performed as follows: radioactive and

BEST COPY AVAILABLE

hazardous waste constituents will be characterized; barrier performance will be demonstrated by both instrumented field tests and modeling; the need and methods to improve the stability of the waste form will be determined, and destruction or stabilization alternatives for hazardous constituents will be evaluated; and methods for retrieving, processing, and disposing of this waste will be evaluated. Following this additional development and evaluation, alternatives for final disposal will be analyzed in a supplement to the HDW-EIS before the final disposal decision(s). This supplement will be issued in draft for pubilc review and comment.

For the pre-1970 buried suspect TRU-contaminated solid waste and TRU-contaminated soil sites (except for the 618–11 site) the present remedial action program will continue. Further development and evaluation are necessary before decisions on final disposition can be made for these waste classes. These evaluations will be conducted in accordance with the DOE's responsibilities under the Comprehensive Environmental Response, Compensation, and Liability Act, as amended. Development and evaluation for these two waste classes include additional characterization of selected sites' radioactive and hazardous waste constituents, establishing criteria to identify wastes unacceptable for in-place disposal, and determining and evaluating methods for retrieval, processing, and preparing this fraction for disposal. The need for and methods to improve the isolation potential and stability of the waste form will be evaluated, and void subsidence control will be demonstrated. Additional environmental analysis will be performed and appropriate environmental documentation prepared before a final decision(s) on these waste classes is made.

Basis for Decision

In compliance with NEPA, DOE has analyzed the environmental impacts of each alternative described in the HDW-EIS. DOE considered all comments received on the Draft HDW-EIS in the preparation of the Final HEW-EIS which contains DOE's reponses to those comments, and in the identification of the preferred alternative. DOE also has considered comments received on the Final HDW-EIS in making its decision.

The short- and long-term environmental impacts, DOE's commitment to provide for the safe, permanent disposal of the wastes, and costs were all considered in identifying the Preferred Alternative as the alternative to be implemented. The Preferred Alternative is judged also to be the enviromentally preferred alternative.

The No Disposal Action Alternative, continuation of current waste management practices over the long-term for waste that is not already disposed of, was not selected by DOE because it is contrary to DOE's commitment to provide safe, permanent disposal of the wastes.

The health and environmental impacts of the Geologic Disposal and In-place Stasbilization and Disposal alternatives are relatively low and bound the impacts of the Reference and Preferred Alternatives. When the short-term (operational, transportation) and long-term impacts (from final disposal) are compared between the Geologic and In-place Stabilization and Disposal Alternatives, the Geologic Alternative has the greater short-term health and environmental impacts and lower long-term impacts. The In-place Stabilization and Disposal Alternative has lower short-term impacts, but has the potential for the greater long-term impacts.

The lower short-term impacts associated with retrieval and processing of readily retrievable waste classes together with the reduced potential for long-term impacts provide the basis for the decision to proceed with disposal in geologic repositories as described in the Preferred Alternative. This decision is consistent with the evaluations and decision resulting from the "Final Environmental Impact Statement—Management of Commercially Generated Radioactive Waste" (DOE/EIS–0046F) October 1980; the "Final Environmental Impact Statement—Long Term Management of Defense High-Level Radioactive Waste, Savannah River Plant (Research and Development Program for Immobilization)" (DOE/EIS–0023) Novembver 1979; the "Final Environmental Impact Statement—Defense Waste Processing Facility, Savannah River Plant, Aiken, SC" (DOE/EIS–0082) February 1982; and the "Final Environmental Impact Statement—Waste Isolation Pilot Plant" (DOE/EIS–0026) October 1980. These decisions are also consistent with the position taken by the Department in the "Defense Waste Management Plan" (DOE/DP–0015) to dispose of readily retrievable high-level and transuranic waste in geologic repositories.

The technology exists to process readily retrievable and newly generated wastes (double-shell tank waste, encapsulated cesium and strontium waste, and retrievably stored and newly generated TRU waste) for final disposal. DOE considers the impacts associated with this technology to be acceptably low. Borosilicate glass was previously selected as the waste form for high-level waste for two other sites in the United States and is the selected form for high-level waste in Germany, France, and Japan. The HWVP, in addition to virifying double-shell tank waste, will be designed with sufficient flexibility to accommodate all single-shell tank waste should the decision be made to recover this waste. The near-surface disposal of the residual low-activity wastes (involving the Transportable Grout Facility) from procession of tank wastes involves existing technologies even though new in application. The technology exists to treat newly generated and retriveably stored TRU waste for disposal.

Retieval of all the single-shell tank wastes, TRU-contaminated soil sites, and buried suspect TRU wastes for disposal in a geologic repository would have greater short-term risks than for the readily retrievable wastes given the current waste retrieval and processing methods. These three classes of wastes, including their hazardous components, are not well characterized. The efficacy of possible methods of treating and disposing of these wastes is not yet proven and the consequences of such actions are not yet well defined. Therefore, additional waste characterization and additional engineering analysis of waste retrieval and disposal options are necessary before decisions for final disposition can be made regarding geologic or in-place stablization and disposal of these wastes. These wastes can continue to be stored safely and monitored while waste characterization and engineering development and evaluation are being conducted.

Mitigation of Environmental Impacts

All practical means will be used to minimize worker exposure, limit releases to the environment, and protect public health. Contaminated soil sites and buried suspect TRU-contaminated waste sites will continue to be monitored and maintained to protect against subsidence or animal and plant intrusion which could release contamination into the environment. Removal of liquids from single-shell tanks will be continued to reduce the potential for future tank leaks. In some cases retrievably stored TRU wastes will be removed remotely to minimize worker exposures. Facilities will be designed to effectively control releases and to minimize environmental impacts. Airborne emissions and any other

BEST COPY AVAILABLE

projected releases of radioactive and hazardous waste to the environment will be kept as low as reasonably achievable. Land use and use of nonrenewable resources will be minimized to the extent possible. Use of potentially hazardous chemicals in the processing will be kept to the minimum necessary. An extensive environmental monitoring system (air quality, water quality, etc.) will be maintained both during and after disposal operations to ensure compliance with regulatory requirements and the effectiveness of the design. This monitoring program will allow for mitigating actions to be taken in a timely fashion should the need arise.

Considerations in the Implementation of the Decision

Prior to construction of HWVP and the processing faciality for TRU waste, the DOE will evaluate the need for and prepare any additional NEPA documentation required for these facilities. Disposal operations will be conducted in compliance with all applicable environmental regulations, standards, and permit requirements. The long-term protection of the environment and future populations will be a primary goal of all opertions. The DOE intends to maintain an open process with respect to implementing these decisions. Such an open process will include continuing dialogue with the States of Washington and Oregon, with Federal agencies, and other affected parties. The DOE intends to continue having appropriate reviews by outside technical experts, such as the National Academy of Sciences, United States Geological Survey, the Environmental Protection Agency, and independent consultants.

Prior to disposal, DOE will continue to maintain the wastes in an environmentally sound manner and monitor the site with environmental measurement and surveillance programs.

For the Unites States Department of Energy.

Troy E. Wade II,

Acting Assistant Secretary for Defense Programs.

[FR Doc. 88-8155 Filed 4-13-88; 8:45 am]

BILLING CODE 6450-01-M

Financial Assistance Award; Intent To Renew Grant With the Ohio State University

AGENCY: Department of Energy.

ACTION: Notice of restricted eligibility for grant renewal.

SUMMARY: The Department of Energy announces that pursuant to 10 CFR 600.7(b), it is restricting eligibility for a renewal award under Grant Number DE-FG01-86CE26565 to the Ohio State University Research Foundation under the DOE's District Heating and Cooling Research Opportunity for Energy Conservation Retrofit Activities to select and test friction reducing additives for district cooling systems.

Scope: This grant will provide for follow up research in the reduction of pumping energy losses in district heating and cooling systems in the area of complementary friction reduction additives research. Ohio State University will screen friction reducing additives for district cooling systems, and test promising additives for pressure drop, heat transfer impact and longevity in their friction test laboratory.

The Ohio State University initial proposal was to screen and test additives for district heating systems. In the current work over ten additives were tested for friction reduction, heat transfer and additive stability. The results have shown that each additive is potent only in a given range of temperatures. Therefore, the additives found to be promising for district heating may not reduce friction in district cooling.

The proposed modification will add the screening of additives for district cooling systems. Similar screening and testing of additives as has been performed for district heating will now be performed for district cooling. The use of additives to reduce friction will also reduce pumping costs, thus improving the efficiency of district cooling systems and reducing operating cost.

Eligibility: Eligibility for this renewal award is being limited to Ohio State University because the work to be performed derives from projects initiated under the basic grant. The project was one of six projects selected through a competitive solicitation in 1986. The solicitation included a provision for follow-up of complementary research if appropriate. In addition, Ohio State University has built a facility for testing of additives screening and testing and the proposed modification is complementary and consistent with the advanced fluids project objectives. The University has knowledge and expertise in conducting additives screening and testing. The proposed work, to screen and test additives for district cooling applications, is an integral part of the screening of additives for district heating applications. Based on the program office's cost evaluation, the proposed renewal award is advantageous to the government. It is estimated that Ohio State University will perform the research at least cost to the Government in terms of monetary and time considerations. This continuation will provide the necessary coordination to accomplish the goal of this program

The term of this grant extension for additional work shall be from June 1, 1988, through June 30, 1989.

FOR FURTHER INFORMATION CONTACT: U.S. Department of Energy, Office of Procurement Operations, Attn: Lisa Tillman, MA-453.2, 1000 Independence Ave. SW., Washington, DC 20585.

Thomas S. Keefe,

Director, Contract Operations Division "B" Office of Procurement Operations.

[FR Doc. 88-8205 Filed 4-13-88; 8:45 am]

BILLING CODE 6450-01-M

Advisory Committee on Nuclear Facility Safety; Open Meeting

Pursuant to the provisions of the Federal Advisory Committee Act (Pub. L. 92-463, 86 Stat. 770), notice is hereby given of the following advisory committee meeting:

Name: Advisory Committee on Nuclear Facility Safety.

Date & Time: Monday, May 2, 1988, 9:00 a.m. to 6:00 p.m., Tuesday, May 3, 1988, 8:00 a.m. to 6:00 p.m.

Place: U.S. Department of Energy, Forrestal Building, Room 8E-089, 1000 Independence Avenue SW., Washington, DC 20585.

Contact: Wallace R. Kornack, Executive Director, ACNFS S-3, 1000 Independence Avenue SW., Washington, DC 20585, Telephone: 202/586-1770.

Purpose of the Committee: The Committee was established to provide the Secretary of Energy with advice and recommendations concerning the safety of the Department's production and utilization facilities, as defined in section 11 of the Atomic Energy Act of 1954, as amended (42 U.S.C. 2014).

Tentative Agenda:

May 2, 1988

- Review of High Flux Isotope Reactor
- Review of Savannah River Reactors
- Noon to 1:00 p.m.—Lunch
- Safety Criteria and Standards
- Review of Selected Programs and Projects
- Public Comment

May 3, 1988

- Management, Organization, and Responsibilities Regarding Safety
- Review of Selected Programs and

Projects
- Noon to 1:00 p.m.—Lunch
- Committee Organization and Planning
- Public Comment

Public Participation: The meeting is open to the public. Written statements may be filed with the Committee either before or after the meeting. Members of the public who wish to make oral statements pertaining to agenda items should contact Wallace Kornack at the address or telephone number listed above. Requests must be received 5 days prior to the meeting and reasonable provision will be made to include the presentation on the agenda. The Chairperson of the Committee is empowered to conduct the meeting in a fashion that will facilitate the orderly conduct of business.

Transcripts: The transcript of the meeting will be available for public review and copying at the Freedom of Information Public Reading Room, IE-190, Forrestal Building, 1000 Independence Avenue SW., Washington, DC, between 9:00 a.m. and 4:00 p.m., Monday through Friday, except Federal holidays.

Issued at Washington, DC, on April 11, 1988.

J. Robert Franklin,

Deputy Advisory Committee Management Officer.

[FR Doc. 88-8206 Filed 4-13-88; 8:45 am]

BILLING CODE 6450-01-M

Economic Regulatory Administration

[ERA Docket No. 88-17-NG]

National Energy Systems, Inc.; Application To Import Natural Gas From Canada

AGENCY: Economic Regulatory Administration, DOE.

ACTION: Notice of application for blanket authorization to import natural gas.

SUMMARY: The Economic Regulatory Administration (ERA) of the Department of Energy (DOE) gives notice of receipt on March 30, 1988, of an application filed by National Energy Systems, Inc. (National Energy), for blanket authorization to import natural gas from canada on a "short-term" spot market basis. National Energy intends to import up to 200 MMcf of Canadian natural gas per day and up to a maximum of 146 Bcf over a two-year term beginning on the date of first delivery.

The application is filed with the ERA pursuant to section 3 of the Natural Gas Act and DOE Delegation Order No. 0204-111. Protests, motions to intervene, notices of intervention and written comments are invited.

DATE: Protests, motions to intervene, or notices of intervention, as applicable, requests for additional procedures, and written comments are to be filed no later than May 16, 1988.

FOR FURTHER INFORMATION CONTACT:

Frank Duchaine, Natural Gas Division, Economic Regulatory Administration, Forrestal Building, Room GA-076, 1000 Independence Avenue, SW., Washington, DC 20585, (202) 586-8233.

Diane Stubbs, Natural Gas and Mineral Leasing, Office of General Counsel, U.S. Department of Energy, Forrestal Building, Room 6E-042, 1000 Independence Avenue, SW., Washington, DC 20585, (202) 586-6667.

SUPPLEMENTARY INFORMATION:

The decision on this application will be made consistent with the DOE's gas import policy guidelines, under which the competitiveness of an import arrangement in the markets served is the primary consideration in determining whether it is in the public interest (49 FR 6684, February 22, 1984). Parties that may oppose this application should comment in their responses on the issue of competitiveness as set forth in the policy guidelines. The applicant asserts that this import arrangement is competitive. Parties opposing the arrangement bear the burden of overcoming this assertion.

All parties should be aware that if the ERA approves this requested blanket import, it may designate a total amount of authorized volumes for the term rather than a daily or annual limit, in order to provide the applicant with maximum flexibility of operation.

Public Comment Procedures

In response to this notice, any person may file a protest, motion to intervene or notice of intervention, as applicable, and written comments. Any person wishing to become a party to the proceeding and to have the written comments considered as the basis for any decision on the application must, however, file a motion to intervene or notice of intervention, as applicable. The filing of a protest with respect to this application will not serve to make the protestant a party to the proceeding, although protests and comments received from persons who are not parties will be considered in determining the appropriate action to be taken on the application. All protests, motions to intervene, notices of intervention, and written comments must meet the requirements that are specified by the regulations in 10 CFR Part 590. Protests, motions to intervene, notices of intervention, requests for additional procedures, and written comments should be filed with the Natural Gas Division, Office of Fuels Programs, Economic Regulatory Administration, Room GA-076, RG-23, Forrestal Building, 1000 Independence Avenue, SW., Washington, DC 20585, (202) 586-9478. They must be filed no later than 4:30 p.m. e.d.t., May 16, 1988.

The Administrator intends to develop a decisional record on the application through responses to this notice by parties, including the parties' written comments and replies thereto. Additional procedures will be used as necessary to achieve a complete understanding of the facts and issues. A party seeking intervention may request that additional procedures be provided, such as additional written comments, an oral presentation, a conference, or trial-type hearing. Any request to file additional written comments should explain why they are necessary. Any request for an oral presentation should identify the substantial question of fact, law, or policy at issue, show that it is material and relevant to a decision in the proceeding, and demonstrate why an oral presentation is needed. Any request for a conference should demonstrate why the conference would materially advance the proceeding. Any request for a trial-type hearing must show that there are factual issues genuinely in dispute that are relevant and material to a decision and that a trial-type hearing is necessary for a full and true disclosure of the facts.

If an additional procedure is scheduled, the ERA will provide notice to all parties. If no party requests additional procedures, a final opinion and order may be issued based on the official record, including the application and responses filed by parties pursuant to this notice, in accordance with 10 CFR 590.316.

A copy of National Energy's application is available for inspection and copying in the Natural Gas Division Docket Room, 5A-076-A at the above address. The docket room is open between the hours of 8:00 a.m. and 4:30 p.m., Monday through Friday, except Federal holidays.

Issued in Washington, DC, April 7, 1988.

Constance L. Buckley,

Director, Natural Gas Division, Office of Fuels Programs, Economic Regulatory Administration.

[FR Doc. 88-8138 Filed 4-13-88; 8:45 am]

BILLING CODE 6450-01-M

Federal Energy Regulatory Commission

[Docket Nos. CP88-322-000 et al.]

Tennessee Gas Pipeline Co. et al.; Natural Gas Certificate Filings

April 8, 1988.

Take notice that the following filings have been made with the Commission:

1. Tennessee Gas Pipeline Company

[Docket No. CP88-322-000]

Take notice that on March 31, 1988, Tennessee Gas Pipeline Company (Applicant), P.O. Box 2511, Houston, Texas 77252, filed in Docket No. CP88-322-000 a request pursuant to §§ 157.205 and 157.212 of the Regulations under the Natural Gas Act (18 CFR 157.205 and 157.212) to establish a new delivery point to its existing GS-1 firm sales customer, the City of Linden, Tennessee (Linden), under Applicant's blanket certificate issued in Docket No. CP82-413-000 on September 1, 1982, all as more fully set forth in the request which is on file with the Commission and open to public inspection.

Applicant states that pursuant to Linden's request, it has agreed to establish a new GS-1 sales delivery point to Linden in Applicant's Rate Zone 1 to be known as the Lick Creek Meter Station located in Perry County, Tennessee. According to Applicant, the new delivery point is necessary to enable Linden to expand its market area with the scope of its existing contractual entitlements. The total estimated cost of the proposed new delivery point is $33,000.

Applicant does not propose to increase or decrease the total daily and/or annual quantities it is authorized to deliver to Linden. Applicant asserts that the establishment of the proposed new delivery point is not prohibited by Applicant's currently effective tariff and that it has sufficient capacity to accomplish the deliveries at the proposed new delivery point without detriment or disadvantage to any of Applicant's other customers.

Comment date: May 23, 1988, in accordance with Standard Paragraph G at the end of this notice.

2. Natural Gas Pipeline Company of America

[Docket No. CP88-315-000]

Take notice that on March 28, 1988, Natural Gas Pipeline Company of America (Natural), 701 East 22nd Street, Lombard, Illinois, 60148, filed in Docket No. CP88-315-000 a request pursuant to §§ 157.205 and 284.223 of the Commission's Regulations under the Natural Gas Act (18 CFR 157.205 and 284.223) for authorization to provide a best efforts transportation service for LTV Steel Company, Inc. (LTV), an industrial end-user, under the certificate issued in Docket No. CP86-582-000 pursuant to section 7(c) of the Natural Gas Act, all as more fully set forth in the request which is on file with the Commission and open to public inspection.

Natural states that pursuant to a transportation agreement dated January 29, 1988, it proposes to receive up to 70,000 MMBtu of natural gas, plus overrun gas as permitted by Natural's Rate Schedule ITS at twenty receipt points located in Oklahoma, Louisiana, Texas and offshore Texas and redeliver the gas at existing interconnections with (a) Illinois Power Company (IPC) located in LaSalle County, Illinois, (b) Northern Indiana Public Service Company (NIPSCO) located in Cook County, Illinois and (c) the Peoples Gas Light and Coke Company (PGL & C) located in Cook County, Illinois. It is indicated that IPC, NIPSCO and PGL & C, three local distribution companies, would then redeliver the gas to LTV at LTV's Hennepin, Illinois, plant, Indiana Harbor Works and Chicago South Works, respectively.

Natural further states that the average day, maximum day and annual volumes would be 45,000 MMBtu of natural gas, 70,000 MMBtu of natural gas and 16,425,000 MMBtu of natural gas, respectively. Natural indicates that no facilities need be constructed to implement the service. Natural also indicates it commenced on January 29, 1988, a transportation service for LTV under the 120-day authorization of § 284.223 of the Commission's Regulations.

Natural states that the primary term of the transportation service would expire April 30, 1993, but that the service would be extended on a month to month basis thereafter unless cancelled by five days prior notice by either party.

Natural proposes to charge the rates and abide by the terms and conditions provided by its Rate Schedule ITS.

Comment date: May 23, 1988, in accordance with Standard Paragraph G at the end of this notice.

3. Texas Gas Transmission Corp.

[Docket No. CP86-349-004]

Take notice that on March 22, 1988, Texas Gas Transmission Corporation (Texas Gas), P.O. Box 1160, Owensboro, Kentucky 42302, filed in Docket No. CP86-349-004 a petition to further amend the order issued in Docket No. CP86-349-000, as amended, pursuant to section 7(c) of the Natural Gas Act, so as to extend the term of the transportation service authorized beyond the present expiration dates, all as more fully set forth in the petition to amend which is on file with the Commission and open to public inspection.

It is stated that Texas Gas was authorized in Docket No. CP86-349-000 to transport natural gas on behalf of 10 customers (6 interstate pipeline, 3 intrastate pipelines and 1 local distribution company). It is further stated that in subsequent petitions to amend, the certificate has been amended to extend the term for two of the interstate pipelines to June 13, 1988, and for the remaining 7 customers (one of the intrastate pipelines was deleted from the authorization) to the earlier of June 12, 1988, or the date on which Texas Gas accepts a blanket certificate pursuant to § 284.221 of the Commission's Regulations.

Texas Gas requests that the certificate be furhter amended to extend the term of the transportation authorization for all 9 customers to the earlier of 1 year from the respective expiration dates (June 13, 1988, for the two interstate pipelines and June 12, 1988, for the remaining 7 customers) or the date on which Texas Gas accepts a blanket certificate pursuant to Section 284.221 of the Commission's Regulations. It is asserted that in all other respects, the transportation authorization would remain the same.

Comment date: April 22, 1988, in accordance with the first subparagraph of Standard Paragraph F at the end of this notice.

4. ANR Pipeline Company

[Docket No. CP88-317-000]

Take notice that on March 28, 1988, ANR Pipeline Company (ANR), 500 Renaissance Center, Detroit, Michigan 48243, filed in Docket No. CP88-317-000 an application pursuant to sections 7(b) and 7(c) of the Natural Gas Act for a certificate of public convenience and necessity authorizing ANR to (1) reduce annual contract quantity (ACQ) levels for certain of ANR's resale customers, (2) abandon the entire service ANR performs for one customer under Rate Schedule LVS-1 and abandon Rate Schedule LVS-1 and (3) increase the ACQ level for one resale customer, all as more fully set forth in the application which is on file with the Commission and open to public inspection.

ANR states that the ACQ's requests reflect customer nominations wth the

net effect of those nominations being a decrease in ANR's total ACQ level by a total of 312,717,612 dt equivalent of natural gas. Specifically, ANR proposes to permanently abandon sales service in excess of the sales ACQ service to 45 customers under Rate Schedules MC-1, CD-1, and SGS-1 by a total of 297,752,050 dt equivalent of natural gas and to increase the ACQ to one customer, St. Joseph Light & Power Company by 71,318 dt equivalent of natural gas. Also, ANR proposes to abandon all service under Rate Schedule LVS-1 to one customer, North Central Public Service Company (North Central) and to abandon the Rate Schedule LVS-1 altogether, ANR indicates that North Central is the only customer under the LVS-1 Rate Schedule and no longer requires the service. (See the attached appendix summarizing the requested changes).

Comment date: April 22, 1988, in accordance with Standard Paragraph F at the end of this notice.

ANR PIPELINE COMPANY—EXISTING AND RENOMINATED ANNUAL CONTRACT QUANTITIES (ACQ) (DTH)

Line No. and customer	Existing ACQ level	Renominated ACQ level	Increase (decrease) in ACQ level
(Col. 1)	(Col. 2)	(Col. 3)	(Col. 4)
Rate schedules MC-1, CD-1 & SGS-1:			
1. Albany, Missouri, City of	383,810	138,000	(245,810)
2. Aledo, Illinois, City of	716,063	310,000	(406,063)
3. Alta Vista, Kansas, City of	189,041	50,000	(139,041)
4. Associated Natural Gas Company	1,627,685	1,300,000	(327,685)
5. Bethany, Missouri, City of	496,470	300,000	(196,470)
6. Bloomfield, Iowa, City of	477,375	220,000	(257,375)
7. City Gas Company	1,028,040	850,000	(178,040)
8. Community Natural Gas Company, Inc	485,013	250,000	(235,013)
9. Fountaintown Gas Company, Inc.	1,050,225	775,000	(275,225)
10. Grant City, Missouri, City of	295,973	65,000	(230,973)
11. Great River Gas Company	3,650,000	750,000	(2,900,000)
12. Illinois Power Company	2,847,768	1,050,000	(1,797,768)
13. Indiana Gas Company, Inc.	486,621	200,000	(286,621)
14. Iowa Electric Light & Power Company	1,107,648	860,000	(247,648)
15. Iowa Southern Utilities Company	8,500,000	4,400,000	(4,100,000)
16. Lamoni, Iowa, City of	515,565	200,000	(315,565)
17. Lineville, Iowa, City of	114,570	25,000	(89,570)
18. Madison Gas & Electric Company	23,059,361	15,500,000	(7,559,361)
19. Michigan Consolidated Gas Company	280,000,000	125,000,000	(155,000,000)
20. Michigan Gas Company	16,330,822	12,000,000	(4,330,822)
21. Michigan Gas Utilities Company	19,113,110	14,400,000	(4,713,110)
22. Milan, Missouri, City of	706,515	220,000	(486,515)
23. Missouri Valley Natural Gas Company	975,755	413,500	(562,255)
24. Morning Sun, Iowa, City of	190,950	75,000	(115,950)
25. Moulton, Iowa, City of	86,309	42,000	(44,309)
26. New Boston, Illinois, City of	152,760	53,000	(99,760)
27. North Central Public Service Company	3,179,428	1,200,000	(1,979,428)
28. Northern Indiana Fuel & Light Co., Inc.	2,122,560	1,000,000	(1,122,560)
29. Northern Indiana Public Service Company	2,329,590	1,615,787	(713,803)
30. Ohio Gas Company	353,760	150,000	(203,760)
31. Ohio Valley Gas Corporation Paris Henry County Public	2,053,602	820,000	(1,233,602)
32. Utility District	1,552,858	900,000	(652,858)
33. Princeton, Missouri, City of	361,277	90,000	(271,277)
34. St. Joseph Light & Power Company	2,078,682	2,150,000	71,318
35. Stanberry Missouri, City of	248,235	85,000	(163,235)
36. Unionville, Missouri, City of	496,470	145,000	(351,470)
37. Mayland, Iowa, City of	162,308	80,000	(82,308)
1. West Ohio Gas Company	1,395,126	1,000,000	(395,126)
2. Wetsore, Kansas, City of	76,380	23,100	(53,280)
3. Winfield, Iowa, City of	181,403	85,000	(96,403)
4. Wisconsin Fuel & Light Company	13,681,266	9,000,000	(4,681,266)
5. Wisconsin Gas Company	126,680,000	77,500,000	(49,180,000)
6. Wisconsin Natural Gas Company	71,612,752	48,500,000	(23,112,752)
7. Wisconsin Power & Light Company	28,570,306	20,600,000	(7,970,306)
8. Wisconsin Public Service Corporation	55,213,007	35,000,000	(20,213,007)
9. Wisconsin Southern Gas Company, Inc.	534,660	400,000	(134,660)
10. Subtotal	677,471,119	379,790,387	(297,680,732)
Rate Schedule LVS-1:			
11. North Central Public Service Company	15,036,880	0	(15,036,880)
12. Subtotal	692,507,999	379,790,387	(312,717,612)
13. Customers not renominating ACQ's	2,904,720	2,904,720	—
14. Total	695,412,719	382,695,107	(312,717,612)

Standard Paragraphs

F. Any person desiring to be heard or make any protest with reference to said filing should on or before the comment date file with the Federal Energy Regulatory Commission, 825 North Capitol Street NE., Washington, DC 20426, a motion to intervene or a protest in accordance with the requirements of the Commission's Rules of Practice and Procedure (18 CFR 385.211 and 385.214) and the Regulations under the Natural Gas Act (18 CFR 157.10). All protests filed with the Commission will be considered by it in determining the

appropriate action to be taken but will not serve to make the protestants parties to the proceeding. Any person wishing to become a party to a proceeding or to participate as a party in any hearing therein must file a motion to intervene in accordance with the Commission's Rules.

Take further notice that, pursuant to the authority contained in and subject to jurisdiction conferred upon the Federal Energy Regulatory Commission by sections 7 and 15 of the Natural Gas Act and the Commission's Rules of Practice and Procedure, a hearing will be held without further notice before the Commission or its designee on this filing if no motion to intervene is filed within the time required herein, if the Commission on its own review of the matter finds that a grant of the certificate is required by the public convenience and necessity. If a motion for leave to intervene is timely filed, or if the Commission on its own motion believes that a formal hearing is required, further notice of such hearing will be duly given.

Under the procedure herein provided for, unless otherwise advised, it will be unnecessary for the applicant to appear or be represented at the hearing.

G. Any person or the Commission's staff may, within 45 days after the issuance of the instant notice by the Commission, file pursuant to Rule 214 of the Commission's Procedural Rules (18 CFR 385.214) a motion to intervene or notice of intervention and pursuant to § 157.205 of the Regulations under the Natural Gas Act (18 CFR 157.205) a protest to the request. If no protest is filed within the time allowed therefor, the proposed activity shall be deemed to be authorized effective the day after the time allowed for filing a protest. If a protest is filed and not withdrawn within 30 days after the time allowed for filing a protest, the instant request shall be treated as an application for authorization pursuant to section 7 of the Natural Gas Act.

Lois D. Cashell,

Acting Secretary.

[FR Doc. 88-8226 Filed 4-13-88; 8:45 am]

BILLING CODE 6717-01-M

Office of Hearings and Appeals

Refund Procedures

AGENCY: Office of Hearings and Appeals, DOE.

ACTION: Notice of special refund procedures.

SUMMARY: The Office of Hearings and Appeals of the Department of Energy announces the procedures for disbursement of $390,000 (plus accrued interest) obtained pursuant to a consent order between the DOE and Sauvage Gas Company, Inc. and Sauvage Gas Service Company, Inc. The funds will be distributed to refund applicants who purchases propane, butane, natural gasoline, middle distillates or NGL mixed stream products (the covered products) from Sauvage during the period June 13, 1973 through the date of decontrol of each covered product (the refund period).

DATE AND ADDRESS: Applications for refund must be filed on or before July 13, 1988, and should be addressed to: Office of Hearings and Appeals, Department of Energy, 1000 Independence Avenue, SW., Washington, DC 20585. All applications should be filed in duplicate and display a conspicuous reference to Case Number KEF-0024.

FOR FURTHER INFORMATION CONTACT: Thomas O. Mann, Deputy Director, Office of Hearings and Appeals, 1000 Independence Avenue, SW., Washington, DC 20585, (202) 586-2094.

SUPPLEMENTARY INFORMATION: In accordance with § 205.282(c) of the Procedural Regulations of the Department of Energy (DOE), 10 CFR 205.282(c), notice is hereby given of the issuance of the Final Decision and order set out below. The Decision sets forth the procedures that the DOE has formulated to distribute monies obtained from Sauvage Gas Company, Inc. and Sauvage Gas Service Company, Inc. (Sauvage) to settle alleged pricing violations with respect to the firms' sales of refined petroleum products during the period January 1, 1973 through January 27, 1981. Under the terms of the Consent Order, Sauvage remitted $390,000 which is being held in an interest-bearing escrow account.

We will distribute these funds in two stages. In the first stage, we will accept claims from identifiable purchasers of Sauvage covered products who may have been injured by Sauvage's pricing practices during the refund period. The specific requirements which an applicant must meet in order to receive a refund are set out in Section II of the Decision. Claimants who meet these specific requirements will be eligible to receive refunds based on the number of gallons of covered products which they purchased from Sauvage. If any funds remain after meritorious claims are paid in the first stage, they may be used for indirect restitution in accordance with the Petroleum Overcharge Distribution and Restitution Act of 1986, Pub. L. No. 99-509, 1 Fed. Energy Guidelines ¶ 11,702.

Applications for refunds may now be filed by customers who purchased covered products from Sauvage during the refund period. Applications must be filed within 90 days of publication of this notice in the **Federal Register** and should be sent to the address set forth at the beginning of this notice. All applications received will be available for public inspection between the hours of 1:00 p.m. and 5:00 p.m., Monday through Friday, except Federal holidays, in the Public Reference Room of the Office of Hearings and Appeals, located in Room 1E-234, 1000 Independence Avenue, SW., Washington, DC 20585.

Date: April 7, 1988.

George B. Breznay,

Director, Office of Hearings and Appeals.

Decision and Order of The Department of Energy

Implementation of Special Refund Procedures

April 7, 1988.

Names of Firms: Sauvage Gas Company, Inc. and Sauvage Gas Service Company, Inc.

Date of Filing: March 28, 1986.

Case Number: KEF-0024.

Under the procedural regulations of the Department of Energy (DOE), 10 CFR Part 205, Subpart V, the Economic Regulatory Administration (ERA) may request that the Office of Hearings and Appeals (OHA) formulate procedures to distribute funds received as a result of enforcement proceedings, in order to remedy the effects of actual or alleged violations of DOE regulations. On March 28, 1986, in accordance with the provisions of Subpart V, the ERA filed a Petition for the Implementation of Special Refund Procedures in connection with a consent order that it entered into with Sauvage Gas Company, Inc. and Sauvage Gas Service Company, Inc. (hereinafter collectively referred to as Sauvage). This Decision contains the procedures which the OHA has formulated to distribute the funds received pursuant to that consent order.

I. Background

During the period of federal petroleum price controls, Sauvage engaged in the purchase and resale of refined petroleum products, including middle distillates, propane, butane, natural gasoline and natural gas liquid (NGL) mixed stream products. Sauvage's sales were primarily concentrated in the Midwestern states. A DOE audit of Sauvage's records revealed possible violations of the price regulations in the

firm's purchase and resale of petroleum products. Based on this audit, the ERA issued a Proposed Remedial Order (PRO) on November 4, 1981, alleging that during the period September 1973 through July 1977, Sauvage committed certain pricing violations in its sales of NGLs and NGL products. On August 27, 1982, the OHA granted the ERA's motion to withdraw the Sauvage PRO. *Sauvage Gas Company*, 10 DOE ¶83,008 (1982). However, the ERA continued to challenge the firm's pricing practices.

In order to settle all claims and disputes between Sauvage and the DOE regarding the firm's sales of refined petroleum products during the period January 1, 1973 through January 27, 1981 (the consent order period), the parties entered into a consent order on September 29, 1985. Under the terms of the consent order, Sauvage deposited $390,000 into an interest-bearing escrow account for ultimate distribution by the DOE. With interest, the total value of the Sauvage escrow account has grown to $454,277.69 as of February 29, 1988.

On December 7, 1987, the OHA issued a Proposed Decision and Order (PD&O) setting forth a tentative plan for the distribution of refunds to parties that make a reasonable showing of injury as a result of Sauvage's alleged overcharges. In order to give notice to all potentially affected parties, a copy of the PD&O was published in the **Federal Register** and comments regarding the proposed refund procedures were solicited. 52 FR at 47630 (December 15, 1987). We received one comment concerning our proposed procedures from Eric T. Small of Energy Refunds, Inc. This comment will be addressed below in our discussion of the final procedures to be adopted for this proceeding.

II. Refund Procedures

Subpart V sets forth general guidelines to be used by the OHA in formulating a plan for distributing funds received as a result of an enforcement proceeding. The Subpart V process may be used in situations like the present case where the DOE is unable to readily identify those persons who likely were injured by alleged overcharges or ascertain the amount of the refunds they should receive.

The distribution of refunds in this proceeding will take place in two stages. In the first stage, we will accept claims from identifiable purchasers of Sauvage propane, butane, natural gasoline, middle distillates and NGL mixed stream products (the covered products) who may have been injured by Sauvage's pricing practices during the period of federal price controls. In order to receive a refund, each claimant will be required to submit a schedule of its monthly purchases of Sauvage covered products during the period June 13, 1973 through the date of decontrol of each covered product.[1] If any funds remain after all meritorious first-stage claims have been paid, they may be used for indirect restitution in accordance with the provisions of the Petroleum Overcharge Distribution and Restitution Act of 1986, Pub. L. 99-509, Title III, 1 Fed. Energy Guidelines ¶11,702 *et seq.*

A. *Refunds to Identifiable Purchasers.* In the first stage of the Sauvage refund proceeding, we will distribute the funds currently in escrow to claimants who demonstrate that they were injured by Sauvage's alleged overcharges. While there is a variety of methods by which such a showing can be made, a refiner, reseller or retailer claimant is generally required to demonstrate (i) that it maintained a bank of unrecovered increased product costs, in order to show that it did not pass the alleged overcharges through to its own customers, and (ii) that market conditions were the reason that it did not pass through those increased costs. For periods in which the DOE regulations did not require the computation of cost banks, a claimant in the oil business will only be required to make the latter showing, which might be made through a demonstration of lowered profit margins, decreased market shares, or depressed sales volume during the period of purchases from Sauvage. *See, e.g., Dorchester Gas Corp.*, 14 DOE ¶5,240 at 88,451 (1986). Claimants may also use the "competitive disadvantage methodology" to demonstrate that they were injured by Sauvage's alleged overcharges. *See, e.g., Dorchester Gas Corporation/Phillips Petroleum Co.*, 16 DOE ¶85,400 (1987).

We will adopt presumptions of injury which have been used in many prior refund cases. These presumptions are founded upon our experience in prior Subpart V proceedings and upon specific information concerning Sauvage's regulated operations during the consent order period. Presumptions in refund cases are specifically authorized by the Subpart V regulations. *See* 10 CFR 205.282(e). These presumptions will enable the OHA to consider the refund applications in the most efficient way possible in view of the limited resources available, while permitting applicants to participate in the refund process without incurring inordinate expense.

1. *End-Users.* The first presumption we will use is that end-users or ultimate consumers whose businesses were unrelated to the petroleum industry were injured by Sauvage's alleged overcharges. Unlike regulated firms in the petroleum industry, members of this group generally were not subject to price controls during the consent order period. They were therefore not required to base their pricing decisions on cost increases or to keep records which would show whether they passed through cost increases. For these reasons, an analysis of the impact of the alleged overcharges on the final prices of goods and services which were not covered by the petroleum price regulations would be beyond the scope of a special refund proceeding. *Texas Oil & Gas Corp.*, 12 DOE ¶ 85,069 at 88,209 (1984). Therefore, end-users of Sauvage covered products need only document their purchases volumes from the firm to make a sufficient showing that they were injured by the alleged overcharges. On the other hand, refund applicants whose business operations were subject to the DOE regulatory program and who purchased Sauvage products for consumption as fuel or raw materials will not be considered end-users for the purpose of the showing of injury. *Seminole Refining Inc.*, 12 DOE ¶ 85,188 at 88,576 (1985).

2. *Agricultural Cooperatives and Regulated Utilities.* We also will adopt the presumption that regulated industries, such as public utilities, and agricultural cooperatives absorbed the alleged Sauvage overcharges. These types of applicants will not have to submit any further evidence of injury in order to qualify for the full amount of volumetric refund based on purchase volumes that were used by themselves or sold to members. Any overcharges suffered by such firms would have been passed through to their customers by the regulatory bodies or agreements that control the prices they may charge. Similarly, any refunds they receive would automatically be passed through to their customers. Consequently, we will permit an entity of this type to receive a full volumetric refund, provided that it includes in its refund application a full explanation of the manner in which refunds will be passed through to its customers. *See Office of Special Counsel*, 9 DOE ¶ 82,538 at 85,203 (1982).

3. *Applicants Claiming a Refund of $5,000 or Less.* Another presumption we will use is that resellers or retailers of

[1] The decontrol dates for the covered products are as follows: January 28, 1981, for propane and NGL mixed stream products; January 1, 1980, for butane and natural gasoline; and July 1, 1976, for middle distillates.

Sauvage covered products seeking small refunds were injured by the alleged regulatory violations settled in the Sauvage consent order. We recognize that making a detailed showing of injury may be too complicated and burdensome for resellers or retailers who purchased relatively small amounts of product from Sauvage. We are also concerned that the cost to the applicants and to the government of compiling and analyzing information to make a detailed showing of injury not exceed the amount of the refund to be gained. In the past, we have adopted a small claims presumption to assure that the costs of filing and processing a refund application do not exceed the benefits. *See, e.g., Marathon Petroleum Co.*, 14 DOE ¶ 85,269 at 88,515 (1986) and cases cited therein. Under the small claims presumption, a claimant is not required to submit any additional evidence of injury beyond volumes of Sauvage covered products purchased if its refund claim is below $5,000.

4. *Resellers and Retailers Seeking Larger Refunds.* In his comments, Mr. Small suggested that we adopt a presumption of injury for those purchasers of Sauvage covered products seeking larger refunds. Previously, we have determined that a 60 percent presumption for medium-range purchasers of NGL products accurately reflected the amount of their injury as a result of those purchases. *Suburban Propane Gas Corp.*, 16 DOE ¶ 85,382 at 88,744 (1987); *Getty Oil Co.*, 15 DOE ¶ 85,064 at 88,123 (1986). Similarly, we have determined that a 50 percent presumption of injury for medium-range middle distillate resellers and retailers was appropriate. *Id.* We agree with Mr. Small that these same presumptions should apply in this proceeding.

For claims based on purchases above $5,000 of Sauvage propane, butane, natural gasoline and NGL mixed stream products, retailers, resellers and refiners that resold Sauvage covered products may elect to receive either $5,000 or 60 percent of their volumetric amount, whichever is larger, up to $50,000.[3] Middle distillate resellers and retailers may elect between the larger of $5,000 or 50 percent of their volumetric amount, up to $50,000. Consequently, a claimant in this group will only be required to provide documentation of its purchase volumes of Sauvage covered products in order to be eligible to receive a refund of either 50 or 60 percent of its total volumetric share.[3] Claimants seeking refunds greater than $50,000, i.e., those who purchased more than 44,754,744 gallons of Sauvage NGL products or more than 53,705,693 gallons of Sauvage middle distillates, will be required to demonstrate that they were injured by Sauvage's alleged overcharges. Any of these claimants may elect to limit their claim to $50,000 rather than submit a detailed showing of injury.

5. *Spot Purchasers.* In the Sauvage PD&O, we proposed to adopt a rebuttable presumption that a reseller or retailer that made only spot purchases from Sauvage did not suffer economic injury as a result of those purchases. We noted in the PD&O that in prior decisions, we have consistently determined that spot purchasers tend to have considerable discretion in where and when to make purchases and therefore would not have made spot market purchases from a firm at increased prices unless they were able to pass through the full price of the purchases to their own customers. 52 FR at 42,631. *See, e.g., Suburban Propane*, 16 DOE at 86,744–45; *Marathon*, 14 DOE at 88,515. Mr. Small suggested in his comments that we adopt a 20 percent presumption of injury for spot purchasers, but he offered no rationale for this departure from our past practices. We believe that the rationale for the spot purchaser presumption holds true in the present case, and we see no reason to adopt Mr. Small's suggestion. Accordingly, a firm which made only spot purchases from Sauvage will be ineligible to receive a refund, even one below the $5,000 threshold level, unless it presents evidence rebutting the spot purchaser presumption that it was not injured. In prior proceedings, we have stated that refunds will be approved for spot purchasers who demonstrate that: (1) They made the spot purchases in order to maintain supplies to base period customers; and (2) they were forced by market conditions to resell the product at a loss. *See Saber Energy, Inc./Mobil Oil Corp.*, 14 DOE ¶ 85,170 (1986); *Waller Petroleum Co./Wooten Oil Co.*, 13 DOE ¶ 85,110 (1985).

B. *Calculation of Refund Amounts.* We will use a volumetric method to divide the Sauvage escrow account among applicants who demonstrate that they are eligible to receive refunds. This method generally presumes that the alleged overcharges were spread equally over all the gallons of covered products sold by Sauvage during the period of federal petroleum price controls. In the absence of better information, this presumption is sound because the DOE price regulations generally required a regulated firm to account for increased costs on a firm-wide basis in determining its prices. *See generally* 10 CFR Part 212. However, we also recognize that the impact on an individual purchaser might have been greater, and any purchaser may file a refund application based on a claim that it incurred a disproportionate share of alleged overcharges. In other words, the volumetric presumption will be rebuttable, as will all of the other presumptions that we are adopting. *See Office of Special Counsel*, 10 DOE ¶ 85,048 at 88,189 (1982).

Under the volumetric method, a claimant will be eligible to receive a refund equal to the number of gallons of Sauvage covered products that it purchased during the period of price controls times the volumetric refund amount. The volumetric refund amount is calculated by dividing the $390,000 received from Sauvage by the total gallons of covered products which the firm sold during the period of controls.[4] This calculation yields a volumetric refund amount of $.001862 per gallon. In addition, successful claimants will receive a proportionate share of the accrued interest.

As in previous cases, we will establish a minimum refund amount of $15 for first stage claims. We have found through our experience in prior refund cases that the cost of processing claims in which refunds are sought for amounts less than $15 outweighs the benefits of restitution in those situations. *See, e.g., Suburban Propane*, 16 DOE at 88,746.

C. *General Refund Application Requirements.* Pursuant to 10 CFR 205.283, we will not accept Applications for Refund from individuals and firms that purchased middle distillates, propane, butane, natural gasoline and NGL mixed stream products sold by Sauvage between June 13, 1973 and the date of decontrol of each covered product. *See* note 1. There is no specific application form which must be used.

---

[3] That is, claimants who purchased between 2,685,285 gallons and 44,754,744 gallons of Sauvage covered products during the period when those products were subject to federal price controls, may elect to use this presumption.

[3] A medium-range claimant may elect not to receive a refund based upon this presumption and may instead attempt to show that it is eligible for a refund equal to its full allocable share by making a detailed showing of injury using the general criteria set forth above. However, the 50 or 60 percent presumptions will not be available to medium-range claimants who submit a detailed showing which leads us to conclude that they are eligible for a refund of less than 50 or 60 percent of their volumetric share.

[4] Based on information contained in the Sauvage audit file, we estimate that the firm sold approximately 209.4 million gallons of covered products during the period when the price of those products was regulated by the DOE.

All Applications for Refund must be printed or typed, signed by the applicant, and should include the following information:

(1) A conspicuous reference to Case Number KEF-0024 and the applicant's business name and address.

(2) The name, title, and telephone number of a person who may be contacted by the OHA for additional information concerning the Application.

(3) The manner in which the applicant used the Sauvage covered products, i.e., whether it was a refiner, reseller, retailer or end-user.

(4) The volume of Sauvage middle distillates, propane, butane, natural gasoline and NGL mixed stream products it purchased during each month of the period June 13, 1973 through the date of decontrol of each covered product. If the applicant was an indirect purchaser it must also submit the name of its immediate supplier and indicate why it believes the covered product was originally sold by Sauvage.

(5) If the applicant is a reseller, retailer or refiner which wishes to claim a refund in excess of $5,000 and does not elect the medium-range injury presumption for calculating its refund, or which wishes to claim a refund in excess of $50,000, it should also:

(a) Furnish the OHA with quarterly bank calculations of unrecouped product cost increases through January 27, 1981;

(b) State whether it or any of its affiliates have filed any other Applications for Refund in which it referred to its level of banks as a basis for refund; and

(c) Submit evidence that it did not pass through the alleged overcharges to its customers. For example, a firm may submit market surveys to show that price increases were infeasible.

(6) If the applicant is in any way affiliated with Sauvage, it must indicate the nature of that affiliation.

(7) If there has been a change in ownership of the entity that purchased the Sauvage covered products, the applicant must provide the names and addresses of the other owners, and should either state the reasons why a refund should be paid to the applicant rather than the other owners or provide a signed statement from the other owners indicating that they waive their claim to a refund.

(8) If the applicant is involved in DOE enforcement or private actions filed under section 210 of the Economic Stabilization Act, it should describe the action and its current status. If the applicant was a party to such an action which is no longer pending, it should indicate how the proceeding was resolved. The applicant must keep the OHA informed of any change in status during the pendency of its Applications for Refund. *See* 10 CFR 205.9(d).

(9) All applicants must submit the following signed statement: "I swear [or affirm] that the information submitted is true and accurate to the best of my knowledge and belief." 10 CFR 205.283(c) and 18 U.S.C. 1001.

All applications must be filed in duplicate and must be received within 90 days from the date of publication of this Decision in the Federal Register. A copy of each application will be available for public inspection in the Public Reference Room of the Office of Hearings and Appeals. Any applicant that believes that its application contains confidential information must indicate this and submit two additional copies of its application from which confidential information has been deleted. All applications should be sent to: Office of Hearings and Appeals, Department of Energy, 1000 Independence Avenue, SW., Washington, DC 20585.

It Is Therefore Ordered That:

(1) Applications for Refund from the funds remitted to the Department of Energy by Sauvage Gas Company, Inc. and Sauvage Gas Service Company, Inc. pursuant to consent order number 710H06008Z, entered on September 29, 1985, may now be filed.

(2) All applications must be filed no later than 90 days after publication of this Decision in the **Federal Register.**

George Breznay,

Director, Office of Hearings and Appeals.

Date: April 7, 1988.

[FR Doc. 88-8137 Filed 4-13-88; 8:45 am]

BILLING CODE 6450-01-M

ENVIRONMENTAL PROTECTION AGENCY

[FRL-3365-5]

Agency Information Collection Activities Under OMB Review

AGENCY: Environmental Protection Agency (EPA).

ACTION: Notice.

SUMMARY: In compliance with the Paperwork Reduction Act (44 U.S.C. 3501 *et seq.*), this notice announces that the Information Collection Request (ICR) abstracted below has been forwarded to the Office of Management and Budget (OMB) for review, and is available to the public for review and comment. The ICR describes the nature of the information collection and its expected cost and burden; where appropriate, it includes the actual data collection instruments.

FOR FURTHER INFORMATION CONTACT: Carla Levesque at EPA, (202) 382-2740.

SUPPLEMENTARY INFORMATION:

Office of Research and Development

Title: Quality Assurance Specifications and Requirements (EPA ICR #0866).

Abstract: State governments, local governments, and non-profit institutions when applying for Federal assistance to do research studies must include a *narrative* statement describing the data collections procedures to be used. For "non-research" studies, these same entities must submit a detailed data quality assurance plan with their assistance applications.

Respondents: State Governments, local Governments, and non-profit institutions.

Estimated Burden: 9,900 hours.

Frequency of Collection: one time per application.

Comments on the ICR should be sent to:

Carla Levesque, U.S. Environmental Protection Agency, Information Policy Branch (PM-223) 401 M Street SW., Washington, DC 20460.

and

Nicolas Garcia, Office of Management and Budget, Office of Information and Regulatory Affairs, 726 Jackson Place NW., Washington, DC 20503, (Telephone (202) 395-3084).

Dated: April 1, 1988.

Odelia Funke,

Acting Director, Information and Regulatory Systems Division.

[FR Doc. 88-8784 Filed 4-13-88; 8:45 am]

BILLING CODE 6560-50-M

FEDERAL HOME LOAN BANK BOARD

[No. 88-256]

FSLIC Insurance Premium

Date: April 7, 1988.

AGENCY: Federal Home Loan Bank Board.

ACTION: Notice.

SUMMARY: The Federal Home Loan Bank Board ("Bank Board"), as operating head of the Federal Savings and Loan Insurance Corporation ("FSLIC" or "Corporation"), has adopted a resolution pursuant to which the Corporation orders the assessment against each insured institution of an additional premium for FSLIC insurance

in an amount equal to one quarter of one-eighth of one percent (one thirty-second of one percent) of the total amount of the accounts of the insured members of each insured institution determined as of December 31, 1987.

EFFECTIVE DATE: April 14, 1988.

FOR FURTHER INFORMATION CONTACT: Mary A. Creedon, Deputy Director of Operations, FSLIC, (202) 254-2029; or Terrill Rupp, Attorney, Office of General Counsel (202) 377-7051, Federal Home Loan Bank Board, 1700 G Street NW., Washington, DC 20552.

SUPPLEMENTARY INFORMATION:

Whereas, The Federal Home Loan Bank Board ("Bank Board"), as operating head of the Federal Savings and Loan Insurance Corporation ("Corporation" or "FSLIC") may authorize the Corporation, pursuant to section 404(c) of the National Housing Act, as amended ("NHA"), 12 U.S.C. 1727(c) (1982), to assess against each institution the accounts of which are insured by the Corporation pursuant to section 403 of the NHA, 12 U.S.C. 1726 (1982) ("insured institution"), additional premiums for such insurance until the amount of such premiums equals the amount of all losses and expenses of the Corporation, *provided* that the total amount so assessed in any one year against any insured institution shall not exceed one eighth of one per centum of the total amount of the accounts of the insured members of such institution and *provided further* that the amount of the additional premium for the calendar year 1988 may not exceed one-twelfth of one percentum of the total amount of the accounts of the insured members of such institution unless the Bank Board determines that severe pressures on the Corporation exist which necessitate an infusion of additional funds; and

Whereas, The Bank Board, as operating head of the Corporation, by Resolution No. 85-142, dated February 22, 1985, by Resolution No. 85-437, dated June 5, 1985, by Resolution No. 85-770, dated August 28, 1985, by Resolution No. 85-1142, dated December 9, 1985, by Resolution No. 86-213, dated March 6, 1986, by Resolution No. 86-582, dated June 10, 1986, by Resolution No. 86-941, dated September 2, 1986, by Resolution No. 86-1253, dated December 15, 1986, by Resolution No. 87-281 dated March 16, 1987, by Resolution No. 87-610 dated May 27, 1987, by Resolution No. 87-950 dated September 9, 1987, and by Resolution No. 87-1254 dated December 14, 1987, ordered assessments against each insured institution of an additional premium for insurance in an amount equal to one thirty-second of one per centum of the total amount of the accounts of the insured members of each insured institution determined as of December 31, 1984, for the first assessment, as of March 31, 1985, for the second, as of June 30, 1985, for the third, as of September 30, 1985, for the fourth, as of December 31, 1985, for the fifth, as of March 31, 1986, for the sixth, as of June 30, 1986, for the seventh, as of September 30, 1986, for the eighth, as of December 31, 1986, for the ninth, as of March 31, 1987, for the tenth, as of June 30, 1987, for the eleventh and as of September 30, 1987 for the twelfth; and

Whereas, The Bank Board has considered memoranda of the Corporate Accounting Branch and the Chief Financial and Administrative Officer, Office of the FSLIC, (a copy of which memoranda are in the Minute Exhibit file), describing the impact of the collection of the additional premiums for insurance assessed pursuant to Resolution No. 85-142, dated February 22, 1985, Resolution No. 85-437, dated June 5, 1985, Resolution No. 85-770, dated August 28, 1985, Resolution No. 85-1142, dated December 9, 1985, Resolution No. 86-213, dated March 6, 1986, Resolution No. 86-582, dated June 10, 1986, Resolution No. 86-941, dated September 2, 1986, Resolution No. 86-1253, dated December 15, 1986, Resolution No. 87-281, dated March 16, 1987, Resolution No. 87-610 dated May 27, 1987, Resolution No. 87-950 dated September 9, 1987, and Resolution No. 87-1254 dated December 14, 1987, upon the Corporation's insurance reserves:

Now, therefore, it is resolved, That on the basis of the administrative record, the Bank Board finds and determines that the Corporation has incurred substantial losses during calendar years 1981 through 1987; and

Resolved further, That the Bank Board finds and determines that:

1. Losses and expenses incurred by the Corporation, as defined in Resolution No. 85-142, require the assessment of additional insurance premiums pursuant to section 404(c) of the NHA in addition to the additional insurance premiums assessed pursuant to Resolutions No. 85-142, No. 85-437, No. 85-770, No. 85-1142, No. 86-213, No. 86-582, No. 86-941, No. 86-1253, No. 87-281, No. 87-610, No. 87-950, and No. 87-1254, in order to maintain the insurance reserves of the Corporation at a level adequate to meet in part the Corporation's losses and expenses and to protect the insured members of insured institutions;

2. Severe pressures on the Corporation exist which necessitate an infusion of additional funds;

3. Postponement of a reduction in the assessment of an additional premium, as provided in section 404(c)(2) of the NHA, will improve the financing environment for selling obligations of the Financing Corporation organized pursuant to the Federal Savings and Loan Insurance Corporation Recapitalization Act of 1987;

4. It is appropriate, therefore, to provide for the assessment of an additional insurance premium at this time, pursuant to section 404(a)(2) and 404(c)(1) of the NHA, by order of the Corporation; and

Resolved further, That the Corporation hereby orders the assessment against each insured institution of an additional premium for insurance for the first quarter of 1988, in an amount equal to one thirty-second of one per centum of the total amount of the accounts of the insured members of such insured institution determined as of December 31, 1987; and

Resolved further, That the additional insurance premium assessed pursuant to this Resolution shall be payable on or about April 30, 1988; and

Resolved further, That the Executive Director or a Deputy Director of the FSLIC, or a designee of either of them, ("Director"), shall determine the amount of the additional premium due, including an offset of one quarter of twenty percent (five percent) of each insured institution's pro rata share of the statutorily prescribed amount as provided in section 404(e)(2) of the NHA, to be paid on April 30, 1988, by each insured institution, and shall notify each insured institution of such amount at least fifteen (15) days prior to the date such amount is due; and

Resolved further, That the Director, on behalf of the Corporation, is hereby authorized to take all other actions necessary or appropriate to determine and collect the additional insurance premium authorized and ordered by this Resolution; and

Resolved further, That the Secretary shall forward this Resolution for publication in the **Federal Register**.

By the Federal Home Loan Bank Board.

John M. Buckley, Jr.,

Secretary.

[FR Doc. 88-8115 Filed 4-13-88; 8:45 am]

BILLING CODE 6720-01-M

FEDERAL MARITIME COMMISSION

[Docket No. 88-11]

Virginia International Terminals, Inc.; Filing of Petition for Declaratory Order

Notice is given that a petition for declaratory order has been filed by

Virginia International Terminals, Inc. ("VIT") requesting that the Federal Maritime Commission resolve a controversy between VIT and Kawasaki Kisen Kaisha, Ltd. ("K-Line") regarding the effective date of an Addendum (Agreement No. 224-010740-001) to FMC Agreement No. 224-010740, a terminal use agreement originally between VIT, Seapac Services, Inc. and Neptune Orient Line. By virtue of the Addendum, K-Line became a party to FMC Agreement No. 224-010740.

The petition was served on K-Line and that party may file a reply to the petition with the Secretary, Federal Maritime Commission, Washington, DC 20573-0001 on or before May 23, 1988.

An original and fifteen copies of such reply shall be submitted and a copy thereof served on counsel for VIT, J. Stanley Payne, Jr., Esq., 600 World Trade Center, Norfolk, Virginia 23510. Replies shall contain the complete factual and legal presentation of the replying party as to the desired resolution of the petition.

Interested persons may inspect and obtain a copy of the petition at the Washington Office of the Federal Maritime Commission, 1100 L Street NW., Room 11101. Participation by persons other than those named above will be permitted only upon grant of a petition to intervene by the Commission pursuant to Rule 72 (46 CFR 502.72). Petitions for leave to intervene shall be submitted on or before the reply date and shall be accompanied by intervenor's complete reply including its factual and legal presentation in the matter.

Joseph C. Polking,

Secretary.

[FR Doc. 88-8240 Filed 4-13-88; 8:45 am]

BILLING CODE 6730-01-M

GENERAL SERVICES ADMINISTRATION

Advisory Committee on the FTS2000 Procurement; Meeting

Notice is hereby given that the General Services Administration (GSA) Advisory Committee on the FTS2000 Procurement will meet on April 22, 1988, from 8:30 a.m. to 4:30 p.m., in the board room of the MITRE Corporation, 7225 Colshire Drive, McLean, VA 22109, to review the plans to evaluate vendor proposals for the FTS2000 procurement. The agenda will relate to (1) FTS2000 program requirements; (2) roles and responsibilities; (3) security and ethics; (4) structure, content, and main issues on the request for proposals; and (5) evaluation scheme, evaluation process, and schedule.

The entire meeting will be closed to the public because procurement sensitive matters, especially the pre-award evaluation scheme and methodology, will be discussed. The exemptions for closing the meeting are cited in 5 U.S.C. 552b(c)(9)(B) (Government in the Sunshine Act).

Less than fifteen days notice of this meeting is being provided due to scheduling difficulties.

Questions regarding this meeting should be directed to John J. Landers (202) 523-5308.

Dated: April 6, 1988.

John J. Landers,

Director, Office of Administration, Information Resources Management Service.

[FR Doc. 88-8112 Filed 4-13-88; 8:45 am]

BILLING CODE 6820-25-M

DEPARTMENT OF HEALTH AND HUMAN SERVICES

Food and Drug Administration

[Docket No. 88E-0073]

Determination of Regulatory Review Period for Purposes of Patent Extension; Bactroban

AGENCY: Food and Drug Administration.

ACTION: Notice.

SUMMARY: The Food and Drug Administration (FDA) has determined the regulatory review period for Bactroban and is publishing this notice of that determination as required by law. FDA has made the determination because of the submission of an application to the Commissioner for Patents and Trademarks, Department of Commerce, for the extension of a patent which claims that antibiotic.

ADDRESS: Written comments and petitions should be directed to the Dockets Management Branch (HFA-305), Food and Drug Administration, Rm. 4-62, 5600 Fishers Lane, Rockville, MD 20857.

FOR FURTHER INFORMATION CONTACT: Andrea E. Chamblee, Office of Health Affairs (HFY-20), Food and Drug Administration, 5600 Fishers Lane, Rockville, MD 20857, 301-443-1382.

SUPPLEMENTARY INFORMATION: The Drug Price Competition and Patent Term Restoration Act of 1984 (Pub. L. 98-417) generally provides that a patent may be extended for a period of up to 5 years so long as the patented item (human drug product, medical device, food additive, or color additive) was subject to regulatory review by FDA before the item was marketed. Under that act, a product's regulatory review period forms the basis for determining the amount of extension an applicant may receive.

A regulatory review period consists of two periods of time: a testing phase and an approval phase. For human drug products, the testing phase begins when the exemption to permit the clinical investigations of the drug becomes effective and runs until the approval phase begins. The approval phase starts with the initial submission of an application to market the human drug product and continues until FDA grants permission to market the drug product. Although only a portion of a regulatory review period may count toward the actual amount of extension that the Commissioner of Patents and Trademarks may award (for example, half the testing phase must be subtracted as well as any time that may have occurred before the patent was issued), FDA's determination of the length of a regulatory review period for a human drug product will include all of the testing phase and approval phase as specified in 35 U.S.C. 156(g)(1)(B).

FDA recently approved for marketing the antibiotic product Bactroban (mupirocin), which is indicated for the topical treatment of impetigo due to Enterobacter species *, *Escherichia coli* *, *Sarcina lutea* *, *Staphylococcus aureus*, *Staphylococcus epidermidis*, *Staphylococcus* species *, alpha hemolytic *Streptococcus* *, beta hemolytic *Streptococcus* *, and *Streptococcus pyrogenes*. (* Efficacy for this organism in this organ system was studied in fewer than 10 infections.) Subsequent to this approval, the Patent and Trademark Office received a patent term restoration application for Bactroban (U.S. Patent No. 4,071,536) from Beecham Group, p.l.c., and requested FDA's assistance in determining the patent's eligibility for patent term restoration. FDA, in a letter dated March 8, 1988, advised the Patent and Trademark Office that the antibiotic product had undergone a regulatory review period and that the active ingredient, mupirocin, represented the first permitted marketing or use of that active ingredient. Shortly thereafter, the Patent and Trademark Office requested that the FDA determine the product's regulatory review period.

FDA has determined that the applicable regulatory review period for Bactroban is 1,867 days. Of this time, 491 days occurred during the testing phase of the regulatory review period, while 1,376 days occurred during the approval phase. These periods of time were derived from the following dates:

1. *The date an exemption under section 507(d) of the Federal Food, Drug, and Cosmetic Act became effective:* November 22, 1982. The applicant claims October 30, 1982, as the date the investigational new drug application (IND) for the drug became effective. However, FDA records indicate that the IND became effective on November 22, 1982.

2. *The date the application was initially submitted with respect to the human drug product under section 507 of the Federal Food, Drug, and Cosmetic Act:* March 26, 1984. FDA has verified the applicant's claim that the new drug application for the product (NDA 50-591) was initially submitted on March 26, 1984.

3. *The date the application was approved:* December 31, 1987. FDA has verified the applicant's claim that NDA 50-591 was approved on December 31, 1987.

This determination of the regulatory review period establishes the maximum potential length of a patent extension. However, the U.S. Patent and Trademark Office applies several statutory limitations in its calculations of the actual period for patent extension. In its application for patent extension, this applicant seeks 730 days of patent term extension.

Anyone with knowledge that any of the dates as published is incorrect may, on or before June 13, 1988, submit to the Dockets Management Branch (address above) written comments and ask for a redetermination. Furthermore, any interested person may petition FDA, on or before October 11, 1988, for a determination regarding whether the applicant for extension acted with due diligence during the regulatory review period. To meet its burden, the petition must contain sufficient facts to merit an FDA investigation. (See H. Rept. 857, Part 1, 98th Cong., 2d Sess., pp. 41-42, 1984.) Petitions should be in the format specified in 21 CFR 10.30.

Comments and petitions should be submitted to the Dockets Management Branch (address above) in three copies (except that individuals may submit single copies) and identified with the docket number found in brackets in the heading of this document. Comments and petitions may be seen in the Dockets Management Branch between 9 a.m. and 4 p.m., Monday through Friday.

Dated: April 5, 1988.

Stuart L. Nightingale,

Associate Commissioner for Health Affairs.

[FR Doc. 88-8193 Filed 4-13-88; 8:45am]

BILLING CODE 4160-01-M

[Docket No. 88E-0103]

Determination of Regulatory Review Period for Purposes of Patent Extension; Deursil®

AGENCY: Food and Drug Administration.

ACTION: Notice.

SUMMARY: The Food and Drug Administration (FDA) has determined the regulatory review period for Deursil® and is publishing this notice of that determination as required by law. FDA has made the determination because of the submission of an application to the Commissioner of Patents and Trademarks, Department of Commerce, for the extension of a patent which claims that human drug product.

ADDRESS: Written comments and petitions should be directed to the Dockets Management Branch (HFA-305), Food and Drug Administration, Rm. 4-62, 5600 Fishers Lane, Rockville, MD 20857.

FOR FURTHER INFORMATION CONTACT: I. David Wolfson, Office of Health Affairs (HFY-20), Food and Drug Administration, 5600 Fishers Lane, Rockville, MD 20857, 301-443-1382.

SUPPLEMENTARY INFORMATION: The Drug Price Competition and Patent Term Restoration Act of 1984 (Pub. L. 98-417) generally provides that a patent may be extended for a period of up to 5 years so long as the patented item (human drug product, medical device, food additive, or color additive) was subject to regulatory review by FDA before the item was marketed. Under that act, a product's regulatory review period forms the basis for determining the amount of extension an applicant may receive.

A regulatory review period consists of two periods of time: a testing phase and an approval phase. For human drug products, the testing phase begins when the exemption to permit the clinical investigations of the drug becomes effective and runs until the approval phase begins. The approval phase starts with the initial submission of an application to market the human drug product and continues until FDA grants permission to market the drug product. Although only a portion of a regulatory review period may count toward the actual amount of extension that the Commissioner of Patents and Trademarks may award (for example, half the testing phase must be subtracted as well as any time that may have occurred before the patent was issued), FDA's determination of the length of a regulatory review period for a human drug product will include all of the testing phase and approval phase as specified in 35 U.S.C. 156(g)(1)(B).

FDA recently approved for marketing the human drug product Deursil® (ursodiol) which is indicated for patients with radiolucent, noncalcified, gallbladder stones <20 mm in greatest diameter in whom elective cholecystectomy would be undertaken except for the presence of increased surgical risk due to systemic disease, advanced age, idiosyncratic reaction to general anesthesia, or for those patients who refuse surgery. Subsequent to this approval, the Patent and Trademark Office received a patent term restoration application for Deursil® from the CIBA-GEIGY Corp. and requested FDA's assistance in determining the patent's eligibility for patent term restoration. FDA, in a letter dated March 21, 1988, advised the Patent and Trademark Office that the human drug product had undergone a regulatory review period and that the active ingredient, ursodiol, represented the first permitted commercial marketing or use of the active ingredient. Shortly thereafter, the Patent and Trademark Office requested that FDA determine the product's regulatory review period.

FDA has determined that the applicable regulatory review period for Deursil® is 4,053 days. Of this time, 3,377 days occurred during the testing phase of the regulatory review period, while 676 days occurred during the approval phase. These periods of time were derived from the following dates:

1. *The date an exemption under section 505(i) of the Federal Food, Drug, and Cosmetic Act became effective:* November 27, 1976. The applicant claims November 11, 1976, as the date the investigational new drug application (IND) for the drug became effective. However, FDA records indicate that the IND became effective on November 27, 1976.

2. *The date the application was initially submitted with respect to the human drug product under section 505(b) of the Federal Food, Drug, and Cosmetic Act:* February 24, 1986. FDA has verified the applicant's claim that the new drug application for the drug (NDA 19-594) was initially submitted on February 24, 1986.

3. *The date the application was approved:* December 31, 1987. FDA has verified the applicant's claim that NDA 19-594 was approved on December 31, 1987.

This determination of the regulatory review period establishes the maximum potential length of a patent extension. However, the U.S. Patent and Trademark Office applies several statutory limitations in its calculations of the actual period for patent extension.

In its application for patent extension, this applicant seeks 730 days of patent extension.

Anyone with knowledge that any of the dates as published is incorrect may, on or before June 13, 1988, submit to the Dockets Management Branch (address above) written comments and ask for a redetermination. Furthermore, any interested person may petition FDA, on or before October 11, 1988, for a determination regarding whether the applicant for extension acted with due diligence during the regulatory review period. To meet its burden, the petition must contain sufficient facts to merit an FDA investigation. (See H. Rept. 857, Part 1, 98th Cong., 2d Sess., pp. 41–42, 1984). Petitions should be in the format specified in 21 CFRA 10.30.

Comments and petitions should be submitted to the Dockets Management Branch (address above) in three copies (except that individuals may submit single copies) and identified with the docket number found in brackets in the heading of this document. Comments and petitions may be seen in the Dockets Management Branch between 9 a.m. and 4 p.m., Monday through Friday.

Dated: April 6, 1988.

Stuart L. Nightingale,

Associate Commissioner for Health Affairs.

[FR Doc. 88-8152 Filed 4-13-88; 8:45 am]

BILLING CODE 4160-01-M

[Docket No. 88E-0068]

Determination of Regulatory Review Period for Purposes of Patent Extension; Spectamine®

AGENCY: Food and Drug Administration.

ACTION: Notice.

SUMMARY: The Food and Drug Administration (FDA) has determined the regulatory review period for Spectamine® and is publishing this notice of that determination as required by law. FDA has made the determination because of the submission of an application to the Commissioner of Patents and Trademarks, Department of Commerce, for the extension of a patent which claims that human drug product.

ADDRESS: Written comments and petitions should be directed to the Dockets Management Branch (HFA-305), Food and Drug Administration, Rm. 4-62, 5600 Fishers Lane, Rockville, MD 20857.

FOR FURTHER INFORMATION CONTACT: Andrea E. Chambles, Office of Health Affairs (HFY-20), Food and Drug Administration, 5600 Fishers Lane, Rockville, MD 20857, 301-443-1382.

SUPPLEMENTARY INFORMATION: The Drug Price Competition and Patent Term Restoration Act of 1984 (Pub. L. 98-417) generally provides that a patent may be extended for a period of up to 5 years so long as the patented item (human drug product, medical device, food additive, or color additive) was subject to regulatory review by FDA before the item was marketed. Under that act, a product's regulatory review period forms the basis for determining the amount of extension an applicant may receive.

A regulatory review period consists of two periods of time: a testing phase and an approval phase. For human drug products, the testing phase begins when the exemption to permit the clinical investigations of the drug becomes effective and runs until the approval phase begins. The approval phase starts with the initial submission of an application to market the human drug product and continues until FDA grants permission to market the drug product. Although only a portion of a regulatory review period may count toward the actual amount of extension that the Commissioner of Patents and Trademarks may award (for example, half the testing phase must be subtracted as well as any time that may have occurred before the patent was issued), FDA's determination of the length of a regulatory review period for a human drug product will include all of the testing phase and approval phase as specified in 35 U.S.C. 156(g)(1)(B).

FDA recently approved for marketing the human drug product Spectamine® for use as a lipid-soluble brain-imaging agent. It has been shown to be useful in the evaluation of nonlacunar stroke, expecially when used within 96 hours of the onset of local neurological deficit. The rates of agreement between abnormal images and the neurological exam suggestive of ischematic cerebrovascular insufficiency, appear to increase with the severity of symptoms. Its usefulness for measurement of cerebral blood flow has not been established. Subsequent to this approval, the Patent and Trademark Office received a patent term restoration application for Spectamine® (U.S. Patent No. 4,360,511) from Medi-Physics, Inc., and requested FDA's assistance in determining the patent's eligibility for patent term restoration. FDA, in a letter dated March 8, 1988, advised the Patent and Trademark Office that the human drug product had undergone a regulatory review period and that the active ingredient, Iofetamine HC1, I-123 injection, represented the first permitted marketing or use of that active ingredient. Shortly thereafter, the Patent and Trademark Office requested that the FDA determine the product's regulatory review period.

FDA has determined that the applicable regulatory review period for Spectamine® is 1,853 days. Of this time, 807 days occurred during the testing phase of the regulatory review period, while 1,046 days occurred during the approval phase. These periods of time were derived from the following dates:

1. *The date an exemption under section 505(i) of the Federal Food, Drug, and Cosmetic Act became effective:* November 29, 1982. The applicant claims December 16, 1982, as the date the notice of claimed investigational exemption (IND) for the drug became effective. However, FDA records, indicate that the IND became effective when FDA notified the applicant by telephone on November 29, 1982, that the IND was removed from clinical hold.

2. *The date the application was initially submitted with respect to the human drug product under section 505(b) of the Federal Food, Drug and Cosmetic Act:* February 12, 1985. FDA has verified the applicant's claim that the new drug application for the product (NDA 19-432) was initially submitted on February 12, 1985.

3. *The date the application was approved:* December 24, 1987. FDA has verified the applicant's claim that NDA 19-432 was approved on December 24, 1987.

This determination of the regulatory review period establishes the maximum potential length of a patent extension. However, the U.S. Patent and Trademark Office applies several statutory limitations in its calculations of the actual period for patent extension. In its application for patent extension, this applicant seeks 730 days of patent term extension.

Anyone with knowledge that any of the dates as published is incorrect may, on or before June 13, 1988, submit to the Dockets Management Branch (address above) written comments and ask for a redetermination. Furthermore, any interested person may petition FDA, on or before October 11, 1988, for a determination regarding whether the applicant for extension acted with due diligence during the regulatory review period. To meet its burden, the petition must contain sufficient facts to merit an FDA investigation. (See H. Rept. 857, Part 1, 98th Cong., 2d Sess., pp. 41–42, 1984.) Petitions should be in the format specified in 21 CFR 10.30.

Comments and petitions should be submitted to the Dockets Management Branch (address above) in three copies (except that individuals may submit single copies) and identified with the

docket number found in brackets in the heading of this document. Comments and petitions may be seen in the Dockets Management Branch between 9 a.m. and 4 p.m., Monday through Friday.

Dated: April 5, 1988.

Stuart L. Nightingale,

Associate Commissioner for Health Affairs.

[FR Doc. 88-8150 Filed 4-13-88; 8:45 am]

BILLING CODE 4160-01-M

Health Resources and Services Administration

Acquired Immune Deficiency Syndrome Service Demonstration Program Grants

AGENCY: Health Resources and Services Administration, PHS, DHHS.

ACTION: Notice of availability of funds.

SUMMARY: The Bureau of Maternal and Child Health and Resources Development (BMCHRD), Health Resources and Services Administration (HRSA), announces that Fiscal Year (FY) 1988 funds are available for Service Demonstration grants to develop projects demonstrating a comprehensive, cost effective, ambulatory and community-based health care and support system for persons with Acquired Immune Deficiency Syndrome (AIDS) and other Human Immunodeficiency Virus (HIV) related conditions. Applicants will be expected to demonstrate a thorough understanding of the AIDS/HIV epidemic as it affects their community, the need and demand for services, and a realistic and comprehensive plan for a service delivery system which builds upon existing community health resources.

Supplement grant applications from current HRSA AIDS Service Demonstration Program grantees listed in Appendix B will be accepted. Additionally, new applicants from the Standard Metropolitan Statistical Areas (SMSAs) with a cumulative total of 300 or more AIDS cases as reported by the Centers for Disease Control as of February 22 are eligible to compete for new grants (see Appendix A).

Funds were appropriated by Pub. L. 100-202 for this purpose under the authority of section 301 of the Public Health Service (PHS) Act (42 U.S.C. 241).

DATE: To receive consideration, both supplemental and new grant applications must be received by the Grants Management Officer by June 13, 1988. Applications shall be considered as meeting the deadline if they are either (1) received on or before the deadline date; or (2) postmarked on or before the deadline date and received in time for submission to the review committee. A legibly dated receipt from a commercial carrier or U.S. Postal Service will be accepted in lieu of a postmark. Private metered postmarks shall not be accepted as proof of timely mailing. Applications which do not meet the deadline will be considered late applications and will be returned to the applicant.

FOR FURTHER INFORMATION CONTACT: Requests for technical or programmatic information should be directed to Ms. Patricia D. Mail, Chief, AIDS Service Branch, Room 9-21, 5600 Fishers Lane, Rockville, Maryland 20857 (301-443-6745). Grant applications (Form PHS 5161-1 with revised face sheet HHS Form 424 approved under OMB Number 0348-0006 and additional information regarding business administration or fiscal issues related to the awarding of grants under this notice may be requested from Ms. Glenna Wilcom, Grants Management Specialist, BMCHRD, Parklawn Building, Room 9-21, 5600 Fishers Lane, Rockville, Maryland 20857 (301-443-6745). The original and two copies of the application must be submitted to Ms. Wilcom.

SUPPLEMENTARY INFORMATION:

Program Objectives

The AIDS Service Demonstration Program is intended to support the development and demonstration of community-based systems of care which provide the spectrum of needed services for people with HIV infection and its complications, and provide appropriate alternatives to inpatient hospital care. Such systems must be developed in response to a careful assessment of the community's needs and must assure the coordination of the community's health care resources. Applicants should propose innovative, cost effective means of providing services, and should develop specific strategies to reduce the need for inpatient hospital care and to link together community health resources. For purposes of the grant, consideration must be given to the needs and resources of the entire community defined as the SMSA for which the application is submitted.

Since a disproportionately high number of persons with AIDS and HIV infection are from minority populations, particular attention should be placed on developing appropriate outreach, information and education strategies, and arranging for services so that cultural and language differences are adequately addressed. Additionally, specific AIDS education outreach and counseling programs must be directed toward IV drug users and their sexual partners.

Because of the demonstration nature of the program, emphasis should be placed on how the program can operate without Federal funds 3 years after initial Federal funding and on how the proposed project might serve as a model for other communities with significant numbers of persons with AIDS and other HIV related conditions.

Availability of Funds

Approximately $13.0 million is available in FY 1988 for the AIDS Service Demonstration Program grants. Up to 30 percent of the amount available will be reserved for supplemental awards to current grantees. The balance will be used for new grant awards. Not more than one grant award will be made in any one SMSA.

Applications for both supplemental and new grants will be competitively awarded. The budget and project period for new applicants will be two years, i.e., funds awarded in FY 1988 are for expenditure over the 2 year project period. This requires new applicants to submit a budget for each of the two years as well as a summary budget for the entire period. Applicants for supplemental awards will submit a revised budget for the original 3-year project and budget period that specifies how the funds awarded in prior years are being (have been) used, and how this supplemental award will be used in each of the remaining years of the original project period.

Eligible Applicants

Current grantees are eligible to apply for supplemental grants (See Appendix B). Public and private entities, non-profit and for-profit, located in and providing services to the SMSAs listed in Appendix A are eligible to apply for new grants. Eligible entities may include, but are not limited to State or local health departments; public or private hospitals; and consortia of health care and community organizations which can develop a comprehensive ambulatory community and home based AIDS support program offering appropriate and compassionate care at reduced costs.

Collaboration/Coordination with Other AIDS Programs

To the maximum extent possible the grantees will be expected to work closely and coordinate their activities with the Robert Wood Johnson Foundation AIDS Health Services

Program grantees; the Pediatric AIDS Health Care Demonstration Projects which will be funded by HRSA in Fiscal Year 1988; the AIDS Community Outreach Demonstration Projects supported by the National Institute of Drug Abuse; information, public education/prevention and testing programs supported by the Centers for Disease Control; the drug clinical trial studies and other research programs conducted by the National Institutes of Health; the Community Health Centers and Migrant Health Centers supported by HRSA: State Health Departments or other appropriate State-level representatives, activities of the Office of Minority Health, community based AIDS service organizations, and appropriate State Medicaid Programs.

Review and Evaluation Criteria for New Applications

Applications for the new FY 1988 grants will be reviewed and rated by an objective review committee according to the applicant's demonstration of: the ability of coalesce broad-based community support among appropriate agencies and programs and involve such agencies and programs from all of the cities and counties of the SMSA listed on Appendix A; a thorough understanding of AIDS and the HIV epidemic; the need and demand for ambulatory, community and home-based services, including education and prevention services for individuals with high risk behaviors; and the experience and potential to provide treatment and support to the largest number of patients with AIDS and other HIV related conditions within eligible SMSAs at the least cost.

Applicants must develop an implementation plan that includes a milestone chart or time schedule that shows the phase-in of each component of the delivery system and the expected completion dates of various project objectives over the course of the grant period. All sources of funding to support the organization that will work with the grantee must be accurately reflected in the applicant's budget. Specific attention must be given to assuring comprehensiveness and appropriateness of services, and access to all segments of the affected population. Where appropriate, contigous communities should undertake cooperative regional systems of care in order that duplication of services can be avoided. More detailed information on the review and evaluation criteria may be found in the grant application kit.

Technical Assistance Workshops

The Division of AIDS Programs will conduct Technical Assistance (T.A.) Workshops to respond to questions from potential applicants. The dates, locations and times of the T.A. Workshops are as follows:

1. Date May 5, 1988
   Location—Federal Building—Room 1005, 1200 Main Tower, Dallas, Texas
   Time—9:00 a.m.
2. Date May 19, 1988
   Location—Federal Building—Room 4020—3535 Market Street, Philadelphia, Pennsylvania
   time—9:00 a.m.

Applicants who plan to attend one of the T.A. Workshops must confirm their participation, the location of the workshop they will be attending, and the number of individuals in their party. Confirmation should be made at least two weeks prior to the workshop date to: Ms. Janice Edmonds, Parklawn Building, Room 9-21, 5600 Fishers Lane, Rockville, Maryland 20857, 301 443-6745. If there are changes to the above schedule, applicants will be notified at the time of confirmation.

Review and Evaluation Criteria for Supplemental Applications

Current grantees will compete for available funds through a limited application and review process. These grantees must submit an abbreviated application, not to exceed 20 pages. Priority consideration will be given to those applications that address one or more of the following: Expansion of the existing coalition to include other service and support organizations; expansion and/or redirection of the scope of services within a project to meet identified needs, particularly with respect to minority communities and IV drug users; extension of services and support systems to all areas of the SMSA; and developing a regionalized approach to coordinate services to person s with AIDS. An updated needs-demand assessment must be submitted by the applicant to justify the program elements being proposed. The grantees must also provide a specific time-phased plan that shows how and when the objectives will be met. Instructions for the supplemental applications will be included in the grant application kit.

Allowable Costs

The basis for determining the allowability and allocability of costs charged to PHS grants is set forth in 45 CFR Part 74, subpart Q. The five separate sets of cost principles prescribed for grant recipients are: OMB Circular A-87 for State and local governments; OMB Circular A-21 for institutions of higher education; 45 CFR Part 74, Appendix E for hospitals; OMB Circular A-122 for nonprofit organizations; and 48 CFR Chapter 1, Subpart 31.2 for for-profit (commercial) organizations. PHS has elected the option provided in 48 CFR 1-31.2 of not authorizing independent research and development costs.

Other Award Information

A successful applicant under this notice will submit reports in accordance with the provisions of the general regulations which apply under 45 CFR Part 74, Subpart J, Monitoring and Reporting of Program Performance.

Executive Order 12372

The AIDS Service Demonstration Program has been determined to be a program which is subject to the provisions of Executive Order 12372 concerning intragovernmental review of Federal programs, as implemented by 45 CFR Part 100. Executive Order 12372 allows States the option of setting up a system for reviewing applications from within their States for assistance under certain Federal programs. The application package under this notice will contain a listing of States which have chosen to set up such a review and will provide a point of contact in the States for the review. Applicants should promptly contact their State single point of contact (SPOC) and follow their instructions prior to the submission of an application. The SPOC has 60 days after the application deadline date to submit its review comments.

(The OMB Catalog of Federal Domestic Assistant number of the AIDS Service Demonstration Program is 13.133)

Date: March 15, 1988.

David N. Sundwall,

Administrator.

Appendix A—Standard Metropolitan Statistical Areas (SMSA) Eligible for New Grants Under the AIDS Service Demonstration Program

SMSA	Cities and counties included in the SMSA
1 Houston, TX	Houston City Brazoria County Fort Bend County Harris County Liberty County Montgomery County Waller County

SMSA	Cities and counties included in the SMSA
2. Chicago, IL	Chicago City
	Cook County
	DuPage County
	Kane County
	Lake County
	Will County
3. Dallas-Fort Worth, TX.	Dallas City
	Fort Worth City
	Collin County
	Dallas County
	Denton County
	Ellis County
	Hood County
	Johnson County
	Kaufman County
	Parker County
	Rockwall County
	Tarrant County
	Wise County
4. Philadelphia, PA-NJ.	PA
	Philadelphia City
	Bucks County
	Chester County
	Delaware County
	Montgomery County
	Philadelphia County
	NJ
	Burlington County
5. Jersey City, NJ	Jersey City City
	Hudson County
6. Nassau-Suffolk, NY.	Nassau County
	Suffolk County
7. New Orleans, LA	New Orleans City
	Jefferson Parish
	Orleans Parish
	St. Bernard Parish
	St. Tammany Parish
8. Denver-Boulder, CO.	Boulder City
	Denver City
	Adams County
9. Baltimore, MD	Baltimore City
	Anne Arundel County
	Baltimore County
	Carroll County
	Hartford County
	Howard County
10. Detroit, MI	Detroit City
	Lapeer County
	Livingston County
	Macomb County
	Oakland County
	St. Clair County
	Wayne County
11. San Juan, PR	San Juan Municipio
	Bayamón Municipio
	Canóvanas Municipio
	Carolina Municipio
	Cataño Municipio
	Guaynabo Municipio
	Lóiza Municipio
	Toa Baja Municipio
	Trujillo Municipio
12. Riverside-San Bernardino Ontario.	Ontario City
	Riverside City
	San Bernardino City
	Riverside County
	San Bernardino County
13. Phoenix	Phoenix City
	Maricopa County
14. Tampa-St. Petersburg.	St. Petersburg City
	Hillsborough County
	Pasco County
	Pinellas County

Appendix B—Standard Metropolitan Statistical Areas Eligible for Supplemental Grants Under the AIDS Service Demonstration Program

SMSA	Cities and counties included in the SMSA
1. New York, NY-NJ	NJ
	New York City
	Bronx County
	Kings County
	New York County
	Putnam County
	Queens County
	Richmond County
	Rockland County
	Westland County
	NJ
	Bergen County
2. San Francisco-Oakland, CA.	San Francisco City
	Oakland City
	Alameda County
	Contra Costa County
	Marin County
	San Francisco County
	San Mateo County
3. Los Angeles-Long Beach, CA.	Los Angeles City
	Long Beach City
	Los Angeles County
4. Miami, FL	Miami City
	Dade County
5. Washington, DC	Washington, DC
	MD
	Charles County
	Montgomery County
	Prince George's County
	VA
	Arlington County
	Fairfax County
	Loudon County
	Prince William County
	Alexandria City
	Fairfax City
	Falls Church City
	Manassas City
	Manassas City Park
6. Atlanta, GA	Atlanta City
	Butts County
	Cherokee County
	Clayton County
	Cobb County
	DeKalb County
	Douglas County
	Fayette County
	Forsyth County
	Fulton County
	Gwinnett County
	Henry County
	Newton County
	Paulding County
	Rockdale County
	Walton County
7. Boston MA	Boston City
	Essex County
	Beverly City
	Boxford Town
	Danvers Town
	Hamilton Town
	Lynn City
	Lynnfield Town
	Manchester Town
	Marblehead Town
	Middleton Town
	Nahant Town
	Peabody City
	Salem City
	Saugus Town
	Swampscott Town
	Topsfield Town
	Wenham Town
	Middlesex County
	Action Town
	Arlington Town
	Ashland Town
	Bedford Town
	Belmont Town
	Boxborough Town
	Burlington Town
	Cambridge City
	Carlisle Town
	Concord Town
	Everett City
	Framingham Town
	Holliston Town
	Lexington Town
	Lincoln Town
	Malden City
	Medford City
	Melrose City
	Natick Town
	Newton City
	North Reading Town
	Reading Town
	Sherborn Town
	Somerville City
	Stoneham Town
	Sudbury Town
	Wakefield Town
	Waltham City
	Watertown Town
	Wayland Town
	Weston Town
	Wilmington Town
	Winchester Town
	Woburn City
	Norfolk County
	Bellingham Town
	Braintree Town
	Brookline town
	Canton Town
	Cohasset Town
	Dedham Town
	Dover Town
	Foxborough Town
	Franklin Town
	Holbrook Town
	Medfield Town
	Medway Town
	Millis Town
	Milton Town
	Needham Town
	Norfolk Town
	Norwood Town
	Quincy City
	Randolph Town
	Sharon Town
	Stoughton Town
	Walpole Town
	Wellesely Town
	Westwood Town
	Weymouth Town
	Wrentham Town
	Plymouth County
	Abington Town
	Duxbury Town
	Hanover Town
	Hingham Town
	Hull Town
	Kingston Town
	Marshfield Town
	Norwell Town
	Pembroke Town
	Rockland Town
	Scituate Town
	Suffolk County
	Boston City
	Chelsea City
	Revere City
	Winthrop Town

SMSA	Cities and counties included in the SMSA
8. Fort Lauderdale-Hollywood, FL.	Fort Lauderdale City Hollywood City Broward County
9. Seattle-Everett, WA.	Everett City Seattle City King County Snohomish County
10. San Diego, CA	San Diego City San Diego County
11. West Palm Beach-Boca Raton, FL.	Boca Raton City West Palm Beach City Palm Beach County
12. Anaheim-Santa Ana-Garden Grove, CA.	Anaheim City Garden Grove City Santa Ana City Orange County
13. Newark, NJ	Newark City Essex County Morris County Somerset County Union County

[FR Doc. 88-8149 Filed 4-13-88; 8:45 am]

BILLING CODE 4160-15-M

Maternal and Child Health Research Grants Review Committee; Meeting

In accordance with section 10(a)(2) of the Federal Advisory Committee Act (Pub. L. 92-463), announcement is made of the following National Advisory body scheduled to meet during the month of June 1988:

Name: Maternal and Child Health Research Grants Review Committee.

Date and Time: June 22-24, 1988, 9:00 a.m.

Place: Maryland Room, Parklawn Building, 5600 Fishers Lane, Rockville, Maryland 20857. Open on June 22, 1988, 9:00 a.m.—10:00 a.m. Closed for remainder of meeting.

Purpose: To review research grant applications in the program area of maternal and child health administered by the Bureau of Health Care Delivery and Assistance.

Agenda: The open portion of the meeting will cover opening remarks by the Director, Division of Maternal and Child Health Program Coordination and Systems Development, who will report on program issues, Congressional activities and other topics of interest to the field of maternal and child health. The meeting will be closed to the public on June 22, at 10:00 a.m. for the remainder of the meeting for the review of grant applications. The closing is in accordance with the provisions set forth in section 552b(c)(6), Title 5 U.S.C. Code, and the Determination by the Administrator, Health Resources and Services Administration, pursuant to Pub. L. 92-463.

Anyone requiring information regarding the subject Council should contact Gontran Lamberty, Dr.Ph.H., Executive Secretary, Maternal and Child Health Research Grants Review Committee, Room 6-17, Parklawn Building, 5600 Fishers Lane, Rockville, Maryland 20857, Telephone (301) 443-2190.

Agenda Items are subject to change as priorities dictate.

Date: April 11, 1988.

Jackie E. Baum,

Advisory Committee Management Officer, HRSA.

[FR Doc. 88-8188 Filed 4-13-88; 8:45 am]

BILLING CODE 4160-15-M

DEPARTMENT OF HOUSING AND URBAN DEVELOPMENT

Office of Administration

[Docket No. N-88-1799]

Submission of Proposed Information Collections to OMB

AGENCY: Office of Administration, HUD.

ACTION: Notices.

SUMMARY: The proposed information collection requirements described below have been submitted to the Office of Management and Budget (OMB) for review, as required by the Paperwork Reduction Act. The Department is soliciting public comments on the subject proposals.

ADDRESS: Interested persons are invited to submit comments regarding these proposals. Comments should refer to the proposal by name and should be sent to: John Allison, OMB Desk Officer, Office of Management and Budget, New Executive Office Building, Washington, DC 20503.

FOR FURTHER INFORMATION CONTACT: David S. Cristy, Reports Management Officer, Department of Housing and Urban Development, 451 7th Street, Southwest, Washington, DC 20410, telephone (202) 755-6050. This is not a toll-free number. Copies of the proposed forms and other available documents submitted to OMB may be obtained from Mr. Cristy.

SUPPLEMENTARY INFORMATION: The Department has submitted the proposal for the collection of information, as described below, to OMB for review, as required by the Paperwork Reduction Act (44 U.S.C. Chapter 35).

The Notices list the following information: (1) The title of the information collection proposal; (2) the office of the agency to collect the information; (3) the description of the need for the information and its proposed use; (4) the agency form number, if applicable; (5) what members of the public will be affected by the proposal; (6) how frequently information submissions will be required; (7) an estimate of the total numbers of hours needed to prepare the information submission; (8) whether the proposal is new or an extension, reinstatement, or revision of an information collection requirement; and (9) the names and telephone numbers of an agency official familiar with the proposal and of the OMB Desk Officer for the Department.

Authority: Section 3507 of the Paperwork Reduction Act, 44 U.S.C. 3507; section 7(d) of the Department of Housing and Urban Development Act, 42 U.S.C. 3535(d).

Date: April 6, 1988.

John T. Murphy,

Director, Information Policy and Management Division.

Proposal: Cooperative Membership Exhibit.

Office: Housing.

Description of the Need for the Information and its Proposed Use: This form is needed to list the prospective cooperative members. It indicates the identification number of the property, the number of rooms, the unit cost, the down payment, and the monthly unit payment for each prospective member. The form is used as evidence of compliance of selling the property of project to an eligible cooperative group.

Form Number: HUD-93203.

Respondents: Individuals or Households.

Frequency of Respondents: On Occasion.

Estimated Burden Hours: 150.

Status: Reinstatement.

Contact: Richard S. Fitzgerald, HUD, (202) 426-0283; John Allison, OMB, (202) 395-6880.

Date: April 6, 1988.

Proposal: Reporting Requirements Associated with 24 CFR 203.508 and 235.1001-Providing Information.

Office: Housing.

Description of the Need for the Information and its Proposed Use: Under the section 235 Program, lenders must provide the interest accounting to homeowners to allow them to deduct the amount of subsidy HUD paid on behalf of the homeowner. This information is needed to make certain homeowners do not claim more interest and/or taxes than they are actually entitled. HUD uses this requirement to make sure program funds are accounted for.

Form Number: None.

Respondents: Businesses or Other For-Profit.

Frequency of Respondents: Annually.

Estimated Burden Hours: 3,000.
Status: Extension.
Contact: Ann M. Sudduth, HUD, (202) 755–7330; John Allison, OMB, (202) 395–6880.

Date: April 6, 1988.

Proposal: Section 8 Existing Housing Allowances for Tenant Furnished Utilities and Other Services.
Office: Housing.
Description of the Need for the Information and its Proposed Use: The information, provided on this form, is needed and used by the Public Housing Agencies (PHAs) to establish a utility allowance for each locality (e.g., city, town, municipality) based on the average costs of utilities.
Form Number: HUD–52667.
Respondents: State or Local Governments.
Frequency of Respondents: On Occasion and Annually.
Estimated Burden Hours: 6,000.
Status: Extension.
Contact: Myra E. Newbill, HUD, (202) 755–6887; John Allison, OMB, (202) 395–6880.

Date: March 28, 1988.

[FR Doc. 88–8236 Filed 4–13–88; 8:45 am]
BILLING CODE 4210-01-M

Office of Assistant Secretary for Community Planning and Development

[Docket No. N-88-1793; FR-2493]

Application Submission Dates for HUD-Administered Small Cities Program for Fiscal Year 1988

AGENCY: Assistant Secretary for Community Planning and Development, HUD.

ACTION: Notice.

SUMMARY: This Notice advises prospective applicants of the dates for submission of applications to the HUD office for the HUD-Administered Small Cities Program in New York under the Community Development Block Grant Program for Fiscal Year 1988.

FOR FURTHER INFORMATION CONTACT: Richard Kennedy, State and Small Cities Division, Office of Community Planning and Development, Department of Housing and Urban Development, 451 Seventh Street SW., Washington, DC 20410. Telephone (202) 755–6322. (This is not a toll-free number.)

SUPPLEMENTARY INFORMATION: In accordance with 24 CFR 570.420(h)(3), the Department of Housing and Urban Development (HUD) has established dates for submission of applications for Small Cities grants in the State of New York for Fiscal Year 1988. Applications for funding under the Single Purpose and Comprehensive Grant provisions of the HUD-Administered Small Cities Program will be accepted only during the designated time period. Applications received in the HUD Office after the deadline must be postmarked no later than the May 16, 1988 submission deadline. Applications postmarked after that date are unacceptable and will be returned.

Applications for Single Purpose grants under 24 CFR 570.430, or applications for Comprehensive Grants under 24 CFR 570.426 for the State of New York are required to be submitted no earlier than May 2, 1988 and no later than May 16, 1988. Applicants in New York in the Counties of Sullivan, Ulster and Putnam and nonparticipating jurisdictions in the urban Counties of Dutchess, Orange, Rockland, Westchester, Nassau, and Suffolk should submit applications to the New York Regional Office. All other nonentitled communities in the State of New York should submit their applications to the Buffalo Field Office.

The Application requirements related to this program have been approved by the Office of Management and Budget (OMB) and assigned approval number 2506–0060.

This action is exempt from the provisions of the National Environmental Policy Act under 24 CFR 50.20(k).

Dated: April 6, 1988.

Jack R. Stokvis,
General Deputy, Assistant Secretary for Community Planning and Development.

[FR Doc. 88–8237 Filed 4–13–88; 8:45 am]
BILLING CODE 4210-29-M

Office of the Assistant Secretary for Housing—Federal Housing Commissioner

[Docket No. N-88-1800; FR-2507]

Interstate Land Sales Registration Division; Notice of Administrative Proceedings

AGENCY: Assistant Secretary for Housing—Federal Housing Commissioner, Office of Lender Activities and Land Sales Registration, Interstate Land Sales Registration Division, HUD.

ACTION: Notice of proceedings and opportunity for hearing.

SUMMARY: The Interstate Land Sales Registration Division gives public notice of its attempt to serve upon certain persons (defined by statute (15 U.S.C. 1701) as individuals, unincorporated organizations, partnerships, associations, corporations, trusts, or estates) at their last known addresses, a notice requiring revisions to their Statement of Record. Service of this notice was attempted by mail and was found to be undeliverable. Therefore, in accordance with 44 U.S.C. 1508, the Department is publishing this Notice of Proceedings and Opportunity for Hearing in order to effect constructive notice upon the persons listed in the attached Appendix.

DATE: Requests for hearings should be filed on or before April 29, 1988.

ADDRESSES: Requests shall be filed with the docket Clerk for Administrative Proceedings, Room 10251, HUD Building, 451 Seventh Street SW., Washington, DC 20410.

FOR FURTHER INFORMATION CONTACT: Roger G. Henderson, Branch Chief, Land Sales Enforcement Branch, Department of HUD, Room 6278, Washington, DC 20410. Telephone: (202) 755–0502. (This is not a toll-free number).

SUPPLEMENTARY INFORMATION: The Notice of Proceedings and Opportunity for hearing is issued pursuant to the Interstate Land Sales Full Disclosure Act (15 U.S.C. 1706(d)) and related regulations at 24 CFR 1710.45(b)(1) and 24 CFR 1710.215. The Department hereby serves the following Notice of Proceedings and Opportunity for Hearing to the persons listed in the attached Appendix:

NOTICE OF PROCEEDINGS AND OPPORTUNITY FOR HEARING

I

—Docket No. _____
—In the matter of: (subdivision) _____
_____
—(developer) _____
_____
—Representative Respondent _____
—OILSR No. _____

The Secretary in administering the Interstate Land Sales Full Disclosure Act of 1968, 15 U.S.C. 1701 et seq., and its Regulations finds his public files disclose that:

A. Respondent is a corporation organized under the laws of the State of _____ and has its principal office in _____.

B. The mailing address of Respondent's last known principal office or place of business is _____
_____

C. The Respondent filed a Statement of Record and Property Report for the above subdivision, located in _____ County, _____ State, which Statement of Record and Property Report, as amended, if any amendments have been filed, became effective on _____ and is still effective.

D._____is an authorized Representative of Respondent.

(Information for completing the above format follows. The captioned matters in the Appendix are listed alphabetically by subdivision in each State. Paragraph I of the Notice of Proceedings and Opportunity for Hearing includes the captions of the separate matters. Information for the completion of the captions of each of the matters is set out in columns 1 and 2 of the aforementioned Appendix. Information for Lines A, B and C above is set out in columns 3, 4 and 5 respectively of the Appendix. Information for Line D of Paragraph I is contained in the caption of the matter, and the same information is supplied in the last line of Column 1 of the Appendix. The entire Notice is completed by inserting the applicable information from the Appendix in the appropriate blanks of paragraph I. In this form it is constructively noticed that the Notice of Proceedings and Opportunity for Hearing is served upon the persons listed in column 1 of the Appendix.)

II

The Interstate Land Sales Registration Division (ILSRD) from its records or from other sources has obtained information which tends to show, and it so alleges, that the Statement of Record and Property Report of the subdivision captioned above include untrue statements of material fact, or omit to state material facts required to be stated therein or necessary to make the statements therein not misleading, to wit:

The developer has failed to file amendments (including an annual report of activity) to comply with revised regulations of the Interstate Land Sales Registration Division or, alternatively, to file documentation establishing that no such amendments are necessary by the time required in 24 CFR 1710.23(a) and/or 1710.310 (1984 Edition), as amended by 49 FR 31366 (August 6, 1984) (as codified in the 1985 edition.

III

In view of the allegations contained in Part II above, the Secretary will provide an opportunity for a public hearing to determine:

A. Whether the allegations set forth in Part II are true and in connection therewith to afford Respondent an opportunity to establish any defenses to such allegations; and

B. What, if any, remedial action is appropriate in the public interest and for the protection of purchasers pursuant to the Interstate Land Sales Full Disclosure Act.

IV

If the respondent desires a hearing, he shall file a request for hearing accompanied by an answer within 15 days after service of this Notice of Proceedings. Respondent is hereby notified that if he fails to file a response pursuant to 25 CFR 1720.240 and 1720.245 within 15 days after service of this Notice of Proceedings, Respondent shall be deemed in default, and the proceedings shall be determined against him, the allegations of which shall be determined to be true, and an order suspending the Statement of Record will be issued. The said order shall remain in effect until the Statement of Record and Property Report have been amended in accordance therewith, and thereupon the order shall cease to be effective.

V

Any request for hearing, answer, motion, amendment to pleadings, offer of settlement or correspondence forwarded during the pendency of this proceedings shall be filed with the Docket clerk for Administrative Proceedings, Room 10251, HUD Building, 451 Seventh Street SW., Washington, DC 20410. All such papers shall clearly identify the type of matter and the docket number as set forth in this Notice of Proceedings.

VI

It is hereby ordered, that upon request of the Respondent a public hearing for the purpose of taking evidence on the questions set forth in Part III hereof be held before an Administrative Law Judge, HUD Building, 451 Seventh Street SW., Washington, DC 20410, at 10:00 a.m. on the 30th day after receipt of the answer or at such other time as the Secretary or a designee may fix by further order.

This Notice of Proceedings shall be served upon the Respondent pursuant to 24 CFR 1720.170 and/or 44 U.S.C. 1509.

Date: April 6, 1988.

James E. Schoenberger,

General Deputy Assistant Secretary for Housing-Federal Housing Commissioner.

In the matter of (subdivision) developer, representative and title; respondent	OILSR No. and land sales enforcement branch docket No.	State of organization and location of principal office	Last known mailing address	Location of subdivision (county, State) and effective date
(1)	(2)	(3)	(4)	(5)
Arizona: Desert Vista Place, Richard G. Davis and Carolyn E. Davis, sole proprietors.	C 0-6385-02-1130, M-87-037	Arizona; Scottsdale, AZ	10298 North 87th Street, Scottsdale, AZ 85258.	Maricopa County, AZ; Feb. 7, 1965.
Colorado: Douglas Mountain Ranch, Donald McClure, sole proprietor.	0-05104-05-0528	Colorado; Denver, CO	6780 East Cedar, Apt. 202, Denver, CO 80224.	Jefferson County, CO; May 8, 1978.
Illinois: Valley of the Pines Sections 1 and 2, Meister Development Corporation, Robert L. Meister, president.	0-4873-15-76, M-88-029	Indiana; Fort Wayne, IN	3201 Doe Run Trail, Fort Wayne, IN 46825; 418 East Berry Street, Fort Wayne, IN 46802.	Steuben County, IN; May 3, 1977

[FR Doc. 88-8238 Filed 4-13-88; 8:45 am]

BILLING CODE 4210-27-M

DEPARTMENT OF THE INTERIOR

Office of the Secretary

Priority System of Ranking Education Construction Projects

AGENCY: Office of Construction Management, Interior.

ACTION: Notice of a priority system established to rank new school construction.

This notice is published pursuant to guidelines entitled "Instructions and Applications for New School Construction," dated November 1987, recently made available through the Office of Construction Management (OCM), as noticed in 53 FR 3080, February 3, 1988, which stated all applications will be reviewed and ranked. In accordance with criteria developed from the guidelines, OCM has developed criteria which established a priority system for use in ranking new school construction applications. These criteria are as follows:

A. The percentage of "unhoused" students is the starting point for reviewing applications for new construction. Students are considered unhoused:

1. When the condition of the existing school facility is such that it can no longer be used without major repairs, renovations or complete replacement.

2. When the school can no longer meet the space requirements of the Bureau approved educational program.

3. When the Bureau approved average daily membership (ADM) of the school exceeds the design capacity of the facility.

4. When seats are not available in any other school (Bureau, Tribal, Contract, Private or public) within a one hour's bus ride of home.

B. Those applications for facilities for "unhoused" students will be evaluated and ranked on the basis of the additional criteria listed below:

1. Cost and/or education program benefits accruing from consolidation of Bureau, Tribal, Contract, or public schools.

2. Compliance with Bureau approved attendance areas including other Bureau schools and public, private and contract schools, as demonstrated by historical data for past five years.

3. Demonstrated and supportable enrollment history for past ten years and enrollment trends for next five years or more, if available.

4. Severity of non-compliance of existing facilities with applicable Federal, Tribal, or State health and safety standards.

After ranking, a feasibility study will be required to analyze the cost benefits of replacement versus renovation.

FOR FURTHER INFORMATION CONTACT: Arthur M. Love, Jr., Director, Office of Construction Management, Department of the Interior, 18th & C Streets NW., Mail Stop 2415, Washington, DC 20240, (202) 343-3403.

Dated: March 21, 1988.

Rick Ventura,

Assistant Secretary, Policy, Budget & Administration

[FR Doc. 88-8781 Filed 4-13-88; 8:45 am]

BILLING CODE 4310-RK-M

Bureau of Land Management

[AA-680-08-4132-02]

Information Collection Submitted for Review

The proposal for the collection of information listed below has been submitted to the Office of Management and Budget for approval under the provisions of the Paperwork Reduction Act (44 U.S.C. Chapter 35). Copies of the proposed information collection requirement and explanatory material may be obtained by contacting the Bureau's clearance officer at the phone number listed below. Comments and suggestions on the requirements should be made directly to the Bureau clearance officer and the Office of Management and Budget Interior Department Desk Officer, Washington, DC 20503, telephone 202-395-7313.

Title: Multiple Use Mining, Mining Claims Under the General Mining Laws.

Abstract: Several statutes affecting the location of operations on, patenting of, and contesting of mining claims or sites on the public lands require certain information to be filed with the Bureau of Land Management if the owners of the mining claims or sites wish to exercise their rights under the mining laws. The Acts of August 11, 1955 and April 8, 1948 (30 U.S.C. 621) require that a notice or certificate of location and annual assessment work be filed with the Bureau. Section 603(c) of the Federal Land Policy and Management Act of 1976 (43 U.S.C. 1782(c)) requires an operator to file a plan of operations with the Bureau prior to operating in a Wilderness Study Area. The Stockraising Homestead Act of 1916 (43 U.S.C. 299) requires that an operator on the reserved mineral interest of the United States on these lands provide the Bureau with either:

(1) An agreement for compensation and damages between him and the surface owner.

(2) A waiver from the surface owner.

(3) A bond, not less than $1,000 as surety against damages to the property. The Act of May 10, 1872 (30 U.S.C. 22 *et seq.*) provides for the patenting of a mining claim or site and for adverse claims against such before the Bureau. Information specified in the act must be provided to the Bureau if the owner wishes to patent or adverse another claimant.

Bureau Form Number: 3814-1.

Frequency: Respondents only file once to claim the benefits of the various statutes.

Description of Respondents:

CFR

3730	250
3802	30
3814	25
3821	400
3860	75
3872	350

Annual Burden Hours:

CFR

3730	21
3801	250
3814	13
3821	33
3860	3000
3872	5000

Bureau Clearance Officer: Richard Iovaine 202-653-8853.

Date: January 26, 1988.

Adam A. Sokoloski,

Acting Assistant Director, Energy and Mineral Resources.

[FR Doc. 88-8117 Filed 4-13-88; 8:45 am]

BILLING CODE 4310-84-M

[WY-040-08-4111-09; W-66212]

Availability of Final Environmental Impact Statement; Record of Decision; Rock Springs and Bridger-Teton, WY

AGENCY: Bureau of Land Management, Interior.

ACTION: Notice of Availability of the Amoco Sohare Creek Unit Exploratory Oil Well No. 1-35 Final Environmental Impact Statement (EIS) and Record of Decision (ROD), and Reviewer Comments and Agency Responses Document.

SUMMARY: The Bureau of Land Management (BLM), Rock Springs District and the U.S. Forest Service (FS), Bridger-Teton National Forest announce the availability of the Amoco Sohare Creek Unit Exploratory Oil Well Final EIS and ROD. Both documents are bound together. The final EIS, in accordance with 40 CFR Parts 1500-1508, analyzes the impacts of Amoco Production Company's proposal to drill an exploratory oil well in northwestern Wyoming. The purpose is to determine if hydrocarbons are present within the Sohare Creek Unit. If hydrocarbons are encountered, production potential from the one well would be evaluated.

The ROD outlines the decision and rationale (including key management considerations) for the Sohare Creek Unit Exploratory Oil Well. Because of the volume of comments received on the Draft EIS, a separate document containing all the comments and agency responses has been prepared.

DATES: Since the ROD is issued at the same time as the final EIS, a concurrent 30-day period is provided before any actions are implemented. The 30-day period commences with the filing of the final EIS and Record of Decision with the Environmental Protection Agency (EPA).

ADDRESSES: Copies of the final EIS, ROD, and Reviewer Comments documents are available at the following locations: Bureau of Land Management, Rock Springs District Office, Highway 191 North, P.O. 1869, Rock Springs, Wyoming 82902-1869, (703) 382-5350. U.S. Forest Service, Bridger-Teton National Forest, P.O. Box 1888, Jackson, Wyoming 83001, (307) 733-2752.

BEST COPY AVAILABLE

FOR FURTHER INFORMATION CONTACT: Bill McMahan, Project Co-Leader, Bureau of Land Management, P.O. Box 1869, Rock Springs, Wyoming 82902–1869, (307) 382–5350. Al Reuter, Project Co-Leader, U.S. Forest Service, Bridger-Teton National Forest, P.O. Box 1888, Jackson, Wyoming 83001, (307) 733–4755.

SUPPLEMENTARY INFORMATION: Amoco Production Company or Riverton, Wyoming, proposes to drill and produce from an 11,050-foot exploratory oil well on the Jackson Ranger District, Bridger-Teton National Forest. The proposal is located in the Sohare Creek drainage, a tributary to the Gros Ventre River, Teton County, Wyoming. The drill site is located approximately 27 air miles northeast of Jackson, Wyoming, in the SW¼ of Section 35, T. 43 N., R. 112 W. A worker campsite to house drilling-related personnel on location is planned.

Alternatives to the proposed action include two alternate routes of road access to the proposed drill site; a helicopter mobilization and support alternative; and the alternative of "No Action."

Public comments received during scoping and the review of the draft EIS identified resources that could be affected by construction, drilling, and production activities as: Wildlife (particularly grizzly bear, elk calving, and historic elk migrations), primitive values (new road into an area currently unroaded), recreation (established snowmobiling), big game hunting and outfitter/guide operations and soil and water quality (erosion and stram sedimentation from occupancy of slopes in excess of 40 percent of unstable soils or within 500 feet of streams or 400 feet of springs).

Donald H. Sweep,
District Manager.

[FR Doc. 88–8131 Filed 4–13–88; 8:45 am]

BILLING CODE 4310–22–M

[CA–067–08–4331–10]

Prohibition Against Collection of Fossils, Gems and Minerals; California

AGENCY: Bureau of Land Management, Interior.

ACTION: Prohibition against collection of gems and minerals within the Indian Pass Area of Critical Environment Concern (ACEC) and prohibition against collection of vertebrate and invertebrate fossils within the Coyote Mountains ACEC. Both areas are within Imperial County, California.

SUMMARY: This notice affects public lands under the administrative responsibility of the El Centro Resource Area, California Desert District. The area includes public lands in the San Bernardino Meridian.

San Bernardino Meridian

Indian Pass ACEC

T. 13 S., R. 21 E.,
Sec. 20;
Sec. 21;
Sec. 27;
Sec. 28;
Sec. 29.

Coyote Mountains

T. 15 S., R. 9 E.,
Sec. 27, S½;
Sec. 28, S½;
Sec. 29, S½;
Sec. 30, S½;
Sec. 31;
Sec. 32;
Sec. 33;
Sec. 34;
Sec. 35, SW¼.

San Bernardino Meridian

T. 16 S., R. 9 E.,
Sec. 3, N½;
Sec. 4, N½;
Sec. 5, N½.

The above listed lands located within the Indian Pass ACEC are hereby closed to the collection of gems and minerals. The final management plan, which was subject to public review during the draft stage, calls for a prohibition of recreational or commercial collection of gem stones, rocks, fossils, and minerals from within the ACEC. The restriction against collection was effective with finalization of the Indian Pass ACEC plan on June 19, 1987, and will remain in effect until rescinded or modified by the authorized officer. This prohibition is designed to protect archaeological resources and to prevent damage to pristine desert pavement surfaces.

The above listed lands located within the Coyote Mountains are hereby closed to the collection of vertebrate and invertebrate fossils. This area includes the Coyote Mountains Fossil Site ACEC management plan. This plan, which was subject to public review during the draft stage, calls for expansion of important fossil localities. The above listed lands in the Coyote Mountains are included in a Desert Plan amendment to revise the ACEC boundaries.

The final ACEC plan also calls for a prohibition against collection of invertebrate fossils from the entire ACEC. This prescription clearly referred to the new boundaries once they are established. Limited collection is still possible through specific written authorization from the Area Manager, El Centro Resource Area. The restriction against the collection of invertebrate fossils was effective with formalization of the Coyote Mountains ACEC management plan on January 8, 1988, and will remain in effect until rescinded or modified by the authorized officer. This restriction is designed to protect rare and unusual paleontological resources found in the Coyote Mountains.

Notices or signs will be posted in the areas restricted and maps showing the exact locations of each ACEC are available with the respective management plan. Copies of both plans are available from the El Centro, CA 92243. Any person who knowingly and willfully violates these prohibitions may be subject to a $1,000 fine or imprisonment for not longer than 12 months, or both, under authority of 43 CFR 8364.1(a).

FOR FURTHER INFORMATION CONTACT: Area Manager, Bureau of Land Management, El Centro Resource Area, 333 S. Waterman, El Centro, California 92243, 619–352–5842.

Dated: April 6, 1988.

James L. Williams,
Acting District Manager.

[FR Doc. 88–8139 Filed 4–13–88; 8:45 am]

BILLING CODE 4310–40–M

[CA–050–4410–04]

Advisory Council Meeting; Ukiah District, CA

AGENCY: Bureau of Land Management, Interior.

ACTION: Notice of meeting, Ukiah, California, District Advisory Council.

SUMMARY: Prusuant to Pub. L. 94–579 and 43 CFR Part 1780, the Ukiah District Advisory Council will meet in Redding, California, May 19–20, 1988, to discuss issues and alternatives to be addressed in a resource management plan for public lands in the Bureau's Redding Resource Area.

DATES: The meeting will begin at 10:00 a.m. Thursday, May 19, 1988, and adjourn at 3:00 p.m. Friday, May 20, 1988.

ADDRESS: The meeting will be held at the Bureau of Land Management Office, 355 Hemsted Drive, Redding, California. A portion of Thursday and Friday will be spent visiting some of the public land parcels to be considered in the resource management plan.

FOR FURTHER INFORMATION CONTACT: Barbara Taglio, Ukiah District Office, Bureau of Land Managmeent, 555 Leslie Street, Ukiah, California 95482, (707) 462–3873.

SUPPLEMENTARY INFORMATION: The Redding Resource Area is responsible

for the management of approximately 230,000 acres of public land scattered throughout the five-county area of Siskiyou, Trinity, Shasta, Tehema, and Butte. Predominant uses of the public lands are timber harvesting, grazing, mining, wildlife habitat, recreation, and rights-of-way.

The meeting is open to the public. Individuals may submit oral or written comments for the Council's consideration. Opportunity for oral comments will be provided at 1:00 p.m. Thursday, May 19, 1988. Summary minutes of the meeting will be maintained by the Ukiah District Office and will be available for inspection and reproduction within 30 days of the meeting.

Dated: April 7, 1988.

Alfred W. Wright,

District Manager.

[FR Doc. 88-8129 Filed 4-13-88; 8:45 am]

BILLING CODE 4310-40-M

Oil and Gas Lease Sale; Alaska

ACTION: Notice of sale.

SUMMARY: The purpose of this notice is to announce that a Competitive Protective Oil and Gas Lease Drainage Sale No. 882 will be held on May 24, 1988. The lands are within the Kuparuk River Unit, North Slope Borough, Alaska, and are offered for lease under section 17 of the Mineral Leasing Act of 1920 as amended and supplemented (30 U.S.C. 181 *et seq.*).

FOR FURTHER INFORMATION CONTACT: Kay F. Kletka, 907-271-3791, Bureau of Land Management, 701 C Street, Box 18, Anchorage, AK 99513.

SUPPLEMENTARY INFORMATION: Notice is hereby given that at 10 a.m. on May 24, 1988, certain lands containing 678.2 acres within the Kuparuk River Unit, North Slope Borough, Alaska will be offered by oral bid to the highest responsible qualified bidder in a competitive protective oil and gas lease sale.

A detailed statement of the terms and conditions of the lease offering and how and where to bid may be obtained from the BLM at the address shown above.

John Santora,

Deputy State Director for Mineral Resources.

[FR Doc. 88-8123 Filed 4-13-88; 8:45 am]

BILLING CODE 4310-JA-M

[AZ-020-08-4212-13; A-23217]

Realty Action; Public Land Exchange; Mohave and Yavapai Counties, AZ

AGENCY: Bureau of Land Management, Interior.

ACTION: Correction notice.

SUMMARY: The notice of realty action published on Monday, March 21, 1988, in **Federal Register** document 88-6071, page 9150, is corrected as follows:

1. Page 9151, column 1, line 40 should read T. 12 N., R. 7 W.; and

2. Page 9151, column 3, line 25 should include section 13.

FOR FURTHER INFORMATION CONTACT: Mike Berch, Kingman Resource Area, (602) 757-3161.

Dated: April 5, 1988.

Henri R. Bisson,

District Manager.

[FR Doc. 88-8140 Filed 4-13-88; 8:45 am]

BILLING CODE 4310-32-M

[AZ 020-08-4212 11; A 22592]

Realty Action; Recreation and Public Purposes (R&PP), Act Classification; Arizona

BLM proposes to study the compatibility of applications by Maricopa County and the Ocotillo Botanical Preservation and Hiking Club, Inc. to develop public land for recreation and educational purposes related to parks, hiking trails and native plant interpretation. A determination will be made to lease and/or patent the following described land:

Gila and Salt River Meridian, Arizona

T. 3 S., R. 7 E.,
Sec. 4, E½SW¼SE¼;
Sec. 5, SE¼SW¼;
Sec. 8, E½NW¼, SW¼NW¼, W½SW¼;
Sec. 14, SW¼SW¼;
Sec. 17, NW¼NW¼;
Sec. 22, NE¼, E½SE¼;
Sec. 23, N½, SW¼, NW¼SE¼;
Sec. 24, W½NW¼, SE¼NW¼.

Containing 1,220 acres, more or less.

The land has been examined and found suitable for classification for recreation and public purposes under the provisions of the R&PP Act of June 14, 1926, as amended (44 Stat. 741; 43 U.S.C. 869; 869-4) and the regulations contained in 43 CFR Part 2740 and 43 CFR Part 2912.

In addition, the land is determined to meet general classification criteria of 43 CFR 2410.1(a-d) and specific public purposes classification criteria of 43 CFR 2430.4(c).

Classification of this land under the provisions of the above cited R&PP Act segregates them from appropriations under the public lands laws and the mining laws, but not from applications under the mineral leasing laws or the R&PP Act for a period of eighteen months from the date this notice is published in the **Federal Register** (43 CFR 2741.5(2)).

Detailed information concerning this classification is available from the Phoenix District Office, Bureau of Land Management, 2015 West Deer Valley Road, Phoenix, Arizona 85027.

For a period of 45 days from the date of publication of this notice in the **Federal Register** interested parties may submit comments to the Phoenix District Manager.

Dated: April 8, 1988.

Henri R. Bisson,

District Manager.

[FR Doc. 88-8143 Filed 4-13-88; 8:45 am]

BILLING CODE 4310-32-M

[AZ-940-08-4212-13; A-22308]

Arizona, Exchange of Public and Private Lands in Mohave County

April 5, 1988.

AGENCY: Bureau of Land Management, Interior.

ACTION: Notice of exchange of land.

SUMMARY: This action informs the public of the completion of an exchange between the United States and Lake Sections, Inc. The United States transferred 128.56 acres in Mohave County and Lake Sections, Inc. conveyed 1,280.00 acres in Mohave County.

FOR FURTHER INFORMATION CONTACT: Lisa Schaalman, Arizona State Office, P.O. Box 16563, Phoenix, Arizona 85011. Telephone (602) 241-5534.

SUPPLEMENTARY INFORMATION: On March 23, 1988, the Bureau of Land Management transferred the following described land by Deed No. AZ-88-003, pursuant to the Federal Land Policy and Management Act of October 21, 1976:

Gila and Salt River Meridian, Arizona

T. 14 N., R. 20 W.,
Sec. 9, lots 6 and 7, S½S½N½N½NW¼SW¼, S½N½NW¼SW¼, S½NW¼SW¼, SW¼SW¼.

The area described comprises 128.56 acres in Mohave County.

In exchange the following described land was conveyed to the United States:

Gila and Salt River Meridian, Arizona

T. 24 N., R. 22 W.,
Sec. 12, all;
Sec. 13, all.

The area described comprises 1,280.00 acres in Mohave County.

The purpose of this notice is to inform the public and interested State and local

government officials of the exchange of public and private land.

John T. Mezes,

Chief, Branch of Lands and Minerals Operations.

[FR Doc. 88-8134 Filed 4-13-88; 8:45 am]

BILLING CODE 4310-32-M

[AZ-940-08-4212-13; A-22677]

Arizona; Exchange of Public and Private Lands in La Paz and Mohave Counties

April 5, 1988.

AGENCY: Bureau of Land Management, Interior.

ACTION: Notice of exchange of land.

SUMMARY: This action informs the public of the completion of an exchange between the United States and Robert E. Crowder, III and Robert E. Crowder, Jr. The United States transferred 771.46 acres in La Paz County and accepted title on 5,078.93 acres of private land in Mohave County.

FOR FURTHER INFORMATION CONTACT: Marsha Luke, Arizona State Office, P.O. Box 16563, Phoenix, Arizona 85011. Telephone (602) 241-5534.

SUPPLEMENTARY INFORMATION: On March 30, 1988, the Bureau of Land Management transferred the following described land by Patent No. 02-88-0026 and Deed No. AZ-88-004, pursuant to the Federal Land Policy and Management Act of October 21, 1976:

Gila and Salt River Meridian, Arizona

T. 3 N., R. 15 W.,
Sec. 2, lots 1, 2, 9 and 12.
T. 4 N., R. 15 W.,
Sec. 25, S½;
Sec. 36, W½.

The area described comprises 771.46 acres in La Paz County.

In exchange the surface in the following described land was conveyed to the United States:

Gila and Salt River Meridian, Arizona

T. 12 N., R. 19 W.,
Sec. 11, SW¼SE¼.
T. 14 N., R. 18 W.,
Sec. 1, lots 3 and 4, N½SW¼;
Sec. 5, lots 1 to 4 incl., S½N½, S½;
Sec. 9, N½NE¼, E½SW¼NE¼, SW¼SW¼NE¼, SE¼NE¼, NW¼, S½;
Sec. 11, E½;
Sec. 13, all;
Sec. 15, all;
Sec. 23, all.
T. 15 N., R. 18 W.,
Sec. 31, lot 1.
T 15 N., R. 19 W.,
Sec. 19, W½NE¼;
Sec. 21, SW¼NE¼, NE¼NW¼, SE¼SW¼, N½SE¼;
Sec. 23, E½W½;
Sec. 25, NW¼NE¼, W½SW¼NW¼, SE¼NW¼, SW¼NW¼, S½SW¼, SE¼;
Sec. 29, E½NE¼SE¼;
Sec. 31, N½NE¼SW½, NW¼NW¼SE¼, N½SE¼SE¼;
Sec. 33, S½SW¼NE¼, S½SE¼SW¼, N½NW¼SE¼;
Sec. 35, NW¼, SE¼NE¼SW¼, W½SW¼.
T. 19 N., R. 19 W.,
Sec. 23, SW¼.

The area described comprises 5,078.93 acres in Mohave County.

The purpose of this notice is to inform the public and interested State and local government officials of the exchange of public and private land.

John T. Mezes,

Chief, Branch of Lands and Minerals Operations.

[FR Doc. 88-8130 Filed 4-13-88; 8:45 am]

BILLING CODE 4310-32-M

[CA-060-08-4212-12; CA-21579]

California Desert District and Ukiah District, Realty Action; Exchange of Public and State Lands in Imperial, Inyo, Mendocino, Riverside, San Bernardino and Trinity Counties, CA

AGENCY: Bureau of Land Management, Interior.

ACTION: Notice of Realty Action CA-21579, exchange of public and State lands.

SUMMARY: The following described lands in Mendocino and San Bernardino Counties have been determined to be suitable for disposal by exchange under section 206 of the Federal Land Policy and Management Act of 1976, 43 U.S.C. 1716:

Mount Diablo Meridian, California

T.17N., R.12W.,
Sec. 2: NE¼SE¼;

San Bernardino Meridian, California

T.2N., R. 5E.,
Sec. 1: lot 2 of NE¼, lot 2 of NW¼;
Sec. 4: NE¼NE¼, NE¼NW¼NE¼, E½SE¼NE¼;
T.5N., R.3W.,
Sec. 6: S½SE¼;
T.6N., R.3W.,
Sec. 10: NW¼SW¼;
Sec. 21:NW¼;
Sec. 26: E½NE¼;
Sec. 32: W½NW¼, NW¼SW¼, N½SW¼SW¼, SW¼SW¼SW¼;
T.6N., R.4W.,
Sec. 24: E½SW¼SW¼, SE¼SW¼;
T.8N., R.4W.,
Sec. 19: W½NE¼, Lot 1 of NW¼;
T.9N., R.1E.,
Sec. 23: NE¼SW¼;
Sec. 24: S½SE¼;
T.9N., R.2E.,
Sec. 19: S½N½;
Sec. 26: S½S½;
Sec. 27: S½SE¼;
Sec. 30: S½NE¼, S½ lot 1 of NW¼, S½ lot 2 of NW¼, N½ lot 1 of SW¼, N½ lot 2 of SW¼, N½SE¼;
Sec. 34: N½NE¼, NE¼NW¼;
Sec. 35: N½N½;
T.9N., R.3E.,
Sec. 31: lots 3 through 66, S½NE¼;
T.9N., R.1W.,
Sec. 19: E½E½NE¼;
Sec. 20: All;
T.9N., R.2W.,
Sec. 8: NE¼SW¼;
T.9N., R.3W.,
Sec. 26: NW¼NE¼, N½SW¼NE¼NE¼, S½NW¼, NW¼SW¼, N½SW¼SW¼, SW¼SW¼SW¼;
T.10N., R.1E.,
Sec. 31: S½NE¼, SE¼;
Sec. 32: E½NW¼;
Sec. 34: NE¼, S½NW¼, N½S½;
Sec. 35: N½, N½S½;

Containing 45,362.60 acres, more or less.

In exchange for these lands, the State Lands Commission, State of California, has offered the following lands within a variety of special management areas identified by the Bureau of Land Management:

Mount Diablo Meridian, California

T.25N., R.12W.,
Sec. 36: Tract ;74; excepting 80 acres previously conveyed

San Bernardino Meridian, California

T.2N., R.22E.,
Sec. 36: All;
T.4N., R.18E.,
Sec. 36: All;
T.5N., R.5E.,
Sec. 16: All;
T.5N., R.20E.,
Sec. 36: All;
T.6N., R.3E.,
Sec. 16: All;
T.7N., R.4E.,
Sec. 36: lots 1 through 4, W½E½, W½;
T.8N., R.12E.,
Sec. 36: All;
T.8N., R.13E.,
Sec. 16: N½, SW¼, S½SE¼;
T.9N., R.11E.,
Sec. 16: All;
Sec. 36: All;
T.9N., R.12E.,
Sec. 36: lots 1 through 4, W½E½, W½;
T.10N., R.11E.,
Sec. 16: All;
Sec. 36: All;
T.10N., R.12E.,
Sec. 16: All;
Sec. 36: All;
T.11N., R.11E.,
Sec. 16: All;
T.11N., R.12E.,
Sec. 16: All;
T.11N., R.15E.,
Sec. 36: Tract 44;
T.11N., R.16E.,
Sec. 36: Tract 47;
T.12N., R.11E.,
Sec. 36: All;
T.12N., R.14E.,

Sec. 36: All;
T.12N., R.18E.,
Sec. 16: All;
T.13N., R.15E.,
Sec. 16: All;
T.13N., R.16E.,
Sec. 16: All;
Sec. 36: All;
T.14N., R.12E.,
Sec. 36: All;
T.14N., R.13E.,
Sec. 16: All;
T.14N., R.15E.,
Sec. 36: All;
T.15N., R.9E.,
Sec. 36: All;
T.15N., R.12E.,
Sec. 36: All;
T.15N., R.16E.,
Sec. 36: All;
T.15N., R.14E.,
Sec. 36: All;
T.16N., R.10E.,
Sec. 36: lots 1 through 4, N½S½, N½;
T.17N., R.12E.,
Sec. 36: All;
T.17N., R.12E.,
Sec. 36: lots 1 through 6, N½NE¼, SE¼;
T.19N., R.10E.,
Sec. 16: All;
T.24N., R.4E.,
Sec. 16: All;
T.8S., R.20E.,
Sec. 16: All;
T.12S., R.16E.,
Sec. 36: All;
T.13S., R.17E.,
Sec. 36: NW¼, SW¼, SE¼; excepting 17.13 acres previously conveyed
T.13S., R.17½E.,
Sec. 36: All;
T.14S., R.18E.,
Sec. 16: All;
Sec. 26: NE¼, N½SE¼, SE¼SE¼;
Containing 26,998.02 acres, more or less.

The public land to be conveyed will be subject to the following terms and conditions:

A. Reservation to the United States: A right-of-way thereon for ditches or canals constructed by the authority of the United States. Act of August 30, 1890 (43 U.S.C. 945).

B. Third Party Rights: Public lands conveyed will be subject to the following:

1. Those rights for public highways established under Revised Statute 2477 (foremerly 43 U.S.C. 932).

2. Those rights for a railroad and telegraph line granted to Atchison Topeka and Santa Fe Railway Company by approved map pursuant to the Act of July 27, 1866 (14 Stat. 292).

3. Those rights for a railroad line granted to Atchison Topeka and Santa Fe Railway Company by Right-of-Way No. R-01540 pursuant to the Act of March 3, 1875 (formerly 43 U.S.C. 934-939).

4. Those rights, if valid, for a railroad line granted to San Pedro, Los Angeles and Salt Lake Railway Company, its successors or assigns, by Right-of-Way No. R-01604 pursuant to the Act of March 3, 1875.

5. Those rights, if valid, for ditches granted to Southern California Improvement Company, its successors or assigns, by Right-of-Way No. S-3427 pursuant to the Act of March 3, 1891, as amended (formerly 43 U.S.C. 946-949).

6. Those rights for a flood control channel granted to the County of San Bernardino by Right-of-Way No. R-03157 pursuant to the Act of March 3, 1891, as amended.

7. Those rights for electric transmission lines and distribution lines granted to Southern California Edison Company by Right-of-Way Nos. LA-0152805, LA-0159695, R-324, R-1537, R-3529 and R-4879 pursuant to the Act of March 4, 1911, as amended (43 U.S.C. 961).

8. Those rights for an underground coaxial communications cable granted to American Telephone and Telegraph Company by Right-of-Way No. R-01840 pursuant to the Act of March 4, 1911, as amended.

9. Those rights for telephone lines granted to Continental Telephone Company by Right-of-Way Nos. LA-028932, LA-0170417, R-01554, R-126 and R-322 pursuant to the Act of March 4, 1911, as amended.

10. Those rights for underground gas pipelines granted to Pacific Gas and Electric Company by Right-of-Way Nos. LA-0118349, LA-0140110 and LA-0162199 pursuant to the Act of February 25, 1920, as amended (30 U.S.C. 185).

11. Those rights for underground gas pipelines granted to CalNev Pipeline Company by Right-of-Way Nos. LA-0168999 and R-2537 pursuant to the Act of February 25, 1920, as amended.

12. Those rights for an underground oil pipeline granted to All American Pipeline Company by Right-of-Way No. CA-14013 pursuant to the Act of February 25, 1920, as amended.

13. Those rights for public highways and public highway material site granted to the California State Department of Transportation by Right-of-Way Nos. R-01727, R-01735 and LA-0145975 pursuant to the Act of November 9, 1921 (formerly 23 U.S.C. 1-3).

14. Those rights for an electric transmission line granted to the City of Los Angeles, Department of Water and Power by Right-of-Way No. LA-052174 pursuant to the Act of December 21, 1928 (43 U.S.C. 617d).

15. Those rights for a public highway and public highway material site granted to the California State Department of Transportation by Right-of-Way Nos. R-05755 and R-05927 pursuant to the Act of August 27, 1958 (23 U.S.C. 317).

16. Those rights for an underground water pipeline granted to Bighorn Mountains Water Agency by Right-of-Way No. CA-5232 pursuant to the Act of October 21, 1976 (43 U.S.C. 1761).

17. Those rights for underground telephone cables granted to Continental Telephone Company of California by Right-of-Way Nos. CA-2915 and R-05135 as amended, pursuant to the Act of October 21, 1976.

18. Those rights for an electric transmission line granted to Intermountain Power Agency by Right-of-Way No. CA-8294 pursuant to the Act of October 21, 1976.

19. Those rights for roadways granted to the County of San Bernardino by Right-of-Way Nos. CA-9315 and CA-13200 pursuant to the Act of October 21, 1976.

20. Those rights for an underground water pipeline granted to John VanLeeuwen by Right-of-Way No. CA-17644 pursuant to the Act of October 21, 1976.

21. Those rights for a roadway, conveyor system and underground water pipeline granted to McKee Products Inc. by Right-of-Way No. CA-18112 pursuant to the Act of October 21, 1976.

22. Those rights for an electric distribution line granted to Southern California Edison by Right-of-Way No. CA-18906 pursuant to the Act of October 2, 1976.

23. Those rights for an underground fiber-optic communications cable and regeneration station granted to William Telecommunications Company by Right-of-Way No. CA-19143 pursuant to the Act of October 21, 1976.

24. Those rights for an underground fiber-optic communications cable granted to U.S. Sprint Communications Company by Right-of-Way No. CA-20105 pursuant to the Act of October 21, 1976.

All minerals in the State and public lands will be exchanged. The purpose of this exchange is to acquire lands with significant resource and recreational values and to create more manageable public land units in the following areas:

California Desert District

East Mojave National Scenic Area (San Bernardino County)
Greenwater Canyon Area of Critical Environmental Concern (Inyo County)
Mule Mountain Long-Term Visitor Area (Riverside County)
Imperial Sand Hills Recreation Area (Imperial County)
Johnson Valley OHV Recreation Area (San Bernardino County)

Mammoth Wash OHV Recreation Area (Imperial County)

Ukiah District

Yolla-Bolly Middle Eel Wilderness (Mendocino and Trinity Counties)

Disposal of the fragmented and isolated public land tracts selected by the State of California is consistent with the management objectives of the California Desert Plan and the East Mendocino Management Framework Plan. The exchange would benefit the people of the State of California and the general public. The public interest would be well served by making the exchange.

As provided in 43 CFR 2201.1(b), the publication of this Notice in the **Federal Register** shall segregate, subject to existing valid rights, the public lands described herein from all other forms of appropriation under the public land laws, including the mining laws and mineral leasing laws.

The segregative effect will terminate upon issuance of a conveyance document, upon publication in the **Federal Register** of a termination of the segregation, or two years from the date of this publication, whichever occurs first.

The values of the lands to be exchanged are approximately equal. Equalization of values will be achieved by acreage adjustment.

Additional information concerning the exchange is availabe at the Barstow Resource Area Office, 150 Coolwater Lane, Barstow, CA 92311 (619–256–3591) and the California Desert District Office, 695 Spruce Street, Riverside, CA 92507.

For a period of forty-five (45) days from the date of publication of this Notice in the **Federal Register**, interested parties may submit comments to the District Manager, California Desert District, at the above address.

Date: April 4, 1988.

H. W. Riecker,

Acting District Manager.

[FR Doc. 88–8119 Filed 4–13–88; 8:45 am]

BILLING CODE 4310–40–M

[OR–090–08–4212–13:GP8–120:OROR 44047]

Realty Action; Exchange; Oregon

AGENCY: Bureau of Land Management, Interior.

ACTION: Notice of realty action—exchange of public lands in Lane County, Oregon.

SUMMARY: The following described public lands are being considered for disposal by exchange pursuant to section 206 of the Federal Land Policy and Management Act of 1976 (43 U.S.C. 1716):

Willamette Meridian, Oregon

T. 19 S., R. 1 E.,
Sec. 26: NW¼NW¼.
T. 21 S., R. 1 W.,
Sec. 17 Lot 1.
T. 22 S., R. 1 W.,
Sec. 7: Lot 27.
T. 22 S., R. 2 W.,
Sec. 12: SW¼NE¼, S½NW¼.
Comprising 230.82 acres, more or less.

Final determination on disposal will await completion of an environmental assessment.

In accordance with the regulations of 43 CFR 2201.1(b), publication of this Notice will segregate the affected public lands from appropriation under the public land laws, including the mining laws, subject to valid existing rights, but not the mineral leasing laws or from exchange pursuant to the Federal Land Policy and Management Act of 1976.

The segregation of the above-described lands shall terminate upon issuance of a document conveying such lands or upon publication in the **Federal Register** of a notice of termination of the segregation; or the expiration of two years from the date of publication, whichever occurs first.

DATE: For a period of up to and including May 31, 1988, interested parties may submit comments to the Eugene District Manager at the address shown below.

ADDRESSES: Detailed information concerning the proposed exchange is available from the Eugene District Office, P.O. Box 10226 (1255 Pearl Street), Eugene, Oregon 97440.

FOR FURTHER INFORMATION CONTACT: Ronald Wold, Eugene District Office, at (503) 683–6403.

Date of Issue: April 7, 1988.

Ronald L. Kaufman,

District Manager.

[FR Doc. 88–8113 Filed 4–13–88; 8:45 am]

BILLING CODE 4310–33–M

[ES–940–08–4520–13; (ES–038367, Group 172)]

Florida; Filing of Plats of Subdivision of Sections 1, 3, 6, 10, 25, 26, 30, 32 and 35

April 5, 1988.

1. The plat, in nine sheets, of the survey of the subdivision of sections 1, 3, 6, 10, 25, 26, 30, 32 and 35 and the metes-and-bounds survey of certain parcels in sections 6, 25, 26 and 35, Township 15 South, Range 24 East, Tallahassee Meridian, Florida, will be officially filed in the Eastern States Office, Alexandria, Virginia at 7:30 a.m., on May 20, 1988.

2. The survey was made at the request of the Forest Service.

3. All inquiries or protests concerning the technical aspects of the survey of subdivisions must be sent to the Deputy State Director for Cadastral Survey, Eastern States Office, Bureau of Land Management, 350 South Pickett Street, Alexandria, Virginia 22304, prior to 7:30 a.m., May 20, 1988.

4. Copies of the plat will be made available upon request and prepayment of the reproduction fee of $4.00 per copy.

Lane J. Bouman,

Deputy State Director for Cadastral Survey and Support Services.

[FR Doc. 88–8145 Filed 4–13–88; 8:45 am]

BILLING CODE 4310–GJ–M

[OR–943–08–4520–12: GP8–115]

Filing of Plats of Survey; Oregon/Washington

AGENCY: Bureau of Land Management, Interior.

ACTION: Notice.

SUMMARY: The plats of survey of the following described lands have been officially filed in the Oregon State Office, Portland, Oregon on the dates hereinafter stated:

Willamette Meridian, Oregon

T. 29 S., R. 11 W.,
T. 8 S., R. 19 E.

The above listed plats were accepted February 12, 1988 and officially filed February 16, 1988.

T. 26 S., R. 14 E.,
T. 28 S., R. 12 W.

The above listed plats were accepted March 4, 1988 and officially filed March 21, 1988.

T. 22 S., R. 9 W., Accepted March 25, 1988 and officially filed March 29, 1988.

Washington

T. 38 N., R. 1 E., Accepted February 12, 1988 and officially filed February 16, 1988.
T. 26 N., R. 17 E., Accepted February 26, 1988 and officially filed February 29, 1988.

The above-listed plats represent dependent resurveys, survey and subdivision.

FOR FURTHER INFORMATION CONTACT: Bureau of Land Management, 825 NE. Multnomah Street, P.O. Box 2965, Portland, OR 97208.

B. LaVelle Black,

Chief, Branch of Lands and Minerals Operations.

Dated: April 7, 1988.

[FR Doc. 88–8125 Filed 4–13–88; 8:45 am]

BILLING CODE 4310–33–M

[OR-943-08-4520-12: GP8-116]

Filing of Plats of Survey; Oregon/Washington

AGENCY: Bureau of Land Management, Interior.

ACTION: Notice.

SUMMARY: The plats of survey of the following described land will be officially filed at 8:30 a.m., May 27, 1988, in the Oregon State Office, Portland, Oregon.

Willamette Meridian, Washington

T. 34 N., R. 20 E.

The plat represents a dependent resurvey of a portion of the east boundary, a portion of the boundaries of Homestead Entry Survey No. 217 and Homestead Entry Survey 218, Tract B, designed to restore the corners in their true original locations according to the best available evidence, and the metes-and-bounds survey of Tract 37 in unsurveyed T. 34 N., R. 20 E., Willamette Meridian, Washington. The plat returns areas of unsurveyed land totaling 135.06 acres.

The land encompassed in this survey is located about five miles west of the town of Winthrop, Washington. Access is by way of County Road No. 1117 and Forest Service Road No. 500, from the south, and County Road No. 9120 and Forest Service Road No. 100, from the northwest.

The land is rolling hills, bisected by Wolf Creek, which flows south-easterly through the area. Elevations range from 2,900 feet above sea level near Corner No. 2, Homestead Entry No. 217, to 2,300 feet above sea level near Wolf Creek on the east boundary of the township.

The timber consists primarily of ponderosa pine and fir, with cedar and aspen located along the creek bottom. Undergrowth consists of sagebrush, deer brush, and native grasses.

The principal use of the area is timber harvesting and cattle grazing. There are numerous cross-country ski trails in the area.

There were no mineral deposits noted along the lines surveyed.

FOR FURTHER INFORMATION CONTACT: Bureau of Land Management, 825 N.E. Multnomah Street, P.O. Box 2965, Portland, OR 97208.

B. LaVelle Black,

Chief, Branch of Lands and Minerals Operations.

Dated: April 7, 1988.

[FR Doc. 88-8128 Filed 4-13-88; 8:45 am]

BILLING CODE 4310-33-M

[ID-943-08-4220-10; I-7317]

Partial Termination of Proposed Withdrawal and Reservation of Lands; Idaho

AGENCY: Bureau of Land Management, Interior.

ACTION: Withdrawal application termination.

SUMMARY: This notice partially terminates a withdrawal application filed by the Forest Service on lands within ¼ mile of either side of the Lower Salmon River. The application is being relinquished, in part, because the lands are adequately protected by the "Wild Segment" of the Salmon Wild and Scenic River, the Frank Church River of No Return Wilderness and the Gospel Hump Wilderness area designations. The lands involved have been and will continue to be segregated from the mining and mineral leasing laws by virtue of the Wild and Scenic River and Wilderness Area designations. Accordingly, this action involves a record-clearing procedure, only.

EFFECTIVE DATE: May 2, 1988.

FOR FURTHER INFORMATION CONTACT: William E. Ireland, BLM, Idaho State Office, 3380 Americana Terrace, Boise, Idaho 83706, 208-334-1597.

Notice of an application, serial number I-7317, for withdrawal and reservation of lands was posted in the land office records October 1, 1973. The applicant agency has cancelled its application insofar as it involved the lands described below. Therefore, pursuant to the regulations contained in 43 CFR Part 2091, such lands will be at 9:00 a.m. on May 2, 1988, relieved of the segregative effect of the above-mentioned application.

The lands in this notice of termination are all public lands located within ¼ mile of either side of the Lower Salmon River from Wheat Creek to Long Tom Bar within the following-described townships:

T. 23 N., R. 14 E.
T. 24 N., Rgs. 5, 6, 7, 8, 11, 12, 13 and 14 E.
T. 25 N., Rgs. 5, 6, 8, 9, 10, 11 and 12 E.
T. 26 N., Rgs. 10 and 11 E.

The areas described are located within Idaho and Lemhi Counties.

William E. Ireland,

Chief, Realty Operations Section.

Date: April 6, 1988.

[FR Doc. 88-8121 Filed 4-13-88; 8:45 am]

BILLING CODE 4310-GG-M

[ID-943-08-4220-11; I-2110]

Proposed Continuation of Withdrawal; Idaho

AGENCY: Bureau of Land Management, Interior.

ACTION: Notice.

SUMMARY: The U.S. Forest Service proposes that a 16.15 acre withdrawal of National Forest System lands for the State Creek Recreation Area continue for an additional 20 years. The lands will remain closed to surface entry and mining but have been and will remain open to mineral leasing.

EFFECTIVE DATE: Comments should be received by July 13, 1988.

FOR FURTHER INFORMATION CONTACT: Larry R. Lievsay, BLM, Idaho State Office, 3380 Americana Terrace, Boise, Idaho 83706, 208-334-1735.

The U.S. Forest Service proposes that the existing land withdrawal made by Public Land Order No. 4580, be continued for a period of 20 years pursuant to section 204 of the Federal Land Policy and Management Act of 1976, 90 Stat. 2751, 43 U.S.C. 1714.

The land is described as follows:

Boise Meridian

T. 27 N., R. 21 E., unsurveyed,
Sec. 34, a tract of land described as follows:

Beginning at Corner No. 8 of the Gold Nugget placer claim, MS 3303, identical to Corner No. 8 of HES 94, a granite rock 8" × 8" × 6" above ground, with "X" chiseled on top. From this initial point by M and B: N 86° 23' W. 775' to the east right-of-way boundary U.S. Highway 93; thence N 0° 21' W. 1690' along highway right-of-way to a point on the withdrawal boundary between Corner No. 3 of the withdrawn area and Corner No. 10, Gold Nugget Placer claim, MS 3303; thence N 72° 29' E. 116' to Corner No. 10, Gold Nugget placer claim, MS 3303; thence S 7° 21' E. 277.62' to Corner No. 9, Gold Nugget placer claim, MS 3303; thence S 22° 52' E. 1634.23' to Corner No. 8, HES 94, the place of beginning.

The area described contains 16.15 acres in Lemhi County.

The purpose of the withdrawal is to protect the State Creek Recreation Area. The improvements are valued at $250,000. The withdrawal segregates the land from operation of the public land laws generally, including the mining laws, but not the mineral leasing laws. No change is proposed in the purpose or segretative effect of the withdrawal.

For a period of 90 days from the date of publication of this notice, all persons who wish to submit comments in connection with the proposed withdrawal continuation may present their views in writing to the Idaho State Director at the above address.

The authorized officer of the Bureau of Land Management will undertake such investigations as are necessary to determine the existing and potential demand for the land and its resources. A report will also be prepared for consideration by the Secretary of the Interior, the President, and Congress, who will determine whether or not the withdrawal will be continued and, if so, for how long. The final determination on the continuation of the withdrawal will be published in the **Federal Register.** The existing withdrawal will continue until such final determination is made.

William E. Ireland,

Chief, Realty Operations Section.

Date: April 7, 1988.

[FR Doc. 88-8122 Filed 4-13-88; 8:45 am]

BILLING CODE 4310-GG-M

[OR-943-08-4220-11; GP-08-119; OR-3530(WASH), ORE-016849(WASH)]

Proposed Continuation of Withdrawals; Washington

AGENCY: Bureau of Land Management, Interior.

ACTION: Notice.

SUMMARY: The U.S. Army Corps of Engineers proposes that two separate land withdrawals continue for an additional 88 years and requests that the lands involved remain closed to surface entry and mining.

FOR FURTHER INFORMATION CONTACT: Champ Vaughan, BLM Oregon State Office, P.O. Box 2965, Portland, Oregon 97208, 503-231-6905.

The U.S. Army Corps of Engineers proposes that the following identified land withdrawals be continued for a period of 88 years pursuant to section 204 of the Federal Land Policy and Management Act of 1976, 90 Stat. 2751; 43 U.S.C. 1714. All the lands are within the Lower Granite Lock and Dam Project and are described as follows:

1. OR-3530(WASH), Public Land Order No. 4581.

Containing 7.23 acres.

Located on a submerged island in the Snake River between Asotin and Whitman Counties, Washington.

T. 11 N., R. 46 E., W.M., sec. 19, Washington.

2. ORE-016849 (WASH), Public Land Order No. 3929.

Containing 158.70 acres.

Located in Garfield and Whitman Counties, approximately 10 miles north of Asotin, Washington.

T. 13 N., R. 43 E., W.M., sec. 25; T. 12 N., R. 44 E., W.M. sec. 25; T. 13 N., R. 44 E., W.M., sec. 33; and T. 11 N., R. 43 E., W.M. sec. 23, Washington.

The withdrawals currently segregate the lands from operation of the public land laws generally, including the mining laws. The U.S. Army Corps of Engineers requests no changes in the purpose or segregative effect of the withdrawals.

For a period of 90 days from the date of publication of this notice, all persons who wish to submit comments, suggestions, or objections in connection with the proposed withdrawal continuations may present their views in writing to the undersigned officer at the address specified above.

The authorized offer of the Bureau of Land Management will undertake such investigations as are necessary to determine the existing and potential demand for the lands and their resources. A report will also be prepared for consideration by the Secretary of the Interior, the President and Congress, who will determine whether or not the withdrawals will be continued and if so, for how long. The final determination on the continuation of the withdrawals will be published in the **Federal Register.** The existing withdrawals will continue until such final determination is made.

B. LaVelle Black,

Chief, Branch of Lands and Minerals Operations.

Dated: April 8, 1988.

[FR Doc. 88-8120 Filed 4-13-88; 8:45 am]

BILLING CODE 4310-33-M

[WY-930-08-4220-10; W-101818]

Proposed Withdrawal and Public Meeting; Wyoming

AGENCY: Bureau of Land Management, Interior.

ACTION: Notice.

SUMMARY: The Bureau of Land Management proposes to withdraw 11,335.86 acres of public land and mineral estate in Big Horn County, to protect the Spanish Point Caves and associated subsurface karstic waterways. This notice closes the land for up to 2 years from surface entry and mining. The land will remain open to mineral leasing.

DATE: Comments must be received by July 13, 1988.

ADDRESS: Comments should be sent to the Wyoming State Director, BLM, 2515 Warren Avenue, P.O. Box 1828, Cheyenne, Wyoming 82003.

FOR FURTHER INFORMATION CONTACT: Tamara Gertsch, BLM Wyoming State Office, 307-772-2072.

SUPPLEMENTARY INFORMATION: On March 24, 1988, a petition was approved allowing the Bureau of Land Management to file an application to withdraw the following described public land from settlement, sale, location, or entry under the general land laws, including the mining laws, subject to valid existing rights

Sixth Principal Meridian, Wyoming

T. 50 N., R. 88 W.,
Sec. 5, lots 6 and 7.
T. 50 N., R. 89 W.,
Sec. 1, lots 12-20, N½NW¼SW¼;
Sec. 2, lots 17-20, N½S½;
Sec. 3, lots 8, 9, 19, 20, SE¼;
Sec. 4, lots 5, 6, 11-14, 19, and 20.
T. 51 N., R. 88 W.,
Sec. 4, SW¼NW¼, W½SW¼;
Sec. 5, lots 6-10, SW¼NE¼, S½SE¼NE¼, SE¼;
Sec. 8, lot 1, NW¼NE¼;
Sec. 28, W½SW¼;
Sec. 32, lots 2-4, NE¼, N½SE¼, SW¼SE¼;
Sec. 33, W½NW¼.
T. 51 N., R. 89 W.,
Sec. 1, lot 11;
Sec. 11, E½E½;
Sec. 12, lots 1-4, SW¼NE¼, S½NW¼, SW¼, E½SE¼;
Sec. 13, lots 1-3, N½NW¼,
Sec. 14, lots 1 and 2, NE¼, S½NW¼, NE¼SW¼; S½SW¼, W½SE¼;
Sec. 22, E½E½;
Sec. 23, W½;
Sec. 26, W½NW¼;
Sec. 27, E½;
Sec. 33, E½SE¼;
Sec. 34, N½, N½NE¼SW¼; W½SW¼.
T. 52 N., R. 88 W.,
Sec. 16, SW¼SW¼;
Sec. 17, E½SE¼SE¼;
Sec. 32, lot 4, SW¼SE¼.
T. 52 N., R. 89 W.,
Sec. 21, S½;
Sec. 22, S½N½, S½;
Sec. 23, SW¼NE¼, SE¼NW¼, N½S½, Sw¼SW¼.

Federal surface and subsurface estates, managed by the U.S. Forest Service, Bighorn National Forest:

T. 51 N., R. 88 W.,
Sec. 4, lots 5-7, S½NE¼, SE¼NW¼, E½SW¼, SE¼;
Sec. 9, NE¼, E½NW¼, N½NE¼SW¼ N½NW¼SE¼;
Sec. 28, E½, E½W½;
Sec. 33, E½, E½W½;
T. 52 N., R. 88 W.,
Sec. 15, W½ Unsurveyed;
Sec. 16, E½, E½W½;
Sec. 21, NE¼, E½NW¼, N½NE¼SW¼, N½SE¼;
Sec. 22, NW¼, N½SW¼ Unsurveyed;
Sec. 33, SE¼SW¼, S½SE¼.

Private surface with Federal mineral estate managed by the Bureau of Land Management.

T. 51 N., R. 89 W.,
Sec. 1, lot 10, SW¼;
Sec. 12, NW¼NE¼, N½NW¼.
T. 52 N., R. 88 W.,
Sec. 20, lots 1-3, NE¼, NW¼NW¼SE¼.
T. 52 N., R. 89 W.,

Sec. 14, NE¼NE¼SW¼; W½NE¼SW¼, W½SW¼, NW¼SE¼SW¼.
Sec. 15, SE¼NE¼SE¼, NE¼SW¼SE¼, S½SW¼SE¼, SE¼SE¼;
Sec. 22, N½NE¼, NE¼NW¼;
Sec. 23, E½NE¼, SE¼NW¼NE¼, W½NW¼, SE¼SW¼, S½SE¼;
Sec. 24, lots 2–4, S½SW¼NW¼, W½NW¼, SW¼, W½SE¼;
Sec. 25, N½NW¼NW¼;
Sec. 28, NE¼NE¼NE¼.

The area described aggregates approximately 11,335.86 acres in Big Horn County.

The purpose of the proposed withdrawal is to protect the Spanish Point Caves and associated subsurface karstic waterways.

For a period of 90 days from the date of publication of this notice, all persons who wish to submit comments, suggestions, or objections in connection with the proposed withdrawal may present their views in writing to the undersigned officer of the Bureau of Land Management.

Notice is hereby given that a public meeting will be held in connection with the proposed withdrawal. A notice of the time and place will be published in the **Federal Register** at least 30 days before the scheduled date of the meeting.

The application will be processed in accordance with the regulations set forth in 43 CFR Part 2300.

For a period of 2 years from the date of publication of this notice in the **Federal Register**, the land will be segregated as specified above unless the application is denied or canceled, or the withdrawal is approved prior to that date. The temporary uses which may be permitted during this segregative period are only those uses that are specifically permited by an authorized officer of the Bureau of Land Management.

Hillary A. Oden,
State Director.
April 7, 1988.
[FR Doc. 88–8124 Filed 4–13–88; 8:45 am]
BILLING CODE 4310-22-M

[CA-010-08-4322-02]

Bakersfield District Advisory Council Meeting

AGENCY: Bureau of Land Management, Interior.

ACTION: Notice of Bakersfield District Advisory Council Meeting.

SUMMARY: Notice is hereby given in accordance with Pub. L. 94–579 and 43 CFR Part 1780 that the Bakersfield District Advisory Council to the Bureau of Land Management, U.S. Department of the Interior, will meet formally May 20, and 21, 1988 in Mariposa, California. The Friday meeting will begin at 8:00 am with a raft trip down the Merced River. The Saturday Meeting will be held in the banquet room of Tink's Little Acre Restaurant starting at 8:00 am.

SUPPLEMENTARY INFORMATION: The District Advisory Council meeting agenda on Saturday will include an overview of the river, recreation on the river, commercial rafting, mining on the river, and wild and scenic legislation.

The public is invited to address the Council regarding any BLM land management issue on Saturday, May 21 from 1:00 pm to 2:30 pm.

Summary minutes of the meeting will be maintained in the Bakersfield District Office and will be available for public inspection and reproduction during regular business hours within 30 days following the meeting.

FOR FURTHER INFORMATION CONTACT: Larry Mercer, Public Affairs Officer, Bakersfield District Office, Bureau of Land Management, 800 Truxtun Avenue, Room 311, Bakersfield, California 93301; (805) 861–4191.

Date: April 7, 1988.
Robert D. Rheiner, Jr.,
District Manager.
[FR Doc. 88–8178 Filed 4–13–88; 8:45 am]
BILLING CODE 4310-40-M

[AZ-027-7-21]

Phoenix District Planning Amendment/ Environmental Assessment and Decision Record, Phoenix District, AZ; Availability and Public Comment

AGENCY: Bureau of Land Management (BLM), Interior.

ACTION: Notice of availability of the decision record, final EA and planning amendment to the Lower Gila South RMP.

SUMMARY: In compliance with the Federal Land Policy and Management Act of 1976 and section 102(2)(c) of the National Environmental Policy Act of 1969, a Planning Amendment and Final Environmental Assessment was prepared by the Phoenix District, Arizona. A subsequent Decision Record and Finding of No Significant Impact (FONSI) is made available for public comment.

The public review and comment period will end thirty (30) days from the date of this notice in the **Federal Register** after which the Decision will become final.

The Decision finds it appropriate to amend the Lower Gila South RMP for the purpose of the designation of public lands relative to off-road vehicle (ORV) use and designation of Areas of Critical Environmental Concern (ACEC).

Public Participation

Copies of the Decision Record and FONSI are available upon request from the Phoenix District Office, 2015 West Deer Valley Road, Phoenix, Arizona 85027, (602) 863–4464. Public reading copies of the amendment/EA may be reviewed at the above address and the Bureau of Land Management, Arizona State Office, 2707 North Seventh Street, Phoenix Arizona 85014, (602) 241–5547.

Written comments should be sent to William T. Childress, Area Manager, Bureau of Land Management, 2015 West Deer Valley Road, Phoenix, Arizona 85027.

Herman Kast,
Acting District Manager.
Dated: March 30, 1988.
[FR Doc. 88–8118 Filed 4–13–88; 8:45 am]
BILLING CODE 4310-32-M

Minerals Management Service

Development Operations Coordination Document; ODECO Oil and Gas Co.

AGENCY: Minerals Management Service, Interior.

ACTION: Notice of the receipt of a proposed Development Operations Coordination Document (DOCD).

SUMMARY: Notice is hereby given that ODECO Oil & Gas Company has submitted a DOCD describing the activities it proposes to conduct on Lease OCS–G 5695, Block 113, Main Pass Area, offshore Louisiana. Proposed plans for the above area provided for the development and production of hydrocarbons with support activities to be conducted from an existing onshore base located at Venice, Louisiana.

DATE: The subject DOCD was deemed submitted on April 1, 1988. Comments must be received by April 29, 1988, or 15 days after the Coastal Management Section receives a copy of the plan from the Minerals Management Service.

ADDRESSES: A copy of the subject DOCD is available for public review at the Public Information Office, Gulf of Mexico OCS Region, Minerals Management Service, 1201 Elmwood Park Boulevard, Room 114, New Orleans, Louisiana (Office Hours: 8 a.m. to 4:30 p.m., Monday through Friday). A copy of the DOCD and the accompanying Consistency Certification are also available for public review at the Coastal Management Section Office located on the 10th Floor of the State Lands and Natural Resources Building.

625 North 4th Street, Baton Rouge, Louisiana (Office Hours: 8 a.m. to 4:30 p.m., Monday through Friday). The public may submit comments to the Coastal Management Section, Attention OCS Plans, Post Office Box 44487, Baton Rouge, Louisiana 70805.

FOR FURTHER INFORMATION CONTACT: Mr. Michael D. Joseph, Minerals Management Service, Gulf of Mexico OCS Region, Field Operations, Plans, Platform and Pipeline Section, Exploration/Development Plans Unit; Telephone (504) 736-2875.

SUPPLEMENTARY INFORMATION: The purpose of this Notice is to inform the public, pursuant to section 25 of the OCS Lands Act Amendments of 1978, that the Minerals Management Service is considering approval of the DOCD and that it is available for public review. Additionally, this Notice is to inform the public, pursuant to § 930.61 of Title 15 of the CFR, that the Coastal Management Section/Louisiana Department of Natural Resources is reviewing the DOCD for consistency with the Louisiana Coastal Resources Program.

Revised rules governing practices and procedures under which the Minerals Management Service makes information contained in DOCDs available to affected States, executives of affected local governments, and other interested parties became effective December 13, 1979 (44 FR 53685).

Those practices and procedures are set out in revised § 250.34 of Title 30 of the CFR.

Date: April 5, 1988.

J. Rogers Pearcy,

Regional Director, Gulf of Mexico OCS Region.

[FR Doc. 88-8136 Filed 4-13-88; 8:45 am]

BILLING CODE 4310-MR-M

Development Operations Coordination Document; Tenneco Oil Exploration and Production

AGENCY: Minerals Management Service, Interior.

ACTION: Notice of the receipt of a proposed Development Operations Coordination Document (DOCD).

SUMMARY: Notice is hereby given that Tenneco Oil Exploration and Production has submitted a DOCD describing the activities it proposes of conduct on Lease OCS-G 2047, Block 272, East Cameron Area, offshore Louisiana. Proposed plans for the above area provide for the development and production of hydrocarbons with support activities to be conducted from an existing onshore base located at Intracoastal City, Louisiana.

DATE: The subject DOCD was deemed submitted on April 5, 1988.

ADDRESS: A copy of the subject DOCD is available for public review at the Public Information Office, Gulf of Mexico OCS Region, Minerals Management Service, 1201 Elmwood Park Boulevard, Room 114, New Orleans, Louisiana (Office Hours: 8 a.m. to 4:30 p.m., Monday through Friday).

FOR FURTHER INFORMATION CONTACT: Mr. Warren Williamson; Minerals Management Service, Gulf of Mexico OCS Region, Field Operations, Plans, Platform and Pipeline Section, Exploration/Development Plans Unit; Telephone (504) 736-2874.

SUPPLEMENTARY INFORMATION: The purpose of this Notice is to inform the public, pursuant to section 25 of the OCS Lands Act Amendments of 1978, that the Minerals Management Service is considering approval of the DOCD and that it is available for public review.

Revised rules governing practices and procedures under which the Minerals Management Service makes information contained in DOCDs available to affected States, executives of affected local governments, and other interested parties became effective December 13, 1979 (44 FR 53685). Those practices and procedures are set out in revised § 250.34 of Title 30 of the CFR.

Date: April 5, 1988.

J. Rogers Pearcy,

Regional Director, Gulf of Mexico OCS Region.

[FR Doc. 88-8133 Filed 4-13-88; 8:45 am]

BILLING CODE 4310-MR-M

INTERSTATE COMMERCE COMMISSION

[Finance Docket No. 31127]

CSX Transportation, Inc., and Central of Georgia Railroad Co.—Exemption; Joint Project for Relocation of a Line of Railroad

The notice of exemption published October 28, 1987 [52 FR 41515], concerned the joint project of CSX Transportation, Inc. (CSX) and Central of Georgia Railroad Company (Central) to relocate a line of railroad. The joint project will provide for relocation of a small segment of CSX's main line in Valdosta, GA, to a right-of-way previously used by Central that passes under the Patterson Street overhead bridge.

As described in the previous notice, the joint project involves a number of activities. The notice indicated that insofar as the project involves the relocation of a line of railroad that does not disrupt service to shippers, it falls within the class of exempted transactions identified at 49 CFR 1180.2(d)(5). The notice indicated further that a decision of the Commission, Director Mackall, served October 28, 1987, had rejected, as not falling under 49 CFR 1180.2(d)(5), two of the activities proposed by the carriers.

The activities rejected were: (1) The abandonment of the former Central main line track between mileposts GF-27.75; and GF-28.75 and (2) the realignment or contruction of two segments of connector track (510 feet and 547 feet). In an appeal filed November 17, 1987, Central described the joint relocation project in detail, demonstrating that the abandonment of the former Central main line track was necessary to the project and would not affect rights of shippers, and the realignment or construction of the connector track segments was already exempt under Commission precedent. The appeal was granted in a decision served concurrently with this one. Accordingly, the prior notice of exemption is being supplemented here to include the above-described abandonment.

Use of this exemption will be conditioned on appropriate labor protection. Any employees affected by the abandonment of the former Central main line will be protected by the conditions in *Oregon Short Line R. Co.-Abandonment-Goshen*, 360 I.C.C. 91 (1979).

This notice is effective immediately. Petitions to revoke the exemption under 49 U.S.C. 10505(d) may be filed at any time.

Decided: April 6, 1988.

By the Commission, Chairman Gradison, Vice Chairman Andre, Commissioners Sterrett, Simmons, and Lamboley.

Noreta R. McGee,

Secretary.

[FR Doc. 88-6172 Filed 4-13-88; 8:45 am]

BILLING CODE 7035-01-M

DEPARTMENT OF LABOR

Mine Safety and Health Administration

[Docket No. M-88-50-C]

HICO Coal Co.; Petition for Modification of Application of Mandatory Safety Standard

HICO Coal Company, P.O. Box 72, Woodbine, Kentucky 40771 has filed a

petition to modify the application of 30 CFR 75.313 (methane monitor) to its No. 1 Mine (I.D. No. 15-16155) located in Whitley County, Kentucky. The petition is filed under section 101(c) of the Federal Mine Safety and Health Act of 1977.

A summary of the petitioner's statements follows:

1. The petition concerns the requirement that a methane monitor be installed on any electric face cutting equipment, continuous miner, longwall face equipment and loading machine and is required to be kept operative and properly maintained and frequently tested.

2. Petitioner states that no methane has been detected in the mine. The three wheel tractors are permissible DC powered machines, with no hydraulics. The bucket is a drag type, where approximately 30-40% of the coal is hand loaded. Approximately 20% of the time that the tractor is in use, it is used as a man trip and supply vehicle.

3. As an alternate method, petitioner proposes to use hand held continuous oxygen and methane monitors in lieu of methane monitors on three wheel tractors. In further support of this request, petitioner states that:

(a) Each three wheel tractor will be equipped with a hand held continuous monitoring methane and oxygen detector and all persons will be trained in the use of the detector;

(b) A gas test will be performed, prior to allowing the coal loading tractor in the face area, to determine the methane concentration in the atmosphere. The air quality will be monitored continuously after each trip, provided the elapsed time between trips does not exceed 20 mimutes. This will provide continuous monitoring of the mine atmosphere for methane to assure any undetected methane buildup between trips;

(c) If one percent of methane is detected, the operator will manually deenergize the battery tractor immediately. Production will cease and will not resume until the methane level is lower than one percent;

(d) A spare continuous monitor will be available to assure that all coal hauling tractors will be equipped with a continuous monitor;

(e) Each monitor will be removed from the mine at the end of the shift, and will be inspected and charged by a qualified person. The monitor will also be calibrated monthly; and

(f) No alterations or modifications will be made in addition to the manufacturer's specifications.

4. Petitioner states that the proposed alternate method will provide the same degree of safety for the miners affected as that afforded by the standard.

Request for Comments

Persons interested in this petition may furnish written comments. These comments must be filed with the Office of Standards, Regulations and Variances, Mine Safety and Health Administration, Room 627, 4015 Wilson Boulevard, Arlington, Virginia 22203. All comments must be postmarked or received in that office on or before May 16, 1988. Copies of the petition are available for inspection at that address.

Patricia W. Silvery,

Director, Office of Standards, Regulations and Variances.

Date: April 8, 1988.

[FR Doc. 88-8160 Filed 4-13-88; 8:45 am]

BILLING CODE 4510-43-M

[Docket No. M-88-66-C]

Wolf-Creek Collieries Co., Petition for Modification of Application of Mandatory Safety Standard

Wolf-Creek Collieries Company, Caller 802, Lovely, Kentucky 41231 has filed a petition to modify the application of 30 CFR 75.1002 (location of trolley wires, trolley feeder wires, high-voltage cables and transformers) to its No. 4 Mine, Longwall Panels B and C (I.D. 15-04020) located in Martin County, Kentucky. The petition is filed under section 101(c) of the Federal Mine Safety and Health Act of 1977.

A summary of the petitioner's statements follows:

1. The petition concerns the requirement that trolley wires and trolley feeder wires, high-voltage cables and transformers not be located inby the last open crosscut and be kept at least 150 feet from pillar workings.

2. Petitioner states that the longwall mining systems will increase in width, which will require additional horsepower to power the longwall system, nominally 1950 and 2500 horsepower. In order to supply power to such a mining system from a power system limited to 1,000 volts, the following problems arise:

(a) The ampacity requirements at 1,000 volts are such that very large and heavy cables must be used. These large, heavy cables cause congested work space and handling problems. Accident information indicates that a large number of electrical-related injuries are strains and sprains incurred during cable handling;

(b) Poor voltage regulation resulting in motor overheating and lack of torque to be applied to the face conveyor; and

(c) A diminished safety factor as the interrupting limits of the available circuit breakers at 1,000 volts is approached.

3. As an alternate method, petitioner proposes to use high-voltage (not to exceed 2,400 volt) cables to supply power to permissible longwall face equipment in or inby the last open crosscut, with specific equipment and conditions as outlined in the petition.

4. Petitioner states that the proposed alternate method will provide the same degree of safety for the miners affected as that afforded by the standard.

Request for Comments

Persons interested in this petition may furnish written comments. These comments must be filed with the Office of Standards, Regulations and Variances, Mine Safety and Health Administration, Room 626, 4015 Wilson Boulevard, Arlington, Virginia 22203. All comments must be postmarked or received in that office on or before May 16, 1988. Copies of the petition are available for inspection at that address.

Patricia W. Silvey,

Director, Office of Standards, Regulations and Variances.

Date: April 6, 1988.

[FR Doc. 88-8159 Filed 4-13-88; 8:45 am]

BILLING CODE 4510-43-M

Assistant Secretary for Veterans' Employment and Training

Secretary of Labor's Committee on Veterans' Employment Meeting; Extension of Comment Period

AGENCY: Assistant Secretary for Veterans' Employment and Training, Labor.

SUMMARY: This document extends the comment period for persons wishing to submit written comment regarding the Secretary of Labor's Committee on Veterans' Employment National Forum on "Workforce 2000 and America's Veterans" set forth in the **Federal Register** at 53 FR No. 45, pp. 7427-7428, March 8, 1988.

DATES: The comment period is extended through May 23, 1988.

ADDRESSEE: Written comments (three copies) should be submitted to the National Veterans Training Institute (NVTI), University of Colorado at Denver, 1250 14th Street, Suite 650, Denver, CO 80202, telephone: (800) 331-0562.

FOR FURTHER INFORMATION CONTACT: Lesley A. Elliott, Executive Assistant to the Assistant Secretary for Veterans'

Employment and Training, 200 Constitution Avenue, NW., Room S1313, Washington, DC 20210, Tel. (202) 523-9116.

SUPPLEMENTARY INFORMATION: On March 8, 1988, the Assistant Secretary of Labor for Veterans' Employment and Training published a notice (53 FR No. 45 7427) of a meeting of the Secretary of Labor's Committee on Veterans' Employment on April 19, 20 and 21 for a National Forum on Workforce 2000 and America's Veterans. The Forum will provide interested parties with the opportunity to present oral and/or written statements of their views, as well as participate in a colloquy concerning the employment and training needs of veterans. In that Notice the Assistant Secretary invited all interested persons not attending the Forum to submit written comments concerning the Forum and topics to be presented on or before April 20, 1988.

The Assistant Secretary has received requests for additional time to prepare comments, and the Assistant Secretary believes that it is appropriate to grant such additional time for persons not attending the Forum and to include persons that will attend the Forum but wish to submit written comments. Accordingly, this Notice extends the comment period during which comments on the Forum and Forum topics will be received from all interested parties through May 23, 1988.

Notice of Extension of Comment Period

Notice is hereby given that the period of time for the submission of public comments on the National Forum on Workforce 2000 and America's Veterans is hereby extended for all interested parties through Monday, May 23, 1988.

Signed at Washington, DC, this 8th day of April 1988.

Donald E. Shasteen,

Assistant Secretary for Veterans' Employment and Training.

[FR Doc. 88-8158 Filed 4-13-88; 8:45 am]

BILLING CODE 4510-79-M

NATIONAL COMMISSION TO PREVENT INFANT MORTALITY

Open Hearing

AGENCY: National Commission To Prevent Infant Mortality.

ACTION: Notice of open hearing.

SUMMARY: In accordance with Pub. L. 99-660, notice is given of the third hearing of the National Commission to Prevent Infant Mortality. The purpose of this hearing is to discuss the role of the federal, state, and local governments in reducing infant mortality.

DATE: April 25, 1988.

Time: 1:00 a.m.-5:00 p.m.

ADDRESS: State of Illinois Center, 100 West Randolph, Room 503, 16th Floor, Chicago, Illinois.

FOR FURTHER INFORMATION CONTACT: Mary Brecht, 202/472-1364.

Rae K. Grad,

Executive Director.

[FR Doc. 88-8109 Filed 4-13-88; 8:45 am]

BILLING CODE 6820-SK-M

NATIONAL SCIENCE FOUNDATION

Committee Management; Establishments

The Assistant Director for Computer Information Science and Engineering (CISE) has determined that the establishments of panels listed below are necessary and in the public interest in connection with the performance of duties imposed upon the Director, National Science Foundation (NSF) and other applicable law. This determination follows consultation with the Committee Management Secretariat, General Services Administration.

Name of Committee: Program Advisory Panel for Advanced Scientific Computing.

Purpose: Primarily to advise on the merit of proposals for the maintenance and improvement of national supercomputer centers, and for research in high performance computing technologies and engineering. These proposals have been submitted to NSF for financial support. Additionally, the Panel provides oversight, general advice, and policy guidance to the programs within the Division of Advanced Scientific Computing.

Name of Committee: Advisory Panel for Networking and Communications Research and Infrastructure.

Purpose: Primarily to advise on the merit of proposals in the areas of Networking and Communications Research, management of the NSF net and coordination and improvement of the associated infrastructure within the scientific research community. Additionally, the Panel provides oversight, general advice and policy guidance to the Division of Networking and Communications Research and Infrastructure.

M. Rebecca Winkler,

Committee Management Officer.

April 5, 1988.

[FR Doc. 88-8162 Filed 4-13-88; 8:45 am]

BILLING CODE 7555-01-M

Meeting; Advisory Committee for Atmospheric Sciences

The National Science Foundation announces the following meeting:

Name: Advisory Committee for Atmospheric Sciences (ACAS).

Date and Time: May 2-4, 1988, 9:00 a.m.-5:00 p.m. each day.

Place: Room 1243, National Science Foundation, 1800 G Street, NW., Washington, DC.

Type of Meeting:

Closed—May 2—9:00 a.m. to 5:00 p.m.
May 3—9:00 a.m. to 2:00 p.m.

Open—May 3—2:00 p.m. to 5:00 p.m.
May 4—9:00 a.m. to 5:00 p.m.

Contact: Dr. Eugene M. Bierly, Division Director, Division of Atmospheric Sciences, Room 644, National Science Foundation, Washington, DC 20550, Telephone: (202) 357-9874.

Minutes: May be obtained from the contact person listed above.

Purpose of Meeting: To provide advice and recommendations on long-range planning and oversight concerning support for research and research areas.

Agenda:

Closed: Oversight review of the Atmospheric Chemistry, Climate Dynamics, and Experimental Meteorology Programs including examination of proposals, reviewer comments, and other privileged material.

Open: Presentations on Long-Range Planning, Human Resources, oversight reports, and general discussion.

Reason for Closing: The proposals being reviewed include information of proprietary or confidential nature, including technical information; financial data such as salaries; and personal information concerning individuals associated with the proposals. These matters are within exemptions (4) and (6) of 5 U.S.C. 522b(c), Government in the Sunshine Act.

April 11, 1988.

M. Rebecca Winkler,

Committee Management Officer.

[FR Doc. 88-8179 Filed 4-13-88; 8:45 am]

BILLING CODE 7555-01-M

Advisory Panel for Cellular Physiology; Meeting

The National Science Foundation announces the following meeting:

Name: Advisory Panel for Cellular Physiology.

Date and Time: May 9, 10, 11, 1988—8:30 a.m. to 5 p.m. each day.

Place: Room 643, National Science Foundation, 1800 G St., NW., Washington, DC 20550.

Type of Meeting: Closed.

Contact Person: Dr. Maryanna P. Henkart, Program Director, Cellular Physiology Program (202) 357–7377, Room 321, National Science Foundation, Washington DC 20550.

Purpose of Advisory Panel: To provide advice and recommendations concerning support for research in Cellular Physiology.

Agenda: To review and evaluate research proposals and projects as part of the selection process of awards.

Reason For Closing: The proposals being reviewed include information of a proprietary or confidential nature, including technical information; financial data, such as salaries; and personal information concerning individuals associated with the proposals. These matters are within exemptions (4) and (6) of 5 U.S.C. 552b(c), Government in the Sunshine Act.

April 11, 1988.

M. Rebecca Winkler,

Committee Management Officer.

[FR Doc. 88–8165 Filed 4–13–88; 8:45am]

BILLING CODE 7555–01–M

Meeting; Advisory Panel for Ethics and Values Studies

The National Science Foundation announces the following meeting:

Name: Advisory Panel for Ethics and Values Studies.

Date and Time: May 9, 1988, 8:30 a.m. to 5:00 p.m. May 10, 1988, 8:30 a.m. to 5:00 p.m.

Place: Room 1243, National Science Foundation, 1800 G Street NW., Washington, DC.

Type of Meeting: Part Open—Open May 9, 8:30 a.m. to 10:30 a.m. Closed remainder.

Contact Person: Dr. Rachelle Hollander, Coordinator, Ethics and Values Studies, National Science Foundation, Washington, DC 20550, Telephone (202) 357–9894.

Summary Minutes: May be obtained from the contact person at the above address.

Purpose of Meeting: To provide advice and recommendations concerning support for research and related activities in this field.

Agenda:

Open—General discussion of EVS priorities in the Studies in Science, Technology and Society program.

Closed—To review and evaluate research proposals as part of the selection process for awards.

Reason for Closing: The proposals being reviewed include information of proprietary or confidential nature, including technical information; financial data, such as salaries; and personal information concerning individuals associated with the proposals. These matters are within exemption (4) and (6) of 5 U.S.C. 552b(c), Government in the Sunshine Act.

M. Rebecca Winkler,

Committee Management Officer.

April 11, 1988.

[FR Doc. 88–8160 Filed 4–13–88; 8:45 am]

BILLING CODE 7555–01–M

Advisory Committee for International Programs; Notice of Meeting

National Science Foundation announces the following meeting:

Name: Advisory Committee for International Programs.

Date: May 5, 1988, 8:30 a.m. to 5:00 p.m.; May 6, 1988, 8:30 a.m. to 1:00 p.m.

Place: National Science Foundation, 1800 G Street NW., Room 1143, Washington, DC 20550.

Type of Meeting: Open.

Contact Person: Dr. John Boright, Director, Division of International Programs, National Science Foundation, Washington, DC 20550, Telephone (202) 357–9552.

Summary of Minutes: May be obtained from Contact Person.

Purpose of Meeting: To provide advice, recommendations, and oversight related to support for international cooperation in science and engineering.

Tentative Agenda:

May 5

- Status report on international programs of NSF.
- Status of current international initiatives.
- Briefing on International Information and Analysis Section activities.
- Discussion of science and engineering information and communications.

May 6

- Briefing on Developing Countries Programs.
- Discussion of science and engineering cooperation with Developing Countries.

M. Rebecca Winkler,

Committee Management Officer.

April 11, 1988.

[FR Doc. 88–8166 Filed 4–13–88; 8:45 am]

BILLING CODE 7555–01–M

Task Force on Women, Minorities and the Handicapped in Science and Technology; Meeting and Public Hearing

In accordance with section 10(a)(2) of the Federal Advisory Committee Act (Pub. L. 92–463), notice is hereby given of a meeting of the Task Force followed by a public hearing on May 4, 1988, followed by a meeting of the Task Force on May 5, 1988.

Public Hearing

Name: Task Force on Women, Minorities, and the Handicapped in Science and Technology.

Date: May 4, 1988.

Time: 10:00 a.m.–3:30 p.m.

Place: Community College of Baltimore, Harbor Campus—Harry Bard Building, 600 E. Lombard Street, Baltimore, MD 21202.

Purpose: The Task Force will seek testimony from interested parties on innovative ways to increase opportunities for women, minorities and the handicapped in science and technology in the areas of employment research, higher education, precollege education and social aspects.

Testimony will be heard in three ways: (1) Scheduled testimony of ten-minute summary presentations accompanied by longer written statements and supporting documents for the record; (2) summary statements from the floor of three-minute duration accompanied by any longer written statements or materials for the record; and (3) written testimony submitted to the Task Force offices from those who cannot be heard because of time constraints or those who cannot attend.

Anyone wishing to testify or submit a statement for the record should write Sue Kemnitzer, Executive Director, Task Force on Women, Minorities, and the Handicapped in Science and Technology, 330 C Street, SW., Washington, DC 20201.

The public hearing will be followed by a discussion of the testimony by the Task Force members May 4, 1988.

Meeting

Name: Task Force on Women, Minorities, and the Handicapped in Science and Technology.

Date: May 5, 1988.

Time: 9:00 a.m. to 4:00 p.m.

Place: Department of Health and Human Services, 200 Independence Avenue, SW., Washington, DC 20201.

Type of Meeting: Open.

Purpose: The purpose of the Task Force on Women, Minorities and the Handicapped is to:

—Examine the current status of women, minorities and the disabled in science and engineering positions in the federal government and in federally-assisted research programs;
—Coordinate existing federal programs designed to promote the employment of women, minorities and the physically disabled scientists and engineers;
—Suggest cooperative interagency programs for promoting such employment;
—Identify exemplary programs in the state, local or private sectors and;
—Develop a long-range plan to advance opportunities for women, minorities, and disabled persons in science and technology.

Agenda: Reports will be heard on progress of the subcommittees on Employment, Research, Higher Education, Precollege Education and Social Aspects, as well as other business of the Task Force.

All meetings and public hearings of the Task Force are open to the public and all proceedings will be recorded and will be available at the Task Force offices.

Sue Kemnitzer,

Executive Director, (202) 245-7477.

April 4, 1988.

[FR Doc. 88-8167 Filed 4-13-88; 8:45 am]

BILLING CODE 7555-01-M

Advisory Committee for Computer and Computation Research; Meeting

The National Science Foundation announces the following meeting:

Name: Advisory Committee for Computer and Computation Research.

Date and Time:

May 5, 1988, 9:00 a.m. to 6:00 p.m.
May 6, 1988, 9:00 a.m. to 3:30 p.m.

Place: Room 543, National Science Foundation, 1800 G Street NW., Washington, DC 20550.

Type of Meeting: All Open.

May 5 OPEN—9:00 a.m. to 6:00 p.m.
May 6 OPEN—9:00 a.m. to 3:30 p.m.

Contact Person: Peter Freeman, Division Director, Division of Computer and Computation Research, Room 304, National Science Foundation, 1800 G Street NW., Washington, DC 20550. Telephone: (202) 357-9747 email: pfreeman@note.nsf.gov. Anyone planning to attend this meeting should notify Dr. Freeman no later than May 2, 1988.

Purpose of Committee: To provide advice and recommendations concerning support of Computer Research.

Summary Minutes: May be obtained from the contact person at the above address.

Agenda

Thursday, May 5, 1988, Room 543—9:00 a.m. to 5:00 p.m.—Open

9-9:30—Introduction and Overview of CCR Status—Dr. Peter Freeman, DD/CCR
9:30-10—Status of cross-directorate and foundation-wide programs—Dr. Harry Hedges, Acting Head/OCDA
10-11—Discussion with Dr. Bill Wulf, AD/CISE Designate
11-12—Human Infrastructure Trends Post docs—Dr. Peter Freeman, DD/CCR Graduate Fellowships—Dr. Rao Kosaraju, Johns Hopkins University Undergraduate enrollments Dr. J. Mack Adams, Program Director
12-1:30—Lunch—Open
1:30-3:30—Report on and discussion of Workshop on Software Engineering—Dr. Rick Adrion, University of Massachusetts
3:30-5—Report on and discussion of Workshop on Numeric and Symbolic Computation—Dr. Bob Caviness, Program Director
5-6—Committee business—Dr. John Hopcroft, Cornell University

Friday, May 6, 1987, Room 543—9:00 a.m. to 3:30 p.m.—Open

9-10:30—Report on and discussion of Workshop on Undergraduate Education—J. Foley, George Washington University
10:30-11:30—Report on NAS Computer Science and Technology Board—Dr. Joe Traub, Columbia University
11:30-12:30—Committee business
12:30-2—Lunch
2-3—Discussion with Mr. Erich Bloch, Director, NSF
3-3:30—Committee business

M. Rebecca Winkler,

Committee Management Officer.

[FR Doc. 88-8163 Filed 4-13-88; 8:45 am]

BILLING CODE 7555-01-M

Advisory Panel for Plant Science Centers; Meeting

The National Science Foundation announces the following meeting:

Name: Advisory Panel for Plant Science Centers.

Date and Time: May 2, 1988—8:30 a.m. to 5:00 p.m.

Place: Room 543, 1800 G Street NW., Washington, DC 20550.

Type of Meeting: Closed.

Contact Person: Dr. Robert Rabin, Senior Advisor for Biotechnology, Directorate for Biological, Behavioral and Social Sciences, (202) 357-9894, Room 312, National Science Foundation, Washington, DC 20550.

Summary Minutes: May be obtained from the Contact Person at the above address.

Purpose of Meeting: To provide advice and recommendations concerning support for the establishment of Plant Science Centers and the research to be conducted in each.

Agenda: Review and evaluation of research proposals and projects as part of the selection process of awards.

Reason for Closing: The proposals being reviewed include information of a proprietary or confidential nature, including technical information; financial data such as salaries; and personal information concerning individuals associated with the proposals. These matters are within exemptions (4) and (6) of 5 U.S.C. 552b(c), Government in the Sunshine Act.

M. Rebecca Winkler,

Committee Management Officer.

[FR Doc. 88-8164 Filed 4-13-88; 8:45 am]

BILLING CODE 7555-01-M

NUCLEAR REGULATORY COMMISSION

[Docket No. 50-293]

Boston Edison Co.; Environmental Assessment and Finding of No Significant Impact

The U.S. Nuclear Regulatory Commission (the Commission) is considering issuance of exemptions from certain requirements of 10 CFR Part 50, Appendix R, to the Boston Edison Company (BECo/licensee) for the Pilgrim Nuclear Power Station located at the licensee's site in Plymouth County, Massachusetts.

Environmental Assessment

Identification of Proposed Action

The proposed action would grant exemptions from certain requirements of Appendix R of 10 CFR Part 50. The exemption was requested from Section III.G.1.(a) to the extent that it requires that capability exists to achieve and maintain hot shutdown from either the Control Room or emergency control station(s) without the need of operator actions classified as repairs. The licensee requested that operator actions which includes repairs be allowed under specific circumstances.

The Need for the Proposed Action

The proposed exemptions are needed because the plant-specific circumstances and features described in the licensee's request regarding operator action which is the most practical means for meeting the intent of Appendix R and literal compliance would not significantly enhance the fire protection capability. The operator actions identified are required to assure that one train of cables and equipment necessary to achieve and maintain safe shutdown will be available in the event of a fire.

Environmental Impacts of the Proposed Action

The proposed exemptions, based on the existing physical plant design and fire protection features, will provide a degree of fire protection that is equivalent to that required by Appendix R for the affected areas of the plant such that there is no increase in the risk of fires at this facility. Consequently, the probability of fires has not been increased and the post-fire radiological releases will not be greater than previously determined, nor do the proposed exemptions otherwise affect radiological plant effluents. Therefore, the Commission concludes that there are no significant radiological environmental impacts associated with these proposed exemptions.

With regard to potential non-radiological impacts, the proposed exemptions involve features located entirely within the restricted area as defined in 10 CFR Part 20. They do not affect non-radiological plant effluents and have no other environmental impact. Therefore, the Commission concludes that there are no significant non-radiological environmental impacts associated with the proposed exemptions.

Alternative to the Proposed Action

Since the Commission has concluded there are no measurable environmental impacts associated with the proposed exemptions, any alternatives with equal or greater environmental impact need not be evaluated. The principal alternative to the exemptions would be to require rigid compliance with the applicable portions of Section III.G.1(a) of the Appendix R requirements. Such action would not enhance the protection of the environment and would result as unjustified costs for the licensee.

Alternative Use of Resources

This action does not involve the use of any resources not considered previously in the Final Environmental Statements related to the operation of Pilgrim Nuclear Power Station.

Agencies and Persons Consulted

The NRC staff reviewed the licensee's request and did not consult other agencies or persons.

Finding of No Significant Impact

The Commission has determined not to prepare an environmental impact statement for the proposed exemptions. Based upon the foreign environmental assessment, the NRC staff concludes that the proposed action will not have a significant effect on the quality of the human environment.

For further details with respect to this proposed action, see the licensee's letter dated October 2, 1987. The letter is available for public inspection at the Commission's Public Document Room, 1717 H Street NW., Washington, DC and at the Plymouth Public Library, 11 North Street, Plymouth, Massachusetts.

Dated at Rockville, Maryland, this 8th day of April, 1988.

For the Nuclear Regulatory Commission.

Victor Nerses,

Acting Director Project Directorate I-3 Division of Reactor Projects I/II.

[FR Doc. 88-8171 Filed 4-13-88; 8:45 am]

BILLING CODE 7590-01-M

[Docket Nos. 50-295, 50-304]

Commonwealth Edison Co.; Issuance of Amendment to Facility Operating License

The U.S. Nuclear Regulatory Commission (Commission) has issued Amendment Nos. 111 and 100 to Facility Operating License Nos. DPR-39 and DPR-48 issued to Commonwealth Edison Company, which revised the Technical Specifications for operation of the Zion Station, Units 1 and 2, located in Zion, Illinois. The amendments were effective as of the date of their issuance.

The amendments allow steam generator tubes to be repaired by utilizing Westinghouse mechanical sleeving methodology.

The application for the amendment complies with the standards and requirements of the Atomic Energy Act of 1954, as amended (the Act), and the Commission's rules and regulations. The Commission has made appropriate findings as required by the Act and the Commission's rules and regulations in 10 CFR Chapter I, which are set forth in the license amendment.

Notice of Consideration of Issuance of Amendment and Opportunity for Hearing in connection with this action was published in the **Federal Register** on March 2, 1988 (53 FR 6715). No request for a hearing or petition for leave to intervene was filed following this notice.

The Commission has determined that the issuance of the amendment will not result in any significant environmental impact and pursuant to 10 CFR 51.32(d)(4) an environmental assessment was prepared in connection with issuance of the amendments.

For further details with respect to the actions see (1) the application for amendment December 24, 1987, supplemented February 11, 1988, (2) Amendment No. 111 to License No. DPR-39, (3) Amendment No. 100 to License No. DPR-48 and (4) the Commission's related Safety Evaluation. All of these items are available for public inspection at the Commission's Public Document Room, 1717 H Street, NW., and at the Waukegan Public Library, 128 N. County Street, Waukegan, Illinois 60085. A copy of items (2), (3), and (4) may be obtained upon request addressed to the U.S. Nuclear Regulatory Commission, Washington, DC 20555, Attention: Director, Division of Reactor Projects.

Dated at Rockville, Maryland this 6th day of April 1988.

For the Nuclear Regulatory Commission.

Daniel R. Muller,

Director, Project Directorate III-2, Division of Reactor Projects—III, IV, V and Special Projects.

[FR Doc. 88-8170 Filed 4-13-88; 8:45 am]

BILLING CODE 7590-01-M

[Docket No. 50-424]

Georgia Power Co. et al.; Correction

53 FR 10450 published on March 31, 1988, contained a "Notice of Consideration of Issuance of Amendment to Facility Operating License and Proposed No Significant Hazards Consideration Determination and Opportunity for Hearing" related to the Vogtle Electric Generating Plant,

Unit 1. The date in the first line of column one on page 10451 should be corrected to read May 2, 1988.

Dated at Rockville, Maryland, this 7th day of April 1988.

For the Nuclear Regulatory Commission.

Lawrence P. Crocker,

Acting Director, Project Directorate II-3, Division of Reactor Projects I/II.

[FR Doc. 88-8169 Filed 4-13-88; 8:45 am]

BILLING CODE 7590-01-M

SECURITIES AND EXCHANGE COMMISSION

[Release No. 34-25552; File No. SR-CBOE-88-6]

Self-Regulatory Organizations; Proposed Rule Change by the Chicago Board Options Exchange, Inc. Relating to Margin Requirements

Pursuant to section 19(b)(1) of the Securities Exchange Act of 1934, 15 U.S.C. 78s(b)(1) ("Act"), notice is hereby given that on March 25, 1988, the Chicago Board Options Exchange, Inc. ("CBOE" or "Exchange") filed with the Securities and Exchange Commission ("Commission") the proposed rule change as described in Items I, II, and III below, which Items have been prepared by the self-regulatory organization. The Commission is publishing this notice to solicit comments on the proposed rule change from interested persons.

I. Self-Regulatory Organization's Statement of the Terms of Substance of the Proposed Rule Change

Additions are italicized; deletions are bracketed.

Rule 12.3(a)(5) For each put or call option dealt in on a registered national securities exchange, or a securities association and issued by the Options Clearing Corporation carried in a short position in the account, margin must be deposited and maintained equal to at least 100% of the current market value of the contract plus [15%] *20%* of the market value of equivalent units of the underlying security value; and for each put or call contract not dealt in on an exchange carried in a short position in the account, 100% of the current market value of the contract plus 45% of the market value of equivalent units of the underlying security value. In each, the amount shall be decreased by any excess of the exercise price of the option over the current market value of the underlying security in the case of a call or any excess of the current market value of the underlying security over the exercise price of the option in the case of a put; provided, however, that the minimum margin required on each such option contract shall not be less than the option market value plus [5%] *10%* of the market value of equivalent units of the underlying security value for an option dealt in on an exchange; and the option market value plus 10% of the market value of equivalent units of the underlying security value for an option not dealt in on an exchange. As an exception to the foregoing, where both a put and a call option contract for the same number of shares of the same underlying security are carried in a short position in an account, the amount of the margin required shall be the margin on the put or call, whichever amount is greater, [increased by the amount of an unrealized loss on] *plus 100% of the current market value of* the other option.

(b) through (d) No change.

Rule 24.11(a) No change.

(b)(i) Option Contract on a Market Index.

For each put or call option contract on a market index carried in a short position in the account, margin must be deposited and maintained equal to at least 100% of the current market value of the contract plus [10%] *15%* of the current index value times the index multiplier. In each case, the amount shall be decreased by any excess of the aggregate exercise price of the option over the current index value as multiplied by the index multiplier in the case of a call, or any excess of the current index value as multiplied by the index multiplier over the aggregate exercise price of the option in the case of a put; provided, however, that the minimum margin required on each such option contract shall not be less than the option market value plus [5%] *10%* of the current index value times the index multiplier.

(b)(ii) and (c)(1) No change.

(c)(2) Short put and short call.

This subparagraph (c)(2) applies to accounts carrying positions in short put index options which are offset by positions in short call index options for the same underlying index with the same index multiplier. The margin required for such a position shall be the margin required for the short put option contract or the margin required for the short call option contract (pursuant to paragraph (b) of this Rule), whichever is greater, as determined by (b) above [, increased by the amount of any unrealized loss on] *plus 100% of the current market value of* the other option contract.

(d) No change.

II. Self-Regulatory Organization's Statement of the Purpose of, and Statutory Basis for, the Proposed Rule Change

In its filing with the Commission, the self-regulatory organization included statements concerning the purpose of and basis for the proposed rule change and discussed any comments it received on the proposed rule change. The text of these statements may be examined at the places specified in Item IV below and is set forth in sections (A), (B), and (C) below.

(A) Self-Regulatory Organization's Statement of the Purpose of, and the Statutory Basis for, the Proposed Rule Change

The proposed rule change raises the margin requirements applicable to broad market index and equity options. The Exchange has deemed it advisable to impose higher margin requirements to ensure sufficient margin protection in view of the increased aggregate volatility of the markets experienced in the fourth quarter of 1987.

Since October 1985, the Exchange's rule setting forth minimum margin for all options has been based on a premium plus formula. The formula called for the deposit and maintenance for each short put or call option of at least 100% of the current premium plus a percentage, 15% of the current value of the underlying for equity options and 10% of the current index value times the index multiplier for market indices. In each case the margin may be reduced by any out-of-the-money amount, with a minimum of 100% plus 5% of the current value of the underlying. The percentage levels were established to cover 95% of all historical seven business day percentage price moves in the applicable underlying instrument during a recent twelve month review period.

In the last quarter of 1987, the volatility level of the stock market increased substantially. Accordingly the Exchange has reduced the applicable review period from twelve to six months to provide a methodology which is more responsive to changes in market volatility. Based upon a review of six month data, the Exchange has determined to increase by 5% the basic and minimum formula percentages for both index and equity options. The exception for straddle/combination positions is proposed to be modified to more accurately reflect the potential risk of the positions.

The new requirements would be in effect for a period of six months commencing on the date the margin

increases become effective for positions established on or after the effective date. At the end of the six month period, the new percentages would revert to their previous levels unless other percentages proposed by the Exchange are deemed to be appropriate in light of the experienced market volatility. During this period, the Exchange, in conjunction with the other securities regulators, will have an opportunity to determine adequate procedures to routinely monitor and adjust margin levels so that they will provide adequate protection to the carrying broker-dealers based on current market volatilities.

The Exchange believes that the proposed rule change is consistent with the provisions of the Act and, in particular, Section 6(b) thereof, in that the rule change is designed to adjust margins for market index and equity options to a level which provides a reasonable amount of financial protection to the securities industry and does not permit the excessive use of credit for the purchase or carrying of securities.

(B) Self-Regulatory Organization's Statement on Burden on Competition

This proposed rule change will not impose a burden on competition.

(C) Self-Regulatory Organization's Statement on Comments on the Proposed Rule Change Received From Members, Participants or Others

Comments were neither solicited nor received.

III. Date of Effectiveness of the Proposed Rule Change and Timing for Commission Action

Within 35 days of the date of publication of this notice in the **Federal Register** or within such longer period (i) as the Commission may designate up to 90 days of such date if it finds such longer period to be appropriate and publishes its reasons for so finding or (ii) as to which the self-regulatory organization consents, the Commission will:

(A) By order approve such proposed rule change, or

(B) Institute proceedings to determine whether the proposed rule change should be disapproved.

IV. Solicitation of Comments

Interested persons are invited to submit written data, views and arguments concerning the foregoing. Persons making written submission should file six copies thereof with the Secretary, Securities and Exchange Commission, 450 Fifth Street, NW., Washington, DC 20549. Copies of the submission, all subsequent amendments, all written statements with respect to the proposed rule change that are filed with the Commission, and all written communications relating to the proposed rule change between the Commission and any person, other than those that may be withheld from the public in accordance with the provisions of 5 U.S.C. 552, will be available for inspection and copying the Commission's Public Reference Section, 450 Fifth Street, NW., Washington, DC. Copies of such filing will also be available for inspection and copying at the principal office of the above-mentioned self-regulatory organization. All submissions should refer to the file number in the caption above and should be submitted by May 5, 1988.

For the Commission by the Division of Market Regulation, pursuant to delegated authority.

Dated: April 7, 1988.

Jonathan G. Katz,

Secretary.

[FR Doc. 88-8224 Filed 4-13-88; 8:45 am]

BILLING CODE 8010-01-M

Self-Regulatory Organizations; Applications for Unlisted Trading Privileges and of Opportunity for Hearing; Cincinnati Stock Exchange, Inc.

April 8, 1988

The above named national securities exchange has filed applications with the Securities and Exchange Commission pursuant to section 12(f)(1)(B) of the Securities Exchange Act of 1934 and Rule 12f-1 thereunder, for unlisted trading privileges in the following securities:

ACM Government Securities
  Common Stock, $.01 Par Value (File No. 7-3206)
Baltimore Bancorp
  Common Stock, $5.00 Par Value (File No. 7-3207)
Businessland, Inc.
  Common Stock, No Par Value (File No. 7-3208)
Emerald Homes, L.P.
  Common Stock, No Par Value (File No. 7-3209)
Fine Homes International, L.P.
  Common Stock, No Par Value (File No. 7-3210)
Fischbach Corporation
  Common Stock, $1.00 Par Value (File No. 7-3211)
Hannaford Brothers
  Common Stock, $.75 Par Value (File No. 7-3212)
High Income Advantage Trust
  Shares of Beneficial Interest, $.01 Par Value (7-3213)
IMC Fertilizer Group Inc.
  Common Stock, $1.00 Par Value (File No. 7-3214)
Leisure Technology Inc.
  Common Stock, $.10 Par Value (File No. 7-3215)
Liggett Group Inc.
  Common Stock, $1.00 Par Value (File No. 7-3216)
M.D.C. Assett Investors
  Common Stock, $.01 Par Value (File No. 7-3217)
Millipore Corporation
  Common Stock, $1.00 Par Value (File No. 7-3218)
Oneida Limited
  Common Stock, $6.25 Par Value (File No. 7-3219)
St. Joseph Light & Power Co.
  Common Stock, No Par Value (File No. 7-3220)
Triton Group Ltd.
  Common Stock, $.10 Par Value (File No. 7-3221)
USLICO Corp.
  Common Stock, $1.00 Par Value (File No. 7-3222)
U.S. Surgical Corporation
  Common Stock, $.10 Par Value (File No. 7-3223)
Vendo Company
  Common Stock, $1.25 Par Value (File No. 7-3224)
MGI Properties
  Common Stock, $1.00 Par Value (File No. 7-3225)
Wichita River Oil Co.
  Common Stock, No Par Value (File No. 7-3226)

These securities are listed and registered on one or more other national securities exchange and are reported in the consolidated transaction reporting system.

Interested persons are invited to submit on or before April 29, 1988, written data, views and arguments concerning the above-referenced applications. Persons desiring to make written comments should file three copies thereof with the Secretary of the Securities and Exchange Commission, Washington, DC 20549. Following this opportunity for hearing, the Commission will approve the applications if it finds, based upon all the information available to it, that the extensions of unlisted trading privileges pursuant to such applications are consistent with the maintenance of fair and orderly markets and the protection of investors.

For the Commission, by the Division of Market Regulation, pursuant to delegated authority.

Jonathan G. Katz,

Secretary.

[FR Doc. 88-8221 Filed 4-13-88; 8:45 am]

BILLING CODE 8010-01-M

[Release No. 34-25549; File No. SR-PSE-88-01]

Self-Regulatory Organizations; Proposed Rule Change by the Pacific Stock Exchange, Inc., Relating to Changes to the Constitution and the Certificate of Incorporation

Pursuant to section 19(b)(1) of the Securities Exchange Act of 1934 ("Act"), 15 U.S.C. 78s(b)(1), notice is hereby given that on March 7, 1988, the Pacific Stock Exchange Incorporated ("PSE" or "Exchange") filed with the Securities and Exchange Commission the proposed rule change as described in Items I, II and III below, which Items have been prepared by the self-regulatory organization. The Commission is publishing this notice to solicit comments on the proposed rule change from interested persons.

I. Self-Regulatory Organization's Statement of the Terms of Substance of the Proposed Rule Change

The Exchange pursuant to Rule 19(b)-4 of the Act, hereby proposes the following changes to the Certificate of Incorporation and the articles of the constitution of the PSE:

Certificate of Incorporation, Ninth Article

Ninth. The Corporation may provide indemnification for members of its Board of Governors and of committees of the Board of Governors and of other committees of the Corporation, its officers, agents and employees, and those serving another corporation, partnership, joint venture, trust or other enterprise at the request of the Corporation, within the limits permitted by Delaware law, to safeguard such persons from expense and liability for actions they take in any such capacity in good faith in furtherance of, or without belief that such actions are opposed to, the best interests of the Corporation and its members. *To the fullest extent permitted by Delaware law, or any other applicable laws, the members of the Board of Governors shall not be liable to the Corporation or its members for monetary damages for breach of fiduciary duty as a Governor.*

Constitution

Article II, Section 7

[Transition Provision]

[*Sec. 7.* At the first annual meeting following the effectiveness of the amendments to the Constitution approved at the Special Meeting on October 17, 1979 ("1979 Amendments"), a Vice Chairman elect shall be elected to serve for a term of one year from the date of election and until his successor is elected and qualified. If the 1979 Amendments become effective before the Annual Meeting in 1980, until such time as the position of Chairman is filled or until the 1980 Annual Meeting, whichever is earlier, the person who is presently Chairman would retain the title of Chairman, and would perform the duties of Chairman, as such duties were constituted prior to the effectivness of the 1979 Amendments, and the person who is presently Vice Chairman would retain the title of Vice Chairman and would perform the duties of Vice Chairman as those duties were constituted prior to the effectiveness of the 1979 Amendments, but at such time as the position of Chairman is filled the person who is presently Chairman would be Vice Chairman, with the duties of that office as provided in the 1979 Amendments, and such person would become Vice Chairman at the 1980 Annual Meeting. If the 1979 Amendments become effective after the 1980 Annual Meeting and the position of Chairman has not yet been filled, until such time as the position of Chairman is filled the Vice Chairman (who, after the 1980 Annual Meeting, would be the person who is presently Vice Chairman) would have the title of Chairman and would perform the duties of Chairman, as such duties were constituted prior to the effectiveness of the 1979 Amendments, but at such time as the position of Chairman is filled the titles and duties of the Vice Chairman and Vice Chairman elect would be as provided in the 1979 Amendments. Until the position of Chairman is filled the President will be the Chief Executive Officer as well as the Chief Operating Officer.]

Article V, Section I

Number of Memberships

Sec. 1. The number of authorized memberships in the Exchange shall [be 516] *not exceed 552.* * * * (No change is proposed with respect to the remainder of this section).

Article VI, Section 2

Application for Membership & Election

Sec. 2. Application for membership in the Exchange must be made in accordance with [the rules] *Rule IX* of the Board of Governors. [After the Board of Governors of the Exchange has cleared the applicant for membership,] *Upon approval,* the name of the applicant shall forthwith be posted with all members of the Exchange for a period of ten days.

Article VII, Section 4

Payment Purchase Price

Sec. 4. [At least four days prior] *Prior* to the effective date of admission to membership of the transferee, any purchase price being paid for such transfer shall be paid to the Exchange. * * * (No change is proposed for the remainder of this section.)

Article VIII, Section 4

Exchange Membership Asset of Firm

Sec. 4. The membership of every member of the Exchange who has conferred his membership privileges on any firm shall be deemed to be an asset of such firm *only* to the extent necessary to protect [its creditors, subject to the provisions of] *claimants under* Article VII as to the disposition of such proceeds.

II. Self-Regulatory Organization's Statement of the Purpose of, and Statutory Basis for the Proposed Rule Change

In its filing with the Commission, the self-regulatory organization included statements concerning the purpose of and basis for the proposed rule change. The text of these statements may be examined at the places specified in Item IV below. The self-regulatory organization has prepared summaries, set forth in sections (A), (B) and (C) below, of the most significant aspect of such statements.

(A) Self-Regulatory Organization's Statement of the Purpose of, and Statutory Basis for the Proposed Rule Change

The purpose of each of the proposed rule changes is as follows:

1. Certificate of Incorporation, *Ninth Article*

This proposed amendment is based on a change in Delaware law (the PSE is incorporated under the laws of the state of Delaware). Delaware Corporations Code, section 102(b)(7), (added 1986), states that a Certificate of Incorporation

may include a provision eliminating or limiting a director's personal liability to the corporation for monetary damages for breach of fiduciary duty as a director. Many Boards of Delaware Corporations have adopted similar provisions in 1987. The new law:

(a) Does *not* permit the elimination or limitation of a director's liability for breach of its duty of loyalty, for acts or omissions not in good faith, for intentional misconduct, or for any transaction from which the director derived an improper personal benefit,

(b) Does *not* eliminate the fiduciary duty, it merely prevents the imposition of monetary damages in the event of breach. Other legal remedies such as rescission and injunction remain available,

(c) Applies to a breach of fiduciary duty (standard of care) only, and does not extend to other duties owed by the directors to the Corporation (standard of loyalty).[1]

2. PSE Constitution, Article II, section 7, Transition Provision

This provision was added as part of the constitutional amendments in 1979. Its purpose was to provide that there would be a Chairman and Vice Chairman at all times whether the 1979 amendments became effective prior to or subsequent to the 1980 annual meeting.

This section is now obsolete and the Exchange membership has voted to delete the section entirely.

3. Article V, section 1, *Number of Memberships*

In April 1987, the creation of 36 additional members via a rights offering was approved by the SEC after approval by the PSE Board and members. The amendment will reflect this increase in the number of memberships.

4. Article VI, section 2, *Application for Membership and Election*

The purpose of this change is to provide reference to Rule IX which contains a more detailed description of procedures for eligibility, application, and approval for membership.

[1] The Commission requests commentators to address the question of whether, as a matter of public policy or law, it is appropriate for a corporation operating as a national securities exchange with substantial self-regulatory responsibilities under the federal securities laws to adopt a provision that would completely exempt members of the PSE's Board of Governors from monetary liability to the corporation or its members for breach of fiduciary duty, including situations where the breach constitutes gross negligence.

5. Article VII, section 6, *Payment Purchase Price*

Currently, admission to membership is effective almost immediately after payment of the purchase price. Deleting the first four words of this sections "at least four days prior" more accurately reflects that current practice. Holding admission up for four days after payment is no longer required.

6. Article VIII, section 4, *Exchange Membership Asset of Firm*

Under this section, as it now stands, confusion is created by the use of the word "asset". Questions arise as to whether a member may use its membership as collateral, or whether a lien by one other than a member may be placed on a membership.

This is the only section that refers to membership as an asset. Throughout the constitution and the rules, membership is referred to as a privilege that creates no vested rights in the member. Because membership is only a privilege, revocable at will be the PSE, it is not personal property and cannot be subject to an external lien, nor used as collateral.

The proposed change will clarify that the use of membership as an "asset" refers only to claims arising under Article VII. It is believed that this change reflects the true intent of the section.

(B) Self-Regulatory Organization's Statement on Burden on Competition

The Exchange does not believe that the proposed rule changes impose a burden on competition.

(C) Self-Regulatory Organization's Statement on Comments on the Proposed Rule Change Received from Members, Participants or Others

The proposed rule changes were sent to each member and approved by over a ⅔ majority vote of the general membership at the annual meeting on January 28, 1988.

III. Date of Effectiveness of the Proposed Rule Change and Timing for Commission Action

Within 35 days of the date of the publication of this notice in the **Federal Register** or within such longer period, (i) as the Commission may designate up to 90 days of such date if it finds such longer period to be appropriate and publishes its reasons for so finding, or (ii) as to which the self-regulatory organization consents, the Commission will:

(A) By order approve such proposed rule changes; or

(B) Institute proceedings to determine whether the proposed rule changes or any Rule changes should be disapproved.

IV. Solicitation of Comments

Interested person are invited to submit written data, views, and arguments concerning the foregoing. Persons making written submissions should file six copies thereof with the Secretary, Securities and Exchange Commission, 450 Fifth Street, NW., Washington, DC 20549. Copies of the submission, all subsequent amendments, all written statements with respect to the proposed rule change that are filed with the Commission, and all written communications relating to the proposed rule changes between the Commission and any person, other than those that may be withheld form the public in accordance with the provisions of 5 U.S.C. 55, will be available for inspection and copying in the Commission's Public Reference Section, 450 Fifth Street, NW., Washington, DC 20549. Copies of such filing will also be available for inspection and copying at the principal office of the PSE. All submissions should refer to File No. SR-PSE-88-01 and should be submitted within May 5, 1988.

For the Commission by the Division of Market Regulation, pursuant to delegated authority.

Dated: April 6, 1988.

Jonathan G. Katz,

Secretary.

[FR Doc. 88-8229 Filed 4-13-88; 8:45 am]

BILLING CODE 8010-01-M

Self-Regulatory Organizations; Applications for Unlisted Trading Privileges and of Opportunity for Hearing; Philadelphia Stock Exchange, Inc.

April 8, 1988

The above named national securities exchange has filed applications with the Securities and Exchange Commission pursuant to section 12(f)(1)(B) of the Securities Exchange Act of 1934 and Rule 12f-1 thereunder, for unlisted trading privileges in the following securities:

MFS Intermediate Income Trust Shares of Beneficial Interest, No Par Value (File No. 7-3227)

Templeton Global Income Fund Common Stock, $0.01 Par Value (File No. 7-3228)

Thoretec International, Inc. Common Stock, $0.25 Par Value (File No. 7-3229)

These securities are listed and registered on one or more other national securities exchange and are reported in the consolidated transaction reporting system.

Interested persons are invited to submit on or before April 29, 1988, written data, views and arguments concerning the above-referenced application. Persons desiring to make written comments should file three copies thereof with the Secretary of the Securities and Exchange Commission, Washington, DC 20549. Following this opportunity for hearing, the Commission will approve the application if it finds, based upon all the information available to it, that the extensions of unlisted trading privileges pursuant to such applications are consistent with the maintenance of fair and orderly markets and the protection of investors.

For the Commission, by the Division of Market Regulation, pursuant to delegated authority.

Jonathan G. Katz,

Secretary.

[FR Doc. 88-8222 Filed 4-13-88; 8:45 am]

BILLING CODE 8010-01-M

[Release No. 34-25547; File No. PHLX 88-16]

Self-Regulatory Organizations; Proposed Rule Change by the Philadelphia Stock Exchange, Inc. Relating to Time Stamping Options Order Tickets

Pursuant to section 19(b)(1) of the Securities Exchange Act of 1934, 15 U.S.C. 78s(b)(1), notice is hereby given that on March 24, 1988 the Philadelphia Stock Exchange, Inc. filed with the Securities and Exchange Commission the proposed rule change as described in Items I, II and III below, which Items have been prepared by the self-regulatory organization. The Commission is publishing this notice to solicit comments on the proposed rule change from interested persons.

I. Self-Regulatory Organization's Statement of the Terms of Substance of the Proposed Rule Change

The Philadelphia Stock Exchange, Inc. ("PHLX" or the "Exchange"), proposes to amend the following Floor Procedure Advice F-2 Responsibility for Time Stamping and Matching to provide for an alternative manual method of recording execution times on orders effected in the trading crowd upon approval of a floor official. The text of the proposed rule change is set forth below. [Brackets] indicate deletions; *italics* indicates additions.

F-2 Responsibility for Time Stamping and Matching

It is the duty of the largest participant in an options transaction to both match and time stamp the order tickets involved. If there is only one seller and one buyer, the seller is responsible for the matching and time stamping. *However, when a large, active trading crowd makes it impractical to reach a time clock, a floor official may instead allow members to handwrite execution times on orders effected in the crowd that day. It should be noted that time clock exemptions apply only to execution times and do not apply to either order receipt times or orders placed on the book.*

F-2		
1st occurrence	[$25.00]	$50.00
2nd occurrence	[$50.00]	$100.00
3rd occurrence	[$100.00]	$250.00
4th occurrence and thereafter		Sanction is discretionary with Business Conduct Committee.

II. Self-Regulatory Organization's Statement of the Purpose of, and Statutory Basis for, the Proposed Rule Change

In its filing with the Commission, the self-regulatory organization included statements concerning the purpose of and basis for the proposed rule change and discussed any comments it received on the proposed rule change. The text of these statements may be examined at the places specified in Item IV below. The self-regulatory organization has prepared summaries, set forth in sections (A), (B), and (C) below, of the most significant aspects of such statements.

A. Self-Regulatory Organization's Statements of the Purpose of, and Statutory Basis for the Proposed Rule Change

The purpose of the proposed rule change is to provide for an alternative manual method of recording execution times on orders effected in the trading crowd upon approval of a floor official when a large active trading crowd makes it impractical to reach a time stamp clock. The proposed rule change also raises the fines for violating the order ticket time stamping matching requirements.

The proposed rule change is based on section 6(b)(5) of the Securities Exchange Act of 1934 in that it is designed to facilitate compliance with the Exchange's Floor Procedure Advices and Commission regulations respecting the maintenance of accurate books and records.

B. Self-Regulatory Organizations Statement on Burden on Competition

The PHLX does not believe that the proposed rule change will impose any inappropriate burden on competition.

C. Self-Regulatory Organization's Statement of Comments on the Proposed Rule Change Received from Members, Participants, or Others

No written comments were either solicited or received.

III. Date of Effectiveness of the Proposed Rule Change and Timing for Commission Action

Within 35 days of the date of publication of this notice in the Federal Register or within such longer period (i) as the Commission may designate up to 90 days or such date if it finds such longer period to be appropriate and publishes its reasons for so finding or (ii) as to which the self-regulatory organization consents, the Commission will:

(A) By order approve such proposed rule change, or,

(B) Institute proceedings to determine whether the proposed rule change should be disapproved.

IV. Solicitation of Comments

Interested persons are invited to submit written data, views and arguments concerning the foregoing. Persons making written submissions should file six copies thereof with the Secretary, Securities and Exchange Commission, 450 Fifth Street, NW., Washington, DC 20549. Copies of the submission, all subsequent amendments, all written statements with respect to the proposed rule change that are filed with the Commission, and all written communications relating to the proposed rule change between the Commission and any person, other than those that may be withheld from the public in accordance with the provisions of 5 U.S.C. 552, will be available for inspection and copying in the Commission's Public Reference Section, 450 Fifth Street, NW., Washington, DC 20549. Copies of such filing will also be available for inspection and copying at the principal office of the above-mentioned self-regulatory organization. All submissions should refer to the file number in the caption above and should be submitted by May 5, 1988.

For the Commission by the Division of Market Regulation, pursuant to delegated authority.

Jonathan G. Katz,

Secretary.

Dated: April 4, 1988.

[FR Doc. 88-8225 Filed 4-13-88; 8:45 am]

BILLING CODE 8010-01-M

[File No. 22-17985]

Application and Opportunity for Hearing; Allied-Signal Inc.

April 7, 1988.

Notice is hereby given that Allied-Signal Inc. (the "Company") has filed an application pursuant to clause (ii) of section 310(b)(1) of the Trust Indenture Act of 1939 (the "Act") for a finding by the Securities and Exchange Commission (the "Commission") that the trusteeship of The Chase Manhattan Bank (National Association) ("Bank") under an indenture dated as of October 1, 1985 (the "1985 Indenture") between the Company and Bank which was heretofore qualified under the Act, under an indenture dated as of October 1, 1983 (the "1983 Indenture") between Allied Corporation ("Allied") and Bank supplemented as of August 15, 1984 ("August Supplement") and September 30, 1987 ("September Supplement") pursuant to which the Company assumed the obligations of Allied which was heretofore qualified under the Act, and under a Note Facility Agreement dated as of October 15, 1987 (the "Agreement") between the Company and Bank relating to Allied-Signal Inc. TREND Financing (Tailored Rate ESOP Notes on Demand) (the "Demand Notes") which has not been qualified under the Act, is not so likely to involve a material conflict of interest as to make it necessary in the public interest or for the protection of investors to disqualify the Bank from acting as trustee under the indentures or the Agreement. The 1985 Indenture and the 1983 Indenture are herein collectively referred to as the "Indentures".

The Company alleges:

(1) Pursuant to the 1984 Indenture, the Company had outstanding $100,000,000 aggregate principal amount of its 9.40% Notes due 1988, $200,000,000 9⅞% Sinking Fund Debentures due 1997, $22,500,000 10½% Notes due 1991, $100,000,000 9½% Debentures due 2016, $250,000,000 9⅞% Debentures due 2202 and 100,000 warrants to purchase $100,000,000 of the Company's 10.48% Notes due 1995 (reserved for issuance in 1988) (collectively, the "Debentures"). The Debentures and other debt securities to be issued from time to time under the 1985 Indenture were registered under the Securities Act of 1933 (the "1933 Act") and the 1985 Indenture was qualified under the Act.

(2) Pursuant to the 1983 Indenture and the September Supplement, the Company had outstanding $413,390,000 aggregate principal amount of Zero Coupon Serial Bonds Due 1985–2009 (the "Bonds"). The Bonds were registered under the 1933 Act and the 1983 Indenture was qualified under the Act.

(3) The Company's obligation under the Agreement is $85,000,000. This obligation was not registered under the 1933 Act nor qualified under the Act.

(4) The Company's obligations under the Indentures and the Agreement are wholly unsecured and rank *pari passu inter se.*

(5) The Company is not in default under the Indentures, the Debentures, or the Bonds.

(6) The Company is not in default under the Agreement, or the Demand Notes:

(7) Such differences as exist between the Indentures and the Agreement are not so likely to involve a material conflict of interest as to make it necessary in the public interest or the protection of investors to disqualify the Bank from acting as Trustee under the Indentures or the Agreement.

The Company has waived notice of hearing, hearing and any and all rights to specify procedures under the Rules of Practice of the Commission in connection with this matter.

For a more detailed statement of the matters of fact and law asserted, all persons are referred to said application which is on file in the Offices of the Commission's Public Reference Section, File Number 22-17985, 450 Fifth Street, NW., Washington, DC 20549.

Notice is further given that any interested person may, not later than May 4, 1988, request in writing that a hearing be held on this matter, stating the nature of his interest, the reason for such request and the issues of law or fact raised by such application which he desires to controvert, or he may request that he be notified if the Commission orders a hearing thereon. Any such request should be addressed: Secretary, Securities and Exchange Commission, 450 Fifth Street, NW., Washington, DC 20549. Any any time after said date, the Commission may issue an order granting the application, upon such terms and conditions as the Commission may deem necessary or appropriate in the public interest and for the protection of investors, unless a hearing is ordered by the Commission.

For the Commission, by the Division of Corporation Finance, pursuant to delegated authority.

Jonathan G. Katz,

Secretary.

[FR Doc. 88-8228 Filed 4-13-88; 8:45 am]

BILLING CODE 8010-01-M

[File No. 1-8151]

Issuer Delisting; Notice of Application To Withdraw From Listing and Registration; Standard Logic, Inc. (Common Stock, $.025 Par Value)

April 8, 1988.

Standard Logic, Inc. ("Company"), has filed an application with the Securities and Exchange Commission pursuant to section 12(d) of the Securities Exchange Act of 1934 and Rule 12d2-2(d) promulgated thereunder, to withdraw the above specified securities from listing and registration on the Boston Stock Exchange, Inc. ("BSE").

The reasons alleged in the application for withdrawing this security from listing and registration include the following:

The Company has suffered declining sales and net losses to such an extent that the Company no longer is large enough to attract securities industry analysis. There has been no significant or regular trading of the Company's common stock on the BSE and, therefore, the Company does not believe there exists an established public market in such security on the BSE. The Company's common stock is also listed on the National Association of Securities Dealers Automated Quotation System ("NASDAQ"). Recently, all trading in the Company's common stock has occurred on NASDAQ. The Company expects that its common stock will continue to be listed and traded on NASDAQ after it delists from the BSE.

Any interested person may, on or before April 29, 1988, submit by letter to the Secretary of the Securities and Exchange Commission, 450 Fifth Street, NW., Washington, DC 20549, facts bearing upon whether the application has been made in accordance with the rules of the Exchange and what terms, if any, should be imposed by the Commission for the protection of investors. The Commission, based on the information submitted to it, will issue an order granting the application after the date mentioned above, unless the Commission determines to order a hearing on the matter.

BEST COPY AVAILABLE

For the Commission, by the Division of Market Regulation, pursuant to delegated authority.

Jonathan G. Katz,

Secretary.

[FR Doc. 88-8227 Filed 4-13-88; 8:45 am]

BILLING CODE 8010-01-M

SMALL BUSINESS ADMINISTRATION

Reporting and Recordkeeping Requirements Under OMB Review

ACTION: Notice of reporting requirements submitted for review.

SUMMARY: Under the provisions of the Paperwork Reduction Act (44 U.S.C. Chapter 35), agencies are required to submit proposed reporting and recordkeeping requirements to OMB for review and approval, and to publish a notice in the **Federal Register** notifying the public that the agency has made such a submission.

DATE: Comments should be submitted within 30 days of this publication in the **Federal Register**. If you intend to comment but cannot prepare comments promptly, please advise the OMB Reviewer and the Agency Clearance Officer before the deadline.

Copies: Request for clearance (S.F. 83), supporting statement, and other documents submitted to OMB for review may be obtained from the Agency Clearance Officer. Submit comments to the Agency Clearance Officer and the OMB Reviewer.

FOR FURTHER INFORMATION CONTACT:

Agency Clearance Officer: William Cline, Small Business Administration, 1441 L Street, NW., Room 200, Washington, DC 20416, Telephone: (202) 653-8538.

OMB Reviewer: Robert Neal, Office and Information and Regulatory Affairs, Office of Management and Budget, New Executive Office Building, Washington, DC 20503, Telephone: (202) 395-7340.

Title: SBIR Policy Directive.

Form Nos.: SOP 6501 2.

Frequency: Annually.

Description of Respondents: Directive details program procedures and sets forth the specific kinds of information needed for the agency to fulfill its mandate to monitor and coordinate the Government wide activities of the SBIR Program.

Annual Responses: 18.

Annual Burden Hours: 90.

Title: Competition with small business by rural electric and telephone cooperatives in unregulated businesses.

Form Nos.: Research study.

Frequency: One time collection.

Description of respondents: The purpose of this study is to examine the scope and degree of the problem from rural electric and rural telephone cooperatives, review actual cases, reviews applicable laws and also make recommendations.

Annual Responses: 600.

Annual Burden Hours: 150.

William Cline,

Chief, Administrative Information Branch.

[FR Doc. 88-8147 Filed 4-13-88; 8:45 am]

BILLING CODE 8025-01-M

[License No. 04/04-5243]

Alabama Small Business Investment Company, Inc.; Issuance of a Small Business Investment Company License

On January 8, 1988, a notice was published in the **Federal Register** (53 FR 589) stating that an application had been filed by Alabama Small Business Investment Company, Inc., Birmingham, Alabama, with the Small Business Administration (SBA) pursuant to § 107.102 of the Regulations governing small business investment companies (13 CFR 107.102 (1988)) for a license to operate as a small business investment company.

Interested parties were given until the close of business February 7, 1988, to submit their comments to SBA. No significant comments were received.

Notice is hereby given that, pursuant to section 301(d) of the Small Business Investment Act of 1958, as amended, after having considered the application and all other pertinent information, SBA issued License No. 04/04-5243 on April 5, 1988, to Alabama Small Business Investment Company, Inc. to operate as a small business investment company.

(Catalog of Federal Domestic Assistance Program No. 59.011, Small business Investment Companies)

Robert G. Lineberry,

Deputy Associate Administrator for Investment.

Dated: April 8, 1988.

[FR Doc. 88-8146 Filed 4-13-88; 8:45 am]

BILLING CODE 8025-01-M

TENNESSEE VALLEY AUTHORITY

Information Collection Under Review by the Office of Management and Budget (OMB)

AGENCY: Tennessee Valley Authority.

ACTION: Information collection under review by the Office of Management and Budget (OMB).

SUMMARY: The Tennessee Valley Authority (TVA) has sent to OMB the following proposal for the collection of information under the provisions of the Paperwork Reduction Act of 1980 (44 U.S.C. Chapter 35), as amended by Pub. L. 99-591..

Requests for information, including copies of the information collection proposed and supporting documentation, shoud be directed to the Agency Clearance Officer whose name, address, and telephone number appear below. Questions or comments should be directed to the Agency Clearance Officer and also to the Desk Officer for the Tennessee Valley Authority, Office of Information and Regulatory Affairs. Office of Management and Budget, Washington, DC 20503; Telephone: (202) 395-3084.

Agency Clearance Officer: Mark R. Winter, Tennessee Valley Authority, 100 Lupton Building, Chattanooga, TN 37401: (615) 751-2523.

Type of Request: Regular submission.

Title of Information Collection: Power Distributors Monthly Report to TVA.

Frequency of Use: Monthly.

Type of Affected Public: Businesses or other for-profit and small businesses or organizations.

Small Businesses or Organizations Affected: Yes.

Federal Budget Functional Category Code: 271.

Estimated Number of Annual Responses: 1920.

Estimated Total Annual Burden Hours: 960.

Need For and Use of Information: This monthly collection supplies TVA with financial information to assist in making timely management decisions on electric power rates, finances, and other long- and short-term plans.

John W. Thompson.

Manager of Corporate Services, Senior Agency Official.

[FR Doc. 88-8141 Filed 4-13-88; 8:45 am]

BILLING CODE 8120-01-M

DEPARTMENT OF TRANSPORTATION

Coast Guard

[CGD-88-025]

National Boating Safety Advisory Council Subcommittee on Consumer Education; Meeting

Pursuant to section 10(a) of the Federal Advisory Committee Act (Pub. L. 92-463; 5 U.S.C. App. 1), notice is hereby given of a meeting of the National Boating Safety Advisory

Council's Subcommittee on Consumer Education to be held on Monday, May 9, 1988 at the Monteleone Hotel, 214 Royal Street, New Orleans, Louisiana, beginning at 2:00 p.m. and ending at 5:00 p.m. The agenda for the meeting will be as follows:

1. Status report on Alcohol and Recreational Boating Workshop.
2. Summary of State Operating Under the Influence Laws.

Attendance is open to the interested public. With advance notice to the Chairman, members of the public may present oral statements at the meeting. Persons wishing to present oral statements should so notify the Executive Director no later than the day before the meeting. Any member of the public may present a written statement to the Council at any time. Additional information may be obtained from Captain William S. Griswold, Executive Director, National Boating Safety Advisory Council, U.S. Coast Guard, (G-NAB), Washington, DC 20593-0001, or by calling (202) 267-0997.

Issued in Washington, DC.

April 11, 1988.

W.P. Hewel,

Captain, U.S. Coast Guard, Chief, Office of Boating, Public and Consumer Affairs.

[FR Doc. 88-8194 Filed 4-13-88; 8:45 am]

BILLING CODE 4910-14-M

[CGD-88-026]

National Boating Safety Advisory Council Subcommittee on Hull Identification Number (HIN); Meeting

Pursuant to section 10(a) of the Federal Advisory Committee Act (Pub. L. 92-463; 5 U.S.C. App. 1), notice is hereby given of a meeting of the National Boating Safety Advisory Council's Subcommittee on Hull Identification Number (HIN) to be held on Monday, May 9, 1988 at the Monteleone Hotel, 214 Royal Street, New Orleans, Louisiana, beginning at 2:00 p.m. and ending at 5:00 p.m. The agenda for the meeting will be as follows:

1. Discuss the possibility of adding additional characters to Hull Identification Number (HIN) to assist in recovering stolen boats.

Attendance is open to the interested public. With advance notice to the Chairman, members of the public may present oral statements at the meeting. Persons wishing to present oral statements should so notify the Executive Director no later than the day before the meeting. Any member of the public may present a written statement to the Council at any time. Additional information may be obtained from Captain William S. Griswold, Executive Director, National Boating Safety Advisory Council, U.S. Coast Guard, (G-NAB), Washington, DC 20593-0001, or by calling (202) 267-0997.

Issued in Washington, DC.

April 11, 1988.

W.P. Hewel,

Captain, U.S. Coast Guard Chief, Office of Boating, Public and Consumer Affairs.

[FR Doc. 88-8195 Filed 4-13-88; 8:45 am]

BILLING CODE 4910-14-M

[CGD-88-024]

National Boating Safety Advisory Council; Meeting

Pursuant to section 10(a) of the Federal Advisory Committee Act (Pub. L. 92-463; 5 U.S.C. App. 1), notice is hereby given of a meeting of the National Boating Safety Advisory Council to be held on Tuesday and Wednesday, May 10 & 11, 1988 at the Monteleone Hotel, 214 Royal Street, New Orleans, Louisiana, beginning at 9:00 a.m. and ending at 4:00 p.m. on both days. The agenda for the meeting will be as follows:

1. Introduction of new Council Sponsor.
2. Review of action taken at the 40th meeting of the Council.
3. Members' items.
4. Executive Director's report.
5. Consumer Education Subcommittee report.
6. HIN Regulation Subcommittee report.
7. Presentation on Oregon's safety programs in schools.
8. Presentation on vertical sector sidelights for unmanned barges.
9. Informational update on vertical sector sidelights for sailboats.
10. Report of Boating Education Seminar in Louisiana.
11. Presentation on MARPOL Annex V need and proposed requirements.
12. Update on boating standards program.
13. Review of Rulemaking.
14. Final report on Personal Flotation Device (PFD) pamphlet project.
15. Presentation on problem of PFD ride-up.
16. Report on 1987 Boating Statistics.
17. Report on Safe Boating Week 1988.
18. Remarks by Chief, Office of Navigation and Waterway Systems.
19. Reply to members' items.
20. Chairman's session.

Attendance is open to the interested public. With advance notice to the Chairman, members of the public may present oral statements at the meeting. Persons wishing to present oral statements should so notify the Executive Director no later than the day before the meeting. Any member of the public may present a written statement to the Council at any time. Additional information may be obtained from Captain William S. Griswold, Executive Director, National Boating Safety Advisory Council, U.S. Coast Guard, (G-NAB), Washington, DC 20593-0001, or by calling (202) 267-0997.

Issued in Washington, DC.

W. P. Hewel,

Captain, U.S. Coast Guard Chief, Office of Boating, Public, and Consumer Affairs.

April 11, 1988.

[FR Doc. 88-8196 Filed 4-13-88; 8:45 am]

BILLING CODE 4910-14-M

DEPARTMENT OF THE TREASURY

Treasury Decision Proclaiming Annual Secretary's Percentage for Foreign Life Insurance Companies and Providing Estimated Tax Guidance for All Foreign Insurance Companies

AGENCY: Department of the Treasury.

ACTION: Proclamation.

SUMMARY: This proclamation announces the percentage to be used to compute the income tax liability for 1987 of foreign corporations carrying on life insurance business in the United States and provides instructions for computing the estimated tax and the installment payments of estimated tax for 1988 for all foreign insurance companies.

EFFECTIVE DATE: March 15, 1988.

FOR FURTHER INFORMATION CONTACT: Ms. Jenny Wahl, Office of Tax Analysis, U.S. Treasury Department, Washington, DC 20220. (202-566-2589), not a toll free call.

SUPPLEMENTARY INFORMATION: This proclamation, issued each year by the Secretary of the Treasury, announces the percentage to be used to compute the income tax liability of foreign corporations carrying on life insurance business in the United States. In addition, the proclamation provides instructions for computing the estimated tax and the installment payments of estimated tax for 1988 for all foreign insurance companies.

Proclamation

For purposes of computing the 1987 income tax of foreign corporations carrying on a life insurance business, a percentage of 16.2 percent shall be used in determining the "minimum figure" under former section 813. For purposes

of computing the estimated tax and the installment payments of estimated tax for the taxable year 1988, all foreign insurance companies (life and property-casualty companies) will be allowed to rely on their actual investment income for purposes of computing investment income under section 842, as amended by the Omnibus Budget Reconciliation Act of 1987, until publication by the Secretary of the domestic asset/liability percentages and the domestic investment yields under section 842. No additions to tax shall be made because of any underpayment of estimated tax for the taxable year 1988 if: (1) The taxpayer timely pays estimated tax based on its actual net investment income, and (2) the taxpayer deposits the full amount due under section 6655 of the Code with its first estimated tax payment following publication of the domestic asset/liability percentages and the domestic investment yields under section 842.

This proclamation was issued without notice and public procedure because the public cannot effectively participate in the determination of the percentage required under former section 813. It is computed from information contained in income tax returns that are not open to the public. The proclamation was not published prior to its effective date because the percentage is computed on the basis of data which was not then available.

O. Donaldson Chapoton,

Assistant Secretary (Tax Policy).

[FR Doc. 88-8208 Filed 4-13-88; 8:45 am]

BILLING CODE 4810-25-M

UNITED STATES INFORMATION AGENCY

Culturally Significant Objects Imported for Exhibition; Determination

Notice is hereby given of the following determination: Pursuant to the authority vested in me by the act of October 19, 1965 (79 Stat. 985, 22 U.S.C. 2459), Executive Order 12047 of March 27, 1978 (43 FR 13359, March 29, 1978), and Delegation Order No. 85-5 of June 27, 1985 (50 FR 27393, July 2, 1985), I hereby determine that the objects to be included in the exhibit, "Masterworks from Munich" (see list [1]) imported from abroad for the temporary exhibition without profit within the United States are of cultural significance. These objects are imported pursuant to loan agreements with the foreign lenders. I also determine that the temporary exhibition or display of the listed exhibit objects at the National Gallery of Art, Washington, DC, beginning on or about May 29, 1988, to on or about September 5, 1988, and at the Cincinnati Art Museum, Cincinnati, Ohio, beginning on or about October 25, 1988, to on or about January 8, 1989, is in the national interest.

Public notice of this determination is ordered to be published in the **Federal Register.**

C. Normand Poirier,

Acting General Counsel.

Date: April 7, 1988.

[FR Doc. 88-8157 Filed 4-13-88; 8:45 am]

BILLING CODE 8230-01-M

[1] A copy of this list may be obtained by contacting Mr. R. Wallace Stuart of the Office of the General Counsel of USIA. The telephone number is 202-485-7988, and the address is Room 700, U.S. Information Agency, 301 4th Street, SW., Washington, DC 20547.

Sunshine Act Meetings

Federal Register
Vol. 53, No. 72
Thurday, April 14, 1988

This section of the FEDERAL REGISTER contains notices of meetings published under the "Government in the Sunshine Act" (Pub. L. 94-409) 5 U.S.C. 552b(e)(3).

COMMISSION ON CIVIL RIGHTS

April 12, 1988.

PLACE: 1121 Vermont Avenue, NW., Room 512, Washington, DC 20425.

DATE AND TIME: Friday, April 22, 1988, 9:00 a.m.–5:00 p.m.

STATUS OF MEETING: Open to the public.

MATTERS TO BE CONSIDERED:

I. Approval of Agenda
II. Approval of Minutes of Last Meeting
III. Briefing: Congressional Legislation to Amend the Fair Housing Act of 1968
IV. SAC Report: "Education Vouchers in Louisiana"
V. SAC Report: "Ethic Intimidation Data in Pennsylvania"
VI. Interim Appointments for Colorado SAC
VII. SAC Recharters
VIII. Presentations by SAC Chairs

PERSON TO CONTACT FOR FURTHER INFORMATION: John Eastman, Press and Communications Division (202) 376-8105.

William H. Gillers,
Solicitor, 376-8514

[FR Doc. 88-8249 Filed 4-12-88; 9:45 am]

BILLING CODE 6335-01-M

FEDERAL DEPOSIT INSURANCE CORPORATION

Pursuant to the provisions of the "Government in the Sunshine Act" (5 U.S.C. 552b), notice is hereby given that at 5:55 p.m. on Friday, April 8, 1988, the Board of Directors of the Federal Deposit Insurance Corporation met in closed session to consider matters relating to an assistance agreement pursuant to section 13(c) of the Federal Deposit Insurance Act.

In calling the meeting, the Board determined, on motion of Director C.C. Hope, Jr. (Appointive), seconded by Chairman L. William Seidman, concurred in by Director Robert L. Clarke (Comptroller of the Currency), that Corporation business required its consideration of the matters on less than seven days' notice to the public; that no earlier notice of the meeting was practicable; that the public interest did not require consideration of the matters in a meeting open to public observation; and that the matters could be considered in a closed meeting pursuant to subsections (c)(6), (c)(8), (c)(9)(A)(ii), and (c)(9)(B) of the "Government in the Sunshine Act" (5 U.S.C. 552b(c)(6), (c)(8), (c)(9)(A)(ii), and (c)(9)(B)).

The meeting was held in the Board Room on the sixth floor of the FDIC Building located at 550-17th Street, NW., Washington, DC.

Dated: April 11, 1988.

Federal Deposit Insurance Corporation.

Robert E. Feldman,
Assistant Executive Secretary (Operations).

[FR Doc. 88-8266 Filed 4-12-88; 11:13 am]

BILLING CODE 6714-01-M

FEDERAL ELECTION COMMISSION

"FEDERAL REGISTER" NO.: 88-7771.

PREVIOUSLY ANNOUNCED DATE AND TIME: Thursday, April 14, 1988, 10:00 a.m.

THE FOLLOWING ITEMS WERE ADDED TO THE AGENDA:

Draft AO 1987-34—Leslie J. Kerman on behalf of Telenet Communications Corporation.
Draft AO 1988-10—William E. Taylor.

* * * * *

DATE AND TIME: Tuesday, April 19, 1988, 10:a.m.

PLACE: 999 E Street, NW., Washington, DC

STATUS: This meeting will be closed to the public.

ITEMS TO BE DISCUSSED:

Compliance matters pursuant to 2 U.S.C. 437g.
Audits conducted pursuant to 2 U.S.C. 437g, 438(b), and Title 26, U.S.C.
Matters concerning participation in civil actions or proceedings or arbitration.
Internal personnel rules and procedures or matters affecting a particular employee.

* * * * *

DATE AND TIME: Thursday, April 21, 1988, 10:a.m.

PLACE: 999 E Street, NW., Washington, DC (Ninth Floor).

STATUS: This meeting will be open to the public.

MATTERS TO BE CONSIDERED:

Setting of Dates for Future Meetings.
Correction and Approval of Minutes.
Eligibility Report for Candidates to Receive Presidential Primary Matching Funds.
Draft AO 1988-9 –Michael B. Brewer on behalf of Free Voters of Mid America, Inc.
Draft AO 1988-14—Neil C. Taylor on behalf of Atlantic Marine, Inc. and Atlantic Dry Dock Corp.
Routine Administrative Matters.

PERSON TO CONTACT FOR INFORMATION: Mr. Fred Eiland, Information Officer, Telephone: 202-376-3155.

Marjorie W. Emmons,
Secretary of the Commission.

[FR Doc. 88-8346 Filed 4-12-88; 4:00 pm]

BILLING CODE 6715-01-M

PAROLE COMMISSION

Pursuant to the Government In the Sunshine Act (Pub. L. 94-409) [5 U.S.C. 552b]

DATE AND TIME: Tuesday, April 19, 1:30 p.m. eastern daylight time.

PLACE: 5550 Friendship Boulevard Chevy Chase, Maryland 20815.

STATUS: Open—Meeting to be conducted by conference telephone call.

MATTERS TO BE CONSIDERED: The following matters have been placed on the agenda for the open Parole Commission meeting:

Whether the Commission should include mandatory release cases in its Electronic Monitoring Project in order to ensure that adequate numbers of participants are involved to make the project viable.

AGENCY CONTACT: James Beck, Director Research Section, United States Parole Commission, (301) 492-5936.

Date: April 11, 1988.

Michael Stover,
Acting General Counsel, U.S. Parole Commission.

[FR Doc. 88-8287 Filed 4-12-88; 11:49 am]

BILLING CODE 4410-01-M

SECURITIES AND EXCHANGE COMMISSION

Notice is hereby given, pursuant to the provisions of the Government in the Sunshine Act, Pub. L. 94-409, that the Securities and Exchange Commission will hold the following meeting during the week of April 18, 1988:

A closed meeting will be held on Tuesday, April 19, 1988, at 2:30 p.m.

The Commissioners, Counsel to the Commissioners, the Secretary of the Commission, and recording secretaries will attend the closed meeting. Certain staff members who are responsible for the calendared matters may also be present.

The General Counsel of the Commission, or his designee, has certified that, in his opinion, one or more of the exemptions set forth in 5 U.S.C. 552b(c) (4), (8), (9)(A) and (10) and 17 CFR 200.402(a) (4), (8), (9)(i) and (10)

permit consideration of the scheduled matters at a closed meeting.

Commissioner Peters, as duty officer, voted to consider the items listed for the closed meeting in closed session.

The subject matter of the closed meeting scheduled for Tuesday, April 19, 1988, at 2:30 p.m., will be:

Institution of injunctive actions.

Institution of administrative proceedings of an enforcement nature.

Settlement of administrative proceedings of an enforcement nature.

Settlement of injunctive action.

Opinion.

At times changes in Commission priorities require alterations in the scheduling of meeting items. For further information and to ascertain what, if any, matters have been added, deleted or postponed, please contact: Alden Atkins at (202) 272-2014.

Jonathan G. Katz,

Secretary.

April 11, 1988.

[FR Doc. 88-8294 Filed 4-12-88; 12:09 pm]

BILLING CODE 8010-01-M

Corrections

Federal Register
Vol. 53, No. 72
Thursday, April 14, 1988

This section of the FEDERAL REGISTER contains editorial corrections of previously published Presidential, Rule, Proposed Rule, and Notice documents and volumes of the Code of Federal Regulations. These corrections are prepared by the Office of the Federal Register. Agency prepared corrections are issued as signed documents and appear in the appropriate document categories elsewhere in the issue.

COMMITTEE FOR PURCHASE FROM THE BLIND AND OTHER SEVERELY HANDICAPPED

Procurement List 1988; Proposed Additions

Correction

In notice document 88-7747 appearing on page 11694 in the issue of Friday, April 8, 1988, make the following correction:

In the second column, under "*Commodities*", the third entry under "Enamel, Aerosol" should read "8010-00-159-4519".

BILLING CODE 1505-01-D

DEPARTMENT OF ENERGY

Office of General Counsel

10 CFR Part 1010

Conduct of Employees; Statements of Employment and Financial Interest, and Interests in Energy Concerns

Correction

In rule document 88-7471 beginning on page 11240 in the issue of Wednesday, April 6, 1988, make the following corrections:

Appendix I-[Corrected]

1. On page 11241, in the third column, in the 10th line of Appendix I, "for" should read "from".

2. On page 11242, in the first table in the first column, the following should be added to the beginning of the text of footnote 1: "(Except Office of Hearings and Appeals)."

3. On the same page, in the same column, in the second table, the following should be added to the beginning of the text of footnote 2: "(Office of Hearings and Appeals)."

BILLING CODE 1505-01-D

DEPARTMENT OF THE INTERIOR

Fish and Wildlife Service

50 CFR Part 23

Procedural Change in Requesting Comments on Species Listings in Appendix III of the Convention on International Trade in Endangered Species of Wild Fauna and Flora

Correction

In rule document 88-6647 beginning on page 9945 in the issue of Monday, March 28, 1988, make the following corrections:

1. On page 9945, in the third column, in the **SUMMARY**, in the 8th, 17th and 28th lines, "Appendix II" should read "Appendix III".

2. On page 9946, in the second column, in the first complete paragraph, in the 18th line, "provision" should read "provisions".

BILLING CODE 1505-01-D

DEPARTMENT OF LABOR

Wage and Hour Division

29 CFR Parts 516 and 530

Employment of Homeworkers in Certain Industries; Records To Be Kept By Employers

Correction

Note: This is a republication of a correction appearing on page 11590 in the issue of Thursday, April 7, 1988. It is being republished because two paragraphs inadvertently appeared in a correction to an Environmental Protection Agency document.

In proposed rule document 88-6926 beginning on page 10342 in the issue of Wednesday, March 30, 1988, make the following corrections:

1. On page 10342, in the first column, under "**AGENCY**", remove "Employment Standards Administration".

2. On the same page, in the same column, under "**ACTION**", the third line should read "comments on additional enforcement provisions, and other".

3. On the same page, in the second column, under "**Background**", in the third paragraph, in the second line, "increased 56.2%" should read "increased from 56.2%".

4. On the same page, in the third column, in the second complete paragraph, in the 15th line, "restricted" was misspelled.

5. On page 10343, in the second column, under "**Wage-Hour Investigation Procedures**", in the ninth line, "further" should read "future".

6. On page 10344, in the first column, under "**Denial or Revocation of a Homework Certificate**", in the second line, "authorized" should read "authority".

7. On page 10345, in the 1st, 2nd and 3rd columns, the italicized headings, "Civil Money Penalties", "Administrative Procedures" and "Bonding or Security Payments" should have been bold headings.

8. On the same page, in the second column, in the first complete paragraph, in the 19th line "*Bros.*" should read "*Bro.*"; and in the 20th line "(1944)" should read "(1944)).".

9. On the same page, in the same column, in the last paragraph, in the third line "followed" should read "following".

10. On page 10346, in the 1st and 2nd columns, the italicized headings, "Homework in the Jewelry Industry", "Homework in the Women's Apparel Industry" and "Model Garment Programs", should have been bold headings.

11. On the same page, in the first column, in the last paragraph, in the eighth line, "lift that" should read "lift the".

12. On the same page, in the third column, under "**Regulatory Flexibility Act**", in the third paragraph, in the first line, "Bureau" should read "Bureaus".

§ 530.101 [Corrected]

13. On page 10348, in the second column, in § 530.101, in the fifth line, "to" should read "of".

§ 530.205 [Corrected]

14. On page 10349, in the third column, in § 530.205(h), in the ninth line, "homeworkers" should read "homeworker"; and in the 10th line, "certificates" should read "certificate".

§ 530.301 [Corrected]

15. On page 10350, in the second column, in § 530.301, in the third line, "violations" should read "violation".

§ 530.402 [Corrected]

16. On the same page, in the third column, in § 530.402(e), in the fourth

line, "Administration" should read "Administrator".

§ 530.411 [Corrected]

17. On page 10351, in the third column, in § 530.411(b), in the first line, "hearing to" should read "hearing pursuant to".

PART 516—[CORRECTED]

18. On page 10352, in the second column, under "**Authority**", in the second line, insert a period after "29 U.S.C. 211".

§ 516.31 [Corrected]

19. On the same page, in the third column, in § 516.31(c), in the 20th line, "wages be" should read "wages to be".

BILLING CODE 1505-01-D

PANAMA CANAL COMMISSION

Privacy Act of 1974; Systems of Records, Deletions, Revisions

Correction

In notice document 87-29941 beginning on page 49541 in the issue of Thursday December 31, 1987, make the following corrections:

1. On page 49541, in the third column, the **EFFECTIVE DATE** should read "December 31, 1987".

2. On page 49542, in the first column, in the first complete paragraph, in the ninth line, after "Canal", insert "Zone".

3. On the same page, in the first column, in the second complete paragraph, in the first line, "of" should read "to".

BILLING CODE 1505-01-D

ENVIRONMENTAL PROTECTION AGENCY

40 CFR Part 60

[AD-FRL-3274-7]

Standards of Performance for New Stationary Sources; Revision of Method 25 of Appendix A

Correction

Note: This is a republication of a correction beginning on page 11590 in the issue of Thursday, April 7, 1988. It is being republished because two paragraphs from a Department of Labor correction inadvertently appeared in this correction.

In rule document 88-2804 beginning on page 4140 in the issue of Friday, February 12, 1988, make the following corrections:

PART 60—[CORRECTED]

Appendix A—[Corrected]

1. On page 4146, in the second column, the 24th line should read "ρ=Density of liquid injected, g/cc."

2. On the same page, the formulas, appearing after paragraphs 6.4 and 6.8 should appear as follows:

6.4 . . .

$$C_t = \left[\frac{\dfrac{P_{tf}}{T_{tf}}}{\dfrac{P_t}{T_t} - \dfrac{P_{ti}}{T_{ti}}}\right]\left[\frac{1}{r}\sum_{j=1}^{r} C_{tm_j}\right] \qquad \text{Eq. 25-3}$$

6.8 . . .

$$\text{Percent recovery} = 1.604\,\frac{M}{L}\,\frac{V_v}{\rho}\,\frac{P_f}{T_f}\,\frac{C_{cm}}{N} \qquad \text{Eq. 25-7}$$

BILLING CODE 1505-01-D

federal register

Thursday
April 14, 1988

Part II

Department of Defense
General Services Administration
National Aeronautics and Space Administration

48 CFR Part 52

Federal Acquisition Regulation (FAR); Double Recoupment of Taxes on FMS Contracts; Proposed Rule

VOL
53
ISS
72
AP
14
1988
UMI

DEPART

GENERA
ADMINIS

NATION
SPACE A

48 CFR

Federal
Double
Contrac

AGENCIE
(DoD), G
(GSA), a
Space A

ACTION:

SUMMAR
Acquisit
Acquisit
consider
52.229–8
foreign c

DATE: Co
submitte
address
13, 1988,
formulat

ADDRESS
submit w
Services
Sercreta
NW.; Ro
Please
correspo

FOR FUR
Margare
Room 40
DC 2040

SUPPLEM

A. Back

FAR c
regardin
reimburs
revised t
subcontr
U.S. inco
foreign t
Revenue
reductio
U.S. Gov
tax cred
FAR 52.2
price co
the poss
payment
contract
under a
contract
credit or

DEPARTMENT OF DEFENSE

GENERAL SERVICES ADMINISTRATION

NATIONAL AERONAUTICS AND SPACE ADMINISTRATION

48 CFR Part 52

Federal Acquisition Regulation (FAR); Double Recoupment of Taxes on FMS Contracts

AGENCIES: Department of Defense (DoD), General Services Administration (GSA), and National Aeronautics and Space Administration (NASA).

ACTION: Proposed rule.

SUMMARY: The Civilian Agency Acquisition Council and the Defense Acquisition Regulatory Council are considering revisions to FAR clauses 52.229-8 and 52.229-9 regarding taxes on foreign cost-reimbursement contracts.

DATE: Comments: Comments should be submitted to the FAR Secretariat at the address shown below on or before June 13, 1988, to be considered in the formulation of a final rule.

ADDRESS: Interested parties should submit written comments to: General Services Administration, FAR Secretariat (VRS), 18th & F Streets NW.; Room 4041, Washington, DC 20405.

Please cite FAR Case 88-22 in all correspondence related to this issue.

FOR FURTHER INFORMATION CONTACT: Margaret A. Willis, FAR Secretariat, Room 4041, GS Building, Washington, DC 20405, (202) 523-4755.

SUPPLEMENTARY INFORMATION:

A. Background

FAR clauses 52.229-8 and 52.229-9 regarding taxes on foreign cost-reimbursement contracts are being revised to require that, if a contractor or subcontractor obtains a reduction of its U.S. income tax liability because of foreign tax credits under the Internal Revenue Code, the amount of the reduction shall be credited back to the U.S. Government at the time the foreign tax credit is taken. A similar clause, FAR 52.229-6, applies to foreign fixed-price contracts. This revision precludes the possibility of a "wind-fall" from the payment of foreign taxes (for which contractors are reimbursed by the U.S. under a contract) resulting from a contractor or subcontractor receiving a credit on its U.S. income taxes.

Under current FAR provisions, a U.S. contractor performing a Foreign Military Sales (FMS) contract in a foreign country may properly pay an income tax to the host country and be reimbursed by the U.S. Government for that tax as an allowable cost under the contract. The contractor may then receive a double recovery of the tax because the foreign tax credit will reduce the contractor's U.S. income tax liability to the extent of the tax. The changes being proposed will preclude this double recovery by requiring that the amount of the reduction be credited back to the U.S. Government at the time the foreign tax credit is taken.

B. Regulatory Flexbility Act

The proposed rule may have an impact on certain contractors doing business in foreign countries under FMS contracts, and therefore, publication for public comments is required. The proposed rule is not expected to have a significant impact on a substantial number of small entities because these types of cost-reimbursement FMS contracts performed in foreign countries are generally performed by large entities. Therefore, an Initial Regulatory Flexibility Analysis has not been prepared. Comments are invited from small businesses and other interested parties. Comments from small entities concerning the affected FAR Subpart will also be considered in accordance with Section 610 of the Act. Such comments must be submitted separately and cite FAR Case 88-610 in correspondence.

C. Paperwork Reduction Act

The Paperwork Reduction Act does not apply because the proposed changes do not impose any reporting or recordkeeping requirements or collection of information from offerors, contractors, or members of the public which require the approval of OMB under 44 U.S.C. 3501, *et seq.*

List of Subjects in 48 CFR Part 52

Government procurement.

Dated: April 7, 1988.

Harry S. Rosinski,

Acting Director, Office of Federal Acquisition and Regulatory Policy.

Therefore, it is proposed that 48 CFR Part 52 be amended as set forth below:

PART 52—[AMENDED]

1. The authority citation for Part 52 continues to read as follows:

Authority: 40 U.S.C. 486(c); 10 U.S.C. 137; and 42 U.S.C. 2473(c).

2. Section 52.229-8 is amended by inserting a colon in the introductory text following the word "clause" and deleting the remainder of the sentence; by removing in the title of the clause the date "APR 1984" and inserting in its place the date "APR 1988"; by designating the existing clause as paragraph (a); by adding paragraph (b); and by removing the derivation line following "(End of clause)", to read as follows:

52.229-8 Taxes—foreign cost-reimbursement contracts.

* * * * *

(b) If the Contractor or subcontractor under this contract obtains a foreign tax credit that may be offset against the Contractor's or subcontractor's tax liability under the United States Internal Revenue Code (Title 26, U.S. Code) because of the payment of any tax or duty that was reimbursed under this contract, the amount of the credit shall be paid or credited at the time of such offset to the Government of the United States as the Contracting Officer directs.

3. Section 52.229-9 is amended by inserting a colon in the introductory text following the word "clause" and deleting the remainder of the sentence; by removing in the title of the clause the date "APR 1984" and inserting in its place the date "APR 1988"; by designating the existing clause as paragraph (a); by adding paragraph (b); and by removing the derivation line following "(End of clause)", to read as follows:

52.229-9 Taxes—cost-reimbursement contracts with foreign governments.

* * * * *

(b) If any subcontractor obtains a foreign tax credit that may be offset against the subcontractor's tax liability under the United States Internal Revenue Code (Title 26, U.S. Code) because of the payment of any tax or duty that was reimbursed under this contract, the amount of the credit shall be paid or credited at the time of such offset to the Government of the United States as the Contracting Officer directs.

[FR Doc. 88-8154 Filed 4-13-88; 8:45 am]

BILLING CODE 6820-61-M

VOL
53
ISS
72
AP
14
1988
UMI

federal register

Thursday
April 14, 1988

Part III

Department of Transportation

Federal Highway Administration

49 CFR Parts 383 and 391

Commercial Driver's License Program; Waivers; Request for Comments; Notice of Petition

DEPARTMENT OF TRANSPORTATION

Federal Highway Administration

49 CFR Parts 383 and 391

[FHWA Docket No. MC-88-8]

Commercial Driver's License Program; Waivers; Request for Comments

AGENCY: Federal Highway Administration (FHWA), DOT.

ACTION: Notice of petition; request for comment.

SUMMARY: The FHWA is requesting comments from interested parties on petitions submitted by the American Farm Bureau Federation, the New York State Fire Safety Advisory Board, the U.S. Department of Defense (DOD), and other groups of drivers. The petitioners request exemptions from the commercial driver testing and licensing standards (49 CFR 383), and the provisions of the Commercial Motor Vehicle Safety Act of 1986 (Title XII of Pub. L. 99-570, Stat. 3207-170). Specifically, the FHWA is considering waiver requests from drivers of six classes of vehicles:

(1) Farm vehicles;
(2) Firefighting equipment;
(3) Military vehicles;
(4) Transit buses;
(5) Certain vehicles used by railway companies; and
(6) Public utility vehicles.

The FHWA requests public comment on whether, if granted, the waivers would serve the public interest or diminish public safety.

DATE: Written comments must be received on or before May 16, 1988.

ADDRESS: All signed, written comments should refer to the docket number that appears at the top of this document and should be submitted Federal Highway Administration, Room 4232, Office of Chief Counsel, HCC-10, 400 Seventh Street SW., Washington, DC 20590. All comments received will be available for examination at the above address from 8:30 a.m. to 3:30 p.m., e.t., Monday through Friday, except legal holidays. Commenters who want to be notified that the FHWA received their comments should include a self-addressed, stamped postcard.

FOR FURTHER INFORMATION CONTACT: Ms. Jill L. Hochman, Office of Motor Carrier Standards, (202) 366-4001; or Mr. Paul L. Brennan, Office of the Chief Counsel, HCC-10, (202) 366-1350, Federal Highway Administration, Department of Transportation, 400 Seventh Street SW., Washington, DC 20590. Office hours are from 7:45 a.m. to 4:15 p.m., e.t. Monday through Friday, except legal holidays.

Background

The Commercial Driver's License Program was established by the Commercial Motor Vehicle Safety Act of 1986 (the Act). The Act requires that the driver of a commercial motor vehicle (1) have a single driver's license with a single driving record, (2) be tested for the knowledge and skills needed to drive a vehicle representative of the vehicle that they will be licensed to drive, and (3) be disqualified from driving a commercial vehicle if the driver commits certain criminal or traffic violations.

The Congress intended that the provisions of the Act apply both to interstate and intrastate drivers, involved in trade, traffic, and transportation in all sectors of the economy. Drivers of farm vehicles, firefighting equipment, military vehicles, and transit buses are subject to the commercial driver's license requirements; however, the requirements do not apply to a driver of vehicle for personal use, such as a recreational vehicle that would otherwise meet the definition of a commercial motor vehicle.

Single License, Notifications, and Disqualifying Offenses

The FHWA published a final rule for the single license, notification reuirements, and disqualification provisions on June 1, 1987 (52 FR 20574; Docket No. MC-125). The final rule was effective July 1, 1987. "Commercial motor vehicle" is defined as a vehicle:

(1) With a gross vehicle weight rating (GVWR) of 26,001 or more pounds;
(2) Designed to transport more than 15 passengers (including the driver); or
(3) Transporting hazardous materials in such quantities that the vehicle is required to be placarded under the Hazardous Materials Transportation Regulations (49 CFR 383.5).

Federal regulations prohibit the driver of a commercial motor vehicle from having more than one license (49 CFR 383.21). The provision also was effective July 1, 1987. Exceptions are provided for a person who moves and applies for a new driver's license (10-day exception) and, until December 31, 1989, for a person who holds more than one license because of State laws or regulations in effect before October 27, 1986.

Effective July 1, 1987, a driver of a commercial motor vehicle who commits a violation outside his/her State must notify the State which issued the license. A driver also must notify his/her employer of any convictions and when his/her driver's license is suspended, revoked or canceled. An applicant for a job as a commercial motor vehicle driver must inform the prospective employer of previous employment as an "operator of a commercial motor vehicle," if any, for the 10-year period before the application date. An employer is prohibited from knowingly allowing a employee to operate a commercial motor vehicle if the employee's driver's license to operate such vehicle has been suspended, revoked, or canceled, if the employee has been disqualified from driving, or if the employee has more than one license (49 CFR 383.31-383.37).

A driver who violates the single license or notification requirements, or an employer who violates the employer requirements is subject to a maximum $2,500 civil penalty. A driver or employer who knowingly and willfully violates the requirements is subject to a maximum $5,000 criminal penalty and/or 90 days of imprisonment.

The regulation also requires a 1-year disqualification for the first offense of driving a commercial motor vehicle under the influence of alcohol or a controlled substance, leaving the scene of an accident, or using a commercial motor vehicle in the commission of a felony. If the offense occurs while the driver is operating a commercial motor vehicle that is placarded for hazardous materials, the minimum disqualification is 3 years. Second offenders of the offenses are disqualified for life, as are first offenders who use a commercial motor vehicle in the commission of a felony involving the manufacture, distribution, or dispensing of controlled substances (49 CFR 383.51).

Proposed Testing and Licensing Standards

The FHWA published the proposed testing and licensing standards required by the Act on December 11, 1987 (52 FR 47326; Docket No. MC-87-18). By October of 1993, all 50 States and the District of Columbia would have to comply with the standards when licensing commercial truck and bus drivers, or risk losing a portion of their highway funds. The proposed standards would require that the driver demonstrate the necessary skills and ability to operate a truck or bus safely, based on the type of vehicle to be operated. Drivers must be licensed under the proposed standards by April 1, 1992. A foreign driver of a commercial motor vehicle in the United States would have to meet comparable testing standards within the jurisdiction that

issued his/her driver's license, or be tested by a State.

A commercial driver's license is *not* a Federal license. States will continue to issue all drivers' licenses. In fact, each State will continue to oversee and administer all its testing and licensing procedures. Each State establishes its own testing and licensing fees for all drivers. For current drivers, the FHWA proposed that the State could substitute the skills-test requirement with a safe driving record, experience, or previous passage of an acceptable skills tests. States also would continue to establish the physical and medical qualifications for *intrastate* drivers, including the minimum age of the driver.

The current requirement that an *interstate* driver must be 21 years or older would not change under the proposed testing and licensing standards. An *interstate* driver operating a commerical vehicle transporting agricultural products or farm machinery must be at least 18, but there is not a Federal minimum age for an *interstate* driver who operates a farm vehicle of less than 10,001 pounds or within 150 miles of the farmer's farm (49 CFR 391.3).

The comment period for the Notice of Proposed Rulemaking (NPRM) for the proposed testing and licensing standards closed February 9, 1988. The FHWA received approximately 1,200 comments to the docket. The FHWA is reviewing the comments and plans to issue the final testing and licensing standards this June.

Waiver Procedures

Section 12003 of the Act provides the Secretary with the authority to waive any class of drivers or vehicles from any or all of the provisions of the Act or the implementing regulations, if the Secretary determines that the "waiver is not contrary to the public interest and does not diminish the safe operation of commerical vehicles." Under Federal regulations (49 CFR 383.7), a person may petition the Federal Highway Administrator for a waiver of compliance by a class of persons or a class of commercial motor vehicles with any or all requirements of the Act or implementing regulations. The Administrator may deny the petition, if he determines it is without merit. If the Administrator determines that the petition may have merit, the FHWA will publish a notice in the **Federal Register** to provide interested persons an opportunity for comment. After the opportunity for comment, the Administrator may grant or deny the waiver. The FHWA must publish a notice of its decision on the petition and its rationale in the **Federal Register**.

Petitions

The FHWA is considering waiver requests from drivers of six classes of vehicles:

(1) Farm vehicles;
(2) Firefighting equipment;
(3) Military vehicles;
(4) Transit buses;
(5) Certain vehicles used by railway companies; and
(6) Public utility vehicles.

Several hundred individuals and associations requested exemptions from the Commercial Driver's License Program through their comments on regulations for the program. The majority of the requests for exemptions were from drivers of farm vehicles. Drivers of firefighting equipment, transit buses, motor vehicles owned by railway companies, and public utility vehicles also requested exemptions. The FHWA is combining the petitions and requests in this notice.

In this portion of the notice, the FHWA is requesting specific views, information, and data that it should consider when determining whether (or not) each waiver would be contrary to the public interest or would diminish the safe operation of commercial vehicles. The FHWA is posing questions to assist in the review of comments on the notice, but encourages commenters to provide any additional facts or views pertaining to the waiver requests.

Drivers of Farm Vehicles

The American Farm Bureau Federation petitioned the FHWA on January 27, 1988, requesting that "farmers with farm plates on their trucks who drive their truck less than 15,000 miles per year be exempt from the newly enacted commercial driver's license requirements." Drivers of farm vehicles are affected by the commercial driver requirements because some of the vehicles weigh more than 26,000 pounds GVWR, and many of the vehicles are used to transport chemicals in amounts that require a placard.

The petitioners generally believe that drivers of farm vehicles should be exempt from the Commercial Driver's License Program because they do not consider themselves to be commercial drivers. The American Farm Bureau Federation notes that farmers drive many fewer miles annually than the typical over-the-road trucker, as farmers are not on the road many hours a day, day after day. The American Farm Bureau Federation also indicates that 45 percent of the farmers are part-time farmers; many farms are small, family operations where anyone in the family may transport supplies to the farms or products to market. Many of the farmers who have petitioned believe that the testing and licensing requirements would create undue hardship and costly impacts for an already economically stressed agricultural community.

As part of the public docket for the NPRM on the proposed testing and licensing standards, the FHWA received over 500 requests from farm groups and individuals in the agricultural community requesting waivers from the commercial driver's license requirements. Aside from the American Farm Bureau Federation, some of the other groups who have commented on how the requirements affect farmers include:

—Arizona Cattlemen's Association;
—Colorado Cattlemen's Association;
—Farm Bureaus from 16 States (Arizona, Delaware, Florida, Georgia, Idaho, Indiana, Iowa, Kentucky, Minnesota, Nebraska, New Hampshire, New York, North Carolina, South Carolina, Tennessee, and Wisconsin);
—Farm Bureau Mutual Insurance Company;
—Georgia Agricultural Commodity Commission for Peanuts;
—Idaho Cattle Association;
—Kansas Association of Wheat Growers;
—Kansas Livestock Association;
—Kansas State Board of Agriculture;
—Minnesota Association of Wheat Growers;
—Minnesota Plant Food and Chemical Association;
—National Grange;
—Nebraska Beet Growers Association;
—North Dakota Milk Products Association;
—North Dakota State Wheat Commission;
—Oklahoma Peanut Commission;
—Pennsylvania State Grange;
—Red River Valley Sugarbeet Grower Association;
—Texas Cattle Association;
—Wisconsin Potato and Vegetable Growers Association Inc.; and
—Women Involved in Farm Economics.

In February 1987, the FHWA and the U.S. Department of Agriculture (USDA) initiated a series of research projects to develop driver and vehicle profiles, and accident statistics relating to the operation of farm trucks in the United States. In 1987, the USDA contracted with the Upper Great Plains Transportation Institute to collect information in the upper midwest region of the United States. The FHWA is also

working with the University of Michigan Transportation Research Institute to access its dataset (Trucks Involved in Fatal Accidents), the U.S. Census of Transportation, and other readily available data in order to compile more information on farmers. The FHWA expects the results from these efforts will be available later this spring.

Drivers of Firefighting Equipment

The New York State Fire Safety Advisory Board petitioned the Department on February 3, 1988, stating the Board is "adamant that the current licensing proposal under the Commercial Motor Vehicle Safety Act of 1986 cannot be complied with by the New York State's fire departments, and drivers of fire apparatus should be exempt from this Act." Petitioners for drivers of firefighting equipment also believe that they should be exempt from the commercial driver's license program because they are not typical commercial drivers. They are especially concerned about the economic burden and logistical problems of testing and licensing.

The New York State Fire Safety Advisory Board states that all 1,810 of New York's fire departments have apparatus that fall under the definition of commercial motor vehicle in the Act. The Board estimates that in New York alone a total of 94,000 fire personnel (of which 80,000 are volunteers) would need to be licenced under the new program.

The Prince George's County Fire Chief (Maryland) states that the County has many firefighting employees and volunteers who are residents of other States, including students from a local university's fire protection curriculum. The Fire Chief is concerned that these drivers would have to drive the fire equipment from Maryland to the skills testing sites in their States in order to be licensed, thus the Fire Chief requests an exemption "for fire and rescue personnel to drive commercial vehicles for emergency operation only."

In addition to the requests from the New York State Fire Safety Advisory Board and the Prince George's County Fire Chief, the FHWA also received several other requests to waive firefighters from the commercial driver's license requirements. For example, the FHWA received requests from several local fire districts in New York and the Fairhaven Fire District in California.

Drivers of Military Vehicles

The DOD petitioned the FHWA on March 18, 1988, requesting "a waiver for military drivers from the provisions of the 1986 Motor Vehicle Safety Act [sic]." The DOD petition is for "all active duty military personnel, Reserve and National Guard on active duty, to include personnel on full time National Guard duty, inactive duty training and National Guard military technicians." The DOD petition is for military drivers of DOD vehicles *only*. The DOD prefers that their civilian drivers be required to comply with the Act's provisions through their respective States.

The DOD believes that a waiver of military drivers is justified because the military enforces special training and discipline procedures for its drivers, and large military vehicles are in limited use on the public highways. In addition, the DOD notes that it has 10,500 "oversized vehicles of commercial design" which were operated 52 million miles on and off military installations in 1987; these vehicles were involved in accidents resulting in 3 fatalities (one on an installation, and the other two in a bus accident on an Interstate highway).

Based on these figures, the FHWA estimates that the fatal accident rate for DOD "oversized vehicles" would be approximately 5.8 fatal accidents per 100 million vehicle miles of travel (VMT). By comparison the fatal accident rate in 1985 for all vehicles was 2.2 fatal accidents per 100 million VMT (39,168 fatal accidents/1,774 hundred million VMT), and the fatal accident rate for trucks of 26,001 pounds and over was 6.4 fatal accidents per 100 million VMT (4,198 fatal accidents/65,611 million VMT).

Drivers of Transit Buses

The Amalgamated Transit Union petitioned the FHWA on July 30, 1987, requesting a waiver for public transit operators from the commercial driver's license requirements. The Union believes that the problems the Act was intended to correct—multiple licenses, lack of uniform testing and fitness requirements, and unsafe drivers—are not problems in the intracity segment of the transit industry.

The Union notes that "municipal transit operators are employed by one employer and operate for the most part intra-state * * *. [P]ublic transit agencies and their employees are already subject to a wide range of Federal, state and local rules and regulations affecting safety, equipment and other aspects of thir operations. Drivers, especially, are required to satisfy state licensing laws and comply with related regulations concerning the reporting of accidents and violations of state and local traffic laws. This system has served to ensure that unsafe operators are removed from service and subject to appropriate penalities, including suspensions, disqualifications and if necessary fines and/or jail terms."

Drivers of Motor Vehicles Used by Railway Companies

In commenting on the final rule on the Commercial Driver Licensing Standards (Docket No. MC–125), the Association of American Railroads (AAR) suggested in its July 31, 1987, letter that "DOT exempt all drivers of vehicles who, under state law, are not required to obtain commercial motor vehicle licenses, subject to a provision that the application of this exception would be inapplicable to drivers of tractor/trailer combinations." The AAR also suggested that "DOT exempt drivers who drive commercial motor vehicles less than a specified amount of mileage annually." The AAR suggested the exemption of such a broad population of drivers because "the problems arising from the application of the standards to the railroads are undoubtedly present for a wide variety of industries."

Railroads use a variety of vehicles that fall within the definition of a "commercial motor vehicle" for a variety of purposes—maintaining rail rights-of-way, transporting supplies (including railway torpedoes, and fusees, and oxygen and acetylene tanks), and transporting railroad crews. Railroad employees also position piggyback trailers at terminals. The AAR is especially concerned about the burden of the requirements on employees whose principal duty is not driving.

Drivers of Public Utility Vehicles

Virginia Power petitioned the FHWA on March 29, 1988, stating that "public utility vehicles do not meet the intent of the definition of commercial motor vehicle and should be excluded from compliance with these proposed [testing and license] regulations." Virginia Power believes that the Act intended to regulate common carriers, contract carriers, and private carriers of property for sale, lease, rent, or bailment.

Virginia Power also states, "The public utility industry employs the use of highly specialized vehicles specifically designed for routine maintenance and construction work on electrical equipment. The employees of utility companies are lineman, electricians, and maintenance men who drive merely to move from one service job to another within a specified district. The vehicles that they drive are not designed for over the road transportation of freight, and public utility employees do not drive excessively long hours on the road because their principal job is the repair

and maintenance of electrical equipment. In addition, public utility companies promote extremely aggressive safety programs, which has allowed the public utility industry to maintain an excellent highway safety record."

Questions on the Waiver Requests

In this portion of the notice, the FHWA is requesting specific views, information, and data that it should consider when determinig whether (or not) each waiver would be contrary to the public interest or would diminish the safe operation of commercial vehicles. The FHWA is posing the questions to assist in the review of comments on the notice, but strongly encourages commenters to provide any additional facts or views pertaining to the waiver requests.

(1) Should the FHWA grant waivers to any or all of the major groups—i.e., farmers, firefighters, public transit drivers, military drivers, railroad employees, and public utility employers—who have petitoned? On what basis should such waivers be granted or rejected?

(2) For purposes of granting a waiver, how should FHWA define "farmer," "firefighter," "public transit driver," "military driver," "railroad employee," and "public utility employee," and the vehicles which they operate? Would vehicle registration or a limit of driving within a 150-mile radius from place of employment be an acceptable basis to use in these definitions?

(3) Should the FHWA waive all the drivers within each group or selected ones—such as those who operate intrastate, drive less than a specified number of miles annually, drive the vehicles within a specified radius of the primary place of employment, or drive vehicles specially "registered" by the State (such as "farm vehicles")?

(4) Should the FHWA waive each group of drivers requesting exemptions from all the commercial driver's license requirements or only selected ones:

—Single license;
—Knowledge and skills test;
—Notifications; or
—Minimum disqualifications?

(5) Should the FHWA impose any restrictions on waivers?

(6) How many drivers and vehicles, by vehicle size, fall within the scope of each waiver request?

(7) What data or information are available on the drivers and vehicles in each group, such as annual vehicle miles traveled on public highways and the incidence of accidents resulting in fatalities, serious injuries, or property damage that support or reject the rationale for waiving certain groups of drivers?

(8) What portion of the mileage involves the transport of hazardous materials requiring a placard, what type of hazardous materials are transported, and what is the incidence of accidents involving vehicles transporting hazardous materials that resulted in fatalities, serious injuries, or property damage?

Note. Earlier in this notice, the FHWA cites data included in the DOD petition. The FHWA believes that similar data for farmers, firefighters, transit bus drivers, railroad, and public utility employees would be useful in reviewing the waiver requests and would appreciate data for time periods longer than 1 year, if available.

Scope of Waivers

The FHWA intends to take a reasonable, common-sense approach in implementing the Commercial Driver's License Program. Many States already recognize certain drivers, such as those in the farm community, when issuing vehicle registrations and driver's licenses. The FHWA believes that balance must be determined between potential burdens associated with the Act's requirements on certain drivers and the safety consequences of waiving all or any of the Act's requirements for such drivers. For example, if the FHWA waived the single-license, single-record requirement and the minimum disqualification provisions for any driver of a large or heavy vehicle, some drivers could obtain multiple licenses, and disqualified drivers could unwittingly be allowed to operate a "waived" class of heavy trucks or buses, especially current drivers of these vehicles.

From a safety standpoint, therefore, it may be appropriate to grant a waiver that is limited *only* to testing and licensing requirements for commercial motor vehicle operations that are regional or local in nature and that do not effect the public over an extended period of vehicle operation. The FHWA requests comments on "where to draw the line," i.e., whether a waiver should be granted (1) for all or only certain of the Commercial Driver's License requirements—the single-license, single-record; notifications; knowledge and skills tests for a representative vehicle; and the minimum disqualifications; and (2) for all or only certain of the petitioners—classes drivers or vehicles including drivers of farm vehicles, firefighting equipment, military vehicles, transit buses, and certain motor vehicles used by railway and public utility companies.

In closing, the FHWA believes that "where to draw the line" is important to consider with respect to the balance between potential burdens and safety impacts when addressing the concerns of drivers of farm vehicles, firefighting equipment, and other specialized vehicles. Under the proposed testing and licensing standards, each State would be free to devise special license *classifications, endorsements,* or *restrictions* (beyond the minimum Federal groupings) and special *tests* for any group of vehicles. The FHWA, however, is willing to consider waivers and to provide the States additional discretion in order to help reduce the burden on these drivers, if it is in the public interest and the safe operation of a commercial motor vehicle is not diminished. Commenters are requested to provide data or information that demonstrate whether or not additional State discretion would serve the public interest and diminish the safe operation of commercial motor vehicles. The FHWA also encourages commenters to provide any additional facts or views pertaining to the waiver requests.

Authority: Title XII of Pub. L. 99–570, 100 Stat. 3207 170; 49 U.S.C. 3102; 49 U.S.C. App. 2505; 49 CFR 1.48.

Issued on: April 11, 1988.

Robert E. Farris,

Deputy Administrator Federal Highway Administration.

[FR Doc. 88–8358 Filed 4–13–88; 8:50 am]

BILLING CODE 4910-22-M

VOL
53
ISS
72
AP
14
1988
UMI

Read

INFORMA

Federal R

Index, fin
Public ins
Correction
Document
Machine r

Code of

Index, fin
Printing s

Laws

Public La
Additiona

President

Executive
Public Pa
Weekly C

The Unite

General i

Other Se

Data base
Guide to
Legal staf
Library
Privacy A
Public La
TDD for t

FEDERAL

10519-106
10869-110
11031-112
11239-114
11487-116
11633-118
11815-119
11991-121
12137-123
12371-125

Reader Aids

Federal Register

Vol. 53, No. 72

Thursday, April 14, 1988

INFORMATION AND ASSISTANCE

Federal Register

Index, finding aids & general information	523-5227
Public inspection desk	523-5215
Corrections to published documents	523-5237
Document drafting information	523-5237
Machine readable documents	523-5237

Code of Federal Regulations

Index, finding aids & general information	523-5227
Printing schedules	523-3419

Laws

Public Laws Update Service (numbers, dates, etc.)	523-6641
Additional information	523-5230

Presidential Documents

Executive orders and proclamations	523-5230
Public Papers of the Presidents	523-5230
Weekly Compilation of Presidential Documents	523-5230

The United States Government Manual

General information	523-5230

Other Services

Data base and machine readable specifications	523-3408
Guide to Record Retention Requirements	523-3187
Legal staff	523-4534
Library	523-5240
Privacy Act Compilation	523-3187
Public Laws Update Service (PLUS)	523-6641
TDD for the deaf	523-5229

FEDERAL REGISTER PAGES AND DATES, APRIL

10519-10868 1
10869-11030 4
11031-11238 5
11239-11486 6
11487-11632 7
11633-11814 8
11815-11990 11
11991-12136 12
12137-12370 13
12371-12508 14

CFR PARTS AFFECTED DURING APRIL

At the end of each month, the Office of the Federal Register publishes separately a List of CFR Sections Affected (LSA), which lists parts and sections affected by documents published since the revision date of each title.

3 CFR

Proclamations:
5784 10519
5785 10521
5786 10523
5787 11031
5788 11489
5789 11809
5790 11811
5791 11813
5792 12365
5793 12367
5794 12369

Executive Orders:
12634 11041
12635 12134

Administrative Orders:

Memorandums:
Mar. 31, 1988 11039

Presidential Determinations:
No. 88-10 of February 29, 1988 11487

5 CFR

831 11633
842 11633
1633 11815

Proposed Rules:
1632 11864
2431 10885

7 CFR

2 11636
300 10525
301 11825
400 10526
907 12371
908 12371
910 ..... 10527, 11636
911 11830
917 11832
929 12373
946 11043
981 12374
1032 11637
1064 11590
1126 11638
1421 11239
3600 11639
3601 11639

Proposed Rules:
6 11091
53 10545
54 10545
449 11299
917 11669
918 11867
946 12423
949 10887
1030 10894
1065 12424
1106 11092
1497 11474
1498 11474
1530 11098
1700 11511
1701 10545

8 CFR

Proposed Rules:
3 11300
208 11300
236 11300
242 11300
253 11300

9 CFR

77 11491
92 11043

Proposed Rules:
78 12019

10 CFR

430 10869
600 12137
1010 ..... 11240, 12497

Proposed Rules:
2 11310
50 ..... 11311, 12425

12 CFR

202 11044
205 11046
226 ..... 11047, 11055
229 11832
265 11640
563 ..... 11242, 11243
611 12140
615 12140

14 CFR

Ch. III 11004
39 ..... 11246, 11641-11643, 11837, 11838, 12141, 12376
71 ..... 10528, 11020, 11060, 11061, 11839-11841
97 ..... 11062, 12377
121 12358
135 12358

Proposed Rules:
Ch. I 11868
21 11869
23 11869
27 ..... 10826, 11162
29 ..... 10826, 11162
39 ..... 11674-11676, 11678, 11871, 12427
71 ..... 10546, 11100, 11101
73 11102

16 CFR

13 ..... 11247, 12379

17 CFR
30 ... 11491
200 ... 12412
230 ... 11841
240 ... 11841
Proposed Rules:
Ch. IV ... 12428
200 ... 12429

18 CFR
37 ... 11191
154 ... 11191
157 ... 11644, 11845

19 CFR
7 ... 12143

20 CFR
10 ... 11594
Proposed Rules:
10 ... 11596

21 CFR
184 ... 11247
340 ... 11731
452 ... 12414
510 ... 11492
520 ... 11063
522 ... 11064, 11493
524 ... 11064
540 ... 11492
558 ... 11065, 11251
561 ... 11938
800 ... 11251
803 ... 11251
807 ... 11251
808 ... 11251
809 ... 11251
812 ... 11251
813 ... 11251
820 ... 11251
860 ... 11251
861 ... 11251
862 ... 11645
864 ... 11251
866 ... 11251
876 ... 11251
895 ... 11251
1002 ... 11251
1005 ... 11251
1010 ... 11251
1020 ... 11251
1030 ... 11251
1040 ... 11251
1050 ... 11251
1308 ... 10834, 10861, 10869
Proposed Rules:
133 ... 11312
175 ... 11402
176 ... 11402
177 ... 11402
178 ... 11402
193 ... 11938
561 ... 11313

22 CFR
120 ... 11494, 12099
121 ... 11494, 12099
122 ... 11494, 12099
123 ... 11494, 12099
124 ... 11494, 12099
125 ... 11494, 12099
126 ... 11494, 12099
127 ... 11494, 12099
128 ... 11494, 12099
514 ... 10528
602 ... 10529
706 ... 11992
Proposed Rules:
204 ... 11872
602 ... 12430

23 CFR
650 ... 11065
658 ... 12145
771 ... 11065
1204 ... 11255
1205 ... 11255
Proposed Rules:
625 ... 11875
626 ... 11875
1309 ... 11679

24 CFR
50 ... 11224
200 ... 11270
201 ... 11997
203 ... 10529, 11997
221 ... 11224
234 ... 11997
236 ... 11224
241 ... 11224
248 ... 11224
Proposed Rules:
35 ... 11164
200 ... 11164, 12431
510 ... 11164
511 ... 11164
570 ... 11164
882 ... 11164
886 ... 11164
888 ... 12278
941 ... 11164
965 ... 11164
968 ... 11164

25 CFR
61 ... 11271

26 CFR
1 ... 11002, 11066, 11162, 11731, 12000, 12149
602 ... 11066, 11162, 11731, 12000
Proposed Rules:
1 ... 11103, 11876, 12433

27 CFR
Proposed Rules:
4 ... 12024
12 ... 12024

28 CFR
0 ... 10870, 10871, 11645
66 ... 12099
71 ... 11645

29 CFR
102 ... 10872
1907 ... 12102
1910 ... 11414, 12102
2610 ... 10530
2622 ... 10530
2644 ... 10531
Proposed Rules:
516 ... 11590, 12497
530 ... 11590, 12497
1910 ... 11511
1915 ... 11511
1917 ... 11511
1918 ... 11511
2550 ... 11886
2580 ... 11886

30 CFR
48 ... 12415
75 ... 11395
250 ... 10596, 12227
256 ... 10596, 12227
773 ... 11606
934 ... 11500
Proposed Rules:
20 ... 12250
75 ... 12250
77 ... 12250, 12253
785 ... 11685
823 ... 11685
935 ... 11887
948 ... 11888

31 CFR
Proposed Rules:
103 ... 11513

32 CFR
388 ... 10876
Proposed Rules:
45 ... 12034

33 CFR
84 ... 10532
100 ... 11502, 12415
117 ... 10533, 10534, 12416, 12417
165 ... 12417
Proposed Rules:
100 ... 11515, 12434
110 ... 11395, 11515
117 ... 11516, 11517, 12434

34 CFR
99 ... 11942
600 ... 11208
657 ... 10820
668 ... 11208
Proposed Rules:
105 ... 10808

36 CFR
1202 ... 12150
1258 ... 12150

38 CFR
36 ... 11502

39 CFR
Proposed Rules:
111 ... 11685

40 CFR
22 ... 12256
24 ... 12256
52 ... 11068, 11273, 11655, 11847, 12417
60 ... 11590, 12008, 12009, 12498
180 ... 11071, 11274, 11938, 12151, 12418
Proposed Rules:
52 ... 11314, 11686, 11688, 12161, 12435
116 ... 11889
117 ... 11889
180 ... 10895
261 ... 12162
264 ... 11742
265 ... 11742
268 ... 11742
271 ... 11742
302 ... 11889, 11890
372 ... 12035
761 ... 11104
763 ... 10546
796 ... 11104

41 CFR
101-25 ... 11847
101-40 ... 11849
Proposed Rules:
201-33 ... 11518

42 CFR
405 ... 11504, 12010
413 ... 12016
416 ... 11504
418 ... 11504
434 ... 12010
442 ... 11504
482 ... 11504
Proposed Rules:
405 ... 12037

43 CFR
Proposed Rules:
3160 ... 11318
Public Land Orders:
6670 ... 10535
6671 ... 12419
6672 ... 12420
6673 ... 12420

44 CFR
67 ... 11510, 12152
80 ... 11275
82 ... 11275
83 ... 11275
Proposed Rules:
61 ... 10547

45 CFR
36 ... 11279
79 ... 11656
96 ... 11656
1611 ... 12017
Proposed Rules:
303 ... 12041
606 ... 10896
1356 ... 12436

46 CFR
572 ... 11072
Proposed Rules:
Ch. I ... 11440
502 ... 12440

47 CFR
0 ... 11849
1 ... 11851
2 ... 10876, 11855
15 ... 11861
22 ... 11855
73 ... 11668, 11863, 12152-12154
90 ... 11849, 12154
94 ... 11855
Proposed Rules:
Ch. I ... 10549, 10550
73 ... 10905, 11690, 12167-12169

40 CFR

15 10828
25 12128
31 ..... 10828, 12128
52 ..... 10828, 12128
215 11073
227 10780
242 11073
252 ..... 10780, 11073
2804 12421
2832 12421
2852 12421

Proposed Rules:

43 11795
47 11795
52 ..... 11795, 12501
916 11318
931 11318
952 11318
1505 11519
1506 11519

49 CFR

387 12158
533 11074
571 11280
1160 10536

Proposed Rules:

171 ..... 11320, 12442
172 12442
173 ..... 11320, 12442
174 12442
175 12442
176 12442
177 ..... 11618, 12442
178 12442
179 12442
192 10906
383 12504
391 12504
571 11105
840 11520
1185 12443

50 CFR

17 ..... 10879, 11609, 11612
23 12497
285 11510
301 10536
672 11297

Proposed Rules:

18 12043
228 12169
644 11321
658 12046

LIST OF PUBLIC LAWS

Last List April 6, 1988

This is a continuing list of public bills from the current session of Congress which have become Federal laws. It may be used in conjunction with "P L U S" (Public Laws Update Service) on 523-6641. The text of laws is not published in the **Federal Register** but may be ordered in individual pamphlet form (referred to as "slip laws") from the Superintendent of Documents, U.S. Government Printing Office, Washington, DC 20402 (phone 202-275-3030).

S. 2151/Pub. L. 100-277

To amend section 416 of the Agricultural Act of 1949, and for other purposes. (Apr. 4, 1988; 102 Stat. 67; 3 pages) Price: $1.00

H.R. 4263/Pub. L. 100-278

To designate interstate route I-195 in the State of New Jersey as the "James J. Howard Interstate Highway." (Apr. 6, 1988; 102 Stat. 70; 1 page) Price: $1.00

H.J. Res. 470/Pub. L. 100-279

To designate March 29, 1988, as "Education Day, U.S.A." (Apr. 6, 1988; 102 Stat. 71; 1 page) Price: $1.00

H.J. Res. 519/Pub. L. 100-280

To continue the withdrawal of certain public lands in Nevada. (Apr. 6, 1988; 102 Stat. 72; 1 page) Price: $1.00

S. 1397/Pub. L. 100-281

To recognize the organization known as the Non Commissioned Officers Association of the United States of America. (Apr. 6, 1988; 102 Stat. 73; 4 pages) Price: $1.00

S.J. Res. 206/Pub. L. 100-282

To designate April 8, 1988, as "Dennis Chavez Day." (Apr. 6, 1988; 102 Stat. 77; 1 page) Price: $1.00

S. 2117/Pub. L. 100-283

Age Discrimination Claims Assistance Act of 1988. (Apr. 7, 1988; 102 Stat. 78; 3 pages) Price: $1.00

H.R. 3981/Pub. L. 100-284

To make section 7351 of title 5, United States Code, inapplicable to leave transfers under certain experimental programs covering Federal employees, except as the Office of Personnel Management may otherwise prescribe. (Apr. 7, 1988; 102 Stat. 81; 1 page) Price: $1.00

H.J. Res. 480/Pub. L. 100-285

Granting the consent of the Congress to amendments made by Maryland, Virginia, and the District of Columbia to the Washington Metropolitan Area Transit Regulation Compact. (Apr. 7, 1988; 102 Stat. 82; 4 pages) Price: $1.00

S.J. Res. 223/Pub. L. 100-286

To designate the period commencing on April 10, 1988, and ending on April 16, 1988, as "National Productivity Improvement Week." (Apr. 7, 1988; 102 Stat. 86; 1 page) Price: $1.00

S.J. Res. 245/Pub. L. 100-287

To designate April 21, 1988, as "John Muir Day." (Apr. 7, 1988; 102 Stat. 87; 1 page) Price: $1.00

S.J. Res. 260/Pub. L. 100-288

To designate the week beginning April 10, 1988, as "National Child Care Awareness Week." (Apr. 7, 1988; 102 Stat. 88; 1 page) Price: $1.00

BEST COPY AVAILABLE

VOL 53 ISS 72 AP 14 1988 UMI

Would you like to know...

if any changes have been made to the Code of Federal Regulations or what documents have been published in the Federal Register without reading the Federal Register every day? If so, you may wish to subscribe to the *LSA (List of CFR Sections Affected)*, the *Federal Register Index*, or both.

LSA • List of CFR Sections Affected

The LSA (List of CFR Sections Affected) is designed to lead users of the Code of Federal Regulations to amendatory actions published in the Federal Register. The LSA is issued monthly in cumulative form. Entries indicate the nature of the changes—such as revised, removed, or corrected.

$24.00 per year

Federal Register Index

The Index, covering the contents of the daily Federal Register, is issued monthly in cumulative form. Entries are carried primarily under the names of the issuing agencies. Significant subjects are carried as cross-references.

$22.00 per year

A finding aid is included in each publication which lists Federal Register page numbers with the date of publication in the Federal Register.

Note to FR Subscribers:
FR Indexes and the LSA (List of CFR Sections Affected) are mailed automatically to regular FR subscribers.

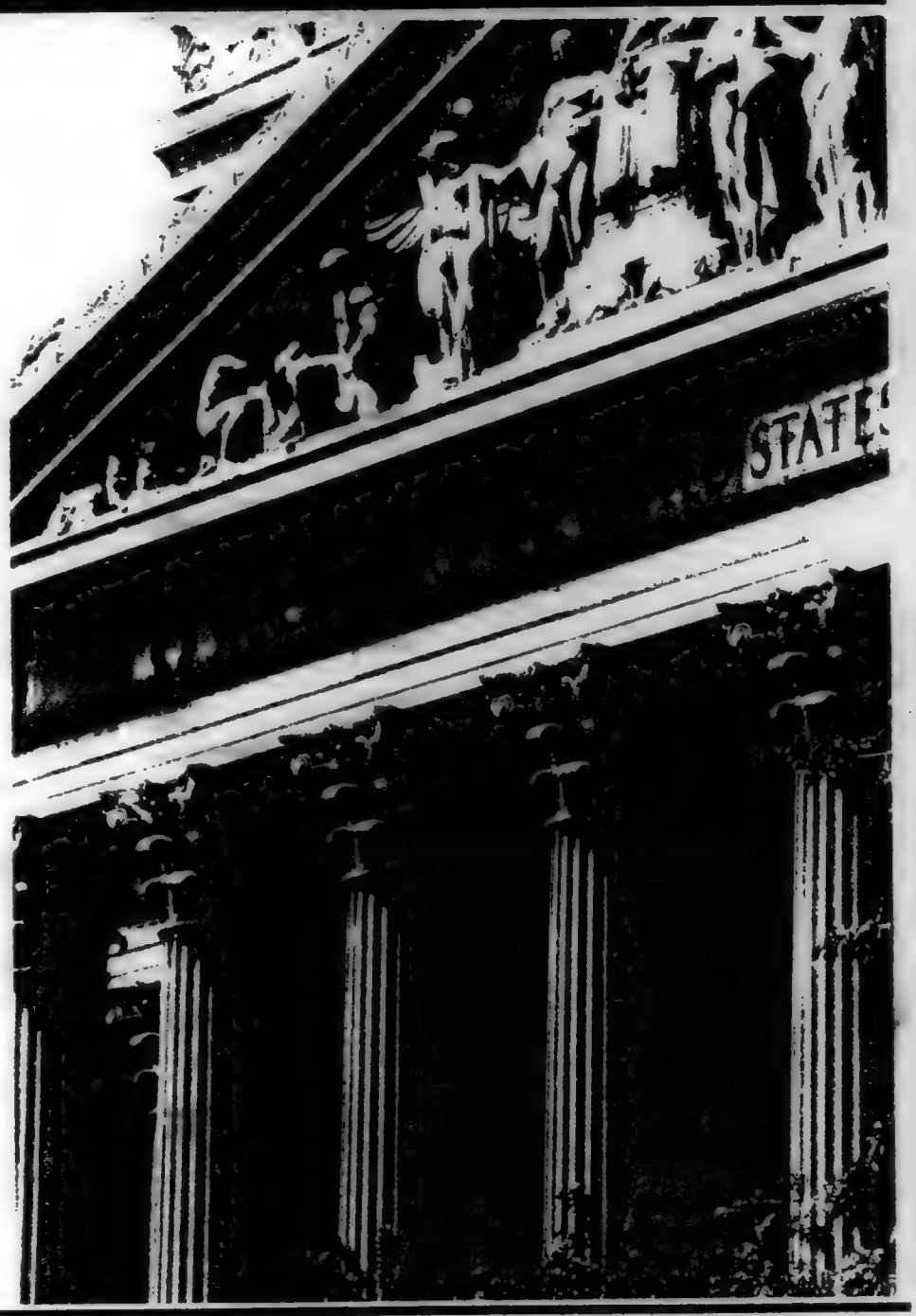

Order Form

Mail To: Superintendent of Documents, U.S. Government Printing Office, Washington, D.C. 20402

Enclosed is $ _____ ☐ check, ☐ money order, or charge to my Deposit Account No.

☐☐☐☐☐☐☐–☐

Order No. _____

MasterCard and VISA accepted.

Credit Card Orders Only

Total charges $ _____

Credit Card No.

Expiration Date Month/Year

Customer's Telephone Nos.
Area Code Home Area Code Office

Charge orders may be telephoned to the GPO order desk at (202)783-3238 from 8:00 a.m. to 4:00 p.m eastern time, Monday-Friday (except holidays)

Please enter the subscription(s) I have indicated

LSA
List of CFR Sections Affected
$24.00 a year domestic.
$30.00 foreign

Federal Register Index
$22.00 a year domestic
$27.50 foreign

PLEASE PRINT OR TYPE

Company or Personal Name

Additional address/attention line

Street address

City State ZIP Code

(or Country)

(Rev 10 1-85)

92

hone Nos.

Office

d to the GPO order
0 a.m. to 4:00 p.m
cept holidays).

VOL
53

ISS
72

AP
14

1988

UMI

VOL
53

ISS
73

AP
15

1988

UMI

Unit
Gov
Prin
SUPE
OF DO
Wash

OFFIC
Penalt

4-15-88
Vol. 53 No. 73

federal register

Friday
April 15, 1988

United States
Government
Printing Office
SUPERINTENDENT
OF DOCUMENTS
Washington, DC 20402

OFFICIAL BUSINESS
Penalty for private use, $300

**********5-DIGIT 48106
A FR SERIA300S NOV 88 R
SERIALS PROCESSING
UNIV MICROFILMS INTL
300 N ZEEB RD
ANN ARBOR MI 48106

SECOND CLASS NEWSPAPER
Postage and Fees Paid
U.S. Government Printing Office
(ISSN 0097-6326)

VOL
53

ISS
73

AP
15

1988

UMI

4-15-88
Vol. 53
Pages 1

4-15-88
Vol. 53 No. 73
Pages 12509-12670

federal register

Friday
April 15, 1988

BEST COPY AVAILABLE

FEDERAL REGISTER Published daily, Monday through Friday, (not published on Saturdays, Sundays, or on official holidays), by the Office of the Federal Register, National Archives and Records Administration, Washington, DC 20408, under the Federal Register Act (49 Stat. 500, as amended; 44 U.S.C. Ch. 15) and the regulations of the Administrative Committee of the Federal Register (1 CFR Ch. I). Distribution is made only by the Superintendent of Documents, U.S. Government Printing Office, Washington, DC 20402.

The **Federal Register** provides a uniform system for making available to the public regulations and legal notices issued by Federal agencies. These include Presidential proclamations and Executive Orders and Federal agency documents having general applicability and legal effect, documents required to be published by act of Congress and other Federal agency documents of public interest. Documents are on file for public inspection in the Office of the Federal Register the day before they are published, unless earlier filing is requested by the issuing agency.

The **Federal Register** will be furnished by mail to subscribers for $340.00 per year, or $170.00 for 6 months in paper form, or $188.00 per year, or $94.00 for six months in microfiche form, payable in advance. The charge for individual copies is $1.50 for each issue, or $1.50 for each group of pages as actually bound. Remit check or money order, made payable to the Superintendent of Documents, U.S. Government Printing Office, Washington, DC 20402, or charge to your GPO Deposit Account or VISA or Mastercard.

There are no restrictions on the republication of material appearing in the **Federal Register.**

How To Cite This Publication: Use the volume number and the page number. Example: 52 FR 12345.

SUBSCRIPTIONS AND COPIES

PUBLIC

Subscriptions:

Paper or fiche	202-783-3238
Magnetic tapes	275-3328
Problems with public subscriptions	275-3054

Single copies/back copies:

Paper or fiche	783-3238
Magnetic tapes	275-3328
Problems with public single copies	275-3050

FEDERAL AGENCIES

Subscriptions:

Paper or fiche	523-5240
Magnetic tapes	275-3328
Problems with Federal agency subscriptions	523-5240

For other telephone numbers, see the Reader Aids section at the end of this issue.

Contents

Federal Register
Vol. 53, No. 73
Friday, April 15, 1988

Agricultural Marketing Service
RULES
Lemons grown in California and Arizona, 12509

Agriculture Department
See also Agricultural Marketing Service; Animal and Plant Health Inspection Service
NOTICES
Program payments; income tax exclusion; primary purpose determination:
Iowa soil erosion control financial incentive program, 12550

Animal and Plant Health Inspection Service
RULES
Exportation and importation of animals and animal products:
Horses from countries affected with CEM—Approved States; correction, 12640
NOTICES
Environmental statements; availability, etc.:
Tomato plants, genetically engineered insect tolerant; field test permit, 12551

Arts and Humanities, National Foundation
See National Foundation on the Arts and the Humanities

Centers for Disease Control
NOTICES
Grants and cooperative agreements; availability, etc.:
Health promotion and disease prevention research and demonstration centers, 12595
Meetings:
Immunization Practices Advisory Committee, 12599
Vital and Health Statistics National Committee, 12599

Coast Guard
PROPOSED RULES
Drawbridge operations:
New Jersey, 12535
NOTICES
Vessels under optional simplified measurement method; application procedures, 12637

Commerce Department
See Economic Development Administration; International Trade Administration; National Oceanic and Atmospheric Administration

Defense Department
See Navy Department

Economic Development Administration
RULES
Adjustment grants; revolving loan funds, 12510

Education Department
NOTICES
Meetings:
Education Intergovernmental Advisory Council, 12582
Postsecondary Education Improvement Fund National Board, 12582

Employment Standards Administration
NOTICES
Minimum wages for Federal and federally-assisted construction; general wage determination decisions, 12614

Energy Department
See Energy Information Administration; Western Area Power Administration

Energy Information Administration
NOTICES
Forms; availability, etc.:
Oil and gas reserve system forms, 12583

Environmental Protection Agency
RULES
Air programs; State authority delegations:
South Dakota and Colorado, 12517
Pesticides; tolerances in food, animal feeds, and raw agricultural commodities:
3,5,-Dichloro-N-(1,1-dimethyl-2-propynyl)benzamide; correction, 12640
Ethephon; correction, 12640
Toxic substances:
Technical amendments, 12522
NOTICES
Chesapeake Bay program; 1987 agreement, proposals for review, 12586
Environmental statements; availability, etc.:
Agency statements—
Comment availability, 12587
Weekly receipts, 12587
Pesticide registration, cancellation, etc.:
Chevron Chemical Co. et al.; correction, 12640
Pesticides; emergency exemptions, etc.:
Strychnine, 12587
Toxic and hazardous substances control:
Premanufacture exemption applications, 12588

Executive Office of the President
See Management and Budget Office

Export Administration
See International Trade Administration

Federal Aviation Administration
RULES
Airworthiness directives:
GROB, 12511

Federal Communications Commission
RULES
Common carrier services:
International telecommunications—
Foreign-owned carrier and annual procurement reports, 12520
Radio stations; table of assignments:
California, 12528
Missouri, 12528

PROPOSED RULES
Common carrier services:
International communications—
Accounting rates and restrictive practices, 12546
Telecommunications equipment and services; access by hearing impaired and other disabled persons, 12546
Radio stations; table of assignments:
Arizona, 12547
Iowa, 12548
Louisiana, 12548
New York, 12549
NOTICES
Agency information collection activities under OMB review, 12589
Meetings:
Advanced Television Service Advisory Committee, 12589
Radio Broadcasting Advisory Committee, 12589
Rulemaking proceedings; petitions filed, granted, denied, etc., 12590
(2 documents)
Applications, hearings, determinations, etc.:
Axell, Wade, et al., 12590
Celina Broadcasting, 12590
Davis, Roy, et al., 12591
Dean-Thomas Communications et al., 12591
Family Stations, Inc., et al., 12591
Froggy Bottom Television et al., 12592
Giacone, Leonard James, et al., 12592
Miller, Ernest C., et al., 12592
National Exchange Carrier Association, Inc., 12594
Pueblo Radio Broadcasting Service et al., 12593
Trax Broadcasting et al., 12593
Turner Broadcasting & Communications System et al., 12593

Federal Emergency Management Agency
PROPOSED RULES
Flood elevation determinations:
Georgia et al., 12536
New York; correction, 12536
NOTICES
Meetings:
National Fire Academy Board of Visitors, 12594

Federal Maritime Commission
NOTICES
Meetings; Sunshine Act, 12639

Federal Reserve System
RULES
Authority delegations:
Staff Director; authority to extend 30-day buy-ins of securities not received, 12509
NOTICES
Meetings; Sunshine Act, 12639
(2 documents)
Applications, hearings, determinations, etc.:
Bank of Montreal, 12594

Federal Trade Commission
PROPOSED RULES
Prohibited trade practices:
Reader's Digest Association, Inc., 12534
NOTICES
Meetings; Sunshine Act, 12639
(3 documents)

Fish and Wildlife Service
NOTICES
Endangered and threatened species permit applications, 12606

Food and Drug Administration
RULES
Animal drugs, feeds, and related products:
Kanamycin, amphomycin, and hydrocortisone, 12512
Human drugs:
Antibiotic drugs—
Neomycin sulfate for compounding oral products, 12644
Neomycin sulfate in sterile vials, 12656
NOTICES
Committees; establishment, renewal, termination, etc.:
Fertility and Maternal Health Drugs Advisory Committee, 12599
Human drugs:
Antibiotic drugs—
Neomycin sulfate for compounding oral products, etc., 12662
Neomycin sulfate in sterile vials, 12664
Export applications—
Intal Nebulizer Solution; correction, 12640
Patent extension; regulatory review period determinations—
Corotrope, 12600
Primivil, 12600
Prozac, 12601
Medical devices; premarket approval:
Prosorba Column; correction, 12640
Meetings:
Advisory committees, panels, etc., 12601

Health and Human Services Department
See Centers for Disease Control; Food and Drug Administration; Health Care Financing Administration; Health Resources and Services Administration; National Institutes of Health

Health Care Financing Administration
RULES
Medicare:
Reimbursement; lesser of costs or charges provisions Correction, 12641
PROPOSED RULES
Medicare:
Inpatient hospital services—
Payments; correction, 12641

Health Resources and Services Administration
NOTICES
Grants and cooperative agreements:
Comprehensive primary health care services; planning and development by statewide organizations, 12602

Interior Department
See also Fish and Wildlife Service; Land Management Bureau; National Park Service
NOTICES
Alaska Land Use Council; work program items, 12606

Internal Revenue Service
RULES
Income taxes:
Nonaccrual-experience method of accounting, 12513

PROPOSED RULES
Income taxes:
Nonaccrural-experience method of accounting; cross reference, 12534

International Trade Administration
RULES
Export licensing:
Nuclear activities in certain free world countries; shipments to facilities, 12668
NOTICES
Antidumping:
Internal-combustion, industrial forklift trucks from Japan, 12552
Meetings:
Management-Labor Textile Advisory Committee; correction, 12641
Transportation and Related Equipment Technical Advisory Committee, 12579
Applications, hearings, determinations, etc.:
East Orange VA Medical Center et al., 12579
Hawaii Institute of Geophysics et al., 12580
Pennsylvania State University et al., 12580
University of California et al., 12580
University of Nevada-Reno et al., 12581

Interstate Commerce Commission
NOTICES
Railroad services abandonment:
CSX Transportation, Inc., 12612

Justice Department
NOTICES
Pollution control; consent judgments:
Allied Corp., 12613
Big Apple Wrecking Corp. et al., 12613

Labor Department
See Employment Standards Administration

Land Management Bureau
NOTICES
Coal leases, exploration licenses, etc.:
Colorado et al., 12607
Environmental statements; availability, etc.:
Beaver Creek, AK, 12608
Meetings:
Albuquerque District Grazing Advisory Board, 12608
Realty actions; sales, leases, etc.:
California, 12608
Nevada; correction, 12641
Oregon, 12609
Utah, 12608
Withdrawal and reservation of lands:
Nevada; correction, 12641

Management and Budget Office
NOTICES
Federal statistical activities; guidelines, 12626

National Foundation on the Arts and the Humanities
NOTICES
Meetings:
Humanities Panel, 12615

National Highway Traffic Safety Administration
RULES
Motor vehicle safety standards:
Motorcycle helmets, 12528
NOTICES
Motor vehicle safety standards; exemption petitions, etc.:
General Motors Corp., 12638

National Institute for Occupational Safety and Health
See Centers for Disease Control

National Institutes of Health
NOTICES
Meetings:
Animal Resources Review Committee, 12603
Fogarty International Center Advisory Board, 12604
National Cancer Institute, 12604
National Heart, Lung, and Blood Institute, 12604
National Institute of General Medical Sciences, 12605
National Institute on Aging, 12604, 12605 (2 documents)
National Library of Medicine, 12605

National Oceanic and Atmospheric Administration
NOTICES
Coastal zone management programs and estuarine sanctuaries:
State programs—
New Jersey, 12581
Meetings:
Emergency Striped Bass Research Study, 12581

National Park Service
NOTICES
Boundary establishment, descriptions, etc.:
Capulin Volcano National Monument, NM, 12610
Golden Gate National Recreation Area, CA, 12611
Environmental statements; availability, etc.:
Santa Monica Mountains National Recreation Area, Decker Canyon, CA, 12611
Meetings:
Upper Delaware Citizens Advisory Council, 12612

Navy Department
RULES
Navigation, COLREGS compliance exemptions:
USS Fletcher et al., 12515
NOTICES
Meetings:
Chief of Naval Operations Executive Panel Advisory Committee, 12581, 12582 (2 documents)

Nuclear Regulatory Commission
NOTICES
Abnormal occurrence reports:
Periodic reports to Congress, 12616
Environmental statements; availability, etc.:
Detroit Edison Co. et al., 12616
General Public Utilities Nuclear Corp. et al., 12617
Applications, hearings, determinations, etc.:
Baltimore Gas & Electric Co., 12618
H&G Inspection Co., Inc., 12620
Long Island Lighting Co., 12622
Niagara Mohawk Power Corp., 12622
Pennsylvania Power & Light Co. et al., 12625

Office of Management and Budget
See Management and Budget Office

Panama Canal Commission
RULES
Vessels, general provisions; maximum overall lengths, 12516

Pension Benefit Guaranty Corporation
RULES
Multiemployer plans:
Valuation of plan benefits and plan assets following mass withdrawal—
Interest rates, 12514

Personnel Management Office
NOTICES
Agency information collection activities under OMB review, 12625

Postal Service
NOTICES
International postal rates and fees; final changes, 12627

Public Health Service
See Centers for Disease Control; Food and Drug Administration; Health Resources and Services Administration; National Institutes of Health

Securities and Exchange Commission
NOTICES
Self-regulatory organizations; unlisted trading privileges:
Midwest Stock Exchange, Inc., 12637
Philadelphia Stock Exchange, Inc., 12637

Small Business Administration
NOTICES
Meetings; regional advisory councils:
South Carolina, 12637

Transportation Department
See also Coast Guard; Federal Aviation Administration; National Highway Traffic Safety Administration
NOTICES
Aviation proceedings:
Standard foreign fare level—
Index adjustment factors, 12638

Treasury Department
See Internal Revenue Service

Western Area Power Administration
NOTICES
Environmental statements; availability, etc.:
Sidney-North Yuma 230-kV transmission line project, CO and NE, 12584
Power marketing plans, etc.:
Amistad and Falcon projects, 12584

Separate Parts in This Issue

Part II
Department of Health and Human Services, Food and Drug Administration, 12644

Part III
Department of Commerce, International Trade Administration, 12668

Reader Aids
Additional information, including a list of public laws, telephone numbers, and finding aids, appears in the Reader Aids section at the end of this issue.

CFR PARTS AFFECTED IN THIS ISSUE

A cumulative list of the parts affected this month can be found in the Reader Aids section at the end of this issue.

7 CFR
910 12509

9 CFR
92 12640

12 CFR
265 12509

13 CFR
308 12510

14 CFR
39 12511

15 CFR
370 12668
371 12668
373 12668
378 12668
379 12668
385 12668
399 12668

16 CFR
Proposed Rules:
13 12534

21 CFR
444 (2 documents) 12644, 12658
524 12512
561 12640

26 CFR
1 12513
Proposed Rules:
1 12534

29 CFR
2676 12514

32 CFR
706 12515

33 CFR
Proposed Rules:
117 12535

35 CFR
103 12516

40 CFR
60 12517
61 12517
180 12640
704 12522
707 12522
710 12522
712 12522
716 12522
717 12522
720 12522
721 12522
723 12522
750 12522
761 12522
763 12522
790 12522
796 12522
797 12522
799 12522

42 CFR
413 12641
Proposed Rules:
405 12641
412 12641
413 12641
489 12641

44 CFR
Proposed Rules:
67 (2 documents) 12536

47 CFR
43 13526
63 12526
73 (2 documents) 12528
Proposed Rules:
43 12546
63 12546
68 12546
73 (4 documents) 12547–12549

49 CFR
571 12528

VOL
53
ISS
73
AP
15
1988
UMI

Ru

This s
contain
genera
of whi
the Co
publish
U.S.C.
The C
by the
Prices
first F
week.

DEPA

Agric

7 CFR

[Lemo

Lemo
Arizo

AGEN
USDA

ACTIO

SUMM
the qu
lemon
335,00
17 thr
needed
lemon
period
situat

DATES
effect
April

FOR F
Raym
Volun
Order
AMS,
P.O. B
6456;

SUPPL
final
Execu
Depar
been
rule u

Pur
the R
Admi
Mark
this a
econo
numb

The
regula
busin
that s

Rules and Regulations

Federal Register
Vol. 53, No. 73
Friday, April 15, 1988

This section of the FEDERAL REGISTER contains regulatory documents having general applicability and legal effect, most of which are keyed to and codified in the Code of Federal Regulations, which is published under 50 titles pursuant to 44 U.S.C. 1510.
The Code of Federal Regulations is sold by the Superintendent of Documents. Prices of new books are listed in the first FEDERAL REGISTER issue of each week.

DEPARTMENT OF AGRICULTURE

Agricultural Marketing Service

7 CFR Part 910

[Lemon Regulation 609]

Lemons Grown in California and Arizona; Limitation of Handling

AGENCY: Agricultural Marketing Service, USDA.

ACTION: Final rule.

SUMMARY: Regulation 609 establishes the quantity of fresh California-Arizona lemons that may be shipped to market at 335,000 cartons during the period April 17 through April 23, 1988. Such action is needed to balance the supply of fresh lemons with market demand for the period specified, due to the marketing situation confronting the lemon industry.

DATES: Regulation 609 (§ 910.909) is effective for the period April 17 through April 23, 1988.

FOR FURTHER INFORMATION CONTACT: Raymond C. Martin, Section Head, Volume Control Programs, Marketing Order Administration Branch, F&V, AMS, USDA, Room 2523, South Building, P.O. Box 96456, Washington, DC 20090-6456; telephone: (202) 447-5697.

SUPPLEMENTARY INFORMATION: This final rule has been reviewed under Executive Order 12291 and Departmental Regulation 1512-1 and has been determined to be a "non-major" rule under criteria contained therein.

Pursuant to requirements set forth in the Regulatory Flexibility Act (RFA), the Administrator of the Agricultural Marketing Service has determined that this action will not have a significant economic impact on a substantial number of small entities.

The purpose of the RFA is to fit regulatory action to the scale of business subject to such actions in order that small businesses will not be unduly or disproportionately burdened. Marketing orders issued pursuant to the Agricultural Marketing Agreement Act, and rules issued thereunder, are unique in that they are brought about through group action of essentially small entities acting on their own behalf. Thus, both statutes have small entity orientation and compatibility.

This regulation is issued under Marketing Order No. 910, as amended [7 CFR Part 910] regulating the handling of lemons grown in California and Arizona. The order is effective under the Agricultural Marketing Agreement Act (the "Act," 7 U.S.C. 601-674), as amended. This action is based upon the recommendation and information submitted by the Lemon Administrative Committee and upon other available information. It is found that this action will tend to effectuate the declared policy of the Act.

This regulation is consistent with the marketing policy for 1987-88. The committee met publicly on April 12, 1988, in Los Angeles, California, to consider the current and prospective conditions of supply and demand and recommended, by a unanimous vote, a quantity of lemons deemed advisable to be handled during the specified week. The committee reports that the market for lemons is steady.

Pursuant to 5 U.S.C. 553, it is further found that it is impracticable, unnecessary, and contrary to the public interest to give preliminary notice and engage in further public procedure with respect to this action and that good cause exists for not postponing the effective date of this action until 30 days after publication in the **Federal Register** because of insufficient time between the date when information became available upon which this regulation is based and the effective date necessary to effectuate the declared purposes of the Act. Interested persons were given an opportunity to submit information and views on the regulation at an open meeting. It is necessary, in order to effectuate the declared purposes of the Act, to make these regulatory provisions effective as specified, and handlers have been apprised of such provisions and the effective time.

List of Subjects in 7 CFR Part 910

Marketing agreements and orders, California, Arizona, Lemons.

For the reasons set forth in the preamble, 7 CFR Part 910 is amended as follows:

PART 910—LEMONS GROWN IN CALIFORNIA AND ARIZONA

1. The authority citation for 7 CFR Part 910 continues to read as follows:

Authority: Secs. 1-19, 48 Stat. 31, as amended; 7 U.S.C. 601-674.

2. Section 910.909 is added to read as follows:

[This section will not appear in the Code of Federal Regulations.]

§ 910.909 Lemon Regulation 609.

The quantity of lemons grown in California and Arizona which may be handled during the period April 17, 1988, through April 23, 1988, is established at 335,000 cartons.

Dated: April 13, 1988.

Robert C. Keeney,
Deputy Director, Fruit and Vegetable Division, Agricultural Marketing Service.

[FR Doc. 88-8403 Filed 4-14-88; 8:45 am]

BILLING CODE 3410-02-M

FEDERAL RESERVE SYSTEM

12 CFR Part 265

[Docket No. R-0632]

Rules Regarding Delegation of Authority

AGENCY: Board of Governors of the Federal Reserve System.

ACTION: Final rule.

SUMMARY: The Board is delegating to the Staff Director of the Division of Banking Supervision and Regulation its authority under 17 CFR 403.5(g) to extend the 30-day period for buy-ins of securities that were not received.

EFFECTIVE DATE: April 11, 1988.

FOR FURTHER INFORMATION CONTACT: Robert S. Plotkin, Assistant Director, Division of Banking Supervision and Regulation (202-452-2782); Joseph R. Alexander, Senior Attorney, Legal Division (202-452-2489); Board of Governors of the Federal Reserve System.

SUPPLEMENTARY INFORMATION: Under the authority of the Government Securities Act of 1986, the Treasury Department has issued rules (Chapter IV

BEST COPY AVAILABLE

of 17 CFR) concerning, among other things, the duties of government securities brokers and dealers to protect investor securities and funds. Section 403.5(c)(1) of these rules requires a financial institution that is a government securities broker or dealer to determine on each business day the quantity and issue of government securities held for the account of its customers that are required to be, but are not, in the financial institution's control. If any of these securities are shown as "failed to receive" for more than 30 days, the financial institution must take prompt steps to obtain possession or control of these securities, steps that normally involve "buying in" the necessary securities; i.e., the institution must purchase securities of the same issue and maturity to cover its obligation to its customer.

In issuing its final rules, the Treasury Department noted that many of the commenters pointed out the frequent difficulties of buying in certain kinds of securities, particularly mortgage-backed securities and certain Treasury issues. Treasury thus exempted mortgage-backed securities from the buy-in requirement and made provision for financial institution broker-dealers to request extensions of the 30-day period for other securities. Section 403.5(g) of the Treasury regulations provides that a financial institution's appropriate regulatory agency may extend the 30-day buy-in period for one or more limited periods commensurate with the circumstances, provided the agency is satisfied that the applicant is acting in good faith and that exceptional circumstances warrant such action. The agency must keep records of each extension granted, together with the agency's justification for granting the extension, for at least three years.

The Board is the appropriate regulatory agency for state-chartered banks that are members of the Federal Reserve System, foreign banks, state branches and state agencies of foreign banks, and commercial lending companies that are owned or controlled by foreign banks. The Board has decided, under the authority of section 11(k) of the Federal Reserve Act (12 U.S.C. 248(k)), to delegate its authority to extend the 30-day buy-in period for fails to receive to the Staff Director of the Division of Banking Supervision and Regulation.

The Board finds that this amendment relates only to rules of agency organization, procedure, or practice, and thus the usual publication of a proposal for comment is not required by 5 U.S.C. 553(b)(A).

List of Subjects in 12 CFR Part 265

Banks, Banking, Federal Reserve System.

For the reasons set out in the preamble, Title 12, Part 265, of the Code of Federal Regulations is amended as set forth below.

PART 265—RULES REGARDING DELEGATION OF AUTHORITY

1. The authority citation for Part 265 continues to read as follows:

Authority: 12 U.S.C. 248(k).

2. A new paragraph (c)(36) is added to § 265.2 to read as follows:

§ 265.2 Specific functions delegated to Board employees and to Federal Reserve Banks.

* * * * *

(c) * * *

(36) Under § 403.5(g) of the Treasury Department regulations (17 CFR 403.5(g)) implementing the Government Securities Act of 1986 (Pub. L. 99-571), to approve the application of a state member bank, a state branch or agency of a foreign bank, a foreign bank, or a commercial lending company owned or controlled by a foreign bank to extend for one or more limited periods commensurate with the circumstances the 30-day time period for obtaining possession or control of securities specified in 17 CFR 403.5(c)(1)(iii), provided the Staff Director is satisfied that the applicant is acting in good faith and that exceptional circumstances warrant such action.

By order of the Board of Governors of the Federal Reserve System, April 11, 1988.

William W. Wiles,

Secretary of the Board.

[FR Doc. 88-8250 Filed 4-14-88; 8:45 am]

BILLING CODE 6210-01-M

DEPARTMENT OF COMMERCE

Economic Development Administration

13 CFR Part 308

[Docket No. 71030-7232]

Adjustment Grants—Revolving Loan Funds

AGENCY: Economic Development Administration (EDA), Commerce.

ACTION: Interim rule with request for comments.

SUMMARY: This rule amends EDA's rule on adjustment grants to provide that revolving loan fund (RLF) grants are held in trust by the grantee as trustee for the benefit of borrowers and potential borrowers.

DATES: Effective date: April 15, 1988.

Comments by: June 14, 1988.

ADDRESS: Send comments to James F. Marten, Deputy Chief Counsel, Economic Development Administration, U.S. Department of Commerce, Herbert C. Hoover Building, 14th Street between Pennsylvania and Constitution Avenues NW., Room 7001, Washington, DC 20230.

FOR FURTHER INFORMATION CONTACT: James F. Marten, Deputy Chief Counsel, Economic Development Administration, U.S. Department of Commerce, Herbert C. Hoover Building, 14th Street between Pennsylvania and Constitution Avenues NW., Room 7001, Washington, DC 20230, (202) 377-5441.

SUPPLEMENTARY INFORMATION: EDA is amending 13 CFR 308.5(c)(2) by adding a statement that RLF grants are held in trust by the grantee as trustee for the benefit of borrowers and potential borrowers. This statement is necessary to clarify the legal rights and obligations of parties involved in RLF projects so that when a grantee can no longer perform its duties under the grant, a substitute grantee could serve as trustee. If not, then the trust assets would be returned to the U.S. Treasury.

Under Executive Order 12291 the Department must judge whether a regulation is "major" within the meaning of Section 1 of the order and therefore subject to the requirement that a Regulatory Impact Analysis be prepared. This regulation is not major because it is not likely to result in an annual effect on the economy of $100 million or more; a major increase in costs or prices for consumers, individual industries, Federal, State, or local government agencies, or geographic regions; or significant adverse effects on competition, unemployment, investments, productivity, innovation, or on the ability of United States-based enterprises to compete with foreign-based enterprises in domestic or export markets.

Accordingly, neither a preliminary nor final Regulatory Impact Analysis has to be or will be prepared.

This rule is exempt from all requirements of 5 U.S.C. 553 including notice and opportunity to comment and delayed effective date, because it relates to public property, loans, grants, benefits and contracts.

No other law requires that notice and opportunity for comment be given for this rule.

Accordingly, the Department's General Counsel has determined and so certified to the Office of Management

and Budget, that dispensing with notice and opportunity for comment is consistent with the Administrative Procedure Act (APA) and all other relevant laws.

However, because the Department is interested in receiving comments from those who will benefit from the amendment, this rule is being issued as interim final. Public comments on the interim rule are invited and should be sent to the address listed in the "ADDRESS" section above.

Comments received by June 14, 1988 will be considered in promulgating a final rule.

Since a notice and an opportunity for comment are not required to be given for this rule under section 553 of the APA (5 U.S.C. 553) or any other law, under sections 603(a) and 604(a) of the Regulatory Flexibility Act (5 U.S.C. 603(a), 604(a)), no initial or final Regulatory Flexibility Analysis has to be or will be prepared.

This rule does not contain a collection of information for purposes of the Paperwork Reduction Act (Pub. L. 96-511).

List of Subjects in 13 CFR Part 308

Business and industry; Community development; Community facilities; Grant programs-business; Grant programs-community development; Indians; Manpower training programs; Mortgages; Relocation assistance; Rent subsidies; Reporting and recordkeeping requirements; Research; Technical assistance; Unemployment compensation.

PART 308—SPECIAL ECONOMIC DEVELOPMENT AND ADJUSTMENT ASSISTANCE GRANTS.

1. The authority citation for Part 308 is revised to read as follows:

Authority: Sec. 701, Pub. L. 89-136; 79 Stat. 570 (42 U.S.C. 3211); Sec. 1-105, Department of Commerce Organization Order 10-4, as amended (40 FR 5670, as amended).

2. Section 308.5 is amended by revising paragraph (c)(2) to read as follows:

§ 308.5 Use of adjustment grants.

* * * * *

(c) * * *

(2) Adjustment grants may be redistributed in the form of loans, loan guarantees, payments to reduce interest on guaranteed loans, or other appropriate assistance to public and private entities. Revolving loan fund grants are held in trust by the grantee as trustee for the benefit of borrowers and potential borrowers.

Date: April 11, 1988.

Orson G. Swindle, III,

Assistant Secretary for Economic Development.

[FR Doc. 88-8340 Filed 4-14-88; 8:45 am]

BILLING CODE 3510-24-M

DEPARTMENT OF TRANSPORTATION

Federal Aviation Administration

14 CFR Part 39

[Docket No. 87-ANE-45; Amendment 39-5880]

Airworthiness Directives; GROB Models G103 TWIN II and G103A TWIN II ACRO Gliders

AGENCY: Federal Aviation Administration (FAA), DOT.

ACTION: Final rule.

SUMMARY: This action publishes in the **Federal Register** and makes effective as to all persons an amendment adopting a new airworthiness directive (AD) which was previously made effective as to all known U.S. owners and operators of certain GROB Models G103 TWIN II and G103A TWIN II ACRO gliders by individual priority letter. The AD requires visual inspection of the rudder lever, P/N 103B-4430, for damage within 5 hours time in service after receipt of the AD, on GROB Models G103 TWIN II and G103A TWIN II ACRO gliders; and replacement prior to further flight if damaged, and if not damaged, no later than March 15, 1988. The AD is needed to prevent failure of the rudder lever which could result in the loss of rudder control and possible loss of the glider.

DATES: Effective—April 15, 1988 as to all persons except those persons to whom it was made immediately effective by priority letter AD 87-25-10, issued December 11, 1987, which contained this amendment.

Compliance Schedule—As prescribed in the body of the AD.

Incorporation by reference—Approved by the Director of the Federal Register as of April 15, 1988.

ADDRESSES: The applicable technical information referenced in this amendment may be obtained from GROB Systems, Inc., Aircraft Division, I-75 and Airport Drive, Bluffton, Ohio 45817. A copy of each Service Bulletin is contained in Rules Docket No. 87-ANE-45, Office of the Regional Counsel, Federal Aviation Administration, New England Region, 12 New England Executive Park, Room 311, Burlington, Massachusetts 01803, and may be examined between the hours of 8:00 a.m. and 4:30 p.m., Monday through Friday, except federal holidays.

FOR FURTHER INFORMATION CONTACT: Munroe Dearing, Brussels Aircraft Certification Office, AEU-100, FAA, Europe, Africa, and Middle East Office, c/o American Embassy, 15 Rue de la Loi B-1040 Brussels, Belgium, telephone 513.38.30, extension 2710, or John J. Maher, New York Aircraft Certification Office ANE-172, Aircraft Certification Division, FAA, New England Region, 181 South Franklin Avenue, Room 202, Valley Stream, New York 11581; telephone (516) 791-6221.

SUPPLEMENTARY INFORMATION: On December 11, 1987, priority letter AD 87-25-10, was issued and made effective immediately as to all known U.S. owners and operators of certain GROB models G103 Twin II and G103A Twin II ACRO gliders. The AD required inspection for widened or cracked bearing rings and rudder lever deformation, and replacement of the lever. AD action was necessary to prevent failure of the rudder control system and possible loss of the glider.

Since it was found that immediate corrective action was required, notice and public procedure thereon were impracticable and contrary to public interest, and good cause existed to make the AD effective immediately by individual priority letter, issued December 11, 1987, to all known U.S. owners and operators of certain GROB MODEL G103 Twin II AND G103A Twin II ACRO gliders. These conditions still exist and the AD is hereby published in the **Federal Register** as an amendment to § 39.13 of Part 39 of the Federal Aviation Regulations to make it effective as to all persons.

Conclusion: The FAA has determined that this regulation is an emergency regulation that is not considered to be major under Executive Order 12291. It is impracticable for the agency to follow the procedures of Executive Order 12291 with respect to this rule since the rule must be issued immediately to correct an unsafe condition in aircraft. It has been further determined that this action involves an emergency regulation under DOT Regulatory Policies and Procedures (44 FR 11034; February 26, 1979). If this action is subsequently determined to involve a significant/major regulation, a final regulatory evaluation or analysis, as appropriate, will be prepared and placed in the regulatory docket (otherwise, an evaluation or analysis is not required). A copy of it, when filed, may be obtained by contacting the person identified under the caption "FOR FURTHER INFORMATION CONTACT".

List of Subjects in 14 CFR Part 39

Air transportation, Aircraft, Aviation safety, Incorporation by Reference.

Adoption of the Amendment

Accordingly, pursuant to the authority delegated to me, the Federal Aviation Administration (FAA) amends Part 39 of the Federal Aviation Regulations (FAR) as follows:

PART 39—[AMENDED]

1. The authority citation for Part 39 continues to read as follows:

Authority: 49 U.S.C. 1354(a), 1421 and 1423; 49 U.S.C. 106(g) (Revised, Pub. L. 97-449, January 12, 1983); and 14 CFR 11.89.

§ 39.13 [Amended]

2. By adding to § 39.13 the following new airworthiness directive (AD):

GROB: Applies to GROB Models G103 TWIN II and G103A TWIN II ACRO gliders, Serial Nos. 3730 through 3878, and Serial Nos. 33879 through 34078 (ACRO with supplement K), certificated in all categories.

Compliance is required, as indicated, unless already accomplished.

To prevent failure of the rudder lever, which could result in the glider becoming uncontrollable, accomplish the following:

(a) Within the next 5 hours time in service after the effective date of this AD, unless compliance with Paragraph (c) has been accomplished, visually inspect the rudder lever, P/N 103B-4430, using a 10 power or greater magnifying glass and flashlight in accordance with Paragraph 1 of GROB Repair Instruction No. 315-33/1 for Service Bulletin (SB) TM 315-33, dated August 3, 1987.

(b) Replace damaged parts before further flight, with rudder lever, P/N 103B-4430/1, and two rudder stop screws, M 6 × 45 (mm), in accordance with GROB Repair Instruction No. 315-33/2 for SB TM 315-33, dated August 3, 1987.

(c) Prior to March 15, 1988, replace any rudder lever and rudder stop screws not replaced in accordance with Paragraph (b) of this AD with rudder lever, P/N 103B-4430/1, and two rudder stop screws, M 6 × 45 (mm), in accordance with GROB Repair Instruction No. 315-333/2 for SB TM 315-33, dated August 3, 1987.

(d) Aircraft may be ferried in accordance with the provisions of Federal Aviation Regulations 21.197 and 21.199 to a base where the AD can be accomplished.

(e) Upon request, an equivalent means of compliance with the requirements of this AD may be approved by the Manager, Brussels Aircraft Certification Office, Europe, Africa, and Middle East Office, FAA c/o American Embassy, 15 Rue de la Loi B-1040 Brussels, Belgium, or the Manager, New York Aircraft Certification Office, Aircraft Certification Division, New England Region, Federal Aviation Administration, 181 South Franklin Avenue, Room 202, Valley Stream, New York 11581.

(f) Upon submission of substantiating data by an owner or operator through an FAA maintenance inspector, the Manager, Brussels Aircraft Certification Office, or the Manager, New York Aircraft Certification Office, may adjust the compliance time specified in this AD.

GROB Repair Instructions No. 315-33/1 and /2 for SB TM 315-33, dated August 3, 1987, identified and described in this document, are incorporated herein and made a part hereof pursuant to 5 U.S.C. 552(a)(1). All persons affected by this directive who have not already received these documents from the manufacturer may obtain copies upon request to GROB Systems, Inc., Aircraft Division, I-75 and Airport Drive, Bluffton, Ohio 45817.

These documents may also be examined at the Office of the Regional Counsel, Federal Aviation Administration, New England Region, 12 New England Executive Park, Burlington, Massachusetts 01803, Room 311, Docket No. 87-ANE-45, between the hours of 8:00 a.m. and 4:30 p.m., Monday through Friday, except federal holidays.

This amendment becomes effective April 15, 1988, as to all persons except those persons to whom it was made immediately effective by individual priority letter AD 87-25-10, issued December 11, 1987, which contained this amendment.

Issued in Burlington, Massachusetts, on March 9, 1988.

Timothy P. Forté,

Acting Director, New England Region.

[FR Doc. 88-8265 Filed 4-14-88; 8:45 am]

BILLING CODE 4910-13-M

DEPARTMENT OF HEALTH AND HUMAN SERVICES

Food and Drug Administration

21 CFR Part 524

Ophthalmic and Topical Dosage Form New Animal Drugs Not Subject to Certification; Kanamycin, Amphomycin, and Hydrocortisone

AGENCY: Food and Drug Administration.

ACTION: Final rule.

SUMMARY: The Food and Drug Administration (FDA) is editorially amending the animal drug regulations to reflect the amphomycin specifications of the product kanamycin sulfate, calcium amphomycin, and hydrocortisone acetate. Fort Dodge Laboratories holds an approved new animal drug application (NADA) for use of this product topically on dogs.

EFFECTIVE DATE: April 15, 1988.

FOR FURTHER INFORMATION CONTACT: John R. Markus, Center for Veterinary Medicine (HFV-142), Food and Drug Administration, 5600 Fishers Lane, Rockville, MD 20857, 301-443-3442.

SUPPLEMENTARY INFORMATION: Section 524.1204(a)(2) (21 CFR 524.1204(a)(2)) provides that calcium amphomycin shall conform to certain specifications in 21 CFR 455.3(a)(1). However, FDA has removed section 455.3 from its regulations (50 FR 47212 at 47214; November 15, 1985). In removing this section, the agency inadvertently failed to incorporate the specifications referenced in § 524.1204(a)(2) directly into that regulation. This document amends 21 CFR 524.1204(a)(2) to correct this inadvertent error.

List of Subjects in 21 CFR Part 524

Animal drugs.

Therefore, under the Federal Food, Drug, and Cosmetic Act and under authority delegated to the Commissioner of Food and Drugs and redelegated to the Center for Veterinary Medicine, Part 524 is amended as follows:

PART 524—OPHTHALMIC AND TOPICAL DOSAGE FORM NEW ANIMAL DRUGS NOT SUBJECT TO CERTIFICATION

1. The authority citation for 21 CFR Part 524 is revised to read as follows:

Authority: Sec. 512(i), 82 Stat. 347 (21 U.S.C. 360b(i)); 21 CFR 5.10 and 5.83.

2. Section 524.1204 is amended by revising paragraph (a)(2) to read as follows:

§ 524.1204 Kanamycin sulfate, calcium amphomycin, and hydrocortisone acetate.

(a) * * *

(2) Calcium amphomycin is the calcium salt of amphomycin. It conforms to the following specifications:

(i) Its potency is not less than 863 micrograms of amphomycin per milligram;

(ii) Its moisture content is not more than 10 percent; and

(iii) Its pH in a 2-percent aqueous suspension is 6.0 to 7.5.

* * * * *

Dated: April 11, 1988.

Richard A. Carnevale,

Deputy Director, Office of New Animal Drug Evaluation, Center for Veterinary Medicine.

[FR Doc. 88-8270 Filed 4-14-88; 8:45 am]

BILLING CODE 4160-01-M

DEPARTMENT OF THE TREASURY

Internal Revenue Service

26 CFR Part 1

[T.D. 8194]

Income Tax; Nonaccrual-Experience Method of Accounting

AGENCY: Internal Revenue Service, Treasury.

ACTION: Temporary regulations.

SUMMARY: This document contains temporary regulations relating to the nonaccrual-experience method of accounting. The Tax Reform Act of 1986 added the nonaccrual-experience method of accounting to the law. These regulations affect taxpayers using the nonaccrual-experience method of accounting and provide them with guidance needed to comply with the law. The text of the temporary regulations contained in this document also serves as the text of the proposed regulations cross-referenced in the notice of proposed rulemaking in the Proposed Rules section of this issue of the Federal Register.

DATES: The regulations contained in this document are effective December 31, 1986, and apply to taxable years beginning after such date.

FOR FURTHER INFORMATION CONTACT: Katherine Lee Wambsgans of the Legislation and Regulations Division, Office of Chief Counsel, Internal Revenue Service, 1111 Constitution Avenue NW., Washington, DC 20224, Attention: CC:LR:T (202-566-3288, not a toll-free number).

SUPPLEMENTARY INFORMATION:

Background

This document amends the Temporary Income Tax Regulations (26 CFR Part 1) relating to the nonaccrual-experience method under section 448(d)(5) of the Internal Revenue Code of 1986. Section 801 of the Tax Reform Act of 1986 (the Act) (Pub. L. 99-514, 100 Stat. 2085) added section 448(d)(5) to the Code.

Explanation of Provisions

Section 448(d)(5) provides that taxpayers who use an accrual method of accounting need not accrue any amounts (accounts receivable) to be received from the performance of services if, on the basis of experience, such amounts will not be collected. On June 16, 1987, the Service published temporary regulations under section 448(d)(5), relating to the nonaccrual-experience method (52 FR 22764, T.D. 8143). Those temporary regulations also served as a notice of proposed rulemaking (52 FR 22796).

Under the nonaccrual-experience method of accounting, the portion of a receivable that is considered uncollectible and not required to be accrued is the product of the receivable and a fraction representing the taxpayer's bad debt experience. The numerator of the fraction is the taxpayer's bad debts for the taxpayer's current and five preceding taxable years, and the denominator of the fraction is the taxpayer's accounts receivable for the same six-year period. The Internal Revenue Service has received questions from taxpayers as to whether the denominator of the fraction is determined on the basis of (i) total accounts receivable earned throughout the six-year period (i.e., the total amount of sales resulting in accounts receivable throughout the period) or (ii) year-end balances of the accounts receivable over the six-year period. These regulations provide that the denominator is based on total accounts receivable earned throughout the period ending at the close of the six-year period. This interpretation is consistent with the legislative history of the Act which provides that "[t]he amount of billings that, on the basis of experience, will not be collected is equal to the total amount billed, multiplied by a fraction whose numerator is the total amount of such receivables which were billed and determined not to be collectible within the most recent five taxable years of the taxpayer, and whose denominator is the total of such amounts billed within the same five year period." H.R. Rep. No. 99-426, 99th Cong., 1st Sess. 608 (1985). These regulations only apply to the determination of a taxpayer's bad debt experience under section 448. These regulations do not apply to any other provision of law including, for example, computations of a taxpayer's reserve for bad debts under section 585 of the Code.

These regulations are effective for taxable years beginning after December 31, 1986. Nevertheless, a taxpayer will not be liable for the addition to tax under section 6654 or 6655 (relating to failure to pay estimated tax) for an increase in income for the period before May 16, 1988, attributable to the computation of the bad debt experience ratio using accounts receivable earned throughout the period ending at the close of the six-year period, rather than the computation of the ratio using year-end balances of accounts receivable over the six-year period.

Regulatory Flexibility Act

A general notice of proposed rulemaking is not required by 5 U.S.C. 553 for temporary regulations. Accordingly, these temporary regulations are not subject to the Regulatory Flexibility Act (5 U.S.C. Chapter 6).

Executive Order 12291

The Commissioner of Internal Revenue has determined that this temporary rule is not a major rule as defined in Executive Order 12291. Therefore, a regulatory impact analysis is not required.

Drafting Information

The principal author of these temporary regulations is Ewan D. Purkiss of the Legislation and Regulations Division of the Office of Chief Counsel, Internal Revenue Service. However, personnel from other offices of the Internal Revenue Service and Treasury Department participated in developing the regulations, on matters of both substance and style.

List of Subjects in 26 CFR 1.441-1-1.483-2

Income taxes, Accounting, Deferred compensation plans.

Adoption of Amendments to the Regulations

For the reasons set out in the preamble, Title 26, Chapter 1, Subchapter A, Part 1 of the Code of Federal Regulations is amended as set forth below:

PART 1—[AMENDED]

Paragraph 1. The authority for Par' 1 continues to read as follows:

Authority: 26 U.S.C. 7805. * * *

Par. 2. Section 1.448-2T is amended by revising the first sentence of paragraph (e)(2)(i), by revising example (1) in paragraph (e)(4), and by adding a new paragraph (e)(5) to read as follows:

§ 1.448-2T Nonaccrual of certain amounts by service providers (temporary).

* * * * *

(e) * * *

(2) *Six-year moving average*—(i) *General rule.* For any taxable year the uncollectible amount of a receivable is the amount of that receivable which bears the same ratio to the account receivable outstanding at the close of the taxable year as (A) the total bad debts (with respect to accounts receivable) sustained throughout the period consisting of the taxable year and the five preceding taxable years (or, with the approval of the Commissioner, a shorter period), adjusted for recoveries of bad debts during such period, bears to (B) the sum of the accounts receivable earned throughout the entire six (or

fewer) taxable year period (i.e., the total amount of sales resulting in accounts receivable) throughout the period. * * *

* * * * *

(4) *Examples* * * *

Example (1). X is a calendar year service provider that uses an accrual method of accounting with respect to the amounts (accounts receivable) to be received from the provision of services. X does not require the payment of interest or penalties with respect to past due accounts receivable. Assume that under this section, X adopts for taxable year 1987 the nonaccrual-experience method of accounting with respect to its accounts receivable. Further, assume that X's total accounts receivable and bad debt experience for the current and five preceding taxable years is as follows:

Years	Total accounts receivable	Bad debts adjusted for recoveries
1982	$30,000	$5,700
1983	40,000	7,200
1984	50,000	11,000
1985	60,000	10,200
1986	70,000	14,000
1987	80,000	16,800
	330,000	64,900

Thus, the ratio of the bad debts (adjusted for recoveries) for the current and five preceding taxable years to the total accounts receivable over the same period is 19.67% ($64,900/$330,000). Assume that $49,300 of the total $80,000 of accounts receivable earned throughout the taxable year 1987 are outstanding as of the close of such year. Assume further that the $49,300 of the accounts receivable outstanding as of the close of the tax year 1987 consist of 10 separate accounts receivable. The uncollectible amount of each receivable is 19.67%. The amount of these accounts receivable and the uncollectible amount of each is as follows:

	Accounts receivable	Applicable ratio	Uncollectible amount
1.	$5,200	.1967	$1,022.84
2.	7,300	.1967	1,435.91
3.	3,200	.1967	629.44
4.	4,300	.1967	845.81
5.	1,700	.1967	334.39
6.	4,000	.1967	786.80
7.	6,300	.1967	1,239.21
8.	8,000	.1967	1,573.60
9.	3,200	.1967	629.44
10.	5,100	.1967	1,199.87
	49,300		9,697.31

For taxable year 1987, X will not accrue as income $9,697.31 of its accounts receivable of $49,300 outstanding as of the close of the year.

* * * * *

(5) *Special rule for estimated tax.* For purposes of section 6654 or 6655 only (relating to the addition to tax for underpayment of estimated tax), a taxpayer's income does not include eligible income attributable to the period before May 16, 1988. A taxpayer's eligible income is the excess (if any) of—

(i) Income (including the amount of any adjustment required under section 481(a)) computed with a bad debt experience ratio using accounts receivable earned throughout the period ending at the close of the six-year period (or other shorter period) described in paragraph (e)(2)(i) of this section, over

(ii) Income (including the amount of any adjustment required under section 481(a)) computed with a bad debt experience ratio using the year-end balances of accounts receivable over such six-year (or other shorter) period.

* * * * *

There is a need for immediate guidance with respect to the provisions contained in this Treasury decision. For this reason it is impracticable to issue this Treasury decision with notice and public procedure under subsection (b) of section 553 of Title 5 of the United States Code or subject to the effective date limitation of subsection (d) of that section.

Lawrence B. Gibbs,

Commissioner of Internal Revenue.

Approved: April 1, 1988.

Dennis E. Ross,

(Acting) Assistant Secretary of the Treasury.

[FR Doc. 88-8338 Filed 4-14-88; 8:45 am]

BILLING CODE 4830-01-M

PENSION BENEFIT GUARANTY CORPORATION

29 CFR Part 2676

Valuation of Plan Benefits and Plan Assets Following Mass Withdrawal; Interest Rates

AGENCY: Pension Benefit Guaranty Corporation.

ACTION: Final rule.

SUMMARY: This is an amendment to the Pension Benefit Guaranty Corporation's regulation on Valuation of Plan Benefits and Plan Assets Following Mass Withdrawal (29 CFR Part 2676). The regulation prescribes rules for valuing benefits and certain assets of multiemployer plans under sections 4219(c)(1)(D) and 4281(b) of the Employee Retirement Income Security Act of 1974. Section 2676.15(c) of the regulation contains a table setting forth, for each calendar month, a series of interest rates to be used in any valuation performed as of a valuation date within that calendar month. On or about the fifteenth of each month, the PBGC publishes a new entry in the table for the following month, whether or not the rates are changing. This amendment adds to the table the rate series for the month of May 1988.

EFFECTIVE DATE: May 1, 1988.

FOR FURTHER INFORMATION CONTACT: Deborah C. Murphy, Attorney, Office of the General Counsel (22500), Pension Benefit Guaranty Corporation, 2020 K Street, NW., Washington, DC 20006; 202-778-8820 (202-778-8859) for TTY and TTD). (These are not toll-free numbers.)

SUPPLEMENTARY INFORMATION: The PBGC finds that notice of and public comment on this amendment would be impracticable and contrary to the public interest, and that there is good cause for making this amendment effective immediately. These findings are based on the need to have the interest rates in this amendment reflect market conditions that are as nearly current as possible and the need to issue the interest rates promptly so that they are available to the public before the beginning of the period to which they apply. (*See* 5 U.S.C. 533 (b) and (d).) Because no general notice of proposed rulemaking is required for this amendment, the Regulatory Flexibility Act of 1980 does not apply (5 U.S.C. 601(2)).

The PBGC has also determined that this amendment is not a "major rule" within the meaning of Executive Order 12291 because it will not have an annual effect on the economy of $100 million or more; or create a major increase in costs or prices for consumers, individual industries, or geographic regions; or have significant adverse effects on competition, employment, investment, or innovation, or on the ability of United States-based enterprises to compete with foreign-based enterprises in domestic or export markets.

List of Subjects in 29 CFR Part 2676

Employee benefit plans and Pensions.

In consideration of the foregoing, Part 2676 of Subchapter H of Chapter XXVI of Title 29, Code of Federal Regulations, is amended as follows:

PART 2676—VALUATION OF PLAN BENEFITS AND PLAN ASSETS FOLLOWING MASS WITHDRAWAL

1. The authority citation for Part 2676 continues to read as follows:

Authority: 29 U.S.C. 1302(b)(3), 1399(c)(1)(D), and 1441(b)(1).

2. In § 2676.15, paragraph (c) is amended by adding to the end of the

table of interest rates therein the following new entry:

§ 2676.15 Interest.

* * * * *

(c) *Interest rates.*

For valuation dates occurring in the month:—	The values of i_k are:—															
	i_1	i_2	i_3	i_4	i_5	i_6	i_7	i_8	i_9	i_{10}	i_{11}	i_{12}	i_{13}	i_{14}	i_{15}	i_n
*		*			*			*				*			*	
May 1988	.09625	.0925	.0875	.0825	.0775	.07125	.07125	.07125	.07125	.07125	.065	.065	.065	.065	.065	.06

Royal S. Dellinger,

Acting Executive Director, Pension Benefit Guaranty Corporation.

[FR Doc. 88-8286 Filed 4-14-88; 8:45 am]

BILLING CODE 7708-01-M

DEPARTMENT OF DEFENSE

Department of the Navy

32 CFR Part 706

Certifications and Exemptions Under the International Regulations for Preventing Collisions at Sea, 1972; Amendment

AGENCY: Department of the Navy, DoD.

ACTION: Final rule.

SUMMARY: The Department of the Navy is amending its certifications and exemptions under the International Regulations for Preventing Collisions at Sea, 1972 (72 COLREGS), to reflect that the Under Secretary of the Navy has (1) determined that USS FLETCHER (DD 992) is a vessel of the Navy which, due to its special construction and purpose, cannot comply fully with certain provisions of the 72 COLREGS without interfering with its special functions as a naval destroyer; (2) directed that certain naval ships and classes of ships be deleted from the tables in the existing Part 706; and (3) directed that certain corrections and deletions be made to one of the tables in the existing Part 706. The intended effect of its rule is to warn mariners in waters where 72 COLREGS apply.

EFFECTIVE DATE: March 23, 1988.

FOR FURTHER INFORMATION CONTACT: Captain P.C. Turner, JAGC, U.S. Navy Admiralty Counsel, Office of the Judge Advocate General, Navy Department, 200 Stovall Street, Alexandria, VA 22332-2400. Telephone number: (202) 325-9744.

SUPPLEMENTARY INFORMATION: Pursuant to the authority granted in 33 U.S.C. 1605, the Department of the Navy amends 32 CFR Part 706. This amendment provides notice that the Under Secretary of the Navy, under authority delegated by the Secretary of the Navy, has certified that USS FLETCHER (DD 992) is a vessel of the Navy which, due to its special construction and purpose, cannot comply fully with 72 COLREGS, Annex I, section 3(a), pertaining to the location of the forward masthead light in the forward quarter of the ship, the placement of the after masthead light, and the horizontal distance between the forward and after masthead lights, without interfering with its special functions as a naval destroyer. The Under Secretary of the Navy has also certified that the above mentioned lights are located in closest possible compliance with the applicable 72 COLREGS requirements.

Notice is also provided that the Under Secretary of the Navy has determined that certain naval ships and classes of ships listed in the existing tables of 32 CFR Part 706 may be deleted from those tables because those ships and classes of ships have been stricken from the Naval Vessel Register or removed from active operational service.

Notice is also provided that the Under Secretary of the Navy has determined that the existing Table Four of 32 CFR 706.2 should be revised to correct errors contained therein, to remove paragraphs that are no longer required, and to delete certain naval ships that have been stricken from the Naval Vessel Register.

Moreover, it has been determined, in accordance with 32 CFR Parts 296 and 701, that publication of this amendment for public comment prior to adoption is impracticable, unnecessary, and contrary to public interest since it is based on technical findings that the placement of lights on USS FLETCHER (DD 992) in a manner differently from that prescribed herein will adversely affect the ship's ability to perform its military functions.

List of Subjects in 32 CFR Part 706

Marine Safety, Navigation (Water), Vessels.

PART 706—[AMENDED]

Accordingly, 32 CFR Part 706 is amended as follows:

1. The authority citation for 32 CFR Part 706 continues to read:

Authority: 33 U.S.C. 1605.

§ 706.2 [Amended]

2. Table One of § 706.2 is amended by removing the following ships:

USS ALACRITY (AG-520)
USS ASSURANCE (AG-521)
USS PLAINVIEW (AGEH-1)
USS TANG (AGSS-563)
USS DASH (MSO-428)
USS DETECTOR (MSO-429)
USS DIRECT (MSO-43)
USS DOMINANT (MSO-431)
USS ANTELOPE (PG-86)
USS READY (PG-87)
USS GRAND RAPIDS (PG-100)
USS DOUGLAS (PG-106)
USS TANG (SS-563)
USS WAHOO (SS-565)
USS TROUT (SS-566)
USS GUDGEON (SS-567)
USS SAILFISH (SS-572)
USS GRAYBACK (SS-574)
USS NAUTILUS (SSN-571)
USS SEAWOLF (SSN-575)
USS SKATE (SSN-578)
USS SEADRAGON (SSN-584)
USS SNOOK (SSN-592)
USS GEORGE WASHINGTON (SSBN-598)
USS PATRICK HENRY (SSBN-599)
USS THEODORE ROOSEVELT (SSBN-600)
USS ROBERT E. LEE (SSBN-601)
USS ABRAHAM LINCOLN (SSBN-602)
USS ETHAN ALLEN (SSBN-608)
USS THOMAS A. EDISON (SSBN-610)
USS THOMAS JEFFERSON (SSBN-618)
USS NATHAN HALE (SSBN-623)

3. Table Three of § 706.2 is amended by removing the following ships:

USS TANG (AGSS-563)
USS WAHOO (SS-565)
USS TROUT (SS-566)
USS GUDGEON (SS-567)
USS SAILFISH (SS-572)
USS SALMON (SS-573)
USS GREYBACK (SS-574)
USS NAUTILUS (SSN-571)
USS SEAWOLF (SSN-575)
USS SKATE (SSN-578)
USS SEADRAGON (SSN-584)
USS SNOOK (SSN-592)

USS GEORGE WASHINGTON (SSBN-598)
USS PATRICK HENRY (SSBN-599)
USS THEODORE ROOSEVELT (SSBN-600)
USS ROBERT E. LEE (SSBN-601)
USS ABRAHAM LINCOLN (SSBN-602)
USS ETHAN ALLEN (SSBN-608)
USS THOMAS A. EDISON (SSBN-610)
USS THOMAS JEFFERSON (SSBN-618)
USS NATHAN HALE (SSBN-623)

4. Table Four of § 706.2 is amended by revising the existing paragraph 2 to read as follows:

* * * * *

2. To provide all-round visibility, the lights required by Rules 27 (a) and (b) will consist of two lights, one light port and one light starboard on the mast or superstructure at each location in the vertical array.

* * * * *

5. Table Four of § 706.2 is amended by revising the existing paragraph 3 to read as follows:

* * * * *

3. The second masthead light required by Rule 23(a)(ii) and the lights and shapes required by Rules 24, 27, and 30(d)(i) are not displayed by submarines.

* * * * *

6. Table Four of § 706.2 is amended by removing the existing paragraph 4.

7. Table Four of § 706.2 is amended by redesignating the existing paragraph 5 as paragraph 4 and removing from the redesignated paragraph 4 the following ships:

USS DASH (MSO-428)
USS DETECTOR (MSO-429)
USS DIRECT (MSO-430)
USS DOMINANT (MS-431)

8. Table Four of § 706.2 is amended by redesignating the existing paragraph 6 as paragraph 5.

9. Table Four of § 706.2 is amended by redesignating the existing paragraph 7 as paragraph 6 and removing from the redesignated paragraph 6 the following ships:

USS SHENANDOAH (AD-26)
USS BRYCE CANYON (AD-27)

10. Table Four of § 706.2 is amended by redesignating the existing paragraphs 8 and 9 as paragraphs 7 and 8.

11. Table Four of § 706.2 is amended by removing the existing paragraphs 10, 11, 12, and 13.

12. Table Four of § 706.2 is amended by redesignating the existing paragraph 14 as paragraph 9.

13. Table Four of § 706.2 is amended by removing the existing paragraphs 15 and 16.

14. Table Four of § 706.2 is amended by redesignating the existing paragraph 17 as paragraph 10.

15. Table Four of § 706.2 is amended by removing the existing paragraph 18.

16. Table Four of § 706.2 is amended by redesignating the existing paragraph 19 as paragraph 11.

17. Table Four of § 706.2 is amended by redesignating the existing paragraph 20 as paragraph 12 and by revising the redesignated paragraph 12 to read as follows:

* * * * *

12. On the following ships, two lights are installed at the same level, one fore and one aft, high on the mast to provide the closest possible compliance to the all-around anchor light visibility required by Rule 30(b) and Annex I, section 9(b):

USS PEGASUS (PHM-1)
USS HERCULES (PHM-2)
USS TAURUS (PHM-3)
USS AQUILA (PHM-4)
USS ARIES (PHM-5)
USS GEMINI (PHM-6)

* * * * *

18. Table Four of § 706.2 is amended by removing the existing paragraph 21.

19. Table Four of § 706.2 is amended by redesignating the existing paragraphs 22 and 23 as paragraphs 13 and 14.

20. Table Five of § 706.2 is amended by revising the existing entry for USS FLETCHER (DD-992) to read as follows:

Vessel	Number	Forward masthead light less than the required height above hull. Annex I, sec. 2(a)(i)	Aft masthead light less than 4.5 meters above forward masthead light. Annex I, sec. 2(a)(ii)	Masthead lights not over all other lights and obstructions. Annex I, sec. 2(f)	Vertical separation of masthead lights used when towing less than required by Annex I, sec. 2(a)(i)	Aft masthead lights not visible over forward light 1,000 meters ahead of ship in all normal degrees of trim. Annex I, sec. 2(b)	Forward masthead light not in forward quarter of ship. Annex I, sec. 3(a)	Aft masthead light less than ½ ship's length aft of forward masthead light. Annex I, sec. (3)(a)	Percentage horizontal separation attained
•	•	•	•	•	•		•	•	
USS FLETCHER	DD-992					x		x	46
•	•	•	•	•	•		•	•	

§ 706.3 [Amended]

21. Table One of § 706.3 is amended by removing the following ships and classes of ships:

USNS KINGSPORT (T-AG-164)
USNS WHEELING (T-AGM-8)
USNS ARNOLD (T-AGM-9)
USNS BROSTROM (T-AK-255)
USNS TOWLE (T-AK-240)
USNS BLAND (T-AK-277)
USNS NORWALK (T-AK-279)
USNS VICTORIA (T-AK-261)
COLUMBIA CLASS (T-AO-182-185)
SS-563 CLASS
USS GRAYBACK (SS-574)
USS NAUTILUS (SSN-571)
USS SEAWOLF (SSN-575)
USS OKLAHOMA CITY (CG-5)
CG-10 CLASS
DD-710 CLASS
DDG-35 CLASS
SSBN-598 CLASS
AG-520 CLASS
USS PLAINVIEW (AGEH-1)
USS TANG (AGSS-563)

Date: March 23, 1988.

Approved.

H. Lawrence Garrett III,

Acting Secretary of the Navy.

[FR Doc. 88-8349 Filed 4-14-88; 8:45 am]

BILLING CODE 3810-AE-M

PANAMA CANAL COMMISSION

35 CFR Part 103

General Provisions Governing Vessels

AGENCY: Panama Canal Commission.

ACTION: Final rule.

SUMMARY: The Panama Canal Commission is today amending its regulations in Title 35, Code of Federal Regulations, § 103.6(e)(1) concerning the maximum overall lengths for vessels which transit the Panama Canal. This action is necessary due to an increase in

the number of vessels being accepted for transit by Canal authorities when their length exceeds that permitted by current regulations. The effect will be to recognize the increasing growth in size of commercial vessels by permitting them transit on a regular basis, thereby conforming regulations to the practice that has developed.

EFFECTIVE DATE: April 15, 1988.

FOR FURTHER INFORMATION CONTACT: Mr. Michael Rhode, Jr., Secretary, Panama Canal Commission, telephone: (202) 634-6441, or Mr. John Haines, Jr., General Counsel, Balboa Heights, Republic of Panama, telephone: 011-507-52-7511.

SUPPLEMENTARY INFORMATION: On February 16, 1988, a notice of proposed rulemaking was published in the **Federal Register** (53 4424) setting forth the proposed amendments to the rules governing provisions for length of vessels. Interested parties were given the opportunity to submit comments on or before March 17, 1988. No comments were received during the period.

Following is a summary of how the rules published today will modify the rules which have been in effect concerning the maximum overall lengths for vessels which transit the Panama Canal.

Present Commission regulations in 35 CFR 103.6(e)(1) restrict regular transits to (1) commercial vessels whose overall maximum length, including bulbous bow, does not exceed 900 feet, and (2) to passenger and container ships whose overall length does not exceed 950 feet. Depending on their characteristics, vessels exceeding these limits have been authorized single transits at the discretion of Canal authorities, subject to special conditions to ensure the safety and continiuty of regular Canal operations.

There has been a gradual increase in the number of exceptions granted to vessels that exceed the limitations set forth above and recurring requests for these vessels to transit on a regular basis, without the need for authorization for individual transits. A study of Canal operating procedures indicates that an increase in maximum length by 50 feet, from 900 feet to 950 feet may be acceptable on certain commercial vessels. Similarly, an increase of 15 feet, from 950 feet to 965 feet is considered acceptable for transit of passenger and container ships.

In view of this determination, therefore, the Commission is revising paragraph (e)(1) of § 103.6 to permit the Commission to accept for regular transit commercial vessels whose maximum length overall, including bulbous bow, is 950 feet, except that passenger and container ships may be 965 feet in overall length. To insure a safe passage, vessels greater than 900 feet in length overall, which are transiting for the first time or are newly-modified vessels or newly-constructed vessels are still subject to denial of passage pursuant to section 103.2 and to the requirement of prior review and approval of vessel plans by Canal authorities.

The Commission has determined that this rule does not constitute a major rule within the meaning of Executive Order 12291 dated February 17, 1981 (47 FR 13193). The bases for that determination are, first, that the rule, when implemented, would not have an annual effect on the economy of $100 million or more per year, and secondly, that the rule would not result in a major increase in costs or prices for consumers, individual industries, local governmental agencies or geographic regions.

Further, the agency has determined that implementation of the rule will have no adverse effect on competition, employment, investment, productivity, innovation or the ability of United States based enterprises to compete with foreign-based enterprises in domestic or export markets.

Finally, the Commission has determined that this rule is not subject to the requirements of sections 603 and 604 of Title 5, United States Code, in that its promulgation will not have a significant impact on a substantial number of small entities, and the Administrator of the Commission so certifies pursuant to 5 U.S.C. 605(b).

List of Subjects in 35 CFR, Part 103

Panama Canal, Vessels, Marine safety, Navigation.

Accordingly, Title 35, Code of Federal Regulations, Part 103, is amended as follows:

PART 103—GENERAL PROVISIONS GOVERNING VESSELS

1. The authority citation for Part 103 is revised to read as follows:

Authority: 22 U.S.C. 3811, E.O. 12215, 45 FR 36043.

2. Section 103.6 is amended by revising paragraph (e)(1), to read as follows:

§ 103.6 Size and draft limitations of vessels.

* * * * *

(e) Maximum length. (1) The maximum length overall, including bulbous bow, for a commercial vessel acceptable for regular transit is 950.0 feet, except passenger and container ships, which may be 965.0 feet in overall length. In order to insure a safe passage, vessels exceeding 900.0 feet in overall length, which are transiting the Canal for the first time or are newly-modified or newly-constructed vessels, are subject to denial of passage pursuant to § 103.2 and to the requirement of prior Commission review and approval of vessel plans in accordance with Canal regulations.

* * * * *

Dated: April 12, 1988

D.P. McAuliffe,

Administrator, Panama Canal Commission.

[FR Doc. 88-8366 Filed 4-14-88; 8:45 am]

BILLING CODE 3640-04-M

ENVIRONMENTAL PROTECTION AGENCY

40 CFR Parts 60 and 61

[FRL-3366-1]

Standards of Performance for New Stationary Sources and National Emission Standards for Hazardous Air Pollutants; South Dakota and Colorado; Delegation of Authority

AGENCY: Environmental Protection Agency.

ACTION: Delegation of authority.

SUMMARY: EPA is today providing notice that it granted delegation of authority to South Dakota on March 26, 1987, to implement and enforce (1) the New Source Performance Standards (NSPS) for metallic and nonmetallic mineral processing plants (40 CFR Part 60, Subparts LL and OOO, respectively) and (2) the National Emission Standards for Hazardous Air Pollutants (NESHAPs) for asbestos (40 CFR Part 61, Subpart M). This is a result of requests for delegation from the State of South Dakota on March 27, 1986, for the NESHAP and on April 23, 1986, for the NSPS.

EPA is also today providing notice that it granted delegation of authority to Colorado on September 30, 1987, to implement and enforce the NSPS for industrial-commercial-institutional steam generating units; basic oxygen process steelmaking facilities (secondary emissions); nonmetallic mineral processing plants; natural gas processing plants (equipment leaks of VOC); natural gas processing plants (SO_2 emissions); wool fiberglass insulation manufacturing plants (40 CFR Part 60, Subparts Db, Na, OOO, KKK, LLL and PPP, respectively); pressure sensitive tape and label surface coating operations; metallic mineral processing

plants; synthetic organic chemicals manufacturing industry (equipment leaks of VOC); flexible vinyl and urethane coating and printing; petroleum refineries (equipment leaks of VOC); synthetic fiber production facilities; and petroleum dry cleaners (40 CFR Part 60, Subparts RR, LL, VV, FFF, GGG, HHH and JJJ, respectively).

The first six NSPS are a result of a request for delegation from the State of Colorado on August 19, 1987. The latter seven NSPS were adopted by the State of Colorado on July 11, 1985, but had never been officially delegated to the State of Colorado. EPA is acting on them at this time. EPA is also today updating the State addresses shown in 40 CFR 60.4(b) and 40 CFR 61.04(b).

EFFECTIVE DATE: March 26, 1987, for South Dakota. September 30, 1987, for Colorado.

ADDRESSES: Copies of the revisions are available for public inspection between 8:00 a.m. and 4:00 p.m. Monday through Friday at the following offices:

Environmental Protection Agency, Region VIII, Air Programs Branch, 999 18th Street, Suite 500, Denver Colorado 80202-2405.

Environmental Protection Agency, Public Information Reference Unit, Waterside Mall, 401 M Street SW., Washington, DC 20460.

FOR FURTHER INFORMATION CONTACT: Laurie Ostrand, Environmental Protection Agency, Air Programs Branch, 999 18th Street, Suite 500, Denver, Colorado 80202-2405, (303) 293-1764, (FTS) 564-1764.

SUPPLEMENTARY INFORMATION: Sections 111(c) and 112(d) of the Clean Air Act permit EPA to delegate to the States the authority to implement and enforce the standards set forth in 40 CFR Part 60, NSPS, and 40 CFR Part 61, NESHAP.

South Dakota

On March 25, 1976 (see 41 FR 17600, April 27, 1976), EPA delegated to the State of South Dakota the authority to implement and enforce the following categories of NSPS: Incinerators; portland cement plants; sulfuric acid plants; asphalt concrete plants; petroleum refineries; storage vessels for petroleum liquids; secondary lead smelters; secondary brass and bronze ingot production plants; iron and steel plants; and sewage treatment plants.

On October 16, 1980, the State of South Dakota submitted a State Implementation Plan (SIP) revision to EPA. This revision, among other things, added several NSPS to the Administrative Rules of South Dakota (ARSD). Additionally, several NSPS that had been included in the ARSD at the time of the original delegation (March 25, 1976) were omitted. Those NSPS added to ARSD included: Fossil fuel-fired steam generators; fossil fuel-fired electric utility generators; coal preparation plants; grain elevators; lime manufacturing plants; and stationary gas turbines. Those NSPS that were omitted from ARSD included: Petroleum refineries; secondary lead smelters; secondary brass and bronze ingot production plants; iron and steel plants; and sulfuric acid plants. The EPA approved these revisions on November 3, 1981 (46 FR 54541).

On September 17, 1984 (49 FR 36368), EPA published a list of the delegation status of NSPS and NESHAP in Region VIII. The State of South Dakota was shown to have the authority to implement and enforce the following NSPS: General provisions; fossil fuel-fired steam generating units constructed after August 17, 1971; electric utility steam generating units constructed after September 18, 1975; incinerators; portland cement plants; sulfuric acid plants; asphalt concrete plants; petroleum refineries; storage vessels for petroleum liquids constructed after June 11, 1973 and prior to May 19, 1978; sewage treatment plants; coal preparation plants; grain elevators; stationary gas turbines; lime manufacturing plants, and nitric acid plants. Nitric acid plants, however, should not have been shown in the Federal Register notice. Its appearance was an error.

On April 23, 1986, the State of South Dakota requested the authority to implement and enforce the NSPS for metallic mineral processing plants and nonmetallic mineral processing plants. On March 27, 1986, the State of South Dakota requested the authority to implement and enforce the NESHAP for asbestos. Pursuant to these requests, on March 26, 1987, delegation was given with the following letter:

Mr. Joel C. Smith,
Division of Water and Natural Resource Management, Department of Water and Natural Resources, Joe Foss Building, Pierre, SD 57501

Dear Mr. Smith: This is in response to your letters of April 23, 1986, and March 27, 1986, which requested authority to implement and enforce additional categories of the Standards of Performance for New Stationary Sources (NSPS) and one of the National Emission Standards for Hazardous Air Pollutants (NESHAPs) programs, respectively.

Specifically, in your letter of April 23, 1986, you requested that EPA delegate authority for implementation and enforcement of the NSPS categories outlined in 40 CFR § 60.380 to 60.386, inclusive (Part 60, Subpart LL), entitled "Standards of Performance for Metallic Mineral Processing Plants", and 40 CFR § 60.670 to 60.676, inclusive (Part 60, Subpart OOO), entitled "Standards of Performance for Nonmetallic Mineral Processing Plants". In your letter of March 27, 1986, you requested authority to implement and enforce the provisions of 40 CFR § 61.140 to 61.150, inclusive (Part 61, Subpart M), entitled "Emission Standards for Asbestos Air Pollutants".

We have reviewed the pertinent laws of the State of South Dakota and the rules and regulations thereof, and have determined that they provide an adequate and effective procedure for implementation of the NSPS and NESHAPs by the State of South Dakota. Therefore, we hereby delegate our authority for the implementation and enforcement of NSPS and NESHAPs to the State of South Dakota as follows:

A. Authority for all sources located or to be located in the State of South Dakota subject to the NSPS for Subpart LL and Subpart OOO promulgated in 40 CFR Part 60 as of the date of this letter.

B. Authority for all sources located or to be located in the State of South Dakota subject to the NESHAPs for Subpart M promulgated in 40 CFR Part 61 as of the date of this letter.

Certain authorities of NSPS and NESHAPS cannot be delegated to states under Sections 111 and 112 of the Clean Air Act. Examples include: (1) equivalency determinations; (2) alternative test methods; (3) decisions where federal oversight is needed to ensure national consistency; and (4) decisions that require rulemaking to implement. Therefore, the following is a list of provisions of Part 61, Subpart M where the authority to implement is retained by the Administrator: § 61.151(c)(2), § 61.152(b)(3), § 61.153(c), § 61.154(b)(2), and § 61.155(d).

The delegation is based upon the same conditions as those stated in our letter of March 25, 1976, except that condition 3 of that letter, relating to federal facilities, has been voided by the Clean Air Act Amendments of 1977. A copy of the March 25, 1976, letter was published in the Notices section of the Federal Register of April 27, 1976 (76 FR 12246), along with the associated rulemaking notifying the public that certain reports and applications required from operators of new sources shall be submitted to the State of South Dakota. A notice announcing this delegation will be published in the Federal Register in the near future.

Sincerely,

Alexandra B. Smith,
Acting Regional Administrator.

On November 19, 1987, EPA requested clarification from the State on several NSPS that were delegated to the State in the past but no longer appeared in the ARSD. The State responded on January 8, 1988, stating that, in fact, the NSPS regulations in question had been deleted from ARSD. Therefore, EPA is rescinding the delegation for the following NSPS because the State no longer has regulations to implement and enforce them: Sulfuric acid plants; petroleum refineries; secondary lead

smelters; secondary brass and bronze ingot production plants; iron and steel plants; and nitric acid plants.

In summary, the NSPS and NESHAP that the EPA has delegated to the State of South Dakota to implement and enforce are shown in the tables below.

Colorado

On August 27, 1975 (see 40 FR 50748, October 31, 1975), EPA delegated to the State of Colorado the authority to implement and enforce the following categories of NSPS: Fossil fuel-fired steam generators; incinerators; portland cement plants; nitric acid plants; sulfuric acid plants; asphalt concrete plants; petroleum refineries; secondary lead smelters; secondary brass and bronze ingot production plants; iron and steel plants; and sewage treatment plants.

On September 17, 1984 (49 FR 36368), EPA published a list of the delegation status of NSPS for Region VIII. The State of Colorado was shown to have the authority to implement and enforce the above mentioned NSPS plus the following NSPS: General provisions; electric utility steam generators; storage vessels for petroleum liquids constructed after June 11, 1973 and prior to May 19, 1978; storage vessels for petroleum liquids constructed after May 18, 1978; primary copper smelters; primary zinc smelters; primary lead smelters; primary aluminum reduction plants; phosphate fertilizer industry (wet process phosphoric acid plants—super phosphoric acid plants—diammonium phosphate plants—triple super phosphate plants—granular triple super phosphate storage facilities); coal preparation plants; ferralloy production facilities; steel plants (electric arc furnaces); kraft pulp mills; glass manufacturing plants; grain elevators; surface coating of metal furniture; stationary gas turbines; lime manufacturing plants; lead-acid battery manufacturing plants; automobile and light duty surface coating operations; phosphate rock plants; ammonium sulfate manufacturing; graphic arts publication rotogravure printing; industrial surface coating (large appliances); metal coil surface coating; asphalt processing and roofing manufacturing; beverage can coating; and bulk gasoline terminals.

On August 19, 1987, the State of Colorado requested the authority to implement and enforce the following NSPS: Industrial-commercial institutional steam generating units; basic oxygen process steelmaking facilities (secondary emissions); nonmetallic mineral processing plants; natural gas processing plants (equipment leaks of VOC); Natural gas processing plants (SO_2 emissions); and wool fiberglass insulation manufacturing. EPA also noted, at the time of this submittal, that there were seven additional NSPS which were adopted by the State on July 11, 1985, but for which authority to implement and enforce had not been officially delegated to the State of Colorado. The seven NSPS included: Pressure sensitive tape and label surface coating operations; metallic mineral processing plants; synthetic organic chemical manufacturing industry (equipment leaks of VOC); flexible vinyl and urethane coating and printing; petroleum refineries (equipment leaks of VOC); synthetic fiber production facilities; and petroleum dry cleaners.

Delegation of these thirteen standards was made on September 30, 1987.

Delegation was given with the letter below:

Honorable Roy Romer,
Governor of Colorado, Executive Chambers, 136 State Capitol, Denver, Colorado 80203-1792

Dear Governor: This is in response to your letter dated August 19, 1987, which submitted Colorado's Revised Regulation No. 6, New Source Performance Standards (NSPS). This submittal included the addition of six new NSPS to Colorado's regulations. Subsequent to states adopting NSPS, it is the Environmental Protection Agency's (EPA) policy to delegate the authority for the implementation and enforcement of the NSPS. Following the review of the above mentioned submittal, we noted that there were seven additional NSPS for which authority for implementation and enforcement had not been officially delegated to the State of Colorado. Therefore, at this time we are acting on the delegation of authority for the implementation and enforcement of 13 NSPS.

We have reviewed the pertinent laws of the State of Colorado and the rules and regulations thereof, and have determined that they provide an adequate and effective procedure for implementation and enforcement of the NSPS by the State of Colorado. Therefore, pursuant to Section 111(c) of the Clean Air Act (CAA), as amended, and 40 CFR 60, I hereby delegate our authority for the implementation and enforcement of the NSPS to the State of Colorado as follows:

(A) Responsibility for all sources located, or to be located, in the State of Colorado subject to the standards of performance for new stationary sources promulgated in 40 CFR 60.

These categories of new stationary sources covered by this delegation are as follows: Industrial-Commercial-Institutional Steam Generating Units; Basic Oxygen Process Steelmaking Facilities (secondary emissions); Nonmetallic Mineral Processing Plants; Natural Gas Processing (equipment leaks of VOC); Natural Gas Processing Plants: SO_2 Emissions; Wool Fiberglass Insulation Manufacturing Plants; Pressure Sensitive Tape and Label Surface Coating Operations; Metallic Mineral Processing Plants; Synthetic Organic Chemical Manufacturing Industry (equipment leaks of VOC); Flexible Vinyl and Urethane Coating and Printing; Petroleum Refineries (equipment leaks of VOC); Synthetic Fiber Production Facilities; and Petroluem Dry Cleaners.

(B) Not all authorities of NSPS can be delegated to states under Section 111 of the CAA. The EPA Administrator retains the authority to implement those sections of NSPS that require: (1) approving equivalency determinations and alternative test methods; (2) decision making to ensure national consistency; (3) rulemaking to implement. Therefore, we cannot delegate to the State of Colorado the authority for the following:

(i) 40 CFR 60.634 (Section I.E. in Colorado Regulation No. 6) pertains to Equipment Leaks of VOC from Natural Gas Processing Plants;

(ii) 40 CFR 60.482-1(c)(2) and 60.484 (Sections XLIV.C.3.b and XLIV.O in Colorado Regulation No. 6) pertains to Equipment Leaks of VOC in the Synthetic Organic Chemical Manufacturing Industry;

(iii) 40 CFR 60.592(c) (Section XLIV.C.3. in Colorado Regulation No. 6) pertains to Equipment Leaks of VOC in Petroleum Refineries; and

(iv) 40 CFR 60.623 (Section XLVIII.D. in Colorado Regulation No. 6) pertains to Petroleum Dry Cleaners.

(C) EPA takes notice that Section I.I.2., pertaining to the initial compliance demonstration for the opacity standard is differentiated from 40 CFR 60.11(b) in the number of six minute readings that occur in the 3-hour period. However, EPA believes that the changes to the Federal regulations do not change their purpose and intent since 3-hours of observations will be conducted during the initial compliance demonstration.

This delegation is based upon and continues the same conditions as those stated in our letter of August 27, 1975, except that condition 3, relating to Federal facilities, has been voided by the Clean Air Act Amendments of 1977. It is also important to note that EPA retains concurrent enforcement authority as stated in condition 3 of our letter dated August 27, 1975. A copy of the August 27, 1975, letter was published in the Notices section of the **Federal Register** of October 31, 1975 (40 FR 50748), along with the associated rulemaking notifying the public that certain reports and applications required from operators of new or modified sources shall be submitted to the State of Colorado (40 FR 50718). Copies of these **Federal Registers** are enclosed for your convenience. In addition, information received by the State of Colorado pursuant to 40 CFR 60.676(b), Section XLIX.G.2. in Colorado Regulation No. 6, pertaining to Nonmetallic Mineral Processing Plants, should be copied to the Director of the Emission Standards and Engineering Division (MD-13), U.S. Environmental Protection Agency, Research Triangle Park, North Carolina 27711.

Since this delegation is effective immediately, there is no need for the State to notify the EPA of its acceptance. Unless we receive written notice of objections from you

within ten days of the date on which you receive this letter, the State of Colorado will be deemed to have accepted all the terms of this delegation.

Sincerely,

James J. Scherer,

Regional Administrator.

In summary, the NSPS, that the EPA has delegated to the State of Colorado to implement and enforce, are shown in the table below. In the next to the last paragraph in the August 27, 1975, letter above, EPA referenced a condition 3. Condition 3 in this letter is an error; it should be condition 2.

List of Subjects

40 CFR Part 60

Air pollution control, Aluminum, Aluminum reduction, Ammonium sulfate plants, Asphalt, Asphalt concrete plants, Asphalt processing, and roofing manufacture, Basic oxygen process steelmaking, Brass, Bronze, Cement industry, Coal preparation plants, Copper, Copper smelters, Electric power plants, Electric utility steam generating units, Ferralloy, Fossil fuel-fired steam operators, Gasoline, Glass, Glass products, Glass manufacturing, Grains, Grain elevators, Graphic arts, Incinerators, Industrial-commercial-institutional steam generating units, Intergovernmental relations, Iron, Iron and steel plants, Lead, Lead smelters, Lead acid battery, Lime, Lime manufacturing, Metals, Metallic minerals, Motor vehicles, Nitric acid plants, Nonmetallic minerals, Paper and paper products industry, Petroleum, Petroleum refineries, Petroleum liquids storage vessels, Phosphate fertilizer industry, Primary copper smelters, Primary zinc smelters, Primary lead smelters, Primary aluminum reduction, Pulp mills, Phosphate rock, Portland cement, Secondary lead smelters, Secondary brass and bronze ingot production, Sewage disposal, Sewage treatment, Steel, Sulfuric acid plants, Turbines, Waste treatment and disposal, Zinc, Zinc smelters, Tires, Incorporation by reference, Surface coating, Industrial organic chemicals, Organic solvent cleaners, Fiberglass insulation, Synthetic fibers, Stationary gas turbines, Natural gas processing, Wool fiberglass, Metal furniture surface coaters, Automobile and light duty surface coaters, Publication rotogravure printing surface coaters, Metal coil surface coaters, Beverage can surface coaters, and flexible vinyl and urethane coaters and printers.

40 CFR Part 61

Air pollution control, Asbestos, Beryllium, Hazardous materials, Mercury, Vinyl chloride.

Authority: 42 U.S.C. 7411 and 7412.

Dated: March 31, 1988.

James J. Scherer,

Regional Administrator.

Part 60 of Chapter I, Title 40 of the *Code of Federal Regulations* is amended as follows:

PART 60—[AMENDED]

1. The authority citation for Part 60 continues to read as follows:

Authority: 42 U.S.C. 7411 and 7412.

Subpart A—General Provisions

§ 60.4 [Amended]

2. Section 60.4(b)(G) is revised to read as follows:

(b) * * *

(G) State of Colorado, Department of Health, Air Pollution Control Division, 4210 East 11th Avenue, Denver, CO 80220

Editorial Note: For a table listing Region VIII's NSPS delegation status, see paragraph (c) of this section.

* * * * *

3. Section 60.4(b)(BB) is revised to read as follows:

(b) * * *

(BB) State of Montana, Department of Health and Environmental Services, Air Quality Bureau, Cogswell Building, Helena, MT 59601

Editorial Note: For a table listing Region VIII's NSPS delegation status, see paragraph (c) of this section.

* * * * *

4. Section 60.4(b)(JJ) is revised to read as follows:

(b) * * *

(JJ) State of North Dakota, State Department of Health and Consolidated Laboratories, Division of Environmental Engineering, State Capitol, Bismarck, ND 58505

Editorial Note: For a table listing Region VIII's NSPS delegation status, see paragraph (c) of this section.

* * * * *

5. Section 60.4(b)(QQ) is revised to read as follows:

(b) * * *

(QQ) State of South Dakota, Department of Water and Natural Resources, Office of Air Quality and Solid Waste, Joe Foss Building, 523 East Capitol, Pierre, SD 57501-3181

Editorial Note: For a table listing Region VIII's NSPS delegation status, see paragraph (c) of this section.

* * * * *

6. Section 60.4(b)(TT) is revised to read as follows:

(b) * * *

(TT) State of Utah, Department of Health, Bureau of Air Quality, 288 North 1460 West, P.O. Box 16690, Salt Lake City, UT 84115-0690

Editorial Note: For a table listing Region VIII's NSPS delegation status, see paragraph (c) of this section.

* * * * *

7. Section 60.4(b)(ZZ) is revised to read as follows:

(b) * * *

(ZZ) State of Wyoming, Department of Environmental Quality, Air Quality Division, Herschler Building, 122 West 25th Street, Cheyenne, WY 82002

Editorial Note: For a table listing Region VIII's NSPS delegation status, see paragraph (c) of this section.

* * * * *

8. Section 60.4(b) is amended by removing the table that shows the Delegation Status of New Source Performance Standards for Region VIII.

9. Section 60.4 is amended by adding paragraph (c) to read as follows:

(c) The following is a table indicating the delegation status of New Source Performance Standards for Region VIII.

DELEGATION STATUS OF NEW SOURCE PERFORMANCE STANDARDS

[(NSPS) for Region VIII]

Subpart	State					
	Colorado	Montana	North Dakota	South Dakota	Utah	Wyoming
A General provisions	(*)	(*)	(*)	(*)	(*)	
D Fossil fuel-fired steam generating units constructed after 8/17/71.	(*)	(*)	(*)	(*)	(*)	(*)
Da Electric utility steam generating units constructed after 9/18/75.	(*)	(*)	(*)	(*)	(*)	(*)
Db Industrial-commercial-institutional steam generating units.	(*)					

DELEGATION STATUS OF NEW SOURCE PERFORMANCE STANDARDS—Continued

[(NSPS) for Region VIII]

Subpart	State					
	Colorado	Montana	North Dakota	South Dakota	Utah	Wyoming
E Incinerators	(*)	(*)	(*)	(*)	(*)	(*)
F Portland cement plants	(*)	(*)	(*)	(*)	(*)	(*)
G Nitric acid plants	(*)	(*)	(*)		(*)	(*)
H Sulfuric acid plants	(*)	(*)	(*)		(*)	(*)
I Asphalt concrete plants	(*)	(*)	(*)	(*)	(*)	
J Petroleum refineries	(*)	(*)	(*)		(*)	(*)
K Storage vessels for petroleum liquids constructed after 6/11/73 prior to 5/19/78.	(*)	(*)	(*)	(*)	(*)	(*)
Ka Storage vessels for petroleum liquids constructed after 5/18/78.	(*)	(*)			(*)	(*)
L Secondary lead smelters	(*)	(*)			(*)	(*)
M Secondary brass and bronze ingot production	(*)	(*)			(*)	(*)
N Iron and steel plants	(*)	(*)			(*)	(*)
Na Basic oxygen process steelmaking facilities (secondary emissions).	(*)					
O Sewage treatment plants	(*)	(*)	(*)	(*)	(*)	(*)
P Primary copper smelters	(*)	(*)			(*)	(*)
Q Primary zinc smelters	(*)	(*)			(*)	(*)
R Primary lead smelters	(*)	(*)			(*)	(*)
S Primary aluminum reduction plants	(*)	(*)			(*)	(*)
T Phosphate fertilizer industry: Wet process phosphoric acid plants.	(*)	(*)	(*)		(*)	(*)
U Phosphate fertilizer industry: Super phosphoric acid plants.	(*)	(*)	(*)		(*)	(*)
V Phosphate fertilizer industry: Diammonium phosphate plants.	(*)	(*)	(*)		(*)	(*)
W Phosphate fertilizer industry: Triple super phosphate plants.	(*)	(*)	(*)		(*)	(*)
X Phosphate fertilizer industry: Granular triple super phosphate storage facilities.	(*)	(*)	(*)		(*)	(*)
Y Coal preparation plants	(*)	(*)	(*)	(*)	(*)	(*)
Z Ferralloy production facilities					(*)	
AA Steel plants: Electric arc furnaces	(*)	(*)			(*)	(*)
BB Kraft pulp mills	(*)	(*)			(*)	(*)
CC Glass manufacturing plants	(*)	(*)			(*)	(*)
DD Grain elevators	(*)	(*)	(*)	(*)	(*)	(*)
EE Surface coating of metal furniture	(*)	(*)			(*)	(*)
GG Stationary gas turbines	(*)	(*)	(*)	(*)	(*)	(*)
HH Lime manufacturing plants	(*)	(*)	(*)	(*)	(*)	(*)
KK Lead—Acid battery manufacturing plants	(*)				(*)	(*)
LL Metallic minerals	(*)			(*)	(*)	(*)
MM Automobile & light duty surface coating operations	(*)	(*)			(*)	(*)
NN Phosphate rock plants	(*)				(*)	(*)
PP Ammonium sulfate manufacturing	(*)	(*)			(*)	(*)
QQ Graphic arts: Publication rotogravure printing	(*)				(*)	(*)
RR Pressure sensitive tape and label surface coating operations.	(*)				(*)	
SS Industrial surface coating: Large appliances	(*)				(*)	(*)
TT Metal coil surface coating	(*)				(*)	(*)
UU Asphalt processing and roofing manufacturing	(*)				(*)	(*)
VV Synthetic organic chemical manufacturing: Equipment leaks of VOC.	(*)				(*)	
WW Beverage can coating	(*)				(*)	
XX Bulk gasoline terminals	(*)				(*)	
FFF Flexible vinyl and urethane coating and printing	(*)				(*)	
GGG Petroleum refineries (equipment leaks of VOC)	(*)				(*)	
HHH Synthetic fiber production	(*)				(*)	
JJJ Petroleum dry cleaners	(*)				(*)	
KKK Natural gas processing plants (equipment leaks of VOC).	(*)				(*)	
LLL Natural gas processing plants: S02 emission	(*)				(*)	
OOO Nonmetallic mineral processing	(*)			(*)	(*)	
PPP Wool fiberglass insulation manufacturing plants	(*)				(*)	

*Indicates delegation.

Part 61 of Chapter I, Title 40 of the *Code of Federal Regulations* is amended as follows:

PART 61—[AMENDED]

1. The authority citation for Part 61 continues to read as follows:

Authority: 42 U.S.C. 7412.

Subpart A—General Provisions

§ 61.04 [Amended]

2. Section 61.04(b)(G) is revised to read as follows:

(b) * * *

(G) State of Colorado, Department of Health, Air Pollution Control Division, 4210 East 11th Avenue, Denver, CO 80220

Editorial Note: For a table listing Region VIII's NESHAPs delegation status, see paragraph (c) of this section.

* * * * *

3. Section 61.04(b)(BB) is revised to read as follows:

(b) * * *

(BB) State of Montana, Department of Health and Environmental Services, Air Quality Bureau, Cogswell Building, Helena, MT 59601

Editorial Note: For a table listing Region VIII's NESHAPs delegation status, see paragraph (c) of this section.

* * * * *

4. Section 61.04(b)(JJ) is revised to read as follows:

(b) * * *

(JJ) State of North Dakota, State Department of Health and Consolidated Laboratories, Division of Environmental Engineering, State Capitol, Bismarck, ND 58505

Editorial Note: For a table listing Region VIII's NESHAPs delegation status, see paragraph (c) of this section.

* * * * *

5. Section 61.04(b)(QQ) is added to read as follows:

(b) * * *

(QQ) State of South Dakota, Department of Water and Natural Resources, Office of Air Quality and Solid Waste, Joe Foss Building, 523 East Capitol, Pierre, SD 57501-3181

Editorial Note: For a table listing Region VIII's NESHAPs delegation status, see paragraph (c) of this section.

6. Section 61.04(b)(TT) is added to read as follows:

(b) * * *

(TT) State of Utah, Department of Health, Bureau of Air Quality, 288 North 1460 West, P.O. Box 16690, Salt Lake City, UT 84116-0690

Editorial Note: For a table listing Region VIII's NESHAPs delegation status, see paragraph (c) of this section.

7. Section 61.04(b) is amended by removing the table that shows the Delegation Status of National Emission Standards for Hazardous Pollutants (NESHAPs) in Region VIII.

8. Section 61.04 is amended by adding paragraph (c) to read as follows:

(c) The following is a table indicating the delegation status of National Emission Standards for Hazardous Air Pollutants in Region VIII.

DELEGATION STATUS OF NATIONAL EMISSION STANDARDS FOR HAZARDOUS AIR POLLUTANTS (NESHAPS)

Subpart	State					
	Colorado	Montana	North Dakota	South Dakota	Utah	Wyoming
A General provisions	(*)		(*)		(*)	
M Asbestos	(*)		(*)	(*)	(*)	
C Beryllium	(*)		(*)		(*)	
D Beryllium rocket motor firing	(*)		(*)		(*)	
E Mercury	(*)		(*)		(*)	
F Vinyl chloride	(*)		(*)		(*)	

* Indicates delegation.

[FR Doc. 88-8302 Filed 4-14-88; 8:45 am]

BILLING CODE 6560-50-M

---

40 CFR Parts 704, 707, 710, 712, 716, 717, 720, 721, 723, 750, 761, 763, 790, 796, 797, and 799

[OPTS-00085; FRL-3365-3]

Toxic Substances Control Act Regulations; Technical Amendments

AGENCY: Environmental Protection Agency (EPA).

ACTION: Final rule; technical amendments.

SUMMARY: EPA is issuing technical amendments to some of the regulations under the Toxic Substances Control Act (TSCA). These amendments revise the mailing address for submitting information to, or requesting information from, the Office of Toxic Substances (OTS), correct obsolete or inaccurate cross-references and typographical errors, and remove obsolete provisions.

DATE: These amendments are effective April 15, 1988.

FOR FURTHER INFORMATION CONTACT: Michael M. Stahl, Acting Director, TSCA Assistance Office (TS-799), Environmental Protection Agency, Rm. E-543, 401 M St., SW., Washington, DC 20460, Telephone: (202) 554-1404.

SUPPLEMENTARY INFORMATION: This document makes technical amendments to the regulations in 40 CFR Subchapter R containing the provisions implementing TSCA (40 CFR Parts 700 to end). The technical amendments update the mailing addresses for submissions of information to, and requests for information from, the Office of Toxic Substances (OTS). The addresses currently listed in the regulations have been changed and should no longer be used. Updating applicable addresses will insure that OTS receives all submissions and information requests in a timely manner. These technical amendments also correct obsolete or incorrect cross-references to sections or paragraphs that have been redesignated, revised, or removed and correct typographical errors

Because these are non-substantive procedural changes, notice and public comment are not necessary and the changes are effective immediately.

List of Subjects in 40 CFR Parts 704, 707, 710, 712, 716, 717, 720, 721, 723, 750, 761, 763, 790, 796, 797, and 799

Chemicals, Environmental protection, Hazardous substances, Health and safety, Reporting and recordkeeping requirements.

Dated: March 28, 1988.

Charles L. Elkins,

Director, Office of Toxic Substances.

Therefore, 40 CFR Chapter I, Subchapter R is amended as follows:

PART 704—[AMENDED]

1. In Part 704:

a. The authority citation for Part 704 continues to read as follows:

Authority: 15 U.S.C. 2607(a).

§ 704.9 [Amended]

b. In § 704.9 by adding "Rm. L-100, after "(TS-790),".

PART 707—[AMENDED]

2. In Part 707:

a. The authority citation for Part 707 continues to read as follows:

Authority: 15 U.S.C. 2611(b) and 2612.

b. In § 707.65 by revising paragraph (c) to read as follows:

§ 707.65 Submission to agency.

* * * * *

(c) Notices shall be marked "Section 12(b) Notice" and sent to the TSCA Document Processing Center (TS-790), Rm. L-100, Office of Toxic Substances, Environmental Protection Agency, 401 M St., SW., Washington, DC 20460.

PART 710—[AMENDED]

3. In Part 710:

a. The authority citation for Part 710 continues to read as follows:

Authority: 15 U.S.C. 2607(a).

§ 710.39 [Amended]

b. In § 710.39, paragraph (b) by adding "Rm. L-100," after "(TS-790),".

PART 712—[AMENDED]

4. In Part 712:

a. The authority citation for Part 712 continues to read as follows:

Authority: 15 U.S.C. 2607(a).

§ 712.28 [Amended]

b. In § 712.28, paragraph (c), by adding "Rm. L-100," after "(TS-790),".

c. In § 712.30 by revising the last sentence in paragraph (c) to read as follows:

§ 712.30 Chemical lists and reporting periods.

* * * * *

(c) * * * Any information submitted must be addressed to: TSCA Document Processing Center (TS-790), Rm. L-100, Office of Toxic Substances, Environmental Protection Agency, 401 M St., SW., Washington, DC 20460, ATTN: 8(a) Auto-ITC.

* * * * *

PART 716—[AMENDED]

5. In Part 716:

a. The authority citation for Part 716 continues to read as follows:

Authority: 15 U.S.C. 2607(d).

§ 716.30 [Amended]

b. In § 716.30, paragraph (c), by adding "Rm. L-100," after "(TS-790),".

§ 716.35 [Amended]

c. In § 716.35, paragraph (c), by adding "Rm. L-100," after "(TS-790),".

6. In Part 717:

PART 717—[AMENDED]

a. The authority citation for Part 717 continues to read as follows:

Authority: 15 U.S.C. 2607(c).

§ 717.17 [Amended]

b. In § 717.17, paragraph (c), by adding "Rm. L-100," after "(TS-790),".

PART 720—[AMENDED]

7. In Part 720:

a. The authority citation for Part 720 continues to read as follows:

Authority: 15 U.S.C. 2604, 2607, and 2613.

b. In § 720.75 by revising the first sentence in the introductory text of paragraph (b)(2) and the second sentence in paragraph (e)(1) to read as follows:

§ 720.75 Notice review period.

* * * * *

(b) * * *

(2) A request for suspension may be made in writing to the TSCA Document Processing Center (TS-790), Rm. L-100, Office of Toxic Substances, Environmental Protection Agency, 401 M St., SW., Washington, DC 20460. * * *

* * * * *

(e) * * *

(1) * * * A statement of withdrawal must be made in writing to the TSCA Document Processing Center (TS-790), Rm. L-100, Office of Toxic Substances, Environmental Protection Agency, 401 M St., SW., Washington, DC 20460. * * *

* * * * *

c. In § 720.95 by revising the last sentence to read as follows:

§ 720.95 Public file.

* * * Any of the nonconfidential material described in this Subpart will be available for public inspection in the TSCA Public Docket Office, Rm. NE-G004, 401 M St., SW., Washington, DC, between the hours of 8 a.m. and 4 p.m. weekdays, excluding legal holidays.

d. In § 720.102 by revising paragraph (d) to read as follows:

§ 720.102 Notice of commencement of manufacture or import.

* * * * *

(d) *Where to submit.* Notices of commencement of manufacture or import should be submitted to: TSCA Document Processing Center (TS-790), Rm. L-100, Office of Toxic Substances, Environmental Protection Agency, 401 M St., SW., Washington, DC 20460.

* * * * *

PART 721—[AMENDED]

8. In Part 721:

a. The authority citation for Part 721 continues to read as follows:

Authority: 15 U.S.C. 2604 and 2607.

b. In § 721.6 by revising the introductory text of paragraph (b) to read as follows:

§ 721.6 Applicability determination when the specific chemical identity is confidential.

* * * * *

(b) To establish a *bona fide* intent to manufacture, import, or process a chemical substance, the person who intends to manufacture, import, or process the chemical substance must submit the following in writing to the TSCA Document Processing Center (TS-790), Rm. L-100, Office of Toxic Substances, Environmental Protection Agency, 401 M St., SW., Washington, DC 20460:

* * * * *

PART 723—[AMENDED]

9. In Part 723:

a. The authority citation for Part 723 continues to read as follows:

Authority: 15 U.S.C. 2604.

b. In § 723.50 by revising paragraph (n) to read as follows:

§ 723.50 Chemical substances manufactured in quantities of 1,000 kilograms or less per year.

* * * * *

(n) *Submission of information.* Information submitted to EPA under this section must be sent in writing to: TSCA Document Processing Center (TS-790), Rm. L-100, Office of Toxic Substances, Environmental Protection Agency, 401 M St., SW., Washington, DC 20460.

* * * * *

c. In § 723.175 by revising paragraph (i)(3) to read as follows:

§ 723.175 Chemical substances used in or for the manufacture or processing of instant photographic and peel-apart film articles.

* * * * *

(i) * * *

(3) *Address.* The exemption notice must be addressed to: TSCA Document Processing Center (TS-790), Rm. L-100, Office of Toxic Substances, Environmental Protection Agency, 401 M St., SW., Washington, DC 20460.

* * * * *

d. In § 723.250 by revising the second sentence of paragraph (m)(1), and paragraph (s) to read as follows:

§ 723.250 Polymers.

* * * * *

(m) * * *

(1) * * * A statement of withdrawal must be made in writing to the TSCA Document Processing Center (TS-790), Rm. L-100, Office of Toxic Substances, Environmental Protection Agency, 401 M St., SW., Washington, DC 20460. * * *

* * * * *

(s) *Submission of information.* Information submitted to EPA under this section must be sent in writing to: TSCA Document Processing Center (TS-790), Rm. L-100, Office of Toxic Substances, Environmental Protection Agency, 401 M St., SW., Washington, DC 20460.

* * * * *

PART 750—[AMENDED]

10. In Part 750:

a. The authority citation for Part 750 continues to read as follows:

Authority: 15 U.S.C. 2605.

b. In § 750.11 by revising paragraph (c) to read as follows:

§ 750.11 Filing of petitions for exemption.

* * * * *

(c) *Where to file.* All petitions shall be submitted to the following location: TSCA Document Processing Center (TS-790), Rm. L-100, Office of Toxic Substances, Environmental Protection Agency, 401 M St., SW., Washington, DC 20460.

* * * * *

c. In § 750.31 by revising paragraph (c) to read as follows:

§ 750.31 Filing of petition for exemption.

* * * * *

(c) *Where to file.* All petitions must be submitted to the following location: TSCA Document Processing Center (TS-790), Rm. L-100, Office of Toxic Substances, Environmental Protection Agency, 401 M St., SW., Washington, DC 20460.

* * * * *

PART 761—[AMENDED]

11. In Part 761:

a. The authority citation for Part 761 continues to read as follows:

Authority: 15 U.S.C. 2605, 2607, and 2611; Subpart G is also issued under 15 U.S.C. 2614 and 2616.

b. In § 761.19 by revising the last sentence of the introductory text of paragraph (b), to read as follows:

§ 761.19 References.

* * * * *

(b) * * * Copies of the incorporated material may be obtained from the TSCA Public Docket Office (TS-793), Rm. NE-G004, Office of Toxic Substances, Environmental Protection Agency, 401 M St., SW., Washington, DC 20460, or from the American Society for Testing and Materials (ASTM), 1916 Race Street, Philadelphia, PA 19103.

* * * * *

c. In § 761.20 by revising the second sentence of the introductory text of paragraph (c)(3) and the first sentence of paragraph (c)(3)(vii) to read as follows:

§ 761.20 Prohibitions.

* * * * *

(c) * * *

(3) * * * Export notices must be submitted to the TSCA Document Processing Center (TS-790), Rm. L-100, Office of Toxic Substances, Environmental Protection Agency, 401 M St., SW., Washington, DC 20460. * * *

* * * * *

(vii) No less than 30 days after the end of each calendar quarter (March 31, June 30, September 30, and December 31) during which PCBs were exported for disposal, each person exporting the PCBs must submit a report to the TSCA Document Processing Center (TS-790), Rm. L-100, Office of Toxic Substances, Environmental Protection Agency, 401 M St., SW., Washington, DC 20460. * * *

* * * * *

§ 761.20 [Amended]

d. In § 761.20 by removing the phrase "Document Control Officer (TS-793)", from the third sentence in paragraphs (c)(3)(vii) and from paragraph (c)(3)(viii), and by substituting in place thereof the phrase "TSCA Document Processing Center (TS-790)".

§ 761.30 [Amended]

e. In § 761.30, paragraph (a)(2)(v), by removing the words "Assistant Administrator" and inserting in their place the words "Director, Exposure Evaluation Division".

f. In § 761.30, paragraph (h)(2)(iv) is amended by removing the parentheses.

§ 761.40 [Amended]

g. In § 761.40 introductory text, by revising the reference in paragraph (a) to "§ 761.44(a)", to read "§ 761.45(a)".

§ 761.60 [Amended]

h. In § 761.60, paragraphs (a)(1), and the introductory texts of (b)(5)(i) and (c)(1), by revising the "50 ppm" to read "500 ppm".

i. In § 761.60(a)(2)(iii)(C) by revising the reference to "paragraph (b)(2)(iii)(B)(*3*)" to read "paragraph (a)(2)(iii)(b)(*3*)."

j. In § 761.60(a)(2)(iv) by revising the reference to "(b)(2)(iii)" to read "paragraph (a)(2)(iii)."

k. In § 761.60(a)(5)(ii), by revising the reference to "§ 761.65" to read "§ 761.75."

l. In § 761.60, paragraphs (e) and (i)(1), by removing the words "Assistant Administrator for Pesticides and Toxic Substances", and inserting in their place the words "Director, Exposure Evaluation Division".

§ 761.70 [Amended]

m. In § 761.70, the formula in paragraph (a)(2) is amended by revising "$C_{CO_2}/C_{CO_2}+C_{CO}\times 100$" to read "$[C_{CO_2}/(C_{CO_2}+C_{CO})]100$."

§§ 761.65, 761.70, 761.75 [Amended]

n. In § 761.65(c)(9) and § 761.70(c), the introductory text of § 761.75(b)(6)(iii), and paragraph (b)(8)(iv) of § 761.75, by revising all references to "§ 761.80" to read "§ 761.180".

§ 761.70 [Amended]

o. In § 761.70, the introductory text of paragraph (a), paragraph (a) (7), (8) introductory text, and (9), the introductory text of paragraph (b), the introductory text of paragraph (d), paragraph (d)(2) (i), (ii) introductory text, (iii), (4) (i), (ii), (5) and (7), by removing the words "Assistant Administrator for Pesticides and Toxic Substances" and inserting in their place the words "Director, Exposure Evaluation Division".

p. In § 761.70, the introductory text of paragraph (d)(1), by removing the words "Assistant Administrator", and adding in place thereof the words "Director, Exposure Evaluation Division".

§ 761.80 [Amended]

q. In § 761.80 by removing and reserving paragraphs (a) through (e), and (h) through (l) and by removing paragraphs (p) through (r).

§ 761.180 [Amended]

r. In § 761.180(f)(3) by revising the reference to "§ 761.41(c)" to read "§ 761.75(c)."

s. In § 761.185 by revising paragraph (f) to read as follows:

§ 761.185 Certification program and retention of records by importers and persons generating PCBs in excluded manufacturing processes.

* * * * *

(f) This report must be submitted to the TSCA Document Processing Center (TS-790), Rm. L-100, Office of Toxic Substances, Environmental Protection Agency, 401 M St., SW., Washington, DC 20460, ATTN: PCB Notification. This report must be submitted by October 1, 1984 or within 90 days of starting up processes or commencing importation of PCBs.

* * * * *

t. In § 761.187 by revising paragraph (d) to read as follows:

§ 761.187 Reporting by importers and by persons generating PCBs in excluded manufacturing processes.

* * * * *

(d) These reports must be submitted to the TSCA Document Processing Center (TS-790), Rm. L-100, Office of Toxic Substances, Environmental Protection Agency, 401 M St., SW., Washington, DC 20460, ATTN: PCB Notification.

PART 763—[AMENDED]

12. In Part 763:

a. The authority citation for Part 763 continues to read as follows:

Authority: 15 U.S.C. 2605 and 2607(c); Subpart E also issued under 15 U.S.C. 2641, 2643, and 2647.

§ 763.90 [Amended]

b. Section 763.90 is amended as follows:

i. The third sentence of paragraph (i)(5) is amended by revising the words "The method is available at the Office of the Federal Register Information Center, 11th and L St., NW., Room 8401 * * *" to read "The method is available for public inspection at the Office of the Federal Register, 11th and L St., NW., Room 8401 * * *".

ii. The third sentence in paragraphs (i)(6) and (7) is amended by revising the words "The method is available at the Office of the Federal Register, 11th and L St., NW., Room 8301 * * *" to read "The method is available for public inspection at the Office of the Federal Register, 11th and L St., NW., Room 8401 * * *".

c. Section 763.119 is revised to read as follows:

§ 763.119 References.

(a) *General.* The following reference contains detailed information on sampling and analysis of friable materials and provides a background on which this Part is based. Microfiche copies may be obtained from the TSCA Public Docket Office (TS-793), Rm. NE-G004, Office of Toxic Substances, Environmental Protection Agency, 401 M St., SW., Washington, DC 20460.

(1) USEPA. 1979. "Asbestos-Containing Materials in School Buildings: A Guidance Document" Part 1 (EPA No. C00090), OPTS Docket 61004.

(2) [Reserved]

(b) [Reserved]

PART 790—[AMENDED]

13. In Part 790:

a. The authority citation for Part 790 continues to read as follows:

Authority: 15 U.S.C. 2603.

b. In § 790.5 by revising paragraph (b) to read as set forth below and by removing paragraph (c).

§ 790.5 Submission of information.

* * * * *

(b) Submissions containing both confidential business information or non-confidential business information must be addressed to: TSCA Document Processing Center (TS-790), Rm L-100, Office of Toxic Substances, Environmental Protection Agency, 401 M St., SW., Washington, DC 20460. Attention: TSCA Section 4.

* * * * *

PART 796—[AMENDED]

14. In Part 796:

a. The authority citation for Part 796 continues to read as follows:

Authority: 15 U.S.C. 2603.

b. In § 796.1550 by revising the last sentence in paragraph (b)(1)(iii) to read as follows:

§ 796.1550 Partition coefficient (n-Octanol/water).

* * * * *

(b) * * *

(1) * * *

(iii) * * * Copies of the incorporated material may be obtained from the TSCA Public Docket Office (TS-793), Rm NE-G004, Office of Toxic Substances, Environmental Protection Agency, 401 M St., SW., Washington, DC 20460, and from the American Society for Testing and Materials (ASTM), 1916 Race Street, Philadelphia, PA 19103.

* * * * *

d. In § 796.1570 by revising the last sentence in paragraph (b)(1)(ii) to read as follows:

§ 796.1570 Partition coefficient (n-Octanol/water)— Estimation by liquid chromatography.

* * * *

(b) * * *

(1) * * *

(ii) * * * Copies of the incorporated material may be obtained from the TSCA Public Docket Office (TS-793), Rm. NE.-G004, Office of Toxic Substances, Environmental Protection Agency, 401 M St., SW., Washington, DC 20460, and from the American Society for Testing and Materials (ASTM), 1916 Race Street, Philadelphia PA 19103.

* * * * *

e. In § 796.1720 by revising the last sentence in paragraph (b)(1)(ii) and the last sentence in paragraph (b)(2)(i) to read as follows:

§ 796.1720 Octanol/water partition coefficient, generator column method.

* * * * *

(b) * * *

(1) * * *

(ii) * * * Copies of the incorporated material may be obtained from the TSCA Public Docket Office (TS-793), Rm. NE-G004, Office of Toxic Substances, Environmental Protection Agency, 401 M St., SW., Washington, DC 20460, or from the American Society for Testing and Materials (ASTM), 1916 Race Street, Philadelphia, PA 19103.

* * * * *

(2) * * *

(i) * * * Copies of the incorporated material may be obtained from the TSCA Public Docket Office (TS-793), Rm. NE-G004, Office of Toxic Substances, Environmental Protection Agency, 401 M St., SW., Washington, DC 20460, or from the American Society for Testing and Materials (ASTM), 1916 Race Street, Philadelphia, Pa 19103.

* * * * *

f. In § 796.1840 by revising the last sentence in paragraph (b)(1)(ii) to read as follows:

§ 796.1840 Water solubility.

* * * * *

(b) * * *

(1) * * *

(ii) * * * Copies of the incorporated material may be obtained from the TSCA Public Docket Office (TS-793), Rm. NE-G004, Office of Toxic Substances, Environmental Protection Agency, 401 M St., SW., Washington, DC 20460, or from the American Society for Testing and Materials (ASTM), 1916 Race Street, Philadelphia, Pa 19103.

* * * * *

g. In § 796.1860 by revising the last sentence in paragraph (b) (1) (ii) to read as follows:

§ 796.1860 Water solubility (generator column method).

* * * * *

(b) * * *

(1) * * *

(ii) * * * Copies of the incorporated material may be obtained from the TSCA Public Docket Office (TS-793), Rm. NE-G004, Office of Toxic Substances, Environmental Protection Agency, 401 M St., Washington, DC 20460, or from the American Society for Testing and Materials (ASTM), 1916 Race Street, Philadelphia, PA 19103.

* * * * *

h. In § 796.1950 by revising the fifth sentence of paragraph (b)(2)(i) to read as follows:

§ 796.1950 Vapor pressure.

* * * * *

(b) * * *

(2) * * *

(i) * * * Copies of the incorporated material may be obtained from the TSCA Public Docket Office (TS-793), Rm. NE-G004, Office of Toxic Substances, Environmental Protection Agency, 401 M St., SW., Washington, DC 20460, or from the American Society for Testing and Materials (ASTM), 1916 Race Street, Philadelphia, PA 19103.

* * *

* * * * *

§ 796.3260 [Amended]

i. In § 796.3260, paragraph (b)(2)(i)(B)(*2*) introductory text by revising the word "megohms.cm" to read "megaohms.cm".

j. In § 796.3500 by revising the last sentence in paragraph (b)(1)(ii) to read as follows:

§ 796.3500 Hydrolysis as a function of pH at 25°C.

* * * * *

(b) * * *

(1) * * *

(ii) * * * Copies of the incorporated material may be obtained from the TSCA Public Docket Office (TS–793), Rm. NE–G004, Office of Toxic Substances, Environmental Protection Agency, 401 M St., SW., Washington, DC 20460, or from the American Society for Testing and Materials (ASTM), 1916 Race Street, Philadelphia, PA 19103.

* * * * *

k. In § 796.3700 by revising the last sentence in paragraph (b)(2)(i)(B) to read as follows:

§ 796.3700 Photolysis in aqueous solution in sunlight.

* * * * *

(b) * * *

(2) * * *

(i) * * *

(B) * * * Copies of the incorporated material may be obtained from the TSCA Public Docket Office (TS–793), Rm. NE–G004, Office of Toxic Substances, Environmental Protection Agency, 401 M St., SW., Washington, DC 20460, or from the American Society for Testing and Materials (ASTM), 1916 Race Street, Philadelphia, PA 19103.

* * * * *

§ 796.3780 [Amended]

l. In § 796.3780 as follows:

i. In paragraph (b)(2)(i)(B)(*1*) by revising the reference "paragraph (b)(i)(vi)" to read "paragraph (b)(1)(vi)".

ii. In paragraph (b)(1)(vi)(A) by revising the last sentence to read as follows:

§ 796.3780 Laboratory determination of the direct photolysis reaction quantum yield in aqueous solution and sunlight photolysis.

* * * * *

(b) * * *

(1) * * *

(iv) * * *

(A) * * * Copies of the incorporated material may be obtained from the TSCA Public Docket Office (TS–793), Rm. NE–G004, Office of Toxic Substances, Environmental Protection Agency, 401 M St., SW., Washington, DC 20460, or from the American Society for Testing and Materials (ASTM), 1916 Race Street, Philadelphia, PA 19103.

* * * * *

PART 797—[AMENDED]

15. In Part 797:

a. The authority citation for Part 797 continues to read as follows:

Authority: 15 U.S.C. 2603.

§ 797.1060 [Amended]

b. In § 797.1060 by redesignating paragraphs (c)(1) (A) and (B) as paragraphs (c)(1) (i) and (ii), respectively.

§ 797.1075 [Amended]

c. In § 797.1075 by redesignating paragraphs (c)(1) (A) and (B) as paragraphs (c)(1) (i) and (ii), respectively.

§ 797.2050 [Amended]

d. In § 797.2050, paragraph (c)(3), by revising the reference "(d)(4)(iii)" to read "(c)(4)(iii)".

PART 799—[AMENDED]

17. In Part 799:

a. The authority citation for Part 799 continues to read as follows:

Authority: 15 U.S.C. 2603, 2611, 2625.

b. Section 799.5 is revised to read as follows:

§ 799.5 Submission of information.

Information (letters, study plans, reports) submitted to EPA under this Part must bear the Code of Federal Regulations (CFR)a section number of the subject chemical test rule (e.g. § 799.4400 for 1,1,1-trichloroethane) and must be addressed to: TSCA Document Processing Center (TS–790), Rm. L–100, Office of Toxic Substances, Environmental Protection Agency, 401 M St., SW., Washington, DC 20460.

c. In § 799.500 by revising the last sentence in paragraph (c)(4)(i) and paragraph (d)(2)(i)(C) to read as follows:

§ 799.500 Anthraquinone.

* * * * *

(c) * * *

(4) * * *

(i) * * * Copies of the incorporated material may be obtained from the TSCA Public Docket Office (TS–793), Rm. NE–G004, Office of Toxic Substances, Environmental Protection Agency, 401 M St., SW., Washington, DC 20460, or from the American Society for Testing and Materials (ASTM), 1916 Race Street, Philadelphia, PA 19103.

* * * * *

(d) * * *

(2) * * *

(C) * * * Copies of the incorporated material may be obtained from the TSCA Public Docket Office (TS–793), Rm. NE–G004, Office of Toxic Substances, Environmental Protection Agency, 401 M St., SW., Washington, DC 20460, or from the Society for Industrial Microbiology, P.O. Box 12534, Arlington, VA 22209–8534.

* * * * *

d. In § 799.4400 by revising the last sentence in paragraph (d)(1)(ii) to read as follows:

§ 799.4400 1,1,1-Trichloroethane.

* * * * *

(d) * * *

(1) * * *

(ii) * * * Copies of the incorporated material may be obtained from the TSCA Public Docket Office (TS–793), Rm. NE–G004, Office of Toxic Substances, Environmental Protection Agency, 401 M St., SW., Washington, DC 20460.

[FR Doc. 88–8040 Filed 4–14–88; 8:45 am]

BILLING CODE 6560-50-M

FEDERAL COMMUNICATIONS COMMISSION

47 CFR Parts 43 and 63

[CC Docket No. 86–494; FCC 88–71]

Common Carrier Services; In the Matter of Regulatory Policies and International Telecommunications

AGENCY: Federal Communications Commission.

ACTION: Report & Order (R&O) Final rule.

SUMMARY: The Commission has established annual procurement requirements for interexchange carriers with more than $100 million in common carrier operations revenue and Tier I local exchange carriers, their holding companies and affiliates, for core equipment purchases during the preceding year. The Commission has also established quarterly reporting requirements of traffic and revenue from foreign-owned carriers offering interstate common cafrier services within the United States. Additionally, carriers commencing U.S. domestic long distance service after July 1, 1988 must notify the Commission in writing within 30 days after they begin providing such services. (*See also* Supplemental Notice of Inquiry adopted in conjunction with the R&O and published elsewhere in the issue of the **Federal Register**.)

DATES: Effective June 1, 1988. Annual procurement reports for the preceding year must be filed for 1987 by July 1, 1988, and for subsequent calendar years by May 1 of the following year. Initial traffic and revenue quarterly reports for the calendar year 1987 and for the first quarter of 1988 must be filed by July 1, 1988. Reports for subsequent quarters must be filed on or before the 90th day after the completion of the calendar quarter.

ADDRESS: Federal Communications Commission, Washington, DC 20554.

FOR FURTHER INFORMATION CONTACT: William J. Kirsch, (202) 632-4047 or Anna Lim (202) 632-9342, Policy & Program Planning Division, Common Carrier Bureau.

SUPPLEMENTARY INFORMATION: This is a summary of the Commission's Report & Order, CC Docket 86-494, adopted February 25, 1988, and released March 25, 1988.

The full text of this Commission's Report & Order is available for inspection and copying during normal business hours in the FCC Dockets Branch, 1919 M Street, NW., Room 230, Washington, DC. The complete text of the R&O may also be purchased from the Commission's copy contractors, International Transcription Service, 2100 M Street, Suite 140, Washington, DC 20037. (202) 857-3800.

Summary of Report and Order

On December 23, 1986, the Commission adopted a Notice of Inquiry and Proposed Rulemaking (Notice) in CC Docket 86-494 to determine whether the public interest requires that the Commission consider the telecommunications policies of foreign governments in the formulation of U.S. regulatory policies. The rulemaking section of the *Notice* focused on whether the Commission has sufficient information at present to consider the extent to which telecommunications entities from countries with restrictive practices have benefited from the liberalized U.S. market.

Forty-nine parties filed comments and twenty filed replies in response to the *Notice*. On February 25, 1988, the Commission adopted a Report & Order (Order) concluding that it must continue to monitor developments in domestic and international communications and to work with the executive branch and the Congress to promote a more competitive international telecommunications environment.

The *Order* establishes reporting requirements for core equipment purchases for interexchange carriers with more than $100 million in common carrier operations and for Tier I local exchange carriers, their holding companies and affiliates. The *Order* concludes that these companies must file annual procurement reports that provide information on their purchases of core equipment from both domestic and foreign-owned firms over the preceding calendar year.

The *Order* also establishes reporting requirements for foreign-owned carriers providing common carrier services within the United States. A carrier is classified as foreign-owned if a foreign telecommunications entity directly or indirectly owns 15 percent or more of its stock, or an employee, agent, or representative of a foreign telecommunications entity sits on its board of directors. All foreign-owned carriers will be required to file traffic and revenue reports on a quarterly basis. Carriers commencing U.S. domestic interexchange services must notify the Commission in writing within 30 days after they begin providing such services.

The *Order* concludes that the Commission should decline to establish reporting requirements for foreign-owned enhanced service providers operating within the United States or to and from the U.S. and foreign points. It also concludes that the Commission should not establish reporting requirements for registrants of customer premises equipment under Part 68 of the FCC Rules.

Ordering Clause

Accordingly, it is ordered that Part 43 and Part 63 of the Commission's Rules be amended by adding new rules, effective June 1, 1988, that provide for the following:

(1) That all foreign-owned carriers offering interstate common carrier services within the United States must file revenue and traffic reports with the Common Carrier Bureau on a quarterly basis beginning July 1, 1988, with subsequent reports due on, or before, the 90th day after completion of the calendar quarter;

(2) That all foreign-owned carriers that initiate domestic common carrier services within the United States after July 1, 1988, must notify this Commission within thirty days of their commencement of such service; and

(3) That all U.S. Interexchange Carriers with more than $100 million in common carrier operations revenue and all Tier I Local Exchange Carriers, their holding companies and affiliates must file with the Common Carrier Bureau annual reports on the preceding year's core equipment procurement beginning July 1, 1988, and for subsequent calendar years by May 1 of the following year.

Federal Communications Commission.

H. Walker Feaster, III,

Acting Secretary.

List of Subjects in 47 CFR Parts 43 and 63

Common carrier.

PART 43—[AMENDED]

47 CFR Part 43 shall be amended by adding the following:

1. The authority citation for Part 43 continues to read as follows:

Authority: Sec. 4, 48 Stat. 1066, as amended; 47 U.S.C. 154, unless otherwise noted. Interpret or apply secs. 211, 219, 48 Stat. 1073, 1077, as amended; 47 U.S.C. 211, 219, 220.

2. Section 43.81 is added to read as follows:

§ 43.81 Reports of foreign-owned carriers.

(a) All foreign-owned carriers are required to file with the Commission quarterly revenue and traffic reports on all common carrier services they offer within the United States;

(b) A carrier is classified as foreign-owned if a foreign telecommunications entity directly or indirectly owns 15 percent or more of its stock; or an employee, agent, or representative of a foreign telecommunications entity sits on its board of directors;

(c) Foreign telecommunications entities include, but are not necessarily limited to, telecommunications and telecommunications-related equipment manufacturers, equipment suppliers, and service providers;

(d) Initial reports for the calendar year 1987 and for the first quarter of 1988 must be filed by foreign-owned carriers by July 1, 1988;

(e) Reports for subsequent quarters must be filed by foreign-owned carriers on, or before, the 90th day after the completion of the calendar quarter; and

(f) Beginning July 1, 1988, foreign-owned carriers shall give written notice to the Commission within 30 days after they begin providing domestic interstate common carrier services with in the United States."

PART 63—[AMENDED]

47 CFR Part 63 shall be amended by adding the following:

3. The authority citation for Part 63 continues to read as follows:

Authority: Sec. 4, 48 Stat. 1066, as amended; 47 U.S.C. 154. Interpret or apply sec. 214, 48 Stat. 1075, as amended; 47 U.S.C. 214; secs. 211, 219, 48 Stat. 1073, 1077, as amended; 47 U.S.C. 211, 219, 220.

4. Section 63.801 is added to read as follows:

§ 63.801 Annual procurement reports.

(a) Tier I local exchange carriers, their holding companies and affiliates, and interexchange carriers with common carrier operations revenues exceeding $100 million annually must file annual procurement reports concerning their purchases of all pieces of network switching and transmission equipment during the preceding calendar year;

(b) The report should be captioned—"Section 63.801 Report"—and list by name of manufacturer or supplier, aggregate annual dollar purchases of this equipment in categories determined by the Chief, Common Carrier Bureau; and

(c) Annual procurement reports for the preceding year must be filed for 1987 by July 1, 1988, and for subsequent calendar years by May 1 of the following year.

[FR Doc. 88-8174 Filed 4-14-88; 8:45 am]

BILLING CODE 6712-01-M

---

47 CFR Part 73

[MM Docket No. 86-384; RM-5223; RM-5476]

Radio Broadcasting Services; Lompoc and Orcutt, CA

AGENCY: Federal Communications Commission.

ACTION: Final rule.

SUMMARY: This document deletes FM Channel 265A from and allots FM Channel 262B1 to Lompoc, California and modifies the license of Station KRQK-FM, Lompoc, to specify operation on Channel 262B1 in response to a proposal filed by Crystal Broadcasting, Inc. This document also deletes FM Channel 224A from and allots FM Channel 281Bd1 to Lompoc and modifies the license of Station KBOX (FM), Lompoc, to specify operation on Channel 281B1 in response to a proposal filed jointly by Golden Coast Broadcasting, Inc. and Broadcast Management Consultants. This document further allots FM Channel 294B1 to Lompoc. Finally, this document allots FM Channel 239B1 to Orcutt, California in response to a counterproposal filed by Radio Representatives, Inc. With this action, this proceeding is terminated.

DATES: Effective May 23, 1988; The window periods for filing applications for Channel 294B1, Lompoc, and Channel 239B1, Orcutt, California will open on May 24, 1988, and close on June 23, 1988.

FOR FURTHER INFORMATION CONTACT: Joel Rosenberg, Mass Media Bureau, (202) 634-6530.

SUPPLEMENTARY INFORMATION: This is a summary of the Commission's Report and Order, MM Docket No. 86-384, adopted March 4, 1988, and released April 8, 1988. The full text of this Commission decision is available for inspection and copying during normal business hours in the FCC Dockets Branch (Room 230), 1919 M Street NW., Washington, DC. The complete text of this decision may also be purchased from the Commission's copy contractors, International Transcription Service, (202) 857-3800, 2100 M Street NW., Suite 140, Washington, DC 20037.

List of Subjects in 47 CFR Part 73

Radio broadcasting.

PART 73—[AMENDED]

1. The authority citation for Part 73 continues to read as follows:

Authority: 47 U.S.C. 154, 303.

§ 73.202 [Amended]

2. Section 73.202(b), the Table of FM Allotments, is amended under California by removing Channel 265A and Channel 224A from and adding Channel 262B1, Channel 281B1, and Channel 294B1 at Lompoc and by adding Channel 239B1 at Orcutt.

Federal Communications Commission.

Steve Kaminer,

Deputy Chief, Policy and Rules Division, Mass Media Bureau.

[FR Doc. 88-8316 Filed 4-14-88; 8:45 am]

BILLING CODE 6712-01-M

---

47 CFR Part 73

[MM Docket No. 86-410; RM-5428, RM-5469, RM-5688 and RM-5792]

Radio Broadcasting Services; Columbia, Eldon, Centralia, Cabool and Mountain Grove; MO

AGENCY: Federal Communications Commission.

ACTION: Final rule.

SUMMARY: This document allots FM Channel 230A to Columbia, Missouri, in response to a petition filed by George Thomas. A counterproposal filed by The Clair Group to substitute Channel 230A for Channel 221A at Centralia, Missouri, was denied. A second counterproposal filed by Southwest Communications, Inc., to substitute of Channel 224C2 for Channel 224A at Eldon, Missouri and to modify its license for Station KLDN (FM), Eldon, will be treated in a subsequent document in this proceeding.

The allotment of Channel 230A to Columbia will provide a fifth FM channel. The Centralia proposal was denied since the Commission did not believe there was a valid technical problem with the present channel.

DATES: Effective April 28, 1988. The window period for filing applications will open on April 29, 1988, and close on May 31, 1988.

FOR FURTHER INFORMATION CONTACT: Arthur Scrutchins, Mass Media Bureau, (202) 634-6530.

SUPPLEMENTARY INFORMATION: This is a summary of the Commission's Report and Order, MM Docket No. 86-410, adopted February 26, 1988, and released March 14, 1988. The full text of this Commission decision is available for inspection and copying during normal business hours in the FCC Dockets Branch (Room 230), 1919 M Street NW., Washington, DC. The complete text of this decision may also be purchased from the Commission's copy contractors, International Transcription Service, (202) 857-3800, 2100 M Street NW., Suite 140, Washington, DC 20037.

List of Subjects in 47 CFR Part 73

Radio broadcasting.

PART 73—[AMENDED]

1. The authority citation for Part 73 continues to read as follows:

Authority: 47 U.S.C. 154, 303.

§ 73.202 [Amended]

2. Section 73.202(b), the Table of FM Allotments under Missouri is amended by adding Channel 230A to Columbia.

Federal Communications Commission.

Steve Kaminer,

Deputy Chief, Policy and Rules Division, Mass Media Bureau.

[FR Doc. 88-8317 Filed 4-14-88; 8:45 am]

BILLING CODE 6712-01-M

DEPARTMENT OF TRANSPORTATION

National Highway Traffic Safety Administration

49 CFR Part 571

[Docket No. 85-11; Notice 3]

Federal Motor Vehicle Safety Standards; Motorcycle Helmets

AGENCY: National Highway Traffic Safety Administration (NHTSA), DOT.

ACTION: Final rule; correction.

SUMMARY: On April 6, 1988, the agency published a final rule amending its Federal Motor Vehicle Safety Standard on motorcycle helmets. The document contained an incomplete Table 2, Exterior Dimensions for the Medium

Headform. Today's document publishes correctly Table 2 in its entirety.

FOR FURTHER INFORMATION CONTACT: Dr. William J.J. Liu, Office of Vehicle Safety Standards, NRM-12, National Highway Traffic Safety Administration, 400 Seventh Street, SW., Washington, DC 20590. (202) 366-4923.

SUPPLEMENTARY INFORMATION: The incorrect Table 2 in FR Doc. 88-7395 appears on page 11293 of the April 6, 1988 issue of the **Federal Register**. FR Doc. 88-7395 is corrected as follows.

Table 2 of the Appendix to § 571.218, entitled "Medium Headform—Exterior Dimensions", is correctly added as set forth after the signature line of this document.

Issued: April 8, 1988.

Diane K. Steed,

Administrator.

BILLING CODE 4910-59-M

BEST COPY AVAILABLE

Table 2

Medium Headform - Exterior Dimensions

θ	Bottom Opening Z= -3.02			Level -5 Z= -2.900		
	R	X	Y	R	X	Y
0	4.292	4.292	0	4.293	4.293	0
10	4.266	4.201	0.741	4.270	4.205	0.742
20	4.159	3.908	1.423	4.172	3.920	1.427
30	3.967	3.436	1.984	3.961	3.430	1.981
40	3.680	2.804	2.353	3.670	2.811	2.359
50	3.332	2.142	2.553	3.352	2.155	2.568
60	3.039	1.520	2.632	3.067	1.534	2.656
70	2.839	0.971	2.668	2.869	0.981	2.696
80	2.720	0.472	2.679	2.772	0.481	2.730
90	2.675	0	2.675	2.709	0	2.709
100	2.703	-0.469	2.662	2.724	-0.473	2.683
110	2.764	-0.945	2.597	2.794	-0.956	2.626
120	2.888	-1.444	2.501	2.917	-1.459	2.526
130	2.985	-1.919	2.287	3.040	-1.954	2.329
140	3.100	-2.375	1.993	3.175	-2.432	2.041
150	3.175	-2.750	1.588	3.232	-2.799	1.616
160	3.186	-2.994	1.090	3.246	-3.050	1.110
170	3.177	-3.129	0.552	3.237	-3.188	0.562
180	3.187	-3.187	0	3.246	-3.246	0

θ	Basic Plane Z= -2.360			Level -4 Z= -2.000		
	R	X	Y	R	X	Y
0	4.272	4.272	0	4.247	4.247	0
10	4.248	4.184	0.738	4.223	4.159	0.733
20	4.147	3.897	1.418	4.120	3.872	1.409
30	3.961	3.430	1.981	3.940	3.412	1.970
40	3.687	2.824	2.370	3.683	2.821	2.367
50	3.384	2.175	2.592	3.392	2.180	2.598
60	3.111	1.556	2.694	3.132	1.566	2.712
70	2.927	1.001	2.751	2.960	1.012	2.782
80	2.815	0.489	2.772	2.860	0.497	2.817
90	2.779	0	2.779	2.838	0	2.838
100	2.802	-0.487	2.759	2.861	-0.497	2.818
110	2.887	-0.987	2.713	2.958	1.012	2.780
120	3.019	-1.510	2.615	3.098	1.549	2.683
130	3.180	2.044	2.436	3.260	2.096	2.497
140	3.306	-2.533	2.125	3.405	-2.608	2.189
150	3.398	2.943	1.699	3.516	3.045	1.758
160	3.458	-3.250	1.183	3.585	3.369	1.226
170	3.475	-3.422	0.603	3.612	-3.557	0.627
180	3.472	-3.472	0	3.609	-3.609	0

VOL 53 ISS 73 AP 15 1988 UMI

Table 2

Medium Headform—Exterior Dimensions (Continued)

θ	Level—3 Z= -1.500			Level—2 Z= -1.000		
	R	X	Y	R	X	Y
0	4.208	4.208	0	4.148	4.148	0
10	4.179	4.116	0.726	4.112	4.050	0.714
20	4.075	3.829	1.394	4.013	3.771	1.373
30	3.902	3.379	1.951	3.844	3.329	1.922
40	3.654	2.799	2.349	3.609	2.765	2.320
50	3.377	2.171	2.587	3.352	2.155	2.568
60	3.094	1.547	2.680	3.137	1.569	2.717
70	2.982	1.020	2.802	2.989	1.022	2.809
80	2.891	0.502	2.847	2.902	0.504	2.858
90	2.876	0	2.876	2.884	0	2.884
100	2.918	-0.507	2.874	2.943	-0.511	2.898
110	3.021	-1.033	2.839	3.052	-1.044	2.868
120	3.170	-1.585	2.745	3.225	-1.613	2.793
130	3.337	-2.145	2.556	3.397	-2.184	2.602
140	3.483	-2.668	2.239	3.536	-2.709	2.273
150	3.604	-3.121	1.802	3.657	-3.167	1.829
160	3.682	-3.460	1.259	3.751	-3.525	1.283
170	3.725	-3.668	0.647	3.807	-3.749	0.661
180	3.741	-3.741	0	3.822	-3.822	0

θ	Level—1 Z= -0.500			Reference Plane Z=0.0		
	R	X	Y	R	X	Y
0	4.067	4.067	0	3.971	3.971	0
10	4.033	3.972	0.700	3.935	3.875	0.683
20	3.944	3.706	1.349	3.853	3.621	1.318
30	3.777	3.271	1.889	3.701	3.205	1.851
40	3.552	2.721	2.283	3.491	2.674	2.244
50	3.323	2.136	2.546	3.279	2.108	2.512
60	3.126	1.563	2.707	3.101	1.551	2.686
70	2.987	1.022	2.807	2.979	1.019	2.799
80	2.912	0.506	2.868	2.910	0.505	2.868
90	2.893	0	2.893	2.890	0	2.890
100	2.895	-0.503	2.851	2.945	-0.511	2.900
110	3.064	-1.048	2.879	3.062	-1.047	2.877
120	3.231	-1.616	2.798	3.228	-1.614	2.796
130	3.411	-2.193	2.613	3.413	-2.194	2.615
140	3.560	-2.727	2.288	3.563	-2.729	2.290
150	3.682	-3.189	1.841	3.681	-3.188	1.841
160	3.783	-3.555	1.294	3.773	-3.546	1.290
170	3.885	-3.826	0.675	3.832	-3.774	0.665
180	3.857	-3.857	0	3.844	-3.844	0

Table 2

Medium Headform—Exterior Dimensions (Continued)

Θ	Level+1 Z=0.500			Level +2 Z=1.000		
	R	X	Y	R	X	Y
0	3.830	3.830	0	3.665	3.665	0
10	3.801	3.743	0.660	3.613	3.559	0.627
20	3.725	3.500	1.274	3.554	3.340	1.216
30	3.587	3.106	1.794	3.436	2.976	1.718
40	3.399	2.604	2.185	3.271	2.506	2.103
50	3.205	2.060	2.455	3.102	1.994	2.376
60	3.044	1.522	2.636	2.959	1.480	2.563
70	2.927	1.001	2.751	2.854	0.976	2.682
80	2.861	0.497	2.818	2.792	0.485	2.750
90	2.855	0	2.855	2.783	0	2.783
100	2.897	−0.503	2.853	2.832	−0.492	2.789
110	3.007	−1.029	2.826	2.938	−1.005	2.761
120	3.176	−1.588	2.751	3.102	−1.551	2.686
130	3.372	−2.168	2.583	3.294	−2.117	2.523
140	3.520	−2.697	2.263	3.450	−2.643	2.218
150	3.643	−3.155	1.822	3.564	−3.087	1.782
160	3.728	−3.503	1.275	3.637	−3.419	1.244
170	3.777	−3.720	0.656	3.675	−3.619	0.638
180	3.782	−3.782	0	3.670	−3.670	0

Θ	Level +3 Z=1.450			Level +4 Z=1.860		
	R	X	Y	R	X	Y
0	3.419	3.419	0	3.061	3.061	0
10	3.382	3.331	0.587	3.035	2.989	0.527
20	3.299	3.100	1.128	2.966	2.787	1.014
30	3.197	2.769	1.599	2.872	2.487	1.436
40	3.052	2.338	1.962	2.754	2.110	1.770
50	2.911	1.871	2.230	2.642	1.698	2.024
60	2.786	1.393	2.413	2.522	1.261	2.184
70	2.700	0.924	2.537	2.477	0.847	2.328
80	2.647	0.460	2.607	2.442	0.424	2.405
90	2.636	0	2.636	2.442	0	2.442
100	2.691	−0.467	2.650	2.492	−0.433	2.454
110	2.796	−0.956	2.627	2.590	−0.888	2.442
120	2.961	−1.481	2.564	2.758	−1.379	2.389
130	3.147	−2.029	2.411	2.936	−1.887	2.249
140	3.301	−2.529	2.122	3.081	−2.360	1.980
150	3.408	−2.951	1.704	3.176	−2.754	1.588
160	3.479	−3.268	1.190	3.230	−3.035	1.105
170	3.514	−3.461	0.610	3.270	−3.229	0.568
180	3.502	−3.502	0	3.271	−3.271	0

VOL 53 ISS 73 APR 15 1988 UMI

Table 2

Medium Headform – Exterior Dimensions (Continued)

θ	Level +5 Z=2.250			Level +6 Z=2.560		
	R	X	Y	R	X	Y
0	2.526	2.526	0	1.798	1.798	0
10	2.521	2.483	0.483	1.798	1.771	0.312
20	2.464	2.315	0.843	1.757	1.651	0.601
30	2.387	2.067	1.194	1.719	1.489	0.860
40	2.305	1.766	1.482	1.678	1.285	1.079
50	2.232	1.435	1.710	1.652	1.062	1.266
60	2.174	1.087	1.883	1.641	0.821	1.421
70	2.144	0.733	2.015	1.645	0.563	1.546
80	2.132	0.370	2.100	1.673	0.291	1.648
90	2.147	0	2.147	1.712	0	1.712
100	2.213	−0.384	2.179	1.809	−0.314	1.782
110	2.316	−0.792	2.176	1.925	−0.658	1.809
120	2.463	−1.232	2.133	2.066	−1.033	1.789
130	2.624	−1.687	2.010	2.213	−1.423	1.695
140	2.763	−2.117	1.776	2.358	−1.806	1.516
150	2.863	−2.479	1.432	2.469	−2.138	1.235
160	2.919	−2.743	0.988	2.536	−2.383	0.867
170	2.954	−2.909	0.513	2.561	−2.522	0.445
180	2.958	−2.958	0	2.556	−2.556	0

θ	Level +7 Z=2.750		
	R	X	Y
0	1.081	1.081	0
10	1.068	1.072	0.189
20	1.055	0.991	0.361
30	1.039	0.900	0.520
40	1.039	0.796	0.668
50	1.052	0.676	0.806
60	1.068	0.534	0.925
70	1.106	0.378	1.039
80	1.171	0.203	1.153
90	1.242	0	1.242
100	1.422	−0.247	1.400
110	1.489	−0.509	1.399
120	1.683	−0.842	1.458
130	1.801	−1.158	1.380
140	1.954	−1.497	1.256
150	2.083	−1.804	1.042
160	2.138	−2.009	0.731
170	2.175	−2.142	0.378
180	2.175	−2.175	0

Notes:

1. Apex is located at (-0.75, 0, 3.02) for (X,Y,Z) or (0.75, 180, 3.02) for (R, θ, Z).
2. Center of ear opening is located at (0.40, 2.78, -2.36) for (X,Y,Z) or (2.80, 81.8, -2.36) for (R,θ,Z).
3. Scale all dimensions by 0.8941 for small headform.
4. Scale all dimensions by 1.069 for large headform.
5. Headform is symmetrical about the mid-sagittal plane.
6. Units:
   R,X,Y,Z - inches.
   θ – degrees.
7. To obtain metric equivalents in centimeters, multiply each figure by 2.54.

[FR Doc. 88-8248 Filed 4-14-88; 8:45 am]
BILLING CODE 4910-59-C

Proposed Rules

Federal Register
Vol. 53, No. 73
Friday, April 15, 1988

This section of the FEDERAL REGISTER contains notices to the public of the proposed issuance of rules and regulations. The purpose of these notices is to give interested persons an opportunity to participate in the rule making prior to the adoption of the final rules.

FEDERAL TRADE COMMISSION

16 CFR Part 13

[Docket Nos. C-626 and C-2075]

The Reader's Digest Association, Inc.

AGENCY: Federal Trade Commission.

ACTION: Notice of period for public comment on petition to reopen proceedings and modify consent orders.

SUMMARY: The Reader's Digest Association, Inc., the respondent in the orders in Docket Nos. C-626 and C-2075, has petitioned the Federal Trade Commission to modify in certain respects the 1963 and 1971 consent orders against The Reader's Digest Association, Inc., requiring disclosures of the terms and conditions of offers of free merchandise and of all other offers. This document announces the public comment period on the petition.

DATE: The deadline for filing comments in this matter is May 10, 1988.

ADDRESS: Comments should be sent to the Office of the Secretary, Federal Trade Commission, 6th Street and Pennsylvania Avenue NW, Washington, DC 20580. Requests for copies of the request should be sent to Public Reference Branch, Room 130.

FOR FURTHER INFORMATION CONTACT: Terrence J. Boyle, Attorney, Division of Enforcement, Bureau of Consumer Protection, Federal Trade Commission, Washington, DC 20580, (202) 326-3016.

SUPPLEMENTARY INFORMATION: The order against The Reader's Digest Association, Inc., in Docket No. C-626 was published at 29 FR 399 on January 16, 1964. The order in Docket No. C-2075 was published at 36 FR 22824 on December 1, 1971. The petitioner, The Reader's Digest Association, Inc., is a magazine and book publisher. The order in Docket C-626 prohibits The Reader's Digest Association, Inc., from employing words like "free" for merchandise offered to consumers unless all the conditions for receipt and retention of such merchandise are clearly and conspicuously set forth at the outset so as to leave no reasonable probability that the terms might be misunderstood. The order in Docket C-2075 prohibits The Reader's Digest Association, Inc., from offering any product for sale when all the terms and conditions of the offer are not explained fully and clearly and set forth conspicuously on the order form or in the case of offers in catalogues, either on the order form or elsewhere in the catalogue, with a clear and conspicuous disclosure on the order form of the location in the catalogue of the disclosures. The petition to modify was placed on the public record on March 30, 1988.

List of Subjects in 16 CFR Part 13

Magazines and books.

Emily H. Rock,
Secretary.

[FR Doc. 88-8305 Filed 4-14-88; 8:45 am]

BILLING CODE 6750-01-M

DEPARTMENT OF THE TREASURY

Internal Revenue Service

26 CFR Part 1

[LR-26-88]

Incomes Taxes; Nonaccrual-Experience Method of Accounting

AGENCY: Internal Revenue Service, Treasury.

ACTION: Notice of proposed rulemaking by cross-reference to temporary regulations.

SUMMARY: In the Rules and Regulations portion of this issue of the **Federal Register**, the Internal Revenue Service is issuing temporary amendments to the income tax regulations relating to the nonaccrual-experience method of accounting. The text of those temporary regulations also serves as the comment document for this proposed rulemaking.

DATES: Written comments and requests for a public hearing must be delivered or mailed by June 14, 1988.

ADDRESS: Send comments and requests for a public hearing to: Commissioner of Internal Revenue, Attention: CC:LR:T (LR-26-88), Washington, DC 20224.

FOR FURTHER INFORMATION CONTACT: Katherine Lee Wambsgans of the Legislation and Regulations Divisions, Office of Chief Counsel, Internal Revenue Service, 1111 Constitution Avenue, NW., Washington, DC 20224, Attention: CC:LR:T (202-566-3288, not a toll-free number).

SUPPLEMENTARY INFORMATION:

Background

The temporary regulations (designated by a "T" following the section citation) in the Rules and Regulations portion of this issue of the **Federal Register** amend Part 1 of Title 26 of the Code of Federal Regulations. These amendments clarify the computation of the bad debt ratio for purposes of the nonaccrual-experience method under section 448(d)(5) of the Internal Revenue Code of 1986 as added by section 801 of the Tax Reform Act of 1986 (Pub. L. 99-514, 100 Stat. 2085). For the text of the temporary regulations, see FR Doc. 88-8338 (T.D. 8194) published in the Rules and Regulations portion of this issue of the **Federal Register**. A general discussion of the temporary regulations is contained in the preamble to the regulations. The final regulations, which this document proposes to base on the temporary regulations, would amend Part 1 of Title 26 of the Code of Federal Regulations.

Special Analyses

The Commissioner of Internal Revenue has determined that this proposed rule is not a major rule as defined in Executive Order 12291. Accordingly, a Regulatory Impact Analysis is not required. Although this document is a notice of proposed rulemaking that solicits public comments, the Internal Revenue Service has concluded that the proposed regulations are interpretative and that the notice and public procedure requirements of 5 U.S.C. 553 do not apply. Accordingly, a regulatory flexibility analysis in not required under the Regulatory Flexibility Act (5 U.S.C. chapter 6).

Comments and Requests for a Public Hearing

Before adopting these proposed regulations, consideration will be given to any written comments that are submitted (preferably eight copies) to the Commissioner of Internal Revenue. All comments will be available for public inspection and copying. A public hearing will be held upon written request to the Commissioner by any

person who submitted comments. If a public hearing is held, notice of the time and place will be published in the Federal Register.

Drafting Information

The principal author of these proposed regulations is Ewan D. Purkiss of the Legislation and Regulations Division, Office of Chief Counsel, Internal Revenue Service. However, personnel from other offices of the Internal Revenue Service and the Treasury Department participated in developing the regulations on matters of both substance and style.

List of Subjects in 26 CFR Parts 1.441–1——1.483–2

Income taxes, Accounting, Deferred compensation plans.

Lawrence B. Gibbs,

Commissioner of Internal Revenue.

[FR Doc. 88–8339 Filed 4–14–88; 8:45 am]

BILLING CODE 4830-01-M

DEPARTMENT OF TRANSPORTATION

Coast Guard

33 CFR Part 117

[CGD1 88-009]

Drawbridge Operation Regulations; Shark River, NJ

AGENCY: Coast Guard, DOT.

ACTION: Proposed Temporary rule.

SUMMARY: At the request of New Jersey Department of Transportation with the concurrence of New Jersey Transit Railroad Operations, the Coast Guard is considering issuing temporary regulations governing the draws of Route 71 bridge, mile 0.8, the railroad bridge, mile 0.9, and the Route 35 bridge, mile 0.9, all at Avon by permitting the number of openings to be limited from 7 a.m. to 9 a.m. and from 3 p.m. to 7 p.m. Monday through Friday, and from 9 a.m. to 9 p.m. on Saturdays, Sundays and federal holidays. The opening of the bridges may be delayed not more than 10 minutes after the signal to open is given for the passing of a scheduled train or bunching of commercial vessels. This proposal is being made because periods of peak vehicular traffic have increased due to the Ocean Avenue bridge reconstruction and diversion of same to the Route 71 and Route 35 bridges. This action should accommodate the needs of vehicular traffic and should still provide for the reasonable needs of navigation.

DATE: Comments must be received on or before April 18, 1988.

ADDRESSES: Comments should be mailed to Commander (obr), First Coast Guard District, Bldg. 135A, Governors Island, NY 10004–5098. The comments and other materials referenced in this notice will be available for inspection and copying at this address. Normal office hours are between 9 a.m. and 3:30 p.m., Monday through Friday, except federal holidays. Comments may also be hand-delivered to this address.

FOR FURTHER INFORMATION CONTACT: William C. Heming, Bridge Administrator, First Coast Guard District, at (212) 668–7994.

SUPPLEMENTARY INFORMATION: Interested persons are invited to participate in this temporary rulemaking by submitting written views, comments, data or arguments. Persons submitting comments should include their names and addresses, identify the bridge, and give reasons for concurrence with or any recommended change in the proposal. Good cause exists for limiting the comment period to less than 30 days after publication in the Federal Register, because of the need to relieve the vehicular congestion in the area caused by the added traffic.

The Commander, First Coast Guard District, will evaluate all communications received and determine a course of final action on this proposal. The proposed temporary regulations may be changed in light of comments received.

Drafting Information

The drafters of this notice are Jose M. Arca Jr., project officer, and Cdr. R. B. Ellard, project attorney.

Discussion of Temporary Regulation

Current regulations provide that the draws shall open on signal; except that from May 15 through September 30 from 4 p.m. to 7 p.m. Monday through Friday except federal holidays and from 9 a.m. to 9 p.m. Saturdays, Sundays and federal holidays, the draws need be opened only on the hour and half hour if a vessel is waiting to pass. The proposed temporary regulations are being made in an effort to relieve traffic congestion while Ocean Avenue bridge is being reconstructed. The temporary regulations are essentially the same opening schedule in effect during the summer months when vehicular traffic is heavy, except that provision is also being made for the morning rush hour period. Marine interests, officials of the towns of Avon and Belmar, Monmouth County, New Jersey Department of Transportation, New Jersey Transit Railroad Operations and the Coast Guard met on January 29, 1988 to develop the proposed schedule.

Economic Assessment and Certification

These regulations are considered to be non-major under Executive Order 12291 on Federal Regulation, and nonsignificant under the Department of Transportation regulatory policies and procedures (44 FR 11034; February 26, 1979).

The economic impact of this proposal is expected to be so minimal that a full regulatory evaluation is unnecessary. These temporary changes in the regulations will not prevent mariners from transiting the bridges when needed but only require advance planning. Since the economic impact of this proposal is expected to be minimal, the Coast Guard certifies that if adopted, it will not have a significant economic impact on a substantial number of small entities.

List of Subjects in 33 CFR Part 117

Bridges.

Temporary Proposed Regulations

In consideration of the foregoing, the Coast Guard proposes to amend Part 117 of Title 33, Code of Federal Regulations as follows:

PART 117—DRAWBRIDGE OPERATION REGULATIONS

1. The authority citation for Part 117 continues to read as follows:

Authority: 33 U.S.C. 499; 49 CFR 1.46; 33 CFR 1.05–1(g).

2. Section 117.751 is amended by suspending for the period April 15 through October 31, 1988, paragraph (b) and adding new paragraph (d) effective for the period April 15 through October 31, 1988, to read as follows:

§ 117.751 Shark River.

* * * * *

(d) From April 15 through October 31, 1988, the draws shall open on signal; except that from 7 a.m. to 9 a.m. and from 3 p.m. to 7 p.m., Mondays through Friday, except federal holidays and from 9 a.m. to 9 p.m. on Saturdays, Sundays and federal holidays, the draws need be opened only on the hour and half hour for waiting vessels. The opening of the draws may be delayed not more than 10 minutes after the signal to open is given to facilitate passage of scheduled trains or bunching of commercial vessels.

Dated: March 30, 1988.

J.N. Faigle,

Captain, U.S. Coast Guard, Acting Commander, First Coast Guard District.

[FR Doc. 88–7757 Filed 4–12–88; 11:36 am]

BILLING CODE 4910-14-M

FEDERAL EMERGENCY MANAGEMENT AGENCY

44 CFR Part 67

[Docket No. FEMA-6923]

Proposed Flood Elevation Determinations; Correction

AGENCY: Federal Emergency Management Agency.

ACTION: Proposed rule; correction.

SUMMARY: This document corrects a Notice of Proposed Modified Determinations of base (100-year) flood elevations previously published at 53 FR 4690 on February 17, 1988. This correction notice provides a more accurate representation of the revised Flood Insurance Rate Map for the Town of Ramapo, Rockland County, New York.

FOR FURTHER INFORMATION CONTACT: John L. Matticks, Chief, Risk Studies Division, Federal Insurance Administration, Federal Emergency Management Agency, Washington, DC 20472, (202) 646-2754.

SUPPLEMENTARY INFORMATION: The Federal Emergency Management Agency gives notice of the correction to the Notice of Proposed Modified Determinations of base (100-year) flood elevations for selected locations in the Town of Ramapo, Rockland County, New York, previously published at 53 FR 4690 on February 17, 1988, in accordance with section 110 of the Flood Disaster Protection Act of 1973 (Pub. L. 93-234), 87 Stat. 980, which added section 1363 to the National Flood Insurance Act of 1968 (Title XIII of the Housing and Urban Development Act of 1968 (Pub. L. 90-448)), 42 U.S.C. 4001-4128, and 44 CFR 67.4(a).

List of Subjects in 44 CFR Part 67

Flood insurance, Floodplains.

The authority citation for Part 67 continues to read as follows:

Authority: 42 U.S.C. 4001 et seq., Reorganization Plan No. 3 of 1978, E.O. 12127.

On page 4690, in the February 17, 1988 issue of **Federal Register**, a new entry is added after the third entry under Ramapo (Town), Rockland County, and the entry for "Pascack Brook" is correctly revised to read as follows:

Source of flooding	Location	Depth in feet above ground. *Elevation in feet (NGVD)	
		Existing	Modified
* * *	* * *	* * *	* * *
North Branch Pascack Brook	At downstream corporate limits	*410	*406
	Approximately 20 feet downstream of Pascack Brook	*431	*429
	At downstream side of Eckerson Road	*446	*446
	Approximately 30 feet upstream of Rockland Parkway (1st upstream crossing)	None	*461
	Approximately 20 feet upstream of State Route 45	None	*489
	At the upstream corporate limits	None	*498
	At the upstream side of the Kearsing Parkway	None	*557
	Approximately 50 feet upstream of Viola Road	None	*587
Pascack Brook	Approximately 50 feet downstream of Abandoned Railroad	None	*465
	Approximately 150 feet upstream of Francis Place (2nd upstream crossing)	None	*477
	At the upstream side of the Ida Road Backyard Foot Bridge	None	*492
	Approximately 220 feet upstream of Ralph Boulevard	None	*529
* * *	* * *	* * *	* * *

Maps available for inspection at the Office of Town Clerk, Town Hall, Ramapo, New York.
Send comments to The Honorable Herbert Reisman, Supervisor of the Town of Ramapo, Rockland County, 237 Route 59, Suffern, New York 10901.

Issued: April 11, 1988.

Harold T. Duryee,

Administrator, Federal Insurance Administration.

[FR Doc. 88-8289 Filed 4-14-88; 8:45 am]

BILLING CODE 6718-21-M

44 CFR Part 67

[Docket No. FEMA-6926]

Proposed Flood Elevation Determinations

AGENCY: Federal Emergency Management Agency.

ACTION: Proposed rule.

SUMMARY: Technical information or comments are solicited on the proposed base (100-year) flood elevations and proposed base flood elevation modifications listed below for selected locations in the nation. These base (100-year) flood elevations are the basis for the floodplain management measures that the community is required to either adopt or show evidence of being already in effect in order to qualify or remain qualified for participation in the National Flood Insurance Program (NFIP).

DATES: The period for comment will be ninety (90) days following the second publication of this proposed rule in a newspaper of local circulation in each community.

ADDRESSES: See table below.

FOR FURTHER INFORMATION CONTACT: John L. Matticks, Chief, Risk Studies Division, Federal Insurance Administration, Federal Emergency Management Agency, Washington, DC 20472, (202) 646-2767.

SUPPLEMENTARY INFORMATION: The Federal Emergency Management Agency gives notice of the proposed determinations of base (100-year) flood elevations and modified base flood elevations for selected locations in the nation, in accordance with section 110 of the Flood Disaster Protection Act of 1973 (Pub. L. 93-234), 87 Stat. 980, which added section 1363 to the National Flood Insurance Act of 1968 (Title XIII of the Housing and Urban Development Act of 1968 (Pub. L. 90-448)), 42 U.S.C. 4001-4128, and 44 CFR 67.4(a).

These elevations, together with the floodplain management measures required by § 60.3 of the program regulations, are the minimum that are required. They should not be construed to mean the community must change any existing ordinances that are more stringent in their floodplain management requirements. The community may at any time enact stricter requirements on its own, or pursuant to policies established by other Federal, State, or regional entities. These proposed elevations will also be used to calculate the appropriate flood insurance premium rates for new buildings and their contents and for the second layer of insurance on existing buildings and their contents.

Pursuant to the provisions of 5 U.S.C. 605(b), the Administrator, to whom authority has been delegated by the Director, Federal Emergency Management Agency, hereby certifies that the proposed flood elevation determinations, if promulgated, will not have a significant economic impact on a substantial number of small entities. A flood elevation determination under section 1363 forms the basis for new local ordinances, which, if adopted by a local community, will govern future construction within the floodplain area. The elevation determinations, however, impose no restriction unless and until the local community voluntarily adopts floodplain ordinances in accord with these elevations. Even if ordinances are adopted in compliance with Federal standards, the elevations prescribe how high to build in the floodplain and do not prohibit development. Thus, this action only forms the basis for future local actions. It imposes no new requirement; of itself it has no economic impact.

List of Subjects in 44 CFR Part 67

Flood insurance, Flood plains.

The authority citation for Part 67 continues to read as follows:

Authority: 42 U.S.C. 4001 et seq., Reorganization Plan No. 3 of 1978, E. O. 12127.

The proposed base (100-year) flood elevations for selected locations are:

PROPOSED BASE (100-YEAR) FLOOD ELEVATIONS

Source of flooding and location	#Depth in feet above ground. *Elevation in feet (NGVD)
GEORGIA	
Americus (city), Sumter County	
Muckalee Creek:	
At mouth	*321
About 6,500 feet upstream of Meadowbrook Drive	*333
Town Creek:	
At mouth	*330
Just downstream of Mayo Street	*354
Just upstream of Mayo Street	*361
About 1,700 feet upstream of Mayo Street	*361
Mill Creek:	
About 3,000 feet downstream of CXS railroad	*336
Just downstream of U.S. Route 280	*361
Mill Creek Tributary:	
About 750 feet downstream of CSX railroad	*338
Just downstream of Felder Street	*353
Just upstream of Felder Street	*361

PROPOSED BASE (100-YEAR) FLOOD ELEVATIONS—Continued

Source of flooding and location	#Depth in feet above ground. *Elevation in feet (NGVD)
Maps available for inspection at the Office of the Community Development Director, City Hall, Americus, Georgia.	
Send comments to The Honorable Russell Thomas, Jr., Mayor, City of Americus, City Hall, P.O. Box M, Americus, Georgia 31709.	
Lakeland (city), Lanier County	
Big Creek:	
About 1,700 feet downstream of Main Avenue	*160
About 3,200 feet upstream of Brantley Street	*168
Mill Creek:	
At mouth	*164
Just downstream of North Lakeshore Drive	*167
Just upstream of North Lakeshore Drive	*175
About 4,000 feet upstream of Old Nashville Road	*177
Maps available for inspection at the City Hall, 122 South Valdosta Road, Lakeland, Georgia.	
Send comments to The Honorable James S. Shaw, Jr., Mayor, City of Lakeland, City Hall, 122 South Valdosta Road, Lakeland, Georgia 31635.	
Polk County (unincorporated areas)	
Mill Creek:	
About 1.0 mile downstream of Prospect Road	*722
Just downstream of Prospect Road	*729
Just upstream of Prospect Road	*735
Just downstream of Norfolk Southern Railway	*738
Pumpkin Pile Creek:	
At mouth	*783
Just downstream of Pine Bower Road	*823
McCurry Creek:	
At mouth	*795
Just downstream of confluence of Lime Branch	*806
Cedar Creek:	
About 1,300 feet downstream of Kings Bridge Road	*725
Just downstream of dam	*783
Just upstream of dam	*791
Just downstream of Huntington Road	*798
Skeeter Branch:	
At mouth	*788
Just downstream of CSX railroad	*786
South Prong Skeeter Branch:	
About 1,200 feet downstream of U.S. Route 278	*797
Just downstream of Frank Lott Drive	*820
About 500 feet upstream of Frank Lott Drive	*826
Fish Creek:	
At mouth	*730
Just downstream of Hendrix Road	*818
Thompson Creek:	
About 1.3 miles downstream of Sycamore Street	*752
Just downstream of County Route 221	*806
Elm Street Slough:	
About 1,100 feet downstream of Sherwood Drive	*765

PROPOSED BASE (100-YEAR) FLOOD ELEVATIONS—Continued

Source of flooding and location	#Depth in feet above ground. *Elevation in feet (NGVD)
Just downstream of Morgan Road	*793
Simpson Creek:	
At mouth	*764
About 4,000 feet above mouth	*771
Euharlee Creek:	
About 1.7 miles upstream of Taylorsville Road	*713
Just downstream of Government Farm Road	*765
Tributary A:	
About 1,050 feet downstream of Nathan Dean Bypass	*760
Just downstream of Braswell Road	*816
White River Cave Creek:	
At mouth	*741
Just downstream of Marquette Road	*763
Maps available for inspection at the Building Inspector's Office, Courthouse Annex, Room 203, Cedartown, Georgia.	
Send comments to The Honorable David Willingham, Chairman, Board of Commissioners, Polk County, P.O. Box 268, Cedartown, Georgia 30125.	
ILLINOIS	
Wenona (city), Marshall County	
Sandy Creek Tributary:	
Just upstream of Elm Street	*673
About 1,075 feet upstream of Third South Street	*687
Maps available for inspection at the Wenona State Bank, Wenona, Illinois.	
Send comments to The Honorable Frederick Campbell, Mayor, City of Wenona, City Hall, Wenona, Illinois 61377.	
INDIANA	
DeKalb County (unincorporated areas)	
Cedar Creek:	
About 1,450 feet downstream of the CSX railroad	*852
About 0.6 mile upstream of County Route 31	*897
St. Joseph River:	
Just upstream of County Route 59	*795
Just downstream of County Route 64	*798
Maps available for inspection at the Planning Commission Office, County Courthouse, Auburn, Indiana.	
Send comments to The Honorable Robert Wilder, President, County Board, DeKalb County, County Courthouse, Auburn, Indiana 46706.	
Marshall County	
Yellow River:	
Just upstream of 1,200 East Road	*732
Just downstream of East 4th Road	*800
Tippecanoe River:	
Just upstream of East 20th Road	*766
Just downstream of East 18th Road (upstream crossing)	*779
Cook Lake: entire shoreline	*770
Holem Lake: entire shoreline	*770
Koontz Lake: entire shoreline	*715
Kreighbaum Lake: entire shoreline	*770
Lake of the Woods: entire shoreline	*805

PROPOSED BASE (100-YEAR) FLOOD ELEVATIONS—Continued

Source of flooding and location	#Depth in feet above ground. *Elevation in feet (NGVD)
Lake Latonka: entire shoreline	*783
Lawrence Lake: entire shoreline	*770
Myers Lake: entire shoreline	*770
Mill Pond: entire shoreline	*770
Maps available for inspection at the County Planning Office, County Building, Room 302, Plymouth, Indiana.	
Send comments to The Honorable Clark Dare, President, County Board of Commissioners, Marshall County, County Courthouse, Plymouth, Indiana 46563	
KENTUCKY	
Whitley County (unincorporated areas)	
Cumberland River:	
Just upstream of State Route 204	*807
About 7.65 miles upstream of U.S. Route 25W	*944
Brown's Creek:	
At mouth	*924
About 900 feet upstream of private road	*950
Clear Fork:	
At mouth	*932
At state boundary	*976
Meadow Creek:	
At mouth	*979
About 1.22 miles upstream of mouth	*990
Watts Creek:	
At mouth	*924
Just downstream of Gatliff Dam	*924
Just upstream of Gatliff Dam	*929
About 3,690 feet upstream of State Route 26	*985
Lynn Camp Creek:	
About 1.10 miles downstream of private road	*1,070
About 0.50 mile upstream of Back Street	*1,089
Maps available for inspection at the County Courthouse, Williamsburg, Kentucky.	
Send comments to The Honorable Jerry Taylor, Judge Executive, Whitley County, P.O. Box 237, Williamsburg, Kentucky 40769.	
Williamsburg (city), Whitley County	
Cumberland River:	
About 0.55 mile downstream of CSX railroad	*926
About 0.93 mile upstream of State Route 25W	*932
Maps available for inspection at the City Hall, Williamsburg, Kentucky.	
Send comments to The Honorable Donnie R. Witt, Mayor, City of Williamsburg, P.O. Box 119, Williamsburg, Kentucky 40769.	
MAINE	
Rockland (city), Knox County	
Atlantic Ocean:	
Shoreline at Talbot Avenue (extended)	*11
Shoreline at Atlantic Point	*14
Shoreline at Samoset Road (extended)	*19
Maps available for inspection at the Code Enforcement Office, City Hall, Rockland Maine.	
Send comments to The Honorable Cathy Smith, Manager of the City of Rockland, Knox County, P.O. Box 546, Rockland, Maine 04841.	
Rockport (town), Knox County	
Atlantic Ocean:	
Shoreline of West Penobscot Bay at Beauchamp Point	*15
At Goose Rock	*19
Shoreline of West Penobscot Bay approximately 1,700 feet east of intersection of Russell Avenue and Calderwood Lane	23
Shoreline approximately 6,500 feet north of Babcocks Point	*37
Goose River:	
At Pascal Avenue	*10
Downstream side of Commercial Street	*45
Downstream side of Main Street (downstream crossing)	*55
Approximately 30 feet upstream of Park Street	*50
Maps available for inspection at the Planning Office, Rockport, Maine.	
Send comments to The Honorable Roger B. Jones, Chairman of the Board of Selectmen for the Town of Rockport, Knox County, 199 Beach Street, R.F.D., Rockport, Maine 04856.	
MICHIGAN	
Taymouth (township), Saginaw County	
Flint River:	
Just upstream of Sheridan Road	*600
About 1.8 miles upstream of East Burt Road	*619
Maps available for inspecton at the Taymouth Township Hall, 4343 East Birch Run Road, Birch Run, Michigan.	
Send comments to The Honorable Glenn Kerr, Supervisor, Township of Taymouth, Taymouth Township Hall, 4343 East Birch Run Road, Birch Run, Michigan 48415.	
MISSISSIPPI	
Bolivar County (unincorporated areas)	
Mississippi River:	
About 2.8 miles downstream of southern county boundary	*145
At northern county boundary	*174
Lead Bayou West Main Canal:	
At eastern county boundary	*133
Just downstream of U.S. Highway 61	*139
Porter Bayou:	
At eastern county boundary	*125
Just downstream of County Highway at City of Shaw western corporate limits	*128
Jones Bayou:	
Just upstream of Township Road	*134
About 1,300 feet upstream of Tower Road	*135
Pecan Bayou:	
About 0.8 mile downstream of Yale Street	*134
Just downstream of Yale Street	*135
Bear Pen Canal:	
About 2,700 feet downstream of Sunflower Road	*134
About 1,400 feet upstream of Rosemary Road	*137
Maps available for inspection at the County Courthouse, Cleveland, Mississippi.	
Send comments to The Honorable Kermit Stanton, President, County Board of Supervisors, Bolivar County, P.O. Drawer 698, Cleveland, Mississippi 38732.	
NEW HAMPSHIRE	
Littleton (town), Grafton County	
Ammonoosuc River:	
Downstream corporate limits	*689
Downstream side of Northbound Interstate 93 Bridge	*725
Upstream side of Bridge Street Bridge	*756
Downstream side of Cottage Street Bridge	*759
Downstream side of Chiswick Avenue Bridge	*822
Upstream corporate limits	*876
Baker Brook:	
Confluence with Ammonoosuc River	*834
Upstream corporate limits	*853
Dells Brook:	
Confluence with Ammonoosuc River	*712
Upstream side of Northbound Interstate Route 93 Bridge	*766
Upstream side of State Route 18 Bridge	*805
Approximately 0.6 mile upstream of State Route 18 Bridge	*831
Farr Brook:	
Confluence with Dells Brook	*787
Upstream side of State Route 18 Bridge	*835
Palmer Brook:	
Confluence with Ammonoosuc River	*826
At State Route 116 Bridge	*847
Upstream side of Pleasant Street Bridge	*900
Approximately 1,125 feet upstream of Gary Drive Bridge	*925
Maps available for inspection at the Town Clerk's Vault, Littleton, New Hampshire.	
Send comments to The Honorable Tom Landry, Town Manager of the Town of Littleton, Grafton County, Town Hall, 1 Union Street, Littleton, New Hampshire 03561.	
Tuftonboro (town), Carroll County	
Lake Winnipesaukee: Entire shoreline within community	*506
Maps available for inspection at the Town Clerk's Vault, Tuftonboro, New Hampshire.	
Send comments to The Honorable Charles Whitten, Chairman of the Town of Tuftonboro Board of Selectmen, Carroll County, Town Offices, Tuftonboro Center, Tuftonboro, New Hampshire 03816.	

PROPOSED BASE (100-YEAR) FLOOD ELEVATIONS—Continued

Source of flooding and location	#Depth in feet above ground. *Elevation in feet (NGVD)
NEW MEXICO	
Rio Arriba County (unincorporated areas)	
Embudo Creek:	
Approximately 600 feet upstream of confluence with Rio Grande	*5,846
Approximately 1,200 feet downstream of confluence with Arroyo La Mina	*5,920
Approximately 1.1 miles downstream of State Route 75	*5,995
Approximately 1,750 feet upstream of State Route 75	*6,070
Approximately 1.5 miles upstream of State Route 75	*6,145
Approximately 2,400 feet upstream of confluence with Canada de Los Pino Reales	*6,219
Rio Grande—Below Espanola:	
At downstream County boundary	*5,539
At confluence of Arroyo Seco	*5,565
At upstream County boundary	*5,579
Rio Grande—Above Rio Chama:	
Approximately 0.5 mile downstream confluence of Arroyo de Chinguague	*5,640
At confluence of Arroyo del Palacio	*5,684
Approximately 1.1 miles upstream of confluence of Arroyo del Palacio	*5,696
Maps available for inspection at the County Manager's Office, Espanola, New Mexico.	
Send comments to The Honorable Emilo Naranjo, Rio Arriba County Manager, P.O. Box 1256, Espanola, New Mexico 87532.	
Taos County (unincorporated areas)	
Rio Pueblo De Taos:	
Approximately 1,600 feet downstream confluence with Rio Lucero	*6,860
Approximately 100 feet downstream of County Road	*6,916
At upstream County boundary	*6,950
Rio Lucero:	
Approximately 50 feet upstream confluence with Rio Pueblo De Taos	*6,882
Approximately 1,350 feet downstream of State Route 3	*6,941
Approximately 0.5 mile upstream of State Route 3	*6,995
Maps available for inspection at the Taos County Courthouse, Planning Department, Taos, New Mexico.	
Send comments to The Honorable Lewis Gallegos, Chairman of the Taos County Board of Commissioners, P.O. Box 1914, Taos, New Mexico 87571.	
NEW YORK	
New Hempstead (village), Rockland County	
North Branch Pascack Brook:	
At downstream corporate limits	*497
Approximately 100 feet upstream of Greenridge Way	*515
Willow Tree Brook:	
Corporate limits at Grandview Avenue	*560
Approximately 670 feet upstream of Grandview Avenue	*567

PROPOSED BASE (100-YEAR) FLOOD ELEVATIONS—Continued

Source of flooding and location	#Depth in feet above ground. *Elevation in feet (NGVD)
Maps available for inspection at the New Hempstead Village Hall, 8 Old Schoolhouse Road, New City, New York.	
Send comments to The Honorable Stanley J. Teich, Mayor of the Village of New Hempstead, Rockland County, 34 Bridle Road, New Hempstead, New York 10977.	
NORTH CAROLINA	
East Laurinburg (town), Scotland County	
Leith Creek:	
Just downstream of Laurinburg and Southern Railroad (downstream crossing)	*192
About 550 feet upstream of McKay Street	*199
Maps available for inspection at the Town Hall, Fifth Street, East Laurinburg, North Carolina.	
Send comments to The Honorable Paul Britt, Mayor, Town of East Laurinburg, Town Hall, Fifth Street, East Laurinburg, North Carolina 28352.	
Scotland County (unincorporated areas)	
Gum Swamp Creek:	
About 800 feet downstream of State Road 79	*187
About 1,000 feet upstream of State Road 79	*189
Leith Creek:	
Just upstream of U.S. Route 74 Bypass	*179
About 3,000 feet upstream of Laurinburg and Southern Railroad	*194
Little Creek:	
At mouth	*180
Just downstream of Highland Road	*188
Just upstream of Highland Road	*196
Just downstream of Wagram Road	*219
Lumber River:	
About 1,700 feet downstream of Red Springs Road	*189
About 3.0 miles upstream of McGirts Bridge Road	*206
Maps available for inspection at the County Complex, Laurinburg, North Carolina.	
Send comments to The Honorable John Q. Byrd, County Manager, Scotland County, County Complex, Box 489, Laurinburg, North Carolina 28352.	
OKLAHOMA	
Ottawa County (unincorporated areas)	
Little Elm Creek:	
At confluence with Neosho River	*772
State Highway 10	*772
Approximately 18,300 feet above confluence with Neosho River	*789
Lost Creek (Lower Reach):	
At Main Street	*757
Approximately 13,700 feet above confluence with Lake of the Cherokees	*788
Lost Creek (Upper Reach):	

PROPOSED BASE (100-YEAR) FLOOD ELEVATIONS—Continued

Source of flooding and location	#Depth in feet above ground. *Elevation in feet (NGVD)
Approximately 45,800 feet above confluence with Lake of the Cherokees	*820
At Burlington Northern Railroad	*837
At Ottawa County boundary	*847
Neosho River:	
Approximately 49,000 feet above confluence with Spring River	*769
At Interstate Highway 144	*772
At confluence of Tar Creek	*773
Approximately 2,750 feet upstream of confluence of Tar Creek	*774
Tar Creek:	
At confluence with Neosho River	*773
At 22nd Avenue	*789
Approximately 6,550 feet upstream of D Street	*795
Warren Branch:	
Approximately 19,600 feet above confluence with Spring River	*855
Approximately 27,000 feet above confluence with Spring River	*895
Maps available for inspection at the Ottawa County Courthouse, Miami, Oklahoma.	
Send comments to The Honorable Don J. McElhany, Chairman of the Ottawa County Commissioners, County Courthouse, Miami, Oklahoma 74354.	
Wagoner County (unincorporated areas)	
Verdigris River:	
At State Route 16	*516
At upstream side of State Route 51	*533
At most upstream County boundary	*558
Verdigris River Divergence Channel:	
At confluence with Verdigris River	*516
At divergence from Verdigris River	*525
East Coal Creek:	
At confluence with Verdigris River	*526
Approximately .31 mile upstream of Pierce Avenue	*576
West Coal Creek:	
At confluence with Verdigris River	*542
Approximately 220 feet upstream of Lone Star Road	*547
At upstream side of 305th East Avenue	*567
At upstream side of 273rd East Avenue	*641
Approximately .97 mile upstream of 91st Street South	*695
Adams Creek:	
At confluence with Verdigris River	*546
At upstream side of 273rd East Avenue	*577
At upstream side of 225th East Avenue	*615
At 193rd East Avenue	*663
Springtown Creek:	
At confluence with Adams Creek	*567
Approximately .56 mile upstream of confluence with Adams Creek	*581
Midway Creek:	
At confluence with Adams Creek	*578
Approximately 1.04 miles upstream of 257th East Avenue	*601
Timber Creek:	
At confluence with Adams Creek	*596
Approximately 50 feet upstream of 257th East Avenue	*629
Covington Creek:	
At downstream side of 71st Street South	*608
At upstream side of 91st Street South	*658

PROPOSED BASE (100-YEAR) FLOOD ELEVATIONS—Continued

Source of flooding and location	#Depth in feet above ground. *Elevation in feet (NGVD)
Approximately 250 feet upstream of 101st Street South	*692
Covington Creek Tributary:	
At confluence with Covington Creek	*612
Approximately .81 mile upstream of Gafford Boulevard	*639
School Creek:	
At confluence with Adams Creek	*604
Approximately .77 mile upstream of 81st Street South	*657
Lone Star Creek:	
At confluence with Adams Creek	*642
Approximately .32 mile upstream of 61st Street South	*678
Saf Creek:	
At confluence with Verdigris River	*557
Approximately .51 mile upstream of confluence of Salt Creek Tributary 2	*616
Salt Creek Tributay 1:	
At confluence with Salt Creek	*579
Approximately .52 mile upstream of confluence with Salt Creek	*590
Salt Creek Tributary 2:	
At confluence with Salt Creek	*608
Approximately .40 mile upstream of confluence with Salt Creek	*613
Spunky Creek:	
At downstream County boundary	*599
At upstream side of 21st Street South	*645
Approximately .72 mile upstream of 193rd East Avenue	*668
Spunky Creek Tributary A:	
At upstream side of State Route 33	*617
At downstream side of 193rd East Avenue	*632
Broken Arrow Creek:	
At upstream side of 193rd East Avenue (first crossing)	*616
At downstream side of 193rd East Avenue (second crossing)	*667
Broken Arrow Creek Tributary:	
At confluence with Broken Arrow Creek	*626
Approximately 1.81 miles upstream of 209th East Avenue	*669
Arkansas River:	
At confluence of Verdigris River	*516
Approximately .55 mile downstream of upstream County boundary	*576
Approximately 1.48 miles upstream of upstream County boundary	*581
Neosho River:	
Approximately 0.4 mile downstream of Missouri Pacific Railroad	*518
Approximately 1.66 miles upstream of Missouri Pacific Railroad	*519
Coweta Creek:	
At confluence with Arkansas River	*571
At upstream side of 141st Street South	*620
Approximately .96 mile upstream of confluence of Coweta Creek	*668
Tributary B	
Coweta Creek Tributary A:	
At upstream side of 289th East Avenue	*638
At 131st Street South	*641
Coweta Creek Tributary B:	
At confluence with Coweta Creek	*654
Approximately .63 mile upstream of confluence with Coweta Creek	*667
Middle Branch Tributary:	
Approximately 1.0 mile upstream of confluence with Coweta Creek	*629
Approximately 1.70 miles upstream of confluence with Coweta Creek	*652

Maps available for inspection at the Wagoner County Courthouse, Wagoner, Oklahoma.

Send comments to The Honorable Allen Farley, Chairman of the Wagoner County Board of Commissioners, P.O. Box 156, Wagoner, Oklahoma 74477.

SOUTH CAROLINA

Source of flooding and location	#Depth in feet above ground. *Elevation in feet (NGVD)
Sumter County (unincorporated areas)	
Alligator Branch:	
Just upstream of Brewington Road	*124
Just downstream of U.S. Route 378	*143
Beech Creek:	
Just upstream of Claremont Road	*125
Just downstream of Barnwell Road	*161
Just upstream of Barnwell Road	*168
About 1.0 mile upstream of Barnwell Road	*181
Causeway Branch:	
At confluence with Green Swamp	*149
About 0.9 mile upstream of Keels Road	*178
Long Branch:	
At mouth	*159
Just upstream of U.S. Route 378	*173
Mush Swamp:	
At mouth	*154
Just downstream of Loring Mill Road	*164
Robert Branch:	
Just upstream of Claremont Road	*133
Just downstream of Ben Sanders Road	*205
Green Swamp:	
At mouth	*126
Just downstream of Old West Liberty Street	*142
Just upstream of Old West Liberty Street	*149
Just downstream of Mason Road	*170
Shot Pouch Creek:	
About 1.1 miles downstream of Jefferson Road	*169
About 2,400 feet downstream of Jefferson Road	*175
Rocky Bluff Swamp:	
About 1.0 mile downstream of Oswego Road	*126
About 1.2 miles upstream of Oswego Road	*134
Turkey Creek:	
At mouth	*119
About 800 feet downstream of Wanning Avenue	*120
Just upstream of Wanning Avenue	*125
About 1.3 miles upstream of East Red Bay Road	*136
Pocotaligo River:	
About 1.6 miles downstream of confluence of Turkey Creek	*115
At confluence of Green Swamp	*126
Cane Savannah Creek:	
At mouth	*126
Just upstream of Pineview Avenue	*138
Mile Branch:	
Just upstream of U.S. Route 378	*145
About 1,400 feet upstream of Winkles Road	*150
Shallow flooding (overflow from Mile Branch) Within community	*146
Caroline Bay 1: About 1,300 feet southwest of intersection of Berkwood Road and Brewington Road	*124
Caroline Bay 5: About 1,000 feet southwest of intersection of U.S. Route 521 and State Route 120	*177
Caroline Bay 6: About 400 feet east of intersection of Babbit Road and Harwood Drive	*197
Caroline Bay 7: About 2,200 feet southeast of intersection of U.S. Route 378 and State Route 120	*173
Caroline Bay 8: About 1,500 feet southwest of intersection of Brownfield Road and Wilson Hall Road	*173
Caroline Bay 9: About 3,000 feet east of intersection of Loring Mill Road and Wise Drive	*181
Caroline Bay 10: About 3,200 feet east of intersection of Loring Mill Road and Wise Drive	*180
Caroline Bay 11: Just southwest of intersection of St. Paule Church Road and Folly Road	*192
Caroline Bay 12: About 2,900 feet southeast of intersection of Loring Mill Road and Wise Drive	*175
Caroline Bay 13: About 700 feet southwest of intersection of Loring Mill Road and Keels Road	*178
Caroline Bay 14: About 800 feet southwest of intersection of Loring Mill Road and Keels Road	*174
Caroline Bay 16: About 1.2 miles east of intersection of Pitts Road and CSX	*174
Caroline Bay 18: About 4,000 feet east of intersection of Pitts Road and CSX	*175
Caroline Bay 19: About 1.4 miles east of intersection of Pitts Road and CSX	*162
Caroline Bay 20: About 1,000 feet south of intersection of Pitts Road and CSX	*178
Caroline Bay 21: About 800 feet southeast of intersection of Pitts Road and CSX	*173
Caroline Bay 22: About 600 feet southwest of intersection of Stadium Road and McCray's Mill Road	*174
Caroline Bay 23: About 2,300 feet south of intersection of Pitts Road and CSX	*173
Caroline Bay 24: About 3,000 feet southwest of McCray's Mill Road and Stadium Road	*179
Caroline Bay 25: About 1,600 feet southeast of intersection of McCray.'s Mill Road and Stadium Road	*164
Caroline Bay 30: About 500 feet southeast of Cains Mill Road and Church Road	*171

Maps available for inspection at the County Courthouse, 141 North Main Street, Sumter, South Carolina.

Send comments to The Honorable William A. Frick, County Administrator, Sumter County, County Courthouse, 141 North Main Street, Sumter, South Carolina 29150.

PROPOSED BASE (100-YEAR) FLOOD ELEVATIONS—Continued

Source of flooding and location	#Depth in feet above ground. *Elevation in feet (NGVD)
TENNESSEE	
Lawrence County (unincorporated areas)	
Shoal Creek:	
At Old Shoal Creek Dam	*790
Just upstream of Old Shoal Creek Dam	*795
At confluence of Beeler Fork Shoal Creek	*846
Beeler Fork Shoal Creek:	
At confluence of Shoal Creek	*846
About 1.3 miles upstream of Quail Drive	*866
Little Shoal Creek:	
At mouth	*807
Just downstream of Mount Ararat Road	*866
Crowson Creek:	
About 400 feet upstream of Old Waynesboro Road	*806
About 1.5 miles upstream of Old Waynesboro Road	*820
Tripp Town Branch:	
At mouth	*846
About 1.35 miles upstream of mouth	*880
Big Dry Branch:	
At confluence of Tripp Town Branch	*880
Just downstream of Weakley Creek Road	*916
Maps available for inspection at the Building Official's Office, County Courthouse, Lawrenceburg, Tennessee.	
Send comments to The Honorable Marty Duskin, County Executive, Lawrence County, County Courthouse, Lawrenceburg, Tennessee 38474.	
TEXAS	
Lewisville (city), Dallas and Denton Counties	
Elm Fork Trinity River:	
At confluence of Timber Creek	*451
At confluence of Midway Branch	*456
Approximately 400 feet downstream of State Route 121	*461
At confluence of Prairie Creek	*462
Denton Creek:	
Approximately 3.4 miles above confluence with Elm Fork Trinity River	*451
Downstream side of Denton Tap Road	*459
Approximately 8.2 miles above confluence with Elm Fork Trinity River	*470
Approximately 8.5 miles above confluence with Elm Fork Trinity River	*470
Maps available for inspection at the Department of Public Works, 1000 North Kealay, Lewisville, Texas.	
Send comments to The Honorable Donny Daniels, Mayor of the City of Lewisville, Dallas and Denton Counties, 151 West Church Street, Lewisville, Texas 75067.	
VERMONT	
Newfane (town), Windham County	
West River:	
Approximately 1.2 miles downstream from confluence of Smith Brook	*358
U.S. Geological Survey gage 01156000	*395
Smith Brook:	
At River Road	*408
Approximately 120 feet upstream from South Wardsboro Road	*608
Rock River:	
At Sunset Lake Road	*496
At confluence of Marlboro Branch	*634
Approximately 230 feet upstream from Dover Road	*822
Maps available for inspection at the Town Clerk's Vault, Newfane, Vermont.	
Send comments to The Honorable Jim Grey, Chairman of the Town of Newfane Board of Selectmen, Windham County, Town Hall, P.O. Box 36, Newfane, Vermont 05345.	
Reading (town), Windsor County	
Knapp Brook:	
At confluence with North Branch Black River	*668
At upstream corporate limits	*731
North Branch Black River:	
At downstream corporate limits	*678
Approximately 350 feet upstream of State Route 106	*735
Approximately 0.3 mile upstream of State Route 106	*804
Maps available for inspection at the Town Clerk's Vault, Reading, Vermont.	
Send comments to The Honorable Robert Allen, Chairman of the Town of Reading Board of Selectmen, Windsor County, Town Hall, P.O. Box 44, Reading, Vermont 05062.	
VIRGINIA	
Bland County (unincorporated areas)	
Hunting Camp Creek:	
At confluence with Wolf Creek	*2,162
At approximately 1,000 feet upstream from State Road 615	*2,218
At approximately 2.5 miles upstream from State Road 615	*2,275
Laurel Creek:	
At confluence with Wolf Creek	*1,992
Approximately 1.2 miles upstream from confluence of Dry Fork	*2,152
Dry Fork:	
At confluence with Laurel Creek	*2,086
At approximately 325 feet upstream of 3rd upstream crossing of State Road 613	*2,149
Wolf Creek (Lower Reach):	
At approximately 1.5 miles downstream of first downstream crossing of U.S. Routes 21 and 52	*2,116
At approximately .57 mile upstream from confluence of Hunting Camp Creek	*2,169
Wolf Creek (Upper Reach):	
At approximately 1.6 miles downstream from State Road 614 (1st crossing)	*2,272
At 100 feet upstream from 2nd crossing of State Route 614	*2,346
At approximately 2 miles upstream from the 2nd crossing of State Road 614	*2,470
Maps available for inspection at the County Clerk's Office, Courthouse Building, Bland, Virginia.	
Send comments to The Honorable Fay Lambert, Chairman of Bland County Board of Supervisors, P.O. Box 295, Bland, Virginia 24315.	
Essex County (unincorporated areas)	
Rappahannock River: Entire shoreline	*7
Maps available for inspection at the Department of Building and Zoning, Prince Street, Tappahannock, Virginia.	
Send comments to The Honorable James F. Moore, Essex County Administrator, P.O. Box 1979, Tappahannock, Virginia 22560.	
Middlesex County (unincorporated areas)	
Chesapeake Bay:	
Approximately 100 feet southeast of intersection of State Routes 636 & 643	*7
Shoreline at State Route 1107 (extended)	*7
At Stingray Point	*11
Rappahannock River:	
Upstream side of State Route 3 bridge	*7
Shoreline at Parrot Island	*11
Piankatank River: At Doctor Point	*7
Maps available for inspection at the Zoning Office, County Courthouse, Saluda, Virginia.	
Send comments to The Honorable Phill Gay, Middlesex County Administrator, County Courthouse, P.O. Box 428, Saluda, Virginia 23149.	
York County (unincorporated areas)	
Chesapeake Bay:	
At the intersection of State Routes 622 and 212	*8
Shoreline at York Point Drive extended	*12
Poquoson River:	
Shoreline at Tide Mill Road extended	*8
Shoreline at River Point Drive extended	*12
Back Creek:	
At intersection of Back Creek Road and Clayton Creek Road	*8
Shoreline at Back Creek Road extended	*12
Chisman Creek:	
At intersection of Ship Point Road and Anchor Drive	*9
Shoreline at Anchor Drive extended	*12
Lambs Creek:	
On Lambs Creek Drive approximately 1,200 feet east of intersection of Lambs Creek Drive and Calthrop Neck Road	*8
Shoreline 2,000 feet northeast of intersection of Calthrop Neck Road and Shackelford Road	*12
York River:	
Shoreline at Ferry Point	*7
At intersection of U.S. Route 17 and State Route 238	*9
Shoreline at U.S. Route 17 bridge	*12
Brick Kiln Creek: At State Route 134 bridge	*9

PROPOSED BASE (100-YEAR) FLOOD ELEVATIONS—Continued

Source of flooding and location	#Depth in feet above ground. *Elevation in feet (NGVD)
Maps available for inspection at the County Planning Department, County Administrative Office Building, Yorktown, Virginia.	
Send comments to The Honorable John M. Richardson, York County Administrator, 224 Ballard Street, P.O. Box 532, Yorktown, Virginia 23690.	
WISCONSIN	
Gilman (village), Taylor County	
Yellow River:	
About 0.36 mile downstream of Soo Line Railway	*1,205
About 0.58 mile upstream of 5th Street	*1,216
Tributary A:	
At mouth	*1,208

PROPOSED BASE (100-YEAR) FLOOD ELEVATIONS—Continued

Source of flooding and location	#Depth in feet above ground. *Elevation in feet (NGVD)
Just upstream of Riverside Drive	*1,214
About 1,200 feet upstream of State Highway 64	*1,216
Maps available for inspection at the Village Hall, 380 East Main Street, Box 157, Gilman, Wisconsin.	
Send comments to The Honorable Gerald H. DeStaercke, Village President, Village of Gilman, Village Hall, 380 East Main Street, Box 157, Gilman, Wisconsin 54433.	
Grantsburg (village), Burnett County	
Wood River:	
About 3,500 feet downstream of Grantsburg Lake Dam	*886

PROPOSED BASE (100-YEAR) FLOOD ELEVATIONS—Continued

Source of flooding and location	#Depth in feet above ground. *Elevation in feet (NGVD)
About 2,000 feet upstream of Oak Street	*894
Maps available for inspection at the Village Hall, 416 South Pine Street, Grantsburg, Wisconsin.	
Send comments to The Honorable James N. McNally, Village President, Village of Grantsburg, Village Hall, Box D-3, Route 1, 416 South Pine Street, Grantsburg, Wisconsin 54840.	

The proposed modified base (100-year) flood elevations for selected locations are:

PROPOSED MODIFIED BASE (100-YEAR) FLOOD ELEVATIONS

State	City/town/county	Source of flooding	Location	#Depth in feet above ground. *Elevation in feet (NGVD)	
				Existing	Modified
Arkansas	City of Cabot, Lonoke County.	Bayou Two Prairie	At downstream corporate limits	None	*266
			Approximately .21 mile upstream of upstream corporate limits.	None	*269
		Drain 1	At corporate limits	None	*265
			Approximately .74 mile upstream of corporate limits.	None	*274
		Drain 2	At corporate limits	None	*268
			Approximately 535 feet upstream of confluence of Drain 2A.	None	*274
		Drain 2A	At confluence with Drain 2	None	*273
			At Barnwell Street	None	*279
		Drain 3	At Kerr Station Road	None	*275
			At upstream side of State Route 89	None	*286
		Drain 3A	At Kerr Station Road	None	*275
			At State Route 89	None	*291
		Drain 3B	At confluence with Drain 3A	None	*280
			Approximately 90 feet upstream of State Route 89.	None	*288
		Drain 35	At confluence with Drain 3	None	*277
			Approximately 50 feet upstream of State Route 89.	None	*287
		Drain 4	At Kerr Station Road	None	*277
			Approximately 240 feet upstream of upstream corporate limits.	None	*290
Maps available for inspection at the City Hall, Cabot, Arkansas.					
Send comments to The Honorable N.E. Smith, Mayor of the City of Cabot, Lonoke County, P.O. Box 1113, Cabot, Arkansas 72023.					
Arkansas	England, City, Lonoke County.	Wabbeseka Bayou	At downstream corporate limits	None	*222
			Approximately .28 mile upstream of upstream corporate limits.	None	*225
Maps available for inspection at the City Hall, England, Arkansas.					
Send comments to The Honorable Roy Cox, Mayor of the City of England, Lonoke County, City Hall, Box 249, England, Arkansas 72046.					
Georgia	City of Cedartown, Polk County.	Cedar Creek	About 350 feet downstream of confluence of Skeeter Branch.	*769	*768
			About 3,550 feet upstream of Canal Street	*778	*776
		Skeeter Branch	About 850 feet downstream of North Cave Spring Road.	*769	*768
			Just downstream of College Street	*775	*772

PROPOSED MODIFIED BASE (100-YEAR) FLOOD ELEVATIONS—Continued

State	City/town/county	Source of flooding	Location	#Depth in feet above ground. *Elevation in feet (NGVD)	
				Existing	Modified
			Just upstream of College Street	*776	*776
			About 3,200 feet upstream of Norfolk Southern Railway.	None	*797
		South Prong Skeeter Branch	At mouth	*783	*784
			About 1,500 feet upstream of East Avenue	*795	*797
		Tanyard Branch	At confluence with Cedar Creek	*775	*776
			Just upstream of CSX railroad	*795	*795
Maps available for inspection at the Building Inspector's Office, City Hall, Cedartown, Georgia.					
Send comments to The Honorable Bart Wood, Chairman, City Commission, City of Cedartown, City Hall, P.O. Box 65, Cedartown, Georgia 30125.					
Illinois	City of Aurora, Kane and DuPage Counties.	Indian Creek	At mouth	*636	*636
			Just downstream of High Street	*650	*652
			Just upstream of High Street	*654	*658
			About 2,300 feet upstream of Bilter Road	*726	*729
		Selmarten Creek	At confluence with Indian Creek	*715	*716
			About 3,100 feet upstream of Selmarten Road	*715	*720
		South Tributary	At mouth	None	*684
			About 700 feet upstream of mouth	None	*688
		Tributary B	Just upstream of Farnsworth Avenue	None	*712
			About 3,700 feet upsteam of Farnsworth Avenue.	None	*716
Maps available for inspection at the City Hall, 44 East Downer Place, Aurora, Illinois.					
Send comments to The Honorable David Pierce, Mayor, City of Aurora, City Hall, 44 East Downer Place, Aurora, Illinois 60507.					
Indiana	Town of Roseland, St. Joseph County.	Judy Creek	Just upstream of Cleveland Road	*713	*711
			About 750 feet upstream of Myrtle Street	*715	*714
Maps available for inspection at the Building Commission, Town Hall, South Bend, Indiana.					
Send comments to The Honorable Charles Landeman, President, Town of Roseland, Town Hall, 200 Independence Drive, South Bend, Indiana 46637.					
Michigan	Township of Putnam, Livingston County.	Honey Creek	Just upstream of Darwin Road	None	*860
			Just downstream of Pinchney Road	None	*868
		Portage River	About 0.6 mile downstream of Hi-Land Lake Dam.	None	*872
			Just downstream of Hi-Land Lake Dam	None	*874
		Portage Lake	Along shoreline	None	*852
		Silver Lake	do	None	*876
		Hi-Land Lake	do	None	*884
		Halfmoon Lake	do	None	*885
		Patterson Lake	do	None	*887
Maps available for inspection at the Putnam Township Hall, 131 South Howell, Pinckney, Michigan.					
Send comments to The Honorable Bruce E. Chapman, Supervisor, Township of Putnam, Township Hall, 131 South Howell, P.O. Box 46, Pinckney, Michigan 48169.					
Mississippi	City of Cleveland, Bolivar County.	Lead Bayou-West Main Canal	About 1.5 miles downstream of White Street	None	*135
			Just downstream of Rosemary Road	*139	*138
Maps available for inspection at the City Hall, Cleveland, Mississippi.					
Send comments to The Honorable Martin T. King, Mayor, City of Cleveland, P.O. Box 1439, Cleveland, Mississippi 38732.					
North Carolina	Unincorporated Areas of Guilford County.	Horsepen Creek Tributary No. 1.	At mouth	None	*757
			Just upstream of dam	None	*758
			Just upstream of dam	None	*770
			About 1,350 feet upstream of dam	None	*771
		Horsepen Creek Tributary No. 2.	At mouth	None	*763
			About 600 feet upstream of New Garden Road	None	*782
		Richland Creek	At mouth	*720	*720
			About 0.81 mile upstream of Bass Chapel Road.	*756	*755
		North Buffalo Creek	At mouth	*672	*672
			About 3,100 feet upstream of confluence of Muddy Creek.	None	*716
		South Buffalo Creek	At mouth	*672	*672
			Above 1,400 feet upstream of Interstate 85	None	*724

PROPOSED MODIFIED BASE (100-YEAR) FLOOD ELEVATIONS—Continued

State	City/town/county	Source of flooding	Location	#Depth in feet above ground. *Elevation in feet (NGVD)	
				Existing	Modified
Maps available for inspection at the County Courhouse, 301 West Market Street, Greensboro, North Carolina. Send comments to the Honorable John Witherspoon, County Manager, Guilford County, County Courthouse, 301 West Market Street, Room 107, Greensboro, North Carolina 27402.					
Tennessee	City of Lawrenceburg, Lawrence County.	Shoal Creek	About 0.7 mile upstream of Old Shoal Creek Dam.	*793	*799
			Just downstream of confluence of Tripp Town Branch.	*840	*845
		Little Shoal Creek	At mouth	*801	*807
			Just downstream of Tripp Road	None	*854
		Crowson Creek	At mouth	*797	*804
			About 1.5 miles upstream of Old Waynesboro Road.	*818	*820
		Tripp Town Branch	Within community	None	*846
Maps available for inspection at the Building Official's Office, City Hall, Lawrenceburg, Tennessee. Send comments to The Honorable Ivan Johnston, Mayor, City of Lawrenceburg, P.O. Box 590, Lawrenceburg, Tennessee 38474.					
Texas	Brazoria County Unincorporated Areas	Brazos River	Upstream side of State Route 36	None	*8
			At County Route	None	*11
			At Route 933 (extended)	None	*11
			Approximately 0.5 mile downstream of River Mile 13.0.	*4	*16
			Approximately 2.0 miles east of intersection of FM 521 & County Route 508.	None	*24
			Approximately 3.9 miles upstream of FM 1462	*57	*56
		Oyster Creek	Upstream side of County Route 226	*13	*10
			Approximately 500 feet north of Missouri-Pacific Railroad, east of the City of Clute.	#1	*10
			Approximately 1,500 feet east of River Mile 14	#1	*12
			Upstream side of County Route 290	*30	*27
			Intersection of County Routes 28 & 893B	#1	*30
			300 feet west of intersection FM 521 and County Route 30.	#1	*35
			Upstream county boundary	*59	*54
		Brushy Bayou	Approximately 0.5 mile downstream of King Road.	None	*9
			Downstream side of County Route 212	None	*13
		Cocklebur Slough	Approximately 0.8 mile upstream of County Route 306.	*10	*11
		San Bernard River	At the City of Freeport most western corporate limit.	*7	*8
			Approximately 2.0 miles downstream of FM 521.	*15	*16
			Approximately 400 feet upstream of State Route 35.	*25	*26
			Upstream side of FM 1301	None	*43
			Approximately 1.9 miles downstream of county boundary.	None	*58
		Mound Creek	Confluence with San Bernard River	*19	*31
			Approximately 2.0 miles upstream of County Route 450.	*30	*31
		Varner Creek	Confluence with Brazos River	*30	*28
			Approximately 2.5 miles upstream of confluence with Brazos River.	*32	*31
		Bell Creek	Confluence with San Bernard River	*25	*26
			Approximately 0.76 mile upstream of State Route 35.	*25	*26
			Approximately 1,500 feet northwest of Oyster Creek River Mile 35.0.	#1	*27
		Mustang Bayou	North side of intersection of County Route 58 and County Route 48.	None	*64
			Old Mustang Bayou channel 400 feet west of the terminus of County Route 95.	None	*52
		Cow Creek	Approximately 1,300 feet upstream of County Route 25.	*53	*36
			Approximately 200 feet upstream of County Route 17.	*53	*52
		Sheet Flow	Intersection of Davis Bend Road and Bennett Road.	None	#2
			Parker Road 2,000 feet northeast of Briscoe Canal.	None	#3
			Parker Road 5,000 feet northeast of Briscoe Canal.	None	#1
			At Topeka and Santa Fe Railway South of American Canal.	None	#1

PROPOSED MODIFIED BASE (100-YEAR) FLOOD ELEVATIONS—Continued

State	City/town/county	Source of flooding	Location	#Depth in feet above ground. *Elevation in feet (NGVD)	
				Existing	Modified
			At the intersection of FM 527 and Friendswood Road.	None	#2
			Approximately 4,100 feet northwest along County Route 135, 400 feet from intersection of County Route 400 and State Route 36.	None	#1
			Approximately 1 mile north of Darrington State Prison Farm on Brazoria County boundary.	*59	#2
			Approximately 4,000 feet north of Darrington State Prison Farm, west of Oyster Creek River Mile 62.0.	*58	#2
			Approximately 2,000 feet north of terminus of County Route 570.	*56	#2
			Approximately 1 mile west of the intersection of County Routes 42 and 570.	*55	#2
			Approximately 1,000 feet south of Brazos River River Mile 62.	*56	#1
			At County Route 42 approximately 1.2 mile north of intersection of County Route 42 and FM 1462.	*55	#1
			Approximately 2,700 feet southeast of Brazos River River Mile 53.0.	*47	#1
			Approximately 3,000 feet southeast of Brazos River River Mile 53.0.	*47	#2
			Approximately 4,800 feet east-southeast of Brazos River River Mile 52.0.	*45	#2
			Approximately 2,200 feet east-southeast of Brazos River River Mile 52.0.	*46	#1
			Approximately 1.1 miles west of the terminus of County Route 34.	*41	#1
			Approximately 2,000 feet north of Senna Bean Lake.	*38	#1
			Approximately 1,500 feet south of Senna Bean Lake.	*37	#1
			Approximately 1.7 mile southeast along County Route 400 from the intersection of County Route 400 and County Route 912.	*19	#1
			Approximately 1.2 miles southeast of Brazos River River Mile 19.0.	*18	#1
			Approximately 800 feet south of Brazos River River Mile 18.0.	*19	#2
			Approximately 1.6 miles south of Brazos River River Mile 18.0.	*18	#2
			Approximately 2,600 feet southeast of Brazos River River Mile 18.0.	*19	#1
			Approximately 1.6 miles south of Brazos River River Mile 16.0.	*17	#1
			Approximately 2,000 feet southwest of Brazos River River Mile 15.0.	*17	#2
			Approximately 1.5 miles south of Brazos River River Mile 15.0.	*16	#2
			Approximately 1.7 miles northwest along County Route 400 from intersection of County Route 400 and Perry Landing Lane.	*16	#1
			Approximately 1,500 feet northwest along County Route 400 from intersection of County Route 400 and Perry Landing Lane.	*14	#1
			Approximately 3,600 feet southeast along County Route 400 from intersection of County Route 400 and Perry Landing Lane.	*13	#1
			Approximately 2.4 miles southeast along County Route 400 from intersection of County Route 400 and Perry Landing Lane.	*11	#1
			Approximately 100 feet west of the intersection of County Route 306 and FM 2918.	*10	#1

Maps available for inspection at the County Courthouse, Angleton, Texas.

Send comments to The Honorable John Damon, Brazoria County Judge, County Courthouse Angleton, Texas 77515.

Harold T. Duryee,

Administrator, Federal Insurance Administration.

Issued: April 11, 1988.

[FR Doc. 88-8290 Filed 4-14-88; 8:45 am]

BILLING CODE 6718-21-M

FEDERAL COMMUNICATIONS COMMISSION

47 CFR Parts 43 and 63

[CC Docket No. 86-494; FCC 88-71]

Common Carrier Services: In the Matter of Regulatory Policies and International Telecommunications

AGENCY: Federal Communications Commission.

ACTION: Supplemental Notice of Inquiry (Supplemental NOI).

SUMMARY: The Commission has requested interested parties to file comments on the cost characteristics of international accounting rates, the interrelationship of international accounting rates and national collection rates, and the implications that above-cost international accounting rates may have on U.S. market access concerns. It has also requested comments on the most appropriate procedural mechanism or mechanism to consider the regulatory implications of restrictive foreign standards-setting and procurement practices on U.S. comsumers. (See also a Report and Order on this same subject published elsewhere in todays **Federal Register**).

DATES: Comments must be filed by May 20, 1988 and replies by June 14, 1988.

ADDRESS: Federal Communications Commission, Washington, DC 20554.

FOR FURTHER INFORMATION CONTACT: William J. Kirsch (202) 632-4047 or Anna Lim (202) 632-9342, Policy & Program Planning Division, Common Carrier Bureau.

SUPPLEMENTARY INFORMATION: This is a summary of the Commission's Supplemental Notice of Inquiry, CC Docket 86-494, FCC 88-71, adopted February 25, 1988, and released March 25, 1988.

The full text of this Commission's Supplemental Notice of Inquiry (CC Docket 86-494) is available for inspection and copying during normal business hours in the FCC Dockets Branch, 1919 M Street, NW., Room 230, Washington, D.C. The complete text of the R&O may also be purchased from the Commission's copy contractors, International Transcription Service, 2100 M Street, Suite 140, Washington, DC 20037. (202) 857-3800.

Summary of Supplemental Notice of Inquiry

On December 23, 1986, the Commission adopted a Notice of Inquiry and Proposed Rulemaking (Notice) in CC Docket 86-494 (52 FR 5318) to determine whether the public interest requires that the Commission consider the telecommunications policies of foreign governments in the formulation of U.S. regulatory policies. The inquiry portion of the *Notice* set out four objectives—open entry, nondiscrimination, technological innovation and international comity. It sought comments on actions the Commission could consider to promote these objectives in international telecommunications.

In the *Supplemental NOI*, the Commission expresses concern that the present high level of international accounting rates and the increasing net revenue outflow paid by U.S. carriers to their foreign correspondants may adversely affect the above objectives. It notes that the net revenue outflow paid by U.S. carriers increased from $78.3 million to $1.2 billion from 1975 to 1986 and directs the Common Carrier Bureau to undertake a study of international accounting rates and provide the Commission with a recommendation on what, if any, action the Commission should propose to lower intenational accounting rates for IMTS originating or terminating in the U.S.

The Commission also invites parties to comment on the cost characteristics of international accounting rates, the interrelationship of international accounting rates and national collection rates, and the implications that above-cost international accounting rates may have on U.S. market access concerns.

In addition, the Commission notes the strong interest expressed by the executive branch in the establishment of Commission procedures that provide for routine consultation with the executive branch with respect to trade policy and the need for Commission procedures to address trade issues as they arise. As a result, it requests comments on the most appropriate procedural mechanism or mechanisms for its consideration of the regulatory implications of restrictive foreign standards-setting and procurement practices on the price, quality, and technological sophistication of telecommunications goods and services offered to U.S. consumers. In particular, the Notice invites parties to comment on whether the Commission should consider specific actions in this area only in the context of a rulemaking that would focus on the public interest considerations of such action under the statutory mandate set forth in the Communications Act. The Notice also invites parties to file additional comments on the proper role of the executive branch, including whether the Commission should consider, propose, or take action in this area only after some specified determination by the President, or his designated representative, based on U.S. trade, investment, commercial, defense, and foreign policy consideration.

Ordering clause

Accordingly, it is ordered that comments be field with the Secretary, Federal Communications Commission, 1919 M Street NW., Washington, DC 20554 on or before May 20, 1988 and replies to comments be filed on or before June 14, 1988.

List of Subjects in 47 CFR Parts 43 and 63

Common carrier.

(Authority: 47 U.S.C. 4(i), 154(i), and 403)

Federal Communications Commission.

H. Walker Feaster, III,
Acting Secretary.

[FR Doc. 88-8175 Filed 4-14-88; 8:45 am]

BILLING CODE 6712-01-M

---

47 CFR Part 68

[CC Docket No. 87-124; FCC 88-123]

Access to Telecommunications Equipment and Services by the Hearing Impaired and Other Disabled Persons

AGENCY: Federal Communications Commission.

ACTION: Notice of Proposed Rulemaking and Further Notice of Inquiry.

SUMMARY: The Telecommunications for the Disabled Act of 1982, Public Law No. 97-410 (Disabled Act), requires the Federal Communications Commission to establish such regulations as are necessary to ensure reasonable access to telecommunications services by persons with impaired hearing. In keeping with this mandate, the Commission, in the Notice of Proposed Rulemaking portion of this document, proposes to amend its rules to expand the definition of "essential" telephones to require that more telephones be hearing aid compatible (HAC). In the Further Notice of Inquiry portion of the document, the Commission seeks specific proposals for implementing an interstate relay system for users of Telecommunications Devices for the

Deaf (TDDs), which would enable deaf and speech-impaired persons to carry on real-time conversations with voice telephone users. The Commission also seeks further information on other measures to help the hearing impaired and other disabled persons to access telecommunications services. These actions are further efforts by the Commission to fully implement the policy of the Disabled Act. Comments submitted in this proceeding will be part of the record upon which the Commission will rely in making rule modifications and/or recommendations to Congress for statutory changes necessary to ensure that all persons have reasonable access to telecommunications services.

DATES: Comments must be filed on or before July 26, 1988 and reply comments on or before September 9, 1988.

ADDRESS: Federal Communications Commission, 1919 M Street, NW., Washington, DC 20554.

FOR FURTHER INFORMATION CONTACT: Robert James, Common Carrier Bureau, Domestic Facilities Division, (202) 634-1831; Richard Violette/Bonnie Gay (News Media) Office of Congressional & Public Affairs, (202) 632-5050.

SUPPLEMENTARY INFORMATION: This is a summary of the Commission's Notice of Proposed Rulemaking and Further Notice of Inquiry in CC Docket No. 87-124, FCC 88-123, adopted March 24, 1988 and released March 29, 1988.

The full text of this document is available for inspection and copying during normal business hours in the FCC Dockets Branch (Room 230), 1919 M Street, NW., Washington, DC. The complete text of this decision may also be purchased from the Commission's copy contractor, International Transcription Services, Inc., (202) 857-3800, 2100 M Street, NW., Suite 140, Washington, DC 20037.

Summary of the Notice of Proposed Rulemaking and Further Notice of Inquiry

This proceeding was initiated to gather information concerning the telecommunications needs of the hearing impaired and other disabled persons and to evaluate the need for consideration of regulatory measures or legislative initiatives to ensure reasonable access to telecommunications services by those persons. Ensuring reasonable access to telecommunications services by all Americans has been, and continues to be, a top priority of this Commission. In the Notice of Proposed Rulemaking portion of this document, the Commission proposes specific changes in its regulations that should increase the ability of the hearing impaired to access telephone service by expanding the definition of "essential" telephones that must be HAC. Specifically, the Commission proposes to change § 68.112(c)(1) to require HAC for all credit card telephones. Under the existing rules such telephones must be HAC only if they are not located near a readily available coin operated telephone. This action is based on the Commission's preliminary view that the benefits of including credit card telephones in the class of essential telephones outweigh the costs. The Commission seeks comment on the costs and benefits of this proposal.

The Commission also proposes to expand the definition of essential workplace telephones. Currently, § 68.112(c)(2) of the rules only requires that an HAC telephone be made available at the work station of the hearing impaired employee. The Commission is concerned that this rule may be impairing the ability of these employees to be fully productive workers. It therefore proposes a rule change to expand the range of areas in which workplace telephones must be HAC to include all common areas that hearing impaired employees may need to access in the ordinary course of their employment. These would include telephones in library, reception and similar areas. The Commission seeks comment on its analysis of the costs and benefits of this proposal and asks whether grandfathering is appropriate.

The Further Notice of Inquiry portion of this document seeks comment on important and difficult issues involved in ensuring reasonable access to telephone service for the hearing impaired and other disabled persons, and encourages existing groups with expertise in the area to coordinate the development of consensus proposals. For example, specific proposals are sought for implementing an interstate relay system for users of TDDs, which would enable deaf and speech-impaired persons to carry on real-time interstate conversations with voice telephone users. Such proposals should include data regarding the technical, economic and regulatory parameters for an interstate relay system. Comments on various other issues on which there is not an adequate record is also sought, e.g., the need for requiring a percentage of coin- and card-operated telephone handsets to be equipped with an amplifier, the need for greater dissemination of information regarding the Commission's rules addressing the disabled and the need for standardization of the technical parameters of hearing aids.

Finally, this document also serves as a report to Congress on information gathered to date in this proceeding to aid it in deciding whether to amend the Disabled Act to require that all telephones be compatible with telecoil equipped hearing aids. The Commission found the record does not support a finding that this amendment would resolve the problems being experienced by those among the hearing impaired population who still do not appear to have satisfactory access to telecommunications services. Although it found that various countervailing public interest considerations make it a close question as to whether this amendment to the Disabled Act should be adopted, on balance, it tentatively concluded that this amendment is not necessary at this time to ensure reasonable access by the disabled to telecommunications services.

Federal Communications Commission.

H. Walker Feaster III,

Acting Secretary.

[FR Doc. 88-8279 Filed 4-14-88; 8:45 am]

BILLING CODE 6712-01-M

---

47 CFR Part 73

[MM Docket No. 88-132, RM-6016]

Radio Broadcasting Services; Fort Mohave, AZ

AGENCY: Federal Communications Commission.

ACTION: Proposed rule.

SUMMARY: This document requests comments on a petition by Ft. Mohave Broadcasting seeking the allotment of Channel 296C2 to Fort Mohave, AZ, as a first local service.

DATES: Comments must be filed on or before May 31, 1988, and reply comments on or before June 15, 1988.

ADDRESS: Federal Communications Commission, Washington, DC 20554. In addition to filing comments with the FCC, interested parties should serve the petitioner, as follows: Ft. Mohave Broadcasting, P.O. Box 8073, Fort Mohave, AZ 86427.

FOR FURTHER INFORMATION CONTACT: Nancy Joyner, Mass Media Bureau (202) 634-6530.

SUPPLEMENTARY INFORMATION: This is a summary of the Commission's Notice of Proposed Rule Making, MM Docket No. 88-132, adopted March 4, 1988, and released April 8, 1988. The full text of this Commission decision is available for inspection and copying during

normal business hours in the FCC Dockets Branch (Room 230), 1919 M Street NW., Washington, DC. The complete text of this decision may also be purchased from the Commission's copy contractors, International Transcription Service, (202) 857-3800, 2100 M Street, NW., Suite 140, Washington, DC 20037.

Provisions of the Regulatory Flexibility Act of 1980 do not apply to this proceeding.

Members of the public should note that from the time a Notice of Proposed Rule Making is issued until the matter is no longer subject to Commission consideration or court review, all *ex parte* contacts are prohibited in Commission proceedings, such as this one, which involve channel allotments. See 47 CFR 1.1231 for rules governing permissible *ex parte* contact.

For information regarding proper filing procedures for comments, See 47 CFR 1.415 and 1.420.

List of Subjects in 47 CFR Part 73

Radio broadcasting.

Federal Communications Commission.

Steve Kaminer,

Deputy Chief, Policy and Rules Division, Mass Media Bureau.

[FR Doc. 88-8318 Filed 4-14-88; 8:45 am]

BILLING CODE 6712-01-M

---

47 CFR Part 73

[MM Docket No. 88-131, RM-5849; RM-5949]

Radio Broadcasting Services; Mason City and Iowa City, IA

AGENCY: Federal Communications Commission.

ACTION: Proposed rule.

SUMMARY: This document requests comments on petitions by B-Y Communications, Inc. seeking the substitution of Channel 230C1 for Channel 228A at Mason City, Iowa, and the modification of its license for Station KNIQ to specify the higher powered channel and by KRNA, Inc. seeking the substitution of Channel 231C1 for Channel 230C1 at Iowa City, Iowa, and the modification of its license for Station KRNA(FM) to specify the adjacent channel. Channel 230C1 can be allocated to Mason City in compliance with the Commission's minimum distance separation requirements, and can be used at Station KNIQ's present transmitter location, contingent upon the allocation of Channel 231C1 at Iowa City. Channel 231C1 can be substituted for Channel 230C1 at Iowa City in compliance with the Commission's minimum distance separation requirements with a site restriction of 7.4 kilometers (4.6 miles) southeast. In accordance with the procedures set forth in § 1.420(g) of the Commission's Rules, B-Y Communications, Inc. will not be required to demonstrate the availability of an additional equivalent channel for use by other interested parties and the Commission will not accept competing expressions of interest in use of the higher powered channel. The provisions of § 1.420(g) do not apply to the substitution at Iowa City since KRNA does not contemplate any increase in its facilities.

DATES: Comments must be filed on or before May 31, 1988, and reply comments on or before June 15, 1988.

ADDRESS: Federal Communications Commission, Washington, DC 20554. In addition to filing comments with the FCC, interested parties should serve the petitioner, or its counsel or consultant, as follows: Michael D. Basile, Esq., Dow, Lohnes & Albertson, 1255 23rd Street NW., Suite 500, Washington, DC 20037 (Counsel to KRNA, Inc.); Jonathan D. Blake, Esq., Neil K. Roman, Esq., Covington & Burling, 1201 Pennsylvania Avenue NW., P.O. Box 7566, Washington, DC 20044 (Counsel to B-Y Communications).

FOR FURTHER INFORMATION CONTACT: Leslie K. Shapiro, Mass Media Bureau, (202) 634-6530.

SUPPLEMENTARY INFORMATION: This is a summary of the Commission's Notice of Proposed Rule Making, MM Docket No. 88-131, adopted March 4, 1988, and released April 8, 1988. The full text of this Commission decision is available for inspection and copying during normal business hours in the FCC Dockets Branch (Room 230), 1919 M Street NW., Washington, DC. The complete text of this decision may also be purchased from the Commission's copy contractor, International Transcription Service, (202) 857-3800, 2100 M Street NW., Suite 140, Washington, DC 20037.

Provisions of the Regulatory Flexibility Act of 1980 do not apply to this proceeding.

Members of the public should note that from the time a Notice of Proposed Rule Making is issued until the matter is no longer subject to Commission consideration of court review, all *ex parte* contacts are prohibited in Commission proceedings, such as this one, which involve channel allotments. See 47 CFR 1.1231 for rules governing permissible *ex parte* contact.

For information regarding proper filing procedures for comments, see 47 CFR 1.415 and 1.420.

List of Subjects in 47 CFR Part 73

Radio broadcasting.

Federal Communications Commission.

Steve Kaminer,

Deputy Chief, Policy and Rules Division, Mass Media Bureau.

[FR Doc. 88-8319 Filed 4-14-88; 8:45 am]

BILLING CODE 6712-01-M

---

47 CFR Part 73

[MM Docket No. 88-128, RM-6168]

Radio Broadcasting Services; Bastrop, LA

AGENCY: Federal Communications Commission.

ACTION: Proposed rule.

SUMMARY: This document requests comments on a petition by Hagan Broadcasting, Inc., licensee of Station KMYQ-FM, Channel 261A, Bastrop, Louisiana, proposing the substitution of Channel 261C2 for Channel 261A and modification of its license to specify operation on the higher class channel. A site restriction of 10.4 kilometers (6.5 miles) south of Bastrop is required.

DATES: Comments must be filed on or before May 26, 1988, and reply comments on or before June 10, 1988.

ADDRESS: Federal Communications Commission, Washington, DC 20554. In addition to filing comments with the FCC, interested parties should serve the petitioners, or their counsel or consultant, as follows: James J. Popham, Esquire, Hardy & Popham, 700 Camp Street, New Orleans, LA 70130 (Counsel for petitioner).

FOR FURTHER INFORMATION CONTACT: Patricia Rawlings (202) 634-6530.

SUPPLEMENTARY INFORMATION: This is a summary of the Commission's Notice of Proposed Rule Making, MM Docket No. 88-128, adopted March 3, 1988, and released April 5, 1988. The full text of this Commission decision is available for inspection and copying during normal business hours in the FCC Dockets Branch (Room 230), 1919 M Street NW., Washington, DC. The complete text of this decision may also be purchased from the Commission's copy contractors, International Transcription Service, (202) 857-3800, 2100 M Street NW., Suite 140, Washington, DC 20037.

Provisions of the Regulatory Flexibility Act of 1980 do not apply to this proceeding.

Members of the public should note that from the time a Notice of Proposed Rule Making is issued until the matter is no longer subject to Commission

VOL 53 ISS 73 APR 15 1988 UMI

consideration or court review, all *ex parte* contacts are prohibited in Commission proceedings, such as this one, which involve channel allotments. See 47 CFR 1.1231 for rules governing permissible *ex parte* contact.

For information regarding proper filing procedures for comments, See 47 CFR 1.415 and 1.420.

List of Subjects in 47 CFR Part 73

Radio broadcasting.

Federal Communications Commission.

Steve Kaminer,

Deputy Chief, Policy and Rules Division, Mass Media Bureau.

[FR Doc. 88-8320 Filed 4-14-88; 8:45 am]

BILLING CODE 6712-01-M

---

47 CFR Part 73

[MM Docket No. 88-130, RM-6155]

Radio Broadcasting Services; Old Forge, NY

AGENCY: Federal Communications Commission.

ACTION: Proposed rule.

SUMMARY: The Commission requests comments on a petition by Ross Broadcasting Company proposing the allocation of Channel 231A to Old Forge, New York, as the community's second local FM service. Channel 231A can be allocated to Old Forge in compliance with the Commission's minimum distance separation requirements without a site restriction. Canadian concurrence in the allotment is required since Old Forge is located within 320 kilometers of the U.S.-Canadian border.

DATES: Comments must be filed on or before May 31, 1988, and reply comments on or before June 15, 1988.

ADDRESS: Federal Communications Commission, Washington, DC 20554. In addition to filing comments with the FCC, interested parties should serve the petitioner, or its counsel or consultant, as follows: Donald E. Ross, Ross Broadcasting Company, Box 260, Old Forge, New York 13420 (Petitioner).

FOR FURTHER INFORMATION CONTACT: Leslie K. Shapiro, Mass Media Bureau, (202) 634-6530.

SUPPLEMENTARY INFORMATION: This is a summary of the Commission's Notice of Proposed Rule Making, MM Docket No. 88-130, adopted March 7, 1988, and released April 8, 1988. The full text of this Commission decision is available for inspection and copying during normal business hours in the FCC Dockets Branch (Room 230), 1919 M Street NW., Washington, DC. The complete text of this decision may also be purchased from the Commission's copy contrator, International Transcription Service, (202) 857-3800, 2100 M Street NW., Suite 140, Washington, DC 20037.

Provisions of the Regulatory Flexibility Act of 1980 do not apply to this proceeding.

Members of the public should note that from the time a Notice of Proposed Rule Making is issued until the matter is no longer subject to Commission consideration of court review, all *ex parte* contacts are prohibited in Commission proceedings, such as this one, which involve channel allotments. See 47 CFR 1.1231 for rules governing permissible *ex parte* contact.

For information regarding proper filing procedures for comments, see 47 CFR 1.415 and 1.420.

List of Subjects in 47 CFR Part 73

Radio broadcasting.

Federal Communications Commission.

Steve Kaminer,

Deputy Chief, Policy and Rules Division, Mass Media Bureau.

[FR Doc. 88-8321 Filed 4-14-88; 8:45 am]

BILLING CODE 6712-01-M

BEST COPY AVAILABLE

Notices

Federal Register
Vol. 53, No. 73
Friday, April 15, 1988

This section of the FEDERAL REGISTER contains documents other than rules or proposed rules that are applicable to the public. Notices of hearings and investigations, committee meetings, agency decisions and rulings, delegations of authority, filing of petitions and applications and agency statements of organization and functions are examples of documents appearing in this section.

DEPARTMENT OF AGRICULTURE

Office of the Secretary

State of Iowa Financial Incentive Program for Soil Erosion Control Payments; Determination of Primary Purpose for Amounts That May Be Excluded From Income

AGENCY: Office of the Secretary, USDA.

ACTION: Notice of Determination.

SUMMARY: The purpose of this notice is to announce the determination by the Secretary of Agriculture that certain State payments made to farmers under the Iowa Financial Incentive Program for Soil Erosion Control are deemed by the Secretary to have been made primarily for purposes of conserving soil and water resources, protecting or restoring the environment or providing a habitat for wildlife. This determination by the Secretary is made in accordance with section 126(b) of the Internal Revenue Code of 1954, as amended by section 543 of the Revenue Act of 1978 and the technical Corrections Act of 1979. The effect of this determination is to make it possible for recipients of these payments to exclude some or all of them from gross income for federal income tax purposes if certain other conditions are met.

FOR FURTHER INFORMATION CONTACT: Iowa Department of Soil Conservation, Wallace State Office Building East Ninth and Grand Avenue, Des Moines, Iowa 50319 (515–281–5851) or James R. McMullen, Director, Conservation and Environmental Protection Division, Agricultural Stabilization and Conservation Service, USDA, P.O. Box 2415, Washington, DC 20013.

SUPPLEMENTARY INFORMATION: Section 126 of the Internal Revenue Code of 1954, as amended by the Revenue Act of 1978 and the Technical Corrections Act of 1979, provides that certain payments made under State programs may be eligible for exclusion from gross income if certain determinations are made. The Secretary of Agriculture must determine whether payments made under a state program, as described in section 126(a) are "made primarily for the purpose of conserving soil and water resources, protecting or restoring the environment, improving forests, or providing a habitat for wildlife." In making this determination the Secretary of Agriculture must evaluate each program according to criteria set forth at 7 CFR Part 14.

One of the State conservation programs is the Iowa Financial Incentive Program for Soil Erosion Control. The program is authorized by the Iowa Code Ann section 467A (West 1987) and implemented in accordance with administrative regulations found at 780 Iowa Admin. Code, Ch. 5 that are promulgated by the Iowa Department of Soil Conservation. The Iowa Financial Incentive Program for Soil Erosion Control (IFIP) is a state funded cost share incentive program designated for the purpose of rendering financial assistance for the restoration and conservation of soil resources in that state.

Funds appropriated by the State legislature for the program go to the Iowa Department of Soil Conservation and are allocated to each of Iowa's 100 soil conservation districts. Each district is governed by five locally elected commissioners who administer the program and make funds available to landowners who have a signed cooperator agreement with the district. Technical assistance is provided through the districts to landowners.

Financial assistance under the program is available for land covered under a cooperator agreement. However, landowners who are required to install practices as a result of an administrative order or court order are not required to meet the district cooperator requirement. Eligible land is nongovernmental land used for agricultural purposes and which is greater than ten acres in size and which produces more than $2500 in value of agricultural products annually. Tracts of less than ten acres in size and from which less than $2500 of agricultural products are sold annually are not considered to be eligible lands unless approved by the district commissioners as a group project or as a continuation of an adjacent system. Cost-share assistance is limited to fifty percent of eligible costs incurred by the applicant in installing eligible practices. Eligible costs are machine hire or use of the applicant's equipment, needed materials delivered to and used at the site, and labor required to install the practice. Each District must execute a certification of need to qualify land for cost shares.

Cost-share payments are made to eligible producers under the program for the satisfactory installation of one of the following soil erosion control and abatement practices:

A. Temporary Practices

1. Iowa Till
2. No-till Planting

B. Permanent Practices

1. Critical Area Planting
2. Diversion
3. Field Windbreak
4. Grade Stabilization Structure
5. Grass Strips
6. Grassed Waterway or Outlet
7. Pasture and Hayland Planting
8. Terrace
9. Underground Outlet
10. Water Sediment Control Basin

The IFIP authorizing legislation, and regulations have been carefully examined using the criteria set forth in 7 CFR Part 14. The Department has concluded that the payments under the IFIP are made to provide financial assistance to agricultural producers for carrying out soil erosion control and abatement practices. An "Iowa Financial Incentive Program for Soil Erosion Control Record of Decision: Primary Purpose Determination for Federal Tax Purposes" has been prepared and is available upon request from the Conservation and Environmental Protection Division, ASCS.

Determination

Therefore, the Secretary of Agriculture has determined that, in accordance with section 126(b)(1) of the Internal Revenue Code of 1954, as amended, all payments made for conservation practices under the Iowa Financial Incentive Program for Soil Erosion Control after September 30, 1979, are made primarily for the purpose of conserving soil and water resources, protecting or restoring the environment,

improving forests, or providing a habitat for wildlife.

Signed at Washington, DC, on April 4 1988.

Richard E. Lyng,

Secretary of Agriculture.

[FR Doc. 88-8347 Filed 4-14-88; 8:45 am]

BILLING CODE 3410-05-M

Animal and Plant Health Inspection Service

[Docket No. 88-042]

Availability of Environmental Assessment and Finding of No Significant Impact Relative to Issuance of a Permit to Field Test Genetically Engineered Insect Tolerant Tomato Plants

AGENCY: Animal and Plant Health Inspection Service, USDA.

ACTION: Notice.

SUMMARY: This document provides notice that an environmental assessment and finding of no significant impact have been prepared by the Animal and Plant Health Inspection Service relative to the issuance of a permit to the Monsanto Agricultural Company to allow the field testing of genetically engineered tomato plants, designed to be tolerant to lepidopteran insects. The assessment provides a basis for the conclusion that the field testing of these genetically engineered tomato plants does not present a risk of plant pest introduction or dissemination and also will not have any significant impact on the quality of the human environment. Based upon this finding of no significant impact, the Animal and Plant Health Inspection Service has determined that an environmental impact statement need not be prepared.

ADDRESS: Copies of the environmental assessment and finding of no significant impact are available for public inspection at the Biotechnology and Environmental Coordination Staff, Animal and Plant Health Inspection Service, U.S. Department of Agriculture, Room 406, Federal Building, 6505 Belcrest Road, Hyattsville, MD 20782.

FOR FURTHER INFORMATION CONTACT: Dr. James White, Staff Biotechnologist, Biological Assessment and Support Staff, Biotechnology Permit Unit, Animal and Plant Health Inspection Service, U.S. Department of Agriculture, Room 813, Federal Building, 6505 Belcrest Road, Hyattsville, MD 20782, (301) 436-7769. For copies of the environmental assessment call Ms. Mary Petrie at Area Code (301) 436-7472, or write her at this same address. The environmental assessment should be requested under accession number 87-329-02.

SUPPLEMENTARY INFORMATION:

Background

On June 16, 1987, the Animal and Plant Health Inspection Service (APHIS) published a final rule in the **Federal Register** (52 FR 228992-22915) which established a new Part 340 in Title 7 of the Code of Federal Regulations (7 CFR 340) entitled, "Introduction of Organisms and Products Altered or Produced Through Genetic Engineering Which Are Plant Pests or Which There Is Reason to Believe Are Plant Pests" (hereinafter "the rule"). The rule regulates the introduction (importation, interstate movement, and release into the environment) of genetically engineered organisms and products which are plant pests or which there is reason to believe are plant pests (regulated articles). The rule sets forth procedures for obtaining a permit for the release into the environment of a regulated article and for obtaining limited permits for the importation or interstate movement of a regulated article. A permit must be obtained before a regulated article can be introduced in the United States.

APHIS has stated that it would prepare environmental assessments and, where necessary, environmental impact statements prior to issuing a permit for the release into the environment of a regulated article (see 52 FR 22906).

The Monsanto Agricultural Company of St. Louis, Missouri, has submitted an application for a permit for release into the environment of genetically engineered tomato plants that are designed to be tolerant to lepidopteran insects. In the course of reviewing the permit application, APHIS assessed the impact to the environment of releasing the tomato plants under the conditions described in the Monsanto application. APHIS concluded that the field testing will not present a risk of plant pest introduction or dissemination and will also not have any significant impact on the quality of the human environment.

The environmental assessment and finding of no significant impact which is based on data submitted by the Monsanto Agricultural Company, as well as a review of other relevant literature, provides the public with documentation of APHIS' review and analysis of the environmental impacts associated with conducting the field testing.

The facts supporting APHIS' finding of no significant impact are summarized below and are contained in the environmental assessment.

1. A gene for lepidopteran insect tolerance has been inserted into the tomato chromosome. In nature, chromosomal genetic material can only be transferred to other sexually compatible plants by cross-pollination. In this field test, the introduced gene cannot spread to other plants by cross-pollination, because the field test plot is located at a sufficient distance from any sexually compatible plants with which the experimental tomato plants could cross-pollinate.

2. Neither the insect tolerance gene itself, nor its gene product confers on tomato any plant pest characteristics.

3. The microorganism from which the insect tolerance gene was isolated is not a plant pest and is widely distributed in the environment as a soil inhabitant.

4. The vector used to transfer the insect tolerance gene to tomato plants has been evaluated for its use in this specific experiment and does not pose a plant pest risk in this experiment. The vector, although derived from a DNA sequence with known plant pest potential, has been disarmed; that is, genes that are necessary for producing plant disease have been removed from the vector. The vector has been tested and shown to be nonpathogenic to susceptible plants.

5. The vector agent, the bacterum that was used to deliver the vector DNA and the insect tolerance gene into the plant cells, has been shown to be eliminated and no longer associated with the transformed tomato plants.

6. Horizontal movement of the introduced gene is not possible. The vector acts by delivering and inserting the gene into the tomato genome (i.e., chromosomal DNA). The vector does not survive in or on the transformed plant. No mechanism of horizontal movement is known to exist in nature to move an inserted gene from a chromosome of a transformed plant to any other organism.

7. The toxic polypeptide produced by the insect tolerance gene is called delta-endotoxin. Upon ingestion, the toxin is activated and kills only lepidopteran insects. Delta-endotoxin is not toxic to most other insects, wild or domestic birds, fish or mammals. Because of its safety, its topical application on vegetable crops is permitted up to harvest date.

8. The field test site is 36 feet wide by 200 feet long and has good physical security. The plot is isolated from many species of wild plants and animals by irrigation canals and a surrounding area of cultivated land.

The environmental assessment and finding of no significant impact has been prepared in accordance with (1) The National Environmental Policy Act of

1969 (NEPA) (42 U.S.C. 4331 *et seq.*); (2) Regulations of the Council on Environmental Quality for Implementing the Procedural Provisions of NEPA (Title 40, Code of Federal Regulations (CFR) Parts 1500–1508); (3) USDA regulations implementing NEPA (7 CFR Part 1b); and (4) APHIS guidelines implementing NEPA (44 FR 50381–50384 and 44 FR 51272–51274).

Done at Washington, DC, this 12th day of April, 1988.

James W. Glosser,

Acting Administrator, Animal and Plant Health Inspection Service.

[FR Doc. 88–8348 Filed 4–14–88; 8:45 am]

BILLING CODE 3410-34-M

DEPARTMENT OF COMMERCE

International Trade Administration

[A–588–703]

Final Determination of Sales at Less Than Fair Value; Certain Internal-Combustion, Industrial Forklift Trucks From Japan

AGENCY: Import Administration, International Trade Administration, Commerce.

ACTION: Notice

SUMMARY: We determine that certain internal-combustion, industrial forklift trucks (forklifts) from Japan are being, or are likely to be, sold in the United States at less than fair value. We also determine that critical circumstances exist with respect to certain imports of forklifts from Japan. We have notified the U.S. International Trade Commission (ITC) of our determinations and have directed the U.S. Customs Service to continue to suspend liquidation of all entries of forklifts from Japan as described in the "Suspension of Liquidation" section of this notice. The ITC will determine, within 45 days of the date of publication of this notice, whether these imports are materially injuring, or threaten material injury to, a U.S. industry.

EFFECTIVE DATE: April 15, 1988.

FOR FURTHER INFORMATION CONTACT: Rick Herring or Gary Taverman, Office of Investigations, Import Administration, International Trade Administration, U.S. Department of Commerce, 14th Street and Constitution Avenue N.W., Washington, DC 20230; telephone: (202) 377–0187 or 377–0161.

SUPPLEMENTARY INFORMATION:

Final Determination

We determine that forklifts from Japan are being, or are likely to be, sold in the United States at less than fair value, as provided in section 735(a) of the Tariff Act of 1930, as amended (19 U.S.C. 1673d(a)) (the Act). The weighted-average dumping margins are shown in the "Suspension of Liquidation" section of this notice. We also determine that critical circumstances exist with respect to certain imports of forklifts from Japan, as outlined in the "Critical Circumstances" section of this notice.

Case History

Since our notice of preliminary determination (52 FR 45003, November 24, 1987), the following events have occurred.

On November 24, 27, and 30, and December 1, 1987, Komatsu Forklift Co., Ltd. (Komatsu), Toyota Motor Corp. (Toyota), Nissan Motor Co., Ltd. (Nissan), and Sumitomo-Yale Co., Ltd. (Sumitomo), respectively, requested a postponement of the final determination until not later than 135 days after the date of publication of the preliminary determination, pursuant to section 735(a)(2)(A) of the Act. On December 4, 1987, we issued a notice postponing the final determination until April 7, 1988, and rescheduling the public hearing until March 2, 1988 (52 FR 46805, December 10, 1987)

Scope of Investigation

The products covered by this investigation are certain internal-combustion, industrial forklift trucks, with lifting capacity of 2,000 to 15,000 lbs., currently provided for under items 692.4025, 692.4030, and 692.4070 of the *Tariff Schedules of the United States Annotated* (TSUSA). The corresponding Harmonized System (HS) numbers are 8427.20.00–0, 8427.90.00–0, and 8431.20.00–0. The products covered by this investigation are further described as follows: assembled, not assembled, and less than complete, finished and not finished, operator-riding forklift trucks powered by gasoline, propane, or diesel fuel internal-combustion engines of off-the-highway types used in factories, warehouses, or transportation terminals for short-distance transport, towing, or handling of articles. Less than complete forklift trucks are defined as imports which include a frame by itself or a frame assembled with one or more component parts. We understand that the frame by itself is the identifying feature and principal component part of the product, and is solely dedicated for the manufacture of a complete internal-combustion, industrial forklift truck.

Used Forklift Issue

Petitioners and several other interested parties have stated that genuinely "used" forklifts should not be included within the scope of this investigation and have submitted suggestions on how the Department can distinguish new and used forklifts. In our preliminary determination, we stated that we considered any forklift to be used if, at the time of entry into the United States, the importer could demonstrate to the satisfaction of the U.S. Customs Service that the forklift was manufactured at least three years prior to the date of entry. We will now consider as used forklifts exported from Japan to the United States if, at the time of entry into the United States, the importer can demonstrate to the satisfaction of the U.S. Customs Service that the forklift was manufactured in a calendar year at least three years prior to the year of entry into the United States. If the U.S. Customs Service accepts the importer's contention that the forklift is used, it will not be subject to the suspension of liquidation (*See* DOC Position to Comment 31).

Period of Investigation

Sales of forklifts often involve significant after-sale price adjustments. In order to capture all after-sale price adjustments on sales of forklifts from Japan to the United States, we chose as the period of investigation the six months from August 1, 1986, through January 31, 1987, as permitted by 19 CFR 353.38(a).

Such or Similar Comparisons

For all respondent companies, pursuant to section 771(16)(C) of the Act, we established four categories of "such or similar" merchandise on the basis of load (lifting) capacity of the forklift (*i.e.*, 2,000–3,000 lbs; 3,001–5,999 lbs.; 6,000–9,999 lbs.; 10,000–15,000 lbs.). Within these categories, we based our product comparisons on 12 primary characteristics. These are load capacity, tire type, upright style, engine type, transmission type, maximum fork height, engine size, carriage type, fork arm type, hose reel, hydraulic control valve, and fork arm length. Where there was no identical product in the home market with which to compare a product imported into the United States, we selected the most similar product on the basis of the 12 characteristics listed above.

In order to determine whether there were sufficient sales of forklifts in the home market to serve as the basis for calculating foreign market value, we compared the volume of home market sales within each such or similar category to the volume of third country sales within each respective such or

similar category, in accordance with section 773(a)(1) of the Act. We determined that, for Toyota and Komatsu, there were sufficient home market sales to unrelated customers or arm's-length sales to related customers for each such or similar category to form an adequate basis for comparison to the forklifts imported into the United States. For Nissan, we determined that there were insufficient home market sales for one such or similar category. Therefore, we used constructed value as the basis for foreign market value for that such or similar category. For Sanki, there were no home market sales of new forklifts. Therefore, we used constructed value as the basis for foreign market value for comparison to all U.S. sales.

Fair Value Comparisons

To determine whether sales of forklifts from Japan to the United States were made at less than fair value, we compared the United States price to the foreign market value as specified below.

For the reasons cited below, we have determined, in accordance with section 776(b) of the Act, that use of best information available is appropriate for Kasagi, TCM, and Sumitomo. This statutory provision requires the Department to use best information available "whenever a party or any other person refuses or is unable to produce information requested in a timely manner or in the form required, or otherwise significantly impedes an investigation."

Prior to the scheduled date of verification, TCM informed the Department of extensive errors in the data which it had submitted and which the Department had used for the preliminary determination. The Department determined that the necessary revisions to TCM's information were so substantial that such revisions would constitute a new response. While the Department allows minor revisions to questionnaire responses after the preliminary determination and during verification, it is well-established Department policy not to allow new responses to be filed after the preliminary determination. This is because at that point there is insufficient time for proper analysis and verification by the Department. Consequently, the Department informed TCM that it would not accept any new submissions correcting the deficiencies and errors and would not verify TCM's sales and cost of production responses. Nevertheless, TCM submitted a new response on January 8, 1988, more than four months after the original questionnaire response was due and almost two months after our preliminary determination which was on November 18, 1987. This information could not be analyzed, verified, or used in this determination.

Had we accepted this information for use in this determination, we would have been required to analyze, among other things, TCM's new product concordances, costs relating to difference in merchandise claims, and new U.S. value-added data. In addition, we would have had to review computer printouts containing data on a substantial number of sales transactions. Further, given the extensive deficiencies found in TCM's earlier submissions (four deficiency questionnaries were issued with regard to TCM's original questionnaire response), follow-up questionnaires for additional information would have been likely.

A new response submitted so late in this investigation would have precluded petitioners and other interested parties from commenting on the new responses. Moreover, verification of TCM would have been delayed by at least one month, allowing the Department insufficient time to conduct verification, prepare verification reports, hold the public hearing, provide an adequate opportunity for the parties to submit briefs, and to prepare the final notice. For these reasons, we have not accepted TCM's January 8, 1988 response for use in this determination. Accordingly, we have assigned TCM the highest company rate calculated in this investigation as best information available. (*See* also DOC Positions to Comments 5 and 6.)

With respect to Sumitomo, the Department found numerous discrepancies and errors in methodology and mathematical calculations at verification. In addition, Sumitomo was unable to support substantial portions of its sales and cost responses at verification. The deficiencies found during verification are outlined in detail in the public versions of our verification reports. During and after verification, Sumitomo presented new and revised information which we have determined constitutes a new response which was submitted too late in the investigatory process for proper analysis and verification. For these reasons, we have assigned Sumitomo the highest company rate calculated in this investigation as best information available. (*See* also DOC Position to Comment 8 below.)

Kasagi failed to respond to our questionnaire prior to the preliminary determination. It is Department policy not to accept initial questionnaire responses after the preliminary determination is issued. It is inappropriate for a respondent to base its decision to respond to our questionnaire on the rate it is assigned in the preliminary determination. Therefore, we have assigned Kasagi, as best information available, the highest margin supplied in the petition for any company. This is the same rate it was assigned in the preliminary determination.

United States Price

For sales made directly to unrelated parties prior to importation into the United States, we based the United States price on purchase price, in accordance with section 772(b) of the Act.

For sales made through a related sales agent in the United States to an unrelated purchaser prior to the date of importation, we also used purchase price as the basis for determining United States price. For these sales, the Department determined that purchase price was the most appropriate indicator of United States price based on the following elements:

1. The merchandise in question was shipped directly from the manufacturer to the unrelated buyer, without being introduced into the inventory of the related selling agent;

2. This was a customary commercial channel for sales of this merchandise between the parties involved; and

3. The related selling agent located in the United States acted only as a processor of sales-related documentation and a communication link with the unrelated U.S. buyer.

Where all of the above elements are met, we regard the routine selling functions of the exporter as merely having been relocated geographically from the country of exportation to the United States, where the sales agent performs them. Whether these functions are performed in the United States or abroad does not change the substance of the transactions or the functions themselves.

Where the sale to the first unrelated purchaser took place after importation into the United States, we based United States price on exporter's sales price (ESP), in accordance with section 772(c) of the Act.

The calculation of United States price for each respondent is detailed below.

A. *Toyota*: We calculated purchase price and ESP based on the packed, c&f, c.i.f., and delivered prices to unrelated customers in the United States. To arrive at the actual gross ESP, we deducted the value of unattached options invoiced with the forklift, where

appropriate. We made deductions from purchase price and ESP, where appropriate, for foreign inland freight, foreign inland insurance, export brokerage, ocean freight, marine insurance, import brokerage, U.S. duty, and U.S. inland freight, in accordance with section 772(d) of the Act. We also made deductions, where appropriate, for discounts and rebates. We made further deductions from ESP, where appropriate, for credit expenses, warranties, advertising, service payments to dealers, and indirect selling expenses, pursuant to sections 772(e)(2) of the Act. For ESP transactions involving further manufacture prior to sale in the United States, we deducted all value added in the United States pursuant to section 772(e)(3) of the Act.

Toyota calculated its credit expense on ESP transactions not financed by Toyota based on the actual number of days between invoice and payment. We recalculated this credit expense to include an additional period of time from shipment to invoice. Toyota calculated its credit expense on ESP transactions financed by Toyota from the date the sale is posted in its books to the date that Toyota no longer absorbs credit costs on behalf of its dealers. We recalculated this credit expense to include an additional period of time from shipment to invoice based on the actual number of days from shipment to invoice, plus four days to account for the average number of days from invoice to the date the sale is posted in Toyota's books.

For inventory carrying costs, Toyota's parent company reported a greater number of days than its subsidiary for the period for which merchandise is held in inventory in Japan. Based on verified information, we recalculated inventory carrying costs to include an additional three days representing the greatest difference between the two reported time periods.

Toyota reported U.S. import duties on fork arms based on the cost of manufacture rather than the sales value. We increased the amount of reported duties based on the difference between the invoice value of the fork arm and its cost of manufacture.

Toyota claimed a deduction from ESP for a rebate to dealers for the installation of options at dealer locations. We treated these expenses as value added since this constitutes further manufacture or processing subcontracted to dealers.

Toyota did not claim, but did incur, expenses related to demonstration forklifts on ESP transactions. Based on documents gathered at verification, we calculated an expense for demonstration vehicles which was applied to sales of the same models as the demonstration vehicles. This was then deducted from the United States price as a direct advertising expense.

Toyota claimed a deduction for U.S. inland insurance. During verification, we discovered that this claim was for property insurance rather than inland insurance. As such, we are treating this as an indirect selling expense.

B. *Nissan*: We calculated ESP based on the packed, c.i.f. and delivered prices to unrelated customers in the United States. To arrive at the actual gross ESP, we added credit revenue earned on each transaction, and deducted the value of unattached options invoiced with the forklift, where appropriate. We made deductions from ESP, where appropriate, for foreign inland freight, foreign inland insurance, shipping charges, invoice preparation fees, ocean freight, marine insurance, U.S. duty, import brokerage, and U.S. drayage, in accordance with section 772(d)(2) of the Act. We also made deductions, where appropriate, for discounts and rebates. We made further deductions from ESP, where appropriate, for credit expenses, technical services, warranties, advertising, service payments to dealers, incentive payments to dealers, and indirect selling expenses, pursuant to sections 772(e)(2) of the Act. For ESP transactions involving further manufacture prior to sale in the United States, we deducted all value added in the United States, pursuant to section 772(e)(3) of the Act.

Nissan did not report certain after-sale adjustments to prices and discounts. We amended the prices and discounts reported for after-sale adjustments discovered at verification.

Nissan reported foreign inland freight on U.S. sales based on rates charged by a related trucking company. At verification, we were unable to validate the freight rates claimed on export sales and found that these rates were generally lower than the rates charged by the same trucking company on sales destined for the home market over a comparable distance. Therefore, based on information obtained at verification, we used the rates charged by this trucking company on home market sales for the foreign inland freight deduction on U.S. sales.

Nissan claimed an average brokerage expense on U.S. sales. We recalculated the average to correct errors discovered at verification.

At verification, we found that Nissan based its credit expense and credit revenue calculations on incorrect payment terms. Because we were unable to verify specific payment terms for each sale, we recalculated credit expense and credit revenue based on the longest verified payment term. For sales to end-users, we recalculated the credit expense based on the verified payment terms.

Nissan included in its claimed technical service expenses certain indirect selling expenses and certain value-added expenses. In addition, Nissan underreported its direct travel expenses. We allowed the corrected travel expense figure as a technical service expense directly related to specific sales and treated the remainder, less the value-added expense, as an indirect selling expense.

Nissan underreported its advertising expenses on U.S. sales. We allowed the correct amount based on information reviewed at verification as a direct advertising expense.

Nissan claimed certain incentive payments to dealers' salesmen as an indirect selling expense. We treated these payments as a direct selling expense since they were directly related to particular sales.

We were unable to verify Nissan's total reported U.S. indirect selling expenses incurred in the home market. Since no information was provided by petitioners, we have deducted the full amount reported by Nissan from ESP, as best information available, for purposes of this determination.

Nissan reported inventory carrying costs from the date of export to the date of shipment to the U.S. customer. We added 15 days to account for the period from production to export based on petitioners' experience. We then recalculated inventory carrying costs based on the cost of manufacture of the product as imported and the home market and U.S. short-term borrowing rates.

We were unable to verify Nissan's reported product liability expense on U.S. sales. Therefore, we based the amount used for purposes of this determination on the U.S. industry's product liability experience.

C. *Komatsu*: We calculated purchase price and ESP based on the packed, f.o.b., c.i.f., and delivered prices to unrelated customers in the United States. To arrive at the actual purchase price or ESP, we added credit revenue earned on each transaction, where appropriate, and we deducted the value of unattached options invoiced with the forklift from the gross invoice price. We made deductions from purchase price and ESP, where appropriate, for foreign inland freight, foreign inland insurance, export brokerage, ocean freight, marine insurance, import brokerage, U.S. duty,

and U.S. inland freight, in accordance with section 772(d)(2) of the Act. We also made deductions, where appropriate, for discounts and rebates. We made further deductions from ESP, where appropriate, for credit expenses, warranties, advertising, service payments to dealers, and indirect selling expenses, pursuant to sections 772(e) (1) and (2) of the Act.

Komatsu reported certain advertising expenses incurred in the United States as indirect selling expenses. We have treated these expenses as direct selling expenses and reduced indirect selling expenses accordingly.

Komatsu reported inventory carrying costs on ESP sales based on average days in inventory and average inventory values. For this determination, we have recalculated inventory carrying costs for ESP sales from the date of entry into the United States to the date of shipment to the U.S. customer in order to more accurately determine these costs. We also added 45 days for the period from production to entry into the United States based on petitioners' U.S. experience. We then recalculated inventory carrying costs on ESP sales based on the cost of manufacture of the product as imported and the home market and U.S. short-term borrowing rates.

Komatsu reported the total credit expense from the date of shipment to the date of payment, net the amount of interest which Komatsu charged its customers. At verification, Komatsu was unable to substantiate its claim that interest charges levied on U.S. customers were in fact paid. Therefore, we have disallowed this claim and have recalculated credit expenses based on the full amount outstanding from shipment date to payment date. We have used the home market and U.S. short-term borrowing rates as appropriate.

D. *Sanki*: We calculated purchase price based on the c.i.f. prices to unrelated customers in the United States. We made deductions from purchase price, where appropriate, for foreign inland freight, export brokerage, ocean freight, and marine insurance, in accordance with section 772(d)(2) of the Act.

Foreign Market Value

In accordance with section 773(a) of the Act, we calculated foreign market value based on home market sales and, where appropriate, constructed values. The calculation of foreign market value for each respondent is detailed below.

A. *Toyota*: We calculated foreign market value based on the c&f and f.o.b. prices to unrelated and related dealers in the home market. We included sales to related dealers, pursuant to 19 CFR 353.22(b), since we were able to verify that prices paid by those dealers were comparable to prices paid by unrelated dealers for such or similar merchandise.

We made deductions from the home market price, where appropriate, for inland freight and rebates. We added U.S. packing to the home market price, in accordance with section 773(a)(1) of the Act. No packing costs were claimed on home market sales.

For comparisons involving purchase price sales, we made adjustments to the home market price, where appropriate, for differences in credit expenses, warranties, and advertising, pursuant to 19 CFR 353.15. For comparisons involving ESP transactions, we made further deductions from the home market price, where appropriate, for home market credit expenses, warranties, and advertising, and we made an adjustment to the home market price for indirect selling expenses, in accordance with 19 CFR 353.15(c). We made further adjustments to the home market price to account for differences in the physical characteristics of the merchandise, in accordance with section 773(a)(4)(C) of the Act.

Toyota calculated its home market credit expense based on the actual number of days from invoice to payment. We recalculated this expense based on the actual number of days from shipment to payment.

Toyota claimed an adjustment for temporary exchange rate fluctuations. We disallowed this adjustment pursuant to 19 CFR 353.56(b), since the movement in the exchange rate is part of a sustained change in the rate and not a temporary fluctuation, and because Toyota did not provide evidence that its U.S. prices have been revised to account for the movement in the exchange rate.

Toyota claimed a deduction from the home market price for an advertising campaign for the 500,000th Production—30th Anniversary and for the 1985 International Materials Handling Exhibition. We disallowed these deductions since these expenses were incurred before the period of investigation.

At verification, we found that advertising expenses incurred on purchase price transactions had not been reported. Therefore, based on information obtained at verification, we calculated an amount for advertising and made the adjustment to the home market price.

Toyota claimed a deduction from the home market price for expenses incurred in introducing a new model series to its dealers. We allowed only the portion of the expenses claimed that was incurred during the period of investigation as an indirect selling expense.

Toyota claimed a deduction from the home market price for discounts on the sale of demonstration forklifts of a new model series. We trated these discounts as a direct advertising expense.

Toyota also claimed, as a direct selling expense, and adjustment to the home market price for a computerized customer management system. We disallowed this adjustment since we found that this program was not used for the promotion of sales of the merchandise under investigation.

B. *Nissan*: We calculated foreign market value based on delivered prices to unrelated and related dealers in the home market. We included sales to related dealers, pursuant to 19 CFR 353.22(b), because we were able to verify that prices paid by those dealers were comparable to prices paid by unrelated dealers for such or similar merchandise.

Petitioners alleged that Nissan's home market sales were made at less than the cost of production and that constructed value should be used to compute foreign market value. We compared the home market prices, net inland freight, discounts, and rebates, to the cost of production which included materials, fabrication costs, and general expense.

Cost of production was based on the respondent's information with the following adjustments. To determine actual costs from standard costs, we used the variance of the plant where forklifts are produced instead of the reported company-wide variance. Interest expense was included, based on the consolidated Ministry of Finance Report and supplemented with information from the non-consolidated financial statements when required, after adjusting for credit and inventory carrying costs. The adjusted interest expense was allocated over the actual cost of sales. Material costs from related suppliers were increased based on information gathered at verification for a selected sample of related suppliers with respect to sales of the same materials to unrelated parties. Actual research and development expenses were reallocated based on the actual cost of sales. For selling expenses, we used the data from the sales response (*see* adjustments discussed below). Although we were unable to verify certain items in Nissan's reported indirect selling expenses on home market sales, as best information available, we included the total amount

reported in determining general expenses.

Where there were no, or insufficient, sales of such or similar merchandise at prices above the cost of production, as defined in section 773(b) of the Act, we used constructed value as the basis for calculating foreign market value. Constructed value was based on the respondent's information, except for those changes made to the cost of production data described above. We calculated a weighted-average home market selling expense based on sales in the home market of all products in the appropriate such or similar product category. Since Nissan's general expenses exceeded the statutory minimum of ten percent of the cost of materials and fabrication, we used actual general expenses in calculating the constructed value, in accordance with section 773(e)(1)(B)(i) of the Act. Since Nissan's reported home market profit was less than eight percent of materials, fabrication, and general expenses, we used the statutory minimum of eight percent in calculating constucted value, in accordance with section 773(e)(1)(B)(ii) of the Act.

We added U.S. packing costs to constructed value and made deductions from constructed value for credit expenses, warranties, advertising, technical services, and certain incidental warranty-type expenses. We also made an adjustment to constructed value for indirect selling expenses, in accordance with 19 CFR 353.15(c). Since we were unable to fully verify Nissan's reported indirect selling expenses (*e.g.*, other expenses which accounted for approximately 25 percent of the total claim could not be documented) on home market sales, we allowed those items which were verified.

Where we found sufficient above-cost sales in the home market to form a basis for comparison, we calculated foreign market value based on delivered prices to unrelated and related dealers in the home market. We created a new concordance based on the above-cost home market sales and the products as imported, according to the procedure outlined in the original questionnaire. To determine the actual gross home market price, where appropriate, we added credit revenue. We made deductions from the home market price, where appropriate, for inland freight, discounts, and rebates. We added U.S. packing to the home market price, in accordance with section 773(a)(1) of the Act. No packing costs were claimed on home market sales.

Because all of Nissan's U.S. sales were ESP, we made further deductions from the home market price, where appropriate, for credit expenses, warranties, advertising, technical services, certain incidental warranty-type expenses, and demonstration vehicle expenses, and we made an adjustment to the home market price for indirect selling expenses, in accordance with 19 CFR 353.15(c). We made adjustments to the home market price to account for differences in the physical characteristics of the merchandise, in accordance with section 773(a)(4)(C) of the Act.

Nissan reduced its home market prices for certain account adjustments offered to its customers based on previous sales. We amended these prices to reflect actual selling prices, based on information reviewed at verification.

Nissan overreported several rebates paid. We allowed the corrected rebates. Nissan reported a certain rebate on two forklifts which did not qualify for the rebate according to the rebate agreement. We did not allow this rebate on these two sales. In addition, Nissan claimed a different type of rebate on home market sales which was never paid. We did not allow this rebate on any sales.

Nissan claimed a deduction from the home market price for certain payments made to dealers with respect to demonstration vehicles. We allowed this payment as a direct advertising expense on sales of the same models as the demonstration vehicles. Nissan also claimed deductions from the home market price for certain payments made to dealers with respect to service vans, facility improvements, and assistance for profit/loss ratios. We allocated these payments over average dealer revenue for sales of new forklifts, sales of parts, and servicing and treated these as indirect selling expenses.

Nissan reported credit expense on installment sales based on an average monthly payment and an average payment date. We recalculated credit expense based on the declining balance of both principal and interest.

Nissan claimed the cost of an exhibition held outside the period of investigation as a direct advertising expense. We did not allow this expense.

Nissan claimed expenses for certain service schools, service manuals, and other training as a direct technical service expense. We treated these as an indirect selling expense.

We were unable to verify certain items in Nissan's reported indirect selling expenses on home market sales. Therefore, we allowed only those items which were verified.

We were unable to verify the average number of days over which Nissan calculated its inventory carrying costs. Therefore, we used an average number of days based on shipment ledgers reviewed at verification. We then recalculated inventory carrying costs based on the cost of manufacture of the product sold and the home market short-term borrowing rate.

Nissan reported a commission paid to its employees on home market sales. We treated this as an indirect selling expense since, in its response, Nissan did not tie these commissions to specific sales.

Nissan claimed warranty expenses incurred outside the warranty period, but within the period of investigation, as a direct selling expense. We treated these expenses as indirect selling expenses since they were not anticipated at the time of the sale, and are not true warranty expenses but rather goodwill expenses.

C. *Komatsu:* Petitioners alleged that Komatsu's home market sales were made at less than the cost of production and that constructed value should be used to compute foreign market value. We compared the home market prices, net inland freight and inland insurance, to the cost of production which included materials, fabrication costs, and general expenses. We made adjustments to G&A to represent an allocation based on the cost of manufacturing rather than the selling price as reported in the response. We also adjusted G&A to include parts center expenses not reported in the response. Interest expense was recalculated to reflect only the interest expense incurred in the cost of manufacturing.

Following the methodology explained above in the "Foreign Market Value" section B for Nissan, we determined that there were sufficient numbers of sales in each such or similar category above the cost of production to base foreign market value on home market sales.

We calculated foreign market value based on delivered prices to unrelated customers in the home market. We created a new concordance based on the above-cost home market sales and the products as imported, according to the procedure outlined in the original questionnaire. To determine the actual gross home market price, we added credit revenue, where appropriate. We made deductions from the home market price, where appropriate, for inland freight and insurance. We added U.S. packing to the home market price, in accordance with section 773(a)(1) of the Act. No packing costs were claimed on home market sales. We made adjustments to the home market price to account for differences in the physical

characteristics of the merchandise, in accordance with section 773(a)(4)(C) of the Act.

For comparisons involving purchase price sales, we made adjustments to the home market price, where appropriate, for differences in credit expenses, technical services, warranties, advertising, service payments to dealers, and commissions, pursuant to 19 CFR 353.15. For comparisons involving ESP transactions, we made further deductions from the home market price, where appropriate, for credit expenses, warranties, and technical services; and we made an adjustment to the home market price for indirect selling expenses, in accordance with 19 CFR 353.15(c).

For installment sales in the home market, the selling price was based on the total payments received, which included both principal and interest revenue. Credit expense was calculated based on the declining balance of both principal and interest. For installment sales with a payment period of 12 months or more, we used a compound interest rate in the credit expense calculation. For purchase price sales to a trading company on which Komatsu charged interest for late payment, we calculated credit expense from the date the forklift left the factory to the date payment was received. For purchase price sales on which no interest was charged, we calculated credit expense from the date of export at the f.o.b. point to the date payment was received.

Komatsu claimed home market expenses incurred in preparing forklifts prior to delivery as a direct selling expense. At verification, we learned that this expense included charges which relate to options and attachments costs. We requested that Komatsu report these expenses separately as options, rather than including them as pre-delivery expenses. In its revised response, Komatsu reported additional costs under options and attachments but did not provide an explanation of these adjustments, as requested at verification. Furthermore, we were unable to reconcile the reallocations in the revised response to the response which was used at verification. Therefore, we have disallowed this adjustment for purposes of this determination.

We added inventory carrying costs to the total indirect selling expenses on purchase price sales as an offset to home market commissions, pursuant to § 353.15(c). Komatsu reported inventory carrying costs on purchase price sales based on average days in inventory and average inventory values. For this determination, we recalculated these costs based on the cost of manufacture of the product as imported and the home market short-term borrowing rate. We used 15 days for the period from production to export, based on petitioners' experience.

In addition, Komatsu claimed a level of trade adjustment to compensate for alleged differences in levels of trade existing between the U.S. and home markets in sales of forklifts.

Pursuant to 19 CFR 353.19, we disallowed this adjustment because Komatsu did not establish that it experienced actual differences in selling costs associated with sales at different levels of trade in the home market. (*See* Comment 86 below.)

D. *Sanki:* We used constructed value as the basis for calculating foreign market value because we determined that there were no sales by Sanki of new forklifts in the home market. Constructed value was calculated in accordance with section 773(e) of the Act. Given that Sanki is a reseller of forklifts, we considered the cost of manufacturing to be equal to Sanki's acquisition cost of the forklift. Because Sanki did not report SG&A or profit, we used the statutory minima of ten and eight percent, respectively, in accordance with section 773(e)(1)(B)(i) of the Act.

Currency Conversion

For comparisons involving purchase price transactions, we made currency conversions in accordance with 10 CFR 353.56(a)(1). For comparisons involving ESP transactions, we used the official exchange rates in effect on the dates of sale, in accordance with section 773(a)(1) of the Act, as amended by section 615 of the Trade and Tariff Act of 1984. All currency conversions were made at the rates certified by the Federal Reserve Bank.

Critical Circumstances

Under section 635(a)(3) of the Act, critical circumstances exist if we determine that there is a reasonable basis to believe or suspect that:

(A) (i) there is a history of dumping in the United States or elsewhere of the class or kind of the merchandise which is the subject of the investigation, or

(ii) the person by whom, or for whose account, the merchandise was imported knew or should have known that the exporter was selling the merchandise which is the subject of the investigation at less than its fair value, and

(B) there have been massive imports of the class or kind of merchandise which is the subject of the investigation over a relatively short period.

The purpose of a critical circumstances finding is to deter foreign manufacturers from increasing levels of imports sold at less than fair value prior to the suspension of liquidation. Pursuant to section 737(a)(3)(B) of the Act, we generally consider the following factors in determining whether imports have been massive over a relatively short period of time: (1) The volume and value of the imports; (2) seasonal trends; and (3) the share of domestic consumption accounted for by imports.

We have in the past determined whether imports have been massive by examining the Department's import data. However, because the Department's import data on forklifts includes within the same TSUSA categories products not covered by the scope of this investigation, we determined in this case that company-specific data on shipments of the products under investigation were the most appropriate on which to base our determinations of critical circumstances. Furthermore, we believe that company-specific critical circumstances determinations better fulfill the objective of the critical circumstances provisions of deterring specific companies that may try to massively increase imports prior to the suspension of liquidation. Based on our analysis of the verified shipment data of the individual respondent manufacturers, including Sumitomo and TCM, we have found that there is a reasonable basis to believe or suspect that imports of forklifts from Nissan and TCM have been massive over a relatively short period. Therefore, we find that the requirements of section 735(a)(3)(B) are met with respect to imports of forklifts by these two companies.

Pursuant to section 735(a)(3)(A)(i) of the Act, we have examined recent antidumping duty cases and found that, as of the date of filing of the petition in this investigation, there were no findings in the United States or elsewhere involving the dumping of forklifts by Japanese manufacturers, producers, or exporters. In accordance with section 733(e)(1)(A)(ii) of the Act, it is our standard practice to impute knowledge of dumping when the estimated margins in our determination are of such a magnitude that the importer should realize that dumping exists with regard to the subject merchandise. Normally, we consider estimated margins of 25 percent or greater to be sufficient (*See, e.g., Final Determination of Sales at Less Than Fair Value; Tapered Roller Bearings and Parts Thereof, Finished or Unfinished, From Italy* (52 FR 24198, June 29, 1987)). However, in cases where

the foreign manfuacturer sells in the United States through a related company, we consider that lower margins may be sufficient. Since Nissan and TCM sell in the United States through related companies, we find that the requirements of section 733(e)(1)(A) are met for these companies. Therefore, we determine that critical circumstances exist with respect to imports of forklifts by Nissan and TCM.

We have based the determination of critical circumstances with respect to imports of forklifts by Sanki, Kasagi, and "all others" on the total verified shipment data of the respondent manufacturers. Because these manufacturers account for over 80 percent of all shipments of forklifts to the United States in 1987, we believe these to be the most accurate data available to the Department. Based on our analysis of total shipments of these five manufacturers, we have determined that imports have not been massive over a relatively short period of time; and, therefore, critical circumstances do not exist with respect to imports of forklifts by Sanki, Kasagi, and "all others".

Verification

Except where noted, we verified the information used in making our final determination in accordance with section 776(a) of the Act. Department officials spent approximately seven weeks both in Japan and the United States verifying the responses submitted. We used standard verification procedures including examination of relevant accounting records and original source documents of the respondents. Our verification results are outlined in detail in the public versions of the verification reports which are on file in the Central Records Unit (Room B-099) of the Main Commerce Building.

Interested Party Comments

Comment 1: Petitioners contend that the respondents in this investigation submitted revised information after verification which changes significantly the information previously submitted, and that it is inappropriate for the Department to accept such information because it was not verified. Petitioners state that the purpose of verification is for the Department to confirm the accuracy of the questionnaire response; it is not an opportunity for respondents to correct significant mistakes and revise methodologies used in their responses. Petitioners argue, therefore, that in the absence of verified information, the Department should use best information available.

Petitioners also contend that the reported difference in merchandise adjustments and cost of production information submitted by respondents does not reconcile with their sales information. Therefore, the Department should reject respondents' information or, at a minimum, use the information that is least beneficial to respondents in analyzing the difference in merchandise adjustments, cost of production data, and the selling expenses claimed.

DOC Position: Except where noted, the information used in this determination has been verified. Where there were minor errors found during verification on certain charges or adjustments, we verified the corrected information and instructed respondents to submit revised responses containing the verified information. For charges or adjustments which we were unable to verify, and where information in the cost response and in the sales response could not be reconciled, we used best information available. Where we were unable to verify substantial portions of the response, as in the case of Sumitomo, or where we made a determination not to verify a response due to its untimely submission, which prevented us from analyzing and verifying it in a mannner consistent with our statutory obligations, as in the cases of TCM and Kasagi, we disregarded the entire response and used best information available.

Comment 2: Petitioners contend that Toyota's responses have been untimely and have contained substantial revisions and discrepancies, and unexplained price variations on home market related-party sales. Toyota also failed to submit accurate information until after verification on the characteristics of the products as imported, and that the changes in this data resulted in changes in Toyota's difference in merchandise claims and in its U.S. value-added data. Because the changed data were not submitted until after verification, they could not have been verified by the Department. Petitioners further argue that, just as TCM's failure to submit proper information on a timely basis resulted in the Department's rejection of its data, the Department should also reject Toyota's response and rely on best information available for the final determination.

Toyota contends that all of the variable cost figures for its difference in merchandise adjustments have been properly reported and verified. Therefore, Toyota maintains that the Department should make its final determination based upon the verified data submitted and reject petitioners' request that best information be used.

DOC Position: We verified the information submitted by Toyota which was used in this determination, including the changes to the characteristics of the product as imported and the difference in merchandise and value-added information. Unlike TCM and Sumitomo, these changes affected only a small percentage of Toyota's U.S. sales, while the changes that would have been required of TCM and Sumitomo would have affected over 50 percent of their U.S. sales. As such, Toyota's changes were not so extensive as to constitute a new response submitted after the preliminary determination.

Comment 3: Petitioners contend that the Department should reject Nissans's response and use best information available for purposes of the final determination because (1) Nissan's responses have been untimely, replete with errors, and are unreliable; and (2) Nissan failed to provide home market matches for certain of its U.S. sales.

Nissan contends that errors are inevitable in a case of this magnitude and complexity, that it has corrected its data when necessary, and that there is no basis for rejecting its response. Nissan argues that it did not provide model comparisons for two categories of U.S. sales based upon approval from the Department.

DOC Position: Except in the instances noted above, all information submitted by Nissan and used in our final determination has been verified. For charges and adjustments which we were unable to verify, we used best information available, as explained in the "Foreign Market Value" and "United States Price" sections of this notice. In addition, in accordance with our instructions, Nissan was not required to provide home market product comparisons for certain U.S. sales because the number of such sales was insignificant. We did not include these sales in our price-to price calculations. For other U.S. sales for which Nissan did not provide cost of manufacture data, we used the cost of manufacture data provided by Nissan for similar models.

Comment 4: Petitioners contend that Komatsu's cost of manufacture data and its direct and indirect selling expenses as reported in the cost of production and constructed value responses are inconsistent with the data and expenses reported in its home market sales response. Petitioners also contend that the cost data in Komatsu's cost of production response do not reconcile

with the cost data in its product concordance. Therefore, the Department should reject all of Komatsu's data for purposes of the final determination and use as best information available the highest margin alleged in the petition or the highest margin found for another respondent, whichever is greater.

Komatsu contends that, as the verification reports show, its data have been verified in all material respects and constitute a reliable basis for the Department's final determination.

DOC Position: We used verified cost of manufacture data as reported in the cost of production response and verified selling expenses as reported in the sales response for purposes of this determination.

Comment 5: Petitioners contend that, because TCM failed to supply adequate information, for the final determination the Department should use as best information available the highest margin alleged in the petition of 56.81 percent or the highest margin found for another respondent, whichever is greater.

TCM contends that the revisions incorporated in its submission of January 8, 1988 are not so extensive as to constitute a "new response" or to justify the Department's refusal to verify its data. TCM argues that all other companies subject to this investigation apparently discovered, just prior to or during the course of verification, errors in their data that seem to be at least as substantial as the revisions contained in TCM's submission. TCM contends that the Department erred in refusing to verify the data submitted in response to the Department's questionnaires. TCM also argues that the only difference between the positions of the other companies and TCM is one of timing.

TCM further contends that the Department should not determine a dumping margin for TCM based on best information available but should apply the "all others" rate to TCM in the final determination because (1) the Department should have verified TCM's data and (2) TCM has cooperated with the Department in a complex investigation in which mistakes are inevitable. Citing recent antidumping determinations, TCM contends that, if the Department determines that it must apply a rate adverse to TCM, it should apply the average of the TCM rates alleged in the petition.

DOC Position: In accordance with section 776(b) of the Act, we have used the highest company rate calculated in this investigation as best information available for TCM.

We disagree with TCM's contention that the correction of the errors discovered in its response would not have required the submission of a "new" response. As stated in TCM's letter of December 8, 1987, the errors in the company's response affected over 50 percent of its reported U.S. sales. In a meeting with Department officials on December 17, 1987, TCM stated that to correct the errors in its submission would require the filing of "new" responses. Further, in that meeting and in a letter dated December 22, 1987, TCM informed the Department that these errors affected not only the characteristics of the imported products, but also: (1) The product matches in the home market; (2) the difference in merchandise claims; and (3) the amounts reported for U.S. value-added. On December 31, 1987, the Department issued a letter to TCM stating that a response correcting errors of this magnitude would constitute a new repsonse. Therefore, such a response would not be accepted because it would be received after the preliminary determination and would not allow the Department sufficient time to analyze the information. Consequently, verification was not conducted.

We also disagree with TCM's contention that it has been treated differently than other respondents in this investigation. Kasagi's response was submitted after the preliminary determination and was not verified or used for purposes of this determination. We found at verification that Sumitomo's response was also replete with errors of a magnitude similar to the errors in TCM's response. Accordingly, we disregarded Sumitomo's reponse. In both cases, we have used best information available for this determination.

In accordance with section 776(b) of the Act, the Department may determine on a case-by-case basis what is best information available. In this case, we believe it is inappropriate to assign a rate to TCM that is lower than the rate calculated for another company on the basis of a complete and verified response. Accordingly, we do not agree with TCM that the most appropriate rate is the average TCM rate alleged in the petition. For reasons already discussed, we have determind that the highest company rate calculated in this investigation, and not the highest rate alleged in the petition, is most appropriate for TCM. We note that the rate used as best information available in this determination is not significantly higher than TCM's preliminary margin which was based on TCM's own information.

Comment 6: TCM argues that the Department refused to verify its data because of revisions necessitated by the Department's position that, when there is further manufacture or assembly in the United States, the physical characteristics of the forklifts as imported should be reported. TCM contends that this methodology is contrary to law and that TCM's methodology of starting with the sale to the first unrelated party and then deducting, among other things, U.S. value-added is the methodology required by the statute. TCM argues that the Department cannot justify its decision not to verify TCM's data on the grounds that TCM failed to comply with a methodology that contravenes the antidumping law.

DOC Position: The Department used the characteristics of the merchandise *as imported* into the United States for comparison with home market transactions based on section 772(e)(3) of the Act, 19 CFR 353.30(e), and past case precedent *(see Color Picture Tubes from Japan; Final Determination of Sales at Less Than Fair Value,* (52 FR 44171, November 18, 1987), *Erasable Programmable Read Only Memories (EPROM's) from Japan; Final Determination of Sales at Less Than Fair Value,* (50 FR 39680, October 30, 1986), and *Cellular Mobile Telephones and Subassemblies from Japan; Final Determination of Sales at Less Than Fair Value,* (50 FR 45477, October 31, 1985)).

Our initial questionnaire stated that the product characteristics reported should be those of the merchandise as exported to the United States. Further, section 773(a)(1) of the Act concerns the foreign market value of the *imported merchandise.* The requirement to report the characteristics of the imported product was reiterated in several subsequent discussions with TCM until the date of our preliminary determination. Further, in a letter dated October 26, 1987, we notified TCM of our specific instructions as to how it should report value-added data in order to report the product as imported. TCM repeatedly assured the Department that is data had been reported in the manner requested. At no time prior to discovery of the reporting error did TCM express disagreement with the Department's stated methodology. TCM formally raised its objection for the first time in a letter of December 22, 1987, more than one month after the preliminary determination and less than three weeks prior to the scheduled beginning of verification. We consider TCM's objection to the basic premise of our methodology six months after issuance of our questionnaire to be untimely and without merit.

Comment 7: TCM contends that, unless the methodology it employed is contrary to law, the Department erred in its refusal to verify TCM's data. TCM argues that its methodology is reasonable, yields an accurate calculation of TCM's dumping margin, and should have been accepted by the Department.

DOC Position: We disagree. *See* DOC Positions to Comment 5 and Comment 6.

Comment 8: Petitioners contend that the information supplied by Sumitomo on home market sales, U.S. sales, cost of production, and U.S. value-added was erroneous and unsupported at verification. Specifically, petitioners argue that the Department should reject all of the information submitted by Sumitomo because: (1) Sumitomo's home market sales information contained numerous significant errors and, therefore, was not verified by the Department; (2) Sumitomo completely revised its response on purchase price sales due to the number of errors and discrepancies found on verification; (3) Sumitomo's ESP response was replete with significant errors and unsupported calculations and allocations of charges and adjustments; (4) the selling expenses claimed by Sumitomo in its constructed value response did not correlate with selling expenses reported in its home market sales response; (5) the total cost of manufacture provided in Sumitomo's cost of production reponse did not reconcile with the total cost of manufacture on which the difference in merchandise adjustment is based; (6) Sumitomo understated its manufacturing costs by applying fiscal year variances to adjust standard costs rather than applying the variances that occurred during the period of investigation; (7) Sumitomo omitted a number of costs from its constructed value data, such as the cost of services provided by parent companies; (8) Sumitomo failed to document that its purchases from related suppliers were at arm's-length prices or that these purchases were reported at a fully absorbed cost of production; and (9) Sumitomo understated its material costs and general expenses in its cost of production information. Furthermore, petitioners believe that the information submitted by Sumitomo after verification has not been verified by the Department. For these reasons, petitioners contend that the Department should use as best information available for Sumitomo the greater of the highest margin found for another respondent or the highest margin alleged in the petition.

Sumitomo contends that the Department should use the revised data submitted for the final determination because: (1) Sumitomo demonstrated good faith by voluntarily and thoroughly disclosing all changes to the Department; (2) many of the changes were insignificant, affected only a minority of data columns, or were driven by other changes; (3) the errors and omissions in the responses were both favorable and unfavorable to Sumitomo; (4) many of the revisions were the result of the extraordinary complexity of the investigation; (5) the Department will not be burdened by accepting the revised data; and (6) even if the Department chose to characterize the revised data as unverified, the revised data is the best information available.

With respect to petitioners' specific arguments that Sumitomo's cost of production response does not reconcile with its sales response, Sumitomo contends that: (1) it cannot determine how petitioners derived the figures cited in their examples of claimed discrepancies or how the comparisons were selected; (2) the variation between the cost and sales data is attributable to the permissible apportioning of direct and indirect selling expenses to the chassis and the completed forklift; (3) petitioners must apply the cost variance to the figures in their examples and take into account the fact that direct labor and factory overhead were not allocated back to each component part in the costs; and (4) where changes in the post-verification sales response affected the cost data, those changes must be taken into account in petitioners' calculations. Furthermore, Sumitomo disagrees with petitioners' contention that the cost variance during the period of investigation should be applied to standard costs to determine actual costs. Sumitomo maintains that the actual cost variance for the year should be used.

DOC Position: In accordance with section 776(b) of the Act, we have used the highest company rate calculated in this investigation as best information available for Sumitomo.

It is not uncommon to find minor methodological problems and mathematical errors during verification. However, during our attempted verification of Sumitomo's sales and cost of production responses, we found that the scope of the discrepancies, inconsistencies, unreported expenses and costs, methodological and mathematical errors, and information that could not be supported by the company's sales and accounting records was so extensive as to require completely new responses which at that stage of this complex proceeding could not be subjected to satisfactory analysis or verification. In addition, we discovered that for a substantial percentage of its U.S. sales, Sumitomo reported the characteristics of the product as ultimately sold in the United States instead of as imported.

Faced with responses containing numerous fundamental flaws, the Department could not properly base its determination on the information submitted by Sumitomo. Nor is it acceptable, in such situations, that the Department bear the responsibility of attempting to identify and perform numerous and substantial recalculations necessary for the development of accurate sales and cost of production data. Such a role would place too great a burden on the resources of the Department under the time constraints and procedural framework of this investigation. As stated in *Photo Albums and Filler Pages from Korea; Final Determination of Sales at Less Than Fair Value* (50 FR 43754, October 29, 1985): "[I]t is the obligation of respondents to provide an accurate and complete response prior to verification so that the Department may have the opportunity to fully analyze the information and other parties are able to review and comment on it." A respondent cannot shift this burden to the Department by submitting incomplete and inaccurate information and expect the Department to correct its response during the course of verification. Verification is intended to establish the accuracy of a response rather than to reconstruct the information to fit the requirements of the Department or to perform the recalculations necessary to develop accurate information.

Similarly, the Department rejected TCM's responses and did not conduct verification of that company because TCM informed the Department after the preliminary determination that, for a substantial percentage of its U.S. sales, the characteristics reported were those of the product sold in the United States, rather than those of the product imported into the United States (*see* Comment 5 above). After careful consideration, the Department determined that the extent of the revisions required to correct TCM's responses were of such a magnitude as to constitute a completely new response submitted too late in the investigatory process. In addition to the fundamental errors in Sumitomo's sales and cost of production responses mentioned above,

we also found at verification that a substantial percentage of its U.S. sales reported the characteristics of the product ultimately sold in the United States, as opposed to the product imported.

Further, with respect to the cost data, the Department requested the actual cost of production of the forklifts sold during the period of investigation. However, during verification, we found that Sumitomo did not report actual costs. For the chassis, Sumitomo reported a "construct" based on 1987 costs. For the value added in the United States, Sumitomo reported standard costs and included the transfer prices of masts produced by a related supplier. In addition, the costs for certain services provided by Sumitomo Heavy Industries, a parent company of Sumitomo, and certain research and development costs were not included in the cost of the chassis. For the further manufacturing in the United States, Sumitomo failed to report shrinkage, scrap, obsolescence, losses on revaluation, and costs of counterweights (a significant forklift component) in the cost of production. Furthermore, Sumitomo used a favorable annual cost variance which resulted in lower costs instead of the appropriate six-month variance pertaining to the period of investigation which would have reflected higher costs.

For all of the reasons described above, we have determined that rejection of Sumitomo's responses and use of best information available is appropriate for this determination. Furthermore, because we have used best information available with respect to Sumitomo, petitioners' and respondent's comments pertaining to specific charges, adjustments, and other issues are moot. For reasons already discussed, we have determined that the highest company rate calculated in this investigation, and not the highest rate alleged in the petition, is most appropriate for Sumitomo.

Comment 9: Petitioners contend that demonstration forklifts sold in the home market are not similar to the merchandise under investigation, nor are thay sold in the ordinary course of trade. Therefore, they should not be compared with new forklifts sold in the United States. Petitioners further contend that discounts or other expenses claimed on demonstration forklifts apply only to sales of demonstration forklifts and are not expenses incurred by respondents in selling new forklifts. Therefore, such home market expenses and discounts claimed by Toyota, Nissan, and Komatsu should be disallowed.

DOC Position: We agree that demonstration forklifts are not appropriate comparisons for sales of new forklifts. However, we believe that expenses incurred by respondents on the demonstration vehicles are a direct advertising expense and have treated them as such for Toyota and Nissan. We have disallowed such expenses for Komatsu since we have determined that Komatsu and its dealers are related and, as such, the expenses claimed by Komatsu are intracompany transfers of funds.

Comment 10: Petitioners contend that the demonstration or damaged forklifts imported into the United States by Toyota and Nissasn and sold to unrelated parties during the period of investigation should be included in the Department's calculation of dumping margins. Petitioners further argue that all sales that involved a transfer of title during the review period are subject to analysis and cite *Television Receiving Sets, Monochrome and Color, from Japan; Final Results of Administrative Review of Antidumping Finding* (46 FR 30163, June 5, 1981) and *Television Receivers, Monochrome and Color, from Japan; Final Results of Antidumping Duty Administrative Review* (53 FR 4050, February 11, 1988). They assert that the requirement that the Department determine the price of such or similar merchandise sold in the ordinary course of trade pertains only to sales used to establish foreign market value. There is no such requirement for determining U.S. sales subject to investigation.

With respect to Toyota, petitioners argue that it is unclear whether the forklifts listed by Toyota are actually damaged or demonstration units. Therefore, these U.S. sales should be used to calculate the extent to which Toyota is selling at less than fair value.

With respect to Nissan, petitioners contend that all of its sales of demonstration vehicles in the United States should be included in the Department's calculation of dumping margins, and that the amount of the discount for each of these forklifts should be changed from the amount originally reported to the actual verified amount.

Toyota contends that sales of demonstration forklifts are not similar to the products under investigation and should not be included in the U.S. sales transactions examined.

Nissan contends that the Department's determinations cited by petitioners with respect to the inclusion of demonstration models are not dispositive because they involve administrative reviews, not original antidumping duty investigations. Nissan argues that, while a margin must be calculated for every entry covered by an administrative review, the Department's regulations do not require calculation of a margin for every sale taking place during the period of investigation.

DOC Position: Since the damaged and demonstration vehicles sold in the United States are sold as used forklifts which are not subject to this investigation, we have not included these sales in our calculations.

Comment 11: Petitioners contend that, to the extent that any respondent has not provided specific rebate or discount information on a sale-by-sale basis and have not demonstrated that these rebates or discounts were actually provided during the period of investigation, discounts or rebates should not be allowed.

DOC Position: Discounts and rebates are by definition tied to specific sales. Where respondents have not been able to tie them to specific sales, we have disallowed them. Some rebate or inventive programs offered by respondents, such as a rebate provided to dealers that meet a monthly sales target, have been allowed since they have been tied to sales made within a particular month. Rebates do not have to be paid during the period of investigation, but they must be tied to sales made during that period.

Comment 12: Petitioners contend that the credit calculation on installment sales in the home market must take into account the gradual reduction of the outstanding balance and the amount of interest earned by the respondent. If respondents have not provided, and the Department has not verified, the amount and date of each payment by the purchaser and the interest rate charged on each installment sale, no deduction for credit expenses on any installment sale should be allowed. In addition, if a respondent failed to identify its installment sales during the period of investigation, no credit expense adjustment should be allowed.

DOC Position: The required information was verified and used to calculate credit expenses for installment sales in the home market for purposes of this determintion. Credit expenses were calculated based on the outstanding balance plus interest revenue for each month. For installment sales of 12 months or more, we used a compound interest rate.

Comment 13: Petitioners contend that any home market warranty expense

claimed must be based on variable, rather than fixed, expenses. Petitioners also argue that any claim for expenses associated with warranty repair parts should be stated as the cost of such parts, rather than the sales or list price.

DOC Position: For Nissan and Toyota, warranty expense payments are made between unrelated parties. As such, we have deducted the full payment amount since this is a variable expense to the manufacturer. For Komatsu, since related dealers performed the warranty work, we have allowed only the variable warranty expenses as an appropriate deduction from the home market price.

Comment 14: Petitioners contend that the Department considers commissions paid to related parties to be intracompany transfers of funds which are not expenses to the corporate entity. Therefore, such payments should be disallowed as adjustments to foreign market value. In support of this argument, petitioners cite *Anhydrous Sodium Metasilicate from France; Final Results of Administrative Review of Antidumping Duty Order* (49 FR 43733, October 31, 1984).

With respect to Nissan, petitioners contend that certain commissions claimed by Nissan on home market sales were paid to related parties and, therefore, constitute intracompany transfers of funds. Petitioners also argue that other commissions claimed by Nissan were earned on sales made prior to the review period of investigation and, therefore, should be disallowed by the Department.

Nissan contends that home market sales commissions paid to employees were shown at verification to be directly related to specific sales and should be allowed as circumstance of sale adjustments. Nissan also argues that commissions on sales made prior to the period of investigation were not included in the database and were not claimed as a deduction from the home market price.

DOC Position: Nissan claimed payments to employees as commissions on the home market sales. Since these expenditures were made to individual employees, we do not consider them to be intracompany transfers of funds. However, Nissan did not tie these payments to individual sales. Therefore, we treated these payments as an indirect selling expense.

Comment 15: Petitioners contend that in the preliminary determination the Department failed to follow the two-step ESP cap procedure used in the *Preliminary Determination of Sales at Less Than Fair Value; Brass Sheet and Strip from the Netherlands* (*Brass Sheet*) (53 FR 3612, February 8, 1988). They argue that the aggregate home market indirect selling expenses should first be capped at the level of aggregate U.S. indirect selling expenses and then, on an individual sale basis, home market indirect selling expenses should be capped at the level of the indirect selling expenses claimed on an individual U.S. sale. This two-step approach ensures that home market indirect selling expenses are equivalent to those claimed in the United States, regardless of whether there are significant differences in the number of sales in the U.S. and home markets. Petitioners maintain that the Federal Circuit's decision in *Consumer Products Division, SCM Corp. v. Silver Reed America, Inc.*, 753 F.2d 1033 (Fed. Cir. 1985) upholds the Department's regulations requiring that home market indirect selling expenses be capped at the amount of indirect selling expenses in the United States.

Petitioners further argue that the Department should disallow home market G&A expenses as part of the ESP offset and only allow indirect selling expenses claimed in the home market for sales made in the home market.

Nissan contends that it is difficult to comment on petitioners' proposed two-step cap on indirect selling expenses in the home market since the only discussion of this approach seems to have been in a private disclosure conference, but argues that the approach appears inconsistent with the statute and prior Department paractice.

Toyota contends that petitioners' request that the Department apply a two-step procedure in calculating the ESP cap is incorrect, unnecessary, and not required by the statute, nor is it consistent with prior Department practice.

DOC Position: Pursuant to 19 CFR 353.15(c), in making ESP comparisons, the Department is required to make "reasonable allowance . . . for all actual selling expenses incurred in the home market up to the amount of the selling expenses incurred in the United States market." As petitioners recognized at the hearing in this investigation, the two-step ESP cap procedure used in the preliminary determination in *Brass Sheet* is not the method we have employed in the past. Furthermore, we do not regard it as the appropriate method to use since adjustments are made on a sale-by-sale basis.

Capping on an aggregate basis would not reflect the individual circumstances of each sale, and may lead to adjustments distorted by the comparative size of each market. Thus, we continue to use our standard policy of capping home market indirect selling expenses on a sale-by-sale basis, as described in the Department's 1985 Adjustments Study.

Accordingly, we have subtracted from the home market price the amount of any indirect selling expenses allocated to the home market sale up to the amount of indirect selling expenses allocated to the U.S. sale.

Comment 16: Petitioners contend that, because specific home market sales are being compared to specific U.S. sales, no sale that is below cost of production should be compared with a U.S. sale, even if the total number of sales below cost is less than ten percent.

DOC Position: This issue is moot. For both Nissan and Komatsu, below-cost sales were more than ten percent in each such or similar category. As such, no below-cost sales were used in our comparisons.

Comment 17: Petitioners contend that, absent proper explanation by Komatsu, Nissan, or Toyota, the Department should deduct the full amount of the cash or prompt payment discount on any U.S. sale where the payment period would entitle the purchaser to such a discount.

Toyota contends that all of Toyota's discounts and net selling expenses are verified and that there is no basis for imputing any additional discount on U.S. sales.

DOC Position: We have verified that all prompt payment discounts have been reported by respondents or have already been deducted from the sales prices reported in the responses.

Comment 18: Petitioners contend that respondents should have provided all information relating to freight allowances or freight equalization payments. This is a practice in the industry whereby, if a unit is not available for purchase at a particular distribution center, a respondent will bill its customer for the normal cost of freight despite additional freight costs that have been incurred in shipping the unit from an alternative distribution site. The Department should take this cost into account if it has not been reflected in respondents' freight claim. In the absence of information concerning the freight absorption or equalization, the Department should take the freight expense reported in the financial statements of the U.S. subsidiary, deduct the total U.S. freight expense incurred by the U.S. subsidiary as claimed in the response, deduct a portion of the freight expense allocable to sales of products other than those subject to investigation, and allocate the remaining portion of the freight expense

to individual sales as a proxy for these excess freight costs.

DOC Position: We have verified all freight expenses applicable to the subject merchandise and have deducted those expenses from the sales price.

Comment 19: Petitioners contend that any costs assumed by a parent company on behalf of its U.S. subsidiary for U.S. sales (*e.g.*, advertising brochures printed in Japan for promoting U.S. sales or product liability insurance premiums to cover claims in the United States) should be considered a direct selling expense and deducted from U.S. price in the final determination.

DOC Position: We disagree in part. Using our standard criteria, we consider product liability insurance premiums paid by a parent company to be indirect selling expenses. We agree that advertising expenses for brochures printed in Japan for promotion of U.S. sales are direct selling expenses.

Comment 20: Petitioners contend that the expenses incurred by parent companies on behalf of their U.S. subsidiaries for certain types of services (*e.g.*, setting up accounting systems, conducting internal audits, providing computer services, assisting in marketing programs, conducting time studies by industrial engineers, and incurring research and development cost) should be included as U.S. indirect selling expenses. In addition, any selling expenses incurred by the parent company on behalf of the U.S. subsidiary which are part of the parent company's G&A expenses should be part of the ESP cap. The Department's allocation of these expenses should be based on the cost of goods sold.

DOC Position: We disagree. The expenses identified above by petitioners are general expenses of the parent company incurred in Japan; they do not constitute U.S. indirect selling expenses.

Comment 21: Citing *Silver Reed America, Inc. et al.* v. *U.S.* (Slip Op. 88-5, January 12, 1988), Nissan, Toyota, and Komatsu contend that we should not deduct expenses incurred outside the United States with respect to ESP sales.

DOC Position: We disagree. The Court has reconsidered and reversed its position on this issue, holding that: "[A]n analysis of the entire statutory scheme for ESP adjustments in 1677a demonstrates that many preimportation expenses related to United States sales must be deducted from ESP." *Silver Reed America, Inc. et al.* v. *U.S.* (Slip Op. 88-37, March 18, 1988). The Court went on to note that, if the Department did not deduct preimportation expenses from ESP, "the essential price comparison to determine the margin of dumping, if any, becomes distorted and contrary to the purpose of the dumping law to achieve a fair price comparison." Accordingly, where expenses were incurred outside the United States on ESP sales, we have taken them into account in this determination.

Comment 22: Petitioners contend that, for those companies that did not segregate technical service expenses on U.S. sales, but claimed them as an indirect selling expense, the Department should treat all technical service expenses as directly related to the sales under investigation and make the appropriate deduction from U.S. price.

With respect to Toyota, petitioners argue that the Department should use the amount of Toyota's technical service expenses in the home market as a proxy for those expenses in the United States and treat them as a direct selling expense.

Toyota contends that its U.S. technical service expenses are not variable expenses separately traceable to individual transactions and, therefore, are properly included among indirect selling expenses.

DOC Position: For Toyota, we found that the technical services provided to U.S. dealers are of a routine nature and would have been incurred whether or not a particular sale had been made. Therefore, we have treated these expenses as indirect selling expenses. For Komatsu, we have determined that the only direct technical service expenses are travel expenses incurred in servicing specific sales. The other claimed technical service expenses have been treated as indirect selling expenses. For Nissan, we found that the company had underreported its expenses. We used the correct verified amounts in this final determination. We treated Nissan's travel expense as direct and all other expenses incurred in providing technical services as indirect since they are expenses of a routine nature that would have been incurred whether or not a particular sale had been made.

Comment 23: Petitioners contend that it is the Department's practice to allow technical service adjustments to home market price only for expenses that are incurred during the period of investigation and that are directly related to the sales made during the period of investigation. In support of their position, petitioners cite the *Final Determination of Sales at Less Than Fair Value; Tapered Roller Bearings and Parts Thereof, Finished and Unfinished, from Japan* (52 FR 30700, August 17, 1987) and the *Final Determination of Sales at Less Than Fair Value: Certain Forged Steel Crankshafts from the Federal Republic of Germany* (52 FR 28170, July 28, 1987). Petitioners further argue that valid technical service expenses do not include salaries for technical engineers or other personnel which would have been paid regardless of the amount of work performed. In support of this contention, petitioners cite *Dry Cleaning Machinery from West Germany; Final Results of Administrative Review of Antidumping Finding* (50 FR 32154, August 8, 1985) and *Certain Welded Carbon Steel Standard Pipe and Tube from India; Final Determination of Sales at Less Than Fair Value* (51 FR 9089, March 17, 1986). Petitioners contend that, for the most part, the technical service expenses claimed by respondents in this investigation are incurred on routine visits to customers in an effort to maintain general corporate goodwill and, therefore, should not be allowed by the Department as a direct selling expense. At most, they should be treated as an indirect selling expense.

With respect to Nissan, petitioners contend that its technical service expenses include salaries, wages, and bonuses and, therefore, should be treated as indirect selling expenses for purposes of the final determination.

With respect to Komatsu, petitioners contend that its technical service expenses are comprised of fixed salary and transportation expenses incurred for routine inspection visits which do not constitute direct selling expenses and, therefore, should not be deducted from home market price.

Komatsu contends that its claimed adjustment for home market technical service visits are out-of-pocket expenses directly tied to the specific sales in question. Komatsu argues that while these calls are routine, petitioners have cited no support for their statement that technical service adjustments can be made only where it is shown that an engineer has visited a customer that is having a specific technical problem.

DOC Position: We have treated all of Toyota's claimed technical service expenses as indirect selling expenses because these are expenses of a routine nature that would have been incurred regardless of whether any particular sale had been made. For Nissan and Komatsu, we have also treated all of their technical expenses as indirect selling expenses, except for travel, for the same reason. We have determined that travel expenses borne by the two companies are appropriate technical service claims since the travel expenses are variable and are tied to specific sales made during the period of investigation.

Comment 24: Petitioners contend that the advertising expenses incurred on behalf of a particular model are direct expenses and should be deducted from home market price with respect to sales of that model. Expenses incurred for advertisements which feature products not subject to the investigation should not be considered as either a direct or an indirect selling expense. Separate expenses should have been submitted for the products under investigation and for the expenses incurred during the period of investigation.

DOC Position: Where advertising expenses could be segregated to particular models, this was done. Otherwise, they were allocated to the subject merchandise. During verification, we reviewed the allocation of advertising expenses to the subject merchandise. In those instances where advertising expenses could be segregated, we found they were properly allocated. We have disallowed advertising expenses related to non-forklift products and advertising expenses which were incurred outside the period of investigation.

Comment 25: Petitioners content that U.S. advertising expenses incurred by respondents under co-op advertising programs should be allocated on a customer-by-customer and model-by-model basis. Furthermore, petitioners argue that to the extent that other U.S. advertising expenses for products subject to this investigation have not been reported separately by the respondents on a model-by-model or series-by-series basis, the Department should treat all U.S. advertising expenses as direct selling expenses.

With respect to Toyota, petitioners contend that, in addition to the co-op advertising program, other advertising expenses were incurred which qualify as direct selling expenses on U.S. sales. In support of their contention, petitioners submitted sample advertisements published during the period of investigation which promote Toyota forklifts, are directed at end-users, and feature no particular Toyota dealer. Since Toyota failed to report fully its direct U.S. advertising expenses, the Department should treat the entire amont of these expenses as a direct selling expense on both ESP and purchase price sales.

In addition, petitioners contend that the Department should rectify the inconsistency in the preliminary determination of treating Toyota's advertisements directed at end-users in the home market as direct expenses while treating advertisements directed at end-users in the United States as indirect selling expenses.

With respect to Nissan, petitioners contend that the Department should use Nissan's actual advertising expenses incurred during the period of investigation. The Department should disregard Nissan's assertion that the advertising expenses associated with the introduction of new models were unusually high and that these expenses should be allocated over a five-year period. In addition, to the extent that such advertisements are directed at specific models, such advertising expenses should be allocated only to those specific models, not over all forklifts.

Nissan contends that, becaue its U.S. advertising expenses were unusually high during the period of investigation due to the recent introduction of two new models, the Department should use a five-year average for U.S. advertising expenses.

DOC Position: We found Toyota's allocation of co-op advertising to be reasonable. During verification, we found that certain advertising expenses were included in Toyota's claimed indirect selling expenses. A portion of those advertising expenses was directed to Toyota's dealers' customers. Therefore, we treated those expenses as direct selling expenses. At verification, we found that Komatsu also inappropriately reported certain advertising expenses as indirect. We have treated these expenses as direct selling expenses in this determination.

With respect to Nissan, we have examined the advertising expenses incurred during the period of investigation and in each of the four prior years. We saw no evidence that the period of investigation's expenses were unusually high when compared with fluctuations in previous years' expenses. As such, we have made an adjustment for actual advertising expenses incurred during the period of investigation.

Comment 26: Petitioners contend that none of the respondents have fully reported product liability expenses. Each company should have submitted not only the cost of insurance premiums but the amounts reserved for settlement costs and litigation fees. All liability expenses should be allocated only over forklift sales in the United States since liability claims arise primarily in the United States. To the extent that these costs have not been reported or verified, the Department should use the information in the petition as best information available for each respondent. The Department should also treat product liability expenses as a direct selling expense rather than an indirect selling expense because a company's expense increases with every forklift sold and claim made.

With respect to Nissan, petitioners contend that, since the Department was unable to verify Nissan's claimed product liability expense, the Department should use the information in the petition as best information otherwise available.

Toyota contends that all of its U.S. product liability expenses have been reported and verified, and that product liability insurance premiums are not variable expenses as petitioners claim. Toyota also argues that, because premiums paid during the period of investigation are paid to insure all Toyota forklifts presently in operation and not just those sold in the period of investigation, Toyota properly allocated ten years of premiums over sales for the same period.

DOC Position: We have treated product liability insurance premiums as indirect selling expenses since these expenses are fixed expenses and are not incurred with each sale made. We saw no evidence of reserves for settlements or litigation fees during the period of investigation for Toyota or Komatsu, and have verified all product liability insurance premiums for Toyota and Komatsu. We believe that Toyota properly allocated this expense over all North American sales since we verified that its product liability insurance covers all forklifts sold and in operation in the North American market.

For Nissan, we were unable to verify these expenses. Therefore, we based the amount used for purposes of this determination on the U.S. industry's product liability experience.

Comment 27: Petitioners contend that the Department should deduct from U.S. price all costs incurred in adding value to the forklifts, including labor and overhead, G&A expenses, and profit. Only by deducting all of the value added in the United States, including profit, will the Department be able to compare accurately the price of the "as imported" product with the price of the product with the same characteristics in the home market.

For options not attached, the Department should use the greater of the net selling price of the options or the acquisition cost plus profit to determine the value-added expense. With respect to installed options, the Department should use the greater of the net selling price or the acquisition cost plus labor, overhead, and profit to determine the value-added expense. With respect to options that have been added or removed, the Department should calculate U.S. value-added as the sum of

the acquisition cost of the parts added, plus labor, overhead, and profit on the parts added. The Department should calculate profit on sales in which items were removed or added based on the profit earned on the parts added, not on the difference between the cost of parts removed and added.

Nissan contends that the pre-sale activities performed by Nissan Industrial Equipment Corporation (NIEC) in the United Sates are not "a process of manufacture or assembly" within the meaning of section 772(e)(3) of the Act because they do not "significantly transform" the imported forklifts. Therefore, the Department should not deduct the profit associated with these activities from ESP. Nissan argues that the costs incurred in the United States for pre-sale activities should be treated as indirect selling expenses. Alternatively, Nissan contends that, if the Department determines that the operations performed by NIEC in the United States do constitute "manufacture or assembly" within the meaning of the statute, profit should be calculated based on the ratio of the cost of these operations to the total cost of the product. This ratio should then be applied to the difference between NIEC's selling price and the total cost of the forklift. In addition, Nissan argues that the Department should treat all options similarly, whether installed or not installed.

Toyota contends that the activities performed on imported forklifts at U.S. processing centers do not constitute manufacture or assembly within the meaning of section 772(e)(3) of the Act and 19 CFR 353.10(e)(3) and are incidental to the selling operations. Therefore, the Department should not deduct the value-added in the United States to arrive at ESP. Toyota argues that the manufacture and assembly process is concluded in Japan and that the following operations performed in the United States do not constitute manufacture or assembly: (1) Securing of certain options such as LPG tanks, sideshifters, and fork arms to the units for shipment to customers, (2) attachment of lights, alarms, and hydraulic valves, and (3) swapping of masts and forks.

DOC Position: We consider the pre-sale activities of Nissan and Toyota in the United States to constitute further manufacture or assembly within the meaning of section 772(e)(3) of the Act. We have calculated the value-added adjustment to the U.S. price as follows. For installed options, we have deducted the acquisition cost of the options, plus labor, overhead, and profit. With respect to options that have been switched, we have used the difference between the cost of manufacture of the parts switched, plus labor, overhead, and profit. For Nissan, we calculated profit for options installed and for parts switched based on the ratio of the cost of these operations to the total cost of the product. We then applied this ratio to the difference between the net selling price and the total cost of the forklift.

For Toyota, we calculated a net profit factor on forklift sales for Toyota Motor Sales (TMS), the U.S. subsidiary of Toyota, during the period of investigation. We then applied this factor to the transfer price between Toyota and TMS as best information available.

We do not consider unattached options to be value added. We deducted the sales price of the unattached options from U.S. price.

Comment 28: Petitioners contend that the cost of carrying inventories of parts and attachments should be included by the Department in each company's U.S. value-added expenses. The Department should calculate this expense based on the cost or price of the options or attachments that are added in the United States and the length of time the forklifts are held in inventory.

Petitioners also contend that all freight expenses associated with transporting the attachments and options to U.S. processing centers should be included by the Department as part of the U.S. value-added expense.

DOC Position: All expenses incurred by the U.S. subsidiary have been reported. Expenses such as the cost of carrying inventory and freight expenses related to transporting attachments and options have been reported either under inventory carrying costs or under indirect selling expenses. A portion of these expenses has been allocated to the value-added operations. Most of the items held in inventory, such as fork arms and masts, were imported attached to one forklift and then removed to be switched with items from another forklift. As such, the associated freight expenses were already included in the freight expense of the forklift as a direct selling expense.

Comment 29: Regarding critical circumstances, C. Itoh Industrial Machinery Inc. (CIM) and TCM America (MBK) Inc. (TAM), U.S. distributors related to TCM, contend that they would not have access to knowledge of less than fair value sales because their corporate relationship with the manufacturer, TCM, is insufficiently close. CIM and TAM argue that there is no evidence that they had access to information on TCM's pricing in the home market or to each other's pricing. CIM and TAM also argue that knowledge of less than fair value sales cannot be imputed to them because of the complexity and technical nature of the calculations necessary to make such a determination. They further argue that application of a 25 percent "rule" to impute knowledge of less than fair value sales constitutes informal rulemaking requiring notice and comment, and in support of their contention cite the Court of International Trade decision in *Carlisle Tire and Rubber Co. v. U.S.*, 7 ITRD 1512, 1515 (C.I.T., 1985) regarding an allegedly analogous Departmental guideline.

Machinery Distribution Inc. (MDI), an interested party, contends that overall imports have not been massive and that import levels in the months immediately preceding the filing of the petition are not the appropriate benchmark to use to evaluate post-filing import levels because (1) import levels are traditionally greater during the time of the year represented by the post-filing time period and (2) pre-filing time period import levels were unusually low.

DOC Position: While CIM and TAM contend that they had no knowledge of TCM's pricing policies, it is our longstanding practice to consider foreign manufacturers and their related U.S. importers to be a single entity. Given TCM's ownership interest in both CIM and TAM, we believe it is appropriate to apply our imputed knowledge methodology.

The Department is not required to follow formal rulemaking procedures in adopting every methodology it employs. Congress has afforded the Department wide latitude in its administration of the antidumping law. Furthermore, the courts have accorded deference to the Department in fulfilling its statutory duties and have recognized that the Department requires "methodological flexibility." *Ceramica Regiomontana v. United States*, (Slip Op. 86–58, May 29, 1986) at 12–13.

The position advocated by CIM and TAM would require the Department to promulgate every methodology that it proposed to follow in an administrative proceeding as a rule under the Administrative Procedure Act, 5 USC 551 *et seq.* Such an approach would require the Department to announce the methodology that it intends to apply in the **Federal Register**, request and evaluate comments, publish the final rule, and then wait 30 days for it to become effective. This approach could not be accomplished in the short time

Congress has mandated for the completion of an investigation and would permit no flexibility in subsequent administrative proceedings. If the rulemaking process were followed, the Department would be obligated to apply a "rule" once made. The agency could not consider other methodologies that might be more appropriate for the facts in that particular case unless it went through the rulemaking process again. Such a requirement would unduly restrict the ability of the Department to carry out the intent of Congress.

Having had the opportunity to comment on the Department's methodology, the parties have not provided any basis for the Department to alter its current practice.

The rationale behind a critical circumstances allegation is to prevent foreign manufacturers from increasing levels of imports of products sold at less than fair value prior to the suspension of liquidation. As such, contrary to MDI's contention, the most appropriate periods to measure import levels are those immediately preceding and following the filing of the petition, up to the time of the preliminary determination.

Finally, based on our analysis of import data, we have found no evidence of seasonality with respect to imports of forklifts from Japan.

Comment 30: Petitioners contend that, because Kasagi and Sanki failed to submit monthly import data, the Department should make a finding of critical circumstances with respect to these companies for purposes of the final determination.

DOC Position: We sought shipment data only from the manufacturers of forklifts, not from resellers. Because Sanki and Kasagi do not produce the subject merchandise, we believe it is appropriate that these companies receive the "all others" determination regarding critical circumstances (*see* "Critical Circumstances" section of this notice).

Comment 31: Petitioners contend that the Department should consider a forklift to be used if, at the time of entry into the United States, the importer can prove that the forklift was manufactured at least three years prior to the date of entry.

Mifran-Boman, an interested party, contends that any forklift older than one year should be considered to be used for purposes of this investigation and suggests using the serial numbers published by the manufacturers to make this determination.

Equipment Company of Los Angeles (ECOLA), an interested party, contends that the Department's presumption in the preliminary determination that only forklifts over three years old can be considered used is without support in the record, is illogical, and is not based on any industry standard, custom, or practice. ECOLA contends that there is no support in the record other than petitioners' assertions that new vehicles may remain in inventory for over a year or that new vehicles will be misclassified as used to avoid any potential dumping duties. ECOLA also argues that the Department has an obligation to investigate before making such a determination and may not rely on unsupported assertions in its determination of the age at which a forklift becomes used. As support, it cites *Cellular Mobile Telephones and Subassemblies from Japan; Final Determination of Sales at Less Than Fair Value* (50 FR 45447, October 31, 1985).

ECOLA also contends that the Department's three-year rule is harsh and unreasonable because it does not give importers the opportunity to demonstrate to U.S. Customs that individual entries under three years of age are used. ECOLA argues that the Department should establish a rebuttable presumption that any forklift manufactured at least one year prior to the date of entry should be considered used and, therefore, not subject to any duties imposed in this investigation.

DOC Position: Our investigation uncovered no evidence that Japanese producers and exporters of the subject merchandise have been involved in the practices alleged by petitioners of exporting essentially new forklifts to unauthorized dealers as used forklifts. In addition, verification of one reseller indicated that forklifts are being purchased through third parties without the direct knowledge of the manufacturers. We have found, however, that certain manufacturers' forklifts were imported as new more than one year after the forklifts' date of manufacture. While we recognize that high inventory carrying costs may be a disincentive to holding a forklift in inventory between one and three years in order to avoid the imposition of antidumping duties, we must be able to ensure that this determination can be enforced and that any potential order will not be circumvented.

As Mifran-Boman has suggested, in order to identify the age of a forklift, we will instruct the U.S. Customs Service to require documentation from industry publications containing information reconciling a forklift's serial number and date of manufacture. These industry publications, however, do not specify the exact date of manufacture, but only the year a forklift with a particular serial number was manufactured. As such, the U.S. Customs Service would not be able to determine the date a forklift was manufactured, but only the year it was manufactured.

To ensure that imports of new forklifts are covered by this determination, we have established the following cut-off for used forklifts. Given that the U.S. Customs Service can only determine the manufacture year of a forklift, we will instruct the U.S. Customs Service to consider as used any forklift produced in a calendar year at least three years prior to the year of entry into the United States. We have discussed this issue with the U.S. Customs Service and have concluded that our treatment of used forklifts is administratively feasible.

Comment 32: Petitioners contend that manufacturers and exporters of forklifts are planning to circumvent the imposition of antidumping duties on forklifts They state that the Department should clarify the scope of the investigation to include separately imported major component parts being shipped to the United States by Japanese forklift producers and exporters to be installed on Japanese-made frames or frames made principally from Japanese components.

Mitsubishi Heavy Industries (MHI), an interested party, contends that the petitioners have provided no basis for expanding the scope of the investigation. MHI also argues that the petitioners should not be permitted to amend the petition and expand the scope of this investigation because the request was not made until after verification. This request is unjustifiably late and deprives the Department of the opportunity to investigate whether such imported components are being or are likely to be sold at less than fair value. Finally, citing *Royal Business Machines, Inc. v. United States*, 507 F. Supp. 1007 (C.I.T., 1980) and section 735(a)(1) of the Act, MHI argues that the Department lacks the statutory authority and evidentiary basis to grant the petitioners' request for expansion of the scope of investigation.

Nissan contends that it would be improper to extend the scope of investigation beyond the limited clarification sought by petitioners.

DOC Position: We have denied petitioners' request to expand the scope of this investigation for the following reasons. First, prior to the initiation of this investigation, petitioners clearly excluded component parts from the scope of their petition. In a letter to the Department dated may 7, 1987, petitioners stated:

[T]he investigation would cover imports of a fabricated frame by itself or assembled with one or more component parts such as the transmission, drive axle or engine. The fabricated frame, by itself, would be included within the scope of the petition because once a frame is fabricated, it can only be used to produce an internal-combustion, industrial forklift truck and cannot be used to manufacture any other product. In contrast, other *individual* component parts, such as an engine or transmission, when sold as separate units prior to assembly, could be used to produce a product other than an internal-combustion, industrial forklift truck. Thus, these individual parts, separately imported, would not be in the scope of the petition.

On May 11, 1987, petitioners submitted another letter to the Department reiterating their intent to exclude component parts. They stated: "As indicated in our letter on May 7, 1987, we do not intend for this investigation to cover all forklift parts separately imported."

Second, petitioners only speculate as to the apparent intention of the Japanese producers and exporters of forklifts to circumvent antidumping duties. Petitioners do not allege that duties have been or currently are being avoided. In a Department memorandum regarding an administrative review of *Color Television Receivers from Korea,* cited by petitioners in support of their request, the Department had statistical evidence of a decrease in the volume of imported TVs subject to duty and an increase in the volume of separately imported components which were not dutiable. At this time, neither petitioners nor any other party has presented any evidence that major component parts of the forklifts under investigation are being separately imported in order to avoid the imposition of antidumping duties.

Third, petitioners' request to include component parts would encompass components for end-products other than the internal-combustion forklifts under investigation. As petitioners acknowledged in their May 7, 1987 letter, certain individual component parts, when sold separately, can be used in the manufacture of products other than internal-combustion forklifts. For example, some components might be destined for large forklifts outside the scope of this investigation, electric forklifts, or other non-forklift products not subject to investigation. We have insufficient evidence on the record to instruct properly U.S. Customs how to identify the components to which this determination and any eventual antidumping duty order would apply.

Finally, petitioners' February 22, 1988 request to expand the scope of the invetigation was made too late in the investigatory process to obtain evidence, to receive comments from parties which may be affected by a revision of the scope of this investigation, and to allow the Department sufficient time to consider the issue.

Comment 33: Petitioners contend that a large number of Toyota's product comparisons are inappropriate because they involve substantial difference in merchandise adjustments. For such sales, the Department should select other home market sales for comparison for find some other basis for calculating foreign market value.

Petitioners further argue that, because Toyota provided difference in merchandise information only on those sales it deemed relevant and failed to provide sufficient cost data for the Department to calculate foreign market value on the basis of constructed value, the Department should use best information available to calculate dumping margins on Toyota's U.S. sales that have no suitable home market comparisons. As best information available, the Department should use the highest *ad valorem* margin found on any of Toyota's sales that have appropriate home market comparisons.

With respect to Komatsu, petitioners contend that, for those instances where Komatsu's product comparisons result in large difference in merchandise adjustments, the Department should either find new home market product comparisons or use constructed value.

DOC Position: It is the Department's practice to disregard home market sales as the basis for foreign market value when the difference in merchandise adjustments claimed are of such a magnitude as to lead us to question whether the home market sales reported can serve as an appropriate measure of foreign market value. There are two basic reasons for this practice: (1) In determining whether U.S. sales are being made at less than fair value, we do not want the difference in merchandise adjustment either to falsely create dumping margins or to mask them; and (2) large difference in merchandise adjustments may indicate that the home market sale is not similar to the U.S. sale, thus, warranting a new comparison.

Because of the wide array of products which we investigate, it would be inappropriate to set any one particular cut-off point, beyond which we would either select another home market comparison or use constructed value. In this investigation, we have followed a strict set of criteria in selecting our product comparisons. Respondents have followed these guidelines. Therefore, for each of our product comparisons, we used the most similar home market sale as our match to the U.S. sale.

During verification, we examined various home market sales which had large difference in merchandise claims. We found that the reason for many of the large difference in merchandise adjustments was that the product sold and special attachments which were not included in the product characteristics which we developed in defining our product comparisons. The costs of these attachments are included in the sales prices charged. These attachments are individually specified on the invoice, and the prices are uniformly set based on the list price. The difference in merchandise adjustment for these attachaments to the home market price does not distort the calculation of sales at less than fair value, because the cost of the attachment is reflected in the sales price of the forklift. By adjusting for this cost in the home market price, we have made the price comparable to a forklift sold without such an attachment.

Comment 34: Petitioners contend that the Department should reject Toyota's inland freight expenses on home market sales because: (1) Toyota claimed this deduction on sales of specific models to all dealers even though it only absorbs freight charges on sales to exclusive dealers; (2) Toyota used an inappropriate method of allocation which it did not correct until after verification; and (3) Toyota failed to segregate freight expenses on demonstration and defective vehicles, repair parts, and shipments to inventory holding areas from the freight expenses incurred on the subject merchandise.

Toyota contends that it properly allocated home market movement charges since records of such expenses are not maintained on a transaction-by-transaction basis and that the expenses do not include extraneous freight charges.

DOC Position: In this determination, we have used the actual, verified charges incurred by Toyota in delivering forklifts to its dealers.

Comment 35: Petitioners contend that Toyota's home market current model incentives were granted on models which were sold prior to the period of investigation on sales of forklifts that are not considered such or similar merchandise, and therefore, should be disallowed. In addition, Toyota's home market forklift replacement incentives were rebates not contingent on, or related to, sales of the subject merchandise, and did not affect the netback price of new forklifts.

Therefore, petitioners argue, these rebates should also be disallowed.

Toyota contends that the Department improperly disallowed its "current model" incentive as a home market indirect selling expense at the preliminary determination because the incentive related to sales outside the period of investigation. Toyota argues that this incentive was intended to recover market share and to assure the successful introduction of a new model which was properly allocated over a full year's sales. Toyota contends that the incentive served to clear dealer inventories of the superseded model in order to sell the maximum number of new models beginning in August 1986, the first month of the period of investigation, and, therefore, part of this expense is related to sales in the review period.

Toyota also argues that the forklift replacement incentive is directly related to and contingent upon the sale of a Toyota forklift by Toyota's dealers and should be deducted from the home market price.

DOC Position: We have disallowed the current model incentive which Toyota claimed as an indirect selling expense incurred on sales of the X300 series. The company claimed that this incentive was to promote sales of the old X200 series to make way for the introduction of the X300 series. We have disallowed this incentive because the purpose of the program was to encourage dealers to place orders of the old X200 series. As such, it was not related to sales of the new X300 series.

We have allowed the forklift replacement incentive because the provision of this rebate was contingent on a sale of a forklift under investigation and we were able to trace these rebates to individual sales made during the period of investigation.

Comment 36: Petitioners contend that the Department should reduce Toyota's home market credit expense for purposes of the final determination to take into account certain "prepayments" made by dealers.

Toyota contends that, contrary to petitioners' assertion, certain "prepayments" made by dealers to Toyota are not related to sales and, therefore, no adjustment to home market credit expense is required.

DOC Position: At verification, we found that no "prepayments" were provided to Toyota by its dealers on sales of forklifts. While certain "prepayments" are required, we verified that they are not used as a form of payment on the forklifts. Therefore, we have made no adjustment to Toyota's credit expense with respect to "prepayments".

Comment 37: Petitioners contend that Toyota's home market technical service expenses relate only to the repair of industrial vehicles, not to the sale of those vehicles. Therefore, the Department should reject this claim for purposes of the final determination because it does not constitute either a direct or an indirect selling expense.

DOC Position: The technical service expenses claimed by Toyota relate to periodic visits by field service representatives to their respective dealerships to train and test mechanics on the use and service of forklifts. These expenses are indirect selling expenses because they are tied to Toyota's sales operations. At verification, we found these expenses to be properly allocated to the subject merchandise.

Comment 38: Petitioners contend that, because Toyota has failed to clarify the expenses included in its home market direct and indirect advertising expense claims, the Department should reject all such claims for purposes of the final determination. However, if the Department allows these adjustments, Toyota's home market direct advertising expenses should be reduced by the amount of any disallowed advertising expenses and by the amount of any reimbursements received by Toyota from its dealers.

Petitioners also contend that Toyota's home market indirect selling expenses include indirect advertising expenses incurred outside the period of investigation on products and services unrelated to sales of the subject merchandise. Therefore, the Department should segregate Toyota's actual indirect advertising expenses incurred during the period of investigation and allow deductions only for those expenses that promote sales of internal-combustion forklifts.

Toyota contends that it properly used different bases for the allocation of domestic sales promotion expenses depending on whether the expenses were routine and aimed at current sales or were part of a promotional effort aimed directly at sales of a new model.

Toyota argues that all of its claimed home market advertising expenses are net of any reimbursements and, therefore, are not overstated as petitioners assert.

Toyota also contends that the Department improperly disallowed its institutional advertising as home market indirect selling expenses at the preliminary determination because the expenses were incurred outside the period of investigation. Toyota argues that it submitted the actual expenses incurred during the period of investigation, that it properly allocated all expenses over the period for which they were incurred, and that these expenses should be treated as indirect selling expenses for the final determination.

DOC Position: Toyota's advertising expenses have been segregated between direct advertising expenses (*i.e.*, advertising directed to Toyota's customer's customer) and indirect expenses. We have treated advertising directed to Toyota's customers, in this case to its dealers, as indirect selling expenses. These expenses have been verified. Toyota has also deducted from these claimed expenses the reimbursements from its dealers that cover the dealers' share of advertising expenses.

Toyota claimed advertising expenses incurred before the period of investigation which we have disallowed. These included advertising for the company's 500,000th Production-30th Anniversary and for the 1985 International Materials Handling Exhibition. A portion of the advertising expenses for the X300 In-House Introduction expenses were also disallowed because they were incurred before the period of investigation. Toyota claimed that the expenses for the 500,000th-30th Anniversary should be allowed because they are tied to the new X300 series of forklifts which were introduced during the period of investigation. During verification, we examined each of the claimed expenses for the 500,000th-30th Anniversary advertising campaign. We found no evidence that these expenses were for the X300 series. Our policy is to allow only advertising expenses which were incurred during the period of investigation. We do not believe that a deviation from that policy is warranted in this case.

Toyota also made a claim for institutional advertising which promotes Toyota's name in general without stressing any particular product. At the preliminary determination, we disallowed this claim because it appeared from the company's response that these expenses were incurred before the period of investigation. At verification, we reviewed these expenses and determined that they were incurred during the period of investigation. Therefore, we have allowed these expenses as an indirect selling expense.

Comment 39: Petitioners contend that expenses related to Toyota's F-80 management information system are G&A expenses, are not incurred to

promote sales of forklifts, nor do they directly affect the netback price of sales of new forklifts. Therefore, the Department should disallow this claim as an indirect home market selling expense.

Toyota contends that the Department improperly disallowed its F-80 Management Program expenses as a home market indirect selling expense at the preliminary determination because the program was not used for the promotion of sales on the merchandise under investigation. Toyota argues that because the objectives of this program are to increase the efficiency of sales and servicing, it directly promotes Toyota's sales to its dealers.

DOC Position: Because the basic purpose of the F-80 Management Program is to track the service history of forklifts sold, we do not consider the expenses related to this program to be selling expenses. Therefore, we have disallowed these expenses for purposes of this determination.

Comment 40: Petitioners contend that labor costs incurred by the Quality Assurance Department of Toyoda Automatic Loom Works, Ltd. (TAL) are manufacturing expenses, not indirect selling expenses and, therefore, should be included as part of the cost of production. Accordingly, the Department should not allow these expenses as an indirect selling expense.

Toyota contends that costs incurred through TAL's Quality Assurance Department in advising dealers' customers on the use and maintenance of forklifts are properly classified as home market indirect selling expenses.

DOC Position: These expenses are not related to the manufacturing of forklifts. They are incurred post-sale in providing technical assistance to Toyota's dealers. As such, we have treated them as indirect selling expenses.

Comment 41: Petitioners contend that an additional 45 days should be added to Toyota's U.S. inventory carrying cost to account for the inventory period after production and before importation into the United States.

Citing *Silver Reed America, Inc. et al. v. U.S.* (Slip Op. 88-5, 1988), *supra*, Toyota contends that the Department should not impute inventory carrying costs for the time prior to entry of the forklifts into the United States.

DOC Position: Toyota has included in its calculation of inventory carrying costs the length of time from the date of production to the date the forklift is shipped to the first unrelated customer in the United States. We made a minor adjustment to this calculation by including three additional days in Toyota's inventory carrying costs as explained under the "United States Price" section A of this notice. (*See* also DOC Position to Comment 21.)

Comment 42: Petitioners contend that, with the exception of its co-op advertising expense, deductions for interest expense, warranty claims, and inland insurance expense, Toyota claimed all of its U.S. operating expenses as indirect selling expenses. In making its final determination, the Department should review the types of expenses included by Toyota as part of its indirect selling expense claim. To the extent that direct selling expenses and value-added costs associated with coordinating and operating the U.S. processing centers are included in Toyota's indirect selling expense claim, they should be deducted from the total ESP cap.

DOC Position: All direct expenses have been properly reported by Toyota with the exception of certain advertising expenses incurred on U.S. sales. We have segregated those advertising expenses from the claimed indirect selling expenses and have treated them as direct expenses. Labor and overhead associated with the value-added operations at the company's processing centers are not included in the ESP cap.

Comment 43: Petitioners contend that Toyota's expenses related to the leasing and rental of forklifts should be disallowed as home market indirect selling expenses because such expenses do not relate to sales of the merchandise under investigation.

DOC Position: Toyota does not lease or rent forklifts in the home market and, thus, did not incur or claim such expenses. However, Toyota offers an incentive program to its dealers that lease or rent forklifts to end-users. Since these forklifts have been purchased by the dealer from Toyota, we consider this incentive program to be tied to sales made by Toyota during the period of investigation. As such, we allowed the expenses of the incentive program as indirect expenses.

Comment 44: Petitioners contend that Toyota's allocation of U.S. warranty expenses is inappropriate since actual warranty expense records for each model series are available. Therefore, the Department should reject Toyota's U.S. warranty expense claim and, instead, deduct the warranty expense claimed by Toyota on home market sales from U.S. price.

Toyota contends that its allocation of U.S. warranty expenses is necessary and proper.

DOC Position: We consider Toyota's allocation of warranty expenses to be reasonable.

Comment 45: Petitioners contend that Toyota's value-added information is inaccurate and unreliable, the labor and overhead costs were based on estimates that were not supported by any records maintained by Toyota, and the methods used to allocate costs were inappropriate. If the Department does not reject Toyota's data, it should recalculate Toyota's U.S. value-added costs by including the general expenses incurred by Toyota in operating its processing centers, costs incurred in carrying an inventory of attachments and options, and the interest expenses associated with carrying such inventory.

DOC Position: Some of Toyota's allocation of labor and overhead to the value-added operations was based on estimates of the processing center's manager. The amount of labor time incurred in performing certain operations, such as attaching options or switching items, were estimates recorded in a report prepared by Toyota. We are using these estimates as best information available. We note that the amount of time reported by Toyota to switch masts, fork arms, and counterweights was stated in the verification report. Petitioners have provided no information indicating that the amount of time reported by Toyota was inaccurate. All actual expenses for labor and overhead were tied to Toyota's accounting records and financial reports. Toyota has also included all expenses associated with its processing centers and value-added operations in the labor and overhead expenses reported in the response.

Comment 46: Petitioners contend that rebates paid by Toyota to U.S. dealers for actual expenses incurred in the installation of optional equipment should be treated as U.S. value-added and deducted with an appropriate amount of profit in calculating net U.S. price.

Toyota contends that rebates paid to dealers for operations and services performed on forklifts after original invoicing are not U.S. value-added. Toyota argues that, since these payments reduce the net return to Toyota for particular sales and are treated by Toyota as rebates, they should be considered price reductions by the Department. Toyota argues that, if the Department does treat these rebates as value-added, no additional profit should be included in the deduction since the profit on such services is already included in the rebates.

DOC Position: We have deducted the payments by Toyota to dealers that installed options on a forklift before

BEST COPY AVAILABLE

delivery to a National Account customer since this constitutes value-added. A National Account customer is an end-user that purchases forklifts directly from Toyota. However, we calculated no additional profit on these operations since payment for this service is between two unrelated parties, Toyota and its dealers, and any profit on these operations is included in that price and would be earned by the dealer.

Comment 47: Petitioners contend that Toyota has understated the credit period on a substantial number of U.S. sales by basing the reported date of sale on the date Toyota's dealer sells the forklift to its customer rather than the date Toyota ships the forklift to the dealer. Furthermore, the Department learned of the existence of Toyota Motor Credit Corporation (TMCC) only at verification and discovered the payment dates reported by Toyota were incorrect. Petitioners argue that the U.S. credit expense data were not verified and that, therefore, the Department should use as best information available the longest credit period found on any U.S. sale by another respondent.

Toyota contends that it has calculated the U.S. credit expense based on the actual interest-free period allowed its customers and that the expense is not understated as claimed by petitioners.

DOC Position: We verified Toyota's credit expenses and found them to be accurately reported except for minor adjustments which we incorporated in our calculations as detailed under the "United States Price" section A of this notice.

Comment 48: Citing *The Timken Company v. United States*, No. 82-6-00890, Slip Op. 87-118 (C.I.T., October 29, 1987), Toyota contends that the Department should adjust for all U.S. selling expenses by increasing the foreign market value instead of decreasing the U.S. price as was done at the preliminary determination.

DOC Position: There is no basis for the Department to change the methodology used in the preliminary determination because the methodology that we employ is consistent with section 772(e) of the Act which requires the Department to reduce ESP for "expenses generally incurred by and for the account of the exporter in selling identical or substantially identical merchandise * * *." Furthermore, the *Timken* opinion has been remanded to the Department and, therefore, is not final.

Comment 49: Petitioners contend that the Department should not use Nissan's difference in merchandise adjustment data because the information originally submitted was erroneous and could not be reconciled with Nissan's cost of production information. Petitioners further contend that, if the Department accepts Nissan's new information on difference in merchandise adjustments, the cost of options rather than the options price should be used. In addition, petitioners argue that it is unclear whether the cost of options added in Japan on U.S. forklifts has been accounted for in the difference in merchandise data. If the Department is unable to determine whether Nissan has provided this information, the Department should reject Nissan's data.

Nissan contends that although there were differences in the application of variances to the reported difference in merchandise and cost data, these differences were reconciled at verification and the data is accurate. In addition, Nissan states that the cost of options added in Japan has been included in the total amounts shown in the response for materials and direct labor.

DOC Position: The Department verified the difference in merchandise information. However, neither the component-specific variance nor the company-wide variance was used. The Department adjusted standard costs submitted by applying the variance of the plant where forklifts are produced.

As stated in the verification report, we requested that Nissan separately report the options price for purposes other than the difference in merchandise adjustment. We have used the cost of options in calculating the difference in merchandise adjustment. With respect to the cost of options added in Japan, we verified that this was included in Nissan's reported cost of production.

Comment 50: Nissan contends that the Department failed to take into account the cost of options on home market sales as difference in merchandise adjustments in the preliminary determination. The Department should adjust for the cost of these options in its final determination.

DOC Position: The Department was unable to adjust for the cost of these options in the preliminary determination. Nissan did not report the cost of options on home market sales on the computer tape submitted for use in the preliminary determination and admitted to this error after the preliminary disclosure conference was held. For purposes of this determination, we have based our difference in merchandise adjustment on the cost of manufacture data verified in Japan. This cost includes the cost of options on home market sales.

Comment 51: Petitioners contend that Nissan's actual costs should be calculated based on the variance of the plant that produces forklifts rather than on a company-wide variance.

Nissan contends that use of the cost variance for the Murayama plant as calculated in the cost verification report is inappropriate because (1) the monthly data used in the calculation are not as accurate as data for 6-month periods, and (2) calculation of the cost variance for the Murayama plant in isolation does not take into account expenses incurred elsewhere which benefit production at Murayama. Nissan argues that the cost variance for the company as a whole should be used instead.

DOC Position: The company-wide variance is an aggregation of the variances from all operations of the company, most of which are neither directly nor indirectly related to the manufacture of forklifts. To apply the company-wide variance to the specific standard costs for forklifts for the six months from August 1986 through January 1987 would distort actual costs. Therefore, the Department has applied the Murayama plant variance to the standard costs of the forklifts to obtain actual costs.

Comment 52: Petitioners contend that the Department was unable to verify Nissan's interest expense and, therefore, as best information available, it should attribute to Nissan's cost of production the largest interest expense that it finds for one of the other respondents.

Nissan contends that, if the Department bases its calculation of interest income and expenses on the consolidated financial statements, Nissan's short-term interest expense must be reduced by the portion attributable to account receivable and finished goods inventory based on the ratio of accounts receivable and finished goods inventory to net current assets after deduction of non-interest bearing current liabilities. In any event, the Department has sufficient information related to Nissan's consolidated and unconsolidated accounts to calculate a net home market interest expense for the company.

DOC Position: The Department obtained the major items included in Nissan's consolidated Ministry of Finance Report. From this, the Department calculated the adjusted amount of interest applicable to forklifts.

Comment 53: Petitioners contend that the Department should disallow several rebates claimed by Nissan on home market sales for the following reasons: (1) There were discrepancies between the information provided in the response and that found at verification; (2) some

of the rebates were improperly allocated; (3) some of the rebate programs were not in effect during the period of investigation or were not given on sales during the period of investigaton; (4) Nissan has grouped certain rebates together without a clear explanation of what was included; (5) certain rebates are directly related to sales which are not subject to this investigation; (6) certain rebates claimed by Nissan are G&A or goodwill expenses rather than selling expenses. In addition, petitioners maintain that Nissan itself claimed that sales on which a certain rebate was paid were not made in the ordinary course of trade. The Department, therefore, should not use the sales on which this rebate was paid as home market comparisons for U.S. sales.

Nissan contends that the Department's preliminary determination improperly disallowed certain deductions from the home market price for payments made to dealers. Nissan argues that these payments are indirect selling expenses because they are designed to assist dealers in their selling activities and to provide incentives to dealers to improve the efficiency of their operations. In addition, Nissan contends that petitioners' comments regarding home market rebates are based on incorrect information and misunderstandings, and that the Department has the necessary corrected data to account for these rebates in any manner it chooses.

DOC Position: Where minor errors were found during verification on certain rebates, we verified the corrected information and instructed Nissan to submit a revised response. Where we were unable to verify the corrected information, we have disallowed these rebates in our final determination. With respect to the rebates claimed by Nissan for assisting dealers in their selling activities, because they were provided to dealers to improve the efficiency of dealers' operations, we have allowed these payments as indirect selling expenses and allocated them over average dealer revenue for sales of new forklifts, sales of parts, and servicing.

Comment 54: Petitioners contend that Nissan did not provide a breakdown of its credit expense and interest revenue on its sales in the United States. Therefore, the Department should base Nissan's credit costs on Nissan's gross credit expense.

Nissan contends that the calculation of credit in the U.S. and home markets must take into account the amount of interest earned on each sale. The adjustment should be equal to the total amount of credit expense up to the time of payment, less the interest received from customers. The Department has verified that NIFC charges and collects interest.

DOC Position: We have taken into account the interest revenue from the customer, but not in the way Nissan suggests. Nissan's customers know at the time of sale that, if payment is made after a certain date, interest will be charged. As such, we consider the interest revenue to be an increase in price agreed to by the customer at the time of sale. We have added the credit revenue earned by Nissan on U.S. and home market sales to the U.S. and home market price, respectively, and have recalculated the credit expense based on that amount between shipment and pyament. Because Nissan misreported the terms of payment on its U.S. sales to dealers, we used the longest payment term as the basis for the interest revenue and credit expense calculations for all sales to dealers. We recalculated credit expense on home market installment sales based on the declining balance of principal and interest.

Comment 55: Petitioners contend that, because Nissan failed to provide home market warranty expenses separately for the F01/F02 and H01/H02 models, the Department should disallow the warranty expense claimed on these models.

Nissan contends that the home market warranty expenses for F01/F02 and H01/H02 series forklifts combined are a more accurate reflection of warranty expenses on the sales under investigation than the brief history of warranty claims for the latter series alone.

DOC Position: Given that we do not consider the F01/F02 series to be obsolete, we consider it appropriate to include all warranty expenses incurred during the period of investigation on both series.

Comment 56: Petitioners contend that the Department should disallow Nissan's claim for a deduction from home market price for expenses incurred for incidential warranty-type services (*e.g.*, loaner forklifts during repairs, services outside the warranty period, and reimbursement to dealers for installation of options) because Nissan did not report this information on a sale-by-sale basis. In addition, Nissan's claims should be rejected because Nissan has not shown that these expenses were incurred on sales made during the period of investigation, or that they were made in the normal course of business. In support of their argument, petitioners cite *Dry Cleaning Machinery from West Germany: Final Results of Antidumping Duty Administrative Review* (52 FR 11299, April 8, 1987) in which the Department disallowed warranty expenses paid outside the warranty period.

Nissan contends that home market expenses for loaner forklifts, incidental warranty-type expenses, and reimbursements to dealers for options installation are very small and appropriately allocated as expenses incurred during the period of investigation even if they are related to sales made prior to the period.

DOC Position: It is unlikely that the warranty expenses claimed during the period of investigation would be applicable to sales made during that period due to the terms of the warranty. We allowed Nissan's loaner forklifts and options installation expenses as direct selling expenses. However, both Nissan and Toyota claimed expenses incurred on servicing and repairing forklifts outside of the warranty period. We disallowed these expenses as warranty claims but have accepted them as indirect selling expenses. This decision is consistent with the above-cited case since we are not treating these claims as a circumstance of sale adjustment, but rather as an indirect selling expense.

Comment 57: Petitioners contend that expenses for a May 1987 exhibition should not be included in Nissan's home market advertising expenses because they were incurred outside the period of investigation. If these expenses are to be included at all, they must be reallocated because Nissan attributed the entire 1986 allocated portion to forklifts, even though the exhibition was for all products within the Industrial Machinery Division.

In addition, petitioners contend that Nissan's response pertaining to home market advertising expenses is incomplete and that the expenses should have been provided on a model-by-model basis for the period of investigation to ensure that the expenses reported relate directly to the sales under investigation. Therefore, the Department should disallow these expenses or, if they are allowed, they should be treated as indirect selling expenses.

Nissan contends that the points raised by petitioners are primarily issues which were examined in detail at verification and, since petitioners had ample opportunity to raise their concerns prior to verification, their concerns are untimely.

DOC Position: Because Nissan did not report advertising expenses on a model-by-model basis, we allocated total

advertising expenses over total home market sales. We disallowed Nissan's advertising expenses related to the May 1987 exhibition because the exhibition took place three months after the end of the period of investigation and, as such, bears no relationship to the forklifts sold during the period of investigation.

Comment 58: Petitioners contend that Nissan's home market remodeling expenses, which were reported both separately as a direct selling expense and included in indirect selling expenses, are fabrication costs which should be included as part of Nissan's cost of production. In addition, petitioners argue that, if the changes to this data which were submitted after verification benefit Nissan, the pre-verification data should be used.

Nissan contends that while a post-verification submission revised a number of figures on the home market remodeling expenses, the overall effect is miniscule and the revisions were verified.

DOC Position: We have included Nissan's verified remodeling expenses in the calculation of the cost of manufacture rather than allowing them as a direct selling expense, and have not included them in indirect selling expenses.

Comment 59: Petitioners contend that the Department should disallow Nissan's claim for "other" expenses as part of the home market indirect selling expenses because they could not be verified.

DOC Position: For the calculation of cost of production, we used the total amount of home market indirect selling expenses reported. For the calculation of foreign market value, we allowed only those items which were verified. For example, Nissan stated at verification that the documents supporting other expenses had been lost. These expenses comprised a large percentage of the total claim.

Comment 60: Nissan contends that the Department should not allocate a portion of the general expenses of the Japanese parent (*i.e.*, Nissan Motor Company (NMC)) to the U.S. sales of the related U.S. importer, NIEC, because (1) the operations performed in the U.S. are not subject to any material amount of supervision by NMC, and (2) the supervision that does occur is performed by the Industrial Machinery Division and is already being allocated to ESP sales in the form of indirect selling expense incurred in Japan.

DOC Position: The Department did not attribute G&A expenses of the operations in Japan to the value-added operations in the United States for Nissan. However, since Nissan did not report an amount for G&A for the U.S. operations, nor were these expenses reflected on the financial statements of the U.S. subsidiary, the Department used, as best information available, the G&A expenses reported in Nissan's response for the Japanese operations.

Comment 61: Petitioners contend that, because Nissan was able to calculate a sale-by-sale inventory carrying cost in its cost of production response, that cost should be used for the home market inventory carrying cost in the sales response. In addition, because Nissan did not report specific information on U.S. inventory carrying costs on a sale-by-sale basis, the information on the cost of production for U.S. forklifts should be used in conjunction with NIEC's short-term borrowing rate and the average number of days in inventory to recalculate a sale-specific inventory carrying cost. Petitioners further contend that, because Nissan did not provide information on the amount of time between production and shipment, the Department should add an additional 30 days to Nissan's inventory period.

DOC Position: We have recalculated the inventory carrying cost on U.S. and home market sales on a sale-by-sale basis, using the cost of production and Nissan's home market and U.S. short-term borrowing rates. For the home market expense, we have used as best information available an average period between production and shipment to home market dealers, based on documentation gathered at verification. For the U.S. expense, we have added 15 days for the period between production and export to the United States to the figures submitted by Nissan, based on petitioners' U.S. experience.

Comment 62: Petitioners contend that Nissan's methodology to determine whether it is selling below cost is inappropriate. Therefore, the Department should take Nissan's base price plus options, less all discounts and rebates and less freight costs and compare that to the total cost of manufacture, G&A expenses, remodeling costs, credit costs, plus all selling expenses reported in the sales response to determine sales below cost of production.

Nissan contends that it did not attempt to compare gross price with the cost of production, and that it is more appropriate to deduct rebates and discounts from gross price than to include them in the cost of production. Therefore, Nissan's cost of production was correctly calculated.

DOC Position: We have calculated the cost of production based on our standard methodology, as described in the "Foreign Market Value" section B of this notice.

Comment 63: Petitioners contend that the total amount of service payments reported in Nissan's response does not match the total amount reported on the sales listing. Therefore, the Department should reallocate the higher amount over sales of the subject merchandise based on the cost of goods sold.

Nissan contends that the amount of total U.S. service payments verified by the Department differs from an earlier response because the earlier response included payments on sales outside the period of investigation and on products outside the scope of the investigation. Nissan argues that the verified amount, and not the earlier amount, is the correct information to be used in the final determination.

DOC Position: In making the deduction for service payments, we used the verified amounts, as reported in Nissan's revised submission.

Comment 64: Petitioners contend that, because Nissan did not provide verifiable information pertaining to its U.S. indirect selling expenses incurred in the United States, the Department should use the percentage derived from NIEC's financial statements to determine those expenses.

Nissan contends that the verification report incorrectly states that Nissan was unable to provide an adequate explanation of the allocation methodologies for NIEC's indirect selling expenses and labor and overhead expenses of the forklift shop. They state that they had no indication that the verifiers did not understand the allocation methodologies used.

DOC Position: At verification, Nissan could not provide a clear explanation of the allocation methodology used in the response. We requested that Nissan revise its allocation of indirect selling expenses which we verified and have used in this determination.

Comment 65: Petitioners contend that Nissan incorrectly calcualted its U.S. warranty expense. Therefore, the Department should recalculate this expense using the ratio of the sales value of the products under investigation to the sales value of all forklifts during the period of investigation and applying this ratio to the highest total warranty expense amount reported by Nissan. The result should then be allocated to the products under investigation based on the cost of goods sold for each product.

Nissan contends that the exact amount of U.S. warranty expense related to each series of forklift has

VOL 53 ISS 73 APR 15 1988 UMI

been verified and no allocation of these expenses is necessary.

DOC Position: We made a deduction from U.S. price for the verified warranty expenses.

Comment 66: Petitioners contend that Nissan's home market indirect selling expenses and credit expenses reported in the sales response do not correlate with the information provided in the cost of production response. Therefore, for purposes of the final determination, the Department should rely on the information least favorable to Nissan.

Nissan contends that the differences in the credit expenses reported in the home market sales response and the cost of production response are attributable to the fact that the latter is based on the Department's methodology used at the preliminary determination. Nissan also argues that the different indirect selling expenses reported are attributable to the fact that a portion of them was broken out separately on the latest computer tape.

DOC Position: As stated above, we have recalculated home market indirect selling expenses and credit expenses in our final determination based on information obtained at verification.

Comment 67: Petitioners contend that the net home market prices reported by Nissan are incorrect and that the "negative options" should be added to the price to determine the actual selling price for the products under investigation.

Nissan contends that home market "negative options", which reflect post-sale adjustments to prices of earlier sales, have a minimal impact on foreign market value since similar adjustments were made with respect to sales during the period of investigation which were recorded as "negative options" after the period.

DOC Position: We have added the amount of these adjustments back into the reported sales prices since these account adjustments were not related to the sales under investigation.

Comment 68: Petitioners contend that Nissan's "Tokuso" sales in the home market are made in the ordinary course of trade and should be used as comparisons with U.S. sales.

Nissan contends that so-called Tokuso forklifts sold in the home market have non-standard features and require custom designing and, therefore, are not as similar to the products sold in the United States as base machines sold with regular options. They state that the Department has all the necessary information if it were to determine that particular Tokuso sales are the most comparable to U.S. sales.

DOC Position: We have determined that Nissan's Tokuso sales were made in the ordinary course of trade and that any physical differences in the Tokuso products could be accounted for by a difference in merchandise adjustment. Therefore, we have included these sales in our analysis.

Comment 69: Petitioners contend that Nissan's sales of "obsolete" models are not, in fact, obsolete as defined in the Department's policy paper on which Nissan bases its claim. The Department should include these sales in the calculation of ESP, particularly since Nissan has not argued that they be removed from the calculation of foreign market value.

Nissan contends that the Department should either not consider sales of obsolete models in its calculation of ESP or should make a circumstance of sale adjustment to foreign market value to take obsolescence into account.

DOC Position: We do not consider the models referred to by Nissan to be obsolete. The physical characteristics and functions of these models do not differ significantly from the models now being produced and sold under a new model number. As such, we have included these sales in the calculation of ESP and have not made an adjustment to foreign market value for obsolescence.

Comment 70: Petitioners contend that, since Nissan underreported the amount of time required to perform an LP conversion (*i.e.*, adapting a gasoline engine to use liquid propane fuel), the Department should increase the time for each value-added operation performed by NIEC.

DOC Position: The Department reviewed each function performed by NIEC and the time associated with each function. At verification, we found that the LP conversion time had been understated. Accordingly, we adjusted the labor cost on LP conversions based on verified information. We found that the time associated with other functions was accurately reported. Therefore, no additional time has been added to other value-added operations.

Comment 71: Petitioners contend that the information provided by Nissan on foreign inland insurance, foreign inland freight, foreign shipping charges, and the foreign invoice preparation fee on U.S. sales is inadequate because it is based on expenses in the six-month fiscal period April through September 1986, rather than expenses incurred during the period of investigation. Therefore, the Department should use the largest freight costs per model in its final determination.

Nissan argues that the freight expenses for April through September 1986 correspond most closely to the sales made by NIEC during the period of investigation.

DOC Position: At verification, we saw that ESP transactions during the period of investigation generally incurred charges in the home market between April and September. We reviewed these expenses at verification and have used them in this determination.

Comment 72: Petitioners contend that Nissan's prep fees should be deducted from U.S. price.

Nissan contends that its inadvertent omission of the U.S. prep fee in its original response should not be construed agaisnt it since the error was unfavorable to Nissan.

DOC Position: Given that Nissan reported prices net this prep fee, it has already been accounted for in our analysis.

Comment 73: Nissan contends that the Department's product comparison procedures followed in the preliminary determination produced "highly anomolous results", specifically, the comparison of a large number of U.S. models with a single sale in Japan. Nissan argues that we should look only to "major" product characteristics in selecting the home market forklifts to be used for comparison and that minor characteristics such as hose reels and fork arms should be treated as options.

Komatsu also argues that the Department's product comparison criteria give undue weight to mast type (upright style) over other characteristics which Komatsu considers to be more indicative of the basic forklift such as engine type, engine size, and transmission type.

DOC Position: Prior to the issuance of our original questionnaire, we consulted with petitioners to develop a hierarchy of product characteristics so as to compare products for each respondent on a consistent basis. While individual manufacturers may place more or less emphasis on a particular characteristic, all respondents agreed that the characteristics we selected were, for the most part, the most important ones. All physical characteristics other than the primary characteristics also have been accounted for in the difference in merchandise adjustment.

Comment 74: Petitioners contend that Nissan failed to lower its U.S. prices for certain price adjustments discovered at verification. Therefore, the Department should either reject Nissan's response or, at a minimum, make these adjustments to Nissan's U.S. prices.

DOC Position: We agree with petitioners and have made the appropriate adjustments to the U.S. prices reported.

Comment 75: Petitioners contend that, since Komatsu's cost of production information does not reconcile with the cost information in its product concordance, the Department should only make difference in merchandise adjustments that increase foreign market value.

DOC Position: We have used verified cost data to calculate home market costs of production and differences in merchandise adjustments.

Comment 76: Petitioners contend that Komatsu used an inappropriate method of calculating interest expense in its cost of production and constructed value information. Therefore, the Department should recalculate Komatsu's interest adjustment.

Komatsu contends that, if the Department intends to deduct interest income from investments not related to operations from the reported net interest income, then the Department should deduct interest costs incurred with respect to such investments from the cost of production.

DOC Position: Interest, which included income and expenses from installment sales, was recalculated to reflect only the interest expense incurred in producing the forklifts, offset for a proportional amount related to credit and inventory.

Comment 77: Petitioners contend that Komatsu failed to report all of its Parts Department's G&A expenses and, therefore, understated the cost of production it reported for the home market forklifts under investigation.

Komatsu contends that its Parts Department's G&A expenses should not be included in the cost of production because that department handles spare repair parts only and does not supply attachments to dealers.

DOC Position: We have included the Parts Department's expenses in G&A expenses as they were recorded in KFC's financial records. We consider the costs incurred to maintain an inventory of parts for future repairs to be a normal G&A expense of a forklift manufacturer and, therefore, we have allocated them as a G&A expense to the cost of manufacture of Komatsu's forklifts.

Comment 78: Petitioners contend that the actual selling prices reported by Komatsu on certain home market sales do not reconcile with the actual selling prices reported in its cost of production response. Therefore, the Department should adjust upward the actual selling prices in the sales database to correspond with the selling prices reported in the cost of production response.

DOC Position: The Department has used the verified actual selling prices reported in the sales response for purposes of this determination.

Comment 79: Petitioners contend that the Department should not allow home market freight charges incurred in moving goods to warehouses for storage prior to sale. Petitioners also argue that freight expenses incurred by Komatsu in transporting forklifts from the factory to related dealers constitute pre-sale related party payments and, therefore, should not be deducted from foreign market value. In support of these contentions, petitioners cite *Color Television Receivers; Except for Video Monitors, from Taiwan; Final Results of Antidumping Duty Administrative Review (Receivers from Taiwan)* (51 FR 46895, December 29, 1986) and *Television Receivers, Monochrome and Color, from Japan; Final Results of Antidumping Duty Administrative Review (Receivers from Japan)* (53 FR 4050, February 11, 1988).

Komatsu contends that failure to adjust for factory-to-dealer inland freight expenses in the home market would prevent a fair "ex-factory price" comparison as required by the law. Furthermore, these are no more "pre-sale" expenses than are Japanese inland freight, ocean freight, and U.S. inland freight on ESP sales.

DOC Position: In *Receivers from Taiwan,* we treated a respondent's home market freight claim as a general expense because the transportation charge was incurred in shipping the goods to a facility used for general storage as well as distribution. In *Receivers from Japan,* we denied a respondent's claim for certain home market inland freight expenses because they were incurred prior to the sale of the merchandise. In the case of Komatsu, home market dealers do not store inventory prior to sale. Shipments are made from the factory subsequent to the consummation of the sale between the dealer and the end-user customer. Therefore, we have allowed Komatsu's claim for purposes of this determination.

Comment 80: Petitioners contend that Komatsu's home market inland freight expenses incurred in transporting forklifts from the dealer to the customer appear unreasonably high in relationship to the ocean freight expenses claimed on its ESP sales and, therefore, should be disallowed.

DOC Position: We verified that the inland freight charges reported in the response are the actual charges incurred by the dealer. As such, they are appropriate deductions from the home market price.

Comment 81: Petitioners contend that an adjustment to home market price for charges incurred by respondent manufacturers for services performed by related dealers must be based solely on the actual cost of providing the service. The adjustment should not include any profit earned by related dealers in the adjustment claimed. If profit for these expenses is not provided on an individual basis, the Department should use as best information available an average profit percentage earned by a related company to calculate a profit proxy.

DOC Position: Komatsu is the only respondent with related-dealer transactions which we are not treating as arm's-length for purposes of this determination. In calculating charges and adjustments in the home market, we did not take into account transfer payments between Komatsu and its related dealers. All charges and adjustments were based on actual expenses incurred by either Komatsu or its dealers.

Comment 82: Petitioners contend that the Department should reject Komatsu's pre-verification and post-verification home market credit expense claims because neither has been verified adequately. Even if the new data were verified, the Department should not use it because it would overstate the credit expense. Petitioners further argue that the Department should not deduct credit expenses for Komatsu's sales for which shipment or payment dates were not reported.

Komatsu argues that, contrary to petitioners' assertion, home market credit expenses have been verified.

DOC Position: During verification, we found that there were actually multiple payment dates for many home market sales. The payment date reported was the date of the first payment received and was not reflective of the actual number of days outstanding for the entire balance of payment. At verification, we requested that Komatsu recalculate credit expense based on the actual number of days in which a portion of the balance was outstanding. These recalculations were verified for three of the company's dealers (two of which were Komatsu's largest dealers). The recalculation of credit for the other dealers is comparable to the credit recalculations of the three verified dealers. As such, we are using the expenses reported for each dealer as best information available.

Comment 83: Petitioners contend that the Department should disallow certain

sales commissions claimed by Komatsu on home market sales because Komatsu did not provide the Department with sufficient information on the commissions and because Komatsu was unable to substantiate at verification the amounts claimed.

Komatsu contends that adjustments should be made to home market sales for certain payments to third parties and employees which are contingent upon consummation of a sale because they are specific to a particular sale and represent actual out-of-pocket expenditures. Komatsu argues that certain of these payments to salesmen are properly allowable because the payments benefit the individual recipient and, therefore, are not mere internal transfers of corporate funds.

DOC Position: We verified that Komatsu paid bonuses to individuals and to its dealer's employees who introduced new customers. Since the payments are actual expenditures made by the company tied to specific sales and are not intracompany transfers, we are treating the expenditures as home market sales commissions.

Comment 84: Petitioners contend that, because Komatsu was unable to demonstrate that certain sales promotional items were actually provided to customers and because Komatsu made unsolicited changes in its data in its post-verification submission regarding these expenses, the Department should disallow this claim as either a direct or indirect selling expense on home market sales.

DOC Position: We verified the expenses claimed under this form of sales promotion and determined that these items are used to promote the sales of forklifts. We are treating these expenses as indirect selling expenses since Komatsu and its dealers are related and, thus, these expenses are directed as Komatsu's customers.

Comment 85: Petitioners contend that Komatsu's claim for certain home market advertising expenses directed at end-user customers should be rejected as an indirect selling expense because Komatsu used an inappropriate method of allocation to calculate these expenses and because Komatsu failed to show that these expenses were actually incurred during the period of investigation.

Komatsu contends that certain model-specific home market advertising expenses are designed to induce end-user customers to purchase forklifts for and are reasonably allocated expenses for which an adjustment should be made.

DOC Position: We verified that Komatsu's advertising claims were incurred during the period of investigation and that the company had properly allocated them to sales of forklifts. We are treating these expenses as indirect selling expenses since Komatsu and its dealers are related and, thus, these expenses are directed at Komatsu's customers.

Comment 86: Petitioners contend that Komatsu has not attempted to show that differing levels of trade affect price comparability. Rather, it has tried to prove that this adjustment is warranted based on quantification of the cost differentials of selling at differing levels of trade. Komatsu has simply aggregated its dealers' indirect selling expenses but has provided no other substantiation that these costs were incurred because the sales were made at a different level of trade.

Petitioners also argue that Komatsu has claimed a deduction from home market price for indirect selling expenses incurred by itself and related dealers. Therefore, to claim a level of trade adjustment equal to the indirect selling expenses incurred by related dealers would result in a double adjustment—one as part of the ESP offset provision and the other as part of the level of trade adjustment. For these reasons, the Department should reject Komatsu's level of trade adjustment.

Komatsu contends that the Department, in its preliminary determination, improperly compared home market retail transactions with U.S. wholesale transactions without adjusting for the difference in levels of trade being compared as required by 19 CFR 353.19. Komatsu argues that it has established that it experiences actual differences in selling costs associated with sales at the different levels of trade in the two markets, that the difference in costs is equal to the additional dealer overhead incurred in Japan but not in the United States, and that this difference has been fully quantified, documented, and verified. Since the dealers in each market perform exactly the same functions, the costs incurred by Komatsu's home market dealers in providing those services is an accurate measure of the additional cost associated with selling at the retail level in Japan as compared with selling at the wholesale level in the United States.

Komatsu further argues that the Department's circumstances of sale adjustments recognize that differences in costs incurred in selling in one market versus another market have a direct effect on price, and that the difference in merchandise adjustments recognize that a cost difference reflected in a physical difference likewise affects the price of products compared. Accordingly, the evidence of costs incurred by dealers in one market but not in the other market establishes the actual differences in selling costs due to selling at different levels of trade and fulfills the requirements for this adjustment as stated in *Fundicao Tupy v. United States*, Slip Op. 88-3 (C.I.T., January 12, 1988). Furthermore, to avoid a double adjustment of the indirect selling expenses, the level of trade adjustment should be made before adjusting for the ESP offset.

Komatsu also contends that, when presented with prima facie evidence that prices at different levels of trade are being compared, the Department has an affirmative duty to seek all data necessary to make the level of trade adjustment and that it has no discretion to refuse to do so. If the Department denies a level of trade adjustment, *Silver Reed America, Inc. et al. v. U.S.* (Slip Op. 88-5, 1988) requires that a detailed explanation must be given disclosing why a party has failed in its proof of the matter. Finally, Komatsu argues that if a level of trade adjustment is not granted in this case, the Department will have effectively read 19 CFR 353.19 out of the regulations which is impermissible without following the rulemaking procedures of the Administrative Procedure Act.

DOC Position: Section 353.19 of our regulations allows for an adjustment when comparing the prices of U.S. and home market sales made at different levels of trade. This section, like other provisions dealing with differences in circumstances of sale (either based upon differences in wholesale quantities or "other" circumstances of sale), is governed by 19 CFR 353.13 which provides that: "The person who alleges entitlement to any adjustment pursuant to §§ 353.14 through 353.19 must establish entitlement thereto to the satisfaction of the Secretary." In order to be entitled to an adjustment for differences in the levels of trade, the party claiming the adjustment must establish to the Department's satisfaction that the differences in the levels of trade affect price comparability. The Department has interpreted the regulation as requiring affirmative evidence that the differences in the prices are the result of selling at one level of trade as compared to the other in the home market. *See Final Determination of Sales at Less Than Fair Value; Industrial Nitrocellulose from France* (48 FR 21615, May 9, 1983) and *International Trade Administration Countertop Microwave Ovens from Japan; Final Determination of Sales at Less Than Fair Value, and Exclusions*

from Final Determination of Sales at Less Than Fair Value (45 FR 80157, December 3, 1980).

Komatsu has claimed a level of trade adjustment on the basis that virtually all of its U.S. sales are made to unrelated dealers, while in the home market Komatsu was required to report sales to its dealers' customers (*i.e.*, end-users) since nearly all of its home market dealers are related.

The Department requires that a company establish its claim for a level of trade adjustment by showing that within the home market, where all other facts are equal, there is consistent pricing between the different levels of trade. This establishes that the difference in price between the U.S. sale and the home market sale is attributable to a difference in the levels of trade rather than differences resulting from disparate market conditions in two distinct markets. An adjustment cannot be made for differences in level of trade just because costs are different when comparing sales to the United States and sales in the home market.

The Department cannot make the assumption that, because there are differences in costs between home market and U.S. sales, it should make a level of trade adjustment, because it "cannot [be] assume[d] that the market conditions and distribution network in the United States would be the same as in [the home market]." *Final Determination of Sales at Less Than Fair Value; Certain Carton Closing Staples and Staple Machines from Sweden* (48 FR 49323, October 25, 1983). *See also Low-Fuming Brazing Copper Rod and Wire from New Zealand; Preliminary Determination of Sales at Less Than Fair Value* (50 FR 31405, August 2, 1985).

Komatsu made its claim for a level of trade adjustment based on an examination of the selling expenses incurred on sales to dealers in the United States and sales to end-users in the home market. In order to qualify for a level of trade adjustment, as stated above, Komatsu would have to demonstrate that it incurs different selling expenses in selling to different levels of trade in the home market (*i.e.*, to both unrelated dealers and end-users). However, the number of sales to Komatsu's unrelated dealers in the home market were so insignificant that the Department could not make an appropriate comparison of different selling prices at the different levels.

Since there are many factors which affect the selling expenses in the two different markets, regardless of the level of trade, it is impossible for us to quantify the differences incurred in selling to different levels of trade by examining the expenses incurred in selling to two different markets. Our circumstance of sale adjustments do not measure the differences in selling expenses incurred in selling to different levels of trade, but measure the differences in selling expenses incurred in selling to two different markets. Komatsu's contention that evidence of differences in selling expenses to dealers in the United States and end-users in Japan warrants making an adjustment for level of trade is without merit and is illogical. If one were to accept Komatsu's argument, there should be no differences in selling expenses in selling to dealers in the United States and in selling to dealers in Japan.

Contrary to Komatsu's assertion, the Department has allowed a level of trade adjustment where the respondent has adequately supported the claim. *See Final Determination of Sales at Less Than Fair Value; Tapered Rolling Bearings and Parts Thereof, Finished and Unfinished, from Japan* (52 FR 30700, August 17, 1987). However, in this case, Komatsu has not demonstrated its entitlement to the level of trade adjustment. At no point in this investigation did we refuse to consider relevant information from Komatsu necessary to make a level of trade adjustment.

Comment 87: Petitioners contend that the sale of a new forklift by a Komatsu dealer in return for money and a trade-in should not be viewed as two distinct transactions. Rather, because the amount of money tendered by the purchaser and accepted by the dealer reflects the existence of the trade-in, the Department should make an adjustment for trade-ins in the final determination. According to petitioners, the trade-in adjustment should be added to foreign market value to reflect the actual amount the dealer obtained on the sale. This adjustment should be calculated by taking the resale price less any trade-in allowance and reconditioning expense. Petitioners further argue that, for those sales in which Komatsu did not resell a forklift accepted as a trade-in, the Department should disallow any reconditioning expenses claimed.

Petitioners also contend that Komatsu's claimed adjustment for the loss it incurs on scrapped trade-in forklifts should be rejected because Komatsu allocated this expense over all dealer sales although the claim cannot be tied directly to those sales, and because the residual value of scrap is an economic gain that should be added to, not subtracted from, foreign market value. Petitioners further argue that double-counting would result if the trade-in allowance is subtracted from foreign market value and the Department also grants the claim for trade-in scrap.

Komatsu argues that petitioners have presented no persuasive rationale or evidence to support its proposed methodology of valuing trade-ins and that the proposed methodology ignores a variety of other costs and imputed expenses absorbed by the dealer. Therefore, the Department has insufficient data to make such an adjustment should it decide to do so.

DOC Position: First, we are confused by petitioners' assertion that the sale of a new forklift and the receipt of a trade-in on that sale should not be viewed as two distinct transactions, while under Comment 35 petitioners argue that the acceptance of a trade-in is not related to the sale of a new forklift. Nevertheless, we agree that the acceptance of a trade-in is part of the same transaction as the sale of the forklift. That is the reason we allowed Toyota's truck replacement incentive rebate. Therefore, in calculating credit expenses, we deducted the trade-in allowance from the sales price to reflect the actual amount of credit assumed by respondents on the sale. The trade-in allowance is already included in the sales price of the new forklift, so no further adjustment to the home market price is warranted.

We disagree with both petitioners and Komatsu that a further adjustment to the home market price is needed to reflect the resale value of the trade-in and the reconditioning expense of the trade-in. Resale value and reconditioning expenses are related to the sale of the *trade-in.* This is a transaction distinct from Komatsu's sale of a *new* forklift.

Comment 88: Petitioners contend that the Department should disallow Komatsu's claim for home market indirect selling expenses because Komatsu included G&A expenses and used inappropriate methodologies to allocate these expenses.

DOC Position: We have not included G&A expenses in the indirect selling expenses for Komatsu.

Comment 89: Petitioners contend that the Department should use Komatsu's actual date of production for each sale to calculate home market inventory carrying costs.

DOC Position: We agree and have done so in this determination.

Comment 90: Petitioners contend that the Department should base Komatsu's U.S. inventory carrying cost calculation on the length of time from shipment in

Japan to shipment to the unrelated U.S. customer.

Citing *Silver Reed America, Inc. et al. v. U.S.* (Slip Op. 88–5, 1988), *supra*, and section 772(e)(2) of the Act, Komatsu contends that the cost of carrying inventory prior to entry into the United States is not an expense incurred in the United States and should not be deducted from ESP.

DOC Position: We have calculated inventory carrying cost from the date of production to the date of shipment to the first unrelated buyer. See also DOC Position to Comment 21 above.

Comment 91: Petitioners contend that Komatsu allocated its U.S. indirect selling expenses over total sales rather than ESP sales, thus understating the amount of the adjustment. Petitioners further argue that the Department should recalculate the allocation of these expenses over ESP sales based on the cost of goods sold for purposes of the final determination.

DOC Position: We consider the allocation to be reasonable given that both purchase price and ESP sales are handled by Komatsu's U.S. subsidiary. Furthermore, our normal allocation methodology is based on sales value rather than cost of goods sold.

Comment 92: Petitioners contend that, for Komatsu, the sales price of attachments and accessories added in the United States, as well as the portion of inland freight expense attributable to such attachments and accessories, should be deducted from the U.S. price for both ESP and purchase price transactions.

DOC Position: We agree with petitioners with respect to the sales prices of attachments and accessories on both ESP and purchase price sales. (*See* also DOC Position to Comment 27 above.)

With respect to inland freight, because the unrelated U.S. dealer is responsible for these charges, we did not deduct the expenses incurred for shipment of attachments and accessories.

Comment 93: Petitioners contend that, when lease transactions are sales-type leases, as in the case of Komatsu, they constitute sales subject to this investigation which should be used in the calculation of foreign market value. Where transactions are bona fide lease transactions, as in the case of Toyota, they should not be used as a basis for comparison to U.S. sales or for calculating foreign market value. In addition, where complete information on lease transactions was not provided, as in the case of Komatsu, the Department should use best information available in the final determination.

Toyota contends that, contrary to petitioners' assertion, home market transactions with certain payment terms are sales to dealers who buy forklifts in order to lease or rent to end-users. These transactions by Toyota are not leases and, therefore, are properly included as sales in the home market.

Komatsu contends that its home market leases do not constitute sales since there are no terms contemplating transfer of ownership, no bargain purchase options, and none of the transactions has a term of even 75 percent of the estimated useful life of a forklift using the estimated actual useful life of nine years. Komatsu also argues that there is no need to look to the relatively small number of home market leases since the number of home market sales reported provides an ample basis for determining fair market value.

DOC Position: Shortly before the preliminary determination, we discovered that certain respondents had lease transactions in the U.S. and home markets. Additional information on these transactions was requested and provided. While we have verified this information, we have not used lease transactions in making fair value comparisons.

This is the first instance in which the Department has had the opportunity to examine lease transactions to determine whether they should be treated as sales, pursuant to section 731 of the Act, as amended. Although interested parties have suggested several different methods to use in determining whether a lease transaction should be considered equivalent to a sale, we do not believe that the relevant factors have been sufficiently addressed in this case to warrant the selection of a standard that would apply in future cases. Moreover, the number of lease transactions that might be considered equivalent to sales is very small. Even without the lease transactions, we have been able to make fair value comparisons for every U.S. sale.

Comment 94: Petitioners contend that the Department should use the interest rate associated with the Komatsu's short-term U.S. borrowings during the period of investigation to calculate credit expenses on ESP sales. Petitioners further maintain that, even if there were no U.S. borrowing during the period of investigation, the Department has the authority to use the U.S. prime rate rather than an overseas rate. In support of this position, petitioners cite the *Final Determination of Sales at Less Than Fair Value: 64K Dynamics Random Access Memory Components from Japan* (51 FR 15943, April 29, 1986). Petitioners further argue that Komatsu's U.S. credit expenses should not be offset by overdue payment charges because Komatsu was unable to prove that such charges were paid.

Komatsu contends that, because Komatsu Forklift Inc. (KFI) ordinarily receives payment from its dealers well before it (KFI) is obligated to pay Komatsu Forklift Co., Ltd. (KFC), the Japanese parent company, credit expenses associated with U.S. sales are incurred by KFC in Japan. Therefore, the Department should use KFC's verified short-term borrowing rate in calculating the credit expense on U.S. sales. Komatsu cites *Certain Welded Carbon Steel Pipe and Tube from Turkey: Final Determination of Sales at Less Than Fair Value* (51 FR 13044, April 17, 1986) in arguing that the use of U.S. interest rates on U.S. sales is appropriate only when the Department has verified that U.S. sales have been financed with borrowings in the United States. Komatsu also argues that KFI's borrowings in the United States were for short-term needs (*e.g.*, overnight loans) and cannot be construed as borrowings to finance sales.

DOC Position: For the period in which Komatsu had U.S. borrowings, we have used a U.S. interest rate to reflect the cost of borrowing in the United States. However, for the period in which Komatsu had no borrowings in the United States, we determined that the most appropriate interest rate was the rate incurred on KFC's short-term borrowings in Japan because the parent company in Japan, in effect, bore the expense of financing the sale.

Comment 95: Petitioners contend that the Department should reject Komatsu's claim for certain expenses on home market sales because they are comprised primarily of normal pre-sale services and are not requested by a customer in the ordinary course of business and because expenses related to U.S. sales were included in the amount reported. Petitioners further argue that these expenses should be included as part of the cost of production and should not be deducted from foreign market value as either a direct or an indirect selling expense. In addition, petitioners contend that Komatsu's revised data for these expenses should be disallowed because these expenses have not been verified, were not submitted properly, and have been increased without explanation from the pre-verification submission to the post-verification submission.

Komatsu contends that certain home market expenses for final preparation of a forklift prior to delivery to a customer, which Komatsu characterizes as

necessary to place the merchandise in a condition ready for delivery, should be treated as direct selling expenses. Komatsu argues that, at a minimum, amounts paid to outside contractors for these services should be deducted from the home market price.

DOC Position: These home market pre-sale expenses do not include expenses related to U.S. sales, as a misstatement in the verification report may have led petitioners to believe. Because of discrepancies in the reporting of these charges subsequent to verification, we have disallowed them as an adjustment in the home market. We have included the amounts paid to outside contractors for certain services in the calculation of the cost of production.

Comment 96: Petitioners contend that, because some of Komatsu's home market sales were made by a related dealer to a related sub-dealer, Komatsu should have reported the sales by the sub-dealer to the end-user.

DOC Position: We agree and have not used these sales as home market comparisons.

Comment 97: Petitioners contend that Komatsu has provided no substantive evidence to support its assertion that "direct shipment" sales are purchase price transactions. Therefore, the Department should treat such sales as ESP transactions in the final determination and impute all additional ESP selling and movement expenses to these sales.

DOC Position: We disagree. At verification, Komatsu was able to substantiate its claim that these sales were properly classified as purchase price transactions and we have treated them as such for purposes of this determination.

Comment 98: Petitioners contend that KFI has incurred a bad debt expense during the period of investigation. Therefore, the Department should determine the rate at which KFI is accruing balances in its allowances for doubtful accounts and apply this rate to sales during the period of investigation as an indirect selling expense on U.S. sales. Petitioners further argue that the Department should disallow Komatsu's home market claim for indirect selling expenses because Komatsu failed to explain the discrepancies between its bad debt claim and certain other accounts.

DOC Position: The Department considers bad debts related to sales of the subject merchandise to be a selling expense. However, in the case of Komatsu, we found at verification that even though the company set aside funds in a reserve for doubtful accounts, it did not incur any bad debt expense on sales of forklifts during the period of investigation.

Comment 99: Petitioners contend that the Department should include all of the repossessed forklifts reported in Komatsu's U.S. sales database because: (1) The forklifts repossessed from dealers had not reached an end-user and, therefore, cannot be considered used; and (2) Komatsu failed to demonstrate that the forklifts repossessed from end-users were truly used.

Komatsu contends that a small number of used forklifts which it resold in the United States should be excluded from the investigation because they cannot be sold as, or compete with, new forklifts.

DOC Position: We verified that the forklifts referred to by petitioners were reconditioned and resold as used forklifts. Furthermore, we have not included used, demonstration, or reconditioned forklifts in our calculation of sales at less than fair value.

Comment 100: Mifran-Boman, an interested party, contends that it is not reasonable to give Sanki a separate duty rate since it is not a manufacturer of the subject merchandise.

DOC Position: We examined the sales of Sanki because of petitioners' allegation that manufacturers in Japan might be selling new forklifts to resellers which, in turn, sell the forklifts as used to unauthorized U.S. dealers. In an antidumping duty investigation, the Department may select as respondents those companies that manufacture or export the subject merchandise to the United States. As an exporter, unrelated to any of the manufacturers under investigation, Sanki qualified as a respondent in this case. Therefore, we have assigned Sanki a separate duty rate in this determination.

Comment 101: Petitioners contend that certain export sales reported by Sanki also appear in the home market database of another respondent in this investigation. Therefore, the Department should eliminate these sales from that respondent's database and use new comparison sales or constructed value as the basis for foreign market value.

DOC Position: We have verified that the sales reported by the respondent manufacturer qualify as legitimate home market sales. The respondent manufacturer had no knowledge that the forklifts would eventually be exported to the United States. Even though the same forklifts were subsequently exported by Sanki, there is no evidence linking the respondent manufacturer's home market sales and Sanki's export sales. As such, we have not deleted these sales from the manufacturer's home market database.

Continuation of Suspension of Liquidation

We are directing the U.S. Customs Service to continue to suspend liquidation of all entries of forklifts from Japan that are entered or withdrawn from warehouse, for consumption, on or after the date of publication of this notice in the **Federal Register**. The U.S. Customs Service shall continue to require on all entries a cash deposit or the posting of a bond equal to the estimated average amounts by which the foreign market value of forklifts from Japan exceeds the United States price as shown below. This suspension of liquidation will remain in effect until further notice. The weighted-average margins are as follows:

Manufacturer/producer/exporter	Weighted-average margin (percent)
Toyota Motor Corp.	17.29
Nissan Motor Co., Ltd.	51.33
Komatsu Forklift Co., Ltd.	47.73
Sumitomo-Yale Co., Ltd.	51.33
Toyo Umpanki Co., Ltd.	51.33
Sanki Industrial Co., Ltd.	13.65
Kasagi Forklift, Inc.	56.81
All others	39.50

As a result of our affirmative critical circumstances determination with respect to Nissan and TCM, the retroactive suspension of liquidation ordered on Nissan and TCM will remain in effect. However, because our final critical circumstances determination is negative for the other respondents and all other companies, the retroactive suspension of liquidation ordered at the time of the preliminary determination with respect to all companies other than Nissan and TCM is terminated. All cash deposits or bonds placed on entries made by all companies other than Nissan and TCM prior to November 24, 1987, shall be refunded.

This suspension of liquidation covers imports of forklifts meeting the definition outlined in the "Scope of Investigation" section of this noticed. If, at the time of entry into the United States, the importer can demonstrate to the satisfaction of the U.S. Customs Service that the forklift was used, as defined in the section of this notice entitled "Used Forklift Issue," that forklift will be exempt from the suspension of liquidation and any cash deposit or bonding requirements.

In our preliminary determination, we required a cash deposit or bond on all forklifts manufactured less than three

years prior to the date of entry. Given that we have clarified the definition of a used forklift, all cash deposits or bonds placed on used forklifts manufactured in a calendar year at least three years prior to the year of entry into the United States shall be refunded if the importer establishes to the satisfaction of the U.S. Customs Service that the forklift is used as defined in the "Used Forklift Issue" section of this noticed.

ITC Notification

In accordance with section 735(d) of the Act, we have notified the ITC of our determination. In addition, we are making available to the ITC all nonprivileged and nonproprietary information relating to this investigation. We will allow the ITC access to all privileged and business proprietary information in our files, provided the ITC confirms that it will not disclose such information, either publicly or under administrative protective order, without the written consent of the Acting Assistant Secretary for Import Administration.

If the ITC determines that material injury, or threat of material injury, does not exist, this proceeding will be terminated and all securities posted as a result of the suspension of liquidation will be refunded or cancelled. However, if the ITC determines that such injury does exist, the Department will issue an antidumping duty order directing Customs officers to assess an antidumping duty on forklifts from Japan entered or withdrawn from warehouse, for consumption, after the effective date of the suspension of liquidation, equal to the amount by which the foreign market value exceeds the U.S. price.

This determination is published pursuant to section 735(d) of the Act (19 U.S.C. 1673d(d)).

April 7, 1988.

Joseph A. Spetrini,

Acting Assistant Secretary for Import Administration.

[FR Doc. 88-8215 Filed 4-14-88; 8:45 am]

BILLING CODE 3510-DS-M

Transportation and Related Equipment Technical Advisory Committee; Partially Closed Meeting

A meeting of the Transportation and Related Equipment Technical Advisory Committee will be held May 3, 1988 at 9:30 a.m., Room 12138, the Federal Building, 450 Golden Gate Avenue, San Francisco, California. The Committee advises the Office of Technology and Policy Analysis with respect to technical questions which affect the level of export controls applicable to transportation and related equipment or technology.

Agenda

General Session

1. Opening Remarks by the Chairman.
2. Introduction of Members and Visitors.
3. Presentation of Papers or Comments by the Public.
4. Committee Charter Objectives, and Relationships with Other Government Working Groups.
5. 1987 Committee Accomplishments, and the 1988 Plan.
6. Discussion of Briefing Presented to Aerospace Industries Association.
7. Briefing on Relationships Between the Militarily Critical Technologies List (MCTL) and COCOM.
8. New Business.

Executive Session

9. Discussion of matters properly classified under Executive Order 12356, dealing with the U.S. and COCOM control program and strategic criteria related thereto.

The general session of the meeting will be open to the public and a limited number of seats will be available. To the extent time permits, members of the public may present oral statements to the Committee. Written statements may be submitted at any time before or after the meeting.

The Assistant Secretary for Administration, with the concurrence of the delegate of the General Counsel, formally determined on December 17, 1986, pursuant to Section 10(d) of the Federal Advisory Committee Act, as amended that the series of meetings or portions of meetings of the Committee and of any Subcommittees thereof, dealing with the classified materials listed in 5 U.S.C. 552b(c)(1) shall be exempt from the provisions relating to public meetings found in section 10(a)(1) and (a)(3), of the Federal Advisory Committee Act. The remaining series of meetings or portions thereof will be open to the public.

A copy of the Notice of Determination to close meetings or portions of meetings of the Committee is available for public inspection and copying in the Central Reference and Records Inspection Facility, Room 6628, U.S. Department of Commerce, Washington, DC.

For further information or copies of the minutes call Ruth D. Fitts, 202-377-4959.

Date: April 8, 1988.

Betty Anne Ferrell,

Acting Director, Technical Support Staff Office of Technology and Policy Analysis.

[FR Doc. 88-8311 Filed 4-14-88; 8:45 am]

BILLING CODE 3510-DT-M

East Orange VA Medical Center, et al.; Consolidated Decision on Applications for Duty-Free Entry of Electron Microscopes

This is a decision consolidated pursuant to section 6(c) of the Educational, Scientific, and Cultural Materials Importation Act of 1966 (Pub. L. 89-651, 80 Stat. 897; 15 CFR 301). Related records can be viewed between 8:30 a.m. and 5:00 p.m. in room 1523, U.S. Department of Commerce, 14th and Constitution Avenue NW., Washington, DC.

Docket No.: 87-057. Applicant: East Orange VA Medical Center, East Orange, NJ 07019. Instrument: Electron Microscope with Accessory, Model H-6010. Manufacturer: Nissei Sangyo America, Ltd., Japan. Intended Use: See notice at 53 FR 4866, February 18, 1988. Instrument Ordered: March 18, 1986.

Docket No.: 87-093. Applicant: VA Medical Center, Denver, CO 80220. Instrument: Electron Microscope. Manufacturer: N.W. Philips, The Netherlands. Intended Use: See notice at 53 FR 4866, February 18, 1988. Instrument Ordered: July 24, 1986.

Docket No.: 87-283R. Applicant: Naval Hospital San Diego, San Diego, CA 92134-5000. Instrument: Electron Microscope, Model EM 109T. Manufacturer: Carl Zeiss, West Germnay. Intended Use: See notice at 52 FR 1812, January 22, 1988. Instrument Ordered: August 15, 1985.

Comments: None received.

Decision: Approved. No instrument of equivalent scientific value to the foreign instrument, for such purposes as these instruments are intended to be used, was being manufactured in the United States at the time instruments were ordered.

Reasons: Each foreign instrument is a conventional transmission electron microscope (CTEM) and is intended for research or scientific educational uses requiring a CTEM. We know of no CTEM, or any other instrument suited to these purposes, which was being manufactured in the United States either at the time of order of each instrument or at the time of receipt of application by the U.S. Customs Service.

Frank W. Creel,

Director, Statutory Import Programs Staff.

[FR Doc. 88-8341 Filed 4-14-88; 8:45 am]

BILLING CODE 3510-DS-M

Hawaii Institute of Geophysics, et al.; Consolidated Decision on Applications for Duty-Free Entry of Scientific Instruments

This is a decision consolidated pursuant to section 6(c) of the Educational, Scientific, and Cultural Materials Importation Act of 1966 (Pub. L. 89-651, 80 Stat. 897; 15 CFR 301). Related records can be viewed between 8:30 a.m. and 5:00 p.m. in Room 1523, U.S. Department of Commerce, 14th and Constitution Avenue NW., Washington, DC.

Docket No.: 87-267R Applicant: Hawaii Institute of Geophysics, Honolulu, HI 96813. Instrument: Field Portable Remote Radon Detector, Model Alphameter. Manufacturer: Alpha Nuclear Cororation, Canada. Intended Use: See notice at 52 FR 32824, August 31, 1987. Reasons for This Decision: The foreign instrument provides for continuous measurement of parent radionuclide concentrations at remote locations for 24 hour periods over several days.

Docket No.: 88-035. Applicant: University of Utah, Salt Lake City, UT 84112. Instrument: Electron Microprobe, Model CAMEBAX SX 50. Manufacturer: Cameca, France. Intended Use: See notice at 52 FR 48557, December 23, 1987, Reasons for This Decision: The foreign instrument provides image analysis combining x-ray, electron, cathodoluminescence signals and electron beam currents of 10^{-6} to 10^{-12}amperes.

Comments: None received.

Decision Approved. No instrument of equivalent scientific value to the foreign instrument, for such purposes as each is intended to be used, is being manufactured in the United States.

Reasons: The capability of each of the foreign instruments described above is pertinent to each applicant's intended purposes. We know of no instrument or apparatus being manufactured in the United States which is of equivalent scientific value to either of the foreign instruments.

Frank W. Creel,

Director, Statutory Import Programs Staff.

[FR Doc. 88-8342 Filed 4-14-88; 8:45 am]

BILLING CODE 3510-DC-M

The Pennsylvania State University, et al.; Consolidated Decision on Applications for Duty-Free Entry of Scientific Instruments

This is a decision consolidated pursuant to section 6(c) of the Educational, Scientific, and Cultural Materials Importation Act of 1966 (Pub. L. 89-651, 80 Stat. 897; 15 CFR 301). Related records can be viewed between 8:30 a.m. and 5:00 p.m. in room 1523, U.S. Department of Commerce, 14th and Constitution Avenue NW., Washington, DC.

Docket No.: 88-058. Applicant: The Pennsylvania State University, University Park, PA 16802. Instrument: Langmuir Trough (Balance). Manufacturer: Joyce Loebl, United Kingdom. Intended Use: See notice at 53 FR 1811, January 22, 1988. Reasons for This Decision: The foreign instrument provides complete programmability, calibration, monitoring, graphical display and comparison of results of the film deposition process.

Docket No.: 88-072. Applicant: University Corporation for Research, Boulder, CO 80303. Instrument: Mass Spectrometer System, Model Delta E. Manufacturer: Finnigan MAT GmbH, West Germany. Intended Use: See notice at 53 FR 4866, February 18, 1988. Reasons for This Decision: The foreign instrument provides a multielement multicollector system capable of measuring $^{13}C/^{12}C$, $^{15}N/^{14}N$, $^{18}O/^{16}O$, $^{34}S/^{32}S$ in sequence at high precision without breaking vacuum.

Docket No.: 88-077. Applicant: Massachusetts Institute of Technology, Cambridge, MA 02139. Instrument: Inductively Coupled Plasma/Mass Spectrometer, Model PlasmaQuad. Manufacturer: VG Instruments, United Kingdom. Intended Use: See notice at 53 FR 4866, February 18, 1988. Reasons for This Decision: The foreign instrument is capable of detecting elements, isotopes or impurities down to concentrations of ten parts per trillion.

Comments: None received.

Decision: Approved. No instrument of equivalent scientific value to the foreign instrument, for such purposes as each is intended to be used, is being manufactured in the United States.

Reasons: The capability of each of the foreign instruments described above is pertinent to each applicant's intended purposes. We know of no instrument or apparatus being manufactured in the United States which is of equivalent scientific value to any of the foreign instruments.

Frank W. Creel,

Director, Statutory Import Programs Staff.

[FR Doc. 88-8343 Filed 4-14-88; 8:45 am]

BILLING CODE 3510-DS-M

University of California, Los Angeles, et al.; Consolidated Decision on Applications for Duty-Free Entry of Scientific Instruments

This is a decision consolidated pursuant to section 6(c) of the Educational, Scientific, and Cultural Materials Importation Act of 1966 (Pub. L. 89-651, 80 Stat. 897; 15 CFR Part 301). Related records can be viewed between 8:30 a.m. and 5:00 p.m. in Room 1523, U.S. Department of Commerce, 14th and Constitution Avenue NW., Washington, DC.

Docket Number: 87-251. *Applicant:* University of California, Los Angeles, Los Angeles, CA 90024-1786. *Intended Use:* See notice at 52 FR 32823, August 31, 1987.

Docket Number: 87-271. *Applicant:* Massachusetts Institute of Technology, Cambridge, MA 02142. *Intended Use:* See notice at 52 FR 32825, August 31, 1987.

Docket Number: 88-002. *Applicant:* Baylor College of Medicine, Houston, TX 77030. *Intended Use:* See notice at 52 FR 43219, November 10, 1987.

Docket Number: 88-015. *Applicant:* USDA/ARS Children's Research Center, Baylor College of Medicine, Houston, TX 77030. *Intended Use:* See notice at 52 FR 46639, December 9, 1987.

Instrument: Gas-Isotope Ratio Mass Spectrometer, Model Delta E.

Manufacturer: Finnigan MAT Corporation, West Germany. *Advice Submitted by:* The National Institutes of Health, March 15, 1988.

Comments: None received.

Decision: Approved. No instrument of equivalent scientific value to the foreign instrument, for such purposes as each is intended to be used, is being manufactured in the United States.

Reasons: The foreign instruments provide: (1) An internal precision of 0.01% for 100 bav μl samples of CO_2, (2) a six-cup multicollector system, and (3) a computer-controlled sample preparation and inlet system. The National Institutes of Health advises that (1) the capabilities of each of the foreign instruments described above are pertinent to each applicant's intended purpose and (2) it knows of no domestic instrument or apparatus of equivalent scientific value for the intended use of each instrument.

We know of no other instrument or apparatus being manufactured in the United States which is of equivalent

scientific value to any of the foreign instruments.

Frank W. Creel,

Director, Statutory Import Programs Staff.

[FR Doc. 88-8344 Filed 4-14-88; 8:45 am]

BILLING CODE 3510-DS-M

University of Nevada—Reno, et al.; Consolidated Decision on Applications for Duty-Free Entry of Scientific Instruments

This is a decision consolidated pursuant to section 6(c) of the Educational, Scientific, and Cultural Materials Importation Act of 1966 (Pub. L. 89-651, 80 Stat. 897; 15 CFR Part 301). Related records can be viewed between 8:30 A.M. and 5:00 P.M. in Room 1523, U.S. Department of Commerce, 14th and Constitution Avenue NW., Washington, DC.

Docket Number: 88-021. *Applicant:* University of Nevada, Reno, NV 89557-0047. *Instrument:* Modulated Transducer and Signal Processing System. *Manufacturer:* Lloyd Instruments, PLC., United Kingdom. *Intended Use:* See notice at 52 FR 46640, December 9, 1987. *Reasons for This Decision:* The foreign instrument provides integrated measurement and control of strain, displacement, velocity, acceleration, pressure flow, fluid level and other parameters from modular transducer test beds. *Advice Submitted by:* National Bureau of Standards, February 23, 1988.

Docket Number: 87-156. *Applicant:* Good Samaritan Hospital and Medical Center, Portland, OR 97029. *Instrument:* Electronic Laboratory Interface, Model 1401. *Manufacturer:* Cambridge Electronic Design Ltd., United Kingdom. *Intended Use:* See notice at 52 FR 15527, April 29, 1987. *Reasons for This Decision:* The foreign instrument provides programmed multi-channel processing of neural action potentials. *Advice Submitted by:* National Institutes of Health, June 25, 1987.

Comments: None received.

Decision: Approved. No instrument of equivalent scientific value to the foreign instrument, for such purposes as each is intended to be used, is being manufactured in the United States. The National Institutes of Health and National Bureau of Standards advise that (1) the capabilities of each of the foreign instruments described above are pertinent to each applicant's intended purpose and (2) they know of no domestic instrument or apparatus of equivalent scientific value for the intended use of each instrument.

We know of no other instrument or apparatus being manufactured in the United States which is of equivalent scientific value to either of the foreign instruments.

Frank W. Creel,

Director, Statutory Import Programs Staff.

[FR Doc. 88-8345 Filed 4-14-88; 8:45 am]

BILLING CODE 3510-DS-M

National Oceanic and Atmospheric Administration

Coastal Zone Management; Federal Consistency Appeal by A. Paul King From an Objection by the New Jersey Department of Environmental Protection

AGENCY: National Oceanic and Atmospheric Administration, Commerce.

ACTION: Dismissal of Appeal.

On June 30, 1987, the Department of Commerce (Department) received a Notice of Appeal from A. Paul King under section 307(c)(3)(A) of the Coastal Zone Management Act (CZMA) and the Department's implementing regulations, 15 CFR Part 930, Subpart H (1987). The appeal is taken from an objection by the New Jersey Department of Environmental Protection (State) to the Appellant's consistency certification for U.S. Army Corps of Engineers Permit Applicant No. 86-1586-12, under section 10 of the River and Harbor Act of 1899, for filling of wetlands to construct a single-family home in Waretown, New Jersey.

On October 5, 1987, a stay of this appeal was granted pending negotiations with the State. This stay expired on December 30, 1987. At the expiration of this stay, the appeal automatically resumed and a briefing schedule was established. The Appellant's brief and supporting data were due no later than January 29, 1988. The Department has not received the information which was due January 29, 1988.

The Secretary has dismissed the appeal for good cause pursuant to 15 CFR 930.128. A. Paul King is barred from filing another appeal from the New Jersey Department of Environmental Protection's objection to the aforementioned activities.

FOR ADDITIONAL INFORMATION CONTACT: Cynthia L. Mackey, Attorney-adviser, Office of the Assistant General Counsel for Ocean Services, National Oceanic and Atmospheric Administration, U.S. Department of Commerce, 1825 Connecticut Avenue NW., Suite 603, Washington, DC 20235, (202) 673-5200.

[Federal Domestic Assistance Catalog No. 11.419 Coastal Zone Management Program Assistance]

Dated: April 12, 1988.

James W. Brennan,

Acting General Counsel.

[FR Doc. 88-8295 Filed 4-14-88; 8:45 am]

BILLING CODE 3510-08-M

National Marine Fisheries Service and U.S. Fish and Wildlife Service; Emergency Striped Bass Research Study; Joint Meeting

AGENCY: National Marine Fisheries Service, NOAA, Commerce.

SUMMARY: The National Marine Fisheries Service and the U.S. Fish and Wildlife Service will hold a joint meeting to discuss progress on the Emergency Striped Bass Research Study as authorized by the amended Anadromous Fish Conservation Act (Pub. L. 96-118).

DATE: The meeting will convene on Friday, May 20, 1988, at 10:00 a.m., and will adjourn at approximately 3:00 p.m. The meeting is open to the public.

ADDRESS: Room 7000-A, Department of the Interior, C Street between 18th and 19th Street NW., Washington, DC 20240.

FOR FURTHER INFORMATION CONTACT: David G. Deuel, Office of Fisheries Conservation and Management, National Marine Fisheries Service, Washington, DC 20235. Telephone: (202) 673-5256.

Date: April 11, 1988.

Richard H. Schaefer,

Director, Office of Fisheries Conservation and Management.

[FR Doc. 88-8296 Filed 4-14-88]

BILLING CODE 3510-22-M

DEPARTMENT OF DEFENSE

Department of the Navy

Chief of Naval Operations Executive Panel Advisory Committee; Closed Meeting

Pursuant to the provisions of the Federal Advisory Committee Act (5 U.S.C. app.), notice is hereby given that the Chief of Naval Operations (CNO) Executive Panel Advisory Committee Lower Level Conflict Task Force will meet June 8-9, 1988 from 9 a.m. to 5 p.m. each day, at 4401 Ford Avenue, Alexandria, Virginia. All sessions will be closed to the public.

The purpose of this meeting is to the employment of Naval forces in armed conflict with third world adversaries and related intelligence. These matters

constitute classified information that is specifically authorized by Executive order to be kept secret in the interest of national defense and is, in fact, properly classified pursuant to such Executive order. Accordingly, the Secretary of the Navy has determined in writing that the public interest requires that all sessions of the meeting be closed to the public because they will be concerned with matters listed in section 552b(c)(1) of Title 5, United States Code.

For further information concerning this meeting, contact Ann Lynn Cline, Special Assistant to the CNO Executive Panel Advisory Committee, 4401 Ford Avenue, Room 601, Alexandria, Virginia 22302-0268. Phone (703) 756-1205.

Dated: April 12, 1988.

W.R. Babington, Jr.,

Commander, JAGC, U.S. Navy, Federal Register Liaison Officer.

[FR Doc. 88-8350 Filed 4-14-88; 8:45 am]

BILLING CODE 3810-AE-M

Chief of Naval Operations Executive Panel Advisory Committee; Closed Meeting

Pursuant to the provisions of the Federal Advisory Committee Act (5 U.S.C. app.), notice is hereby given that the Chief of Naval Operations (CNO) Executive Panel Advisory Committee will meet May 25-26, 1988, from 9 a.m. to 5 p.m. each day, at 4401 Ford Avenue, Alexandria, Virginia. All sessions will be closed to the public.

The purpose of this meeting is to review maritime issues as they impact national security policy and requirements. The entire agenda for the meeting will consist of discussions of key issues related to national security policy, and related intelligence. These matters constitute classified information that is specifically authorized by Executive order to be kept secret in the interest of national defense and is, in fact, properly classified pursuant to such Executive order. Accordingly, the Secretary of the Navy has determined in writing that the public interest requires that all sessions of the meeting be closed to the public because they will be concerned with matters listed in section 552b(c)(1) of Title 5, United States Code.

For further information concerning this meeting, contact Ann Lynn Cline Special Assistant to the CNO Executive Panel Advisory Committee, 4401 Ford Avenue, Room 928, Alexandria, Virginia 22302-0268. Phone (703) 756-1205.

Date: April 12, 1988.

W.R. Babington, Jr.,

Commander, JAGC, U.S. Navy, Federal Register Liaison Officer.

[FR Doc. 88-8351 Filed 4-14-88; 8:45 am]

BILLING CODE 3810-AE-M

DEPARTMENT OF EDUCATION

Intergovernmental Advisory Council on Education; Meeting

AGENCY: Intergovernmental Advisory Council on Education, Education.

ACTION: Notice of Meeting.

SUMMARY: This notice sets forth the schedule and proposed agenda of a forthcoming meeting of the Intergovernmental Advisory Council on Education. This notice also describes the functions of the Council. Notice of this meeting is required under section 10(a)(2) of the Federal Advisory Committee Act. This document is intended to notify the general public of their opportunity to attend.

DATE: May 10, 1988; 2:00 p.m.-5:00 p.m.

ADDRESS: The Grand Hyatt, 1000 H Street, NW., Washington, DC 20001.

FOR FURTHER INFORMATION CONTACT: Gwen A. Anderson, Acting Executive Director, Intergovernmental Advisory Council on Education, Room 3036, 400 Maryland Avenue SW., Washington, DC 20202, 732-3844.

SUPPLEMENTARY INFORMATION: The Intergovernmental Advisory Council on Education was established under section 213 of the Department of Education Organization Act (20 U.S.C. 3424). The Council was established to provide assistance and make recommendations to the Secretary and the President concerning intergovernmental policies and relations pertaining to education.

The meeting is open to the public. The proposed agenda includes:

—Old Business
—New Business
—Election of Executive Committees

Records are kept of all Council proceedings, and are available for public inspection at the Office of the Intergovernmental Advisory Council on Education, Room 3036, 400 Maryland Avenue SW., Washington, DC 20202, from the hours of 9:00 a.m. to 5:00 p.m.

Dated: April 11, 1988.

Peter R. Greer,

Deputy Under Secretary for Intergovernmental and Interagency Affairs.

[FR Doc. 88-8246 Filed 4-14-88; 8:45 am]

BILLING CODE 4000-01-M

National Board of the Fund for the Improvement of Postsecondary Education; Closed Meeting

AGENCY: National Board of the Fund for the Improvement of Postsecondary Education, Education.

ACTION: Notice of closed meeting.

SUMMARY: This notice sets forth the proposed agenda of a forthcoming meeting of the National Board of the Fund for the Improvement of Postsecondary Education. This notice also describes the functions of the Board. Notice of this meeting is required under section 10(a)(2) of the Federal Advisory Committee Act.

DATE: May 5, 1988 at 8:00 a.m. to May 6, 1988 at 6:00 p.m.

ADDRESS: Georgetown Marbury Hotel, 3000 M Street NW., Washington, DC 20037.

FOR FURTHER INFORMATION CONTACT: Charles H. Karelis, Director, Fund for the Improvement of Postsecondary Education, 400 Maryland Avenue SW., Room 3100, ROB #3, Washington, DC 20202 (202-245-8091).

SUPPLEMENTARY INFORMATION: The National Board of the Fund for the Improvement of Postsecondary Education is established under section 1001 of the Higher Education Amendments of 1980, Title X (20 U.S.C. 1135a-1). The National Board of the Fund is authorized to recommend to the Director of the Fund and the Assistant Secretary for Postsecondary Education priorities for funding and approval or disapproval of grants of a given kind.

The meeting of the National Board is closed to the public. The meeting is for the purpose of reviewing and evaluating grant applications submitted to the Fund under the Comprehensive Program.

The meeting of the National Board will be closed to the public from 8:00 a.m., May 5 until the conclusion of the agenda, approximately 6:00 p.m., May 6. The meeting will be closed under the authority of section 10(d) of the Federal Advisory Committee Act (Pub. L. 92-463; 5 U.S.C. Appendix 2) and under exemptions (4) and (6) of 5 U.S.C. 552b(c) (Pub. L. 94-409). The review and discussions of the applications and the qualifications of proposed staff may disclose commercial or financial information obtained from a person and privileged or confidential or which would disclose information of a personal nature where disclosure would constitute a clearly unwarranted invasion of personal privacy if conducted in open session.

A summary of the activities at the closed session and related matters which are informative to the public consistent with the policy of Title 5 U.S.C. 552b will be available to the public within fourteen days of the meeting.

Records are kept of all Board proceedings, and are available for public inspection at the office of the Fund for the Improvement of Postsecondary Education, Room 3100, Regional Office Building #3, 7th and D Streets SW., Washington, DC 20202 from the hours of 8:00 a.m. to 4:30 p.m.

Dated: April 8, 1988.

Kenneth D. Whitehead,

Acting Assistant Secretary for Postsecondary Education.

[FR Doc. 88-8271 Filed 4-14-88; 8:45 am]

BILLING CODE 4000-01-M

DEPARTMENT OF ENERGY

Energy Information Administration

Oil and Gas Reserve System Forms; Request for Comments

AGENCY: Energy Information Adminsitration, DOE.

ACTION: Request for comments on the extension of the Oil and Gas Reserve System Forms.

SUMMARY: As part of its continuing effort to reduce paperwork and respondent burden, the Energy Information Administration (EIA), as required by the Paperwork Reduction Act of 1980, conducts a consultation program to provide the general public with the opportunity to comment on proposed and continuing reporting forms. This program helps to ensure that requested data are provided in the desired format, reporting burden is minimized, reporting forms are clearly understood, and the impact of collection requirements on respondents can be assessed.

At this time EIA solicits comments on the extension of its Oil and Gas Reserve System forms for 3 years. The three forms which constitute the Oil and Gas Reserve system are described in the Supplementary Information Section of this Notice. They are the Form EIA-23, "Annual Survey of Domestic Oil and Gas Reserves," the Form EIA-23P, "Oil and Gas Well Operator Update Report," and the Form EIA-64A, "Annual Report of the Origin of Natural Gas Liquids Production." Interested persons are asked to review these forms, and provide comments to the contact person described below.

DATE: Written comments must be received by EIA on or before May 16, 1988.

ADDRESS: Comments should be sent to Mr. Paul Chapman, Dallas Field Office, Office of Oil & Gas, Energy Information Administration, 1114 Commerce Street, Room 804, Dallas, Texas 75242-2899. Telephone (214) 767-2200.

FOR FURTHER INFORMATION CONTACT: To obtain additional information or copies of the forms and instructions, contact Paul Chapman at the address listed above.

SUPPLEMENTARY INFORMATION:

I Background
II. Request for Comment

I. Background

In accordance with provisions of the Department of Energy Organization Act (Pub. L. 95-91), the Energy Information Administration (EIA) is responsible for carrying out comprehensive national energy data programs, including the compilation and dissemination of economic and statistical information. EIA's Oil and Gas Reserves system is designed to provide information for use by the Congress, Federal and State agencies, industry, and other interested parties on the status of proved reserves of crude oil, natural gas and lease condensate. In keeping with its responsibilities, EIA is planning to request a 3 year extension of the three forms used to gather information for this system. EIA does not proposed to make changes to any of these forms.

The Form EIA-23, "Annual Survey of Domestic Oil and Gas Reserves," is designed to collect information on the proved reserves of crude oil, natural gas, and lease condensate from a sample of operators of domestic crude oil and/or gas wells. All data are reported on a total operated basis. The total operated reporting basis of schedule A includes total reserves and production associated with wells operated by an individual operator. Schedule B of the form collects footnote or anecdotal information about changes to the data.

The Form EIA-23P, "Oil and Gas Well Operator Update Report," is designed to determine the status (active or inactive) and approximate level of production for domestic oil and gas well operators currently on the operator frame for the Form EIA-23. Removal of inactive firms and knowledge of the approximate size of active operators is necessary to reduce both the sample size and the sampling errors of future EIA-23 surveys.

Form EIA-64A, "Annual Report of the Origin of Natural Gas Liquids Production," is designed to collect information on the volume of natural gas received and the natural gas liquids extracted at gas processing plants, by areas of origin, and the total gas shrinkage resulting from the natural gas liquids extracted by the plants.

II. Request for Comments

EIA invites the public to comment on this proposal within 30 days of the publication of this notice. The following general guidelines are provided to assist in the preparation of responses. When commenting, please indicate the form(s) to which your comments apply.

As a Potential Respondent

A. Are the instructions and definitions clear and sufficient? If not, which instructions require clarification?

B. Can the data be submitted using the definitions included in the instructions?

C. Can data be submitted in accordance with the response time specified in the instructions?

D. How many hours, including time for preparation and administrative review, would you require to complete and submit the required form(s)?

E. What is the estimated cost of completing the form(s), including the direct and indirect costs associated with the data collection? Direct costs should include all costs, such as administrative costs, directly attributable to providing this information.

F. How can the form(s) be improved?

G. Do you know other Federal, State or local agencies that collect similar data? If you do, specify the agency, the data elements, and the means of collection.

As a Potential Data User

A. Can you use data at the levels of detail indicated on the form(s)?

B. For what purposes would you use the data? Be specific.

C. How could the form(s) be improved to better meet your specific needs?

D. Are there alternative sources of data? Do you now use them? What are their deficiencies and/or strengths?

EIA is also interested in receiving comments on the need for the collection of this information. Comments or summaries of comments will be provided in EIA's submission to the Office of Management and Budget requesting a 3-year extension of these data collections and will become a matter of public record.

Statutory Authority: Sections 5 (a) and (b), 13 (a) and (b), and 52 of Public Law (93-275), Federal Energy Administration Act of 1974 as amended (15 U.S.C. 764 (a) and (b), 772 (a) and (b), and 790 a).

Issued in Washington, DC April 11, 1988.

Yvonne M. Bishop,

Director, Statistical Standards, Energy Information Administration.

[FR Doc. 88-8357 Filed 4-14-88; 8:45 am]

BILLING CODE 6450-01-M

Western Area Power Administration

Intent To Prepare an Environmental Assessment and Conduct Scoping Meetings; Sidney-North Yuma 230-KV Transmission Line Project, Colorado and Nebraska

AGENCY: Western Area Power Administration, DOE.

ACTION: Public notice and opportunity to comment.

SUMMARY: Notice is hereby given that, in accordance with the National Environmental Policy Act of 1969 (NEPA), the Department of Energy (DOE), Western Area Power Administration (Western), intends to begin preparation of an environmental assessment (EA) to evaluate the environmental effects of the proposed construction, operation, and maintenance of a new 230-kilovolt (kV) transmission line between the Sidney Substation, Nebraska, and the North Yuma Substation in Colorado, a distance of approximately 80-90 miles. The project is know as the Sidney-North Yuma 230-kV Transmission Line Project (Project) and will be located in the counties of Logan, Washington, and Yuma in Colorado and Cheyenne County in Nebraska. Western will conduct scoping meetings to inform agencies and the public of the Project and to solicit comments that will assist in identifying issues and concerns to be addressed during the environmental studies for the EA. The public scoping meetings will be held in Sidney, Nebraska, and Yuma and Sterling, Colorado, on May 3, 4, and 5, 1988, respectively.

DATES: Comments must be submitted on or before May 27, 1988.

ADDRESS: Send questions, comments, and suggestions to: Mr. Mark N. Silverman, Area Manager, Western Area Power Administration, Loveland Area Office, P.O. Box 3700, Loveland, CO 80539.

FOR FURTHER INFORMATION CONTACT: Mr. Bill Melander, 303-490-7231.

SUPPLEMENTARY INFORMATION: Western owns a major portion of the transmission system in the northeastern portion of Colorado. The system has deficiencies because the loads exceed the capability of the system. In the event of a single, major line outage in the region, about 50 megawatts (MW) of load must be shed in northeastern Colorado to prevent cascading outages, or the Sidney Direct Current Tie must be automatically reduced from 200 MW to 20 MW. These remedial actions must be initiated to avoid major system outages.

Western initiated the Northeastern Colorado Joint Transmission Planning Study (Study) to identify solutions to these deficiencies. The Study participants include Western, Public Service Company of Colorado, Tri-State Generation and Transmission Association, Inc., and the Nebraska Municipal Power Pool. The results of the study indicate that the Project is the best solution to resolve the system deficiencies. The Project would increae the load serving capability in eastern Colorado by 150 MW.

The EA will comprehensively evaluate the effects on the natural, human, and cultural environments that could be caused by the construction, operation, and maintenance of the proposed transmission line and terminal facilities. The EA will consider air, earth, biological, and cultural resources; floodplains and wetlands; land uses; visual characteristics; socioeconomics; and electrical effects. Alternatives that will be addressed in the EA include: no action; energy conservation; and system, design, construction, and location alternatives. Completion of the EA is tentatively scheduled for February of 1989.

Integral to the environmental process is the active solicitation of comments from various Federal, State, county, and local agencies, and interested organizations and individuals by means of a comprehensive public involvement program. The intent of the public involvement program is to assure that the most accurate and current environmental information and public opinion are incorporated into planning and decision making. Western will conduct public scoping meetings to identify the scope of the issues and concerns to be addressed in the EA.

Interested parties are encouraged to attend the meetings scheduled on the dates and locations listed below:

1. May 3, 1988, at City Council Chambers, City Hall, 1113 13th Avenue, Sidney, Nebraka, at 7 p.m.
2. May 4, 1988, at City Council Chambers, City Hall, 221 South Main Street, Yuma, Colorado, at 7:00 p.m.
3. May 5, 1988, at the Park Inn, Interstate Highway 76 and East Highway 6, Sterling, Colorado, at 7:00 p.m.

All interested agencies, organizations, and individuals are invited to submit questions, comments, and suggestions regarding the scope of the Project to the address provided above. Those interested in receiving information over the course of the Project should send their names and addresses to be included on the Project mailing list. Other opportunities will be offered to comment during the environmental studies for the Project.

The proposed terminals for the Project are located on opposite sides of the South Platte River. The Project would thus need to cross the floodplain of the river in Logan County, Colorado. In accordance with 10 CFR 1022.14 of the DOE Procedures for Floodplain/Wetlands Review, comments will be accepted concerning the proposed crossing of the floodplain of the South Platte River.

The results of the studies will dictate whether or not an environmental impact statement (EIS) will be required. If an EIS should be required, the EA will be completed in sufficient detail to support the completion of an EIS. Any comments received on the scope of alternatives and impacts as a result of this notice and the public scoping meetings would be considered in an EIS, if required. If the EA satisfactorily addresses all issues and concerns and it is determined that an EIS is not required, the decision will be documented in a finding of no significant impact.

Issued at Golden, CO, April 4, 1988.

William H. Clagett,

Administrator.

[FR Doc. 88-8356 Filed 4-14-88; 8:45 am]

BILLING CODE 6450-01-M

Amistad and Falcon Projects; Rate Order

AGENCY: Western Area Power Administration, DOE.

ACTION: Notice of a Rate Order—Amistad and Falcon Projects.

SUMMARY: Notice is given of Rate Order No. WAPA-37 of the Under Secretary of the Department of Energy (DOE) for placing a rate extension into effect on an interim basis beginning on June 8, 1988, for power marketed by the Western Area Power Administration (Western) from the Amistad and Falcon Projects under Contract No. 7-07-50-P0890.

The Amistad and Falcon Dams are international storage projects located on the Rio Grande River between Texas and Mexico. Since June 8, 1983, power from these dams has been marketed by Western under the terms of Contract No. 7-07-50-P0890. The terms of that contract were approved by the Federal

Power Commission, predecessor to the Federal Energy Regulatory Commission (FERC), for a 5-year period beginning June 8, 1983, by Docket No. E-9566 on August 12, 1977.

Supplement No. 1 to Contract No. 7-07-50-P0890 was executed on April 10, 1986.

According to article 9(a) of that contract, Western calculates an annual installment, to be paid by the South Texas Electric Cooperative, Inc., and the Medina Electric Cooperative, Inc. (STEC/MEC), for the power generated at the Amistad and Falcon Powerplants, on or before August 31 of the year preceding the fiscal year to which it pertains.

Each annual installment pays the appropriate amortized portion of the United States investment in the Falcon and Amistad hydroelectric facilities with interest, and the associated operation, maintenance, and administrative costs.

This repayment schedule is not dependent upon the power and energy made available for sale or the rate of generation each year.

Western will continue to provide STEC/MEC with a revised exhibit A by August 31 of each year using the same methodology.

EFFECTIVE DATE: The rate extension will become effective on June 8, 1988.

FOR FURTHER INFORMATION CONTACT:

Ms. Marlene Moody, Deputy Area Manager, Salt Lake City Office, Western Area Power Administration, P.O. Box 11606, Salt Lake City, UT 84147, (801) 524-5493

Mr. Conrad K. Miller, Chief, Rates and Statistics Branch, Western Area Power Administration, P.O. Box 3402, Golden, CO 80401, (303) 231-1535

Mr. Ron Greenhalgh, Assistant Administrator for Washington Liaison, Western Area Power Administration, Room 8G061, Forrestal Building, 1000 Independence Avenue SW., Washington, DC 20585, (202) 586-5581.

SUPPLEMENTARY INFORMATION: By Delegation Order No. 0204-108, effective December 14, 1983 (48 FR 55664), as amended May 30, 1986 (51 FR 19744), the Secretary of Energy delegated to the Administrator of Western the authority to develop long-term power and transmission rates; to the Under Secretary of the DOE the authority to confirm, approve, and place such rates in effect on an interim basis; and to the FERC the authority to confirm, approve, and place in effect on a final basis, to remand, or to disapprove such rates.

Rate Order No. WAPA-37 confirming and approving a rate extension on an interim basis is hereby issued, and the rate will be promptly submitted to the FERC for confirmation and approval on a final basis.

Issued at Washington, DC, April 1, 1988.

Joseph F. Salgado,

Under Secretary.

In the Matter of Western Area Power Administration—Amistad and Falcon Projects Power Rate, Rate Order No. WAPA-37.

Order Confirming and Approving a Rate Extension on an Interim Basis

April 1, 1988.

Pursuant to section 302(a) of the Department of Energy (DOE) Organization Act, 42 U.S.C. 7152(a), the power marketing functions of the Secretary of the Interior and the Bureau of Reclamation (Reclamation) under the Reclamation Act of 1902, 43 U.S.C. 372, *et seq.*, as amended and supplemented by subsequent enactments, particularly section 9(c) of the Reclamation Act of 1939, 43 U.S.C. 485h(c), and acts specifically applicable to the Falcon Project and the Amistad Project, were transferred to and vested in the Secretary of Energy. By Delegation Order No. 0204-108, effective December 14, 1983 (48 FR 55664, December 14, 1983), and as amended on May 30, 1986 (51 FR 19744), the Secretary of Energy delegated (1) the authority to develop power and transmission rates to the Administrator of the Western Area Power Administration (Western); (2) the authority to confirm, approve, and place in effect such rates on an interim basis to the Under Secretary of DOE; and (3) the authority to confirm, approve, and place in effect on a final basis, to remand, or to disapprove those rates to the Federal Energy Regulatory Commission (FERC). This rate extension is issued pursuant to the delegation to the Administrator of Western and the Under Secretary and the rate adjustment procedures in 10 CFR Part 903, published in the **Federal Register** at 50 FR 37835 on September 18, 1985.

Background

Project History

On August 1, 1977, the Federal Power Commission, pursuant to the Falcon Dam Act of 1954, ch. 310, 68 Stat. 255 (1954), approved rates contained within the original contract between Reclamation and the Central Power and Light Company (CPL). Said contract was to remain in effect "until the date on which the Amistad Powerplant is ready to deliver power or December 31, 1982, whichever date occurs first." The rate for power in the contract was 14 mills per kilowatthour.

On August 12, 1977, in Docket No. E-9566, the Federal Power Commission approved a rate formula contained in Contract No 7-07-50-P0890, between Reclamation and two electric cooperatives. The South Texas Electric Cooperative, Inc. (STEC), and the Medina Electric Cooperative, Inc. (MEC), agreed to purchase the output of the Amistad and Falcon Powerplants for a 50-year period, beginning when initial electric service became available from Amistad. The cooperatives agreed to take all Amistad and Falcon power and to pay the United States the following:

1. The amount necessary to amortize within the remaining period the unpaid investment costs of the Falcon power facilities and the penstocks at Amistad Dam;

2. The amount necessary to amortize within a 50-year period the investment costs of the Amistad power facilities, exclusive of the penstocks; and

3. The projects' annual operation, maintenance, and replacement costs, and the associated administrative costs of the U.S. Section of the International Boundary and Water Commission (U.S. Section) and Reclamation.

The power marketing functions of Reclamation were transferred to Western on October 1, 1977, and Western became responsible for the administration of both of the above contracts.

Due to construction delays, the Amistad Powerplant was not operational until June 8, 1983. Western and CPL extended the original contract for marketing Falcon power from January 1, 1983, until the Amistad Powerplant was ready to deliver power.

Western held a public meeting on February 10, 1983, in Del Rio, Texas, to explain the methods used to determine the annual installment, to answer questions, and to receive comments and suggestions. In addition, a written comment period was opened February 2, 1983, and ended March 10, 1983.

Service under Contract No. 7-70-50-P0890 began June 8, 1983, when the Amistad Powerplant became operational.

Western, STEC, and MEC executed Supplement No. 1 to Contract No. 7-07-50-P0890 on April 10, 1986, to make refinements, updates, and clarification of the method for determining the annual installment, consistent with DOE Order No. RA 6120.2. Those clarifications were repayment of Falcon hydroelectric facilities within the remaining period, establishment of interest during construction at 7 percent, capitalization of major replacements and additions at the current interest

rate, and specification of the actual date of initial service as June 8, 1983.

Supplement No. 1 requires that the amount of each annual installment be established in advance by the contracting officer in consultation with the U.S. Section and submitted to the cooperatives as Exhibit A on or before August 31 of the year preceding the appropriate fiscal year in accordance with the following:

The amount of each annual installment shall be the sum of:

1. An annual installment, including interest, to amortize within the remaining period the unpaid United States investment in the Falcon hydroelectric facilities and in the penstocks at Amistad Dam;

2. An annual installment to amortize over a 50-year period the United States actual total investment costs, with interest, for hydroelectric power facilities, not including penstocks, at Amistad Dam to be under the jurisdiction of the U.S. Section, including the costs of engineering plans, supervision, administration of construction, and interest during construction; and

3. The annual operation, maintenance, replacement, and administration costs of the U.S. Section and the administration costs of Western related directly or indirectly to the United States power facilities at Amistad Dam and at Falcon Dam, provided that such costs shall be based on prudent and businesslike management practices and in accordance with established electric industry operation and maintenance practices.

The billing procedures contained in Supplement No. 1 require Western to submit bills to the cooperatives for each monthly payment on the annual installment on or before the 10th day of the month for which such payment is due. Payments are due and payable by the cooperatives on the first day of the following month.

Although paragraph 903.23(2) of 10 CFR Part 903, for rate extensions, does not require a consultation and comment period, nor public information or comment forums, Western held a meeting with the customers on February 12, 1988, in San Antonio, Texas, to discuss the rate extension, answer questions, and receive comments and suggestions. No significant issues were raised.

Environmental Evaluation

In compliance with the National Environmental Policy Act of 1969 (NEPA), Council of Environmental Quality regulations (40 CFR Parts 1500–1508), and DOE guidelines (52 FR 47662), Western evaluated the rate extension in terms of its potential to affect the human environment. The rate extension is clearly not a major Federal action significantly affecting the quality of the human environment as it is merely an extension of 1977 contract terms. A memorandum to the file documenting this finding has been prepared, which completes NEPA compliance for this action.

Executive Order 12291

The DOE has determined that this is not a major rule within the meaning of the criteria of section 1(b) of Executive Order 12291. In addition, Western has an exemption from sections 3, 4, and 7 of that order, and therefore will not prepare a regulatory impact statement.

Availability of Information

Information regarding this rate extension is available for public review in Salt Lake City Area Office, Western Area Power Administration, 438 East 200 South, Suite 2, Salt Lake City, Utah 84111; in the office of the Director, Division of Marketing and Rates, Western Area Power Administration, 1627 Cole Boulevard, Golden, Colorado 80401; and in the Office of the Assistant Administrator for Washington Liaison, Room 8G061, Forrestal Building, 1000 Independence Avenue SW., Washington, DC 20585.

Submission to FERC

The rate extension herein confirmed, approved, and place in effect on an interim basis, together with supporting documents, will be submitted to the FERC for confirmation and approval on a final basis.

Order

In view of the foregoing and pursuant to the authority delegated to me by the Secretary of Energy, I hereby confirm and approve and place in effect on an interim basis an extension of the rate provisions contained in Contract No. 7–07–50–P0890 and Supplement No. 1 to that contract effective on June 8, 1988. The rate provisions shall remain in effect on an interim basis pending FERC confirmation and approval of this or a substitute rate on a final basis or until suspended.

Issued in Washington, DC, April 1, 1988.

Joseph F. Salgado,

Under Secretary.

[FR Doc. 88–8359 Filed 4–14–88; 8:45 am]

BILLING CODE 6450–01–M

ENVIRONMENTAL PROTECTION AGENCY

[FRL–3366–5]

1987 Chesapeake Bay Agreement; Proposals for Review

The 1987 Chesapeake Bay Agreement signed by the Governors of Maryland, Virginia and Pennsylvania, the Mayor of the District of Columbia, the Chairman of the Chesapeake Bay Commission and the Administrator of the US Environmental Protection Agency for the Federal Government, requires that nine commitments be met in July 1988. Draft proposals to fulfill these commitments will be available for public review in libraries for a 30-day review period starting April 25. Four public meetings also will be held to brief citizens and receive their comments.

The July commitments include:

(1) A Baywide plan for stock assessment;

(2) A schedule for developing Baywide resource management strategies;

(3) A strategy to reduce nutrient loadings by 40 percent;

(4) A strategy to manage and control conventional pollutants;

(5) A strategy to reduce pollution from federal facilities;

(6) An inventory of present public access opportunities and a strategy to secure additional shorefront;

(7) A comprehensive research plan;

(8) A Baywide biological monitoring plan;

(9) A coordinated federal agencies work plan.

A Baywide communication plan also will be available for review.

Public meetings will be conducted:

May 5 at 10 a.m., 3rd Floor Conference Room, Barto Building, 3rd & State Streets, Harrisburg, PA; sponsored by PA State Conservation Commission, Chesapeake Bay Advisory Committee, and Citizens Program for the Chesapeake Bay, Inc. (CPCB)

May 9 at 7 p.m., General Assembly Building, Senate Rooms A & B, Richmond, VA; sponsored by CPCB, Central James River Basin Committee, and Shenandoah River Basin Committee

May 12 at 7 p.m., Lowe House Office Building, Environmental Matters Hearing Room, Annapolis, MD; sponsored by CPCB and Coastal Resources Advisory Committee

May 19 at 6 p.m. and May 20, 8:30 a.m. to 3:30 p.m., Omni Georgetown Hotel, 2121 P Street NW, Washington, DC; sponsored by the Citizens Advisory

Committee to the Chesapeake Executive Council

Citizens attending the meetings are encouraged to bring written comments. Written comments also may be submitted by mail to the EPA Chesapeake Bay Liaison Office, 410 Severn Avenue, Annapolis, Maryland 21403.

For more information, including locations of libraries which will have the documents, contact:

Maryland: Helene Tenner (301) 974-3382
Pennsylvania: Anne Swaim (717) 236-1006
Virginia: Ann Regn (804) 786-4500
District of Columbia: Patsy Harden (202) 783-3182
EPA: (301) 266-6873 or (215) 597-2447
Citizens Program for the Chesapeake Bay, Inc.: (301) 377-6270

Charles S. Spooner,
Director, Chesapeake Bay Liaison Office.

[FR Doc. 88-8303 Filed 4-14-88; 8:45 am]

BILLING CODE 6560-50-M

[ER-FRL-3366-3]

Environmental Impact Statements and Regulations; Availability of EPA Comments

Availability of EPA comments prepared March 28, 1988 through April 1, 1988 pursuant to the Environmental Review Process (ERP), under section 309 of the Clean Air Act and section 102(2)(c) of the National Environmental Policy Act as amended. Requests for copies of EPA comments can be directed to the Office of Federal Activities at (202) 382-5075/76. An explanation of the ratings assigned to draft environmental impact statements (EISs) was published in the **Federal Register** dated April 24, 1987 (52 FR 13749).

Draft EISs

ERP No. D-AFS-L65114-00, Rating EC2, Umatilla National Forest, Land and Resource Management Plan, Implementation, Baker, Grant, Morrow, Umatilla, Union, Wallowa and Wheeler Counties, OR and Asotin, Columbia, Walla Walla and Garfield Counties, WA.

Summary: EPA believes that the level of detail and commitment for water quality monitoring and feedback mechanism are not commensurate with the sensitivity of the resources. The forest plan implementation process should include; a description of the data base for existing conditions; Best Management Practices and prescription development; selection of BMPs for specific activities; upgrading of BMPs or prescriptions to correct inaccurate predictions; on-site inspection and administration; detailed environmental monitoring and built-in feedback mechanisms.

ERP No. DS-FHW-E40572-AL, Rating EC2, Corridor X Highway Construction, Walker/Jefferson County Line to US 31, Additional Alternate Alignment Alternative, Funding, Birmingham Metropolitan Area, Jefferson County, AL.

Summary: EPA has concerns with noise impacts and a lack of any proposed abatement measures to offset these impacts.

Dated: April 12, 1988.

Richard E. Sanderson,
Director, Office of Federal Activities.

[FR Doc. 88-8354 Filed 4-14-88; 8:45 am]

BILLING CODE 6560-50-M

[ER-FRL-3366-2]

Environmental Impact Statements; Availability

Responsible Agency: Office of Federal Activities, General Information (202) 382-5073 or (202) 382-5075.

Availability of Environmental Impact Statements Filed April 4, 1988 Through April 8, 1988 Pursuant to 40 CFR 1506.9.

EIS No. 880106, Draft, FHW, VA, US 288 Const., US 360/Hull Street to I-64, Funding, Section 10 and 404 and Coast Guard Permits, Chesterfield, Henrico, Goochland and Powhatan Counties, VA. Due: May 23, 1988, Contact: Robert L. Hundley (804) 786-4304.

The availability of this EIS should have appeared in the 4-8-88 **Federal Register**. The 45 day review period is calculated from 4-8-88.

EIS No. 880107, Draft, NPS, AK, Gates of the Arctic National Park and Preserve Wilderness Recommendations, Designation or Nondesignation, AK, Due: July 18, 1988, Contact: Linda Nebel (907) 257-2654.

EIS No. 880108, Draft, COE, NC, Wilmington Harbor Long Term Maintenance, Dredging and Disposal of Sediments, Implementation, New Hanover and Brunswick Counties, NC, Due: June 10, 1988, Contact: Frank Yelverton (919) 343-4640.

EIS No. 880109, Final, AFS, AZ, Kaibab National Forest, Land and Resource Management Plan, Implementation, Coconino, Yavapai and Mohave Counties, AZ, Due: May 16, 1988, Contact: Leonard A. Lindquist (602) 635-2061.

EIS No. 880110, DSuppl, COE, MI, Sault Ste. Marie Federal Facilities, Operation, Maintenance and Minor Improvements, Extension of Operations thru 31 January +2 Weeks and Additional Information, Implementation, Chippewa County, MI, Due: May 30, 1988, Contact: Donald Williams (313) 226-2208.

EIS No. 880111, Draft, COE, OH, Swan Creek Flood Protection Project, Implementation, Heatherdale-Lemond Drive Area, Lucus County, OH, Due: May 30, 1988, Contact: William Butler (716) 876-5454.

EIS No. 880112, Final, USN, VA, Empress II Oper., Electromagnetic Pulse Radiation Environment Simulator for Ships, Chesapeake Bay (West of Bloodsworth Island) and Atlantic Ocean (Virginia Capes Operating Area), off the coast of VA, Due: May 16, 1988, Contact: Ronald L. Dudley (804) 445-2306.

EIS No. 880113, Final, BPA, WA, ID, MT, WY, CA, NV, UT, NM, AZ, OR, Pacific Northwest/Pacific Southwest Intertie, Capacity Increase and Long Term Intertie Access Policy Development Plan, Implementation, WA, OR, ID, MT, WY, CA, NV, UT, NM and AZ, Due: May 16, 1988, Contact: Anthony R. Morrell (503) 230-5136.

Amended Notice

EIS No. 880105, DSuppl, CGD, NY, Davids Island Residential Development, Marina and Bridge Access from New Rochelle Mainland and Davids Island Construction, Updated Information and Design Modifications, Bridge and 404 Permits, City of New Rochelle, Long Island Sound, Westchester County, NY, Due: May 31, 1988.

Contact: Gary Kassof (212) 668-7994.

Published FR 04-08-88—Filing date reestablished. The 45 day NEPA review period is calculated from 04-15-88.

Dated: April 12, 1988.

Richard E. Sanderson,
Director, Office of Federal Activities.

[FR Doc. 88-8355 Filed 4-14-88; 8:45 am]

BILLING CODE 6560-50-M

[OPP-180774; FRL-3366-4]

Receipt of Application for an Emergency Exemption From Wyoming to Use Strychnine; Solicitation of Public Comment

AGENCY: Environmental Protection Agency (EPA).

ACTION: Notice of receipt.

SUMMARY: EPA has received a public health exemption request from the Wyoming Department of Agriculture (hereafter referred to as "Applicant") to use strychnine alkaloid (CAS 57-24-0) in egg baits for control of rabid skunks.

EPA, in accordance with 40 CFR 166.24, is required to issue a notice of receipt and, time permitting, to solicit public comment before making the decision whether to grant the exemption.

DATE: Comments must be received on or before May 2, 1988.

ADDRESS: Three copies of written comments, bearing the identification notation "OPP-180774," should be submitted by mail to:

Information Service Section, Program Management and Support Division (TS-757C), Office of Pesticide Programs, Environmental Protection Agency, 401 M Street SW., Washington, DC 20460

In person, bring comments to: Room 236, Crystal Mall #2, 1921 Jefferson Davis Highway, Arlington, VA.

Information submitted in any comment concerning this notice may be claimed confidential by marking any part or all of that information as "Confidential Business Information." Information so marked will not be disclosed except in accordance with procedures set forth in 40 CFR Part 2. A copy of the comment that does not contain Confidential Business Information must be provided by the submitter for inclusion in the public record. Information not marked may be disclosed publicly by EPA without prior notice. All written comments filed pursuant to this notice will be available for public inspection in Room 236, Crystal Mall No. 2, 1921 Jefferson Davis Highway, Arlington VA, from 8 a.m. to 4 p.m., Monday through Friday, except legal holidays.

FOR FURTHER INFORMATION CONTACT:

By mail: Jim Tompkins, Registration Division (TS-767C), Office of Pesticide Programs, Environmental Protection Agency, 401 M Street SW., Washington, DC 20460

Office location and telephone number: Room 716D, Crystal Mall 2, 1921 Jefferson Davis Highway, Arlington, VA, (703-557-1806).

SUPPLEMENTARY INFORMATION: Pursuant to section 18 of the Federal Insecticide, Fungicide, and Rodenticide Act (FIFRA) (17 U.S.C. 136p), the Administrator may, at his discretion, exempt a State or Federal agency from any registration provision of FIFRA if he determines that emergency conditions exists which require such exemption.

The Applicant has requested the Administrator to issue a public health exemption for the use of strychnine in eggs to control rabid skunks. Wyoming has been authorized emergency exemptions for this use six times since 1974.

In 1972, EPA cancelled the registrations of strychnine products used for predator control, including the use of strychnine to control skunks (37 FR 5718). Therefore, the proposed use is subject to EPA's Subpart D regulations, 40 CFR 164.130 to 164.133, in addition to the regulations at 40 CFR Part 166 governing the issuance of exemptions under section 18.

The Administrator has previously determined that substantial new evidence does exist in connection with the pending registration request and the 1986 emergency exemption request, as published in the **Federal Register** of June 13, 1986 (51 FR 21617).

Accordingly, a hearing to reconcile whether to modify the prior cancellation order to permit the use of strychnine for controlling skunks to suppress rabies in areas where rabid animals have been found was held on October 7, 1986, as announced in the **Federal Register** of August 8, 1986 (51 FR 28623).

As a result of the hearing, the Order, suspending the registration of strychnine, sodium cyanide, and sodium fluoroaluminate ("1080") for predator uses, has been modified to permit the registration of strychnine to reduce populations of skunks as a means of suppressing the spread of rabies to humans and domestic animals.

The Applicant has applied, under section 3 of FIFRA, for registration of strychnine in egg baits to control rabid skunks. The Applicant in conjunction with the State of Montana is currently generating the data necessary to support the registration of this use of strychnine.

The Applicant has requested the use of strychnine for the purpose of suppressing local populations of skunks, the main carrier of rabies, thereby reducing the opportunity for exposure of humans, domestic animals, and susceptible wild species to rabies. The Applicant considers the incidence of rabies to be at a level which poses an unacceptable threat to public health.

The proposed control program involves use of strychnine egg baits which contain 0.035 gram of actual strychnine alkaloid.

Placement of strychnine treated eggs is limited to land within a 5-mile radius of a site where a laboratory-confirmed rabid skunk has been found. The number of strychnine egg baits may not exceed: 1,200 eggs in any treatment area, 150 eggs per any square mile, or two eggs per site. Strychnine egg baits will be placed in such skunk habitats as follows: skunk dens, holes, garbage dumps, road culverts, junk piles, and under non-occupied buildings. All strychnine egg baits will be stamped with the word "poison" in three locations and will contain green food coloring to warn people of their toxic nature. Bait will be covered at all times and checked no less than once a week. Warning signs will be posted at all points commonly used for access to the treatment area. Strychnine egg baits will be placed only on lands where written permission has been obtained from the landowner. Placement or removal of strychnine eggs baits will be under the direct supervision of certified commercial applicators of restricted use pesticides.

The regulations governing section 18 require publication of a notice in the **Federal Register** of receipt of an application that proposes use of a pesticide if such pesticide was the subject of a notice under section 6(b) of FIFRA and was subsequently cancelled and is intended for a use that poses a risk similar to the risk posed by the pesticide which was the subject of the notice. The regulations also provide for the opportunity for public comment.

Accordingly, interested persons may submit written views on this subject to the Program Management and Support Division at the address given above.

The Agency will review and consider all comments received during the comment period in determining whether to issue this public health exemption.

Dated: April 1, 1988.

Edwin F. Tinsworth,

Director, Registration Division, Office of Pesticide Programs.

[FR Doc. 88-8304 Filed 4-14-88; 8:45 am]

BILLING CODE 6560-50-M

[OPTS-59258; FRL-3365-7]

Toxic and Hazardous Substances; Test Market Exemption Applications

AGENCY: Environmental Protection Agency (EPA).

ACTION: Notice.

SUMMARY: EPA may upon application exempt any person from the premanufacturing notification requirements of section 5(a) or (b) of the Toxic Substance Control Act (TSCA) to permit the person to manufacture or process a chemical for test marketing purposes under section 5(h)(1) of TSCA. Requirements for test marketing exemption (TME) applications, which must either be approved or denied within 45 days of receipt are discussed in EPA's final rule published in the **Federal Register** of May 13, 1983 (48 FR 21722). This notice, issued under section 5(h)(6) of TSCA, announces receipt of two applications for exemption,

provides a summary, and requests comments on the appropriateness of granting this exemption.

Written comments by:

T 88-8, 88-9, April 15, 1988.

ADDRESS: Written comments, identified by the document control number "(OPTS-59253)" and the specific TME number should be sent to: Document Processing Center (TS-790), Office of Toxic Substances, Environmental Protection Agency, Room L-100, 401 M Street SW., Washington, DC 20460, (202) 554-1305.

FOR FURTHER INFORMATION CONTACT: Stephanie Roan, Premanufacture Notice Management Branch, Chemical Control Division (TS-794), Office of Toxic Substances, Environmental Protection Agency, Room E-611, 401 M Street SW., Washington, DC 20460, (202) 382-3725.

SUPPLEMENTARY INFORMATION: The following notice contains information extracted from the non-confidential version of the submission provided by the manufacturer on the TME received by EPA. The complete non-confidential document is available in the Public Reading Room NE-G004 at the above address between 8:00 a.m. and 4:00 p.m., Monday through Friday, excluding legal holidays.

T 88-8

Close of Review Period. April 29, 1988.
Manufacturer. Confidential.
Chemical. (G) Tertiary amine salt.
Use/Production. (G) Catalyst; contained use. Prod. range: Confidential.

T 88-9

Close of Review Period. April 29, 1988.
Manufacturer. Confidential.
Chemical. (G) Tertiary amine salt.
Use/Production. (G) Catalyst; contained use. Prod. range: Confidential.

Date: April 8, 1988.

Steve Newburg-Rinn,

Acting Chief, Public Data Branch, Information Management Division, Office of Toxic Substances.

[FR Doc. 88-8185 Filed 4-14-88; 8:45 am]

BILLING CODE 6560-50-M

FEDERAL COMMUNICATIONS COMMISSION

Public Information Collection Requirement Submitted to Office of Management and Budget for Review

April 5, 1988.

The Federal Communications Commission has submitted the following information collection requirement to OMB for review and clearance under the Paperwork Reduction Act of 1980 (44 U.S.C. 3507).

Copies of this submission may be purchased from the Commission's copy contractor, International Transcription Service, (202) 857-3800, 2100 M Street NW., Suite 140, Washington, DC 20037. For further information on this submission contact Terry Johnson, Federal Communication Commission (202) 623-7513. Persons wishing to comment on this information collection should contact J. Timothy Sprehe, Office of Management and Budget, Room 3235 NEOB, Washington, DC 20503, (202) 395-4814.

OMB Number: None
Title: Forecast of Investment Usage Report and Actual Usage of Investment Report
Form Number: FCC Forms 495-A and 495-B
Action: New collection
Respondents: Businesses or other for-profit
Frequency of Response: Annually
Estimated Annual Burden: 300 Responses, 12,000 Hours
Needs and Uses: The Forecast of Investment Usage Report (FCC Form 495-A) and Actual Usage of Investment Report (FCC Form 495-B) are needed to detect and correct forecast errors that could lead to significant misallocation of network plant between regulated and nonregulated activities. The Commission's purpose is to protect the regulated ratepayer from subsidizing the nonregulated activities of rate regulated telephone companies.

Federal Communications Commission.

H. Walker Feaster III,

Acting Secretary.

[FR Doc. 88-8281 Filed 4-14-88; 8:45 am]

BILLING CODE 7712-01-M

Advisory Committee on Advanced Television Service; Planning Subcommittee

1. The Planning Subcommittee will hold its fourth meeting on: April 26, 1988, 9:30 a.m., National Association of Broadcasters, 1771 N Street NW., Washington, DC 20036.

2. The purpose of this meeting is to review working party final reports, discuss the Chairman's report to the Advisory Committee and define further work.

3. The agenda of the meeting is as follows:

a. Call to order by the Chairman
b. Opening remarks by Richard Wiley and Alex Felker
c. Adoption of the minutes of the third meeting
d. Review of the final Reports of each Working Party and Advisory Group Chairman. Each Chairman will make a brief presentation
e. Discussion of principal findings to be included in the Planning Subcommittee's Chairman's Report to the Advisory Committee
f. Definition of further work to be done to complete the Planning document for the Advisory Committee
g. Other business
h. Date and location of next meeting.

4. This meeting is open to the public.

5. Parties may submit written statements prior to or at the time of the meeting. Oral statements and discussion will be permitted under the direction of the Chairman.

6. For further information please contact: Chairman J.A. Flaherty, (212) 975-2213, or William Hassinger (202) 632-6460.

Federal Communications Commission.

H. Walker Feaster III,

Acting Secretary.

[FR Doc. 88-8280 Filed 4-14-88; 8:45 am]

BILLING CODE 6712-01-M

Technical and Allocations Subgroups of Radio Advisory Committee; Joint Session

The Technical and Allocations Subgroups of the Advisory Committee on Radio Broadcasting will meet in joint session on Thursday, April 21, 1988, at the Headquarters of the National Association of Broadcasters, 1771 N Street NW., Washington, DC. The meeting will convene at 1:30 p.m. Please note that this is a half hour later than the customary meeting time.

At this joint meeting, the Subgroups will continue their consideration of:

—Improvement of the AM radio broadcast service;
—Preparations for the Second Session of the Regional Administrative Radio Conference on Expansion of the AM Band (RARC-88);
—Other business.

The Subgroups' meetings are continuing ones, and may be resumed after each session at such times and places as may be decided by the participants at publicly announced meetings. All meetings of the Radio Advisory Committee and its Subgroups are open to the public. All interested persons are invited to participate.

For further information, please call Wallace Johnson, Chairman of the Technical Subgroup, at (703) 824-5660, or Louis Stephens, Chairman of the Allocations Subgroup, at (202) 254-3394.

BEST COPY AVAILABLE

Federal Communications Commission.
H. Walker Feaster III,
Acting Secretary.
[FR Doc. 88-8283 Filed 4-14-88; 8:45 am]
BILLING CODE 6712-01-M

[Report No. 1721]

Petitions for Reconsideration of Actions in Rulemaking Proceedings

April 4, 1988.

Petitions for reconsideration have been filed in the Commission rule making proceeding listed in this Public Notice and published pursuant to 47 CFR 1.429(e). The full text of these documents are available for viewing and copying in Room 239, 1919 M Street, NW., Washington, DC., or may be purchased from the Commission's copy contractor, International Transcription Service (202-857-3800). Oppositions to these petitions must be filed May 3, 1988. See § 1.4(b)(1) of the Commission's rules (47 CFR 1.4(b)(1)). Replies to an opposition must be filed within 10 days after the time for filing oppositions has expired.

Subject: Amendment of § 73.202(b), Table of Allotments, FM Broadcast Stations. (Keokuk, Iowa) (MM Docket No. 86-416, RM-5112) Number of petitions received: 1

Federal Communications Commission.
H. Walker Feaster III,
Acting Secretary.
[FR Doc. 88-8284 Filed 4-14-88; 8:45 am]
BILLING CODE 6712-01-M

[Report No. 1723]

Petitions for Reconsideration and Clarification of Actions in Rulemaking Proceedings

April 7, 1988.

Petitions for reconsideration and clarification have been filed in the Commission rule making proceeding listed in this Public Notice and published pursuant to 47 CFR 1.429(e). The full text of these documents are available for viewing and copying in Room 239, 1919 M Street, NW., Washington, DC, or may be purchased from the Commission's copy contractor, International Transcription Service (202-857-3800). Oppositions to these petitions must be filed May 3, 1988. See § 1.4(b)(1) of the Commission's rule (47 CFR 1.4(b)(1)). Replies to an opposition must be filed within 10 days after the time for filing oppositions has expired.

Subject: Amendment of § 73.202(b), Table of Allotments, FM Broadcast Stations. (Oxford and New Albany, Mississippi) (MM Docket No. 87-58, RM's 5408 & 5464) Number of petitions received: 1

Subject: Policies Regarding Detrimental Effects of Proposed New Broadcast Stations on Existing Stations. (MM Docket No. 87-88) Number of petitions received: 1

Federal Communications Commission.
H. Walker Feaster III,
Acting Secretary.
[FR Doc. 88-8285 Filed 4-14-88; 8:45 am]
BILLING CODE 6712-01-M

Applications for Consolidated Hearing; Wade Axell, et al.

1. The Commission has before it the following mutually exclusive applications for a new FM station:

Applicant, City and State	File No.	MM Docket No.
A. Wade Axell, Grass Valley, CA.	BPH-851030MG	88-120
B. Eric R. Hilding	BPH-851020MH	
C. Bernadita Paulino San Nicolas-Obenauf.	BPH-851030MI	

2. Pursuant to section 309(e) of the Communications Act of 1934, as amended, the above applications have been designated for hearing in a consolidated proceeding upon the issues whose headings are set forth below. The text of each of these issues has been standardized and is set forth in its entirety under the corresponding headings at 51 FR 19347, May 29, 1986. The letter shown before each applicant's name, above, is used below to signify whether the issue in question applies to the particular applicant.

Issue Heading and Applicants

1. Financial, B
2. Air Hazard, C
3. Comparative, A, B, C
4. Ultimate, A, B, C

3. If there is any non-standardized issue(s) in this proceeding, the full text of the issue and the applicant(s) to which it applies are set forth in an Appendix to this Notice. A copy of the complete HDO in this proceeding is available for inspection and copying during normal business hours in the FCC Dockets Branch (Room 230), 1919 M Street NW., Washington, DC. The complete text may also be purchased from the Commission's duplicating contractor, International Transcription Services, Inc., 2100 M Street NW., Washington, DC 20037. (Telephone (202) 857-3800).

W. Jan Gay,
Assistant Chief, Audio Services Division, Mass Media Bureau.
[FR Doc. 88-8322 Filed 4-14-88; 8:45 am]
BILLING CODE 7712-01-M

Applications for Consolidated Hearing; Celina Broadcasting, et al.

1. The Commission has before it the following mutually exclusive applications for a new FM station:

Applicant, city, and State	File No.	MM Docket No.
A. David and Joyce Goff d/b/a Celina Broadcasting, Celina, TN.	BPH-861217MB	88-121
B. John W. & Linda Hembree et al. d/b/a Clay County Broadcasting, Celina, TN.	BPH-861217MC	
C. Gary L. Wells, Celina, TN.	BPH-861217NH	

2. Pursuant to section 309(e) of the Communications Act of 1934, as amended, the above applications have been designated for hearing in a consolidated proceeding upon the issues whose headings are set forth below. The text of each of these issues has been standardized and is set forth in its entirety under the corresponding headings at 51 FR 19347, May 29, 1986. The letter shown before each applicant's name, above, is used below to signify whether the issue in question applies to that particular applicant.

Issue Heading and Applicant(s)

1. Comparative, A,B,C
2. Ultimate, A,B,C

3. If there is any non-standardized issue(s) in this proceeding, the full text of the issue and the applicant(s) to which it applies are set forth in an Appendix to this Notice. A copy of the complete HDO in this proceeding is available for inspection and copying during normal business hours in the FCC Dockets Branch (Room 230), 1919 M Street NW., Washington, DC. The complete text may also be purchased from the Commission's duplicating contractor, International Transcription Services, Inc., 2100 M Street NW.,

Washington, DC 20037. (Telephone (202) 857–3800).

W. Jan Gay,

Assistant Chief, Audio Services Division, Mass Media Bureau.

[FR Doc. 88–8323 Filed 4–14–88; 8:45 am]

BILLING CODE 6712-01-M

Applications for Consolidated Hearing; Roy Davis, et al.

1. The Commission has before it the following mutually exclusive applications for a new FM station:

Applicant, city, and State	File No.	MM Docket No.
A. Roy Davis, East Ridge, TN.	BPH-870612MA	88-122
B. John H. Totten, Sr., and Jennie L. Totten, East Ridge, TN.	BPH-870612MD	.....
C. Michael J. Benns, East Ridge, TN.	BPH-870615MB	.....
D. Leonard & Diana Scott, d/b/a Highland Broadcasting Partnership, East Ridge, TN.	BPH-870615ME	.....
E. Virginia Ann Sattler, East Ridge, TN.	BPH-870615MM	.....
F. Rebecca Ann Fulton & Kathleen D. Walker, d/b/a Rebecca Radio of East Ridge, East Ridge, TN.	BPH-870615MU	.....
G. East Ridge FM Limited, Partnership East Ridge, TN.	BPH-870615MY	.....

2. Pursuant to section 309(e) of the Communications Act of 1934, as amended, the above applications have been designated for hearing in a consolidated proceeding upon the issues whose headings are set forth below. The text of each of these issues has been standardized and is set forth in its entirety under the corresponding headings at 51 FR 19347, May 29, 1986. The letter shown before each applicant's name, above, is used below to signify whether the issue in question applies to that particular applicant.

Issue Heading and Applicant(s)

1. Air Hazard, C, G
2. Comparative, A, B, C, D, E, F, G
3. Ultimate, A, B, C, D, E, F, G

3. If there is any non-standardized issue in this proceeding, the full text of the issue and the applicant to which it applies are set forth in an Appendix to this Notice. A copy of the complete HDO in this proceeding is available for inspection and copying during normal business hours in the FCC Dockets Branch (Room 230), 1919 M Street NW., Washington, DC. The complete text may also be purchased from the Commission's duplicating contractor, International Transcription Services, Inc., 2100 M Street NW., Washington, DC 20037. (Telephone (202) 857–3800).

W. Jan Gay,

Assistant Chief, Audio Services Division Mass Media Bureau.

[FR Doc. 88–8324 Filed 4–14–88; 8:45 am]

BILLING CODE 6712-01-M

Applications for Consolidated Proceeding; Dean-Thomas Communications, et al.

1. The Commission has before it the following mutually exclusive applications for a new FM station:

Applicant, City, and State	File No.	MM Docket No.
A. Robert L. Dean & Charles Thomas, Sr., d/b/a Dean-Thomas Communications, Bridgewater, VA.	BPH-860312MR	88-113
B. Mountain Tower, Bridgewater, VA.	BPH-860313MT	
C. Ronald L. Wilson, Bridgewater, VA.	BPH-860317ND	
D. Robert A. Jones, Bridgewater, VA.	BPH-860317NG	
E. College Town Radio Limited, Partnership, Bridgewater, VA.	BPH-860317NH	
F. Emmett M. Capper, d/b/a Bridgewater Broadcasters, Bridgewater, VA.	BPH-860317NI	
G. Kirkley Paige Beal, Bridgewater, VA.	BPH-860317NK	
H. Judith L. Randolph and Genesis Communications, Inc., Bridgewater, VA.	BPH-860317NF [1]	

[1] Dismissed herein.

2. Pursuant to section 309(e) of the Communications Act of 1934, as amended, the above applications have been designated for hearing in a consolidated proceeding upon the issues whose headings are set forth below. The text of each of these issues has been standardized and is set forth in its entirety under the corresponding headings at 51 FR 19347, May 29, 1986. The letter shown before each applicant's name, above, is used below to signify whether the issue in question applies to that particular applicant.

Issue Heading and Applicant(s)

1. Air Hazard, C,F,G
2. Comparative, All
2. Ultimate, All

3. A copy of the complete HDO in this proceeding is available for inspection and copying during normal business hours in the FCC Dockets Branch (Room 230), 1919 M Street, NW., Washington, DC. The complete text may also be purchased from the Commission's duplicating contractor, International Transcription Services, Inc., 2100 M Street NW., Washington, DC 20037 (Telephone No. (202) 857–3800).

W. Jan Gay,

Assistant Chief, Audio Services Division, Mass Media Bureau.

[FR Doc. 88–8325 Filed 4–14–88; 8:45 am]

BILLING CODE 6712-01-M

Applications for Consolidated Hearing; Family Stations, Inc., et al.

1. The Commission has before it the following mutually exclusive applications for a new FM station:

Applicant, city, and State	File No.	MM Docket No.
A. Family Stations, Inc., Youngstown, OH.	BPED-850613MA	88-115
B. Christian Communications, Inc., Youngstown OH.	BPED-860512MK	.....

2. Pursuant to section 309(e) of the Communications Act of 1934, as amended, the above applications have been designated for hearing in a consolidated proceeding upon the issues whose headings are set forth below. The text of each of these issues has been standardized and is set forth in its entirety under the corresponding headings at 51 FR 19347, May 29, 1986. The letter shown before each applicant's name, above, is used below to signify whether the issue in question applies to that particular applicant.

Issue Heading and Applicant(s)

1. Comparative-Noncommercial Education FM, A,B
2. Ultimate, A,B

3. If there are any non-standardized issues in this proceeding, the full text of the issue and the applicants to which it applies are set forth in an Appendix to this Notice. A copy of the complete HDO in this proceeding is available for inspection and copying during normal business hours in the FCC Dockets Branch (Room 230), 1919 M Street NW., Washington, DC. The complete text may also be purchased from the Commission's duplicating contractor, International Transcription Services,

Inc., 2100 M Street, NW., Washington, DC 20037. (Telephone (202) 857-3800).

W. Jan Gay,

Assistant Chief, Audio Services Division Mass Media Bureau.

[FR Doc. 88-8326 Filed 4-14-88; 8:45 am]

BILLING CODE 6712-01-M

Applications for Consolidated Hearing; Froggy Bottom Television, et al.

1. The Commission has before it the following mutually exclusive applications for a new TV station:

Applicant, city, and State	File No.	MM Docket No.
A. Thaddeus Bishop, d/b/a Froggy Bottom Television, Danville, VA.	BPCT-861216IV	88-134
B. Freeman Borntreger, Danville, VA.	BPCT-870317KO	.....
C. AW Broadcasting, Danville, VA.	BPCT-870317KP	.....

2. Pursuant to section 309(e) of the Communications Act of 1934, as amended, the above applications have been designated for hearing in a consolidated proceeding upon the issues whose headings are set forth below. The text of each of these issues has been standardized and is set forth in its entirety under the corresponding headings at 51 FR 19347, May 29, 1986. The letter shown before each applicant's name, above, is used below to signify whether the issue in question applies to that particular applicant.

Issue Heading and Applicant(s)

Air Hazard, A,C
Comparative, A,B,C
Ultimate, A,B,C

3. If there is any non-standardized issue(s) in this proceeding, the full text of the issue and the applicant(s) to which it applies are set forth in an Appendix to this Notice. A copy of the complete HDO in this proceeding is available for inspection and copying during normal business hours in the FCC Dockets Branch (Room 230), 1919 M Street NW., Washington, DC. The complete text may also be purchased from the Commission's duplicating contractor, International Transcription Services, Inc., 2100 M Street NW., Washington, DC 20037 (Telephone No. (202) 857-3800).

Roy J. Stewart,

Chief, Video Services Division, Mass Media Bureau.

[FR Doc. 88-8327 Filed 4-14-88; 8:45 am]

BILLING CODE 6712-01-M

Application for Consolidated Hearing; Leonard James Giacone, et al.

1. The Commission has before it the following mutually exclusive applications for a new FM station:

Applicant, city and state	File No.	MM Docket No.
A. Leonard James Giacone, Vicksburg, MS.	BPH-851210ME	88-116
B. H & I Broadcasting, Ltd., Vicksburg, MS.	BPH-851212ME	
C. Bobby Bishop, Vicksburg, MS.	BPH-851216NH	
D. Clearwater Company, Vicksburg, MS.	BPH-851216NJ	
E. Julie N. Frew, Vicksburg, MS.	BPH-851216NJ	
F. Vicksburg FM Group Limited Partnership, Vicksburg, MS.	BPH-851216NK	
G. Radio Vicksburg, LTD., Vicksburg, MS.	BPH-851216NG [1]	
H. Vicksburg Broadcasting Foundation, Vicksburg, MS.	BPH-851216NL [1]	

[1] Previously dismissed.

2. Pursuant to section 309(e) of the Communications Act of 1934, as amended, the above applications have been designated for hearing in a consolidated proceeding upon the issues whose headings are set forth below. The text of each of these issues has been standardized and is set forth in its entirety under the corresponding headings at 51 FR 19347, May 29, 1986. The letter shown before each applicant's name, above, is used below to signify whether the issue in question applies to that particular applicant.

Issue Heading and Applicant(s)

1. Site Availability, A
2. Environmental, C
3. Comparative, A,B,C,D,E,F
4. Ultimate, A,B,C,D,E,F

3. A copy of the complete HDO in this proceeding is available for inspection and copying during normal business hours in the FCC Dockets Branch (Room 230), 1919 M Street NW., Washington, DC. The complete text may also be purchased from the Commission's duplicating contractor, International Transcription Services, Inc., 2100 M Street NW., Washington, DC 20037. (Telephone (202) 857-3800).

W. Jan Gay,

Assistant Chief, Audio Services Division, Mass Media Bureau.

[FR Doc. 88-8328 Filed 4-14-88; 8:45 am]

BILLING CODE 6712-01-M

Applications for Consolidated Hearing; Ernest C. Miller, et al.

1. The Commission has before it the following mutually exclusive applications for a new FM station:

Applicant, State, and city	File No.	MM Docket No.
A. Ernest C. Miller, Wauseon, OH.	BPH-860115MK	88-117
B. Charles J. Saltzman, Wauseon, OH.	BPH-860121MT	.....
C. Jane A. Filler, Wauseon, OH.	BPH-860123MV	.....
D. David Edward Knisely, Wauseon, OH.	BPH-860123MW	.....
E. Fulton Broadcasters, Wauseon, OH.	BPH-860123NS	.....

2. Pursuant to section 309(e) of the Communications Act of 1934, as amended, the above applications have been designated for hearing in a consolidated proceeding upon the issues whose headings are set forth below. The text of each of these issus has been standardized and is set forth in its entirety under the corresponding headings at 51 FR 19347, May 29, 1986. The letter shown before each applicant's name, above, is used below to signify whether the issue in question applies to that particular applicant.

Issue Heading and Applicant(s)

1. Air Hazard, B
2. Comparative, A-E
3. Ultimate, A-E

3. If there is any non-standardized issue(s) in this proceeding, the full text of the issue and the applicant(s) to which it applies are set forth in an Appendix to this Notice. A copy of the complete HDO in this proceeding is available for inspection and copying during normal business hours in the FCC Dockets Branch (Room 230), 1919 M Street NW., Washington DC. The complete text may also be purchased from the Commission's duplicating contractor, International Transcription Services, Inc., 2100 M Street NW., Washington, DC 20037. (Telephone (202) 857-3800).

W. Jan Gay,

Assistant Chief, Audio Services Division, Mass Media Bureau.

[FR Doc. 88-8329 Filed 4-14-88; 8:45 am]

BILLING CODE 6712-01-M

Applications for Consolidated Hearing; Roy E. Henderson, et al.

1. The Commission has before it the following mutually exclusive applications for a new FM station:

Applicant, city, and State	File No.	MM Docket No.
A. Roy E. Henderson d/b/a Pubio Radio Broadcasting Service, Oro Valley, AZ.	BPH-861002TA	88-137
B. Sanchez Communication, Inc., Oro Valley, AZ.	BPH-861002TA	.....
C. Honero S. Pacheco, Oro Valley, AZ.	BPH-861002TC	.....
D. William N. Freeman, Oro Valley, AZ.	BPH-861002TD	.....
E. Hal S. Widsten, Oro Valley, AZ.	BPH-861002TE	.....
F. Classic Media, Inc., Oro Valley, AZ.	BPH-861002TF	.....
G. Buena Suerta Broadcasting Corp., Oro Valley, AZ.	BPH-861002TG	.....
H. O-V Communications, Oro Valley, AZ.	BPH-861002TH	.....

2. Pursuant to section 309(e) of the Communications Act of 1934, as amended, the above applications have been designated for hearing in a consolidated proceeding upon the issues whose headings are set forth below. The text of each of these issues has been standardized and is set forth in its entirety under the corresponding headings at 51 FR. 19347, May 29, 1986. The letter shown before each applicant's name, above, is used to signify whether the issue in question applies to the particular applicant.

Issue Heading and Applicant(s)

1. Environmental, F
2. Comparative, A–H
3. Ultimate, A–H

3. If there is any non-standardized issue(s) in this proceeding, the full text of the issue and the applicant(s) to which it applies are set forth in an Appendix to this Notice. A copy of the complete HDO in this proceeding is available for inspection and copying during normal business hours in the FCC Dockets branch (Room 230), 1919 M Street NW, Washington, DC. The complete text may also be purchased from the Commission's duplicating contractor, International Transcription Services, Inc., 2100 M Street NW, Washington, DC 20037 (Telephone No. (202) 857–3800).

W. Jan Gay,

Assistant Chief, Audio Services Division, Mass Media Bureau.

[FR Doc. 88–8330 Filed 4–14–88; 8:45 am]

BILLING CODE 6712-01-M

Applications for Consolidated Hearing, Trax Broadcasting, et al.

1. The Commission has before it the following mutually exclusive applications for a new FM station:

Applicant, city, and State	File No.	MM Docket No.
A. Trax Broadcasting, Silver Springs, FL.	BPH-870629NE	88-119
B. Silver Springs Communications, Silver Springs, FL.	BPH-870630MS	.....
C. A.P. Walter, Jr., Silver Springs, FL.	BPH-870630MU	.....
D. Silver Springs Radio Communications, Ltd., Silver Springs, FL.	BPH-870630MW	.....
E. Silver Radio Partners, Silver Springs, FL.	BPH-870630MX	.....
F. Silver Springs Broadcasting, Inc., Silver Springs, FL.	BPH-870630MY	.....
G. Jim Johnson, Silver Springs, FL.	BPH-870630MZ	.....
H. Mark L. Wodlinger, Silver Springs, FL.	BPH-870630NC	.....
I. Silver Springs-Ocala Broadcasting, Inc., Silver Springs, FL.	BPH-870630NE	.....
J. Ocala Radio, Inc., Silver Springs, FL.	BPH-870630NG	.....
K. Sun Coast Communications Limited Partnership, Silver Springs, FL.	BPH-870630NH	.....
L. Rosalia Bianco, Silver Springs, FL.	BPH-870629MY [1]	.....

[1] Previously dismissed.

2. Pursuant to 47 U.S.C. 309(e), the above applications have been designated for hearing in a consolidated proceeding upon the issues whose headings are set forth below. The text of each of these issues has been standardized and is set forth in its entirety under the corresponding headings at 51 FR 19347 (May 29, 1986). The letter shown before each applicant's name, above, is used below to signify whether the issue in question applies to that particular applicant.

Issue Heading and Applicant(s)

1. Air Hazard, A,E
2. Comparative, A–K
3. Ultimate, A–K

3. If there is any non-standardized issue(s) in this proceeding, the full text of the issue and the applicant(s) to which it applies are set forth in an Appendix to this Notice. A copy of the complete HDO in this proceeding is available for inspection and copying during normal business hours in the FCC Dockets Branch (Room 230), 1919 M Street NW., Washington, DC. The complete text may also be purchased from the Commission's duplicating contractor, International Transcription Service, Inc., 2100 M Street NW., Washington, DC 20037. (Telephone (202) 857–3800).

W. Jan Gay,

Assistant Chief, Audio Services Division, Mass Media Bureau.

[FR Doc. 88–8331 Filed 4–14–88; 8:45 am]

BILLING CODE 6712-01-M

Applications for Consolidated Hearing; Turner Broadcasting & Communications System, et al.

1. The Commission has before it the following mutually exclusive applications for a new TV station:

Applicant, city, and State	File No.	MM Docket No.
A. Linda F. Turner, d/b/a Turner Broadcasting & Communications System, Marquette, MI.	BPCT-861222KM	88-133
B. William J. Kimble, et al., d/b/a Marquette Television Associates, Marquette, MI.	BPCT-870326KU	.....
C. John J. Garofalo, d/b/a Skyway Television, Ltd., Marquette, MI.	BPCT-870331LB	.....
D. Upper Peninsula Telecasting Corp., Marquette, MI.	BPCT-870331LY	

2. Pursuant to section 309(e) of the Communications Act of 1934, as amended, the above applications have been designated for hearing in a consolidated proceeding upon the issues whose headings are set forth below. The text of each of these issues has been standardized and is set forth in its entirety under the corresponding headings at 51 FR 19347, May 29, 1986. The letter shown before each applicant's name, above, is used below to signify

whether the issue in question applies to that particular applicant.

Issue Heading and Applicant(s)

Air Hazard, B, C, D
Comparative, A, B, C, D
Ultimate, A, B, C, D

3. If there is any non-standardized issue(s) in this proceeding, the full text of the issue and the applicant(s) to which it applies are set forth in an Appendix to this Notice. A copy of the complete HDO in this proceeding is available for inspection and copying during normal business hours in the FCC Dockets Branch (Room 230), 1919 M Street NW., Washington, DC. The complete text may also be purchased from the Commission's duplicating contractor, International Transciption Services, Inc. 2100 M Street NW., Washington, DC 20037 (Telephone No. (202) 857-3800).

Roy J. Stewart,

Chief, Video Services Division, Mass Media Bureau.

[FR Doc. 88-8332 Filed 4-14-88; 8:45 am]

BILLING CODE 6712-01-M

[Docket No. 87-2]

Additional Pleading Cycle Established on National Exchange Carrier Association, Inc., Relating to NECA Administrative Expenses

Released: April 6, 1988.

A notice of proposed rulemaking in CC Docket No. 87-2, the Commission's proceeding considering issues relating to the recovery of the administrative expenses of the National Exchange Carrier Association, Inc. (NECA), was released on January 16, 1987. The pleading cycle in that docket was completed on April 22, 1987. After the close of the pleading cycle, the Commission adopted several orders that modify the pooling arrangements and affect NECA's activities. On March 17, 1988, NECA filed Supplemental Comments in CC Docket No. 87-2 which state that the changes prescribed in these Commission orders should be reflected in the methodologies that allocate NECA's administrative expenses. NECA's supplemental comments suggest an alternative approach that would address those changes that have occurred, and that will occur, in NECA functions in the revised regulatory framework.

NECA proposes that its expenses be classifed as "Category I" (regulated interstate access activities) or "Category II" (other activities that are authorized but not mandated). Category I expenses would be further divided into three components: universal service fund/Lifeline, common line/exchange carrier support funds, and other NECA tariffs. The disaggregated Category I expenses would be recovered on the basis of the revenues associated with each of these activities.

Interested persons may file additional comments on the issues addressed in the NECA supplemental comments by April 29, and reply comments by May 13, 1988. Copies of the pleadings in CC Docket No. 87-2 and the NECA supplemental comments can be obtained from International Transcription Services Inc. (ITS), Suite 140, 2100 M Street NW., Washington, DC 20037, or by contacting Grace Williams, Room 544, FCC, 1919 M Street NW., Washington, DC 20554. Interested parties should file comments on this request with the Secretary, FCC, 1919 M Street NW., Washington, DC 20554, and with ITS. Two copies should also be sent to Peggy Reitzel, Policy and Program Planning Division, Common Carrier Bureau, FCC, Room 544, 1919 M Street NW., Washington, DC 20554.

For further information, contact Diane Cornell, at (202) 632-9342, or Kent Nilsson, at (202) 632-6363, in the Policy and Program Planning Division of the Common Carrier Bureau.

Federal Communications Commission.

H. Walker Feaster III,

Acting Secretary.

[FR Doc. 88-8282 Filed 4-14-88; 8:45 am]

BILLING CODE 6712-01-M

FEDERAL EMERGENCY MANAGEMENT AGENCY

Board of Visitors for the National Fire Academy; Open Meeting

In accordance with section 10(a)(2) of the Federal Advisory Committee Act (Pub. L. 92-463), announcement is made of the following committee meeting:

Name: Board of Visitors for the National Fire Academy.

Dates of Meeting: May 17-18, 1988.

Place:

May 17

Palos Verdes Room
Westin-Bonaventure Hotel
404 South Figueroa Street
Los Angeles, CA 90071

May 18

Room 212
Los Angeles Convention Center
Los Angeles, CA

Time: May 17—9:00 a.m. to 5:00 p.m.; May 18—9:00 a.m. to completion.

Proposed Agenda: May 17—Old Business, New Business, Annual Report; May 18—Annual Field Survey Meeting.

The meeting will be open to the public with seating available on a first-come, first-serve basis. Members of the general public who plan to attend the meeting should contact the Office of the Superintendent, National Fire Academy, Office of Training, 16825 South Seton Avenue, Emmitsburg, Maryland, 21727 (telephone number, 301-447-1123) on or before May 2, 1988.

Minutes of the meeting will be prepared by the Board and will be available for public viewing in the Director's Office, Office of Training, Federal Emergency Management Agency, 500 C Street SW., Washington, DC 20472. Copies of the minutes will be available upon request 30 days after the meeting.

Dated: April 1, 1988.

Caesar A. Roy,

Deputy Director, Office of Training.

[FR Doc. 88-8288 Filed 4-14-88; 8:45 am]

BILLING CODE 6718-01-M

FEDERAL RESERVE SYSTEM

The Bank of Montreal, Toronto, Canada; Application To Engage in Various Securities Activities

The Bank of Montreal, Toronto, Canada ("Applicant"), has applied, pursuant to section 4(c)(8) of the Bank Holding Company Act (12 U.S.C. 1843(c)(8)) ("BHC Act") and § 225.23(a)(2) and (3) of the Board's Regulation Y (12 CFR 225.23(a)(2) and (3)), to acquire Nesbitt Thomson Securities, Inc., New York, New York ("Company"), and thereby engage in:

(1) Providing brokerage and investment advisory services on a combined basis to institutional customers and Company's affiliates;

(2) Providing advice in connection with mergers and acquisitions, divestitures, loan syndications, interest rate swaps, interest rate caps and similar transactions to unaffiliated financial and nonfinancial institutions;

(3) Providing financial advice to the Canadian federal and provincial governments, such as with respect to the issuance of their securities in the U.S.;

(4) Underwriting and dealing in commerical paper to a limited extent; and

(5) Acting as agent and advisor to issuers of commercial paper in connection with the placement of such commercial paper with institutional purchasers.

Applicant has also applied to engage in providing discount brokerage services to non-institutional customers together with related securities credit services and incidental activities such as offering custodial services and cash management services; providing protfolio investment advice and research to institutional customers and Company's affiliates; furnishing general economic information and advice, general economic statistical forecasting services and industry studies to institutional customers and Company's affiliates; and underwriting and dealing in obligations of the United States, general obligations of states and their political subdivisions, and other obligations that state member banks are authorized to underwrite and deal in under 12 U.S.C. 24 and 335. The Board has previously found these latter activities to be generally permissible for bank holding companies. 12 CFR 225.25(b)(15), (4)(iii), (4)(iv) and (16), respectively.

The Board previously has determined that the combined offering of investment advice with securities brokerage services to institutional customers from the same bank holding company subsidiary is a permissible nonbanking activity and does not violate the Glass-Steagall Act. *National Westminster Bank PLC*, 72 Federal Reserve Bulletin 584 (1986) (*"NatWest"*); *J.P. Morgan & Co. Incorporated*, 73 Federal Reserve Bulletin 810 (1987) (*"Morgan"*); and *Manufacturers Hanover Corporation*, 73 Federal Reserve Bulletin 930 (1987) (*"Manufacturers Hanover"*). That position has been upheld by the U.S. Court of Appeals for the District of Columbia Circuit in its affirmance of the Board's *NatWest* Order. *Securities Industry Ass'n v. Board of Governors*, 821 F.2d 810 (D.C. Cir. 1987), *cert. denied*, 108 S. Ct. 697 (1988).

Applicant has proposed to conduct its brokerage activity in accordance with the limitations approved by the Board in *Manufacturers Hanover* except that, here, Applicant proposes to exercise limited investment discretion at a customer's specific request as approved by the Board in *Morgan*. Moreover, under the terms of Applicant's proposal, Company's offices will either be separate from those of its *banking* affiliates or, in the case of offices established in a building in which a *banking* affiliate also has offices, in areas separate from areas utilized by such affiliates. In *Manufacturers Hanover*, this commitment was extended to *all* of the affiliates of the brokerage firm.

Applicant has also proposed to engage in providing advice in connection with financing transactions for unaffiliated financial and nonfinancial institutions, as previously approved by the Board in *Signet Banking Corporation*, 73 Federal Reserve Bulletin 59 (1987).

In addition, Applicant has proposed to provide financial advice to Canadian federal and provincial governments, as previously approved by the Board in *Bank of Nova Scotia*, 74 Federal Reserve Bulletin 249 (1988).

With regard to Applicant's proposal to underwrite and deal in commercial paper to a limited extent, Applicant has applied to conduct these activities in accordance with the limitations set forth in the Board's Orders approving those activities for a number of bank holding companies, except that Applicant has not proposed a market share limitation on its underwriting and dealing activity. *See, e.g., Citicorp, J.P. Morgan & Co. Incorporated and Bankers Trust New York Corporation*, 73 Federal Reserve Bulletin 473 (1987) (underwriting and dealing in commercial paper as well as municipal revenue bonds and mortgage-related securities). Applicant's underwriting and dealing proposal presents issues under section 20 of the Glass-Steagall Act (12 U.S.C. 377). Section 20 of the Glass-Steagall Act prohibits the affiliation of a member bank, such as First National Bank of Wilmette, with a firm that is "engaged principally" in the "underwriting, public sale or distribution" of securities. Applicant states that it would not be "engaged principally" in such activities on the basis of the restriction on the amount of the proposed activity relative to the total business conducted by the underwriting subsidiary previously approved by the Board.

With regard to Applicant's commercial paper placement proposal, Applicant has not proposed any quantitative limitations on this activity. Applicant has otherwise applied to conduct these activities in accordance with the limitations set forth in the Board's Order approving those activities for Bankers Trust New York Corporation. 73 Federal Reserve Bulletin 138 (1987).

Any views or requests for hearing should be submitted in writing and received by Williams W. Wiles, Secretary, Board of Governors of the Federal Reserve System, Washington, DC 20551, not later than May 11, 1988. Any request for a hearing must, as required by § 262.3(e) of the Board's Rules of Procedure (12 CFR 262.3(e)), be accompanied by a statement in lieu of a hearing, identifying specifically any questions of fact that are in dispute, summarizing the evidence that would be presented at a hearing, and indicating how the party commenting would be aggrieved by approval of the proposal.

This application may be inspected at the offices of the Board of Governors of the Federal Reserve Bank of Chicago.

Board of Governors of the Federal Reserve System, April 11, 1988.

James McAfee,

Associate Secretary of the Board.

[FR Doc. 88-8251 Filed 4-14-88; 8:45am]

BILLING CODE 6210-01-M

DEPARTMENT OF HEALTH AND HUMAN SERVICES

Centers for Disease Control

Grants for Centers for Research and Demonstration of Health Promotion and Disease Prevention; Program Announcement and Notice of Availability of Funds for Fiscal Year 1988

The Centers for Disease Control (CDC) announces that competitive grant applications are being accepted for up to three awards to establish, maintain and operate Prevention Centers and for one award to establish, maintain and operate an International Health Promotion and Disease Prevention Center. This center is hereinafter referred to as the International Prevention Center. The Catalog of Federal Domestic Assistance number is 13.135.

Objectives

Recent advances in health sciences research have added to existing knowledge about promoting good health and preventing disease. This new information has emphasized the need for a broadened approach, utilizing the skills and abilities of health professionals heretofore not part of the prevention team. To ensure the widest possible participation in programs designed to foster good health, it is vital that a full range of services be available to provide health assessment and targeted intervention to both individuals and well-defined population groups in the community. There are also important evaluation questions and methodologic issues affecting disease prevention and health promotion programs.

The specific objectives are:

1. To assess the current status of disease prevention and health promotion programs and services offered by national, State, local and

territorial health agencies, public and private health-care providers, voluntary agencies and other community or lay organizations.

2. To identify areas where research is needed to better define the efficacy and utility of specific disease prevention and health promotion programs and services.

3. To initiate research designed to improve understanding of the scientific basis of disease prevention and health promotion programs and services.

4. To establish demonstration projects for the delivery of disease prevention and health promotion programs and services in collaboration with the providers of these programs and services.

5. To develop improved evaluation methodologies for assessing the efficacy of disease prevention and health promotion programs and services and the cost-effectiveness of applying those programs and services to board-based constituencies.

Type of Assistance

The award instrument to be used resulting from this announcement will be grants.

Availability of Funds

In Fiscal Year 1988, 1.915 million dollars are available for funding Prevention Centers. Approximately 1.4 million dollars are available to fund 2 to 3 awards. The awards are expected to range from $450,000 to $700,000. Approximately $500,000 are allocated for an award to establish an International Prevention Center.

Authority

This program is authorized under the Public Health Service Act sections 301(a) (42 U.S.C. 241(a)), as amended, and 1706 (42 U.S.C. 300u–5).

The grant administration policies of the Department of Health and Human Services and the Public Health Service are applicable to the Prevention Centers Program.

Eligibility Requirements

Eligible applicants are schools of medicine, schools of osteopathy, and schools of public health. Eligible applicants may enter into contracts, including consortia agreements (as described in the PHS Grants Policy Statement), as necessary to meet the essential requirements of this program, and to strengthen the overall application.

Essential Requirements

Section 1706 of the PHS Act stipulates that a Prevention Center shall:

1. Be located in an academic health center with—

a. A multidisciplinary faculty with expertise in public health and which has working relationships with relevant groups in such fields as medicine, psychology, nursing, social work, education and business;

b. Graduate training programs relevant to disease prevention;

c. A core faculty in epidemiology, biostatistics, social sciences, behavioral and environmental health sciences, and health administration;

d. A demonstrated curriculum in disease prevention;

e. A capability for residency training in public health or preventive medicine.

2. Conduct—

a. Health promotion and disease prevention research, including retrospective studies and longitudinal prospective studies in population groups and communities;

b. Demonstration projects for the delivery of services relating to health promotion and disease prevention to defined population groups using, as appropriate, community outreach and organization techniques and other methods of educating and motivating communities; and

c. Evaluation studies on the efficacy of demonstration projects conducted under 2.b above

Other Characteristics

A number of other characteristics, which are not specified by law, are desirable and will also be used in the evaluation of applications:

1. The availability of highly qualified professional staff to perform proposed activities with relevant experience in such fields as infectious and chronic diseases, injuries, occupational safety and health, environmental health, maternal and child health, international health, and health promotion and risk reduction.

2. The designation of a Director who has well-defined authorities and responsibilities, and who will devote sufficient time to accomplish the Prevention Center's objectives.

3. A continuing base of peer-reviewed projects or activities funded from other sources relevant to the goals of the Prevention Center and its principal focus.

4. Demonstrated experience in successfully conducting and evaluating research, demonstration, and/or special projects relating to health promotion, disease prevention, and the delivery of health services.

5. Commitment of the parent institution to the Prevention Center, so that the Center will be recognized as a major element within the organizational structure; and manifested by various combinations of personnel, facilities, and activities funded from other sources.

6. Facilities and organizational arrangements that promote and foster collaboration among the staff and components of the Prevention Center.

7. A history of successful intramural cooperation among a variety of disciplines and, as appropriate, involving staff who will be part of the Prevention Center.

8. Effective working relationships with State and local health departments and other organizations (e.g., care providers, professional associations, voluntary organizations, etc.) whose active support and participation are essential to successful implementation of proposed activities, and in the case of the International Center, with international organizations.

9. Effective mechanisms for linking Prevention Center activities with researchers and practitioners in disease prevention, health promotion and health services research, and agencies, organizations and individuals engaged in offering programs and delivering services in those areas.

10. Relevant data and experience for rigorously evaluating the efficacy and cost benefits of demonstrations and other Center activities requiring rigorous evaluation.

11. Plans for the establishment of an advisory committee or other suitable mechanisms for obtaining input from a variety of perspectives (including scientists, health care providers, health services administrators, health officials, voluntary health organizations, and consumers) on the major aspects of the Prevention Center Program.

12. Plans to become self-sustaining.

Applications

1. Copies—Place of Submission

Applications should be submitted on Form PHS–398 (revised September 1986). Applications should also adhere to the Errata to the Instruction Sheet for PHS–398 contained in the Grant Application Kit. The original and two copies of the application must be submitted on or before June 1, 1988, to the: Centers for Disease Control, Grants Management Officer, Procurement and Grants Office, 255 E. Paces Ferry Road, NE., Room 321, E14, Atlanta, Georgia 30305.

Application kits are available from the CDC Grants Management Officer.

Applicant organizations wishing to apply for awards for a domestic Prevention Center and for an

International Prevention Center must submit a separate application for each type of Center. A single application which seeks funding for both a domestic Center and an International Center will not be considered responsive to the application guidelines and will not be forwarded for peer review.

An applicant organization has the option of having specific salary and fringe benefit amounts for individuals omitted from the copies of the application that are made available to outside reviewing groups. If the applicant elects to exercise this option, use asterisks on the original and two copies of the application to indicate those individuals for whom salaries and fringe benefits are being requested; the subtotals must still be shown.

In addition, submit an additional copy of page four of Form PHS-398, completed in full with the asterisks replaced by the amount of the salary and fringe benefits requested for each individual listed. This budget page will be reserved for internal CDC staff used only.

2. Deadlines

Applications shall be considered as meeting the deadline if they are either:

a. Received at the above address on, or before, the deadline date, or

b. Sent on, or before, the deadline date and received in time for submission to the peer review committee. (Applicants should request a legibly-dated U.S Postal Service postmark or obtain a legibly-dated receipt from a commercial carrier or U.S. Postal Service. Private metered postmarks shall not be acceptable as proof of timely mailing).

3. Late Applications

Applications which do not meet the criteria in either paragraph 2. a. or b. immediately above are considered late applications and will not be considered in the current competition and will be returned to the applicant.

4. Reviews

Applications are not subject to Inter-Governmental Review pursuant to Executive Order 12372.

5. Content of Application

Applications must include a narrative which details the following information: (NOTE: For general guideline purposes, the terms "Center," "Prevention Center" and "International Prevention Center" may be considered interchangeable.)

a. The proposed focus for the Center. Whether the proposed focus is broadly conceived or narrowly targeted on one or a few closely related areas, activities to be conducted in conjunction with the Center's focus should be clearly explained in terms of overall thrust, areas of emphasis, need, scientific basis, expertise, expected interactions, and anticipated outcomes.

While creativity and flexibility in selecting a focus are essential to stimulating innovative approaches and interactions, the Center's proposed focus should be responsive to the health priorities or emerging health needs of the geographic area and/or demographic group defined. In selecting a focus, applicants should also consider:

(1) The leading causes of preventable illness/injuries, premature death, and medical expenditures in the nation as a whole, as well as identified target populations; and/or

(2) Major cross-cutting issues affecting the present or future status of disease prevention and health promotion programs and services in the geographic area and/or population group defined in the application. The proposed focus should also reflect the interests and capabilities of the applicant and the health needs of the various nations, States, or communities within the geographic area involved or population group defined.

b. Clearly stated and measurable objectives consistent with the applicant's proposed focus and activities and the goals of the program outlined under the Objectives section of this document. The Center's proposed focus and objectives should likewise promote clarity of purpose and facilitate integration of Center activities into a conceptual whole.

c. A detailed program plan describing the means by which the Center's objectives will be achieved. The program plan must include a description of multidisciplinary interactions, developmental research, formal studies, demonstration projects, and shared expertise. For the purposes of this announcement, these terms are defined as:

(1) "Multidisciplinary interactions" means such investigations, surveys, literature searches, dialogues, assessments, initiatives, and other intramural or extramural activities as the applicant may propose in order to clearly explain, nuture, and further delineate specific needs and opportunities for furthering the aims of the Prevention Center Program. The need for such interactions and how they will contribute to the Center's objectives must be clearly defined.

(2) "Developmental research" means that series of steps leading to the development of specific studies or research projects. In addition to determining the needs for further scientific research and methods development, developmental research includes identifying and synthesizing available scientific evidence or data about a specific health problem, population group, health care setting or intervention. Applicants must clearly define the areas to be investigated and the methods to be used. The need for developmental research and how it will contribute to the Center's objectives must be clearly defined.

(3) "Formal study" means an identified research project which is intended and designed to establish, discover, develop, clarify, or confirm information on the underlying mechanisms of a specific health problem, population group, health care setting or intervention. In the context of this program, formal studies include research or methods, retrospective studies and longitudinal prospective studies in defined populations, and controlled intervention trials. Proposed studies must adhere to the scientific method and fall within the framework of the Public Health Service's definition of "prevention research" as defined in (6) below. The need for new studies, their contribution to the Center's objectives, and the relevancy of ongoing studies conducted by core faculty must be clearly defined.

(4) "Demonstration project" means a time-limited project aimed at testing the impact and/or efficacy of a service or intervention in remedying or reducing the underlying causes and/or exposure to risk factors of one or more preventable health problems in a defined community or target population. Testing the public health impact of a trial intervention, method, or approach on a community basis requires rigorous evaluation as well as quality control. The scientific basis and projected cost benefit of the intervention must be clearly delineated in the application along with a clear statement of the problem and methodology. The potential for practical application in public health practice of the methods tested in demonstration projects should be clear. Such demonstrations must also be consistent with the Public Health Service definition of "prevention research" as defined in (6) below. The need for each identified demonstration and how it will contribute to the Center's objectives must be clearly defined.

(5) "Shared expertise" means consultation to government public health agencies and other organizations in planning and evaluating programs or projects involving disease prevention

and health promotion programs and services and other activities which match the Center's capabilities and focus. The mechanisms for offering such assistance, particularly as it relates to designing and/or conducting formal evaluations, and how it will enhance the Center's objectives must be clearly defined.

(6) "Prevention research" includes only that research designed to yield results directly applicable to interventions to prevent occurrence of disease or disability, or the progression of detectable but asymptomatic disease.

(a) Pre-intervention:

—Identification of risk factors for disease or disability
—Development of methods for identification of disease controllable in the asymptomatic stage
—Refinement of methodological and statistical procedures for quantitatively assessing risk and measuring the effects of preventive interventions.

(b) Intervention:

—Development of biologic interventions to prevent occurrence of disease or disability, or progression of asymptomatic disease
—Development of environmental interventions to prevent occurrence of disease or disability, or progression of asymptomatic disease
—Development of behavioral interventions to prevent occurrence of disease or disability, or progression of asymptomatic disease
—Conduct of clinical and community trials and demonstrations to assess preventive interventions and to encourage their adoption.

Some interventions may be applicable to primary prevention as well as to disease treatment (e.g., diet and exercise as components of rehabilitation for coronary heart disease). Research into such intervention is considered prevention research.

Applicants have broad flexibility in determining the appropriateness, scope and blend of these and other proposed activities, but at least twenty-five (25) percent of the Center's resources must be allocated to defined formal studies/research projects and community demonstrations as defined in parts c.(3) and c.(4) above. The need for such "other activities" that the applicant may consider necessary to accomplish its stated objectives must also be clearly defined along with expected outcomes.

d. A method of evaluation aimed at monitoring progress in meeting the Center's objectives.

e. A description of the Center director's role and authority relative to staffing the Prevention Center, coordination of effort, and control over Center space and equipment.

f. A description of the core faculty and its role in implementing and evaluating the proposed program. Whether paid from the grant or other sources, the core faculty must include full or part-time faculty in epidemiology, biostatistics, social sciences, behavioral sciences, environmental health sciences, and one of the health disciplines which addresses the administration of health programs. The applicant may also include as a part of the core faculty other disciplines (e.g., health economics, biomedical ethics, occupational safety and health, health law, health education, medicine, and nursing) as needed to achieve the Center's proposed objectives.

g. A list of staff, including the Center director and core faculty, who are expected to participate in the Center, including titles, tenure status, areas of expertise, and the amount of time devoted to each component of the proposed program, and whether paid from the grant or other sources.

h. A list of relevant current funded and/or pending grants and/or contracts for the core faculty (PHS 398, "Other Support") under part e. above. For each grant or contract include:

(1) Source of funds;
(2) Amount of funding;
(3) Identifying numbers;
(4) Whether funded or pending;
(5) Date of funding, initiation, and termination;
(6) Relationship to the Center's proposed theme, objectives and implementation plan.

i. Documentation of the involvement of appropriate public health agencies, health care providers, professional and community organizations, and other interested parties, including letters of support and a clear statement of their role, if applicable.

j. A description of how the applicant plans to obtain continuing input and advice from a variety of perspectives (e.g., scientists, public health officials, health care providers, health services administrators, voluntary health organizations, and consumers) as counsel is needed, to maximize participation and "ownership" in Prevention Center activities and to obtain resources from other sources. Toward this end, applicants may establish an advisory committee or use other mechanisms suitable to their needs.

k. Documentation of the source, allocation and planned full use of other national, State, local government, foundation, or institutional funds made available to the Center and an indication of the discretion which the Center director has with these funds.

l. Charts showing the proposed organizational structure of the Center and its relationship to the applicant institution and, where applicable, to other governments, affiliated institutions or collaborating organizations.

m. A detailed budget for the Prevention Center.

n. In regard to the Research Plan, instructions apply to demonstration projects as well as formal research studies.

o. In citing preliminary studies or prior findings, the six phases of prevention research and demonstrations are:

(1) Hypothesis development;
(2) Methods development;
(3) Controlled intervention trials;
(4) Defined population studies;
(5) Demonstrations;
(6) Wide-scale application of successful results.

The phase(s) to be conducted should be clearly delineated.

p. For demonstration projects, also describe the scientific strength of the proposed interventions; the target population; projected cost benefits; data gathering activities and evaluations procedures; and possible future strategies for wide-scale application of the results if the specific aims of the project are accomplished.

q. Plans to become self-sustaining.

6. Review Criteria

Applications will be reviewed and evaluated by a dual review process.

a. A *peer review* will be conducted on all applications. Applications for funds to establish an International Prevention Center will receive a separate peer review. The review process may include a site visit. Applications will be reviewed and evaluated in the peer review based on the evidence submitted which specifically describes the applicant's ability to meet the following criteria:

(1) The degree to which the applicant satisfies the essential requirements described under Eligibility Requirements section of this document.

(2) The degree to which the applicant possesses Other Characteristics described under Eligibility Requirements section of this document.

(3) The quality of the program's measurable objectives and the overall match between the applicant's proposed focus, activities, and the objectives and the goals stated in the application.

(4) The scientific merit of the overall application relative to the types of

research, demonstration, and other activities proposed.

(5) The need for, and significance of, proposed studies and demonstrations, such that at least 25 percent of the grant award will be directed toward the conduct of defined formal studies/research projects and community demonstrations.

(6) The adequacy of the methods for coordinating the overall program and its components.

(7) The adequacy of the methods for evaluating achievement of the program's measurable objectives.

(8) Overall qualifications, adequacy, and appropriateness of personnel to accomplish proposed activities.

(9) The degree of commitment by the parent institution as manifested by the organizational status of the Prevention Center and combinations of Center personnel, facilities and activities funded from other sources, and the likelihood that this commitment will be sustained or expanded in future years.

(10) The degree of commitment and cooperation manifested by other interested parties, including national, State and local health departments, organizations and associations of health services providers, voluntary health organizations and consumers where applicable. The degree of this commitment will also be measured by the likelihood that it will be sustained or expanded in future years.

(11) The reasonableness of the proposed budget in relation to the proposed program.

b. A *secondary review* of all applications will be conducted by a CDC committee based on:

(1) The results of the peer review.

(2) The significance of proposed Prevention Center activities, including areas of emphasis for research and demonstration.

(3) Needs and geographic balance within the geographic area defined.

(4) Balance between multi-disciplinary interactions, research projects, community demonstrations, and other proposed activities.

(5) Budgetary considerations

(6) Plans to become self-sustaining.

7. Awards

Awards will be made based on priority score ranking, secondary review, availability of funds, and such other significant factors deemed necessary and appropriate by the Director, CDC.

Both types of awards will not be given to a single applicant. In the event an applicant organization submits applications for both types of awards and should rank sufficiently high as to be eligible for two awards, funds will be granted to implement that application which best promotes the objectives of the program.

Information

Information on application procedures, copies of application forms, and other material may be obtained from Mr. Henry S. Cassell, Grants Management Officer, Grants Management Branch, Procurement and Grants Office, Centers for Disease Control, 255 East Paces Ferry Road NE., Room 321, E14, Atlanta, Georgia 30305, or by calling (404) 842-6575 or FTS 236-6575.

Technical assistance may be obtained from Steven L. Solomon, M.D., Assistant Director for Prevention, Training and Laboratory Program Office, Centers for Disease Control, Atlanta, Georgia 30333, or by calling (404) 639-1986 or FTS 236-1986.

Dated: April 11, 1988.

Robert L. Foster,

Acting Director, Office of Program Support, Centers for Disease Control.

[FR Doc. 88-8275 Filed 4-14-88; 8:45 am]

BILLING CODE 4160-18-M

Immunization Practices Advisory Committee; Meeting

In accordance with section 10(a)(2) of the Federal Advisory Committee Act (Pub. L. 92-463), the Centers for Disease Control announces the following Committee meeting:

Name: Immunization Practices Advisory Committee.

Date: May 17-18, 1988.

Place: Conference Room 207, Centers for Disease Control, 1600 Clifton Road NE., Atlanta, Georgia 30333.

Time: 8:30 a.m.

Type of Meeting: Open

Contact Person: Jeffrey P. Koplan, M.D., Executive Secretary of Committee, Centers for Disease Control (1-2047), 1600 Clifton Road NE., Atlanta, Georgia 30333. Telephone: FTS: 236-3751; Commercial: 404/639-3751.

Purpose: The Committee is charged with advising on the appropriate uses of immunizing agents.

Agenda: The Committee will discuss Hepatitis vaccine, polio vaccine, influenza vaccine, and other vaccines; and consider other matters of relevance among the Committee's objectives.

Agenda items are subject to change as priorities dictate.

Dated: April 11, 1988.

Elvin Hilyer,

Associate Director for Policy Coordination, Centers for Disease Control.

[FR Doc. 88-8273 Filed 4-14-88; 8:45am]

BILLING CODE 4160-18-M

Meeting of National Committee on Vital and Health Statistics

ACTION: Notice of Meeting.

In accordance with the Federal Advisory Committee Act (Pub. L. 92-463), notice is hereby given that the National Committee on Vital and Health Statistics (NCVHS) Subcommittee on Minority Health Statistics established pursuant to 42 USC 242k, section 306(k)(2) of the Public Health Service Act, as amended, announces the following Subcommittee meeting.

Name: National Committee on Vital and Health Statistics Subcommittee on Minority Health Statistics

Time and Date: 9:00 am-5:00 pm—May 10, 1988; 9:00 am-12:00 noon—May 11, 1988.

Place: Room 337A-339A, Hubert H. Humphrey Building, 200 Independence Avenue, SW., Washington, DC 20201

Status: Open

Purpose: The Subcommittee will hear presentations on unmet statistical data needs on access and financing of medical care for minority populations and the medically indigent, including the potential use and value of these data.

Contact Person for More Information: Substantive program information as well as summaries of the meeting and roster of Committee members may be obtained from Gail F. Fisher, Ph.D., Executive Secretary, National Committee on Vital and Health Statistics, Room 2-12, Center Building, 3700 East West Highway, Hyattsville, Maryland 20782, telephone (301) 436-7050.

Dated: April 11, 1988.

Elvin Hilyer,

Associate Director for Policy Coordination, Centers for Disease Control.

[FR Doc. 88-8306 Filed 4-14-88; 8:45 am]

BILLING CODE 4160-18-M

Food and Drug Administration

Fertility and Maternal Health Drugs Advisory Committee; Notice of Renewal

AGENCY: Food and Drug Administration.

ACTION: Notice.

SUMMARY: The Food and Drug Administration announces the renewal of the Fertility and Maternal Health Drugs Advisory Committee by the Secretary of Health and Human Services. This notice is issued under the Federal Advisory Committee Act of October 6, 1972 (Pub. L. 92-463, 86 Stat. 770-776 (5 U.S.C. App. I)).

DATE: Authority for this committee will expire on March 23, 1990, unless the

Secretary formally determines that renewal is in the public interest.

FOR FURTHER INFORMATION CONTACT: Richard L. Schmidt, Committee Management Office (HFA-306), Food and Drug Administration, 5600 Fishers Lane, Rockville, MD 20857, 301-443-2765.

Dated: April 11, 1988

John M. Taylor,

Associate Commissioner for Regulatory Affairs.

[FR Doc. 88-8267 Filed 4-14-88; 8:45 am]

BILLING CODE 4160-01-M

[Docket No. 88E-0064]

Determination of Regulatory Review Period for Purposes of Patent Extension; Prinivil®

AGENCY: Food and Drug Administration.

ACTION: Notice.

SUMMARY: The Food and Drug Administration (FDA) has determined the regulatory review period for Prinivil® and is publishing this notice of that determination as required by law. FDA has made the determination because of the submission of an application to the Commissioner of Patents and Trademarks, Department of Commerce, for the extension of a patent which claims that human drug product.

ADDRESS: Written comments and petitions should be directed to the Dockets Management Branch (HFA-305), Food and Drug Administration, Rm. 4-62, 5600 Fishers Lane, Rockville, MD 20857.

FOR FURTHER INFORMATION CONTACT: Andrea E. Chamblee, Office of Health Affairs (HFY-20), Food and Drug Administration, 5600 Fishers Lane, Rockville, MD 20857, 301-443-1382.

SUPPLEMENTARY INFORMATION: The Drug Price Competition and Patent Term Restoration Act of 1984 (Pub. L. 98-417) generally provides that a patent may be extended for a period of up to 5 years so long as the patented item (human drug product, medical device, food additive, or color additive) was subject to regulatory review by FDA before the item was marketed. Under that act, a product's regulatory review period forms the basis for determining the amount of extension an applicant may receive.

A regulatory review period consists of two periods of time: a testing phase and an approval phase. For human drug products, the testing phase begins when the exemption to permit the clinical investigations of the drug becomes effective and runs until the approval phase begins. The approval phase starts with the initial submission of an application to market the human drug product and continues until FDA grants permission to market the drug product. Although only a portion of a regulatory review period may count toward the actual amount of extension that the Commissioner of Patents and Trademarks may award (for example, half the testing phase must be subtracted as well as any time that may have occurred before the patent was issued), FDA's determination of the length of a regulatory review period for a human drug product will include all of the testing phase and approval phase as specified in 35 U.S.C. 156(g)(1)(B).

FDA recently approved for marketing the human drug product Prinivil® (Lisinopril) which is indicated for the treatment of hypertension. It may be used alone or concomitantly with other classes of antihypertensive agents. Subsequent to this approval, the Patent and Trademark Office received a patent term restoration application for Prinivil® (U.S. Patent No. 4,374,829) from Merck & Co., Inc., and requested FDA's assistance in determining the patent's eligibility for patent term restoration. FDA, in a letter dated March 7, 1988, advised the Patent and Trademark Office that the human drug product had undergone a regulatory review period and that the active ingredient, Lisinopril, represented the first permitted marketing or use of that active ingredient. Shortly thereafter, the Patent and Trademark Office requested that FDA determine the product's regulatory review period.

FDA has determined that the applicable regulatory review period for Prinivil® is 2,373 days. Of this time, 1,751 days occurred during the testing phase of the regulatory review period, while 622 days occurred during the approval phase. These periods of time were derived from the following dates:

1. *The date an exemption under section 505(i) of the Federal Food, Drug, and Cosmetic Act became effective:* July 2, 1981. FDA has verified the applicant's claim that the investigational new drug application for the product (IND 18-815) was initially submitted on July 2, 1981.

2. *The date the application was initially submitted with respect to the human drug product under section 505(b) of the Federal Food, Drug, and Cosmetic Act:* April 17, 1986. The applicant claims April 16, 1986 as the date the new drug application (NDA) for the drug was initially submitted. However, FDA records indicate that NDA 19-558 was initially submitted on April 17, 1986.

3. *The date the application was approved:* December 29, 1987. FDA has verified the applicant's claim that NDA 19-558 was approved on December 29, 1987.

This determination of the regulatory review period establishes the maximum potential length of a patent extension. However, the U.S. Patent and Trademark Office applies several statutory limitations in its calculations of the actual period for patent extension. In its application for patent extension, this applicant seeks 676 days of patent term extension.

Anyone with knowledge that any of the dates as published is incorrect may, on or before June 14, 1988, submit to the Dockets Management Branch (address above) written comments and ask for a redetermination. Furthermore, any interested person may petition FDA, on or before October 12, 1988, for a determination regarding whether the applicant for extension acted with due diligence during the regulatory review period. To meet its burden, the petition must contain sufficient facts to merit an FDA investigation. (See H. Rept. 857, Part 1, 98th Cong., 2d Sess., pp. 41-42, 1984.) Petitions should be in the format specified in 21 CFR 10.30.

Comments and petitions should be submitted to the Dockets Management Branch (address above) in three copies (except that individuals may submit single copies) and identified with the docket number found in brackets in the heading of this document. Comments and petitions may be seen in the Dockets Management Branch between 9 a.m. and 4 p.m., Monday through Friday.

Dated: April 5, 1988.

Stuart L. Nightingale,

Associate Commissioner for Health Affairs.

[FR Doc. 88-8268 Filed 4-14-88; 8:45 am]

BILLING CODE 4160-01-M

[Docket No. 88E-0084]

Determination of Regulatory Review Period for Purposes of Patent Extension; Corotrope®

AGENCY: Food and Drug Administration.

ACTION: Notice.

SUMMARY: The Food and Drug Administration (FDA) has determined the regulatory review period for Corotrope® and is publishing this notice of that determination as required by law. FDA has made the determination because of the submission of an application to the Commissioner of Patents and Trademarks, Department of Commerce, for the extension of a patent which claims that human drug product.

ADDRESS: Written comments and petitions should be directed to the Dockets Management Branch (HFA-305), Food and Drug Administration, Rm. 4-62, 5600 Fishers Lane, Rockville, MD 20857.

FOR FURTHER INFORMATION CONTACT: Andrea E. Chamblee, Office of Health Affairs (HFY-20), Food and Drug Administration, 5600 Fishers Lane, Rockville, MD 20857, 301-443-1382.

SUPPLEMENTARY INFORMATION: The Drug Price Competition and Patent Term Restoration Act of 1984 (Pub. L. 98-417) generally provides that a patent may be extended for a period of up to 5 years so long as the patented item (human drug product, medical device, food additive, or color additive) was subject to regulatory review by FDA before the item was marketed. Under that act, a product's regulatory review period forms the basis for determining the amount of extension an applicant may receive.

A regulatory review period consists of two periods of time: a testing phase and an approval phase. For human drug products, the testing phase begins when the exemption to permit the clinical investigations of the drug becomes effective and runs until the approval phase begins. The approval phase starts with the initial submission of an application to market the human drug product and continues until FDA grants permission to market the drug product. Although only a portion of a regulatory review period may count toward the actual amount of extension that the Commissioner of Patents and Trademarks may award (for example, half the testing phase must be subtracted as well as any time that may have occurred before the patent was issued), FDA's determination of the length of a regulatory review period for a human drug product will include all of the testing phase and approval phase as specified in 35 U.S.C. 156(g)(1)(B).

FDA recently approved for marketing the human drug product Corotrope® (milrinone lactate) which is indicated for the short-term intraveneous therapy of conjestive heart failure. Subsequent to this approval, the Patent and Trademark Office received a patent term restoration application for Corotrope® (U.S. Patent No. 4,313,951) from Sterling-Winthrop Research Institute and requested FDA's assistance in determining the patent's eligibility for patent term restoration. FDA, in a letter dated March 14, 1988, advised the Patent and Trademark Office that the human drug product had undergone a regulatory review period and that the product represented the first permitted marketing or use of that active ingredient. Shortly thereafter, the Patent and Trademark Office requested that FDA determine the product's regulatory review period.

FDA has determined that the applicable regulatory review period for Corotrope® is 2,205 days. Of this time, 1,287 days occurred during the testing phase of the regulatory review period, while 918 days occurred during the approval phase. These periods of time were derived from the following dates:

1. *The date an exemption under section 505(i) of the Federal Food, Drug, and Cosmetic Act became effective:* December 19, 1981. FDA has verified the applicant's claim that the investigational new drug application (IND) for the drug became effective on December 19, 1981.

2. *The date the application was initially submitted with respect to the human drug product under section 505(b) of the Federal Food, Drug, and Cosmetic Act:* June 27, 1985. Although the applicant claims that the new drug application for the product (NDA 19-436) was initially submitted on September 26, 1985, according to FDA records, NDA 19-436 was initially submitted on June 27, 1985.

3. *The date the application was approved:* December 31, 1987. FDA has verified the applicant's claim that NDA 19-436 was approved on December 31, 1987.

This determination of the regulatory review period establishes the maximum potential length of a patent extension. However, the U.S. Patent and Trademark Office applies several statutory limitations in its calculations of the actual period for patent extension. In its application for patent extension, this applicant seeks 730 days of patent term extension.

Anyone with knowledge that any of the dates as published is incorrect may, on or before June 14, 1988, submit to the Dockets Management Branch (address above) written comments and ask for a redetermination. Furthermore, any interested person may petition FDA, on or before October 12, 1988, for a determination regarding whether the applicant for extension acted with due diligence during the regulatory review period. To meet its burden, the petition must contain sufficient facts to merit an FDA investigation. (See H. Rept. 857, Part 1, 98th Cong., 2d Sess., pp. 41-42, 1984.) Petitions should be in the format specified in 21 CFR 10.30.

Comments and petitions should be submitted to the Dockets Management Branch (address above) in three copies (except that individuals may submit single copies) and identified with the docket number found in brackets in the heading of this document. Comments and petitions may be seen in the Dockets Management Branch between 9 a.m. and 4 p.m., Monday through Friday.

Dated: April 5, 1988.

Stuart L. Nightingale,

Associate Commissioner for Health Affairs.

[FR Doc. 88-8269 Filed 4-14-88; 8:45 am]

BILLING CODE 4160-01-M

Health Professional Organizations' Participation; Open Meeting

AGENCY: Food and Drug Administration.

ACTION: Notice.

SUMMARY: The Food and Drug Administration (FDA) is announcing a forthcoming meeting of health professional organizations to be chaired by Frank E. Young, Commissioner of Food and Drugs. The agenda will include discussions on treatment investigational new drug applications (IND's), acquired immunodeficiency syndrome (AIDS), aspirin issues, renal dialysis, and the new drug approval process.

DATE: The meeting will be held on April 22, 1988, from 1:30 to 3:30 p.m.

ADDRESS: The meeting will be held in Conference Rm. 503A, Hubert H. Humphrey Bldg., 200 Independence Ave. SW., Washington, DC 20201.

FOR FURTHER INFORMATION CONTACT: Robert Veiga, Office of Health Affairs, Food and Drug Administration, 5600 Fishers Lane, Rockville, MD 20857, 301-443-5470.

Dated: April 8, 1988.

John M. Taylor,

Associate Commissioner for Regulatory Affairs.

[FR Doc. 88-8314 Filed 4-14-88; 8:45 am]

BILLING CODE 4160-01-M

[Docket No. 88E-0131]

Determination of Regulatory Review Period for Purposes of Patent Extension; Prozac™

AGENCY: Food and Drug Administration.

ACTION: Notice.

SUMMARY: The Food and Drug Administration (FDA) has determined the regulatory review period for Prozac™ and is publishing this notice of that determination as required by law. FDA has made the determination because of the submission of an application to the Commission of Patents and Trademarks, Department of Commerce, for the extension of a patent which claims that human drug product.

ADDRESS: Written comments and petitions should be directed to the Dockets Management Branch (HFA-305), Food and Drug Administration, Rm. 4-62, 5600 Fishers Lane, Rockville, MD 20857.

FOR FURTHER INFORMATION CONTACT: Philip L. Chao, Office of Health Affairs (HFY-20), Food and Drug Administration, 5600 Fishers Lane, Rockville, MD 20857, 301-443-1382.

SUPPLEMENTARY INFORMATION: The Drug Price Competition and Patent Term Restoration Act of 1984 (Pub. L. 98-417) generally provides that a patent may be extended for a period of up to 5 years so long as the patented item (human drug product, medical device, food additive, or color additive) as subject to regulatory review by FDA before the item was marketed. Under that act, a product's regulatory review period forms the basis for determining the amount of extension an applicant may receive.

A regulatory review period consists of two periods of time: a testing phase and an approval phase. For human drug products, the testing phase begins when the exemption to permit the clinical investigations of the drug becomes effective and runs until the approval phase begins. The approval phase starts with the initial submission of an application to market the human drug product and continues until FDA grants permission to market the drug product. Although only a portion of a regulatory review period may count toward the actual amount of extension that the Commissioner of Patents and Trademarks may award (for example, half the testing phase must be subtracted as well as any time that may have occurred before the patent was issued), FDA's determination of the length of a regulatory review period for a human drug product will include all of the testing phase and approval phase as specified in 35 U.S.C. 156(g)(1)(B).

FDA recently approved for marketing the human drug product Prozac™ (Fluoxetine Hydrochloride) which is indicated for the treatment of depression. The clinical efficacy of Prozac™ was established in 5- and 6-week trials with depressed outpatients whose diagnoses corresponded most closely to the DSM-III category of major depressive disorder. Subsequent to this approval, the Patent and Trademark Office received a patent term restoration application for Prozac™ from Eli Lilly & Co. and requested that FDA determine the product's regulatory review period.

FDA has determined that the applicable regulatory review period for Prozac™ is 4,292 days. Of this time, 2,716 days occurred during the testing phase of the regulatory review period, while 1,576 days occurred during the approval phase. These periods of time were derived from the following dates:

1. *The date an exemption under section 505(i) of the Federal Food, Drug, and Cosmetic Act became effective:* March 31, 1976. FDA has verified the applicant's claim that an investigational new drug application for Prozac™ became effective on March 31, 1976.

2. *The date the application was initially submitted with respect to the human drug product under section 505(b) of the Federal Food, Drug, and Cosmetic Act:* September 6, 1983. FDA has verified the applicant's claim that the new drug application for the drug (NDA 18-936) was initially submitted on September 6, 1983.

3. *The date the application was approved:* December 29, 1987. FDA has verified the applicant's claim that NDA 18-936 was approved on December 29, 1987.

This determination of the regulatory review period establishes the maximum potential length of a patent extension. However, the U.S. Patent and Trademark Office applies several statutory limitations in its calculations of the actual period for patent extension. In its application for patent extension, this applicant seeks 731 days of patent term extension.

Anyone with knowledge that any of the dates as published is incorrect may, on or before June 14, 1988, submit to the Dockets Management Branch (address above) written comments and ask for a redetermination. Furthermore, any interested person may petition FDA, on or before October 12, 1988, for a determination regarding whether the applicant for extension acted with due diligence during the regulatory review period. To meet its burden, the petition must contain sufficient facts to merit an FDA investigation. (See H. Rept. 857, Part 1, 98th Cong., 2d Sess., pp. 41-42, 1984.) Petitions should be in the format specified in 21 CFR 10.30.

Comments and petitions should be submitted to the Dockets Management Branch (address above) in three copies (except that individuals may submit single copies) and identified with the docket number found in brackers in the heading of this document. Comments and petitions may be seen in the Dockets Management Branch between 9 a.m. and 4 p.m., Monday through Friday.

Dated: April 8, 1988.

Stuart L. Nightingale,

Associate Commissioner for Health Affairs.

[FR Doc. 88-8313 Filed 4-14-88; 8:45 am]

BILLING CODE 4160-01-M

Health Resources and Services Administration

Application Announcement for Cooperative Agreements With Statewide Organizations for Development of Comprehensive Primary Health Care Services

AGENCY: Health Resources and Services Administration, HHS.

ACTION: Notice.

SUMMARY: The Health Resources and Services Administration (HRSA) is announcing that applications are being accepted from qualified Statewide organizations for cooperative agreements to provide assistance in the development and delivery of comprehensive primary health care services in areas that lack adequate health manpower or have populations lacking access to primary care services. It is expected that approximately $4 million will be available for new and competing continuation agreements, averaging $100,000 each. These agreements will be entered into under the authority of section 333(g) of the Public Health Service Act.

DATE: All applications must be delivered to the contact designated in this announcement or postmarked by July 1, 1988. Applications not meeting the deadline date will be returned to the State.

ADDRESS AND FURTHER INFORMATION: Application kits (Form PHS-5161 with revised facesheet DHHS Form 424, as approved by the Office of Management and Budget under control number 0348-0006) and additional information may be obtained from, and completed applications should be sent to, Ms. Harriett Brown, Special Projects Section, Office of Program Support, Bureau of Health Care Delivery and Assistance, Health Resources and Services Administration, Room 7-15, 5600 Fishers Lane, Rockville, Maryland 20857, telephone (301) 443-4220. Additional information about the program can be obtained from Mr. Richard Bohrer, Director, Division of Primary Care Services, at the above address, Room 7A-55, (301) 443-2260.

SUPPLEMENTARY INFORMATION: In order to qualify for a cooperative agreement, an applicant must be a State or a State agency or another Statewide public or private nonprofit entity that operates solely within one State, and must satisfy the Secretary that it is able to perform each of the following functions:

a. Analyze the use of and determine the need for primary care health services and health professionals

personnel in defined health service delivery areas;

b. Determine the types of inpatient and other health services that should be provided to meet the primary care needs of such health service delivery areas; and

c. Cooperate with and assist the Federal Government in the recruitment, selection and retention of National Health Service Corps (NHSC) and other health professionals to meet identified needs.

In carrying out the functions defined above, applicants will be expected to perform at least the following specific activities as part of their responsibilities under a cooperative agreement:

• Have in effect a program for the delivery of primary health care services in medically underserved areas utilizing the resources available through State Medicaid and other agencies, local health departments, and State and local medical societies.

• Initiate and coordinate the implementation of comprehensive plans to integrate Federal, State, and local efforts in the delivery of primary health care services to medically underserved populations.

• Serve as a clearinghouse for persons seeking employment in delivering primary health care services to the medically underserved, and for health service delivery sites in health manpower shortage areas seeking such personnel; evaluate recent experiences in performing this activity, amending existing strategies as appropriate.

Applicants will be evaluated on the basis of their relative ability, as determined by the Secretary, to perform the functions and specific activities listed above.

In conducting this evaluation the Secretary will also consider:

• The experience of the applicant in the delivery of primary health care services or the operation of facilities involved in actual patient care.

• The ability of the applicant to integrate (or the progress the applicant has made in integrating) existing State and local resources with Federal assistance and health care delivery programs.

• Evidence that the applicant will be able to enter (or has entered) into a formal Memorandum of Agreement with an organization representing a majority of Federally funded Community Health Centers within the State.

Federal responsibilities under the cooperative agreements, in addition to the usual monitoring and technical assistance provided by grants, will include the following:

1. To the extent possible, the exercise of responsibility for final authority on the award of Federal grants, Federal health personnel placement, and overall program management of Federal resources in the context of fulfilling the State program as developed under the agreement;

2. Participation in the development of Statewide efforts to coordinate and implement primary care delivery systems; and

3. The recruitment and assignment of National Health Service Corps personnel in accordance with the program developed under the cooperative agreement.

A competitive review of applications will be the basis for selecting successful applicants for cooperative agreements, with consideration being given to those who indicate that they can achieve the objectives of the cooperative agreement with cost-effective expenditure of funds.

In determining which projects to fund, the Secretary will consider applicants' plans to secure maximum self sufficiency and minimize dependence upon and need for subsequent Federal support. Priority will be given to applicants that demonstrate use of combined resources in coordinated primary health care service delivery.

Other Award Information

All agreements to be established under this notice are subject to the provisions of Executive Order 12372, as implemented by 45 CFR Part 100, which allows States the option of setting up a system for reviewing applications from within their States for assistance under certain Federal programs. The application packages to be made available by DHHS will contain a listing of States which have chosen to set up such a review system and will provide a point of contact in the States for that review. Since 60 days are allowed for this reiew, applicants are advised to discuss projects with and provide copies of their applications to contact points as early as possible. At the latest, an applicant should provide the application to the State for review at the same time it is submitted to the Bureau of Health Care Delivery and Assistance.

Catalog of Federal Domestic Assistance

The cooperative agreements for development of comprehensive primary health care services are listed as No. 13.130 in the OMB Catalog of Federal Domestic Assistance.

Dated: March 23, 1988.

David N. Sundwall,

Administrator.

[FR Doc. 88-8272 Filed 4-14-88; 8:45 am]

BILLING CODE 4160-15-M

National Institutes of Health

Animal Resources Review Committee and the Subcommittees; Meeting

Pursuant to Pub. L. 92-463, notice is hereby given of the meeting of the Animal Resources Review Committee and the Subcommittees on Animal Resources and on Primate Research Centers, Division of Research Resources, May 17-18, 1988, National Institutes of Health, Building 31, Conference Room 7, 9000 Rockville Pike, Bethesda, Maryland 20892.

The meeting of the full Committee will be open to the public on May 17, from 2:00 p.m. to 5:00 p.m. for a brief staff presentation on the current status of the Animal Resources Program and the selection of future meeting dates. Also, members from the National Advisory Research Resources Council will be present to discuss a report from an ad hoc committee to review program objectives of the Laboratory Animal Sciences Program. Attendance by the public will be limited to space available.

In accordance with the provisions set forth in sections 552b(c)(4) and 552b(c)(6), Title 5, U.S.C. and section 10(d) of Pub. L. 92-463, the Subcommittee meetings will be closed to the public on May 17 from 8:00 a.m. to 2:00 p.m. and on May 18 from 8:00 a.m. until adjournment for the review, discussion, and evaluation of individual grant applications submitted to the Animal Resources or Primate Research Centers Programs. These applications and the discussions could reveal confidential trade secrets or commercial property such as patentable material and personal information concerning individuals associated with the applications, the disclosure of which would constitute a clearly unwarranted invasion of personal privacy. The location of the Subcommittee meetings will be announced.

Mr. James Augustine, Information Officer, Division of Research Resources, National Institutes of Health, Building 31 Room 5B13, Bethesda, Maryland 20892, (301) 496-5545, will provide a summary of the meeting and a roster of the committee members upon request. Dr. Arthur Schaerdel, Executive Secretary of the Animal Resources Review Committee, Division of Research Resources, National Institutes of Health,

Building 31, Room 5B55, Bethesda, Maryland 29892, (301) 496-5175, will furnish program information upon request.

(Catalog of Federal Domestic Assistance Programs No. 13.306, Laboratory Animal Sciences, National Institites of Health)

Dated: April 6, 1988.

Betty J. Beveridge,

Committee Management Officer, NIH.

[FR Doc. 88-8255 Filed 4-14-88; 8:45 am]

BILLING CODE 4140-01-M

Fogarty International Center Advisory Board; Meeting

Pursuant to Pub. L. 92-463, notice is hereby given of the meeting of the Fogarty International Center (FIC) Advisory Board, May 24 and 25, 1988, in the Stone House (Building 16), at the National Institutes of Health.

The meeting will be open to the public on May 24 from 8:30 to 5 p.m. The morning agenda will include a Report by the Director of the FIC including discussions of proposed program initiatives; a presentation on strategies and implications of strengthening resources for science and technology in developing countries; and a report of the FIC Program Planning Committee. The afternoon session will continue the program planning process and will include discussion of implementation plans and priorities. A discussion and ratification of the Board's biennial report concludes the afternoon session.

In accordance with the provisions of sections 552b(c)(4) and 552b(c)(6), Title 5, U.S.C. and section 10(d) of Pub. L. 92-463, the meeting will be closed to the public on May 25, from 9 a.m. to adjournment, for the review, discussion, and evaluation of research fellowship applications. These applications contain information of a proprietary nature, including detailed research protocols, designs, and other technical information; and personal information about individuals associated with the applications.

Myra Halem, Committee Management Officer, Fogarty International Center, Building 38A, Room 609, National Institutes of Health, Bethesda, Maryland 20892 (301-496-1491), will provide a summary of the meeting and a roster of the committee members upon request.

Dr. Coralie Farlee, Assistant Director for Planning and Evaluation, Fogarty International Center (Executive Secretary), Building 38A, Room 609, telephone 301-496-1491, will provide substantive program information.

Dated: March 31, 1988.

Betty J. Beveridge,

Committee Management Officer, NIH.

[FR Doc. 88-8257 Filed 4-14-88; 8:45 am]

BILLING CODE 4140-01-M

National Advisory Council on Aging; Meeting

Pursuant to Pub. L. 92-463, notice is hereby given of the meeting of the National Advisory Council on Aging, National Institute on Aging (NIA), on May 23-24, 1988, in Building 31, Conference Room 6, National Institutes of Health, Bethesda, Maryland. This meeting will be open to the public on Monday, May 23, from 10:30 a.m. until 12:30 p.m. for a status report by the Director, National Institute on Aging, a report on the World Health Organization, a report on Regional Meetings of the Advisory Committee to the Director, NIH, and a report on NIA Extramural Priorities for Data Collection in Health and Retirement Economics. It will again be open to the public Tuesday, May 24, from 9:00 a.m. until adjournment for the Annual Report of Intramural Program, Laboratory of Neurosciences, a report on the ad hoc Committee on Program and a report on Role of Aging Research in Relation to Aids. Attendance by the public will be limited to space available.

In accordance with the provisions set forth in sections 552b(c)(4) and 552b(c)(6), Title 5, U.S.C. and section 10(d) of Pub. L. 92-463, the meeting of the Council will be closed to the public on May 23 from 2:00 p.m. to recess for the review, discussion, and evaluation of individual grant applications. These applications and the discussions could reveal confidential trade secrets or commercial property such as patentable material and personal information concerning individuals associated with the applications, the disclosure of which would constitute a clearly unwarranted invasion of personal privacy.

Because this meeting is scheduled so far in advance, it is suggested that you contact Mrs. June McCann, Council Secretary for the National Institute on Aging, National Institutes of Health, Building 31, Room 5C02, Bethesda, Maryland 20892, (301/496-9322), for specific information.

(Catalog of Federal Domestic Assistance Program No. 13.866, Aging Research, National Institutes of Health)

Dated: March 31, 1988.

Betty J. Beveridge,

Committee Management Officer, NIH.

[FR Doc. 88-8254 Filed 4-14-88; 8:45 am]

BILLING CODE 4140-01-M

National Cancer Institute; Meeting of the Board of Scientific Counselors

Pursuant to Pub. L. 92-463, notice is hereby given of the meeting of the Board of Scientific Counselors, Division of Cancer Etiology on May 12-13, 1988. The meeting will be held in Building 31, C Wing, Conference Room 10, National Institutes of Health, 9000 Rockville Pike, Bethesda, Maryland 20892.

This meeting will be open to the public from 1 p.m. to recess on May 12 and from 9 a.m. to adjournment on May 13 for discussion and review of the Division budget and review of concepts for grants and contracts. Attendance by the public will be limited to space available.

In accordance with the provisions set forth in section 552b(c)(6), Title 5, U.S.C. and section 10(d) of Pub. L. 92-463, the meeting will be closed to the public from 9 a.m. to approximately 12 p.m. on May 12 for the review, discussion and evaluation of individual programs and projects conducted by the Division of Cancer Etiology. These programs, projects, and discussions could reveal personal information concerning individuals associated with the programs and projects, the disclosure of which would constitute a clearly unwarranted invasion of personal privacy.

Mrs. Winifred Lumsden, Committee Management Officer, National Institutes of Health, National Cancer Institute, Building 31, Room 10A06, National Institutes of Health, Bethesda, Maryland 20892 (301/496-5708) will provide summaries of the meeting and rosters of committee members, upon request.

Dr. David McB. Howell, Executive Secretary of the Board of Scientific Counselors, Division of Cancer Etiology, National Cancer Institute, Building 31, Room 11A06, National Institutes of Health, Bethesda, Maryland 20892 (301/496-6927) will furnish substantive program information.

Dated: March 31, 1988.

Betty J. Beveridge,

Committee Management Officer, NIH.

[FR Doc. 88-8259 Filed 4-14-88; 8:45 am]

BILLING CODE 4140-01-M

National Heart, Lung, and Blood Advisory Council and Its Research Subcommittee and Training Subcommittee; Meeting

Pursuant to Pub. L. 92-463, notice is hereby given of the meeting of the National Heart, Lung, and Blood Advisory Council, National Heart, Lung, and Blood Institute, May 19-20, 1988,

National Institutes of Health, 9000 Rockville Pike, Building 31, Conference Room 10, Bethesda, Maryland 20892. In addition, the Research Subcommittee and the Training Subcommittee of the above Council will meet on May 18; the Research Subcommittee at 1 p.m. in Building 31, Conference Room 9 and the Training Subcommittee at 8 p.m. in Building 31, Conference Room 10.

The Council meeting will be open to the public on May 19 from 9 a.m. to approximately 3:30 p.m. for discussion of program policies and issues. Attendance by the public is limited to space available.

In accordance with the provisions set forth in sections 552b(c)(4) and 552b(c)(6), Title 5, U.S.C., section 10(d) of Pub. L. 92–463, the Council meeting will be closed to the public from approximately 3:30 p.m. on May 19 to adjournment on May 20 for the review, discussion and evaluation of individual grant applications. The meetings of the Research Subcommittee and the Training Subcommittee of the above Council on May 18, will be closed from 1 p.m. and 8 p.m., respectively, to adjournment for the review, discussion, and evaluation of individual grant applications.

These applications and the discussions could reveal confidential trade secrets or commercial property such as patentable material, and personal information concerning individuals associated with the applications, the disclosure of which would constitute a clearly unwarranted invasion of personal privacy.

Terry Bellicha, Chief, Communications and Public Information Branch, National Heart, Lung, and Blood Institute, Building 31, Room 4A21, National Institutes of Health, Bethesda, Maryland 20892, (301) 496–4236, will provide a summary of the meeting and a roster of the Council members.

Dr. Frances A. Pitlick, Director, Division of Extramural Affairs, Westwood Building, Room 7A–17, National Institutes of Health, Bethesda, Maryland 20892, (301) 496–7416, will furnish substantive program information.

(Catalog of Federal Domestic Assistance Program Nos. 13.837, Heart and Vascular Diseases Research; 13.838, Lung Diseases Research; and 13.839, Blood Diseases and Resources Research, National Institutes of Health.)

Dated: March 31, 1988.

Betty J. Beveridge,

Committee Management Officer, NIH.

[FR Doc. 88–8260 Filed 4–14–88; 8:45 am]

BILLING CODE 4140–01–M

National Institute on Aging; Meeting

Pursuant to Pub. L. 92–463, notice is hereby given of the meeting of the Board of Scientific Counselors, National Institute on Aging, May 16–17, 1988, to be held at the Gerontology Research Center, Baltimore, Maryland. The meeting will be open to the public from 9:00 a.m. on Monday, May 16, until approximately 4:00 p.m. and will again be open to the public from 9:00 a.m. on Tuesday, May 17, until 4:00 p.m. Attendance by the public will be limited to space available.

In accordance with the provisions set forth in section 552b(c)(6), Title 5, U.S.C. and section 10(d) of Pub. L. 92–463, the meeting will be closed to the public on May 16 from 4:00 p.m. until recess, and again on May 17 from 4:00 p.m. until adjournment on May 17 for the review, discussion, and evaluation of individual programs and projects conducted by the National Institutes of Health, NIA, including consideration of personnel qualifications and performance, and the competence of individual investigators, the disclosure of which would constitute a clearly unwarranted invasion of personal privacy.

Ms. June C. McCann, Committee Management Officer, NIA, Building 31, Room 5C02, National Institutes of Health, Bethesda, Maryland 20892, (telephone: 301/496–9322) will provide a summary of the meeting and a roster of committee members. Dr. Gunther L. Eichhorn, Acting Scientific Director, NIA, Gerontology Research Center, Baltimore City Hospitals, Baltimore, Maryland 21224, will furnish substantive program information.

(Catalog of Federal Domestic Assistance Program No. 13.866, Aging Research, National Institutes of Health)

Dated: March 31, 1988.

Betty J. Beveridge,

NIH Committee Management Officer.

[FR Doc. 88–8261 Filed 4–14–88; 8:45 am]

BILLING CODE 4140–01–M

National Institute of General Medical Sciences; Meeting

Pursuant to Pub. L. 92–463, notice is hereby given of the meeting of the National Advisory General Medical Sciences Council, National Institute of General Medical Sciences, National Institutes of Health, on May 18, 1988, Building 1, Wilson Hall, and May 19 and 20, Building 31, Conference Room 6, Bethesda, Maryland.

This meeting will be open to the public on May 18, in Building 1, Wilson Hall, from 1:30 p.m. to 6:00 p.m. for opening remarks; report of the Director, NIGMS; a scientific presentation; and other business of the Council. Attendance by the public will be limited to space available.

In accordance with provisions set forth in sections 552b(c)(4) and 552b(c)(6), Title 5, U.S.C. and section 10(d) of Pub. L. 92–463, the meeting will be closed to the public on May 19 from 8:30 a.m. to 6:00 p.m., and on May 20 from 8:30 a.m. until adjournment, for the review, discussion, and evaluation of individual grant applications. These applications and the discussions could reveal confidential trade secrets or commercial property such as patentable material, and personal information concerning individuals associated with the applications, disclosure of which would constitute a clearly unwarranted invasion of personal privacy.

Mrs. Ann Dieffenbach, Public Information Officer, National Institute of General Medical Sciences, National Institutes of Health, Building 31, Room 4A52, Bethesda, Maryland 20892, telephone: (301) 496–7301 will provide a summary of the meeting, roster of council members. Dr. Elke Jordan, Executive Secretary, NAGMS Council, National Institutes of Health, Westwood Building, Room 953, Bethesda, Maryland 20892, telephone: (301) 496–7061 will provide substantive program information upon request.

(Catalog of Federal Domestic Assistance Program Nos. 13–821, Biophysics and Physiological Sciences; 13–859, Pharmacological Sciences; 13–862, Genetics Research; 13–863, Cellular and Molecular Basis of Disease Research; and 13–880, Minority Access to Research Careers [MARC]).

Dated: March 31, 1988.

Betty J. Beveridge,

Committee Management Officer, NIH.

[FR Doc. 88–8258 Filed 4–14–88; 8:45 am]

BILLING CODE 4140–01–M

National Library of Medicine; Meeting

Pursuant to Pub. L. 92–463, notice is hereby given of the meeting of the Board of Regents of the National Library of Medicine on May 17–18, 1988, in the Board Room of the National Library of Medicine, 8600 Rockville Pike, Bethesda, Maryland, and the Meetings of the following subcommittees:

Program Outreach Subcommittee, Conference Room A, Mezzanine, National Library of Medicine, from 2 to 3 p.m., May 16.

Extramural Programs Subcommittee, 5th-floor Conference Room, Lister Hill Center Building, 2 to 3 p.m., May 16.

The meeting of the Board will be open to the public from 9 a.m. to approximately 4:30 p.m. on May 17 and from 9 a.m. to approximately 11:00 a.m. on May 18 for administrative reports and program discussions. The entire meeting of the Program Outreach Subcommittee will be open to the public. Attendance by the public will be limited to space available.

In accordance with provisions set forth in sections 552b(c)(4), 552b(c)(6), Title 5, U.S.C. and section 10(d) of Pub. L. 92-463, the entire meeting of the Extramural Programs Subcommittee on May 16 will be closed to the public, and the regular Board meeting on May 18 will be closed from approximately 11:00 a.m. to adjournment for the review, discussion, and evaluation of individual grant applications. These applications and the discussion could reveal confidential trade secrets or commercial property, such as patentable material, and personal information concerning individuals associated with the applications, the disclosure of which would constitute a clearly unwarranted invasion of personal privacy.

Mr. Robert B. Mehnert, Chief, Office of Inquiries and Publications Management, National Library of Medicine, 8600 Rockville Pike, Bethesda, Maryland 20894, Telephone Number: 301-496-6308, will furnish a summary of the meeting, rosters of Board members, and other information pertaining to the meeting.

(Catalog of Federal Domestic Assistance Program No. 13.879—Medicine Library Assistance, National Institutes of Health.

Dated: March 31, 1988.

Betty J. Beveridge,

Committee Management Officer, NIH.

[FR Doc. 88-8256 Filed 4-14-88; 8:45 am]

BILLING CODE 4140-01-M

DEPARTMENT OF THE INTERIOR

Office of the Secretary

Alaska Land Use Council; Work Program Items

As required by the operating procedures of the Alaska Land Use Council, which was established under the Alaska National Interest Lands Conservation Act (ANILCA), the Council invites the public to submit, for its consideration, projects and issues they believe should be addressed by the Council. The Council is comprised of Federal, State, and native land and resource decision-makers in Alaska. The Council is mandated to conduct cooperative studies, develop programs and procedures for implementing ANILCA, and to advise the Federal and State governments on a variety of complex land and resource management issues in Alaska.

In submitting a potential project or issues please include a brief description of the work to be accomplished; the completion data, the anticipated product, and the nature of the Council's involvement. The Cochairmen, after consultation with the Council's Staff Committee, will prepare a recommended work program considering the requirements of ANILCA, projected Council resources, special requests, and recommendations from the public, the Council's Land Use Advisors Committee, and Council members. The proposed work program will be submitted in May to the Council for adoption. Any interested parties having a proposed work program item should submit the information to the Cochairmen prior to May 4, 1988.

Submittals should be sent to either:

Robert L. Grogan, State Cochairman Designee, Alaska Land Use Council, 2600 Denali Street, Suite 700, Anchorage, Alaska 99503-2798.

Vernon R. Wiggins, Federal Cochairman, Alaska Land Use Council, 1689 "C" Street, Suite 100, Anchorage, Alaska 99501.

Anyone having questions regarding the Council's work program may call either the State Cochairman's office at (907) 274-3528 or the Federal Cochairman's office at (907) 272-3422.

William P. Horn,

Assistant Secretary for Fish and Wildlife and Parks.

April 12, 1988.

[FR Doc. 88-8291 Filed 4-14-88; 8:45 am]

BILLING CODE 4310-10-M

Fish and Wildlife Service

Receipt of Applications for Permits

The following applicants have applied for permits to conduct certain activities with endangered species. This notice is provided pursuant to section 10(c) of the Endangered Species Act of 1973, as amended (16 U.S.C. 1531, et seq.):

PRT-725979

Applicant: San Diego Zoological Society, San Diego, CA

The applicant requests a permit to reexport one male and two female clouded leopards (*Neofelis nebulosa*) that were captive born at Chegdu Zoo, Poeple's Republic of China. These cats are to be reexported to the London Zoo, London, England for the purpose of enhancement of propagation.

PRT-726222

Applicant: Gregg Bogosian, Ballwin, MO

The applicant requests a permit to take (collect) an unlimited number of empty shells and dead tissues of the Higgins' eye pearly mussel (*Lampsilis higginsi*), the pink mucket pearly mussel (*Lampsilis orbiculata*), the fat pocketbook mussel (*Potamilus* (=*Proptera*) *capax*), and the Curtis' pearly mussel (*Epioblasma* (=*Dysnomia*) *florentina curtisi*) that are found in the states of Arkansas, Illinois, Iowa, Kentucky, Missouri, and Tennessee for the purpose of scientific research with the possible sacrifice of up to ten live specimens of each species per year. The applicant would like to use the samples to determine the current range and status of these species.

PRT-726873

Applicant: San Diego Zoological Society, San Diego, CA

The applicant requests a permit to import one captive born female Bactrian deer (*Cervus elaphus bactrianus*) from Tierpark Berlin, Berlin, East Germany, to enhance the propagation of their existing breeding group.

PRT-726407

Applicant: Woodland Park Zoological Gardens, Seattle, WA

The applicant requests a permit to purchase in interstate commerce one female captive born ocelot (*Felis pardalis*) from the Cincinnati Zoo, Cincinnati, Ohio for the purpose of enhancement of propagation of the species.

PRT-726397 and 726400

Applicant: National Museum of Natural History, Washington, DC

The applicant requests a permit to import salvaged specimens worldwide of endangered and threatened amphibians and reptiles. These specimens will be accessioned into the museum collection and made available for scientific research.

PRT-726381

Applicant: Serge d'Elia, Villa Park, CA

The applicant requests a permit to import the trophy of a bontebok (*Damaliscus dorcas dorcas*) culled from the captive herd of Frank Bowker, Grahamstown, South Africa, for the purpose of enhancement of the survival of the species.

PRT-726618

Applicant: Regional Director, Region Five, U.S. Fish and Wildlife Service, Newton Corner, MA

The applicant requests a permit to capture roseate terns (*Sterna dougallii*

dougallii) for banding, to include color-marking of adults and weighing of young. Salvage of dead birds and unhatched eggs is also requested. Activities will be conducted in Maine, Massachusetts, Connecticut and New York. Data obtained will be used to determine factors inhibiting population growth of this species.

PRT-726667

Applicant: Lloyd Erickson, Holdrege, NE

The applicant requests a permit to import the trophy of a male bontebok (*Damaliscus dorcas dorcas*), culled from the captive herd maintained by Mr. F.W.M. Bowker, Jr., Grahamstown, Republic of South Africa, for the purpose of enhancement of survival of the species.

PRT-726625

Applicant: Greater Baton Rouge Zoo, Baker, LA

The applicant requests a permit to purchase one male nene goose (*Nesochen* (=*Branta*) *sandvicensis*) from the Los Angeles Zoo, where it was captive-hatched, for purposes of captive breeding and display.

PRT-726690

Applicant: David J. Harrington, Holdrege, NE

The applicant requests a permit to import the trophy of a male bontebok (*Damaliscus dorcas dorcas*), culled from the captive herd maintained by Mr. F.W.M. Bowker, Jr., Grahamstown, Republic of South Africa, for the purpose of enhancement of survival of the species.

PRT-726736

Applicant: Steve Martin, Acton, CA

The applicant requests a permit to export five wolves (*Canis lupus*) to Burnaby, British Columbia, Canada, for the purpose of educating the public about the conservation needs of the species. The wolves will then be returned to the United States.

PRT-726738

Applicant: Idaho Department of Fish and Game, Boise, ID

The applicant requests a permit to import five peregrine falcons (*Falco peregrinus anatum*) from John Lejeune, Agassiz, British Columbia, Canada, for reintroduction to the wild in Boise.

PRT-726737

Applicant: Bruce McElyea, Don Pauls Reptile, Springfield, MO

The applicant requests a permit to import two captive born Round Island day geckos (*Phelsuma quentheri*) from the Jersey Zoo, Channel Islands, Great Britain, for enhancement of the propagation of the species.

PRT-726740

Applicant: Louisiana Department of Wildlife and Fisheries, Baton Rouge, LA

The applicant requests a permit to take (harass) the following sea turtles in the Gulf of Mexico for the purpose of conducting scientific resource surveys and environmental monitoring: Atlantic ridley (*Lepidochelys kempi*), hawksbill (*Eretmochelys imbricata*), leatherback (*Dermochelys coriacea*), olive ridley (*Lepidochelys olivaceae*), green (*Chelonia mydas*), and loggerhead (*Caretta caretta*).

Documents and other information submitted with these applications are available to the public during normal business hours (7:45 am to 4:15 pm), Room 403, 1375 K Street NW., Washington, DC 20005, or by writing to the Director, US Office of Management Authority, P.O. Box 27329, Washington, DC 20038-7329.

Interested persons may comment on any of these applications within 30 days of the date of this publication by submitting written views, arguments, or data to the Director at the above address. Please refer to the appropriate applicant and PRT number when submitting comments.

Date: April 11, 1988.

R. K. Robinson,

Chief, Branch of Permits, U.S. Office of Management Authority.

[FR Doc. 88-8365 Filed 4-14-88; 8:45 am]

BILLING CODE 4310-AN-M

Bureau of Land Management

[CO-920-08-4121-02]

Green River Hams Fork Federal Coal Region; Colorado and Wyoming

AGENCY: Bureau of Land Management (BLM), Interior.

ACTION: Availability of Draft Operational Procedures for Leasing by Application for a 30-Day Public Review Period and Meeting of the Green River-Hams Fork Regional Coal Team to Consider, and if Appropriate, Approve Final Operational Procedures for Use in the Region.

SUMMARY: BLM is making available draft Operational Procedures for processing coal lease applications under the regulations of 43 CFR Part 3425 for a 30-day public review period. Public comments received on the draft Procedures before close of business on Monday, May 16, 1988, will be given full consideration in preparation of final Operational Procedures.

In addition, BLM has reviewed the market conditions described in the Long Range Market Analysis which was prepared for the October 9, 1987, Green River-Hams Fork Regional Coal Team Meeting. As a result of the review, BLM has concluded that there have been no substantial changes in the conditions as described. Copies of the Green River-Hams Fork Long Range Market Analysis are available for review.

On Wednesday, June 1, 1988, the Green River-Hams Fork Regional Coal Teams (RCT) will meet to discuss the final procedures, receive additional public comment, and, if appropriate, approve final Operational Procedures for use in processing lease applications in the region.

DATES: Beginning on Friday, April 15, 1988, copies of the draft Operational Procedures will be available, upon request, from the address listed below for a 30-day public review and comment period. In order to receive full consideration, comments on the draft Operational Procedures should be received at the address below by close of business on Monday, May 16, 1988.

The Regional Coal Team will meet on Wednesday, June 1, 1988, at 9:00 a.m. at the Lakewood Sheraton Hotel (address given below).

ADDRESSES: Copies of the draft Operational Procedures and Long Range Market Analysis are available on request from the Public Room of the Colorado State Office, Bureau of Land Management, 2850 Youngfield Street, Lakewood, Colorado 80215, (303) 236-2100 or (FTS) 776-2100. Comments on the draft Operational Procedures should be submitted to the Colorado State Office (CO-923), Bureau of Land Management, 2850 Youngfield Street, Lakewood, Colorado 80215.

The Regional Coal Team meeting will be held at the Lakewood Sheraton Hotel, 360 Union Boulevard, Lakewood, Colorado 80228, (303) 987-2000.

FOR FURTHER INFORMATION CONTACT: Betsy Daniel, (303) 236-1778, Colorado State Office, Bureau of Land Management, 2850 Youngfield Street, Lakewood, Colorado 80215.

SUPPLEMENTARY INFORMATION: During its October 9, 1988, meeting, the Green River-Hams Fork Regional Coal Team approved two motions affecting Federal coal leasing in the region. First, the team recommended renewal of its charter with revisions including a description of the regional coal team's role in the lease by application process. In addition, the team recommended that, after opportunity for public comment on the topic, the Director of BLM decertify the region so that leasing could be conducted under the regulations

contained in 43 CFR Part 3425, Lease Applications.

On March 24, 1988, after requesting and receiving public comment, the Regional Coal Team recommended to the Director of BLM that the Green River-Hams Fork Federal Coal Production Region be decertified in order to allow leasing by application in the region.

Approval of the revised charter by the Secretary of the Interior and action by the Director of BLM decertifying the region are expected before the Green River-Hams Fork Regional Coal Team meeting on June 1, 1988.

A preliminary meeting agenda for June 1, 1988, follows:

I. Introduction.

II. Approval of Minutes of the October 9, 1987, Meeting.

III. Approval of Final Agenda.

IV. Updates.

A. Regional Coal Team Charter.

B. Market Conditions in the Region.

C. Status of Lease Actions.

1. Preference Right Lease Applications.

2. Emergency Lease Applications.

V. Final Operational Procedures for Leasing by Application.

A. Overview of the Draft Procedures, Discussion of Public Comments, and Changes Made in Final Procedures.

B. RCT Discussion.

C. Public Comment.

D. Revisions or Modifications of the Proposed Final Procedures.

E. Approval of the Final Procedures, If Appropriate.

VI. Data Adequacy Standards.

Date: April 8, 1988.

Neil F. Morck,

State Director.

[FR Doc. 88-8274 Filed 4-14-88; 8:45 am]

BILLING CODE 4310-JB-M

Beaver Creek Draft Environmental Impact Statement

AGENCY: Bureau of Land Management, Interior.

ACTION: Notice of availability.

SUMMARY: Pursuant to section 102(2)c of the National Environmental Policy Act of 1969, as amended, the Department of the Interior, Bureau of Land Management (BLM) prepared an environmental impact statement covering placer mining within the Beaver Creek drainage.

The drainage area is located approximately 50 air miles north of Fairbanks, Alaska and constitutes nearly 1.2 million acres of land and contains portions of the White Mountains National Recreation area.

Issues encompassed are the cumulative impacts of multiple mining operations on the environment; in particular, water quality, subsistence uses, and the consistency of BLM permitting procedures with the Alaska National Interest Lands Conservation Act (ANILCA).

A proposed action and four alternatives incorporating management options ranging from emphasizing regulations under 43 CFR Part 3809 to a "no mining" alternative as outlined by the Court are presented. The proposed action evaluates BLM's surface management practices in the affected watershed. Environmental consequences of all the alternatives are analyzed and presented.

DATES: The EIS will be available for review from approximately April 18, 1988 to June 20, 1988. This will allow a required minimum 45-day period for public comment. Comments received prior to June 20, 1988 will be considered while preparing the Final EIS (FEIS). Comments received after this date may be too late to be integrated into the FEIS. Draft EIS public meetings will be held June 1, 1988 from 7 p.m. to 9 p.m. at the BLM, Anchorage District Office, 6881 Abbott Loop Road, Anchorage, Alaska; June 2, 1988 from 7 p.m. to 9 p.m. at the Ryan Junior High School, 915 Airport Way, Fairbanks, Alaska; June 13, 1988 from 7 p.m. to 9 p.m. at the Tribal Hall, Beaver Village, Alaska; June 14, 1988 from 7 p.m. to 9 p.m. at the Cultural Center, Fort Yukon, Alaska; and June 20, 1988 from 7 p.m. to 9 p.m. at the Community Center, Birch Creek Village, Alaska.

ADDRESSES: Comments on the EIS should be sent to 3809 Project Manager, Richard F. Dworsky, Alaska State Office, Bureau of Land Management, 701 C Street, Box 13, Anchorage, Alaska 99513.

FOR FURTHER INFORMATION CONTACT: Richard Dworksy—Project Manager, or Page Spencer—Technical Coordinator, at (907) 271-3114.

Lester K. Rosenkrance,

Acting State Director.

[FR Doc. 88-8031 Filed 4-14-88; 8:45 am]

BILLING CODE 4130-JA-M

[NM-010-08-4322-02]

Albuquerque District, NM; District Advisory Board Meeting

AGENCY: Bureau of Land Management, Interior.

ACTION: Notice of Albuquerque District Grazing Advisory Board meeting.

SUMMARY: The Bureau of Land Management's Albuquerque District Grazing Advisory Board will meet on Friday, May 13, 1988, at 10:00 a.m., in the BLM Albuquerque District Office Building located at 435 Montano NE., in Albuquerque, New Mexico.

The agenda for the meeting will include:

1. A review and discussion on proposed 1989 range improvement projects.

2. Discussion on late payments of grazing bills.

3. Farmington Resource Area report.

4. Discussion of base water qualifications on the Chiuilla allotment—Rio Puerco Resource Area.

Time will be provided for public comments during the appropriate agenda items. Minutes of the meeting will be available for public inspection within 30 days following the meeting in the Albuquerque District Office located at 435 Montano NE., Albuquerque, New Mexico 87107.

Michael F. Reitz,

Acting District Manager.

[FR Doc. 88-8245 Filed 4-14-88; 8:45 am]

BILLING CODE 4310-FB-M

[CA-010-08-3110-10-CAPL; Casefile #CA 21738]

Realty Action; Exchange of Public and Private Lands in San Luis Obispo County, CA

AGENCY: Bureau of Land Management, Interior.

ACTION: Notice of Realty Action—CA 21738.

SUMMARY: The following described public lands have been determined to be suitable for exchange under section 206 of the Federal Land Policy and Management Act of October 21, 1976 (43 U.S.C. 1716):

Mt. Diablo Meridian, California

T.29S., R.17E.
- Sec. 2 S½;
- Sec. 3 All;
- Sec. 4 Lots 1, 2 of NW¼, S½;
- Sec. 5 E½ Lot 1 of NE¼, Lot 2 of NE¼;
- Sec. 8 NE¼NE¼;
- Sec. 9 NE¼, E½NW¼, NW¼NW¼, SE¼;
- Sec. 10 SW¼;
- Sec. 11 NW¼NW¼;
- Sec. 15 NW¼NE¼, W½, W½SE¼;
- Sec. 22 All;
- Sec. 23 W½, W½SE¼, SE¼SE¼;
- Sec. 26 All;
- Sec. 27 E½, N½NW¼;
- Sec. 34 E½;
- Sec. 35 N½, SE¼.

T.30S., R.17E.,
- Sec. 3 Lot 3, SE¼NW¼.

Except therefrom those portions deeded to the State of California for State Route 58 and all mineral rights.

Containing 5,668.85 acres of public land, more or less.

In exchange for these land, the United States will acquire the surface estate of approximate equal value within the Carrizo Natural Heritage Reserve from The Nature Conservancy.

SUPPLEMENTARY INFORMATION: The purpose of this exchange is to acquire a portion of the non-federal lands within the proposed Carrizo Natural Heritage Reserve. This Reserve would promote the conservation of threatened and endangered species and preserve a representative sample of the historic southern San Joaquin Valley flora and fauna.

The ultimate goal of the Bureau of Land Management is to acquire approximately 155,000 acres within the Reserve. A secondary purpose of the exchange is to consolidate the Bureau lands in San Luis Obispo County and reduce the number of scattered, isolated Bureau parcels that lack legal access and are difficult for the Bureau to manage. The public interest will be well served by completing the exchange.

Publication of this notice in the **Federal Register** segregates the following public lands from the operation of the public land laws and the mining laws, except for mineral leasing. The segregative effect will end upon issuance of patent or two years from the date of publication in the **Federal Register**, whichever occurs first.

Mt. Diablo Meridian

T.29S., R.17E.,
Sec. 15 NW¼NE¼, W½SE¼.

The exchange will be on an equal value basis. Acreage of the private land will be adjusted to approximate equal values.

Lands transferred from the United States will retain the following reservations:

1. A right-of-way for ditches or canals constructed by the authority of the United States, under the Act of August 30, 1890 (43 U.S.C. 945).

Land transferred from the United States will be subject to:

1. Private easements of record, including easements to Pacific Gas and Electric Company for electric transmission lines and AT&T communications.

2. Any unrecorded farming or grazing leases.

FOR FURTHER INFORMATION CONTACT: Bureau of Land Management Caliente Resource Area Office, 4301 Rosedale Highway, Bakersfield, CA 93308 (805) 861-4236.

DATE: For a period up to and including May 31, 1988, interested parties may submit comments to the Area Manager, Caliente Resource Area Office, Bureau of Land Management, at the above address.

Objections will be reviewed by the State Director who may sustain, vacate or modify this realty action. In the absence of any objections, this realty action will become the final determination of the Department of Interior.

Glenn A. Carpenter,
Caliente Resource Area Manager.

Date: April 5, 1988.

[FR Doc. 88-8132 Filed 4-14-88; 8:45 am]

BILLING CODE 4310-40-M

[UT-020-88-4212-21]

Salt Lake District; Realty Action

AGENCY: Bureau of Land Management, Interior.

ACTION: Notice of realty action.

SUMMARY: This notice of realty action is to allow for applications to be filed to permit the use of public lands under section 302 of the Federal Land Policy and Management Act of 1976 (43 U.S.C. 1732; 90 Stat. 2762). The following public land in Tooele County, Utah has been found suitable for the issuance of a short-term permit which would allow the Utah National Guard to establish troop assembly area and communication areas, and carry out artillery firing from two firing points on public lands during a two-week period. This would be from June 12 to June 25, 1988. The exercise, known as FIREX 88, will include participation of nearly 17,000 soldiers and airmen. The proposed exercise would be conducted partially on BLM lands adjacent to and around Dugway Proving Ground.

T. 4 S., R. 4 W., SLM.,
Sec. 31: Lot 4, SE¼SW¼, S½SE¼.
T. 5 S., R. 4 W., SLM.,
Sec. 6: ALL;
Sec. 7: Lots 1 & 2, NE¼, E½NW¼;
Sec. 17: Lots 8 & 9, SW¼, W½SE¼;
Sec. 20: Lots 3 & 4, W½NE¼, SE¼.
T. 7 S, R. 5 W., SLM.,
Sec. 7: Lots 3 & 4, E½SW¼;
Sec. 18: Lots 1-4, E½W½;
Sec. 19: Lots 1 & 2, E½NW¼.
T. 7 S., R. 6 W., SLM.,
Sec. 12: S½;
Sec. 13: ALL;
Sec. 24: N½;
Sec. 25: ALL;
Sec. 26: E½;
Sec. 34: ALL;
Sec. 35: ALL;
Sec. 36: NW¼.
T. 8 S., R. 6 W., SLM.,
Sec. 1: Lots 3 & 4, S½NW¼, SW¼;
Sec. 2: ALL;
Sec. 3: ALL;
Sec. 4: ALL;
Sec. 11: N½N½.
T. 7 S., R. 7 W., SLM.,
Sec. 4: ALL;
Sec. 5: ALL;
Sec. 6: Lots 1 & 2, S½NE¼, SE¼;
Sec. 7: E½;
Sec. 8: ALL;
Sec. 9: ALL;
Sec. 17: ALL;
Sec. 18: E½.
T. 9 S., R. 7 W., SLM.,
Sec. 4: ALL;
Sec. 5: Lots 1-3, S½NE¼, SE¼NW¼, E½SW¼, SE¼;
Sec. 8: E½, E½W½;
Sec. 9: ALL;
Sec. 16: ALL;
Sec. 17: E½, E½W½.
Containing 15,979.96 acres.

The permit is proposed for issuance on a noncompetitive basis, and an application will only be accepted at the Salt Lake District, 2370 South 2300 West, Salt Lake City, Utah 84119. This application will be from the Utah Army National Guard, I Corps Artillery Headquarters. The application must include the intended acreage as part of the proposal. All rehabilitation will be in accordance with the terms and conditions of the permit and responsibility of the Utah Army National Guard.

The application must include a reference to this notice and a complete description of the proposed action. The action description must be in sufficient detail to allow evaluation of the proposed land use, impacts on the environment, public benefits and justification for the proposed action on public lands. The application should include: Details of the proposed use and activities, a map of sufficient scale to be legible, a legal description of the proposed project location (acreage), and any other information that may aid in evaluating the application.

For more details of application content, refer to 43 CFR Part 2920, copies of which are available at the BLM Salt Lake District Office. Also available is information on terms and conditions that will apply to the permit, location maps, evaluation criteria, etc. The Environmental Assessment concerning the proposed action are also available for review.

During a period of 45 days from the date of publication, interested parties may submit comments to the District Manager, Bureau of Land Management, Salt Lake District Office, 2370 South 2300 West, Salt Lake City, Utah 84119. Any adverse comments will be evaluated by the District Manager who

BEST COPY AVAILABLE

may vacate or modify this Notice and issue a final determination. In the absence of any action by the District Manager, this Realty Action will become the final determination of the Bureau.

Deane H. Zeller,

District Manager.

[FR Doc. 88-8276 Filed 4-14-88; 8:45 am]

BILLING CODE 4310-DQ-M

[OR-010-08-4212-14; GP8-117]

Realty Action in Lake County, OR

AGENCY: U.S. Department of the Interior, Bureau of Land Management.

ACTION: Direct Sale of Public Land in Lake County, Oregon.

The following lands are suitable for a direct sale under Section 203 (and 209) of the Federal Land Policy and Management Act of 1976, 43 U.S.C. 1713 (and 1719), at no less than the appraised fair market value.

Serial No.	Legal description	Acreage	Value	Minimum (percent) bid deposit	Bidding procedure
OR 43342	T. 26 S., R.14 E., W.M., Oregon; Sec. 4: Lot 14.	20	$1,100	30	Direct
OR 43343	T. 28 S., R.16 E., W.M., Oregon; Sec. 18: S½S½NE¼SW¼. S½N½NE¼SW¼	15	900	30	Direct

The above described land(s) are hereby segregated from appropriation under the public land laws, but not from sale under the above cited statute, for 270 days or until title transfer is completed or the segregation is terminated by publication in the **Federal Register**, whichever occurs first.

The sale will be held 60 days after publication of this notice at the Bureau of Land Management, Lakeview District Office, P.O. Box 151, 1000 South 9th Street, Lakeview, Oregon 97630. Disposal of these land tracts will serve important public objectives and are not suitable for management by another Federal department or agency. No significant resource values will be affected by this disposal. The sale is in conformance with BLM's planning for the land involved and the public interest will be best served by offering this land for sale.

Direct Sale Procedures

Direct sale procedures are being used since competitive sale is not appropriate and the public interest would be best served by direct sale. Benefits to direct sale would be: (1) to provide public land for community expansion, and (2) to provide an adjoining landowner the opportunity to acquire a parcel of public land which is currently used as an integral part of his/her existing ranch operation.

Sale parcels OR 43342 and OR 43343 are being offered to the Fort Rock Historical Society and ZX Land and Cattle Company respectively, using direct sale procedures authorized under 43 CFR 2711.3-3. The land will be sold at fair market value to the designated purchaser without competitive bidding. The designated purchaser will be required to render the minimum percent bid deposit indicated, by the sale date, and the balance of the purchase price within 180 days from the date of sale. If the required deposit is not submitted and the balance of the full purchase price not rendered within 180 days of the sale date, the preference right is cancelled, and the deposit will be forfeited.

Terms and Conditions of the Sale

The terms, conditions and reservations applicable to the sale are a follows:

1. As to the parcels identified in this notice, all minerals will be reserved to the United States in accordance with Section 209 of the Federal Land Policy and Management Act of October 21, 1976; and

2. Rights-of-way for ditches and canals will be reserved to the United States under 43 U.S.C. 945; and

3. Patents will be issued subject to all valid existing rights and reservations of record; and

4. The BLM may accept or reject any and all offers, or withdraw any land or interest in land from sale if, in the opinion of the authorized officer, consummation of the sale would not be fully consistent with the Federal Land Policy and Management Act or other applicable laws.

Unsold Parcels

If any of the parcels identified in this notice are not sold on the date of sale, the parcels will then be offered to the public, using competitive sale procedures 43 CFR 2711.3-1, until sold or withdrawn from the market. Sealed bids will be solicited at the BLM, Lakeview District Office, during regular business hours, 7:45 a.m. to 4:30 p.m. Bidders must be U.S. citizens, 18 years of age or more; a state or state instrumentality authorized to hold property; or a corporation authorized to own real estate in the state in which the land is located. All bids received will be opened the first Wednesday of each subsequent month. To be considered, bids must be received by 10:00 a.m. on the day of the bid opening.

Comments

For a period of 45 days from the date of publication of this notice in the **Federal Register**, interested parties may submit comments to the District Manager, Bureau of Land Management, Lakeview, Oregon. Objections will be reviewed by the State Director who may sustain, vacate, or modify this realty action. In the absence of any objections, this realty action will become final determination of the Department of the Interior.

Date: April 8, 1988.

Judy E. Nelson,

Lakeview District Manager.

[FR Doc. 88-8296 Filed 4-14-88; 8:45 am]

BILLING CODE 4310-33-M

National Park Service

Capulin Mountain National Monument Name and Boundary Change—Capulin Volcano National Monument

AGENCY: National Park Service, Interior.

ACTION: Notice.

Notice is hereby given that, effective 30 days from the publication of this notice, the name of Capulin Mountain National Monument will be changed to Capulin Volcano National Monument. Further, the boundaries are adjusted to include 17.464 acres of Bureau of Land Management lands, legal description of such lands as follows:

New Mexico Principal Meridian, T. 29 N., R. 28 E., Section 5, NE¼ of lot 3, N½ SE¼ of lot 3, and NE¼SW¼ of lot 3.

This name change and boundary adjustment was authorized by Public Law 100–225, section 506(g)(1), dated December 31, 1987.

Donald A. Dayton,

Acting Reginal Director, Southwest Region, National Park Service.

Date: April 6, 1988.

[FR Doc. 88–8307 Filed 4–14–88; 8:45 am]

BILLING CODE 4310-70-M

Golden Gate National Recreation Area; Minor Boundary Change and Addition of Certain Lands

By virtue of the authority contained in section 5 of the Act of June 10, 1977 (91 Stat. 210) as amended and section 2(b) of the Act of October 27, 1972 (86 Stat. 1299), notice is hereby given that the boundaries of Golden Gate National Recreation Area are modified to include the following described lands:

All that certain real property situated in the City of Pacifica, County of San Mateo, State of California, described as follows:

Portion of "Part 1" shown on portion of the Rancho San Pedro, the Property of David Mahoney, Richard and Robert Tobin, recorded November 19, 1875 in book 1 of maps at page 24, and also being portion of the lands shown on survey of 398.284 acre tract filed August 17, 1943 in book 1 of licenses land surveyors maps at page 78, records of San Mateo County, more particularly described a follows:

Beginning at the northeasterly corner of said Part 1 and running thence along the easterly line of said Part 1 (according to the calls shown on the above named licensed survey), south 1° 56′ West 836.48 feet to the true point of beginning; Thence from said true point of beginning along said easterly line of said Part 1 above referred to South 1° 56′ West 300 feet to the northerly line of property described in deed to James C. Laskey, dated Arpil 10, 1947 and recorded May 19, 1947 in book 1347 of official records of San Mateo County at page 346; Thence along said northerly line North 88° 07′ 30″ West 405.95 feet to the easterly line of the State Highway as described in deed to State of California, recorded March 6, 1941 in book 942 official records of San Mateo County at page 334; Thence along said easterly line of the State highway North 1° 52′ 30″ East 300 feet to the southerly line of the lands described in deed from Penelope C. Halstead to Perry Liebman and Ysabel Liebman, his wife, in joint tenancy, recorded August 27, 1954 in book 2640 of official records of San Mateo County at page 490 (81762-L); Thence along the last named line South 88° 07′ 30″ East 405.95 feet, more or less, to the point of beginning.

Excepting therefrom the following described parcel of land:

Beginning at the northwesterly corner of that parcel of land described in the deed to C. Theodore Plummer, recorded March 16, 1955 in book 2760 of official records of San Mateo County at page 398 (34302-M), said corner being also on the easterly line of that parcel of land described in the deed to State of California, recorded March 6, 1941 in book 942 of official records of San Mateo County at page 334; Thence along the northerly line of first said parcel (2760 OR 398), South 87° 11′ 13″ East, 143.01 feet to a line parallel with and distant 25.00 feet southeasterly, at right angles, from the "FR2" line of the Department of Public Works' survey for the state freeway in San Mateo County, Road IV-SM-56-PFA; Thence along said parallel line South 27° 40′ 02″ West 138.04 feet and along a tangent curve to the left with a radius of 775.00 feet, through an angle of 8° 50′ 24″ an arc length of 119.57 feet; Thence South 72° 00′ 1″ East, 22.63 feet; Thence along a tangent curve to the right with a radius of 61.00 feet, through an angle of 72° 55′ 18″, an arc length of 76.64 feet to the southerly line of first said parcel (2760 or 398); Thence along last said line North 87° 11′ 13″ West, 110.11 feet to the above-said easterly line of the above-said parcel (942 or 334); Thence along last said line North 2° 48′ 47″ East, 299.98 feet to the point of beginning.

Donald P. Hodel,

Secretary of the Interior.

[FR Doc. 88–8308 Filed 4–14–88; 8:45 am]

BILLING CODE 4310-70-M

Decker Canyon Development Concept Plan; Santa Monica Mountains National Recreation Area Los Angeles and Ventura Counties, CA

Decision

The selected alternative, Alternative IV, for the future development and use of the Decker Canyon site, Santa Monica Mountains National Recreation Area, will provide day use and overnight facilities that will be accessible to and usable by a wide range of visitors with many levels of physical and mental abilities. The plan to be implemented will provide a barrier-free, handicap-accessible center and overnight lodging facilities consisting of lodges with a total of 24 rooms. The facilities will be targeted to serve family groups or other groups with at least one disabled or elderly member. Also included in the plan are an interpretive activity center, small amphitheater, interpretive and general use trails, picnic areas, and administrative, maintenance and parking space. Decker Canyon Road will be relocated to eliminate a hazardous intersection and to promote more efficient site utilization.

Alternatives Considered

The following alternatives were considered during the project development and environmental analysis. See pages 15 to 55 in the draft EIS and page 2, under *ERRATA*, in the final EIS for more information:

Alternative I. No action. Existing conditions are maintained

Alternative II. Partial exchange, with some retained controls, in order to protect other high priority areas

Alternative III. Staged development of day use facilities only and relocation of Decker Canyon Road

Alternative IV. The preferred alternative as described under *Decision* above

Alternative sites to the Decker Canyon property were also considered. While several locations with suitable terrain and natural features were identified, most of these properties either had been proposed for other development or could not be acquired within a reasonable time frame for implementation of the plan.

Basis for Decision

It is the policy of the National Park Service that, to the extent feasible, facilities and activities are to be made accessible to all populations. A National Park Service special study, *Potential Visitor Use by Urban Minority and Handicapped Populations* (NPS 1981), indicated that much needs to be done to attract and serve a wide spectrum of national recreation area visitors. The Decker Canyon site, because of its physical nature and location, is particularly well suited to fill this need in the Santa Monica Mountains National Recreation Area. Concerns raised during the public review of the draft EIS, regarding traffic and circulation, solid waste disposal, threatened and endangered species and fire prevention, were additionally analyzed in the final EIS and appropriate changes were incorporated in the plan to alleviate these concerns. As compared to the other alternatives evaluated, the selected alternatives offers the best solution to providing recreational facilities for special populations while allowing for other recreation needs and

maintaining the natural and cultural values the selected site.

Measures to Minimize Harm

All practicable means to avoid or minimize environmental harm from the selected alternative have been adopted and include the following measures incorporated into the plan to reduce the impacts of construction and subsequent use of the New facilities at Decker Canyon.

1. Potential traffic problems will be controlled by elimination of the hazardous Decker Road-Mulholland Drive intersection and use of the least congested and safest routes to reach the Decker Canyon facility will be encouraged and advertised. Traffic demands and parking requirements subsequently will be monitored.

2. Visual intrusions of and fire hazard to structures will be reduced through the use of earth shelter design concepts.

3. Impacts to soils and vegetation will be reduced through the provisions of boardwalks and barriers in the natural areas, reuse of excavated topsoil for rehabilitation, contouring, use of hollow pavers that will permit natural grasses to remain, maintenance of constructed trails to prevent erosion, rotation of use areas, and revegetation of disturbed areas with native species.

4. Construction activities will be closely monitored for potential impact on unexpected presence of cultural resource sites or special status species.

5. Following construction and initiation of use, surface waters will be monitored for possibility of contamination from human and equestrain use.

Monitoring or Enforcement Program

An impact/mitigation matrix has been prepared to guide the construction specifications for the project and to assist in monitoring the implementation of the plan in order to ensure that the prescribed mitigation is carried out. The matrix identifies each expected impact of the project with its prescribed mitigation measure(s) and parties responsible for implementation.

Conclusion

The above factors and considerations justify the selection of Alternative IV, identified as the preferred alternative in the draft EIS and as modified or corrected in the final EIS, for the Decker Canyon Development Concept Plan, Santa Monica Mountains National Recreation Area, Los Angeles and Ventura Counties, California.

Approved:

Date: April 4, 1988.

Lewis Albert,

Deputy Regional Director, Western Region, National Park Service.

[FR Doc. 88-8309 Filed 4-14-88; 8:45 am]

BILLING CODE 4310-70-M

Upper Delaware Citizens Advisory Council; Open Meeting

AGENCY: National Park Service; Upper Delaware Citizens Advisory Council, Interior.

ACTION: Notice of meeting.

SUMMARY: This notice sets forth the date of the forthcoming meeting of the Upper Delaware Citizens Advisory Council. Notice of this meeting is required under the Federal Advisory Committee Act.

DATE: April 29, 1988, 7:00 p.m.[1] Inclement weather reschedule date: May 13, 1988.

ADDRESS: Town of Tusten Hall, Narrowsburg, New York.

FOR FURTHER INFORMATION CONTACT: John T. Hutzky, Superintendent, Upper Delaware Scenic and Recreational River, P.O. Box C, Narrowsburg, NY 12764-0159; 717-729-8251.

SUPPLEMENTARY INFORMATION: The Advisory Council was established under section 704(f) of the National Parks and Recreation Act of 1978, Pub. L. 95-625, 16 U.S.C. 1724 note, to encourage maximum public involvement in the development and implementation of the plans and programs authorized by the Act. The Council is to meet and report to the Delaware River Basin Commission, the Secretary of the Interior, and the Governors of New York and Pennsylvania in the preparation and implementation of the management plan, and on programs which relate to land and water use in the Upper Delaware region. The agenda for the meeting will surround distribution and collection of information and concerns surrounding ownership of the strand.

The meeting will be open to the public. Any member of the public may file with the Council a written statement concerning agenda items. The statement should be addressed to the Upper Delaware Citizens Advisory Council, P.O. Box 84, Narrowsburg, NY 12764. Minutes of the meeting will be available for inspection four weeks after the meeting, at the permanent headquarters of the Upper Delaware Scenic and Recreational River; River Road, 1¾ miles north of Narrowsburg, New York; Damascus Township, Pennsylvania.

Alec Gould,

Deputy Regional Director, Mid-Atlantic Region.

[FR Doc. 88-8310 Filed 4-14-88; 8:45 am]

BILLING CODE 4310-70-M

[1] Announcements of cancellation due to inclement weather will be made by radio stations WDNH, WDLC, WSUL, and WVOS.

INTERSTATE COMMERCE COMMISSION

[Docket No. AB-55 (Sub-No. 239X)]

CSX Transportation, Inc.; Exemption; Abandonment in Chesterfield County, SC

Applicant has filed a notice of exemption under 49 CFR Part 1152, Subpart F—*Exempt Abandonments* to abandon its 2.6-mile line of railroad between milepost AJ-332.84 and milepost AJ-335.0, near Cheraw, in Chesterfield County, SC.

Applicant has certified that (1) no local traffic has moved over the line for at least 2 years and that overhead traffic has been rerouted, and (2) that no formal complaint filed by a user of rail service on the line (or by a State or local governmental entity acting on behalf of such user) regarding cessation of service over the line either is pending with the Commission or any U.S. District Court, or has been decided in favor of the complainant within the 2-year period. The appropriate State agency has been notified in writing at least 10 days prior to the filing of this notice.

As a condition to use of this exemption, any employee affected by the abandonment shall be protected pursuant to *Oregon Short Line R. Co.-Abandonment-Goshen*, 360 I.C.C. 91 (1979). To address whether this condition adequately protects affected employees, a petition for partial revocation under 49 U.S.C. 10505(d) must be filed.

Provided no formal expression of intent to file an offer of financial assistance has been received, this exemption will be effective on May 15, 1988 (unless stayed pending reconsideration). Petitions to stay and formal expressions of intent to file an offer [1] of financial assistance under 49 CFR 1152.27(c)(2) must be filed by April 25, 1988, and petitions for reconsideration, including environmental, energy, and public use concerns, must be filed by May 5, 1988

[1] *See Exemption of Rail Line Abandonments or Discontinuance—Offers of Financial Assistance,* _____ I.C.C.2d _____, served December 21, 1987, and final rules published in the Federal Register on December 22, 1987 (52 FR 48440-48446).

with: Office of the Secretary, Case Control Branch, Interstate Commerce Commission, Washington, DC 20423.

A copy of any petition filed with the Commission should be sent to applicant's representative: Charles M. Rosenberger, Senior Counsel, CSX Transportation, Inc., 500 Water Street, Jacksonville, FL 32202.

If the notice of exemption contains false or misleading information, use of the exemption is void *ab initio*.

Applicant has filed an environmental report which addresses environmental or energy impacts, if any, from this abandonment.

The Section of Energy and Environment (SEE) will prepare an environmental assessment (EA). SEE will serve the EA on all parties by April 20, 1988. Other interested persons may obtain a copy of the EA from SEE by writing to it (Room 3115, Interstate Commerce Commission, Washington, DC 20423) or by calling Carl Bausch, Chief, SEE at (202) 275-7316.

A notice to the parties will be issued if use of the exemption is conditioned upon environmental or public use conditions.

Decided: April 8, 1988.

By the Commission, Joseph H. Dettmar, Acting Director, Office of Proceedings.

Noreta R. McGee,

Secretary.

[FR Doc. 88-8297 Filed 4-14-88; 8:45 am]

BILLING CODE 7035-01-M

DEPARTMENT OF JUSTICE

Lodging of Consent Decree; Allied Corp.

In accordance with Departmental policy, 28 CFR 50.7, notice is hereby given that on March 17, 1988, a proposed consent decree in *United States of America v. Allied Corporation*, Civil Action No. 88-237A was lodged with the United States District Court for the Middle District of Louisiana. The complaint filed by the United States sought recovery of response costs and injunctive relief under the Comprehensive Environmental Response, Compensation, and Liability Act and the Resource Conservation and Recovery Act against the Allied Corporation and other companies that generated hazardous wastes found at the Bayou Sorrel Landfill near Bayou Sorrel, Louisiana.

The consent decree provides that the settling defendants will complete remedial work at the site, and will reimburse the United States and the State of Louisiana for most of their past response costs and future costs of overseeing the remedial action.

The Department of Justice will receive comments relating to the proposed consent decree for a period of thirty (30) days from the date of this publication. Comments should be addressed to the Assistant Attorney General, Land and Natural Resources Division, Department of Justice, Washington, DC 20530, and should refer to *United States v. Allied Corporation*, D.J. Ref. 90-11-2-179.

The proposed consent decree may be examined at the office of the United States Attorney, 352 Florida Street, Baton Rouge, Louisiana 70801 and at the Region VI office of the Environmental Protection Agency, 1445 Ross Avenue, Dallas, Texas 75202-2733. Copies of the consent decree may be examined at the Environmental Enforcement Section, Land and Natural Resources Division, Department of Justice, Room 1517, Ninth Street and Pennsylvania Avenue NW., Washington, DC 20530. Copies of the proposed consent decree may be obtained in person or by mail from the Environmental Enforcement Section, Land Natural Resources Division of the Department of Justice.

In requesting a copy, please enclose a check in the amount of $5.20 (10 cents per page reproduction cost) payable to the Treasurer of the United States.

Roger J. Marzulla,

Acting Assistant Attorney General.

[FR Doc. 88-8299 Filed 4-14-88; 8:45 am]

BILLING CODE 4410-01-M

Lodging of Consent Decree; Big Apple Wrecking Corp. et al.

In accordance with Departmental policy, 28 CFR 50.7, notice is hereby given that a proposed Consent Decree as to Defendants General DataComm Industries, Inc., GDC Naugatuck, Inc., and Borough of Naugatuck and a proposed Consent Decree as to Defendant Big Apple Wrecking Corp. in *United States v. Big Apple Wrecking Corp., et al.* have been lodged with the United States District Court for the District of Connecticut. The consent decrees address violations of the National Emission Standard for Hazardous Air Pollutants ("NESHAP") for asbestos alleged in regard to the demolition of the former Uniroyal shoe factory in Naugatuck, Connecticut.

The proposed Consent Decree as to Defendants General DataComm Industries, Inc., GDC Naugatuck, Inc., and Borough of Naugatuck requires General DataComm Industries, Inc. to pay a civil penalty of $130,000 in settlement of the United States' claims for civil penalties against those defendants. The consent decree also enjoins those defendants from violations of the asbestos NESHAP for demolition or renovation operations.

The proposed Consent Decree as to Defendant Big Apple Wrecking Corp. requires Big Apple Wrecking Corp. to pay a civil penalty of $130,000 in settlement of the United States' claims for civil penalties against Big Apple Wrecking Corp. The consent decree also enjoins Big Apple Wrecking Corp. from violations of the asbestos NESHAP for demolition or renovation operations, requires Big Apple Wrecking Corp. to provide copies of asbestos notification documents required under State and local law to the U.S. Environmental Protection Agency, and requires Big Apple Wrecking Corp. to comply with certain State and local asbestos removal licensing and worker certification requirements.

The Department of Justice will receive for a period of thirty (30) days from the date of this publication comments relating to the proposed Consent Decree as to Defendants General DataComm Industries, Inc., GDC Naugatuck, Inc., and Borough of Naugatuck and/or comments relating to the proposed Consent Decree as to Defendant Big Apple Wrecking Corp. Comments should be addressed to the Assistant Attorney General, Land and Natural Resources Division, Department of Justice, Washington, DC 20530, and should refer to *United States v. Big Apple Wrecking Corp., et al.*, D.J. Ref. 90-5-2-1-802A.

The proposed Consent Decree as to Defendants General DataComm Industries, Inc., GDC Naugatuck, Inc., and Borough of Naugatuck and/or the proposed Consent Decree as to Defendant Big Apple Wrecking Corp. may be examined at the office of the United States Attorney, District of Connecticut, 141 Church Street—Mezzanine, New Haven, Connecticut 06510, and at the Office of Regional Counsel, United States Environmental Protection Agency, Region I, John F. Kennedy Federal Building, Rm. 2003, Boston, Massachusetts 02203. Copies of either or both of the consent decrees may also be examined at the Environmental Enforcement Section, Land and Natural Resources Division, Department of Justice, Room 1517, Ninth Street and Pennsylvania Ave., NW., Washington, DC 20530. A copy of the proposed Consent Decree as to Defendants General DataComm Industries, Inc., GDC Naugatuck, Inc., and Borough of Naugatuck and/or a copy of the proposed Consent Decree as to Defendant Big Apple Wrecking Corp.

may be obtained in person or by mail from the Environmental Enforcement Section, Land and Natural Resources Division, Department of Justice. In requesting a copy of either or both consent decrees, please refer to *United States v. Big Apple Wrecking Corp., et al.*, D.J. Reference # 90-5-2-1-902A. In requesting a copy of the Consent Decree as to Defendant Big Apple Wrecking Corp., enclose a check in the amount of $1.40 (ten cents per page reproduction cost) payable to the Treasurer of the United States.

Roger J. Marzulla,

Acting Assistant Attorney General, Land and Natural Resources Division.

[FR Doc. 88-8300 Filed 4-14-88; 8:45 am]

BILLING CODE 4410-01-M

DEPARTMENT OF LABOR

Employment Standards Administration, Wage and Hour Division

Minimum Wages for Federal and Federally Assisted Construction; General Wage Determination Decisions

General wage determination decisions of the Secretary of Labor are issued in accordance with applicable law and are based on the information obtained by the Department of Labor from its study of local wage conditions and data made available from other sources. They specify the basic hourly wage rates and fringe benefits which are determined to be prevailing for the described classes of laborers and mechanics employed on construction projects of a similar character and in the localities specified therein.

The determinations in these decisions of prevailing rates and fringe benefits have been made in accordance with 29 CFR Part 1, by authority of the Secretary of Labor pursuant to the provisions of the Davis-Bacon Act of March 3, 1931, as amended (46 Stat. 1494, as amended, 40 U.S.C 276a) and of other Federal statutes referred to in 29 CFR Part 1, Appendix, as well as such additional statutes as may from time to time be enacted containing provisions for the payment of wages determined to be prevailing by the Secretary of Labor in accordance with the Davis-Bacon Act. The prevailing rates and fringe benefits determined in these decisions shall, in accordance with the provisions of the foregoing statutes, constitute the minimum wages payable on Federal and federally assisted construction projects to laborers and mechanics of the specified classes engaged on contract work of the character and in the localities described therein.

Good cause is hereby found for not utilizing notice and public comment procedure thereon prior to the issuance of these determinations as prescribed in 5 U.S.C. 553 and not providing for delay in the effective date as prescribed in that section, because the necessity to issue current construction industry wage determinations frequently and in large volume causes procedures to be impractical and contrary to the public interest.

General wage determination decisions, and modifications and supersedeas decisions thereto, contain no expiration dates and are effective from their date of notice in the **Federal Register**, or on the date written notice is received by the agency, whichever is earlier. These decisions are to be used in accordance with the provisions of 29 CFR Parts 1 and 5. Accordingly, the applicable decision, together with any modifications issued, must be made a part of every contract for performance of the described work within the geographic area indicated as required by an applicable Federal prevailing wage law and 29 CFR Part 5. The wage rates and fringe benefits, notice of which is published herein, and which are contained in the Government Printing Office (GPO) document entitled "General Wage Determinations Issued Under The Davis-Bacon And Related Acts," shall be the minimum paid by contractors and subcontractors to laborers and mechanics.

Any person, organization, or governmental agency having an interest in the rates determined as prevailing is encouraged to submit wage rate and fringe benefit information for consideration by the Department. Further information and self-explanatory forms for the purpose of submitting this data may be obtained by writing to the U.S. Department of Labor, Employment Standard Administration, Wage and Hour Division, Division of Wage Determinations, 200 Constitution Avenue NW, Room S-3504, Washington, DC 20210.

Modifications to General Wage Determination Decisons

The numbers of the decisions listed in the Government Printing Office document entitled "General Wage Determinations Issued Under the Davis-Bacon and Related Acts" being modified are listed by Volume, State, and page number(s). Dates of publication in the **Federal Register** are in parentheses following the decisions being modified.

Volume I:

New Jersey:
NJ88-2(Jan. 8, 1988) ..... p.617.
New York
NY88-7(Jan. 8, 1988) ..... pp.738-740, pp. 742,754.

Volume II:

Illinois:
IL88-7(Jan. 8, 1988) ..... p.138.
IL88-8(Jan. 8, 1988) ..... p.142.
IL88-9(Jan. 8, 1988) ..... p.148.
IL88-11(Jan. 8, 1988) ..... p.158.
Ohio:
OH88-29(Jan. 8, 1988) ..... pp.828,843-844.

Volume III:

California:
CA88-1(Jan. 8, 1988) ..... pp.34,36.
CA88-4(Jan. 8, 1988) ..... pp.72-102.
Washington:
WA88-2(Jan. 8, 1988) ..... p.387.

General Wage Determination Publication

General wage determinations issued under the Davis-Bacon and related Acts, including those noted above, may be found in the Goevernment Printing Office (GPO) document entitled "General Wage Determinations Issued Under The Davis-Bacon And Related Acts". This publication is available at each of the 50 Regional Government Depository Libraries and many of the 1,400 Government Depository Libraries across the country. Subscriptions may be purchased from: Superintendent of Documents, U.S. Government Printing Office, Washington, DC 20402, (202) 783-3238.

When ordering subscription(s), be sure to specify the State(s) of interest, since subscriptions may be ordered for any or all of the three separate volumes, arranged by State. Subscriptions include an annual edition (issued on or about January 1) which includes all current general wage determinations for the States covered by each volume. Throughout the remainder of the year, regular weekly updates will be distributed to subscribers.

Signed at Washington, DC this 4th day of April, 1988.

Alan L. Moss,

Director, Division of Wage Determinations.

[FR Doc. 88-8044 Filed 4-14-88; 8:45 am]

BILLING CODE 4510-27-M

NATIONAL FOUNDATION ON THE ARTS AND THE HUMANITIES

Humanities Panel; Meetings

AGENCY: National Endowment for the Humanities.

ACTION: Notice of meetings.

SUMMARY: Pursuant to the provisions of the Advisory Committee Act (Pub. L. 92-463, as amended), notice is hereby given that the following meetings of the Humanities Panel will be held at the Old Post Office, 1100 Pennsylvania Avenue NW., Washington, DC 20506:

FOR FURTHER INFORMATION CONTACT: Stephen J. McCleary, Advisory Committee Management Officer, National Endowment for the Humanities, Washington, DC 20506; telephone 202/786-0322.

SUPPLEMENTARY INFORMATION: The proposed meetings are for the purpose of panel review, discussion, evaluation and recommendation on applications for financial assistance under the National Foundation on the Arts and the Humanities Act of 1965, as amended, including discussion of information given in confidence to the agency by grant applicants. Because the proposed meetings will consider information that is likely to disclose: (1) Trade secrets and commercial or financial information obtained from a person and privileged or confidential; (2) information of a personal nature the disclosure of which would constitute a clearly unwarranted invasion of personal privacy; or (3) information the disclosure of which would significantly frustrate implementation of proposed agency action, pursuant to authority granted by the Chairman's Delegation of Authority to Close Advisory Committee Meetings, dated January 15, 1978, I have determined that these meetings will be closed to the public pursuant to subsections (c) (4), (6) and (9)(B) of section 552b of Title 5, United States Code.

1. *Date:* May 2, 1988
   Time: 8:30 a.m. to 5:30 p.m.
   Room: 316-2
   Program: This meeting will review applications for Summer Stipend for College Teachers in History, submitted to the Division of Fellowships and Seminars, for projects beginning after October 1, 1988.

2. *Date:* May 2-3, 1988
   Time: 8:30 a.m. to 5:30 p.m.
   Room: 415
   Program: This meeting will review applications submitted for Humanities Projects in Media, submitted to the Division of General Programs, for projects beginning after October 1, 1988.

3. *Date:* May 2-3, 1988
   Time: 9:00 a.m. to 5:30 p.m.
   Room: 430
   Program: This meeting will review applications submitted to the Public Humanities Projects program, submitted to the Division of General Programs, for projects beginning after March 1988.

4. *Date:* May 3, 1988
   Time: 8:30 a.m. to 5:30 p.m.
   Room: 316-2
   Program: This meeting will review applications for Summer Seminars for College Teachers in Foreign and Comparative Literature, submitted to the Division of Fellowships and Seminars, for projects beginning after October 1, 1988.

5. *Date:* May 5, 1988
   Time: 8:30 a.m. to 5:30 p.m.
   Room: 316-2
   Program: This meeting will review applications for Summer Seminars for College Teachers in Philosophy and Religion, submitted to the Division of Fellowships and Seminars, for projects beginning after October 1, 1988.

6. *Date:* May 5-6, 1988
   Time: 9:00 a.m. to 5:30 p.m.
   Room: 430
   Program: This meeting will review applications submitted to the Public Humanities Projects Program, submitted to the Division of General Programs, for projects beginning after March 1988.

7. *Date:* May 6, 1988
   Time: 8:30 a.m. to 5:30 p.m.
   Room: 316-2
   Program: This meeting will review applications for Summer Seminars for College Teachers in Politics and Society, submitted to the Division of Fellowships and Seminars, for projects beginning after October 1, 1988.

8. *Date:* May 9, 1988
   Time: 8:30 a.m. to 5:30 p.m.
   Room: 315
   Program: This meeting will review Faculty Graduate Study applications in Historically Black Colleges and Universities, submitted to the Division of Fellowships and Seminars, for projects beginning after October 1, 1988.

9. *Date:* May 9-10, 1988
   Time: 9:00 a.m. to 5:30 p.m.
   Room: 430
   Program: This meeting will review applications submitted to the Humanities Projects in Libraries program, submitted to the Division of General Programs, for projects beginning after March 1988.

10. *Date:* May 9-10, 1988
    Time: 8:30 a.m. to 5:30 p.m.
    Room: 415
    Program: This meeting will review applications submitted for Humanities Projects in Media, submitted to the Division of General Programs, for projects beginning after October 1, 1988.

11. *Date:* May 16, 1988.
    Time: 8:30 a.m. to 5:30 p.m.
    Room: 315
    Program: This meeting will review applications in Higher Education in the Humanities, submitted to the Division of Education Programs, for projects beginning after August 1, 1988.

12. *Date:* May 17-18, 1988.
    Time: 8:30 a.m. to 5:30 p.m.
    Room: 415
    Program: This meeting will review applications submitted for Humanities Projects in Media, submitted to the Division of General Programs, for projects beginning after October 1, 1988.

13. *Date:* May 19, 1988.
    Time: 8:30 a.m. to 5:30 p.m.
    Room: 415
    Program: This meeting will review applications in Higher Education Programs, submitted to the Division of Education Programs, for projects beginning after August 1988.

14. *Date:* May 23, 1988.
    Time: 8:30 a.m. to 5:30 p.m.
    Room: 316-2
    Program: This meeting will review applications for Summer Seminars for School Teachers in British Literature, submitted to the Division of Fellowships and Seminars, for projects beginning after October 1, 1988.

15. *Date:* May 23, 1988.
    Time: 8:30 a.m. to 5:30 p.m.
    Room: 415
    Program: This meeting will review applications in Higher Education Programs, submitted to the Division of Education, for projects beginning after August 1988.

16. *Date:* May 24, 1988.
    Time: 8:30 a.m. to 5:30 p.m.
    Room: 316-2
    Program: This meeting will review applications for Summer Seminars, for School Teachers in History, submitted to the Division of Fellowships and Seminars, for projects beginning after October 1, 1988.

17. *Date:* May 25, 1988.
Time: 8:30 a.m. to 5:30 p.m.
Room: 315
Program: This meeting will review applications for Summer Seminars for School Teachers in Philosophy and Religion, submitted to the Division of Fellowships and Seminars, for projects beginning after October 1, 1988.

18. *Date:* May 25, 1988.
Time: 8:30 a.m. to 5:30 p.m.
Room: 415
Program: This meeting will review applications in Higher Education, submitted to the Division of Education Program, for projects beginning after August 1988.

19. *Date:* May 25, 1988.
Time: 8:30 a.m. to 5:30 p.m.
Room: 316–2
Program: This meeting will review applications for Summer Seminars for School Teachers in Foreign and Classical Literature, submitted to the Division of Fellowships and Seminars, for projects beginning after October 1, 1988.

20. *Date:* May 26, 1988.
Time: 8:30 a.m. to 5:30 p.m.
Room: 315
Program: This meeting will review applications for Summer Seminars for School Teachers in Social and Political Science, submitted to the Division of Fellowships and Seminars, for projects beginning after October 1, 1988.

21. *Date:* May 26, 1988.
Time: 8:30 a.m. to 5:30 p.m.
Room: 316–2
Program: This meeting will review applications for Summer Seminars for School Teachers in American Literature, submitted to the Division of Fellowships and Seminars, for projects beginning after October 1, 1988.

Stephen J. McCleary,
Advisory Committee Management Officer.

[FR Doc. 88–8364 Filed 4–14–88; 8:45 am]
BILLING CODE 7536–01–M

NUCLEAR REGULATORY COMMISSION

Abnormal Occurrence Report Section 208 Report Submitted to the Congress

Notice is hereby given that pursuant to the requirements of section 208 of the Energy Reorganization Act of 1974, as amended, the Nuclear Regulatory Commission (NRC) has published and issued another periodic report to Congress on abnormal occurrences (NUREG–0090, Vol. 10, No. 3).

Under the Energy Reorganization Act of 1974, which created the NRC, an abnormal occurrence is defined as "an unscheduled incident or event which the Commission (NRC) determines is significant from the standpoint of public health or safety." The NRC has made a determination based on criteria published in the **Federal Register** (42 FR 10950) on February 24, 1977, that events involving an actual loss or significant reduction in the degree of protection against radioactive properties of source, special nuclear, and byproduct materials are abnormal occurrences.

The report to Congress is for the third calendar quarter of 1987. The report identifies the occurrences or events that the Commission determined to be significant and reportable; the remedial actions that were undertaken are also described. During the report period, there were two abnormal occurrences at the nuclear power plants licensed to operate. The first involved a significant degradation of plant safety at Oyster Creek; and the second involved a steam generator tube rupture at North Anna Unit 1.

There were four abnormal occurrences at the other NRC licensees. The first involved a therapeutic medical misadministration; the second involved a failure to report diagnostic medical misadministrations; the third involved the suspension of a well logging company's license; and the fourth involved the suspension of an industrial radiography company's license. There were two abnormal occurrences reported by an Agreement State (New York). The first involved a hospital contamination incident and the second involved therapeutic medical misadministrations.

The report also contains information updating some previously reported abnormal occurrences.

A copy of the report is available for public inspection and/or copying at the NRC Public Document Room, 1717 H Street NW., Washington DC 20555, or at any of the nuclear power plant local Public Document Rooms throughout the country.

Copies of NUREG–0090, Vol. 10, No. 3 (or any of the previous reports in this series), may be purchased from the Superintendent of Documents, U.S. Government Printing Office, Post Office Box 37082, Washington, DC 20013–7082. A year's subscription to the NUREG–0090 series publications, which consists of four issues, is also available.

Copies of the report may also be purchased from the National Technical Information Service, 5285 Port Royal Road, Springfield, VA 22161.

Dated at Washington, DC this 5th day of April 1988.

For the Nuclear Regulatory Commission.

Samuel J. Chilk,
Secretary of the Commission.

[FR Doc. 88–8353 Filed 4–14–88; 8:45 am]
BILLING CODE 7590–01–M

[Docket No. 50–341]

Detroit Edison Co. and Wolverine Power Supply Cooperative, Inc.; Environmental Assessment and Finding of No Significant Impact

The U.S. Nuclear Regulatory Commission (the Commission) is considering issuance of an exemption from the schedular requirements of Appendix J to 10 CFR Part 50 to the Detroit Edison Company (DECo) and the Wolverine Power Supply Cooperative, Incorporated (the licensees) for the Fermi–2 Plant located at the licensees' site in Monroe County, Michigan. The exemption was requested by the licensees by letter from DECo dated February 22, 1988.

Environmental Assessment

Identification of Proposed Action

The exemption would provide, for three containment isolation valves on the Residual Heat Removal (RHR) System, a one-time relief from the requirement of section III.D.3 of Appendix J, 10 CFR Part 50, to perform Type C local leak rate tests (LLRTs) at each plant shutdown for refueling but in no case at intervals greater than two years. The licensees have proposed to conduct these tests prior to startup from the first refueling outage currently scheduled for late 1989.

The Need for the Proposed Action

The end of the initial 24-month testing intervals for the three containment isolation valves is April 1988. With the exception of these three valves, the licensees either have, or plan to perform the required Type C tests. Local leak rate tests are being conducted during the current March/April 1988 outage. The licensees have stated that due to plant constraints it is not possible to perform the testing of these three valves without extending both loops of the RHR shutdown cooling inoperable.

The licensees have further indicated that it is not desirable for them to schedule an additional outage, nor to extend other scheduled outages, for the sole purpose of performing these LLRTs, as this would result in a net increase in

overall outage time or would subject the plant equipment and systems to potential adverse effects of an additional shutdown and startup operation.

Testing of the valves covered by the requested exemption would require one or both of the following plant conditions:

(1) Reactor vessel head removal.

(2) Both RHR shutdown cooling loops rendered inoperable.

The licensees do not plan to remove the reactor vessel head until the first refueling outage. To render both loops of the RHR shutdown cooling inoperable, the licensees would either be required to remove the drywell and reactor heads and flood the vessel, or wait until decay heat is reduced such that the reactor could be cooled by alternate means. The next scheduled outage where removal of the vessel head would occur is the first refueling outage.

Environmental Impacts of the Proposed Action

The licensees have indicated that Type C LLRTs have been completed for the valves covered by the requested exemption three times (August 1984, May 1985 and April 1986). No refurbishment of the three valves has been required. These valves are normally closed during power operation and any deterioration in the overall integrity is expected to be gradual. The total of the Type C leakage rates for these valves is not a significant portion (0.94%) of the allowable leakage limit. Therefore, the licensees have concluded that the granting of the requested exemption would not present a significantly increased probability of containment leakage other than contemplated in Appendix J.

The Commission's staff has determined that granting the proposed exemption would not significantly increase the probability or amount of expected containment leakage and that containment integrity would thus be maintained. Consequently, the probability of accidents would not be increased, nor would the post-accident radiological releases be greater than previously determined. Neither would the proposed exemption otherwise affect radiological plant effluents. Therefore, the Commission concludes that there are no significant radiological environmental impacts associated with the proposed exemption.

With regard to potential nonradiological impacts, the proposed exemption involves a change to surveillance and testing requirements. It does not affect nonradiological plant effluents and has no other environmental impact. Therefore, the Commission concludes that there are no significant nonradiological environmental impacts associated with the proposed exemption.

Alternatives to the Proposed Action

Because the Commission has concluded that there is no significant environmental impact associated with the proposed exemption, any alternative would have either no or greater environmental impact. The principal alternative would be to deny the requested exemption. This would not reduce the environmental impacts attributed to the facility but would result in an outage of considerable duration with attendant costs and would result in an unnecessary loss of power to the grid.

Alternative Use of Resources

This action involves no use of resources not previously considered in connection with the "Final Environmental Statement Related to Operation of Fermi-2," dated August 1981.

Agencies and Persons Consulted

The Commission's staff reviewed the licensees' request and did not consult other agencies or persons.

Finding of No Significant Impact

The Commission has determined not to prepare an environmental impact statement for the proposed exemption.

Based upon the foregoing environmental assessment, the Commission concludes that the proposed action will not have a significant effect on the quality of the human environment.

For further details with aspect to this action, see the application for exemption dated February 22, 1988, which is available for public inspection at the Commission's Public Document Room, 1717 H Street NW., Washington, DC, and at the Monroe County Library System, 3700 South Custer Road, Monroe, Michigan 48161.

Dated at Rockville, Maryland, this 7th day of April 1988.

For the Nuclear Regulatory Commission.

Theodore R. Quay,

Acting Director, Project Directorate III-1, Division of Reactor Projects—III, IV, V and Special Projects.

[FR Doc. 88-8390 Filed 4-14-88; 8:45 am]

BILLING CODE 7590-01-M

[Docket No. 219]

GPU Nuclear Corp. and Jersey Central Power & Light Co., Oyster Creek Nuclear Generating Station; Environmental Assessment and Finding of No Significant Impact

The U.S. Nuclear Regulatory Commission (the Commission) is considering issuance of an exemption from the requirements of Appendix J to 10 CFR Part 50 to GPU Nuclear Corporation, et al. (the licensee) for the Oyster Creek Nuclear Generating Station, located at the licensee's site in Ocean County, New Jersey.

Environmental Assessment

Identification of Proposed Action

The licensee is requesting an exemption from Paragraph III.A.3 of 10 CFR Part 50 Appendix J, "Primary Reactor Containment Leakage Testing for Water-Cooled Power Reactors." In 1973, Appendix J was issued to establish requirements for primary containment leakage testing and incorporated by reference, ANSI N45:4–1972, "Leakage Rate Testing of Containment Structures for Nuclear Reactors." This standard requires that containment leakage calculations be performed by using either the point-to-point method or the total time method. The total time method was used the most by the nuclear industry until about 1976.

At this time, licensees who wish to use mass-point must submit an application for exemption from the Appendix J requirement that containment integrated leak rate tests will conform to ANSI N45.4. The exemption proposed by the licensee would be granted until pending changes to Appendix J become effective.

In the mass-point method, the mass of air in containment is calculated and plotted as a function of time and leakage is calculated from the slope of the linear least squares.

With the present developments in technology, the mass-point method has gained increasing recognition.

The superiority of the mass-point method becomes apparent when it is compared with the two other methods. In the total time method, a series of leakage rates are calculated on the basis of air mass differences between an initial data point and each individual data point thereafter. If for any reason (such as instrument error, lack of temperature equilibrium, ingassing or outgassing) the initial data point is not accurate, the results of the test will be affected. In the point-to-point method, the leak rates are based on the mass

difference between each pair of consecutive points which are then averaged to yield a single leakage rate estimate. Mathematically, this can be shown to be the difference between the air mass at the beginning of the test and the air mass at the end of the test expressed as a percentage of the containment air mass. It follows from the above that the point-to-point method ignores any mass readings during the test and thus the leakage rate is calculated on the basis of the difference in mass between two measurements taken at the beginning and at the end of the test, which are 24 hours apart.

The licensee's request and bases for exemption are contained in a letter dated February 19, 1988.

The Need for the Proposed Action

The exemption is needed to allow use of the mass-point analysis method at Oyster Creek Nuclear Generating Station.

Environmental Impacts of the Proposed Action

The erratic behavior of the total time method creates a higher probability of unnecessarily failing a containment integrated leakage rate test (note that the calculational procedure is independent of containment tightness) possibly resulting in increased test frequency, critical path outage time, and exposure to test personnel.

Radiological releases will not be greater than previously determined, nor does the proposed exemption otherwise affect radiological plant effluents, or have any other environmental impact. Therefore, the Commission concludes that there are no measurable radiological or non-radiological environment impacts associated with the proposed exemption.

Alternative to the Proposed Action

It has been concluded that there is no measurable impact associated with the proposed exemption; any alternatives to the exemption will have either no environmental impact or greater environmental impact.

Alternative Use of Resources

This action does not involve the use of any resources beyond the scope of resources used during normal plant operation.

Agencies and Persons Consulted

The Commission's staff reviewed the licensee's request that supports the proposed exemption. The staff did not consult other agencies or persons.

Finding of No Significant Impact

Based upon the foregoing environmental assessment, the Commission concluded that the proposed action will not have a significant effect on the quality of the human environment. Accordingly, the Commission has determined not to prepare an environmental impact statement for the proposed exemption.

For further details with respect to this action, see the request for exemption dated February 19, 1988. Copies of the request for exemption are available for public inspection at the Commission's Public Document Room, 1717 H Street NW., Washington, DC and at the Ocean County Library, Reference Department, 101 Washington Street, Toms River, New Jersey 08753.

Dated at Rockville, Maryland, this 6th day of April 1988.

For the Nuclear Regulatory Commission.

John F. Stolz,

Director, Project Directorate I-4, Division of Reactor Projects I/II, Office of Nuclear Reactor Regulation.

[FR Doc. 88-8333 Filed 4-14-88; 8:45 am]

BILLING CODE 7590-01-M

[Docket No. 50-317]

Baltimore Gas and Electric Co.; Consideration of Issuance of Amendment to Facility Operating License and Proposed No Significant Hazards Consideration Determination and Opportunity for Hearing

The U.S. Nuclear Regulatory Commission (the Commission) is considering issuance of an amendment to Facility Operating License No. DPR-53, issued to the Baltimore Gas and Electric Company (the licensee), for operation of the Calvert Cliffs Nuclear Power Plant, Unit No. 1 located in Calvert County, Maryland.

The amendment would make the following changes in accordance with the licensee's application for amendment dated February 12, 1988, as supplemented on March 21, 1988 and twice on March 25, 1988:

1. Modify Technical Specification (TS) Limiting Condition for Operation (LCO) 3.1.1.4 by adding a figure that provides the upper limits for moderator temperature coefficient (MTC) and increases this MTC limit for thermal power levels above 70% rated thermal power (RTP) from less positive than 0.2 E-4 delta k/k/°F to the linear equation where the MTC limit is less positive than +[(.9 + 4 (1-P))/3] E-4 delta k/k/°F where P is the fraction of RTP. Thus, at 70% RTP, MTC must be less positive than +0.7 E-4 delta k/k/°F and at 100% RTP MTC must be less positive than +0.3 E-4 delta k/k/°F.

2. Increase the minimum required shutdown margin of TS LCO 3.1.1.1 above the currently required +3.5 delta k/k in accordance with the linear progression where the shutdown margin limit shall be greater than or equal to +[3.5 + 1.5(P)] delta k/k where P is the fraction of RTP. Thus, at 0% RTP the shutdown margin limit is +3.5 delta k/k but at 100% RTP the limits is +5.0 delta k/k.

3. Change the TS Figure 3.1-2, "CEA Group Insertion Limits vs. Fraction of Allowable Thermal Power for Existing RCP Combination," Bank 5 Transient Insertion Limit from the linear progression with values of 25% insertion at 90% RTP and 35% insertion at 100% RTP to a constant insertion limit of 35% between 90% and 100% RTP.

4. Reduce unnecessary Axial Shape Index (ASI) trips below 70% RTP and provide additional operating flexibility by:

a. Modifying TS Figure 2.2-1, "Peripheal Axial Shape Index vs. Fraction of Rated Thermal Power," by increasing the acceptable operation region below 70% RTP to the area bounded by the linear equations for the ASI limits, where

(1) ASI limit = ±[.6 + ⅔ (.4-P)] (P is the fraction of RTP) between 40% and 100% RTP, and

(2) ASI limit = ±0.6 at powers below 40% RTP. The current ASI limits are ±0.04 at powers below 70% RTP;

b. Expanding the acceptable operation region of TS Figure 3.2-2, "Linear Heat Rate Axial Flux Offset Control Limits," and TS Figure 3.2-4, "DNB Axial Flux Offset Control Limits," by increasing the negative ASI limit below 50% RTP from the current value of −0.3 to

(1) The linear equation limit, between 15% and 50% RTP, of the negative ASI limit = −[0.3 + ⅔ (.5-P)], where P is the fraction of RTP;

(2) Below 15% RTP, the negative ASI limit = −0.45.

5. Reflect the lowering of the departure from nucleate boiling ratio (DNBR) limit to 1.16 due to the incorporation of an extended statistical combination of uncertainties methodology through modifying Figures 2.2-2, "Thermal Margin/Low Pressure Trip Setpoint Part 1 (ASI v. A_1)," and 2.2-3, "Thermal Margin/Low Pressure Trip Setpoint Part 2 (Fraction of Rated Thermal Power v. QR_1)," by

a. Changing the equation for the pressure variable trip from P(TRIP VAR) = 2061 (Q_{DNB}) + 15.85 (T_{IN})—8915 to P (TRIP VAR) = 2892 Q_{DNB} + 17.16 (T_{IN})—10882;

b. Changing Q_{DNB}, which equals $QR_1 \times A_1$, by increasing QR_1 from the values of

$QR_1 = .235 + (628/781)$ P between 0% and 78.1% RTP

$QR_1 = .863 + (109/191) \times (P-.781)$ between 78.1% and 97.2% RTP

$QR_1 =$ P above 97.2% RTP

to

$QR_1 = .3 + (11/12)$ P between 0% and 60% RTP

$QR_1 = .85 + (3/8) \times (P-.6)$ between 60% and 100% RTP

$QR_1 =$ P above 100% RTP

where P is the fraction of RTP.

Before issuance of the proposed license amendment, the Commission will have made findings required by the Atomic Energy Act of 1954, as amended (the Act) and the Commission's regulations.

The Commission has made a proposed determination that the amendment request involves no significant hazards considerations. Under the Commission's regulations in 10 CFR 50.92, this means that operation of the facility in accordance with the proposed amendment would not (1) involve a significant increase in the probability or consequences of an accident previously evaluated; of (2) create the possibility of a new or different kind of accident from any accident previously evaluated; or (3) involve a significant reduction in a margin of safety.

The licensee evaluated the proposed changes against the standards in 10 CFR 50.92 and has determined that the amendment would not:

(i) Involve a significant increase in the probability or consequences of an accident previously evaluated * * *

To support the Unit 1 Cycle 10 reload core design and the associated TS changes, eighteen design basis events were reviewed and one of these events was reanalyzed (the Steam Rupture event). All eighteen design basis events, including the Steam Line Rupture event, were bounded by the results of the previously accepted reference cycle (Unit 2 Cycle 8).

An emergency core cooling system (ECCS) performance analysis was performed for Unit 1 Cycle 10 to demonstrate compliance with 10 CFR 50.46, "Acceptance Criteria for Emergency Core Cooling Systems for Light-Water Nuclear Power Reactors." This analysis justified an allowable Peak Linear Heat Generation Rate of 15.5 kw/ft, the current limit for both Units 1 and 2.

The Small Break Loss of Coolant Accident (SBLOCA) analyses confirm that the results previously reported for Unit 1 Cycle 8 (SBLOCA reference cycle for Unit 1 Cycle 10) also bound the SBLOCA results for the Unit 1 Cycle 10 reload core design.

Thus, as provided in the previously described analyses, the probability or consequences of any accidents previously evaluated would not increase signficantly as a result of the proposed Unit 1 Cycle 10 reload TS changes.

(ii) Create the possibility of a new or different type of accident from any accident previously evaluated * * *

The design of Unit 1 Cycle 10 closely follows that of the reference cycle, Unit 2 Cycle 8. The four ANF demonstration lead assemblies, included in the Unit 1 Cycle 10 core, do not impact the core design in any adverse manner. All nuclear, mechanical, thermal-hydraulic, transient and LOCA safety analyses performed for Cycle 10 core design, envelope the four ANF assemblies. The analyzed performance of those assemblies is determined to be very similar to that of the balance of the core.

The impact that the proposed TS changes would have on the operation and safety of the plant was evaluated to determine if a new or different type of accident would be created. The reductions in safety margins to the Specific Acceptable Fuel Design Limits were evaluated to determine if it were possible for a new accident type to be created, different from that was already analyzed. It was determined that no changes in plant hardware or manner of operation result from these proposed changes. All results and conclusions of the LOCA and non-LOCA transient safety analyses were evaluated to determine whether the possibility of a new type accident was created, since some of those analyses results are different from results previously presented for NRC review. Thus, this proposed change in operation will not create the possibility of any new or different types of accidents from any previously evaluated.

(iii) Involve a significant reduction in a margin of safety * * * All LOCA and non-LOCA transient safety analyses were evaluated/reanalyzed, and the reduction in the margin or safety between each proposed TS change and the affected SAFDL was determined. Although this margin to safety is reduced in some instances (i.e., the changes proposed the Axial Power Distribution Trip Limiting Safety System, the Linear Heat Rate Axial Flux Offset Control Limits, the DNB Axial Flux Offst Control Limits, the Shutdown Margin, and the Power Dependent Insertion Limit proposed changes), these reductions were not significant reductions as sufficient margin remains between the proposed limits and the current safety limits.

Based upon the above, the NRC staff proposes to determine that the TS changes proposed for the Unit 1 Cycle 10 reload involve no significant hazards considerations.

The Commission is seeking public comments on this proposed determination. Any comments received within 30 days after the date of publication of this notice will be considered in making any final determination. The Commission will not normally make a final determination unless it receives a request for a hearing.

Comments should be addressed to the Secretary of the Commission, U.S. Nuclear Regulatory Commission, Washington, DC 20555, Attn: Docketing and Service Branch.

By May 16, 1988, the licensee may file a request for a hearing with respect to issuance of the amendment to the subject facility operating license and any person whose interest may be affected by this proceeding and who wishes to participate as a party in the proceeding must file a written petition for leave to intervene. Requests for a hearing and petitions for leave to intervene shall be filed in accordance with the Commission's "Rules of Practice for Domestic Licensing Proceedings" in 10 CFR Part 2. If a request for a hearing or petition for leave to intervene is filed by the above date, the Commission or an Atomic Safety and Licensing Board, designated by the Commission or by the Chairman of the Atomic Safety and Licensing Board Panel, will rule on the request and/or petition and the Secretary or the designated Atomic Safety and Licensing Board will issue a notice of hearing or an appropriate order.

As required by 10 CFR 2.714, a petition for leave to intervene shall set forth with particularity the interest of the petitioner in the proceeding, and how that interest may be affected by the results of the proceeding. The petition should specifically explain the reasons why intervention should be permitted with particular reference to the following factors: (1) The nature of the petitioner's right under the Act to be made a party to the proceeding; (2) the nature and extent of the petitioner's property, financial, or other interest in the proceeding; and (3) the possible effect of any order which may be entered in the proceeding on the petitioner's interest. The petition should also identify the specific aspect(s) of the subject matter of the proceeding as to which petitioner wishes to intervene.

Any person who has filed a petition for leave to intervene or who has been admitted as a party may amend the petition without requesting leave of the Board up to fifteen (15) days prior to the first prehearing conference scheduled in the proceeding, but such an amended petition must satisfy the specificity requirements described above.

Not later than fifteen (15) days prior to the first prehearing conference scheduled in the proceeding, a petitioner shall file a supplement to the petition to intervene, which must include a list of the contentions that are sought to be litigated in the matter, and the bases for each contention set forth with reasonable specificity. Contentions shall be limited to matters within the scope of the amendment under consideration. A petitioner who fails to file such a supplement which satisfies these requirements with respect to at least one contention will not be permitted to participate as a party.

Those permitted to intervene become parties to the proceeding, subject to any limitations in the order granting leave to intervene, and have the opportunity to participate fully in the conduct of the hearing, including the opportunity to present evidence and cross-examine witnesses.

If a hearing is requested, the Commission will make a final determination on the issue of no significant hazards consideration. The final determination will serve to decide when the hearing is held.

If the final determination is that the amendment request involves no significant hazards considerations, the Commission may issue the amendment and make it effective, notwithstanding the request for a hearing. Any hearing held would take place after issuance of the amendment.

If the final determination is that the amendment request involves significant hazards considerations, any hearing held would take place before the issuance of any amendment.

Normally, the Commission will not issue the amendment until the expiration of the 30-day notice period. However, should circumstances change during the notice period, such that failure to act in a timely way would result, for example, in derating or shutdown of the facility, the Commission may issue the license amendment before the expiration of the 30-day notice period, provided that its final determination is that the amendment involves no significant hazards considerations. The final determination will consider all public and State comments received. Should the Commission take this action, it will publish a notice of issuance and provide for opportunity for a hearing after issuance. The Commission expects that the need to take this action wil occur very infrequently.

A request for a hearing or a petition for leave to intervene must be filed with the Secretary of the Commission, U.S. Nuclear Regulatory Commission, Washington, DC 20555, Attention: Docketing and Service Branch, or may be delivered to the Commission's Public Document Room, 1717 H Street NW., Washington, DC, by the above date. Where petitions are filed during the last ten (10) days of the notice period, it is requested that the petitioner promptly so inform the Commission by a toll-free telephone call to Western Union at (800) 325-6000 (in Missouri (800) 342-6700). The Western Union operator should be given Datagram Identification Number 3737 and the following message addressed to Robert A. Capra: petitioner's name and telephone number; date petition was mailed; plant name; and publication date and page number of this **Federal Register** notice. A copy of the petition should also be sent to the Office of the General Counsel, U.S. Nuclear Regulatory Commission, Washington, DC 20555, and to D. A. Brune, Jr., General Counsel, Baltimore Gas & Electric Company, P. O. Box 1475, Baltimore, Maryland 21203, attorney for the licensee.

Nontimely filings of petitions for leave to intervene, amended petitions, supplemental petitions and/or requests for hearing will not be entertained absent a determination by the Commission, the presiding officer or the Atomic Safety and Licensing Board designated to rule on the petition and/or request, that the petitioner has made a substantial showing of good cause for the granting of a late petition and/or request. That determination will be based upon a balancing of the factors specified in 10 CFR 2.714(a)(1)(i)-(v) and 2.714(d).

For further details with respect to this action, see the application for amendment which is available for public inspection at the Commission's Public Document Room, 1717 H Street NW., Washington, DC 20555, and at the Local Public Document Room, Calvert County Library, Prince Frederick, Maryland.

Dated at Rockville, Maryland, this 12th day of April, 1988.

For the Nuclear Regulatory Commission.

Scott Alexander McNeil,

Project Manager, Project Directorate I-1, Division of Reactor Projects I/II, Office of Nuclear Reactor Regulation.

[FR Doc. 88-8361 Filed 4-14-88; 8:45 am]

BILLING CODE 7590-01-M

[Docket No. 30-29319, License No. 42-26838-01, EA 87-145]

H & G Inspection Co., Inc., Order Imposing Civil Monetary Penalty

H & G Inspection Company, Inc., Houston, Texas (licensee) is the holder of NRC Materials License No. 42-26838-01, issued by the Nuclear Regulatory Commission (NRC/Commission) on August 11, 1986. The license was amended on September 15, 1986. The license authorizes the licensee to possess and use sealed sources for industrial radiography and replacement of sources in accordance with the conditions specified therein.

II

A routine unannounced radiation safety inspection of the licensee's activities was conducted at the licensee's facilities at Evanston, Wyoming, on June 29, 1987. The inspection was a followup to an event that had been previously reported to the NRC in the licensee's letter of April 21, 1987. The event involved the overexposure of a radiographer to a cumulative whole body dose of 3.135 rems during the period from January 21 to April 9, 1987. The circumstances surrounding this overexposure reflect a lack of management control over the safe use of licensed material. This violation is of further concern to the NRC inasmuch as the licensee was cited in July 1986 for an overexposure to a radiographer which occurred in the foruth quarter of 1985. A Notice of Violation was issued July 21, 1986, and a Civil Monetary Penalty of Two Thousand Five Hundred Dollars ($2,500) was assessed and paid.

As a result of the 1987 overexposure, a written Notice of Violation and Proposed Imposition of Civil Penalty was served upon the licensee by letter dated October 26, 1987. The Notice stated the nature of the violation, the provision of the NRC's requirement that the licensee had violated, and the amount of the civil penalty proposed for the violation. The licensee responded to th Notice of Violation and Proposed Imposition of Civil Penalty by letter dated December 16, 1987. The licensee's response was supplemented by letter dated February 11, 1988. In its response, the licensee denied the violation and sought mitigation of the proposed civil penalty.

III

After consideration of the licensee's response denying the violation and the statements of fact, explanation, and request for migitation of the civil penalty

contained therein, the Deputy Executive Director for Regional Operations has determined as set forth in the Appendix to this Order that the violation occurred as stated and the penalty proposed for the violation designated in the Notice of Violation and Proposed Imposition of Civil Penalty should be imposed.

IV

In view of the foregoing and pursuant to section 234 of the Atomic Energy Act of 1954, as amended (Act), 42 U.S.C. 2282, and 10 CFR 2.205, it is hereby ordered that:

The licensee pay a civil penalty in the amount of Seven Thousand Five Hundred Dollars ($7,500) within 30 days of the date of this Order, by check, draft, or money order, payable to the Treasurer of the United States and mailed to the Director, Office of Enforcement, U.S. Nuclear Regulatory Commission, ATTN: Document Control Desk, Washington, DC 20555.

The licensee may request a hearing within 30 days of the date of this Order. A request for a hearing should be clearly marked as a "Request for an Enforcement Hearing" and shall be addressed to the Director, Office of Enforcement, U.S. Nuclear Regulatory Commission, ATTN: Document Control Desk, Washington, DC 20555, with a copy to the Regional Administrator, U.S. Nuclear Regulatory Commission, Region IV.

If the hearing is requested, the Commission will issue an order designating the time and place of the hearing. If the licensee fails to request a hearing within 30 days of the date of this Order, the provisions of this Order shall be effective without further proceedings. If payment has not been made by that time, the matter may be referred to the Attorney General for collection.

In the event the licensee requests a hearing as provided above, the issues to be considered at such hearing shall be:

(a) Whether the licensee was in violation of the Commission's requirements as set forth in the Notice of Violation and Proposed Imposition of Civil Penalty referenced in Section II above, and

(b) Whether, on the basis of such violation, this Order should be sustained.

Dated at Rockville, Maryland, this 7th day of April 1988.

For the Nuclear Regulatory Commission.

James M. Taylor,

Deputy Executive Director for Regional Operations.

Appendix—Evaluations and Conclusions

On October 26, 1986, a Notice of Violation and Proposed Imposition of Civil Penalty (NOV) was issued for the violation identified during an NRC inspection. H & G Inspection Company responded to the Notice on December 16, 1987 and February 11, 1988. The licensee denied the violation and requested mitigation of the civil penalty. The NRC's evaluation and conclusion regarding the licensee's arguments are as follows:

I. Restatement of Violation

10 CFR 20.101(a) limits the whole body exposure of an individual in a restricted area to one and one quarter rems per calendar quarter, except as provided by 10 CFR 20.101(b). Paragraph (b) provides, in part, that a licensee may permit an individual in a restricted area to receive a total occupational dose to the whole body greater than one and one quarter rems per calendar quarter, provided that such dose during any calendar quarter shall not exceed three rems and other conditions not relevant here are satisfied.

Contrary to the above, a radiographer working for H & G Inspection Company, Inc. in the state of Wyoming received a whole body dose of 3.135 rems in the calendar quarter from January 10 through April 9, 1987.

This is a Severity Level III violation (Supplement IV).

Civil Penalty—$7,500.

Summary of Licensee's Response

The licensee denied the violation, stating that the system used to measure whole body dose and the documentation in support of that system indicated that there was an overexposure of the radiographer when, in fact, no such overexposure actually occurred.

The licensee stated that there were four specific reasons that contributed to the recorded overexposure: (a) The radiographer failed to follow verbal instructions given to him and continued to work in areas where he picked up additional radiation exposure, (b) there was a lapse of almost 20 days between the time that film badges were sent in from the Wyoming site and the time H & G Inspection became aware of the excessively high readings and notified the employee, (c) the film badge results were high as shown by a third party evaluation of the radiographer's exposure, and (d) there was inadequate management control over parts of the program that could have prevented the event, including the length of time to learn of the overexposure, control over remote site personnel, and a lack of understanding by employees of the mandatory nature of the procedures regarding the length of time they can work in the field.

NRC Evaluation of Licensee's Response

The NRC staff has carefully reviewed the licensee's response and concluded that the violation occurred as stated. Three of the licensee's reasons for the recorded overexposures: (a) The radiographer failed to follow verbal instructions, (b) the lapse of time for H & G to notify employees of high readings, and (c) inadequate management control that could have prevented the event, are examples of H & G's management weakness in implementing its responsibilities. This was the reason for the proposed civil penalty. It is the licensee's responsibility to establish a system for evaluating and maintaining compliance with the dose limitations specified in the NRC Rules and Regulations.

The licensee's argument that no such overexposure actually occurred and that the film badge results were high as shown by a third party evaluation are not accepted by the NRC. Central to the third party's evaluation is an assumption that the individual was a distance of 28 feet from the collimated source during the entire time. The third party's assumption in this regard cannot be accepted since it fails to demonstrate that the individual did not perform his duties near an unretracted source which would account for the overexposure.

II. Summary of Licensee's Request for Mitigation

The licensee denied the violation and requested mitigation of the Civil Penalty based on errors in the NRC's letter transmitting the Notice of Violation and extenuating circumstances that dictate remission or mitigation of the Civil Penalty. The licensee stated that the letter was substantially in error by suggesting that H & G Inspection did not take the overexposure very seriously when they had a long history of compliance with regulatory programs throughout the country, and there had been only a small number of overexposures compared to the number of employees and amount of work over the 11 years that H & G Inspection has been in this business. Further, the licensee stated that the last overexposure occurred in 1985 and not 1986 as referenced in the NRC letter. In regard to extenuating circumstances, the licensee stated that H & G Inspection is a small company and the commitments

for corrective actions will increase the cost of doing business by a substantial amount. The licensee also asserts that the amount of the Civil Penalty proposed is significantly higher than the amount proposed or issued by the NRC for other violations of this type. In addition, the licensee states it has undertaken a series of programmatic changes including: (1) revising its program manual, (2) revising and writing new forms and procedures, and (3) hiring a third-party consultant to review the implementation of its program on a monthly basis.

NRC Evaluation of Licensee's Request for Mitigation

The licensee's contention that the NRC October 26, 1987, letter transmitting the Notice of Violation erroneously refers to an overexposure in 1986 that actually occurred in 1985 is correct. However, this typographical error is immaterial to the civil penalty since NRC typically reviews events within the last two years and this 1985 exposure was in this period and resulted in a Notice of Violation and Proposed Imposition of Civil Penalty issued on July 21, 1986. (See Part 2, Appendix C, V.B.)

With regard to the licensee's argument that the NRC's letter transmitting the civil penalty was in error by suggesting that H & G did not take the overexposure seriously, the NRC maintains that its letter did not state that the licensee did not take the overexposure seriously but stated that "significant actions were not taken to reduce dosage accumulations to prevent the ultimate overexposure" and that "improvement in your management control over personnel exposures" was needed.

The licensee's claim that there have been only a small number of overexposures compared to the number of employees and the amount of work over the 11 years that H & G has been in business is also unpersuasive. On July 21, 1986 the NRC issued the civil penalty in the amount of $2,500 for a whole body exposure of 3.4 rems resulting from failures to perform surveys after each radiographic exposure and failure to follow operating procedures. Having another overexposure less than a year after being cited for an overexposure is rare and indicates that the licensee's corrective actions were ineffective. The licensee noted in its response that "there was inadequate management control over the parts of the program that could have prevented this event * * *."

With respect to the licensee's claim that H & G is a small company and the commitments for corrective actions will increase the cost of doing business by a substantial amount, the NRC maintains that the cost of implementing additional administrative controls to ensure future compliance with NRC regulatory requirements is an expected financial obligation. There has not been any indication or claim that such cost combined with the Civil Penalty will be of such magnitude that it will put the licensee out of business or adversely affect its ability to safely conduct licensed activities (See Part 2, Appendix C, V.B.). NRC enforcement action is taken as necessary to ensure that each licensee will achieve and maintain compliance with NRC regulatory requirements in the interest of public health and safety.

As to H & G's corrective actions, the actions described in the responses appear appropriate and comprehensive. However, mitigation for such corrective action was not warranted because they were not timely and were taken following NRC suggestions rather than on the licensee's initiatives.

The licensee further claims that the amount of the Civil Penalty proposed is significantly higher than the amount proposed or issued by the NRC for other violations of this type. The licensee stated that another company engaged in similar work at the Shute Creek site was only issued a $500 civil penalty for much more serious violations. The NRC presumes the licensee is referring to the civil penalty issued on February 28, 1985 to A-1 Inspection, Inc. (EA 85-08). NRC normally does not compare the civil penalty of one case to another case since each escalated enforcement action is considered on its own merits. However, in the A-1 Inspection, Inc. case, the penalty was reduced because of A-1's corrective actions taken before the enforcement conference and the licensee's financial status. In the H & G case, corrective action was not taken prior to the enforcement conference and H & G, while a small company, is considerably larger than A-1. In addition, H & G previously had an overexposure during the fourth quarter of 1985.

III. NRC Conclusion

The NRC staff concludes that the violation occurred as stated in the Notice of Violation, and further, a sufficient basis for mitigation of the Civil Penalty was not provided by the licensee. Consequently, the proposed Civil Penalty in the amount of Seven Thousand Five Hundred Dollars ($7,500) should be imposed.

[FR Doc. 88-8334 Filed 4-14-88; 8:45 am]

BILLING CODE 7590-01-M

[Docket No. 50-322-OL-5 (EP Exercise)]

Long Island Lighting Co., Shoreham Nuclear Power Station, Unit 1; Oral Argument

Notice is hereby given that, in accordance with the Appeal Board's order of March 18, 1988, oral argument on the appeal of Long Island Lighting Company (LILCO) from the Licensing Board's December 7, 1987, partial initial decision (LBP-87-32) will be heard at 9:30 a.m. on Thursday, April 28, 1988, in the NRC Public Hearing Room, Fifth Floor, East-West Towers Building, 4350 East-West Highway, Bethesda, Maryland.

For The Appeal Board.

C. Jean Shoemaker,

Secretary to the Appeal Board.

Dated: April 8, 1988.

[FR Doc. 88-8352 Filed 4-14-88; 8:45 am]

BILLING CODE 7590-01-M

[Docket No. 50-220]

Niagara Mohawk Power Corp., Nine Mile Point Nuclear Station, Unit 1; Consideration of Issuance of Amendment to Facility Operating License and Proposed No Significant Hazards Consideration Determination and Opportunity for Hearing

The U.S. Nuclear Regulatory Commission (the Commission) is considering issuance of an amendment to Facility Operating License No. DPR-63, issued to the Niagara Mohawk Power Corporation (the licensee), for operation of the Nine Mile Point Nuclear Station, Unit 1 located in Scriba, New York. The proposed amendment is in response to the licensee's submittal dated April 5, 1988, as amended April 8, 1988.

The amendment would add new Technical Specifications 3.7.1 and 4.7.1, "Special Test Exception—Shutdown Margin Demonstration," and associated Bases to allow shutdown margin testing in the shutdown condition-cold and would modify Technical Specifications Definitions 1.1a "Shutdown Condition-Cold," and 1.1b, "Shutdown Condition-Hot," to accommodate the new Technical Specifications. These changes would permit reactor coolant system pressure testing (system leakage and hydrostatic testing) and control rod

scram time testing to be performed with the mode switch in the refuel position and the reactor coolant temperature greater than 212 °F. The proposed changes will also facilitate scram recovery operations. The proposed changes include an addition to the Table of Contents.

Before issuance of the proposed license amendment, the Commission will have made findings required by the Atomic Energy Act of 1954, as amended (the Act) and the Commission's regulations.

The Commission has made a proposed determination that the amendment request involves no significant hazards considerations. Under the Commission's regulations in 10 CFR 50.92, this means that operation of the facility in accordance with the proposed amendment would not (1) involve a significant increase in the probability or consequences of an accident previously evaluated; or (2) create the possibility of a new or different kind of accident from any accident previously evaluated; or (3) involve a significant reduction in a margin of safety.

The proposed amendment was requested to allow system pressure testing and scram time testing of control rods with the mode switch in the refuel position and the reactor coolant temperature greater than 212 °F and to allow the mode switch to be in the refuel position during scram recovery.

The proposed amendment will not involve a significant increase in the probability or consequences of an accident previously evaluated for the following reasons.

The change to allow scram time testing with the mode switch in the refuel position has no effect on the probability or the consequences of a loss of coolant accident (LOCA). The probability of a leak in the reactor coolant pressure boundary during the hydrostatic test and subsequent scram time testing is not increased by allowing the mode switch to be in the refuel position. Furthermore, because the systems required to be operable to mitigate the consequences of a LOCA (core spray and containment spray) will be operable and the temperature of the reactor coolant will be less than during normal operation, this change will not significantly increase the consequences of a LOCA. In addition, when the reactor mode switch is placed in the refuel position following a scram, all safety systems required to be operable based on the reactor coolant temperature and pressure will be operable for accident mitigation. Therefore, the placing of the mode switch in the refuel position during scram recovery will not increase the probability or consequences of a LOCA.

Since refueling activities will not be occurring and only one control rod can be withdrawn at a time in the refuel mode, the probability and consequences of a refueling accident are not affected by the above listed changes. Furthermore, the reactor vessel head is in place. Therefore, a refueling accident cannot occur. In addition, the placing of the reactor mode switch in the refuel position following a scram, or during hydrostatic testing or scram time testing, does not place the reactor in an unanalyzed condition. Therefore, the probability and consequences of a refueling accident are not increased.

The change to allow shutdown margin demonstration to be performed in the shutdown condition will assure that the probability of an inadvertent criticality is not increased. In addition, only one control rod can be withdrawn at a time in the refuel mode. Therefore, the probability and consequences of a control rod drop accident are not increased. Consequently, the proposed change will not increase the probability or consequences of an accident previously evaluated.

The change to revise the Table of Contents is administrative in nature and will not affect the probability or consequences of an accident previously evaluated.

The proposed changes will not create the possibility of a new or different kind of accident from any previously evaluated for the following reasons.

The only potential accident of a new or different kind identified by the licensee as associated with having the model switch in the refuel position while performing the hydrostatic testing and scram time testing of the control rods is the potential for an inadvertent criticality occurring with the reactor coolant system "solid" (filled with water). However, the performance of the control rod exercising and the shutdown margin demonstration test will ensure that the reactor cannot be made critical with only one control rod withdrawn. This test, in conjunction with the interlock, which prevents more than one control rod from being withdrawn with the mode switch in the refuel position, will ensure an inadvertent criticality does not occur during the system pressure test. In addition, all safety systems required to be operable in the shutdown condition when reactor coolant temperature is greater than 212 °F will be operable except for those systems that are not required to be operable during hydrostatic testing. When the mode switch is placed in the refuel position, during scram recovery, all safety systems required to be operable based on reactor coolant temperature and pressure will be operable. Since the safety systems required to mitigate an accident will be operable when the mode switch is placed in the refuel position, the plant will not be in an unanalyzed condition. Therefore, there is not a possibility of creating a new or different kind of accident from any accident previously evaluated.

The change to revise the Table of Contents is administrative in nature and will not create the possibility of a new or different kind of accident from any accident previously evaluated.

The proposed changes will not involve a significant reduction in a margin of safety for the following reasons.

The proposed amendment is to allow control rod scram time testing to be performed with the mode switch in the refuel position and the reactor coolant system temperature greater than 212 °F and to allow the reactor mode switch to be placed in the refuel position during scram recovery. Because the reactor vessel head will be in place, primary containment integrity maintained and all systems required to be operable in accordance with the Technical Specifications will be operable, the proposed changes will not have any effect on any design basis accident or safety limit. In addition, the changes include a provision to allow shutdown margin demonstration in the shutdown condition—cold to ensure that the reactor cannot be made critical by the withdrawal of any one control rod. This test will be performed before the scram time testing. Therefore, the proposed changes will not reduce a margin of safety.

The change to revise the Table of Contents is administrative in nature. Therefore, it has no affect on a margin of safety.

Accordingly, the Commission proposes to determine that this change does not involve significant hazards considerations.

The Commission is seeking public comments on this proposed determination. Any comments received within 15 days after the date of publication of this notice will be considered in making any final determination. The Commission will not normally make a final determination unless it receives a request for a hearing.

Written comments may be submitted by mail to the Rules and Procedures Branch, Division of Rules and Records, Office of Administration and Resources Management, U.S. Nuclear Regulatory

Commission, Washington, DC 20555, and should cite the publication date and page number of the **Federal Register** notice.

Written comments may also be delivered to Room 4000, Maryland National Bank Building, 7735 Old Goergetown Road, Bethesda, Maryland, from 8:15 a.m. to 5:00 p.m. Copies of written comments received may be examined at the NRC Public Document Room, 1717 H Street, NW., Washington, DC. The filing of requests for hearing and petitions for leave to intervene is discussed below.

By May 16, 1988, the licensee may file a request for a hearing with respect to issuance of the amendment to the subject facility operating license and any person whose interest may be affected by this proceeding and who wishes to participate as a party in the proceeding must file a written request for hearing and a petition for leave to intervene. Requests for a hearing and petitions for leave to intervene shall be filed in accordance with the Commission's "Rule of Practice for Domestic Licensing Proceedings" in 10 CFR Part 2. If a request for a hearing or petition for leave to intervene is filed by the above date, the Commission or an Atomic Safety and Licensing Board, designated by the Commission or by the Chairman of the Atomic Safety and Licensing Board Panel, will rule on the request and/or petition; and the Secretary or the designated Atomic Safety and Licensing Board will issue a notice of hearing or an appropriate order.

As required by 10 CFR 2.714, a petition for leave to intervene shall set forth with particularity the interest of the petitioner in the proceeding, and how that interest may be affected by the results of the proceeding. The petition should specifically explain the reasons why intervention should be permitted with particular reference to the following factors: (1) The nature of the petitioner's right under the Act to be made a party to the proceeding; (2) the nature and extent of the petitioner's property, financial, or other interest in the proceeding; and (3) the possible effect of any order which may be entered in the proceeding on the petitioner's interest. The petition should also identify the specific aspect(s) of the subject matter of the proceeding as to which petitioner wishes to intervene. Any person who has filed a petition for leave to intervene or who has been admitted as a party may amend the petition without requesting leave of the Board up to fifteen (15) days prior to the first prehearing conference scheduled in the proceeding, but such an amended petition must satisfy the specificity requirements described above.

Not later than fifteen (15) days prior to the first prehearing conference scheduled in the preceeding, a petitioner shall file a supplement to the petition to intervene, which must include a list of the contentions that are sought to be litigated in the matter, and the bases for each contention set forth with reasonable specificity. Contentions shall be limited to matters within the scope of the amendment under consideration. A petitioner who fails to file such a supplement which satisfies these requirements with respect to at least one contention will not be permitted to participate as a party.

Those permitted to intervene become parties to the proceeding, subject to any limitations in the order granting leave to intervene, and have the opportunity to participate fully in the conduct of the hearing, including the opportunity to present evidence and cross-examine witnesses.

If the amendment is issued before the expiration of 30-days, the Commission will make a final determination on the issue of no significant hazards considerations. If a hearing is requested, the final determination will serve to decide when the hearing is held.

If the final determination is that the amendment request involves no significant hazards considerations, the Commission may issue the amendment and make it effective, notwithstanding the request for a hearing. Any hearing held would take place after issuance of the amendment.

If the final determination is that the amendment request involves significant hazards considerations, any hearing held would take place before the issuance of any amendment.

Normally, the Commission will not issue the amendment until the expiration of the 15-day notice period. However, should circumstances change during the notice period, such that failure to act in a timely way would result, for example, in derating or shutdown of the facility, the Commission may issue the license amendment before the expiration of the 15-day notice period, provided that its final determination is that the amendment involves no significant hazards considerations. The final determination will consider all public and State comments received. Should the Commission take this action, it will publish a notice of issuance. The Commission expects that the need to take this action will occur very infrequently.

A request for a hearing or a petition for leave to intervene must be filed with the Secretary of the Commission, U.S. Nuclear Regulatory Commission, Washington, DC 20555, Attention: Docketing and Service Branch, or may be delivered to the Commission's Public Document Room, 1717 H Street, NW. Washington, DC, by the above date. Where petitions are filed during the last ten (10) days of the notice period, it is requested that the petitioner promptly so inform the Commission by a toll-free telephone call to Western Union at (800) 325-6000 (in Missouri (800) 342-6700). The Western Union operator should be given Datagram Identification Number 3737 and the following message addressed to Robert A. Capra: petitioner's name and telephone number; date petition was mailed; plant name; and publication date and page number of this **Federal Register** notice. A copy of the petition should also be sent to the Office of the General Counsel, U.S. Nuclear Regulatory Commission, Washington, DC 20555, and to Troy B. Conner, Jr., Esquire, Conner and Wetterhahn, Suite 1050, 1747 Pennsylvania Avenue, NW., Washington, DC 20006.

Nontimely filings of petitions for leave to intervene, amended petitions, supplemental petitions and/or request for hearing will not be entertained absent a determination by the Commission, the presiding officer or the presiding Atomic Safety and Licensing Board that the petition and/or request should be granted based upon a balancing of the factors specified in 10 CFR 2.714(a)(1) (i)-(v) and 2.714(d).

For further details with respect to this action, see the application for amendment dated April 5, 1988, which is available for public inspection at the Commission's Public Document Room, 1717 H Street, NW., Washington, DC 20555, and at the Local Public Document Room, Reference and Documents Department, Penfield Library, State University of New York, Oswego, New York 13126.

Dated at Rockville, Maryland, this 11th day of April 1988.

For The Nuclear Regulatory Commission.

Robert A. Benedict,

Project Directorate I-1, Division of Reactor Projects I/II, Office of Nuclear Reactor Regulation.

[FR Doc. 88-8335 Filed 4-14-88; 8:45 am]

BILLING CODE 7590-01-M

[Docket No. 50-388]

Pennsylvania Power & Light Co. and Allegheny Electric Coop. Inc.; Consideration of Issuance of Amendment to Facility Operating License and Proposed No Significant Hazards Consideration Determination and Opportunity for Hearing

The U.S. Nuclear Regulatory Commission (the Commission) is considering issuance of amendment to Facility Operating License No. NPF-22 issued to Pennsylvania Power and Light Company and Allegheny Electric Cooperative Inc., for operation of Susquehanna Steam Electric Station, Unit 2, located in Luzerne County, Pennsylvania.

In accordance with the licensee's application dated April 8, 1988, the proposed amendment would delete reference to recirculation fans 2V418 A&B and fan associated breakers, and add fans 2V415 A&B and the associated breakers to the Technical Specifications. The change is necessary as a result of the licensee's decision not to proceed with its previously scheduled modifications to install new fans 2V418 A&B and to continue to rely upon existing fans 2V415 A&B.

Before issuance of the proposed license amendment, the Commission will have made findings required by the Atomic Energy Act of 1954, as amended (the Act) and the Commission's regulations.

The Commission has made a proposed determination that the amended request involves no significant hazards consideration. Under the Commission's regulations in 10 CFR 50.92, this means that operation of the facility in accordance with the proposed amendments would not (1) involve a significant increase in the probability or consequences of an accident previously evaluated; or (2) create the possibility of a new or different kind of accident from any accident previously evaluated; or (3) involve a significant reduction in a margin of safety.

The licensee, in its April 8, 1988 application provided the following arguments in support of a determination that the application involves a no significant hazards consideration.

The following three questions are addressed below for each of the proposed changes:

I. Does the proposed change involve a significant increase in the probability or consequences of an accident previously evaluated?

II. Does the proposed change create the possibility of a new or different kind of accident from any accident previously evaluated?

III. Does the proposed change involve a significant reduction in a margin of safety?

• Specification 3.6.6.2.

I. No. The proposed change will require a unit cooler subsystem of the same airflow capability as the currently required recirculation fans. Utilizing the existing 2V415 A&B fans for this purpose ensures that the post-LOCA hydrogen mixing capability of the drywell air flow system is consistent with the assumptions of the existing safety analysis.

II. No. The equivalent airflow capability of the existing fans as compared to the currently required fans precludes the potential for a new event; since the resulting configuration represents the original design, all pertinent safety analyses have already been performed.

III. No. The airflow capability required to support the hydrogen mixing safety function is unchanged by this proposal. Therefore, safety margin remains the same.

• Table 3.8.4.1-1.

I. No. Primary containment penetration overcurrent protection is only required when loads exist which could jeopardize their associated penetrations. In this case, the ——— fans 2V418 A&B, are not being installed. Therefore, no circuit breakers are required to protect the associated penetrations to ensure primary containment integrity, and consequently, no previous safety analysis is affected.

II. No. The currently required circuit breakers are not needed to perform any safety function for the reasons described in I above. Therefore, not installing them cannot result in a new event requiring further safety analysis.

III. No. Not installing a device that has no safety function to perform has no impact on safety margin.

The staff concurs with the above licensee evaluation and its conclusions. Accordingly, the Commission proposes to determine that this change does not involve significant hazards considerations.

The Commission is seeking public comments on this proposed determination. Any comments received within 30 days after the date of publication of this notice will be considered in making any final determination. The Commission will not normally make a final determination unless it receives a request for a hearing.

Written comments may be submitted by mail to the Rules and Procedures Branch, Division of Rules and Records, Office of Administration, U.S. Nuclear Regulatory Commission, Washington, DC 20555, and should cite the publication date and page number of this **Federal Register** notice. Written comments may also be delivered to Room 4000, Maryland National Bank Building, 7735 Old Georgetown Road, Bethesda, Maryland from 8:15 a.m. to 5:00 p.m. Copies of written comments received may be examined at the NRC Public Document Room, 1717 H Street NW., Washington, DC. The filing of requests for hearing and petitions for leave to intervene is discussed below.

By May 16, 1988, the licensee may file a request for a hearing with respect to issuance of the amendment to the subject facility operating license and any person whose interest may be affected by this proceeding and who wishes to participate as a party in the proceeding must file a written petition for leave to intervene. Request for a hearing and petitions for leave to intervene shall be filed in accordance with the Commission's "Rules of Practice for Domestic Licensing Proceedings" in 10 CFR Part 2. If a request for a hearing or petition for leave to intervene is filed by the above date, the Commission or an Atomic Safety and Licensing Board, designated by the Commission or by the Chairman of the Atomic Safety and Licensing Board Panel, will rule on the request and/or petition and the Secretary or the designated Atomic Safety and Licensing Board will issue a notice of hearing or an appropriate order.

As required by 10 CFR 2.714, a petition for leave to intervene shall set forth with particularity the interest of the petitioner in the proceeding, and how that interest may be affected by the results of the proceeding. The petition should specifically explain the reasons why intervention should be permitted with particular reference to the following factors: (1) The nature of the petitioner's right under the Act to be made a party to the proceeding; (2) the nature and extent of the petitioner's property, financial, or other interest in the proceeding; and (3) the possible effect of any order which may be entered in the proceeding on the petitioner's interest. The petition should also identify the specific aspect(s) of the subject matter of the proceeding as to which petitioner wishes to intervene. Any person who has filed a petition for leave to intervene or who has been admitted as a party may amend the petition without requesting leave of the Board up to fifteen (15) days prior to the first prehearing conference scheduled in the proceeding, but such an amended

petition must satisfy the specificity requirements described above.

Not later than fifteen (15) days prior to the first prehearing conference scheduled in the proceeding, a petitioner shall file a supplement to the petition to intervene which must include a list of the contentions which are sought to be litigated in the matter, and the bases for each contention set forth with reasonable specificity. Contentions shall be limited to matters within the scope of the amendment under consideration. A petitioner who fails to file such a supplement which satisfies these requirements with respect to at least one contention will not be permitted to participate as a party.

Those permitted to intervene become parties to the proceeding, subject to any limitations in the order granting leave to itervene, and have the opportunity to participate fully in the conduct of the hearing, including the opportunity to present evidence and cross-examine witnesses.

If a hearing is requested, the Commission will make a final determination on the issue of no significant hazards consideration. The final determination will serve to decide when the hearing is held.

If the final determination is that the amendment request involves no significant hazards consideration, the Commission may issue the amendment and make it effective, notwithstanding the request for a hearing. Any hearing held would take place after issuance of the amendment.

If the final determination is that the amendment involves a significant hazards consideration, any hearing held would take place before the issuance of any amendment.

Normally, the Commission will not issue the amendment until the expiration of the 30-day notice period. However, should circumstances change during the notice period such that failure to act in a timely way would result in derating or shutdown of the facility, the Commission may issue the license amendment before the expiration of the 30-day notice period, provided that its final determination is that the amendment involves no significant hazards consideration. The final determination will consider all public and State comments received. Should the Commission take this action, it will publish a notice of issuance and provide for opportunity for a hearing after issuance. The Commission expects that the need to take this action will occur very infrequently.

A request for a hearing or a petition for leave to intervene must be filed with the Secretary of the Commission, U.S. Nuclear Regulatory Commission, Washington, DC 20555, Att: Docketing and Service Branch, or may be delivered to the Commission's Public Document Room, 1717 H Street NW., Washington, DC, by the above date. Where petitions are filed during the last ten (10) days of the notice period, it is requested that the petitioner promptly so inform the Commission by a toll-free telephone call to Western Union at 1-(800) 325-6000 (in Missouri 1-(800) 342-6700). The Western Union operator should be given Datagram Identification Number 3737 and the following message addresed to Walter R. Butler, Director, Project Directorate I-2, Division of Reactor Projects I/II: petitioner's name and telephone number; date petition was mailed; plant name; and publication date and page number of this **Federal Register** notice. A copy of the petition should also be sent to the General Counsel, U.S. Nuclear Regulatory Commission, Washington, DC 20555, and to Jay Silberg, Esquire, Shaw, Pittman, Potts and Trowbridge, 2300 N Street NW., Washington, DC 20037.

Nontimely filings of petitions for leave to intervene, amended petitions, supplemental petitions and/or requests for hearing will not be entertained absent a determination by the Commission, the presiding officer or the presiding Atomic Safety and Licensing Board, that the petition and/or request should be granted based upon a balancing of factors specified in 10 CFR 2.714(a)(1)(i)-(v) and 2.714(d).

For further details with respect to this action, see the application for amendment dated April 8, 1988, which is available for public inspection at the Commission's Public Document Room, 1717 H Street NW., Washington, DC 20555, and at the Osterhout Free Library, Reference Department, 71 South Franklin Street, Wilkes-Barre, Pennsylvania 18701.

Dated at Rockville, Maryland, this 12th day of April 1988.

For the Nuclear Regulatory Commission.

Walter R. Butler,

Director, Project Directorate I-2, Division of Reactor Projects I/II.

[FR Doc. 88-8336 Filed 4-14-88; 8:45 am]

BILLING CODE 7590-01-M

OFFICE OF MANAGEMENT AND BUDGET

Guidelines for Federal Statistical Activities

AGENCY: Office of Management and Budget.

ACTION: Notice extending public comment period on a Draft Circular Establishing Guidelines for Federal Statistical Activities.

SUMMARY: The Office of Management and Budget (OMB) is extending from April 19, 1988 to July 15, 1988, the period for public comment on a draft Circular, *Guidelines for Federal Statistical Activities.*

DATES: Public comments on the draft Circular must be received on or before July 15, 1988.

ADDRESSES: Comments should be made in writing and sent to Dorothy M. Tella, Office of Management and Budget, Room 3228, New Executive Office Building, Washington, DC 20503. All comments will be available for public examination at this address.

FOR FURTHER INFORMATION CONTACT: Dorothy M. Tella, (202) 395-3093.

SUPPLEMENTARY INFORMATION: On January 20, 1988, OMB published in the **Federal Register** (pp. 1542-1552) a notice soliciting comment on a draft Circular, *Guidelines for Federal Statistical Activities.* To date OMB has received relatively few comments from members of the public and is therefore extending from April 19, 1988, to July 15, 1988, the deadline for comments from members of the public. Federal agencies should provide their comments to OMB on or before the original deadline of April 19, 1988.

Darrell A. Johnson,

Assistant Director for Administration.

[FR Doc. 88-8253 Filed 4-14-88; 8:45 am]

BILLING CODE 3110-01-M

OFFICE OF PERSONNEL MANAGEMENT

Request for Approval of RI 30-10 Submitted to OMB for Clearance

AGENCY: Office of Personnel Management.

ACTION: Notice.

SUMMARY: In accordance with the Paperwork Reduction Act of 1980 (Title 44, U.S. Code, chapter 35), this notice announces a new information collection from the public. RI 30-10, the Disabled Dependent Questionnaire, is completed by a retired Federal employee or a surviving family member, to provide medical evidence regarding the nature and degree of disability of an unmarried dependent child. OPM examines the evidence to determine if the child meets the requirements for entitlement to annuity benefits as a disabled surviving

family member and/or continued health benefits coverage. There will be approximately 2,500 questionnaires completed annually, for a total public burden of approximately 1,250 hours. For copies of this proposal, call William C. Duffy, Agency Clearance Office, on (202) 632-7714.

DATES: Comments on this proposal should be received within 10 working days from the date of this publication.

ADDRESSES: Send or deliver comments to—

William C. Duffy, Agency Clearance Officer, U.S. Office of Personnel Management, 1900 E Street NW., Room 6410, Washington, DC 20415,

and

Joseph Lackey, Information Desk Officer, Office of Information and Regulatory Affairs, Office of Management and Budget, New Executive Office Building NW., Room 3235, Washington, DC 20503.

FOR FURTHER INFORMATION CONTACT: James L. Brison, (202) 632-5472.

U.S. Office of Personnel Management.

Constance Horner,

Director.

[FR Doc. 88-8315 Filed 4-14-88; 8:45 am]

BILLING CODE 6325-01-M

POSTAL SERVICE

Implementation of Final International Postage Rates

AGENCY: Postal Service.

ACTION: Notice of Changes in International Rates and Fees.

SUMMARY: The Postal Service, following consideration of comments submitted in reponse to its request for comments on proposed changes in international rates and fees, 53 FR 6892, hereby gives notice that it is implementing changes in international rates and fees effective at 12:01 a.m., April 17, 1988. The rates and fees published herein supersede the interim rates and fees announced March 28, 1988 (53 FR 10,007). The interim rates and fees will cease to be effective at the same time these rates take effect.

EFFECTIVE DATE: 12:01 a.m., April 17, 1988.

FOR FURTHER INFORMATION CONTACT: John F. Alepa (202) 268-2664.

SUPPLEMENTARY INFORMATION: On March 3, 1988, the Postal Service published in the **Federal Register** (53 FR 6892) a notice of proposed changes in international rates and fees. The Postal Service requested comments on the proposed rate and fee changes and set April 1, 1988, as the last day for submitting comments. The Postal Service proposed to implement international rate and fee changes at the same time it implemented domestic rate and fee changes. At that time, a Postal Service request for new domestic rates and fees was pending before the independent Postal Rate Commission.

On March 28, 1988, the Postal Service published notice of implementation of changes in international rates and fees on an interim basis. The Postal Service noted that it had stated in its March 3, 1988, notice that to reduce administrative difficulties and to make rate changes easier for mailers, it proposed to implement international rate and fee changes at the same time it implemented domestic rate and fee changes. The Postal Service then stated that the Board of Governors of the Postal Service had set April 3, 1988, as the effective date for domestic rate and fee changes, and that because the deadline for submitting comments on the proposed international rates and fees was April 1, 1988, there would not be sufficient time to evaluate the comments and implement final international rates and fees on April 3, 1988. The Postal Service said, therefore, that it was implementing changes in international rates and fees on an interim basis on April 3, 1988, pending full consideration of all comments received. The Postal Service stated that a document announcing final international rates and fees would be published as soon as practicable after April 3, 1988. The interim rates and fees were generally the same as the rates proposed in the March 3 notice, with some modifications to take into account certain rate and fee adjustments for domestic services that had been recommended by the independent Postal Rate Commission and approved by the Governors of the Postal Service.

Thirteen comments were received on or before April 1, 1988. Of the comments received, two raised questions about specific rates to Canada and Mexico. Ten comments were from representatives of the publishing industry concerning the magnitude of the proposed increases in rates for publishers' periodicals and the short amount of time that would elapse between the announcement of the proposed rate increases and their effective date. Among these comments were suggestions that rate increases for publishers' periodicals be no greater than the rate increases for domestic second-class mail and that the rate increases for publishers' periodicals be postponed to allow publishers more time to adjust to the rate changes. The other comment suggested that the Postal Service submit its proposed changes in international rates and fees to the Postal Rate Commission. Each of these comments is addressed below.

I. Canadian and Mexican Rates

In the past, letter mail rates for Canada and Mexico were set at the same level as domestic rates. In its March 3 Notice, the Postal Service departed from this pattern of rate relationships by proposing to establish letter mail rates for Canada that were higher than domestic letter rates. A number of comments inquired about the reason for this and similar changes in rate relationships.

One commenter observed that the rates for Mexico generally were the same as domestic rates. The commenter asked why those rates were not included among the fees for special services that the Postal Service had noted were subject to revision, upon the outcome of the then-pending domestic proceeding before the Postal Rate Commission, to make them the same as the special service fees for comparable domestic services. Rates for Mexico are developed separately from domestic rates and reflect the costs of the mail to Mexico. In the rate design, it was considered advantageous from the point of view of administering international rates to have rates to Mexico that were the same as domestic rates when possible, but which departed from domestic rates when costs required it. Because the rates to Mexico, unlike the special service fees, were not so closely tied to domestic rates, it would not have been appropriate to mark them as automatically subject to revision so that they would be the same as domestic rates. However, the post and postal card rate for Mexico was proposed to be 16 cents. In its March 4, 1988 recommended decision, the Rate Commission recommended a domestic post and postal card rate of 15 cents. The Postal Service has decided to change the post and postal card rate to Mexico to 15 cents to be the same as the domestic post and postal card rate. This will avoid requiring mailers to add postage to domestic cards to send them to Mexico and will also avoid having the Postal Service print separate postal cards just for Mexico.

One commenter asked why rates for letter mail going to Canada were higher than domestic letter mail rates and letter mail rates for Mexico. This departure from this historic rate pattern was brought about by a change in the way the United States and Canada charge terminal dues, which are the amounts paid to foreign postal administrators for

delivery of mail in the country of destination, to each other. In the past, the terminal dues charged by both Mexico and Canada were the dues established by the Universal Postal Union. Because the UPU rates did not fully reflect differences in the costs of handling different kinds of mail, the Postal Service and Canada Post Corporation, the Canadian postal administration, recently entered into an arrangement whereby the terminal dues that would be charged would be based on each country's cost of delivering mail orginating in the other country. This cost-based arrangement increased the charge for delivery of light-weight pieces such as letters, which is reflected in the higher new rates for letter mail.

Another comment noted that the LC and AO rates to Canada were higher than rates to Mexico for pieces weighing up to 12 ounces, but were lower than rates to Mexico in the heavier weight categories. A similar comment was received with respect to surface printed matter rates for under and over two pounds. This, also, is due to the cost-based terminal dues arrangement with Canada Post, which had the effect of lowering the charges for delivery of heavier weight pieces in comparison with UPU charges at the same time it increased the charges for lighter pieces. The rate differences reflect the different amounts that the Postal Service must pay Mexico and Canada Post for delivery of the mail.

The same commenter asked why air LC and AO rates to Mexico were the same as domestic rates up to 11 ounces, but higher above 11 ounces. The reason for this difference is mainly in the charges for terminal dues. As noted, rates for mail to Mexico are developed separately from domestic rates. However, for administrative convenience, when possible, rates are set at the same level as domestic rates. With respect to heavier pieces, Mexico charges UPU terminal dues rates which proportionately increase the cost of heavier weight pieces. This is reflected in the higher rates for heavier pieces.

One commenter asked why there were separate rates stated for surface and air post and postal cards to Mexico and Canada even though the surface and air rates to each country were identical. The commenter stated that the surface and air rates for letters to each country were the same, but only the rates for surface letters were printed. This commenter also asked whether cards must be specially marked to receive air service. Under the rate categories for international mail in general there are separate rates for air and surface mail. With respect to Canada and Mexico, as noted above, the Postal Service has arrangements which provide that all letter mail, including post and postal cards, receive air service. Thus, cards need not be specially marked to receive air service and the rate for post and postal cards to each country is the same for both the air and surface categories. The letter rates are treated the same way, but instead of listing all of the rates twice, the listing for air letters simply referred to the rate schedule for surface rates. Put another way, it would also have been appropriate to list only the surface rate for post and postal cards and refer to that rate in the air rate schedule, the same as was done with letters, and that has been done in the accompanying rate schedules to avoid confusion.

Another commenter asked why the fee for money orders to Canada was higher than the domestic money order fee even though the Canadian service uses domestic money order forms and the exchange of money orders with most other countries follows a different procedure. The proposed fee for Canadian money orders was based on Canada Post's charges to the Postal Service for processing money orders. However, the Postal Service has determined that charging the higher rate is administratively impractical at this time. Accordingly, the Postal Service has adjusted the fee for money orders to Canada in the schedule of fees accompanying this Notice. The fee will be the same as the domestic rate.

Another comment concerned why there was a separate air parcel rate to Canada, but not to Mexico, when there was an air AO schedule to both countries. The reason is that the rates for different groups of countries are based on the costs of that mail, including terminal dues and transportation costs. Mexico is included in the rate group that includes the Caribbean nations and its rates reflect the costs of that group. The rates to Canada reflect its unique costs, including the different terminal dues arrangement.

II. Publishers' Periodicals

The Postal Service received comments from a trade association for publishers and several publishers who were members of the trade association that criticized the proposed increases in the rates for publishers' periodicals as excessive. These commenters also argued that the Postal Service had allowed insufficient time for publishers to adjust to increased rates. The commenters noted that subscriptions and sometimes advertising space are paid for in advance and that it takes some time to adjust prices to take into account increased postage costs. It was suggested that the rate increases for publishers' periodicals be restrained so that they would not exceed the 18 percent increase for domestic second-class mail, and, alternatively, that the rate increases for publishers' periodicals be postponed. It was also suggested that letter rates be increased more so that publishers' periodicals rates could be lowered. Finally, some of the commenters stated that the rate increases were so great that they would have to seek alternative ways of getting their publications delivered.

With respect to the comments that the rate increase for publishers' periodicals is excessive, the Postal Service is generally under an obligation to be self supporting. 39 U.S.C. 3621. The Postal Service is also guided by certain policies of the Postal Reorganization Act. These policies are, (1) "The costs of establishing and maintaining the Postal Service shall not be apportioned to impair the overall value of the service to the people," 39 U.S.C. 101(a) (last sentence); (2) "Postal rates shall be established to apportion the costs of all postal operations to all users of the mail on a fair and equitable basis," 39 U.S.C. 101(d); and (3) "[I]n establishing classifications, rates, and fees under this title, the Postal Service shall not, except as specifically authorized in this title, make any undue or unreasonable discrimination among users of the mails, nor shall it grant any undue or unreasonable preferences to any such user," U.S.C. 403(c).

In addition, international postage rates are subject to the provisions of the Universal Postal Convention of the Universal Postal Union. Under the current Convention, publishers' periodicals are part of surface AO mail. International Mail Manual 141.2(b), incorporated by reference, 39 CFR 20.1. Article 19(1) of the Convention establishes, in pertinent part, the minimum and maximum rates that can be charged for surface AO mail, including regular printed matter and small packets. The rates for publishers' periodicals fall within these limits. In addition, Article 19(6) provides,

> Each postal administration may allow, for newspapers and periodicals published in its country, a reduction of not more than 50 percent of the tariff for printed papers, while reserving the right to restrict this reduction to newspapers and periodicals which fulfil the conditions required by internal regulations for transmission at the tariff for newspapers. This reduction shall not extend to commercial printed papers such as

catalogues, prospectuses, price lists, etc., no matter how regularly they are issued; the same shall apply to advertisements printed on sheets annexed to newspapers and periodicals.

Thus, the rate for publishers' periodicals cannot be lower than 50 perent of the rate for regular printed matter surface AO mail.

One of the criteria that the Postal Service employs in establishing fair and equitable rates is that, as a general rule, no kind of category of mail should have rates that produce revenues lower than its costs, unless Congress has authorized the lower rate and appropriated the funds to make up the Postal Service's losses. This is because, in general, charging rates that do not produce revenues at least equal to costs results in one group of mailers paying for the cost of delivery of another group's mail. Such cross-subsidization is harmful to mailers because it results in some mailers paying higher rates than they otherwise would, and it is harmful to the Postal Service because the artificially high prices may cause it to lose mail volume and its attendant contributions to overhead.[1] This loss of postal revenues also hurts the mailers who continue to use the Postal Service, because they will have to pay higher rates to make up the lost contribution to overhead that would have been paid by the mailers driven away by higher prices.[2]

The Postal Service developed its surface AO rate proposals in reference to its costs. Historically, the Postal Service has not distinguished between inbound (originating in a foreign country for delivery in the United States) and outbound (originating in the United States for delivery in a foreign country) costs for international mail in setting international rates. In developing the costs for the rates proposed on March 3, the Postal Service quantified separate costs for outbound mail. The Postal Service's initial analysis of the relationship between the costs for outbound surface AO mail and the revenues it would produce showed that in the FY 1989, costs would exceed revenues by over $24 million if the rates remained unchanged. This revenue deficit apparently can be traced in part to general increases in the Postal Service's costs of doing business, but more importantly, to a 45 percent increase in terminal dues rates that became effective in 1986—after current rates were implemented in 1985. The proposed rates include the maximum 50 percent reduction from regular printed matter rates for most weight cells for both publishers' periodicals and books and sheet music (*see* Convention article 19(7)), and were designed so as not to produce any contribution to overhead in an effort to minimize the average rate increases for surface AO mail. The Postal Service believes that any greater increases would unduly burden mailers of surface AO mail without providing a clear benefit for the Postal Service or significantly relieving the overhead cost burden being borne by other mailers. The surface AO rates that were developed in achieving that 100 percent cost coverage are the rates the Postal Service proposed in the Federal Register on March 3.

After careful consideration of the policies of the Postal Reorganization Act, the Postal Service has decided to adopt the rates for surface AO mail, incuding publishers' periodicals, that were proposed. Lesser increases in rates for surface AO mail are not warranted. Although the percentage increases are substantial, they are nonetheless necessary if the surface AO category is to make progress toward paying its own way. While the increases might not completely eliminate the cross-subsidy from other international mail, (a reexamination of the cost data tentatively suggests that the costs for surface AO mail might have been understated), they will at least reduce the burden on the other mail.

Other alternatives have been considered, and found not to be appropriate. Limiting rate increases to the same amount as the increases for domestic second-class would reduce the impact of the increases publishers now, but would mean that they would have to receive even larger increases later if they are to pay their own way. Similarly, increasing air letter rates more than proposed in order to lower surface AO rates without decreasing total revenues would not be economically sound. The proposed air letter rates are estimated to produce a cost coverage of 221 percent, the highest cost coverage of any type of mail, domestic or international. Any additional increase would be difficult to justify under any circumstances, but in particular higher rates cannot be justified to maintain larger subsidies for surface AO mail.

Equally important, it is far from clear that increasing the rates for air letters further would in fact produce more revenues. There is already active competition with the Postal Service for the carriage of air letters. Larger increases in air letter rates would appear more likely to produce additional revenues for the Postal Service's competitors, because the higher rates would be expected to cause more mailers to use private services. The loss of the contributions to overhead that this mail would make would only result in higher rates for all other mailers in the future.

Finally, for those weight categories which have the greatest volumes, publishers' periodicals will generally receive the maximum discount allowed by the UPU Convention.

On the other hand, additional rate increases are not warranted at this time. The users of the publishers' periodicals rates say that the proposed increases will be difficult for them to handle and that they might have to seek alternative means of having their periodicals delivered in foreign countries. The Postal Service is mindful of the policy of establishing rates that will not impair the value of the service to the people, and has concluded that any greater increases at this time could impair the value of surface AO mail to its users.

With respect to the comment that the Postal Service allowed insufficient time for publishers to adjust to rate increases, the short time allowed was, in considerable part, due to the time required to develop better costs on which to base rates. The improved cost data did not become available until shortly before the rates were proposed. Moreover, the trade association commenter knew that an increase in international rates was to be expected through its participation as a party to the domestic rate case before the independent Postal Rate Commission. The Postal Service's filing before the Commission in May 1987 indicated that rate increases were contemplated for international mail. Furthermore, historically the Postal Service has increased international rates at the same time it increased domestic rates and fees. Accordingly, while not all the commenters might have had personal knowledge that an increase in international rates was on the horizon,

[1] While the Postal Service is generally protected from competition in the carriage of letter mail in its domestic service by the Private Express Statutes, 18 U.S.C. 1693–1699, 1724; 39 U.S.C. 601–606, because of a suspension of the requirement that postage be paid on international letters, the Postal Service is no longer protected from competition in its international service. *See* 39 CFR 320.8. Competitors for international letter mail are active and have attracted an undetermined amount of the Postal Service's international letter mail business.

[2] Some mailers will continue to use the Postal Service because they have no choice. Those who use competitive services will do so in many instances because they are offered discounts that can vary among customers. The requirement that the Postal Service not discriminate unreasonably and not grant undue or unreasonable preferences generally prevents it from meeting the prices charged by these competitors' practices.

BEST COPY AVAILABLE

and while specific rate information was not available until the Postal Service's request for comments of March 3,1988, it cannot be said that there was no notice to any of the commenters that rates would be increased in the present time frame.

The Postal Service has decided not to delay the rate increases for international mail as a whole, or for publishers' periodicals alone. The Postal Service received no comments on most of the rate changes it proposed. The comments, other than those of mailers of publishers' periodicals, were mainly in the nature of seeking explanations of particular rate relationships. On the whole, while it cannot be said that the comments supported increasing rates, the commenters at least expressed no great dissatisfaction with the vast majority of the proposed increases. Thus, there is no reason for postponing most of the international rate changes. Fairness and equity suggest that if most mailers are going to have to pay increased postage rates as a result of a general increase, then all those scheduled increases should occur at the same time. Moreover, the large gap between present permanent rate levels for publishers' periodicals and the rate levels needed to meet the costs of the service provided would represent a significant drain on Postal Service resources. If the final rates are implemented promptly, publishers will continue to benefit from rates that do not exceed costs. Finally, although the comments suggest that the magnitude of the increases might cause some difficulties for some publishers, the Postal Service is convinced that the increases are warranted. On balance, the reasons for implementing the rates promptly appear to outweigh the reasons for postponing the increases.

III. Other Comments Concerning Rates

One commenter noted that there was no longer a separate air LC rate from American Samoa to Western Samoa, and from Guam to the Philippines, although a separate rate was maintained for air AO mail. The proposed air LC rates consolidated into one schedule what was formerly two schedules. Air LC is the service used most often by individual mailers, and this change simplified the rates for air LC to make it easier for individuals to determine what rate to pay. With the elimination of the schedule in which the former special rate was included, there was no longer any reason to have these special rates. The air AO schedules, however, were not consolidated, because AO pieces tend to be heavier and air transportation costs are more significant on a piece basis. Since multiple schedules were maintained, the rates from American Samoa to Western Samoa and Guam to the Philippines were included in the most appropriate rate schedule.

One commenter noted that the proposed air AO rates to Estonia and similar destinations do not provide for any savings for pieces weighing under half an ounce comparable to the savings at the half-ounce air LC rate, even though the rates were the same at the one-ounce interval. The reason for this is that while both schedules are cost based, they apply to different kinds of mail. For the LC mail, which has a low average weight per piece, the half-ounce increments were considered to be more appropriate, and for the AO mail, which has a higher average weight per piece, one-ounce increments were considered more appropriate.

IV. Procedural Comments

One commenter suggested that the Postal Service submit its proposed international rates and fees to the Postal Rate Commission for consideration. This would not be appropriate because Congress has not given the Rate Commission authority to review or recommend international rates.

One commenter objected that the original notice contained inadequate information to formulate appropriate comments. The notice itself provided a means of obtaining additional information, of which this commenter took full advantage, including obtaining detailed cost data for surface AO mail and having interviews with officials of the Postal Service.

This commenter also objected to the Postal Service not releasing details about its terminal dues arrangements with Canada. This information is commercially sensitive information that under good business practice would not be publicly released. *See* 39 U.S.C. 410(c)(2).

This commenter also urged the Postal Service to hold a hearing on its proposed rate increases, with at least 10 months to pass between commencement of hearings and implementation of new rates. The Postal Reorganization Act does not provide for such a hearing to be held. Moreover, as was noted in the section concerning publishers' periodicals, the Postal Service has decided not to delay implementation of these rate increases.

This commenter was also critical of the UPU and the UPU terminal dues arrangements, and suggested that the Postal Service withdraw from the UPU. We believe this proposal is not a reasonable alternative to implementation of the proposed rates.

V. Conclusion

Accordingly, the Postal Service hereby adopts the international rates and fees set forth in the schedules below. These rates and fees shall take effect at 12:01 a.m. on April 17, 1988. The interim rates and fees which took effect on April 3, 1988, are canceled effective at the same time the rates below become effective.

Fred Eggleston,

Assistant General Counsel, Legislative Division.

I. International Postal Rates and Fees

A. New Rates

1. Letters and letter packages.

Weight steps, not over		Canada [1]	Mexico
Lbs.	Ozs.		
0	1	$0.30	$0.25
0	2	0.52	0.45
0	3	0.74	0.65
0	4	0.96	0.85
0	5	1.18	1.05
0	6	1.40	1.25
0	7	1.62	1.45
0	8	1.84	1.65
0	9	2.06	1.85
0	10	2.28	2.05
0	11	2.50	2.25
0	12	2.72	2.45
1	0	3.08	3.25
1	8	3.70	4.05
2	0	4.32	4.85
2	8	4.94	5.65
3	0	5.56	6.45
3	8	6.18	7.25
4	0	6.80	8.05

[1] Registered letters to Canada may weigh up to 66 pounds. For these items, the rate for each additional pound or fraction over 4 pounds is $1.24.

2. Letters and letter packages (Surface).

Weight steps, not over		All countries (other than Canada/Mexico)
Lbs.	Ozs.	
0	1	$0.40
0	2	0.63
0	3	0.86
0	4	1.09
0	5	1.32
0	6	1.55
0	7	1.78
0	8	2.01
1	0	3.60
1	8	5.20
2	0	6.60
2	8	7.60
3	0	8.60
3	8	9.60
4	0	10.60

3. Letters and Letter Packages (Air).

a. Canada and Mexico: refer to rates listed under A.1. Mail paid at this rate receives First-Class service in the United States and air service in Canada and Mexico.

b. All other Countries: 45 cents per half ounce up to and including 2 ounces; 42 cents each additional half ounce up to and including 32 ounces; 42 cents per additional ounce over 32 ounces.

4. Post and Postal Cards.

a. Surface.

(1) Canada: 21 cents each.

(2) Mexico: 15 cents each.

(3) All other countries: 28 cents each.

b. Air.

(1) Canada: 21 cents each.

(2) Mexico: 15 cents each.

(3) All countries (except Canada and Mexico): 36 cents each.

5. Aerogrammes: 39 cents each.

6. Other Articles (AO).

a. Surface.

(1) Regular Printed Matter.

Weight steps	Canada	Mexico	All other countries
Not over:			
1 oz	$0.30	$0.25	$0.40
2 oz	0.52	0.45	0.60
3 oz	0.74	0.65	0.80
4 oz	0.96	0.85	1.00
6 oz	1.21	1.05	1.28
8 oz	1.46	1.25	1.56
10 oz	1.71	1.45	1.84
12 oz	1.96	1.65	2.12
14 oz	2.21	1.85	2.40
16 oz	2.39	2.05	2.68
18 oz	2.57	2.25	2.92
20 oz	2.75	2.45	3.16
22 oz	2.93	2.65	3.40
24 oz	3.11	2.85	3.64
26 oz	3.29	3.05	3.88
28 oz	3.47	3.25	4.12
30 oz	3.65	3.45	4.36
32 oz	3.83	3.65	4.60
3 lbs	5.03	5.15	6.10
4 lbs	6.23	6.65	7.60
Each additional 1 lb	1.20	1.50	1.50

Weight steps	Canada	Mexico	All other countries
Direct sacks to one addressee (M-Bag): Minimum 15 lbs, maximum 66 lbs, per pound, or fraction	.96	1.20	1.20

(2) Publishers Periodicals.

Weight steps	All countries
Not over:	
1 oz	$0.20
2 oz	0.30
3 oz	0.40
4 oz	0.50
6 oz	0.64
8 oz	0.78
10 oz	0.92
12 oz	1.06
14 oz	1.20
16 oz	1.34
18 oz	1.46
20 oz	1.58
22 oz	1.70
24 oz	1.82
26 oz	1.94
28 oz	2.06
30 oz	2.18
32 oz	2.30
3 lbs	3.20
4 lbs	4.10
Each additional 1 lb	.90
Director sacks to one addressee (M-Bag): Minimum 15 lbs, maximum 66 lbs, per pound or fraction	.72

(3) Books and Sheet Music.

Weight steps	All countries
Not over:	
1 lbs	$1.34
2 lbs	2.30
3 lbs	3.20
4 lbs	4.10
5 lbs	5.00
6 lbs	5.90
7 lbs	6.80
8 lbs	7.70
9 lbs	8.60
10 lbs	9.50
11 lbs	10.40
Each additional 1 lb	.90
Direct sacks to one addressee (M-Bag): minimum 15 lbs, maximum 66 lbs, per pound or fraction	.72

(4) Small Packets.

Weight steps	Canada	Mexico	All other countries
Not over:			
1 oz	$0.30	$0.25	$0.40
2 oz	0.52	0.45	0.60
3 oz	0.74	0.65	0.80
4 oz	0.96	0.85	1.00
6 oz	1.21	1.05	1.28
8 oz	1.46	1.25	1.56
10 oz	1.71	1.45	1.84
12 oz	1.96	1.65	2.12
14 oz	2.21	1.85	2.40
16 oz	2.39	2.05	2.68
18 oz	2.57	2.25	2.92
20 oz	2.75	2.45	3.16
22 oz	2.93	2.65	3.40
24 oz	3.11	2.85	3.64
26 oz	3.29	3.05	3.88
28 oz	3.47	3.25	4.12
30 oz	3.65	3.45	4.36
32 oz	3.83	3.65	4.60
3 pounds			6.10
4 pounds			7.60

b. Air (Encompasses all Printed Matter, Matter for the Blind and Small Packets).

Weight steps	Canada and Mexico	Columbia Venezuela, Central America, Caribbean Islands, Bahamas, Bermuda, & St. Pierre & Miquelon (Also, from American Samoa to Western Samoa, & from Guam to the Philippines	South America (except Colombia & Venezuela), Europe (except Estonia, Latvia, Lithuania, & U.S.S.R.), & North Africa	Estonia, Latvia, Lithuania, U.S.S.R., Asia, Pacific Ocean Islands, Africa (other than North Africa) the Indian Ocean Islands & the Middle East
Not over:				
1 oz	(1)	$0.69	$0.83	$0.90
2 oz	(1)	1.06	1.32	1.54
3 oz	(1)	1.43	1.81	2.18
4 oz	(1)	1.80	2.30	2.82
6 oz	(1)	2.17	2.94	3.73
8 oz	(1)	2.54	3.58	4.64
10 oz	(1)	2.91	4.22	5.55
12 oz	(1)	3.28	4.86	6.46
14 oz	(1)	3.65	5.50	7.37

Weight steps	Canada and Mexico	Columbia Venezuela, Central America, Caribbean Islands, Bahamas, Bermuda, & St. Pierre & Miquelon (Also, from American Samoa to Western Samoa, & from Guam to the Philippines	South America (except Colombia & Venezuela), Europe (except Estonia, Latvia, Lithuania, & U.S.S.R.), & North Africa	Estonia, Latvia, Lithuania, U.S.S.R., Asia, Pacific Ocean Islands, Africa (other than North Africa) the Indian Ocean Islands & the Middle East
16 oz	(1)	4.02	6.14	8.26
18 oz	(1)	4.39	6.78	9.19
20 oz	(1)	4.76	7.42	10.10
22 oz	(1)	5.13	8.06	11.01
24 oz	(1)	5.50	8.70	11.92
26 oz	(1)	5.87	9.34	12.83
28 oz	(1)	6.24	9.98	13.74
30 oz	(1)	6.61	10.62	14.65
32 oz	(1)	6.98	11.26	15.56
2.5 pounds	(1)	8.38	13.76	19.11
3.0 pounds	(1)	9.78	16.26	22.66
3.5 pounds	(1)	11.18	18.76	26.21
4.0 pounds	(1)	12.58	21.26	29.76
Each additional 1/2 pound	(1)	1.40	2.50	3.55
Direct sack to one addressee (M-Bag), minimum 15 lbs., maximum 66 lbs., per pound or fraction	(1)	2.24	4.00	5.68

[1] See section C.

c. Air AO—Canada/Mexico (Encompasses all Printed Matter, Matter for the Blind and Small Packets).

Weight steps, not over	Canada	Mexico
1 ounces	$0.30	$0.25
2 ounces	0.52	0.45
3 ounces	0.74	0.65
4 ounces	0.96	0.85
5 ounces	1.18	1.05
6 ounces	1.40	1.25
7 ounces	1.62	1.45
8 ounces	1.84	1.65
9 ounces	2.06	1.85
10 ounces	2.28	2.05
11 ounces	2.50	2.25
12 ounces	2.72	2.45
16 ounces	3.08	3.25
24 ounces	3.70	4.05
32 ounces	4.32	4.85
2.5 pounds	4.94	5.65
3.0 pounds	5.56	6.45
3.5 pounds	6.18	7.25
4.0 pounds	6.80	8.05
Each additional ½ pound over 4 pounds	.62	.80
Direct sack to one addressee (M-Bag): Minimum 15 pounds, maximum 66 pounds, or fraction	.99	1.28

7. Parcel Post.

a. Surface

(1) Canada: $3.95 for over 1 pound and up to 2 pounds, and $1.20 for each additional pound or fraction.

(2) Mexico, Central America, the Caribbean Islands, Bahamas, Bermuda, St. Pierre and Miquelon: $4.40 for the first 2 pounds and $1.40 for each additional pound or fraction.

(3) All other countries: $4.60 for the first 2 pounds and $1.50 for each additional pound or fraction.

b. Air.

Air Parcel Post Rates.

(1) Canada.

Weight steps, not over (pounds)	Rates
1 to 2	$4.32
3	5.56
4	6.80
5	8.04
6	9.28
7	10.52
8	11.76
9	13.00
10	14.24
11	15.48
12	16.72
13	17.96
14	19.20
15	20.44
16	21.68
17	22.92
18	24.16
19	25.40
20	26.64
21	27.88
22	29.12
23	30.36
24	31.60
25	32.84
26	34.08
27	35.32
28	36.56
29	37.80
30	39.04
31	40.28
32	41.52
33	42.76
34	44.00
35	45.24
36	46.48
37	47.72
38	48.96
39	50.20
40	51.44
41	52.68
42	53.92
43	55.16
44	56.40
45	57.64
46	58.88
47	60.12
48	61.36
49	62.60
50	63.84
51	65.08
52	66.32
53	67.56
54	68.80
55	70.04
56	71.28
57	72.52
58	73.76
59	75.00
60	76.24
61	77.48
62	78.72
63	79.96
64	81.20
65	82.44
66	83.68

b. Air.

2. All other countries.

Weight steps	Country groups				
	A	B	C	D	E
First 1 pound	$5.50	$7.15	$8.70	$10.30	$11.95
Each additional pound or fraction up to 5 pounds	2.80	4.00	4.80	5.80	6.80
Each additional pound or fraction over 5 pounds	2.00	3.00	4.00	5.00	6.00

All Parcel Post Rate Groups: See list.

AIR PARCEL POST RATE GROUPS

Country	Rate Group	Maximum weight limits for air parcel post
Afghanistan	D	44
Albania	C	44
Algeria	D	44
Andorra	B	44
Angola	E	22
Anguilla	A	22
Antigua and Barbuda	A	22
Argentina	D	44
Aruba	A	44
Ascension	(1)	
Australia	D	44
Austria	B	44
Azores	C	22
Bahamas	A	22
Bahrain	D	22
Bangladesh	E	22
Barbados	B	44
Belgium	D	44
Belize	A	44
Benin	C	44
Bermuda	A	44
Bhutan	E	22
Bolivia	B	44
Botswana	E	22
Brazil	E	44
British Virgin Islands	A	44
Brunei	D	22
Bulgaria	D	44
Burkina Faso	D	44
Burma	D	22
Burundi	E	44
Cameron	D	44
Canada	(2)	66
Cape Verde	D	22
Cayman Islands	A	44
Central African Republic	E	44
Chad	D	44
Chile	D	22
China (Peoples Republic of)	D	44
Colombia	B	44
Camoros	E	44
Congo	D	44
Corsica	E	44
Costa Rica	A	44
Cote d'Ivoire (Ivory Coast)	D	44
Cuba	(3)	
Cyprus	C	44
Czechoslovakia	C	33
Denmark	C	44
Djibouti	D	44
Dominica	A	22
Dominican Republic	A	44
East Timor	(3)	
Ecuador	C	44
Egypt	D	44
El Salvador	B	44
Equatorial Guinea	D	44
Estonia	E	22
Ethiopia	D	44
Falkland Islands	D	44
Faroe Islands	C	44
Fiji	B	44
Finland	D	44
France (including Monaco)	E	44
French Guiana	C	44

AIR PARCEL POST RATE GROUPS—Continued

Country	Rate Group	Maximum weight limits for air parcel post
French Polynesia	D	44
Gabon	D	44
Gambia	B	22
German Democratic Republic (East Germany).	C	44
Germany, Federal Republic of (West Germany).	C	44
Ghana	D	22
Gibraltar	C	44
Great Britain and Northern Ireland.	C	50
Greece	C	44
Greenland	D	44
Grenada	A	22
Guadeloupe	A	44
Guatemala	A	44
Guinea	B	44
Guinea-Bissau	B	22
Guyana	B	44
Haiti	A	44
Honduras	B	44
Hong Kong	C	44
Hungary	C	44
Iceland	C	44
India	D	44
Indonesia	E	22
Iran	D	44
Iraq	D	44
Ireland (Eire)	C	22
Israel	C	33
Italy (including San Marino)	C	44
Jamaica	A	22
Japan	E	22
Jordan	C	44
Kampuchea	(3)	
Kenya	D	44
Kiribati	B	44
Korea, Democratic People's Republic.	(3)	
Korea, Republic of	C	44
Kuwait	C	44
Lao	E	44
Latvia	E	22
Lebanon	C	11
Lesotho	E	22
Liberia	C	22
Libya	D	44
Lithuania	E	22
Luxembourg	B	44
Macao	C	22
Madagascar	E	44
Madeira Islands	B	22
Malawi	D	44
Malaysia	D	22
Maldives	D	22
Mali	C	44
Malta	C	22
Martinique	A	44
Mauritania	D	44
Mauritius	E	22
Mexico	A	44
Mongolia	(3)	
Montserrat	A	44
Morocco	C	44

AIR PARCEL POST RATE GROUPS—Continued

Country	Rate Group	Maximum weight limits for air parcel post
Mozambique	E	22
Nauru	C	44
Nepal	D	44
Netherlands	C	44
Netherlands Antilles	A	44
New Caledonia	D	44
New Zealand	D	22
Nicaragua	B	44
Niger	D	44
Nigeria	C	22
Norway	D	44
Oman	D	22
Pakistan	D	22
Panama	A	44
Papua New Guinea	D	44
Paraguay	D	44
Peru	B	44
Philippines	D	44
Pitcairn Islands	B	22
Poland	B	44
Portugal	C	22
Qatar	C	44
Reunion	E	44
Romania	C	44
Rwanda	D	44
Saint Christoper and Nevis	A	44
Saint Helena	C	44
Saint Lucia	A	44
Saint Pierre and Miquelon	A	44
Saint Vincent and the Grenadines.	A	22
Sao Tome and Principe	D	44
Saudia Arabia	D	22
Senegal	D	44
Seychelles	D	22
Sierre Leone	D	44
Singapore	D	22
Solomon Islands	C	44
Somalia	D	44
South Africa (including South West Africa and Namibia).	D	22
Spain	C	44
Sri Lanka	D	44
Sudan	D	44
Suriname	B	44
Swaziland	D	44
Sweden	D	44
Switzerland (including Leichtenstein).	B	44
Syria	C	44
Taiwan	C	44
Tanzania	E	22
Thailand	D	44
Togo	D	44
Tonga	B	22
Trinidad and Tobago	B	22
Tristan da Cunha	E	22
Tunisia	C	44
Turkey	C	44
Turks and Caicos Islands	A	22
Tuvalu	B	44
Uganda	D	22
Union of Soviet Socialist Republic.	E	22

AIR PARCEL POST RATE GROUPS—Continued

Country	Rate Group	Maximum weight limits for air parcel post
United Arab Emirates	D	44
Uruguay	B	44
Vanuatu	B	44
Vatican City State	C	44
Venezuela	B	44
Vietnam	(3)	
Wallis and Futuna Islands	D	44
Western Samoa	B	22
Yemen Arab Republic	D	22
Yemen, Peoples Democratic Representative of	E	44
Yugoslavia	C	22
Zaire	E	44
Zambia	E	44
Zimbabwe	E	44

[1] No air service.
[2] Separate rate group.
[3] No parcel post service.

8. Express Mail International Service for Countries by Rate Group, See List.

a. Custom Designed Service [1 2 3]

(1) Group 1:

Pounds (up to and including)	Rates
1-2	$31.20
3	33.40
4	35.60
5	37.80
6	40.00
7	42.20
8	44.40
9	46.60
10	48.80
11	51.00
12	53.20
13	55.40
14	57.60
15	59.80
16	62.00
17	64.20
18	66.40
19	68.60
20	70.80
21	73.00
22	75.20
23	77.40
24	79.60
25	81.80
26	84.00
27	86.20
28	88.40
29	90.60
30	92.80
31	95.00
32	97.20
33	99.40
34	101.60
35	103.80
36	106.00
37	108.20
38	110.40
39	112.60
40	114.80
41	117.00
42	119.20
43	121.40
44	123.60
45	125.80
46	128.00
47	130.20
48	132.40
49	134.60
50	136.80
51	139.00
52	141.20
53	143.40
54	145.60
55	147.80
56	150.00
57	152.20
58	154.40
59	156.60
60	158.80
61	161.00
62	163.20
63	165.40
64	167.60
65	169.80
66	172.00

[1] Rates for pieces 1 pound and under published in November 12, 1987, FEDERAL REGISTER Notice.

[2] Rates in these tables are applicable to each piece of International Custom Designed Express Mail shipped under a Service Agreement providing for tender by the customer at a designated Post Office.

[3] Pickup is available under a Service Agreement for an added charge of $4.00 for each pickup stop, regardless of the number of pieces picked up. Domestic and International Express Mail picked up together under the same Service Agreement incurs only one pickup charge.

(2) Group 2:

Pounds (up to and including)	Rates
1-2	$33.50
3	38.00
4	42.50
5	47.00
6	51.50
7	56.00
8	60.50
9	65.00
10	69.50
11	74.00
12	78.50
13	83.00
14	87.50
15	92.00
16	96.50
17	101.00
18	105.50
19	110.00
20	114.50
21	119.00
22	123.50
23	128.00
24	132.50
25	137.00
26	141.50
27	146.00
28	150.50
29	155.00
30	159.50
31	164.00
32	168.50
33	173.00
34	177.50
35	182.00
36	186.50
37	191.00
38	195.50
39	200.00
40	204.50
41	209.00
42	213.50
43	218.00
44	222.50

(3) Group 3:

Pounds (up to and including)	Rates
1-2	$34.70
3	40.40
4	46.10
5	51.80
6	57.50
7	63.20
8	68.90
9	74.60
10	80.30
11	86.00
12	91.70
13	97.40
14	103.10
15	108.80
16	114.50
17	120.20
18	125.90
19	131.60
20	137.30
21	143.00
22	148.70
23	154.40
24	160.10
25	165.80
26	171.50
27	177.20
28	182.90
29	188.60
30	194.30
31	200.00
32	205.70
33	211.40
34	217.10
35	222.80
36	228.50
37	234.20
38	239.90
39	245.60
40	251.30
41	257.00
42	262.70
43	268.40
44	274.10

(4) Group 4:

Pounds (up to and including)	Rates
1-2	$36.00
3	43.00
4	50.00
5	57.00
6	64.00
7	71.00
8	78.00
9	85.00
10	92.00
11	99.00
12	106.00
13	113.00
14	120.00
15	127.00
16	134.00
17	141.00
18	148.00
19	155.00
20	162.00
21	169.00
22	176.00
23	183.00
24	190.00
25	197.00
26	204.00
27	211.00
28	218.00
29	225.00
30	232.00
31	239.00
32	246.00
33	253.00

Pounds (up to and including)	Rates
34	260.00
35	267.00
36	274.00
37	281.00
38	288.00
39	295.00
40	302.00
41	309.00
42	316.00
43	323.00
44	330.00
45	337.00
46	344.00
47	351.00
48	358.00
49	365.00
50	372.00

b. On Demand Service [1] [2]

(1) Group 1:

Pounds (up to and including)	Rates
1-2	$23.20
3	25.40
4	27.60
5	29.80
6	32.00
7	34.20
8	36.40
9	38.60
10	40.80
11	43.00
12	45.20
13	47.40
14	49.60
15	51.80
16	54.00
17	56.20
18	58.40
19	60.60
20	62.80
21	65.00
22	67.20
23	69.40
24	71.60
25	73.80
26	76.00
27	78.20
28	80.40
29	82.60
30	84.80
31	87.00
32	89.20
33	91.40
34	93.60
35	95.80
36	98.00
37	100.20
38	102.40
39	104.60
40	106.80
41	109.00
42	111.20
43	113.40
44	115.60
45	117.80
46	120.00
47	122.20
48	124.40
49	126.60
50	128.80
51	131.00
52	133.20
53	135.40
54	137.60
55	139.80
56	142.00
57	144.20
58	146.40
59	148.60
60	150.80
61	153.00
62	155.20
63	157.40
64	159.60
65	161.80
66	164.00

[1] Rates for pieces 1 pound and under published in November 12, 1987, FEDERAL REGISTER Notice.

[2] Pickup is available under a Service Agreement for an added charge of $4.00 for each pickup stop, regardless of the number of pieces picked up. Domestic and International Express Mail picked up together under the same Service Agreement incurs only one pickup charge.

(2) Group 2:

Pounds (up to and including)	Rates
1-2	$25.50
3	30.00
4	34.50
5	39.00
6	43.50
7	48.00
8	52.50
9	57.00
10	61.50
11	66.00
12	70.50
13	75.00
14	79.50
15	84.00
16	88.50
17	93.00
18	97.50
19	102.00
20	106.50
21	111.00
22	115.50
23	120.00
24	124.50
25	129.00
26	133.50
27	138.00
28	142.50
29	147.00
30	151.50
31	156.00
32	160.50
33	165.00
34	169.50
35	174.00
36	178.50
37	183.00
38	187.50
39	192.00
40	196.50
41	201.00
42	205.50
43	210.00
44	214.50

(3) Group 3:

Pounds (up to and including)	Rates
1-2	$26.70
3	32.40
4	38.10
5	43.80
6	49.50
7	55.20
8	60.90
9	66.60
10	72.30
11	78.00
12	83.70
13	89.40
14	95.10
15	100.80
16	106.50
17	112.20
18	117.90
19	123.60
20	129.30
21	135.00
22	140.70
23	146.40
24	152.10
25	157.80
26	163.50
27	169.20
28	174.90
29	180.60
30	186.30
31	192.00
32	197.70
33	203.40
34	209.10
35	214.80
36	220.50
37	226.20
38	231.90
39	237.60
40	243.30
41	249.00
42	254.70
43	260.40
44	266.10

(4) Group 4:

Pounds (up to and including)	Rates
1-2	$28.00
3	35.00
4	42.00
5	49.00
6	56.00
7	63.00
8	70.00
9	77.00
10	84.00
11	91.00
12	98.00
13	105.00
14	112.00
15	119.00
16	126.00
17	133.00
18	140.00
19	147.00
20	154.00
21	161.00
22	168.00
23	175.00
24	182.00
25	189.00
26	196.00
27	203.00
28	210.00
29	217.00
30	224.00
31	231.00
32	238.00
33	245.00
34	252.00
35	259.00
36	266.00
37	273.00
38	280.00
39	287.00
40	294.00
41	301.00
42	308.00

Pounds (up to and including)	Rates
43	315.00
44	322.00
45	329.00
46	336.00
47	343.00
48	350.00
49	357.00
50	364.00

INTERNATIONAL EXPRESS MAIL—RATE GROUPS AND MAXIMUM WEIGHT LIMITS

Country	Rate group	Maximum weight (lbs.)
Argentina	3	44
Australia	4	44
Austria	2	44
Bahamas	2	44
Bahrain	3	44
Bangladesh	4	44
Barbados	2	44
Belgium	3	44
Bermuda	1	44
Brazil	4	50
Burkina Faso	3	44
Canada	1	66
Cayman Islands	2	44
Chad	3	44
Chile	3	33
China, Peoples Republic of	4	33
Colombia	2	44
Cote d'Ivoire (Ivory Coast)	3	44
Cyprus	3	44
Denmark (including Faroe Islands)	3	44
Djibouti	4	44
Egypt	3	44
Finland	3	44
France (including Corsica and Monaco)	3	44
Germany, Federal Republic of	2	44
Great Britain/Northern Ireland	2	44
Greece	3	44
Guinea	3	44
Guyana	2	44
Hong Kong	3	44
Hungary	2	44
Iceland	3	44
India	4	44
Indonesia	4	22
Ireland	2	44
Israel	3	33
Italy	3	44
Japan	4	44
Jordan	3	44
Korea, Republic of	3	44
Kuwait	3	44
Luxembourg	2	44
Macao	3	44
Malaysia	4	33
Mali	3	44
Mexico	1	44
Netherlands	3	44
Netherlands Antilles	2	44
New Zealand	4	44
Niger	3	44
Nigeria	3	44
Norway	3	44
Oman	3	44
Pakistan	3	22
Panama	2	44
Portugal (including Madeira Islands and Azores)	2	44
Qatar	3	44
Rwanda	4	44
Saudi Arabia	3	22
Senegal	3	44

INTERNATIONAL EXPRESS MAIL—RATE GROUPS AND MAXIMUM WEIGHT LIMITS—Continued

Country	Rate group	Maximum weight (lbs.)
Singapore	4	44
South Africa	4	44
Spain	2	44
Sweden	3	44
Switzerland (including Liechtenstein	3	33
Taiwan	3	33
Tanzania	4	22
Thailand	4	44
Tunisia	3	44
Turkey	3	44
United Arab Emirates	3	44
Uruguay	3	44
Venezuela	2	44

B. New Special Mail Services Fees.

1. Nonstandard Surcharge:

a. Letters (weighing one ounce or less): 10 cents.

b. Regular Printed Matter (weighing one ounce or less): 10 cents.

2. Customs Clearance and Delivery Fee: $3.25

3. Inquiry Fee: $5.00

4. Return receipt requested at time of mailing: 90 cents.

5. Registered Mail

Limit of indemnity and Fee

1. Canada:

$000.00 to $100 ..... $4.50
$100.01 to $500 ..... 4.85
$500.01 to $1,000 ..... 5.25

2. All other countries:

$24.60 ..... $4.40

6. Insured Mail:

Limit of Indemnity [1]	Fees	
Not over	Canada	All other countries
50	$0.70	$1.50
100	1.50	1.90
150	1.90	3.15
200	2.20	3.15
300	3.15	4.30
400	4.30	5.00
500	5.00	5.70
600		6.40
700		7.10
800		7.80
900		8.50
1,000		9.20
1,100		9.90
1,200		10.60

[1] Limits vary by country.

7. Money Orders:

a. Orders Issued on Domestic Form:

Amount of Money Order and Fee

$0.01 to $35 ..... $.75
$35.01 to $700 ..... 1.00

Note: Service is not available to all countries. See IMM for service availability. When service is available each order is limited to $700, except $200 to Great Britain and $400 to Norway.

b. Orders Issued on International Form (including Japan): $3.00 per money order.

c. Charge for a photostat of a paid money order issued on a domestic form or pursuant to an international authorization form: $2.00.

8. Special Handling:

Weight and Fee

Not More than 10 pounds $1.55
More than 10 pounds 2.25

9. Special Delivery:

Class of mail	Not over 2 pounds	Over 2 pounds
Letters, letter packages, post and postal cards	$5.35	$5.75
Other articles	5.85	6.50

10. Restricted Delivery: $2.00.

11. Certificates of Mailing:

	Fee
Individual listed pieces:	
Original or Copy of original Certificate of mailing or receipt for registered or insured mail (per piece) (Form 3817)	$0.45
Firm mailing books (per piece) (Form 3877)	0.15
Identical pieces:	
Up to 1,000 pieces	2.00
For each additional 1,000 pieces, or fraction	0.25
Duplicate copy	0.45

12. Return charges for returned publishers' periodicals mailed to Canada by publishers or registered news agents (781.5a, International Mail Manual).

Weight not over	Charge
1 oz	$.25
2	.45
3	.65
4	.85
6	1.00
8	1.10
10	1.20
12	1.30
14	1.40
16	1.50

For weights over 1 pound, use the domestic 8th zone fourth-class rate.

13. International Reply Coupons:

Selling price for U.S. issued coupons: 95 cents.

[FR Doc. 88-8362 Filed 4-14-88; 8:45 am]

BILLING CODE 7710-12-M

SECURITIES AND EXCHANGE COMMISSION

Self-Regulatory Organizations; Applications for Unlisted Trading Privileges and of Opportunity for Hearing; Midwest Stock Exchange, Inc.

April 11, 1988.

The above named national securities exchange has filed applications with the Securities and Exchange Commission pursuant to section 12(f)(1)(B) of the Securities Exchange Act of 1934 and Rule 12f-1 thereunder, for unlisted trading privileges in the following stocks:

Brazil Fund, Inc.
Common Stock, $.01 Par Value (File No. 7-3232)

British Gas PLC
Final Installment American Depositary Receipts (File No. 7-3233)

WPL Holdings, Inc.
Common Stock, $.01 Par Value (File No. 7-3234)

These securities are listed and registered on one or more other national securities exchange and are reported in the consolidated transaction reporting system.

Interested persons are invited to submit on or before May 2, 1988, written data, views and arguments concerning the above-referenced applications. Persons desiring to make written comments should file three copies thereof with the Secretary of the Securities and Exchange Commission, 450 Fifth Street NW., Washington, DC 20549. Following this opportunity for hearing, the Commission will approve the applications if it finds, based upon all the information available to it, that the extensions of unlisted trading privileges pursuant to such applications are consistent with the maintenance of fair and orderly markets and the protection of investors.

For the Commission, by the Division of Market Regulation, pursuant to delegated authority.

Jonathan G. Katz,
Secretary.

[FR Doc. 88-8292 Filed 4-14-88; 8:45 am]

BILLING CODE 8010-01-M

Self-Regulatory Organizations; Applications for Unlisted Trading Privileges and of Opportunity for Hearing; Philadelphia Stock Exchange, Inc.

April 11, 1988.

The above named national securities exchange has filed applications with the Securities and Exchange Commission pursuant to section 12(f)(1)(B) of the Securities Exchange Act of 1934 and Rule 12f-1 thereunder, for unlisted trading privileges in the following stock:

Kansas City Southern Industries, Inc.
Common Stock, No Par Value (File No. 7-3230)

This security is listed and registered on one or more other national securities exchange and is reported in the consolidated transaction reporting system.

Interested persons are invited to submit on or before May 2, 1988 written data, views and arguments concerning the above-referenced applications. Persons desiring to make written comments should file three copies thereof with the Secretary of the Securities and Exchange Commission, 450 Fifth Street, NW., Washington, DC 20549. Following this opportunity for hearing, the Commission will approve the applications if it finds, based upon all the information available to it, that the extensions of unlisted trading privileges pursuant to such applications are consistent with the maintenance of fair and orderly markets and the protection of investors.

For the Commission, by the Division of Market Regulation, pursuant to delegated authority.

Jonathan G. Katz,
Secretary.

[FR Doc. 88-8293 Filed 4-14-88; 8:45 am]

BILLING CODE 8010-01-M

SMALL BUSINESS ADMINISTRATION

Region IV Advisory Council; Public Meeting

The U.S. Small Business Administration, Region IV Advisory Council, located in the geographical area of Columbia, South Carolina, will hold a public meeting at 9:00 a.m. on Tuesday, April 26, 1988 at the Embassy Suites, I-20 Greystone Boulevard, Columbia, South Carolina, to discuss such matters as may be presented by members, staff of the U.S. Small Business Administration, or others present.

For further information, write or call John C. Patrick, Jr., District Director, U.S. Small Business Administration, P.O. Box 2786, Columbia, South Carolina (803) 765-5339.

Jean M. Nowak,
Director, Office of Advisory Councils.

April 11, 1988.

[FR Doc. 88-8252 Filed 4-14-88; 8:45 am]

BILLING CODE 8025-01-M

DEPARTMENT OF TRANSPORTATION

Coast Guard

[CGD 88-023]

Vessels Under the Optional Simplified Measurement Method

AGENCY: Coast Guard, DOT.

ACTION: Notice that Coast Guard is changing the application procedure for measurement of vessels under the Optional Simplified Measurement method.

SUMMARY: The Coast Guard is publishing notice that, on and after May 2, 1988, the applications required under 46 CFR 69.05 for simplified measurement will be accepted and processed, as part of the vessel documentation application process, at the vessel's intended port of documentation.

EFFECTIVE DATE: May 2, 1988.

FOR FURTHER INFORMATION CONTACT: Mr. Ray L. Bunnell, Tonnage Survey Branch, Merchant Vessel Inspection and Documentation Division, Office of Marine Safety, Security, and Environmental Protection, U.S. Coast Guard, 2100 Second Street SW., Washington, DC 20593-0001, (202) 267-2992. Normal office hours are between 7:00 a.m. and 3:30 p.m. Monday through Friday, except holidays.

SUPPLEMENTARY INFORMATION: Tonnages calculated under the Optional Simplified Measurement method are employed as a basis to document a vessel as a vessel of the United States. Simplified measurement presently applies to domestically-operated commercial vessels less than 79 feet in length overall and to barges of any length, and to pleasure vessels of any length, whether or not engaged in international voyages. An applicant who intends to document a vessel with tonnages calculated under the simplified measurement system currently is required to forward the application to a central processing unit located at Coast Guard Headquarters. During the past year the Coast Guard has programmed the Marine Safety Information System (MSIS) to accept vessel documentation and simplified measurement data processing at each vessel

documentation office. This capability will eliminate the current requirement for separate processing of simplified measurement applications at Coast Guard headquarters.

As of May 2, 1988, applications for simplified measurement will be accepted as part of the vessel documentation application process at the vessel's intended port of documentation. Applications for simplified measurement that are received at headquarters before May 2, 1988, will be processed. Applications received on or after that date will be forwarded to the vessel documentation office designated by the applicant.

April 11, 1988.

P.C. Lauridsen,

Captain, U.S. Coast Guard Acting Chief, Office of Maine Safety Security and Environmental Protection.

[FR Doc. 88-8200 Filed 4-14-88; 8:45 am]

BILLING CODE 4910-14-M

National Highway Traffic Safety Administration

[Docket No. IP 87-13; Notice 2]

General Motors Corp; Grant of Petition for Determination or Inconsequential Noncompliance

This notice grants the petition by General Motors Corporation of Warren, Michigan, to be exempted from the notification and remedy requirements of the National Traffic and Motor Vehicle Safety Act (15 U.S.C. 1381 *et seq.*) for an apparent noncompliance with 49 CFR 571.102, Federal Motor Vehicle Safety Standard No. 102, "Transmission Shift Lever Sequence, Starter Interlock, and Transmission Braking Effect." The basis of the grant is that the noncompliance is inconsequential as it relates to motor vehicle safety.

Notice of the petition was published on January 14, 1988, and an opportunity afforded for comment (53 FR 987).

Section S3.2 of Standard No. 102 requires that:

> Identification of shift lever positions of automatic transmissions and of the shift lever pattern of manual transmissions, except three forward speed manual transmissions having the standard "H" pattern, shall be permanently displayed in view of the driver.

Section 571.3 of 49 CFR defines a "driver" as the occupant of a motor vehicle seated immediately behind the steering control system." In recent interpretations of Standard No. 102, NHTSA has stated that section S3.2's requirement that the identification of shift lever positions of automatic transmissions be permanently displayed in view of the driver requires a display whenever a driver is in the driver's seating position, even if the ignition is not turned on. General Motors has manufactured approximately 113,000 passenger cars that do not comply with this interpretation of Standard No. 102. The vehicles are equipped with displays for electronic transmission shift lever position which are only visible to the driver when the ignition switch is turned to the positions of "on" on "off." According to NHTSA's interpretation, this does not meet the requirement for permanently-displayed shift lever positions. The following table shows the number of noncompliant vehicles sold between 1985 and 1987 by model type.

Model type	No. of vehicles sold		
	1985	1986	[1] 1987
Buick, Electra and LeSabre	.....	9,637	21,574
Olds Regency and Delta 88	7,679	29,965	36,824
Olds Toronado	.....	3,164	7,360

[1] 1987 figures are General Motors projected sales.

General Motors vehicles equipped with electronic transmission shift lever position displays and built on or after November 15, 1987, have an additional message on the instrument panel which states: "Vehicle is in Park before [P]RNDL is Illuminated."

In General Motors' view, this eliminates any future noncompliance. General Motors believes the noncompliance is inconsequential for the following reasons:

> First and, perhaps, foremost, we do not perceive a need for displaying the PRNDL based exclusively on occupancy of the driver's seating position. The need arises when someone is driving the vehicle and, by virtue of driving the vehicles, has occasion to shift the transmission. The affected GM vehicles are all equipped with backdrive. Therefore, it is not possible to shift the transmission when the key is in the "lock" or "accessory" positions. In addition, it is not possible to turn the key to the "lock" or "accessory" positions unless the transmission is in park. Given that the purpose of section S3.2 is to avoid the likelihood of shifting errors, we believe GM's electronic PRNDL designs not only satisfy that objective, but may in fact represent an improvement over conventional mechanical designs.
>
> A second major consideration is that the recent [agency] interpretations do not appear to use the term 'driver' as comprehended in the purpose of FMVSS 102. Recall that the requirement is that the PRNDL be permanently displayed in view of the driver. It seems to us that, for purposes of FMVSS No. 102, a driver is more than just someone who happens to be occupying the driver's seat. Any number of examples could be given, such as a small child who might crawl into the seat, or someone sitting at a drive-in theatre watching a movie, etc., where the seat is occupied but where the vehicle is not being operated.

No comments were received on the petition.

In light of the particular design of these vehicles, the noncompliance with Standard No. 102 reported by General Motors appears to be more of form than of substance. The vehicles are equipped with a system which prevents the transmission from being shifted when the key is in the "lock" or "accessory" position. When the ignition switch is moved out of these positions, the PRNDL display is activated, providing the driver with the information required by Standard No. 102 necessary to avoid errors in gear shifting.

In consideration of the foregoing, it is hereby found that petitioner has met its burden of persuasion that the noncompliance herein described is inconsequential as it relates to motor vehicle safety, and its petition is granted.

(Section 102, Pub. L. 93-492, 88 Stat. 1470 (15 U.S.C. 1417); delegations of authority at 49 CFR 1.50 and 49 CFR 501.8.)

Issued on: April 11, 1988.

Barry Felrice,

Associate Administrator for Rulemaking.

[FR Doc. 88-8247 Filed 4-14-88; 8:45 am]

BILLING CODE 4910-59-M

[Docket 37554]

Order Adjusting the Standard Foreign Fare Level Index

The International Air Transportation Competition Act (IATCA), Pub. L. 96-192, requires that the Department, as successor to the Civil Aeronautics Board, establish a Standard Foreign Fare Level (SFFL) by adjusting the SFFL base periodically by percentage changes in actual operating costs per available seat-mile. Order 80-2-69 established the first interim SFFL and Order 88-2-30 set the currently effective two-month SFFL applicable through March 31, 1988.

In establishing the SFFL for the two-month period beginning April 1, 1988, we have projected nonfuel costs based on the year ended December 31, 1987 data, and have determined fuel prices on the basis of the latest experienced monthly fuel cost levels as reported to the Department.

By Order 88-4-38 fares may be increased by the following factors over the October 1, 1979, level:

Atlantic	1.1863
Latin America	1.1769
Pacific	1.5293
Canada	1.1631

For Further Information Contact: Julien R. Schrenk (202) 366-2441.

By the Department of Transportation.

Dated: April 11, 1988.

[FR Doc. 88-8360 Filed 4-14-88; 8:45 am]

BILLING CODE 4910-62-M

Sunshine Act Meetings

Federal Register
Vol. 53, No. 73
Friday, April 15, 1988

This section of the FEDERAL REGISTER contains notices of meetings published under the "Government in the Sunshine Act", (Pub. L. 94-409) 5 U.S.C. 552b(e)(3).

FEDERAL MARITIME COMMISSION

TIME AND DATE: 10:00 a.m., April 20, 1988.

PLACE: Hearing Room One, 1100 L Street, NW., Washington, DC 20573.

STATUS: Closed.

MATTERS TO BE CONSIDERED:

1. Baton Rouge Marine Contractors, Inc.—Proposed Investigation of Unfiled Agreement.
2. Docket No. 87-22—United States Lines (S.A.) Inc.—Petition for Declaratory Order Re: The Brazil Agreements—Consideration of the Record.

CONTACT PERSON FOR MORE INFORMATION: Joseph C. Polking, Secretary, (202) 523-5723.

Joseph C. Polking,
Secretary.

[FR Doc. 88-8373 Filed 4-13-88; 9:40 a.m.]

BILLING CODE 6730-01-M

FEDERAL RESERVE SYSTEM BOARD OF GOVERNORS

TIME AND DATE: Approximately 10:30 a.m., Wednesday, April 20, 1988, following a recess at the conclusion of the open meeting.

PLACE: Marriner S. Eccles Federal Reserve Board Building, C Street entrance between 20th and 21st Streets, NW., Washington, DC 20551.

STATUS: Closed.

MATTERS TO BE CONSIDERED:

1. Personnel actions (appointments, promotions, assignments, reassignments, and salary actions) involving individual Federal Reserve System employees.
2. Any items carried forward from a previously announced meeting.

CONTACT PERSON FOR MORE INFORMATION: Mr. Joseph R. Coyne, Assistant to the Board; (202) 452-3204. You may call (202) 452-3207, beginning at approximately 5 p.m. two business days before this meeting, for a recorded announcement of bank and bank holding company applications scheduled for the meeting.

Date: April 13, 1988.

James McAfee,
Associate Secretary of the Board.

[FR Doc. 88-8378 Filed 4-13-88; 10:05]

BILLING CODE 6210-01-M

FEDERAL RESERVE SYSTEM BOARD OF GOVERNORS

TIME AND DATE: 10:00 a.m., Wednesday, April 20, 1988.

PLACE: Marriner S. Eccles Federal Reserve Board Building, C Street entrance between 20th and 21st Streets, NW., Washington, DC 20551.

STATUS: Open.

MATTERS TO BE CONSIDERED:

Summary Agenda

Because of their routine nature, no substantive discussion of the following items is anticipated. These matters will be voted on without discussion unless a member of the Board requests that an item be moved to the discussion agenda.

1. Publication for comment of proposed amendment to Regulation H (Membership of State Banking Institutions in the Federal Reserve System) to facilitate public access to financial information regarding state member banks.

2. Proposed uniform supervisory policy for finanical institutions regarding selection of securities dealers and unsuitable investment practices.

Discussion Item

3. Proposed amendment to Regulation T (Credit by Brokers and Dealers) to make certain foreign sovereign debt securities marginable.

4. Any items carried forward from a previously announced meeting.

Note.—This meeting will be recorded for the benefit of those unable to attend. Cassettes will be available for listening in the Board's Freedom of Information Office, and copies may be ordered for $5 per cassette by calling (202) 452-3684 or be writing to: Freedom of Information Office, Board of Governors of the Federal Reserve System, Washington, DC 20551.

CONTACT PERSON FOR MORE INFORMATION: Mr. Joseph R. Coyne, Assistant to the Board; (202) 452-3204.

Date: April 13, 1988.

James McAfee,
Associate Secretary of the Board.

[FR Doc. 88-8379 Filed 4-13-88; 10:06 am]

BILLING CODE 6210-01-M

FEDERAL TRADE COMMISSION

TIME AND DATE: 2:00 p.m., Friday, April 8, 1988.

PLACE: Room 432, Federal Trade Commission Building, 6th Street and Pennsylvania Avenue, NW., Washington, DC 20580.

STATUS: Closed.

Consideration of disclosure of nonpublic information concerning an ongoing Part II matter to a member of Congress.

CONTACT PERSON FOR MORE INFORMATION: Susan B. Ticknor, Office of Public Affairs: (202) 326-2179; Recorded Message: (202) 326-2711.

Emily H. Rock,
Secretary.

[FR Doc. 88-8369 Filed 4-13-88; 9:01 am]

BILLING CODE 6750-01-M

FEDERAL TRADE COMMISSION

TIME AND DATE: 10:00 a.m., Wednesday, April 13, 1988.

PLACE: Room 432, Federal Trade Commission Building, 6th Street and Pennsylvania Avenue NW., Washington, DC 20580.

STATUS: Open.

MATTER TO BE CONSIDERED: Briefing by Commissioner Calvani on recent speeches, and reactions thereto, on the subject of non-uniform state regulation in the franchise area.

CONTACT PERSON FOR MORE INFORMATION: Susan B. Ticknor, Office of Public Affairs: (202) 326-2179; Recorded Message: (202) 326-2711.

Emily H. Rock,
Secretary.

[FR Doc. 88-8370 Filed 4-13-88; 8:45 am]

BILLING CODE 6750-01-M

FEDERAL TRADE COMMISSION

TIME AND DATE: 10:00 a.m., Monday, April 18, 1988.

PLACE: Room 432, Federal Trade Commission Building, 6th Street and Pennsylvania Avenue, NW, Washington, DC 20580.

STATUS: Open.

MATTER TO BE CONSIDERED: Presentation by the American Association of Advertising Agencies and the Association of National Advertisers entitled "Genesis of a Successful Advertising Campaign".

CONTACT PERSON FOR MORE INFORMATION: Susan B. Ticknor, Office of Public Affairs: (202) 326-2179; Recorded Message: (202) 326-2711.

Emily H. Rock,
Secretary.

[FR Doc. 88-8371 Filed 4-13-88; 9:01 am]

BILLING CODE 6750-01-M

Corrections

Federal Register
Vol. 53, No. 73
Friday, April 15, 1988

This section of the FEDERAL REGISTER contains editorial corrections of previously published Presidential, Rule, Proposed Rule, and Notice documents and volumes of the Code of Federal Regulations. These corrections are prepared by the Office of the Federal Register. Agency prepared corrections are issued as signed documents and appear in the appropriate document categories elsewhere in the issue.

DEPARTMENT OF AGRICULTURE

Animal and Plant Health Inspection Service

9 CFR Part 92

[Docket No. 87-180]

Specifically Approved States Authorized To Receive Mares and Stallions Imported From CEM-Affected Countries

Correction

In rule document 88-7435 beginning on page 11043 in the issue of Tuesday, April 5, 1988, make the following correction:

PART 92—[CORRECTED]

On page 11044, in the second column, in the **Authority** , in the first line, the first cite should read "7 U.S.C. 1622;".

BILLING CODE 1505-01-D

ENVIRONMENTAL PROTECTION AGENCY

21 CFR Part 561

[PP 5H5467/R937; FRL-3331-4]

Pesticide Tolerances for Ethephon

Correction

In rule document 88-3557 appearing on page 5367 in the issue of Wednesday, February 24, 1988, make the following correction:

§ 561.225 [Corrected]

In the third column, in § 561.225(a), in the table, the first heading "Foods" should read "Feeds".

BILLING CODE 1505-01-D

ENVIRONMENTAL PROTECTION AGENCY

40 CFR Part 180

[PP 6E3457/R938; FRL-3333-2]

Pesticide Tolerance for 3,5-Dichloro-N-(1,1-Dimethyl-2-Propynyl)Benzamide

Correction

In rule document 88-3899 appearing on page 5378 in the issue of Wednesday, February 24, 1988, make the following correction:

§ 180.317 [Corrected]

In the second column, in § 180.317, in the heading, in the second line, "propynyl" was misspelled.

BILLING CODE 1505-01-D

ENVIRONMENTAL PROTECTION AGENCY

[OPP-240076; FRL-3333-3]

EPA Denial of Application for Federal Registration for Certain Intrastate Pesticide Products; Chevron Chemical Co. et al.

Correction

In notice document 88-3904 beginning on page 5459 in the issue of Wednesday, February 24, 1988, make the following corrections:

On page 5460:

1. In the table, in the second column, in the 34th and 35th entries, insert "Southern" in front of "Tobacco".

2. In the table, in the last column, the 13th entry should read "2224-5650 (MD)"; and the last entry should read "3286-8105 (TX)".

On page 5461:

3. In the table, in the first column, in the sixth entry, "32000" should read "3200".

4. In the table, in the last column, in the 26th and 27th entries "(TX)" should read "(GA)"; and in the 29th entry, "(TX)" should read "(AL)".

On page 5464:

5. In the table, in the first column, in the third line from the bottom of the table, "LA" should read "AL".

6. In the table, in the second column, in the 26th entry, insert a hyphen between "Dewey" and "Dimethoate"; and in the 30th entry, "Dylow" should read "Dylox".

7. In the table, in the last column, in the 16th entry "(IH)" should read "(HI)".

8. On page 5464, in the first column, in the first paragraph, in the first line, "Agency" was misspelled.

BILLING CODE 1505-01-D

DEPARTMENT OF HEALTH AND HUMAN SERVICES

Food and Drug Administration

[Docket No. 88N-0098]

Drug Export; Intal® Nebulizer Solution (Cromolyn Sodium Inhalation, USP)

Correction

In notice document 88-5620 beginning on page 8513 in the issue of Tuesday, March 15, 1988, make the following correction:

On page 8514, in the second column, below the signature, insert "*Deputy Director*".

BILLING CODE 1505-01-D

DEPARTMENT OF HEALTH AND HUMAN SERVICES

Food and Drug Administration

[Docket No. 88M-0019]

IMRE Corp.; Premarket Approval of the Prosorba® Column

Correction

In notice document 88-3783 beginning on page 5320 in the issue of Tuesday, February 23, 1988, make the following corrections:

1. On page 5320, in the second column, under **SUPPLEMENTARY INFORMATION**, in the eighth line, "pasma" should read "plasma".

2. On page 5321, in the first column, in the second line, the U.S.C. cite should read "360e(d)".

BILLING CODE 1505-01-D

DEPARTMENT OF HEALTH AND HUMAN SERVICES

Health Care Financing Administration

42 CFR Parts 405, 412, 413 and 489

[BERC-462-F]

Medicare Program; Miscellaneous Changes Affecting Payment for Inpatient Hospital Services

Correction

In proposed rule document 88-6124 beginning on page 9337 in the issue of Tuesday, March 22, 1988, make the following corrections:

1. On page 9339, in the second column, preceding the last paragraph, the formulas should have appeared as follows:

Number of covered patient days of those patients entitled to both Medicare Part A and SSI (excluding those patients receiving State supplementation only)

Number of patient days of those patients entitled to Medicare Part A

Number of patient days of those patients entitled to Medicaid but not to Medicare Part A

Total number of patient days

2. On page 9340, in the second column, in the third complete paragraph, in the 14th line, "be used to" should read "not be used to".

§ 412.50 [Corrected]

3. On page 9342, in the first column, in § 412.50(b), in the fourth line, "impatient" should read "inpatient".

BILLING CODE 1505-01-D

DEPARTMENT OF HEALTH AND HUMAN SERVICES

Health Care Financing Administration

42 CFR Part 413

[BERC-270-F]

Medicare Program; Changes to the Lesser of Costs or Charges Provisions

Correction

In rule document 88-6833 beginning on page 10077 in the issue of Tuesday, March 29, 1988, make the following correction:

§ 413.13 [Corrected]

On page 10086, in the first column, in § 413.13(c)(1)(iii), in the 12th line, after "that", insert "its charges are less than costs because".

BILLING CODE 1505-01-D

DEPARTMENT OF THE INTERIOR

Bureau of Land Management

[NV-930-08-4212-13; N-48171]

Realty Action; Exchange; Lyon County, NV

Correction

In notice document 88-6398 appearing on page 9708 in the issue of Thursday, March 24, 1988, make the following correction:

In the second column, under T. 11 N., R. 23 E., the first line should read "Sec. 1, S½SE¼,"; and the second line should read "Sec. 12, W½NE¼, SE¼.".

BILLING CODE 1505-01-D

DEPARTMENT OF THE INTERIOR

Bureau of Land Management

[AA-320-08-4220-10]

Proposed Withdrawal; Nevada

Correction

In notice document 88-7788 appearing on page 11713 in the issue of Friday, April 8, 1988, make the following correction:

In the second column, under "T. 6 N., R. 33 E." in Sec. 26, "N¼SE ¼", should read "NE¼SE¼".

BILLING CODE 1505-01-D

DEPARTMENT OF COMMERCE

International Trade Administration

Management-Labor Textile Advisory Committee; Partially Closed Meeting

Correction

In notice document 88-6816 appearing on page 10137 in the issue of Tuesday, March 29, 1988, make the following correction:

In the third column, in the second paragraph, in the first line, "10:30 p.m." should read "1:30 p.m."

BILLING CODE 1505-01-D

VOL
53

ISS
73

AP
15

1988

UMI

federal register

Friday
April 15, 1988

Part II

Department of Health and Human Services

Food and Drug Administration

21 CFR Part 444

Oligosaccharide Antibiotic Drugs; Final Rules and Notices

VOL 53 ISS 73 AP 15 1988 UMI

DEPARTMENT OF HEALTH AND HUMAN SERVICES

Food and Drug Administration

21 CFR Part 444

[Docket No. 79N-0155]

Oligosaccharide Antibiotic Drugs; Neomycin Sulfate for Compounding Oral Products

AGENCY: Food and Drug Administration.

ACTION: Final rule.

SUMMARY: The Food and Drug Administration (FDA) is amending the antibiotic drug regulations which describe standards for nonsterile neomycin sulfate for prescription compounding. The amendments change the product name from "neomycin sulfate for prescription compounding" to "neomycin sulfate for compounding oral products" and require labeling to provide information concerning appropriate uses and to warn about the risks associated with inappropriate use. The labeling will state that the product is recommended for oral use only. Elsewhere in this issue of the **Federal Register** is a notice announcing the availability of guideline labeling for neomycin sulfate for compounding oral products and offering an opportunity for a hearing on the proposal to withdraw approval of antibiotic applications and abbreviated antibiotic applications for nonsterile neomycin sulfate products that are labeled in accordance with the antibiotic regulations. These actions are being taken because nonsterile neomycin sulfate, a prescription drug with a recognized potential for producing toxicity, is now supplied for prescription compounding without adequate labeling. The drug is being used for indications for which it lacks evidence of effectiveness and for which there is clinical evidence of significant risk to the patient. FDA is offering an opportunity for a hearing, under the formal rulemaking provisions in section 507(f) of the Federal Food, Drug, and Cosmetic Act (the act) (21 U.S.C. 357(f)) and the Administrative Procedure Act (5 U.S.C. 556 and 557), on objections to the final rule.

DATES: Effective June 14, 1988; notice of participation and request for hearing by May 16, 1988; data and information to justify a hearing by June 14, 1988.

ADDRESSES: Written comments concerning guideline labeling, requests for copies of the guideline, requests for hearing, and supporting data and information to Dockets Management Branch (HFA-305), Food and Drug Administration, Rm. 4-62, 5600 Fishers Lane, Rockville, MD 20857. (Send two self-addressed adhesive labels to assist the Branch in processing your request.)

Requests for opinion of the applicability of this final rule to a specific product to Division of Drug Labeling Compliance (HFN-310), Center for Drug Evaluation and Research, Food and Drug Administration, 5600 Fishers Lane, Rockville, MD 20857.

FOR FURTHER INFORMATION CONTACT: Judy O'Neal, Center for Drug Evaluation and Research (HFN-366), Food and Drug Administration, 5600 Fishers Lane, Rockville, MD 20857, 301-295-8041.

SUPPLEMENTARY INFORMATION:

I. Background

In the **Federal Register** of July 27, 1979 (44 FR 44178), FDA proposed to revoke the provisions in the antibiotic drug regulations (specifically, § 444.942a) that provide for the certification of nonsterile neomycin sulfate for prescription compounding. This action was proposed primarily because FDA believed that the risks of the drug outweighed its benefits. The nonsterile drug was permitted to be shipped without a package insert identifying approved indications for use and describing adverse reactions and warnings. It was being used for indications for which FDA concluded, in the Drug Efficacy Study Implementation (DESI) project, sterile neomycin sulfate lacked evidence of effectiveness (37 FR 4224; February 29, 1972) and for which there is clinical evidence of significant risk to the patient. These indications include: (1) Intraperitoneal instillations; (2) use in wet dressings, packs, and irrigations to treat secondarily infected wounds and ulcers; and (3) use for intestinal instillation in emergency abdominal surgery. FDA believed that the nonsterile drug was no longer needed for the use for which it was initially made available—for extemporaneous compounding of individual prescriptions by pharmacists—because of the availability of neomycin sulfate in commercially prepared forms.

The agency received 55 written comments on the proposal from physicians, pharmacists, and pharmaceutical manufacturers. All but two of the comments were opposed to some aspect of the proposal. In addition, the agency received three requests for an informal conference. A notice of opportunity for an informal conference was published in the **Federal Register** of October 19, 1979 (44 FR 60331), and an informal conference was held on November 20, 1979. The comment period also was extended for 30 days after the date of the informal conference. The substantive comments and the agency's responses are discussed later in this document.

Based on its evaluation of these written and oral comments and on other information (discussed below), FDA concludes that nonsterile neomycin sulfate should be available for use in compounding oral prescription products. This final rule amends the regulations to change the product name and to require package insert labeling to inform users of the product about the risks associated with neomycin sulfate.

In a notice published elsewhere in this issue of the **Federal Register**, FDA is proposing to withdraw approval, under section 505(e) of the act (21 U.S.C. 355(e)), of the antibiotic applications and abbreviated antibiotic applications that are not supplemented, by the effective date of this final rule, to provide for the new product name and package insert labeling. The agency has prepared guideline labeling that manufacturers and suppliers may adopt to ensure that their labeling complies with the requirements of the revised regulations.

Only neomycin sulfate for prescription compounding is affected by this action. Other preparations containing neomycin, including otic, ophthalmic, oral, and dermatologic dosage forms may continue to be marketed. Elsewhere in this issue of the **Federal Register**, FDA is issuing a final rule based upon its proposal to revoke provisions for certifying sterile neomycin sulfate in vials for parenteral use and is proposing to withdraw approval of applications for those products.

II. Discussion

A. General Observations

Neomycin sulfate has the most potent ototoxic, nephrotoxic, and neuromuscular blocking potentials of the commercially available aminoglycoside antibiotics (Refs. 1 through 11). It also is the most strongly tissue bound. Ototoxicity, nephrotoxicity, neurotoxicity, or a combination of these toxic reactions has occurred following the irrigation of wounds (Refs. 12 and 13), decubitus ulcers (Refs. 4 and 14), joints (Refs. 15, 16, and 17), and fractures (Ref. 13); following intraperitoneal (Refs. 18 and 19), intrapleural (Refs. 20 through 23), mediastinal (Ref. 24), and rectal and colonic lavage (Ref. 25); following infusion into an empyema cavity (Ref. 26); following the use in sinuses (Ref. 27), and in dialysis fluid (Ref. 13); following local applications to prevent burn wound sepsis (Refs. 28 through 31);

following cutaneous applications of impregnated skin grafts (Ref. 32); and following an oral administration (Refs. 19 and 33 through 37). Moreover, substantial systemic absorption following topical administration of neomycin sulfate has been demonstrated (Ref. 38), in many cases by the presence of substantial serum concentrations (Refs. 16, 39, and 40), and at times with fatal outcome (Refs. 17, 18, 24, and 41). Toxicity associated with parenteral use is so great that this route has been essentially abandoned (Refs. 1, 4, 19, 42, and 43).

Indications for the use of neomycin sulfate have changed since it was first approved on March 7, 1951. Because of information about neomycin's toxicity and because less potentially toxic aminoglycosides such as gentamicin, tobramycin, netilmicin and amikacin sulfates now are available for systemic use, neomycin sulfate can no longer be recommended where significant systemic absorption may occur. The monograph for the one remaining indication for systemic use of sterile neomycin sulfate is being revoked elsewhere in this issue of the **Federal Register**. Orally administered neomycin sulfate is indicated only as adjunctive therapy in preoperative preparation of the bowel and in treatment of hepatic coma.

B. Ototoxicity

Deafness due to the parenteral administration of neomycin was first reported in 1950, just a little more than a year after the antibiotic was discovered, in four of six tuberculosis patients (Ref. 44). Shortly thereafter, five more cases were reported (Ref. 37). In each of these five cases, the adverse reaction was not noticed until some time after the treatment was discontinued. As early as 1959, a summary of 20 such cases shows that hearing loss occurred with treatment periods ranging between 3 and 58 days (Ref. 45). Within the next decade, neomycin ototoxicity was found to occur after use of the drug by all routes of administration that were common at the time: parenteral, aerosol, oral, wound and bowel irrigation, and cutaneous application (Ref. 46).

Safe and effective use of neomycin sulfate requires an understanding of its absorption, excretion, and toxicity in the inner ear. The characteristic pattern of neomycin-induced ototoxicity is the loss, which may be massive, of sensory hair cells, both inner and outer hair cells, supporting cells, and neurons (Refs. 19 and 47 through 49). Postmortem examinations of human temporal bones from patients who had received neomycin during peritoneal irrigation, including the temporal bone of a 10-year-old boy who had received only one peritoneal irrigation, showed complete disappearance of the organ of Corti in the basal turn of the cochlea and incipient degeneration of the distal ends of the cochlear nerve fibers in adjacent portions of the osseous spiral lamina (Ref. 19). Otopathologists have reported varying degrees of inner and outer hair cell degeneration and cochlear neuron degeneration in specimens from other patients with neomycin-induced sensorineural deafness (Refs. 47 through 49). The drug's ototoxic effect is not always the same in each patient, presumably because of wide individual variations in systemic absorption from the various routes of administration and because of patient-to-patient variations in the susceptibility of cochlear tissues (Ref. 50).

Polyphosphoinositides, lipids in inner ear tissues that are essential for the regulation of membrane structure and permeability, may be involved in neomycin ototoxicity. It has been suggested that the biochemical basis for neomycin's ototoxicity is the drug's inhibition of the metabolism of polyphosphoinositides (Refs. 47 and 51).

Neomycin, like other aminoglycosides, accumulates and is retained in the inner ear fluid or perilymph. Neomycin's rate of elimination from the inner ear is slower than the other aminoglycosides (Ref. 9) and far slower than its rate of elimination from the serum (Refs. 5, 8, 9, and 47). Significant accumulation of neomycin in the perilymph has been observed in guinea pigs. In one study, a single intramuscular injection of neomycin base, 150 milligrams per kilogram (mg/kg), resulted in a peak drug concentration in the perilymph of 7 to 8 micrograms per milliliter (micrograms/mL) after 3 to 6 hours (Ref. 9). The amount of neomycin decreased so slowly that only one-third had been eliminated after approximately 24 hours, when serum levels were undetectable. Traces of neomycin were detectable in the perilymph for up to 55 hours. When 150 mg/kg doses were repeated daily for 4 days, the concentration of neomycin in the perilymph increased significantly in a stepwise manner to a maximum of 20 micrograms/mL (Ref. 9). The concentration of neomycin in the perilymph did not fall below 1 microgram/mL until 72 hours after the last dose.

In a second guinea pig study, after a single subcutaneous injection of neomycin sulfate, 25 mg/kg, the concentration of neomycin in the perilymph rose to 111 micrograms/mL in 1 hour and was still 10.6 micrograms/mL 25 hours after the injection (Ref. 8). The half-life of the antibiotic in the perilymph was 15 hours, 10 times longer than its half-life in the blood (Ref. 8). Thus, ototoxicity may, to some extent, be explained by neomycin's high concentration in, and slow elimination from, the inner ear fluid. Less toxic aminoglycosides, show substantially lower levels in perilymph and faster elimination (Refs. 8 through 10 and 47). In the guinea pig, as in other species, neomycin also has a special affinity for sensory hair cells in the organ of Corti (Refs. 7 and 52 through 54).

Neomycin-induced ototoxicity was reported by Stebbins and coworkers in two monkeys that received the drug daily by the intramuscular route (Ref. 55). In one animal treated at a dosage of 100 mg/kg/day, neomycin was discontinued after 5 days because of nephrotoxic effects. A moderate hearing loss had developed at high frequencies (20 to 40 kilohertz (kHz)). In the other animal treated with 50 mg/kg/day, the drug was stopped after 15 days when signs of nephrotoxicity developed. Over the following 6 weeks, hearing loss progressed from a moderate loss at high frequencies to total deafness in both ears. The phenomenon of delayed damage to the organ of Corti occurs in other species as well.

Under the stereomicroscope, cochlear lesions in these monkeys showed all gradations of destruction. The organ of Corti in the lower basal turn had completely disappeared. In the upper basal turn, supporting structures were present but both inner and outer hair cells were absent. An abrupt transition to a normal hair cell pattern occurred at the beginning of the middle turn of the cochlea. Radial nerve fibers in the basal turn were missing. Cochlear locations for threshold response were sharply defined and correlated with the extent of hair cell damage and nerve degeneration, the basal turn being the location for the response to high frequencies. Histopathology similar to that found in monkeys has been reported for humans who received therapeutic doses (Refs. 19 and 47 through 49).

In humans, destruction by neomycin of practically all sensory hair cells and some neural tissue, first at the basal turn of the cochlea (the area for hearing high frequency tones), is common (Ref. 19). Low frequency deafness (apical turn of the cochlea) appears last and vestibular involvement is rare (Ref. 50). Unlike renal tubular cells, damaged cochlear hair cells cannot be regenerated. Once hair cell destruction begins, damage

progresses even after dosing has been discontinued (Refs. 4, 5, 19, 47, and 50).

Deafness is usually a delayed-onset adverse reaction but may appear suddenly (Refs. 24 and 49). Neomycin-induced hearing loss may not be apparent until well after the patient has completed the course of treatment (Refs. 35, 39, 40, and 43). Latency periods are usually 2 to 6 weeks after the initiation of treatment and deafness may progress for 6 to 10 months (Refs. 5, 56, and 57). The absence of symptoms and the absence of an abnormal audiogram at the end of therapy do not mean that neomycin-induced hearing loss will not develop later or that it has not already developed at frequencies above 8,000 kHz, higher than conventional audiometer is capable of detecting. Lethargy, headaches, confusion, or tinnitus may occur just before a hearing loss is recognized (Ref. 4). Once symptoms develop, the deterioration of hearing cannot be averted. Serial audiography over a period of 6 to 10 months reveals a gradually progressive, sometimes partial but usually profound, bilateral sensorineural hearing defect (Refs. 5, 20, 22, 28, 33 through 35, 40, 44, 45, 47, 56, and 57). Ototoxicity occurs regardless of age, with or without concomitant nephrotoxicity (Ref. 16), and there is no threshold or dose level below which toxicity cannot be expected to occur (Ref. 22). The ototoxicity of neomycin is additive to the ototoxicity of certain other ototoxic drugs, i.e., other aminoglycosides, vancomycin, polymyxin B, and furosemide (Ref. 57).

C. Nephrotoxicity

The nephrotoxicity of neomycin sulfate is well established (Refs. 1, 4, 10, 15 through 17, 23, 24, 32, 35, 39, 40 through 43 and 58 through 60). Patients with neomycin-induced nephrotoxicity develop sloughing of renal tubular epithelial cells, cylindruria, hematuria, and increased blood urea nitrogen. The renal damage is primarily in the tubules and is manifested as dose-related tubular cell necrosis. Vacuolization of the proximal renal tubular epithelium has also been reported (Refs. 58 and 61).

D. Neuromuscular Blockade

Neuromuscular blockade induced by neomycin sulfate may be manifested in different ways. Coleman and co-workers summarized published reports of respiratory arrest in 12 anesthetized pediatric patients (4 were fatal) that occurred between 10 and 30 minutes after intraperitoneal absorption of neomycin (Ref. 18). Craig and co-workers summarized published reports of severe respiratory depression in 25 patients (8 were fatal) (Ref. 62). Neomycin-induced neuromuscular blockade has been reported as cessation of respiration and coma (Ref. 17); lethargy with progressive flaccidity and coma with dilated pupils after anesthesia (Ref. 18); apnea and unconsciousness 6 hours after irrigation of a septic gunshot wound (Ref. 39); and flaccid extremities, dilated pupils, and intermittent unconsciousness beginning 3 hours after intraperitoneal instillation of neomycin (Ref. 63). In most cases intraperitoneal lavage had been given. Neomycin sulfate is thought to decrease the influx of the calcium ion into the motor nerve terminal, which in turn decreases the output of acetylcholine at the myoneural junction (Refs. 18, 64, and 65). Transmission at this site normally depends on the release of acetylcholine into the synaptic space. This curariform toxicity is similar to that caused by the other aminoglycosides.

E. Adverse Events Reported

Since 1969 FDA's Drug Experience Surveillance Program has maintained a computerized file of spontaneous reports of adverse events associated with the use of neomycin sulfate (Ref. 41). Because these reports come from a variety of sources, the quality of information in the system varies from excellent, e.g., a detailed case summary attached to pages reproduced from a hospital record, to very poor, e.g., a physician's report giving the word "deafness" with no other information. Thus, a causal relationship between neomycin sulfate and the reported adverse event cannot be established with certainty in all cases. However, many of these reports do specify the dosage, the period for which the drug was used, and the route of administration. The following table lists the adverse events reported to FDA that were associated with the use of neomycin sulfate in 194 patients; 17 of these were fatal. It covers the reporting period from 1969, when computerization began, to March 6, 1984.

DRUG EXPERIENCE REPORTS ASSOCIATED WITH USE OF NEOMYCIN, 1969 THROUGH MAR. 6, 1984, ROUTES OF ADMINISTRATION

Adverse reaction	Irrigations	Intramuscular	Intravenous	Intravenous, oral, and rectal	Rectal	Rectal and oral	Unknown	Oral	Ointment	Cream	Ophthalmic	Otic	Total
Ototoxicity alone	31	3				1	11	7					53
Ototoxicity and nephrotoxicity	8	1				1	2	1					13
Ototoxicity and neurotoxicity			2										2
Ototoxicity and nephro- and neurotoxicity	2			1(1)							1		4(1)
Ototoxicity and hypersensitivity or miscellaneous	1	1							1				3
Total ototoxicity													75
Nephrotoxicity alone	3	2(1)	1				1(1)	10(3)					17(5)
Nephrotoxicity and exfoliate dermatitis							1						1
Neurotoxicity alone or with other	5(6)							5(1)					11(7)
Neurotoxicity and nephrotoxicity	1(1)												1(1)
Hypersensitivity alone or with other	7				1		1	13	9	11	1	2	45
Hypersensitivity and GI disorder							2						2
Gastrointestinal	2(1)					1	3	10(1)					16(2)
Other	2		4				4(1)	10	2	1	3	1	26(1)
Total	63(8)	9(1)	5	1(1)	1	3	25(2)	57(5)	11	12	5	3	194(17)

Numbers in parentheses are fatalities.
Three of 4 intravenous cases were inadvertent intravenous administrations of a product compounded for irrigation.

There were 75 reports of ototoxicity. Ototoxicity alone occurred in 53 cases and was accompanied by nephrotoxicity and neurotoxicity in 19 cases. Nephrotoxicity or renal failure was reported 35 times. There were 17 reports of neuromuscular blockade and/or other neurotoxicity. Some of the toxicity experiences may have been due to the additive toxicities of other aminoglycosides, because parenteral kanamycin, gentamicin, streptomycin, or tobramycin sulfates were given concomitantly or sequentially in approximately 13 cases. Twenty-one patients were at risk for additive toxicity due to concomitant irrigation with a fixed or nonfixed combination of neomycin plus polymyxin B (a nephrotoxic and neurotoxic antibiotic) and bacitracin (another nephrotoxic antibiotic). Ototoxicity and nephrotoxicity may have been enhanced in some patients because of the concomitant administration of furosemide and/or ethacrynic acid, both potent, high-ceiling diuretics which are themselves ototoxins.

Of the 17 fatalities, 8 were associated with topical irrigations with neomycin and 5 were associated with prolonged oral use. One such case involved an 11-year-old male who received daily irrigations with 3,000 mL of a 1-percent neomycin sulfate solution to the left hip joint over a period of 8 days for septic arthritis. The boy developed lethargy and cardiac arrest when the hip irrigation system did not drain well. His post-mortem neomycin sulfate blood level was 21.2 micrograms/mL. At autospy his kidney tissue revealed proximal tubular necrosis and his lung tissue showed pulmonary edema.

F. Conclusions: Risk Verus Benefit

The value of using antibiotics in solutions for orthopedic, intraperitoneal, intrapleural, and other surgical wound irrigations to prevent infections remains controversial (Ref. 66). At least one publication states that neomycin should never be used for peritoneal irrigation (Ref. 67). Evidence from the published literature and from FDA's Drug Experience Surveillance Program demonstrates that the use of neomycin sulfate, particularly when appreciable amounts can be absorbed systemically, is associated with significant risk of serious adverse reactions: ototoxicity, nephrotoxicity, and neurotoxicity. These toxic reactions involved prophylactic uses of the drug as well as therapeutic uses. The acceptability of the associated risks with these two types of uses differs slightly: ideally, a prophylactic regimen should be freer from unacceptable and harmful side effects than a therapeutic regimen. An adverse reaction to a prophylactic antibiotic becomes unacceptable when that adverse reaction approaches the seriousness of, or is more serious than, the infection it is intended to prevent or the consequences of that infection.

The benefit of using neomycin sulfate solutions to irrigate surgical wounds has not been demonstrated. In the DESI project, FDA concluded that evidence was lacking to support the effectiveness of sterile neomycin sulfate for such uses. Although some published reports suggest that the local instillation of neomycin during surgical procedures is effective, other publications report that efficacy has not been established. To FDA's knowledge, none of the published reports that recommend the local instillation of neomycin sulfate include followup evaluations long enough after treatment was discontinued to measure the degree of systemic absorption and to determine if delayed-onset, neomycin-induced adverse reactions occurred. Without such long-term followup assessments, clinical reports of the benefits of using neomycin sulfate for wound irrigation must be considered to be incomplete.

Moreover, local antibiotic irrigation at the operative site has disadvantages: (1) Dosage cannot be easily individualized; (2) the antibiotic does not reach the wound until after contamination has begun; (3) distribution is uneven in that the antibiotic does not reach all remote areas in the wound; and (4) systemic absorption cannot be controlled. Generally, delivery of an antibiotic to the tissues at the site of an infection is more efficient by the vascular route following systemic administration.

FDA concludes that the risks of adverse reactions from the use of neomycin sulfate irrigations are significantly greater than any demonstrated benefits.

Safety and efficacy have been demonstrated for a number of less toxic alternatives to the local instillation of neomycin sulfate in surgical procedures. The following antimicrobial agents for injection have approved indications for use during the perioperative period for the prevention of infections: cephalothin, cephradine, cephapirin, cefazolin, cefamandole, cefoxitin, cefuroxime, cefonicid, ceforanide, cefotaxime, ceftriaxone, cefotetan, and piperacillin.

When injected before the operative procedure begins, these beta-lactam antibiotics rapidly diffuse into tissues at the operative site. Bactericidal concentrations are maintained in these tissues and in tissue fluids for the full length of many operations; booster injections based upon the drug's elimination half-life may be given when surgery is prolonged. Aside from reduced toxicity, the advantages of parenteral administration of these beta-lactam antibiotics are: (1) Bactericidal concentrations of the antibiotic are present in the tissues before and throughout the period of greatest contamination; (2) dosage may be individualized based upon the patient's weight, age, and state of renal function; and (3) tissue diffusion is more likely to be complete so that there is uniform distribution of the drug to all areas.

The risk versus benefit considerations are different for orally administered neomycin sulfate. Because systemic absorption is low with oral administration, the risk of toxicity is reduced. Adequate evidence supports the effectiveness of neomycin sulfate oral tablet and oral solution preparations as adjunctive therapy for preoperative suppression of intestinal bacteria and for treatment of hepatic coma. For these two indications only, FDA has concluded the benefits outweigh the risks.

If nonsterile neomycin sulfate is to be available for use in compounding oral products for these two approved indications, the agency has concluded it must be labeled to include warnings about the risks of serious toxicity associated with systemic absorption.

III. Response to Comments

A summary of the substantive comments to the 1979 proposal and the agency's responses follows.

A. General Comments

1. Several comments contended that the proposed revocation of the provisions for certification of neomycin sulfate is not based on sound medical reasoning. The comments claimed that neomycin sulfate is being used safely and effectively, that there is no satisfactory substitute available, and that many lives will be endangered if the drug is removed from the market.

The agency believes that sound scientific data support its conclusion that neomycin sulfate for prescription compounding is being used for indications for which it lacks evidence of effectiveness and for which there is clincial evidence of significant risk to the patient. In addition, the agency does not believe that the comments have offered sufficient data from controlled studies to refute this evidence. FDA provided documented evidence supporting its conclusions in the July 27,

1979, proposal and cites additional evidence in this document.

No situations have been identified in which human lives might be endangered either by the action proposed in 1979 or by the actions in this document. The management of hepatic coma is the only life-threatening condition for which neomycin is indicated. Neomycin sulfate oral products, not affected by the actions in this document, are approved for this condition. Hepatic coma also may be treated with oral preparations of kanamycin or lactulose.

2. Several comments asserted that the proposed removal of nonsterile neomycin sulfate powder is an unauthorized infringement on the professional rights of physicians and pharmacists. The comments stated that not all medications can be administered in dosage or prepackaged forms, not all patients can be treated with manufactured products, and certain emergencies can require extemporaneous compounding. The comments said that physicians today must take advantage of all available scientific information to treat specific medical conditions before them. According to the comments, FDA must permit practitioners to use their best judgment in selecting either a dosage form medication, an oral administration, an extemporaneously prepared compound, or any other medication that may be necessary for the patient's welfare. One comment stated that FDA is, in effect, attempting to regulate surgical procedures.

FDA disagrees that this action is an infringement on the professional rights of physicians and pharmacists, and it is not an attempt to regulate surgical procedures. FDA is requiring labeling for neomycin sulfate for prescription compounding to provide information about its use for conditions for which it has been clinically shown to present significant risk to the patient.

FDA does not regulate the practice of medicine. However, it is FDA's statutory responsibility to determine which drug products are safe and effective and, thus, suitable for prescribing, and to determine what information about the drugs is necessary to permit safe and effective prescribing by the physician. The physician may, as part of the practice of medicine, prescribe an approved drug for an unapproved use and otherwise vary the conditions of use from those approved in the labeling. The physician, therefore, is responsible for making the final judgment about treatment in light of the information in drug labeling and other medical information available to him. FDA believes that good medical practice and patient welfare require that physicians remain free to use approved drugs according to their best knowledge and judgment.

3. One comment contended that there is no proof that neomycin sulfate for prescription compounding is being used for indications other than those approved. Another comment stated that an article cited in the proposal from *Hospital Pharmacy* (Ref. 68) does not say that neomycin sulfate is misused, but praises the effective use of neomycin sulfate for prescription compounding and explains how to prepare it.

FDA advises that reports of inappropriate prescribing of neomycin sulfate, especially those reporting serious adverse reactions, can be found in many medical publications such as those referenced in this document and in the proposal. Such reports also can be found in FDA's drug experience files, in the public comments summarized in this document, and in other communications with FDA. These reports demonstrate that the drug is being used for purposes for which it is neither labeled nor intended. Indeed, the article from *Hospital Pharmacy* cited by the comment had also been cited in the proposal as an example of the kind of information appearing in the scientific literature promoting the inappropriate uses of neomycin sulfate.

4. A comment stated that removal of neomycin sulfate for prescription compounding contradicts FDA's initial reason for approving the drug—to provide pharmacists with pure bulk powder instead of tablets in order to extemporaneously compound prescriptions. Another comment maintained the proposal is contradictory because FDA is proposing to revoke certification of neomycin sulfate for prescription compounding but continues to certify the use of neomycin sulfate when mixed with other ingredients such as polymyxin B sulfate.

FDA is not removing neomycin sulfate for prescription compounding from the market as originally proposed. However, new clinical evidence demonstrating unreasonable risk associated with most uses of neomycin sulfate has become available since neomycin sulfate products were originally approved. Based on its review of the comments received and other information cited herein, the agency now has concluded that (1) neomycin sulfate for prescription compounding can be recommended for compounding preparations for oral use only, and (2) labeling is needed to warn users of the product about the risk of administering the drug under conditions where it may be systematically absorbed in significant quantities.

The agency disagrees that this action regarding the nonsterile neomycin sulfate product is inconsistent with the treatment of approved prepared dosage forms. Each finished dosage form product has its own specific strength, identity, and labeling. The safety and effectiveness of each such formulation are supported by clinical data. Because their dosage regimens have been carefully studied, are very specific, and have been found by qualified investigators to be both safe and effective as recommended, such commercially prepared neomycin sulfate products are preferred. An unlimited variety of preparations could be compounded from nonsterile neomycin sulfate; most such preparations, however, have not been clinically tested for safety and effectiveness. As a result of this action, specific dosage and administration information will be provided for oral neomycin sulfate preparations compounded for the approved indications, suppression of intestinal bacteria and treatment of hepatic coma, for which FDA believes there is adequate evidence of safety and effectiveness.

B. Comments About Medical Uses for Neomycin Sulfate

5. Several comments argued that neomycin sulfate for prescription compounding should not be removed from the market because it is needed as a terminal irrigant before wound closure in patients undergoing major orthopedic surgery, particularly total hip replacement, and in irrigating wounds during other surgical procedures. The comments said that this solution has been in use for some time and no adverse effects, including ototoxicity and nephrotoxicity, have been reported by practitioners who follow their patients for an extended period of time.

The agency disagrees. Use of neomycin sulfate for prescription compounding to prepare irrigation solutions lacks evidence of effectiveness and presents significant risk to the patient. The National Research Council of the National Academy of Sciences reviewed the efficacy of neomycin sulfate sterile powder for its labeled indications, including irrigation, as part of the DESI project. After extensive scientific review, the agency published its conclusions about that product's effectiveness on May 13, 1970, and February 29, 1972 (DESI 7837). Neomycin sulfate sterile powder was found effective only for treatment of certain urinary tract infections when

administered by intramuscular injection. Evidence of effectiveness was found lacking for all other claims, including intraperitoneal instillation, use as wet dressings, packs, or irrigations, treatment of varicose ulcers and eye infections, and intestinal instillation in emergency abdominal surgery. The agency considers these conclusions to be equally applicable to the use of the nonsterile powder for compounding formulations intended for the same indications.

FDA believes that there also is a lack of substantial evidence of safety for use of the drug in irrigations during orthopedic surgery (Refs. 12, 13, 15, 16, 27, 38, 41, and 59). Irrigation results in systemic absorption leading to substantial serum and tissue levels. Also, the drug is unevenly distributed at the operative site. Davia reported neuromuscular blockade, renal failure, and a permanent 90 to 95 decibel bilateral hearing loss following one single irrigation of a complicated fracture site in an 18-year-old male (Ref. 39).

6. Several comments argued that neomycin sulfate for prescription compounding should be available for use in augmentation mammaplasty and in the use of other silicon-rubber implants or other prosthetic devices, and as a solution to soak bone grafts prior to implementation. One comment said that neomycin sulfate is used to prevent wound infection in patients undergoing renal transplantation. Another comment noted that "Wynn's solution" containing neomycin, chloramphenicol and polymyxin B has been dispensed for irrigation. According to another comment, neomycin sulfate is used as a prophylactic topical application for foreign prosthetic devices.

The agency concludes that soaking a device or an organ such as above graft in a neomycin sulfate solution may suppress the growth of some microorganisms but will not sterilize the device or organ as contended by the comment. Devices for implantation, such as heart valves, artificial joints, other prostheses, and miscellaneous implants, are usually supplied by the manufacturer in a sterile state or are maintained in a sterile environment. When devices and organs that are left in place after an operation continue to provide open avenues for bacterial colonization or entry, parenteral antimicrobial agents should be considered for prophylaxis.

The agency considers the use of neomycin sulfate solution to soak bone grafts and silicone-rubber implants prior to surgical implantation, and the use of neomycin in an antibiotic solution for the prophylactic topical application to prosthetic devices, to be investigational. In these procedures, large quantities of the antibiotic are disseminated systemically after the solution is instilled in the patient's tissues, and there are inadequate data to establish safe dosage under these circumstances.

7. One comment argued that a 1-percent neomycin sulfate irrigant should be available for use in the bladder following routine instrumentation. The comment's author knew of no harmful effects from this procedure and said that, before FDA withdraws the drug, a double-blind clinical trial should be carried out.

The agency agrees that clinical investigation is needed to provide data on the efficacy, as well as safety, of neomycin sulfate as the single active ingredient in a bladder irrigant product but disagrees that such an investigation is needed before issuance of this final rule. Because there apparently is little or no systemic absorption of neomycin when it is used for irrigation of the intact urinary bladder, toxicity from urinary bladder irrigation generally may not be a problem. (Substantial systemic absorption accompanies irrigation of other sites.) The commercially prepared product containing a fixed combination of neomycin and polymyxin B for bladder irrigation, for which adequate evidence of safety and effectiveness exists, is not affected by this action.

8. One comment argued in favor of the use of a 1- or 2-percent neomycin sulfate irrigating solution in the peritoneal cavity and the use of a 5-percent solution in contaminated sinus wounds. The comment maintained that the risks of ototoxicity and nephrotoxicity are dose related, and that if the proper concentration and dosage are used and the solution is adminstered properly, the drug is safe. Another comment stated that a neomycin sulfate solution is used as a quick method to sterilize fecal spillage in the abdominal cavity and to help sterilize a ruptured appendiceal abscess where systemic antibiotics would not. Another comment noted that a neomycin sulfate solution is used to sterilize a staphylococcal infection in a hernia with Marlex mesh and to help heal a total gastrectomy with a thoracoabdominal fistula.

The agency believes that no concentration and dosage of neomycin sulfate for the irrigation purposes described in these comments has been shown to be safe. There is evidence that significant absorption takes place with these irrigations. Neomycin sulfate solutions, when used to irrigate operative sites, can be very toxic and have caused deaths (Refs. 17, 24, and 41). Even after a single irrigation, neomycin sulfate can be absorbed in amounts substantial enough to produce toxicity (Ref. 39). Systemic absorption that follows irrigation of the peritoneum with these concentrations of neomycin sulfate is equivalent to that which follows a parenteral injection. Furthermore, this route of administration lacks the dosage control of an injection. Once neomycin is absorbed, although the greatest fraction of the dose is rapidly excreted by the kidneys, a high level rapidly develops in the inner ear fluids where the drug is eliminated very slowly over a period of weeks. Applying suction after topical instillation cannot be relied upon to remove the aminoglycoside (Ref. 69), because a significant portion of the drug will have already circulated to both the cochlea and the renal cortex by the time suction is applied. There have been reports that, even though the patient experienced early adverse reactions, neomycin irrigations were continued without the prescriber's being aware that adverse reactions were neomycin induced (Refs. 13, 16, and 17).

The thick wall of an empyeme cavity does not prevent absorption following instillation of neomycin sulfate solution. Meakins reported profound respiratory failure and renal failure following instillation of 1,000 mL of a 1-percent solution in the thoracic cavity of a patient with recurrent empyema who was already totally deaf because of aminoglycosides (Ref. 23). Other authors have reported severe ototoxicity from intrapleural use of neomycin sulfate (Refs. 21, 22, and 26). Gruhl reported a case of renal failure, deafness, brain lesions, and death following 11 days of irrigation of the mediastinum with 2.4 liters (L) of 0.3-percent neomycin solution every 24 hours (Ref. 24).

9. One comment argued that neomycin sulfate is needed in neurosurgical procedures, to irrigate closed space infections, such as those that rarely occur following the removal of an intervertebral disc, and for both intracranial and spinal operations, especially if contamination is thought to have occurred. The comment stated that a 1 mg/mL (0.1-percent) concentration of the nonsterile powder is used to prepare a solution that is subjected to microfiltration followed by autoclave sterilization. The comment stated that concentrations less than 10 mg/mL have been found to be safe, and that a 0.1-percent solution is nonepileptogenic and does not produce cortical depression. The comment added that, although there have not been well-controlled efficacy studies, the widespread use of neomycin

BEST COPY AVAILABLE

sulfate attests to its acceptance by neurosurgeons and that it is questionable whether truly controlled trials could be conducted.

The agency does not have data from studies in humans to support the safety and efficacy of the local use of neomycin sulfate in the irrigation of closed place infections such as those mentioned in this comment. Concentrations of less than 10 percent, which the comment stated had been found to be safe, were nonepileptogenic, and did not produce cortical depression, appear to have been tested in only three cats (Ref. 70). Six concentrations were tested. Because blood-brain barriers for cats differ from those for humans and effects may be different when tissues are inflamed, these results cannot be applied directly to humans. The study fails to consider individual variations in human tolerance. Although no effects were seen with concentrations of 0.01 percent, and minimal changes were seen at 0.1 percent, locally applied neomycin sulfate in higher concentrations depressed electrocortical activity in cats and produces an inflammatory reaction in the brain as demonstrated by histological studies. Also, neomycin sulfate did produce epileptogenic activity at a higher concentration. Finally, local application of the drug to feline or human neutral tissue has not been evaluated, weeks after treatment ended, for delayed-onset ototoxicity.

FDA agrees that it would not be easy to conduct the usual kind of randomized controlled efficacy trials for these neurosurgical procedures. However, under the law testimonial statements, such as the one in the comment claiming that the widespread use of neomycin attests to its acceptance by neurosurgeons, cannot be substituted for the scientific data required to establish safety and effectiveness. Furthermore, the prophylactic use of antimicrobial agents in neurosurgery is not recommended (Refs. 66 and 67).

10. One comment urged that neomycin sulfate be available for use in staged colonic resections, to prepare the distal defunctionalized portion of the colon by administering a neomycin sulfate irrigant through the distal colostomy and the rectum. The comment cited numerous articles that, according to the comment, substantiate the safe and effective use of neomycin sulfate when proper dosage and administration are followed. The comment stated that in 15 years of using neomycin sulfate, only one patient became deaf, and this was because large doses of neomycin sulfate had been orally administered to a patient with ulcerative colitis. Another comment maintained that neomycin colostomy irrigations are useful for patients with obstructing lesions of the intestinal tract that may prohibit the use of oral antibiotics.

FDA considers the administration of neomycin sulfate through a colostomy site or through the rectum to be investigational. These routes of administration are not included in the labeling for neomycin products because safety and efficacy data are lacking. The agency has reports that total irreversible bilateral deafness has followed neomycin sulfate irrigations of the distal colon and rectum (Ref. 41).

Although the short-term oral administration of neomycin sulfate can be relatively safe, neomycin should not be considered a nonabsorbable antibiotic in the gastrointestinal tract. Approximately 3 percent of an orally administered dose is excreted by the kidney (Refs. 40 and 71). Oral administration has led to significant drug levels in blood and has been associated with ototoxicity (Refs. 19, 33 through 36, 41, and 56). Even the absorption of small amounts of neomycin that result in relatively low serum levels can produce ototoxicity because of drug accumulation and retention in the inner ear if the exposure is prolonged over weeks to months. There may be an increased risk of toxicity if damage to the gastrointestinal tract occurs or if surgical intervention results in increased absorption. In cases of intestinal obstruction or renal impairment, serum levels following oral administration may exceed levels attained after parenteral administration. Ruben and Daly reported profound deafness in a 45-year-old female 1 month after just two oral doses (total 11 grams) given prior to a right colectomy for a partial small bowel obstruction. She became anuric, then noticed a hearing loss 8 days after the first dose (Ref. 35).

11. Several comments contended that irrigation solutions combining neomycin sulfate, bacitracin, and polymyxin B sulfate are both safe and effective, and that these drugs are frequently combined in irrigation solutions for renal transplantation, for orthopedic surgery, for burn therapy, for neurosurgery, and for other surgical specialities.

Orthopedic surgeons, neurosurgeons, and surgeons specializing in the treatment of burns have reported serious toxicities, including bilateral permanent deafness, resulting from the use of this triple combination. Absorption from wounds and granulating surfaces is significant; serum concentrations are comparable to and often higher than those attained with intramuscular therapy. Davia and co-workers reported total permanent bilateral deafness and renal failure following irrigations of orthopedic wounds with these three ingredients in two patients, one having only a single irrigation (Ref. 39). Hemodialysis was required for the other patient who experienced not only permanent deafness but also acute neuromuscular blockage. Bamford and Jones reported deafness in six children ranging in ages from 8 to 16 months following treatment for full-thickness burns with topical sprays containing neomycin, bacitracin, and polymyxin B or E (Ref. 28). Gelman and co-workers reported acute renal failure during the immediate postoperative period on 8 of 41 patients who underwent total hip replacement in which a neomycin-bacitracin-polymyxin B irrigating solution was used twice during the procedure (Ref.15). Little and Lynn reported that a burn covering only 10 percent of the body surface area was treated with an aerosol combination of neomycin, bacitracin, and polymyxin, and the patient became deaf in 17 days (Ref. 30). Graham reported bilateral sensorineural deafness in a 5-year-old girl treated with an aerosol mixture of neomycin, bacitracin, and polymyxin for burns over 80 percent of her body surface (Ref. 31). Rwylin described three cases of extensive necrosis of the epithelium of the proximal convoluted tubules following a single intraperitoneal instillation of 50,000 units of bacitracin and 0.5 g of neomycin. The author suggested that both antibiotics contributed to the tubular damage because both are nephrotoxic and have produced similar lesions individually (Ref. 72).

Labeling for all three of these antibiotics indicates that each one is potentially nephrotoxic. Updated labeling for the aminoglycosides (netilmicin, amikacin, gentamicin, tobramycin, kanamycin, streptomycin, and oral neomycin) even includes box warnings that concurrent and/or sequential systemic or topical use of other potentially neurotoxic and nephrotocix drugs, including bacitracin and polymyxin, should be avoided.

The labeling for polymyxin B sulfate and neomycin sulfate also warns that both products are ototoxic. In addition, neomycin is the most potent neuromuscular blocking aminoglycoside, and polymyxin B sulfate is a potent neuromuscular blocking polypeptide. Their neuromuscular blocking potentials are additive not only in terms of potency and duration but also in terms of the

characteristics of the blocks produced (Ref. 63). The combination product Neosporin® G. U. Irrigant, containing neomycin sulfate and polymyxin B sulfate, is approved for use as an irrigation solution of the intact urinary bladder, where systemic absorption is minimal.

The agency concludes that the concurrent or sequential use of these products should be avoided where systemic absorption may occur.

12. One comment objected to the proposal because neomycin sulfate for prescription compounding is used in the care of severely burned patients. The comment argued that although there is a chance of drug toxicity in these cases, prohibiting the use of the drug would be far worse.

FDA disagrees with this comment because of evidence of toxicity resulting from such use (Refs. 28 through 32) and because of progress in the control of post-burn sepsis without the use of neomycin sulfate. The goal in treating most full-thickness burns of significant size is to reduce the risk of infection. Adequate primary therapy consists of prompt removal of necrotic tissue and immediate closure with biological dressings such as allographs and autographs (Ref. 42). Selection of either the appropriate parenteral antibiotic or the appropriate local therapy for infected burns is based upon the specific contaminating organisms and the safety of the drugs. The antimicrobial agent not only must be effective against the isolated pathogens, but also must be locally and systemically nontoxic if it is absorbed. Two of the topical agents that have approved labeling indications for the management of burn wounds are silver sulfadiazine, and mafenide acetate.

Local instillation of neomycin in open burn wounds results in significant absorption and systemic toxicity. There is no evidence to support the routine prophylactic use of neomycin in major burn injury (Ref. 73). The use of burn dressings impregnated with aminoglycosides has been associated with the development of bacterial resistance and toxicity (Ref. 1). Sugarbaker reported permanent deafness and nephrotoxicity following 29 days of local applications of porcine skin xenographs commercially impregnated with neomycin in the treatment of a partial thickness burn involving 35 percent of the body surface (Ref. 32). As discussed in the preceding paragraph, Bamford and Jones reported severe reactions in six children following the use of topical antibiotic aerosol sprays containing neomycin sulfate, polymyxin B, and bacitracin for the treatment of full-thickness burns covering body surface areas ranging from 10 to 22 percent. All six children developed delayed-onset deafness. Three developed renal failure and three developed tetany associated with a metabolic imbalance (Ref. 28).

13. One comment reported using both nonsterile and sterile neomycin sulfate in the preparation of topical gels, ointments, and sprays as part of the prophylactic regimen for patients undergoing cancer chemotherapy in protected-environment units. The comment stated that neomycin sulfate is compounded with vancomycin, polymyxin B, and nystatin in a topical ointment, and with vancomycin and polymyxin B in a spray.

These uses of these products are outside the scope of this rulemaking and are investigational. Before these uses can be approved and included in the INDICATIONS section of a product's labeling, data on their safety and effectiveness must be submitted for evaluation.

14. Comments from two pediatricians who treat children with chronic lung disease, especially cystic fibrosis, stated that one form of therapy used is an aerosol inhalation, and that neomycin sulfate is used in the aerosol. The comments stated that, theoretically, neomycin sulfate suppresses *Staphylococcus aureus*, a major component of the bacteria in children with this disorder. Another comment noted that there is no conclusive evidence that this form of therapy is particularly effective in suppressing the growth of this organism, but contended that it is accepted therapy and has never been shown to be harmful. The comment said that the drug should remain in use until studies are performed that show it is ineffective.

FDA disagrees with the comment that aerosol inhalation of neomycin has never been shown to be harmful. Neomycin has been reported to be absorbed in toxic amounts by this route. As early as 1960, Fuller reported deafness in two children resulting from the aerosol inhalation of neomycin for the treatment of staphylococcal infections (Ref. 20).

15. Several comments argued that neomycin sulfate for prescription compounding should not be removed from the market because of its use in the preparation of enemas and in compounding oral dosage forms. The comments cited the following as conditions appropriate for treatment with neomycin sulfate enemas: hepatic encephalopathy or coma, cirrhosis, colostomy surgery, biopsy of the prostate, Reye syndrome, and the preoperative preparation of the bowel. In addition, the comments cited the following as conditions appropriate for treatment with oral dosage forms: colon and rectal operations, preoperative bowel preparation, and hepatic coma. One comment asserted that neomycin sulfate in tablet and solution formulations has been used successfully since 1945 to sterilize the colon prior to resection and in other types of intestinal surgery. Another comment stated that neomycin sulfate enemas should be permitted because they are useful for patients who are unable to take medications orally.

The agency does not believe that neomycin sulfate can be recommended for use in the preparation of enemas. Adequate clinical data on the extent of absorption, safe dosage ranges, safe treatment periods, and drug effectiveness after rectal administration are not available. Breen and co-workers studied absorption following oral and enema administration and concluded that "enema-administered neomycin is absorbed to the same extent as that administered orally, and intestinal ulceration does not enhance neomycin absorption" (Ref. 74). However, this one report is not adequate to provide detailed prescribing information for this route of administration. Clinical evidence concerning the safety or effectiveness of neomycin sulfate used as an enema in the treatment of Reye syndrome also is unavailable.

Although there is significant systemic absorption following the local instillation of neomycin sulfate in the peritoneal cavity and other tissues during surgery, the agency believes that the short-term oral administration of the drug can be relatively safe. Neomycin sulfate is poorly absorbed from an intact gastrointestinal tract following oral administration. Currently available oral tablets and oral solutions will not be affected by this action. The current labeling for these oral products recommends their use as adjunctive therapy for the suppression of intestinal bacteria as in the preoperative preparation of the bowel and for the treatment of hepatic coma for periods up to 3 weeks. (Oral tablets should not be instilled into an operative site. FDA has received a report about a patient who lost her hearing following the instillation of two neomycin tablets directly into an infected postoperative cholecystectomy wound twice daily for 8 days.) The agency agrees that neomycin sulfate should be available to compound prescriptions for oral use for the two approved indications. Compounded oral

solutions may be useful for patients who are unable to take solid dosage forms.

16. One comment stated that, although neomycin sulfate is not approved for enema use in the treatment of hepatic encephalopathy, there is no other antibiotic that has been approved for this use that has low toxicity and is economical to the patient. The comment asserted that kanamycin, a possible alternative, is not approved for enema use and is much more toxic, and that the only dosage form available for compounding is the injectable product which is very expensive. Other comments noted that lactulose, another drug which may be used instead of neomycin sulfate as an enema preparation in patients in hepatic coma, may not be effective in some patients and has not been approved by FDA for this indication.

FDA notes that, although kanamycin is not approved for enema use in the treatment of hepatic coma, it is approved for oral administration. Kanamycin sulfate, an aminoglycoside closely related to neomycin with similar ototoxic and nephrotoxic potentials, is slightly less toxic than neomycin sulfate (Refs. 2, 5, 6, 11, 22, 42, 43, 50, 55, 75, and 76). Kanamycin-induced hearing loss also can be rapid in onset, progressive, and severe, can occur after the administration of small quantities, and may continue to develop after cessation of treatment (Ref. 2). Its absorption from the gastrointestinal tract is about 1 percent, however, less than the 3-percent systemic absorption of neomycin (Ref. 43), and its rate of elimination from the inner ear is faster (Ref. 9).

Although slightly less ototoxic, kanamycin, like neomycin, first attacks the outer hair cells of the basal turn of the organ of Corti. Neomycin sulfate, however, destroys both the outer and inner hair cells and distal ends of the fibers of the cochlear nerve, as well as most of the supporting cells, and affects all turns of the cochlea (Ref. 13). With kanamycin there is said to be nearly complete preservation of nerve fibers despite outer hair cell loss, and the progression of kanamycin-induced hearing loss may be arrested, or in a few patients reversed, by terminating therapy after the first signs of ototoxicity appear (Ref. 47). As with all aminoglycosides, impaired renal function potentiates this effect. The labeling for kanamycin sulfate oral capsules states that the capsules are indicated when suppression of the normal bacterial flora of the bowel is desirable for short-term adjunctive therapy, and for treatment of hepatic coma.

Lactulose syrup, contrary to the comment, is approved by FDA for oral and rectal administration for the prevention and treatment of portal-systemic encephalopathy, including hepatic pre-coma and coma states. When compared in a controlled double-blind clinical trial in the treatment of hepatic encephalopathy, both lactulose and neomycin sulfate were equally effective (Ref. 77). The *AMA Drug Evaluations* indicates that lactulose is preferred for long-term therapy because of its lower toxicity (Ref. 1).

17. One comment argued that commercially prepared dermatologic drug products should not completely replace extemporaneously prepared products made with neomycin sulfate for prescription compounding. The comment stated that dermatologists, particularly in high volume clinics, frequently have uniquely formulated products. Another comment stated that the risk of adverse side effects is greatly diminished when neomycin sulfate is topically applied, and that neomycin sulfate for prescription compounding should be permitted to remain on the market with a label restricting its use to dermatological applications only. The comment maintained that approximately 15 percent of the neomycin sulfate powder sold is used for dermatological preparations and that removal would cause an unjustified hardship. The comment added that if FDA would permit the product to be marketed only in 100-g containers with modified and restricted labeling, the agency would have easy access to records of the product being shipped and would be in a better position to monitor unapproved uses.

FDA notes that there are many commercial preparations containing neomycin sulfate that are already available for dermatologic, ophthalmic, or otic use, and also one for urological use. This action will not affect the availability of bulk neomycin sulfate that is supplied to pharmaceutical manufacturers for use in making these specific dosage forms. With the revocation of provisions for certification of (and withdrawal of approval of applications for) neomycin sulfate sterile powder, the only remaining prescription products in which neomycin sulfate is the only active ingredient will be neomycin sulfate oral tablets and solution and, as discussed below, neomycin sulfate for compounding oral products. There is adequate evidence of the safety and effectiveness of these approved products for their labeled indications, suppression of intestinal bacteria and treatment of hepatic coma. Adequate evidence is not available, however, to support the agency's approval of the use of nonsterile neomycin sulfate for extemporaneously compounded preparations other than for oral use.

If nonsterile neomycin sulfate is to remain available it must be labeled to provide full prescribing information for safe use of the product. "Neomycin sulfate for prescription compounding," to be renamed "Neomycin sulfate for compounding oral products," will be required to have package insert labeling, including warnings and the same indications for which the oral tablets and solution are approved. Additional indications may be added to the labeling when a supplement containing adequate evidence of their safety and effectiveness is submitted and approved.

18. Several comments referred to the use of specific concentrations of neomycin sulfate irrigation and enema solutions, contending that the risks of ototoxicity and nephrotoxicity are dose related and that, if the proper concentration and dosage are used and if neomycin is administered properly, the antibiotic is safe. One comment said that tentative guidelines for irrigating solution concentrations and usage should be developed.

The agency has concluded that no specific concentrations of neomycin sulfate irrigation and enema solutions can be recommended as safe and effective without further study. Serious permanent toxic reactions have been reported in the medical literature following the use of concentrations ranging from very dilute to as high as 10 percent (Ref. 27). In published reports of local irrigations, the amount of the drug used has almost always greatly exceeded what appears to be necessary. (See the response to comment 8, above.) A 1-percent concentration is often 1,000 times greater (range = 16 to 2,000 times greater (Ref. 10)) than most mean inhibitory concentrations needed in vitro to eradicate the expected microorganisms (Refs. 10, 42, and 50). Weinstein demonstrated that striking systemic absorption occurred in all 10 patients undergoing hip replacements who received single 5- to 20-minute local irrigations with a 1-percent neomycin solution (Ref. 38). Irrigating volumes were small, varying from 500 to 1,150 mL with a neomycin dose range of 66.7 to 202.7 mg/kg. These doses are 4 to 13 times those previously recommended for parenteral use. Peak serum concentrations (up to 15.5 micrograms/

mL) were attained in 5 of the 10 patients by 15 to 30 minutes and in 4 others by 1 hour. Serum concentrations at 2 hours ranged from approximately 1.2 to 10 micrograms/mL, and at 4 hours all remained higher than 1.2 micrograms/mL. Two patients had concentrations above 9 micrograms/mL at 4 hours. In other reports, these serum levels of neomycin have been associated with nephrotoxicity and ototoxicity (Refs. 16 and 39).

FDA does not agree that guidelines for irrigating solutions should be developed. Because safety and effectiveness have not been established for the use of neomycin sulfate in irrigating solutions, even very dilute solutions, the agency cannot make recommendations about dosage and administration.

C. Comments With Labeling Suggestions

19. Several comments recommended other ways to safeguard against the toxicity problems associated with neomycin sulfate for prescription compounding rather than withdrawal of the drug from the market. Some of the recommendations were to: (a) Provide label and package insert contraindications and warnings; (b) include in the labeling all indications for which similar products are approved, i.e., ophthalmic, otic, oral, and topical, including dermatological, uses and include directions for these uses; (c) continue to certify the product pending final resolution of an appropriate package insert.

FDA agrees with the comments recommending complete labeling for neomycin for prescription compounding and has not withdrawn the product pending resolution of guideline labeling. However, FDA does not believe that it has a basis for including labeling for all the indications for which products containing neomycin sulfate are approved and are readily available. Except for neomycin sulfate oral tablets and solutions, all prescription products containing neomycin sulfate are fixed combinations that also contain one or more other active ingredients. Approval of a fixed combination for a specific indication does not provide the basis for approval of one of the ingredients alone for the same indication. Effectiveness of a fixed combination is based upon the antimicrobial activities of specific quantities of two or more antimicrobial agents added together. The agency is not aware of data that establish the safety and effectiveness of neomycin sulfate alone for any indication in prescription drug labeling except for the indications in the approved labeling for the oral neomycin products.

20. One drug manufacturer commented that the proposal failed to mention that the Anti-Infective Agents Advisory Committee recommended immediate inclusion of a boxed warning on the product's labeling that would emphasize the drug's ototoxicity and nephrotoxicity potentials, and that the proposal also failed to mention the committee's conclusion that pharmaceutical manufacturers should be contacted to add to the boxed warning.

Another comment recommended that a package insert and a boxed statement on the container label be used to provide pharmacists and physicians with adequate information on the risks involved. Because the drug has a fairly large container, the comment added, there is ample room on the existing label to put a boxed warning statement to warn about absorption and to request that the accompanying package insert be read. The comment stated that neomycin sulfate should be permitted for use in irrigating solutions and that the physician should be permitted to make a benefit-risk judgment concerning the use of neomycin sulfate in these and other circumstances where significant systemic absorption may occur.

FDA notes that the proposal did state that a boxed warning was recommended by the Anti-Infective Agents Advisory Committee for neomycin for prescription compounding (44 FR 44178 at 44179; July 27, 1979). However, the proposal also explained that because the product was shipped in bulk for prescription compounding, it was permitted to be shipped without a package insert that would have described approved indications for use, adverse reactions, and warnings. Moreover, pharmaceutical manufacturers were contacted and given an opportunity for input when FDA provided for a comment period on the proposal, when FDA held an informal conference November 20, 1979, and when the comment period was extended at the manufacturer's request.

Because the drug is being used for indications for which it lacks evidence of effectiveness and for which there is clinical evidence of significant risk to the patient, FDA believes that neomycin sulfate can no longer be permitted to be shipped without adequate labeling. FDA agrees that a package insert is needed to provide pharmacists and physicians with the information necessary for the safe and effective use of the drug, including its potential hazards. A boxed warning on the container label, although a step in the right direction, would be too brief to provide essential scientific information that is needed for the safe and effective use of the drug (21 CFR 201.56). The following sections from the specific requirements on the content and format of the labeling (21 CFR 201.57), are applicable to aminoglyoside antibiotics: description, clinical pharmacology including microbiology, indications and usage, contraindications, warnings, precautions, adverse reactions, overdosage, dosage and administration, how supplied, and if appropriate, animal pharmacology and/or animal toxicology.

FDA's labeling guideline for neomycin sulfate for compounding oral products provides the required information. The guideline states first that the product is not for intra-operative irrigation and other parenteral use. A boxed warning describes the ototoxic and nephrotoxic reactions that have been reported following parenteral, aerosol, and oral administration, topical application to wounds, bowel and surgical irrigation, and other uses. The warning advises that renal impairment is not a prerequisite for ototoxicity and that ototoxicity is not always dose-related. In addition, the WARNING section states that neuromuscular blockade and respiratory paralysis have been reported following the use of neomycin.

The guideline advises that because fatal and irreversible toxic reactions may follow the local instillation of neomycin during surgical procedures and the local application of neomycin to full-thickness burns, these routes of administration should be avoided.

The INDICATIONS section of the labeling guideline states that oral neomycin is indicated as adjunctive therapy (1) as part of a regimen for preoperative suppression of normal bacterial flora of the bowel and (2) in hepatic coma. This section also includes a statement that evidence of safety and effectiveness is lacking for the administration of neomycin through the distal portion of the colon in staged colonic resection and through the rectum as an enema to treat acute hepatic coma.

In requiring labeling to provide information concerning appropriate uses and to warn about the risks of inappropriate use, FDA is not preventing any physician from making his or her own benefit-risk judgments about the use of neomycin. A physician's decision to use an approved drug in a given situation does not depend solely upon whether or not that use is indicated in the labeling.

D. Other Comments

21. One comment, contending that neomycin sulfate is approved by FDA as

an irrigant, referred to an FDA-approved package insert for Neosporin® G. U. Irrigant, an irrigation solution consisting of a combination of neomycin sulfate and polymyxin B sulfate. The comment noted that polymyxin does not reduce any of the alleged toxic effects of neomycin sulfate. The comment also requested copies of scientific studies that prove neomycin is absorbed when used in irrigating solutions.

Neosporin® G. U. Irrigant is a fixed combination approved by FDA for use as an irrigation solution of the intact urinary bladder. One mL (containing neomycin sulfate equivalent to 40 mg neomycin base and 200,000 units of polymyxin B sulfate) is to be diluted in 1,000 mL isotonic saline solution. When the urinary bladder is intact, systemic absorption of the prepared solution is minimal. Approval of this fixed combination product does not provide the basis for approval of neomycin sulfate for prescription compounding for this indication. Efficacy of the fixed combination, based upon the antimicrobial activities of specific concentrations of two antibiotics, is broader than that of each of the two active ingredients alone. The data used by the agency to conclude that Neosporin® G. U. Irrigant is safe because it is not absorbed from the intact urinary bladder, and that it is effective as an irrigation solution, are different from the data that would be required to demonstrate the safety and effectiveness of a given concentration of neomycin sulfate as a single-ingredient irrigation preparation.

Regarding the request for copies of studies, there are many published reports of absorption following neomycin sulfate irrigation, some of which are included in the reference list in this document.

22. One comment stated that FDA has asked companies that manufacture or sell neomycin sulfate for prescription compounding to produce scientific studies to show its safety. The comment said that of all the aminoglycosides on the market today, only neomycin sulfate is no longer patented. Therefore, the comment claimed, no company will expend large amounts of money to prove the safety of the drug because that company would have no exclusive rights to its product. The comment argued that it is inconsistent for FDA to request such studies because the agency must already have such data in support of the approved package insert for Neosporin® G. U. Irrigant, which contains neomycin sulfate as a component. The comment stated that the same data used by FDA in approving a product that contains neomycin sulfate as a component should apply to neomycin sulfate for prescription compounding. The comment also noted that the package insert for Neosporin® G. U. Irrigant includes the following contraindication: "This product is contraindicated in those individuals who have shown hypersensitivity to any of its components." The fact that Neosporin® G. U. Irrigant has such a contraindication, the comment argued, should require that neomycin sulfate for prescription compounding remain on the market, because a solution of neomycin sulfate in its pure form would still be available for a patient who shows hypersensitivity to polymyxin B sulfate.

FDA believes that if there is actually a need for neomycin sulfate as a component in an enema or irrigation solution, manufacturers will be economically motivated to conduct the scientific studies or submit the published reports that are necessary to demonstrate its safety and effectiveness in these products. Concerning the comment's statement that FDA already has safety and effectiveness data for Neosporin® G. U. Irrigant, the agency advises, as stated in the response to comment 21 above, that these data are different from the data that would be required to establish the safety and effectiveness of neomycin sulfate alone. The data supporting Neosporin® G. U. Irrigant are from studies on a finished, fixed-combination dosage form containing both neomycin sulfate and polymixin B sulfate. These data are not applicable to nonsterile neomycin sulfate for prescription compounding because the effectiveness of the combination product results from the antimicrobial activities of specific quantities of the two antibiotics together. In addition, the required prescribing information regarding appropriate dosing and administration is lacking for the use of neomycin sulfate as a single ingredient product for irrigation of the bladder for polymyxin B sulfate-hypersensitive patients. Information regarding dosage and administration is particularly important for neomycin because of its known toxicity.

23. Noting that the proposal stated that neomycin sulfate was approved in 1964 as a dermatological preparation, one comment disagreed that neomycin sulfate for prescription compounding was ever used as a dermatologic preparation. The comment stated that FDA provided for batch certification of neomycin sulfate in response to a petition filed by the American Society of Hospital Pharmacists (ASHP). The comment enclosed a copy of the ASHP petition requesting the approval of neomycin sulfate as (1) a solution for wet dressings, (2) a solution for irrigation, (3) an ophthalmic medication of various strengths, (4) an ophthalmic medication using different ointment bases, and (5) a medication prescribed for individual patient needs. The comment concluded that, originally, dermatologic uses were not even discussed.

FDA disagrees with this comment. The original applications for neomycin sulfate sterile vial, approved by FDA on March 7, 1951, indicated that one of the uses for the drug was as an ointment for the topical treatment of skin infections in both humans and animals. In addition, the September 19, 1963, petition from ASHP also stated that a need existed for several compounded medications including "neomycin sulfate ointments in special bases professionally preferred by dermatologists."

24. Several comments contended that removing neomycin sulfate for prescription compounding from the market will not stop the uses of neomycin sulfate that the proposal is intended to prevent. One comment noted that the proposal would remove from the market only the bulk and the injectable neomycin sulfate, leaving neomycin sulfate as an oral solution, in tablet form, and in other products which have neomycin sulfate as a component. The comments contended that physicians who prefer to continue using neomycin sulfate solutions will direct the pharmacist to grind neomycin sulfate tablets or to further dilute neomycin sulfate oral solution. The comments argued that this would risk exposing the patient to potentially adverse ingredients because the pure bulk neomycin sulfate powder and the sterile injection would no longer be used. Another comment asserted that neomycin sulfate tablets are not a good substitute for the bulk powder because, in addition to being inconvenient, the binders in the tablets do not dissolve. The resulting solution would be cloudy and would have a residue. In addition, the use of tablets or solution will make it more difficult and time-consuming for the pharmacist to make the compounded solution.

Many comments said that the withdrawal from the market of neomycin sulfate for prescription compounding would result in increased medical costs to practitioners and patients. The comments said other forms of neomycin sulfate, such as the oral solution, the tablet form, and other

products which have neomycin sulfate as a component, will be used for prescription compounding instead of the bulk powder. The comments cited data to demonstrate the higher costs of these neomycin sulfate products and other aminoglycosides.

FDA must protect the public against the risks of death, disability due to irreversible bilateral deafness, renal failure, and respiratory paralysis associated with unapproved uses of neomycin sulfate. The agency cannot support the continued misuse of the product on the basis of cost or convenience.

Rather than removing the product from the market as originally proposed, FDA is revising the regulations and requiring labeling that will contain strong warnings about the unapproved uses. FDA is hopeful that these measures will help to prevent further misuse of neomycin sulfate.

25. Several comments asserted that FDA's proposal to request a recall to the retail level for all products covered by certificates for batches of neomycin sulfate for prescription compounding is excessive and unnecessary. The comments stated that the publicity received by the proposal has already alerted most users to the potential hazards of unapproved uses of the product. The comments also stated that recall or discontinuing certification penalizes those who are using the product for indications that FDA considers acceptable. The comments also questioned FDA's urgency in requesting a recall, noting that the agency waited 27 months to publish the proposal and that many more months will elapse before the final rule is published.

The agency agrees that a recall may no longer be necessary because the final rule imposes only a new requirement for drug labeling rather than revocation of certification, as proposed. Nevertheless, it is important that prescribers and pharmacists be informed about the risks of toxicity associated with the uses of neomycin sulfate that result in significant systemic absorption. Therefore, supplements providing for package insert labeling in accordance with the guideline must be submitted to approved antibiotic applications or abbreviated antibiotic applications for the products affected by this final rule, by June 14, 1988.

26. One comment stated the proposal would contribute to the elimination of the small pharmaceutical company from the marketplace because it is the smaller company that usually manufactures and sells bulk products, while the larger pharmaceutical manufacturers sell dosage form medications.

FDA disagrees. This final action is not removing the product from the marketplace and thus is not contributing to the elimination of any pharmaceutical companies, small or large.

27. One comment stated that it was not included in early FDA meetings with The Upjohn Co. and Elkins-Sinn, Inc., two firms that marketed neomycin sulfate for prescription compounding. The comment said it was not aware of FDA's intention to withdraw the product from the market until August 11, 1979, whereas the other firms knew as early as 1977.

FDA did not hold early meetings with pharmaceutical manufacturers as contended by the comment. The issue of neomycin sulfate was discussed at an open meeting of FDA's Anti-Infective Agents Advisory Committee on April 4, 1977. A representative from Squibb & Sons, Inc., attended the meeting and participated in the discussion. Although the meeting was announced in advance in the **Federal Register** and open to the public, no other pharmaceutical manufacturer chose to participate. Both the minutes of the meeting and the transcript of the proceedings are filed with FDA's Dockets Management Branch and are available for public inspection.

28. One comment claimed the proposal is based largely on information obtained from an unnamed pharmaceutical company. The comment stated that no written documentation or information is contained in the proposal to substantiate the company's position, and the simple fact that this unnamed company received 100 inquiries concerning neomycin sulfate does not mean that the drug is not safe or effective. The comment said it is possible that the unnamed company has economic motives for its position.

The proposal was not based on information from a pharmaceutical company. FDA's position is documented by publications in the medical literature cited in this document and by FDA's drug experience files, and is supported by both the Anti-Infective Agents Advisory Committee's recommendations and by the Drug Efficacy Study Implementation project.

IV. References

The following references have been placed on display in the Dockets Management Branch (address above) and may be seen by interested persons between 9 a.m. and 4 p.m., Monday through Friday.

1. American Medical Association Department of Drugs, "Aminoglycosides," Chapter 74, *in* "AMA Drug Evaluations," 4th Ed., John Wiley & Sons, Inc., New York, 1980.

2. Frost, J. O., J. E. Hawkins, and J. F. Daly, "Kanamycin: II. Ototoxicity," *American Review of Respiratory Diseases*, 82:23–30, 1960.

3. Kunin, C. M., "Binding of Antibiotics to Tissue Homogenates," *Journal of Infectious Diseases*, 121(1):55–64, 1970.

4. Manuel, M. A., I. Kurtz, C. S. Saiphoo, and J. M. Nedzelski, "Nephrotoxicity and Ototoxicity Following Irrigation of Wounds With Neomycin," *The Canadian Journal of Surgery*, 22(3):274–277, 1979.

5. Ballantyne, J., "Iatrogenic Deafness," *The Journal of Laryngology and Otology*, 84:967–1000, 1970.

6. Price, K. E., J. C. Godfrey, and M. Kawaguchi, "Effect of Structural Modifications on the Biological Properties of Aminoglycoside Antibiotic Containing 2-Deoxystreptamine," *in* "Advances in Applied Microbiology," edited by D. Perlman, Academic Press, Inc., 18:216, 1974.

7. Rudnick, M. D., I. A. Ginsberg, and P. S. Huber, "Aminoglycoside Ototoxicity Following Middle Ear Injection," *Annals of Otology Rhinology and Laryngology*, 89, Supplement 77, 1980.

8. Stupp, H., K. Kupper, F. Lagler, H. Sous, and M. Quante, "Inner Ear Concentrations and Ototoxicity of Different Antibiotics in Local and Systemic Application," *Audiology*, 12:350–363, 1973.

9. Voldrich, L., "The Kinetics of Streptomycin, Kanamycin, and Neomycin in the Inner Ear," *Acta Oto-Laryngolica*, 60:243–248, 1965.

10. Whelton, A., and H. C. Neu, "The Aminoglycosides," Marcel Dekkar, Inc., New York, 1982.

11. Nord, N. M., F. Watanabe, R. H. Parker, and P. D. Hoeprich, "Comparative Acute Toxicity of Four Drugs," *Archives of Internal Medicine*, 119:493–502, May 1967.

12. Anderson, M. G., "Neomycin Ototoxicity Associated with Wound Irrigation in the Local Treatment of Osteomyelitis," *Journal of the Florida Medical Association*, 65(1):20–21, 1978.

13. Nilges, T. C., and J. L. Northern, "Iatrogenic Ototoxic Hearing Loss," *Annals of Surgery*, 173(2):281–289, 1971.

14. Kelly, D. R., E. R. Nilo, and R. B. Berggren, "Deafness After Topical Neomycin Wound Irrigation," *New England Journal of Medicine*, 280(24):1338–1339, 1969.

15. Gelman, M. L., C. H. Frazier, and H. P. Chandler, "Acute Renal Failure After Total Hip Replacement," *Journal of Bone and Joint Surgery*, 61A(5):657–660, 1979.

16. Masur, H., P. K. Whelton, and A. Whelton, "Neomycin Toxicity Revisited," *Archives of Surgery*, 111:822–825, 1976.

17. Oriscello, R. G., and N. P. DePasquale, "Neomycin Wound Irrigation: Report of a Case Associated with Massive Absorption with Nephro- and Neurotoxicity," *American Journal of Therapeutic and Clinical Reports*, 1:1–5, 1975.

18. Coleman, J. W., J. F. Artusio, F. Yao, J. H. McGovern, and S. R. Jalandoni,

"Neomycin-Induced Neuromuscular Blockade," *Urology*, 17(3):265–267, 1981.

19. Johnsson, L., J. E. Hawkins, T. C. Kingsley, F. O. Black, and G. J. Matz, "Aminoglycoside-Induced Cochlear Pathology in Man," *Acta Oto-Laryngologica*, Supplement 393:1–19, 1981.

20. Fuller, A., "Ototoxicity of Neomycin Aerosol," *Lancet*, 1:1028, 1960.

21.Helm, W. H., "Ototoxicity of Neomycin Aerosol," *Lancet*, 1:1294, 1960.

22. Leach, W., "Ototoxicity of Neomycin and Other Antibiotics," *Journal of Laryngology and Otology*, 774–790, 1962.

23. Meakins, J. L., and J. Allard, "Neomycin Absorption Following Clagett Procedure for Post-Pneumonectomy Empyema," *Annals of Thoracic Surgery*, 29(1):32–35, 1980.

24. Gruhl, V. R., "Renal Failure, Deafness and Brain Lesions Following Irrigation of the Mediastinum with Neomycin," *Annals of Thoracic Surgery*, 11(4):376–379, 1971.

25. Fields, R. L., "Neomycin Ototoxicity," *Archives of Otolaryngology*, 79:83–86, 1964.

26. Myerson, M., H. F. Knight, A. J. Gambarini, and T. L. Curran, "Intrapleural Neomycin Causing Ototoxicity," *The Annals of Thoracic Surgery*, 9(5):483–486, 1970.

27. Campanelli, P. A., E. Grimes, and M. L. West, "Hearing Loss in a Child Following Neomycin Irrigation," *Medical Annals of the District of Columbia*, 35(10):541–543, 1966.

28. Bamford, M. F. M., and L. F. Jones, "Deafness and Biochemical Imbalance after Burns Treatment with Topical Antibiotics in Young Children," *Archives of Disease in Childhood*," 53:326–329, 1978.

29. Committee on Safety of Medicines, United Kingdom, "Warning on Aerosols Containing Neomycin," *Lancet*, 1:1115, 1977.

30. Little, P. J., and K. L. Lynn, "Neomycin Toxicity," *New Zealand Medical Journal*, 81(539):445, 1975.

31. Graham, W. C. S., "Survival of a Severely Burned Child with Bilateral Sensory-Neural Deafness from Topical Antibiotics," *Panminerva Medica*, 11:44–46, 1969.

32. Sugarbaker, P. H., L. D. Sabath, and A. P. Morgan, "Neomycin Toxicity From Porcine Skin Xenografts," *Annals of Surgery*, 179(2):183–185, 1974.

33. Berk, D. P., and T. Chalmers, "Deafness Complicating Antibiotic Therapy of Hepatic Encephalopathy," *Annals of Internal Medicine*, 73(3):393–6, 1970.

34. Kalbian, V. V., "Deafness Following Oral Use of Neomycin," *Southern Medical Journal*, 65(4):499–501, 1972.

35. Ruben, R. J., and J. F. Daly, "Neomycin Ototoxicity and Nephrotoxicity. A Case Report Following Oral Administration," *Laryngoscope*, 78(10):1734–1737, 1968.

36. Ward, K. M., and F. J. Rounthwaite, "Neomycin Ototoxicity," *Annals of Otology*, 87:211–215, 1978.

37. Greenberg, L. H., and H. Momary, "Audiotoxicity and Nephrotoxicity Due to Orally Administered Neomycin," *Journal of the American Medical Association*, 194(7):827–828, November 15, 1965.

38. Weinstein, A. J., M. C. McHenry, and T. L. Gavan, "Systemic Absorption of Neomycin Irrigating Solution," *Journal of the American Medical Association*, 238(2):152–153, 1977.

39. Davis, J. E., A. W. Siemsen, and R. W. Anderson, "Uremia, Deafness, and Paralysis Due to Irrigating Antibiotic Solutions," *Archives of Internal Medicine*, 125:135–139, 1970.

40. Waisbren, B. A., and W. W. Spink, "A Clinical Appraisal of Neomycin," *Annals of Internal Medicine*, 33:1099–1119, 1950.

41. FDA Computerized Drug Experience Reporting System: March 6, 1984. Dockets Management Branch—Docket No. 79N–0155, Food and Drug Administration, Rockville, MD.

42. Mandell, G. L., R. G. Douglas, and J. E. Bennett, "Principles and Practice of Infectious Diseases," John Wiley & Sons, Inc., New York, 1979.

43. Weinstein, L., "Antimicrobial Agents: Streptomycin, Gentamicin, and Other Aminoglycosides," *in* "The Pharmacological Basis of Therapeutics," 5th Ed., edited by L. S. Goodman and A. Gilman, The MacMillan Co., New York, 1975.

44. Carr, D. T., H. A. Brown, and K. H. Pfuetze, "Occurrence of Deafness in Neomycin Therapy," *Journal of the American Medical Association*, 144(1):65, 1950.

45. Greenwood, G. J., "Neomycin Ototoxicity," *Archives of Otolaryngology*, 69:390–397, April 1959.

46. Trimble, G. X., "Neomycin Ototoxicity: Dossier and Doses," *New England Journal of Medicine*, 281(4):219, July 24, 1969.

47. Lerner, S. A., G. J. Matz, and J. E. Hawkins, "Aminoglycoside Ototoxicity," Little, Brown and Co., Inc., Boston, 1981.

48. Lindsay, J. R., L. R. Proctor, and W. P. Work, "Histopathologic Inner Ear Changes in Deafness Due to Neomycin in a Human," *The Laryngoscope*, 70(4):382–392, 1960.

49. Lowry, L. D., M. May, and P. Pastore, "Acute Histopathologic Inner Ear Changes in Deafness Due to Neomycin: A Case Report," *Annals of Otology*, 82:876–880, 1973.

50. Lechevalier, H. A., "The 25 Years of Neomycin," *CRC Critical Reviews in Microbiology*, 359–397, 1975.

51. Schacht, J., "Biochemistry of Neomycin Ototoxicity," *Journal of the Acoustical Society of America*, 59(4):940–944, April 1976.

52. Hawkins, J. E., V. Beger, and J. M. Aran, "Antibiotic Insults to Corti's Organ," *in* "Sensorineural Hearing Processes and Disorders," Graham, A. B. (ed.), Little, Brown and Co., Inc., Boston, pp. 411–425, 1965.

53. Ylikoski, J., "Correlative Studies on the Cochlear Pathology and Hearing Loss in Guinea Pigs After Intoxication with Ototoxic Antibiotics," *Acta Oto-Laryngologica*, Supplement 326, pp. 1–62, 1974.

54. Kohonen, A., "Effect of Some Ototoxic Drugs Upon the Pattern and Innervation of Cochlear Sensory Cells in the Guinea Pig," *Acta Oto-Laryngologica*, Supplement 206, pp. 1–70, 1965.

55. Stebbins, W. C., J. M. Miller, L. G. Johnsson, and J. E. Hawkins, "Ototoxic Hearing Loss and Cochlear Pathology in the Monkey," *Annals of Otology, Rhinology, and Laryngology*, 78:1007–1025, 1969.

56. Kavanaugh, K. T., and B. F. McCabe, "Ototoxicity of Oral Neomycin and Vancomycin," *The Laryngoscope*, 93:849–853, 1983.

57. The Medical Letter, Inc., "Topical Neomycin," *The Medical Letter on Drugs and Therapeutics*, 15(25):101–102, 1973.

58. DeBeukelaer, M. M., L. B. Travis, W. F. Dodge, and F. A. Guerra, "Deafness and Acute Tubular Necrosis Following Parenteral Administration of Neomycin," *American Journal of Diseases of Children*, 121:250–252, 1971.

59. Garrison, L., and M. P. Dutro, "Ototoxicity from Topical Neomycin," *Clinical Pharmacy*, 1:301, 1982.

60. Whelton, A., G. G. Carter, T. J. Craig, H. H. Bryant, D. V. Herbst, and W. G. Walker, "Comparison of the Intrarenal Disposition of Tobramycin and Gentamicin: Therapeutic and Toxicologic Answers," *Journal of Antimicrobial Chemotherapy*, 4 (Supplement A):13–22, 1978.

61. Einspruch, B. C., and V. V. Gonzalez, "Clinical and Experimental Nephropathy Resulting from the Use of Neomycin Sulfate," *Journal of the American Medical Association*, 173(7):809–811, 1960.

62. Craig, H. V., G. G. Guillet, J. A. Walker, and C. P. Artz, "Respiratory Depression Related to Intraperitoneal Neomycin, Experimental Study and Review of Recent Literature," *The American Surgeon*, 32(1):27–32, 1966.

63. Yao, F., S. F. Seidman, and J. F. Artusio, "Disturbance of Consciousness and Hypocalcemia After Neomycin Irrigation, and Reversal by Calcium and Physostigmine," *Anesthesiology*, 53(1):69–71, 1980.

64. Lee, C., and A. J. C. de Silva, "Interactions of Neuromuscular Blocking Effects of Neomycin and Polymyxin B," *Anesthesiology*, 50:218–220, 1979.

65. Wright, J. M. and B. Collier, "The Effects of Neomycin Upon Transmitter Release and Action, "*The Journal of Experimental Therapeutics*, 200(3):576–587, 1977.

66. The Medical Letter, Inc., "Antimicrobial Prophylaxis: Prevention of Wound Infection and Sepsis After Surgery," *The Medical Letter on Drugs and Therapeutics*, 19(9):37–40, 1977.

67. The Medical Letter, Inc., "Antimicrobial Prophylaxis for Surgery," *The Medical Letter on Drugs and Therapeutics*, 21(18):73–76, 1979.

68. Turco, S. J., "Preparing Sterile Neomycin Sulfate Solution," *Hospital Pharmacy*, 7(5):146–149, 1972.

69. Ericsson, C. D., J. H. Duke, and L. K. Pickering, "Clinical Pharmacology of Intravenous and Intraperitoneal Aminoglycoside Antibiotics in the Prevention of Wound Infections," *Annals of Surgery*, 188(1):66–71, 1978.

70. Keener, E. B., and P. L. Perot, "Antibacterial Drugs Topically Applied to the Central Nervous System," *Archives of Neurology*, 3:665–670, 1960.

71. Kunin, C. M., T. C. Chalmers, C. M. Levy, S.C . Sebastyen, C. S. Lieber, and M. Finland, "Absorption of Orally Administered Neomycin and Kanamycin: With Special Reference to Patients with Severe Hepatic and Renal Disease," *New England Journal of Medicine*, 262(8):380–385, 1960.

72. Rywlin, A. M., E. S. Minovitch, "Bacitracin and Neomycin Nephrosis: Occurrence After a Single Intraperitoneal Instillation," *Southern Medical Journal*, 58:736–739, June 1965.

73. Monafo, W. W., V. H. Ayvazian, "Topical Therapy," *Surgical Clinics of North America*, 58(6):1157–1171, December 1978.

74. Breen, K. J., R. I. Bryant, J. D. Levinson, and S. Schenker, "Neomycin Absorption in Man: Studies of Oral and Enema Administration and Effect of Intestinal Ulceration," *Annals of Internal Medicine*, 76(2):211–218, 1972.

75. The Medical Letter, Inc., "Kanamycin and Neomycin," *The Medical Letter on Drugs and Therapeutics*, 9(16):61–63, 1967.

76. Falco, F. G., H. M. Smith, and G. M. Arcieri, "Nephrotoxicity of Aminoglycosides and Gentamicin," *Journal of Infectious Diseases*, 119: 406–409, 1969.

77. Atterbury, C. E., W. C. Maddrey, and H. O. Conn, "Neomycin-Sorbitol and Lactulose in the Treatment of Acute-Portal Systemic Encephalopathy," *Digestive Diseases*, 23(5):398–406, 1978.

78. Carr, D. T., K. H. Pfuetze, H. A. Brown, B. E. Douglas, A. E. Karlson, "Neomycin in Clinical Tuberculosis," *American Review of Tuberculosis*, 63:427–433, April 1951.

V. Conclusions

FDA has reached two conclusions as a result of reviewing (1) the written and oral comments on the proposal, (2) findings of the Drug Efficacy Study Implementation published in the **Federal Register** of May 13, 1970 (35 FR 7464) and February 29, 1972 (37 FR 4224), (3) reports in the medical literature, (4) reports in the agency's drug experience files, and (5) information available to support updating currently approved neomycin products. First, there are inadequate data to support the safety and efficacy of neomycin sulfate for use in irrigation solutions in the treatment of infected wounds and ulcers; for use on burns; for prophylactic local use before, during, or after surgical procedures, e.g., intraperitoneal suction-irrigation, fractures and joint replacement surgery, neurosurgery, and for other types of surgery and traumatic wounds; for rectal or colonic irrigation or as a retention enema; for intrapleural instillations; for use in wet dressings; for aerosol inhalation; for solutions to soak bone grafts, skin grafts, and silastic implants; and for any similar use under conditions where neomycin may be systemically absorbed in significant quantities. In addition to the lack of evidence of safety and efficacy of neomycin sulfate for these indications, there is evidence of significant drug toxicity for most of them.

Second, the agency finds that there is adequate safety and efficacy information to continue to allow marketing of nonsterile neomycin sulfate for compounding oral prescription products if full prescribing information is provided.

VI. Amendment to the Antibiotic Regulations

Under 21 CFR Part 433.1 (a) and (b), antibiotic drugs are exempt from batch certification requirements if: (1) The drug is approved for marketing under an appropriate antibiotic application or abbreviated antibiotic application, (2) the drug is packaged and labeled for dispensing in accordance with the applicable regulation or approved application, (3) the bulk drug used in preparing the antibiotic drug product meets the standards of identity, strength, quality, and purity specified in the applicable regulation or approved application, and (4) the antibiotic drug product meets the standards of identity, strength, quality, and purity specified in the applicable regulation or approved application.

The regulation applicable to nonsterile neomycin sulfate for prescription compounding (21 CFR 444.942a), is being amended to change the product name to specify use in compounding oral products and to require package insert labeling. With these amendments, nonsterile neomycin sulfate for prescription compounding cannot be certified or released. Except where other labeling has been approved in an applicable application, nonsterile neomycin sulfate for prescription compounding is not exempt from batch certification requirements. Only nonsterile neomycin sulfate products that are named and labeled in accordance with the amended regulations will be exempt from batch certification.

VII. Economic and Environmental Impact

The agency has determined under 21 CFR 25.24(a)(11) that this action is of a type that does not individually or cumulatively have a significant effect on the human environment. Therefore, neither an environmental assessment nor an environmental impact statement is required.

This final rule does not require either a regulatory impact analysis, as specified in Executive Order 12291, or a regulatory flexibility analysis, as defined in the Regulatory Flexibility Act (Pub. L. 96–354). Executive Order 12291 does not apply to an action such as this at the stage where the action is subject to opportunity for hearing under 5 U.S.C. 556 and 557. Furthermore, the Regulatory Flexibility Act does not apply to this proceeding because the proposed rule was issued before the effective date of the Act. Nevertheless, the agency has examined the economic impact of this final rule and has determined that this impact is insignificant. The final rule amends the antibiotic regulations to change the product name and to require package insert labeling. No additional burdens are imposed upon manufacturers.

VIII. Availability of Guideline

A separate notice published elsewhere in this issue of the **Federal Register** announces the availability of guideline labeling that describes the kind of information to be included in the package insert labeling for this product. The guideline sets forth specific language that would be acceptable to the agency. Copies are available from Dockets Management Branch (address above) under Docket No. 87D–0315.

IX. Notice of Opportunity for a Hearing

The amendments become effective 60 days after the date of publication of this final rule. At that time, batches of nonsterile neomycin sulfate will no longer be certified, released, or exempt from certification unless named and labeled in accordance with the amended regulations. Any person who will be adversely affected by the final rule amending the antibiotic regulations may file objections to it and request a hearing as provided in section 507(f) of the act (21 U.S.C. 357). Reasonable grounds for the hearing must be shown, as specified in 21 CFR 314.300. If requests for hearing are granted both on objections to the final rule and on the proposal to withdraw approval of the antibiotic regulations that is published elsewhere in this issue of the **Federal Register**, the hearings will be combined in a single proceeding under 21 CFR Part 12 and 5 U.S.C. 556 and 557.

Any person subject to this final rule who decides to seek a hearing shall file: (1) on or before May 16, 1988, a written notice of participation and request for hearing, and (2) on or before June 14, 1988, the data, information, and analyses on which the person relies on to justify a hearing, as specified in 21 CFR 314.300. Any other interested person may also submit comments. The procedures and requirements governing this notice of opportunity for hearing, a notice of participation and request for hearing, a submission of data, information, and analyses to justify a hearing, or other comments, and a grant or denial of a hearing are contained in § 314.300.

A request for a hearing may not rest upon mere allegations or denials, but must present specific facts showing that there is a genuine and substantial issue of fact that requires a hearing. If it conclusively appears from the face of the data, information, and factual analyses in the request for hearing that no genuine and substantial issue of fact precludes the action taken by this order,

or when a request for hearing is not made in the required format or with the required analyses, the Commissioner of Food and Drugs will enter summary judgment against the person(s) who request the hearing, making findings and conclusions and denying a hearing.

All submissions under this order are to be filed in three copies. Except for data and information prohibited from public disclosure under 21 U.S.C. 331(j) or 18 U.S.C. 1905, the submissions may be seen in the Dockets Management Branch (address above) between 9 a.m. and 4 p.m., Monday through Friday.

List of Subjects in 21 CFR Part 444

Antibiotics.

Therefore, under the Federal Food, Drug, and Cosmetic Act and under authority delegated to the Commissioner of Food and Drugs, Part 444 is amended as follows:

PART 44—OLIGOSACCHARIDE ANTIBIOTIC DRUGS

1. The authority citation for 21 CFR Part 444 continues to read as follows:

Authority: Sec. 507, 59 Stat. 463 as amended (21 U.S.C. 357); 21 CFR 5.10.

2. Section 444.942a is amended by revising the section heading and by revising paragraphs (a)(1) introductory text, (3) introductory text, and (4)(i), to read as follows:

§ 444.942a Neomycin sulfate for compounding oral products.

(a) * * *

(1) *Standards of identity, strength, quality, and purity.* Neomycin sulfate for compounding oral products is the sulfate salt of a kind of neomycin or a mixture of two or more such salts. It is so purified and dried that:

* * * * *

(3) *Labeling.* It shall be labeled in accordance with the requirements prescribed by § 432.5(a) of this chapter. Its expiration date is 12 months.

(4) * * *

(i) In addition to complying with the conditions of § 431.1 of this chapter, a person who requests certification of a batch of neomycin sulfate for compounding oral products shall submit with the request a statement showing the batch mark, the number of packages of each size in the batch, and the date on which the latest assay of the drug comprising such batch was completed. Such request shall be accompanied or followed by results of tests and assays made on the batch for potency, moisture, pH, and identity.

* * * * *

Dated: March 30, 1988.

Carl C. Peck,

Director, Center for Drug Evaluation and Research.

[FR Doc. 88-8189 Filed 4-14-88; 8:45 am]

BILLING CODE 4160-01-M

---

21 CFR Part 444

[Docket No. 79N-0151]

Oligosaccharide Antibiotic Drugs; Sterile Neomycin Sulfate

AGENCY: Food and Drug Administration.

ACTION: Final rule.

SUMMARY: The Food and Drug Administration (FDA) is amending the antibiotic drug regulations to revoke the provisions for certification of neomycin sulfate in sterile vials for parenteral use. This action is being taken because the risks involved in the parenteral use of neomycin sulfate are judged to outweigh any benefits that might be derived from its continued availability. FDA is offering an opportunity for a hearing on objections to this revocation under the formal rulemaking provisions in section 507(f) of the Federal Food, Drug, and Cosmetic Act (the act) and the Administrative Procedure Act (5 U.S.C. 556 and 557). Elsewhere in this issue of the **Federal Register** is a notice offering an opportunity for a hearing on the proposal to withdraw the approval of antibiotic applications and abbreviated antibiotic applications for neomycin sulfate in sterile vials for parenteral use.

DATES: Effective June 14, 1988; comments, notices of participation, and requests for hearing by May 16, 1988; data, information, and analyses to justify a hearing by June 14, 1988.

ADDRESSES: Written comments concerning requests for hearing, supporting data, and information to Dockets Management Branch (HFA-305), Food and Drug Administration, Rm. 4-62, 5600 Fishers Lane, Rockville, MD 20857.

Requests for opinion of the applicability of this final rule to a specific product to Division of Drug Labeling Compliance (HFN-310), Center for Drugs and Biologics, Food and Drug Administration, 5600 Fishers Lane, Rockville, MD 20857.

FOR FURTHER INFORMATION CONTACT: Judy O'Neal, Center for Drug Evaluation and Research (HFN-366), Food and Drug Administration, 5600 Fishers Lane, Rockville, MD 20857, 301-295-8041.

SUPPLEMENTARY INFORMATION:

I. Background

In the **Federal Register** of July 27, 1979 (44 FR 44180), FDA proposed to revoke the provisions of its antibiotic drug regulations (21 CFR 444.42a) that provide for the certification of neomycin sulfate in sterile vials for parenteral use. This action was taken because there is clinical evidence that parenterally administered neomycin sulfate can induce significant toxicity including ototoxicity (manifested as sensorineural hearing loss), nephrotoxicity, and neuromuscular blockade. In addition, there is evidence that the sterile vial of neomycin sulfate, which has been approved by FDA only for intramuscular administration in the treatment of certain urinary tract infections, is being used to prepare irrigation solutions. As concluded in the Drug Efficacy Study Implementation notice published on February 29, 1972 (37 FR 4224), evidence of effectiveness is lacking for the use of sterile neomycin sulfate in the irrigation of wounds. Moreover, there is clinical evidence that such use poses a significant risk to the patient, as described in the July 27, 1979, proposal and in another final rule published elsewhere in this issue of the **Federal Register** concerning neomycin sulfate for prescription compounding. A third reason for the proposed action was that, as concluded by FDA's Anti-Infective Agents Advisory Committee, use of this dosage form for the single remaining approved indication, the treatment of urinary tract infection, is no longer acceptable because of the availability of newer, safer antibiotics that are as effective as, or more effective than, parenteral neomycin sulfate and that do not present comparable risks.

After the proposal regarding sterile neomycin sulfate was published on July 27, 1979, FDA received three requests for an informal conference, and also received two requests for an extension of the comment period on the related proposal regarding nonsterile neomycin sulfate for prescription compounding. A notice of opportunity for an informal conference was published in the **Federal Register** of October 19, 1979 (44 FR 60331), and an informal conference was held on November 20, 1979. In addition, the comment period was extended for 30 days after the date of the informal conference.

The agency has carefully considered all of the comments received on the proposal and has concluded that the risks involved in the parenteral use of neomycin sulfate outweigh any benefits that might be derived from such use. This final rule amends the regulations to

revoke provisions for certifying neomycin sulfate in sterile vials for parenteral use. In a notice published elsewhere in this issue of the **Federal Register**, FDA is proposing to withdraw approval under section 505(e) of the act of the antibiotic applications and abbreviated antibiotic applications for sterile neomycin sulfate.

Only neomycin sulfate in sterile vials for parenteral use is affected by this action. Other dosage forms of neomycin sulfate (oral, dermatologic, ophthalmic, and otic) and sterile and nonsterile bulk neomycin sulfate used in the preparation of some of these dosage forms are not affected by these actions. However, elsewhere in this issue of the **Federal Register**, FDA is publishing a final rule amending the antibiotic drug regulations (21 CFR 444.942a) for nonsterile neomycin sulfate for prescription compounding. That amendment changes the product name from "Neomycin sulfate for prescription compounding" to "Neomycin sulfate for compounding oral products" and requires package insert labeling that includes indications for use and warnings about the drug's toxicity.

II. Responses to the Comments

In addition to the comments submitted during the informal conference, the agency received eight written comments. Four of the written comments opposed the proposal. A summary of the substantive comments and the agency's responses follow:

1. Several comments said that sterile neomycin sulfate powder in vials is used to prepare irrigation solutions. The comments said that the solution is used in augmentation mammaplasty, as a wash for other silastic implants for total joint replacement procedures, and as a neurosurgical irrigation solution. The comments also said that sterile neomycin sulfate powder in vials is used to prepare neomycin enema and neomycin colostomy irrigations and is used in the preoperative preparation of surgical patients. One comment noted that the injectable form is more convenient because it does not require subsequent sterilization. The comment also said that the solution is effective since wound infections have not been observed after its use. Another comment explained in detail that the contents of the sterile vial are added to saline or water to make irrigating solutions. The comment contended that the sterile vial provides a quick method for getting a 2-percent or less solution when there is fecal spillage in the abdominal cavity. The comment noted the use of a sterile 5-percent irrigating solution in infected hernia wounds. The comment also claimed that if the drug is no longer permitted for topical application, the surgeon will be unable to manage surgical complications. Several comments stated that orthopedic surgeons and other surgeons continue to use neomycin in wound irrigations that require a substantial number of sterile 500-milligram (mg) vials (containing 350 mg of neomycin base). One physician argued that both the nonsterile powder and the sterile neomycin sulfate powder in vials have been used for 13 years to prepare topical sprays, gels, and ointments for patients undergoing cancer chemotherapy in protected environment units. The comment said that topical formulations containing neomycin and other antibiotics in combination are applied to the gums, ears, groin, perianal region, rectum, vagina, anterior nares, or throat up to four times a day.

The agency advises, as explained in the proposal of July 27, 1979 (44 FR 44181), to this final rule and in greater detail in the final rule about nonsterile neomycin sulfate for prescription compounding, published elsewhere in this issue of the **Federal Register**, that the use of neomycin sulfate for irrigation lacks evidence of effectiveness and has produced clinical evidence of significant risk to the patient. Since 1972 sterile neomycin sulfate powder in vials has been approved by FDA only for intramuscular use in the treatment of certain urinary tract infections. In addition, because of the drug's toxicity, its labeling has stated that the drug should be reserved for hospitalized cases with this condition in which no other antimicrobial agent is effective. Many other less toxic and more effective aminoglycosides (such as gentamicin, tobramycin, netilmicin, and amikacin) and other antimicrobial agents are available as alternatives for the approved indication recommended in the labeling.

2. Several comments said that, with respect to both sterile and nonsterile formulations, prudent neomycin sulfate therapy has a place in the physician's armamentarium of antibiotics. One comment said that toxic effects are always considered by health professionals when drug therapy is designed, and that risks and benefits must be weighed against each other when prescribing any drug.

Although the agency agrees that risks and benefits of any drug therapy must be weighed against each other, toxicity associated with parenteral administration of neomycin sulfate is well documented and more severe than that associated with available alternatives. Most experts have avoided the parenteral use of neomycin sulfate since the end of the 1950's because of its toxicity and because of the availability of safer drugs. FDA's Anti-Infective Drugs Advisory Committee recommended that the preparation be removed from the market.

3. One comment contended that there are very limited, unique uses for sterile neomycin sulfate, and that appropriate labeling can control any misuse of the product.

The agency does not believe that labeling would effectively control the misuse of sterile neomycin sulfate nor that unique uses of neomycin sulfate remain. Such labeling is justified only when it can be demonstrated that the continued use of the drug product will serve a useful purpose provided the labeling is observed. As already explained in this document and in the proposal, sterile neomycin sulfate is approved only for intramuscular administration in the treatment of certain urinary tract infections for hospitalized patients for whom no other antimicrobial agent is effective. Despite these restrictions in the product's labeling, this product continues to be used for irrigation in the treatment of various other conditions with significant risk to patients. In addition, FDA's Anti-Infective Drugs Advisory Committee concluded in 1977 that this dosage form is essentially no longer used for the single remaining approved indication, the treatment of certain urinary tract infections. The committee also noted that newer, safer antibiotics, as effective as parenteral neomycin sulfate, are available for this indication.

4. One comment took issue with the statement in the proposal that FDA will "require a recall to the retail level for all products covered by these certificates." The comment argued that section 301(k) of the Federal Food, Drug, and Cosmetic Act, which prohibits the doing of any act that would result in the adulteration or misbranding of an article being held for sale after shipment in interstate commerce, would not be applicable to the revocation of a certificate by FDA.

This product is currently exempt from certification under the provisions of § 433.1 (21 CFR 433.1). Therefore, the issue of the revocation of certification is now moot. In view of the time that has passed since the proposed rule was published, FDA will not request that manufacturers initiate a recall. However, when the final rule is effective, batches of sterile neomycin sulfate packaged in 0.35-gram vials will no longer be certified or released, nor will the product be exempt from

certification except where subject to an approved application. With the withdrawal of approval of the applications, the product may not be legally shipped in interstate commerce.

III. Amendments to the Antibiotic Drug Regulations

Under 21 CFR Part 433.1 (a) and (b), antibiotic drugs are exempt from batch certification requirements if (1) the drug is approved for marketing under an appropriate antibiotic application or abbreviated antibiotic application, (2) the drug is packaged and labeled for dispensing in accordance with the applicable regulation or approved application, (3) the bulk drug used in preparing the antibiotic drug product meets the standards of identity, strength, quality, and purity specified in the applicable regulation or approved application, and (4) the antibiotic drug product meets the standards of identity, strength, quality, and purity specified in the applicable regulation or approved application.

The regulation applicable to sterile neomycin sulfate for parenteral use, § 444.42a, is being amended to delete (1) the provision in paragraph (a)(2) for the 0.35-gram package for dispensing, (2) the provision in paragraph (a)(3) for labeling of the drug packaged for dispensing, (3) the provision in paragraph (a)(4) describing samples required for certification of a batch packaged for dispensing, and (4) provisions under paragraphs (b)(1)(i)(*d*) and (b)(1)(ii) describing potency testing of the drug packaged for dispensing. With the deletion of these provisions, neomycin sulfate packaged in sterile vials for dispensing can neither be certified nor released. Except where other labeling and standards of identity, strength, quality, and purity have been approved in an applicable application, the product is not exempt from batch certification requirements.

As stated in the proposal (44 FR 44181), the revocation becomes effective 60 days after the date of publication of this final rule. At that time, batches of sterile neomycin sulfate packaged in 0.35-gram vials will no longer be certified, released, or exempt from certification, except for those products covered by approved antibiotic applications. Shipment in interstate commerce of sterile neomycin sulfate packaged for parenteral use that is not certified, released, or exempt from certification will be unlawful.

IV. Economic and Environmental Impact

The agency has determined under 21 CFR 25.24(c)(3) that this action is of a type that does not individually or cumulatively have a significant effect on the human environment. Therefore, neither an environmental assessment nor an environmental impact statement is required.

This final rule does not require a regulatory impact analysis, as specified in Executive Order 12291, or a regulatory flexibility analysis, as defined in the Regulatory Flexibility Act (Pub. L. 96-354). Executive Order 12291 does not apply to actions, such as this, at the stage where they are subject to opportunity for hearing under 5 U.S.C. 556 and 557. Furthermore, the Regulatory Flexibility Act does not apply to this proceeding because the proposed rule was issued before the effective date of that Act. Nevertheless, the agency has examined the economic impact of this final rule and has determined that this impact is insignificant. Because the product is not currently being marketed by any manufacturer, FDA believes no additional burdens are imposed. Therefore, the agency concludes that this final rule does not meet the criteria for a major rule as defined in Executive Order 12291, and that this final rule will not have a significant economic impact on small entities as defined by the Regulatory Flexibility Act.

V. Notice of Opportunity for a Hearing

Any person who will be adversely affected by the final rule amending the antibiotic regulations may file objections to it and request a hearing as provided in section 507(f) of the act (21 U.S.C. 357). Reasonable grounds for the hearing must be shown, as specified in 21 CFR 314.300. If hearings are granted both on objections to the final rule and on the proposed withdrawal of approval of the applications that is published elsewhere in this issue of the **Federal Register**, the hearings will be combined in a single proceeding conducted under 5 U.S.C. 556 and 557 and 21 CFR Part 12. Any person subject to this final rule who decides to seek a hearing shall file: (1) On or before May 16, 1988, a written notice of participation and request for hearing, and (2) on or before June 14, 1988, the data, information, and analyses relied on to justify a hearing, as specified in 21 CFR 314.300. Any other interested person may also submit comments. The procedures and requirements governing this notice of opportunity for hearing, a notice of participation and request for hearing, a submission of data, information, and analyses to justify a hearing, other comments, and a grant or denial of a hearing are contained in 21 CFR 314.300.

A request for a hearing may not rest upon mere allegations or denials, but must present specific facts showing that there is a genuine and substantial issue of fact that requires a hearing. If it conclusively appears from the face of the data, information, and factual analyses in the request for hearing that no genuine and substantial issue of fact precludes the action taken by this order, or if a request for hearing is not made in the required format or with the required analyses, the Commissioner of Food and Drugs will enter summary judgment against the person(s) who request(s) the hearing, making findings and conclusions and denying a hearing.

All submissions under this order are to be filed in three copies. Except for data and information prohibited from public disclosure under 21 U.S.C. 331(j) or 18 U.S.C. 1905, submissions may be seen in the Dockets Management Branch (address above) between 9 a.m. and 4 p.m., Monday through Friday.

List of Subjects in 21 CFR Part 444

Antibiotics.

Therefore, under the Federal Food, Drug, and Cosmetic Act and under authority delegated to the Commissioner of Food and Drugs, Part 444 is amended as follows:

PART 444—OLIGOSACCHARIDE ANTIBIOTIC DRUGS

1. The authority citation for Part 444 continues to read as follows:

Authority: Sec. 507, 59 Stat. 463 as amended (21 U.S.C. 357); 21 CFR 5.10.

2. Section 444.42a is amended by removing paragraph (a)(2); by redesignating existing paragraphs (a) (3) and (4) as paragraphs (a) (2) and (3), respectively, and by revising redesignated paragraphs (a)(2) and (a)(3), and paragraphs (b)(1)(i)(d), and (b)(1)(ii) (removing the undesignated paragraph following (b)(1)(ii)), to read as follows:

§ 444.42a Sterile neomycin sulfate.

(a) * * *

(2) *Labeling.* It is to be labeled in accordance with the requirements of § 432.5(b) of this chapter.

(3) *Request for certification; samples.* In addition to the requirements of § 431.1 of this chapter, each such request shall contain:

(i) Results of tests and assays on the batch for potency, sterility, pyrogens, moisture, pH, and identity.

(ii) Samples required:

(*a*) For all tests except sterility: 10 packages, each containing approximately 300 milligrams

(*b*) For sterility testing: 20 packages, each containing approximately 300 milligrams.

* * * * *

(b) * * *

(1) * * *

(i) * * *

(*d*) *Preparation of sample.* Dissolve an accurately weighed sample in sufficient 0.1*M* potassium phosphate buffer, pH 8.0 (solution 3), to give a stock solution of convenient concentration. Further dilute the stock solution with sufficient solution 3 to obtain a reference concentration of 1.0 microgram of neomycin per milliliter (estimated).

* * * * *

(ii) *Plate assay using Staphylococcus aureus (ATCC 6538P).*[1] Proceed as directed in paragraph (b)(1)(i) of this section, except that the reference concentration of the sample under test is 10.0 micrograms of neomycin per milliliter; the concentrations of the standard curve solutions are 6.4, 8.0, 10.0, 12.5, 15.6 micrograms of neomycin per milliliter; and the suspension of the test organism, staphylococcus aureus (ATCC 6538P),[1] is adjusted so that a 1:19 dilution will give 25 percent light transmission and the usual inoculum for each 100 milliliters of agar for the seed layer is 0.2 milliliter of diluted suspension.

* * * * *

Dated: March 30, 1988.

Carl C. Peck,

Director, Center for Drug Evaluation and Research.

[FR Doc. 88-8192 Filed 4-14-88; 8:45 am]

BILLING CODE 4160-01-M

[1] Available from: American Type Culture Collection, 12301 Parklawn Dr., Rockville, MD 20852.

VOL 53 ISS 73 APR 15 1988 UMI

DEPARTMENT OF HEALTH AND HUMAN SERVICES

Food and Drug Administration

[Docket No. 87D-0315]

Oligosaccharide Antibiotic Drugs; Neomycin Sulfate for Prescription Compounding; Opportunity for Hearing on Proposal To Withdraw Approval of Applications; Availability of Guideline Labeling

AGENCY: Food and Drug Administration.

ACTION: Notice of opportunity for hearing and availability of guideline labeling.

SUMMARY: The Food and Drug Administration (FDA) is announcing the availability of guideline labeling for neomycin sulfate for compounding oral products (formerly neomycin sulfate for prescription compounding) and is also offering an opportunity for a hearing on the proposal to withdraw approval of antibiotic applications and abbreviated antibiotic applications for nonsterile neomycin sulfate products that are not labeled in accordance with the antibiotic regulations. In a final rule published elsewhere in this issue of the **Federal Register**, FDA is revising the regulations to change the product name and to require package insert labeling that informs users of the product about the risks associated with neomycin sulfate and recommends the product for oral use only. These actions are being taken because nonsterile neomycin sulfate, a prescription drug with a recognized potential for producing toxicity, is now supplied for prescription compounding without adequate labeling. The drug is being used for indications for which it lacks evidence of effectiveness and for which there is clinical evidence of significant risk to the patient. FDA is offering an opportunity for a hearing on the proposal to withdraw approval of the applications under section 505(e) of the Federal Food, Drug, and Cosmetic Act (the act) (21 U.S.C. 355(e)).

DATES: Guideline labeling available April 15, 1988. Supplements providing for package insert labeling to be submitted by June 14, 1988; notice of participation and request for hearing by May 16, 1988; data, information, and analyses to justify a hearing by June 14, 1988.

ADDRESSES: Written comments and requests for single copies of the guideline labeling, requests for hearing, and supporting data and information to the Dockets Management Branch (HFA-305), Food and Drug Administration, Rm. 4-62, 5600 Fishers Lane, Rockville, MD 20857. (Send two self-addressed adhesive labels to assist the Branch in processing your requests.)

Requests for opinion of the applicability of this notice to a specific product to Division of Drug Labeling Compliance (HFN-310), Center for Drug Evaluation and Research, Food and Drug Administration, 5600 Fishers Lane, Rockville, MD 20857.

FOR FURTHER INFORMATION CONTACT: Judy O'Neal, Center for Drug Evaluation and Research (HFN-366), Food and Drug Administration, 5600 Fishers Lane, Rockville, MD 20857, 301-295-8041.

SUPPLEMENTARY INFORMATION: In a final rule published elsewhere in this issue of the **Federal Register**, FDA is amending the antibiotic drug regulations (specifically, 21 CFR 444.942a) that provide for the certification of nonsterile neomycin sulfate for prescription compounding. As described in the final rule, there are inadequate data to support the safety and efficacy of neomycin sulfate for use in irrigation solutions in the treatment of infected wounds and ulcers; for use on burns; for prophylactic local use before, during, or after surgical procedures, e.g., intraperitoneal suction-irrigation, fractures and joint replacement surgery, neurosurgery, and for other types of surgery and traumatic wounds; for rectal or colonic irrigation or as a retention enema; for intrapleural instillations; for use in wet dressings; for aerosol inhalation; for solutions to soak bone grafts, skin grafts, and silastic implants; and for any similar use under conditions where neomycin may be systemically absorbed in significant quantities. In addition to the lack of evidence of safety and efficacy of neomycin sulfate for these indications, there is evidence of significant drug toxicity for most of them.

FDA finds, however, that there is adequate safety and efficacy information to continue to allow marketing of nonsterile neomycin sulfate for compounding oral prescription products if full prescribing information is provided. Therefore, FDA is amending the antibiotic drug regulations to change the product name from "neomycin sulfate for prescription compounding" to "neomycin sulfate for compounding oral products" and to require labeling to provide information concerning appropriate uses and to warn about the risks associated with inappropriate use. The labeling will state that the product is recommended for oral use only. As discussed later, FDA is announcing the availability of guideline labeling for neomycin sulfate for compounding oral products under Docket No. 87D-0315.

However, amending the antibiotic regulations is not sufficient to accomplish the desired action. The drug products affected by this notice were being certified until the antibiotic drug regulations were amended to exempt antibiotic-containing drugs from batch certification requirements (47 FR 39155; September 7, 1982). Under the new regulations specifying the conditions of the exemption, an antibiotic drug must be packaged and labeled in accordance with the applicable regulations except where FDA has approved other labeling in an antibiotic application. Therefore, in addition to revising the applicable regulations, it is necessary to withdraw approval of antibiotic applications that provide for other labeling.

An antibiotic drug exempt from certification requirements under 21 CFR 433.1(b) is subject, following its approval, to section 505 of the act and applicable parts of the new drug regulations (21 CFR Parts 310 through 314 and 433.1(c)). This notice proposes to withdraw approval, under section 505(e) of the act, of the antibiotic applications and abbreviated antibiotic applications that are not supplemented, within 60 days of the effective date of the final rule, to provide for the new product name and package insert labeling. The agency has prepared guideline labeling that manufacturers and suppliers may adopt to ensure that their labeling complies with the requirements of the revised regulations.

The products known by FDA to be subject to this notice are:

1. No. 61-043, held by the Upjohn Co., 7000 Portage Rd., Kalamazoo, MI 49001.
2. No. 61-085, held by Pfizer, Inc., 235 East 42nd St., New York, NY 10017.
3. No. 61-169, held by S. B. Penick and Co., 540 New York Ave., Lyndhurst, NJ 07071.
4. No. 61-579, held by Pharma-Tek, Inc., P.O. Box AB, Huntington, NY 11743.
5. No. 61-698, held by Elkins-Sinn, Inc., 2 Esterbrook Lane, Cherry Hill, NJ 08034.
6. No. 62-385, held by Paddock Laboratories, Inc., 3101 Louisiana Ave. North, Minneapolis, MN 55421.

On the basis of all the data and information available, the Center for Drug Evaluation and Research finds that nonsterile neomycin sulfate is unsafe for use except when named "Neomycin Sulfate for Compounding Oral Products" and used in accordance with appropriate package insert labeling.

Therefore, notice is given to the holders of the antibiotic applications listed above, and to all other interested

persons, that the Center for Drug Evaluation and Research proposes to issue an order under section 505(e) of the act, withdrawing approval of the antibiotic applications and all amendments and supplements thereto, unless supplements providing for a change in the product name and addition of package insert labeling in accordance with 21 CFR 444.942a of the regulations are submitted by June 14, 1988. This notice is based on the ground that clinical or other experience, tests, or other scientific data show that such drug is unsafe for use under the conditions of use upon the basis of which the applications were approved. With the withdrawal of approval of the applications identified above, shipment in interstate commerce of nonsterile neomycin sulfate that is not certified, released, or exempt from certification will be unlawful.

In accordance with section 505 of the act and the regulations promulgated under this section (21 CFR Parts 310 and 314), the applicants and all other persons who manufacture or distribute a drug product that is identical, related, or similar to the drug product named above (21 CFR 310.6) and that is not the subject of an antibiotic application are hereby given an opportunity for a hearing to show why approval of the application should not be withdrawn, and an opportunity to raise, for administrative determination, all issues relating to the legal status of the drug product named above and of all identical, related, or similar drug products not the subject of an approved application. If requests for hearing are granted both on objections to the final rule published elsewhere in this issue of the **Federal Register** and on withdrawal of approval of the antibiotic applications, the hearings will be combined in a single proceeding under 21 CFR Part 12 and 5 U.S.C. 556 and 557.

In addition to the holders of the applications specifically named above, this notice applies to all persons who manufacture or distribute a drug product, not the subject of an approved antibiotic application, that is identical, related, or similar to the drug product named above, as defined in 21 CFR 310.6. It is the responsibility of every drug manufacturer or distributor to review this notice to determine whether it covers any drug product he or she manufactures or distributes. Any person may request an opinion of the applicability of this notice to a specific drug product that may be identical, related, or similar to a drug product named in this notice by writing to the Division of Drug Labeling Compliance (address above).

This notice of opportunity for hearing encompasses all issues relating to the legal status of the drug products subject to it (including identical, related, or similar drug products as defined in 21 CFR 310.6), e.g., any contention that any such product is not a new drug because it is exempt from part or all of the new drug provisions of the act under the exemption for products marketed before June 25, 1938, in section 201(p) of the act (21 U.S.C. 321(p)), or under section 107(c) of the Drug Amendments of 1962, or for any other reason.

The applicant or any other person subject to this notice under 21 CFR 310.6 who decides to seek a hearing shall file: (1) on or before May 16, 1988, a written notice of participation and request for hearing, and (2) on or before June 14, 1988, the data, information, and analyses on which the person relies on to justify a hearing, as specified in 21 CFR 314.200. Any other interested person may also submit comments. The procedures and requirements governing this notice of opportunity for hearing, a notice of participation and request for hearing, a submission of data, information, and analyses to justify a hearing, other comments, and a grant or denial of a hearing, are contained in 21 CFR 314.200.

The failure of an applicant or any other person subject to this notice under 21 CFR 310.6 to file a timely written notice of participation and request for hearing, as required by 21 CFR 314.200, constitutes an election by the person not to make use of the opportunity for a hearing concerning the action and a waiver of any contentions concerning the legal status of the relevant drug product. Any such drug product may not thereafter lawfully be marketed, and FDA will initiate appropriate regulatory action to remove such drug product from the market. Any new drug product marketed without an approved new drug application is subject to regulatory action at any time.

A request for a hearing may not rest upon mere allegations or denials, but must present specific facts showing that there is a genuine and substantial issue of fact that requires a hearing. If it conclusively appears from the face of the data, information, and factual analyses in the request for hearing that there is no genuine and substantial issue of fact precludes the withdrawal of approval of the application, or when a request for hearing is not made in the required format or with the required analyses, the Commissioner of Food and Drugs will enter summary judgment against the person(s) who request the hearing, making findings and conclusions and denying a hearing.

All submissions under this notice are to be filed in three copies. Except for data and information prohibited from public disclosure under 21 U.S.C. 331(j) or 18 U.S.C. 1905, the submissions may be seen in the Dockets Management Branch (address above) between 9 a.m. and 4 p.m., Monday through Friday.

The guideline labeling is issued under § 10.90 (b) (21 CFR 10.90(b)), which provides for the use of guidelines to establish procedures of general applicability that are not legal requirements, but are acceptable to the agency. A person who follows this guideline is assured that his or her conduct is acceptable to the agency. The agency advises that the labeling guideline for neomycin sulfate for compounding oral products complies with the prescription drug labeling regulations in §§ 201.56, 201.57, and 201.100 and can be relied upon by any person to meet these requirements. Under the provisions of § 314.70 (c) (21 CFR 314.70(c)), the guideline labeling may be used before approval of a supplement to a new drug application. A person may choose to use alternative labeling statements that are not provided in the guideline. If a person chooses to depart from the guideline, he or she may discuss the matter further with the agency to prevent expenditure of money and effort for labeling that the agency may later determine to be unacceptable.

Effective April 15, 1988, a person may adopt the labeling guideline to comply with labeling requirements for neomycin sulfate for compounding oral products. Interested persons may submit written comments on the guideline to the Dockets Management Branch (address above). Comments should be in three copies, identified with Docket No. 87D-0315. The guideline and received comments may be seen in the Dockets Management Branch between 9 a.m. and 4 p.m., Monday through Friday. If, as a result of comments received on the guideline labeling, FDA determines that the labeling should be revised, a notice will be published in the **Federal Register** announcing that such changes have been made.

This notice is issued under the Federal Food, Drug, and Cosmetic Act (secs. 502, 505, 507, 52 Stat. 1050–1053 as amended (21 U.S.C. 352, 355) and 59 Stat. 463 as amended (21 U.S.C. 357)) and under authority delegated to the Center for Drug Evaluation and Research (21 CFR 5.70, 5.78, and 5.82).

Dated: March 30, 1988

Carl C. Peck,

Director, Center for Drug Evaluation and Research.

[FR Doc. 88-8190 Filed 4-14-88; 8:45 am]

BILLING CODE 4160-01-M

[Docket No. 79N-0151]

Oligosaccharide Antibiotic Drugs; Sterile Neomycin Sulfate; Opportunity for Hearing on Proposal To Withdraw Approval of Applications

AGENCY: Food and Drug Administration.

ACTION: Notice of opportunity for hearing.

SUMMARY: The Food and Drug Administration (FDA) is offering an opportunity for a hearing on the proposal to withdraw approval of antibiotic applications and abbreviated antibiotic applications for neomycin sulfate in sterile vials for parenteral use. This action is being taken because the risks involved in the parenteral use of neomycin sulfate are judged to outweigh any benefits that might be derived from its continued availability. FDA is offering an opportunity for a hearing on the proposal under section 505(e) of the Federal Food, Drug, and Cosmetic Act (the act) (21 U.S.C. 355(e)).

DATES: Comments, notice of participation, and request for hearing by May 16, 1988; data, information, and analyses to justify a hearing by June 14, 1988.

ADDRESSES: Written comments concerning requests for hearing, supporting data, and information to the Dockets Management Branch (HFA-305), Food and Drug Administration, Rm. 4-62, 5600 Fishers Lane, Rockville, MD 20857.

Requests for opinion of the applicability of this notice to a specific product to Division of Drug Labeling Compliance (HFN-310), Center for Drug Evaluation and Research, Food and Drug Administration, 5600 Fishers Lane, Rockville, MD 20857.

FOR FURTHER INFORMATION CONTACT: Judy O'Neal, Center for Drug Evaluation and Research (HFN-366), Food and Drug Administration, 5600 Fishers Lane, Rockville, MD 20857, 301-295-8041.

SUPPLEMENTARY INFORMATION:

I. Background

In a final rule published elsewhere in this issue of the **Federal Register**, FDA is amending the antibiotic drug regulations to revoke the provisions for certification of neomycin sulfate in sterile vials for parenteral use. There is clinical evidence that parenterally administered neomycin sulfate can induce significant toxicity including ototoxicity (manifested as sensorineural hearing loss), nephrotoxicity, and neuromuscular blockade. In addition, there is evidence that the sterile vial of neomycin sulfate, which has been approved by FDA only for intramuscular administration in the treatment of certain urinary tract infections, is being used to prepare irrigation solutions. As concluded by the Drug Efficacy Study Implementation notice published February 29, 1972 (37 FR 4224), evidence of effectiveness is lacking for the use of sterile neomycin sulfate in the irrigation of wounds. Moreover, there is clinical evidence that such use poses a significant risk to the patient, as described in the proposed rulemaking published July 27, 1979 (44 FR 44180), and in another final rule published elsewhere in this issue of the **Federal Register** concerning neomycin sulfate for prescription compounding. Another reason is that, as concluded by FDA's Anti-Infective Agents Advisory Committee, use of this dosage form for the single remaining approved indication, the treatment of urinary tract infection, is no longer acceptable because of the availability of newer, safer antibiotics that are as effective as, or more effective than, parenteral neomycin sulfate and that do not present comparable risks.

However, amending the antibiotic regulations, as proposed in the July 27, 1979, notice, is no longer sufficient to remove existing approved products from the market. In the **Federal Register** of September 7, 1982 (47 FR 39155), FDA amended the antibiotic drug regulations to exempt antibiotic-containing drugs from batch certification requirements. Under the new regulations specifying the conditions of the exemption (21 CFR 433.1(b)), an antibiotic drug product is exempt from batch certification requirements if it is packaged and labeled for dispensing in accordance with, and meets the standards of identity, strength, quality, and purity specified in, the applicable regulation except where other labeling and standards have been approved in an applicable antibiotic application or abbreviated antibiotic application. Therefore, in addition to revising the applicable regulations, it is necessary to withdraw approval of applications for the products. An antibiotic drug exempt from certification requirements under 21 CFR 433.1(b) is subject, following its approval, to section 505 of the act and applicable parts of the new drug regulations (21 CFR Parts 310 through 314 and 433.1(c)). This notice proposes to withdraw approval under section 505(e) of the act of the antibiotic applications and abbreviated antibiotic applications for sterile neomycin sulfate.

The following products, although no longer marketed, are known by FDA to be affected by this notice:

1. Neomycin Sulfate for Injection, U.S.P., covered by application number 60-366, E. R. Squibb & Sons, Inc., P.O. Box 4000, Princeton, NJ 08540.

2. Mycifradin Injectable, covered by application number 60-477, The Upjohn Co., Kalamazoo, MI 49001.

3. Neomycin Sulfate for Injection, U.S.P., covered by application number 61-084, Pfizer, Inc., 235 East 42nd St., New York, NY 10017.

4. Neomycin Sulfate for Injection, U.S.P., covered by application number 61-198, Elkins-Sinn, Inc., 2 Esterbrook Lane, Cherry Hill, NJ 08034.

On the basis of all the data and information available, the Director of the Center for Drug Evaluation and Research finds that neomycin sulfate in sterile vials is unsafe for parenteral use as provided for in its approved labeling.

Therefore, notice is given to the holders of the antibiotic applications listed above, and to all other interested persons, that the Director of the Center for Drug Evaluation and Research proposes to issue an order under section 505(e) of the act, withdrawing approval of the antibiotic applications and all amendments and supplements thereto, on the ground that clinical or other experience, tests, or other scientific data show that such drug is unsafe for use under the conditions of use upon the basis for which the applications were approved.

In accordance with section 505 of the act and the regulations promulgated under it (21 CFR Parts 310 and 314), the applicants and all other persons who manufacture or distribute a drug product that is identical, related, or similar to the drug product named above (21 CFR 310.6) and not the subject of an antibiotic application are hereby given an opportunity for a hearing to show why approval of the application should not be withdrawn, and an opportunity to raise, for administrative determination, all issues relating to the legal status of the drug product named above and of all identical, related, or similar drug products not the subject of an approved application. If hearings are granted both on objections to the final rule published elsewhere in this issue of the **Federal Register** and on the proposed withdrawal of approval of the applications, the hearings will be combined in a single proceeding conducted under 21 CFR Part 12 and 5 U.S.C. 556 and 557.

In addition to the holders of the applications specifically named above, this notice applies to all persons who manufacture or distribute a drug product, not the subject of an approved antibiotic application, that is identical, related, or similar to the drug product named above, as defined in 21 CFR 310.6. It is the responsibility of every drug manufacturer or distributor to review this notice to determine whether it covers any drug product he or she manufactures or distributes. Any person may request an opinion of the applicability of this notice to a specific drug product he or she manufactures or distributes that may be identical, related, or similar to a drug product named in this notice by writing to the Division of Drug Labeling Compliance (address above).

This notice of opportunity for hearing on the proposed withdrawal of approval of the applications encompasses all issues relating to the legal status of the drug products subject to it (including identical, related, or similar drug products as defined in 21 CFR 310.6), e.g., any contention that any such product is not a new drug because it is exempt from part or all of the new drug provisions of the act under the exemption for products marketed before June 25, 1938, in section 201(p) of the act (21 U.S.C. 321(p)), or under section 107(c) of the Drug Amendments of 1962, or for any other reason.

The applicant or any other person subject to this notice under 21 CFR 310.6 who decides to seek a hearing shall file: (1) on or before May 16, 1988, a written notice of participation and request for hearing, and (2) on or before June 14, 1988, the data, information, and analyses relied on to justify a hearing, as specified in 21 CFR 314.200. Any other interested person may also submit comments. The procedures and requirements governing this notice of opportunity for hearing, a notice of participation and request for hearing, a submission of data, information, and analyses to justify a hearing, other comments, and a grant or denial of a hearing are contained in 21 CFR 314.200.

The failure of an applicant or any other person subject to this notice under 21 CFR 310.6 to file a timely written notice of participation and request for hearing, as required by 21 CFR 314.200, constitutes an election by the person not to make use of the opportunity for a hearing concerning the action and a waiver of any contentions concerning the legal status of the relevant drug product. Any such drug product may not thereafter lawfully be marketed, and FDA will initiate appropriate regulatory action to remove such drug product from the market. Any new drug product marketed without an approved new drug application is subject to regulatory action at any time.

A request for a hearing may not rest upon mere allegations or denials, but must present specific facts showing that there is a genuine and substantial issue of fact that requires a hearing. If it conclusively appears from the face of the data, information, and factual analyses in the request for hearing that no genuine and substantial issue of fact precludes the withdrawal of approval of the application, or when a request for hearing is not made in the required format or with the required analyses, the Commissioner of Food and Drugs will enter summary judgment against the person(s) who request(s) the hearing, making findings and conclusions and denying a hearing.

All submissions under this notice are to be filed in three copies. Except for data and information prohibited from public disclosure under 21 U.S.C. 331(j) or 18 U.S.C. 1905, the submissions may be seen in the Dockets Management Branch (address above) between 9 a.m. and 4 p.m., Monday through Friday.

This notice is issued under the Federal Food, Drug, and Cosmetic Act (secs. 502, 505, 507, 52 Stat. 1050–1053 as amended (21 U.S.C. 352, 355) and 59 Stat. 463 as amended (21 U.S.C. 357)) and under authority delegated to the Center for Drug Evaluation and Research (21 CFR 5.70, 5.78, and 5.82).

Dated: March 30, 1988.

Carl C. Peck,

Director, Center for Drug Evaluation and Research.

[FR Doc. 88-8191 Filed 4-14-88; 8:45 am]

BILLING CODE 4160-01-M

VOL
53

ISS
73

AP
15

1988

UMI

federal register

Friday
April 15, 1988

Part III

Department of Commerce

International Trade Administration

15 CFR Parts 370, 371, 373, 378, 379, 385, and 399

Exports of Commodities for Use in Certain Nuclear Activities in Certain Free World Countries; Final Rule

DEPARTMENT OF COMMERCE

15 CFR Parts 370, 371, 373, 378, 379, 385, and 399

[Docket No. 80214-8014]

Exports of Commodities for Use in Certain Nuclear Activities in Certain Free World Countries

AGENCY: Bureau of Export Administration, Commerce.

ACTION: Final rule.

SUMMARY: To deter the proliferation of nuclear weapons and nuclear explosive capabilities, the Department of Commerce requires an individual validated export license for all dual-use goods and technologies that will be exported for use, either directly or indirectly, in any activities related to nuclear weapons, nuclear explosive devices, or the other nuclear processes described in § 378.3 of the Export Administration Regulations (15 CFR Parts 368 through 399). This final rule revises the licensing requirements for shipments to nuclear facilities involved in these activities and located in Canada or the countries listed in Supplement No. 2 to Part 373 of the Export Administration Regulations.

The countries in Supplement No. 2 to Part 373 and Canada are all close allies of the United States and have outstanding nuclear non-proliferation credentials.

Specifically, this final rule removes the prohibition against the use of general licenses, Distribution Licenses, Project Licenses, and Service Supply Licenses for shipments for ultimate consumption in these nuclear activities in facilities located in the countries listed in Supplement No. 2 to Part 373. In addition, this rule removes the requirement for an individual validated license for shipments for ultimate consumption in these nuclear activities in facilities located in Canada.

EFFECTIVE DATE: This rule is effective April 15, 1988.

FOR FURTHER INFORMATION CONTACT: John Black, Regulations Branch, Bureau of Export Administration, Telephone: (202) 377-2440.

SUPPLEMENTARY INFORMATION:

Rulemaking Requirements

1. Because this rule concerns a foreign and military affairs function of the United States, it is not a rule or regulation within the meaning of section 1(a) of Executive Order 12291, and it is not subject to the requirements of that Order. Accordingly, no preliminary or final Regulatory Impact Analysis has to be or will be prepared.

2. This rule involves a collection of information subject to the Paperwork Reduction Act of 1980 (44 U.S.C. 3501 *et seq.*). These collections have been approved by the Office of Management and Budget under Control Numbers 0625-0001, 0625-0002, 0625-0041, and 0625-0052.

3. Section 13(a) of the Export Administration Act of 1979, as amended (EAA) (50 U.S.C. app. 2412(a)), exempts this rule from all requirements of section 553 of the Administrative Procedure Act (APA) (5 U.S.C. 553), including those requiring publication of a notice of proposed rulemaking, an opportunity for public comment, and a delay in effective date. This rule is also exempt from these APA requirements because it involves a foreign and military affairs function of the United States. Section 13(b) of the EAA does not require that this rule be published in proposed form because this rule does not impose a new control. Further, no other law requires that a notice of proposed rulemaking and an opportunity for public comment be given for this rule.

4. Because a notice of proposed rulemaking and an opportunity for public comment are not required to be given for this rule by section 553 of the Administrative Procedure Act (5 U.S.C. 553) or by any other law, under sections 603(a) and 604(a) of the Regulatory Flexibility Act (5 U.S.C. 603(a) and 604(a)) no initial or final Regulatory Flexibility Analysis has to be or will be prepared.

5. This final rule does not contain policies with Federalism implications sufficient to warrant preparation of a Federalism assessment under Executive Order 12612.

Therefore, this regulation is issued in final form. Although there is no formal comment period, public comments on this regulation are welcome on a continuing basis. Comments should be submitted to John Black, Office of Technology and Policy Analysis, Bureau of Export Administration, Department of Commerce, P.O. Box 273, Washington, DC 20044.

List of Subjects in 15 CFR Parts 370, 371, 373, 378, 379, 385, and 399

Exports, Nuclear energy, Reporting and recordkeeping requirements.

Accordingly, Parts 370, 371, 373, 378, 379, 385, and 399 of the Export Administration Regulations are amended as follows:

1. The authority citation for 15 CFR Parts 370 and 378 continues to read as follows:

Authority: Pub. L. 96-72, 93 Stat. 503 (50 U.S.C. app. 2401 *et seq.*), as amended by Pub. L. 97-145 of December 29, 1981 and by Pub. L. 99-64 of July 12, 1985; E.O. 12525 of July 12, 1985 (50 FR 28757, July 16, 1985).

2. The authority citation for 15 CFR Parts 371, 373, 379, 385, and 399 continues to read as follows:

Authority: Pub. L. 96-72, 93 Stat. 503 (50 U.S.C. app. 2401 *et seq.*), as amended by Pub. L. 97-145 of December 29, 1981 and by Pub. L. 99-64 of July 12, 1985; E.O. 12525 of July 12, 1985 (50 FR 28757, July 16, 1985); Pub. L. 95-223 of December 28, 1977 (50 U.S.C. 1701 *et seq.*); E.O. 12532 of September 9, 1985 (50 FR 36861, September 10, 1985) as affected by notice of September 4, 1986 (51 FR 31925, September 8, 1986); Pub. L. 99-440 of October 2, 1986 (22 U.S.C. 5001 *et seq.*); and E.O. 12571 of October 27, 1986 (51 FR 39505, October 29, 1986).

PART 370—[AMENDED]

§ 370.3 [Amended]

3. In § 370.3, paragraph (a)(1)(ii) is removed and paragraphs (a)(1) (iii) through (vii) are redesignated as paragraphs (a)(1) (ii) through (vi).

PART 371—[AMENDED]

4. In § 371.2, paragraph (c)(7) is revised to read as set forth below, new footnotes 2 and 3 are added and former footnotes 2 through 13 to Part 371 are redesignated as footnotes 4 through 15.

§ 371.2 General provisions.

* * * * *

(c) *Prohibited shipments.* * * *

(7) The exporter knows, or has reason to know, that the commodity will be used in any destination except the countries listed in Supplement No. 2 to Part 373, either directly or indirectly in any of the following activities, whether or not the commodity is specifically designed or modified for such activities:

(i) Designing, developing, fabricating or testing nuclear weapons or nuclear explosive devices; [2] or

(ii) Designing, constructing, fabricating, or operating the following facilities, or components for such facilities[3]—

[2] Commodities specifically designed or specifically modified for use in designing, developing, or fabricating nuclear weapons or nuclear explosive devices are subject to export licensing or other requirements of the Office of Munitions Control, U.S. Department of State or the licensing or other restrictions specified in the Atomic Energy Act of 1954 as amended. Similarly, commodities and technical data specifically designed or specifically modified for use in devising, carrying out, or evaluating nuclear weapons tests or nuclear explosions (except such items as are in normal commercial use for other purposes) are subject to the same requirements.

[3] Such activities may also require a specific authorization from the Secretary of Energy pursuant

Continued

(A) Facilities for the chemical processing of irradiated special nuclear or source material;

(B) Facilities for the production of heavy water;

(C) Facilities for the separation of isotopes of source and special nuclear material; or

(D) Facilities for the fabrication of nuclear reactor fuel containing plutonium.

§ 371.17 [Amended]

5. In § 371.17, paragraphs (e)(2)(iii) and (f)(1)(iv) are amended by adding the words "to any destination except the countries listed in Supplement No. 2 to Part 373" between the words "this general license" and "if" in each paragraph.

6. In § 371.22, paragraph (c)(2)(i) is revised to read as follows:

§ 371.22 General license GTE; temporary exports.

* * * * *

(c) *Exceptions.* * * *

(2) *Commodities.* * * *

(i) Commodities that will be used outside of the countries listed in Supplement No. 2 to Part 373 either directly or indirectly in any sensitive nuclear activity as described in § 378.3.

* * * * *

PART 373—[AMENDED]

§ 373.2 [Amended]

7. In § 373.2, paragraph (b)(3) is amended by adding the words "The project is located outside of the countries listed in Supplement No. 2 to Part 373 and" before the words "the commodities are" at the beginning of the paragraph.

8. Section 373.3 is amended by adding the words "outside of the countries listed in Supplement No. 2 to Part 373" between the words "will be used" and "in designing" in the first sentence of paragraph (g)(3)(viii) and by revising paragraph (b)(1)(i) to read as follows:

§ 373.3 Distribution license.

* * * * *

(b) *Ineligible or restricted commodities.* * * *

(1) * * *

(i) Commodities that will be used outside of the countries listed in Supplement No. 2 to Part 373 either directly or indirectly in any sensitive nuclear activity as described in § 378.3;

* * * * *

§ 373.7 [Amended]

9. Section 373.7 is amended by adding the words "that are located or for use outside of the countries listed in Supplement No. 2 to Part 373 and are" between the words "Parts to service commodities" and "related" in paragraph (b)(1) and between the words "Parts to service commodities" and "subject" in paragraph (b)(3).

Supplement No. 1 to Part 373 [Amended]

10. In Supplement No. 1 to Part 373, footnote 10 is amended by revising the words "ultimate consignees" to read "ultimate consignees that are located outside the countries listed in Supplement No. 2 to Part 373 and".

PART 378—[AMENDED]

§ 378.3 [Amended]

11. The introductory text of § 378.3 is amended by revising the words "any other commodity or technical data" to read "any other technical data not exportable under the provisions of General License GTDA (except "operation technical data" and "sales technical data" for export to and use in the countries listed in Supplement No. 2 to Part 373 or Canada) and a validated license is required for export to all destinations, except Canada and the countries listed in Supplement No. 2 to Part 373, of any other commodity".

PART 379—[AMENDED]

§ 379.4 [Amended]

12. In § 379.4, paragraph (c) introductory text is amended by revising the words "(including operating and maintenance instructional material)" to read "(other than operating and maintenance instructional material and "sales technical data" for export to and use in the countries listed in Supplement No. 2 to Part 373 and Canada)".

PART 385—[AMENDED]

§ 385.6 [Amended]

13. In § 385.6 the word "or" is added to the end of paragraph (a), paragraph (b) is removed, and paragraph (c) is redesignated as paragraph (b).

PART 399—[AMENDED]

Supplement No. 1 to § 399.1 [Amended]

14. In Supplement No. 1 to § 399.1 (the Commodity Control List), Commodity Group 5 (Electronics and Precision Instruments) ECCN 1565A, the *Nuclear Non-Proliferation Controls* paragraph (excluding the Notes) is revised to read as follows:

1565A Electronic computers, "related equipment," equipment or systems containing electronic computers; and specially designed components and accessories.

* * * * *

Nuclear Non-Proliferation Controls: See § 399.2, Interpretation No. 1.

Note: * * *

* * * * *

Supplement No. 1 to § 399.2 [Amended]

15. In Supplement No. 1 to § 399.2, Interpretation No. 1, the introductory text, paragraph (a) introductory text, and paragraph (b) are revised to read as follows:

Interpretation 1: Electronic Computers and Related Equipment (ECCN 1565A)

The following equipment is subject to nuclear non-proliferation controls:

(a) A validated license is required for nuclear non-proliferation reasons for all electronic computers intended for ultimate consignees located in any destinations outside of Canada or a country listed in Supplement No. 2 to Part 373 and engaged directly or indirectly in any of the following activities:

* * * * *

(b) Advanced electronic computers *except:*

(1) Electronic computers having a total processing data rate of 1000 million bits per second or less are not subject to nuclear non proliferation controls for destinations listed in Supplement No. 2 to Part 373 of the Export Administration Regulations or Canada.

(2) Electronic computers having a total processing data rate of 1000 million bits per second or less are not subject to nuclear non-proliferation controls for destinations listed in Supplement No. 8 to Part 373 of the Export Administration Regulations unless the activities cited in (a) above are involved.

(3) Electronic computers having a total processing data rate of 250 million bits per second or less not subject to nuclear non-proliferation controls for destinations listed in Supplement No. 3 to Part 373 of the Export Administration Regulations unless the activities cited in (a) above are involved.

(4) Electronic computers having a floating point processing data rate of 20 million bits per second or less are not subject to nuclear non-proliferation controls for destinations not listed in Supplement Nos. 2 or 3 to Part 373 of the Export Administration Regulations unless the activities cited in (a) above are involved.

Dated: April 13, 1988.

Vincent F. DeCain,

Deputy Assistant Secretary for Export Administration.

[FR Doc. 88-8416 Filed 4-14-88; 9:11 am]

BILLING CODE 3510-DT-M

---

to section 57.b.(2) of the Atomic Energy Act of 1954 as amended, as implemented by regulations of the Department of Energy published in 10 CFR Part 810.

BEST COPY AVAILABLE

VOL
53
ISS
73
AP
15
1988
UMI

Read

INFORMA

Federal R

Index, fin
Public ins
Correction
Document
Machine r

Code of

Index, fin
Printing s

Laws

Public La
Additiona

President

Executive
Public Pa
Weekly C

The Unit

General i

Other Se

Data bas
Guide to
Legal sta
Library
Privacy A
Public La
TDD for

FEDERAL

10519-108
10869-110
11031-112
11239-114
11487-116
11633-118
11815-119
11991-121
12137-123
12371-125
12509-126

Reader Aids

Federal Register

Vol. 53, No. 73

Friday, April 15, 1988

INFORMATION AND ASSISTANCE

Federal Register

Index, finding aids & general information	523-5227
Public inspection desk	523-5215
Corrections to published documents	523-5237
Document drafting information	523-5237
Machine readable documents	523-5237

Code of Federal Regulations

Index, finding aids & general information	523-5227
Printing schedules	523-3419

Laws

Public Laws Update Service (numbers, dates, etc.)	523-6641
Additional information	523-5230

Presidential Documents

Executive orders and proclamations	523-5230
Public Papers of the Presidents	523-5230
Weekly Compilation of Presidential Documents	523-5230

The United States Government Manual

General information	523-5230

Other Services

Data base and machine readable specifications	523-3408
Guide to Record Retention Requirements	523-3187
Legal staff	523-4534
Library	523-5240
Privacy Act Compilation	523-3187
Public Laws Update Service (PLUS)	523-6641
TDD for the deaf	523-5229

FEDERAL REGISTER PAGES AND DATES, APRIL

10519-10868 1
10869-11030 4
11031-11238 5
11239-11486 6
11487-11632 7
11633-11814 8
11815-11990 11
11991-12136 12
12137-12370 13
12371-12508 14
12509-12670 15

CFR PARTS AFFECTED DURING APRIL

At the end of each month, the Office of the Federal Register publishes separately a List of CFR Sections Affected (LSA), which lists parts and sections affected by documents published since the revision date of each title.

3 CFR

Proclamations:
5784 10519
5785 10521
5786 10523
5787 11031
5788 11489
5789 11809
5790 11811
5791 11813
5792 12365
5793 12367
5794 12369

Executive Orders:
12634 11041
12635 12134

Administrative Orders:

Memorandums:
Mar. 31, 1988 11039

Presidential Determinations:
No. 88-10 of February 29, 1988 11487

5 CFR

831 11633
842 11633
1633 11815

Proposed Rules:
1632 11864
2431 10885

7 CFR

2 11636
300 10525
301 11825
400 10526
907 12371
908 12371
910 ..... 10527, 11636, 12509
911 11830
917 11832
929 12373
946 11043
981 12374
1032 11637
1064 11590
1126 11638
1421 11239
3600 11639
3601 11639

Proposed Rules:
6 11091
53 10545
54 10545
449 11299
917 11669
918 11867
946 12423
949 10887
1030 10894
1065 12424
1106 11092
1497 11474
1498 11474
1530 11098
1700 11511
1701 10545

8 CFR

Proposed Rules:
3 11300
208 11300
236 11300
242 11300
253 11300

9 CFR

77 11491
92 ..... 11043, 12640

Proposed Rules:
78 12019

10 CFR

430 10869
600 12137
1010 ..... 11240, 12497

Proposed Rules:
2 11310
50 ..... 11311, 12425

12 CFR

202 11044
205 11046
226 ..... 11047, 11055
229 11832
265 ..... 11640, 12509
563 ..... 11242, 11243
611 12140
615 12140

13 CFR

308 12510

14 CFR

Ch. III 11004
39 ..... 11246, 11641-11643, 11837, 11838, 12141, 12376, 12511
71 ..... 10528, 11020, 11060, 11061, 11839-11841
97 ..... 11062, 12377
121 12358
135 12358

Proposed Rules:
Ch. I 11868
21 11869
23 11869
27 ..... 10826, 11162
29 ..... 10826, 11162
39 ..... 11674-11676, 11678, 11871, 12427
71 ..... 10546, 11100, 11101
73 11102

15 CFR

370 ... 12668
371 ... 12668
373 ... 12668
378 ... 12668
379 ... 12668
385 ... 12668
399 ... 12668

16 CFR

13 ... 11247, 12379

Proposed Rules:

13 ... 12534

17 CFR

30 ... 11491
200 ... 12412
230 ... 11841
240 ... 11841

Proposed Rules:

Ch. IV ... 12428
200 ... 12429

18 CFR

37 ... 11191
154 ... 11191
157 ... 11644, 11845

19 CFR

7 ... 12143

20 CFR

10 ... 11594

Proposed Rules:

10 ... 11596

21 CFR

184 ... 11247
340 ... 11731
444 ... 12644, 12658
452 ... 12414
510 ... 11492
520 ... 11063
522 ... 11064, 11493
524 ... 11064, 12512
540 ... 11492
558 ... 11065, 11251
561 ... 11938, 12640
800 ... 11251
803 ... 11251
807 ... 11251
808 ... 11251
809 ... 11251
812 ... 11251
813 ... 11251
820 ... 11251
860 ... 11251
861 ... 11251
862 ... 11645
864 ... 11251
866 ... 11251
876 ... 11251
895 ... 11251
1002 ... 11251
1005 ... 11251
1010 ... 11251
1020 ... 11251
1030 ... 11251
1040 ... 11251
1050 ... 11251
1308 ... 10834, 10861, 10869

Proposed Rules:

133 ... 11312
175 ... 11402
176 ... 11402
177 ... 11402
178 ... 11402
193 ... 11938
561 ... 11313

22 CFR

120 ... 11494, 12099
121 ... 11494, 12099
122 ... 11494, 12099
123 ... 11494, 12099
124 ... 11494, 12099
125 ... 11494, 12099
126 ... 11494, 12099
127 ... 11494, 12099
128 ... 11494, 12099
514 ... 10528
602 ... 10529
706 ... 11992

Proposed Rules:

204 ... 11872
602 ... 12430

23 CFR

650 ... 11065
658 ... 12145
771 ... 11065
1204 ... 11255
1205 ... 11255

Proposed Rules:

625 ... 11875
626 ... 11875
1309 ... 11679

24 CFR

50 ... 11224
200 ... 11270
201 ... 11997
203 ... 10529, 11997
221 ... 11224
234 ... 11997
236 ... 11224
241 ... 11224
248 ... 11224

Proposed Rules:

35 ... 11164
200 ... 11164, 12431
510 ... 11164
511 ... 11164
570 ... 11164
882 ... 11164
886 ... 11164
888 ... 12278
941 ... 11164
965 ... 11164
968 ... 11164

25 CFR

61 ... 11271

26 CFR

1 ... 11002, 11066, 11162, 11731, 12000, 12149, 12513
602 ... 11066, 11162, 11731, 12000

Proposed Rules:

1 ... 11103, 11876, 12433, 12534

27 CFR

Proposed Rules:

4 ... 12024
12 ... 12024

28 CFR

0 ... 10870, 10871, 11645
66 ... 12099
71 ... 11645

29 CFR

102 ... 10872
1907 ... 12102
1910 ... 11414, 12102
2610 ... 10530
2622 ... 10530
2644 ... 10531
2676 ... 12514

Proposed Rules:

516 ... 11590, 12497
530 ... 11590, 12497
1910 ... 11511
1915 ... 11511
1917 ... 11511
1918 ... 11511
2550 ... 11886
2580 ... 11886

30 CFR

48 ... 12415
75 ... 11395
250 ... 10596, 12227
256 ... 10596, 12227
773 ... 11606
934 ... 11500

Proposed Rules:

20 ... 12250
75 ... 12250
77 ... 12250, 12253
785 ... 11685
823 ... 11685
935 ... 11887
948 ... 11888

31 CFR

Proposed Rules:

103 ... 11513

32 CFR

388 ... 10876
706 ... 12515

Proposed Rules:

45 ... 12034

33 CFR

84 ... 10532
100 ... 11502, 12415
117 ... 10533, 10534, 12416, 12417
165 ... 12417

Proposed Rules:

100 ... 11515, 12434
110 ... 11395, 11515
117 ... 11516, 11517, 12434, 12535

34 CFR

99 ... 11942
600 ... 11208
657 ... 10820
668 ... 11208

Proposed Rules:

105 ... 10808

35 CFR

103 ... 12516

36 CFR

1202 ... 12150
1258 ... 12150

38 CFR

36 ... 11502

39 CFR

Proposed Rules:

111 ... 11685

40 CFR

22 ... 12256
24 ... 12256
52 ... 11068, 11273, 11655, 11847, 12417
60 ... 11590, 12008, 12009, 12498, 0000012517
61 ... 12517
180 ... 11071, 11274, 11938, 12151, 12418, 12640
704 ... 12522
707 ... 12522
710 ... 12522
712 ... 12522
716 ... 12522
717 ... 12522
720 ... 12522
721 ... 12522
723 ... 12522
750 ... 12522
761 ... 12522
763 ... 12522
790 ... 12522
796 ... 12522
797 ... 12522
799 ... 12522

Proposed Rules:

52 ... 11314, 11686, 11688, 12161, 12435
116 ... 11889
117 ... 11889
180 ... 10895
261 ... 12162
264 ... 11742
265 ... 11742
268 ... 11742
271 ... 11742
302 ... 11889, 11890
372 ... 12035
761 ... 11104
763 ... 10546
796 ... 11104

41 CFR

101-25 ... 11847
101-40 ... 11849

Proposed Rules:

201-33 ... 11518

42 CFR

405 ... 11504, 12010
413 ... 12016, 12641
416 ... 11504
418 ... 11504
434 ... 12010
442 ... 11504
482 ... 11504

Proposed Rules:

405 ... 12037, 12641
412 ... 12641
413 ... 12641
489 ... 12641

43 CFR

Proposed Rules:

3160 ... 11318

Public Land Orders:

6670 ... 10535
6671 ... 12419
6672 ... 12420
6673 ... 12420

44 CFR

67 ..... 11510, 12152
80 11275
82 11275
83 11275

Proposed Rules:

61 10547
67 12536

45 CFR

36 11279
79 11656
96 11656
1611 12017

Proposed Rules:

303 12041
606 10896
1356 12436

46 CFR

572 11072

Proposed Rules:

Ch. I 11440
502 12440

47 CFR

0 11849
1 11851
2 ..... 10878, 11855
15 11861
22 11855
43 12526
63 12526
73 ..... 11668, 11863, 12152–12154, 12528
90 ..... 11849, 12154
94 11855

Proposed Rules:

Ch. I 10549, 10550
43 12546
63 12546
68 12546
73 ..... 10905, 11690, 12167–12169, 12547–12549

48 CFR

15 10828
25 12128
31 ..... 10828, 12128
52 ..... 10828, 12128
215 11073
227 10780
242 11073
252 ..... 10780, 11073
2804 12421
2832 12421
2852 12421

Proposed Rules:

43 11795
47 11795
52 ..... 11795, 12501
916 11318
931 11318
952 11318
1505 11519
1506 11519

49 CFR

387 12158
533 11074
571 ..... 11280, 12528
1160 10536

Proposed Rules:

171 ..... 11320, 12442
172 12442
173 ..... 11320, 12442
174 12442
175 12442
176 12442
177 ..... 11618, 12442
178 12442
179 12442
192 10906
383 12504
391 12504
571 11105
840 11520
1185 12443

50 CFR

17 ..... 10879, 11609, 11612
23 12497
285 11510
301 10536
672 11297

Proposed Rules:

18 12043
228 12169
644 11321
658 12046

LIST OF PUBLIC LAWS

Last List April 14, 1988

This is a continuing list of public bills from the current session of Congress which have become Federal laws. It may be used in conjunction with "P L U S" (Public Laws Update Service) on 523-6641. The text of laws is not published in the **Federal Register** but may be ordered in individual pamphlet form (referred to as "slip laws") from the Superintendent of Documents, U.S. Government Printing Office, Washington, DC 20402 (phone 202-275-3030).

H.J. Res. 513/Pub. L. 100-289

To designate April 6, 1988, as "National Student-Athlete Day." (Apr. 12, 1988; 102 Stat. 89; 1 page) Price: $1.00

VOL 53 ISS 73 AP 15 1988 UMI

New edition now available....

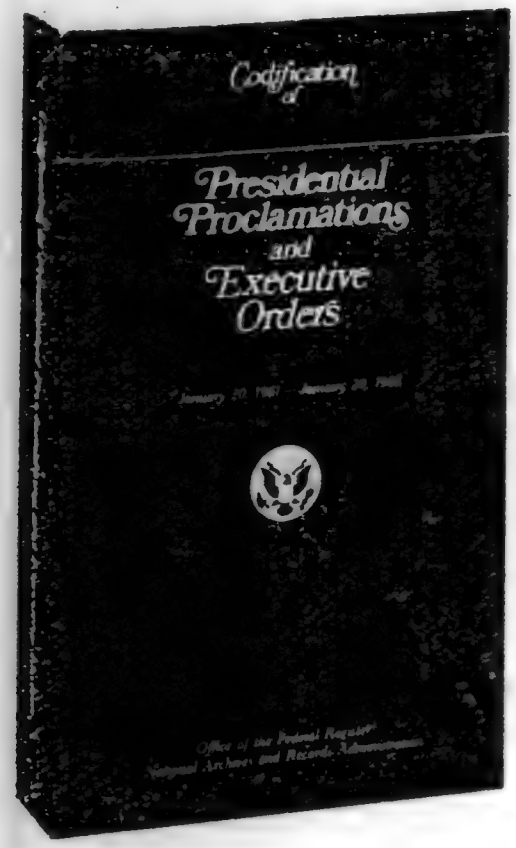

For those of you who must keep informed about **Presidential Proclamations and Executive Orders,** there is a convenient reference source that will make researching these documents much easier.

Arranged by subject matter, this edition of the *Codification* contains proclamations and Executive orders that were issued or amended during the period January 20, 1961, through January 20,1985, and which have a continuing effect on the public. For those documents that have been affected by other proclamations or Executive orders, the codified text presents the amended version. Therefore, a reader can use the *Codification* to determine the latest text of a document without having to "reconstruct" it through extensive research.

Special features include a comprehensive index and a table listing each proclamation and Executive order issued during the 1961-1985 period—along with any amendments—an indication of its current status, and, where applicable, its location in this volume.

Published by the Office of the Federal Register, National Archives and Records Administration

Order from Superintendent of Documents, U.S. Government Printing Office, Washington, D.C. 20402

MAIL ORDER FORM To:

Superintendent of Documents, U.S. Government Printing Office, Washington, D.C. 20402

Enclosed is $ _____ ☐ *check,* ☐ *money order, or charge to my*

Deposit Account No. ☐☐☐☐☐☐☐–☐ *Order No.* _____

Charge orders may be telephoned to the GPO order desk at (202)783-3238 from 8:00a.m. to 4:00p.m. eastern time, Monday-Friday (except holidays).

master charge — VISA

Credit Card Orders Only

Total charges $ _____. Fill in the boxes below:

Credit Card No. ☐☐☐☐☐☐☐☐☐☐☐☐☐☐☐☐☐☐☐☐

★6105

Expiration Date Month/Year ☐☐☐☐

Master Charge Interbank No. ☐☐☐☐

Please send me _____ *copies of the* ***Codification of Presidential Proclamations and Executive Orders*** *at $20.00 per copy. Stock No. 022-022-00110-0*

NAME—FIRST, LAST

COMPANY NAME OR ADDITIONAL ADDRESS LINE

STREET ADDRESS

CITY | STATE | ZIP CODE

(or) COUNTRY

PLEASE PRINT OR TYPE

(Revised 10-15-85)

nformed
nd
ient
arching

dition of
ons and
r
20, 1961,
n have a
hose
by other
he
version.
lification
ument
ough

hensive
mation
e

rrent
ation in

ister,
tion

order
8
p.m.
Friday

VOL
53

ISS
73

AP
15

1988

UMI

VOL
53

ISS
74

AP
18

1988

UMI

4-18-88
Vol. 53

United Sta
Governme
Printing Of
SUPERINTENDE
OF DOCUMENTS
Washington, DC

OFFICIAL BUSIN
Penalty for privat

4-18-88
Vol. 53 No. 74

federal register

Monday
April 18, 1988

United States
Government
Printing Office
SUPERINTENDENT
OF DOCUMENTS
Washington, DC 20402

OFFICIAL BUSINESS
Penalty for private use, $300

**********5-DIGIT 48106
A FR SERIA300S NOV 88 R
SERIALS PROCESSING
UNIV MICROFILMS INTL
300 N ZEEB RD
ANN ARBOR MI 48106

SECOND CLASS NEWSPAPER
Postage and Fees Paid
U.S. Government Printing Office
(ISSN 0097-6326)

VOL
53

ISS
74

AP
18

1988

UMI

4-18-88
Vol. 53
Pages

4-18-88
Vol. 53 No. 74
Pages 12671-12758

federal register

Monday
April 18, 1988

BEST COPY AVAILABLE

FEDERAL REGISTER Published daily, Monday through Friday, (not published on Saturdays, Sundays, or on official holidays), by the Office of the Federal Register, National Archives and Records Administration, Washington, DC 20408, under the Federal Register Act (49 Stat. 500, as amended; 44 U.S.C. Ch. 15) and the regulations of the Administrative Committee of the Federal Register (1 CFR Ch. I). Distribution is made only by the Superintendent of Documents, U.S. Government Printing Office, Washington, DC 20402.

The **Federal Register** provides a uniform system for making available to the public regulations and legal notices issued by Federal agencies. These include Presidential proclamations and Executive Orders and Federal agency documents having general applicability and legal effect, documents required to be published by act of Congress and other Federal agency documents of public interest. Documents are on file for public inspection in the Office of the Federal Register the day before they are published, unless earlier filing is requested by the issuing agency.

The **Federal Register** will be furnished by mail to subscribers for $340.00 per year, or $170.00 for 6 months in paper form, or $188.00 per year, or $94.00 for six months in microfiche form, payable in advance. The charge for individual copies is $1.50 for each issue, or $1.50 for each group of pages as actually bound. Remit check or money order, made payable to the Superintendent of Documents, U.S. Government Printing Office, Washington, DC 20402, or charge to your GPO Deposit Account or VISA or Mastercard.

There are no restrictions on the republication of material appearing in the **Federal Register**.

How To Cite This Publication: Use the volume number and the page number. Example: 52 FR 12345.

SUBSCRIPTIONS AND COPIES

PUBLIC

Subscriptions:

Paper or fiche	202-783-3238
Magnetic tapes	275-3328
Problems with public subscriptions	275-3054

Single copies/back copies:

Paper or fiche	783-3238
Magnetic tapes	275-3328
Problems with public single copies	275-3050

FEDERAL AGENCIES

Subscriptions:

Paper or fiche	523-5240
Magnetic tapes	275-3328
Problems with Federal agency subscriptions	523-5240

For other telephone numbers, see the Reader Aids section at the end of this issue.

Contents

Federal Register
Vol. 53, No. 74
Monday, April 18, 1988

African Development Foundation
NOTICES
Meetings; Sunshine Act, 12745

Agricultural Marketing Service
PROPOSED RULES
Nectarines grown in California, 12687
Pears, plums, and peaches grown in California, 12691

Agricultural Stabilization and Conservation Service
RULES
Marketing quotas and acreage allotments:
Tobacco, 12675

Agriculture Department
See also Agricultural Marketing Service; Agricultural Stabilization and Conservation Service; Farmers Home Administration
RULES
Acquisition regulations
Correction, 12748
NOTICES
Cooperative agreements:
Harlan E. Moore Heart Research Foundation, 12713

Coast Guard
RULES
Ports and waterways safety:
Tampa Bay, FL; regulated navigation areas and limited access areas, 12679
PROPOSED RULES
Drawbridge operations:
Alabama, 12707
Florida, 12708
Regattas and marine parades:
Chesapeake Bay Bridges Swim Race, 12706

Commerce Department
See International Trade Administration; National Oceanic and Atmospheric Administration

Committee for the Implementation of Textile Agreements
NOTICES
Cotton, wool, and man-made textiles:
Dominican Republic, 12715

Consumer Product Safety Commission
NOTICES
Meetings; Sunshine Act, 12745

Defense Department
NOTICES
Meetings:
Integrated Long-Term Strategy Advisory Committee, 12715

Economic Regulatory Administration
NOTICES
Consent orders:
Dorchester Master Ltd. Partnership et al., 12715
Natural gas exportation and importation:
IGI Resources Inc., 12722

Energy Department
See Economic Regulatory Administration; Energy Information Administration; Energy Research Office; Federal Energy Regulatory Commission; Western Area Power Administration

Energy Information Administration
NOTICES
Forms; availability, etc.:
Petroleum Supply Reporting System Forms, 12723

Energy Research Office
NOTICES
Grants; availability, etc.:
Special research program in subsurface science, 12726

Environmental Protection Agency
RULES
Superfund program:
National oil and hazardous substances contingency plan—
National priorities list update, 12680
Toxic chemical release reporting; community right-to-know
Correction, 12748
PROPOSED RULES
Toxic substances:
Testing requirements—
Isopropanol; correction, 12748
NOTICES
Water pollution control:
Disposal site determinations—
East Everglades area, FL, 12729

Executive Office of the President
See Presidential Documents

Export Administration
See International Trade Administration

Farmers Home Administration
PROPOSED RULES
Program regulations:
Appeals procedures; national appeals staff establishment, etc., 12695

Federal Deposit Insurance Corporation
NOTICES
Meetings; Sunshine Act, 12745
(3 documents)

Federal Emergency Management Agency
RULES
Disaster assistance:
Community disaster loan program, 12681

Federal Energy Regulatory Commission
RULES
Natural gas companies (Natural Gas Act):
Purchased gas adjustment regulations—
Reporting and recordkeeping requirements, 12676

Sales and purchases abandonment under expired, terminated, or modified contracts—
Reporting and recordkeeping requirements, 12677
PROPOSED RULES
Natural Gas Policy Act:
Natural gas produced from devonian shale; definition revision, 12704
NOTICES
Natural gas certificate filings:
Natural Gas Pipeline Co. of America et al., 12724

Federal Highway Administration
NOTICES
Environmental statements; notice of intent
Fayette County, PA, 12744

Federal Home Loan Bank Board
NOTICES
Receiver appointments:
First Federal Savings & Loan Association of Shawnee, 12729
Tri-Cities Savings & Loan Association, 12729

Federal Home Loan Mortgage Corporation
NOTICES
Meetings; Sunshine Act, 12746

Federal Reserve System
NOTICES
Applications, hearings, determinations, etc.:
Gulledge, Loretto A., 12729
Southern Bankshares, Inc., et al., 12729
Union Bankshares, Inc., 12730
Union National Corp.; correction, 12730

Federal Trade Commission
NOTICES
Meetings; Sunshine Act, 12746

Food and Drug Administration
RULES
Food additives:
Irradiated foods; production, processing, and handling, 12756

Health and Human Services Department
See Food and Drug Administration; Health Care Financing Administration; Health Resources and Services Administration; National Institutes of Health

Health Care Financing Administration
RULES
Medicaid:
Payments to institutions; post-eligibility determinations for institutionalized individuals
Correction, 12681

Health Resources and Services Administration
NOTICES
Grants and cooperative agreements:
Rural health research centers, 12730

Interior Department
See Land Management Bureau; National Park Service; Surface Mining Reclamation and Enforcement Office

Internal Revenue Service
RULES
Income taxes:
Consolidated return regulations; deferral of gain or loss, 12676
Movie and television films and tapes; investment credit, 12677
PROPOSED RULES
Income taxes:
Consolidated return regulations; deferral of gain or loss; cross-reference, 12705

International Trade Administration
NOTICES
Antidumping and countervailing duties:
Granite products from—
Spain, 12713

Justice Department
NOTICES
Pollution control; consent judgments:
Apex Orchards, Inc., 12732
Conoco, Inc., 12732
U.S. Trustee System; judicial districts certification:
Michigan and Ohio, 12733

Land Management Bureau
NOTICES
Environmental statements; availability, etc.:
Utility corridor lands, AK, 12731
Realty actions; sales, leases, etc.:
Nevada, 12731

Maritime Administration
NOTICES
Trustees; applicants approved, disapproved, etc.:
Shawmut Bank of Boston, N.A., 12744

National Aeronautics and Space Administration
NOTICES
Meetings:
Aeronautics Advisory Committee, 12733

National Archives and Records Administration
NOTICES
Agency records schedules; availability, 12733

National Institutes of Health
NOTICES
Meetings:
Recombinant DNA Advisory Committee, 12752
Recombinant DNA molecules research:
Actions under guidelines—
Proposed, 12752

National Oceanic and Atmospheric Administration
PROPOSED RULES
Fishery conservation and management:
Atlantic sea scallop, 12709
Western Pacific bottomfish and seamount groundfish, 12712
NOTICES
Deep seabed mining; exploration licenses; mine site area revisions:
Ocean Management, Inc., 12714

VOL 53 ISS 74 AP 18 1988 UMI

National Park Service
NOTICES
Meetings:
Golden Gate National Recreation Area and Point Reyes National Seashore Advisory Commission, 12732

National Science Foundation
NOTICES
Meetings:
Interagency Arctic Research Policy Committee, 12734

Nuclear Regulatory Commission
NOTICES
Abnormal occurrence reports:
Periodic reports to Congress, 12734
Meetings:
Reactor Safeguards Advisory Committee, 12734
Proposed schedule, 12735
Applications, hearings, determinations, etc.:
Arizona Public Service Co. et al., 12736
Finlay Testing Laboratories Inc., 12738

Postal Service
NOTICES
Meetings; Sunshine Act, 12746

Presidential Documents
PROCLAMATIONS
Special observances:
Gaucher's Disease Awareness Week (Proc. 5796), 12673
Stuttering Awareness Week, National (Proc. 5795), 12671

Public Health Service
See Health Resources and Services Administration; National Institutes of Health

Securities and Exchange Commission
NOTICES
Agency information collection activities under OMB review, 12740
Self-regulatory organizations; proposed rule changes:
Philadelphia Stock Exchange, Inc., 12740
Applications, hearings, determinations, etc.:
Balboa Development, Inc., 12741
Eli Scientific, Inc., 12742
General Defense Corp., 12742
Nationwide Life Insurance Co., 12743

Surface Mining Reclamation and Enforcement Office
PROPOSED RULES
Permanent program and abandoned mine land reclamation plan submissions:
Ohio, 12705

Tennessee Valley Authority
NOTICES
Meetings; Sunshine Act, 12746

Textile Agreements Implementation Committee
See Committee for the Implementation of Textile Agreements

Transportation Department
See Coast Guard; Federal Highway Administration; Maritime Administration

Treasury Department
See Internal Revenue Service

Western Area Power Administration
NOTICES
Power rate adjustments:
Pick-Sloan Missouri Basin Program-Eastern Division, 12727

Separate Parts in This Issue

Part II
Department of Health and Human Services, National Institutes of Health, 12752

Part III
Department of Health and Human Services, Food and Drug Administration, 12756

Reader Aids
Additional information, including a list of public laws, telephone numbers, and finding aids, appears in the Reader Aids section at the end of this issue.

CFR PARTS AFFECTED IN THIS ISSUE

A cumulative list of the parts affected this month can be found in the Reader Aids section at the end of this issue.

3 CFR
Proclamations:
5795 12671
5796 12673

7 CFR
724 12675
725 12675
726 12675
Proposed Rules:
916 12687
917 12691
1900 12695
1980 12695

16 CFR
389 (2 documents) 12676, 12677
Proposed Rules:
272 12704
274 12704

21 CFR
179 12756

25 CFR
1 (2 documents) 12677, 12678
Proposed Rules:
1 12705

30 CFR
Proposed Rules:
935 12705

33 CFR
165 12679
Proposed Rules:
100 12706
117 (2 documents) 12707, 12708

40 CFR
300 12680
372 12748
Proposed Rules:
795 12748
799 12748

42 CFR
435 12681
436 12681

44 CFR
205 12681

48 CFR
439 12748
452 12748

50 CFR
650 12709
683 12712

VOL 53 ISS 74 AP 18 1988 UMI

Federal Register
Vol. 53, No. 74
Monday, April 18, 1988

Presidential Documents

Title 3—

The President

Proclamation 5795 of April 13, 1988

National Stuttering Awareness Week, 1988

By the President of the United States of America

A Proclamation

The uniquely human ability to communicate thoughts through speech allows us to share our ideas almost as quickly as they occur, with little conscious effort. But for the more than three million Americans who stutter, speech is associated with struggle. Rapid-fire repetitions of sounds, prolonged vowels, and verbal blocks disrupt the smooth and easy flow of speech and limit the spontaneous exchange of ideas and feelings. Many stutterers suffer frustration and embarrassment that can lead to harmful emotional stress.

Stuttering has a tendency to be inherited, and it affects four times as many males as females. Children usually outgrow stuttering before reaching adulthood. When the disorder continues or begins in adults, it is considered chronic and very difficult to control.

Just what causes stuttering is not yet known, but research is providing clues. In normal speech, the brain and more than 100 muscles of the vocal system work together to produce fluent sounds. Within the larynx, one set of muscles contracts to pull the vocal folds apart and works in close coordination with the set of muscles that allows the folds to close. In stuttered speech, however, these muscle sets do not coordinate properly, preventing normal movement of the vocal folds.

Focusing on this specific malfunction, scientists at the National Institute of Neurological and Communicative Disorders and Stroke (NINCDS) have developed a promising, but as yet experimental, treatment for severe chronic adult stutterers. Injections to the larynx temporarily paralyze one of the muscles, easing the disruptive tug-of-war between opposing muscles and thereby improving speech.

The NINCDS leads the Federal government's research effort on stuttering, funding projects around the country in addition to conducting studies in its own laboratories. Research supported by private voluntary health agencies adds to the growing pool of knowledge. These private organizations also provide invaluable counseling and other services to stutterers and their families. Together, Federal and private groups call attention to simple ways the public can help; for example, many stutterers actually improve their speech when listeners know to be patient and supportive.

To enhance public awareness of stuttering, the Congress, by Public Law 100-283, has designated the period of May 9 through May 15, 1988, as "National Stuttering Awareness Week" and authorized and requested the President to issue a proclamation in observance of that event.

NOW, THEREFORE, I, RONALD REAGAN, President of the United States of America, do hereby proclaim the period of May 9 through May 15, 1988, as National Stuttering Awareness Week, and I call upon the people of the United States to observe that week with appropriate ceremonies and activities.

IN WITNESS WHEREOF, I have hereunto set my hand this thirteenth day of April, in the year of our Lord nineteen hundred and eighty-eight, and of the Independence of the United States of America the two hundred and twelfth.

Ronald Reagan

[FR Doc. 88-8498
Filed 4-14-88; 12:08 pm]
Billing code 3195-01-M

VOL 53 ISS 74 AP 18 1988 UMI

Presidential Documents

Proclamation 5796 of April 13, 1988

Gaucher's Disease Awareness Week, 1988

By the President of the United States of America

A Proclamation

Gaucher's disease, the most common of a group of inherited disorders known as lipid storage diseases, afflicts more than 20,000 Americans. It most commonly strikes people of Eastern European Jewish descent, affecting approximately one in every 2,500 people in this group.

Investigators at the Federal government's National Institute of Neurological and Communicative Disorders and Stroke (NINCDS) discovered that Gaucher's disease is caused by the failure of the body to produce an enzyme needed to break down fatty substances called lipids that arise from the normal renewal of the body's cells and tissues. In Gaucher's disease, a specific lipid builds up in body tissues, causing enlargement of the spleen and liver, bone pain, and fractures. In severe cases, serious neurological disorders may occur.

NINCDS scientists and other investigators supported by both public and private funds have narrowed the search for effective management and treatment of this disease. It is now possible to identify carriers of Gaucher's disease. The gene responsible for producing the needed enzyme has been cloned and its structure in normal individuals and Gaucher's disease patients is being studied. Scientists are continuing to refine techniques for replacing the missing enzyme as a useful form of therapy. They are also examining methods that may eventually allow them to replace the defective gene and provide a permanent cure.

Gaucher's patients are further encouraged and sustained by the work of dedicated voluntary health agencies such as the National Gaucher Foundation. These groups provide information and services to patients and their families and work closely with the NINCDS to promote research. When Gaucher's disease is finally conquered, it will be thanks to the cooperative efforts of both private and Federal agencies.

To enhance public awareness of Gaucher's disease, the Congress, by Public Law 100-254, has designated the week beginning October 16, 1988, as "Gaucher's Disease Awareness Week" and authorized and requested the President to issue a proclamation in observance of that week.

NOW, THEREFORE, I, RONALD REAGAN, President of the United States of America, do hereby proclaim the week beginning October 16, 1988, as Gaucher's Disease Awareness Week, and I call upon the people of the United States to observe that week with appropriate ceremonies and activities.

IN WITNESS WHEREOF, I have hereunto set my hand this thirteenth day of April, in the year of our Lord nineteen hundred and eighty-eight, and of the Independence of the United States of America the two hundred and twelfth.

Ronald Reagan

[FR Doc. 88-8499
Filed 4-14-88; 12:00 pm]
Billing code 3195-01-M

VOL
53

ISS
74

AP
18

1988

UMI

Ru

This s
contain
genera
of whi
the Co
publish
U.S.C.
The C
by the
Prices
first Fi
week.

DEPA

Agricu
Conse

7 CFR

Tobac
Marke

AGENC
Conse

ACTION

SUMMA
rule, w
rule w
Regist
This ru
CFR P
that to
marke
Conse
approv
for sal
volunt
term o
would
purcha
flue-cu
produc
situati
Stabili
commi
State A
may ap
realloc

EFFECT

FOR FU
Donald
Specia
Branch
USDA-
Washi

SUPPLE
has be
proced
with E
Depart
has be

Rules and Regulations

Federal Register
Vol. 53, No. 74
Monday, April 18, 1988

This section of the FEDERAL REGISTER contains regulatory documents having general applicability and legal effect, most of which are keyed to and codified in the Code of Federal Regulations, which is published under 50 titles pursuant to 44 U.S.C. 1510.
The Code of Federal Regulations is sold by the Superintendent of Documents. Prices of new books are listed in the first FEDERAL REGISTER issue of each week.

DEPARTMENT OF AGRICULTURE

Agricultural Stabilization and Conservation Service

7 CFR Parts 724, 725 and 726

Tobacco Acreage Allotment and Marketing Quota Regulations

AGENCY: Agricultural Stabilization and Conservation Service, USDA.

ACTION: Final Rule.

SUMMARY: This rule adopts, as a final rule, with minor adjustments, an interim rule which was published in the **Federal Register** on June 11, 1987, (52 FR 22287). This rule amends the regulations at 7 CFR Parts 724, 725 and 726 to provide that tobacco allotments and/or marketing quotas that are subject to a Conservation Reserve Program (CRP) approved contract shall not be eligible for sale under current applicable voluntary sale provisions during the term of the contract. The final rule also would permit the sale of previously purchased or reallocated burley and flue-cured tobacco marketing quotas by producers when certain hardship situations exist. The county Agricultural Stabilization and Conservation (ASC) committee, with the concurrence of a State ASC committee representative, may approve the sale of purchased and reallocated quotas in individual cases.

EFFECTIVE DATE: April 18, 1988.

FOR FURTHER INFORMATION CONTACT: Donald M. Blythe, Agricultural Program Specialist, Tobacco Program Adjustment Branch, Tobacco and Peanuts Division, USDA–ASCS, P.O. Box 2415, Washington, DC 20013 (202) 447–4281.

SUPPLEMENTARY INFORMATION: This rule has been reviewed under USDA procedures established in accordance with Executive Order 12291 and Department Regulation No. 1512–1 and has been classified as "not major." It has been determined that this rule will not result in: (1) An annual effect on the economy of $100 million or more; (2) a major increase in costs or prices for consumers, individual industries, Federal, State or local governments, or geographic regions; or (3) significant adverse effects on competition, employment, investment, productivity, innovation, or the ability of United States-based enterprises, to compete with foreign-based enterprises in domestic or export markets.

The title and number of the Federal Assistance Program to which this rule applies are: Commodity Loan and Purchases; 10.051, as found in the catalog of Federal Domestic Assistance.

It has been determined that the Regulatory Flexibility Act is not applicable to this interim rule since the Agricultural Stabilization and Conservation Service (ASCS) is not required by 5 U.S.C. 553 or any other provision of law to publish a notice of proposed rulemaking with respect to the subject matter of this rule.

This program/activity is not subject to the provisions of Executive Order 12372 which requires intergovernmental consultation with State and local officials. See the notice related to 7 CFR Part 3015, Subpart V, published at 48 FR 29115 (June 29, 1983).

An interim rule was published in the **Federal Register** on June 11, 1987 (52 FR 22287), to provide that tobacco acreage allotments and marketing quotas subject to a Conservation Reserve Program contract may not be sold voluntarily until the CRP contract expires. The interim rule also permitted the sale of previously purchased and/or reallocated quota when certain hardship situations exist.

One comment was received from a farm organization in response to the interim rule. This comment was in support of the change with respect to the sale of previously purchased and/or reallocated quota in certain hardship cases as provided for in the interim rule. No other comments were received. Accordingly, it has been determined that these provisions of the interim rule should be adopted as a final rule. However, the provisions in the interim rule which amended 7 CFR 726.68 with respect to prohibiting the sale of burley tobacco quota subject to a Conservation Reserve Program contract have been determined to be unnecessary since the voluntary sale of burley tobacco quota is not authorized, except in certain exceptional circumstances, by the Agricultural Adjustment Act of 1938, as amended. Accordingly, these provisions of the interim rule have been removed. In addition, certain provisions of the interim rule in 7 CFR 725.72 and 726.68 have been rewritten for clarity.

Accordingly, the proposed rule which we published in the **Federal Register** on June 11, 1987 (52 FR 22287) is adopted, with the above modification and minor changes, as a final rule.

List of Subjects in 7 CFR Parts 724, 725 and 726

Acreage allotments, Marketing quotas, Reporting and recordkeeping requirements, Tobacco.

Final Rule

Accordingly, Chapter VII, Title 7 of the CFR is amended as follows:

PART 724—[AMENDED]

1. In Part 724:

a. The authority citation for Part 724 continues to read as follows:

Authority: Secs. 301, 313, 314, 314A, 316, 316A, 317, 363, 372–375, 377, 378, 52 Stat. 38, as amended, 47, as amended, 48, as amended, 96 Stat. 215, 75 Stat. 469, as amended, 96 Stat. 205, 79 Stat. 66, as amended, 52 Stat. 63, as amended, 65–66, as amended, 70 Stat. 206, as amended, 72 Stat. 995, as amended, 7 U.S.C. 1301, 1313, 1314, 1314–1, 1314b, 1314b–1, 1314c 1363, 1372–75, 1377, 1378; sec. 401, 63 Stat. 1054, as amended, 7 U.S.C. 1421, unless otherwise noted.

b. Section 724.70 is amended by revising paragraph (m) to read as follows:

§ 724.70 Transfer of fire-cured, dark air-cured, and Virginia sun-cured tobacco allotments by lease, sale, or by owner under section 316 of the Act.

* * * * *

(m) *Tobacco allotment subject to an approved Conservation Reserve Program contract.* Allotments which are subject to an approved Conservation Reserve Program contract shall not be eligible for sale during the term of the contract.

* * * * *

PART 725—[AMENDED]

1. In Part 725:

a. The authority citation for Part 725 continues to read as follows:

Authority: Secs. 301, 313, 314, 314A, 316B, 317, 363, 372–375, 377, 378, 52 Stat. 38, as amended, 47, as amended, 48, as amended, 96 Stat. 215, 210, 79 Stat. 66, as amended 52 Stat. 63, as amended, 65–66, as amended, 70 Stat. 206, as amended, 72 Stat. 995, as amended, 7 U.S.C. 1301, 1313, 1314, 1314–1, 1314b–2, 1314c 1363, 1372–75, 1377, 1378; sec. 401, 63 Stat. 1054, as amended, 7 U.S.C. 1421, unless otherwise noted.

b. Section 725.72 is amended by revising paragraphs (d)(5)(i) and (d)(5)(vi) to read as follows:

§ 725.72 Transfer of tobacco marketing quotas by lease or by sale.

* * * * *

(d) * * *

(5) * * *

(i) *Previous purchasers and/or reallocated quota.* If the farm marketing quota includes quota that was bought, and/or reallocated from the quota which has been forfeited and the purchase and/or reallocation became effective during the current year or in the four preceding years; however, this provision shall not be applicable if:

(A) (*1*) The quota being sold was purchased in such period, if forfeiture of such quota is required by § 725.74, and the amount of quota being transferred does not exceed the amount of quota for which forfeiture otherwise is required in accordance with the provisions of § 725.74; or

(*2*) The county ASC committee, with the concurrence of a representative of the State ASC committee, determines that the failure to approve the sale would cause an undue hardship on the seller and:

(B) The sale is in connection with the settlement of an estate which includes the farm for which the quota was established;

(C) The owner of the quota is experiencing financial distress to the extent that current year financing is unlikely;

(D) The owner of the quota is disabled due to health reasons to the extent that such person can no longer continue to share in the risk of production of the purchased and/or reallocated quota; or

(E) The owner of the quota is sharing in the risk of production as an investing producer and loses resources necessary to produce the crop due to reasons beyond such owner's control such as the loss of a tenant or share cropper and a replacement can not be obtained.

* * * * *

(vi) *Tobacco allotment and quota subject to an approved Conservation Reserve Program contract.* If the allotment and quota is subject to an approved Conservation Reserve Program contract.

PART 726—[AMENDED]

1. In Part 726:

a. The authority citation for Part 726 continues to read as follows:

Authority: Secs. 301, 313, 314, 314A, 316B, 317, 363, 372–375, 377, 378, 52 Stat. 38, as amended, 47, as amended, 48, as amended, 96 Stat. 215, 210, 79 Stat. 66, as amended, 52 Stat. 63, as amended, 65–66, as amended, 70 Stat. 206, as amended, 72 Stat. 995, as amended, 7 U.S.C. 1301, 1313, 1314, 1314–1, 1314b–2, 1314c 1363, 1372–75, 1377, 1378; sec. 401, 63 Stat. 1054, as amended, 7 U.S.C. 1421, unless otherwise noted.

b. Section 726.68 is amended by revising paragraph (d)(5)(i) and removing paragraphs (d)(5)(vi) and (vii) to read as follows:

§ 726.68 Transfer of tobacco marketing quotas by lease, by sale or by the owner.

* * * * *

(d) * * *

(5) * * *

(i) *Forfeiture otherwise required.* Unless forfeiture of the quota otherwise would be required in: accordance with § 726.69. However, this provision may be waived if:

(A) The quota was purchased and/or reallocated to the farm effective for the current year or in the four preceding years; and

(B) The county ASC committee, with the concurrence of a representative of the State ASC committee, determines that the failure to permit the sale of the quota, to the extent otherwise permitted by paragraph (d)(5) of this section, would cause an undue hardship on the seller and:

(*1*) The sale is in connection with the settlement of an estate which includes the farm for which the quota was established;

(*2*) The owner of the quota is experiencing financial distress to the extent that current year financing is unlikely;

(*3*) The owner of the quota is disabled due to health reasons to the extent that such person can no longer continue to share in the risk of production of the purchased and/or reallocated quota; or

(*4*) The owner of the quota is sharing in the risk of production as an investing producer and loses resources necessary to produce the crop due to reasons beyond such owner's control such as the loss of a tenant or sharecropper and a replacement can not be obtained.

* * * * *

Signed in Washington, DC, on March 21, 1988.

Milton Hertz,

Administrator, Agricultural Stabilization and Conservation Service.

[FR Doc. 88–6652 Filed 4–15–88; 8:45 am]

BILLING CODE 3410-05-M

DEPARTMENT OF ENERGY

Federal Energy Regulatory Commission

18 CFR Part 389

[Docket No. RM86–14–001; Order No. 483–A]

Revisions to the Purchased Gas Adjustment Regulations

Issued April 12, 1988.

AGENCY: Federal Energy Regulatory Commission, DOE.

ACTION: Final rule; order on rehearing: notice of OMB control numbers.

SUMMARY: The Federal Energy Regulatory Commission (Commission), issued a final rule (Order No. 483, 52 FR 43854 (Nov. 17, 1987)) on November 10, 1987, in Docket No. RM86–14–000, amending its regulations governing the procedures by which a natural gas pipeline company passes through the cost of purchased gas to its jurisdictional customers. The Commission issued an order granting rehearing of Order No. 483 in part, denying rehearing in part and clarifying the final rule on March 2, 1988 (Order No. 483–A, 53 FR 7495 (Mar. 9, 1988)). The Office of Management and Budget has approved the information collection requirements in Order No. 483–A.

EFFECTIVE DATE: April 8, 1988.

FOR FURTHER INFORMATION CONTACT: Sandra S. Vincent, Office of the General Counsel, Federal Energy Regulatory Commission, 825 North Capitol Street NE., Washington, DC 20426, (202) 357–8530.

SUPPLEMENTARY INFORMATION: The Paperwork Reduction Act, 44 U.S.C. 3501–3520 (1982) and the Office of Management and Budget's (OMB) regulations, 5 CFR Part 1320 (1987), require that OMB approve certain information collection requirements imposed by agency rules. On April 4, 1988, OMB approved the information collection requirements of 18 CFR Part 154 as amended by Order No. 483–A under Control Numbers 1902–0070 and 1902–0152. Therefore, Order No. 483–A is effective on April 8, 1988. No amendment to the Table of OMB Control Numbers in 18 CFR 389.101(b) is required.

Lois D. Cashell,

Acting Secretary.

[FR Doc. 88–8420 Filed 4–15–88; 8:45 am]

BILLING CODE 6717-01-M

18 CFR Part 389

[Docket No. RM87-16-000; Order No. 490]

Abandonment of Sales and Purchases of Natural Gas Under Expired, Terminated, or Modified Contracts

Issued April 12, 1988.

AGENCY: Federal Energy Regulatory Commission, DOE.

ACTION: Final rule; notice of OMB control numbers.

SUMMARY: The Federal Energy Regulatory Commission (Commission), issued a final rule (Order No. 490, 53 FR 4121 (Feb. 12, 1988)) on February 5, 1988, in Docket No. RN87-16-000, amending its regulations to provide for abandonment of certain sales and purchases under the Natural Gas Act by both sellers and purchasers where the underlying contract term has expired, or the contract has been terminated or modified with respect to the sales obligations by mutual agreement of the parties. The Office of Management and Budget has approved the information collection requirements in Order No. 490.

EFFECTIVE DATE: April 12, 1988.

FOR FURTHER INFORMATION CONTACT: Sandra S. Vincent, Office of the General Counsel, Federal Energy Regulatory Commission, 825 North Capitol Street N.E., Washington, DC 20426, (202) 357-8530.

SUPPLEMENTARY INFORMATION: The Paperwork Reduction Act, 44 U.S.C. 3501-3520 (1982) and the Office of Management and Budget's (OMB) regulations, 5 CFR Part 1320 (1987), require that OMB approve certain information collection requirements imposed by agency rules. On April 4, 1988, OMB approved the information collection requirements of 18 CFR Part 157 as amended by Order No. 490 under existing Control Numbers 1902-0051, 1902-0052, and 1902-0055. Therefore, Order No. 490 is effective on April 12, 1988.

List of Subjects in 18 CFR Part 389

Reporting and recordkeeping requirements.

Accordingly, Part 389, Chapter I, Title 18, *Code of Federal Regulations* is amended as set forth below.

Lois D. Cashell,

Acting Secretary.

PART 389—OMB CONTROL NUMBERS FOR COMMISSION INFORMATION COLLECTION REQUIREMENTS

1. The authority citation for Part 389 continues to read as follows:

Authority: Paperwork Reduction Act of 1980, 44 U.S.C. 3501-3520 (1982).

§ 389.101 [Amended]

2. The table of OMB Control Numbers in § 389.101(b) is amended by deleting "0060" in the OMB control number column that corresponds to "157.21" in the section column and inserting in its place "0051, 0060."

[FR Doc. 88-8421 Filed 4-15-88; 8:45 am]

BILLING CODE 6717-01-M

DEPARTMENT OF THE TREASURY

Internal Revenue Service

26 CFR Part 1

[T.D. 8195]

Income Taxes; Investment Credit for Movie and Television Films

AGENCY: Internal Revenue Service, Treasury.

ACTION: Final regulations.

SUMMARY: This document contains final regulations relating to the investment credit for movie and television films and tapes. Changes to the applicable law were made by the Tax Reform Act of 1976. The regulations revise the definition of a qualified film and affect taxpayers that own movie and television films or tapes which they place in service.

DATES: The regulations are effective for taxable years beginning after December 31, 1974.

FOR FURTHER INFORMATION CONTACT: David R. Haglund of the Legislation and Regulations Division, Office of the Chief Counsel, Internal Revenue Service, 1111 Constitution Avenue, NW., Washington, DC 20224 (Attention: CC:LR:T). Telephone 202-566-3297 (not a toll-free number).

SUPPLEMENTARY INFORMATION: On June 3, 1982, the **Federal Register** published proposed amendments (47 FR 24142) under section 48(k) of the Internal Revenue Code of 1954. Section 48(k) was added to the Code by the Tax Reform Act of 1976 to provide for an investment credit under section 38 for qualified films and tapes. Section 48(k) (1)(B) provides that "the term 'qualified film' means any motion picture film or video tape created primarily for use as public entertainment * * * [but] does not include any film or tape the market for which is primarily topical or otherwise essentially transitory in nature."

Pursuant to the existing regulations under section 48(k), the subject matter of the film or tape determines whether the market for that film or tape is topical or transitory. The proposed regulations proposed to amend § 1.48-8(a)(3) to provide additional specificity as to the definition of a film that has a transitory market. The proposed regulations stated that a market for a film is essentially transitory if, in the normal operation of the particular market for which the film is produced, films are generally shown once. By example, the proposed regulations provided that the market for serialized daytime dramas is essentially transitory in nature because films or tapes produced for that market usually are shown once. A number of comments were received, and a public hearing was held on October 14, 1982. After consideration of all comments, the Internal Revenue Service has promulgated these final regulations, which withdraw the proposed amendments relating to the definition of topical or transitory films and tapes. In addition, these final regulations amend the existing regulations under section 48(k) to remove the reference to game shows and variety shows as examples of topical or transitory films and tapes. As a result, the determination of whether or not a film or tape of such a game or variety show is topical or transitory will be made on a case-by-case basis.

These regulations do not reflect the repeal (with certain specified exceptions) of the regular investment credit by section 211 of the Tax Reform Act of 1986.

Special Analyses

Although a notice of proposed rulemaking that solicited public comment was issued, the Internal Revenue Service concluded when the notice was issued that the regulations are interpretative and that the notice and public procedure requirements of 5 U.S.C. 553 does not apply. Accordingly, the final regulations do not constitute regulations subject to the Regulatory Flexibility Act (5 U.S.C. Chapter 6).

The Commissioner of Internal Revenue has determined that this final rule is not a major rule as defined in Executive Order 12291 and that a regulatory impact analysis is not required.

Drafting Information

The principal author of these regulations was David R. Haglund of the Legislation and Regulations Division of the Office of the Chief Counsel, Internal Revenue Service. However, personnel from other offices of the Internal Revenue Service and Treasury Department participated in developing

the regulations, on matters of both substance and style.

List of Subjects in 26 CFR 1.0–1 through 1.50–6

Income taxes, Tax liability, Tax rates, Credits.

Adoption of Amendments to the Regulations

Accordingly, 26 CFR Part 1 is amended as follows:

PART 1—[AMENDED]

Income Tax Regulations

Paragraph 1. The authority for Part 1 continues to read in part as follows.

Authority: 26 U.S.C. 7805. * * *

Par. 2. Section 1.48–8 is amended by revising paragraph (a)(3)(iii) to read as follows:

§ 1.48–8 Motion picture and television films and tapes.

(a) *Entitlement to investment credit.* * * *

(3) *Qualified film.* * * *

(iii) *Topical or transitory films and tapes.* The term "qualified film" does not include any film or tape the market for which is primarily topical or is otherwise essentially transitory in nature. A film or tape is topical or essentially transitory in the nature if it primarily deals with events and personalities of current interest at the time the film or tape is placed in service. It does not matter that a film or tape which is topical or essentially transitory in nature may be shown in subsequent years or is actually shown in subsequent years. Topical or transitory films or tapes include news shows such as the evening news and news specials relating to current affairs, interview shows such as "The Tonight Show" or "Meet the Press", award shows, and shows consisting of sporting events. Topical or transitory films and tapes do not include dramatic shows (including dramatized recreations of recent events) or situation comedy shows which present entertainers as characters in a dramatization.

* * * * *

Lawrence B. Gibbs,

Commissioner of Internal Revenue.

Approved: April 4, 1988.

O. Donaldson Chapoton,

Assistant Secretary of the Treasury.

[FR Doc. 88–8837 Filed 4–15–88; 8:45 am]

BILLING CODE 4830–01–M

26 CFR Part 1

[T.D. 8196]

Consolidated Return Regulations; Deferral of Gain or Loss

AGENCY: Internal Revenue Service, Treasury.

ACTION: Temporary and final regulations.

SUMMARY: This document contains temporary and final regulations that amend §§ 1.1502–13, 1.1502–14, 1.1502–13T and add new § 1.1502–14T to the consolidated return regulations. The temporary and final regulations supplement the existing regulations by providing rules relating to complete liquidations of subsidiaries that are taxable to the distributing corporation. The text of the temporary and final regulations set forth in this document also serves as the text of the proposed regulations cross-referenced in the notice of proposed rulemaking in the proposed rules section of this issue of the **Federal Register**.

EFFECTIVE DATE: These regulations are effective upon publication and apply to consolidated income tax returns for which the due date (without extensions) is after April 14, 1988.

FOR FURTHER INFORMATION CONTACT: Patricia W. Pellervo of the Legislation and Regulations Division, Office of Chief Counsel, Internal Revenue Service, 1111 Constitution Avenue, NW., Washington, DC 20224, Attention: CC:LR:T (Telephone 202–566–3458, not a toll-free number).

SUPPLEMENTARY INFORMATION:

Background

This document adds new temporary regulations § 1.1502–14T to Part 1 of Title 26 of the Code of Federal Regulations and makes conforming amendments to §§ 1.1502–13T, 1.1502–13 and 1.1502–14. The temporary regulations added by this document will remain in effect until superseded by later temporary or final regulations relating to these matters.

Explanation of Provision

Under § 1.1502–14(c)(2) of the consolidated return regulations, any gain recognized by the distributing corporation on a complete liquidation is accounted for as if the distributing and distributee member corporations filed separate returns. Because a distribution in complete liquidation of a member of a group is not a "deferred intercompany transaction" (see § 1.1502–13(a)) and is not otherwise treated as such (see §§ 1.1502–14(c)(1) and (2)), any gain or loss recognized by the distributing corporation in a transaction described § 1.1502–14(c)(2) is taken into account in the taxable year in which the transaction occurs.

Under Subchapter C of the Internal Revenue Code of 1986 and the consolidated return regulations, the Internal Revenue Service is unaware of any circumstance in which gain or loss recognized by the distributing corporation in a complete liquidation should not be deferred in the same manner as is provided for other distributions described in § 1.1502–14(a) and (b). *See also* H.R. Rep. No. 100–495, 100th Cong., 1st Sess. 969 (1987). Accordingly, temporary regulation § 1.1504–14T is added, and related temporary regulation § 1.1502–13T is amended, to provided for the deferral of any gain or loss recognized by the distributing corporation on any complete liquidation to the same extent that deferral is provided for gain recognized with respect to a nonliquidating distribution under section 311. The temporary regulations under new § 1.1502–14T, and the amended related regulations under § 1.1502–13T, generally apply to distributions in complete liquidation of a corporation that occur during a taxable year for which the due date (without extensions) for the filing of the income tax return is after April 14, 1988.

Special Analyses

A general notice of proposed rulemaking is not required by 5 U.S.C. 553 for temporary regulations. Accordingly, the temporary regulations do not constitute regulations subject to the Regulatory Flexibility Act (5 U.S.C. Chapter 6). The Commissioner of Internal Revenue has determined that this temporary rule is not a major rule as defined in Executive Order 12291 and that a regulatory impact analysis therefore is not required.

Drafting Information

The principal author these temporary regulations is Patricia W. Pellervo of the Legislation and Regulations Division of the Office of Chief Counsel, Internal Revenue Service. However, other personnel from the Internal Revenue Service and Treasury Department participated in developing the regulations, on matters of both substance and style.

List of Subjects in 26 CFR 1.1501–1 through 1.1564–1

Income taxes, Controlled group of corporations, Consolidated returns.

Adoption of Amendments to the Regulations

Accordingly, 26 CFR Part 1 is amended as follows:

PART 1—INCOME TAX; TAXABLE YEARS BEGINNING AFTER DECEMBER 31, 1986

Paragraph 1. The authority citation for Part 1 is amended by adding the following citation:

Authority: 26 U.S.C. 7805; * * * §§ 1.1502-13, 1.1502-13T, 1.1502-14, and 1.1502-14T also issued under 26 U.S.C. 1502.

Par. 2. Section 1.1502-13 is amended as follows:

1. A new paragraph (c)(7) is added to read as set forth below.

2. A new paragraph (f)(2)(iii) is added to read as set forth below.

§ 1.1502-13 Intercompany transactions.

* * * * *

(c) * * *

(7) *Cross reference to temporary regulations.* For rules relating to inheritance of deferred gain or loss in the case of acquisitions in taxable years for which the due date (without extensions) of the income tax return is after April 14, 1988, see § 1.1502-13T (c).

* * * * *

(f) * * *

(2) * * *

(iii) See § 1.1502-13T (f) for a modification of an exception to paragraph (f)(1)(iii) of this section.

* * * * *

Par. 3. Paragraphs (c) and (f) of § 1.1502-13T are added to read as follows:

§ 1.1502-13T Temporary regulations for certain intercompany transactions.

(a)—(b) [Reserved]

(c) *Deferral of gain or loss on intercompany transactions*—(1) *Inheritance of deferred gain or loss.* If the assets of the selling member are acquired by one or more other members in an acquisition to which section 381(a) applies, or pursuant to a distribution in a complete liquidation not described in section 332(b), the member acquiring the greatest portion of the assets (measured by fair market value) of the selling member shall be subject to the provisions of § 1.1502-13(d), (e), and (f) with respect to the entire remaining balance of the deferred gain or loss. If two or more members acquire the same portion (which is greater than that acquired by any other members), the common parent shall select which such member shall be subject to the provisions of § 1.1502-13(d), (e), and (f). For purposes of this section and § 1.1502-13, a member which inherits the balance of the deferred gain or loss under this subparagraph (1) shall be treated as the selling member.

(2) *Effective date.* Paragraph (c)(1) of this section applies, and § 1.1502-13(c)(6) does not apply, to acquisitions of assets by one or more members from another member in taxable years for which the due date (without extensions) of the income tax return is after April 14, 1988. In the case of a transaction to which this paragraph (c) applies, a reference in this part to § 1.1502-13 (c) is treated as including a reference to this paragraph (c).

(d)—(e) [Reserved]

(f) *Restoration of deferred gain or loss on dispositions, etc.*—(1) *Exception to general rule of § 1.1502-13(f)(1)(iii).* Section 1.1502-13(f)(1)(iii) shall not apply in a case where the selling member or the member which owns the property, as the case may be, ceases to be a member of the group by reason of an acquisition to which section 381(a) applies, or pursuant to a distribution in a complete liquidation not described in section 332(b), and the acquiring corporation is a member.

(2) *Effective date.* Paragraph (f)(1) of this section applies, and § 1.1502-13 (f)(2)(ii)(a) does not apply, when the selling member or the member which owns the property ceases to be a member of the group in a taxable year for which the due date (without extensions) of the income tax return is after April 14, 1988. In the case of a transaction to which this paragraph (f) applies, a reference in this part to § 1.1502-13(f) is treated as including a reference to this paragraph (f).

(g)—(j) [Reserved]

* * * * *

Par. 4. § 1.1502-14 is amended by adding a new paragraph (c)(3) to read as follows:

§ 1.1502-14 Stock, bonds, and other obligations of members.

* * * * *

(c) * * *

(3) *Cross-reference to temporary regulations.* For distributions in taxable years for which the due date (without extensions) of the income tax return is after April 14, 1988, see § 1.1502-14T.

* * * * *

Par. 5. There is added immediately after § 1.1502-14 a new § 1.1502-14T to read as follows:

§ 1.1502-14T Treatment of distributing corporation (temporary).

(a) *Deferral of gain or loss.* To the extent gain or loss is recognized to the distributing corporation on a distribution described in § 1.1502-14 (a) or (b) (including any amount which is treated as gain under sections 311, 336, 341(f)(2), 453B, 1245(a)(1) or 1250(a)(1)), such gain or loss shall be deferred by the distributing corporation. Such deferred gain or loss shall be taken into account by the distributing corporation at the time and in the manner specified in § 1.1502-13 (d), (e), and (f), as if such distributing corporation were a "selling member" and the distributee were a "purchasing member."

(b) *Effective date.* Paragraph (a) of this section applies, and § 1.1502-14(c) does not apply, to distributions described in § 1.1502-14 (a) or (b) that occur in taxable years for which the due date (without extensions) of the income tax return is after April 14, 1988. In the case of a transaction to which this section applies, a reference in this part to § 1.1502-14(c) is treated as including a reference to this section.

The provisions contained in this Treasury Decision are needed to immediately amend the consolidated return regulations in response to amendments made by the section 10223 of the Revenue Act of 1987. It is therefore found impracticable and contrary to the public interest to issue this Treasury Decision with notice and public procedure under subsection (b) of section 553 of Title 5 of the United States Code or subject to the effective date limitation of subsection (d) of that section.

Lawrence B. Gibbs,

Commissioner of Internal Revenue.

Approved: April 12, 1988.

O. Donaldson Chapoton,

Assistant Secretary of the Treasury.

[FR Doc. 88-8411 Filed 4-14-88; 8:45 am]

BILLING CODE 4830-01-M

DEPARTMENT OF TRANSPORTATION

Coast Guard

33 CFR Part 165

[CGD7 88-07]

Regulated Navigation Area; Tampa Bay, FL

AGENCY: Coast Guard, DOT.

ACTION: Final rule, revocation.

SUMMARY: This Amendment revokes the regulations for the Regulated Navigation Area; Tampa Bay, FL, because the 43 foot channel dredging project was

completed and accepted by the U.S. Army Corps of Engineers on 18 November 1985. The completion of this project no longer requires vessel movement control associated with blasting and other restrictive dredging operations.

EFFECTIVE DATE: This rule is effective on April 4, 1988.

FOR FURTHER INFORMATION CONTACT: LTJG Michelle M. Lauzon; TEL: (305) 536–5621.

SUPPLEMENTARY INFORMATION:

Drafting Information

The drafters of this rule are LT M. E. MAES, project officer, and LCDR S. T. FUGER, JR., project attorney.

This action has no economic consequences. It merely revokes regulations that are now meaningless because they pertain to a dredging operation that has been completed. Consequently, this action is considered to be non-major under Executive Order 12291 and nonsignificant under Department of Transportation regulatory policies and procedures (44 FR 11034, February 26, 1979). Since there is no economic impact, a full regulatory evaluation is unnecessary. Because no notice of proposed rulemaking is required under 5 U.S.C. 553, this action is exempt from the Regulatory Flexibility Act (5 U.S.C. 605(b)). However, this action will not have a significant effect on a substantial number of small entities.

List of Subjects in 33 CFR Part 165

Harbor, Marine safety, Navigation (water), Security measures, Vessels, Waterways.

In consideration of the foregoing, Part 165 of Title 33 Code of Federal Regulations, is amended as follows:

PART 165—REGULATED NAVIGATION AREAS AND LIMITED ACCESS AREAS

1. The authority citation for Part 165 continues to read as follows:

Authority: 33 U.S.C. 1225 and 1231; 50 U.S.C. 191; 49 CFR 1.46 and 33 CFR 1.05–1(g), 6.04–1, 6.04–6, and 160.5.

§ 165.702 [Removed]

2. Section 165.702 is removed.

Dated: April 4, 1988.

H.B. Thorsen,

Rear Admiral, U.S. Coast Guard, Commander, Seventh Coast Guard District.

[FR Doc. 88–8399 Filed 4–15–88; 8:45 am]

BILLING CODE 4910-14-M

ENVIRONMENTAL PROTECTION AGENCY

40 CFR Part 300

[FRL-3366-7]

National Oil and Hazardous Substances Contingency Plan; National Priorities List Update

AGENCY: Environmental Protection Agency.

AGENCY: Final rule.

SUMMARY: The Environmental Protection Agency (EPA) announces the deletion of three sites from the National Priorities List (NPL). The NPL is Appendix B to the National Oil and Hazardous Substances Contingency Plan (NCP), which EPA promulgated pusuant to section 105 of the Comprehensive Environmental Response, Compensation, and Liability Act of 1980 (CERCLA), as amended.

EFFECTIVE DATE: April 18, 1988.

FOR FURTHER INFORMATION CONTACT: Allen Dotson, State Requirements Section, State and Local Coordination Branch, Hazardous Site Control Division, Office of Emergency and Remedial Response (WH–548E), Environmental Protection Agency, 401 M Street SW., Washington, DC 20460. Phone (202) 382–5755.

SUPPLEMENTARY INFORMATION: The EPA identifies sites that appear to present a significant risk to public heath, welfare, or the environment and maintains the NPL as the list of those sites. Sites on the NPL may be the subject of Hazardous Substance Response Trust Fund (Fund) financed remedial action. Any site deleted from the NPL remains eligible for Fund-financed remedial actions in the unlikely event that conditions at the site warrant such action. Section 300.66(c)(8) of the NCP states that Fund-financed actions may be taken at sites deleted from the NPL.

The three sites EPA deletes from the NPL are:

1. Middletown Road Dump, Annapolis, Maryland;
2. Harris (Farley Street), Houston, Texas;
3. Mountain View Mobile Home Estates, Globe, Arizona.

An explanation of the criteria for deleting sites for the NPL was presented in section II of the September 3, 1987 Notice of Intent to Delete (50 FR 33446). A description of each of the three sites, and how each meets the criteria for deletion was presented in section IV of that notice.

The closing date for comments on the Notice of Intent to Delete was October 5, 1987. No comments were received concerning Middletown Road Dump.

In the only comment submitted on the Harris (Farley Street) site, Dow Chemical Company stated that action taken at the site had been effective, and that the site should be deleted from the NPL.

EPA received only one comment concerning the Mountain View Mobile Home Estates site. The U.S. Public Interest Research Group opposed deletion of the site, contending that the remedy is inadequate with regard to long-term protectiveness. EPA disagrees with this assertion. The remedy has been demonstrated to be protective of public health and the environment. Arizona has concurred in the recommendation to delete this site. EPA and the State have entered into a twenty-year Operation and Maintenance agreement which may be renegotiated upon expiration. In addition, ownership of the property comprising the site has been transferred to the State of Arizona, and permanent land-use restrictions have been written into the property title. Moreover, deletion of the site from the NPL in no way precludes eligibility of the site for subsequent Fund-financed actions.

List of Subjects in 40 CFR Part 300

Hazardous waste.

PART 300—[AMENDED]

1. The authority citation for Part 300 continues to read as follows.

Authority: Section 105, Pub. L. 96–510, 94 Stat. 2764, 42 U.S.C. 9605 and sec. 311(c)(2), Pub. L. 92–500 as amended, 86 Stat. 865, 33 U.S.C. 1321(c)(2); E.O. 12316, 46 FR 42237; E.O 11735, 38 FR 21243.

Appendix B—[Amended]

2. The NPL Part 300; Appendix B is amended as follows:

In Group 14 remove:

Middletown Road Dump, Annapolis, Maryland

In Group 11 remove:

Harris (Farley Street), Houston, Texas

In Group 2 remove:

Mountain View Mobile Home Estates, Globe, Arizona.

The NPL will reflect these deletions in the next final update.

Date: April 7, 1988.

Jack W. McGraw,

Deputy Assistant Administrator, Office of Solid Waste and Emergency Response.

[FR Doc. 88–8405 Filed 4–15–88; 8:45 am]

BILLING CODE 6560-50-M

DEPARTMENT OF HEALTH AND HUMAN SERVICES

Health Care Financing Administration

42 CFR Parts 435 and 436

[BERC-514-CN]

Medicaid Program; Payments to Institutions; Correction

AGENCY: Health Care Financing Administration (HCFA), HHS.

ACTION: Correction of final rule.

SUMMARY: This document corrects a technical error that appeared in the preamble to the final rule on Medicaid payments to institutions published in the **Federal Register** on February 8, 1988 at 53 FR 3586.

FOR FURTHER INFORMATION CONTACT: Marinos Svolos, (301) 966-4452.

SUPPLEMENTARY INFORMATION: In FR Doc. 88-2480, on page 3594, under "D. Impact on Small Entities," the discussion of program savings in the last 3 lines of the second column and line 1 of the third column immediately under the table are inconsistent with the table on that page. The savings figures presented in the table are correct and should be used in lieu of the figures in that portion of the preamble discussion.

(Catalog of Federal Domestic Assistance Program No. 13.714, Medical Assistance Program)

Dated: April 12, 1988.

James F. Trickett,

Deputy Assistant Secretary for Management Analysis and Systems.

[FR Doc. 88-8413 Filed 4-15-88; 8:45 am]

BILLING CODE 4120-01-M

FEDERAL EMERGENCY MANAGEMENT AGENCY

44 CFR Part 205

[Docket No. 205F]

Disaster Assistance; Community Disaster Loans

AGENCY: Federal Emergency Management Agency.

ACTION: Final rule.

SUMMARY: This Subpart F provides FEMA policy and guidance concerning the Community Disaster Loan program under section 414 of the Disaster Relief Act of 1974, Pub. L. 93-288, as amended. FEMA has determined that changes should be made to upgrade and clarify the regulations.

EFFECTIVE DATE: May 18, 1988.

FOR FURTHER INFORMATION CONTACT: Gene Morath, Office of Disaster Assistance Programs, Federal Emergency Management Agency, Room 714, 500 C Street, SW., Washington, DC 20472, Telephone (202) 646-3683.

SUPPLEMENTARY INFORMATION: On April 28, 1987, FEMA published a proposed rule in the **Federal Register** (52 FR 15348), with a 60 day comment period, proposing changes in the Community Disaster Loan program designed to improve the program and clarify the regulation. The changes were the result of a program review based on over 14 years experience in administering the loan program authorized under Section 414 of the Disaster Relief Act of 1974, Pub. L. 93-288. A total of five comments were received. Four were from States and one was from the Territory of Guam. There was overall concurrence with the proposed rule, with the exception of one proposed change. Specific comments received are discussed below.

The Territory of Guam questioned whether, in view of its special status as a "state" without local governments but with municipal taxing authority, it was eligible for a community disaster loan. An earlier FEMA determination held that Guam is considered a local government for the purpose of applying for a disaster loan.

One State suggested that the loan program be administered through the Regional Director/Federal Coordinating Officer/Disaster Recovery Manager, the same as other Federal disaster assistance. The existing regulation provides that loan applications and applications for loan cancellation must be submitted through the Governor's Authorized Representative and the FEMA Regional Director, to the FEMA Associate Director. FEMA encourages participation at both the State and Regional level, but has retained approval authority at the national level in view of the limited financial resources available to the Regional Director, and to ensure uniformity and consistency in making loans and granting loan cancellations. Also, FEMA has utilized the Treasury Financial Communications System (TFCS) electronic funds transfer for disbursing loan funds directly to local governments, rather than using the Letter of Credit with the State, in order to expedite scheduled disbursements to meet the local government's immediate funding requirements. The regulation at 44 CFR 205.92(a) is being clarified to emphasize that local government correspondence concerning the loan must be submitted to Headquarters, FEMA, through the Governor's Authorized Representative and the FEMA Regional Director.

The balance of the comments received expressed State concerns over FEMA's proposal to make it mandatory for a State to co-sign the promissory note, or otherwise, for the local government to pledge collateral security for the loan, commenting that the State may not be legally able to participate and that the local government may not have a source of collateral available. While FEMA understands these concerns, it has been FEMA's experience that, in view of the cancellation feature, local governments have not always addressed the loan in a fiscally responsible manner, and have been reluctant, and in some cases refused, repeatedly, to repay the uncancelled principal and related accrued interest after the regulatory loan cancellation and appeal process had been exhausted. It has also been FEMA's experience that, in such cases, the State concerned, in view of its close relationship with the borrower, tends to support the position of the local government and adopt a passive attitude towards Federal debt collection efforts. Since State and local governments are exempt from the provision of the Debt Collection Act of 1982, Pub. L. 97-365, as amended, FEMA's only ultimate recourse is litigation. After further consideration of the State's views and FEMA's legitimate program needs, FEMA has determined that it will require States to co-sign the promissory note. However, in view of the State's concerns, if the State cannot legally co-sign the promissory note, FEMA does not consider it an unreasonable requirement for a local government to pledge collateral security against the note as is required in other Federal loan programs. The regulation at 44 CFR 205.94(d)(2) is being revised to modify the language in the proposed rule accordingly.

Based on he foregoing consideration of the comments received and the changes discussed in the proposed rule, FEMA is revising 44 CFR Part 205, Subpart F, summarized as follows. The final rule (1) Extends, in § 205.91(e), the basic term of the promissory note from three to five years to preclude the need for processing routine time extensions for compiling future year financial reports and preparing submissions to FEMA, (2) expands § 205.92(a) to emphasize that local governments must submit all loan correspondence to the FEMA Associate Director through the State and the Regional Director, (3) expands § 205.92(b) to encourage States to take appropriate pre-disaster action to resolve any State impediment which

precludes a local government from incurring the increased indebtedness associated with obtaining a loan, (4) clarifies § 205.94(a)(1) to provide that a local government, when applying for a loan, as a result of having suffered a substantial loss of tax and other revenue as a result of a major disaster, is not required to first seek credit elsewhere, since under such circumstances, the requirement would be inconsistent with the basic intent of the disaster relief legislation, but the applicant would be required to first seek credit elsewhere if a subsequent application is submitted under § 205.97(c), (5) requires, in § 205.94(d)(2), that the State must co-sign the promissory note, but in those cases in which the State cannot legally co-sign the note, requires that the local government must pledge acceptable collateral security against the note, (6) retains, in § 205.96(c)(1)(iv), the requirement that annual audit reports of the local governments accounting records must be submitted when applying for loan cancellation, (7) adds a new provision in § 205.97(c) which provides for executing a new loan agreement and promissory note for an extended period, beyond the current ten year maximum, to enable local governments to develop realistic repayment plans and schedules and repay the indebtedness over an extended period of time, but requires that an applicant must first seek credit elsewhere pursuant to OMB Circular A-70, and (8) expands existing §§ 205.94, 205.95, 205.96, and 205.97, respectively, to clarify the specific financial information required to accompany a loan application, to require the submission of routine annual financial reports during the term of the loan, to expand the information required to accompany applications for loan cancellation, and to show the method used to compute accrued interest on loan disbursements.

Environmental Considerations

FEMA regulations at 44 CFR Part 10, Environmental Considerations, which implement the National Environmental Policy Act (NEPA) identify Community Disaster Loans as subject to a categorical exclusion from NEPA. See 44 CFR 10.8(c)(2)(vii)(G). In addition, 44 CFR 10.8(c)(2)(i) states that the preparation of regulations related to an action which is a categorical exclusion is also a categorical exclusion. Thus, the preparation of an environmental assessment for the issuance of these regulations is not required.

Executive Order 12291, Federal Regulations

This rule is not a "major rule" within the context of Executive Order 12291. It will not have an annual effect on the economy of $100 million or more.

The rule will not have a significant economic impact on small entities, within the meaning of 5 U.S.C. 601 *et. seq.* (the Regulatory Flexibility Act). Our experience over the past 10 years indicates that less than 0.1 of one percent of all applicants for public assistance request Community Disaster Loans. Therefore, no regulatory analysis will be prepared. The information collection requirement contained in this rule has been approved by the Office of Management and Budget under the provisions of the Paperwork Reduction Act of 1980, 44 U.S.C. 3501 *et. seq.*, and has been assigned OMB control numbers 3067-0026 and 3067-0034.

List of Subjects in 44 CFR Part 205

Disaster assistance, Grants programs, Housing and community development.

PART 205—[AMENDED]

1. The authority citation for Part 205 continues to read, in part, as follows:

Authority: 42 U.S.C. 5201; Reorganization Plan No. 3 of 1978, E.O. 12148.

2. Part 205, Subpart F is revised to read as follows:

Subpart F—Community Disaster Loans

Sec.
205.90 Purpose.
205.91 Loan program.
205.92 Responsibilities.
205.93 Eligibility criteria.
205.94 Loan application.
205.95 Loan administration.
205.96 Loan cancellation.
205.97 Loan repayment.

Subpart F—Community Disaster Loans

§ 205.90 Purpose.

This subpart provides policies and procedures for local governments and State and Federal officials concerning the Community Disaster Loan program under section 414 of the Act.

§ 205.91 Loan program.

(a) *General.* The Associate Director, State and Local Programs and Support (the Associate Director) may make a Community Disaster Loan to any local government which has suffered a substantial loss of tax and other revenues as a result of a major disaster or emergency and which demonstrates a need for Federal financial assistance in order to perform its governmental functions.

(b) *Amount of loan.* The amount of the loan is based on need, not to exceed 25 percent of the operating budget of the local government for the fiscal year in which the disaster occurs. The term "fiscal year" as used in this subpart means the local government's fiscal year.

(c) *Interest rate.* The interest rate is the rate determined by the Secretary of the Treasury in effect on the date that the Promissory Note is executed. This Treasury rate takes into consideration the current average market yield on outstanding marketable obligations of the United States with remaining periods to maturity adjusted to the nearest ⅛ percent. The interest rate used shall be the Treasury rate for 5 year maturities in effect for the month the Promissory Note is executed by the Associate Director.

(d) *Time limitation.* The Associate Director may approve a loan in either the fiscal year in which the disaster occurred or the fiscal year immediately following that year. Only one loan may be approved under section 414(a) for any local government as the result of a single disaster.

(e) *Term of loan.* The term of the loan is 5 years, unless otherwise extended by the Associate Director. The Associate Director may consider requests for an extensions of loans based on the local government's financial condition. The total term of any loan under section 414(a) normally may not exceed 10 years from the date the Promissory Note was executed. However, when extenuating circumstances exist and the Community Disaster Loan recipient demonstrates an inability to repay the loan within the initial 10 years, but agrees to repay such loan over an extended period of time, additional time may be provided for loan repayment. See § 205.97(c) of this part.

(f) *Use of loan funds.* The local government shall use the loaned funds to carry on existing local government functions of a municipal operation character or to expand such functions to meet disaster-related needs. The funds shall not be used to finance capital improvements nor the repair or restoration of damaged public facilities. Neither the loan nor any cancelled portion of the loans may be used as the non-Federal share of any Federal program, including those under the Act.

(g) *Cancellation.* The Associate Director shall cancel repayment of all or part of a Community Disaster Loan to the extent that he/she determines that revenues of the local government during the three fiscal years following the disaster are insufficient to meet the

operating budget of that local government because of disaster-related revenue losses and additional unreimbursed disaster-related municipal operating expenses.

(h) Any community disaster loans including cancellations made under this subpart shall not reduce or otherwise affect any commitments, grants, or other assistance under the Act or these regulations.

§ 205.92 Responsibilities.

(a) The local government shall submit the financial information required by FEMA in the application for a Community Disaster Loan and in the application for loan cancellation, if submitted, comply with the assurances on the application, the terms and conditions of the Promissory Note, and these regulations. The local government shall send all loan application, loan administration, loan cancellation, and loan settlement correspondence through the Governor's Authorized Representative and the FEMA Regional Office to the FEMA Associate Director.

(b) The Governor's Authorized Representative shall certify on the loan application that the local government can legally assume the proposed indebtedness and that any proceeds will be used and accounted for in compliance with the FEMA-State Agreement for the major disaster or emergency. States are encouraged to take appropriate pre-disaster action to resolve any existing State impediments which would preclude a local government from incurring the increased indebtedness associated with a loan in order to avoid protracted delays in processing loan application requests in major disasters or emergencies.

(c) The Regional Director or designee shall review each loan application or loan cancellation request received from a local government to ensure that it contains the required documents and transmit the application to the Associate Director. He/she may submit appropriate recommendations to the Associate Director.

(d) The Associate Director, or a designee, shall execute a Promissory Note with the local government, and the Office of Disaster Assistance Programs in Headquarters, FEMA, shall administer the loan until repayment or cancellation is completed and the Promissory Note is discharged.

(e) The Associate Director or designee shall approve or disapprove each loan request, taking into consideration the information provided in the local government's request and the recommendations of the Governor's Authorized Representative and the Regional Director. The Associate Director or designee shall approve or disapprove a request for loan cancellation in accordance with the criteria for cancellation in these regulations.

(f) The Comptroller shall establish and maintain a financial account for each outstanding loan and disburse funds against the Promissory Note.

§ 205.93 Eligibility criteria.

(a) *Local government.* (1) The local government must be located within the area designated by the Associate Director as eligible for assistance under a major disaster or emergency declaration. In addition, State law must not prohibit the local government from incurring the indebtedness resulting from a Federal loan.

(2) Factors considered by FEMA in determining the eligibility of a local government for a Community Disaster Loan include the loss of tax and other revenues as result of a major disaster or emergency, a demonstrated need for financial assistance in order to perform its governmental functions, the maintenance of an annual operating budget, and the responsibility to provide essential municipal operating services to the community. Eligibility for other assistance under the Act does not, by itself, establish entitlement to such a loan.

(b) *Loan eligibility*—(1) *General.* To be eligible, the local government must show that it may suffer or has suffered a substantial loss of tax and other revenues as a result of a major disaster or emergency and must demonstrate a need for financial assistance in order to perform its governmental functions. Loan eligibility is based on the financial condition of the local government and a review of financial information and supporting justification accompanying the application.

(2) Substantial loss of tax and other revenues. The fiscal year of the disaster or the succeeding fiscal year is the base period for determining whether a local government may suffer or has suffered a substantial loss of revenue. Guidelines used in determining whether a local government has or may suffer a substantial loss of tax and other revenue include the following disaster-related factors:

(i) Whether the disaster caused a large enough reduction in cash receipts from normal revenue sources, excluding borrowing, which affects significantly and adversely the level and/or categories of essential municipal services provided prior to the disaster.

(ii) Whether the disaster caused a revenue loss of over 5 percent of total revenue estimated for the fiscal year in which the disaster occurred or for the succeeding fiscal year.

(3) Demonstrated need for financial assistance. The local government must demonstrate a need for financial assistance in order to perform its governmental functions. The guidelines used in making this determination include the following:

(i) Whether there is sufficient funds to meet current fiscal year operating requirement;

(ii) Whether there is availability of cash or other liquid assets from the prior fiscal year;

(iii) Current financial condition considering projected expenditures for governmental services and availability of other financial resources;

(iv) Ability to obtain financial assistance or needed revenue from State and other Federal agencies for direct program expenditures;

(v) Debt ratio (relationship of annual receipts to debt service);

(vi) Ability to obtain financial assistance or needed revenue from State and other Federal agencies for direct program expenditures;

(vii) Displacement of revenue-producing business due to property destruction;

(viii) Necessity to reduce or eliminate essential municipal services; and

(ix) Danger of municipal insolvency.

§ 205.94 Loan application.

(a) *Application.* (1) The local government shall submit an application for a Community Disaster Loan through the Governor's Authorized Representative. The loan must be justified on the basis of need and shall be based on the actual and projected expenses, as a result of the disaster, for the fiscal year in which the disaster occurred and for the three succeeding fiscal years. The loan application shall be prepared by the affected local government and be approved by the Governor's Authorized Representative. FEMA has determined that a local government, in applying for a loan as a result of having suffered a substantial loss of tax and other revenue as a result of a major disaster, is not required to first seek credit elsewhere. (See § 205.97(c))

(2) The State exercises administrative authority over the local government's application. The State's review should include a determination that the applicant is legally qualified, under State law, to assume the proposed debt, and may include an overall review for accuracy for the submission. The Governor's Authorized Representative

may request the Regional Director to waive the requirement for a State review if an otherwise eligible applicant is not subject to State administration authority and the State cannot legally participate in the loan application process.

(b) *Financial requirements.* (1) The loan application shall be developed from financial information contained in the local government's annual operating budget (§ 105.94(b)(2) of this part) and shall include a Summary of Revenue Loss and Unreimbursed Disaster-Related Expenses, a Statement of the Applicant's Operating Results—Cash Position, a Debt History, Tax Assessment Data, Financial Projections, Other Information, a Certification, and the Assurances listed on the application.

(i) Copies of the local government's financial reports (Revenue and Expense and Balance Sheet) for the three fiscal years immediately prior to the fiscal year of the disaster and the applicant's most recent financial statement must accompany the application. The local government's financial reports to be submitted are those annual (or interim) consolidated and/or individual official annual financial presentations for the General Fund and all other funds maintained by the local government.

(ii) Each application for a Community Disaster Loan must also include:

(A) A statement by the local government identifying each fund (i.e. General Fund, etc.) which is included as its Annual Operating Budget, and

(B) A copy of the pertinent State statutes, ordinance, or regulations which prescribe the local government's system of budgeting, accounting and financial reporting, including a description of each fund account.

(2) *Operating budget.* For loan application purposes, the operating budget is that document or documents approved by an appropriating body, which contains an estimate of proposed expenditures, other than capital outlays for fixed assets for a stated period of time, and the proposed means of financing the expenditures. For loan cancellation purposes, FEMA interprets the term "operating budget" to mean actual revenues and expenditures of the local government as published in the official financial statements of the local government.

(3) *Operating budget increases.* Budget increases due to increases in the level of, or additions to, municipal services not rendered at the of the disaster or not directly related to the disaster shall be identified.

(4) Revenue and assessment information. the applicant shall provide information concerning its method of tax assessment including assessment dates and the dates payments are due. Tax revenues assessed but not collected, or other revenues which the local government chooses to forgive, stay, or otherwise not exercise the right to collect, are not a legitimate revenue loss for purposes of evaluating the loan application.

(5) *Estimated disaster-related expense.* Unreimbursed disaster-related expenses of a municipal operation character should be estimated. These are discussed in § 205.96(b) of this part.

(c) *Federal review.* (1) The Associate Director or designee shall approve a community disaster loan to the extent it is determined that the local government has suffered a substantial loss of tax and other revenues and demonstrates a need for financial assistance to perform its governmental function as the result of the disaster.

(2) *Resubmission of application.* If a loan application is disapproved, in whole or in part, by the Associate Director because of inadequacy of information, a revised application may be resubmitted by the local government within sixty days of the date of the disapproval. Decision by the Associate Director on the resubmission is final.

(d) *Community Disaster Loan.* (1) The loan shall not exceed the lesser of:

(i) The amount of projected revenue loss plus the projected unreimbursed disaster-related expenses of a municipal operating character for the fiscal year of the major disaster and the subsequent three fiscal years or

(ii) 25 percent of the local government's annual operating budget for the fiscal year in which the disaster occurred.

(2) *Promissory note.* (i) Upon approval of the loan by the Associate Director or designee, he or she, or a designated Loan Officer will execute a Promissory Note with the applicant. The Note must be co-signed by the State (See § 205.94(d)(2)(ii)). The applicant should indicate its funding requirements on the Schedule of Loan Increments on the note.

(ii) If the State cannot legally so-sign the promissory note, the local government must pledge collateral security, acceptable to the Associate Director, to cover the principal amount of the note. The pledge should be in the form of a resolution by the local governing body identifying the collateral security.

(Approved by the Office of Management and Budget under control number 3067–0034)

§ 205.95 Loan administration.

(a) *Funding.* (1) FEMA will disburse funds to the local government when requested, generally in accordance with the Schedule of Loan Increments in the Promissory Note. As funds are disbursed, interest will accrue against each disbursement.

(2) When each incremental disbursement is requested, the local government shall submit a copy of its most recent financial report (if not submitted previously) for consideration by FEMA in determining whether the level and frequency of periodic payments continue to be justified. The local government shall also provide the latest available data on anticipated and actual tax and other revenue collections. Desired adjustments in the disbursement schedule shall be submitted in writing at least 10 days prior to the proposed disbursement date in order to ensure timely receipt of the funds. A sinking fund should be established to amortize the debt.

(b) *Financial management.* (1) Each local government with an approved Community Disaster Loan shall establish necessary accounting records, consistent with local government's financial management system, to account for loan funds received and disbursed and to provide an audit trail.

(2) FEMA auditors, State auditors, the Governor's Authorized Representative, the Regional Director, the Associate Director, and the Comptroller General of the United States or their duly authorized representatives shall for the purpose of audits and examination have access to any books, documents, papers, and records that pertain to Federal funds, equipments, and supplies received under these regulations.

(c) *Loan servicing.* (1) The applicant annually shall submit to FEMA copies of its annual financial reports (operating statements, balance sheets, etc.) for the fiscal year of the major disaster, and for each of the three subsequent fiscal years.

(2) The Headquarters, FEMA Office of Disaster Assistance Programs, will review the loan periodically. The purpose of the reevaluation is to determine whether projected revenue losses, disaster-related expenses, operating budgets, and other factors have changed sufficiently to warrant adjustment of the scheduled disbursement of the loan proceeds.

(3) The Headquarters, FEMA Office of Disaster Assistance Programs, shall provide each loan recipient with a loan status report on a quarterly basis. The recipient will notify FEMA of any changes of the responsible municipal official who executed the Promissory Note.

VOL 53 ISS 74 APR 18 1988 UMI

(d) *Inactive loans.* If no funds have been disbursed from the Treasury, and if the local government does not anticipate a need for such funds, the note may be cancelled at any time upon a written request through the State and Regional Office to FEMA. However, since only one loan may be approved, cancellation precludes submission of a second loan application request by the same local government for the same disaster.

§ 205.96 Loan cancellation.

(a) *Policies.* (1) FEMA shall cancel repayment of all or any part of a Community Disaster Loan to the extent that the Associate Director determines that revenues of the local government during the full three fiscal year period following the disaster are insufficient, as a result of the disaster, to meet the operating budget of the local government, including additional unreimbursed disaster-related expenses for a municipal operating character. For loan cancellation purposes, FEMA interprets that term "operating budget" to mean actual revenues and expenditures of the local government as published in the official financial statements of the local government.

(2) If the tax and other revenues rates or the tax assessment valuation of property which was not damaged or destroyed by the disaster is reduced during the three fiscal years subsequent to the major disaster, the tax and other revenue rates and tax assessment valuation factors applicable to such property in effect at the time of the major disaster of computing revenues received. This may result in decreasing the potential for loan cancellations.

(3) If the local government's fiscal year is changed during the "full three year period following the disaster" the actual period will be modified so that the required financial data submitted covers an inclusive 36-month period.

(4) If the local government transfers funds from its operating funds accounts to its capital funds account, utilizes operating funds for other than routine maintenance purposes, or significantly increases expenditures not disaster related, except increase due to inflation, the annual operating budget or operating statement expenditures will be reduce accordingly for purposes of evaluating any request for loan cancellation.

(5) It is not the purpose of this loan program to underwrite pre-disaster budget or actual deficits of the local government. Consequently, such deficits carried forward will reduce any amounts otherwise eligible for loan cancellation.

(b) *Disaster-related expenses of a municipal operation character.* (1) For purpose of this loan, unreimbursed expenses of a municipal operating character are those incurred for general government purposes, such as police and fire protection, trash collection, collection of revenues, maintenance of public facilities, flood and other hazard insurance, and other expenses normally budgeted for the general fund, as defined by the Municipal Finance Officers Association.

(2) Disaster-related expenses do not include expenditures associated with debt service, any major repairs, rebuilding, replacement or reconstruction of public facilities or other capital projects, intragovernmental services, special assessments, and trust and agency fund operations. Disaster expenses which are eligible for reimbursement under project applications or other Federal programs are not eligible for loan cancellation.

(3) Each applicant shall maintain records including documentation necessary to identify expenditures for unreimbursed disaster related expenses. Examples of such expenses include but are not limited to:

(i) Interest paid on money borrowed to pay amounts FEMA does not advance toward completion of approved Project Applications.

(ii) Unreimbursed costs to local governments for providing usable sites with utilities for mobile homes used to meet disaster temporary housing requirements.

(iii) Unreimbursed costs required for police and fire protection and other community services for mobile home parks established as the result of or for use following a disaster.

(iv) The cost to the applicant of flood insurance required under Pub. L. 93–234 and other hazard insurance required under section 314, Pub L. 93–288, as a condition of Federal disaster assistance for the disaster under which the loan is authorized.

(4) The following expenses are not considered to be disaster-related for Community Disaster Loan purposes.

(i) The local government's share for assistance provided under the Act including flexible funding under section 402(f) of the Act.

(ii) Improvements related to the repair or restoration of disaster public facilities approved on Project Applications.

(iii) Otherwise eligible costs for which no Federal reimbursement is requested as a part of the applicant's disaster response commitment, or cost sharing as specified in the FEMA-State Agreement for the disaster.

(iv) Expenses incurred by the local government which are reimbursed on the applicant's project application.

(c) *Cancellation application.* A local government which has drawn loan funds from the Treasury may request cancellation of the principal and related interest by submitting an Application for Loan Cancellation through the Governor's Authorized Representative to the Regional Director prior to the expiration date of the loan.

(1) Financial information submitted with the application shall include the following:

(i) Annual Operating Budgets for the fiscal year of the disaster and the three subsequent fiscal years;

(ii) Annual Financial Reports (Revenue and Expense and Balance Sheet) for each of the above fiscal years. Such financial records must include copies of the local government's annual financial reports, including operating statements balance sheets and related consolidated and individual presentations for each fund account. In addition, the local government must include an explanatory statement when figures in the Application for Loan Cancellation form differ from those in the supporting financial reports.

(iii) The following additional information concerning annual real estate property taxes pertaining to the community for each of the above fiscal years:

(A) The market value of the tax base (dollars),

(B) The assessment ratio (percent),

(C) The assessed valuation (dollars),

(D) The tax levy rate (mils),

(E) Taxes levied and collected (dollars).

(iv) Audit reports for each of the above fiscal years certifying to the validity of the Operating Statements. The financial statements of the local government shall be examined in accordance with generally accepted auditing standards by independent certified public accountants. The report should not include recommendations concerning loan cancellation or repayment.

(v) Other financial information specified in the Application for Loan Cancellation.

(2) *Narrative justification.* The application may include a narrative presentation to amplify the financial material accompanying the application and to present any extenuating circumstances which the local government wants the Associate Director to consider in rendering a decision on the cancellation request.

(d) *Determination.* (1) If, based on a review of the Application for Loan Cancellation and FEMA audit, when determined necessary, the Associate

BEST COPY AVAILABLE

Director determines that all or part of the Community Disaster Loan funds should be cancelled, the principal amount which is cancelled will become a grant, and the related interest will be forgiven. The Associate Director's determination concerning loan cancellation will specify that any uncancelled principal and related interest must be repaid immediately and that, if immediate repayment will constitute a financial hardship, the local government must submit for FEMA review and approval, a repayment schedule for settling the indebtedness on timely basis. Such repayments must be made to the Treasurer of the United States and be sent to FEMA, Attention: Office of the Comptroller.

(2) A loan or cancellation of a loan does not reduce or affect other disaster-related grants or other disaster assistance. However, no cancellation may be made that would result in a duplication of benefits to the applicant.

(3) The uncancelled portion of the loan must be repaid in accordance with § 205.97 of this part.

(4) *Appeals.* If an Application for Loan Cancellation is disapproved, in whole or in part, by the Associate Director or designee, the local government may submit any additional information in support of the application within sixty days of the date of disapproval. The decision by the Associate Director or designee on the submission is final.

(Approval by the Office of Management and Budget under control number 3067–0026)

§ 205.97 Loan repayment.

(a) *Prepayments.* The local government may make prepayments against loan at any time without any prepayment penalty.

(b) *Repayment.* To the extent not otherwise cancelled, Community Disaster Loan funds become due and payable in accordance with the terms and conditions of the promissory note. The note shall include the following provisions:

(1) The term of a loan made under this program is five years, unless extended by the Associate Director. Interest will accrue on outstanding cash from the actual date of its disbursement by the Treasury.

(2) The interest amount due will be computed separately for each Treasury disbursement as follows: $I=P\times R\times T$, where I = the amount of simple interest, P = the principal amount disbursed; R = the interest rate of the loan; and, T = the outstanding term in years from the date of disbursement to date of repayment, with periods less than one year computed on the basis of 365/year. If any portion of the loan is cancelled, the interest amount due will be computed on the remaining principal with the shortest outstanding term.

(3) Each payment made against the loan will be applied first to the interest computed to the date of the payment, and then to the principal. Prepayments of scheduled installments, or any portion thereof, may be made at any time and shall be applied to the installments last to become due under the loan and shall not affect the obligation of the borrower to pay the remaining installments.

(4) The Associate Director may defer payments of principal and interest until FEMA makes its final determination with respect to any Application for Loan Cancellation which the borrower may submit. However, interest will continue to accrue.

(5) Any costs incurred by the Federal Government in collecting the note shall be added to the unpaid balance of the loan, bear interest at the same rate as the loan, and be immediately due without demand.

(6) In the event of default on this note by the borrower, the FEMA claims collection officer will take action to recover the outstanding principal plus related interest under Federal Debt Collection authorities, including administrative offset against other Federal funds due the borrower and/or referral to the Department of Justice for judicial enforcement and collection.

(c) In unusual circumstances involving financial hardship, the local government may request an additional period of time to repay the indebtedness. Such request may be approved by the Associate Director subject to the following conditions:

(1) The local government must submit documented evidence that it has applied for the same credit elsewhere and that such credit is not available at a rate equivalent to the current Treasury rate.

(2) The principal amount shall be the original uncancelled principal plus related interest.

(3) The interest rate shall be the Treasury rate in effect at the time the new Promissory Note is executed but in no case less than the original interest rate.

(4) The term of the new Promissory Note shall be for the settlement period requested by the local government but not greater than ten years from the date the new note is executed.

Date: April 8, 1988.

Grant C. Peterson,

Associate Director, State and Local Programs and Support.

[FR Doc. 88–8015 Filed 4–15–88; 8:45 am]

BILLING CODE 6718–01–M

Proposed Rules

Federal Register
Vol. 53, No. 74
Monday, April 18, 1988

This section of the FEDERAL REGISTER contains notices to the public of the proposed issuance of rules and regulations. The purpose of these notices is to give interested persons an opportunity to participate in the rule making prior to the adoption of the final rules.

DEPARTMENT OF AGRICULTURE

Agricultural Marketing Service

7 CFR Part 916

Nectarines Grown in the State of California

Amendments to the Size Requirements and Clarification of the Maturity Regulations for Nectarines

AGENCY: Agricultural Marketing Service, USDA.

ACTION: Proposed rule.

SUMMARY: This proposed rule invites comments on several proposed changes to the size and maturity regulations established for California nectarines. The proposed increase in variety-specific size requirements for numerous nectarine varieties and the proposed increase in minimim size requirements for non-listed varieties are designed to make nectarines more marketable and to give retailers and consumers a better product. This proposal also would change the coverage of the size requirements by adding six varieties of nectarines and by removing four from the variety-specific size list. It would, in addition, clarify the current maturity requirements by specifying the current maturity requirements in greater detail and would simplify the maturity determination system currently used by the nectarine industry.

DATE: Comments must be received by May 3, 1988.

ADDRESS: Interested persons are invited to submit written comments concerning this proposal. Comments must be sent to the Docket Clerk, Fruit and Vegetable Division, AMS, USDA, P.O. Box 96456, Room 2085–S, Washington, DC 20090–6456. Three copies of the written material shall be submitted, and they will be made available for public inspection in the office of the Docket Clerk during regular business hours. The comments should reference the date and page number of this issue of the **Federal Register**.

FOR FURTHER INFORMATION CONTACT: Jerry N. Brown, Marketing Order Administration Branch, Fruit and Vegetable Division, AMS, USDA, P.O. Box 96456, Room 2525–S, Washington, DC 20090–6456; telephone 202–475–5464.

SUPPLEMENTARY INFORMATION: This rule is proposed under Marketing Order No. 916 [7 CFR Part 916], regulating the handling of nectarines grown in California. This order is effective under the Agricultural Marketing Agreement Act of 1937, as amended [7 U.S.C. 601–674], hereinafter referred to as the Act.

This rule has been reviewed under Executive Order 12291 and Departmental Regulation 1512–1 and has been determined to be a "non-major" rule under criteria contained therein.

Pursuant to requirements set forth in the Regulatory Flexibility Act (RFA), the Administrator of the Agricultural Marketing Service (AMS) has considered the economic impact of this proposal on small entities.

The purpose of the RFA is to fit regulatory actions to the scale of business subject to such actions in order that small businesses will not be unduly or disproportionately burdened. Marketing orders issued pursuant to the Act, and rules issued thereunder, are unique in that they are brought about through group action of essentially small entities acting on their own behalf. Thus, both statutes have small entity orientation and compatibility.

There are approximately 650 handlers of plums, peaches, and nectarines subject to regulation under marketing order [7 CFR Parts 916 and 917], and there are approximately 2,030 producers of these commodities in the regulated area. Small agricultural producers have been defined by the Small Business Administration [13 CFR 121.2] as those having gross annual revenues for the last three years of less than $500,000, and small agricultural service firms are defined as those whose gross annual receipts are less than $3,500,000. The majority of handlers and producers of such fruit may be classified as small entities.

Shipments of California nectarines are regulated by grade, maturity, and size under Nectarine Regulation 14 [7 CFR 916.356, as amended and published in the **Federal Register** on April 29, 1987, 52 FR 15487, and as corrected on May 8, 1987, 52 FR 17504]. Most of the proposed changes to § 916.356 were unanimously recommended by the Nectarine Administrative Committee, which works with the Department in administering the marketing order for California nectarines. This proposed rule is based upon the committee's recommendation, information submitted by the committee and other available information. The proposed changes reflect crop and market conditions experienced last season and expected conditions in 1988.

Inspected shipments of California nectarines for the 1987 season totalled 16,863,000 packages and they were primarily sold in the fresh market. In 1987, the production value of California nectarines was about $65,545,000. Although this proposed rule would impose requirements on the handling of nectarines, exemptions from the inspection and certification requirements would continue. These exemptions include provisions for the shipment of minimum quantities of the fruit.

Variety-specific size regulations for nectarines are implemented when the nectarine variety is produced in commercially significant quantities; i.e., shipments in excess of 10,000 packages during a season. When varieties are no longer produced in significant quantities (less than 5,000 packages during the previous season), they are removed from the variety-specific size requirements, but are subject to minimum size requirements established for non-listed varieties. The quantities used in making these determinations are the same as those used in prior seasons. These requirements are specified in paragraph (a) of § 916.356.

To implement the committee's size recommendations, paragraph (a) of § 916.356 would be revised to increase the variety-specific size requirements for 75 varieties of nectarines and to decrease the size requirements for four varieties by removing them from the more restrictive variety-specific size requirements and by subjecting them to the less restrictive minimum size requirements established for non-listed varieties.

This proposal would decrease the number of nectarines allowed in a 16-pound representative sample and require the nectarines to be packed in larger sized packs. For example, the minimum size requirement for Early

Diamond nectarines would be increased from the smaller size "108" to the larger size "96." Also, two new size designations would be added to § 916.356(a), and one size designation would be removed from the minimum size requirements prescribed in that paragraph. Specifically, size "84" (not more than 84 nectarines in a No. 22D standard lug box) would be replaced by two new size designations, size "88" and "80."

Also, under this proposal size "108" nectarines when packed in a loose-filled container would be subject only to a 16-pound sample test instead of both the 16-pound test and the tray pack test as is currently required. Size "108" nectarines would only be subject to the tray pack requirement specifying that such nectarines, when packed in molded forms (tray pack) in a No. 22D standard lug box, are of a size that will pack, in accordance with the requirements of standard pack, not more than 108 nectarines in the lug box. This recognizes that the Aurelio Grand, Maybelle, Mayfire, and Royal Delight variety nectarines subject to the "108" size requirements normally size well enough to meet the tray pack requirements, but sometimes do not develop enough soluble solids to meet the 16-pound weight test.

This proposal would also change the requirements for non-listed varieties of nectarines. Currently, the requirements for non-listed varieties of nectarines specify a minimum size "108" to be shipped during January 1 through May 31 of each fiscal period, size "96" to be shipped during June 1 through June 30 of each fiscal period, and size "84" to be shipped during July 1 through December 31 of each fiscal period. This proposal would increase the requirements for nectarines to size "96" during January 1 through May 31 of each fiscal period, size "88" during June 1 through June 30 of each fiscal period, and size "80" during July 1 through December 31 of each fiscal period.

In addition, the maximum number of nectarines allowed in a representative 16-pound sample of "108" size nectarines would be reduced from 95 to 92. For example, the minimum size requirement for Royal Delight nectarines would continue to be a size "108"; however, the maximum number of Royal Delight nectarines allowed in a representative 16-pound sample would be 92 and they would not be subject to the tray pack test (not more than 108 nectarines in a No. 22D standard lug box) when packed in loose-filled containers.

The committee is of the view that the higher size requirements are necessary to provide consumers and retailers with larger nectarines. Industry bulletins for the past seasons indicate that small-sized fruit has been rejected by consumers. The industry has been gradually adjusting its size requirements to accommodate the preferences of consumers and the trade to maintain the industry's good quality image.

According to the committee, the proposed changes are necessary to remove from the market those sizes of fruit which are not being well received by consumers. These actions are intended to foster repeat purchase and maintain consumer satisfaction. Early season purchases of small-sized nectarines have a negative impact on total nectarine sales because consumers do not make repeat purchases after being dissatisfied with their original purchases. According to the committee, increased size requirements are needed to make nectarines more marketable and are essential for the consumer satisfaction needed to maintain current markets and to build new markets.

The elimination of small-sized nectariens would respond to consumer demands for larger fruit and benefit the consumer and the entire nectarine industry. Because of the cultural practices (e.g., proper thinning) growers can use to increase nectarine size and yields, no shortage is expected as a result of the recommended size changes, but rather more healthy market conditions for California nectarines.

Subsequent to the committee's meeting on December 9, 1987, on this proposal, the Department has received letters from interested persons opposed to the size increases. One person contends that the proposal is intended for volume control rather than quality assurance and that adequate research to justify the size changes was not performed. Another person has requested that the size requirements for the May Glo nectarine variety remain the same as last season. The person stated that his firm was not aware of the committee's recommendation to increase the size requirements for the May Glo nectarine variety until early March and that because the Coachella Valley is such an early growing area, it is too late for his firm to improve the size, with thinning and pruning, this season.

In addition, the proposal would establish variety-specific size requirements for nectarine varieties now produced in commercially significant quantities and remove varieties no longer produced in significant quantities from variety-specific size requirements. Specifically, the Kism Grand, September Red, Sun Diamond, and 181–119 varieties of nectarines would be added to the variety-specific requirements in paragraph (a)(5) of § 916.356; May Diamond would be added to the variety-specific requirements in paragraph (a)(4) of § 916.356; and Mayfire would be added to the variety-specific requirements in paragraph (a)(2) of § 916.356. The Armking, Gee Red, Richards Grand, and Star Grand varieties of nectarines would be removed from the variety-specific size requirements. Shipments of the new varieties that would be added to the variety-specific size regulations exceeded 10,000 packages during the 1987 season. Shipments of the varieties that would be removed from the variety-specific size regulations fell below 5,000 packages during the 1987 season.

Further, the proposal would revise paragraph (a) of § 916.356 to clarify the nectarine maturity requirements and simplify the maturity determination system currently used by the nectarine industry. Among other things, the revision of paragraph (a) would specify that no handler can ship nectarines unless they are at least "well-matured," as defined in paragraph (b) and would specify the role of Federal or Federal-State inspectors in making "well-matured" determinations.

Currently the first sentence of paragraph (a) states that: "No handler shall ship:" and the first sentence of paragraph (a)(1) states that: "Any lot or package or container of any variety of nectarines unless such nectarines meet the requirements of U.S. No. 1 grade: *Provided*, that maturity shall be determined by the application of color standards by variety or such other tests as determined to be proper by the Federal or Federal-State Inspection Service."

It is proposed that the first sentence of paragraph (a)(1) be revised to read: "Any lot or package or container of any variety of nectarines unless such nectarines meet the requirements of U.S. No. 1 grade, except that the nectarines shall be 'well-matured,' rather than 'mature,' but not over-ripe or shriveled." This change would clarify the fact that all nectarines marketed under this program must be "well-matured," rather than "mature" as defined in the U.S. grade standards for nectarines. Since May 16, 1980 [45 FR 32309; May 16, 1980] nectarines have been required to be "well-matured" rather than "mature," and this requirement has been implemented by the Federal-State Inspection Service since that time.

In addition to specifying that nectarines must be "well-matured," the proposal would define "well-matured"

as a condition distinctly more advanced than "mature." According to the U.S. grade standards, a nectarine is considered mature when it has reached the stage of growth which will insure a proper completion of the ripening process. This is a minimum standard of maturity which was in effect before the more recent advances in handling and distribution techniques and does not preclude inspecting to a higher degree of maturity. In 1979 the committee reported that "the maturity of nectarines at destination was rather severely criticized." The "well-matured" requirement has resulted in more consumer acceptance and expansion of markets for California nectarines.

The proposal would also simplify the current maturity determination procedures. To ascertain compliance with the "well-matured" standard with regard to each variety of nectarines, various tests are used. Since 1980, the Federal-State Inspection Service, based on its expertise, has been primarily responsible for determining which specific test or tests should be used for each variety of nectarines and which test level (e.g., particular color chip) is appropriate for each variety. When the Federal-State Inspection Service has sufficient experience with a variety to determine that a color chip test and a particular color chip should normally be appropriate for the entire production area for every year, it has advised the committee of that determination. The committee has then ratified that determination, publishing it in its annual bulletin. After such a determination for a particular variety has been published, variances during the season or permanent changes between seasons have been made by the committee or its Maturity Subcommittee. The committee and its staff have provided advice to the Federal-State Inspection Service in making its maturity determinations, and likewise the Federal-State Inspection Service and the committee staff have advised the committee and its Maturity Subcommittee in making variances and changes.

Over the years, these procedures have provided fair and equitable treatment to producers and handlers. The Federal-State Inspection Service is the recognized authority on matters relating to grading and inspection. The committee staff have backgrounds in inspection and packing and have a vast amount of concentrated hands-on experience with nectarines. The members of the committee are all growers of nectarines who are often also handlers. They are nominated by their peers in each production district. They have practical business experience in the nectarine industry, as well as the confidence of their peers with regard to their expertise and integrity.

The current procedures have, however, at times created logistical problems, particularly with regard to variances during the season. Requests for variances require prompt consideration and action. Committee members are dispersed over a wide geographical area and have daily repsonsibilities with regard to their own businesses. While most committee members have been extremely giving of their time with regard to their variance duties, the demands of such duties have imposed a hardship on the members.

It is, therefore, proposed by the Department that the responsibility for variances during the season and changes between the seasons be given to the Federal or Federal-State Inspection Service.

This change would simplify the procedures by assigning all maturity determinations and the application of those determinations to one group. In making this proposal it is intended that the Federal or the Federal-State Inspection Service, while considering variances and changes, will seek the advice of the committee and its staff in order to draw upon their wealth of expertise. It is also intended that any changes and any variances would be applicable to all growers and handlers of the particular variety. Finally, it is intended that any changes and variances will be made at the supervisory level of the Federal or the Federal-State Inspection Service, rather than by the particular packinghouse inspector. This will ensure that these decisions are made by those who have the greatest background and expertise and who are in a position to be knowledgeable concerning current conditions throughout the entire production area. It is expected that this change in procedures would have very negligible substantive effect. The experience of the last eight seasons indicates that almost invariably there has been a concurrence of opinion regarding the proper decision among the Federal-State Inspection Service, the committee staff and the committee or Subcommittee.

Further, a table would be added to paragraph (a) of § 916.356 which would specify color chip guides which the Federal or the Federal-State Inspection Service intends to use beginning with the 1988 season for the specified varieties of nectarines. For these varieties, an aggregate area of not less than 90 percent of the fruit surface shall meet the color guide established for the variety, and not less than 90 percent of any lot shall meet the color guide established for the variety.

The varieties listed in the table are those described above where the inspection service has sufficient experience to specify a color chip test and a particular color chip. The Federal or the Federal-State Inspection Service would have the authority to make variances from the guides in the table during the season for any variety to reflect changes in crop and weather conditions that would make the guide an inappropriate measure of "well-matured." For varieties not listed in the table, the Federal or Federal-State Inspection Service would use such tests as they deem appropriate. Single sets of the color chip guides used by the Federal or Federal-State Inspection Service may be obtained from the Nectarine Administrative Committee at: 701 Fulton Avenue, Sacramento, California 95865 or can be inspected at such location during regular business hours. The committee's telephone number is 916-483-9261.

There are no changes of color chips in the table from the list in the 1987 Nectarine Bulletin. However, an additional aggregate surface tolerance of 10 percent for the Tom Grand and 61-61 varieties of nectarines would be added to paragraph (a)(1)(i) of § 916.356. This is intended to help make maturity determinations for these varieties of nectarines more accurate. This proposed exception is the same as is currently in effect for the Fairlane variety of nectarines.

It is the Department's view that the proposed change to add several new varieties of nectarines now produced in commercially significant quantities to the variety-specific (named-variety) size requirements and to delete four varieties no longer produced in commercially significant quantities from those requirements would not be detrimental to small entities. These changes are expected to improve the quality of nectarines in the fresh market which would be beneficial in maintaining current markets and developing new ones. The proposed change to clarify the maturity requirements for nectarines is intended to foster and facilitate a greater understanding of these requirements within the nectarine industry and, as such, would not result in additional costs. The proposed changes to the well matured guides for the Tom Grand and 61-61 varieties of nectarines would relax requirements.

The committee is of the view that the higher size requirements are necessary

to provide consumers and retailers better sized nectarines. Industry bulletins from the past season indicate that consumers prefer larger sized well-matured fruit. The industry has been gradually adjusting its size requirements to accommodate the wishes of the consumers and the trade to maintain the industry's good quality image.

According to the committee, the proposed changes are necessary to remove from the market those sizes of fruit which are not being well received by consumers. These actions are intended to foster repeat purchases and maintain consumer satisfaction.

Based on the above, the Administrator of AMS has determined that the changes proposed above would not have a significant economic impact on a substantial number of small entities.

The committee's recommendation, other information, and all written comments timely received in response to this request for comments will be considered before a final determination is made on this proposal. Commenters are encouraged to submit the reasons in support of or in opposition to this proposed rule. Any pertinent data to support their views and comments should also be submitted.

A comment period of less than 30 days is deemed appropriate for this proposal. The harvest and shipment of the 1988 nectarine crop is expected to start April 25, 1988, and growers and handlers should be given as much notice as possible of any changes, if adopted to permit the industry to plan accordingly. Moreover, the Department already has received letters in opposition to the proposed nectarine size changes indicating the industry is aware of the committee's recommendation.

List of Subjects in 7 CFR Part 916

Marketing agreement and order, Nectarines, California.

For the reasons set forth in the preamble, 7 CFR Part 916 is proposed to be amended as follows:

PART 916—NECTARINES GROWN IN CALIFORNIA

1. The authority citation for 7 CFR Part 916 continues to read as follows:

Authority: Secs. 1–19, 48 Stat. 31, as amended; 7 U.S.C. 601–674.

2. Section 916.356 is revised to read as follows:

§ 916.356 Nectarine Regulation 14.

(a) *No handler shall ship:*

(1) Any lot or package or container of any variety of nectarines unless such nectarines meet the requirements of U.S. No. 1 grade, except that the nectarines shall be "well-matured," rather than "mature," but not over-ripe or shriveled. Conformity with the well-matured requirement shall be determined by the Federal or Federal-State Inspection Service by the application of color guides or other tests as it deems proper for each variety: *Provided,* That nectarines 2 inches in diameter or smaller, shall not have fairly light colored, fairly smooth scars which exceed an aggregate area of a circle ⅜ inch in diameter, and nectarines larger than 2 inches in diameter shall not have fairly light colored, fairly smooth scars which exceed an aggregate area of a circle ½ inch in diameter: *Provided further,* That an additional tolerance of 25 percent shall be permitted for fruit that is not well formed but not badly misshapen.

(i) During the 1988 and subsequent seasons, the Federal or the Federal-State Inspection Service intends to use the maturity guides listed in Table I in making maturity determinations for the specified varieties. For these varieties, not less than 90 percent of any lot shall meet the color guide established for the variety, and an aggregate area of not less than 90 percent of the fruit surface shall meet the color guide established for the variety, except that for the Fairlane, Tom Grand, and 61–61 varieties of nectarines, not less than an aggregate area of 80 pecent of the fruit surface shall meet the color guide established for the variety. For varieties not listed, the Federal or the Federal-State Inspection Service will use such tests as it deems proper. The Federal or the Federal-State Inspection Service has the authority to make variances for any variety from any guide or tests, including those in Table I, during the season to reflect changes in crop or weather conditions that would make the existent guide an inappropriate measure of "well-matured."

(2) Any package or container of Aurelio Grand, Maybelle, Mayfire, or Royal Delight variety nectarines unless:

(i) Such nectarines, when packed in molded forms (tray pack) in a No. 22D standard lug box, are of a size that will pack, in accordance with the requirements of a standard pack, not more than 108 nectarines in the lug box; and

(ii) Such nectarines, when packed other than as specified in paragraph (a)(2)(i) of this section, are of a size that a 16-pound sample, representative of the nectarines in the package or container, contains not more than 92 nectarines.

(3) Any package or container of Early Diamond, Mayfair, or May Glo variety nectarines unless:

(i) Such nectarines, when packed in molded forms (tray pack) in a No. 22D standard lug box, are of a size that will pack, in accordance with the requirements of a standard pack, not more than 96 nectarines in the lug box; and

(ii) Such nectarines, when packed in any container, are of a size that a 16-pound sample, representative of the nectarines in the package or container, contains not more than 87 nectarines.

(4) Any package or container of Ama Lyn, Apache, Early May, Early May Grand, Mike Grand, Early Star, Grand Stan, June Glo, June Grand, May Grand, Pacific Star, Red Delight, Red June, Spring Grand, Star Brite, Sunfre, or May Diamond variety nectarines unless:

(i) Such nectarines, when packed in molded forms (tray pack) in a No. 22D standard lug box, are of a size that will pack, in accordance with the requirements of a standard pack, not more than 88 nectarines in the lug box; and

(ii) Such nectarines, when packed in any container, except for the Apache variety of nectarines when packed in tray packs, are of a size that a 16-pound sample, representative of the nectarines in the package or container, contains not more than 78 nectarines.

(5) Any package or container of Autumn Delight, Autumn Grand, Bob Grand, Clinton-Strawberry, Early Sungrand, Fairlane, Fantasia, Firebrite, Flamekist, Flaming Red, Flavortop, Flavortop I, Gold King, Grand Diamond, Granderli, Hi-Red, Independence, July Red, Kent Grand, Kism Grand, Late Le Grand, Le Grand, Moon Grand, Niagara Grand, P–R Red, Red Diamond, Red Free, Red Grand, Regal Grand, Royal Giant, Ruby Grand, September Grand, September Red, Tasty Free, Tom Grand, Larry's Grand, Scarlet Red, Son Red, Spring Diamond, Spring Red, Late Tina Red, Red Jim, Summer Beaut, Sparkling Red, Star Bright, Summer Diamond, Summer Grand, Summer Red, Sun Diamond, Sun Grand, Sherri Red, Super Star, Rio Red, 61–61, or 181–119, variety nectarines unless:

(i) Such nectarines, when packed in molded forms (tray pack) in a No. 22D standard lug box, are of a size that will pack, in accordance with the requirements of a standard pack, not more than 80 nectarines in the lug box; and

(ii) Such nectarines, when packed in any container are of a size that a 16-pound sample, representative of the

nectarines in the package or container, contains not more than 67 nectarines.

(6) During January 1 through 31, of each fiscal period, no handler shall handle any package or container of any variety of nectarines not specifically named in paragraphs (a) (2), (3), (4), or (5) of this section unless:

(i) Such nectarines, when packed in molded forms (tray pack) in a No. 22D standard lug box, are of a size that will pack, in accordance with the requirements of a standard pack, not more than 96 nectarines in the lug box; and

(ii) Such nectarines, when packed in any container, are of a size that a 16-pound sample, representative of the nectarines in the package or container, contains not more than 87 nectarines.

(7) During June 1 through June 30, of each fiscal period, no handler shall handle any package or container of any variety of nectarines not specifically named in paragraphs (a) (2), (3), (4), or (5) of this section unless:

(i) Such nectarines, when packed in molded forms (tray pack) in a No. 22D standard lug box, are of a size that will pack, in accordance with the requirements of a standard pack, not more than 88 nectarines in the lug box; and

(ii) Such nectarines, when packed in any container, are of a size that a 16-pound sample, representative of the nectarines in the package or container, contains not more than 78 nectarines.

(8) During July 1 through December 31, of each fiscal period, no handler shall handle any package or container of any variety of nectarines not specifically named in paragraphs (a) (2), (3), (4), or (5) of this section unless:

(i) Such nectarines, when packed in molded forms (tray pack) in a No. 22D standard lug box, are of a size that will pack, in accordance with the requirements of a standard pack, not more than 80 nectarines in the lug box; and

(ii) Such nectarines, when packed in any container, are of a size that a 16-pound sample, reprensentative of the nectarines in the package or container, contains not more than 67 nectarines.

TABLE I

Column A variety	Column B maturity guide	Column A variety	Column B maturity guide
Ama Lyn	G	Mike Grand	H
Ambrosia	G	Moon Grand	M
Apache	G	Niagara Grand	H
Apkarian	G	P-R Red	L
Armking	B	Red Diamond	M

TABLE I—Continued

Column A variety	Column B maturity guide	Column A variety	Column B maturity guide
Aurelio Grand	F	Red Delight	I
Autumn Delight	M	Red Free	L
Autumn Grand	L	Red Grand	H
Bob Grand	L	Red Jim	L
Clinton-Strawberry	H	Red June	G
Desert Dawn	G	Regal Grand	L
Early May	G	Richards Grand	L
Early May Grand	H	Rio Red	L
Early Star	G	Royal Delight	F
Early Sungrand	H	Royal Giant	I
Fairlane	M	Ruby Grand	J
Fantasia	L	Scarlet Red	K
Firebrite	H	September Grand	L
Flamekist	L	September Red	L
Flaming Red	K	Sheri Red	J
Flavortop	J	Son Red	L
Flavortop I	K	Sparkling June	M
Gee Red	H	Sparkling Red	L
Gold King	H	Spring Diamond	M
Granderli	J	Spring Grand	G
Grand Stan	C	Spring Red	H
Hi-Red	J	Stan's Grand	C
Independence	H	Star Brite	J
July Red	H	Star Grand	H
June Glo	H	Summer Beaut	H
June Grand	G	Summer Diamond	M
Kent Grand	L	Summer Grand	L
Larry's Grand	M	Summer Red	L
Late Le Grand	L	Sunfire	F
Late Tina Red	I	Sun Grand	G
Le Grand	H	Tasty Free	L
Maybelle	F	Tom Grand	L
Mayfair	C	Zee Gold	G
May Glo	H	61-61	J
May Grand	H	#91	G
Mayred	B		

NOTE.—Consult with the Federal or Federal-State Inspection Service Supervisor for the maturity guides applicable to the varieties not listed above.

(b) *Definitions.* As used herein, "U.S. No. 1," "mature," and "standard pack" mean the same as defined in the United States Standards for Grades of Nectarines [7 CFR 51.3145 to 51.3160]; "No. 22D standard lug box" means the same as defined in Section 1380.19(17) of the "Regulations of the California Department of Food and Agriculture." "Well-matured" means a condition distinctly more advanced than "mature."

Dated: April 13, 1988.

Robert C. Keeney,

Deputy Director, Fruit and Vegetable Division, Agricultural Marketing Service.

[FR Doc. 88-8431 Filed 4-15-88; 8:45 a]

BILLING CODE 3410-02-M

7 CFR Part 917

Fresh Pears, Plums, and Peaches Grown in the State of California; Size Requirements and Clarification of Maturity Regulations for Peaches

AGENCY: Agricultural Marketing Service, USDA.

ACTION: Proposed rule.

SUMMARY: This proposed rule invites comments on several proposed changes to the size and maturity regulations established for California peaches. The coverage of the variety-specific size requirements would be changed by removing two varieties, no longer produced in significant quantities, from the variety-specific size list. Also size requirements would be modified for varieties of peaches not subject to variety-specific size requirements which are shipped November 1 through July 2. This is intended to bring these requirements into conformity with those in effect for shipments during the July 3 through October 31 period. It would, in addition, clarify the current maturity requirements by specifying the current maturity requirements in greater detail and would simplify the maturity determination system currently used by the peach industry.

DATE: Comments must be received by May 3, 1988.

ADDRESS: Interested persons are invited to submit written comments concerning this proposal. Comments must be sent to the Docket Clerk, Fruit and Vegetable Division, AMS, USDA, P.O. Box 96456, Room 2085-S, Washington, DC 20090-6456. Three copies of the written material shall be submitted, and they will be made available for public inspection in the office of the Docket Clerk during regular business hours. The comments should reference the date and page number of this issue of the **Federal Register.**

FOR FURTHER INFORMATION CONTACT: Jerry N. Brown, Marketing Order Administration Branch, Fruit and Vegetable Division, AMS, USDA, P.O. Box 96456, Room 2525-S, Washington, DC 20090-6456; telephone 202-475-5464.

SUPPLEMENTARY INFORMATION: This rule is proposed under Marketing Order No. 917 [7 CFR Part 917], regulating the handling of fresh pears, plums, and peaches grown in California. This order is effective under the Agricultural Marketing Agreement Act of 1937, as amended [7 U.S.C. 601-674], hereinafter referred to as the Act.

This rule has been reviewed under Executive Order 12291 and Departmental Regulation 1512-1 and has

been determined to be a "non-major" rule under criteria contained therein.

Pursuant to requirements set forth in the Regulatory Flexibility Act (RFA), the Administrator of the Agricultural Marketing Service (AMS) has considered the economic impact of this proposal on small entities.

The purpose of the RFA is to fit regulatory actions to the scale of business subject to such actions in order that small businesses will not be unduly or disproportionately burdened. Marketing orders issued pursuant to the Act, and rules issued thereunder, are unique in that they are brought about through group action of essentially small entities acting on their own behalf. Thus, both statutes have small entity orientation and compatibility.

There are approximately 650 handlers of plums, peaches, and nectarines subject to regulation under marketing orders [7 CFR Parts 916 and 971], and there are approximately 2,030 producers of these commodities in the regulated area. Small agricultural producers have been defined by the Small Business Administration [13 CFR 121.2] as those having gross annual revenues for the last three years of less than $500,000, and small agricultural service firms are defined as those whose gross annual receipts are less than $3,500,000. The majority of handlers and producers of such fruit may be classified as small entities.

Shipments of California peaches are regulated by grade, maturity, and size under Peach Regulation 14 [7 CFR 917.459, as amended and published in the **Federal Register** on April 29, 1987, 52 FR 15488]. Most of the proposed changes to § 917.459 were recommended by the Peach Commodity Committee, which works with the Department in administering the marketing order for California peaches. This proposed rule is based upon the committee's recommendation, information submitted by the committee, and other available information.

Inspected shipments of California peaches for the 1987 season totalled 13,854,000 packages and they were primarily sold in the fresh market. In 1987, the production value of California freestone peaches (fresh and processed) and clingstone peaches was about $68,252,000 and $95,612,000, respectively. Although this proposed rule would impose requirements on the handling of peaches, exemptions from the inspection and certification requirements would continue. These exemptions include provisions for the shipment of minimum quantities of the fruit.

Variety-specific size regulations for peaches are implemented when the peach vareity is produced in commercially significant quantities; i.e., shipments in excess of 10,000 packages during a season. When varieties are no longer produced in significant quantities (less than 5,000 packages during the previous season), they are removed from the variety-specific size requirements, but are subject to minimum size requirements established for non-listed varieties. The quantities used in making these determinations are the same as those used in prior seasons. These requirements are specified in paragraphs (a), (b), and (c) of § 917.459.

To implement the peach committee's size recommendations, paragraph (a)(5) of § 917.459 would be revised to remove two varieties no longer produced in significant quantities from variety-specific size requirements. Specifically, the Summerset and Windsor varieties of peaches would be removed from the variety-specific size requirements in that paragraph. Shipments of the varieties that would be removed from the variety-specific size requirements fell below 5,000 packages during the 1987 season.

Paragraphs (b) and (c) of § 917.459 require all varieties of peaches not subject to the variety-specific size requirements to be subject to minimum size requirements. The total shipments of these peaches are significant enough to warrant coverage, even though shipments of the individual varieties of them do not exceed 10,000 packages. Paragraph (b) covers shipments of these varieties during the period November 1 through July 2, and paragraph (c) covers shipments during the period July 3 through October 31.

For shipments during the July 3 through October 31 period, paragraph (c) currently specifies minimum size requirements for peaches packed in No. 22D standard lug boxes, requirements for those peaches packed in No. 12B standard fruit (peach) boxes, and 16-pound representative sample count per pound requirements for peaches packed in other containers. Paragraph (b) specifies No. 22D standard lug box requirements and 16-pound representative sample count per pound requirements, but does not specify size requirements for fruit packed in No. 12B standard fruit (peach) boxes. To foster consistency of regulation throughout the year, the committee recommended that size requirements be added to paragraph (b) for peaches packed in No. 12B standard fruit (peach) boxes for shipment during the period November 1 through July 2. The peaches so packed would have to be of a size that would pack, in accordance with the requirements of standard pack, not more than 65 peaches in the box. These are the same requirements as specified in paragraph (c) for shipments during the July 3 through October 31 period. With the change, such peaches packed in No. 12B standard fruit (peach) boxes would no longer be subject to the 16-pound representative sample count per pound requirements, just the pack requirements.

Further, the proposal would revise paragraph (a) of § 917.459 to clarify the peach maturity requirements and simplify the maturity determination system currently used by the peach industry. Among other things, the revision of paragraph (a) would specify that no handler could ship peaches unless they are at least "well-matured," as defined paragraph (d) and would specify the role of Federal or Federal-State inspectors in making "well-matured" determinations.

Currently the first sentence of paragraph (a) states that: "No handler shall ship:" and the first sentence of paragraph (a)(1) states that: "Any package or container of any variety of peaches unless such peaches meet the requirements of U.S. No. 1 grade: *Provided,* That maturity shall be determined by the application of color standards by variety or such other tests as determined to be proper by the Federal or Federal-State Inspection Service."

It is proposed that the first sentence of paragraph (a)(1) be revised to read: "Any lot or package or container of any variety of peaches unless such peaches meet the requirements of U.S. No. 1 grade, except that the peaches shall be 'well-matured,' rather than 'mature,' but not over-ripe or shriveled." This change would clarify the fact that all peaches marketed under this program must be "well-matured," rather than "mature" as defined in the U.S. grade standards for peaches. Since May 16, 1980 [45 FR 32310; May 16, 1980] peaches have been required to be "well-matured" rather than "mature," and this requirement has been implemented by the Federal-State Inspection Service since that time.

In addition to specifying that peaches must be "well-matured," this proposal would define "well-matured" as a condition distinctly more advanced than "mature." According to the U.S. grade standards, a peach is considered mature when it has reached the stage of growth which will insure a proper completion of the ripening process. This is a minimum standard of maturity which was in effect before the more recent advances in handling and distribution techniques and does not preclude inspecting to a higher degree of maturity. In 1979 the committee reported that higher maturity

standards were necessary to satisfy trade demand, particularly in eastern markets. The "well-matured" requirement has resulted in more consumer acceptance and expansion of markets for California peaches.

The proposal would also simplify the current maturity determination procedures. To ascertain compliance with the "well-matured" standard with regard to each variety of peaches, various tests are used. Since 1980, the Federal-State Inspection Service, based on its expertise, has been primarily responsible for determining which specific test or tests should be used for each variety of peaches and which test level (e.g., particular color chip) is appropriate for each variety. When the Federal-State Inspection Service has sufficient experience with a variety to determine that a color chip test and a particular color chip should normally be appropriate for the entire production area for every year, it has advised the committee of that determination. The committee has then ratified that determination, publishing it in its annual bulletin. After such a determination for a particular variety has been published, variances during the season or permanent changes between seasons have been made by the committee or its Maturity Subcommittee. The committee and its staff have provided advice to the Federal-State Inspection Service in making its maturity determinations, and likewise the Federal-State Inspection Service and the committee staff have advised the committee and its Maturity Subcommittee in making variances and changes.

Over the years, these procedures have provided fair and equitable treatment to producers and handlers. The Federal-State Inspection Service is the recognized authority on matters relating to grading and inspection. The committee staff have backgrounds in inspection and packing and have a vast amount of concentrated hands-on experience with peaches. The members of the committee are all growers of peaches who are often also handlers. They are nominated by their peers in each production district. They have practical business experience in the peach industry, as well as the confidence of their peers with regard to their expertise and integrity.

The current procedures have, however, at times created logistical problems, particularly with regard to variances during the season. Requests for variances require prompt consideration and action. Committee members are dispersed over a wide geographical area and have daily responsibilities with regard to their own businesses. While most committee members have been extremely giving of their time with regard to their variance duties, the demands of such duties have imposed a hardship on the members.

It is, therefore, proposed by the Department that the responsibility for variances during the season and changes between the seasons be given to the Federal or Federal-State Inspection Service. This change would simplify the procedures by assigning all maturity determinations and the application of those determinations to one group. In making this proposal it is intended that the Federal or the Federal-State Inspection Service, while considering variances and changes, will seek the advice of the committee and its staff in order to draw upon their wealth of expertise. It is also intended that any changes and any variances would be applicable to all growers and handlers of the particular variety. Finally, it is intended that any changes and variances will be made at the supervisory level of the Federal or the Federal-State Inspection Service, rather than by the particular packinghouse inspector. This will ensure that these decisions are made by those who have the greatest background and expertise and who are in a position to be knowledgeable concerning current conditions throughout the entire production area. It is expected that this change in procedure would have very negligible substantive effect. The experience of the last eight seasons indicates that almost invariably there has been a concurrence of opinion regarding the proper decision among the Federal-State Inspection Service, the committee staff and the committee or subcommittee.

Further, a table would be added to paragraph (a) of § 917.459 which would specify color chip guides which the Federal or the Federal-State Inspection Service intends to use beginning with the 1988 season for the specified varieties of peaches. For these varieties, an aggregate area of not less than 90 percent of the fruit surface shall meet the color guide established for the variety, and not less than 90 percent of any lot shall meet the color guide established for the variety.

The varieties listed in the table are those described above where the inspection service has sufficient experience to specify a color chip test and a particular color chip. The Federal or the Federal-State Inspection Service would have the authority to make variances from the guides in the table during the season for any variety to reflect changes in crop and weather conditions that would make the guide an inappropriate measure of "well-matured." For varieties not listed in the table, the Federal or the Federal-State Inspection Service would use such tests as they deem appropriate. Single sets of the color chip guides used by the Federal or the Federal-State Inspection Service may be obtained from the Peach Commodity Committee at: 701 Fulton Avenue, Sacramento, California 95865 or can be inspected at such location during regular business hours. The committee's telephone number is 916-483-9261.

There is one change in the table from the list in the 1987 Peach Bulletin. The color guide for the Prima Fire peach variety would be changed from the "I" color guide to the "H" color guide. This is intended to help make the maturity determination for this peach variety more accurate. This proposed change is the same as was in effect for such peach variety at the end of last season.

It is the Department's view that the proposed changes deleting two varieties no longer produced in commercially significant quantities from variety-specific size requirements and changing size requirements for peaches chipped in No. 12B standard fruit (peach) boxes during the period November 1 through July 2 would not be detrimental to small entities. The proposed change to clarify the maturity requirements for peaches is intended to foster and facilitate a greater understanding of these requirements within the peach industry and, as such, would not result in additional costs. The proposed change to the well matured guide for the Prima Fire variety of peaches would make maturity determination more accurate.

Based on the above, the Administrator of AMS has determined that the changes proposed above would not have a significant economic impact on a substantial number of small entities.

The committee's recommendation, other information, and all written comments timely received in response to this request for comments will be considered before a final determination is made on this proposal. Commenters are encouraged to submit the reasons in support of or in opposition to this proposed rule. Any pertinent data to support their views and comments should also be submitted.

A comment period of less than 30 days is appropriate for this proposal. The harvest and shipment of the 1988 peach crop is expected to start April 15, 1988, and growers and handlers should be given as much notice as possible of any changes, if adopted to permit the industry to plan accordingly.

List of Subjects in 7 CFR Part 917

Marketing agreements and order, Pears, Plums, Peaches, California.

For the reasons set forth in the preamble, 7 CFR Part 917 is proposed to be amended as follows:

PART 917—FRESH PEARS, PLUMS, AND PEACHES GROWN IN CALIFORNIA

1. The authority citation for 7 CFR Part 917 continues to read as follows:

Authority: Secs. 1–19, 48 Stat. 31, as amended; 7 U.S.C. 601–674.

2. Section 917.459 is revised to read as follows:

§ 917.459 Peach Regulation 14.

(a) No handler shall ship:

(1) Any lot or package or container of any variety of peaches unless such peaches meet the requirements of U.S. No. 1 grade, except that the peaches shall be "well-matured," rather than "mature," but not over-ripe or shriveled. Conformity with the well-matured requirement shall be determined by the Federal or the Federal-State Inspection Service by the application of color guides or other tests as it deems proper for each variety.

(i) During the 1988 and subsequent seasons, the Federal or the Federal-State Inspection Service intends to use the maturity guides listed in Table I in making maturity determinations for the specified varieties. For these varieties, not less than 90 percent of any lot shall meet the color guide established for the variety, and an aggregate area of not less than 90 percent of the fruit surface shall meet the color guide estasblished for the variety. For varieties not listed, the Federal or the Federal-State Inpection Service will use such tests as it deems proper. The Federal or the Federal-State Inspection Service has the authority to make variances for any variety from any guide or tests, including those in Table I, during the season to reflect changes in crop or weather conditions that would make the guide an inappropriate measure of "well-matured."

(2) Any package or container of Desertgold variety peaches unless:

(i) Such peaches when packed in molded forms (tray pack) in a No. 22D standard lug box are of a size that will pack, in accordance with the requirements of standard pack, not more than 96 peaches in the box; or

(ii) Such peaches in any container when packed other than as specified in paragraph (a)(2)(i) of this section are of a size that a 16-pound sample, representative of the peaches in the package or container, contains not more than 96 peaches.

(3) Any package or container of any type of Morning Sun or Springold variety peaches unless:

(i) Such peaches when packed in molded forms (tray pack) in a No. 22D standard lug box are of a size that will pack, in accordance with the requirements of standard pack, not more than 84 peaches in the box; or

(ii) Such peaches when packed in a No. 12B standard fruit (peach) box are of a size that will pack, in accordance with the requirements of standard pack, not more than 65 peaches in the box; or

(iii) Such peaches in any container when packed other than as specified in paragraph (a)(3) (i) and (ii) of this section are of a size that a 16-pound sample, representative of the peaches in the package or container, contains not more than 79 peaches.

(4) Any package or container of Babcock, Coronet, Early Coronet, Firecrest, First Lady, Flavorcrest, Flavor Red, Golden Creat, Golden Lady, Honey Red, June Crest, June Lady, Kern Sun, May Crest, May Lady, Merrill Gem, Merrill Gemfree, Ray Crest, Redhaven, Redtop, Regina, Royal May, Springcrest, Spring Lady, Willie Red, or 50–178 variety of peaches unless:

(i) Such peaches when packed in molded forms (tray pack) in a No. 22D standard lug box are of a size that will pack, in accordance with the requirements of standard pack, not more than 80 peaches in the box; or

(ii) Such peaches when packed in a No. 12B standard fruit (peach) box are of a size that will pack, in accordance with the requirements of standard pack, not more than 65 peaches in the box; or

(iii) Such peaches in any container when packed other than as specified in paragraph (a)(4) (i) and (ii) of this section are of a size that a 16-pound sample, representative of the peaches in the package or container, contains not more than 73 peaches.

(5) Any package or container of Angelus, August Sun, Autumn Crest, Autumn Gem, Autumn Lady, Belmont, Berenda Sun, Blum's Beauty, Cassie, Cal Red, Carnival, Early O'Henry, Elberta, Elegant Lady, Fairmont, Fairtime, Fay Elberta, Fayette, Fire Red, Flamecrest, Fortyniner, Franciscan, July Lady, July Sun, Kings Lady, Lacey, Mary Ann, O'Henry, Pacifica, Parade, Preuss Suncrest, Red Cal, Redglobe, Red Lady, Ryan's Sun, Scarlet Lady, Sparkle, Sprague Last Chance, Suncrest, Sun Lady, or Toreador variety of peaches unless:

(i) Such peaches when packed in molded forms (tray pack) in a No. 22D standard lug box are of a size that will pack, in accordance with the requirements of standard pack, no more than 72 peaches in the box; or

(ii) Such peaches when packed in a No. 12B standard fruit (peach) box are of a size that will pack, in accordance with the requirements of standard pack, not more than 65 peaches in the box; or

(iii) Such peaches in any container when packed other than as specified in paragraphs (a)(5) (i) and (ii) of this section are of a size that a 16-pound sample, representative of the peaches in the package or container, contains not more than 64 peaches.

TABLE I

Column A variety	Column B maturity guide	Column A variety	Column B maturity guide
Angelus	I	Judy Elberta	C
Armgold	D	July Lady	G
August Sun	I	June Crest	G
Autumn Crest	I	June Lady	G
Autumn Gem	I	Kearney	I
Autumn Lady	H	Kern Sun	H
Babcock Type (ask supervising insp.).		Kim Elberta	C
Bella Rosa	G	King's Lady	I
Belmont (Fairmont).	I	Lacey	I
Berenda Sun	I	Mardigras	G
Blum's Beauty	G	May Crest	G
Bonjour	F	May Lady	G
Cardinal	G	Merrill Gem	G
Cal Red	I	Merrill Gemfree.	G
Carnival	I	Morning Sun	D
Cassie	H	O'Henry	I
Coronet	E	Pacifica	G
Delp	C	Parade	I
Desertgold	B	Pat's Pride	D
Early Coronet	D	Preuss Suncrest.	F
Early Elberta	C	Ray Crest	G
Early Fairtime	I	Red Cal	I
Early O'Henry	I	Redglobe	C
Early Royal May.	G	Redhaven	G
Early Top	G	Red Lady	G
Elberta	B	Redtop	G
Elegant Lady	M	Regina	G
Fairtime	G	Rio Oso Gem	I
Fay Elberta	C	Royal April	D
Fayette	I	Royal Gold	D
Fiesta	I	Royal May	G
Fire Red	I	Ryan's Sun	I
First Lady	D	Scarlet Lady	F
Firecrest	I	Sparkle	I
Flamecrest	I	Springcrest	G
Flavorcrest	G	Spring Lady	H
Flavor Red	G	Springold	D
Fortyniner	F	Summerset	I
Franciscan	G	Suncrest	G
Golden Lady	F	Sun Lady	I
Halloween	I	Toreador	I
Honey Red	G	Treasure	F
JJK-1	G	Willie Red	G
Jody Gaye	F	Windsor	I
		Prime Fire	H

NOTE: Consult with the Federal or Federal-State Inspection Service Supervisor for the maturity guide applicable to the varieties not listed above.

(b) During the period November 1 through July 2 of each fiscal period, no handler shall handle any package or container of any variety of peaches not specifically named in paragraphs (a)(2), (3), (4), or (5) of paragraph (a) unless:

(1) Such peaches when packed in molded forms (tray pack) in a No. 22D standard lug box are of a size that will pack, in accordance with the requirements of standard pack, not more than 96 peaches in the box; or

(2) Such peaches when packed in a No. 12B standard fruit (peach) box are of a size that will pack, in accordance with the requirements of standard pack, no more than 65 peaches in the box; or

(3) Such peaches in any container when packed other than as specified in paragraphs (b)(1) or (2) of this section are of a size that a 16-pound sample, representative of the peaches in the package or container, contains not more than 96 peaches.

(c) During July 3 through October 31 of each fiscal period, no handler shall handle any package or container of any variety of peaches not specifically named in subparagraphs (2), (3), (4), and (5) of paragraph (a) unless:

(1) Such peaches when packed in molded forms (tray pack) in a No. 22D standard lug box are of a size that will pack, in accordance with the requirements of standard pack, not more than 80 peaches in the box; or

(2) Such peaches when packed in a No. 12B standard fruit (peach) box are of a size that will pack, in accordance with the requirements of standard pack, not more than 65 peaches in the box; or

(3) Such peaches in any container when packed other than as specified in paragraphs (c)(1) or (2) of this section are of a size that a 16-pound sample, representative of the peaches in the package or container, contains not more than 73 peaches.

(d) As used herein, "U.S. No. 1," "mature," and "standard pack" mean the same as defined in the United States Standards for Grades of Peaches [7 CFR 51.1210 through 51.1223]; and "No. 22D standard lug box" and "No. 12B standard fruit (peach) box" mean the same as defined in section 13.80.19(18) of the "Regulations of the California Department of Food and Agriculture." "Well-matured" means a condition distinctly more advanced than "mature."

Dated: April 13, 1988.

Robert C. Keeney,

Deputy Director, Fruit and Vegetable Division, Agricultural Marketing Service.

[FR Doc. 88-8432 Filed 4-15-88; 8:45 am]

BILLING CODE 3410-02-M

Farmers Home Administration

7 CFR Parts 1900 and 1980

Farmers Home Administration Appeal Procedure

AGENCY: Farmers Home Administration, USDA.

ACTION: Proposed rule.

SUMMARY: The Farmers Home Administration (FmHA) proposes to amend its regulations to: (1) Establish a national appeals staff to hear and review all appeals of FmHA adverse decisions; (2) remove references to State Directors and District Directors acting as hearing officers; (3) require appeal decisions within 45 days after receipt of an appellant's request in farmer program loan restructuring denials; (4) require a tape recording of the appeal hearing and provide for a transcript of the hearing when requested by the appellant; (5) provide for submission of independent appraisals for appeals involving farmer program debt restructuring and servicing actions; (6) allow the appellant to request the State Director and/or the Director of Appeal to review an appeal decision; (7) remove reference to an obsolete unfunded program; (8) require inclusion of the Equal Credit Opportunity Act Statement in all denial letters; (9) remove obsolete material and make other necessary clarifications and editorial changes. The need for this action is to implement the applicable provisions of the "Agriculture Credit Act of 1987" (Pub. L. 100-233). The major effect will be to establish an independent national appeals staff to hear and review formal appeals for FmHA and reduce the amount of time in which an appeal decision is rendered.

DATE: Comments must be received on or before May 18, 1988.

ADDRESSES: Submit written comments, in duplicate, to the Office of the Chief, Directives and Forms Management Branch, Farmers Home Administration, USDA, Room 6348, South Agriculture Building, 14th and Independence Avenue SW., Washington, DC 20250. All written comments made pursuant to this notice will be available for public inspection during regular working hours at the above address.

FOR FURTHER INFORMATION CONTACT: John Gleason, Director, Executive Secretariat Staff, Farmers Home Administration, USDA, Room 5406, South Agriculture Building, 14th Street and Independence Avenue, SW., Washington, DC 20250, telephone (202) 382-1642.

SUPPLEMENTARY INFORMATION:

Classification

This action has been reviewed under USDA procedures established in Departmental Regulation 1512-1, which implements Executive Order 12291, and has been determined to be nonmajor, because there will not be an annual effect on the economy of $100 million or more; a major increase in cost or prices for consumers, individual industries, Federal, State, or local government agencies or geographic regions; or significant adverse effects on competition, employment, investment, productivity, innovation, or on the ability of United States-based enterprises to compete with foreign-based enterprises in domestic or export markets.

Environmental Impact Statement

This document has been reviewed in accordance with 7 CFR Part 1940, Subpart G "Environmental Program." It is the determination of FmHA that this action, consisting only of changes in functions of Agency personnel, does not constitute a major Federal action significantly affecting the quality of human environment, and, in accordance with the National Environmental Policy Act of 1969, Pub. L. 91-190, an Environmental Impact Statement is not required.

Intergovernmental Consultation

This activity affects of FmHA financial assistance programs. The activity is not subject to the provisions of Executive Order 12372 which requires intergovernmental consultations with State and local officials. Those FmHA financial assistance programs subject to intergovernmental consultation are delineated in Subpart J of 7 CFR Part 1940.

Programs Affected

These changes affect the following FmHA Programs as listed in the catalog of Federal Domestic Assistance:

10.404 Emergency Loans
10.405 Farm Labor Housing Loans and Grants
10.406 Farm Operating Loans
10.407 Farm Ownership Loans
10.410 Low Income Housing Loans
10.411 Rural Housing Site Loans
10.414 Resource Conservation and Development Loans
10.415 Rural Rental Housing Loans
10.416 Soil and Water Loans
10.417 Very Low-Income Housing Repair Loans and Grants
10.418 Water and Waste Disposal Systems for Rural Communities

10.419 Watershed Protection and Flood Prevention Loans
10.421 Indian Tribes and Tribal Corporation Loans
10.422 Business and Industrial Loans
10.423 Community Facility Loans
10.427 Rural Rental Assistance Payments
10.428 Economic Emergency Loans
10.433 Housing Preservation Grants
10.434 Nonprofit National Corporations Loan and Grant Program

Discussion of the Major Items of the Proposed Rule

1. The Agency proposes to amend Subpart B of Part 1900 to implement provisions of the "Agricultural Credit Act of 1987" (Pub. L. 100-233) which establishes a national appeals "division." The Act does not change the kinds of decisions made appealable by section 333B of the Consolidated Farm and Rural Development Act (CONACT), but rather requires the Farmers Home Administration to establish a new and independent organization to hear and decide those appeals. This proposed rule thus reorganizes the existing Subpart B to separate those decisional functions that will be the responsibility of the new appeals organization from those that will continue to be the responsibility of FmHA program personnel. It principally concerns these internal FmHA allocations of responsibility.

Within the FmHA hierarchy a Division reports to an Assistant Administrator which is 2 levels removed from the Office of the Administrator, and we do not believe that Congress used the term "division" with the intent of requiring that this new entity be established at that organizational level. In line with the purpose of the legislation, for visibility and prestige in the agency hierarchy, it is instead proposed that the appeals unit be called a "staff," and that the National Appeals Staff report directly to the Administrator. This would give the unit a position on a level with other organizational components reporting to the Administrator.

Hearing officers will have no duties other than those of a hearing officer and will report to the National Director of Appeals. Accordingly, references in the subpart to District Directors and State Directors as hearing officers have been deleted. The appellant will have the choice of selecting either the State Director or the National Director of Appeals to review a decision of a hearing officer. If an appellant elects review by the State Director, the decision of the State Director can be further reviewed by the National Director of Appeals, upon request of the appellant.

All hearings will be tape recorded and a copy of the tape provided to the appellant at no cost. A transcript will be provided to the appellant at cost, upon request. Consideration was given to preparing a transcript of all appeal hearings, but it is proposed instead that transcripts be prepared only when requested by an appellant, since this method will be made less costly and will eliminate the delay that arises when waiting for a verbatim transcript to be prepared. Public Law 100-233 requires the hearing officer to provide a copy of the hearing record to the National Director of Appeals and the Secretary if the hearing officer's decision is appealed. We interpret this to be a ceremonial reference to the Secretary and will not require a separate copy of the hearing record to be sent to the Secretary.

Difficulties in scheduling hearings may arise that affect some or all of the parties involved. In those cases, the Area Supervisor may order use of a telephone conference call or calls to conduct a hearing.

FmHA is aware that the proposal to use conference calls to conduct hearings may be controversial, and is interested in receiving comments from the public on the practical advantages and disadvantages of this idea. FmHA is aware that some agencies and court systems have experimented with this idea, and have found it to be useful in some circumstances. FmHA thinks that telephone hearings may be helpful especially for members of the public who, like housing and other borrowers, must take a considerable amount of their time away from their affairs to attend a face-to-face hearing. The Area Supervisor will solicit and consider the views of all parties before using this authority, and not use it when any party shows a face-to-face hearing is necessary to resolve issues of credibility or for other good reasons.

Appeal decisions involving farmer program restructuring denials must be made within 45 days after receipt of an appellant's appeal request. Appeals involving farmer program loan restructuring may include a request by the appellant for an independent appraisal of any property securing the loan. The hearing officer will provide the appellant with a list of three independent appraisers selected by the County Supervisor for the appellant's county. The appellant will select one and bear the cost of the appraisal.

Revisions to this part remove references to forms FmHA 1924-25, "Notice of Intent to Take Adverse Action," and FmHA 1924-26, "Borrower Acknowledgement of Notice of Intent to Take Adverse Action." Provisions in Pub. L. 100-233 require new notifications and servicing requirements for farmer program loans and these forms are no longer applicable.

Additional revisions to this part remove an obsolete reference to Economic Emergency loans and require the Equal Credit Opportunity Act (ECOA) Statement on denial letters to all applicants.

2. Although the appeal provisions of the Agricultural Credit Act of 1987 only affect CONACT applicants and borrowers, FmHA has administratively chosen to provide these appeal rights for all FmHA applicants and borrowers, because FmHA believes that review of adverse decisions by an independent staff will make it clear that appellant's rights are fully protected in all cases. In addition, it would be inconsistent with the intent of the Agricultural Credit Act of 1987 to provide FmHA applicants/borrowers with potentially conflicting appeal rights. For example, if the proposed appeal regulations only affected CONACT applicants/borrowers, a farmer program borrower with a rural housing and/or labor housing loan would be covered under two different sets of appeal regulations. Therefore, to ensure consistency between FmHA loan programs, and provide all FmHA applicants/borrowers with a fair and impartial review, the proposed appeal regulations will affect all FmHA loan programs. With respect to how this rulemaking action affects housing applicants/borrowers, section 534 of the Housing Act of 1949, as amended, provides that rules and regulations affecting housing programs must be published as a proposed rule with a sixty day comment period and be published in final form for at least 30 days *unless* the rule is published on an emergency basis. Due to the time constraints for publications imposed by the Agricultural Credit Act of 1987, and emergency nature of this regulation, a thirty day comment period pursuant to 42 U.S.C. 1480 will be utilized.

While FmHA intends to bring housing applicants and borrowers within the coverage of the new system as expeditiously as possible, it may not be feasible, on the date that the new system begins hearing farmer program and other FmHA administrative appeals, to give housing appeals to the National Appeals Staff. The large number of housing appeals, when combined with the anticipated workload generated by farmer program appeals, may create a workload too great for the

National Appeals Staff to process without undue delay for all appellants.

FmHA is closely monitoring this situation. If, at the time this rule is published in its final form, it appears that a delay in the transfer of housing appeals to the new system is required, FmHA will publish rules retaining the use of the present system for housing appeals and transferring them to the National Appeals Staff at a date that will be set out in the regulations.

3. On February 16, 1988, FmHA published a proposed rule in the **Federal Register** (53 FR 4414) with a comment period ending March 17, 1988. The purpose of that proposed rule was to amend Subpart B of Part 1900 to implement provisions of section 1313 of the Food Security Act of 1985 (Pub. L. 99-198) pertaining to the Business and Industrial (B & I) Loan Program. The intent of that proposed rule is to amend Subpart B of Part 1900 to include appeals of B & I loan decisions.

The changes proposed by this action do not negate or supercede the changes presented in the earlier proposed rule. This action is a result of additional changes necessary arising from separate legislative action. It is intended that all changes from both actions, with comments, will be consolidated into a single final rule.

4. On September 30, 1986, FmHA published an interim rule in the **Federal Register** (51 FR 34926) with a comment period ending October 30, 1986, regarding the Nonprofit National Corporations Loan and Grant Program, 7 CFR Part 1980, Subpart G. On July 8, 1987, FmHA published an amendment to that same interim rule in the **Federal Register** (52 FR 25586-25589) with a comment period ending August 7, 1987. The final rules have not yet been promulgated. To ensure consistency and fairness in the handling of FmHA appeals, an administrative decision was made to include appeals of all loan and grant programs under Subpart B of Part 1900. Accordingly, only Part 1980, Subpart G, § 1980.680 is affected by this proposed rule as it relates to appeals. The rest of both interim rules remains in effect.

List of Subjects

7 CFR Part 1900

Appeals, Credit, Loan programs—Housing and Community Development.

7 CFR Part 1980

Loan programs—Nonprofit Corporations, Grant programs—Nonprofit Corporations.

Therefore, as proposed, Chapter XVIII, Title 7, Code of Federal Regulations is amended as follows:

PART 1900—GENERAL

1. The authority citation for Part 1900 continues to read as follows:

Authority: 7 U.S.C. 1989; 42 U.S.C. 1480; 5 U.S.C. 301; 7 CFR 2.23; 7 CFR 2.70.

2. Subpart B of Part 1900 is revised to read as follows:

Subpart B—Adverse Decisions and Administrative Appeals

Sec.
1900.51 General.
1900.52 Definitions.
1900.53 Adverse action procedures.
1900.54 National Appeals Staff.
1900.55 Appealable and non-appealable decisions.
1900.56 Appeal request.
1900.57 Hearing rules.
1900.58 Review rules.
1900.59 Effect of appeal decision.
1900.60 Records.
1900.61-1900.100 [Reserved]
Exhibit A—Guide to Conducting a Hearing.
Exhibit B-1—Letter for Notifying Applicants and Borrowers of Adverse Decisions Where the Decision is Appealable.
Exhibit B-2—Letter for Notifying Applicants and Borrowers of Adverse Decisions Where the Decision is Appealable.
Exhibit B-3—Letter for Notifying Applicants and Borrowers of Unfavorable Decision Reached at the Pre-Decisional Meeting.
Exhibit B-4—Appeals of Adverse Action.
Exhibit B-5—Letter for Notifying Applicants and Borrowers of Adverse Decisions Where the Decision is Appealable.
Exhibit C—Letter for Notifying Applicants and Borrowers of Adverse Decisions When Part or All of the Decision is not Appealable.
Exhibit D—Hearing/Review Officers Designations.

Subpart B—Adverse Decisions and Administrative Appeals

§ 1900.51 General.

(a) This Subpart contains operating instructions to be used by the Farmers Home Administration ("FmHA") personnel to ensure that full and complete consideration is given to affected members of the public when certain adverse program administrative decisions are being made. It also sets out the authority and procedures of the National Appeals Staff, which gives administrative appeals and further review of these decisions. The National Appeals Staff is an organization within FmHA which is independent from FmHA State and local officials, and from all other agency officials making program administrative decisions. The FmHA official heading the National Appeals Staff, the Director of Appeals, reports directly to the Administrator of FmHA.

(b) The provisions of this Subpart apply to program administrative decisions concerning all loans and grants made by FmHA. These include farmer program loans, housing loans (both single- and multi-family), community and business program loans, and all grant programs administered by FmHA.

(c) The provisions of this Subpart do not apply to any decisions made by FmHA other than those referred to in paragraph (b) of this section, nor to decisions made by organizations outside FmHA even when those decisions are used as a basis for decisions falling within paragraph (b) of this section. Examples of the first kind of decision are Freedom of Information Act decisions to release or deny the release of information sought by members of the public (appealable under 7 CFR Part 1), decisions to purchase or not to purchase goods and services from members of the public under the Federal contracting laws and regulations (which decisions are appealable to the Department's Board of Contract Appeals under 7 CFR Part 24), FmHA multi-family housing tenant appeals covered by the appeals provisions of 7 CFR Part 1944, suspension and debarment disputes falling within the scope of 7 CFR Part 1944 and offsets against tax refunds. Examples of the second kind of decision are decisions of the Federal Crop Insurance Corporation concerning claimed crop losses (which may determine whether the producer of the crop can or cannot qualify for an FmHA Emergency loan), decisions of the Agricultural Stabilization and Conservation Service on whether particular farmland is or is not "highly erodible" (which may determine whether an applicant is eligible for participation in FmHA administered conservation programs), and decisions by State governmental construction standards-setting agencies (which may determine whether FmHA will finance certain houses).

(d) The provisions of the Administrative Procedure Act, 5 U.S.C. 551-559, as amended, are not applicable to proceedings under this subpart except for the requirements concerning public information. The Equal Access to Justice Act, 5 U.S.C. 504, as amended, does not apply to these proceedings.

(e) Assistance will not be discontinued pending the outcome of an administrative appeal of a complete or partial adverse action. For borrowers with farmer program loans, as defined in § 1900.52(d) of this subpart, releases for

certain family living and farm operating expenses will not be terminated until the borrower has received an opportunity for administrative appeal and, if the borrower elects such an appeal, until the appeal and any further review is complete.

§ 1900.52 Definitions.

(a) *Appellant* means an applicant for FmHA assistance or an FmHA borrower or grantee, either individual or organizational, that is directly and adversely affected by an administrative decision by FmHA. The appellant may also be an applicant for or a recipient of a loan guarantee.

(b) *Hearing*, as used in the subpart, is an informal proceeding at which an administrative appeal from an adverse decision is heard.

(c) *Decision maker* is the FmHA official who actually makes the specific decision but not the official who serves in an advisory capacity in interpreting instructions, policies, or technical items, or who performs routine supervision. For example, if an FmHA official reviews a preapplication from an organization and directs a subordinate to include specific items in Form AD-622, "Notice of Preapplication Review Action," the official is the decision maker. However, when the official or designee serves only in an advisory capacity and is not significantly involved in the decision, the subordinate will be considered the decision maker.

(d) *Farmer program loans* means Farm Ownership (FO), Operating (OL), Soil and Water (SW), Recreation (RL), Emergency (EM), Economic Emergency (EE), Economic Opportunity (EO), Special Livestock (SL), Softwood Timber (ST) loans and/or Rural housing loans for farm service buildings (RHF).

(e) *Hearing officer* is the member of the National Appeals Staff who conducts the administrative appeal hearing. See Exhibit D of this subpart for the designations of hearing officers.

(f) *Review officer* is the member of the National Appeals Staff who has the authority to uphold, reverse, or modify decisions of the hearing officer. See Exhibit D of the subpart for the designations of review officers.

(g) *Record* means the FmHA file, papers filed by an appellant, tapes, written version of the transcript (if any) of a hearing, and decisions made by FmHA.

(h) *Official positions*. The terms County Supervisor and District Director may vary in a few geographical areas. These terms will also mean Assistant Area Loan Specialist and Area Loan Specialist, respectively.

(i) *"Directly and adversely affected"* means having a request for FmHA assistance denied in whole or in part or having FmHA assistance reduced, cancelled, or not renewed.

(j) *"Representative"* means an attorney or other person authorized in writing by an appellant to act for that person in an administrative appeal. Representatives will be presumed to retain their authority to act for an appellant until the written authorization is revoked in writing.

§ 1900.53 Adverse action procedures.

(a) The following actions must take place before adverse program administrative decisions are made. These steps are the responsibility of FmHA program decision makers.

(1) All documentation and calculations necessary to the determination to initiate an adverse action must be accurate, complete, and included within the administrative file.

(2) The specific reason or reasons for an intended adverse action should be clearly explained to the applicant or borrower. Vague reasons should be avoided. For example, avoid "you lack repayment ability." Calculations and documentation which demonstrate the lack of repayment will be provided and explained to the borrower or applicant.

(3) For Rural Housing (RH), Rural Rental Housing (RRH), Rural Cooperative Housing (RCH), Rural Housing Site (RHS) and Labor Housing (LH) loans and grants, a meeting must be held between the affected parties and the decision maker to explain the proposed adverse decision before it is final. This meeting need not be a separate meeting if the decision maker has, during the processing of the application or proposed action, advised the affected parties of the specific reasons for the denial or if the decision maker determines that a meeting would not be likely to achieve resolution of controversy. The decision maker will document the reasons for deciding not to hold a separate meeting in the file. In such cases, Exhibit B-2 with attachment Exhibit B-4 will be used, except in cases involving acceleration of accounts which are provided for in subpart A of Part 1955 of this chapter. When a meeting is required, Exhibit B-1 will be used without revision to inform the appellant.

(4) All other loan applicants and borrowers are entitled to an opportunity for a separate informal meeting with a decision maker before the decisional process of making an adverse decision is complete. The decision maker must give the applicant or borrower notice of his or her right to this meeting at a time no later than the time at which the decision maker informs the applicant or borrower of the decision maker's intent to deny the application or to accelerate a borrower's loan or loans or otherwise to terminate assistance.

(5) This paragraph applies only to those situations covered by paragraphs (a)(3) and (4) of this section. When the person or organization officials attend a meeting with the decision maker and the meeting results in a resolution of the matter, the official will send the person or organization a letter within 7 calendar days of the meeting, setting forth the conclusions reached. If the meeting does not result in a resolution of the matter, Exhibit B-3 with attachment Exhibit B-4 will be sent within 7 calendar days of the meeting to notify the person or organization of their rights to an administrative appeal. If an applicant or borrower who requests a meeting fails to agree to a time and place or to attend, the appellant is still entitled to a hearing.

(b) When an applicant or borrower wishes to contest an appraisal of property value (except for appraisals made in connection with farmer program loan write-down requsts), the applicant must be advised that he or she must seek discretionary review of the appraisal by the State Director of FmHA before the appeal. If an applicant or borrower seeks such discretionary review, the time for seeking administrative review will be extended until after the State Director has acted on the request. The State Director will review each such request and, when in his or her sole discretion it is deemed appropriate, may send a representative to make an on-site review.

(c) If an applicant, borrower or grantee is directly and adversely affected by a decision covered by this Subpart, the decision maker will inform that person or organization by letter of the decision within 10 calendar days of the decision.

(1) Letters, as indicated in Exhibit B-1 thru B-5, and Exhibit C of this subpart, as appropriate, will be used to notify the applicant, borrower or grantee. The notice will advise how to request an administrative appeal and to obtain the record. All such letters shall contain the statement: "The request for an administrative appeal must be received by the National Appeals Staff, Area Supervisor, [show complete mailing address], no later than [give date 15 days after the date of mailing the letter]. Requests which are postmarked by the U.S. Postal Service on or before that date will be considered as timely received."

(2) When a program administrative decision is required by a clear and objective statutory or regulatory reason listed in § 1900.55 as being non-appealable, the decision maker will notify the applicant or borrower of such reason and that the decision is not appealable by notice to the applicant or borrower given with Exhibit C of this subpart.

§ 1900.54 National Appeals Staff.

(a) The National Appeals Staff consists of a Director of Appeals, Area Supervisors, Hearing Officers, Review Officers, and such other subordinate offices as may from time to time be necessary to hear and determine administrative appeals from decisions made appealable under this Subpart.

(b) Appeal hearings will ordinarily be face-to-face hearings, held in the State of the appellant's residence, except in the following circumstances.

(1) With the consent of the appellant, hearings may be held in a place outside his or her State of residence when more convenient to the appellant, the hearing officer and the program officials who must attend the hearing.

(2) Appeals originating in Samoa, Guam, remote areas of Alaska, and the Western Pacific areas may be acted upon without a hearing when, in the discretion of the Area Supervisor, travel time and expense make such a hearing impracticable. In such cases, the Hearing Officer will allow a resonable period of time for the appellant to examine or obtain copies of relevant documents and will make such other arrangements as are necessary to determine their appeal expeditiously and fairly.

(3) At the request of the appellant, the Hearing Officer, or the program officials who must appear at a hearing, the Area Supervisor may order use of a telephone conference call or calls to conduct a hearing. The Area Supervisor will solicit and consider the views of all parties before using this authority, and will not use it when any party shows that a face-to-face hearing is necessary to resolve issues of credibility or for other good reasons.

§ 1900.55 Appealable and non-appealable decisions.

(a) Program administrative decisions of the Farmers Home Administration that directly and adversely affect a person are appealable by that person to the National Appeals Staff under the provisions of this Subpart. All matters concerning the application of the law and applicable regulations to the facts of the matter may be considered. The National Appeals Staff and its officers do not, however, have the authority to change or waive applicable laws or regulations. Program administrative decisions based on such clear and objective statutory or regulatory requirements are therefore not appealable. Examples of such decision include:

(1) Denial of a Section 504 grant to an applicant less than 62 years of age.

(2) Denial of a loan and/or grant to an individual or organization in an ineligible area.

(3) Denial of a loan/or grant to a type of organization not identified as an eligible applicant by the regulations.

(4) Denial of a loan because an application for an Emergency loan was not filed before a prescribed termination date.

(5) Denial of loan because of confirmed income that is above FmHA published limits.

(6) Interest credit reduction that is the result of a confirmed income increase.

(7) A determination of ineligibility for Emergency loans based on confirmation or verification by the Agricultural Stabilization and Conservation Service (ASCS) or the Federal Crop Insurance Corporation (FCIC) that the applicant did not have the required production losses of 30 percent or more.

(8) Denial of compensation for construction defects when it has been determined that the contractor is willing and able to correct the deficiencies.

(9) Requirements and conditions designated by law to be developed by agencies other than FmHA. They include, but are not limited to: Davis-Bacon wage rates; flood plain determination; archaeological and historical areas preservation requirements, and designation of areas that have been determined to be inhabited by endangered species.

(10) Applicable state development standards for construction and other development. An appeal may only be made when the appellant claims FmHA is misapplying the written standards.

(11) Interest rates as set forth in FmHA procedure, except denial of limited resource rates.

(12) A rent increase rejection when the borrower fails or refused to apply for rental assistance according the Exhibit C of Subpart C of Part 1930 of this chapter.

(13) Decisions involving non-program loans.

(14) Denial of assistance (including a subordination request or transfer and assumption) because of a conviction under Federal or State law of planting, cultivating, growing, producing, harvesting, or storing a controlled substance. "Controlled substance" is defined in Exhibit C to Subpart A of Part 1941 of this chapter (available in any FmHA office).

(15) Refusal by a prior or junior lienholder to consent to the terms of a conservation easement as set forth in subpart 5 of Part 1951 of this chapter.

(b) Appraisals of property value made by FmHA employees may be appealed through the hearing and review process provided for in this subpart only after review by the State Director as provided in § 1900.53(b) of this Subpart. See § 1900.57(l) for appraisals involving farmer program debt restructuring and loan servicing.

(c) In cases where denial of assistance is based upon both reversible and nonreversible actions, the denial of assistance is not appealable. Exhibit C will be used in these cases and will include all reasons for the decision.

(d) Appeals of either the presence of a wetland, converted wetland, or highly erodible land on a particular property must be filed directly with the USDA agency making the determination in accordance with its appeal procedures. If the loan denial involves an adverse decision by FmHA and another USDA agency, the appeal will be handled by both agencies in two separate appeals which should be handled concurrently. See Exhibit M of Subpart G of Part 1940 of this chapter for applicable FmHA requirements.

(e) A recommendation by the county committee that a debt settlement offer be refused cannot be overturned in appeal. The appeals officer can require the county committee to review the request again, as a result of an appeal. Exhibit C will *not* be used in this instance.

§ 1900.56 Appeal requests.

(a) When an applicant appeals a decision and requests a hearing, the appeal will be handled as follows:

(1) Upon receipt of the request, the Area Supervisor, National Appeals, Staff will verify whether the appeal was submitted within the authorized period. If the appeal was not submitted within the authorized time period, appeal rights are terminated unless the delay of the appeal was for good reasons as determined by the Area Supervisor.

(2) If the appellant has made a request to obtain a copy of the FmHA material concerning the case, except where the acceleration of a loan secured by real estate is involved, the material (unless privileged) will be made available to the appellant or the appellant's representative or counsel at the FmHA decision maker's office for 10 calendar days following the receipt of the request

for appeal. An FmHA employee should ensure that no material is destroyed or removed from the files. The decision maker will then submit the complete file to the hearing officer.

(3) If, upon review of the file, the hearing officer determines that the decision will be reversed, he or she will notify all parties of the determination and of the actions to be taken. Otherwise, the hearing officer will arrange for a hearing to be held as soon as possible, but normally within 45 calendar days of the receipt of the request for a hearing.

(4) An appeal hearing as a result of a denial of a borrower's request for release of normal income security must be held within 20 days of such request unless the borrower agrees to a longer time.

(5) The hearing will be held at a location convenient to the appellant, decision maker and hearing officer. The hearing must be held in the state of residence of the appellant unless the appellant agrees to another location. If no place can be agreed on, the hearing officer will select the location within the appellant's state of residence.

(6) When the appellant or appellant's representative or counsel, without reasonable cause, fails to appear at the hearing, the appellant's appeal will be considered concluded. If the appellant's failure to appear is for reasons beyond the control of the appellant or a request for postponement is with reasonable cause, the hearing officer will reschedule the hearing at a time convenient to all interested parties, but usually not later than 15 calendar days after the initially scheduled date.

(7) At any time before the scheduled hearing, the appellant may waive the opportunity for a hearing and, instead, request that the hearing officer make a decision based on the file, any written statements or evidence the appellant may submit and any other information the hearing officer deems necessary.

(8) The decision maker or hearing officer, as appropriate, will provide the appellant any new reasons for adverse action to be presented by FmHA, if available, at least 7 calendar days before the hearing. If the reasons cannot be given at that time, the appellant will be advised that a rebuttal may be made in writing within 7 days after the hearing.

§ 1900.57 Hearing rules.

(a) The hearing will be an informal proceeding at which the appellant has the responsibility of showing why the initial decision should be reversed. To do so the appellant may provide any information or witnesses the appellant believes should be considered in reaching a proper decision. The appellant may present evidence, witnesses (when appropriate, FmHA witnesses requested by the appellant will be made available at the hearing) and arguments in support of appellant's appeal, controvert evidence relief on by FmHA, and may question all witnesses. Any evidence may be received by the hearing officer without regard to whether that evidence could be employed in judicial proceedings. A suggested guide for the order of presentation at a hearing is included in Exhibit A to this Subpart.

(b) The decision maker (or successor) or informed delegate (who must be one who participated in the decision making process) will be at the hearing and will present evidence if necessary. Any other witnesses or FmHA personnel the decision maker thinks necessary to support the initial decision will be at the hearing to present evidence.

(c) During the hearing, the hearing officer may request additional witnesses to appear or request further information if the hearing officer considers this necessary to reach a proper decision.

(d) Recording the hearing:

(1) The hearing officer will tape record hearings. With prior permission of the Area Supervisor, the hearing officer may arrange to have the hearing recorded by some other means.

(i) The hearing officer will tape record hearings. With prior permission of the Area Supervisor, the hearing officer may arrange to have the hearing recorded by some other means.

(ii) At the time the decision is rendered and upon request, the record will be made available to the appellant as set out in the hearing officer's decision letter. Also upon request, a transcript of the hearing will be provided for a fee approximately equal to the government's cost of having the transcript made. The appellant may request and receive a copy of the hearing tape at no cost. The appellant may also make their own arrangements, independent of FmHA, for a transcript of the hearing.

(2) File documents and other written materials used in the hearing will be included as part of the record.

(e) For good cause, the hearing officer will, at the request of either the appellant or an FmHA official, continue the hearing to a future time. The length of the continuance will be in the hearing officer's discretion.

(f) The decision of the hearing officer shall be based on facts presented at the hearing or in writing, rebuttal by appellant and decision maker of new evidence, additional information requested by the hearing officer, appropriate FmHA files, applicable statutes and regulations, and the hearing officer's general knowledge of FmHA program functions.

(g) If an appellant waives the opportunity for a hearing and the hearing officer reviews any information the appelant or decision maker has not previously reviewed, the appellant and decision maker will be advised by the hearing officer of the additional information and be allowed an opportunity to review it and respond accordingly. Usually, the total time given the appellant or decision maker to review and respond to this additional information will not exceed 15 calendar days.

(h) The hearing officer will render a decision within 30 calendar days of the date set for the hearing, unless this would not allow sufficient time to consider the appellant's response to any additional information. For appeals involving restructuring of farmer program loans, a decision will be made within 45 days after the receipt of the appeal request.

(i) If the initial decision is reversed, the hearing officer will inform the appellant, original decision maker, and any other official servicing the account, by letter of the decision, the reason for it, and what action will be taken.

(j) If the initial decision is upheld or modified but not reversed, the hearing officer will inform the appellant by letter of the decision giving specific reasons, with a copy to the decision maker and any other official servicing the account. Normally the hearing officer's decision letter will be similar to FmHA Guide Letter 1900–B–1.

(k) If the appellant does not request in writing a review of the hearing officer's decision within the 30 calendar day period provided in the letter, the appeal will be considered concluded.

(l) For farmer program loans, an appeal may include a request by the borrower for an independent appraisal of any property securing the loan. On such request the hearing officer shall present the borrower with a list of three appraisers approved by the county supervisor, from which the borrower shall select an appraiser to conduct the appraisal, the cost of which shall be borne by the borrower. The results of such appraisal shall be considered in any final determination concerning the loan. A copy of any appraisal shall be provided to the borrower. The results of such appraisal shall be considered in any final determination concerning the loan. A copy of any appraisal shall be provided to the borrower. If an

independent appraisal is requested, the 45-day decision deadline referred to in paragraph (h) of this section is extended as necessary to allow completion of the appraisal.

§ 1900.58 Review rules.

If the appellant requests a review:

(a) The review officer may obtain a copy of the transcript of the hearing if one was arranged for by the appellant.

(b) The review officer will review the certified record, applicable law and regulations, any additional written information furnished by the appellant including appellant's comments on the transcript, and any additional information as the review officer deems necessary. However, if the review officer reviews any information the appellant has not previously reviewed, the appellant will be advised by the review officer of the additional information and be allowed an opportunity to review it and respond accordingly. Usually, the total time given the appellant to review and respond to this additional information will not exceed 15 calendar days. Normally, the review officer will render a decision within 45 calendar days of receipt of a review request from the appellant.

(c) The review officer's decision will be based on written facts presented for the review, the certified record, additional information requested by the review officer, appellant's or decision maker's written response to the additional information reviewed by the review officer, applicable statutes and regulations, and the review officer's general knowledge of FmHA program functions.

(d) The appellant will be informed of the final decision by letter. A copy will be sent to the decision maker, the hearing officer and any other official servicing the account. If the decision is upheld, the letter must contain the following statement:

"This review concludes the administrative appeal of your case."

If the State Director is the review officer, the appellant will be given further review rights to the Director of Appeals. The appellant will be notified as set forth in § 1900.57(j) of this subpart.

§ 1900.59 Effect of appeal decision.

(a) *Effective date.* When an appeal is concluded, the effective date of the action to be taken will be the date of the initial decision from which the appeal was taken. All dates and deadlines provided for in acceleration notice will remain in effect. Regulations in effect on the effective date will govern the action unless those requirements would not be authorized under statutory or case law at the time the appeal is concluded. Any loan made as the result of an appeal will bear interest at the rate in effect for that type of loan on the date of actual loan approval. When an emergency loan appellant is given relief, it will include the right to file a new application (if necessary) within 30 days of the date of the decision letter or before the termination date established for the disaster, whichever is later.

(b) *Finality.* A decision made when an appeal is concluded will be administratively final.

(c) *Timeliness.* Whenever an adverse decision concerning a loan or loan guarantee (except for RH, RRH, RCH, RHS, and LH loans and grants) is appealed and the hearing officer or review officer reverses or modifies the initial decision, the decision maker shall resume processing of the application and notify the applicant of this within 15 days after the decision maker is notified of the decision of the hearing or review officer. The decision maker will inform the applicant of any further information needed.

§1900.60 Records.

Appeal records will be maintained in the applicant's or borrower's case folder.

§ 1900.61—1900.100 [Reserved]

Exhibit A to Subpart B—Guide to Conducting a Hearing

A. Upon receipt of the file, the hearing officer will become familiar with the case to be sure that pertinent information is presented at the hearing.

B. The hearing office personnel will arrange a hearing at a place convenient to the appellant, decision making official, and hearing officer in the state of residence of the appellant, unless the appellant consents to holding the hearing in another state.

C. The hearing officer must be an unbiased presiding officer.

1. The hearing officer should have no preconceived opinions concerning the issues.

2. To preserve this unbiased atmosphere—

a. It is preferable that the hearing not be held in an FmHA office. Places such as Conference Room—Agricultural Service Center, SCS, ASCS, Extension Service, etc. should be first considered. This may not be possible, but an attempt should be made to hold the hearing at a neutral place.

b. The hearing officer should not fraternize with the decision maker or other FmHA personnel before, during, or after the hearing. The hearing officer should be seated separate from the others at the hearing.

D. The hearing proceedings should be conducted informally.

1. The appellant has the responsibility of showing why the initial decision should be reversed.

2. The hearing officer may receive evidence without regard to whether that evidence could be employed in judicial proceedings, but evidence clearly unrelated to the issues being appealed need not be accepted.

3. The hearing must be conducted in a manner to get facts on the record. Therefore, the hearing must deal in facts and professional opinions.

4. The hearing officer should keep control over the hearing and not allow any of the participants, including counsel for the appellant or the decision maker, to unduly attempt to set the tone of the hearing. If any person(s) become uncontrollable, they may be requested to leave. If they refuse to leave, the hearing may be terminated.

5. As a fact-finder, the hearing officer may question any witness, request additional witnesses to appear, and/or request further information if this information is necessary to reach a proper decision. If the hearing officer is going to request additional witnesses, these witnesses should be given adequate notice of the time and place of the hearing.

E. Order of presentation. The order listed below should be followed:

1. The opening statement by appellant setting forth why original decision was erroneous. This is an outline of how appellant plans to proceed.

2. The opening statement by decision maker to show why the decision is correct.

3. The appellant presents evidence including documents, witnesses, and arguments supporting the appellant's position. The decision maker can be questioned at this time by the appellant. Any witnesses presented by the appellant can be questioned by the decision maker or other Government representative.

4. The decision maker or other Government representative then has an opportunity to rebut appellant's arguments and/or evidence by presenting evidence including witnesses. Any witnesses may be questioned by appellant.

5. The hearing should be concluded with a summary by both sides.

6. The appellant may arange to have a transcript of the hearing made at the appellant's expense.

7. The appellant may request a copy of the hearing tape.

F. The hearing officer will make a decision based on the following:

1. Facts and materials presented at the hearing.

2. Appropriate FmHA files.

3. Applicable statutes and regulations.

4. The hearing officer's general knowledge of FmHA program functions.

G. After reaching a decision, the hearing officer must prepare the appropriate letter setting out the decision and forward it to the appellant, with a copy to the decision maker or any other official servicing the account.

1. This letter must set out specific reasons for the decision, and the facts on which the decision is based.

2. The decision will be normally communicated by letter to the appellant within 30 calendar days of the hearing.

a. If the initial decision is reversed, the letter will so inform the appellant and the

decision maker, giving the reasons and action to be taken.

b. If the initial decision is upheld or modified, the letter will contain a statement set out in the regulations that the appellant may have the decision reviewed further if the appellant files a request for review within 30 calendar days of the date of the letter.

Exhibit B-1 to Subpart B—Letter for Notifying Applicants and Borrowers of Adverse Decisions Where the Decision is Appealable

(Use when meeting with Decision Maker is required)

United States Department of Agriculture

Farmers Home Administration

(Insert address)

Date
Dear : _____

After careful consideration, we [were unable to take favorable action on your application/request for Farmers Home Administration services] [are cancelling/reducing the assistance you are presently receiving]. The specific reasons for our decision are:

(insert here the adverse decision and all of the specific reasons for the adverse action.)

If you have any questions concerning the decision or the facts used in making our decision and desire further explanation, you must request a meeting with (this office) (The County Committee) within 15 calendar days of the date of this letter. You should present any new information or evidence along with possible alternatives for our consideration. You may also bring a representative [or legal counsel] with you. Should we be unable to satisfactorily resolve your case, you will be advised of your appeal rights and how to begin the appeal process. If, without good cause, you fail to schedule or attend this meeting, there will be no further appeal.

The Federal Equal Credit Opportunity Act prohibits creditors from discrimination against credit applicants on the basis of race, color, religion, national origin, sex, marital status, handicap, or age (provided that the applicant has the capacity to enter into a binding contract), because all or part of the applicant's income derives from any public assistance program, or because the applicant has in good faith exercised any right under the Consumer Credit Protection Act. The Federal agency that administers compliance with the law concerning this creditor is the Federal Trade Commission, Equal Credit Opportunity, Washington, D.C. 20580.

Sincerely,

(Decision Maker)
(County Supervisor may sign for County Committee)

(Title)

Exhibit B-2 to Subpart B—Letter for Notifying Applicants and Borrowers of Adverse Decisions Where the Decision is Appealable

(Use when meeting with Decision Maker is required)

United States Department of Agriculture

Farmers Home Administration

(Insert address)

Date
Dear : _____

After careful consideration, FmHA [was unable to approve your application/request for service] [is cancelling/reducing the assistance you are presently receiving] [is planning to accelerate and liquidate your account(s)] [1] The specific reasons for our decision are:

(insert here the adverse decision and all of the specific reasons for the adverse action.)

See attachment for your appeal rights.

A request for a hearing should be sent to the Area Supervisor, National Appeals Staff

---

(address)

The Federal Equal Credit Opportunity Act prohibits creditors from discriminating against credit applicants on the basis of race, color, religion, national origin, sex, marital status, handicap, or age (provided that the applicant has the capacity to enter into a binding contract), because all or part of the applicant's income derives from any public assistance program, or because the applicant has in good faith exercised any right under the Consumer Credit Protection Act. The Federal agency that administers compliance with the law concerning this creditor is the Federal Trade Commission, Equal Credit Opportunity, Washington, D.C. 20580.

Sincerely,

(Decision Maker)
(County Supervisor may sign for County Committee)

(Title)

Exhibit B-3 to Subpart B—Letter for Notifying Applicants and Borrowers of Unfavorable Decision Reached at the Pre-Decisional Meeting

United States Department of Agriculture

Farmers Home Administration

(Insert address)

Date
Dear : _____

We apreciated the opportunity to review the fact relative to [your application/request for FmHA services] [the assistance you are presently receiving]. We regret that our [meeting] [conference] with you did not result in a satisfactory conclusion.

(Insert here the adverse decision and all the specific reasons for the adverse action).

See attachment for your appeal rights.

A request for a hearing should be sent to the Area Supervisor, National Appeals Staff

---

(address)

The Federal Equal Credit Opportunity Act prohibits creditors from discriminating against credit applicants on the basis of race, color, religion, national origin, sex, marital status, handicap, or age (provided that the applicant has the capacity to enter into a binding contract), because all or part of the applicant's income derives from any public assistance program, or because the applicant has in good faith exercised any right under the Consumer Credit Protection Act. The Federal agency that administers compliance with the law concerning this creditor is the Federal Trade Commission, Equal Credit Opportunity, Washington, D.C. 20580.

Sincerely,

(Decision Maker)
(County Supervisor may sign for County Committee)

(Title)

Exhibit B-4 to Subpart B—Appeals of Adverse Actions

(Use as an attachment to Exhibits B-2 and B3)

Appeals of Adverse Actions

The decision described in the attached letter did not grant you the FmHA assistance you requested or will terminate the assistance you are presently receiving. You have the right to appeal this decision and to have a hearing or a review in lieu of a hearing. In order for this decision to be changed, you will have to show why the decision should be reversed. If you wish to appeal the decision, the request for a hearing must be received in the office of the Area Supervisor, National Appeals Staff at the address shown in the letter to you informing you of the adverse decision and your appeal rights, within 30 days after the date of that letter.

The hearing will generally be held within 45 days of the receipt of your request.

You or your representative or counsel may come to this office anytime during regular office hours in the 10 days following the receipt of your request for a hearing to examine or copy relevant non-confidential material in your file. Photostatic copies will be provided in accordance with the Freedom of Information Act.

No earlier than 11 days after the Area Supervisor receives your request for appeal, we will forward the file, and any additional documents to the Hearing Officer designated by the Area Supervisor to conduct your hearing.

The Hearing Officer will contact you regarding a time and place for the hearing. You may have a representative or counsel with you and may present your own witnesses. The FmHA decision maker or representative will be there and available for you to question, as will all other witnesses presented by FmHA. If you wish to have other FmHA employees present as your witnesses, let the Hearing Officer know and, if possible, they will be there.

FmHA will record the hearing. You may request a copy of the tape. You may also tape record the hearing. You may request FmHA

---

[1] Used only for Farmer Program graduation.

to have a transcript of the tape made at your expense.

At any time before the scheduled hearing you may request that the Hearing Officer make a decision without a hearing. If you do, the Hearing Officer's decision will be based on the FmHA file, any written statements or evidence you may provide and any additional information the Hearing Officer thinks necessary.

The Hearing Officer will advise you by letter of the decision made, the reasons for it, and, if your request for assistance is not granted, what further administrative appeals may be available to you.

A more complete description of the hearing (A Guide to Conducting an Appeals Hearing) may be obtained from any FmHA office.

Exhibit B-5 to Subpart B—Letter for Notifying Applicants and Borrowers of Adverse Decisions Where the Decision is Appealable

(Use when meeting with the decision maker is the option of the appellant)

United States Department of Agriculture

Farmers Home Administration

(Insert Address)

Date

Dear _____:

After careful consideration, we [were unable to take favorable action on your application/request for Farmers Home Administration services] [are cancelling/reducing the assistance you are presently receiving]. The specific reasons for our decision are:

(Insert here the adverse decision and all of the specific reasons for the adverse action.)

If you have any questions concerning the decision or the facts used in making our decision and desire further explanation, you may call the County Office (insert phone number) to request a meeting with [this office] [the County Committee] within 15 calendar days of the date of this letter. You should present any new information or evidence along with possible alternatives for our consideration. You may also bring a representative [or legal counsel] with you. You also have the right to appeal this decision to a hearing officer in lieu of, or in addition to, a meeting with [this office] [the County Committee]. See attachment for your appeal rights.

A request for a hearing should be sent to the Area Supervisor, National Appeals Staff _____.

(address)

The Federal Equal Credit Opportunity Act prohibits creditors from discriminating against credit applicants on the basis of race, color, religion, national origin, sex, marital status, handicap, or age (provided that the applicant has the capacity to enter into a binding contract), because all or part of the applicant's income derives from any public assistance program, or because the applicant has in good faith exercised any right under the Consumer Credit Protection Act. The Federal agency that administers compliance with the law concerning this creditor is the Federal Trade Commission, Equal Credit Opportunity, Washington, D.C. 20580.

Sincerely,

(Decision Maker)

(County Supervisor may sign for County Committee)

(Title)

Exhibit C to Subpart B—Letter for Notifying Applicants and Borrowers of Adverse Decisions When Part or all of the Decision is Appealable

UNITED STATES DEPARTMENT OF AGRICULTURE

Farmers Home Administration

(Insert address)

(date)

Dear _____:

After careful consideration we [were unable to take favorable action on your application/request for Farmers Home Administration services] [are canceling/reducing the assistance you are presently receiving].

(Insert and number all of the *specific* reasons for the adverse action. Examples of nonappealable reasons are listed in § 1900.55(a).

If you have any questions about this action, we would like the opportunity to explain in detail why your request has not been approved, explain any possible alternative, or provide any other information you would like. You may bring any additional information you may have and you may bring a representative or counsel if you wish. Please call (*telephone number*) for an appointment.

Applicants and borrowers generally have a right to appeal adverse decisions, but FmHA decisions based on certain reasons are not appealable. We have determined that the reason(s) numbered _____ for the decision in this case make(s) the decision not appealable under FmHA regulations. You may, however, write the Area Supervisory, National Appeals Staff (insert address) for a review of the accuracy of our finding that the decision is not appealable.

The Federal Equal Credit Opportunity Act prohibits creditors from discriminating against credit applicants on the basis of race, color, religion, national origin, sex, marital status, handicap, or age (provided that the applicant has the capacity to enter into a binding contract), because all or part of the applicant's income derives from any public assistance program, or because the applicant has in good faith exercised any right under the Consumer Credit Protection Act. The Federal agency that administers compliance with the law concerning this creditor is the Federal Trade Commission, Equal Credit Opportunity, Washington, D.C. 20580.

Sincerely,

(Decision Maker)

(County Supervisor may sign for County Committee)

(Title)

Exhibit D to Subpart B—Hearing/Review Officer Designations

Decision maker or decision	Hearing officer	Review officer
County Supervisor	National Appeals Staff Hearing Officer	State Director and/or Director of Appeals.
County Committee	National Appeals Staff Hearing Officer	State Director and/or Directors of Appeals.
District Director	National Appeals Staff Hearing Officer	State Director and/or Director of Appeals.
State Director	As appointed by Director of Appeals	Director of Appeals.
Division Director or Assistant Administrator	Director of Appeals	(No review.)
Deputy or Associate Administrator	Director of Appeals	(No review.)

Notes:

1. District Director also means Assistant District Director or District Loan Specialist.
2. County Supervisor also means Assistant County Supervisor with loan approval authority.
3. The Director of Appeals may designate a member of the National Appeals Staff to conduct a hearing or review. When the hearing/review is completed, the designee will send the complete case file, hearing notes, tape recordings, and a recommended decision to the Director of Appeals for final decision. The Director of Appeals may for individual cases delegate final decision authority to a designee.
4. When a hearing involves both the action on a farmer program loan and acceleration on a non-farmer program loan, the appeal process will follow that for the decision maker to foreclose the non-farmer program loan account.
5. For decisions not directly covered above, advice should be sought from the Director of Appeals.
6. For decisions that reverse, modify, or otherwise require additional work by the state, district or county staff which are signed by the Director of Appeals or designee, copies of such decisions will be provided promptly to the Deputy Administrator for Program Operations, the appropriate Assistant Administrator, and the State Director (attention: appropriate program chief) for their information.
7. An appellant may elect to have an appeal reviewed by the State Director, or the Director of Appeals. The decision of the State Director will be subject to further review by the Director of Appeals upon request by the appellant.

VOL 53 ISS 74 AP 18 1988 UMI

PART 1980—GENERAL

3. The authority citation for Part 1980 continues to read as follows:

Authority: 7 U.S.C. 1989; 42 U.S.C. 1480; 5 U.S.C. 301; 7 CFR 2.23; 7 CFR 2.70.

Subpart G—Nonprofit Corporations Loan and Grant Program

4. Section 1980.680 is revised to read as follows:

§ 1980.680 Appeals.

Any adverse decision made by FmHA which affects the borrower, lender or grantee may be appealed under Subpart B of Part 1900 of this chapter.

Dated: March 30, 1988.

Vance L. Clark,

Administrator, Farmers Home Administration.

[FR Doc. 88-8430 Filed 4-15-88; 8:45 am]

BILLING CODE 3410-07-M

DEPARTMENT OF ENERGY

Federal Energy Regulatory Commission

18 CFR Parts 272 and 274

[Docket No. RM88-10-000]

Revision of the Definition for Natural Gas Produced From Devonian Shale

Issued April 7, 1988.

AGENCY: Federal Energy Regulatory Commission, DOE.

ACTION: Notice of proposed rulemaking.

SUMMARY: The Federal Energy Regulatory Commission (Commission) is proposing to amend its regulations defining Devonian shale for purposes of qualifying under section 107(c)(4) of the Natural Gas Policy Act of 1978 (NGPA). The Commission is proposing to expand the definition to allow producers to measure Devonian shale from a selected interval within the Devonian age stratigraphic interval instead of measuring from the beginning of the Devonian age stratigraphic interval encountered by the wellbore, as currently provided in the regulations. Price controls for gas qualifying under NGPA section 107(c)(4) were eliminated under NGPA section 121(b) on November 1, 1979. Most of the gas qualifying as Devonian shale gas under the proposed rule will also qualify as either NGPA sections 102 or 103 gas. Price controls for this gas were also eliminated on either January 1, 1985 or July 1, 1987. Consequently, there will be minimal impact on the price paid for Devonian shale gas qualifying under this proposed rule change.

DATE: An original and 14 copies of the written comments on this proposed rule must be filed with the Commission by May 18, 1988.

ADDRESS: All filings should refer to Docket No. RM88-10-000 and should be addressed to: Office of the Secretary, Federal Energy Regulatory Commission, 825 North Capitol Street, NE., Washington, DC 20426.

FOR FURTHER INFORMATION CONTACT: Julia Lake White, Office of the General Counsel, 825 North Capitol Street, NE., Washington, DC 20426, (202) 357-8530.

SUPPLEMENTARY INFORMATION: This is a summary of the Commission's action in Docket No. RM88-10-000 adopted and released April 7, 1988.

The full text of this Commission action is available for inspection and copying during normal business hours in Room 1000 at the Commission's Headquarters, 825 North Capitol Street, NE., Washington, DC 20426. The complete text on diskette in WordPerfect format may also be purchased from the Commission's copy contractor, La Dorn Systems Corporation, also located in Room 1000, 825 North Capitol Street, NE., Washington, DC 20426.

List of Subjects

18 CFR Part 272

Natural gas.

18 CFR Part 274

Natural gas, Price controls, Reporting and recordkeeping requirements.

In consideration of the foregoing, the Commission proposes to amend Parts 272 and 274, Chapter I, Title 18 of the Code of *Federal Regulations* as set forth below.

By direction of the Commission.

Lois D. Cashell,

Acting Secretary.

PART 272—DEREGULATED NATURAL GAS

1. The authority citation for Part 272 continues to read as follows:

Authority: Natural Gas Policy Act of 1978, 15 U.S.C. 3301-3432 (1982).

2. In § 272.103, paragraph (e) is revised to read as follows:

§ 272.103 Definitions.

* * * * *

(e) "Natural gas produced from Devonian shale" means natural gas produced from fractures, micropores and bedding planes of shales deposited during the Paleozoic Devonian Period.

(1) "Shales deposited during the Paleozoic Devonian Period" can be defined as either:

(i) The gross Devonian age stratigraphic interval encountered by a well bore, at least 95 percent of which has a gamma ray index of 0.7 or greater; or

(ii)(A) Except as provided in paragraph (ii)(B) of this section, one continuous interval within the gross Devonian age stratigraphic interval, encountered by a well bore, as long as at least 95 percent of the selected Devonian shale interval has a gamma ray index of 0.7 or greater.

(B) If the interval selected is more than 200 feet thick, the bottom and top 100 foot portions must meet the five percent test independently.

(2) When measuring the Devonian age stratigraphic interval under paragraph (e)(1) of this section, the gamma ray index at any point is to be calculated by dividing the gamma ray log value at that point by the gamma log value at the shale base line established over the entire Devonian age interval penetrated by the well bore.

PART 274—DETERMINATIONS BY JURISDICTIONAL AGENCIES

3. The authority citation for Part 274 is revised to read as follows:

Authority: Natural Gas Policy Act of 1978, 15 U.S.C. 3301-3432 (1982); Department of Energy Organization Act, 42 U.S.C. 7101-7352 (1982).

4. In § 274.205, paragraphs (d)(3)(i), (d)(3)(ii) and (d)(4)(ii) are revised to read as follows:

§ 274.205 High-cost natural gas.

* * * * *

(d) *Natural gas produced from Devonian Shale.* * * *

(3)(i) For wells completed on or after November 1, 1979, a gamma ray log with superimposed indications of the shale base line and the gamma ray index of 0.7 over the Devonian age stratigraphic section designated pursuant to § 272.103(e);

(ii) For wells completed before November 1, 1979:

(A) A gamma ray log, if reasonably available, with superimposed indications of the shale base line and the gamma ray index of 0.7 over the Devonian age stratigraphic section designated pursuant to § 272.103(e); or

(B) If a gamma ray log is not reasonably available, a driller's log, or similar report, indicating the general characteristics of the strata penetrated and the corresponding depths at which they are encountered throughout the

Devonian age stratigraphic section designated pursuant to § 272.103(e);

(4) * * *

(ii) Demonstrating that the percentage of potentially disqualifying nonshale footage for the stratigraphic section selected is equal to or less than 5 percent of the Devonian stratigraphic age interval designated pursuant to § 272.103(e);

* * * * *

[FR Doc. 88-8427 Filed 4-15-88; 8:45 am]

BILLING CODE 6717-01-M

DEPARTMENT OF THE TREASURY

Internal Revenue Service

26 CFR Part 1

[LR-47-88]

Consolidated Return Regulations; Deferral of Gain or Loss

AGENCY: Internal Revenue Service, Treasury.

ACTION: Notice of proposed rulemaking by cross-reference to temporary and final and final regulations.

SUMMARY: In the Rules and Regulations portion of this issue of the **Federal Register**, the Internal Revenue Service is issuing temporary and final regulations to provide rules to taxpayers concerning the application of the consolidated return regulations to complete liquidations of subsidiary members of consolidated groups. The text of the temporary and final regulations also serves as the comment document for this notice of proposed rulemaking.

DATES: *Proposed Effective Date:* The regulations are proposed to apply to taxable years for which the due date (without extensions) of the income tax return is after April 14, 1988.

Date for Comments and Requests for a Public Hearing

Written comments and requests for a public hearing must be delivered or mailed by June 17, 1988.

ADDRESS: Send comments and requests for a public hearing to: Commissioner of Internal Revenue, Attention: CC:LR:T [LR-47-88], Washington, DC 20224.

FOR FURTHER INFORMATION CONTACT: Patricia W. Pellervo of the Legislation and Regulations Division, Office of Chief Counsel, Internal Revenue Service, 1111 Constitution Avenue, NW., Washington, DC 20224 (Attention: CC:LR:T) or telephone 202-566-3458 (not a toll-free number).

SUPPLEMENTARY INFORMATION:

Background

Temporary regulations published in the Rules and Regulations portion of this issue of the **Federal Register** amend temporary regulation § 1.1502-13T and add a new temporary regulation § 1.1502-14T to Part 1 of Title 26 of the Code of Federal Regulations (CFR), and make conforming amendments to §§ 1.1502-13 and 1.1502-14. The final regulations that are proposed to be based on these temporary regulations would be added to Part 1 of Title 26 of the CFR. Those final regulations would provide rules on the treatment of gain or loss recognized on complete liquidations within a group of corporations that files consolidated returns. For the text of the new temporary regulations, see T.D. 8196, published in the Rules and Regulations portion of this issue of the **Federal Register**. The preamble to the temporary regulations explains the regulations.

Special Analyses

The Commissioner of Internal Revenue has determined that this proposed rule is not a major rule as defined in Executive Order 12291 and that a Regulatory Impact Analysis is therefore not required. Furthermore, the Secretary of the Treasury has certified that this rule, if issued, will not have a significant economic impact on a substantial number of small entities. The rule applies only to affiliated groups of corporations that have elected to file consolidated returns, which tend to be larger businesses. It would not significantly alter the reporting or recordkeeping duties of small entities. A regulatory flexibility analysis is therefore not required under the Regulatory Flexibility Act (5 U.S.C. Chapter 6).

Comments and Requests for a Public Hearing

Before these proposed regulations are adopted, consideration will be given to any written comments that are submitted (preferably eight copies) to the Commissioner of Internal Revenue. All comments will be available for public inspection and copying. A public hearing will be held upon written request to the Commissioner by any person who has submitted written comments. If a public hearing is held, notice of the time and place will be published in the **Federal Register**.

Drafting Information

The principal author of the proposed regulations is Patricia W. Pellervo of the Legislation and Regulations Division of the Office of Chief Counsel, Internal Revenue Service. However, other personnel from the Internal Revenue Service and Treasury Department participated in developing the regulations, on matters of both substance and style.

Lawrence B. Gibbs,

Commissioner of Internal Revenue.

[FR Doc. 88-8412 Filed 4-14-88; 8:45 am]

BILLING CODE 4830-01-M

DEPARTMENT OF THE INTERIOR

Office of Surface Mining Reclamation and Enforcement

30 CFR Part 935

Ohio Permanent Regulatory Program; Public Comment Period and Opportunity for Public Hearing on Amendments; Award of Costs and Attorney's Fees

AGENCY: Office of Surface Mining Reclamation and Enforcement (OSMRE), Interior.

ACTION: Proposed rule.

SUMMARY: OSMRE is announcing the receipt of proposed amendments to the Ohio permanent regulatory program (herinafter referred to as the Ohio program) under the Surface Mining Control and Reclamation Act of 1977 (SMCRA). The amendments concern the award of costs and attorney's fees by the Ohio Reclamation Board of Review.

This notice sets forth the times and locations that the Ohio program and proposed amendments to that program will be available for public inspection, the comment period during which interested persons may submit written comments on the proposed amendments, and the procedures that will be followed regarding the public hearing, if one is requested

DATES: Written comments must be received on or before 4:00 p.m. on May 18, 1988. If requested, a public hearing on the proposed amendments will be held at 1:00 p.m. on May 13, 1988. Requests to present oral testimony at the hearing must be received on or before 4:00 p.m. on May 3, 1988.

ADDRESSES: Written comments and requests to testify at the hearing should be mailed or hand delivered to Ms. Nina Rose Hatfield, Director, Columbus Field Office, at the address listed below. Copies of the Ohio program, the proposed amendments, and all written comments received in response to this notice will be available for public review at the addresses listed below during normal business hours, Monday through Friday, excluding holidays. Each

BEST COPY AVAILABLE

requester may receive, free of charge, one copy of the proposed amendments by contacting OSMRE's Columbus Field Office.

Office of Surface Mining Reclamation and Enforcement, Columbus Field Office, 2242 South Hamilton Road, Room 202, Columbus, Ohio 43232, Telephone: (614) 866-0578.

Office of Surface Mining Reclamation and Enforcement, 1100 "L" Street N.W., Room 5131, Washington, D.C. 20240, Telephone: (202) 343-5492.

Ohio Department of Natural Resources, Division of Reclamation, Fountain Square, Building B-3, Columbus, Ohio 43224, Telephone: (614) 265-6675.

FOR FURTHER INFORMATION CONTACT: Ms. Nina Rose Hatfield, Director, Columbus Field Office, (614) 866-0578.

SUPPLEMENTARY INFORMATION:

I. Background

On August 16, 1982, the Secretary of the Interior conditionally approved the Ohio program. Information on the general background of the Ohio program submission, including the Secretary's findings, the disposition of comments, and a detailed explanation of the conditions of approval of the Ohio program, can be found in the August 10, 1982 **Federal Register** (47 FR 34688). Subsequent actions concerning the conditions of approval and other revisions, modifications and amendments to the Ohio program are identified at 30 CFR 935.11, 935.12, 935.15, and 935.16.

II. Discussion of the Proposed Amendments

On August 10, 1987 (52 FR 29515), the Deputy Director of OSMRE approved amendments to the rules of the Ohio Reclamation Board of Review (RBR) at Ohio Administrative Code (OAC) Sections 1513-3-21(E) (3), (4), and (5). These amendments had been required by OSMRE so that the standards used by the RBR to award costs and attorney's fees be as effective as Federal counterparts.

During the promulgation of the approved rule change, the Ohio Mining and Reclamation Association (OMRA) voiced opposition to the rule change and the RBR withdrew the amendments in a letter dated November 13, 1987 (Administrative Record No. OH-0993). The disputed issues concerning this rule change were subsequently resolved under a settlement agreement filed on December 23, 1987 between the OMRA, the Mining and Reclamation Council of America, and OSMRE.

By letter dated March 24, 1988 (Administrative Record No. OH-1021), the RBR resubmitted revised amendments to the Ohio Administrative Code (OAC) at Sections 1513-3-21(E), (3), (4), and (5) which reflect the terms of the settlement agreement. The resubmitted changes are briefly summarized below:

(1) The proposed amendments would modify OAC Section 1513-3-21(E)(3) to delete the award of costs and expenses to a permittee from persons other than the State of Ohio where the permittee initiates or participates in a proceeding under Chapter 1513 of the Ohio Revised Code and where a finding has been made that the permittee made a substantial contribution to a full and fair determination of the issues.

(2) The proposed amendments would modify OAC Section 1513-3-21(E)(4) to add that costs and expenses may be awarded to a permittee from any person if the permittee demonstrates that that person initiated or participated in a proceeding under Chapter 1513 of the Ohio Revised Code in bad faith and for the purpose of harassing or embarrassing the permittee.

(3) The proposed amendments would modify OAC Section 1513-3-21(E)(5) to provide for the award of costs and expenses to the Ohio Division of Reclamation where the Division demonstrates that any person applied for RBR review pursuant to Chapter 1513 of the Ohio Revised Code or where any party has participated in such a proceeding in bad faith and for the purpose of harassing or embarrassing the Division.

III. Public Comment Procedures

In accordance with the provisions of 30 CFR 732.17(h), OSMRE is now seeking comment on whether the amendments proposed by ODNR satisfy the applicable program approval criteria of 30 CFR 732.15. If the amendments are deemed adequate, they will become part of the Ohio program.

Written Comments

Written comments should be specific, pertain only to the issues proposed in this rulemaking, and include explanations in support of the commenter's recommendations. Comments received after the time indicated under "DATES" or at locations other than the Columbus Field Office will not necessarily be considered in the final rulemaking or included in the Administrative Record.

Public Hearing

Persons wishing to comment at the public hearing should contact the person listed under "FOR FURTHER INFORMATION CONTACT" by 4:00 p.m. on May 3, 1988. If no one requests an opportunity to comment at a public hearing, the hearing will not be held.

Filing of a written statement at the time of the hearing is requested as it will greatly assist the transcriber. Submission of written statements in advance of the hearing will allow OSMRE officials to prepare adequate responses and appropriate questions.

The public hearing will continue on the specified date until all persons scheduled to comment have been heard. Persons in the audience who have not been scheduled to comment and who wish to do so will be heard following those scheduled. The hearing will end after all persons scheduled to comment and persons present in the audience who wish to comment have been heard.

Public Meeting

If only one person requests an opportunity to comment at a hearing, a public meeting, rather than a public hearing, may be held. Persons wishing to meet with OSMRE representatives to discuss the proposed amendments may request a meeting at the Columbus Field Office by contacting the person listed under "FOR FURTHER INFORMATION CONTACT." All such meetings shall be open to the public and, if possible, notices of the meetings will be posted at the locations listed under "ADDRESSES." A written summary of each public meeting will be made a part of the Administrative Record.

List of Subjects in 30 CFR Part 935

Coal mining, Intergovernmental relations, Surface mining, Underground mining.

Date: April 6, 1988.

Jesse Jackson, Jr.,

Acting Assistant Director, Eastern Field Operations.

[FR Doc. 88-8407 Filed 4-15-88; 8:45 am]

BILLING CODE 4310-05-M

DEPARTMENT OF TRANSPORTATION

Coast Guard

33 CFR Part 100

[CGD 05-88-19]

Special Local Regulations for Chesapeake Bay Bridges Swim Race

AGENCY: Coast Guard, DOT.

ACTION: Notice of proposed rulemaking.

SUMMARY: The Coast Guard is considering a proposal that would establish permanent regulations for the Chesapeake Bay Bridges Swim Race, an

annual event held in June. Annual notice of the precise dates and times of the swim will be published in the Local Notice to Mariners and a Federal Register notice. The special local regulations are necessary to restrict general navigation in the regulated area. These regulations are needed to provide for the safety of life on the navigable waters during the event.

DATES: Comments must be received on or before May 18, 1988.

ADDRESSES: Comments should be mailed or hand carried to Commander (bb), Fifth Coast Guard District, 431 Crawford Street, Portsmouth, Virginia 23704–5004. The comments will be available for inspection and copying at Room 209 of this address. Normal office hours are between 8:00 a.m. and 4:30 p.m., Monday through Friday, except holidays.

FOR FURTHER INFORMATION CONTACT: Billy J. Stephenson, Chief, Boating Affairs Branch, Fifth Coast Guard District, 431 Crawford Street, Portsmouth, Virginia 23704–5004 (804) 398–6204.

SUPPLEMENTARY INFORMATION: Interested persons are invited to participate in this rulemaking by submitting written views, data, or arguments. Persons submitting comments should include their names and addresses, identify this notice (CGD 05–88–19) and the specific section of the proposal to which their comments apply, and give reasons for each comment. The regulations may be changed in light of comments received. All comments received before the expiration of the comment period will be considered before final action is taken on the proposal. No public hearing is planned, but one may be held if written requests for a hearing are received and it is determined that the opportunity to make oral presentations will aid the rulemaking process. The receipt of comments will be acknowledged if a stamped self-addressed postcard or envelope is enclosed.

Drafting Information

The drafters of this notice are Mr. Billy J. Stephenson, project officer, Chief, Boating Affairs Branch, Fifth Coast Guard District, and Commander Robert J. Reining, project attorney, Fifth Coast Guard District Legal Office.

Discussion of Proposed Regulation

The area covered by this proposal is the same as that covered by the special local regulations for the Fourth Annual Chesapeake Bay Bridges Swim Race held on June 14, 1987. The Chesapeake Bay Bridges Swim Race is an annual event consisting of approximately 600 swimmers swimming across the Chesapeake Bay from shore to shore. The swimmers are required to swim between the William P. Lane Jr. Memorial Twin Bridges. It is necessary to close a portion of the Chesapeake Bay to all traffic except participants for the safety of those competing in the swim.

Economic Assessment and Certification

These proposed regulations are considered to be non-major under Executive Order 12291 on Federal Regulation and non-significant under Department of Transportation regulatory policies and procedures (44 FR 11034; February 26, 1979). Because closure of the waterway is not anticipated for any extended period, commercial marine traffic will be inconvenienced only slightly. The economic impact of this proposal is expected to be so minimal, that a full regulatory evaluation is unnecessary. Since the impact of this proposal is expected to be minimal, the Coast Guard certifies that if adopted, it will not have a significant economic impact on a substantial number of small entities.

List of Subjects in 33 CFR Part 100

Marine safety, Navigation (water).

Proposed Regulation

In consideration of the foregoing, the Coast Guard proposes to amend Part 100 of Title 33, Code of Federal Regulations as follows:

PART 100—[AMENDED]

1. The authority citation for Part 100 continues to read as follows:

Authority: 33 U.S.C 1233; 49 CFR 1.46 and 33 CFR 100.35.

2. A new § 100.507 is added to read as follows:

§ 100.507 Chesapeake Bay Bridges Swim Races, Chesapeake Bay, MD.

(a) *Definitions:* (1) *Regulated Area:* The waters of the Chesapeake Bay between and adjacent to the spans of the William P. Lane Jr. Memorial Bridge shore to shore 500 yard north of the north span of the bridge from the western shore at latitude 39°00′36″ North, longitude 76°23′05″ West and the eastern shore at latitude 38°59′14″ North, longitude 76°20′00″ West, and 500 yards south of the south span of the bridge from the western shore at latitude 39°00′16″ North, longitude 76°24′30″ West and the eastern shore at latitude 38°58′38.5″ North, longitude 76°20′06″ West.

(2) *The Coast Guard Patrol Commander:* The Coast Guard Patrol Commander is a commissioned, warrant or who has been designated by the Commander, Group Baltimore.

(b) *Special Local Regulations:* (1) Except for persons or vessels authorized by the Coast Guard Patrol Commander, no person or vessel may enter or remain in the regulated area.

(2) The operator of any vessel in the immediate vicinity of this area shall:

(A) Stop the operator's vessel immediately upon being directed to do so by any commissioned, warrant or petty officer on board a vessel displaying a Coast Guard ensign, and

(B) Proceed as directed by any commissioned, warrant or petty officer.

(c) *Effective Period:* This section is effective during the Chesapeake Bay Bridges Swim Race, and for one hour before the event starts. The Commander, Fifth Coast Guard District publishes a notice in the Federal Register and the Fifth Coast Guard District Local Notice to Mariners that announces the times and dates that the section is in effect.

Dated: April 11, 1988.

R.M. Polant,

Captain, U.S. Coast Guard, Acting Commander, Fifth Coast Guard District.

[FR Doc. 88–8402 Filed 4–15–88; 8:45 am]

BILLING CODE 4910–14–M

---

33 CFR Part 117

[CGD8–88–04]

Drawbridge Operation Regulations; Tensaw River, AL

AGENCY: U.S. Coast Guard, DOT.

ACTION: Proposed rule.

SUMMARY: At the request of CSX Rail Transport, the Coast Guard is considering a change to the regulation governing the operation of the swingspan railroad bridge over the Tensaw River, mile 15.0 near Hurricane, Baldwin County, Alabama, by requiring that at least eight hours advance notice be given for opening the draw; except that, during periods of severe storms or hurricanes the draw must open on signal. This proposal is being made because of infrequent requests to open the draw. During 1986, the bridge opened for passage of vessels 118 times, or an average of 9.8 times per month. During 1987, the bridge opened only 97 times, or an average of 8.1 times per month. There was no pattern to the bridge openings that would indicate that vessel traffic was heavier or lighter during any particular month or season of the year. This action will relieve the bridge owner of the burden of having a

person available at the bridge, and will still provide for the reasonable needs of navigation.

DATE: Comments must be received on or before June 2, 1988.

ADDRESS: Comments should be mailed to Commander (ob), Eighth Coast Guard District, 500 Camp Street, New Orleans, Louisiana 70130-3396. The comments and other materials referenced in this notice will be available for inspection and copying in Room 1115 at this address. Normal office hours are between 8:00 a.m. and 3:30 p.m., Monday through Friday, except holidays. Comments may also be hand-delivered to this address.

FOR FURTHER INFORMATION CONTACT: John Wachter, Bridge Administration Branch, at the address given above, telephone (504) 589-2965.

SUPPLEMENTARY INFORMATION: Interested persons are invited to participate in this proposed rulemaking by submitting written views, comments, data or arguments. Persons submitting comments should include their names and addresses, identify the bridge, and give reasons for concurrence with or any recommended change in the proposal. Persons desiring acknowledgment that their comments have been received should enclose a stamped, self-addressed postcard or envelope.

The Commander, Eighth Coast Guard District, will evaluate all communications received and determine a course of final action on this proposal. This proposed regulation may be changed in the light of comments received.

Drafting Information

The drafters of this notice are John Wachter, project officer, and Lieutenant Commander James Vallone, project attorney.

Discussion of Proposed Regulation

Vertical clearance of the bridge in the closed position is 11.0 feet above mean high water, and 12.0 feet above mean low water. There are, on average, twenty-one trains crossing the bridge daily. Navigation through the bridge consists of tugs with tows and outboard motor powered pleasure boats.

Eight hours advance notice for an opening of the draw would be made by collect call at any time to the railroad Train Master's office in Mobile, Alabama, telephone (205) 434-1304.

To provide for leeway in the appointed vessel arrival time, CSX Rail Transport would have a tender at the bridge at least one-half hour before the appointed opening time, and the tender would remain at least one-half hour after that time for a late arriving vessel.

Economic Assessment and Certification

This proposed regulation is considered to be non-major under Executive Order 12291 on Federal Regulation and nonsignificant under the Department of Transportation regulatory policies and procedures (44 FR 11034: February 26, 1979).

The economic impact of this proposal is expected to be so minimal that a full regulatory evaluation is unnecessary. The basis for this conclusion is that the number of vessels passing the bridge averages only about two per week. Since the economic impact of this proposal is expected to be minimal, the Coast Guard certifies that, if adopted, it will not have a significant economic impact on a substantial number of small entities.

List of Subjects in 33 CFR Part 117

Bridges.

Proposed Regulation

In consideration of the foregoing, the Coast Guard proposes to amend Part 117 of Title 33, Code of Federal Regulations, as follows:

PART 117—DRAWBRIDGE OPERATION REGULATIONS

1. The authority citation for Part 117 continues to read as follows:

Authority: 33 U.S.C. 499; and 49 CFR 1.46 and 33 CFR 1.05-1(g).

2. Section 117.113 is revised to read as follows:

§ 117.113 Tensaw River.

The draw of the CSX Rail Transport bridge, mile 15.0 at Hurricane, shall open on signal if at least eight hours advance notice is given; except that, during periods of severe storm or hurricanes, from the time the National Weather Service sounds an "alert" for the area until the "all clear" is sounded, the draw shall open on signal.

Dated: April 4, 1988.

Peter J. Rots,

Rear Admiral, U.S. Coast Guard Commander, Eighth Coast Guard District.

[FR Doc. 88-8400 Filed 4-15-88; 8:45 am]

BILLING CODE 4910-14-M

---

33 CFR Part 117

[CGD7-88-03]

Drawbridge Operation Regulations; Gulf Intracoastal Waterway, FL

AGENCY: Coast Guard, DOT.

ACTION: Proposed rule.

SUMMARY: At the request of Tierra Verde Community Association Inc. and the Florida Department of Transportation, the Coast Guard is considering adding regulations governing the Pinellas Bayway, Structure "E" (SR 679) drawbridge, at mile 113, St. Petersburg Beach, Florida by permitting the number of openings to be limited during certain periods. This proposal is being made because a significant increase in highway traffic and bridge openings occurs on weekends due to increased recreational activity. This action should accommodate the needs of vehicular traffic and still provide for the reasonable needs of navigation.

DATE: Comments must be received on or before June 2, 1988.

ADDRESSES: Comments should be mailed to Commander (oan), Seventh Coast Guard District, 909 SE. 1st Avenue, Miami, Florida 33131-3050. The comments and other materials referenced in this notice will be available for inspection and copying on the 4th Floor, of the Brickell Plaza Federal Building, 909 SE 1st Ave, Miami, Florida. Office hours are between 7:30 a.m. and 4 p.m., Monday through Friday, except holidays. Comments also may be hand-delivered to this address.

FOR FURTHER INFORMATION CONTACT: Ms. Zonia Reyes at (305) 536-4103.

SUPPLEMENTARY INFORMATION: Interested persons are invited to participate in this rulemaking by submitting written views, comments, data, or arguments. Persons submitting comments should include their names and addresses, identify the bridge, and give reasons for concurrence with or any recommended change in the proposal. Persons desiring acknowledgement that their comments have been received should enclose a stamped, self-addressed postcard or envelope.

The Commander, Seventh Coast Guard District, will evaluate all communications received and determine a course of final action on this proposal. The proposed regulations may be changed in light of comments received.

Drafting Information

The drafters of this notice are Ms. Zonia Reyes, Bridge Administration Specialist, project officer, and Lieutenant Commander S.T. Fuger, Jr., project attorney.

Discussion of Proposed Regulations

The Structure "E" drawbridge presently opens on signal. Traffic counts

show moderate vehicle use of the bridge on weekdays and bridge logs show less than one opening of the draw per hour during the same period. There is however, a significant increase in highway traffic and bridge openings on weekends. The Tierra Verde Community Association requested that the draw open 3 times per hour on weekends and holidays from 11 a.m. to 6 p.m. The Florida Department of Transportation, owner of the bridge, requested that the draw open on the hour, 20 minutes after the hour, and forty minutes after the hour, seven days a week from 6 a.m. to 7 p.m. After careful review of the number of bridge openings and highway traffic data, the Coast Guard has determined that weekday restrictions are not justified.

The proposed rule would limit weekend and federal holiday openings to once every 15 minutes during the hours of 9 a.m. to 6 p.m. This would eliminate back to back openings which are the principal cause of vehicular traffic james, and would provide for the reasonable needs of navigation. The regulations, if approved, would exempt public vessels of the United States, tugs with tows, and vessels in distress, which would be passed through the draw at anytime.

Economic Assessment and Certification

These proposed regulations are considered to be non-major under Executive Order 12291 on Federal Regulation and nonsignificant under the Department of Transportation regulatory policies and procedures (44 FR 11034; February 26, 1979).

The economic impact of this proposal is expected to be so minimal that a full regulatory evaluation is unnecessary. We conclude this because the regulations exempt tugs with tows. Since the economic impact of this proposal is expected to be minimal, the Coast Guard certifies that, if adopted, it will not have a significant economic impact on a substantial number of small entities.

List of Subjects in 33 CFR Part 117

Bridges.

Proposed Regulations

In consideration of the foregoing, the Coast Guard proposes to amend Part 117 of Title 33, Code of Federal Regulations, as follows:

PART 117—DRAWBRIDGE OPERATION REGULATIONS

1. The authority citation for Part 117 continues to read as follows:

Authority: 33 U.S.C. 499; 49 CFR 1.46; 33 CFR 1.05-1(g).

2. Section 117.287(d)(3) is added to read as follows:

§ 117.287 Gulf Intracoastal Waterway, Caloosahatchee River to Perdido River.

* * * * *

(d)(3) The draw of the Pinellas Bayway, Structure "E" (SR 679) bridge, mile 113, at St. Petersburg Beach, Florida shall open on signal; except that from 9 a.m. to 6 p.m. on Saturdays, Sundays, and Federal holidays, the draw need be opened only on the hour, quarter-hour, half-hour, and three quarter-hour.

* * * * *

Dated: March 6, 1988.

H.B. Thorsen,

Rear Admiral, U.S. Coast Guard, Commander, Seventh Coast Guard District.

[FR Doc. 88-8401 Filed 4-15-88; 8:45 am]

BILLING CODE 4910-14-M

DEPARTMENT OF COMMERCE

National Oceanic and Atmospheric Administration

50 CFR Part 650

[Docket No. 80467-8057]

Atlantic Sea Scallop Fishery

AGENCY: National Marine Fisheries Service (NMFS), NOAA, Commerce.

ACTION: Proposed rule.

SUMMARY: NOAA issues this proposed rule to implement Amendment 2 to the Fishery Management Plan for the Atlantic Sea Scallop Fishery (FMP). Amendment 2 (1) specifies a 10 percent increase in the meat count standard during the months of October, November, December, and January, the primary period when spawning causes reduction in individual meat weight of scallops that have reached harvestable age; and (2) provides a framework mechanism to change the magnitude and/or the timing of the adjustment of the meat count standard during the spawning season. The purpose of Amendment 2 is to provide regulatory relief to the industry. This proposed rule also makes minor technical changes to the regulations.

DATE: Comments on the proposed rule are invited until April 29, 1988.

ADDRESSES: Send comments to Richard Roe, Regional Director, National Marine Fisheries Service, Northeast Regional Office, 14 Elm Street, Gloucester, Massachusetts 01930-3799. Mark the outside of the envelope "Comments on the scallop regulations."

Copies of the amendment, the environmental assessment, and the regulatory impact review are available from Douglas G. Marshall, Executive Director, New England Fishery Management Council, Suntaug Office Park, 5 Broadway, Saugus, MA 01906.

FOR FURTHER INFORMATION CONTACT: Peter Colosi, (Chief, Plan Administration Branch, NMFS), 617-281-3600, ext. 324.

SUPPLEMENTARY INFORMATION: The FMP is implemented by regulations appearing at 50 CFR Part 650. The principal objectives of the FMP are: (1) Restoration of adult stock abundance and age distribution, (2) enhancement of yield per recruit of each stock, and (3) minimization of regulatory and management costs. The primary management measure used to achieve these objectives is the requirement that scallops harvested must, on average, meet a standard count of no more than 30 meats per pound. When the FMP was developed it was believed that scallops grew at a constant rate and upon reaching an age of four years (harvestable age), sufficient growth had occurred to allow the scallops to be harvested consistent with the 30 meat count standard and the objectives of the FMP. However, recent studies show that during the fall months of the fourth year, when scallops have reached harvestable age, there is a significant loss in meat weight due to spawning acitivity. This meat weight loss is not regained until late winter when the spawning season is over. The loss in meat weight during the fall months results in significantly fewer scallops of harvestable age that can meet the 30 meat count standard. This results in postponed and foregone benefits to harvesting vessels which cannot profitably harvest enough 30 meat count scallops in the fall because of spawning effects and cannot enter the fishery after the spawning season because of adverse winter weather conditions. Thus, the incentive for non-compliance with the meat count standard in the fall is very high. The fluctuation in meat weight due to spawning was not anticipated in the original FMP and the Council believes that non-compliance with the meat count standard due to spawning is contrary to the objective of the FMP.

The purpose of Amendment 2 is to refine the operative measure to achieve a better balance between resource conservation and regulatory costs during the spawning season. Amendment 2 promotes compliance by making the standard better conform to natural conditions encountered in the fishery. Amendment 2 (1) specifies a 10 percent increase in meat count standard during October, November, December, and January, the primary period when

spawning causes the reduction in individual meat weight of scallops which have reached harvestable age; and (2) provides a framework regulatory mechanism to change the magnitude and/or the timing of the adjustment of the meat count standard during the spawning season. Amendment 2 will provide regulatory relief to the industry.

Growth curves for sea scallops in the Georges Bank, Mid-Atlantic, inshore Gulf of Maine, and offshore Gulf of Maine resource areas are used to predict the meat counts that are expected to occur throughout the year due to the seasonal variation in adductor muscle tissue growth. These data were calculated from growth analyses presented in NMFS/Woods Hole Lab Reference Document 83–35, and were done with particular reference to the Georges Bank population. Based upon these analyses, seasonal adjustments in the meat weight-at-age growth curves were obtained by assuming that the adjusted meat weights are 5 percent greater than the average predicted weights during the months of April through September; 20 percent less during October. the primary spawning month; and 12 percent less during November through March. Although the actual onset of sea scallop spawning in resource areas other than Georges Bank may vary somewhat around the October 1st date, the Council has concluded that the analyses are representative of growth patterns throughout the range of the sea scallop fishery. In all cases, the Council's approach to accounting for the discrepancies between actual and predicted meat weights over the critical months when the three year olds (four year olds in the Gulf of Maine) are recruiting to the fishery is to adjust the management standard for the difference between the average predicted meat count and the assumed value during the months of October through January. The calculated monthly differences are 20 percent during October and 12 percent during November through January. Based upon these values, the Council believes that it is appropriate to adjust the management standard upward by 10 percent from October through January. Further adjustments to the standard during the spawning season would be achieved by a framework mechanism triggered by new and significant scientific information on the spawning phenomenon.

The meat count management standard is redefined as follows: The number of scallops in a one-pound sample (on average) must be 30 or less throughout the year, and may be 10 percent higher; i.e., 33 or less from October through January. Additionally, the magnitude and timing of the adjustment during the spawning season may be changed within defined parameters, based on new and significant information about the spawning phenomenon and its associated meat weight loss. Currently, data collection is underway to augment our understanding of the seasonal variation in meat weight due to spawning. Accordingly, as new information is developed that might affect either the magnitude or timing of the seasonal adjustment, the Council will recommend a modification to be implemented by the Regional Director.

The proposed seasonal adjustment allows harvest during the fall, by a larger number of smaller vessels, of scallops which otherwise would be taken during the winter, by a smaller number of larger vessels that can operate during winter weather conditions. If there were no seasonal adjustment (no-action alternative), the scallops whose harvest is postponed from fall to winter would, by that time, have grown further and be of somewhat larger weight and greater value. While the seasonal adjustment prevents the realization of this somewhat larger value, it does allow more vessels to harvest these scallops, and provides steadier revenue and employment to the industry.

The proposed seasonal adjustment is the preferred management alternative because: (1) It still achieves the objectives of the FMP (the long-term increased revenue associated with the postponement of harvest inherent in the no-action alternative, was not included in the original calculations in the FMP); (2) fishing effort on the recruiting year class can proceed normally, uninhibited by the spawning phenomenon in meat weight; (3) landings will increase by 434,000 pounds and exvessel revenues by $2.2 million (consumer expenditures by $2.8 million) during a seasonal low point in October–January 1988–89; (4) the decrease in revenue over eight years that would result from the proposed adjustment, relative to the no-action alternative with full compliance, would be $5.3 million exvessel ($9.1 million retail), which is only a 0.5 percent reduction in revenues; (5) the entire dredge industry is capable of fishing and reaping the benefits of this rule in the fall, compared to the limited number of boats able to fish in winter weather, which currently harvest these scallops after the spawning season; and (6) the amendment provides for greater vessel safety in the Atlantic sea scallop fishery consistent with the intent of section 303(a)(6) of the Magnuson Act, as amended by Pub. L. 99–659.

In regard to item (4), the Council is aware that no action may result in greater non-compliance, because ligitimate four year old scallops have lost weight during the spawning season, resulting in these small scallops being caught anyway. This noncompliance jeopardizes the achievement of the expected benefits which accompany no action. Accordingly, if no action results in only a 1 percent loss in expected value through non-compliance, the benefit-cost relationships for the proposed action turns positive. The expected benefits will be more readily achieved with the proposed action.

This proposed rule drops as redundant the requirement in the Council's proposal that the Regional Director obtain the concurrence of the Council in making a meat count adjustment and also makes minor technical changes to the regulations by changing all references to the fishery conservation zone (FCZ) to the exclusive economic zone (EEZ), in accordance with the 1986 amendments to the Magnuson Act, and clarifying the definition of the term Land.

Classification

Section 304(b)(3) of the Magnuson Act requires the Secretary of Commerce to publish regulations proposed by the Council before he determines that the amendment to be implemented by the rule is consistent with the national standards, other provisions of the Magnuson Act, and other applicable law. The Secretary, in making that determination, will take into account the information, views and comments received during the comment period.

The Council prepared an environmental assessment (EA) for Amendment 2 and concluded that there will be no significant impact on the environment as a result of this rule. A copy of the EA may be obtained from the Council at the address above.

The Administrator of NOAA determined that this proposed rule is not a "major rule" requiring a regulatory impact analysis under Executive Order 12291.

The General Counsel of the Department of Commerce certified to the Small Business Administration that this proposed rule, if adopted, will not have a significant economic impact on a substantial number of small entities. As a result, a regulatory flexibility analysis was not prepared.

Price changes will be insignificant. Administrative, enforcement, and paperwork and recordkeeping

requirements will remain unchanged; thus there are no impacts on Federal, State, or local government agencies. Employment impacts are expected to reflect predicted changes in revenues. The seasonal adjustment should have no effect on competition, investment, or innovation in the fishery; however, productivity will obviously be higher during October through January with the seasonal adjustment.

The proposed rule will allow both large and small vessels to land more scallops in the fall. If no action is taken, and these scallops are landed in the winter, they will not be landed by smaller vessels which are unable to operate in winter weather (14.9 percent of dredges are considered small). NMFS has issued 1,110 permits to scallop fishing vessels as of December 1984 (all considered small entities). However, only 54 percent of these vessels landed some sea scallops and only 20 percent were considered full-time vessels (based on 1983 data; Report on the Status of the Sea Scallop Fishery, January 1985). About 346 vessels landed sea scallops in 1986 (200 of them were scallop dredges). The average impact of this rule on all 346 vessels would be +$6,376 in 1988 compared with an average gross revenue of $280,206 annually (1986). These vessels will experience an average loss in discounted revenue per vessel of $15,373 over the next eight years.

It is expected that all vessels operating in the fishery will be affected, as described above for the aggregate, in the same way, because all vessels are capable of fishing in the fall. The two major user groups (large scallop dredges in New England and the Mid-Atlantic) decrease their activity from the October–January period to the February–March period, presumably due to weather conditions. For instance, large New England dredges, the most important group in terms of landings, show a decline from 135 active vessels in October–January to 102 vessels during February–March. Thus, this proposed rule will increase landings in the fall and will benefit more vessels, whereas no action will allow those landings to be made in the winter by a limited number of vessels. Small New England dredges and other gear (scuba) operate in the Gulf of Maine during the winter. It is clear that these two groups take scallops almost as much during February–March as they do during October–January. There should be no impact on these two groups either with or without this proposed rule, because the same number of vessels are fishing during both periods. New England trawls (large and small) illustrate a pattern similar to that for the major groups, with declining landings and number of vessels during the winter. Mid-Atlantic trawls, on the other hand, show dissimilar patterns; small trawls have virtually no activity during fall or winter, while larger trawls show proportionately lower landings, but more vessels, during winter, indicating a bycatch fishery. In North Carolina, both dredges and trawls land scallops only in the fall or the October through January period. No differential effects should occur relative to competitive position, cash flow and liquidity, or ability to remain in the market. There will be no change in paperwork and recordkeeping requirements.

This proposed rule is exempt from the procedures of E.O. 12291 under section 8(a)(2) of that order. It is being reported to the Director, Office of Management and Budget, with an explanation of why it is not possible to follow the procedures of the order.

This rule does not contain a collection of information requirement for the purposes of the Paperwork Reduction Act.

The Council determined that this rule will be implemented in a manner that is consistent, to the maximum extent practicable, with the approved coastal zone management programs of Maine, New Hampshire, Massachusetts, Rhode Island, Connecticut, New York, New Jersey, Delaware, Maryland, Virginia, and North Carolina. This determination has been submitted for review by the responsible State agencies under section 307 of the Coastal Zone Management Act.

This proposed rule does not contain policies with federalism implications sufficient to warrant preparation of a federalism assessment under Executive Order 12612.

List of Subjects in 50 CFR Part 650

Fisheries, Reporting and recordkeeping requirements.

Dated: April 12, 1988.

James E. Douglas, Jr.,

Acting Assistant Administrator for Fisheries.

PART 650—[AMENDED]

For the reasons set out in the preamble, 50 CFR Part 650 is proposed to be amended as follows:

1. The authority citation for 50 CFR Part 650 continues to read as follows:

Authority: 16 U.S.C. 1801 *et seq.*

2. In § 650.2, the definition of *Fishery conservation zone (FCZ)* is removed; the definition of *Land* is revised; and a new definition is added in alphabetical order, to read as follows:

§ 650.2 Definitions.

* * * * *

Exclusive economic zone (EEZ) means the zone established by Presidental Proclamation Number 5030, dated March 10, 1983, and is that area adjacent to the United States which, except where modified to accommodate international boundaries, encompasses all waters from the seaward boundary of each of the coastal States to a line on which each point is 200 nautical miles from the baseline from which the territorial sea of the United States is measured.

* * * * *

Land means to begin offloading fish, to offload fish, or to enter port with fish.

* * * * *

§ 650.7 [Amended]

3. In § 650.7(m), the initials "FCZ" are revised to read "EEZ".

4. Section 650.20 is revised to read as follows:

§ 650.20 Meat-count and shell height standards.

(a) Except as provided in paragraph (b) of this section, the meat count for shucked Atlantic sea scallops must not exceed 30 meats per pound; the corresponding minimum shell height is 3½ inches (89 mm). The Regional Director may temporarily adjust the meat count and shell height standards in accordance with the procedure and criteria provided in § 650.22.

(b) The meat count standard in paragraph (a) of this section, will be adjusted upward by 10 percent during the months of October through January each year, to account for the natural reduction of meat weight during and after the spawning season. The corresponding minimum shell height will not be adjusted. The Regional Director may act to change the adjustment to the meat count standard during the spawning period, as set forth in the procedures and criteria of § 650.24.

5. A new § 650.24 is added to read as follows:

§ 650.24 Adjustment of meat count standard.

(a) *Change to adjustment of standard under § 650.20(b).* (1) The Council may request that the Regional Director implement a change in the meat count specified in § 650.20(b), if he makes the findings required by paragraph (b) of this section after considering the information specified in paragraph (c) of this section.

(2) The meat count standard adjustment specified in § 650.20(b) is limited to a magnitude of up to 30 percent greater than that specified in § 650.20(a); limited to a time period of up to 6 months; and constrained to begin no earlier than September 1.

(3) Following a request by the Council for an adjustment, the Regional Director

(i) Will provide for public input by holding a hearing in conjunction with the Council meeting at which the matter is discussed; and

(ii) Will take into consideration comments from the public and information regarding the enforcement and administrative implications of any change in the process of formulating its recommendations.

(b) *Criteria.* (1) New scientific information significantly changes the information contained in the FMP respecting sea scallop growth and/or spawning activity;

(2) The proposed adjustment is within the ranges of period, starting date and magnitude set forth in paragraph (a)(2) of this section; and

(3) The proposed adjustment is consistent with the management objectives of the FMP.

(c) *Sources of information.* The Regional Director will consider all available resource and assessment information, especially the most recently completed survey and assessment, when preparing any report or recommendation under this section. The Regional Director will also consider reports and records maintained by fishermen and made available as a part of the fishery statistics program, other fishery statistics, and any other available information which increases understanding of prevailing conditions of the stock, the fishery, and the industry.

(d) Any change in the adjustment for spawning implemented under this section will become the operative standard for succeeding years unless changed again by the process set forth in this section.

[FR Doc. 88-8397 Filed 4-13-88; 2:40 pm]

BILLING CODE 3510-22-M

---

50 CFR Part 683

Western Pacific Bottomfish and Seamount Groundfish Fisheries

AGENCY: National Marine Fisheries Service (NMFS), NOAA, Commerce.

ACTION: Notice of availability of an amendment to a fishery management plan and request for comments.

SUMMARY: NOAA issues this notice that the Western Pacific Fishery Management Council (Council) has submitted Amendment 2 to the Fishery Management Plan for Bottomfish and Seamount Groundfish Fisheries of the Western Pacific Region (FMP) for review by the Secretary of Commerce (Secretary) and is requesting comments from the public on the amendment. Copies of the amendment may be obtained from the Council at the address below.

DATE: Comments on the plan amendment should be submitted by June 10, 1988.

ADDRESS: Send comments to E.C. Fullerton, Regional Director, Southwest Region, NMFS, 300 South Ferry Street, Terminal Island, CA 90731. Copies of the amendment are available from the Council at 1164 Bishop Street, Suite 1405, Honolulu, Hawaii 96813.

FOR FURTHER INFORMATION CONTACT: Kitty Simonds (Executive Director, Western Pacific Fishery Management Council), 808-523-1368.

SUPPLEMENTARY INFORMATION: Amendment 2 was prepared by the Council under the provisions of the Magnuson Fishery Conservation and Management Act, which requires that the Secretary, upon receiving a plan or amendment, must immediately publish a notice that the plan or amendment is available for public review and comment. The Secretary will consider the public comments in determining whether to approve the amendment.

Amendment 2 proposes to establish an access limitation program for the portion of the bottomfish fishery in the exclusive economic zone seaward of the northwestern Hawaiian Islands. The Council has concluded that the fishery is overcapitalized and that a gradual reduction in harvest capacity through the access limitation program is necessary to bring harvest capacity into balance with the productive capacity of the bottomfish stocks. The program provides a system to allow new entry in the future if the Southwest Regional Director finds that the stocks can support additional effort.

Regulations proposed by the Council that are based on this amendment are scheduled to be published within 15 days.

Authority: 16 U.S.C. 1801 *et seq.*

Dated: April 12, 1988.

Ann D. Terbush,

Acting Director, Office of Fisheries Conservation and Management, National Marine Fisheries Service.

[FR Doc. 88-8398 Filed 4-13-88; 1:59 pm]

BILLING CODE 3510-22-M

Notices

Federal Register
Vol. 53, No. 74
Monday, April 18, 1988

This section of the FEDERAL REGISTER contains documents other than rules or proposed rules that are applicable to the public. Notices of hearings and investigations, committee meetings, agency decisions and rulings, delegations of authority, filing of petitions and applications and agency statements of organization and functions are examples of documents appearing in this section.

DEPARTMENT OF AGRICULTURE

Office of International Cooperation and Development; Intent To Enter Cooperative Agreement With Harlan E. Moore Heart Research Foundation

AGENCY: Office of International Cooperation and Development (OICD), USDA.

ACTION: Notice of intent.

Activity: OICD intends to enter into a Cooperative Agreement with the Harlan E. Moore Heart Research Foundation to provide partial support funding for collaborative international agricultural research on Adjusting the Fat Quality of Pork.

Authority: Sec. 1458 of the National Agricultural Research, Extension and Teaching Policy Act of 1977, as amended (7 U.S.C. 3291), and the Food Security Act of 1985 (Pub. L. 99-198).

OICD announces the availability of funds in fiscal year 1988 (FY1988) to enter into a cooperative agreement with the Harlan E. Moore Heart Research Foundation to collaborate in international research on Adjusting the Fat Quality of Pork. Approximately $20,000 will be available in FY1988 to the Foundation of conduct collaborative reserch with Hungary's Central Food Research Institute and Agricultural University's Institute of Animal Production. Assistance will be provided only to the Foundation, which is contributing resources and experience to conduct the research. Funds provided by OICD will be used to supplement costs of supplies, animal processing and analyses, a research technician, and travel. Hungary's Central Food Research Institute and Agricultural University's Institute of Animal Production will support their portion of the research.

Based on the above, this is not a formal request for application. Funds estimated at $20,000 will be available in FY1988 to support this work. A total of $80,000 is anticipated to be provided for this cooperative research effort over a three-year period, subject to the availability of federally appropriated funds in future fiscal years.

Information on proposed Agreement #58-319R-8-027 may be obtained from: Nancy J. Croft, Contracting Officer, USDA/OICD/Management Services Branch, Washington, DC 20250-4300.

Date: April 13, 1988.

Allen Wilder,

Contracting Officer.

[FR Doc. 88-8422 Filed 4-15-88; 8:45 am]

BILLING CODE 3410-DP-M

DEPARTMENT OF COMMERCE

International Trade Administration

[A-469-701, C-469-702]

Postponement of Final Antidumping and Countervailing Duty Determinations and Postponement of the Antidumping Duty Public Hearing; Certain Granite Products From Spain

AGENCY: International Trade Administration, Import Administration, Department of Commerce.

ACTION: Notice.

SUMMARY: This notice informs the public that we have received a request from the respondents in the antidumping duty investigation to postpone the final determination, as permitted by section 735(a)(2)(A) of the Tariff Act of 1930, as amended (the Act) (19 U.S.C. 1673d(a)(2)(A)).

Based on this request, we are postponing our final determinations as to whether sales of certain granite products from Spain have occurred at less than fair value, and whether producers or exporters have received subsidies within the meaning of the countervailing duty law, until not later than June 21, 1988. We are also postponing our public hearing in the antidumping duty investigation from April 12, 1988, until May 13, 1988.

EFFECTIVE DATE: April 18, 1988.

FOR FURTHER INFORMATION CONTACT: James Riggs (AD) (200-377-1761), Charles E. Wilson (AD) (202-377-5288), Loc Nguyen (CVD) (202-377-0167), or Barbara E. Tillman (CVD) (200-377-2438), Office of Investigations, Import Administration, International Trade Administration, U.S. Department of Commerce, 14th Street and Constitution Avenue, NW., Washington, DC 20230.

SUPPLEMENTARY INFORMATION: On February 29, 1988, we published a preliminary determination of sales at less than fair value with respect to certain granite products (53 FR 6021). This notice stated that if the investigation proceeded normally, we would make our final determination by May 9, 1988.

On March 10, 1988, the respondents requested a postponement of the final determination in the antidumping duty investigation until not later than June 21, 1988, the 113th day after publication of our preliminary determination, pursuant to section 735(a)(2)(A) of the Act (19 U.S.C. 1673d(a)(2)(A)). These respondents account for a significant proportion of exports of the merchandise to the United States. If exporters who account for a significant proportion of exports of the merchandise under investigation request an extension after an affirmative preliminary determination, we are required, absent compelling reasons to the contrary, to grant the request. Accordingly, we are postponing the date of the final antidumping duty determination until not later than June 21, 1988.

In addition, on January 28, 1988, we granted the request of petitioner, the Ad Hoc Granite Trade Group, to extend the deadline date for the final countervailing duty determination to correspond to the date of the final antidumping duty determination of the same product, pursuant to section 705(a)(1) of the Act (19 U.S.C. 1671d(a)(1)) (53 FR 2521). Accordingly, we are also postponing the date of the final countervailing duty determination until not later than June 21, 1988.

Public Comment

In accordance with section 353.47 of our regulations (19 CFR 353.47), if requested, we will hold a public hearing to afford interested parties an opportunity to comment on the preliminary determination in the antidumping duty investigation at 1:30 p.m. on May 13, 1988, at the U.S. Department of Commerce, Room 1414, 14th Street and Constitution Avenue, NW., Washington, DC 20230.

Individuals who wish to participate in the hearing must submit a request to the Assistant Secretary for Import Administration, Room B-099, at the above address within 10 days of publication of this notice. Requests should contain: (1) The party's name, address, and telephone number; (2) the number of participants; (3) the reasons for attending; and (4) a list of issues to be discussed. In addition, prehearing briefs in at least 10 copies must be submitted to the Assistant Secretary for Import Administration on May 6. Oral presentations will be limited to issues raised in the briefs. All written views should be filed in accordance with 19 CFR 353.46 and 355.34, not less than 30 days before the final determinations or, if a hearing is held, within seven days after the hearing transcript is available at the above address in at least 10 copies.

The U.S. International Trade Commission is being advised of these postponements, in accordance with sections 705(d) and 735(d) of the Act. This notice is published pursuant to section 705(d) and 735(d) of the Act.

Joseph A. Spetrini,

Acting Assistant Secretary for Import Administration.

April 12, 1988.

[FR Doc. 88-8417 Filed 4-15-88; 8:45 am]

BILLING CODE 3510-DS-M

National Oceanic and Atmospheric Administration

Deep Seabed Mining; Approval of Revision to Mine Site Area and Publication of Revised Coordinates

AGENCY: National Oceanic and Atomospheric Administration, Commerce.

ACTION: Notice of approval of amendment to Deep Seabed Mining Exploration License area and publication of revised coordinates.

SUMMARY: Pursuant to the Deep Seabed Hard Mineral Resources Act and 15 CFR Part 970, and at the request of the licensee, the National Oceanic and Atmospheric Administration (NOAA) on April 5, 1988, approved Revision No. 2 to exploration license USA-1, issued to Ocean Minerals Company (OMCO). On October 7 and 16, 1987, at 52 FR 37490 and 52 FR 38504, NOAA published notice of proposed license area changes to USA-1, USA-2 and USA-3, issued to OMCO, Ocean Management, Inc., and Ocean Mining Associates, respectively, and a brief explanation of how these area revisions would be accomplished. No comments were received in opposition to approval of the requested revisions. NOAA noticed approval of revisions to USA-2 and USA-3 on March 3, 1988, at 53 FR 6856.

In accordance with the provisions of 15 CFR 970.512 through 970.514, NOAA has approved additional new exploration areas and has modified the license terms, conditions and restrictions (TCR (5)) of license USA-1 to restrict exploration activities so as to reflect the resolution of site overlaps. All other license TCRs will remain in effect.

NOAA published the coordinates for the OMCO exploration license area at 49 FR 47081 on November 30, 1984. The license area for USA-1 is now amended, resulting in a change in operating area from approximately 165,533 square kilometers to approximately 168,841 square kilometers; an addition of aproximately 3,308 square kilometers. This amendment is accomplished as follows:

(1) The license area is increased by the addition of the following areas:

Turning points	Latitude (north)	Longitude (west)
(a) 1	13°29.0'	131°00.0'
2	13°20.0'	131°00.0'
3	13°20.0'	132°15.0'
4	13°29.0'	132°15.0'
1	13°29.0'	131°00.0'
(b) 1	13°00.0'	134°00.0'
2	12°50.0'	134°00.0'
3	12°50.0'	135°50.0'
4	12°11.6'	133°50.0'
5	12°11.6'	134°04.0'
6	12°30.0'	134°04.0'
7	12°30.0'	134°15.0'
8	13°00.0'	134°15.0'
1	13°00.0'	134°00.0'
(c) 1	11°30.0'	131°30.0'
2	11°00.0'	131°30.0'
3	11°00.0'	132°30.0'
4	10°30.0'	132°30.0'
5	10°30.0'	133°30.0'
6	11°00.0'	133°30.0'
7	11°00.0'	133°40.0'
8	11°40.0'	133°40.0'
9	11°40.0'	132°20.0'
10	11°30.0'	132°00.0'
1	11°30.0'	131°30.0'

(2) The operating area within the original license area is reduced by adding new paragraphs (b) and (c) and TCR (5) of the license terms, conditions and restrictions. TCR (5) now provides as follows:

(5) *Freedom of the High Seas Requirements.*

(a) The licensee shall conduct its exploration activities in a manner which will not unreasonably interfere with the interests of other nations in their exercise of the freedoms of the high seas, as recognized under general principles of international law, such as fishing, navigation, submarine pipeline and cable laying, and scientific research (15 CFR 970.520).

(b) In particular, pursuant to the resolution of the deep seabed mining site overlap between Ocean Minerals Company and Yuzhmorgeologia, which is to be implemented as set forth in the agreement of August 14, 1987, between the United States and the U.S.S.R., Ocean Minerals Company shall not engage in exploration, and shall not physically interfere with the exploration or commercial recovery activities of other operators, in the following areas:

Turning points	Latitude (north)	Longitude (west)
(a) 1	13°40.0'	128°35.0'
2	13°20.2'	128°35.0'
3	13°20.2'	130°00.0'
4	13°40.0'	130°00.0'
1	13°40.0'	128°35.0'
(b) 1	12°50.0'	132°15.0'
2	12°31.1'	132°15.0'
3	12°31.1'	133°30.6'
4	12°50.0'	133°30.6'
1	12°50.0'	132°15.0'
(c) 1	11°50.0'	143°37.9'
2	11°00.0'	143°37.9'
3	11°00.0'	145°00.0'
4	11°50.0'	145°00.0'
1	11°50.0'	143°37.9'

(c) In the event of actions which may constitute a breach of the above agreement of August 14, 1987, including the understandings related thereto, the State Department, on its own initiative or at the request of NOAA or any affected licensee, will determine within 60 days after such initiative or request, and in consultation with NOAA and any affected licensee, if such a breach has occurred. If this is determined to be the case, the Department of State and NOAA, in consultation with any affected licensee, will take appropriate action to seek to remedy the breach. If such breach cannot be remedied within 90 days after it is determined a breach has occurred, NOAA shall, in accordance with NOAA regulations, remove or modify restrictions set forth in TCR (5)(b), or take promptly such other action as is appropriate and effective.

Dated: April 12, 1988.

John J. Casey,

Deputy Assistant Administrator for Ocean Services and Coastal Zone Management.

[FR Doc. 88-8404 Filed 4-15-88; 8:45 am]

BILLING CODE 3510-13-M

COMMITTEE FOR THE IMPLEMENTATION OF TEXTILE AGREEMENTS

Negotiated Import Limit and an Adjustment in Charges for a Guaranteed Access Level for Certain Cotton Textile Products Produced or Manufactured in the Dominican Republic

April 12, 1988.

AGENCY: Committee for the Implementation of Textile Agreements.

ACTION: Issuing a directive to the Commissioner of Customs establishing a new limit.

EFFECTIVE DATE: April 12, 1988.

Authority: Executive Order 11651 of March 3, 1972, as amended; Section 204 of the Agricultural Act of 1956, as amended (7 U.S.C. 1854); President's February 20, 1986 announcement of a Special Access Program.

FOR FURTHER INFORMATION CONTACT: Naomi Freeman, International Trade Specialist, Office of Textiles and Apparel, U.S. Department of Commerce, (202) 377–4212. For information on the quota status of this limit, refer to the Quota Status Reports posted on the bulletin boards of each Customs port. For information on embargoes and quota reopenings, call (202) 377–3715.

SUPPLEMENTARY INFORMATION: During consultations held between the Governments of the United States and the Dominican Republic, agreement was reached to amend further the current Bilateral Textile Agreeements to increase the current limit for cotton textile products in Categories 347/348. The specific limit on Categories 347/348 was extended through May 31, 1992.

It was agreed that if the bilateral agreement which expires on May 31, 1988 is not renewed, this increase will be deducted from the specific limit for categories 347/348 for the succeeding agreement period, June 1, 1988 through May 31, 1989.

Import charges for the period January 1–31, 1988 of 27,763 dozen (13,101 dozen for Category 347 and 14,662 dozen for Category 348) are being made in this directive. In addition, 33,424 dozen will be charged to the guaranteed access level for Categories 347/348 for the period January 1, 1988 through May 31, 1988.

A copy of the bilateral agreement is available from the Textiles Division, Economic Bureau, U.S. Department of State, (202) 647–1998.

A description of the textile categories in terms of T.S.U.S.A. numbers is available in the CORRELATION: Textile and Apparel Categories with Tariff Schedules of the United States Annotated (see **Federal Register** notice 52 FR 47745, dated December 11, 1987), also see 51 FR 21208, published on July 11, 1986; 52 FR 26057, published on July 10, 1987 and 53 FR 2619, published on January 29, 1988.

The letter to the Commissioner of Customs and the actions taken pursuant to it are not designed to implement all of the provisions of the bilateral agreement, but are designed to assist only in the implementation of certain of its provisions.

William J. Dulka,

Acting Chairman, Committee for the Implementation of Textile Agreements.

Committee for the Implementation of Textile Agreements

April 12, 1988.

Commissioner of Customs,

Department of the Treasury, Washington, D.C. 20229.

Dear Mr. Commissioner: This directive amends, but does not cancel, the directive issued to you on January 26, 1988 by the Chairman, Committee for the Implementation of Textile Agreements, concerning imports into the United States of certain cotton textile products, produced or manufactured in the Dominican Republic and exported during the period which began on January 1, 1988 and extends through May 31, 1988.

Effective on April 12, 1988, the directive of January 26, 1988 is hereby amended to adjust the current limit for cotton textile products in Categories 347/348 to 477,500 dozen for the period January 1, 1988 through May 31, 1988.

Also effective on April 12, 1988, you are directed to charge the following amounts to the limit established in this directive for Categories 347/348. These charges are for the import period January 1, 1988 through January 31, 1988.

Category	Amount to be charged
347	13,101 dozen.
348	14,662 dozen.

The Committee for the Implementation of Textile Agreements has determined that these actions fall within the foreign affairs exception to the rulemaking provisions of 5 U.S.C. 553(a)(1).

Sincerely,

William J. Dulka,

Acting Chairman, Committee for the Implementation of Textile Agreements.

[FR Doc. 88–8386 Filed 4–15–88; 8:45 am]

BILLING CODE 3510-DR-M

DEPARTMENT OF DEFENSE

Office of the Secretary

Advisory Committee on Integrated Long-Term Strategy; Meeting

ACTION: Notice of Advisory Committee Meeting.

SUMMARY: The Advisory Committee on Integrated Long-Term Strategy will meet in closed session on 10 May 1988 in Room 3E869, The Pentagon, Washington, DC.

The mission of the Advisory Committee on Integrated Long-Term Strategy is to provide the Secretary of Defense and the Assistant to the President for National Security Affairs with an independent, informed assessment of the policy and strategy implications of advanced technologies for strategic defense, strategic offense and theater warfare, including conventional war. At this meeting the Committee will hold classified discussions of national security matters dealing with long term strategy and policy.

In accordance with section 10(d) of the Federal Advisory Committee Act, Public Law No. 92–463, as amended [U.S.C. App. II, (1982)], it has been determined that this Advisory Committee meeting concerns matters listed in 5 U.S.C. 552b(c)(1)(1982), and that accordingly these meetings will be closed to the public.

L.M. Bynum,

Alternate OSD Federal Register Liaison Officer, Department of Defense.

April 12, 1988.

[FR Doc. 88–8389 Filed 4–15–88; 8:45 am]

BILLING CODE 3810-01-M

DEPARTMENT OF ENERGY

Economic Regulatory Administration

Proposed Consent Order With Dorchester Master Limited Partnership and Damson Oil Corporation

AGENCY: Economic Regulatory Administration, Department of Energy.

ACTION: Notice of Proposed Consent Order and opportunity for public comment.

SUMMARY: The Economic Regulatory Administration ("ERA") of the Department of Energy ("DOE") announces a proposed Consent Order with Dorchester Master Limited Partnership ("DMLP") and Damson Oil Corporation ("Damson") for a maximum

amount of $65 million. The settlement requires DMLP to make minimum payments of $11 million plus interest, as well as specified percentages of its annual adjusted net income for the next seven years. The percentage of its annual adjusted net income which DMLP must pay ranges up to 50% of all adjusted net income in excess of $20 million.

DATE: May 16, 1988.

FOR FURTHER INFORMATION CONTACT: Dorothy Hamid, Economic Regulatory Administration, Department of Energy, 1000 Independence Avenue, SW, RG–30, Washington, DC 20585 (202) 586–6900.

SUPPLEMENTARY INFORMATION:

I. Introduction
II. Resolution of Regulatory Issues
A. Areas of Dispute
B. Determination of Maximum Liability
III. Determination of Reasonable Settlement Amount
IV. Terms and Conditions of the Consent Order

I. Introduction

DMLP is a Texas limited partnership formed in 1984. It is the successor to Dorchester Gas Corporation ("Dorchester") by purchase of assets and assumption of liabilities. The acquisition of Dorchester occurred in 1984, after the period of price and allocation controls which are the subject of this Consent Order. Damson is the general partner of DMLP.

On March 19, 1982, the Office of Enforcement of the DOE issued a Proposed Remedial Order ("PRO") on Dorchester, alleging that a Dorchester subsidiary improperly reported the tier classification of certian of its crude oil receipts to the DOE Entitlements Program during the period November 1, 1974 through August 1979.

ERA conducted an intensive audit of Dorchester's compliance with the federal price and allocation regulations. The period audited by the ERA began on November 1, 1974. During the audit, ERA identified instances in which it believed that Dorchester filed reports with the DOE for purposes of the Entitlements Program which demonstrate that Dorchester did not comply with the requirements of the federal price and allocation regulations. The major regulatory area of dispute between DOE and Dorchester, and DMLP as its successor, is whether the activities of Dorchester's refinery subsidiary and its reseller division constituted improper switching of crude oil certifications.

In the lengthy negotiation process leading to this proposed settlement, ERA carefully analyzed the results of the audit, the nature of the alleged regulatory violations, certain factual matters distinguishing this case from other regulatory enforcement matters pursued by ERA, but, most importantly, the substantially impaired financial condition of DMLP and, therefore, its limited ability to respond to any judgment which might be rendered at the end of lengthy and complex enforcement proceedings.

For the alleged miscertification issues covered by this proposed settlement, ERA calculated the maximum amount that could be obtained in a judgment against DMLP to be $54,172,000, plus interest from the date of the alleged violations.

The settlement calls for DMLP to pay a maximum of $65 million. DMLP is required to make minimum payments totalling $11 million, plus interest on those payments, as well as an escalating percentage of its adjusted net income for the next seven years to discharge in full its obligations under the price and allocation regulations, except for those matters specifically excluded from the agreement.

II. Resolution of Regulatory Issues

A. Areas of Dispute

The disputes resolved by the Consent Order include alleged improper allocation of crude oil certifications and improper reporting of crude oil certifications for purposes of the federal price and allocation regulations. These issues were addressed in a PRO issued to Dorchester on March 19, 1982 and a subsequent Remedial Order issued by the Office of Hearings and Appeals ("OHA") on March 11, 1985.

The propriety of the Remedial Order was argued before the Federal Energy Regulatory Commission in 1985; the case has been pending since that time.

B. Determination of Maximum Liability

ERA calculated the maximum amount for which Dorchester might be liable as a result of the issues discussed above. ERA determined this amount by focusing on the change in Dorchester's entitlements position before and after the alleged misreporting of certifications.[1] As a result of Dorchester's method of accounting for crude oil and crude oil certifications, discussed above, Dorchester's entitlements position changed from that of a net purchaser of entitlements to a net seller of entitlements. ERA determined and alleged that the difference between what Dorchester's entitlements payment obligations would have been if it had complied with ERA's view of Dorchester's reporting obligations, and the amount of entitlements payments received by Dorchester as a result of the procedures it followed, constituted an unwarranted benefit equalling the principal amount stated in the Remedial Order.

The proposed settlement also resolves issues related to a Remedial Order issued to Damson and one of its subsidiaries, Doram Energy, Inc. That Remedial Order, and the PRO upon which it was based, alleged that during the period March 1980 through December 1980 Doram and Damson received illegal revenue by reselling crude oil at prices in excess of those permitted by applicable petroleum price and allocation regulations. That Remedial Order alleges that Damson and Doram received illegal revenues totalling $282,141.60, plus interest.

III. Determination of Reasonable Settlement Amount

In determining a reasonable settlement amount for the allegations of regulatory violations discussed above, ERA reviewed several factors. With respect to the merits, ERA considered that the case against Dorchester is based upon certain allegations and interpretations of applicable regulations which have not previously been adopted in any administrative or judicial determination. ERA also considered in its settlement determination, that the calculation of the Dorchester total principal amount of liability, $54 million, did not take into account the fact that Dorchester had sold certain volumes of uncontrolled oil at controlled prices.[2]

A significant factor in arriving at this proposed settlement was ERA's consideration of the current and projected economic condition of DMLP and Damson. DMLP and Damson made available to ERA extensive financial information, including financial statements, tax returns, reserve reports, valuation reports reflecting DMLP's net asset values, both on a going-concern and a liquidation basis, and extensive underlying documents on which the reports, returns and statements were based. As a result of this review, it became apparent to ERA that DMLP would not be capable of satisfying a judgment awarding ERA damages in any

[1] Dorchester and, subsequently, DMLP have maintained throughout the administrative proceedings in this case that Dorchester did not violate applicable regulations because Dorchester maintained overall monthly inventories of crude oil and crude oil certifications which were "in balance."

[2] While realizing entitlements benefits of $54 million (including reduced obligations and increased revenues) Dorchester also "lost" some $42 million by selling crude oil at less than its purchase price.

amount approaching the potential maximum liability alleged by ERA. The ERA noted that DMLP had been required by rules and regulations of the Securities and Exchange Commission to write down significantly its oil and gas assets from book value to the present value of estimated future net revenues, and had also incurred substantial losses on the sale of oil and gas properties to reduce debt. DMLP had also been required to report substantial writedowns associated with assets held for sale and had reported substantial losses from operations since the acquisition of Dorchester.

ERA also considered that its judgment, even if obtained, would be a multiple of the DMLP and Damson combined net worth, yet that judgment liability might well be subordinate to the secured lenders. Consideration of all the foregoing factors led ERA to the conclusion that this settlement is the best method for ERA to realize any recovery in this case. Based on all these considerations—the financial condition of DMLP and Damson, the number and complexity of the legal and factual issues, the time and expense required for the government to fully litigate every issue in order to obtain any recovery, and the low potential for any significant recovery with litigation success—ERA concluded that the resolution of these matters for the amounts prescribed in the proposed Consent Order is an appropriate settlement and is in the public interest.

IV. Terms and Conditions of the Consent Order

The Consent Order provides that DMLP will pay a maximum of $65 million. DMLP will make minimum payments of not less than $11 million. Of those minimum payments, $1 million will be a down payment, payable in two installments. The first installment of $500,000 is to be made on July 1, 1988 with the balance of the down payment due December 1, 1988. Additional minimum payments aggregating $10 million over and above the $1 million down payment will be paid by DMLP, plus interest at 8.25% per annum, in accordance with the following schedule:

Date	Principal amount
July 1, 1989	$900,000
July 1, 1990	900,000
July 1, 1991	1,400,000
July 1, 1992	1,400,000
July 1, 1993	1,800,000
July 1, 1994	1,800,000
July 1, 1995	1,800,000

The Consent Order provides that, upon proper notice, DMLP may postpone payment of up to $400,000 in any year. Fifty percent of the total amount of payments postponed must be paid by July 1, 1996 and the balance of any deferred payments must be paid on July 1, 1997, with interest.

In addition to the foregoing minimum payments DMLP is obligated to pay the DOE certain percentages of its adjusted net income. The percentages of DMLP's adjusted net income which must be paid to the DOE on an annual basis range from 12½% for adjusted net income between $4 million and $5 million to 50% for all amounts of adjusted net income including and in excess of $20 million.

The agreement provides for a limit on DMLP's principal payment obligations to the DOE in the amount of $65 million.

Damson is liable for any payments required by the Consent Order that DMLP fails to pay.

Excepted from the proposed Consent Order are claims and defenses arising out of compliance with the requirements of the Tertiary Incentive Program (10 CFR 212.78).

Submission of Written Comments

The proposed Consent Order cannot be made effective until the conclusion of the public review process, of which this Notice is a part.

Interested parties are invited to submit written comments concerning this proposed Consent Order to: DMLP Consent Order Comments, RG–30, Economic Regulatory Administration, 1000 Independence Avenue, SW., Washington, DC 20585. All comments received by the thirtieth day following publication of this Notice in the **Federal Register** will be considered before determining whether to adopt the proposed Consent Order as a final Order. Any modifications of the proposed Consent Order which significantly alter its terms or impact will be published for additional comment. If, after considering the comments it has received, ERA determines to issue the proposed Consent Order as a final Order, the proposed Order will be made final and effective by publication of a Notice in the **Federal Register**.

Any information or data considered confidential by the person submitting it must be identified as such in accordance with the provision of 10 CFR 205.9(f).

Issued in Washington, DC, on April 12, 1988

Chandler L. van Orman,

Deputy Administrator, Economic Regulatory Administration.

United States Department of Energy, Economic Regulatory Administration, Consent Order With Dorchester Gas Corporation, Dorchester Master Limited Partnership, Doram Energy, Inc., and Damson Oil Corporation

I. Introduction

101. This Consent Order is entered into between Dorchester Master Limited Partnership ("DMLP"), successor by purchase of assets to Dorchester Gas Corporation ("Dorchester"); Damson Oil Corporation ("Damson"); Doram Energy, Inc. ("Doram") and the Economic Regulatory Administration ("ERA") of the United States Department of Energy ("DOE"). Except as specified in paragraph 501(b), this Consent Order settles and finally resolves all pending and potential civil and administrative disputes, claims and causes of action between DOE and DMLP, Dorchester, Doram and Damson arising out of the federal petroleum price and allocation regulations administered and enforced by DOE and its predecessor agencies during the period August 19, 1973 through January 27, 1981 (all matters settled and resolved by this Consent Order are referred to hereinafter as "the matters covered by this Consent Order"). The matters covered by this Consent Order include, but are not limited to (i) a Proposed Remedial Order ("PRO") issued by ERA to Dorchester on March 19, 1982; (ii) a Remedial Order ("RO") issued by the Office of Hearings and Appeals ("OHA") to Dorchester dated March 11, 1985, *Dorchester Gas Corp.* 12 DOE ¶ 83,034, appeal docketed, No. R085–12–000 (FERC April 22, 1985); (iii) a PRO issued to Doram and Damson on March 9, 1983; and (iv) an RO issued to Doram and Damson dated March 12, 1987, *Doram Energy Inc.*, 15 DOE ¶ 83,024, appeal docketed, No. R087–16–000 (FERC April 6, 1987). The PRO and RO issued to Dorchester allege that Dorchester improperly reported the tier classification of certain of its crude oil receipts to the DOE Entitlements Program during the period from November 1, 1974 through August 1979. The PRO and RO issued to Doram and Damson allege that during the period March 1980 through December 1980 Doram and Damson received illegal revenue by reselling crude oil at prices in excess of those permitted by 10 CFR 212.186, 210.62 and 205.202.

II. Jurisdiction, Regulatory Authority and Definitions

201. This Consent Order is entered

into by DOE pursuant to the authority conferred upon DOE by sections 301 and 503 of the Department of Energy Organization Act ("DOE Act"), 42 U.S.C. 7151 and 7193; Executive Order No. 120009, 42 FR 46267 (September 15, 1977); Executive Order No. 12028, 43 FR 4957 (February 7, 1978); and 10 CFR 205.199J.

202. ERA was created by section 206 of the DOE Act, 42 U.S.C. 7136. In Delegation Order No. 0204-4, the Secretary of Energy delegated the responsibility for administration of the federal petroleum price and allocation regulations, including authority to enter into consent orders on behalf of DOE, to the Administrator of the ERA. Authority to enter into this Consent Order on behalf of the DOE has been appropriately delegated to the agency official executing this Consent Order.

203. For purposes of this Consent Order:

(a) "DOE" means the ERA, the Cost of Living Council, the Federal Energy Office, the Federal Energy Administration, the Department of Energy and any predecessor or successor agencies.

(b) "Federal petroleum price and allocation regulations" means all statutory requirements and administrative regulations regarding the pricing and allocation of crude oil and refined petroleum products, including the entitlements and mandatory oil import programs, administered by DOE. For purposes of this Consent Order, the federal petroleum price and allocation regulations include (without limitation) all pricing, allocation, reporting, certification and recordkeeping requirements imposed by or under: the Economic Stabilization Act of 1970, the Emergency Petroleum Allocation Act of 1973, the Federal Energy Administration Act of 1974, and any amendments to those acts; Presidential Proclamation 3279; all applicable DOE regulations codified in 6 CFR Parts 130 and 150 and in 10 CFR Parts 205, 210, 211, 212 and 213; and rules, rulings, guidelines, interpretations, clarifications, manuals, decisions, orders, notices, forms, subpoenas and other pronouncements issued or made by DOE under or with respect to such statutes or regulations.

(c) "Dorchester" means individually and collectively Dorchester Gas Corporation, Dorchester Master Limited Partnership ("DMLP"), successor by purchase of assets to Dorchester Gas Corporation, and the subsidiaries and affiliates thereof, and the successors of each thereof, and the directors, officers, partners, stockholders, agents, representatives and employees of each thereof.

(d) "Damson" means individually and collectively Damson Oil Corporation and the subsidiaries and affiliates thereof, and the successors of each thereof, and the directors, officers, partners, stockholders, agents, representatives and employees of each thereof.

(e) "Doram" means individually and collectively Doram Energy, Inc., and the subsidiaries and affiliates thereof, and the successors of each thereof, and the directors, officers, partners, stockholders, agents, representatives and employees of each thereof.

(f) "The period covered by this Consent Order" means the period from August 19, 1973 through January 27, 1981.

(g) Other terms used herein have the same meaning as in the federal petroleum price and allocation regulations, unless the context suggests otherwise.

III. Facts and Determinations

The stipulated facts and determinations upon which this Consent Order is based are as follows:

301. Dorchester and Doram were corporations that engaged in the business of purchasing and reselling crude oil without substantially changing its form during the period covered by this Consent Order. Dorchester and Doram were therefore "resellers" of crude oil, a "covered product," within the meaning of those terms as defined at 10 CFR 212.31, and were subject to the regulations during such period.

302. During the period covered by this Consent Order, Dorchester owned, operated or controlled the operations of one or more refineries and was therefore a "refiner of crude oil" as that term is defined at 10 CFR 211.62.

303. During the period covered by this Consent Order, Dorchester and Doram negotiated and participated in certain crude oil transactions with other firms.

304. During the period covered by this Consent Order, Dorchester was required to submit Refiner's Monthly Reports under the Entitlements Program pursuant to 10 CFR 211.66 (b) and (h).

305. ERA conducted an audit to determine Dorchester's compliance with the regulations during the period covered by this Consent Order. The audit resulted in the issuance of a PRO (Case No. 6A0X00278) and an RO (Case No. HRO-0045) to Dorchester.

306. ERA conducted an audit to determine Doram's and Damson's compliance with the regulations during the period covered by this Consent Order. The audit resulted in the issuance of a PRO (Case No. 640X00450) and an RO (Case No. HRO-0149) to Doram and Damson.

IV. Terms and Conditions

401. In full and final settlement of all matters covered by this Consent Order, and in lieu of all other remedies which have been or might be sought by the DOE against Dorchester, DMLP, Damson and Doram for such matters under 10 CFR 205.199J or otherwise, DMLP agrees to payment in the manner specified in the paragraphs below. Payments shall be by wire tranfer, pursuant to directions to be provided to DMLP by DOE. If DMLP shall fail to make any payment required pursuant to this Consent Order, then Damson shall be held liable to the same extent DMLP is liable for such payment.

402(a). *Floor:* Payment of not less than $11 million will be made by DMLP to the DOE or its designee as provided below.

402(b). *Down Payments:* Of the $11 million, $1 million will be paid as follows:

July 1, 1988	$500,000
December 1, 1988	$500,000 additional

402(c). *Additional Minimum Payments:* DMLP will pay to the DOE the following additional minimum payments (the "Additional Payments") aggregating $10 million over and above the $1 million provided in paragraph 402(b):

July 1, 1989	$900,000
July 1, 1990	900,000
July 1, 1991	1,400,000
July 1, 1992	1,400,000
July 1, 1993	1,800,000
July 1, 1994	1,800,000
July 1, 1995	1,800,000

Provided, however, that DMLP may, at its election, by 30 days' notice to the DOE, postpone payment of up to $400,000 in any year, such postponed payment or payments to be payable 50% on July 1, 1996, and 50% on July 1, 1997, with interest (as set forth in paragraph 402(i)) to the date of payment.

402(d). *Participation payments:* In addition to the Additional Payments provided for in paragraph 402(c), adjusted net income participation payments (hereinafter "Participation Payments") shall be paid, if and to the extent required by the formula set forth below, by DMLP to the DOE on July 1, 1989, 1990, 1991, 1992, 1993, 1994 and 1995, each of such dates being

denominated a "Calculation Date". Such Participation Payment on each such calculation date will consist in each case of an amount equal to DMLP's adjusted net income (as defined in paragraph 402(e) and Exhibits thereto) for the year ending on the preceding December 31, multiplied by the applicable participation percentage set forth below.

The participation percentages shall be as follows:

12½%—Adjusted net income from $4 million to $4,999,999.99;

22½%—Adjusted net income from $5 million to $9,999,999.99;

32½%—Adjusted net income from $10 million to $14,999,999.99;

42½%—Adjusted net income from $15 million to $19,999,999.99;

50%—Adjusted net income on amounts including and in excess of $20 million.

In calculating Participation Payments, the following loss carryforward provision shall apply. To the extent that DMLP realizes negative Adjusted Net Income in any two consecutive fiscal years aggregating more than $4 million, the amount by which the aggregated negative Adjusted Net Income exceeds $4 million ("Loss Carryforward") may be carried over to the two succeeding years following the consecutive loss years. The Loss Carryforward may be used to offset positive Adjusted Net Income, if any, in the two succeeding years, but may not be used to reduce Adjusted Net Income below zero. The amount of the Loss Carryforward to the second succeeding year shall be reduced by any Loss Carryforward used to offset Adjusted Net Income in the first succeeding year following the establishment of the Loss Carryforward. Any Loss Carryforward not so used in the two consecutive years following the establishment of the Loss Carryforward shall not be considered in the determination of Adjusted Net Income for subsequent years.

For purposes of this paragraph, each consecutive two-year period shall be considered independently for determining any Loss Carryforward, *i.e.*, subject to the effects of paragraph 402(f), each consecutive two-year period shall mean 1988 and 1989; 1989 and 1990; 1990 and 1991; 1991 and 1992; 1992 and 1993; and 1993 and 1994.

402(e). *Definitions:* In determining DMLP's Adjusted Net Income, the definitions and accounting procedures annexed hereto as Exhibits A, B, and C and made a part hereof shall conclusively apply.

402(f). *Change in fiscal year.* If DMLP shall change its fiscal year from the current calendar year basis, or similarly if following a Business Combination as defined in Exhibit C, the successor firm's fiscal year is other than a calendar year, then the following shall apply: (a) The provisions of paragraph 492(b) and paragraph 402(c) shall remain unchanged; (b) the Calculation Dates in paragraph 402(d) shall, as required, be changed to dates six months after the end of each fiscal year, except that for that particular fiscal year that includes December 31, 1994, the Calculation Date shall remain July 1, 1995; (c)(i) for the transition year to a non-calendar fiscal year, the participation payment provided for in paragraph 402(d) shall be calculated by taking the Adjusted Net Income for the period from the close of the previous full fiscal year to the opening date of the new fiscal year, and multiplying such Adjusted Net Income by the applicable participation percentages set forth in paragraph 402(d), and multiplying the resulting amount by a fraction the numerator of which is the number of days in the calculation period and the denominator of which is 365, and (c)(ii) for the fiscal year including December 31, 1994, the participation payment shall be calculated by taking the Adjusted Net Income for the period from the beginning of the fiscal year including December 31, 1994, multiplying this amount by the applicable participation percentages in section 402(d), and multiplying the resulting amount by a fraction the numerator of which is the number of days in the calculation period and the denominator of which is 365; and (d) the transition period shall be considered as a separate period for the purpose of detemining whether a Loss Carryforward exists, and the aggregate loss including the transition period and the full fiscal year preceding or succeeding the transition period shall be required to exceed an amount equal to (i) the sum of 365 plus the number of days in the transition period, (ii) divided by 730, (iii) multiplied by $4 million.

402(g). *Access to records.* DMLP will provide to the DOE 45 days prior to each Calculation Date a complete set of its audited financial statements for the preceding fiscal year end, or the audited financial statements for any successor firm resulting from a Business Combination as defined in Exhibit C of this Consent Order. DMLP will also provide to the DOE at the same time a summary calculation sheet applying the formula, and all supporting schedules, relevant to the Adjusted Net Income calculations specified in Exhibits A, B, and C. Notwithstanding the above, the DOE at all times during the term of this Consent Order reserves the right to review the books and records of DMLP or any successor firm during normal business hours and upon prior written notice.

402(h). *Split year.* If there is a Business Combination as defined in Exhibit C to the Consent Order, Adjusted Net Income for the year of the combination shall be calculated using the definitions in Exhibits A and C for the portion of the fiscal year preceding and the portion of the fiscal year following the effective date of the Business Combination, respectively, and the results so calculated shall be added for the purpose of determining the Participation Payment, if any, due to the DOE in accordance with paragraph 402(d) of this Consent Order.

402(i). *Interest:* Interest at the rate of 8.25% per annum shall accrue and be paid on the then total unpaid balance of the down payments specified in paragraph 402(b) ($1 million) and the Additional Payments specified in paragraph 402(c) ($10 million), but not on the Participation Payments. Such interest payments as accrued shall be paid on the due date of each Additional Payment specified in paragraph 402(c). Interest due in accordance with the above shall be calculated from the date thirty (30) days after the effective date of this Consent Order until the date of payment.

With respect to the Participation Payments due and payable on each Calculation Date, interest at the then prime rate as published in the *Federal Reserve Bulletin* shall accrue and be paid on any Participation Payment balance remaining unpaid for thirty (30) days beyond the respective Calculation Date.

402(j). *Acceleration:* Acceleration of payments made pursuant to paragraphs 402(b) and 402(c) may be made at the election of DMLP without penalty, but any amount accelerated shall be credited to DMLP for purposes of calculating its Adjusted Net Income and DOE's participation therein only in the year such payment would have been due pursuant to the schedule set out in paragraph 402(c).

402(k). *Term of agreement: Cap for all payments:* The term of this Consent Order will expire on the earlier of (i) the date on which the last payment pursuant to paragraph 402(c) is made but in no event prior to July 1, 1995, or (ii) the date on which DMLP has paid to the DOE a total of $65 million, exclusive of interest payments, provided, however, that in the event of DMLP's bankruptcy, the DOE's claim shall be reduced to $11 million plus accrued interest (less all prior principal

payments made pursuant to paragraphs 402(b) and 402(c)).

V Issues Resolved

501(a). With the exception of proceedings related to the PRO's and RO's identified in Paragraphs 305 and 306, Dorchester, DMLP, Doram and Damson warrant that there is no litigation pending against the DOE initiated by or participated in by Dorchester or Doram which in any way relates to or arises out of the Federal Petroleum Price and Allocation Regulations or related claims arising under the Freedom of Information Act, as amended, 5 U.S.C. 552 ("FOIA"). Dorchester, DMLP, Doram and Damson hereby agree to release any and all claims, demands, liabilities or causes of action that Dorchester, DMLP, Doram or Damson have asserted or might be able to assert against DOE, and any employee of DOE, in any manner related to compliance with the Federal Petroleum Price and Allocation Regulations governing crude oil and other covered products during the period covered by this Consent Order.

501(b). Claims, counterclaims, cross-claims, third-party claims and defenses related to or arising out of compliance with the requirements of the Tertiary Incentive Program (10 CFR 212.78) are specifically exempted from the matters coverd by this Consent Order.

502(a). Compliance by Dorchester, DMLP, Doram and Damson with this Consent Order shall be deemed by DOE to constitute full compliance by Dorchester, DMLP, Doram and Damson for all civil purposes with the Federal Petroleum Price and Allocation Regulations for the matters covered by this Consent Order. In consideration of performance by DMLP and Doram under this Consent Order, DOE hereby releases completely and for all purposes all administrative and civil judicial claims, demands, liabilities, or causes of action, specifically including claims for civil penalties and including all issues and claims raised by DOE in the PRO issued to Dorchester on March 19, 1982 (Case No. 6A0X00278), the RO issued to Dorchester (Case No. HR0–0045), the PRO issued to Doram and Damson (Case No. 640X00450) and the RO issued to Doram and Damson (Case No. HR0–0149), that it has asserted or may otherwise be able to assert against Dorchester, DMLP, Doram or Damson, before or after the date of this Consent Order, for alleged violations of the Federal Petroleum Price and Allocation Regulations during the period covered by this Consent Order. DMLP within seven days of the effective date hereof, shall notify the Federal Energy Regulatory Commission that the pending RO appeal proceedings referred to in paragraph 101 hereof have been resolved by this Consent Order and shall request that those appeals be dismissed with prejudice accordingly. DOE will not, except as explicitly provided in paragraph 701 herein, initiate or prosecute any civil matter against Dorchester, DMLP, Doram or Damson with respect to the matters covered by this Consent Order or cause or refer any such matter to be initiated or prosecuted, or directly or indirectly aid in the initiation of any such civil matter.

502(b). Nothing contained herein shall preclude DOE from defending the validity of the Federal Petroleum Price and Allocation Regulations. DOE also reserves the right to initiate and prosecute enforcement actions against any party other than Dorchester, DMLP, Damson and Doram for non-compliance with the Federal Petroleum Price and Allocation Regulations.

502(c). DOE expressly agrees that it will not seek or recommend any criminal fines or penalties against Dorchester, DMLP, Damson or Doram based solely on the information and evidence in its possession at present for the matters covered by this Consent Order; provided that nothing in this Consent Order precludes DOE from exercising its obligations under law with regard to forwarding information of possible criminal violations of law to the appropriate authorities. In addition, the DOE will not otherwise contest Dorchester's, DMLP's, Doram's or Damson's compliance with the Federal Petroleum Price and Allocation Regulations covering crude oil and other covered products during the period covered by this Consent Order. Nothing contained herein may be construed as a bar, an estoppel, or a defense against any criminal action, or against any civil action brought by any purchaser of crude oil, or against any civil action brought under any statute or regulation other than the Federal Petroleum Price and Allocation Regulations. Finally, this Consent Order does not affect or prejudice any private action brought by a third party against Dorchester, DMLP, Doram or Damson or by Dorchester, DMLP, Doram or Damson against any third parties, including any action for contribution, nor may this Consent Order be used to establish, enlarge, or abridge the rights of third parties seeking contribution from Dorchester, DMLP, Doram or Damson or the rights of Dorchester, DMLP, Doram or Damson to seek contribution from third parties.

503. Execution of this Consent Order constitutes neither an admission by Dorchester, DMLP, Doram or Damson nor a finding by DOE of any violation by Dorchester, DMLP, Doram or Damson of any statute or any regulation. DOE has determined that it is not appropriate to seek to impose civil penalties against Dorchester, DMLP, Doram or Damson for the period covered by this Consent Order and the issues resolved by this Consent Order, and DOE expressly agrees that it will not seek any such civil penalties against Dorchester, DMLP, Doram or Damson.

504. Notwithstanding any other provision in this Article V with respect to the matters covered by this Consent Order, DOE reserves the right to initiate an enforcement proceeding or to seek appropriate penalties for newly discovered regulatory violations committed by Dorchester, DMLP, Doram or Damson, but only on the ground that Dorchester, DMLP, Doram or Damson concealed facts relating to such violations. DOE also reserves the right to seek appropriate judicial remedies, other than full rescission of this Consent Order, for any misrepresentation of a material fact made by Dorchester, DMLP, Doram or Damson during the course of the audits or during the course of the negotiations that preceded this Consent Order or upon discovery of information that is materially inconsistent with the information upon which this agreement is based.

VI. Public Disclosure, Recordkeeping and Confidentiality

601. To assist the DOE in the distribution of the payments made pursuant to this Consent Order, DMLP and Damson shall preserve their respective existing records relating to the two proceedings identified in paragraphs 305 and 306, and DMLP shall maintain such records as are necessary to comply with the terms of this Consent Order. Except as otherwise provided in this Consent Order, upon completion of DMLP's compliance with the terms of paragraphs 401 through 402(e), DMLP is relieved of its obligation to comply with the recordkeeping requirements of the regulations relating to the matters settled by this Consent Order.

602. This Consent Order is subject to public disclosure pursuant to the requirements of the FOIA. Dorchester, DMLP, Doram and Damson waive all claims they may have that some or all of the information contained in this Consent Order is exempt from the mandatory public disclosure requirements of the FOIA, is information referred to in 18 U.S.C. 1905, or is

otherwise exempt by law from public disclosure.

603. The DOE will treat any sensitive commercial and financial information obtained from Dorchester, DMLP, Doram and Damson as confidential and proprietary and will not disclose such information unless required to do so by law, including a request by a duly authorized committee or subcommittee of Congress. The DOE will provide Dorchester, DMLP, Doram and Damson with ten (10) days' advance notice, if possible, of any pending disclosure of any such information, unless prohibited or precluded from doing so by law or request of Congress. The DOE will retain information it has acquired from Dorchester, DMLP, Doram and Damson in accordance with DOE's established record retention procedures. Notwithstanding the otherwise confidential treatment afforded such information by the terms of this Consent Order, the DOE will make such information available to the Department of Justice ("DOJ") in response to the request pursuant to DOJ's statutory authority by a duly authorized representative of the DOJ. If so requested by the DOJ, the DOE shall not disclose that such a request has been made. Nothing in this paragraph shall be deemed to waive or prejudice any right Dorchester, DMLP, Doram and Damson may have independent of this Consent Order regarding the disclosure of sensitive commercial and financial information. Notwithstanding this paragraph, DOE may use information and documents obtained from Dorchester, DMLP, Doram and Damson in connection with any investigation, administrative proceeding or judicial proceeding to which DOE is a party.

VII. Contractual Undertaking

701. It is the understanding and express intention of DMLP, Doram, Damson and DOE that this Consent Order constitutes a legally enforceable contractual undertaking that is binding on the parties and their successors and assigns. Notwithstanding any other provisions herein, DMLP, Doram, Damson and DOE each reserves the right to institute a civil action in a appropriated United States District Court, if necessary, to secure enforcement of the terms of this Consent Order, and DOE also reserves the right to seek appropriate penalties and interest for any failure to comply with the terms of this Consent Order. Consistent with departmental policy, DOE will undertake the defense of this Consent Order, upon its becoming effective as a final order, in response to any litigation challenging the Consent Order's validity in which DOE is named as a party. DMLP, Doram and Damson agree to cooperate with DOE in the defense of any such challenge.

VIII. Final Order

801. Upon becoming effective, this Consent Order shall be a final order of DOE having the same force and effect as a Remedial Order issued pursuant to Section 503 of the DOE Act, 42 U.S.C. 7139, and 10 CFR 205.199B. As required by section 205.199J, DMLP, Doram and Damson each hereby waive their right to administrative or judicial review of this order.

IX. Effective Date

901. This Consent Order shall become effective as a final order of DOE upon notice to that effect being published in the **Federal Register**. Prior to that date, DOE will publish notice in the **Federal Register** and in that notice will provide not less than thirty (30) days for members of the public to submit written comments to DOE. DOE will consider all written comments to determine whether to adopt the Consent Order as a final order, to withdraw agreement to the Consent Order, or to attempt to renegotiate the terms of the Consent Order.

X. Communications

1001. Communications or notices to be given by DMLP or Damson to the DOE shall be given by certified or registered mail, return receipt requested, to the following address: Economic Regulatory Administration, Office of Chief Counsel, RG–30, Department of Energy, Forrestal Building, 1000 Independence Avenue, SW., Washington, DC 20585.

or such address as the DOE shall substitute by like notice.

1002. Communications or notices to be given by the DOE to DMLP or Damson shall be given in like manner to the following addresses:

William T. Ouzts, Executive Vice President, Oil & Gas Division, Dorchester Master Limited Partnership, c/o Damson Oil Tower, 398 West Greens Road, P.O. Box 439, Houston, Texas 77210

and

Joel Negrin, Vice President and Co-General Counsel, Damson Oil Corporation, 366 Madison Avenue, New York, NY 10017

or such address as DMLP or Damson shall substitute by like notice.

I, the undersigned, a duly authorized representative of Dorchester Master Limited Partnership, successor by purchase of assets to Dorchester Gas Corporation, hereby agree to and accept on behalf of DMLP the foregoing Consent Order.

By: Damson Oil Corporation, General Partner

By Joel Negrin,

Vice President, Co-General Counsel.

Date: March 29, 1988.

I, the undersigned, a duly authorized representative of Damson Oil Corporation, hereby agree to and accept on behalf of Damson Oil Corporation the foregoing Consent Order.

Joel Negrin,

Vice President, Co-General Counsel.

Date: March 29, 1988.

I, the undersigned, a duly authorized representative of Doram Energy, Inc., hereby agree to and accept on behalf of Doram Energy, Inc. the foregoing Consent Order.

By: Joel Negrin,

Vice President, Deputy General Counsel.

Date: March 29, 1988.

I, the undersigned, a duly authorized representative of DOE, hereby agree to and accept on behalf of DOE the foregoing Consent Order.

Chandler L. van Orman,

Acting Administrator, Economic Regulatory Administration.

Date: April 4, 1988.

Exhibit A

"Adjusted Net Income" shall mean on an annual basis DMLP's audited net income or net loss for each calendar year period determined in accordance with Generally Accepted Accounting Principles, applied on a consistent basis, and adjusted to include or exclude the following items:

(i) Exclude Depreciation, Depletion and Amortization as reported for such period, including economic limit write-down;

(ii) Exclude all non-cash items of other income and other expense; however, such amounts shall be included in subsequent years to the extent such amounts are received or disbursed;

(iii) Include cash receipts from property sales and assets classified per the December 31, 1987 balance sheet as an Asset Held for Sale and exclude all reported gains or losses on the sale of such assets;

(iv) Include as an expenditure the retirement of Indebtedness, which shall mean for this purpose the payment or prepayment of debt (except for prepayments of Additional Payments, which prepayments are deductible only as provided in paragraph 402(j)) and does not occur upon the refinancing of such debt but only when the refinanced debt is paid or prepaid;

(v) Include as an expenditure capital expenditures required to operate existing oil and gas assets and gas plants in an efficient manner (excluding capital expenditures for primary and exploratory drilling activities) but limited in amount to $11 million on a cumulative basis during the term of this Consent Order;

(vi) Include any reasonable payments for liabilities accrued per DMLP's December 31, 1987, audited balance sheet but excluding amounts payable to the DOE pursuant to this Consent Order, which payments are included in Exhibit B, part (iii), of this Consent Order and excluding any trade payables associated with the normal operations of DMLP's oil and gas and gas plant assets, and

(vii) Exclude General and Administrative expenses exceeding $4.6 million in 1988, $4.3 million in 1989 and $4.0 million per annum for each year subsequent to 1989, adjusted for increases in the Consumer Price Index as of the year-end at which the particular computation is made.

Nothing herein shall be construed as permitting a deduction for distributions to the General Partner or the Limited Partners, which distributions are hereby specifically defined as non-deductible.

Exhibit B

"Indebtedness" shall mean amounts outstanding as of Decembver 31, 1987, pursuant to (i) DMLP's outstanding bank loan agreement dated April 30, 186, as amended, (ii) DMLP's 8 ½% Convertible Subordinated Debentures, (iii) any indebtedness created or incurred to effectuate any subsequent refinancing of the indebtedness represented by (i) and (ii) above, and (iv) the amounts payable pursuant to the Consent Order in the matter known as In re: Dorchester Gas Corporation Docket No. RO 85-12-000.

Exhibit C

"Determination of Adjusted Net Income Assuming Future Business Combination" shall mean on an annual basis (i) the sum of oil and gas sales, revenue from natural gas processing, interest and other income (excluding non-cash income items; however, such non-cash amounts shall be included in subsequent years to the extent such amounts are received, and there shall be excluded gain on the sale of oil and gas assets, gas plants and Assets Held for Sale), all of which must be specifically identifiable to the DMLP operations, plus (ii) cash receipts from the sale of DMLP's oil and gas assets, gas plants and Assets Held for Sale (classified per the December 31, 1987, balance sheet as an Asset Held for Sale) minus (iii) the sum of lease operating expense, production and windfall profit taxes (or other similar taxes), costs of natural gas processing, other expenses (adjusted to exclude non-cash charges to operations; however, such non-cash amounts shall be included in subsequent years to the extent such amounts are disbursed), and capital expenditures required to operate existing oil and gas and gas plant facilities in an efficient manner but limited in an amount to $11 million on a cumulative basis during the term of this Consent Order (excluding capital expenditures for primary and exploratory drilling activities) all of which must be specifically identifiable to the DMLP operation, minus (iv) an assumed General and Administrative expense equal to the following amounts adjusted for increase in the Consumer Price Index as of the year end at which the particular computation is made: $4.6 million in 1988, $4.3 million in 1989 and $4.0 million per year for each year for each year subsequent to 1989, minus (v) an amount equal to the total indebtedness as of the date of the Business Combination, divided by the years (or fractions therof) remaining on the term of the Participation Payments, adjusted to include any proceeds resulting from the sale of assets included in (ii) above (Adjusted Indebtedness), in which case the amount for subsequent years shall be recalculated to reflect the Adjusted Indebtedness calculated above divided by the years (or fractions therof) remaining on the term of the Participation Payments, minus (vi) interest expense equal to the percentage of total interest expense of the new combined entity, such percentage being determined at the time of the Business Combination based on the indebtedness which DMLP is contributing to the Business Combination as a percentage of all indebtedness of the combined entity immediately after the Business Combination and minus (vii) reasonable payments for liabilities accrued per DMLP's December 31, 1987 audited balance sheet but excluding amounts payable to the DOE pursuant to this Consent Order, which payments are included in Exhibit B, part (iv), of this Consent ORder and excluding any trade payables associated with the normal operations of DMLP's oil and gas and gas plant assets.

A Business Combination shall mean and include a merger, purchase or sale of asset, consolidation or similar transaction in which DMLP is a party.

Nothing herein shall be construed as permitting a deduction for distributions to general or limited partners or to shareholders of a corporation, all of which are hereby specifically defined as non-deductible.

[FR Doc. 88-8408 Filed 4-15-88; 8:45 am]

BILLING CODE 6450-01-M

[ERA Docket No. 88-16-NG]

IGI Resources, Inc.; Application To Amend Authorization To Import Natural Gas From Canada

AGENCY: Economic Regulatory Administration, DOE.

ACTION: Notice of application to amend blanket authorization to import natural gas from Canada.

SUMMARY: The Economic Regulatory Administration (ERA) of the Department of Energy (DOE) gives notice of receipt on March 24, 1988, of an application from IGI Resources, Inc. (IGI), a wholly-owned subsidiary of Intermountain Gas Industries, Inc., an Idaho corporation, to amend its blanket authorization to import Canadian natural gas for short-term sales in the domestic spot market. Authorization is requested to import up to 50 Bcf of Canadian natural gas per year for a two-year term beginning on August 1, 1988, the expiration date of its current import authorization.

IGI proposes to submit quarterly reports giving details of individual transactions in the month following each calendar quarter. Quarterly reports filed with the ERA indicate that IGI has imported 3,176 MMcf of natural gas under its current import authorization as of December 31, 1987.

The application is filed with the ERA pursuant to section 3 of the Natural Gas Act and DOE Delegation Order No. 0204-111. Protests, motions to intervene notices of intervention and written comments are invited.

DATE: Protests, motions to intervene or notices of intervention, as applicable, requests for additional procedures and written comments are to be filed no later than May 18, 1988.

FOR FURTHER INFORMATION CONTACT:

Robert M. Stronach, Natural Gas Division, Economic Regulatory Administration, Forrestal Building, Room GA-076, 100 Independence Avenue SW., Washington, DC 20585, (202) 586-9622

Diane J. Stubbs, Natural Gas and Mineral Leasing, Office of General Counsel, U.S. Department of Energy, Forrestal Building, Room 6E-042, 1000 Independence Avenue SW., Washington, DC 20585, (202) 586-6667

SUPPLEMENTARY INFORMATION: IGI proposes to purchase the volumes of

natural gas from various individual producers or pipelines for its own account or for others and to resell those imported volumes on the short-term or spot market to purchasers in the U.S. Since IGI intends to utilize existing pipeline facilities for the transportation of the volumes imported, the proposal does not contemplate the construction of any new domestic facilities.

The decision on this application will be made consistent with the DOE's gas import policy guidelines, under which the competitiveness of an import arrangement in the markets served is the primary consideration in determining whether it is in the public interest (49 FR 6684, February 22, 1984). Parties that may oppose this application should comment in their responses on the issue of competitiveness as set forth in the policy guidelines. The applicant asserts that this import arrangement is competitive. Parties opposing the arrangement bear the burden of overcoming this assertion.

All parties should be aware that if the ERA approves this request to amend a blanket import, it may designate a total amount of authorized volumes for the term rather than any annual limit, in order to provide the applicant with maximum flexibility of operation.

Public Comment Procedures

In response to this notice, any person may file a protest, motion to intervene or notice of intervention, as applicable, and written comments. Any person wishing to become a party to the proceeding and to have the written comments considered as the basis for any decision on the application must, however, file a motion to intervene or notice of intervention, as applicable. The filing of a protest with respect to this application will not serve to make the protestant a party to the proceeding, although protests and comments received from persons who are not parties will be considered in determining the appropriate action to be taken on the application. All protests, motions to intervene, notices of intervention, and written comments must meet the requirements that are specified by the regulations in 10 CFR Part 590.

Protest, motions to intervene, notices of intervention, requests for additional procedures, and written comments should be filed with the Natural Gas Division, Office of Fuels Programs, Economic Regulatory Administration, Room GA-076, RG-23, Forrestal Building, 1000 Independence Avenue SW., Washington, DC 20585, (202) 586-9478. They must be filed no later than 4:30 p.m. e.d.t., May 18, 1988.

The Administrator intends to develop a decisional record on the application through responses to this notice by parties, including the parties' written comments and replies thereto. Additional procedures will be used as necessary to achieve a complete understanding of the facts and issues. A party seeking intervention may request that additional procedures be provided, such as additional written comments, an oral presentation, a conference, or trial-type hearing. Any request to file additional written comments should explain why they are necessary. Any request for an oral presentation should identify the substantial question of fact, law, or policy at issue, show that it is material and relevant to a decision in the proceeding, and demonstrate why an oral presentation is needed. Any request for a conference should demonstrate why the conference would materially advance the proceeding. Any request for a trial-type hearing must show that there are factual issues genuinely in dispute that are relevant and material to a decision and that a trial-type hearing is necessary for a full and true disclosure of the facts.

If an additional procedure is scheduled, the ERA will provide notice to all parties. If no party requests additional procedures, a final opinion and order may be issued based on the official record, including the application and responses filed by parties pursuant to this notice, in accordance with 10 CFR 590.316.

A copy of IGI's application is available for inspection and copying in the Natural Gas Division Docket Room, GA-076-A at the above address. The docket room is open between the hours of 8:00 a.m. and 4:30 p.m., Monday through Friday, except Federal holidays.

Issued in Washington, DC, April 11, 1988.

Constance L. Buckley,

Director, Natural Gas Division, Office of Fuels Programs, Economic Regulatory Administration.

[FR Doc. 88-8393 Filed 4-15-88; 8:45 am]

BILLING CODE 6450-01-M

Energy Information Administration

Petroleum Supply Reporting System (PSRS) Forms

AGENCY: Energy Information Administration, Department of Energy.

ACTION: Solicitation of comments concerning proposed changes to the Petroleum Supply Reporting System Forms.

SUMMARY: The Energy Information Administration (EIA), as part of its continuing effort to reduce paperwork and respondent burden, (required by the Paperwork Reduction Act of 1980), conducts a consultation program to provide the general public with an opportunity to comment on proposed and continuing reporting forms. This program ensures that requested data can be provided in the desired format, reporting burden is minimized, reporting forms are clearly understood, and the impact of collection requirements on respondents can be properly assessed.

Currently, EIA is soliciting comments on the extension of its PSRS forms for three years. The forms which cover petroleum supply and disposition are the "Weekly Refinery Report," EIA-800; "Weekly Bulk Terminal Report," EIA-801; "Weekly Product Pipeline Report," EIA-802; "Weekly Crude Oil Stocks Report," EIA-803; "Weekly Imports Report," EIA-804; "Weekly Crude Watch Report," EIA-806; "Monthly Refinery Report," EIA-810; "Monthly Bulk Terminal Report," EIA-811; "Monthly Product Pipeline Report," EIA-812; "Monthly Crude Oil Report," EIA-813; "Monthly Imports Report," EIA-814; "Monthly Natural Gas Liquids Report," EIA-816; "Monthly Tanker and Barge Movement Report," EIA-817; "Monthly International Energy Agency Imports/Stocks-At-Sea Report," EIA-818; "Annual Refinery Report," EIA-820; and the "Petroleum Facility Operator Identification Survey," EIA-825.

DATE: Written comments must be submitted by May 18, 1988.

ADDRESS: Send written comments to: Audrey E. J. Corley, Office of Oil and Gas, Energy Information Administration, Department of Energy, Mail Stop 2H-058, 1000 Independence Avenue SW., Washington, DC 20585. Telephone (202) 586-1149.

FOR FURTHER INFORMATION OR TO OBTAIN COPIES OF THE PROPOSED FORMS AND INSTRUCTIONS: To obtain additional information or copies of the proposed forms, contact Ms. Corley at the address or telephone number listed above.

SUPPLEMENTARY INFORMATION:

I. Background
II. Current Actions
III. Request for Comments

I. Background

In order to fulfill its responsibilities under the Federal Energy Administration Act of 1974 (Pub. L. 93-275), and the Department of Energy (DOE) Organization Act (Pub. L. 95-91), the Energy Information Administration (EIA) is obliged to publish, and

otherwise make available to the public, high-quality statistical data that accurately reflect national and regional petroleum supply activity.

To meet this responsibility, as well as internal DOE requirements that are dependent on accurate data, the EIA conducts statistical surveys that encompass each significant primary petroleum supply activity in the United States.

II. Current Actions

EIA proposes only minor changes and modifications to the forms. These changes will reduce respondent burden and better reflect current industry operations. A change that has been made to all monthly and annual surveys is the addition of a comment field to allow respondents the opportunity to explain any unusual aspects of their company's operations as they relate to the reported data. The purpose of this is to obviate the need for EIA to contact respondents when an unusual value is encountered.

The prposed changes are summarized below:

1. Form EIA–810 (Monthly Refinery Report)
   a. Eliminate the reporting of beginning-of-month stocks.
   b. Begin collecting data on inputs and production of naphthenic and paraffinic lubricants.
   c. Begin collecting data on inputs and production of ethylene, propylene, and butylene separately.
2. Form EIA–812 (Monthly Product Pipeline Report)
   a. Begin collecting data on movements of Liquefied Petroleum Gases (LPGs) and Liquefied Refinery Gases (LRGs) on a component basis.
3. Form EIA–814 (Monthly Imports Report)
   a. Begin collecting data on imports into the Virgin Islands.
4. Form EIA–816 (Monthly Natural Gas Liquids Report)
   a. Eliminate the reporting of beginning-of-month stocks.
   b. Eliminate the reporting of products other than natural gas liquids.
   c. Eliminate the reporting of beginning-of-month stocks for fractionators.
5. Form EIA–817 (Monthly Tanker and Barge Movement Report)
   a. Begin collecting data on movements of Liquefied Petroleum Gases (LPGs) and Liquefied Refinery Gases (LRGs) on a component basis.
6. Petroleum Electronic Data Reporting Option (PEDRO)
   a. Begin voluntary collection of petroleum supply data in machine-readable form via electronic transmission.
   b. Provide respondents with error detection and correction capability prior to form submission.

III. Request for Comments

The EIA invites the public to comment on these proposed changes within 30 days of the publication of this notice. The following guidelines are provided to assist in the preparation of responses. When providing comments, please indicate the form(s) to which each comment applies.

As a potential respondent:

A. Do the proposed changes impose an unreasonable burden increase or ask for information not readily available?

B. Are the instructions and definitions clear and sufficient? If not, which instructions require clarification?

C. Can the data be submitted using the definitions included in the instructions?

D. Can the data be submitted in accordance with the response date specified in the instructions?

E. How many hours, including time for preparation and administrative review, would you require to complete and submit the required form(s)?

F. What is the estimated cost of completing the form(s), including the direct and indirect costs associated with the data collection? Direct costs should include all costs, such as administrative costs, development, assembly, equipment, ADP and any other one-time or recurring costs.

G. Estimate the cost in subsequent years of reporting.

H. How can the form(s) be improved?

I. Do you know other Federal, State, or local agenices that collect similar data? If yes, specify the agency, the data elements, and the means of collection.

As a potential data user:

A. Can you use data at the levels of detail indicated on the form(s)?

B. For what purposes would you use the data? Be specific.

C. How could the form(s) be improved to better meet your specific needs?

D. Are there alternate sources of data and do you use them? What are their deficiencies and/or strengths?

The EIA is also interested in receiving comments from persons regarding their views on the need for the collection of the information contained in the Petroleum Supply Reporting System Surveys.

Comments submitted in response to this notice will be summarized and/or included in the request for OMB approval of these data surveys and will become a matter of public record.

Statutory Authority: Secs. 5(a), 5(b), 13(b), and 52 of Pub. L. 93–275, Federal Energy Administration Act of 1974, as amended (15 U.S.C. § 764(a), 764(b), 772(b), and 790(a)).

Issued in Washington, DC, on April 13, 1988.

Yvonne M. Bishop,

Director, Statistical Standards, Energy Information Administration.

[FR Doc. 88–8409 Filed 4–15–88; 8:45 am]

BILLING CODE 6450-01-M

Federal Energy Regulatory Commission

[Docket Nos. CP88–330–000 et al.]

Natural Gas Pipeline Co. of America et al; Natural Gas Certificate Filings

Take notice that the following filings have been made with the Commission:

1. Natural Gas Pipeline Company of America

[Docket No. CP88–330–000]

April 11, 1988.

Take notice that on April 6, 1988, Natural Gas Pipeline Company of America (Natural), 701 East 22nd Street, Lombard, Illinois, 60148, filed in Docket No. CP88–330–000 a request pursuant to §§ 157.205 and 284.223 of the Regulations under the Natural Gas Act for authorization to provide a transportation service for Illinois Power Company (IPC) under the certificate issued in Docket No. CP86–582–000 pursuant to section 7 of the Natural Gas Act, all as more fully set forth in the request with the Commission and open to public inspection.

Natural states that it proposes to transport on an interruptible basis up to a maximum of 200,000 MMBtu equivalent of natural gas per day (plus any additional volumes accepted pursuant to the overrun provisions of Natural's Rate Schedule ITS) for IPC from 145 receipt points located in Oklahoma, Texas, offshore Texas, Arkansas, Kansas, Iowa, Illinois, New Mexico, Louisiana and offshore Louisiana to interconnections with IPC located on Natural's Amarillo and Gulf Coast systems. Natural further states that the average daily and annual quantities that it would transport for IPC would be 100,000 MMBtu and 36,500,000 MMBtu equivalent of natural gas, respectively.

Natural indicates that in a filing made with the Commission at Docket No. ST88–2791, it reported that transportation service for IPC

commenced on January 29, 1988 under the 120-day automatic authorization provisions of § 284.233(a). Natural herein proposes to continue this service in accordance with §§ 284.221 and 284.223(2)(b).

Comment date: May 26, 1988, in accordance with Standard Paraghraph G at the end of this notice.

Ringwood Gathering Company

[Docket No. CP88-321-000]

April 12, 1988.

Take notice that on March 31, 1988, Ringwood Gathering Company (Ringwood), 4828 Loop Central Drive, Suite 850, Houston, Texas 77081, filed in Docket No. CP88-321-000 a request pursuant to § 157.205 of the Commission's Regulations under the Natural Gas Act (18 CFR 157.205) for authorization to transport natural gas for Plains Resources, Inc. (Plains), under the certificate issued in Docket No. CP86-618-000 pursuant to section 7 of the Natural Gas Act, all as more fully set forth in the request which is on file with the Commission and open to public inspection.

Ringwood proposes to transport up to 1,600 MMBtu equivalent of gas on a daily basis and up to 273,750 MMBtu equivalent on an annual basis for Plains, a producer of natural gas. It is stated that Ringwood would receive the gas at various existing points in Major County, Oklahoma. It is stated that Ringwood would deliver the gas for Plains' account at an existing interconnection with Williams Natural Gas Company in Garfield County, Oklahoma, and at existing interconnections with Oklahoma Natural Gas Company and Panhandle Eastern Pipe Line Company, both located in Major County, Oklahoma.

It is asserted that the transportation service commenced March 1, 1988, under the automatic authorization provisions of § 284.223(a) of the Commission's Regulations. It is further asserted that no construction of facilities would be required to effect the transportation service. Ringwood proposes to charge Plains a rate of 37.2 cents per MMBtu equivalent as specified in Ringwood's Rate Schedule ITS-1. It is explained that the term of the transportation service would extend through March 1, 1993, and would continue on a month-to-month basis thereafter.

Comment date: May 27, 1988, in accordance with Standard Paragraph G at the end of this notice.

3. Tennessee Gas Pipeline Company

[Docket No. CP99-313-000]

April 12, 1988.

Take notice that on March 25, 1988, Tennessee Gas Pipeline Company (Tennessee), P. O. Box 2511, Houston, Texas, 77252, filed in Docket No. CP88-313-000 an application pursuant to sections 7(b) and 7(c) of the Natural Gas Act for a certificate of public convenience and necessity authorizing the replacement of 2,450 feet of existing 6-inch pipe with 2,850 feet of 10-inch pipe near the Town of Lancaster, Massachusetts, all as more fully set forth in the application on file with the Commission and open to public inspection.

In particular, Tennessee states that it currently has a 6-inch pipeline underlying land owned by Digital Equipment Corporation (Digital) near the Town of Lancaster, Massachusetts. It is stated that Digital plans to construct an industrial facility on the lands overlying a portion of Tennessee's existing pipeline. In order to facilitate this construction, Tennesee states that Digital has requested that Tennessee remove 2,450 feet of its existing pipeline and relocate the line in another area of Digital's property. In this regard, Tennessee proposes to install 2,850 feet of 10-inch pipeline along a nearby road. It is stated that Digital has agreed to reimburse Tennessee for all costs associated with removing the existing pipeline and installing the replacement pipeline. Tennessee indicates that the estimated costs to be $340,160.

Comment date: May 3, 1988, in accordance with Standard Paragraph F at the end of this notice.

4. K N Energy, Inc.

[Docket No. CP88-309-000]

April 12, 1988.

Take notice that on March 23, 1988, K N Energy, Inc. (Applicant) P. O. Box 15265, Lakewood, Colorado, 80215, filed in Docket No. CP88-309-000 a request pursuant to § 157.205 of the Commission's Regulations under the Natural Gas Act (18 CFR 157.205) to construct and operate sales taps for the delivery of gas to end users under the authorization issued in Docket No. CP83-140-000 pursuant to section 7 of the Natural Gas Act, all as more fully set forth in the request on file with the Commission and open to public inspection.

Applicant proposes the construction and operation of sales taps to various end users located along its jurisdictional pipelines. Applicant states that the proposed sales taps are not prohibited by any of its existing tariffs and that the additional taps would have no significant impact on Applicant's peak day and annual deliveries.

Comment date: May 27, 1988, in accordance with Standard Paragraph G at the end of this notice.

5. Williston Basin Interstate Pipeline Company

[Docket No. CP88-311-000]

April 12, 1988.

Take notice that on March 24, 1988, Williston Basin Interstate Pipeline Company (Williston Basin), Suite 200, 304 East Rosser Avenue, Bismarck, North Dakota 58501, filed in Docket No. CO88-311-000 an application pursuant to section 7(c) of the Natural Gas Act for a certificate of public convenience and necessity authorizing the construction and operation of compression facilities and to transport natural gas, all as more fully set forth in the application which is on file with the Commission and open to public inspection.

Williston Basin proposes to construct a compressor station on its system near Glen Ullin in Morton County, North Dakota. Williston Basin explains that the Glen Ullin Compressor Station would be located on its existing 16-inch Cabin Creek transmission line, and consist of three natural gas engine compressor units with appurtenant facilities, miscellaneous piping, valves, and fittings. Williston Basin also states that the Glen Ullin Compressor Station would have a total horsepower of 7,950 HP and would cost about $4.9 million dollars.

Williston Basin explains that at present its only direct access into Northern Border Pipeline Company (Northern Border) is through the Ft. Buford Compressor Station. It is further explained that Williston Basin under its blanket authority has installed a tap on its existing system and constructed 2.5 miles of 12¾ inch interconnecting pipeline with Northern Border. These facilities would connect into the proposed Glen Ullin Compressor Station for transportation of natural gas to Northern Border, it is explained.

Williston Basin states that it needs this additional capability to deliver to Northern Border in order to satisfy its anticipated need for long-term access, reliability, flexibility and capacity. Williston Basin further states that it has entered into agreement with Frontier Gas Storage Company (Frontier) and Dyco Gas Marketing (Dyco) wherein Dyco has an option to purchase up to 36,000,000 MMBtu's of natural gas owned by Frontier. The gas is presently stored by Williston Basin for Frontier's account, it is explained. It is further

BEST COPY AVAILABLE

explained, that the primary delivery point for up to 60,000 MMBtu per day of this natural gas is at interconnections with Northern Border. Williston Basin further states that additional natural gas supplies, including natural gas dedicated to Williston Basin which is not being purchased, as well as undedicated gas supplies produced by independent oil and gas producers that is already connected or is capable of being connected to Williston Basin's system, is available for transportation to Northern Border based upon prevailing market conditions from time to time. Williston Basin alleges that the Glen Ullin facilities would provide the necessary capacity to transport this gas to Northern Border in the most efficient manner.

Williston Basin states that transportation of natural gas to the Glen Ullin facilities would be provided by Williston Basin under the terms of existing Rate Schedules X-9, S-2, T-3, T-4 and any subsequent authorized rate schedule. Williston Basin would receive such gas at its compression facilities, and compress and transport such gas for the shippers account to Northern Border under the terms and conditions of a new Rate Schedule TR-1. Williston Basin proposes an initial charge of 11.721 cents per dekatherm for the proposed service. Williston Basin further states that initially all costs associated with the compression facilities would be recovered in the proposed rate and, therefore, no costs are allocated to Williston Basin's existing customers. Williston Basin states that it reserves the right to request rolled-in treatment of the facilities in future section 4(e) filings.

Comment date: May 3, 1988, in accordance with Standard Paragraph F at the end of this notice.

6. Great Lakes Gas Transmission Company

[Docket No. CP88-310-000]

April 12, 1988.

Take notice that on March 23, 1988, Great Lakes Gas Transmission Company (Great Lakes), 2100 Buhl Building, Detroit, Michigan 48226, filed in Docket No. CP88-310-000 an application pursuant to section 7(c) of the Natural Gas Act for a certificate of public convenience and necessity authorizing transportation of natural gas, on an interruptible basis, for the account of Peoples Natural Gas Company, a Division of UtiliCorp United Inc. (Peoples), a Minnesota distribution company, all as more fully set forth in the application which is on file with the Commission and open to public inspection.

It is stated that Great Lakes would transport for Peoples up to 30,000 Mcf of natural gas per day (Mcfd) during the summer period (May through November) and up to 100,000 Mcfd during the winter period (November through April), pursuant to a transportation service agreement dated September 15, 1987. It is further stated that Peoples would purchase natural gas from Canadian suppliers, from a point on the International Border between the United States and Canada, at Emerson, Manitoba (Emerson Receipt Point), where the facilities of Great Lakes interconnect with the facilities of TransCanada PipeLines Limited, to a point where Great Lakes' facilities interconnect with those of Northern Natural Gas Company, a Division of Enron Corporation (Northern Natural), at Carlton, Minnesota (Carlton Delivery Point). The term of the proposed arrangement is to end two years after the effective date of all regulatory approvals deemed necessary to implement the service. Great Lakes proposes a rate for the transportation service which is equal to the 100 percent load factor rate applicable to deliveries in the Western Zone under Great Lakes' existing Rate Schedule T-5 of Great Lakes' FERC Gas Tariff and states that no new facilities are required to provide this proposed service.

It is further stated that Peoples has entered into transportation arrangements with Northern Natural for subsequent transportation of the subject volumes from the Carlton Delivery Point to various points of interconnection between the facilities of Northern Natural and Peoples located in the state of Minnesota.

Comment date: May 3, 1988, in accordance with Standard Paragraph F at the end of this notice.

Standard Paragraphs

F. Any person desiring to be heard or make any protest with reference to said filing should on or before the comment date file with the Federal Energy Regulatory Commission, 825 North Capitol Street N.E., Washington, DC 20426, a motion to intervene or a protest in accordance with the requirements of the Commission's Rules of Practice and Procedure (18 CFR 385.211 and 385.214) and the Regulations under the Natural Gas Act (18 CFR 157.10). All protests filed with the Commission will be considered by it in determining the appropriate action to be taken but will not serve to make the protestants parties to the proceeding. Any person wishing to become a party to a proceeding or to participate as a party in any hearing therein must file a motion to intervene in accordance with the Commission's Rules.

Take further notice that, pursuant to the authority contained in and subject to jurisdiction conferred upon the Federal Energy Regulatory Commission by sections 7 and 15 of the Natural Gas Act and the Commission's Rules of Practice and Procedure, a hearing will be held without further notice before the Commission or its designee on this filing if no motion to intervene is filed within the time required herein, if the Commission on its own review of the matter finds that a grant of the certificate is required by the public convenience and necessity. If a motion for leave to intervene is timely filed, or if the Commission on its own motion believes that a formal hearing is required, further notice of such hearing will be duly given.

Under the procedure herein provide for, unless otherwise advised, it will be unnecessary for the applicant to appear or be represented at the hearing.

G. Any person or the Commission's staff may, within 45 days after the issuance of the instance notice by the Commission, file pursuant to Rule 214 of the Commission's Procedural Rules (18 CFR 385.214) a motion to intervene or notice of intervention and pursuant to § 157.205 of the Regulations under the Natural Gas Act (18 CFR 157.205) a protest to the request. If no protest is filed within the time allowed therefor, the proposed activity shall be deemed to be authorized effective the day after the time allowed for filing a protest. If a protest is filed and not withdrawn within 30 days after the time allowed for filing a protest, the instant request shall be treated as an application for authorization pursuant to section 7 of the Natural Gas Act.

Lois D. Cashell,

Acting Secretary.

[FR Doc. 88-8423 Filed 4-15-88; 8:45 am]

BILLING CODE 6717-01-M

Office of Energy Research

Special Research Grant Program Notice 88-3; Subsurface Science Research Grants; Invitation for Applications

AGENCY: Department of Energy.

ACTION: Notice inviting grant applications.

SUMMARY: The Office of Energy Research (OER) of the Department of Energy (DOE) announces its interest in receiving applications for Special Research Grants that will support

research in Subsurface science. Research efforts should be directed to developing an improved, long-term understanding of the geochemical, microbiological and hydrologic mechanisms associated with contamination in subsoils and particularly in groundwater. Applications must be directed to state-of-the-art research that contributes to resolving subsurface contamination problems. Applicants should request DOE's Research Initiative Plan (DOE/ER-0344) for added technical detail. Interdisciplinary research in chemical-biological-hydrological interactions and in transport mechanisms that are generic to natural subsurface systems and complex contaminant regimes is of interest. Subsoils, microbial ecosystems at depth and sediment-groundwater regimes are representative of such natural systems.

DATES: To permit timely consideration for award in Fiscal Year 1989, applications submitted in response to this Notice should be received by the DOE in care of DOE's administrative contractor, the Oak Ridge Associated Universities (ORAU) by close of business August 1, 1988.

ADDRESS: Completed applications referencing Program Notice 88-3 and the appropriate section and title in DOE/ER-0344 applicable to the research submission should be forwarded to: U.S. Department of Energy, c/o Oak Ridge Associated Universities, P.O. Box 117 (ATTN: 88-3), Oak Ridge, Tennessee 37831-0117.

FOR FURTHER INFORMATION CONTACT: Mrs. Jean A. Morrow, Division of Acquisition and Assistance Management, ER-64, Washington, DC 20545, (301) 353-5544 or Dr. Frank J. Wobber, Office of Health & Environmental Research, ER-75, Washington, DC 20545, (301) 353-4208.

SUPPLEMENTARY INFORMATION: This notice relates to DOE's five-year Research Initiative Plan (DOE/ER-0344) that describes long-term research that is relevant to DOE needs. The following research areas are a high priority: The geochemistry, microbiology and hydrology of co-contaminant (organic-organic, organic-radionuclide, organic-metal) regimes and new generation models that predict contaminant transport. New and innovative experimentation and predictive models related to the mobilization, immobilization and transport of contaminants in groundwater, and to the microbilogy and geochemistry of subsoils and groundwater are of interest. Technologies to characterize the subsurface environment or subsurface contaminants, or demonstrating of engineered remedial action technologies are not included under the Notice. New or innovative physical, chemical, and biological technologies are of interest if they are part of the experimental design detailed in the application. It is anticipated that $3M will be available for research grants during Fiscal Year 1989. Additional years of support for this program will be subject to the availability of funds. Information concerning preparation and submission of applications, eligibility, limitations, evaluation and selection processes, and other policies and procedures may be found at 10 CFR Part 605. Application kits, copies of 10 CFR Part 605, and the DOE Research Initiative Plan are available from the ORAU (see above for address). Telephone requests may be made by calling (615) 576-3455 or (FTS) 626-3455). Instructions for preparation of an application and on DOE research interests and priorities are included in the kit. The Catalog of Federal Domestic Assistance Number for this program is 81.049.

Ira M. Adler,

Deputy Director for Management, Office of Energy Research.

[FR Doc. 88-8410 Filed 4-15-88; 8:45 am]

BILLING CODE 6450-01-M

Western Area Power Administration

Firm Power Allocations Pick-Sloan Missouri Basin Program; Eastern Division

AGENCY: Western Area Power Administration, Department of Energy.

ACTION: Notice of Firm Power Allocations to the Townsites of Fort Peck, Montana; Riverdale, North Dakota; and Pickstown, South Dakota.

SUMMARY: In a March 11, 1986, Federal Register notice (51 FR 8360), the Western Area Power Administration (Western) announced plans to allocate firm power to the former Corps of Engineers (Corps) townsites of Fort Peck, Montana; Riverdale, North Dakota; and Pickstown, South Dakota. This action was undertaken on the basis of enactment of Pub. L. No. 99-88. The allocations, however, will be made pursuant to the provisions of the subsequently enacted Pub. L. No. 99-662. Western has considered all public comments received on the March 11, 1986, notice and plans to offer firm power contracts to the three towns. The firm power allocations to the three towns will be subject to adjustment following a test period ending October 31, 1989. The electrical system demand data gathered from meters measuring electric service to each of the three towns during the test period will be analyzed to determine if the initial allocation amounts should be revised to more appropriately reflect the intent of the applicable laws.

FOR FURTHER INFORMATION CONTACT: Requests for further information may be submitted to the following address: Mr. James D. Davies, Area Manager, Billings Area Office, Western Area Power Administration, P.O. Box 35800, Billings, Montana 59107-5800.

SUPPLEMENTAL INFORMATION: The March 11, 1986, Federal Register notice specified that the Supplemental Appropriations Act for fiscal year 1985 (Act of August 15, 1985, Pub. L. 99-88, 99 Stat. 293, 317-18) (Pub. L. 99-88) authorized the Secretary of the Army to transfer all rights, title, and interests of the United States in the townsites of Fort Peck, Montana; Riverdale, North Dakota; and Pickstown, South Dakota, to newly formed municipal corporations serving the inhabitants of those townsites. The townsites previously received, and are presently receiving, project-use power from the Corps. The townsites can continue to receive such project-use power, upon request, for a period not to exceed 3 years from the date of incorporation of such municipal corporations. The authority to allocate power subsequent to the 3-year period was not specifically provided for in the act. Western, therefore, initiated by means of the notice published on March 11, 1986, a public consultation and comment period concerning a proposal to allocate power to the towns which were supplied with project-use power. The March 11, 1986, notice was the first step in establishing allocations pursuant to the general statutory authorities of Western's Administrator.

Normally, Western would not be able to allocate firm power since all of Western's firm power is presently committed under long-term contracts. However, the power that is being furnished by the Corps to the townsites is considered "project-use" power and has not otherwise been marketed as firm power. With the transfer of the townsites from the Corps to municipal corporations, that power will be available for Western to allocate to the towns as firm power.

Section 1123 of the Water Resources Development Act of 1986 (Act of November 17, 1986, Pub. L. 99-662, 100 Stat. 4242) (Pub. L. 99-662) specifically authorized the Administrator of Western to allocate firm power from the Pick-

Sloan Missouri Basin Program to each of the three towns, or to such other preference entity as the Administrator may designate, as a means to continue electrical service to the towns. That act further directed that such allocations shall be in the amounts required to meet loads during specific reference periods prior to the date of the act. The methodology Western will use to make final allocations is generally the same as originally proposed in the March 11, 1986, notice. Western, however, has determined that adequate system demand data was not available for the stated reference periods because of inadequate electrical metering. Adequate metering has now been installed and a test period has been established to develop data upon which the final allocations will be based.

Three meetings were held in July 1987 to give representatives from each of the former Corps townsites the opportunity to discuss their concerns with representatives of Western and the Corps. Those meetings with Riverdale, North Dakota, on July 8th; with Pickstown, South Dakota, on July 9th; and with Fort Peck, Montana, on July 22nd allowed for discussion on all aspects of the impending transfer of responsibilities for the towns' electric service and of future arrangements between Western and the towns.

Allocations

Both Pub. L. 99–662 and Western's March 11, 1986, **Federal Register** notice describe the criteria for establishing the power allocation to each of the three towns. Western has determined that each town, as a preference entity, qualifies for and therefore will be offered an allocation. The intent of the law and the notice is to establish the amount of the allocation to each town based on the Corps's past deliveries of project-use power to those towns. The notice specified that the allocation would be based on an amount of power equal to each entity's maximum load in the 1985 summer season and the 1985–1986 winter season; however, it was later determined that sufficient load data for these periods were not available.

In an effort to create an approximation of the demand for the 1985 summer and the 1985–1986 winter seasons, Western estimated loads on the basis of actual data which were available for the 1986 summer and 1986–1987 winter season. Western then proposed an allocation of power to each town based upon those estimated values.

In accordance with the March 11, 1986, notice, Western has determined interim seasonal allocations for each town based on each town's estimated peakloads during the 1985 summer season and the 1985–1986 winter season as follows:

Town	Summer season	Winter season
Fort Peck, MT	405KW	730KW
Riverdale, ND	385KW	548KW
Pickstown, SD	536KW	526KW

The above amounts are subject to revision based on information obtained during the test period discussed below.

Test Period

At the July 1987 meetings, the representatives of the three towns expressed concerns that the 1986–87 winter season was inappropriate for determining their power allocation as it would not accurately reflect the towns' actual loads during the reference periods. They stated that 1986–1987 winter season was a mild one and using that season as a basis for the allocation would result in an effective reduction from what the Corps had supplied.

Western addressed the concerns of the towns by suggesting that the allocations be adopted on an interim basis, and the final allocations could be decided subsequent to a test period which began with the installation of demand meters and will conclude at the end of the 1989 summer season; i.e., October 31, 1989. The test period will allow Western to assemble a tabulation of demand readings that may be more representative of the 1985 summer and the 1985–86 winter seasons. The test period demand data should enable Western to adjust the interim allocation to more accurately reflect the amount of project-use power supplied by the Corps.

Environmental Compliance

Western has conducted an environmental analysis of this allocation of power pursuant to the National Environmental Policy Act of 1969, Council on Environmental Quality Regulation, and Department of Energy guidelines (45 FR 20694–20701, as amended). Western's allocation of power will be in the same amounts and generated from the same resource as the project-use power that has been supplied by the Corps. The power will be made available to Western by the Corps to be allocated to the three towns as firm power. The change is essentially administrative in nature with Western assuming the former Corps responsibilities for supplying power to the three towns. Since there clearly would be no significant environmental impact, the proposed action does not require the preparation of an environmental assessment or an environmental impact statement. Documentation supporting this determination is on file in Western's Billings Area Office.

Regulatory Flexibility Analysis

Pursuant to the Regulatory Flexibility Act of 1980 (5 U.S.C. 601, *et seq.*) each agency, when required by 5 U.S.C. 553 to publish a proposed rule, is further required to prepare and make available for public comment an initial regulatory flexibility analysis to describe the impact of the proposed rule on small entities. In this instance, the proposal relates to nonregulatory services provided by Western. Under 5 U.S.C. 601(2), a proposal with particular applicability is not considered "a rule" within the meaning of the act. Since this proposal is of limited applicability and is being set in accordance with specific regulations and legislation under particular circumstances, Western believes that no flexibility analysis is required.

Determination Under Executive Order 12291

The Department of Energy has determined that this is not a major rule because it does not meet the criteria of section 1(b) of Executive Order 12291, 46 FR 13193 (February 19, 1981). Western has an exemption from sections 3, 4, and 7 of Executive Order 12291.

Conclusion

In accordance with Pub. L. No. 99–88 and Pub. L. 99–662, I hereby approve and place into effect the interim allocation of power as specified herein, which includes the process for establishing final allocation amounts as described herein. Upon completion of the Test Period, Western will establish a final allocation for each of the three towns.

Issued at Golden, Colorado, April 7, 1988.

William H. Clagett,

Administrator.

[FR Doc. 88–8380 Filed 4–15–88; 8:45 am]

BILLING CODE 6450-01-M

ENVIRONMENTAL PROTECTION AGENCY

[FRL-3366-8]

Extension of the Period for Action on a Recommended 404(c) Determination From the Environmental Protection Agency's Region IV Office To Prohibit the Specification or Use of Three East Everglades Wetland Areas as Disposal Sites

AGENCY: Environmental Protection Agency (EPA).

ACTION: Notice of an extension to the comment period and period for EPA Headquarters action on recommended 404(c) determination.

SUMMARY: On February 16, 1988, a Recommended 404(c) Determination and administrative record was received from EPA's Region IV Office in Atlanta, Georgia requesting that the Assistant Administrator for Water affirm the Regional Administrator's recommendation to prohibit proposed and anticipated rockplowing activities in three wetland areas of East Everglades, Florida pursuant to section 404(c) of the Clean Water Act (33 U.S.C. 1344(c)). At the request of representatives of property owners of two of the three wetland areas, EPA will schedule a consultation meeting during the week of May 2 which is after the current timeline for EPA to complete this 404(c) action. In addition, a representative of the property owners of the third wetland site has recently indicated by telephone that they are also considering requesting a meeting. Providing the involved property owners the opportunity for consultation best serves the 404(c) process by providing EPA with information pertinent to a well informed final action.

In order to provide time for consultation and consideration of the views presented, the time period provided in 40 CFR 231.6 for EPA Headquarters' action on the Recommended 404(c) Determination is being extended until close of business, June 15, 1988. This time extension is made under authority of 40 CFR 231.8.

FOR FURTHER INFORMATION CONTACT: Kirk Start, Team Leader, Elevated Cases Team, Office of Wetlands Protection, 401 M Street, SW, Washington, DC 20460, Mail Code A-104F, (202) 475-8796.

Dated: April 12, 1988.

Rebecca W. Hanmer,

Acting Assistant Administrator for Water.

[FR Doc. 88-8406 Filed 4-15-88; 8:45 am]

BILLING CODE 6560-50-M

FEDERAL HOME LOAN BANK BOARD

First Federal Savings and Loan Association of Shawnee, Shawnee, OK; Appointment of Receiver

Notice is hereby given that pursuant to the authority contained in section 5 (d)(6)(A) of the Home Owner's Loan Act of 1933, as amended, 12 U.S.C. 1464(d)(6)(A) (1982), the Federal Home Loan Bank Board appointed the Federal Savings and Loan Insurance Corporation as sole receiver for first Federal Savings and Loan Association of Shawnee, Shawnee, Oklahoma, on April 7, 1988.

Dated: April 12, 1988.

By the Federal Home Loan Bank Board.

John M. Buckley, Jr.,

Secretary.

[FR Doc. 88-8440 Filed 4-15-88; 8:45 am]

BILLING CODE 6720-01-M

Tri-Cities Savings and Loan Association; Kennewick, WA; Appointment of Receiver

Notice is hereby given that, pursuant to the authority contained in section 406(c)(1)(B)(i)(I) of the National Housing Act, as amended, 12 U.S.C. 1729(c)(1)(B)(i)(I) (1982), the Federal Home Loan Bank Board duly appointed the Federal Savings and Loan Insurance Corporation as sole receiver for Tri-Cities Savings and Loan Association, Kennewick, Washington, on April 7, 1988.

Dated: April 12, 1988.

By the Federal Home Loan Bank Board.

John N. Buckley, Jr.,

Secretary.

[FR Doc. 88-8441 Filed 4-15-88; 8:45 am]

BILLING CODE 6720-01-M

FEDERAL RESERVE SYSTEM

Change in Bank Control; Acquisition of Shares of Banks or Bank Holding Companies; Loretto A. Gulledge

The notificant listed below has applied under the Change in Bank Control Act (12 U.S.C. 1817(j)) and § 225.41 of the Board's Regulation Y (12 CFR 225.41) to acquire a bank or bank holding company. The factors that are considered in acting on notices are set forth in paragraph 7 of the Act (12 U.S.C. 1817(j)(7)).

The notices are available for immediate inspection at the Federal Reserve Bank indicated. Once the notices have been accepted for processing, they will also be available for inspection at the offices of the Board of Governors. Interested persons may express their views in writing to the Reserve Bank indicated for that notice or to the offices of the Board of Governors. Comments must be received not later than May 4, 1988.

A. Federal Reserve Bank of St. Louis (Randall C. Sumner, Vice President) 411 Locust Street, St. Louis, Missouri 63166:

1. *Loretto A. Gulledge*, Aubrey W. Conway, and Franklin A. Gulledge, Jr., trustees, all of Louisville, Kentucky; to collectively acquire an additional 49.7 percent of the voting shares of Shively Bancshares Corporation, Shively, Kentucky, and thereby indirectly acquire Bank of St. Helens, Shively, Kentucky.

Board of Governors of the Federal Reserve System, April 13, 1988.

James McAfee,

Associate Secretary of the Board.

[FR Doc. 88-8374 Filed 4-15-88; 8:45 am]

BILLING CODE 6210-01-M

Southern Bankshares, Inc., et al.; Formations of; Acquisitions by; and Mergers of Bank Holding Companies

The companies listed in this notice have applied for the Board's approval under section 3 of the Bank Holding Company Act (12 U.S.C. 1842) and § 225.14 of the Board's Regulation Y (12 CFR 225.14) to become a bank holding company or to acquire a bank or bank holding company. The factors that are considered in acting on the applications are set forth in section 3(c) of the Act (12 U.S.C. 1842(c)).

Each application is available for immediate inspection at the Federal Reserve Bank indicated. Once the application has been accepted for processing, it will also be available for inspection at the offices of the Board of Governors. Interested persons may express their views in writing to the Reserve Bank or to the offices of the Board of Governors. Any comment on an application that requests a hearing must include a statement of why a written presentation would not suffice in lieu of a hearing, identifying specifically any questions of fact that are in dispute and summarizing the evidence that would be presented at a hearing.

Unless otherwise noted, comments regarding each of these applications must be received not later than May 6, 1988.

A. Federal Reserve Bank of Richmond (Lloyd W. Bostian, Jr., Vice President) 701 East Byrd Street, Richmond, Virginia 23261:

1. *Southern Bankshares, Inc.*, Beckley, West Virginia; to acquire 100 percent of

the voting shares of M & M Financial Corporation, Oak Hill, West Virginia, and thereby indirectly acquire Valley Bank and Trust Company, Bluefield, West Virginia, and Merchants & Miners National Bank of Oak Hill, Oak Hill, West Virginia.

B. **Federal Reserve Bank of Chicago** (David S. Epstein, Vice President) 230 South LaSalle Street, Chicago, Illinois 60690:

1. *Upbancorp, Inc.*, Chicago, Illinois; to acquire 100 percent of the voting shares of First West Bank of Tempe, Tempe, Arizona. Comments on this application must be received by May 11, 1988.

C. **Federal Reserve Bank of St. Louis** (Randall C. Sumner, Vice President) 411 Locust Street, St. Louis, Missouri 63166:

1. *Lewisburg Bancshares Corporation*, Lewisburg, Kentucky; to become a bank holding company by acquiring 100 percent of the voting shares of Lewisburg Banking Company, Lewisburg, Kentucky. Bank engages only in credit related insurance sold in connection with extensions of credit made by the target bank.

2. *Southside Bancshares Corp.*, St. Louis, Missouri; to acquire at least 25 percent of the voting shares of Bank of Chesterfield, Chesterfield, Missouri, a *de novo* bank.

D. **Federal Reserve Bank of San Francisco** (Harry W. Green, Vice President) 101 Market Street, San Francisco, California 94105:

1. *Alliance Bancorporation*, Seattle, Washington; to become a bank holding company by acquiring 100 percent of the voting shares of Alliance Bank, National Association, Seattle, Washington, a *de novo* bank.

Board of Governors of the Federal Reserve System, April 13, 1988.

James McAfee,

Associate Secretary of the Board.

[FR Doc. 88-8375 Filed 4-15-88; 8:45 am]

BILLING CODE 6210-01-M

Union Bankshares, Inc.; Application To Engage de Novo in Permissible Nonbanking Activities

The company listed in this notice has filed an application under § 225.23(a)(1) of the Board's Regulation Y (12 CFR 225.23(a)(1)) for the Board's approval under section 4(c)(8) of the Bank Holding Company Act (12 U.S.C. 1843(c)(8)) and § 225.21(a) of Regulation Y (12 CFR 225.21(a)) to commence or to engage *de novo*, either directly or through a subsidiary, in a nonbanking activity that is listed in § 225.25 of Regulation Y as closely related to banking and permissible for bank holding companies. Unless otherwise noted, such activities will be conducted throughout the United States.

The application is available for immediate inspection at the Federal Reserve Bank indicated. Once the application has been accepted for processing, it will also be available for inspection at the offices of the Board of Governors. Interested persons may express their views in writing on the question whether consummation of the proposal can "reasonably be expected to produce benefits to the public, such as greater convenience, increased competition, or gains in efficiency, that outweigh possible adverse effects, such as undue concentration of resources, decreased or unfair competition, conflicts of interests, or unsound banking practices." Any request for a hearing on this question must be accompanied by a statement of the reasons a written presentation would not suffice in lieu of a hearing, identifying specifically any questions of fact that are in dispute, summarizing the evidence that would be presented at a hearing, and indicating how the party commenting would be aggrieved by approval of the proposal.

Unless otherwise noted, comments regarding the applicaltion must be received at the Reserve Bank indicated or the offices of the Board of Governors not later than May 6, 1988.

A. **Federal Reserve Bank of Boston** (Robert M. Brady, Vice President) 600 Atlantic Avenue, Boston, Massachusetts 02106:

1. *Union Bankshares, Inc.*, Morrisville, Vermont; to engage *de novo* in leasing activities pursuant to § 225.25(b)(5) of the Board's Regulation Y.

Board of Governors of the Federal Reserve System, April 13, 1988.

James McAfee,

Associate Secretary of the Board.

[FR Doc. 88-8376 Filed 4-15-88; 8:45 am]

BILLING CODE 6210-01-M

Union National Corp.; Applications To Engage de Novo in Permissible Nonbanking Activities; Correction

This notice corrects a previous **Federal Register** notice (FR Doc. 88-7706) published at page 11705 of the issue for Friday, April 8, 1988.

Under the Federal Reserve Bank of Cleveland, the entry for Union National Corporation is revised to read as follows:

A. **Federal Reserve Bank of Cleveland** (John J. Wixted, Jr., Vice President) 1455 East Sixth Street, Cleveland, Ohio 44101:

1. *Union National Corporation*, Pittsburgh, Pennsylvania; to engage *de novo* through its subsidiary, Union National Life Insurance Company, Phoenix, Arizona, in reinsuring credit life and disability insurance on the sum of payments issued in connection with lease transactions made by Union National Corporation's Bank subsidiaries pursuant to § 225.25(b)(8) of the Board's Regulation Y. The lease transactions involved are nonoperating and full payout leases.

Comments on this application must be received by April 29, 1988.

Board of Governors of the Federal Reserve System, April 13, 1988.

James McAfee,

Associate Secretary of the Board.

[FR Doc. 88-8377 Filed 4-15-88; 8:45 am]

BILLING CODE 6210-01-M

DEPARTMENT OF HEALTH AND HUMAN SERVICES

Health Resources and Services Administration

Rural Health Research Centers; Availability of Development Funds

AGENCY: Health Resources and Services Administration, Public Health Service, DHHS.

ACTION: Notice of availability of funds.

SUMMARY: The Office of Rural Health Policy, Health Resources and Services Administration (HRSA), announces that applications are being accepted for a program of grants to develop Rural Health Research Centers. These centers will collect, develop and disseminate current information on rural health and will conduct policy relevant research and analyses of rural health issues of regional or national significance. Awards will be made from funds appropriated under Pub. L. 100-202 (Continuing Resolution for FY 1988). It is anticipated that approximately $1.1 million will be available to support this grant program for one year.

DATE: To receive consideration, applications must be received by the close of business 60 days after publication, by the Grants Management Officer at the address below.

Applications shall be considered as meeting the deadline if they are either (1) received on or before the deadline date; or (2) postmarked on or before the deadline date and received in time for submission to the review committee. A legible dated receipt from a commercial carrier of U.S. Postal Service will be accepted in lieu of a postmark. Private metered postmarks will not be acceptable as proof of timely mailing.

ADDRESS: Requests for grant application packages should be addressed to: Paul T. Clark, Grants and Audit Resolution Branch, Division of Grants and Procurement Management, Room 13A-27, Parklawn Bldg., 5600 Fishers Lane, Rockville, Maryland 20857.

FOR FURTHER INFORMATION CONTACT: Requests for technical or programmatic information should be directed to Arlene Granderson, Office of Rural Health Policy, Room 14-22, Parklawn Bldg., 5600 Fishers Land, Rockville, Maryland 20857. (301) 443-0835.

SUPPLEMENTARY INFORMATION:

Program Objectives

The purpose of this grant program is to support the development of approximately three to five Rural Health Research Centers across the country during 2- to 4-year project periods. Within the limits of their resources, these centers will: (1) Collect, develop, analyze and disseminate current data/information on rural health; (2) conduct applied research, case studies and policy relevant analysis that focuses on the delivery, financing, organization and mangement of health care services in rural areas; (3) provide a focal point for support from foundations and/or other public and private entities interested in rural research and demonstration activities.

Eligible Applicants

All public and private entities, both non-profit and for-profit, are eligible to apply.

Review Considerations

We will evaluate grant applications on the basis of the following criteria:

(1) The extent to which project objectives are specific, measurable, realistic, and consistent with the program objectives defined above;

(2) The quality of the applicant's plan for coordinating project activities;

(3) The degree to which the applicant demonstrates special expertise in rural health analysis;

(4) The extent to which the project personnel are qualified for the work required and the applicant organization has adequate facilities and personnel available;

(5) That the project includes a strong evaluation component;

(6) That the project will widely and effectively disseminate the results of its efforts; and

(7) The degree to which the applicant shows evidence of non-Federal financial support for the proposed project activities, both during the project period and after Federal funding is completed.

Executive Order 12372

The Rural Health Research Centers Grant Program has been determined to be a program which is not subject to the provisions of Executive Order 12372 concerning intergovernmental review of Federal programs.

(The OMB Catalog of Federal Domestic Assistance number is 13.155)

Date: April 6, 1988.

David N. Sundwall,

Administrator, HRSA.

[FR Doc. 88-8381 Filed 4-15-88; 8:45 am]

BILLING CODE 4160-15-M

DEPARTMENT OF THE INTERIOR

Bureau of Land Management

[AK-060-08-4410-08]

Availability of Supplement to Draft Environmental Impact Statement and Resource Management Plan

AGENCY: Bureau of Land Management, Interior.

ACTION: Notice of availability of Supplement to Draft Utility Corridor Resource Management Plan/Environmental Impact Statement (RMP/EIS).

The Bureau of Land Management announces the availability of a Supplement to the Draft Utility Corridor (RMP/EIS). In accordance with provisions of 40 CFR 1502.9(c)(2), the Supplement has been prepared to address changes in the proposed action (preferred alternative) determined to be of significant public interest. These changes have been determined to be within the scope of the plan and within the range of alternatives described and analyzed in the Draft RMP/EIS.

The preferred alternative has been changed to allow for state selection of Utility Corridor lands (now withdrawn by PLO 5150): 1. Between the Yukon River and (aproximately) the Arctic Circle; and 2. north of Toolik Lake. These two areas include approximately 1.1 million acres of federal land.

A copy of the Supplement to the Draft RMP/EIS will be sent to all individuals, government agencies and groups who have expressed an interest in the Utility Corridor RMP/EIS including all individuals who requested a copy of the Draft RMP/EIS. Only comments specific to this change in the preferred alternative will be considered; comments will be accepted through June 6, 1988. All comments must be sent to M. Thomas Dean, Arctic District Manager, Bureau of Land Management, 1541 Gaffney Road, Fairbanks, Alaska, 99703-1399.

During the comment period, public meetings on the changes to the preferred alternative will be held in Barrow, Fairbanks, and Stevens Village at times and places to be announced later.

DATE: Comments will be accepted through June 6, 1988.

ADDRESS: Comments should be sent to M. Thomas Dean, Arctic District Manager, Bureau of Land Management, 1541 Gaffney Road, Fairbanks, Alaska 99703-1399.

FOR FURTHER INFORMATION OR COPIES CONTACT: Dave Ruppert, Project Manager, Bureau of Land Management, Arctic District Office, 1541 Gaffney Road, Fairbanks, Alaska 99703-1399. Telephone Number: (907) 356.5182.

Date: April 11, 1988.

Michael J. Penfold,

State Director.

[FR Doc. 88-8382 Filed 4-15-88; 8:45 am]

BILLING CODE 4310-84-JA

[NV-930-08-4212-14; N-32355]

Realty Action; Competitive Sale of Public Land in Elko County, NV

AGENCY: Bureau of Land Management, Interior.

ACTION: Amended notice of realty action.

SUMMARY: The original notice published in the **Federal Register** on Tuesday, May 5, 1987, Vol. 52, No. 86, page 16460, identified a 6.54 acre parcel of public land as suitable for sale under Section 203 of the Federal Land Policy and Management Act of October 21, 1976. The notice segregated the land from all other forms of appropriation under the public land laws, including the mining laws. This notice extends the segregation for an additional 270 days. This segregation will terminate on October 31, 1988, or when patent is issued. The extension of this segregation is required in order to protect the parcel which has received an acceptable bid, but has not yet been patented.

Date: April 6, 1988.

Rodney Harris,

District Manager.

[FR Doc. 88-8437 Filed 4-15-88; 8:45 am]

BILLING CODE 4310-HC-M

National Park Service

Golden Gate National Recreation Area and Point Reyes National Seashore Advisory Commission

Notice is hereby given in accordance with the Federal Advisory Committee Act that a meeting of the Golden Gate National Recreation Area and Point Reyes National Seashore Advisory Commission will be held at 10:30 a.m. (PDT) on Saturday May 14, 1988, at the West Marin School, Point Reyes Station, California.

The Advisory Commission was established by Public Law 92-589 to provide for the free exchange of ideas between the National Park Service and the public and to facilitate the solicitation of advice or other counsel from members of the public on problems pertinent to the National Park Service systems in Marin, San Francisco and San Mateo Counties.

Members of the Commission are as follows:

Mr. Frank Boerger, Chairman
Ms. Amy Meyer, Vice Chair
Mr. Ernest Ayala
Mr. Richard Bartke
Dr. Howard Cogswell
Brig. Gen. John Crowley, USA (ret)
Mr. Margot Patterson Doss
Mr. Neil D. Eisenberg
Mr. Jerry Friedman
Mr. Steve Jeong
Ms. Daphne Greene
Ms. Gimmy Park Li
Mr. Gary Pinkston
Mr. Merritt Robinson
Mr. R.H. Sciaroni
Mr. John J. Spring
Dr. Edgar Wayburn
Mr. Joseph Williams

The main agenda items at this public meeting will be the Point Reyes resource management program, review of Point Reyes erosion control projects, landslide causation and its relationship to grazing, a Point Reyes Committee Report and Range Management Guidelines, a status report on the Request for Proposals of Pierce Point Ranch, and a Superintendent's Report.

Interested individuals, representatives of organizations, and public officials are invited to express their views in person at the aforementioned public meeting. Those not wishing to appear in person may submit written statements to the General Superintendent of the Golden Gate National Recreation Area on these items. Statements will be accepted until May 31, 1988.

The meeting is open to the public. Persons wishing to receive further information on this meeting or who wishes to submit written statements may contact the Staff Assistant, Golden Gate National Recreation Area, Building 201, Fort Mason, San Francisco, California 94123, telephone (415) 556-4484.

This meeting will be recorded for documentation and trasncribed for dissemination. Minutes of the meeting will be available to the public after approval of the full Advisory Commission. A transcript is available after May 27, 1988. For copies of the minutes contact the Office of the Staff Assistant, Golden Gate National Recreation Area, Building 201, Fort Mason, San Francisco, California, 94123.

Date: March 16, 1988.

Stanley T. Albright,

Regional Director, Western Region.

[FR Doc. 88—8372 Filed 4-15-88; 8:45 am]

BILLING CODE 4310-70-M

DEPARTMENT OF JUSTICE

Consent Decree in Action To Enjoin Discharge of Air Pollutants; Conoco, Inc.

In accordance with Departmental Policy, 28 CFR 50.7, 38 FR 19029, notice is hereby given that on March 29, 1988, a consent decree in *United States v. Conoco, Inc.*, Civil Action No. 88-517A, was lodged with the United States District Court for the Western District of Oklahoma. The consent decree establishes a compliance program for Conoco's Ponca City facility to bring the facility into compliance with the Clean Air Act, 42 U.S.C. 7401 *et seq.*, and the performance standards regulations relating to the discharge of pollutants from petroleum refineries and requires payment of a civil penalty of $250,000.

The Department of Justice will receive for thirty (30) days from the date of publication of this notice, written comments relating to the consent decree. Comments should be addressed to the Assistant Attorney General, Environmental Enforcement Section, Land and Natural Resources Division, Department of Justice, P.O. Box 7611, Ben Franklin Station, Washington, DC 20044, and should refer to *United States v. Conoco, Inc.*, D.J. Ref. No. 90-5-2-1-1133.

The consent decree may be examined at the office of the United States Attorney, Western District of Oklahoma, United States Courthouse and Federal Office Building, 200 Northwest 4th Street, Room 4434, Oklahoma City, Oklahoma 73102; at the Region VI Office of the Environmental Protection Agency, 1445 Ross Avenue, Dallas, Texas 75202; and the Environmental Enforcement Section, Land and Natural Resources Division, Department of Justice, 10th Street and Pennsylvania Avenue NW., Washington, DC 20530. In requesting a copy, please enclose a check in the amount of $2.10 (10 cents per page reproduction charge) payable to the Treasurer of the United States.

Roger J. Marzulla,

Assistant Attorney General, Land and Natural Resources Division.

[FR Doc. 88-8394 Filed 4-15-88; 8:45 am]

BILLING CODE 4410-01-M

Lodging of Consent Decree Pursuant to the Clean Air Act; Apex Orchards, Inc.

In accordance with Departmental policy, 28 CFR 50.7, 38 FR 19029, notice is hereby given that a Consent Decree in *United States v. Apex Orchards, Inc.*, Civil Action No. 87-871 LKK, was lodged on March 15, 1988 in the United States District Court, Eastern District of California. The Complaint in this action sought civil penalties from Apex Orchards, Inc. and injunctive relief from DEI-COAGRI, Inc. for violation of the Clean Air Act, (the "Act") 42 U.S.C. 7401, *et seq.* Specifically, Apex Orchards, Inc. was charged with operating a biomass-fired boiler for co-generation of electricity in Kern County, California without a prevention of significant deterioration (PSD) permit. DEI-COAGRI, Inc. was charged with assuming the liabilities of Apex Orchards, Inc. for operation of the said boiler. The proposed Consent Decree requires Apex to pay a civil penalty of $55,000. The Consent Decree also requires DEI-COAGRI to obtain an authority to construct permit from the Kern County Air Pollution Control District which would limit the emissions from the boiler to levels below those which would require the boiler to operate with a PSD permit, and to comply with those limits.

After the requisite **Federal Register** Notice is published, the time period for comments has run, and the comments, if any, have been evaluated, the Court will be further advised as to any action which may be required by the Court at that time. During the pendency of the **Federal Register** Notice comment period under 28 CFR 50.7, no action is required of the Court.

The Department of Justice will receive for thirty (30) days from the date of publication of this notice, written comments relating to the Consent Decree. Comments should be addressed to the Assistant Attorney General, Land and Natural Resources Division, U.S. Department of Justice, Washington, DC

20530, and should refer to *United States v. Apex Orchards, Inc.*, D.J. Ref. No. 90-5-2-1-1010.

The Consent Decree may be examined at the office of the Environmental Protection Agency, 215 Fremont Street, San Francisco, California 94105, and the Enviornmental Enforcement Section, Land and Natural Resources Division of the Department of Justice, Washington, DC 20530, Room 1736. Copies of the Consent Decree can be obtained in person or by mail from the Environmental Enforcement Section at the above address.

Roger J. Marzulla,

Acting Assistant Attorney General, Land and Natural Resources Division.

[FR Doc. 88-8383 Filed 4-15-88; 8:45 am]

BILLING CODE 4410-01-M

Office of the Attorney General

United States Trustee Program; Certification, Sixth Circuit

The Attorney General, pursuant to section 303 of the Bankruptcy Judges, United States Trustees, and Family Farmer Act of 1986, Pub. L. No. 99-554, 100 Stat. 388 (1986), hereby certifies to the United States Court of Appeals for the Sixth Circuit on this date that, in the region specified in paragraph 581 (a) (9) of title 28, United States Code, composed of the federal judicial districts for the States of Michigan and Ohio, the amendments made by section 113 and subtitle A of title II of the Act and section 1930 (a) (6) of title 28, United States Code, will apply 30 days after this date as to all cases commenced under chapters 7, 11, 12, or 13 of title 11, United States Code, on or after November 26, 1986. The amendments will also apply in cases commenced prior to November 26, 1986, one year after this certification, unless a final report and account of the administration of the estate required under section 704 of title 11, United States Code, has been filed, or a plan has been confirmed under section 1129, 1225, or 1325 of title 11.

These amendments implement the United States Trustee system in the region and impose quarterly fees in chapter 11 cases commenced on or after November 26, 1986 beginning on the thirtieth day after the date of this certification. The implementation of the United States Trustee system and the imposition of quarterly fees in those chapter 11 cases commenced prior to November 26, 1986, in which a plan has not been confirmed, will become effective one year after the date of this certification.

The United States Trustee presently serving for the region is responsible, pursuant to sectin 301(a) of the Act, for implementing the amendments made by the Act in the region hereby certified.

Date: April 5, 1988.

Edwin Meese III,

Attorney General.

[FR Doc. 88-8384 Filed 4-15-88; 8:45 am]

BILLING CODE 4410-01-M

NATIONAL AERONAUTICS AND SPACE ADMINISTRATION

[Notice 88-36]

NASA Advisory Council (NAC), Aeronautics Advisory Committee (AAC); Meeting

AGENCY: National Aeronautics and Space Administration.

ACTION: Notice of meeting change.

Federal Register Citation of Previous Announcement: 53FR10175, Notice Number 88-30, March 29, 1988.

Previous Announced Times and Dates of Meeting: April 18, 1988, 8:30 a.m. to 4:30 p.m.; and April 19, 1988, 8:30 a.m. to 11:30 a.m.

Change in The Meeting: Dates changed to May 9, 1988, 8:30 a.m. to 4:30 p.m.; and May 10, 1988, 8:30 a.m. to 11:30 a.m.

Contact Person for More Information: Dr. Randolph Graves, Office of Aeronautics and Space Technology, National Aeronautics and Space Administration, Washington, DC 20546, 202/453-2828.

Dated: April 12, 1988.

Ann Bradley,

Advisory Committee Management Officer, National Aeronautics and Space Administration.

[FR Doc. 88-8386 Filed 4-15-88; 8:45 am]

BILLING CODE 7510-01-M

NATIONAL ARCHIVES AND RECORDS ADMINISTRATION

Records Schedules; Availability and Request for Comments

AGENCY: National Archives and Records Administration, Office of Records Administration.

ACTION: Notice of availability of proposed records schedules; request for comments.

SUMMARY: The National Archives and Records Administration (NARA) publishes notice at least once monthly of certain Federal agency requests for records disposition authority (records schedules). Records schedules identify records of sufficient value to warrant preservation in the National Archives of the United States. Schedules also authorize agencies after a specified period to dispose of records lacking administrative, legal, research, or other value. Notice is published for records schedules that (1) propose the destruction of records not previously authorized for disposal, or (2) reduce the retention period for records already authorized for disposal. NARA invites public comments on such schedules, as required by 44 U.S.C. 3303a(a).

DATE: Requests for copies must be received in writing on or before June 2, 1988. Once the appraisal of the records is completed, NARA will send a copy of the schedule. The requester will be given 30 days to submit comments.

ADDRESS: Address requests for single copies of schedules identified in this notice to the Records Appraisal and Disposition Division (NIR), National Archives and Records Administration, Washington, DC 20408. Requesters must cite the control number assigned to each schedule when requesting a copy. The control number appears in parentheses immediately after the name of the requesting agency.

SUPPLEMENTARY INFORMATION: Each year U.S. Government agencies create billions of records on paper, film, magnetic tape, and other media. In order to control this accumulation, agency records managers prepare records schedules specifying when the agency no longer needs the records and what happens to the records after this period. Some schedules are comprehensive and cover all the records of an agency or one of its major subdivisions. These comprehensive schedules provide for the eventual transfer to the National Archives of historically valuable records and authorize the disposal of all other records. Most schedules, however, cover records of only one office or program or a few series of records, and many are updates of previously approved schedules. Such schedules also may include records that are designated for permanent retention.

Destruction of records requires the approval of the Archivist of the United States. This approval is granted after a thorough study of the records that take into account their administrative use by the agency of origin, the rights and interests of the Government and of private persons directly affected by the Government's activities, and historical or other value.

This public notice identifies the Federal agencies and their subdivisions requesting disposition authority, includes the control number assigned to each schedule, and briefly describes the records proposed for disposal. The records schedule contains additional information about the records and their disposition. Further information about the disposition process will be furnished to each requester.

Schedules Pending:

1. Department of Commerce, International Trade Administration (N1-151-88-2). Records of the Deputy Assistant Secretary of Commerce for Trade Adjustment Assistance.

2. Department of Health and Human Services, Office of Human Development Services (N1-439-87-1) Supplement to agency's comprehensive records control schedule.

3. Department of the Interior, U.S. Geological Survey (N1-57-88-1). Seismographic records of the Geologic Division, Branch of Global Seismology and Geomagnetism.

4. Department of Justice, Land and Natural Resources Division (N1-60-88-8). Attorney and non-attorney time reporting records.

5. U.S. Postal Service, Bureau of the Third Assistant Postmaster General (N1-28-88-2). Records relating to unpaid postal savings accounts.

6. Tennessee Valley Authority, Office of the General Counsel (N1-142-88-8). Records submitted to the OGC for review related to the billing for the transportation of goods.

7. Tennessee Valley Authority, Office of Corporate Services, Division of Property and Services (N1-142-88-9). Records documenting official travel of agency employees via commercial and corporate flights, maintained in machine readable form.

8. Tennessee Valley Authority, Office of Corporate Services, Division of Medical Services (N1-142-88-11). Project property record used to inventory medical equipment.

9. Veterans Administration, Department of Veterans Benefits, Field Station Administrative Issues History Files (N1-15-87-8). Field station issuances related to routine administrative functions (e.g., payroll procurement, personnel).

Dated: April 11, 1988.

Don W. Wilson,

Archivist of the United States.

[FR Doc. 88-8395 Filed 4-15-88; 8:45 am]

BILLING CODE 7515-01-M

NATIONAL SCIENCE FOUNDATION

Interagency Artic Research Policy Committee; Meeting

In accordance with the Arctic Research and Policy Act, Pub. L. 98-373, the National Science Foundation announces the following meeting:

Name: Interagency Arctic Research Policy Committee.

Date & Time: May 2, 1988 9:00 a.m.

Place: U.S. Department of the Interior, Room 5160, 18th and C Streets, NW., Washington, DC.

Type of Meeting: Open—entire meeting.

Contact Person: Jerry Brown or Charles E. Myers, Division of Polar Programs, Room 627, National Science Foundation, Washington, DC 20550 Telephone: (202) 357-7817.

Purpose of Committee: The Interagency Arctic Research Policy Committee was established by Pub. L. 98-373, the Arctic Research and Policy Act, to survey arctic research, help determine priorities for future arctic research, assist in the development of a national arctic research policy, prepare a single, integrated multi-agency budget request for arctic research, develop a plan to implement national arctic research policy, and facilitate cooperation in and coordination of arctic research.

Agenda: 1. U.S. Arctic Research Planning, Implementation, and Data Management.

2. International Activities.
3. Arctic Logistics Planning and Coordination.
4. Arctic Research Commission Activities.

Public Participation: Committee meetings are not designed as public hearings and will not normally receive verbal comments from observers unless specifically invited by the Committee. Observers invited to address the Committee will be limited to 5 minutes each. An invitation to address the Committee is contingent upon advance submission of the proposed statement and a determination by the Committee that such statement is relevant and appropriate to the agenda at that particular meeting. The texts of such statements shall not exceed 5 doublespaced typed pages each.

Charles E. Myers,

Division of Polar Programs.

[FR Doc. 88-8301 Filed 4-15-88; 8:45 am]

BILLING CODE 7555-01-M

NUCLEAR REGULATORY COMMISSION

Abnormal Occurrence Report; Section 208 Report Submitted to the Congress

Notice is hereby given that pursuant to the requirements of section 208 of the Energy Reorganization Act of 1974, as amended, the Nuclear Regulatory Commission (NRC) has published and issued another periodic report to Congress on abnormal occurrences (NUREG-0090, Vol. 10, No. 4).

Under the Energy Reorganization Act of 1974, which created the NRC, an abnormal occurrence is defined as "an unscheduled incident or event which the Commission (NRC) determines is significant from the standpoint of public health or safety." The NRC has made a determination based on criteria published in the Federal Register (42 FR 10950) on February 24, 1977, that events involving an actual loss or significant reduction in the degree of protection against radioactive properties of source, special nuclear, and byproduct materials are abnormal occurrences.

The report to Congress is for the fourth calendar quarter of 1987. The report identifies the occurrences or events that the Commission determined to be significant and reportable; the remedial actions that were undertaken are also described. During the report period, there was one abnormal occurrence at the NRC licensees; the item involved the suspension of license of an oil and gas well tracer company for noncompliance with NRC regulatory requirements. There were no abnormal occurrences reported by the Agreement States.

The report also contains information updating some previously reported abnormal occurrences.

A copy of the report is available for public inspection and/or copying at the NRC Public Document Room, 1717 H Street, NW., Washington, DC 20555, or at any of the nuclear power plant Local Public Document Rooms throughout the country.

Copies of NUREG-0090, Vol. 10, No. 4 (or any of the previous reports in this series), may be purchased from the Superintendent of Documents, U.S. Government Printing Office, Post Office Box 37082, Washington, DC 20013-7082. A year's subscription to the NUREG-0090 series publication, which consists of four issues, is also available.

Copies of the report may also be purchased from the National Technical Information Service, 5285 Port Royal Road, Springfield, VA 22161.

Dated at Washington, DC, this 5th day of April, 1988.

For the Nuclear Regulatory Commission.

Samuel J. Chilk,

Secretary of the Commission.

[FR Doc. 88-8426 Filed 4-15-88; 8:45 am]

BILLING CODE 7590-01-M

Advisory Committee on Reactor Safeguards Subcommittee on Generic Items; Meeting

The ACRS Subcommittee on Generic Items will hold a meeting on April 27.

1988, Room 1046, 1717 H Street, NW, Washington, DC.

The entire meeting will be open to public attendance.

The agenda for the subject meeting shall be as follows:

Wednesday, April 27, 1988—1:30 p.m. until the conclusion of business

The Subcommittee will discuss: (1) Integrated Safety Assessment Program (ISAP)–II, and (2) Integration of Related Generic Issues.

Oral statements may be presented by members of the public with the concurrence of the Subcommittee Chairman; written statements will be accepted and made available to the Committee. Recordings will be permitted only during those portions of the meeting when a transcript is being kept, and questions may be asked only by members of the Subcommittee, its consultants, and Staff. Persons desiring to make oral statements should notify the ACRS staff member named below as far in advance as is practicable so that appropriate arrangements can be made.

During the initial portion of the meeting, the Subcommittee, along with any of its consultants who may be present, may exchange preliminary views regarding matters to be considered during the balance of the meeting.

The Subcommittee will then hear presentations by and hold discussions with representatives of the NRC Staff, its consultants, and other interested persons regarding this review.

Further information regarding topics to be discussed, whether the meeting has been cancelled or rescheduled, the Chairman's ruling on requests for the opportunity to present oral statements and the time allotted therefor can be obtained by a prepaid telephone call to the cognizant ACRS staff member, Mr. Sam Duraiswamy (telephone 202/634–3267) between 7:30 a.m. and 4:15 p.m. Persons planning to attend this meeting are urged to contact the above named individual one or two days before the scheduled meeting to be advised of any changes in schedule, etc., which may have occurred.

Dated: April 11, 1988.

Morton W. Libarkin,

Assistant Executive Director for Project Review.

[FR Doc. 88–8424 Filed 4–15–88; 8:45 am]

BILLING CODE 7590-01-M

Advisory Committee on Reactor Safeguards; Proposed Meetings

In order to provide advance information regarding proposed public meetings of the ACRS Subcommittees and meetings of the full Committee, the following preliminary schedule is published to reflect the current situation, taking into account additional meetings which have been scheduled and meetings which have been postponed or cancelled since the last list of proposed meetings published March 22, 1988 (53 FR 9384). Those meetings which are definitely scheduled have had, or will have, an individual notice published in the **Federal Register** approximately 15 days (or more) prior to the meeting. It is expected that the sessions of the full Committee meeting designated by an asterisk (*) will be open in whole or in part to the public. ACRS full Committee meetings begin at 8:30 A.M. and Subcommittee meetings usually begin at 8:30 A.M. The time when items listed on the agenda will be discussed during full Committee meetings and when Subcommittee meetings will start will be published prior to each meeting. Information as to whether a meeting has been firmly scheduled, cancelled, or rescheduled, or whether changes have been made in the agenda for the May 1988 ACRS full Committee meeting can be obtained by a prepaid telephone call to the Office of the Executive Director of the Committee (telephone: 202/634–3265, ATTN: Barbara Jo White) between 7:30 A.M. and 4:15 P.M., Eastern Time.

ACRS Subcommittee Meetings

Thermal Hydraulic Phenomena, April 19–21, 1988, Idaho Falls, ID. The Subcommittee will review the following topics: (1) the draft Models and Correlations Document for the RELAP–5/MOD 2 thermal hydraulic code, (2) the final version of the proposed revision to the ECCS Rule, and (3) discuss a proposed report on the NRC RES thermal hydraulic research program for consideration by the ACRS.

Severe Accidents, April 26, 1988, Washington, DC. The Subcommittee will review the final version (intended) of the NRC Staff's proposed generic letter on Individual Plant Examinations (IPEs).

Human Factors, April 27, 1988, Washington, DC. The Subcommittee will be briefed and will discuss the following: (1) Proposed Commission Policy Statement on the Professional Conduct of Nuclear Power Operators, (2) cognitive intelligence and (3) nuclear computerized library.

Generic Items, April 27, 1988, Washington, DC. The Subcommittee will discuss: (1) Integrated Safety Assessment Program (ISAP)–II, and (2) Integration of Related Generic Issues.

Babcock & Wilcox Reactor Plants, May 3 and 4, 1988, Washington, DC. The Subcommittee will continue its review of the long-term safety review of B&W reactors.

Regional Programs, May 24, 1988, Atlanta, GA. The Subcommittee will review the activities under the control of the NRC Region II Office.

Improved LWRs, May 25, 1988, Washington, DC. The Subcommittee will discuss Chapters 3, 4, and 5 of the EPRI ALWR Requirements document.

Metal Components, May 26, 1988, Washington, DC. The Subcommittee will discuss the quality of fasteners in nuclear power plants, BWR reactor pressure vessel in-service inspections, and status of the piping erosion-corrosion program.

Advanced Boiling Water Reactors, June 1, 1988, Washington, DC. The Subcommittee will begin its review of the GE ABWR. This meeting will concentrate on the first review module consisting of SAR Chapters 4, 5, 6, and 15–1.

Waste Management, June 7–8, 1988, Washington, DC. The Subcommittee will review pertinent nuclear waste management topics to be determined in the near future.

Reliability Assurance, June 14, 1988, Washington, DC. The Subcommittee will be briefed on the final outcome of the Equipment Qualification-Risk Scoping Study. An update on the implementation of the resolution of USI A–46, "Seismic Qualification of Equipment in Operating Nuclear Power Plants," is also planned.

Maintenance Practices and Procedures, June 15, 1988, Washington, DC. The Subcommittee will be briefed by RES on the current status of the Maintenance Rule.

Thermal Hydraulic Phenomena, June 21, 1988 (tentative), Washington, DC. The Subcommittee will review the status of the MIST Phast III and IV Programs and the proposed OTSG Follow-on Program.

Thermal Hydraulic Phenomena, June 22, 1988 (tentative), Washington, DC. The Subcommittee will review the *W* revised ECCS Model for 2-Loop Upper Plenum Injection (UPI) plants.

Decay Heat Removal Systems, June 23, 1988 (tentative), Washington, DC. The Subcommittee will continue its review of the NRC Staff's resolution position of USI A–45.

RVA Organizational Issues, July 13, 1988, Washington, DC. The Subcommittee will review the lessons learned from the NRC Staff's review of the shutdown of TVA's nuclear power plants.

Advanced Pressurized Water Reactors, Date to be determined (May/June), Washington, DC. The Subcommittee will review the draft SER

VOL 53 ISS 74 AP 18 1988 UMI

of the Modular HTGR conceptual design. In addition, the Subcommittee may review Commissioner Bernthal's concerns regarding SECY-88-42.

Occupational and Environmental Protection Systems, Date to be determined (May/June), Washington, DC. The Subcommittee will review: (1) "hot particle" problem, (2) monitoring the quality and quantity of airborne radionuclides in/out of containment following an accident, (3) the energency planning rule, (4) the control room habitability report by ANL, and (5) other related matters.

Advanced Pressurized Water Reactors, Date to be determined (June), Washington, DC. The Subcommittee will review the licensing review bases document being developed for Combustion Engineering's Standard Safety Analysis Report-Design Certification (CESSAR-DC).

Containment Requirements, Date to be determined (June/July), Washington, DC. The Subcommittee will review the NRC Staff's document on interim recommendations for containment performance and improvements (BWR Mark I only) (tentative).

Safety Philosophy, Technology and Criteria, Date to be determined (June/July), Washington, DC. The Subcommittee will review the status of NUREG-1251 (Implications of Chernobyl) and the NRC Staff's program (at BNL) to address the implications of Chernobyl in regard to severe reactivity transients. The Subcommittee may also review the Staff's final version of a proposed generic letter on USI A-17, "Systems Interactions."

Decay Heat Removal Systems, Date to be determined (June/July), Washington, DC. The Subcommittee will review the proposed resolutions of Generic Issue 23, "RCP Seal Failures," and Generic Issue 99, "Loss of RHR Capability in PWRs."

Advanced Pressurized Water Reactors, Date to be determined (July), Washington, DC. The Subcommittee will review the draft SER in regard to the reactor, reactor coolant system, and regulatory conformance for the WAPWR RESAR SP/90 design.

Advanced Pressurized Water Reactors, Date to be determined (July/August), Washington, DC. The Subcommittee will discuss the comparison of WAPWR (RESAR SP/90) design with other modern plants (in U.S. and abroad).

Decay Heat Removal Systems, Date to be determined, Washington, DC. The Subcommittee will explore the issue of the use of feed and bleed for decay heat removal in PWRs.

Systematic Assessment of Experience, Date and location to be determined. The Subcommittee will review the Diagnostic Evaluation Program and other related licensee performance review efforts by the NRC Staff.

Thermal Hydraulic Phenomena, Date to be determined, Washington, DC. The Subcommittee will discuss the status of Industry best-estimate ECCS Model submittals for use with the revised ECCS Rule.

Auxiliary Systems, Date to be determined, Washington, DC. The Subcommittee will discuss the: (1) criteria being used by utilities to design Chilled Water Systems, (2) regulatory requirements for Chilled Water Systems design, and (3) criteria being used by the NRC Staff to review the Chilled Water Systems design.

ARC Full Committee Meeting

May 5-7, 1988—Items are tentatively scheduled:

*A. *Babcock & Wilcox Nuclear Power Plants (Open)*—Review design reassessment of B&W Onwers Group safety assessment of B&W nuclear power plants.

*B. *Fire Protection of Nuclear Facilities (Open)*—Review SNL report on fire risk scoping study. Representatives of NRC Staff will participate as appropriate.

*C. *Human Factors (Open)*—Review and comment on proposed NRC policy statement regarding the Professional Conduct of Nuclear Power Plant Operators.

*D. *Integrated Safety Assessment Program (Open)*—Review and comment regarding proposed NRC Staff, implementation of ISAP-II.

*E. *Environmental Qualification of Equipment (Open)*—Discuss proposed issuance of Regulatory Guide 1.100, Seismic Qualification of Electrical and Mechanical Equipment.

*F. *Emergency Core Cooling System (Open)*—Review and comment on proposed revision of NRC ECCS Rule regarding use of best-estimate analytical models.

*G. *Thermal Hydraulic Phenomena (Open)*—Discuss proposed ACRS comments on NRC research program regarding thermal hydraulic phenomena.

*H. *ACRS Subcommittee Activities (Open)*—Reports of subcommittee activities in designate areas including the Westinghouse Advanced PWR.

*I. *Generic Issues (Open)*—Discuss proposed prioritization of generic issues for nuclear power plants.

*J. *Operating Events and Incidents (Open/Closed)*—Briefing regarding operating events and incidents at nuclear facilities.

*K. *Analysis and Evaluation of Operating Data (Open/Closed)*—Briefing regarding analysis and evaluation of operating data at nuclear facilities.

*L. *Anticipated ACRS Activities (Open)*—Discuss anticipated ACRS subcommittee activities and items proposed for consideration of the full committee.

*M. *Appointment of ACRS Members (Closed)*—Discuss qualifications of candidates proposed for consideration as members of the ACRS.

*N. *Individual Plant Examination (Open)*—Review and comment regarding the proposed NRC generic letter to nuclear power plant operators regarding the IPE program for nuclear power plants.

*O. *Containment Systems (Open)*—Briefing and discussion of proposed NRC action plan to resolve issues concerned with Mark I containments to withstand severe accidents.

June 2-4, 1988—Agenda to be announced.

Junly 14-16, 1988—Agenda to be announced.

Date: April 13, 1988.

John C. Hoyle,

Advisory Committee Management Officer.

[FR Doc. 88-8425 Filed 4-15-88; 8:45 am]

BILLING CODE 7590-01-M

[Docket Nos. STN 50-528, STN 50-529 and STN 50-530]

Arizona Public Service Co. et al.; Consideration of Issuance of Amendments to Facility Operating Licenses and Proposed No Significant Hazards Consideration Determination and Opportunity for Hearing

The U.S. Nuclear Regulatory Commission (the Commission) is considering issuance of amendments to Facility Operating License Nos. NPF-41, NPF-51, and NPF-74, issued to the Arizona Public Service Company, Salt River Project Agricultural Improvement and Power District, El Paso Electric Company, Southern California Edison Company, Public Service Company of New Mexico, Los Angeles Department of Water and Power, and Southern California Public Power Authority (licensees), for operation of the Palo Verde Nuclear Generating Station, Units 1, 2 and 3 located in Maricopa County, Arizona.

The amendments would revise the technical specifications relating to the design description of fuel assemblies to include assemblies containing a limited number of Zircaloy-4 or stainless steel filler rods, or vacancies, in lieu of fuel

rods for use in reload cores. The proposed amendments were requested by the licensees' letter of April 8, 1988.

Before issuance of the proposed license amendments, the Commission will have made findings required by the Atomic Energy Act of 1954, as amended (the Act) and the commission's regulations.

The Commission has made a proposed determination that the request for amendments involves no significant hazards consideration. Under the Commission's regulations in 10 CFR 50.92, this means that operation of the facilities in accordance with the proposed amendments would not (1) involve a significant increase in the probability or consequences of an accident previously evaluated; or (2) create the possibility of a new or different kind of accident from any accident previously evaluated; or (3) involve a significant reduction in a margin of safety.

The Commission has provided guidance concerning the application of standards for determining whether a significant hazards concentration exists by providing certain examples (51 FR 7751) of amendments that are considered not likely to involve significant hazards considerations. Example (iii) relates to a change resulting from a nuclear reactor core reloading, if no fuel assemblies significantly different from those found previously acceptable to the NRC for a previous core at the facility in question are involved. This assumes that no significant changes are made to the acceptance criteria for the technical specifications, that the analytical methods used to demonstrate conformance with the technical specifications and regulations are not significantly changed, and that NRC has previously found such methods acceptable. The proposed change is similar to example (iii) of 51 FR 7751 because it would permit reconstituted fuel assemblies to be used during the next core reloading for each facility. The use of reconstituted fuel was developed by Combustion Engineering and is being implemented in other facilities similar in design to Palo Verde.

The Commission is seeking public comments on this proposed determination. Any comments received within 30 days after the date of publication of this notice will be considered in making any final determination. The Commission will not normally make a final determination unless it receives a request for a hearing.

Comments should be addressed to the Rules and Procedures Branch, Office of Administration and Resources Management, U.S. Nuclear Regulatory Commission, Washington, DC 20555, and should cite the publication date and page number of this **Federal Register** notice. Written comments may also be delivered to Room 4000, Maryland National Bank Building, 7735 Old Georgetown Road, Bethesda, Maryland from 8:15 a.m. to 5:00 p.m. Copies of written comments may be examined at the NRC Public Document Room, 1717 H Street, NW., Washington, DC. The filing of requests for hearing and petitions for leave to intervene is discussed below.

By May 18, 1988, the licensees may file a request for a hearing with respect to issuance of the amendments to the subject facility operating licenses and any person whose interest may be affected by this proceeding and who wishes to participate as a party in the proceeding must file a written petition for leave to intervene. Requests for hearing and petitions for leave to intervene shall be filed in accordance with the Commission's "Rules of Practice for Domestic Licensing Proceedings" in 10 CFR Part 2. If a request for a hearing or petition for leave to intervene is filed by the above date, the Commission or an Atomic Safety and Licensing Board, designated by the Commission or by the Chairman of the Atomic Safety and Licensing Board Panel, will rule on the request and/or petition and the Secretary or the designated Atomic Safety and Licensing Board will issue a notice of hearing or an appropriate order.

As required by 10 CFR 2.714, a petition for leave to intervene shall set forth with particularity the interest of the petitioner in the proceeding, and how that interest may be affected by the results of the proceeding. The petition should specifically explain the reasons why intervention should be permitted with particular reference to the following factors: (1) The nature of the petitioner's right under the Act to be made a party to the proceeding; (2) the nature and extent of the petitioner's property, financial, or other interest in the proceeding; and (3) the possible effect of any order which may be entered in the proceeding on the petitioner's interest. The petition should also identify the specific aspect(s) of the subject matter of the proceeding as to which petitioner wishes to intervene. Any person who has filed a petition for leave to intervene or who has been admitted as a party may amend the petition without requesting leave of the Board up to fifteen (15) days prior to the first prehearing conference scheduled in the proceeding, but such an amended petition must satisfy the specificity requirements described above.

Not later than fifteen (15) days prior to the first prehearing conference scheduled in the proceeding, a petitioner shall file a supplement to the petition to intervene which must include a list of the contentions which are sought to be litigated in the matter, and the bases for each contention set forth with reasonable specificity. Contentions shall be limited to matters within the scope of the amendments under consideration. A petitioner who fails to file such a supplement which satisfies these requirements with respect to at least one contention will not be permitted to participate as a party.

Those permitted to intervene become parties to the proceeding, subject to any limitations in the order granting leave to intervene, and have the opportunity to participate fully in the conduct of the hearing, including the opportunity to present evidence and cross-examine witnesses.

If a hearing is requested, the Commission will make a final determination on the issue of no significant hazards consideration. The final determination will serve to decide when the hearing is held.

If the final determination is that the amendment request involves no significant hazards consideration, the Commission may issue the amendments and make them effective, notwithstanding the request for a hearing. Any hearing held would take place after issuance of the amendments.

Normally, the Commission will not issue the amendments until the expiration of the 30-day notice period. However, should circumstances change during the notice period such that failure to act in a timely way would result, for example, in derating or shutdown of the facility, the Commission may issue the license amendments before the expiration of the 30-day notice period, provided that its final determination is that the amendments involve no significant hazards consideration. The final determination will consider all public and State comments received. Should the Commission take this action, it will publish a notice of issuance and provide for opportunity for a hearing after issuance. The Commission expects that the need to take this action will occur very infrequently.

A request for a hearing or a petition for leave to intervene must be filed with the Secretary of the Commission, U.S. Nuclear Regulatory Commission, Washington, DC 20555, Attention: Docketing and Service Branch, or may be delivered to the Commission's Public

Document Room, 1717 H Street, NW. Washington, DC, by the above date. Where petitions are filed during the last ten (10) days of the notice period, it is requested that the petitioner or representative for the petitioner promptly so inform the Commission by a toll-free telephone call to Western Union at 1-800-325-6000 (in Missouri 1-800-342-6700). The Western Union operator should be given Datagram Identification Number 3737 and the following message addressed to George W. Knighton: Petitioner's name and telephone number; date petition was mailed; plant name; and publication date and page number of the **Federal Register** notice. A copy of the petition should also be sent to the Office of General Counsel, U.S. Nuclear Regulatory Commission, Washington, DC 20555, and to Mr. Arthur C. Gehr, Snell & Wilmer, 3100 Valley Center, Phoenix, Arizona 85007.

Nontimely filings of petitions for leave to intervene, amended petitions, supplemental petitions and/or requests for hearing will not be entertained absent a determination by the Commission, the presiding officer or the presiding Atomic Safety and Licensing Board, that the petition and/or request should be granted based upon a balancing of the factors specified in 10 CFR 2.714(a)(1)(i)-(v) and 2.714(d).

For further details with respect to this action, see the application for amendments which is available for public inspection at the Commission's Public Document Room, 1717 H Street, NW., Washington, DC, and at the Phoenix Public Library, Business and Science Division, 12 East McDowell Road, Phoenix, Arizona 85004.

Dated at Rockville, Maryland, this 13th day of April, 1988.

For the Nuclear Regulatory Commission.

E.A. Licitra,

Senior Project Manager, Project Directorate V, Division of Reactor Projects—III, IV, V and Special Projects.

[FR Doc. 88-8392 Filed 4-15-88; 8:45 am]

BILLING CODE 7590-01-M

[Docket No. 030-13435, License No. 53-17854-01, EA 88-69]

Finlay Testing Laboratories, Inc.; Order Continuing Suspension of License (Effective Immediately) and Order To Show Cause Why License Should Not Be Revoked

I.

Finlay Testing Laboratories, Inc. (the licensee), Testing and Inspection Services, 99-940 Iwaena Street, Aiea, Hawaii 96701, is the holder of Byproduct Material License No. 53-17854-01 (license) issued by the Nuclear Regulatory Commission (NRC/Commission). The license authorized the licensee to possess and use licensed materials (cobalt-60, iridium-192, and cesium-137 sources of up to 30, 100, and 0.14 curies per source, respectively) in industrial radiography and survey instrument calibration. On September 21, 1987 the license was suspended by Order entitled "Order Suspending License (Effective Immediately)" pending further investigation of the licensee. Pursuant to 10 CFR 2.202(f), that Order was temporarily effective pending further order. This Order addresses the results of the further investigation and continues the suspension directed by the September 21, 1987 Order.

II.

In response to allegations received by the NRC Region V office, an inspection and an investigation of alleged violations of NRC requirements were initiated on August 31, 1987. The inspection and investigation indicated that on February 9 and 14, 1987 and August 18, 1987, the licensee had caused the shipment of radiographic exposure devices containing radioactive sources on passenger-carrying aircraft by concealing the nature of the material being offered for transport. As a result, on September 21, 1987, the NRC issued an Order Suspending License, effective immediately.

III.

Since issuance of the September 21, 1987 suspension order, the NRC staff has continued to investigate and inspect the performance of the licensee in terms of compliance with NRC regulations, including the alleged willful and repeated violations of federal regulations involving the shipment of radiographic exposure devices on military and civilian passenger aircraft flights. Investigation findings since the September 21, 1987 Order have revealed new information indicating further examples of violations showing that the licensee was unable or unwilling to comply with the Commission's requirements to protect the public health and safety. These violations, together with those that were the basis of the previous Order, are set out in detail in the attached Notice of Violation. The more significant violations are summarized as follows:

A. Contrary to applicable NRC and Department of Transportation (DOT) regulations designed to prevent radioactive exposure of airline passengers and employees, on February 9 and 14, 1987 and April 3 and 14, 1987, on six separate passenger carrying flights, the licensee shipped concealed radiographic exposure devices containing licensed radioactive material between the islands of Hawaii and Oahu.

Furthermore, contrary to requirements, there are not records of surveys necessary to demonstrate that, in each instance, the source was in its shielded position. Of these shipments, at least four involved more than one licensee employee.

Also, on January 29, 1987, and August 18, 1987, the licensee delivered radiographic exposure devices to military transportation authorities for transport between Oahu and Johnston Island on military passenger/cargo aircraft without revealing the nature of the material being offered for shipment and without proper package certification, labeling, and shipping documents.

B. In its response of October 5, 1987 to the NRC Order of September 21, 1987, the licensee stated:

> The transportation violations that occurred were isolated, aberrational and unanticipated events in the job performance of the involved radiographers. They were not authorized by Finlay Testing or Gordon Finlay, and certainly were not the usual course of business at Finlay Testing.

Contrary to this assertion, the evidence developed by the investigation indicates that transportation violations were regular occurrences and were the result of deliberate and willful conduct of Finlay Testing. The evidence indicates that, of the eight licensee employees who performed radiography for the licensee in 1987, seven have admitted or have been identified as having taken part in shipments that violated significant requirements. The licensee's Radiation Safety Officer/General Manager was among the involved employees.

The evidence further shows that in at least two instances, the violations occurred with the knowledge of, and in one of those instances, at the direction of, the president an downer of Finlay Testing Laboratories, Inc., Gordon Finlay, notwithstanding objections by the employees involved that the shipments were improper. In one shipment from Johnston Island to Oahu, Gordon Finlay took possession of the source in an unmarked container when it arrived at the MAC terminal. Prior to the shipment, Mr. Finlay advised the employee who was bringing the source to Oahu not to divulge to anyone the nature of the material being shipped.

The evidence indicates that Mr. Finlay was directly involved in these violations. For example, the evidence indicates that although he called the U.S. Army Director of Logistics several times and learned the correct procedures for packing and labeling a source for transportation by the Military Airlift Command, he ignored the procedures.

The licensee was unable to provide the NRC inspectors required records associated with source utilization on the island of Hawaii for the dates February 9–14, 1987 and April 3 and 14, 1987, the dates of improper shipments to the island of Hawaii. In contrast, the licensee was able to provide to the NRC inspectors the required records, in all but one case, for source utilization off the island of Oahu for shipments where the records indicated that shipments were proper. A reasonable inference from the absence of source utilization records and shipping documents for dates related to improper shipments is that Finlay Testing Laboratories, Inc., had attempted to prevent the NRC from discovering the transportation violations through normal inspection techniques.

C. The license specifies that sources were to be used by, or under the supervision of, Gordon Finlay or individuals who had completed the training program described in letters dated February 28, 1983 and August 2, 1983. Finlay Testing violated training requirements specified in the license and in 10 CFR Part 34 as to five licensee employees. The evidence indicates that at least five licensee employees performed work with radiographic equipment without completing one or more of the following training requirements: Completion of classroom training; completion of written and field examinations; and receipt from the licensee of required written safety procedures.

D. The investigation identified numerous instances where the licensee violated several important areas of its radiation safety program. Each of these failures constitutes a violation of Commission requirements. The violations include:

1. Failures to post radiation and high radiation areas.

2. Failures to provide constant surveillance to prevent unauthorized entry of individuals into restricted areas when radiography was being performed.

3. Failures to lock radiographic exposure devices.

4. Failures to secure radiographic exposure devices against unauthorized removal.

5. Use of partially discharged pocket dosimeters for personnel radiation monitoring.

E. The investigation identified numerous instances where the licensee failed to maintain required records.

Specifically, on at least forty occasions during licensed radiographic operations since October 4, 1986, the licensee failed to prepare or to maintain required records that show one or more of the following: (1) The utilization of radiographic sources; (2) the results of exposure device safety inspections; (3) the radiation surveys needed to establish boundaries of restricted areas; (4) radiation surveys performed following the return of radiographic sources to storage; and (5) the readings from pocket dosimeters worn during radiographic operations.

IV.

In the attached Notice of Violation, due to the willfulness and deception employed in repeatedly transporting radioactive sources in violation of regulatory requirements, the Severity Level assessed for violations I.A through D has been increased to Severity Level I in accordance with Section III of the "General Statement of Policy and Procedures for NRC Enforcement Action," 10 CFR Part 2, Appendix C (1987). The severity level assessed for violations II.A through X has been increased to Severity Level II in accordance with Section III of the Enforcement Policy Statement, as these violations demonstrate a careless disregard for NRC requirements.

V.

The federal regulations for shipping radioactive material by air have been established, in part, to protect passengers in aircraft and personnel who handle baggage and cargo from receiving radiation exposure from radioactive material. For the safety of handlers and passengers, the regulations require packaging, labeling, surveying, documentation, and storage limitations for carriage of radioactive material, and also limit the types of flights on which the material may be transported. Regulations concerning training of personnel, surveying of sources and work sites, proper security for radioactive sources, and maintenance of records have been promulgated to protect the health and safety of the public, including licenes employees.

The information presented in this Order and in the attached Notice of Violation shows that the violations described in the September 21, 1987 Order were not isolated cases. As detailed in the Notice of Violation, there were at least eight improper shipments by seven licensee employees over an eight month period, demonstrating the licensee's willingness to violate NRC requirements when expedient. Indeed, with regard to more than one shipment, the owner and president of Finlay Testing Laboratories directed the shipping of the radiographic exposure device in violation of federal requirements.

Information currently available to the NRC staff establishes that the licensee was unwilling, over an extended period of time, to comply with the Commission's requirements to protect the public health and safety when compliance with the requirements would delay the transport of the licensed material or be otherwise inconvenient. Furthermore, the licensee has demonstrated an unwillingness or an inability to comply with the obligations to protect the public health and safety must be assumed by those whom a license is entrusted. This unwillingness or inability to comply is shown by the licensee's violations of requirements to properly survey and to adequately post radiation areas, to properly secure devices when in storage, to use adequately trained and qualified personnel, to properly monitor exposure of employees, to maintain numerous records, and to exercise adequate control of licensed activities. The lengthy list of violations demonstrates a serious breakdown of management control. In sum, the licensee has shown a disregard for NRC requirements and for the public health and safety.

Given the number and nature of violations and the large number of employees involved relative to the total number of employees performing licensed activities, the NRC no longer has reasonable assurance that licensed activities will or can be conducted without undue risk to the public health and safety. If, at the time the license was issued, the NRC had known of the licensee's inability or unwillingness to control licensed activities, the license would not have been issued. Therefore, I have determined that permitting this licensee to conduct licensed activities would be contrary to the public health and safety and that the license should be revoked. I have also determined pursuant to 10 CFR 2.201(c) and 2.202(f), that the public health and safety requires the continued suspension of the license until the revocation issue is resolved, and that no prior notice is required.

VI.

Accordingly, in view of the foregoing and pursuant to sections 81, 161b, 161c, 161i, 161o, 182 and 186 of the Atomic Energy Act of 1954, as amended, and the Commission's regulations in 10 CFR § 2.202 and 10 CFR Parts 30 and 34, it is hereby ordered, effective immediately, that:

Activities under License No. 53-17854-01 shall continue to be suspended.

It is further ordered that:

The licensee shall show cause, in accordance with section VII of this Order, why License No. 53-17854-01 should not be revoked.

The Regional Administrator, Region V, may, in writing, relax or rescind any of the above provisions on demonstration of good cause by the licensee.

VII.

Pursuant to 10 CFR 2.202(b), the licensee may show cause why License No. 53-17854-01 should not be revoked by filing a written answer under oath or affirmation within 20 days of the date of issuance of this Order, setting forth the matters of fact and law on which the licensee relies. The licensee may answer this Order, as provided in 10 CFR 2.202(d), by consenting to the provisions set forth in Section VI of this Order, or on failure of the licensee to file an answer within the specified time, the license shall be revoked without further Order.

VIII.

The licensee or any other person adversely affected by this Order may request a hearing within 20 days of this Order. Any answer to this Order and any request for a hearing shall be submitted to the Director, Office of Enforcement, U.S. Nuclear Regulatory Commission, Washington, DC 20555. Copies shall also be sent to the Assistant General Counsel for Enforcement, Office of the General Counsel, at the same address, and to the Regional Administrator, U.S. Nuclear Regulatory Commission, Region V, 1450 Maria Lane, Suite 210, Walnut Creek, California 94596. If a person other than the licensee requests a hearing, that person shall set forth with particularity the manner in which the petitioner's interest is adversely affected by this Order and should address the criteria set forth in 10 CFR 2.714(d). An answer to this Order or a request for hearing shall not stay the immediate effectiveness of the continuation of the suspension.

If a hearing is requested by the licensee or a person whose interest is adversely affected, the Commission shall issue an Order designating the time and place of any hearing. If a hearing is held, the issue to be considered at the hearing shall be whether this Order should be sustained.

Dated at Bethesda, Maryland, this 11th day of April 1988.

For the Nuclear Regulatory Commission.

James M. Taylor,

Deputy Executive Director for Regional Operations.

[FR Doc. 88-8391 Filed 4-15-88; 8:45 am]

BILLING CODE 7590-01-M

SECURITIES AND EXCHANGE COMMISSION

Agency Information Collection Activities Under OMB Review

Agency Clearance Officer—Kenneth Fogash, (202) 272-2142.

Upon written request, copy available from: Securities and Exchange Commission, Office of Consumer Affairs and Information Services, Washington, DC 20549.

Revision

SEC File Nos. 270-2, Regulation S-K and 270-50, Form 8-K

Notice is hereby given that pursuant to the Paperwork Reduction Act of 1980 as amended in 1986 (44 U.S.C. 3501 *et seq.*), the Securities and Exchange Commission has submitted for approval proposed amendments to accelerate the time periods for filing information on Form 8-K regarding changes in registrants' certifying accountants and resignations of registrants' directors.

Information collected and records prepared pursuant to the proposed rules would focus on documenting circumstances surrounding a change in a registrant's certifying accountants, and the resignation of the registrant's directors. This information will be used by the public and/or the Commission to review the circumstances surrounding each of these events.

There will generally be a response to the information and record collection request whenever one of these two events occurs.

The potential respondents include all entities that file registration statements or reports (and auditors of financial statements in such registration statements and reports) pursuant to the Securities Act of 1933, the Securities Exchange Act of 1934, the Public Utility Holding Company Act of 1935, or the Investment Company Act of 1940 at an estimated 5 burden hours per form.

It is estimated that there would not be an increase in compliance burden resulting from the proposed rules because the proposals accelerate the timing or disclosure, but do not affect the required recordkeeping or the substance of the disclosures.

Submit comments to OMB Desk Officer: Robert Neal (202) 395-7430, Office of Information and Regulatory Affairs, Room 3228, NEOB, Washington, DC 20503.

Jonathan G. Katz,

Secretary.

April 7, 1988.

[FR Doc. 88-8436 Filed 4-15-88; 8:45 am]

BILLING CODE 8010-01-M

[Rel. No. 34-25564; File No. PHLX 88-12]

Self-Regulatory Organizations; Proposed Rule Change by the Philadelphia Stock Exchange, Inc., Relating to Floor Broker Transactions in Their Own Accounts

Pursuant to section 19(b)(1) of the Securities Exchange Act of 1934, 15 U.S.C. 78s(b)(1), notice is hereby given that on March 24, 1988 the Philadelphia Stock Exchange, Inc. filed with the Securities and Exchange Commission the proposed rule change as described in Items I, II and III below, which Items have been prepared by the self-regulatory organization. The Commission is publishing this notice to solicit comments on the proposed rule change from interested persons.

I. Self-Regulatory Organization's Statement of the Terms of Substance of the Proposed Rule Change

The Philadelphia Stock Exchange, Inc. ("PHLX" or "Exchange"), pursuant to Rule 19b-4, hereby proposes the following rule change: (The following constitutes all new text.)

C-9 Floor Brokers Trading in Their Customer Accounts

All persons employed on the trading floor in association with a Member or Participant, other than Registered Options Traders ("ROTs") and Specialists, are prohibited from initiating trades in PHLX options in their customer accounts while on the floor. A Member or Participant firm which accepts an order for the customer account of such a person must process the order through the channels it normally provides for its other customer orders. When such an order is received on the floor, it may not be handled by any person associated or affiliated with such person or any person with a

beneficial interest in the account. Once such a person has placed an order for his/her customer account in an option, that person is prohibited from brokering orders in that option for the remainder of that day or until such order has been executed or cancelled, whichever is later. This provision shall not apply to (i) any transaction made with the prior approval of two floor officials to permit such person to contribute to the maintenance of a fair and orderly market in such security, or any purchase or sale to reverse any such transaction or (ii) any transaction to offset a transaction made in error.

C-9....	1st Occurrence	$100.00
	2nd Occurrence and Thereafter.	Sanction is Discretionary with Business Conduct Committee

II. Self-Regulatory Organization's Statement of the Purpose of, and Statutory Basis for, the Proposed Rule Change

In its filing with the Commission, the self-regulatory organization included statements concerning the purpose of and basis for the proposed rule change and discussed any comments it received on the proposed rule change. The text of these statements may be examined at the places specified in Item IV below. The self-regulatory organization has prepared summaries, set forth in sections (A), (B), and (C) below, of the most significant aspects of such statements.

A. Self-Regulatory Organization's Statements of the Purpose of, and Statutory Basis for, the Proposed Rule Change

The purpose of the proposed rule change is to clarify that all persons employed on the trading floor in association with a Member or Participant, other than ROTs and Specialists, are prohibited from initiating trades in PHLX options in their personnel customer accounts while on the floor. In this regard, the rule change codifies and makes explicit the applicability of section 11(a) of the Securities Exchange Act of 1934 ("Act") to brokers and other options floor personnel. Section 11(a) makes it "unlawful for any member of a national securities exchange to effect any transaction on such exchange for its own account, the account of an associated person, or an account with respect to which it or an associated person thereof exercises investment discretion." Section 11(a) then provides a number of statutory exceptions, including a dealer/market maker exception [Section 11(a) (A) and (B)] and an error transaction exception [Section 11(a)(F)].

The proposed rule change specifically incorporates the latter exceptions of section 11 while providing the flexibility, consistent with Rule 11a-1(b)(5) under the Act, for additional exceptions to be made, if "made with the prior approval of two floor officials to permit such person to contribute to the maintenance of a fair and orderly market in such security, or any purchase or sale to reverse any such transaction."

As noted in the text of the proposed rule change, the proposal is being promulgated as an Option Floor Procedure Advice, which sets forth a present $100 fine for first occurrence violations with second and subsequent violations being discretionary with the Exchange's Business Conduct Committee.

The proposed rule change is consistent with Section 11 of the Act and section 6(b)(5) of the Act in that it is designed to prevent fraudulent and manipulative acts and practices, will promote just and equitable principles of trade, and protect investors and the public interest.

B. Self-Regulatory Organization's Statement on Burden on Competition

The PHLX does not believe that the proposed rule change will impose any burden on competition.

C. Self-Regulatory Organization's Statement on Comments on the Proposed Rule Change Received From Members Participants, or Others

No written comments were either solicited or received; the proposal, however, was reviewed and approved by the PHLX Options Committe and Foreign Currency Options Committee.

III. Date of Effectiveness of the Proposed Rule Change and Timing for Commission Action

Within 35 days of the date of publication of this notice in the **Federal Register** or within such longer period (i) as the Commission may designate up to 90 days or such date if it finds such longer period to be appropriate and publishes its reasons for so finding or (ii) as to which the self-regulatory organization consents, the Commission will:

(A) By order approve such proposed rule change, or,

(B) Institute proceedings to determine whether the proposed rule change should be disapproved.

IV. Solicitation of Comments

Interested persons are invited to submit written data, views and arguments concerning the foregoing. Persons making written submissions should file six copies thereof with the Secretary, Securities and Exchange Commission, 450 Fifth Street NW., Washington, DC 20549. Copies of the submission, all subsequent amendments, all written statements with respect to the proposed rule change that are filed with the Commission, and all written communications relating to the proposed rule change between the Commission and any person, other than those that may be withheld from the public in accordance with the provisions of 5 U.S.C. 552, will be available for inspection and copying in the Commission's Public Reference Section, 450 Fifth Street, NW., Washington, DC 20549. Copies of such filing will also be available for inspection and copying at the principal office of the above-mentioned self-regulatory organization. All submissions should refer to the file number in the caption above and should be submitted by May 9, 1988.

For the Commission by the Division of Market Regulation, pursuant to delegated authority.

Jonathan G. Katz,

Secretary.

April 8, 1988.

[FR Doc. 88-8433 Filed 4-15-88; 8:45 am]

BILLING CODE 8010-01-M

[500-1]

Balboa Development, Inc.; Order of Trading Suspension

April 13, 1988.

It appears to the Securities and Exchange Commission that there is a lack of current and accurate information relating to the securities of Balboa Development, Inc. ("Balboa"), an Oregon corporation with principal business offices in San Francisco, California, and that questions have been raised about the adequacy and accuracy of publicly disseminated information concerning, among other things: the lack of current and accurate public information about Balboa's financial condition and results of operations; its revenues and net income; its total assets; and other matters. The Commission is of the opinion that the public interest and the protection of investors require a summary suspension of trading in the securities of Balboa.

Therefore, it is ordered, pursuant to section 12(k) of the Securities Exchange Act of 1934, that over-the-counter

trading in the securities of Balboa Development, Inc. is suspended, for the period commencing at 1:00 p.m. (EDT) on April 13, 1988, and terminating at 11:59 p.m. (EDT) on April 22, 1988.

By the Commission.

Jonathan G. Katz,

Secretary.

[FR Doc. 88-8434 Filed 4-15-88; 8:45 am]

BILLING CODE 8010-01-M

[500-1]

Eli Scientific, Inc.; Order of Trading Suspension

April 13, 1988.

It appears to the Securities and Exchange Commission that there is a lack of current and accurate information relating to the securities of Eli Scientific, Inc. ("Eli"), formerly named Nexxus Technologies, Inc., an Oregon corporation with principal business offices in Covina, California, and that questions have been raised about the adequacy and accuracy of publicly disseminated information concerning, among other things: the lack of current and accurate public information about Eli's financial condition and results of operations; its revenues and net income; its total assets; and other matters. The Commission is of the opinion that the public interest and the protection of investors require a summary suspension of trading in the securities of Eli.

Therefore, it is ordered, pursuant to section 12(k) of the Securities Exchange Act of 1934, that over-the-counter trading in the securities of Eli Scientific, Inc. is suspended, for the period commencing at 1:00 (EPT) on April 13, 1988, and terminating at 11:59 p.m. (EDT) on April 22, 1988.

By the Commission.

Jonathan G. Katz,

Secretary.

[FR Doc. 88-8435 Filed 4-15-88; 8:45 am]

BILLING CODE 8010-01-M

[File No. 1-8160]

Issuer Delisting; Application To Withdraw From Listing and Registration; General Defense Corporation (13% Senior Subordinated Debentures due April 15, 1995 and 14½% Senior Subordinated Debentures due February 1, 2003)

April 12, 1988.

General Defense Corporation ("Company") has filed an application with the Securities and Exchange Commission pursuant to section 12(d) of the Securities Exchange Act of 1934 ("Act") and Rule 12d2-2(d) promulgated thereunder, to withdraw the above specified securities from listing and registration of the American Stock Exchange, Inc. ("Amex" or "Exchange").

The reasons alleged by the Company in the application for withdrawing its Debentures from listing and registration on the Amex include the following:

According to Section 1002 of the Amex Company Guide, the Exchange will consider the removal from listing of any security when, in the opinion of the Exchange, the financial condition and/or operating results of the Company appear to be unsatisfactory. The Company's unsatisfactory financial condition and operating results are demonstrated by the following:

There is currently an Event of Default with respect to the 14½% Debentures and it is unlikely that the April 15, 1988 interest payment on the 13% Debentures will be made. The Company and its parent, Clabir Corporation ("Clabir"), have been notified that they are in default under their credit agreement, pursuant to which $55 million of indebtedness is currently outstanding.

Although the Company's results of operations for the fiscal year ended January 31, 1988 have not yet been finalized, the Company has announced that it anticipates reporting revenues of approximately $159 million and a significant operating loss as compared to revenues of $275,851,000 and operating income of $31,438,000 reported in the prior fiscal year. The Company also anticipates incurring large non-cash charges as a result of the writing-off of a material portion of goodwill primarily associated with the purchase of the Company by Clabir in July 1986, which will increase the Company's operating loss for the year ended January 31, 1988.

It is anticipated that a restructuring of the Company's outstanding public indebtedness will be necessary, including the Debentures and the $80.5 million principal amount outstanding of 12% Senior Subordinated Debentures due February 1, 1999 of Hamilton Technology, Inc., a wholly-owned subsidiary of the Company. Drexel Burnham Lambert Incorporated ("Drexel") has been engaged to advise the Company in connection with the proposed sale and the restructuring.

In light of the foregoing and the Company's severe working capital shortage, Clabir has announced that it has determined to seek to sell the Company.

In connection with the contemplated restructuring of the Company's outstanding public indebtedness, the consent of the holders of the Debentures to the waiver of and/or amendment to certain provisions of the 13% Indentures and the 14½% Indenture may be required. As long as the Debentures continue to be listed on the Exchange and registered under section 12(b) of the Act, the solicitation of the consent of Debentureholders to any such waiver or amendment will be subject to the federal proxy rules. Compliance with the federal proxy rules generally entails the preparation of a lengthy, detailed document, including financial and other information concerning the Company. The Company believes that the delay and expense that would be entailed in the preparation and filing of a proxy statement in compliance with the proxy rules would be unduly burdensome in light of Company's current financial condition and the limited number of holders of the Debentures.

According to Section 1011 of the Amex Company Guide, "[i]n appropriate circumstances, when the Exchange is considering delisting because a company no longer meets the requirements for continued listing, a company may, with the consent of the Exchange, file a delisting application, provided that it states in its application that it is no longer eligible for continued dealings on the Exchange."

On the basis of the Company's financial condition the Amex has informed the Company that it will not object to the Company's delisting application. At the request of the Exchange, the Company has arranged for the trustee (the "Trustee") under the indentures with respect to the Debentures (the "Indentures") to send a notice to the registered holders of the Debentures (the "Debentureholders") stating that the Application has been filed with the Exchange.

Drexel, which has acted as a market maker with respect to the Debentures, has advised the Company that it is willing to act as a market maker following the withdrawal of the Debentures from listing and registration. Drexel has advised the Company, however, that it is prohibited from engaging in market making activity with respect to securities at any time that such securities are on a "restricted list" and that the Company's securities are currently on Drexel's restricted list because Drexel has been engaged to assist in the proposed sale of the Company and restructuring of its subordinated indebtedness. The Company has informed the Exchange that it will use its best efforts to cause a registered broker-dealer to make a market in the Debentures until there are no longer any of the Debentures publicly held.

In addition, the Company has undertaken to the Exchange:

(a) To send audited financial statements, within 120 days after the close of each fiscal year, to the Debentureholders and to the Trustee;

(b) To comply with the provisions of each of the Indentures concerning notices to the Trustee and/or the Debentureholders;

(c) To forward to the Securities and Exchange Commission, while the Application is pending, any comments received from Debentureholders regarding the decision to delist the Debentures.

Any interested person may, on or before May 3, 1988, submit by letter to the Secretary of the Securities and Exchange Commission, 450 Fifth Street NW., Washington, DC 20549, facts bearing upon whether the application has been made in accordance with the rules of the Exchange and what terms, if any, should be imposed by the Commission for the protection of investors. The Commission, based on the information submitted to it, will issue an order granting the application after the date mentioned above, unless the Commission determines to order a hearing on the matter.

For the Commission, by the Division of Market Regulation, paursuant to delegated authority.

Jonathan G. Katz,

Secretary.

[FR Doc. 88-8415 Filed 4-15-88; 8:45 am]

BILLING CODE 8010-01-M

[Rel. No. IC-16361; File No. 812-6917]

Nationwide Life Insurance Co. ("Nationwide")

April 12, 1988.

Agency: Securities and Exchange Commission ("SEC").

Action: Notice of Application for Exemption under the Investment Company Act ("the 1940 Act").

Applicants: Nationwide Life Insurance Company, Nationwide Variable Account-3 ("Variable Account-3") and American Capital Marketing, Inc.

Relevant 1940 Act Sections: Exemption requested under Section 6(c) from Sections 26(a)(2)(C) and 27(c)(2).

Summary of Application: Applicants seek an order to permit the deduction of a mortality and expense risk charge, for certain variable annuity contracts to be issued by Nationwide, from the assets of Variable Account-3.

Filing Date: The application was filed on November 13, 1987.

Hearing or Notification of Hearing: If no hearing is ordered, the application will be granted. Any interested person may request a hearing on this application, or ask to be notified if a hearing is ordered. Any request must be received by the SEC by 5:30 p.m., on May 6, 1988. Request a hearing in writing, giving the nature of your interest, the reason for the request, and the issues you contest. Serve the Applicants with the request, either personally or by mail, and also send a copy to the Secretary of the SEC, along with proof of service by affidavit or, for lawyers, by certificate. Request notification of the date of a hearing by writing to the Secretary of the SEC.

Addresses: Secretary, SEC, 450 5th Street, NW., Washington, DC 20549. Nationwide Life Insurance Company, One Nationwide Plaza, Columbus, Ohio 43216.

For Further Information Contact: Wendell M. Faria, Staff Attorney, at (202) 272-3450, or Lewis B. Reich, Special Counsel, at (202) 272-2061 (Division of Investment Management, Office of Insurance Products and Legal Compliance).

Supplementary Information: Following is a summary of the application; the complete application is available for a fee from either the SEC's Public Reference Branch in person or the SEC's commercial copier, (800) 231-3282 (in Maryland (301) 258-4300).

Applicants' Representations

1. Variable Account-3 was established by Nationwide pursuant to Ohio law to fund certain Individual Deferred Variable Annuity Contracts (the "Contracts"). It is registered as a unit investment trust under the 1940 Act. The Contracts are currently in the process of being registered under the Securities Act of 1933 on Form N-4.

2. Variable Account-3 will invest only in shares of American Capital Life Investment Trust, an open-end diversified management investment company consisting of five Portfolios. American Capital Marketing, Inc., will serve as the principal underwriter for the Contracts.

3. For assuming certain risks under the Contracts, Nationwide will impose a mortality and expense risk charge at an annual rate of 1.25% of the total net assets of Variable Account-3. Of this charge approximately .80% will be allocated to cover mortality risks and approximately .45% for expense risks. The rate of this charge is guaranteed never to increase.

4. The mortality risk Nationwide assumes arises from its contractual obligation to make payments for the remaining life of an annuitant regardless of how long all annuitants or any individual annuitant may live. In this regard, annuity payments will not be affected by the mortality experience of persons receiving such payments or of the general population. The expense risk Nationwide assumes is that the expenses incurred in administering the Contracts will be greater than estimated and, therefore, will exceed the expense charge limit set in the Contracts.

5. Applicants represent that the mortality and expense risk charge is reasonable in relation to the risks Nationwide assumes under the Contracts.

6. Applicants further represent that the mortality and expense risk charge is within the range of industry practice with respect to comparable annuity products. This representation is made upon Nationwide's analysis of publicly available information of other insurance companies of similar and risk ratings offering similar products.

7. Applicants also represent that there is a reasonable likelihood that Variable Account-3's proposed distribution financing arrangement will benefit Variable Account-3 and the owners of the Contracts.

Applicants' Conditions

If the requested order is granted, Applicants agree to the following conditions:

1. Nationwide will maintain at its administrative offices, available to the Commission, a memorandum setting forth in detail the products analyzed in the course of, and the methodology and results of, its comparative survey.

2. Nationwide will maintain at its administrative offices and make available to the Commission a memorandum setting forth the basis for the conclusion that Variable Account-3's distribution financing arrangement may benefit Variable Account-3 and the owners of the Contracts.

3. Variable Account-3 will invest only in management investment companies each of which undertakes, in the event such company adopts a plan under Rule 12b-1 to finance distribution expenses, to have a board of trustees (or directors), a majority of whom are not interested persons of the company, approve any such plan under Rule 12b-1.

For the Commission, by the Division of Investment Management, pursuant to delegated authority.

Jonathan G. Katz,

Secretary.

[FR Doc. 88-8414 Filed 4-15-88; 8:45 am]

BILLING CODE 8010-01-M

DEPARTMENT OF TRANSPORTATION

Federal Highway Administration

Environmental Impact Statement: South Union Township, Fayette County, PA

AGENCY: Federal Highway Administration FHWA) DOT.

ACTION: Notice of Intent.

SUMMARY: The FHWA is issuing this notice to advise the public that an Environmental Impact Statement will be prepared for a proposed highway project in Fayette County, Pennsylvania.

FOR FURTHER INFORMATION CONTACT: George J. Catselis, District Engineer, Federal Highway Administration, 228 Walnut Street, P.O. Box 1086, Harrisburg, Pennsylvania 17108–1086, Telephone (717)782–3411 or C. Vance Dei Cas, District Engineer, Pennsylvania Department of Transportation, Engineering District 12–0, North Gallatin Avenue Extension, P.O. Box 459, Uniontown Pennsylvania 15401, Telephone (412)439–7340.

SUPPLEMENTARY INFORMATION: The Federal Highway Administration (FHWA), in cooperation with the Pennsylvania Department of Transportation (PennDOT), will prepare an Environmental Impact Statement for a proposal to complete the fourth and final section of the Uniontown Bypass, S.R. 6040, Section A04, which will alleviate traffic flow problems by diverting traffic, particularly large trucks, around the community of Hopwood and the city of Uniontown. Located in southwestern Pennsylvania, the proposed project is a four-lane limited access highway approximately 3.4 miles in length. The project begins in South Union Township, just south of the city of Uniontown, at the existing terminus of the Uniontown Bypass, extends eastward, and ends in South Union Township, southeast of Hopwood on U.S. 40 at Summit Mountain. Alternatives under construction include (1) taking no action, and (2) constructing a four-lane limited access highway on new location. Design variations of grade and alignment will be incorporated into, and studied with the build alignment. The following areas will be investigated for the project: socioeconomics and land use, Section 4(f) resources, terrestrial ecology, wetlands, water quality, archeological and historic resources, construction impacts, air quality, noise, energy, visual quality, floodplains, aquatic ecology, hazardous waste, farmlands, soils and geology, preliminary design and cost, traffic, groundwater, and threatened and endangered species. Public involvement and interagency coordination will be maintained throughout the development of the Environmental Impact Statement. A Plan of Study and an invitation to scoping meetings will be distributed to appropriate federal, state and local agencies, and to private organizations and citizens who express interest in the proposal. Public meetings, public plans displays, and a public hearing will be conducted to obtain formal public input on the findings of the environmental and engineering studies.

To insure that the full range of issues related to the proposed action are addressed and that all significant issues are identified, comments or questions concerning this action and the Environmental Impact Statement should be directed to the FHWA or PennDOT at the addresses listed above. (Catalog of Federal Domestic Assistance Program Number 20.205, Highway Planning and Construction. The regulations implementing Executive Order 12372 regarding intergovernmental consultation on Federal programs and activities apply to this program.)

George L. Hannon,
Assistant Division Administrator, Harrisburg, Pennsylvania.

[FR Doc. 88–8396 Filed 4–15–88; 8:45 am]
BILLING CODE 4910–22–M

Maritime Administration

Change of Name of Approved Trustee

Notice is hereby given that effective November 1, 1986, Shawmut Bank of Boston, N.A., Boston, Massachusetts, changed its name of Shawmut Bank, N.A.

Dated: April 12, 1988.

By Order of the Maritime Administrator.

James E. Saari,
Secretary.

[FR Doc. 88–8385 Filed 4–15–88; 8:45 am]
BILLING CODE 4910–81–M

Sunshine Act Meetings

Federal Register
Vol. 53, No. 74
Monday, April 18, 1988

This section of the FEDERAL REGISTER contains notices of meetings published under the "Government in the Sunshine Act" (Pub. L. 94-409) 5 U.S.C. 552b(e)(3).

AFRICAN DEVELOPMENT FOUNDATION

Board of Directors Meeting

TIME: 12:00–2:00 p.m.

PLACE: African Development Foundation, 1625 Massachusetts Avenue, NW., Suite 600, Washington, DC 20036.

DATE: Friday, May 6, 1988.

STATUS: Open.

Agenda

1. Chairman's Report
2. President's Report
3. New Business
4. Old Business
5. Other

CONTACT PERSON FOR MORE INFORMATION: Mrs. Janis McCollim, 673–3916.

Leonard H. Robinson, Jr.,
President.

[FR Doc. 88–8460 Filed 4–14–88; 10:50 am]

BILLING CODE 6116-01-M

CONSUMER PRODUCT SAFETY COMMISSION

TIME AND DATE: 10:00 a.m., Thursday, April 21, 1988.

LOCATION: Room 556, Westwood Towers, 5401 Westbard Avenue, Bethesda, Maryland.

STATUS: Open to the public.

MATTERS TO BE CONSIDERED:

1. *Request for Exception to 16 CFR 1031.5*

The Commission will consider two requests for exceptions to Commission regulations concerning staff membership and participation in councils or committees of voluntary standards organizations.

Closed to the Public

2. *Compliance Status Report*

The staff will brief the Commisson of the status of various compliance matters.

FOR A RECORDED MESSAGE CONTAINING THE LASTEST AGENDA INFORMATION, CALL: 301–492–5709.

CONTACT PERSON FOR ADDITIONAL INFORMATION: Sheldon D. Butts, Office of the Secretary, 5401 Westbard Ave., Bethesda, Md. 20207, 301–492–6800.

April 13, 1988.

Sheldon D. Butts,
Deputy Secretary.

[FR Doc. 88–8429 Filed 4–13–88; 4:25 pm]

BILLING CODE 6355-01-M

FEDERAL DEPOSIT INSURANCE CORPORATION

Pursuant to the provisions of the "Government in the Sunshine Act" (5 U.S.C. 552b), notice is hereby given that at 10:31 a.m. on Tuesday, April 12, 1988, the Board of Directors of the Federal Deposit Insurance Corporation met in closed session, by telephone conference call, to consider matters relating to the possible closing of certain insured banks.

In calling the meeting, the Board determined, on motion of Director C.C. Hope, Jr. (Appointive), seconded by Chairman L. William Seidman, concurred in by Mr. Robert J. Herrmann, acting in the place and stead of Director Robert L. Clarke (Comptroller of the Currency), that Corporation business required its consideration of the matters on less than seven days' notice to the public; that no earlier notice of the meeting was practicable; that the public interest did not require consideration of the matters in a meeting open to the public observation; and that the matters could be considered in a closed meeting pursuant to subsections (c)(8), (c)(9)(A)(ii), and (c)(9)(B) of the "Government in the Sunshine Act" (5 U.S.C 552b(c)(8), (c)(9)(A)(ii), and (c)(9)(B)).

Dated: April 13, 1988.

Federal Deposit Insurance Corporation.

Robert E. Feldman,
Assistant Executive Secretary (Operations).

[FR Doc. 88–8439 Filed 4–13–88; 4:42 pm]

BILLING CODE 6714-01-M

FEDERAL DEPOSIT INSURANCE CORPORATION

Pursuant to the provisions of the "Government in the Sunshine Act" (5 U.S.C. 552b), notice is hereby given that at 12:03 p.m. on Wednesday, April 13, 1988, the Board of Directors of the Federal Deposit Insurance Corporation met in closed session to consider matters relating to an assistance agreement pursuant to section 13(c) of the Federal Deposit Insurance Act.

In calling the meeting, the Board determined, on motion of Director C. C. Hope, Jr. (Appointive), seconded by Director Robert L. Clarke (Comptroller of the Currency), concurred in by Chairman L. William Seidman, that Corporation business required its consideration of the matters on less than seven days' notice to the public; that no earlier notice of the meeting was practicable; that the public interest did not require consideration of the matters in a meeting open to public observation; and that the matters could be considered in a closed meeting pursuant to subsections (c)(8), (c)(9)(A)(ii), and (c)(9)(B) of the "Government in the Sunshine Act" (5 U.S.C. 552b(c)(8), (c)(9)(A)(ii), and (c)(9)(B)).

The meeting was held in the Board Room on the sixth floor of the FDIC Building located at 550 17th Street, NW., Washington, DC.

Dated: April 13, 1988.

Federal Deposit Insurance Corporation.

Robert E. Feldman,
Assistant Executive Secretary (Operations).

[FR Doc. 88–8496 Filed 4–14–88; 11:52 am]

BILLING CODE 6714-01-M

FEDERAL DEPOSIT INSURANCE CORPORATION

Pursuant to the provisions of subsection (e)(2) of the "Government in the Sunshine Act" (5 U.S.C. 552b(e)(2)), notice is hereby given that at its closed meeting held at 2:30 p.m. on April 13, 1988, the Corporation's Board of Directors determined, on motion of Chairman L. William Seidman, seconded by Director C. C. Hope, Jr. (Appointive), concurred in by Director Robert L. Clarke (Comptroller of the Currency), that Corporation business required the addition to the agenda for consideration at the meeting, on less than seven days' notice to the public, of the application of The Bank of Casey, Casey, Illinois, an insured State nonmember bank, for consent to purchase the assets of and assume the liability to pay deposits made in Martinsville State Bank, Martinsville, Illinois, and for consent to establish the two offices of Martinsville State Bank as branches of The Bank of Casey.

The Board further determined, by the same majority vote, that no earlier

BEST COPY AVAILABLE

notice of this change in the subject matter of the meeting was practicable; that the public interest did not require consideration of the matter in a meeting open to public observation; and that the matter could be considered in a closed meeting by authority of subsections (c)(6), (c)(8), and (c)(9)(A)(ii) of the "Government in the Sunshine Act" (5 U.S.C. 552b(c)(6), (c)(8), and (c)(9)(A)(ii)).

Dated: April 13, 1988.

Federal Deposit Insurance Corporation.

Robert E. Feldman,

Assistant Executive Secretary (Operations).

[FR Doc. 88-8497 Filed 4-14-88; 11:52 am]

BILLING CODE 6714-01-M

FEDERAL HOME LOAN MORTGAGE CORPORATION

DATE AND TIME: Tuesday, April 19, 1988, 2:00 p.m.

PLACE: 1776 G Street, NW., Board Room, Third Floor, Washington, DC 20006.

STATUS: Closed.

CONTACT PERSON FOR MORE INFORMATION: Alan Hausman, 1759 Business Center Drive, P.O. Box 4115, Reston, Virginia 22090, (703) 759-8405.

MATTERS TO BE CONSIDERED:

Closed Minutes of March 7, 1988 and March 11, 1988 Board of Directors' Meetings
Closed President's Report
Closed Management Delegations
Closed TMIC
Closed Repurchase Transactions
Closed Financial Report

Date sent to Federal Register: April 14, 1988.

Maud Mater,

Secretary.

[FR Doc. 88-8505 Filed 4-14-88; 1:28 pm]

BILLING CODE 6719-01-M

FEDERAL TRADE COMMISSION

TIME AND DATE: 10:00 a.m., Wednesday, April 20, 1988.

PLACE: Room 432, Federal Trade Commission Building, 6th Street and Pennsylvania Avenue, NW., Washington, DC 20580.

STATUS: Open.

MATTERS TO BE CONSIDERED:

Consideration of staff recommendation to amend or repeal Retail Food Store Advertising and Marketing Practices Rule.

CONTACT PERSON FOR MORE INFORMATION. Susan B. Ticknor, Office of Public Affairs: (202) 326-2179; Recorded Message: (202) 326-2711.

Emily H. Rock,

Secretary.

[FR Doc. 88-8454 Filed 4-14-88; 10:46 am]

BILLING CODE 6750-01-M

NATIONAL LABOR RELATIONS BOARD

TIME AND DATE: 9:30 a.m., Monday, May 2, 1988.

PLACE: Board Conference Room, Sixth Floor, 1717 Pennsylvania Avenue, NW., Washington, DC 20570.

STATUS: Open to public observation.

MATTERS TO BE CONSIDERED: Rulemaking—29 CFR Part 103 (Collective-Bargaining Units in the Health Care Industry).

CONTACT PERSON FOR MORE INFORMATION: John C. Truesdale, Executive Secretary, National Labor Relations Board, Washington, DC 20570, Telephone: (202) 254-9430.

Dated: Washington, DC, April 14, 1988.

By direction of the Board.

John C. Truesdale,

Executive Secretary, National Labor Relations Board.

[FR Doc. 88-8471 Filed 4-14-88; 10:51 am]

BILLING CODE 7545-01-M

POSTAL SERVICE BOARD OF GOVERNORS

Vote To Close Meeting

At its meeting on April 4, 1988, the Board of Governors of the United States Postal Service voted unanimously to close to public observation its meeting scheduled for May 2, 1988, in Washington, DC. The members will consider certain mail classification matters that were deferred in the March 22, 1988, Decision of the Governors of the United States Postal Service on the Recommended Decision of the Postal Rate Commission on Postal Rate and Fee Changes.

The meeting is expected to be attended by the following persons: Governors Griesemer, Hall, Nevin, Peters, Pace, Ryan and Setrakian; Postmaster General Frank; Deputy Postmaster General Coughlin; Secretary to the Board Harris; and General Counsel Cox.

The Board determined that pursuant to section 552b(c)(3) of title 5, United States Code, and § 7.3(c) of title 39, Code of Federal Regulations, discussion of this matter is exempt from the open meeting requirement of the Government in the Sunshine Act, [5 U.S.C. 552b(b)], because it is likely to disclose information in connection with proceedings under chapter 36 of title 39 (having to do with postal ratemaking, mail classification and changes in postal services), which is specifically exempted from disclosure by section 410(c)(4) of title 39, United States Code. The Board has determined further that pursuant to section 552b(c)(10) of title 5, United States Code, and § 7.3(j) of title 39, Code of Federal Regulations, the discussion is exempt because it is likely to specifically concern the participation of the Postal Service in a civil action or proceeding involving a determination on the record after opportunity for a hearing. The Board further determined that the public interest does not require that the Board's discussion of the matter be open to the public.

In accordance with section 552b(f)(1) of title 5, United States Code, and § 7.6(a) of title 39, Code of Federal Regulations, the General Counsel of the United States Postal Service has certified that in his opinion the meeting may properly be closed to public observation pursuant to section 552b(c)(3) and (10) of title 5 and section 410(c)(4) of title 39, United States Code; and § 7.3(c) and (j) of title 39, Code of Federal Regulations.

Requests for information about the meeting should be addressed to the Secretary of the Board, David F. Harris, at (202) 268-4800.

David F. Harris,

Secretary.

[FR Doc. 88-8472 Filed 4-14-88; 10:58 am]

BILLING CODE 7710-12-M

TENNESSEE VALLEY AUTHORITY

Meeting No. 1401

TIME AND DATE: 10:00 a.m. (CDT), April 20, 1988.

PLACE: University Center, Exhibit Hall B, University of Alabama, Huntsville, Alabama.

STATUS: Open.

Agenda

Approval of minutes of meeting held on March 16, 1988.

Action Items

Old Business

*1. Modifications of the fiscal year 1988 capital budget financed from power proceeds and borrowings—Upgrade sewage treatment service capabilities at Sequoyah Nuclear Plant.

New Business

A—Budget and Financing

*A1. Modifications of the fiscal year 1988 capital budget financed from power proceeds and borrowings relating to Browns Ferry Nuclear Plant—(1) Scram frequency reduction, (2) Capillary tubing seismic qualifications, (3) Security system project, (4) Drywell fire restoration project, (5) Reactor water cleanup pump enhancements, (6) Central alarm and public address system, (7) Unit 2 restart test program, (8) Unit 2 condenser retubing (9) Unit 2 individual plant evaluation, (10) Detailed control room design review unit 2 restart, (11) Replace torus water level transmitters, (12) Install air dryers to diesel generators air start system, (13) Secondary containment penetration evaluation, (14) Process instrumentation upgrade—ion chromatographs, (15) Replace unit preferred transformer with a voltage regulating transformer, (16) Appendix J, and (17) Anticipated transient without scram.

A2. Modification of the capital budget financed from power proceeds and borrowings for fiscal year 1988—Widows Creek Unit 7 radiant reheater upper waterwall, extend sidewall and roof.

A3. Modification of the capital budget financed from power proceeds and borrowings for fiscal year 1988—PSCC-Wilson/PSCC-Volunteer Microwave Radio System-Replace equipment at various power generating and substation sites.

A4. Adoption of the Tennessee Valley Authority financial statements for the fiscal year ended September 30, 1987.

C—Power Items

C1. Supplement to Contract No. TV-38655A with NUS Corporation which will allow TVA to continue its active participation in the Licensing Information Service program.

C2. Letter agreement with Alabama Power Company extending the term of various agreements providing for concurrent power exchange arrangements.

C3. Supplement to subagreement under the Electric Power Research Institute General Agreement No. TV-50942A: Solid oxide fuel cell test project.

C4. Authorization to provide additional funds under Cooperative Agreement No. TV-65580A with Flour Constructors, Inc., for erection services for the 160-MW Atmospheric Fluidized Bed Combustion Demonstration Plant Project.

C5. Arrangement with MCI Telecommunications Corporation on the use of TVA groundwires for a fiber optics telecommunications system.

D—Personnel Items

D1. Supplement to Personal Services Contract No. TV-73786A with ERCI Inc. for technical assistance in the review, development, and improvement of the effectiveness of TVA's Quality Assurance Program, requested by the Office of Nuclear Power.

D2. Supplement to Personal Services Contract No. TV-72165A with Stone & Webster Engineering Corporation, Cherry Hill, New Jersey, for general engineering, design, and architectural and field construction engineering services related to Browns Ferry Nuclear Plant, requested by the Office of Nuclear Power.

D3. Supplement to Personal Services Contract No. TV-81664A with Massachusetts Institute of Technology providing for continuation of Phase II of a ground water transport study, requested by the Division of Air and Water Resources.

E—Real Property Transactions

E1. Filing of Condemnation Cases.

E2. Real Property Transactions Relating to TVA Reservoir Land—(1) Grant of permanent easement to the City of Hiwassee, Georgia, for a municipal water plant, affecting a total of 3.0 acres of Chatuge Reservoir land in Towns County, Georgia—Tract No. XTCHR-28WP; and (2) Abandonment of TVA's interest in a road right-of-way, affecting approximately 0.8 acre adjacent to Fort Loudoun Reservoir in Loudon County, Tennessee—Tract Nos. FL-92 and FL-93.

F—Unclassified

*F1. Contract with the Mississippi Energy and Transportation Board Covering Arrangements for Participation in a Project Relating to the Development and Implementation of a Biomass Energy Program for the State of Mississippi.

F2. Supplement to Contract No. TV-69275A with Valley Information Systems Association covering the development of low-cost methods of procuring computer hardware and low-cost software to assist Mississippi county governments in implementing fiscal management functions.

F3. Supplement to Contract No. TV-73318A between TVA and State of Alabama, Department of Industrial Relations providing for cooperation in a project to reclaim abandoned coal mine lands.

F4. Subagreement to Contract No. TV-63258A between TVA and the Office of Surface Mining Reclamation and Enforcement, U.S. Department of the Interior, providing for TVA assistance in development of a Bond Release Training Program.

F5. Supplement to Contract No. TV-72444A between TVA and U.S. Army Engineer District, St. Louis, providing for cooperation in conducting a transportation rate study.

F6. Supplement to subagreement to Memorandum of Agreement No. TV-23928A between TVA and U.S. Department of the Army, Corps of Engineers, covering arrangements for TVA to perform engineering and design work for rehabilitation of Wilson Auxiliary Lock.

F7. Agreement No. TV-74490A with U.S. Army Corps of Engineers, Little Rock Arkansas (USACE), to allow TVA to perform a demonstration project that will identify nonpoint source polution sources on the Beaver Lake Watershed in northwestern Arkansas for USACE.

F8. Supplements to Memorandum of Understanding (TV-71249A) between TVA and Directorate of Engineering and Housing for TVA support to the United States Army Forces Command, in connection with Energy Resources Management.

F9. Proposed changes to rules and regulations of the Retirement System, terms and conditions of the Volutary Retirement Savings and Investments Plan, the provisions of the TVA Savings and Deferral Retirement Plan (401(k) Plan), and the addition of a new savings fund to the savings plan.

CONTACT PERSON FOR MORE INFORMATION: Alan Carmichael, Director of Information, or a member of his staff can respond to requests for information about this meeting. Call (615) 632-8000, Knoxville, Tennessee. Information is also available at TVA's Washington Office (202) 245-0101.

Dated: April 13, 1988.

W.F. Willis,

General Manager.

[FR Doc. 88-8493 Filed 4-14-88; 11:24 am]

BILLING CODE 8120-01-M

*These items approved by individual Board members. This would give formal ratification to the Board's action.

Corrections

Federal Register
Vol. 53, No. 74
Monday, April 18, 1988

This section of the FEDERAL REGISTER contains editorial corrections of previously published Presidential, Rule, Proposed Rule, and Notice documents and volumes of the Code of Federal Regulations. These corrections are prepared by the Office of the Federal Register. Agency prepared corrections are issued as signed documents and appear in the appropriate document categories elsewhere in the issue.

DEPARTMENT OF AGRICULTURE

48 CFR Parts 439 and 452

[Agriculture Acquisition Circular No. 2]

Acquisition Regulation; Miscellaneous Amendments

Correction

In rule document 88-4183 beginning on page 6062 in the issue of Monday, February 29, 1988, make the following corrections:

439.7001 [Corrected]

1. On page 6068, in the second column, in the heading to 439.7001, remove "Blank" and add "Blanket".

452.236-77 [Corrected]

2. On page 6085, in the first column, in the heading to 452.236-77, remove "Energy" and add "Emergency".

BILLING CODE 1505-01-D

ENVIRONMENTAL PROTECTION AGENCY

40 CFR Part 372

[OPTS-400002A; FRL 3298-2]

Toxic Chemical Release Reporting; Community Right-to-know

Correction

In rule document 88-3027 beginning on page 4500 in the issue of Tuesday, February 16, 1988, make the following corrections:

1. On page 4500, in the second column, in the second complete paragraph, in the 16th line, after "of" insert "a".

2. On the same page, in the third column, in the eighth complete paragraph, in the last line, after "years" insert "to".

3. On page 4503, in the first column, in the first complete paragraph, in the sixth line, "operators" should read "operates".

4. On page 4505, in the second column, in the first complete paragraph, in the third line, after "for" insert "a".

5. On page 4507, in the first column, in the last paragraph, in the 10th line, after "result" insert "from a chemical reaction that occurs upon end use of other chemical substances,".

6. On page 4512, in the first column, in the second complete paragraph, in the 18th line, "property" should read "properly".

7. On the same page, in the second column, in the third complete paragraph, in the sixth line, remove the second "report".

8. On page 4513, in the first column, in the 10th line, "provide" should read "provided".

9. On page 4523, in the third column, in the second line, "an" should read "and".

§ 372.30 [Corrected]

10. On page 4528, in the first column, in § 372.30(d), in the third line, "occurred" was misspelled, and in the seventh line, "of" should read "or".

§ 372.45 [Corrected]

11. On page 4529, in the second column, in § 372.45(c)(4), in the third line, "previously" was misspelled.

§ 372.65 [Corrected]

12. In § 372.65(a), in the table, make the following corrections:

a. On page 4530, the 31st line should read "Benzal chloride".

b. On the same page, the 41st line should read "Bis(2-chloroethyl) ether".

c. On the same page, the 42nd line should read "Bis(chloromethyl) ether".

d. On the same page, the 43rd line should read "Bis(2-chloro-1-methylethyl) ether".

e. On the same page, the 44th line should read "Bis(2-ethylhexyl) adipate".

f. On the same page, the 47th line should read "1,3-Butadiene".

g. On page 4531, the 20th line should read "Carbaryl [1-Naphthalenol, methylcarbamate]".

h. On the same page, the 26th line should read "Chlordane [4,7-Methanoindan, 1,2,4,5,6,7,8,8-octachloro-2,3,3a,4,7,7a-hexahydro-]".

i. On the same page, the 38th line should read "Chlorothalonil [1,3-Benzenedicarbonitrile,2,4,5,6-tetrachloro-]".

j. On the same page, the 51st line should read "2,4-D [Acetic acid, (2,4-dichlorophenoxy)-]".

k. On the same page, the 80th line should read "Di-(2-ethylhexyl) phthalate (DEHP)".

l. On page 4532, the 24th line from the bottom should read "4,4'-Methylenebis(2-chloroaniline) (MBOCA)".

m. On page 4533, in the 22nd line from the bottom, the CAS No. should read "62-56-6".

n. On the same page, the second line from the bottom should read "Tris(2,3-dibromopropyl) phosphate".

13. In § 372.65(b), in the table, make the following corrections:

a. On page 4536, the 14th line from the bottom should read "Calcium cyanamide".

b. On page 4537, the 14th line should read "Tetrachlorvinphos [Phosphoric acid, 2-chloro-1-(2,4,5-trichlorophenyl)ethenyl dimethyl ester]".

c. On the same page, in the 20th line, "Thorium" was misspelled.

BILLING CODE 1505-01-D

ENVIRONMENTAL PROTECTION AGENCY

40 CFR Parts 795 and 799

[OPTS-42097; FRL-3340-9]

Isopropanol; Proposed Test Rule

Correction

In proposed rule document 88-5721 beginning on page 8638 in the issue of Wednesday, March 16, 1988, make the following corrections:

1. On page 8648, in the third column, under **VIII. Public Meetings**, in the first paragraph, in the seventh line, "of" should read "in".

§ 795.231 [Corrected]

2. On page 8651, in the second column, in § 795.231(c)(2)(ii), after paragraph "(B)", the next designated paragraph should be "(C)".

3. On the same page, in the third column, in § 795.231(c)(4)(i), in the second line, "For" should read "Four".

§ 799.2325 [Corrected]

4. On page 8652, in the second column, in § 799.2325(a), in the first line, remove the second "of".

5. On page 8653, in the second column, in § 799.2325(c)(6)(i)(C)(*2*)(*ii*), in the first line, "*Treatment*" was misspelled.

6. On the same page, in the same column, in § 799.2325(c)(6)(i)(D)(*1*), in the fifth line, "of" should read "if".

BILLING CODE 1505-01-D

VOL
53

ISS
74

AP
18

1988

UMI

federal register

Monday
April 18, 1988

Part II

Department of Health and Human Services

National Institutes of Health

Recombinant DNA Research Guidelines and Advisory Committee Meeting; Notices

VOL 53 ISS 74 AP 18 1988 UMI

DEPARTMENT OF HEALTH AND HUMAN SERVICES

National Institutes of Health

Recombinant DNA Advisory Committee Meeting

Pursuant to Pub. L. 92–463, notice is hereby given of a meeting of the Recombinant DNA Advisory Committee at the National Institutes of Health, Building 31C, Conference Room 6, 9000 Rockville Pike, Bethesda, Maryland 20892, on June 3, 1988, from approximately 9 a.m. to adjournment at approximately 5 p.m. This meeting will be open to the public to discuss:

- Amendment of Guidelines;
- Proposed major actions;
- Other matters to be considered by the Committee.

Attendance by the public will be limited to space available. Members of the public wishing to speak at the meeting may be given such an opportunity at the discretion of the Chair.

Dr. William J. Gartland, Executive Secretary, Recombinant DNA Advisory Committee, National Institutes of Health, 12441 Parklawn Drive, Suite 58, Rockville, Maryland 20852, telephone (301) 770–0131, will provide materials to be discussed at the meeting, rosters of committee members, and substantive program information. A summary of the meeting will be available at a later date.

OMB's "Mandatory Information Requirements for Federal Assistance Program Announcements" (45 FR 39592) requires a statement concerning the official government programs contained in the *Catalog of Federal Domestic Assistance*. Normally NIH lists in its announcements the number and title of affected individual programs for the guidance of the public. Because the guidance in this notice covers not only virtually every NIH program but also essentially every Federal research program in which DNA recombinant molecule techniques could be used, it has been determined to be not cost effective or in the public interest to attempt to list these programs. Such a list would likely require several additional pages. In addition, NIH could not be certain that every Federal program would be included as many Federal agencies, as well as private organizations, both national and international, have elected to follow the NIH Guidelines. In lieu of the individual program listing, NIH invites readers to direct questions to the information address above about whether individual programs listed in the *Catalog of Federal Domestic Assistance* are affected.

Dated: April 5, 1988.

Betty J. Beveridge,

Committee Management Officer, National Institutes of Health.

[FR Doc. 88–8367 Filed 4–15–88; 8:45 am]

BILLING CODE 4140–01–M

Recombinant DNA Research; Proposed Actions Under Guidelines

AGENCY: National Institutes of Health, PHS, DHHS.

ACTION: Notice of Proposed Actions Under NIH Guidelines for Research Involving Recombinant DNA Molecules.

SUMMARY: This notice sets forth proposed actions to be taken under the National Institutes of Health (NIH) Guidelines for Research Involving Recombinant DNA Molecules. Interested parties are invited to submit comments concerning these proposals. These proposals will be considered by the Recombinant DNA Advisory Committee (RAC) at its meeting on June 3, 1988. After consideration of these proposals and comments by the RAC, the Director of the National Institutes of Health will issue a decision on these proposals in accord with the NIH Guidelines.

DATE: Comments received by May 24, 1988, will be reproduced and distributed to the RAC for consideration at its June 3, 1988, meeting.

ADDRESS: Written comments and recommendations should be submitted to the Director, Office of Recombinant NDA Activities, 12441 Parklawn Drive, Suite 58, Rockville, MD 20852. All comments received in timely response to this notice will be considered and will be available for public inspection in the above office on weekdays between the hours of 8:30 a.m. and 5:00 p.m.

FOR FURTHER INFORMATION: Background documentation and additional information can be obtained from the Office of Recombinant DNA Activities, 12441 Parklawn Drive, Suite 58, Rockville, Maryland 20852, (301) 770–0131.

SUPPLEMENTARY INFORMATION: The NIH will consider the following actions under the NIH Guidelines for Research Involving Recombinant DNA Molecules:

I. Proposed Amendment of Section I-C

Section I-C of the NIH Guidelines currently reads as follows:

"I-C General Applicability.

"The Guidelines are applicable to all recombinant DNA research within the United States or its territories which is conducted at or sponored by an institution that receives any support for recombinant DNA research from the National Institutes of Health (NIH). This includes research performed by the NIH directly.

"An individual receiving support for research involving recombinant DNA must be associated with or sponsored by an institution that can and does assume the responsibilities assigned in these Guidelines.

"The Guidelines are also applicable to projects done abroad if they are supported by NIH funds. If the host country, however, has established rules for the conduct of recombinant DNA projects, then a certificate of compliance with those rules may be submitted to NIH in lieu of compliance with the NIH Guidelines. The NIH reserves the right to withhold funding if the safety practices to be employed abroad are not reasonably consistent with the NIH Guidelines.

In a letter dated January 9, 1987, Mr. Edward Lee Rogers, Counsel for the Foundation on Economic Trends, and Mr. Jeremy Rifkin, Foundation on Economic Trends, Washington, D.C., proposed that the following text be inserted after the first sentence of the third paragraph of Section I-C:

"For purposes of the preceding sentence, the term 'project' includes any research or development of the recombinant organism or other product or process in question, including all such work that is reasonably forseeable when the NIH support is received. NIH support includes both money grants and any type of in-kind support, including research conducted directly by NIH, supplies, equipment, the use of facilities, and biological research materials. NIH support has been given where the source of funds or in-kind support is, directly or indirectly, the NIH."

This proposed amendment of Section I–C was initially published for comment in the **Federal Register** of March 11, 1987 (52 FR 7525), prior to a scheduled RAC meeting on June 15, 1987. The June 15, 1987, meeting was postponed and rescheduled on September 21, 1987. Accordingly, this proposed amendment was published again for comment in the **Federal Register** of August 11, 1987 (52 FR 29800).

After extensive discussion at its meeting of September 21, 1987, the RAC voted to establish a working group to make recommendations regarding international projects and to report back to the full RAC.

A Working Group on International Projects met at the NIH on February 1, 1988. After extensive discussion, the

working group voted seven in favor, none opposed, and no abstentions that the following proposed revision of the last paragraph of Section I–C be published for comment:

"The NIH Guidelines are also applicable: (1) To projects done abroad if they are supported by NIH funds or (2) to research done abroad if it involves deliberate release into the environment or testing in humans of materials containing recombinant DNA developed with NIH funds and the research is a direct extension of the development process. If the host country, however, has established rules for the conduct of recombinant DNA projects then a written assurance of compliance with those rules may be submitted to NIH in lieu of compliance with the NIH Guidelines. Alternatively, if the host country does not have such rules, written acceptance by an appropriate government office of the host country is necessary in lieu of compliance with the NIH Guidelines. The NIH reserves the right to withhold funding if the safety practices to be employed abroad are not reasonably consistent with the NIH Guidelines."

II. Large-Scale Production Involving Cephalosporium Acremonium Strain LU4–79–6

In a letter dated December 4, 1987, Dr. Mark A. Fogelsong of Eli Lilly and Company, Indianapolis, Indiana, requests approval to conduct large-scale experiments and production involving *Cephalosporium acremonium* strain LU4–79–6 under less than Biosafety Level 1—Large Scale (BL1–LS) conditions. Information on *C. acremonium* and construction of strain LU4–79–6 are provided in the submission.

III. Proposed Amendment of Section III–B–5

In a letter dated March 24, 1988, Dr. Joseph R. Fordham of Novo Laboratories, Inc., Danbury, Connecticut, requests that Section III–B–5, Experiments Involving More Than 10 Liters of Culture, be amended by adding the following paragraph:

"For large-scale (LS) fermentation experiments, involving non-pathogenic and non-toxicogenic recombinant strains of host organisms having an extended history of safe industrial use the appropriate physical containment conditions need be no greater than those for the host organism unmodified by recombinant DNA techniques; the IBC can specify higher containment if it deems it necessary."

Justification for the proposed change is included in the submission.

IV. Proposed Amendment of NIH Guidelines Regarding Transgenic Animals

The RAC was asked by the NIH Institutional Biosafety Committee to consider guidelines for experiments involving transgenic animals that do not technically fall under the NIH Guidelines because the DNA introduced into the animal is not "recombinant DNA" as defined by the Guidelines. The issue is whether these types of animals should be covered by the NIH Guidelines for Research Involving Recombinant DNA Molecules or other guidelines.

The Working Group on Transgenic Animals met at NIH on March 28, 1988, and recommneded a series of amendments to the NIH Guidelines.

Background. On June 26, 1986, the U.S. Department of Agriculture (USDA) issued an "Advanced Notice of Proposed USDA Guidelines for Biotechnology Research (51 FR 23367). A notice in the December 9, 1986, **Federal Register** (51 FR 44397) stated that USDA would be proposing new provisions relating to agricultural research for inclusion in the NIH Guidelines in lieu of the Advanced Notice of Proposed USDA Guidelines for Biotechnology Research published on June 26, 1986. USDA organized a workshop in Arlington, Virginia, on December 13–15, 1986, in part to develop proposed guidelines for plants and animals. Proposed changes to the NIH Guidelines developed by USDA were reviewed and revised by an NIH RAC Working Group on Revision of the Guidelines which met on June 22 and July 16, 1987.

In this proposal, language was developed to modify Sections II and III of the NIH Guidelines to refer specifically to containment for research with whole plants and animals. Containment is described in the proposed amendments Appendix P for plants and Appendix Q for animals. The suggested modifications and additions will provide guidance to the Institutional Biosafety Committees (IBCs) and Principal Investigators (PIs) to assure safe conduct of such experiments.

The proposed changes were published in the **Federal Register** of August 11, 1987 (52 FR 29800), for public comment.

The proposed modifications were discussed extensively by the RAC at its September 21, 1987, meeting. During the discussion, the RAC recommended a number of changes in the language as published for comment. The NIH is in the process of promulgating these proposed changes. Paragraph numbers cited below refer to the paragraphs as numbered in the August 11, 1987, **Federal Register** announcement (52 FR 29800).

A. On September 21, 1987, the RAC recommended that paragraph 7 as published for comment in the **Federal Register** of August 11, 1987, be incorporated into Section II of the NIH Guidelines as follows:

"Biosafety Level 1 for animals (BL1–N) describes containment which is used for animals in which the germ line has been modified through recombinant DNA techniques (transgenic animals) and is designed to eliminate the possibility of sexual transmission of the modified genome or transmission of recombinant-DNA-derived viruses known to be transmitted only vertically (i.e., transmitted from animal parent to offspring only by sexual reproduction). Procedures, practices, and facilities follow classical methods of avoiding genetic exchange between animals."

The Working Group on Transgenic Animals on March 28, 1988, recommended that "(transgenic animals)" be deleted from this paragraph.

B. The Working Group on Transgenic Animals on March 28, 1988, recommended that the following new sentence be added at the beginning of Section III–B–3 before the paragraph entitled "Caution":

"Experiments involving the introduction of eukaryotic viral genomes into the germ line of animals are covered in Section III–B–4."

C. On September 21, 1987, the RAC recommended that the title of Section III–B–4 as published for comment in paragraph 32 in the **Federal Register** of August 11, 1987, be changed to read as follows:

"Recombinant DNA Experiments Involving Whole Animals."

The Working Group on Transgenic Animals on March 28, 1988, recommended that the title of Section III–B–4 be amended to read as follows:

"Experiments Involving Whole Animals, Including Transgenic Animals."

D. On September 21, 1987, the RAC recommended that paragraph 34 as published for comment in the **Federal Register** of August 11, 1987, be incorporated into Section III–B–4 of the NIH Guidelines as follows:

"This section covers experiments involving whole animals, both those in which the animal's genome has been altered by recombinant DNA techniques and experiments involving viable recombinant-DNA-modified microorganisms tested on whole animals. For the latter, other than viruses which are only vertically

transmitted, the experiments may not be carried out at BL1–N containment; a minimum containment of BL1 or BL2–N is required."

The Working Group on Transgenic Animals on March 28, 1988, recommended that this section be amended to read as follows:

"This section covers experiments involving whole animals, both those in which the animal's genome has been altered by stable introduction of DNA into the germ line (transgenic animals) and experiments involving viable recombinant-DNA-modified microorganisms tested on whole animals. For the latter, other than viruses which are only vertically transmitted, the experiments may not be carried out at BL1–N containment; a minimum containment of BL1 or BL2–N is required.

"Caution: Special care should be used in the evaluation of containment conditions for some experiments with transgenic animals. For example, such experiments might lead to the creation of novel mechanisms or increased transmission of a recombinant pathogen or production of undesirable traits in the host animal. In such cases, serious consideration should be given to increasing the containment conditions."

E. On September 21, 1987, the RAC recommended that a modified paragraph 37 as published for comment in the **Federal Register** of August 11, 1987, be incorporated as Section III–B–4–a of the NIH Guidelines as follows:

"Recombinant DNA, or RNA molecules derived therefrom, from any source except for a eukaryotic viral genome may be transferred to any non-human vertebrate or any invertebrate organism and propagated under conditions of physical containment comparable to BL1 or BL1–N and appropriate to the organism under study [2]. Animals containing sequences from viral vectors, if the sequences do not lead to transmissible infection either directly or indirectly as a result of complementation or recombination in animals, may be propagated under conditions of physical containment comparable to BL1 or BL1–N and appropriate to the organism under study. For experiments involving recombinant DNA modified Class 2, 3, 4, or 5 organisms (1) using whole animals, see Section III–B–1."

The Working Group on Transgenic Animals on March 28, 1988, recommended that this section be amended to read as follows:

"Recombinant DNA, or DNA or RNA molecules derived therefrom, from any source except for a eukaryotic viral genome may be transferred to any non-human vertebrate or any invertebrate organism and propagated under conditions of physical containment comparable to BL1 or BL1–N and appropriate to the organism under study [2]. Animals containing sequences from viral vectors, if the sequences do not lead to transmissible infection either directly or indirectly as a result of complementation or recombination in animals, may be propagated under conditions of physical containment comparable to BL1 or BL1–N and appropriate to the organism under study. Experiments involving the introduction of other sequences from eukaryotic viral genomes into animals are covered under III–B–4–b. For experiments involving recombinant DNA modified Class 2, 3, 4, or 5 organisms (1) using whole animals, see Section III–B–1."

F. On September 21, 1987, the RAC recommended that paragraph 41 as published for comment in the **Federal Register** of August 11, 1987, be incorporated as Section III–B–4–b of the NIH Guidelines, as follows:

"For experiments involving whole animals and not covered by Section III–B–1 or Section III–B–4–a, the appropriate containment will be determined by the IBC (22,23)."

The Working Group on Transgenic Animals on March 28, 1988, recommended that this section be amended to read as follows:

"For experiments involving recombinant DNA, or DNA or RNA derived therefrom, involving whole animals, including transgenic animals, and not covered by Section III–B–1 or Section III–B–4–a, the appropriate containment will be determined by the IBC (22)."

V. Proposed Amendment of Appendix A To Include Pseudomonas Mendocina

In a letter dated March 28, 1988, Dr. Burt D. Ensley of AMGen, Thousand Oaks, California, requests that *Pseudomonas mendocina* be included in Sublist A of Appendix A of the NIH Guidelines. Data in support of the request are included in the submission.

VI. Proposed Amendment of Appendix C–IV To Include Bacillus licheniformis

In a letter dated March 30, 1988, Dr. Joseph R. Fordham of Nova Laboratories, Inc., Danbury, Connecticut, request that *Bacillus licheniformis* be included to the title and to the first sentence of Appendix C–IV of the NIH Guidelines. This section would be amended to read as follows:

Appendix C–IV—Experiments Involving Bacillus Subtilis or Bacillus licheniformis Host-Vector Systems

"Any asporogenic *Bacillus subtilis* or *Bacillus licheniformis* strain. . . ."

Data in support of the request are included in the submission.

OMB's "Mandatory Information Requirements for Federal Assistance Program Announcements" (45 FR 39592) requires a statement concerning the official government programs contained in the *Catalog of Federal Domestic Assistance*. Normally NIH lists in its announcements the number and title of affected individual programs for the guidance of the public. Because the guidance in this notice covers not only virtually every NIH program but also essentially every Federal research program in which DNA recombinant molecule techniques could be used, it has been determined to be not cost effective or in the public interest to attempt to list these programs. Such a list would likely require several additional pages. In addition, NIH could not be certain that every Federal program would be included as many Federal agencies, as well as private organizations, both national and international, have elected to follow the NIH Guidelines. In lieu of the individual program listing, NIH invites readers to direct questions to the information address above about whether individual programs listed in the *Catalog of Federal Domestic Assistance* are affected.

Dated: April 5, 1988.

James C. Hill,

Acting Director, National Institute of Allergy and Infectious Diseases.

[FR Doc. 88–8368 Filed 4–15–88; 8:45 am]

BILLING CODE 4140–01–M

VOL 53 ISS 74 AP 18 1988 UMI

federal register

Monday
April 18, 1988

Part III

Department of Health and Human Services

Food and Drug Administration

21 CFR Part 179

Irradiation in the Production, Processing, and Handling of Food; Labeling Requirements; Final Rule

VOL 53 ISS 74 AP 18 1988 UMI

DEPARTMENT OF HEALTH AND HUMAN SERVICES

Food and Drug Administration

21 CFR Part 179

[Docket No. 87N-0363]

Irradiation in the Production, Processing, and Handling of Food; Labeling

AGENCY: Food and Drug Administration.

ACTION: Final rule.

SUMMARY: The Food and Drug Administration (FDA) is amending the regulation on the labeling of retail packages of irradiated food to extend for 2 years the requirement that, in addition to the irradiation logo, the words "Treated with radiation" or "Treated by irradiation" must be placed prominently on labels, labeling, or, in some cases, on counter signs or cards (or other appropriate devices) for all foods that have been irradiated. This extension of the wording requirements will provide time to inform consumers about the meaning of the logo representing food irradiation. The requirements will remain in effect until April 18, 1990.

DATE: Effective April 14, 1988; except as to any provisions that may be stayed by the filing of proper objections; objections by May 18, 1988.

ADDRESS: Written objections and requests for a hearing to the Dockets Management Branch (HFA-305), Food and Drug Administration, Rm. 4-62, 5600 Fishers Lane, Rockville, MD 20857.

FOR FURTHER INFORMATION CONTACT: Clyde A. Takeguchi, Center for Food Safety and Applied Nutrition (HFF-330), Food and Drug Administration, 200 C Street SW., Washington, DC 20204, 202-472-5740.

SUPPLEMENTARY INFORMATION: In the **Federal Register** of February 18, 1988 (53 FR 4856), FDA proposed to amend the regulation in § 179.26(c)(4) (21 CFR 179.26(c)(4)) on the use of irradiation in the production, processing, and handling of food to extend for 2 years the expiration date of the current wording requirements. The regulation requires that the label and labeling of retail packages of foods that have been irradiated bear the appropriate internationally used logo and the words "Treated with radiation" or "Treated by irradiation" (§ 179.26(c)(1)). For foods not in package form, the required logo and phrase are to be displayed with either the labeling of the bulk container or on a counter sign, card, or other appropriate device (§ 179.26(c)(2)). The wording requirements would have expired on April 18, 1988, unless specifically extended by notice and comment rulemaking.

Because most consumers have had no opportunity to associate the required information logo with irradiation treatment, FDA proposed to amend § 179.26(c)(4) by extending the expiration date of the wording requirements in paragraphs (c) (1) and (2) of § 179.26 from April 18, 1988, to April 18, 1990.

Comments

The agency received 132 comments. Of these comments, 115 were filed within the comment period, and 17 additional comments were filed shortly after the comment period closed on March 21, 1988.

All comments agreed on the continued need for a wording requirement applicable to the labeling of irradiated foods. Thirty-two of the comments supported FDA's specific proposal. Ninety comments stated that the agency should have proposed more than a 2-year extension of the current labeling requirement. Most of these comments requested a labeling requirement with no expiration date, and several sought to establish a new requirement applicable to irradiated ingredients in nonirradiated foods. Ten comments discussed concerns relevant to food irradiation but did not discuss issues specific to the proposal.

While FDA agrees that it may need to reconsider this issue again in 2 years, it sees no need to make all portions of the labeling requirement permanent at this time. The agency finds that the 2-year extension will provide sufficient time either for consumers to become familiar with the logo or for FDA to determine that there is a continued need for the requirement. If the agency tentatively concludes that the requirement is needed beyond April 18, 1990, it will propose to extend again the expiration date.

Comments that addressed promulgation of a new labeling requirement for irradiated ingredients, as well as comments on nonlabeling concerns, are beyond the scope of this rulemaking. The proposal addressed only the extension of the wording requirements, and other issues cannot be considered in this proceeding.

Objections

Any person who will be adversely affected by this regulation may at any time on or before May 18, 1988, file with the Docket Management Branch (address above) written objections thereto. Each objection shall be separately numbered, and each numbered objection shall specify with particularity the provisions of the regulation to which objection is made and the grounds for the objection. Each numbered objection on which a hearing is requested shall specifically so state. Failure to request a hearing for any particular objection shall constitute a waiver of the right to a hearing on that objection. Each numbered objection for which a hearing is requested shall include a detailed description and analysis of the specific factual information intended to be presented in support of the objection in the event that a hearing is held. Failure to include such a description and analysis for any particular objection shall constitute a waiver of the right to a hearing on the objection. Three copies of all documents shall be submitted and shall be identified with the docket number found in brackets in the heading of this document. Any objections received in response to the regulation may be seen in the Dockets Management Branch between 9 a.m. and 4 p.m., Monday through Friday. FDA will publish notice of the objections that the agency has received or lack thereof in the **Federal Register**.

Agency Action

In accordance with the Regulatory Flexibility Act, the agency has previously considered the potential effects that this rule would have on small entities, including small businesses. Because this rule merely extends the expiration date for these labeling requirements for 2 years, the agency has determined, in accordance with section 605(b) of the Regulatory Flexibility Act, that no signification impact on a substantial number of small entities would derive from this action. FDA has not received any new information or comments that would alter its previous determinations.

In accordance with Executive Order 12291, FDA has previously analyzed the potential economic effects of this final rule. As announced in the proposal, the agency has determined that the rule is not a major rule as defined by the order. The agency has not received any new information or comments that would alter its previous determination.

The agency has previously considered the environmental effects of this rule as announced in the proposed rule (53 FR 4856). No new information or comments have been received that would affect the agency's previous determination that there is no significant impact on the human environment and that an

environmental impact statement is not required.

List of Subjects in 21 CFR Part 179

Food additives, Food packaging, Radiation protection.

Therefore, under the Federal Food, Drug, and Cosmetic Act and under authority delegated to the Commissioner of Food and Drugs, Part 179 is amended as follows:

PART 179—IRRADIATION IN THE PRODUCTION, PROCESSING, AND HANDLING OF FOOD

1. The authority citation for 21 CFR Part 179 continues to read as follows:

Authority: Secs. 201(s), 409, 72 Stat. 1784–1788 as amended (21 U.S.C. 321(s), 348); 21 CFR 5.10; §§ 179.25 and 179.26 also are issued under secs. 402, 403, 703, 704, 52 Stat. 1046–1048 as amended, 1057, 67 Stat. 477 as amended (21 U.S.C. 342, 343, 373, 374); 21 CFR 5.10, 5.11.

§ 179.26 [Amended]

2. Section 179.26 *Ionizing radiation for the treatment of food* is amended in paragraph (c)(4) by revising "April 18, 1988" to read "April 18, 1990."

Dated: April 12, 1988.

John M. Taylor,

Associate Commissioner for Regulatory Affairs.

[FR Doc. 88–8597 Filed 4–15–88; 9:10 am]

BILLING CODE 4160-01-M

VOL
53
ISS
74
AP
18
1988
UMI

Rea

INFORI

Federa

Index,
Public
Correc
Docum
Machir

Code

Index,
Printing

Laws

Public
Additio

Presid

Execut
Public
Weekly

The U

Genera

Other

Data b
Guide
Legal
Library
Privacy
Public
TDD f

FEDER

10519-1
10869-1
11031-1
11239-1
11487-1
11633-1
11815-1
11991-1
12137-1
12371-1
12509-1
12671-1

Reader Aids

Federal Register

Vol. 53, No. 74

Monday, April 18, 1988

INFORMATION AND ASSISTANCE

Federal Register

Index, finding aids & general information	523-5227
Public inspection desk	523-5215
Corrections to published documents	523-5237
Document drafting information	523-5237
Machine readable documents	523-5237

Code of Federal Regulations

Index, finding aids & general information	523-5227
Printing schedules	523-3419

Laws

Public Laws Update Service (numbers, dates, etc.)	523-6641
Additional information	523-5230

Presidential Documents

Executive orders and proclamations	523-5230
Public Papers of the Presidents	523-5230
Weekly Compilation of Presidential Documents	523-5230

The United States Government Manual

General information	523-5230

Other Services

Data base and machine readable specifications	523-3408
Guide to Record Retention Requirements	523-3187
Legal staff	523-4534
Library	523-5240
Privacy Act Compilation	523-3187
Public Laws Update Service (PLUS)	523-6641
TDD for the deaf	523-5229

FEDERAL REGISTER PAGES AND DATES, APRIL

10519-10668	1
10669-11030	4
11031-11238	5
11239-11486	6
11487-11632	7
11633-11814	8
11815-11990	11
11991-12136	12
12137-12370	13
12371-12508	14
12509-12670	15
12671-12758	18

CFR PARTS AFFECTED DURING APRIL

At the end of each month, the Office of the Federal Register publishes separately a List of CFR Sections Affected (LSA), which lists parts and sections affected by documents published since the revision date of each title.

3 CFR

Proclamations:
5784 10519
5785 10521
5786 10523
5787 11031
5788 11489
5789 11809
5790 11811
5791 11813
5792 12365
5793 12367
5794 12369
5795 12671
5796 12673

Executive Orders:
12634 11041
12635 12134

Administrative Orders:

Memorandums:
Mar. 31, 1988 11039

Presidential Determinations:
No. 88-10 of February 29, 1988 11487

5 CFR

831 11633
842 11633
1633 11815

Proposed Rules:
1632 11864
2431 10886

7 CFR

2 11636
300 10525
301 11825
400 10526
724 12675
725 12675
726 12675
907 12371
908 12371
910 ..... 10527, 11636, 12509
911 11830
917 11832
929 12373
946 11043
981 12374
1032 11637
1064 11590
1126 11638
1421 11239
3600 11639
3601 11639

Proposed Rules:
6 11091
53 10545
54 10545
449 11299
916 12687
917 ..... 11669, 12691
918 11867
946 12423
949 10887
1030 10894
1065 12424
1106 11092
1497 11474
1498 11474
1530 11098
1700 11511
1701 10545
1900 12695
1980 12695

8 CFR

Proposed Rules:
3 11300
208 11300
236 11300
242 11300
253 11300

9 CFR

77 11491
92 ..... 11043, 12640

Proposed Rules:
78 12019

10 CFR

430 10669
600 12137
1010 ..... 11240, 12497

Proposed Rules:
2 11310
50 ..... 11311, 12425

12 CFR

202 11044
205 11046
226 ..... 11047, 11055
229 11832
265 ..... 11640, 12509
563 ..... 11242, 11243
611 12140
615 12140

13 CFR

308 12510

14 CFR

Ch. III 11004
39 ..... 11246, 11641-11643, 11837, 11838, 12141, 12376, 12511
71 ..... 10528, 11020, 11060, 11061, 11839-11841
97 ..... 11062, 12377
121 12358
135 12358

Proposed Rules:
Ch. I 11868

21 ... 11869
23 ... 11869
27 ... 10826, 11162
29 ... 10826, 11162
39 ... 11674–11676, 11678, 11871, 12427
71 ... 10546, 11100, 11101
73 ... 11102

15 CFR

370 ... 12668
371 ... 12668
373 ... 12668
378 ... 12668
379 ... 12668
385 ... 12668
399 ... 12668

16 CFR

13 ... 11247, 12379
Proposed Rules:
13 ... 12534

17 CFR

30 ... 11491
200 ... 12412
230 ... 11841
240 ... 11841
Proposed Rules:
Ch. IV ... 12428
200 ... 12429

18 CFR

37 ... 11191
154 ... 11191
157 ... 11644, 11845
389 ... 12676, 12677
Proposed Rules:
272 ... 12704
274 ... 12704

19 CFR

7 ... 12143

20 CFR

10 ... 11594
Proposed Rules:
10 ... 11596

21 CFR

179 ... 12756
184 ... 11247
340 ... 11731
444 ... 12644, 12658
452 ... 12414
510 ... 11492
520 ... 11063
522 ... 11064, 11493
524 ... 11064, 12512
540 ... 11492
558 ... 11065, 11251
561 ... 11938, 12640
800 ... 11251
803 ... 11251
807 ... 11251
808 ... 11251
809 ... 11251
812 ... 11251
813 ... 11251
820 ... 11251
860 ... 11251
861 ... 11251
862 ... 11645
864 ... 11251
866 ... 11251
876 ... 11251
895 ... 11251
1002 ... 11251
1005 ... 11251
1010 ... 11251
1020 ... 11251
1030 ... 11251
1040 ... 11251
1050 ... 11251
1308 ... 10834, 10861, 10869
Proposed Rules:
133 ... 11312
175 ... 11402
176 ... 11402
177 ... 11402
178 ... 11402
193 ... 11938
561 ... 11313

22 CFR

120 ... 11494, 12099
121 ... 11494, 12099
122 ... 11494, 12099
123 ... 11494, 12099
124 ... 11494, 12099
125 ... 11494, 12099
126 ... 11494, 12099
127 ... 11494, 12099
128 ... 11494, 12099
514 ... 10528
602 ... 10529
706 ... 11992
Proposed Rules:
204 ... 11872
602 ... 12430

23 CFR

650 ... 11065
658 ... 12145
771 ... 11065
1204 ... 11255
1205 ... 11255
Proposed Rules:
625 ... 11875
626 ... 11875
1309 ... 11679

24 CFR

50 ... 11224
200 ... 11270
201 ... 11997
203 ... 10529, 11997
221 ... 11224
234 ... 11997
236 ... 11224
241 ... 11224
248 ... 11224
Proposed Rules:
35 ... 11164
200 ... 11164, 12431
510 ... 11164
511 ... 11164
570 ... 11164
882 ... 11164
886 ... 11164
888 ... 12278
941 ... 11164
965 ... 11164
968 ... 11164

25 CFR

61 ... 11271

26 CFR

1 ... 11002, 11066, 11162, 11731, 12000, 12149, 12513, 12677, 12678
602 ... 11066, 11162, 11731, 12000
Proposed Rules:
1 ... 11103, 11876, 12433, 12534, 12705

27 CFR

Proposed Rules:
4 ... 12024
12 ... 12024

28 CFR

0 ... 10870, 10871, 11645
66 ... 12099
71 ... 11645

29 CFR

102 ... 10872
1907 ... 12102
1910 ... 11414, 12102
2610 ... 10530
2622 ... 10530
2644 ... 10531
2676 ... 12514
Proposed Rules:
516 ... 11590, 12497
530 ... 11590, 12497
1910 ... 11511
1915 ... 11511
1917 ... 11511
1918 ... 11511
2550 ... 11886
2580 ... 11886

30 CFR

48 ... 12415
75 ... 11395
250 ... 10596, 12227
256 ... 10596, 12227
773 ... 11606
934 ... 11500
Proposed Rules:
20 ... 12250
75 ... 12250
77 ... 12250, 12253
785 ... 11685
823 ... 11685
935 ... 11887, 12705
948 ... 11888

31 CFR

Proposed Rules:
103 ... 11513

32 CFR

388 ... 10876
706 ... 12515
Proposed Rules:
45 ... 12034

33 CFR

84 ... 10532
100 ... 11502, 12415
117 ... 10533, 10534, 12416, 12417
165 ... 12417, 12679
Proposed Rules:
100 ... 11515, 12434, 12706
110 ... 11395, 11515
117 ... 11516, 11517, 12434, 12535, 12707, 12708

34 CFR

99 ... 11942
600 ... 11208
657 ... 10820
668 ... 11208
Proposed Rules:
105 ... 10808

35 CFR

103 ... 12516

36 CFR

1202 ... 12150
1258 ... 12150

38 CFR

36 ... 11502

39 CFR

Proposed Rules:
111 ... 11685

40 CFR

22 ... 12256
24 ... 12256
52 ... 11068, 11273, 11655, 11847, 12417
60 ... 11590, 12008, 12009, 12498, 12517
61 ... 12517
180 ... 11071, 11274, 11938, 12151, 12418, 12640
300 ... 12680
372 ... 12748
704 ... 12522
707 ... 12522
710 ... 12522
712 ... 12522
716 ... 12522
717 ... 12522
720 ... 12522
721 ... 12522
723 ... 12522
750 ... 12522
761 ... 12522
763 ... 12522
790 ... 12522
796 ... 12522
797 ... 12522
799 ... 12522
Proposed Rules:
52 ... 11314, 11686, 11688, 12161, 12435
116 ... 11889
117 ... 11889
180 ... 10895
261 ... 12162
264 ... 11742
265 ... 11742
268 ... 11742
271 ... 11742
302 ... 11889, 11890
372 ... 12035
761 ... 11104
763 ... 10546
795 ... 12748
796 ... 11104
799 ... 12748

41 CFR

101–25 ... 11847
101–40 ... 11849
Proposed Rules:
201–33 ... 11518

42 CFR

405 ..... 11504, 12010
413 ..... 12016, 12641
416 11504
418 11504
434 12010
435 12681
436 12681
442 11504
482 11504

Proposed Rules:

405 ..... 12037, 12641
412 12641
413 12641
489 12641

43 CFR

Proposed Rules:

3160 11318

Public Land Orders:

6670 10535
6671 12419
6672 12420
6673 12420

44 CFR

67 ..... 11510, 12152
80 11275
82 11275
83 11275
205 12681

Proposed Rules:

61 10547
67 12536

45 CFR

36 11279
79 11656
96 11656
1611 12017

Proposed Rules:

303 12041
606 10896
1356 12436

46 CFR

572 11072

Proposed Rules:

Ch. I 11440
502 12440

47 CFR

0 11849
1 11851
2 ..... 10878, 11855
15 11861
22 11855
43 12526
63 12526
73 ..... 11668, 11863, 12152–12154, 12528
90 ..... 11849, 12154
94 11855

Proposed Rules:

Ch. I 10549, 10550
43 12546
63 12546
68 12546
73 ..... 10905, 11690, 12167–12169, 12547–12549

48 CFR

15 10828
25 12128
31 ..... 10828, 12128
52 ..... 10828, 12128
215 11073
227 10780
242 11073
252 ..... 10780, 11073
439 12748
452 12748
2804 12421
2832 12421
2852 12421

Proposed Rules:

43 11795
47 11795
52 ..... 11795, 12501
916 11318
931 11318
952 11318
1505 11519
1506 11519

49 CFR

387 12158
533 11074
571 ..... 11280, 12528
1160 10536

Proposed Rules:

171 ..... 11320, 12442
172 12442
173 ..... 11320, 12442
174 12442
175 12442
176 12442
177 ..... 11618, 12442
178 12442
179 12442
192 10906
383 12504
391 12504
571 11105
840 11520
1185 12443

50 CFR

17 ..... 10879, 11609, 11612
23 12497
285 11510
301 10536
650 12709
672 11297
683 12712

Proposed Rules:

18 12043
228 12169
644 11321
658 12046

LIST OF PUBLIC LAWS

Note: No public bills which have become law were received by the Office of the Federal Register for inclusion in today's **List of Public Laws.**

Last List April 15, 1988

CFR CHECKLIST

This checklist, prepared by the Office of the Federal Register, is published weekly. It is arranged in the order of CFR titles, prices, and revision dates.

An asterisk (*) precedes each entry that has been issued since last week and which is now available for sale at the Government Printing Office.

New units issued during the week are announced on the back cover of the daily **Federal Register** as they become available.

A checklist of current CFR volumes comprising a complete CFR set, also appears in the latest issue of the LSA (List of CFR Sections Affected), which is revised monthly.

The annual rate for subscription to all revised volumes is $595.00 domestic, $148.75 additional for foreign mailing.

Order from Superintendent of Documents, Government Printing Office, Washington, DC 20402. Charge orders (VISA, MasterCard, CHOICE, or GPO Deposit Account) may be telephoned to the GPO order desk at **(202) 783-3238** from 8:00 a.m. to 4:00 p.m. eastern time, Monday—Friday (except holidays).

Title	Price	Revision Date
1, 2 (2 Reserved)	$10.00	Jan. 1, 1988
3 (1986 Compilation and Parts 100 and 101)	11.00	[1] Jan. 1, 1987
4	14.00	Jan. 1, 1988
5 Parts:		
1-699	14.00	Jan. 1, 1988
700-1199	15.00	Jan. 1, 1988
1200-End, 6 (6 Reserved)	11.00	Jan. 1, 1988
7 Parts:		
0-45	25.00	Jan. 1, 1987
27-45	11.00	Jan. 1, 1988
46-51	16.00	Jan. 1, 1988
52	23.00	Jan. 1, 1988
53-209	18.00	Jan. 1, 1987
210-299	22.00	Jan. 1, 1987
300-399	10.00	Jan. 1, 1987
400-699	15.00	Jan. 1, 1987
700-899	22.00	Jan. 1, 1988
*900-999	26.00	Jan. 1, 1988
1000-1059	15.00	Jan. 1, 1988
1060-1119	12.00	Jan. 1, 1988
1120-1199	11.00	Jan. 1, 1988
*1200-1499	17.00	Jan. 1, 1988
1500-1899	9.50	Jan. 1, 1988
1900-1939	11.00	Jan. 1, 1988
1900-1944	25.00	Jan. 1, 1987
1945-End	26.00	Jan. 1, 1987
8	11.00	Jan. 1, 1988
9 Parts:		
1-199	19.00	Jan. 1, 1988
200-End	16.00	Jan. 1, 1987
10 Parts:		
0-199	29.00	Jan. 1, 1987
51-199	14.00	Jan. 1, 1988
200-399	13.00	[2] Jan. 1, 1987
400-499	13.00	Jan. 1, 1988
*500-End	24.00	Jan. 1, 1988
11	10.00	July 1, 1988
12 Parts:		
1-199	11.00	Jan. 1, 1988
200-219	10.00	Jan. 1, 1988
220-299	14.00	Jan. 1, 1988
300-499	13.00	Jan. 1, 1987
500-End	27.00	Jan. 1, 1987
13	19.00	Jan. 1, 1987
14 Parts:		
1-59	21.00	Jan. 1, 1988
60-139	19.00	Jan. 1, 1988
140-199	9.50	Jan. 1, 1988
200-1199	20.00	Jan. 1, 1988
1200-End	11.00	Jan. 1, 1987
15 Parts:		
0-299	10.00	Jan. 1, 1988
300-399	20.00	Jan. 1, 1987
400-End	14.00	Jan. 1, 1988
16 Parts:		
0-149	12.00	Jan. 1, 1988
*150-999	13.00	Jan. 1, 1988
1000-End	19.00	Jan. 1, 1988
17 Parts:		
1-199	14.00	Apr. 1, 1987
200-239	14.00	Apr. 1, 1987
240-End	19.00	Apr. 1, 1987
18 Parts:		
1-149	15.00	Apr. 1, 1987
150-279	14.00	Apr. 1, 1987
280-399	13.00	Apr. 1, 1987
400-End	8.50	Apr. 1, 1987
19 Parts:		
1-199	27.00	Apr. 1, 1987
200-End	5.50	Apr. 1, 1987
20 Parts:		
1-399	12.00	Apr. 1, 1987
400-499	23.00	Apr. 1, 1987
500-End	24.00	Apr. 1, 1987
21 Parts:		
1-99	12.00	Apr. 1, 1987
100-169	14.00	Apr. 1, 1987
170-199	16.00	Apr. 1, 1987
200-299	5.50	Apr. 1, 1987
300-499	26.00	Apr. 1, 1987
500-599	21.00	Apr. 1, 1987
600-799	7.00	Apr. 1, 1987
800-1299	13.00	Apr. 1, 1987
1300-End	6.00	Apr. 1, 1987
22 Parts:		
1-299	19.00	Apr. 1, 1987
300-End	13.00	Apr. 1, 1987
23	16.00	Apr. 1, 1987
24 Parts:		
0-199	14.00	Apr. 1, 1987
200-499	26.00	Apr. 1, 1987
500-699	9.00	Apr. 1, 1987
700-1699	18.00	Apr. 1, 1987
1700-End	12.00	Apr. 1, 1987
25	24.00	Apr. 1, 1987
26 Parts:		
§§ 1.0-1.60	12.00	Apr. 1, 1987
§§ 1.61-1.169	22.00	Apr. 1, 1987
§§ 1.170-1.300	17.00	Apr. 1, 1987
§§ 1.301-1.400	14.00	Apr. 1, 1987
§§ 1.401-1.500	21.00	Apr. 1, 1987
§§ 1.501-1.640	15.00	Apr. 1, 1987
§§ 1.641-1.850	17.00	Apr. 1, 1987
§§ 1.851-1.1000	27.00	Apr. 1, 1987
§§ 1.1001-1.1400	16.00	Apr. 1, 1987
§§ 1.1401-End	20.00	Apr. 1, 1987
2-29	20.00	Apr. 1, 1987
30-39	13.00	Apr. 1, 1987
40-49	12.00	Apr. 1, 1987
50-299	14.00	Apr. 1, 1987
300-499	15.00	Apr. 1, 1987
500-599	8.00	[3] Apr. 1, 1980
600-End	6.00	Apr. 1, 1987
27 Parts:		
1-199	21.00	Apr. 1, 1987
200-End	13.00	Apr. 1, 1987
28	23.00	July 1, 1987
29 Parts:		
0-99	16.00	July 1, 1987

Title	Price	Revision Date
100–499	7.00	July 1, 1987
500–899	24.00	July 1, 1987
900–1899	10.00	July 1, 1987
1900–1910	28.00	July 1, 1987
1911–1925	6.50	July 1, 1987
1926	10.00	July 1, 1987
1927–End	23.00	July 1, 1987
30 Parts:		
0–199	20.00	July 1, 1987
200–699	8.50	July 1, 1987
700–End	18.00	July 1, 1987
31 Parts:		
0–199	12.00	July 1, 1987
200–End	16.00	July 1, 1987
32 Parts:		
1–39, Vol. I	15.00	[4] July 1, 1984
1–39, Vol. II	19.00	[4] July 1, 1984
1–39, Vol. III	18.00	[4] July 1, 1984
1–189	20.00	July 1, 1987
190–399	23.00	July 1, 1987
400–629	21.00	July 1, 1987
630–699	13.00	[5] July 1, 1986
700–799	15.00	July 1, 1987
800–End	16.00	July 1, 1987
33 Parts:		
1–199	27.00	July 1, 1987
200–End	19.00	July 1, 1987
34 Parts:		
1–299	20.00	July 1, 1987
300–399	11.00	July 1, 1987
400–End	23.00	July 1, 1987
35	9.00	July 1, 1987
36 Parts:		
1–199	12.00	July 1, 1987
200–End	19.00	July 1, 1987
37	13.00	July 1, 1987
38 Parts:		
0–17	21.00	July 1, 1987
18–End	16.00	July 1, 1987
39	13.00	July 1, 1987
40 Parts:		
1–51	21.00	July 1, 1987
52	26.00	July 1, 1987
53–60	24.00	July 1, 1987
61–80	12.00	July 1, 1987
81–99	25.00	July 1, 1987
100–149	23.00	July 1, 1987
150–189	18.00	July 1, 1987
190–399	29.00	July 1, 1987
400–424	22.00	July 1, 1987
425–699	21.00	July 1, 1987
700–End	27.00	July 1, 1987
41 Chapters:		
1, 1–1 to 1–10	13.00	[6] July 1, 1984
1, 1–11 to Appendix, 2 (2 Reserved)	13.00	[6] July 1, 1984
3–6	14.00	[6] July 1, 1984
7	6.00	[6] July 1, 1984
8	4.50	[6] July 1, 1984
9	13.00	[6] July 1, 1984
10–17	9.50	[6] July 1, 1984
18, Vol. I, Parts 1–5	13.00	[6] July 1, 1984
18, Vol. II, Parts 6–19	13.00	[6] July 1, 1984
18, Vol. III, Parts 20–52	13.00	[6] July 1, 1984
19–100	13.00	[6] July 1, 1984
1–100	10.00	July 1, 1987
101	23.00	July 1, 1987
102–200	11.00	July 1, 1987
201–End	8.50	July 1, 1987
42 Parts:		
1–60	15.00	Oct. 1, 1987
61–399	5.50	Oct. 1, 1987
400–429	21.00	Oct. 1, 1987
430–End	14.00	Oct. 1, 1987
43 Parts:		
1–999	15.00	Oct. 1, 1987
1000–3999	24.00	Oct. 1, 1987
4000–End	11.00	Oct. 1, 1987
44	18.00	Oct. 1, 1987
45 Parts:		
1–199	14.00	Oct. 1, 1987
200–499	9.00	Oct. 1, 1987
500–1199	18.00	Oct. 1, 1987
1200–End	14.00	Oct. 1, 1987
46 Parts:		
1–40	13.00	Oct. 1, 1987
41–69	13.00	Oct. 1, 1987
70–89	7.00	Oct. 1, 1987
90–139	12.00	Oct. 1, 1987
140–155	12.00	Oct. 1, 1987
156–165	14.00	Oct. 1, 1987
166–199	13.00	Oct. 1, 1987
200–499	19.00	Oct. 1, 1987
500–End	10.00	Oct. 1, 1987
47 Parts:		
0–19	17.00	Oct. 1, 1987
20–39	21.00	Oct. 1, 1987
40–69	10.00	Oct. 1, 1987
70–79	17.00	Oct. 1, 1987
80–End	20.00	Oct. 1, 1987
48 Chapters:		
1 (Parts 1–51)	26.00	Oct. 1, 1987
1 (Parts 52–99)	16.00	Oct. 1, 1987
2 (Parts 201–251)	17.00	Oct. 1, 1987
2 (Parts 252–299)	15.00	Oct. 1, 1987
3–6	17.00	Oct. 1, 1987
7–14	24.00	Oct. 1, 1987
15–End	23.00	Oct. 1, 1987
49 Parts:		
1–99	10.00	Oct. 1, 1987
100–177	25.00	Oct. 1, 1987
178–199	19.00	Oct. 1, 1987
200–399	17.00	Oct. 1, 1987
400–999	22.00	Oct. 1, 1987
1000–1199	17.00	Oct. 1, 1987
1200–End	18.00	Oct. 1, 1987
50 Parts:		
1–199	16.00	Oct. 1, 1987
200–599	13.00	Oct. 1, 1987
600–End	14.00	Oct. 1, 1987
CFR Index and Findings Aids	27.00	Jan. 1, 1987
Complete 1988 CFR set	595.00	1988
Microfiche CFR Edition:		
Complete set (one-time mailing)	155.00	1983
Complete set (one-time mailing)	125.00	1984
Complete set (one-time mailing)	115.00	1985
Subscription (mailed as issued)	185.00	1987
Subscription (mailed as issued)	185.00	1988
Individual copies	3.75	1988

[1] Because Title 3 is an annual compilation, this volume and all previous volumes should be retained as a permanent reference source.

[2] No amendments to this volume were promulgated during the period Jan. 1, 1987 to Dec. 31, 1987. The CFR volume issued January 1, 1987, should be retained.

[3] No amendments to this volume were promulgated during the period Apr. 1, 1980 to March 31, 1987. The CFR volume issued as of Apr. 1, 1980, should be retained.

[4] The July 1, 1985 edition of 32 CFR Parts 1–189 contains a note only for Parts 1–39 inclusive. For the full text of the Defense Acquisition Regulations in Parts 1–39, consult the three CFR volumes issued as of July 1, 1984, containing those parts.

[5] No amendments to this volume were promulgated during the period July 1, 1986 to June 30, 1987. The CFR volume issued as of July 1, 1986, should be retained.

[6] The July 1, 1985 edition of 41 CFR Chapters 1–100 contains a note only for Chapters 1 to 49 inclusive. For the full text of procurement regulations in Chapters 1 to 49, consult the eleven CFR volumes issued as of July 1, 1984 containing those chapters.

VOL 53 ISS 74 AP 18 1988 UMI

Just Released

Code of Federal Regulations

Revised as of January 1, 1988

Quantity	Volume	Price	Amount
	Title 7—Agriculture		
_____	Parts 900–999 (Stock No. 869-004-00016-2)	$26.00	$_____
_____	Parts 1200–1499 (Stock No. 869-004-00020-1)	17.00	_____
	Title 10—Energy		
_____	Part 500–End (Stock No. 869-004-00033-2)	24.00	_____
	Title 16—Commercial Practices		
_____	Parts 150–999 (Stock No. 869-004-00051-1)	13.00	_____
		Total Order	$_____

A cumulative checklist of CFR issuances appears every Monday in the Federal Register in the Reader Aids section. In addition, a checklist of current CFR volumes, comprising a complete CFR set, appears each month in the LSA (List of CFR Sections Affected).

Please do not detach

Order Form

Mail to: Superintendent of Documents, U.S. Government Printing Office, Washington, D.C. 20402

Enclosed find $_____ Make check or money order payable to Superintendent of Documents. (Please do not send cash or stamps). Include an additional 25% for foreign mailing.

Charge to my Deposit Account No.

☐☐☐☐☐☐☐☐–☐

Order No._____

VISA

MasterCard

Credit Card Orders Only

Total charges $_____ Fill in the boxes below.

Credit Card No. ☐☐☐☐☐☐☐☐☐☐☐☐☐☐☐☐☐☐☐☐

Expiration Date Month/Year ☐☐☐☐

Please send me the Code of Federal Regulations publications I have selected above.

Name—First, Last

Street address

Company name or additional address line

City State ZIP Code

(or Country)

PLEASE PRINT OR TYPE

For Office Use Only.

	Quantity	Charges
Enclosed		
To be mailed		
Subscriptions		
Postage		
Foreign handling		
MMOB		
OPNR		
UPNS		
Discount		
Refund		

20402
Charges

VOL
53

ISS
74

AP
18

1988

UMI

VOL
53

ISS
75

AP
19

1988

UMI

4-19
Vol.

Unite
Gove
Printi
SUPERI
OF DOC
Washing

OFFICIA
Penalty

4-19-88
Vol. 53 No. 75

federal register

Tuesday
April 19, 1988

United States
Government
Printing Office
SUPERINTENDENT
OF DOCUMENTS
Washington, DC 20402

OFFICIAL BUSINESS
Penalty for private use, $300

**********5-DIGIT 48106
A FR SERIA300S NOV 88 R
SERIALS PROCESSING
UNIV MICROFILMS INTL
300 N ZEEB RD
ANN ARBOR MI 48106

SECOND CLASS NEWSPAPER
Postage and Fees Paid
U.S. Government Printing Office
(ISSN 0097-6326)

VOL
53

ISS
75

AP
19

1988

UMI

4-19-
Vol. 5
Pages

4-19-88
Vol. 53 No. 75
Pages 12759-12906

federal register

Tuesday
April 19, 1988

BEST COPY AVAILABLE

FEDERAL REGISTER Published daily, Monday through Friday, (not published on Saturdays, Sundays, or on official holidays), by the Office of the Federal Register, National Archives and Records Administration, Washington, DC 20408, under the Federal Register Act (49 Stat. 500, as amended; 44 U.S.C. Ch. 15) and the regulations of the Administrative Committee of the Federal Register (1 CFR Ch. I). Distribution is made only by the Superintendent of Documents, U.S. Government Printing Office, Washington, DC 20402.

The **Federal Register** provides a uniform system for making available to the public regulations and legal notices issued by Federal agencies. These include Presidential proclamations and Executive Orders and Federal agency documents having general applicability and legal effect, documents required to be published by act of Congress and other Federal agency documents of public interest. Documents are on file for public inspection in the Office of the Federal Register the day before they are published, unless earlier filing is requested by the issuing agency.

The **Federal Register** will be furnished by mail to subscribers for $340.00 per year, or $170.00 for 6 months in paper form, or $188.00 per year, or $94.00 for six months in microfiche form, payable in advance. The charge for individual copies is $1.50 for each issue, or $1.50 for each group of pages as actually bound. Remit check or money order, made payable to the Superintendent of Documents, U.S. Government Printing Office, Washington, DC 20402, or charge to your GPO Deposit Account or VISA or Mastercard.

There are no restrictions on the republication of material appearing in the **Federal Register**.

How To Cite This Publication: Use the volume number and the page number. Example: 52 FR 12345.

SUBSCRIPTIONS AND COPIES

PUBLIC

Subscriptions:

Paper or fiche	202-783-3238
Magnetic tapes	275-3328
Problems with public subscriptions	275-3054

Single copies/back copies:

Paper or fiche	783-3238
Magnetic tapes	275-3328
Problems with public single copies	275-3050

FEDERAL AGENCIES

Subscriptions:

Paper or fiche	523-5240
Magnetic tapes	275-3328
Problems with Federal agency subscriptions	523-5240

For other telephone numbers, see the Reader Aids section a the end of this issue.

Contents

Federal Register
Vol. 53, No. 75
Tuesday, April 19, 1988

Agriculture Department
See Commodity Credit Corporation; Federal Crop Insurance Corporation; Food and Nutrition Service

Army Department
NOTICES
Environmental statements; availability, etc.:
Biological aerosol test facility, UT, 12803

Centers for Disease Control
NOTICES
Meetings:
Computer-mediated work; stress control strategies (NIOSH), 12822

Commerce Department
See Foreign-Trade Zones Board; International Trade Administration; National Bureau of Standards; National Oceanic and Atmospheric Administration

Committee for the Implementation of Textile Agreements
NOTICES
Trade consultation; review of trade:
Hong Kong, 12803

Commodity Credit Corporation
NOTICES
Loan and purchase programs:
Wheat and common programs provisions for wheat, feed grains, cotton, and rice (1989 crops), 12890

Defense Department
See Army Department; Navy Department

Drug Enforcement Administration
NOTICES
Applications, hearings, determinations, etc.:
Penick Corp., 12831

Economic Regulatory Administration
NOTICES
Natural gas exportation and importation:
Natural Gas Marketing Services Cooperative Association Inc., 12806

Education Department
NOTICES
Education Appeal Board hearings:
Applications for review, 12804

Employment and Training Administration
NOTICES
Adjustment assistance:
A.O. Smith Automotive Co. et al., 12832
Arvin Industries, Inc., et al., 12831
Puna Sugar Co., Ltd., 12833
Research, evaluation, pilot, and demonstration procurement plan; 1988 FY, 12884

Energy Department
See Economic Regulatory Administration; Energy Information Administration; Federal Energy Regulatory Commission

Energy Information Administration
NOTICES
Agency information collection activities under OMB review, 12806

Environmental Protection Agency
RULES
Air quality implementation plans; approval and promulgation; various States:
Indiana, 12896
PROPOSED RULES
Air quality implementation plans; approval and promulgation; various States:
Indiana, 12906
Superfund program:
Hazardous substances, reporting continuous releases, 12868

Equal Employment Opportunity Commission
NOTICES
Meetings; Sunshine Act, 12864

Executive Office of the President
See Presidential Commission on the Human Immunodeficiency Virus Epidemic

Export Administration
See International Trade Administration

Federal Aviation Administration
PROPOSED RULES
Airport radar service areas; correction, 12866

Federal Communications Commission
RULES
Radio stations; table of assignments:
California, 12768
Mississippi, 12769
Missouri, 12769
Montana, 12770
Vermont, 12770
Television stations; table of assignments:
Colorado, 12770
PROPOSED RULES
Radio broadcasting:
Short-spaced FM station assignments by use of directional antennas, 12779
Radio services, special:
Amateur service—
Modern techniques, technology and uses, 12780

Federal Crop Insurance Corporation
RULES
Crop insurance regulations:
Combined crops, 12759
PROPOSED RULES
Crop insurance regulations:
General provisions; coverage level, 12774

Federal Deposit Insurance Corporation
NOTICES
Agency information collection activities under OMB review, 12815
Privacy Act; systems of records, 12815
State nonmember banks, independent external audits; policy statement, 12817

Federal Emergency Management Agency
NOTICES
Environmental statements; availability, etc.:
Radiological Instrumentation Test Facility, VA, 12819

Federal Energy Regulatory Commission
NOTICES
Electric rate, small power production, and interlocking directorate filings, etc.:
Gulf States Utilities Co. et al., 12807
Tucson Electric Power Co. et al., 12808
Environmental statements; availability, etc.:
Bidwell, Floyd N., 12809
Hydroelectric applications, 12810
Natural gas certificate filings:
United Gas Pipe Line Co. et al., 12812
Applications, hearings, determinations, etc.:
Commercial Pipeline Co., Inc., 12813
Merced Irrigation District, 12814
Valence Operating Co. et al., 12814

Federal Highway Administration
RULES
Engineering and traffic operations:
Certification of size and weight enforcement; technical amendment, 12766

Federal Maritime Commission
NOTICES
Agreements filed, etc., 12819
Complaints filed:
Dominican Ferries P.R., Inc., et al., 12820
Investigations, hearings, petitions, etc.:
California Trucking Association, 12820
Pacific America Line, 12820

Federal Railroad Administration
NOTICES
Exemption petitions, etc.:
CSX Transportation Co., 12862

Federal Reserve System
NOTICES
Federal Open Market Committee:
Domestic policy directives, 12821
Meetings; Sunshine Act, 12864
Applications, hearings, determinations, etc.:
Danville Bank Corp. et al., 12821
Equimark Managing Partners, 12822

Fish and Wildlife Service
PROPOSED RULES
Endangered and threatened species:
Tooth cave pseudoscorpion, etc., 12787

Food and Drug Administration
RULES
Biological products:
Blood grouping reagent; additional standards for diagnostic substances for laboratory tests, 12760
PROPOSED RULES
Human drugs:
Antiflatulent drug products (OTC); tentative final monograph, 12778
Digestive aid drug products (OTC); tentative final monograph, 12779
NOTICES
Food additive petitions:
Monsanto Co., 12822
Human drugs:
Patent extensions; regulatory review period determination—
Cefmax, 12823
Meetings:
Acquired Immune Deficiency Syndrome (AIDS) vaccine development and testing, 12823

Food and Nutrition Service
NOTICES
Commodity Distribution Reform Act and WIC Amendments of 1987; implementation, 12794

Foreign-Trade Zones Board
NOTICES
Applications, hearings, determinations, etc.:
Alabama, 12798
North Carolina; correction, 12866

General Services Administration
RULES
Federal property management:
Utilization and disposal of foreign gifts and decorations; minimal value defined, 12766

Health and Human Services Department
See Centers for Disease Control; Food and Drug Administration; National Institutes of Health

Housing and Urban Development Department
NOTICES
Agency information collection activities under OMB review, 12824
Environmental statements; availability, etc.:
Austin, TX, 12825

Human Immunodeficiency Virus Epidemic Presidential Commission
See Presidential Commission on the Human Immunodeficiency Virus Epidemic

Infant Mortality, National Commission to Prevent
See National Commission to Prevent Infant Mortality

Interior Department
See Fish and Wildlife Service; Land Management Bureau; Minerals Management Service; National Park Service; Surface Mining Reclamation and Enforcement Office

Internal Revenue Service
NOTICES
Organization, functions, and authority delegations:
Chiefs of Appeals et al.; authority to abate interest due to IRS error or delay, 12863
Senior Executive Service:
Performance Review Board; membership, 12863

VOL 53 ISS 75 APR 19 1988 UMI

International Trade Administration
NOTICES
Cheese, quota; foreign government subsidies:
Quarterly update, 12798
Short supply determinations:
Bonderized cold-rolled steel strip for use in manufacturing needle roller bearing shells, 12799
Heavy steel special shapes, 12800
Semi-finished steel slabs, 12800

Justice Department
See also Drug Enforcement Administration
RULES
Acquisition regulations:
Ratification of unauthorized commitments and prompt payment
Correction, 12866

Labor Department
See Employment and Training Administration; Occupational Safety and Health Administration

Land Management Bureau
NOTICES
Jurisdiction transfers:
Oregon and Washington; correction, 12866
Meetings:
North Cascades Scenic Highway Zone, 12825
Opening of public lands:
Arizona; correction; 12866
Recreation management restrictions, etc.:
Emerald Empire Resource Area, ID, 12826
Survey plat filings:
Illinois, 12827
Montana, 12827
New Mexico, 12827
North Carolina; correction, 12866
Withdrawal and reservation of lands:
Colorado, 12826

Minerals Management Service
NOTICES
Outer Continental Shelf; development operations coordination:
Amerada Hess Corp., 12828
Amoco Production Co., 12828
Exxon Company U.S.A., 12828
Hall-Houston Oil Co., 12829

National Aeronautics and Space Administration
NOTICES
Meetings:
Aeronautics Advisory Committee, 12835

National Bureau of Standards
PROPOSED RULES
Laboratory Accreditation Program, National Voluntary:
Privatization of functions, 12880
NOTICES
Meetings:
Laboratory Accreditation Program, National Voluntary:
Bulk asbestos analysis; workshop, 12800

National Commission to Prevent Infant Mortality
NOTICES
Hearings, 12835

National Institute for Occupational Safety and Health
See Centers for Disease Control

National Institutes of Health
NOTICES
Meetings:
National Cancer Institute, 12824
(2 documents)

National Oceanic and Atmospheric Administration
RULES
Fishery conservation and management:
Bering Sea and Aleutian Islands groundfish, 12772
PROPOSED RULES
Fishery conservation and management:
Gulf of Mexico red drum, 12790
NOTICES
Permits:
Marine mammals, 12801–12803
(6 documents)

National Park Service
NOTICES
Boundary establishment, descriptions, etc.:
Golden Gate National Recreation Area, CA, 12829
Concession contract negotiations:
Rock Creek Park Horse Centre, Inc., 12829
National Register of Historic Places:
Pending nominations—
Alaska et al., 12830
National Trail system:
Appalachian National Scenic Trail—
Right-of-way relocation, 12830

Navy Department
NOTICES
Meetings:
Naval Research Advisory Committee, 12804
Navy Resale System Advisory Committee, 12804

Nuclear Regulatory Commission
NOTICES
Environmental statements; availability, etc.:
Florida Power Corp., 12836
Meetings; Sunshine Act, 12864
Applications, hearings, determinations, etc.:
Washington Public Power Supply System, 12836

Occupational Safety and Health Administration
NOTICES
State plans; standards approval, etc.:
Nevada, 12833, 12844
(2 documents)
Oregon, 12844

Personnel Management Office
NOTICES
Agency information collection activities under OMB review, 12837

Presidential Commission on the Human Immunodeficiency Virus Epidemic
NOTICES
Meetings, 12837

Public Health Service
See Centers for Disease Control; Food and Drug Administration; National Institutes of Health

Research and Special Programs Administration
PROPOSED RULES
Aviation proceedings:
See entry under Transportation Department, 12774

Securities and Exchange Commission
NOTICES
Consolidated quotation plan and consolidated transaction plan; amendments, 12837
Meetings; Sunshine Act, 12864
Self-regulatory organizations; proposed rule changes:
Chicago Board Options Exchange, Inc., 12839, 12840 (2 documents)
Depository Trust Co., 12841
National Securities Clearing Corp., 12841
Options Clearing Corp., 12842
Pacific Stock Exchange, Inc., 12844
Applications, hearings, determinations, etc.:
College and University Facility Loan Trust Two, 12845
Goldcor, Inc., 12852
New England Mutual Life Insurance Co. et al., 12852

Small Business Administration
NOTICES
Intergovernmental review of agency programs and activities, 12854, 12856 (2 documents)
License surrenders:
Southwest Venture Capital, Inc., 12858
Meetings; regional advisory councils:
Iowa, 12859
Maryland, 12858
Nevada, 12859
Oregon, 12859
Puerto Rico and Virgin Islands, 12858
Vermont, 12858
West Virginia, 12858
Applications, hearings, determinations, etc.:
MCap Corp., 12859

Surface Mining Reclamation and Enforcement Office
NOTICES
Environmental statements; availability, etc.:
Dry Fork Mine, WY, 12830

Textile Agreements Implementation Committee
See Committee for the Implementation of Textile Agreements

Transportation Department
See also Federal Aviation Administration; Federal Highway Administration; Federal Railroad Administration; Research and Special Programs Administration
PROPOSED RULES
Aviation proceedings:
Air taxi operations exemptions, 12774
NOTICES
Aviation proceedings:
Certificates of public convenience and necessity and foreign air carrier permits; weekly applications, 12861
Hearings, etc.—
Japan charter authorization proceeding, 12861, 12862 (2 documents)
Texas Air Corp. et al., 12859

Treasury Department
See also Internal Revenue Service
RULES
Acquisition regulations:
Protests; submission and disposition, 12770
NOTICES
Agency information collection activities under OMB review, 12862 (2 documents)

Veterans Administration
NOTICES
Meetings:
Geriatrics and Gerontology Advisory Committee, 12863

Separate Parts In This Issue

Part II
Environmental Protection Agency, 12868

Part III
Department of Commerce, National Oceanic and Atmospheric Administration, 12880

Part IV
Department of Labor, Employment and Training Administration, 12884

Part V
Department of Agriculture, Commodity Credit Corporation, 12890

Part VI
Environmental Protection Agency, 12896

Reader Aids
Additional information, including a list of public laws, telephone numbers, and finding aids, appears in the Reader Aids section at the end of this issue.

CFR PARTS AFFECTED IN THIS ISSUE

A cumulative list of the parts affected this month can be found in the Reader Aids section at the end of this issue.

7 CFR
426 12759
Proposed Rules:
401 12774
14 CFR
Proposed Rules:
71 12866
298 12774
15 CFR
Proposed Rules:
7 12880
21 CFR
610 12760
640 12760
660 12760
Proposed Rules:
332 12778
357 12779
23 CFR
657 12766
40 CFR
52 12896
Proposed Rules:
52 12906
302 12868
355 12868
41 CFR
101–49 12766
47 CFR
73 (6 documents) 12768–12770
Proposed Rules:
73 12779
97 12780
49 CFR
1033 12770
2804 12866
50 CFR
675 12772
Proposed Rules:
17 12787
653 12790

Rules and Regulations

Federal Register
Vol. 53, No. 75
Tuesday, April 19, 1988

This section of the FEDERAL REGISTER contains regulatory documents having general applicability and legal effect, most of which are keyed to and codified in the Code of Federal Regulations, which is published under 50 titles pursuant to 44 U.S.C. 1510.
The Code of Federal Regulations is sold by the Superintendent of Documents. Prices of new books are listed in the first FEDERAL REGISTER issue of each week.

DEPARTMENT OF AGRICULTURE

Federal Crop Insurance Corporation

7 CFR Part 426

[Amdt. No. 2; Doc. No. 5398S]

Combined Crop Insurance Regulations

AGENCY: Federal Crop Insurance Corporation, USDA.

ACTION: Final rule.

SUMMARY: The Federal Crop Insurance Corporation (FCIC) amends the Combined Crop Insurance Regulations (7 CFR Part 426), effective for the 1988 crop year. The intended effect of this rule is to maintain the effectiveness of the present Combined Crop Insurance Regulations only through the 1987 crop year. FCIC intends to issue a publication in the **Federal Register** at a later date to terminate the Combined Crop Insurance Regulations effective with the end of the 1987 crop year.

EFFECTIVE DATE: April 19, 1988.

FOR FURTHER INFORMATION CONTACT: Peter F. Cole, Secretary, Federal Crop Insurance Corporation, U.S. Department of Agriculture, Washington, DC, 20250, telephone (202) 447-3325.

SUPPLEMENTARY INFORMATION: This action has been reviewed under USDA procedures established by Departmental Regulation 1512-1. This action constitutes a review as to the need, currency, clarity, and effectiveness of these regulations under those procedures. The sunset review date established for these regulations is April 1, 1988.

John Marshall, Manager, FCIC, (1) has determined that this action is not a major rule as defined by Executive Order 12291 because it will not result in: (a) An annual effect on the economy of $100 million or more; (b) major increases in costs or prices for consumers, individual industries, Federal, State, or local governments, or a geographical region; or (c) significant adverse effects on competition, employment, investment, productivity, innovation, or the ability of U.S.-based enterprises to compete with foreign-based enterprises in domestic or export markets; and (2) certifies that this action will not increase the Federal paperwork burden for individuals, small businesses, and other persons.

This action is exempt from the provisions of the Regulatory Flexibility Act; therefore, no Regulatory Flexibility Analysis was prepared.

This program is listed in the Catalog of Federal Domestic Assistance under No. 10.450.

This program is not subject to the provisions of Executive Order 12372 which requires intergovernmental consultation with State and local officials. See the Notice related to 7 CFR Part 3015, Subpart V, published at 48 FR 29115, June 24, 1983.

This action is not expected to have any significant impact on the quality of the human environment, health, and safety. Therefore, neither an Environmental Assessment nor an Environmental Impact Statement is needed.

Background

The combined crop insurance program, begun in the 1948 crop year, was, at one time, offered in a majority of counties throughout the country as a means of insuring a variety of crops at a reduced premium rate. The concept of a combined crop insurance program was designed to reflect the crop insurance needs of farmers which leaned strongly toward less risk management through crop diversification and covered Barley, Flax, Oats, Rye, Soybeans, and Wheat.

Over the years, participation in the combined crop insurance program dwindled to only five counties in North Dakota. Several of these counties had extremely low participation with the majority of producers preferring crop insurance coverage on an individual basis.

On Thursday, November 29, 1979, FCIC published a final rule in the **Federal Register** at 44 FR 68431, which determined that, while the combined crop insurance program would be maintained for those producers who wished to continue to insure their crops under a continuous combined crop insurance policy, no new applications would be accepted.

The determination to discontinue accepting new applications for combined crop insurance, while affecting only new policyholders, afforded them a greater flexibility in insurance coverage by allowing them to select varying levels of coverage on individual crops to reduce premium costs. The same benefit accrued to existing combined crop insurance policyholders who determined that individual crop coverage would be more beneficial. These policyholders were permitted to transfer any good insuring experience discount to an individual crop program.

On October 9, 1986, the Board of Directors requested that the Corporation determine the feasibility of terminating combined crop insurance with the end of the 1987 crop year.

Approximately 602 policyholders currently remaining under the combined crop insurance program will be offered individual crop insurance coverage under any of the above endorsements for the 1988 crop year.

Any of these policyholders with a continuing benefit from good insuring experience discount will be permitted to continue receiving this benefit through the 1989 crop year.

Beginning with the 1988 crop year, the crops formerly insured under the combined crop insurance program are now incorporated as separate endorsements under the General Crop Insurance Policy (7 CFR Part 401, published on July 30, 1987, at 52 FR 28443), as follows:

Barley 7 CFR 401.103

Flax 7 CFR 401.116

Oats 7 CFR 401.105

Rye 7 CFR 401.106

Soybeans 7 CFR 401.117

Wheat 7 CFR 401.101

On Friday, October 20, 1987, FCIC published a notice of proposed rulemaking in the **Federal Register** at 52 FR 41728, to maintain the effectiveness of the present Combined Crop Insurance Regulations only through the 1987 crop year.

The public was given 30 days in which to submit written comments, data, and opinions on the proposed rule, but none were received. Therefore, FCIC adopts

as final the proposed rule published at 52 FR 41728.

List of Subjects in 7 CFR Part 426

Crop insurance, Combined crops.

Final Rule

Accordingly, pursuant to the authority contained in the Federal Crop Insurance Act, as amended (7 U.S.C. 1501 et seq.), the Federal Crop Insurance Corporation hereby amends the Subpart heading to the Combined Crop Insurance Regulations (7 CFR Part 426), as follows:

PART 426—[AMENDED]

1. The authority citation for 7 CFR Part 426 continues to read as follows:

Authority: Secs. 506, 516, Pub. L. 75–430, 52 Stat. 73, 77, as amended (7 U.S.C. 1506, 1516).

2. The subpart heading in 7 CFR Part 426 is revised to read as follows:

Subpart—Regulations for the 1986 and 1987 Crop Years

Done in Washington, DC, on April 11, 1988.

John Marshall,

Manager, Federal Crop Insurance Corporation.

[FR Doc. 88–8455 Filed 4–18–88; 8:45 am]

BILLING CODE 3410-08-M

DEPARTMENT OF HEALTH AND HUMAN SERVICES

Food and Drug Administration

21 CFR Parts 610, 640, and 660

[Docket No. 83N–0169]

Additional Standards for Diagnostic Substances for Laboratory Tests; Amendment of Requirements for Blood Grouping Reagent

AGENCY: Food and Drug Administration.

ACTION: Final rule.

SUMMARY: The Food and Drug Administration (FDA) is amending its additional standards for Blood Grouping Reagent (formerly named Blood Grouping Serum) as part of the agency's retrospective review of current regulations. FDA is making the standards more flexible and is revising the regulations to reflect recent scientific knowledge and experience in the use of Blood Grouping Reagent. The agency is also making available recommended testing procedures for these products.

DATES: Effective May 19, 1988; amendments to the labeling requirements in 21 CFR 660.28 are effective April 19, 1989, for all affected products initially introduced or initially delivered for introduction into interstate commerce.

ADDRESS: Requests for single copies of the recommended testing procedures may be submitted to the Dockets Management Branch (HFA–305), Food and Drug Administration, Rm. 4–62, 5600 Fishers Lane, Rockville, MD 20857 (Send two self-addressed adhesive labels to assist the Branch in processing your requests).

FOR FURTHER INFORMATION CONTACT: Joseph Wilczek, Center for Biologics Evaluation and Research (HFN–322), Food and Drug Administration, 5600 Fishers Lane, Rockville, MD 20857, 301–295–8046.

SUPPLEMENTARY INFORMATION:

Background

In the **Federal Register** of March 5, 1985 (50 FR 8743), FDA proposed to amend the additional standards for Blood Grouping Serum (21 CFR Part 660) to reflect recent experience and scientific knowledge in the use of these products, and to continue an ongoing retrospective review program of all FDA regulations. The retrospective review of Blood Grouping Serum regulations is an attempt by the agency to relieve unnecessary regulatory burdens and to increase flexibility in the regulations without compromising consumer protection. As defined in the proposal, Blood Grouping Serum consists of a sterile preparation of serum or protein-rich fluid containing one or more blood grouping antibodies that is used to detect ABO, Rh, or other antigens of red blood cells. The preparation is an in vitro diagnostic product that is usually produced from high-titer human serum, with or without stimulation by the injection of red blood cells or blood group substances.

Under section 351 of the Public Health Service Act (42 U.S.C. 262), biological products, including Blood Grouping Serum, offered for sale in interstate commerce must be licensed and meet certain standards designed to ensure their continued safety, purity, and potency.

Also in the **Federal Register** of March 5, 1985 (50 FR 8745), the agency announced it was making available its recommended testing procedures for these products in a document entitled "Recommended Methods for Blood Grouping Sera Evaluation" (Docket No. 84S–0181). The document recommended testing procedures including procedures for potency tests, specificity tests, and avidity tests. Consistent with its proposal of March 5, 1985, FDA is announcing under 21 CFR 10.90(b)(10) that a revised document entitled "Recommended Methods for Blood Grouping Reagents Evaluation" (Docket No. 84S–0181) is available for public examination at the Dockets Management Branch (address above) between 9 a.m. and 4 p.m., Monday through Friday. Requests for single copies of the recommended methods document should refer to the docket number and should be submitted to the Dockets Management Branch.

In the proposed rule for Blood Grouping Serum, FDA proposed to add a new § 600.1 *Scope* to clarify which regulations in 21 CFR Parts 210, 211, 600 through 680, 809, and 820 are applicable to biological products. Parts 210 and 211 concern current good manufacturing practice for drugs and finished pharmaceuticals. Parts 600 through 680 address regulations for biological products, while Parts 809 and 820 address labeling and current good manufacturing practice for medical devices. Proposed § 600.1 attempted to clarify which of these regulations take precedence or supplement each other when these regulations are applied to biological products.

Although FDA has received no comments on proposed § 600.1, the agency, in reevaluating this proposed section, now believes that it was not appropriate to promulgate the scope section in this final rule. The rulemaking affects a limited number of biological in vitro manufacturers, whereas the proposed scope affects every manufacturer of biological products. In order to reach a wider audience of biological manufacturers, FDA is considering reproposing this section in a separate document. Accordingly, FDA is deleting the scope section from this final rule.

Comments

FDA provided interested persons 60 days to submit written comments on the proposal. In response, FDA received seven letters of comment. One letter of comment fully supported the proposed rule. A summary of other comments and FDA's responses follows:

Blood Grouping Reagent (§ 660.20)

1. One comment on § 660.20 concerned the proper name, Blood Grouping Serum. The comment suggested that the proper name be changed to Blood Grouping Reagent to more accurately describe the product's derivation and intended use. With advances in technology, a number of these products are now manufactured from monoclonal antibodies produced in vitro rather than from human and

animal source plasma and serum. The monoclonal Blood Grouping Serum products are therefore no longer "serum" by definition.

FDA agrees with the suggestion that the proper name for this product should be changed to Blood Grouping Reagent for the reason mentioned in the comment. Accordingly, FDA is amending §§ 660.20 through 660.28 to reflect the new proper name and is making conforming changes in §§ 610.12, and 610.53, and 640.5 of the biologics regulations for Blood Grouping Reagents. In addition, FDA is making conforming changes in the name of the product in the document entitled "Recommended Methods for Blood Grouping Reagent Evaluation" (Docket No. 84S-0181).

2. Five comments on proposed § 660.20(a) objected to the requirement that, to be exempted from performing final product sterility tests on each lot of product, a manufacturer must submit data that assure the sterility of the product to the Director, Office of Biologics Research and Review. The comments pointed out that this policy is inconsistent with a final rule published in the **Federal Register** concerning Anti-Human Globulin (50 FR 5574; February 11, 1985). The comments argued that Anti-Human Globulin and Blood Grouping Reagent are related products, prepared by similar procedures, and used in a similar fashion. Because Anti-Human Globulin is exempted from final product sterility testing, the comments stated that consistent wording should be used concerning final product sterility testing for these two products.

FDA agrees with the comments. FDA believes that Blood Grouping Reagents should be sterile and be prepared by procedures demonstrated to yield consistently a sterile final product. However, manufacturers' control of the sterile manufacturing process provides more assurance of product sterility than performance of final product sterility tests. Final product sterility tests reveal whether the units tested are sterile, but such tests cannot provide complete assurance that untested units in the lots are sterile. FDA advises that manufacturers are required to assure that the products are sterile and manufactured by a method demonstrated to yield consistently a sterile product through performance of sterile process validation, a requirement of FDA's current good manufacturing practice (CGMP) regulations for medical devices in 21 CFR Part 820. In the **Federal Register** of May 11, 1987 (52 FR 17638), FDA announced the availability of a final guideline entitled "Guideline on General Principles of Process Validation" (May 1987).

FDA requires that a preservative be added to Blood Grouping Reagents to prevent development of any microbial contamination during use and reuse of the container. To provide increased assurance that the product is safe and effective at time of use, FDA also requires that blood banks perform the daily checks for potency and specificity of Blood Grouping Reagents that are required by FDA's CGMP regulations for blood and blood components (21 CFR 606.65(c)). Thus, FDA believes it can eliminate the proposed requirement for performance of final product sterility tests of each lot without compromising the safety, potency, or effectiveness of Blood Grouping Reagents and without any reduction in consumer protection.

Current licensed manufacturers of Blood Grouping Reagent have already shown a history of consistently manufacturing a sterile product and therefore will not be required to perform final product sterility testing. FDA notes, however, that a new company requesting a license for manufacturing Blood Grouping Reagent and companies that change procedures significantly will have to submit supporting data that demonstrate a history of consistently manufacturing a sterile product to justify elimination of final product sterility testing.

Accordingly, in the final rule the agency is amending § 660.20(a) by removing the last sentence of that section that requires manufacturers to submit data to the Director, Office of Biologics Research and Review, to be exempted from final product sterility testing.

Processing (§ 660.21)

3. Three comments on proposed § 660.21(a)(1) objected to the requirement for manufacturers to perform ongoing stability testing of Blood Grouping Reagent. The proposal had stated that ongoing stability testing was already required by § 601.2. The comments claimed that ongoing stability testing is unnecessary and represents a new testing requirement. Two comments objected because of the absence of an economic impact statement and because no support was given for ongoing stability testing. One comment stated that stability testing of Blood Grouping Reagent is inconsistent with the final rule for Anti-Human Globulin mentioned in paragraph 2 of this preamble.

FDA disagrees in part with the comments. Although stability testing is not yet codified into the biologics regulations, the majority of manufacturers of Blood Grouping Reagents have consistently performed ongoing stability testing of their products for many years. Blood Grouping Reagents can be life-saving reagents when used in the hospital setting to assure that blood and blood components are safely transfused into patients. Stability testing is an essential quality assurance step for monitoring the intrinsic variability of these biological products throughout their shelf-life and such testing assures the continued effectiveness of these biological products. Codifying stability testing represents no additional burden on these manufacturers because they have performed ongoing stability testing for years.

FDA believes that a quality assurance program that includes stability testing is necessary to assure continued potency and efficacy of these products. The agency reviews initial stability studies of Blood Grouping Reagents to support approval of new products for which full shelf-life studies are not completed but are being conducted. For example, the agency may review an initial stability study of 6 month's duration to support approval of a product that has an expected shelf-life of 2 years, provided that ongoing stability studies continue.

FDA acknowledges that stability testing is not specifically codified in the Anti-Human Globulin final rule. Upon further consideration, the agency believes that ongoing stability testing is needed to assure a uniform approach for testing these products. The agency intends to amend the additional standards for Anti-Human Globulin in the future.

FDA believes that manufacturers should test a cross section of products that have different origins of source material, are made in different manners, or are used in different ways. FDA is aware that the commonly used ABO and Rh reagents prepared from polyclonal source material and tested for potency in parallel with FDA reference sera have consistently demonstrated remarkable stability over long storage periods. Therefore, a small number of stability tests may be adequate to monitor the product storage period for these reagents. Ongoing stability testing may have an added benefit to manufacturers. Stability testing data may support requests for exemption from lot release requirements and extension of dating periods for these products beyond those listed in § 610.53(a) of the biologics regulations.

Accordingly, the agency rejects the comments opposed to ongoing stability testing and is amending § 660.21(a)(1) to state that stability testing shall be

performed on an adequate number of representative samples of each group of products.

4. Two comments on proposed § 660.21(b) concerned color coding of Blood Grouping Reagent. One comment recommended that all manufacturers use the same color for any given product to prevent confusion. Another comment stated that any color coding system should be uniform and asked if the Blood Grouping Reagents should be color-coded in harmony with the color-coding system already permitted for final container labels listed in § 660.28(a).

FDA agrees that the color-coding system for Blood Grouping Reagent should be uniform, and agrees that in most instances the color coding should be in harmony with the colors permitted for final container labels in § 660.28(a). Manufacturers should use good judgment and limit the use of colors in reagents to prevent a multiplicity of colors for Blood Grouping Reagents of a single specificity. However, to add flexibility and allow for unusual situations in color coding, the agency is amending proposed § 660.21(b) by adding the words "and the colorant is approved by the Director, Center for Biologics Evaluation and Research, Food and Drug Administration, 8800 Rockville Pike, Bethesda, MD 20892."

Potency Tests Without Reference Preparation (§ 660.25)

5. Three comments on proposed § 660.25 asked that the words "slide or microplate techniques" be added to § 660.25 (a) and (c) to allow for potency tests using slide and microplate techniques in addition to currently permitted test tube methods for potency determinations.

The agency agrees with the comments to permit both slide and microplate techniques in addition to test tube methods for measuring potency of Blood Grouping Reagents when FDA reference sera are not available. However, the agency believes that this wording change should be made to § 660.25(b) because potency tests using slide and microplate techniques are manual testing procedures. Accordingly, the agency is adding the words "slide tests or microplate techniques" to the paragraph heading in § 660.25(b) and a similar statement to the text to allow for these testing techniques.

6. One comment on § 660.25(b) stated that a 1:2 dilution may be excessive for some reagents recommended for slide tests (e.g., anti-e).

FDA disagrees with the comment. FDA believes that for reagent reactivity a 1:2 dilution is appropriate to protect the patient adequately. To clarify a possible misconception of the phrase "1:2 dilution," the agency is amending this paragraph by replacing the phrase "1:2 dilution of reagent" with the phrase "reagent diluted with an equal volume of diluent." The agency notes, however, that under § 610.9 *Equivalent methods*, a manufacturer has the option of using modified test methods or manufacturing processes after receiving written approval from FDA. The modification, in the form of a product license amendment, must show that the proposed alternative procedure will provide assurances of the safety, purity, potency, and effectiveness of the biological product equal to or greater than the assurances provided by the method or process in the general standards or additional standards for the biological product.

7. One comment on § 660.25(b) stated that red blood cells cannot be heterozygous for a blood group antigen, but merely exhibit homozygous or heterozygous expression of an antigen.

The agency agrees that the phrase "heterozygous for corresponding antigen" is technically incorrect and is amending § 660.25(b) to read "* * * showing heterozygous or diminished expression of the corresponding antigen."

8. One comment on proposed § 660.25(c) questioned the phrase "lower extremes of phenotypic expression" as the phrase applies to Blood Grouping Reagent recommended for use in an automated system. The comment suggested that, for certain Blood Grouping Reagent specificities, the proposed rule may appear to require an unequivocal positive result when the phenotype causes difficulty even in manual testing. The comment suggested changing the phrase to read "representing diminished expression of the antigen."

The agency agrees with the comment and is amending § 660.25(c) to read "* * * representing heterozygous or diminished expression of the corresponding antigen" for consistency with the language found in § 660.25(b).

Labeling (§ 660.28)

9. Two comments on proposed § 660.28(a)(1) requested that Blood Grouping Reagent labeling should allow a logo or company name, as already permitted for Anti-Human Globulin in § 660.55(a)(1).

The agency agrees that a manufacturer should be allowed to use a logo or company name provided the logo or name is located outside the main panel of the final container label. Accordingly, FDA is amending § 660.28(a)(1) to allow for such logos or company names along the bottom or end of the label outside of the main panel on final container labels for Blood Grouping Reagent.

10. Three comments on proposed § 660.28(b)(12) pointed out that the word "reconstruction" should be replaced with the word "reconstitution."

The agency agrees with the comment and has revised the final rule accordingly.

11. One comment on § 660.28(b)(14) suggested deleting the word "Potency" from the statement "MEETS FDA POTENCY REQUIREMENTS" on the package label. The comment stated that the suggested broader statement includes nonreactivity for hepatitis and other transmittable diseases which future regulations may address for products derived from human sources.

The agency disagrees with the comment. Statements that concern nonreactivity for hepatitis and other transmittable diseases are addressed in § 660.28(b)(15). (See paragraph 12 below). For consistency with a labeling provision in § 660.55(b)(11) for Anti-Human Globulin, which is a similar type product, the agency believes that this statement should not be changed. Accordingly, the agency rejects the comment.

12. Two comments on proposed § 660.28(b)(15) requested that it be amended by simplifying and clarifying the cautionary hepatitis warning statement.

The agency agrees that the hepatitis warning statement should be revised and is amending § 660.28(b)(15) to read: "CAUTION: ALL BLOOD PRODUCTS SHOULD BE TREATED AS POTENTIALLY INFECTIOUS. SOURCE MATERIAL FROM WHICH THIS PRODUCT WAS DERIVED WAS FOUND NEGATIVE WHEN TESTED IN ACCORDANCE WITH CURRENT FDA REQUIRED TESTS. NO KNOWN TEST METHODS CAN OFFER ASSURANCE THAT PRODUCTS DERIVED FROM HUMAN BLOOD WILL NOT TRANSMIT INFECTIOUS AGENTS." This revised cautionary labeling statement applies to hepatitis as well as other infectious agents for which the agency may require a warning statement in the future.

13. One comment on the proposed removal of § 660.29 stated that the removal of specific lot release requirements is a potentially important reform, but urged the agency not to exercise its authority under the general lot release requirements of §§ 610.1 and 610.2 in such a manner as to neutralize its benefits.

The agency advises that it intends to use its authority under §§ 610.1 and 610.2 to require official lot release whenever the agency believes that lot release is necessary to ensure the safety, purity, or potency of the products. Currently, licensed manufacturers of Blood Grouping Reagents are required by their license applications to comply with lot release requirements. These manufacturers may submit license amendments at any time to request exemptions from the requirements for submission of samples, protocols, and lot release. However, manufacturers of these products are still required to receive FDA's official release under § 610.2(a) for these products, unless otherwise notified by FDA.

Recommended Methods for Blood Grouping Reagents Evaluation

The agency received several comments concerning its document entitled "Recommended Methods for Blood Grouping Serum Evaluation" that was made available at the time the agency published the proposed rule. The agency advises that FDA is making available its revised recommended test procedures for the product as authorized in 21 CFR 10.90(b)(10) of its administrative practices and procedures regulations. The revised test procedures, modified in response to the comments below, are in a document entitled "Recommended Methods for Blood Grouping Reagents Evaluation" (Docket No. 84S-0181), and are available for public examination at FDA's Dockets Management Branch (address above).

14. Two comments noted a discrepancy between proposed § 660.25(b) and the recommended methods concerning avidity testing. The recommended methods state that dilutions of Blood Grouping Reagent should be made with human serum, whereas proposed § 660.25(b) permits dilution of Blood Grouping Reagent with either compatible serum or an approved diluent.

The agency agrees that the recommended methods were unclear. FDA is amending the recommended methods to provide for dilutions with either compatible serum or diluent approved by the Director, Center for Biologics Evaluation and Research.

15. One comment objected to a requirement in Section IV, Avidity Test, that a manufacturer should observe avidity test results at the first half of the recommended observation period as well as at the end of the observation period.

The agency disagrees with the comment. Observation of the avidity results at 1-minute and 2-minute time points has been a codified testing requirement in § 660.27 since 1977. The time frame for performing avidity tests is routinely 2 minutes. By observing the test reaction for agglutination at both 1-minute and 2-minute time points, the agency believes that an additional margin of safety is added in testing the product. Blood Grouping Reagents of adequate strength usually will agglutinate red blood cells in the first minute of avidity testing. Very weak reacting Blood Grouping Reagents may not agglutinate red blood cells in the first minute of avidity testing, and the reagents would likely be of questionable effectiveness. Thus, the agency rejects the comment.

Accordingly, FDA is amending the additional standards for Blood Grouping Reagents with the changes described above and other minor clarifying changes, such as adding to §§ 660.25(a)(3) and 660.28(d) two recently licensed Blood Grouping Reagent antibody specificities, Anti-Lu^a and Anti-Lu^b.

Environmental Impact

The agency has determined under 21 CFR 25.24(c)(10) that this action is of a type that does not individually or cumulatively have a significant effect on the human environment. Therefore, neither an environmental assessment nor an environmental impact statement is required.

Economic Impact

The agency has examined the economic consequences of this rulemaking and has determined that it does not require either a regulatory impact analysis, as specified in Executive Order 12291, or a regulatory flexibility analysis, as defined in the Regulatory Flexibility Act (Pub. L. 96-354). The amendments to the additional standards are expected to be beneficial to manufacturers of Blood Grouping Reagents because the changes potentially relieve certain unnecessary burdens on the industry, such as removal of the specific lot release requirements. Other changes in the current biologics regulations are intended to allow manufacturers of these products greater flexibility and greater discretion in manufacturing and marketing their products while maintaining the same level of consumer protection. The codified requirement of ongoing stability testing also will not result in any significant increase in cost to manufacturers because nearly all manufacturers have performed ongoing stability testing for years. There are 10 licensed manufacturers of Blood Grouping Reagents. The agency estimates that annual sales of Blood Grouping Reagents exceed $25 million. The amendments to the additional standards offer important, but difficult to measure, cost savings to manufacturers of these products. The agency concludes that the rule is not a major rule as defined by Executive Order 12291. Further, the agency certifies that the rule will not have a significant impact on a substantial number of small entities, as defined in the Regulatory Flexibility Act.

Paperwork Reduction Act

Sections 660.21, 660.22, 660.25, 660.26, and 660.28 of this final rule contain collection of information requirements that were submitted for review and approval to the Director of the Office of Management and Budget (OMB), as required by section 3507 of the Paperwork Reduction Act of 1980. The requirements were approved and assigned OMB control number 0910-0209.

List of Subjects

21 CFR Part 610

Biologics, Labeling, Reporting and record requirements.

21 CFR Part 640

Blood, Labeling, Reporting and recordkeeping requirements.

21 CFR Part 660

Biologics, Labeling.

Therefore, under the Public Health Service Act and under authority delegated to the Commissioner of Food and Drugs, Parts 610, 640, and 660 are amended as follows:

PART 610—GENERAL BIOLOGICAL PRODUCTS STANDARDS

1. The authority citation for 21 CFR Part 610 continues to read as follows:

Authority: Secs. 201, 501, 502, 505, 510, 701, 52 Stat. 1040-1042 as amended, 1049-1051 as amended by 76 Stat. 780, 1052-1053 as amended, 1055-1056 as amended, 76 Stat. 794 as amended, and sec. 301 of Pub. L. 87-781 (21 U.S.C. 321, 351, 352, 355, 360 and note, 371), the Public Health Service Act (secs. 351 and 361, 58 Stat. 702 and 703 as amended (42 U.S.C. 262 and 264)), and the Administrative Procedure Act (secs. 4, 10, 60 Stat. 238 and 243, as amended (5 U.S.C. 553, 702, 703, 704)); 21 CFR 5.10 and 5.11.

2. Section 610.12 is amended by revising paragraph (g)(4)(i), to read as follows:

§ 610.12 Sterility.

* * * * *

(g) * * *

(4) *Test precluded or not required.* (i) The tests prescribed in this section need not be performed for Whole Blood, Cryoprecipitated AHF, Platelets, Red Blood Cells, Plasma, Source Plasma, Smallpox Vaccine, Reagent Red Blood Cells, Anti-Human Globulin, or Blood Grouping Reagent.

* * * * *

§ 610.53 [Amended]

3. Section 610.53 *Dating periods for licensed biological products* is amended in the table in paragraph (c) under the column heading "Product" by revising "Blood Grouping Serums" to read "Blood Grouping Reagents".

PART 640—ADDITIONAL STANDARDS FOR HUMAN BLOOD AND BLOOD PRODUCTS

4. The authority citation for 21 CFR Part 640 continues to read as follows:

Authority: Secs. 201, 501, 502, 505, 510, 701, 52 Stat. 1040–1042 as amended, 1049–1053 as amended, 1055–1056 as amended by 70 Stat. 919 and 72 Stat. 948, 76 Stat. 794–795 as amended (21 U.S.C. 321, 351, 352, 355, 360, 371) and the Public Health Service Act (secs. 351, 361, 58 Stat. 702 as amended (42 U.S.C. 262, 264)) and the Administrative Procedure Act (secs. 4, 10, 60 Stat. 238 and 243 as amended (5 U.S.C. 553, 702, 703, 704)); 21 CFR 5.10 and 5.11

§ 640.5 [Amended]

5. Section 640.5 *Testing the blood* is amended as follows:

a. In paragraph (b), "Blood Grouping Serums" is revised to read "Blood Grouping Reagents".

b. In paragraph (c), "Blood Grouping Serum" is revised to read "Blood Grouping Reagent", and "Anti-Rh Typing Serums" is revised to read "Anti-Rh Blood Grouping Reagents", wherever they appear.

PART 660—ADDITIONAL STANDARDS FOR DIAGNOSTIC SUBSTANCES FOR LABORATORY TESTS

6. The authority citation for 21 CFR Part 660 continues to read as follows:

Authority: Secs. 215, 351, 58 Stat. 690, as amended, 702, as amended (42 U.S.C. 216, 262); 21 CFR 5.10.

7. Part 660 is amended by revising Subpart C, consisting of §§ 660.20 through 660.28, to read as follows and § 660.29 is removed:

Subpart C—Blood Grouping Reagent

Sec.
660.20 Blood Grouping Reagent.
660.21 Processing.
660.22 Potency requirements with reference preparations.
660.25 Potency tests without reference preparations.
660.26 Specificity tests and avidity tests.
660.28 Labeling.

Subpart C—Blood Grouping Reagent

§ 660.20 Blood Grouping Reagent.

(a) *Proper name and definition.* The proper name of this product shall be Blood Grouping Reagent and it shall consist of an antibody-containing fluid prepared by a method demonstrated to yield consistently a sterile product and containing one or more of the blood grouping antibodies listed in § 660.28(d).

(b) *Source.* The source of this product shall be blood, plasma, serum, or protein-rich fluids, such as those derived from stable immunoglobulin-secreting cell lines maintained either in tissue cultures or in secondary hosts.

§ 660.21 Processing.

(a) *Processing method.* (1) The processing method shall be one that has been shown to yield consistently a specific, potent final product, free of properties that would affect adversely the intended use of the product throughout its dating period. Stability testing shall be performed on an adequate number of representative samples of each group of products manufactured in the same fashion.

(2) Only that material that has been fully processed, thoroughly mixed in a single vessel, and sterile filtered shall constitute a lot.

(3) A lot may be subdivided into clean, sterile vessels. Each subdivision shall constitute a sublot. If lots are to be subdivided, the manufacturer shall include this information in the license application. The manufacturer shall describe the test specifications to verify that each sublot is identical to other sublots of the lot.

(4) Each lot of Blood Grouping Reagent shall be identified by a lot number. Each sublot shall be identified by that lot number to which a distinctive prefix or suffix shall be added. Final container and package labels shall bear the lot number and all distinctive prefixes and suffixes that have been applied to identify the sublot from which filling was accomplished.

(b) *Color coding of reagents.* Blood Grouping Reagents may be colored provided the added colorant does not adversely affect the safety, purity, or potency of the product and the colorant is approved by the Director, Center for Biologics Evaluation and Research (HFN–830), Food and Drug Administration, 8800 Rockville Pike, Bethesda, MD 20892.

(c) *Final containers and dropper assemblies.* Final containers and dropper pipettes shall be colorless and sufficiently transparent to permit observation of the contents to detect particulate matter or increased turbidity during use.

(d) *Volume of final product.* Each manufacturer shall identify the possible final container volumes in the product license application.

(e) *Date of manufacture.* The date of manufacture shall be the date the manufacturer begins the last entire group of potency tests.

(Collection of information requirements approved by the Office of Management and Budget under number 0910–0209)

§ 660.22 Potency requirements with reference preparations.

(a) *Potency requirements.* Products for which reference Blood Grouping Reagents are available shall have a potency titer value at least equal to that of the reference preparation.

(b) *Reference preparations.* Reference Blood Grouping Reagents shall be obtained from the Center for Biologics Evaluation and Research (HFN–890), Food and Drug Administration, 8800 Rockville Pike, Bethesda, MD 20892, and shall be used as described in the accompanying package insert for determining the potency of Blood Grouping Reagents.

(Collection of information requirements approved by the Office of Management and Budget under number 0910–0209)

§ 660.25 Potency tests without reference preparations.

Products for which Reference Blood Grouping Reagents are not available shall be tested for potency by a method approved by the Director, Center for Biologics Evaluation and Research (HFN–830), Food and Drug Administration, 8800 Rockville Pike, Bethesda, MD 20892.

(a) *Potency requirements.* Blood Grouping Reagents recommended for the test tube methods, including the indirect antiglobulin tests, shall have the following potency titer values, unless other values are approved by the Director, Center for Biologics Evaluation and Research (HFN–830), Food and Drug Administration, 8800 Rockville Pike, Bethesda, MD 20892.

(1) For Anti-K, Anti-k, Anti-Jk^a, Anti-Fy^a, Anti-C^w, at least 1+ reaction with a 1:8 dilution of the reagent.

(2) For Anti-S, Anti-s, Anti-P_1, Anti-M, Anti-I, Anti-e (saline), Anti-c (saline), and Anti-A_1, at least 1+ reaction with a 1:4 dilution of the reagent.

(3) For Anti-U, Anti-Kp^a, Anti-Kp^b, Anti-Js^a, Anti-Js^b, Anti-Fy^b, Anti-N, Anti-Le^a, Anti-Le^b, Anti-Lu^a, Anti-Lu^b, Anti-Di^a, Anti-M^g, Anti-Jk^b, Anti-Co^b, Anti-Wr^a, and Anti-Xg^a, at least 2+ reaction with undiluted reagent.

(b) *Products recommended for slide tests or microplate techniques.* Blood Grouping Reagent recommended for slide test methods or microplate techniques shall produce clearly positive macroscopic results when both undiluted reagent and reagent diluted with an equal volume of diluent are tested by all methods recommended in the manufacturer's package insert using red blood cells showing heterozygous or diminished expression of the corresponding antigen. The dilution shall be made with an equal volume of compatible serum or approved diluent.

(c) *Products recomended for use in an automated system.* The manufacturer of Blood Grouping Reagent that is recommended for use in an automated system shall demonstrate that its product when used both undiluted and diluted with an equal volume of diluent satisfactorily performs when tested with cells representing heterozygous or diminished expression of the corresponding antigen.

(Collection of information requirements approved by the Office of Management and Budget under number 0910–0209)

§ 660.26 Specificity tests and avidity tests.

Specificity and avidity tests shall be performed using test procedures approved by the Director, Center for Biologics Evaluation and Research (HFN–830), Food and Drug Administration, 8800 Rockville Pike, Bethesda, MD 20892.

(Collection of information requirements approved by the Office of Management and Budget under number 0910–0209)

§ 660.28 Labeling.

In addition to the applicable labeling requirements of §§ 610.62 through 610.65 and § 809.10, and in lieu of the requirements in §§ 610.60 and 610.61, the following requirements shall be met:

(a) *Final container label*—(1) *Color coding.* The final container label of all Blood Grouping Reagents shall be completely white, except that all or a portion of the final container label of the following Blood Grouping Reagents may be color coded with the specified color which shall be a visual match to a specific color sample designated by the Director, Center for Biologics Evaluation and Research (HFN–830), Food and Drug Administration, 8800 Rockville Pike, Bethesda, MD 20892. Printing on all final container labels shall be in solid black. A logo or company name may be placed on the final container label; however, the logo or company name shall be located along the bottom or end of the label, outside the main panel.

Blood grouping reagent	Color of label paper
Anti-A	Blue.
Anti-B	Yellow.
Slide and rapid tube test blood grouping reagents only:	
Anti-C	Pink.
Anti-D	Gray.
Anti-E	Brown.
Anti-CDE	Orange.
Anti-c	Lavender.
Anti-e	Green.

(2) *Required information.* The proper name "Blood Grouping Reagent" need not appear on the final container label provided the final container is distributed in a package and the package label bears the proper name. The final container label shall bear the following information:

(i) Name of the antibody or antibodies present as set forth in paragraph (d) of this section.

(ii) Name, address (including ZIP code), and license number of the manufacturer.

(iii) Lot number, including sublot designations.

(iv) Expiration date.

(v) Source of product if other than human plasma or serum.

(vi) Test method(s) recommended.

(vii) Recommended storage temperature in degrees Celsius.

(viii) Volume of product if a liquid, or equivalent volume for a dried product if it is to be reconstituted.

(ix) If a dried product, to remind users to record the reconstitution date on the label, the statement "RECONSTITUTION DATE _____. EXPIRES 1 YEAR AFTER RECONSTITUTION DATE."

(3) *Lettering size.* The type size for the specificity of the antibody designation on the labels of a final container with a capacity of less than 5 milliliters shall be not less than 12 point. The type size for the specificity of the antibody designations on the label of a container with a capacity of 5 milliliters or more shall be not less than 18 point.

(4) *Visual inspection.* When the label has been affixed to the final container, a sufficient area of the container shall remain uncovered for its full length or no less than 5 millimeters of the lower circumference to permit inspection of the contents. The label on a final product container for antibodies Anti-c, Anti-k, or Anti-s shall display a bar immediately over the specificity letter used in the name, i.e., Anti-c, Anti-k, or Anti-s.

(b) *Package label.* The following information shall appear either on the package label or on the final container label if it is visible within the package.

(1) Proper name of the product.

(2) Name of the antibody or antibodies present as set forth in paragraph (d) of this section.

(3) Name, address (including ZIP Code), and license number of the manufacturer.

(4) Lot number, including sublot designations.

(5) Expiration date.

(6) Preservative used and its concentration.

(7) Number of containers, if more than one.

(8) Volume or equivalent volume for dried products when reconstituted, and precautions for adequate mixing when reconstituting.

(9) Recommended storage temperature in degrees Celsius.

(10) Source of the product if other than human serum or plasma.

(11) Reference to enclosed package insert.

(12) If a dried product, a statement indicating the period within which the product may be used after reconstitution.

(13) The statement: "FOR IN VITRO DIAGNOSTIC USE."

(14) The statement: "MEETS FDA POTENCY REQUIREMENTS."

(15) If human blood was used in manufacturing the product, the statement: "CAUTION: ALL BLOOD PRODUCTS SHOULD BE TREATED AS POTENTIALLY INFECTIOUS. SOURCE MATERIAL FROM WHICH THIS PRODUCT WAS DERIVED WAS FOUND NEGATIVE WHEN TESTED IN ACCORDANCE WITH CURRENT FDA REQUIRED TESTS. NO KNOWN TEST METHODS CAN OFFER ASSURANCE THAT PRODUCTS DERIVED FROM HUMAN BLOOD WILL NOT TRANSMIT INFECTIOUS AGENTS."

(16) A statement of an observable indication of an alteration of the product, e.g., turbidity, color change, precipitate, that may indicate possible deterioration of the product.

(c) *Package insert.* Each final container of Blood Grouping Reagent shall be accompanied by a package insert meeting the requirements of § 809.10. If two or more final containers requiring identical package inserts are placed in a single package, only one package insert per package is required.

(d) *Names of antibodies.*

Blood group designation for container label
Anti-A
Anti-A_1
Anti-A, B
Anti-A and B
Anti-B
Anti-C
Anti-C^w
Anti-$\overline{c}$
Anti-CD
Anti-CDE
Anti-Co^b
Anti-D
Anti-DE
Anti-Di^a
Anti-E
Anti-e
Anti-Fy^a
Anti-Fy^b
Anti-I
Anti-Jk^a
Anti-Jk^b
Anti-Js^a
Anti-Js^b
Anti-K
Anti-k
Anti-Kp^a
Anti-Kp^b
Anti-Le^a
Anti-Le^b
Anti-Lu^a
Anti-Lu^b
Anti-M
Anti-M^s
Anti-N
Anti-P_1
Anti-S
Anti-$\overline{s}$
Anti-U
Anti-Wr^a
Anti-Xg^a

(Collection of information requirements approved by the Office of Management and Budget under number 0910-0309)

Dated: February 26, 1988.

Adam J. Trujillo,

Acting Associate Commissioner for Regulatory Affairs.

[FR Doc. 88-8451 Filed 4-18-88; 8:45 am]

BILLING CODE 4160-01-M

DEPARTMENT OF TRANSPORTATION

Federal Highway Administration

23 CFR Part 657

Certification of Size and Weight Enforcement; Technical Amendment

AGENCY: Federal Highway Administration (FHWA), DOT.

ACTION: Final rule.

SUMMARY: The FHWA is correcting the name of the office which receives a copy of the State's yearly enforcement certification. This is merely a technical correction since it involves internal mail routing.

EFFECTIVE DATE: April 19, 1988.

FOR FURTHER INFORMATION CONTACT: Mr. Philip W. Blow, Office of Motor Carrier Information Management and Analysis, (202) 366-4036; or Mr. Michael Laska, Office of the Chief Counsel, (202) 366-1383, Federal Highway Administration, 400 Seventh Street SW., Washington, DC 20590. Office hours are from 7:45 to 4:15 p.m., ET, Monday through Friday, except legal holidays.

SUPPLEMENTARY INFORMATION: Present regulations (23 CFR 657.17) require the FHWA Division Office to forward one copy of a State's yearly size and weight certification to the Associate Administrator for Engineering and Traffic Operations. The recipient of the certification has been changed to the Associate Administrator for Motor Carriers. Consequently, this regulation is being updated to eliminate any possible confusion as to where the yearly certification is to be sent.

The FHWA has determined that this document does not contain a major rule under Executive Order 12291 or a significant regulation under the regulatory policies and procedures of the Department of Transportation. The amendment in this document is primarily technical in nature and is needed solely to update the regulations to reflect a revision relating to the agency's internal management. For this reason and since this rule imposes no additional burdens on the States or other Federal agencies, the FHWA finds good cause to make this regulation final without prior notice and opportunity for comments and without a 30-day delay in effective date under the Administrative Procedure Act. For the same reason, notice and opportunity for comment are not required under the regulatory policies and procedures of the Department of Transportation because it is not anticipated that such action would result in the receipt of useful information. Accordingly, this final rule is effective upon publication in the Federal Register.

Since the change in this document is primarily nonsubstantive in nature and relates to internal agency management and procedures, the anticipated economic impact, if any, is minimal. Therefore, a full regulatory evaluation is not required. For the above reasons and under the criteria of the Regulatory Flexibility Act, the FHWA certifies that this final rule will not have significant impact on a substantial number of small entities.

(Catalog of Federal Domestic Assistance Program Number 20.205, Highway Planning and Construction. The regulations regarding intergovernmental consultation of Federal programs and activities apply to this program.)

List of Subjects in 23 CFR Part 657

Grant programs—transportation, Highways and roads, Motor vehicles, Reporting and recordkeeping requirements, Vehicle size and weight.

In consideration of the foregoing, the FHWA hereby amends Part 657 of Title 23, Code of Federal Regulations, as set forth below.

PART 657—[AMENDED]

1. The authority citation for Part 657 continues to read as follows:

Authority: Sec. 123, Surface Transportation Assistance Act of 1978, Pub. L. 95-599, 92 Stat. 2689; 23 U.S.C. 127, 141, and 315; 49 CFR 1.48(b).

2. In § 657.17, paragraph (b) is revised to read as follows:

§ 657.17 Certification submittal.

* * * * *

(b) The Division office shall forward the original certification to the Office of the Chief Counsel and one copy to the Associate Administrator for Motor Carriers. Copies of appropriate evaluations and/or comments shall accompany any transmittal.

Issued on: April 13, 1988.

Robert E. Farris,

Deputy Administrator, Federal Highway Administration.

[FR Doc. 88-8583 Filed 4-18-88; 8:45 am]

BILLING CODE 4910-22-M

GENERAL SERVICES ADMINISTRATION

41 CFR Part 101-49

[FPMR Amdt. H-166]

Utilization, Donation, and Disposal of Foreign Gifts and Decorations

AGENCY: Federal Supply Service, GSA.

ACTION: Final rule.

SUMMARY: This amendment redefines "minimal value" based on the increase in the Department of Labor Consumer Price Index report of September 30, 1986. This amendment also provides for foreign gifts and decorations to be offered to recipients for purchase, in those cases where recipients have indicated an interest in purchasing the items, before the gifts or decorations are offered to State agencies for donation. Procedures are defined for physical custody, value appraisal, and sale of these foreign gifts and decorations. In addition, this amendment changes the period of restriction imposed on donated foreign gifts and decorations.

EFFECTIVE DATE: April 19, 1988.

FOR FURTHER INFORMATION CONTACT: Stanley M. Duda, Director, Property Management Division, (703) 557-1240.

SUPPLEMENTARY INFORMATION: The General Services Administration has determined that this rule is not a major rule for the purposes of Executive Order 12291 of February 17, 1981, because it is not likely to result in an annual effect on the economy of $100 million or more; a major increase in costs to consumers or others; or significant adverse effects. The General Services Administration has based all administrative decisions underlying this rule on adequate information concerning the need for, and consequences of, this rule; has determined that the potential benefits to society from this rule outweigh the potential costs and has maximized the net benefits; and has chosen the alternative approach involving the least net cost to society.

List of Subjects in 41 CFR Part 101-49

Conflict of interests, Decorations, Medals, Awards, Foreign relations, Government property, Government property management.

Accordingly, 41 CFR Part 101-49 is amended as follows:

PART 101-49—UTILIZATION, DONATION, AND DISPOSAL OF FOREIGN GIFTS AND DECORATIONS

1. The authority citation for Part 101-49 continues to read as follows:

Authority: Sec. 205(c), 63 Stat. 390 (40 U.S.C. 486(c)); and sec. 515, 91 Stat. 862 (5 U.S.C. 7342).

2. The table of contents for Part 101-49 is amended by revising the following entries:

101-49.104 [Reserved]
101-49.107 Sale to recipients.

Subpart 101-49.1—General Provisions

3. Section 101-49.001-5 is amended by revising the introductory paragraph to read as follows:

§ 101-49.001-5 Minimal value.

"Minimal value" means a retail value in the United States at the time of acceptance of $180 or less, except that:

* * * * *

4. Section 101-49.101 is amended by revising paragraph (a) to read as follows:

§ 101-49.101 Custody of gifts and decorations.

(a) GSA normally will not take custody of gifts and decorations for which recipients have expressed an interest in purchasing. All such gifts and decorations shall remain in the physical custody and be the responsibility of the employing agency until recipients either purchase or decline to purchase. GSA will accept physical custody of gifts and decorations which recipients decline to purchase and which are not retained for official use or returned to the donors.

* * * * *

5. Section 101-49.102 is amended by revising paragraph (b) to read as follows:

§ 101-49.102 Care and handling.

* * * * *

(b) Each employing agency shall be responsible for and bear the cost of care and handling of gifts and decorations in its custody and for delivery of the gifts and decorations to the physical custody of GSA.

§ 101-49.104 [Removed and Reserved]

6. Section 101-49.104 is removed and reserved.

7. Section 101-49.105 is revised to read as follows:

§ 101-49.105 Appraisals.

When a recipient indicates an interest in purchasing a gift, the employing agency shall obtain a commercial appraisal before reporting the gift to GSA. The gift is to be reported to GSA on Standard Form (SF), Report of Excess Personal Property, for utilization screening prior to sale to the recipient. The commercial appraisal may be either attached to the SF 120, or completed and furnished separately to GSA after utilization screening is completed.

8. Section 101-49.107 is revised to read as follows:

§ 101-49.107 Sale to recipients.

Gifts and decorations for which there are no Federal requirements as determined by GSA, may be offered for sale to recipients as provided in § 101-49.402 prior to donation to authorized donees under the provisions of Subpart 101-49.3, when so requested by recipients.

9. Section 101-49.108 is revised to read as follows:

§ 101-49.108 Disposal of firearms.

Firearms reported to GSA as foreign gifts may be offered for transfer to Federal agencies, including law enforcement activities. Firearms not required for Federal use may be sold to interested recipients at the discretion of GSA. A certification that the recipient shall comply with all State and local laws regarding purchase and possession of firearms must be received by GSA prior to release of such firearms to the purchaser. Those firearms not tranferred to a Federal activity or sold to recipients shall be destroyed in accordance with § 101-45.309-4.

Subpart 101-49.2—Utilization of Foreign Gifts and Decorations

10. Section 101-49.201-1 is amended by revising the introductory text in paragraph (a) and by revising paragraph (b) to read as follows:

§ 101-49.201-1 Gifts and decorations required to be reported.

(a) Except as provided in § 101-49.106 and § 101-49.201-2, tangible gifts and decorations that are not retained for official use or returned to the donor shall be reported to GSA. Tangible gifts and decorations that have been retained for official use shall be reported to GSA within 30 calendar days after termination of the official use. Gifts and decorations shall be reported on SF 120, Report of Excess Personal Property (see § 101-43.4901-120), to the General Services Administration, Property Management Division (FBP), Washington, DC 20406. The SF 120 shall be conspicuously marked "FOREIGN GIFTS AND/OR DECORATIONS" and include the following information:

* * * * *

(b) Gifts and decorations received by the President or a member of the President's family normally are handled by the National Archives and Records Administration.

* * * * *

11. Section 101-49.201-2 is amended by revising paragraph (a)(3) to read as follows:

§ 101-49.201-2 Gifts and decorations not to be reported.

(a) * * *

(3) Gifts and decorations below minimal value retained by employee recipients with the approval of the employing agency;

* * * * *

12. Section 101-49.202 is amended by revising paragraphs (b) and (e) to read as follows:

§ 101-49.202 Transfers to other Federal agencies.

* * * * *

(b) Transfers will be accomplished by submitting for approval a SF 122, Transfer Order Excess Personal Property (see § 101-43.4901-122), or any other transfer order form approved by GSA, to the General Services Administration, Property Management Division (FBP), Washington, DC 20406. The SF 122, or other transfer order forms, shall be conspicuously marked "FOREIGN GIFTS AND/OR

DECORATIONS" and include all information furnished by the employing agency as specified in § 101-49.201-1(a).

* * * * *

(e) The transfer document shall include the following statement: "At such time as these items are no longer required, they will be reported to the General Services Administration, Property Management Division (FBP), Washington, DC 20406, and will be identified as foreign gift items and cross-referenced to the original excess report number."

13. Section 101-49.204 is revised to read as follows:

§ 101-49.204 Gifts and decorations no longer required by the transferee agency.

Gifts and decorations no longer required by the transferee agency shall be reported to the General Services Administration as provided in § 101-49.201-1 and shall include the transfer order number from the original transfer order or a copy of that order.

Subpart 101-49.3—Donation of Foreign Gifts and Decorations

14. Section 101-49.301 is amended by revising paragraph (a) to read as follows:

§ 101-49.301 Donation of gifts and decorations.

(a) Gifts and decorations not required for Federal use or sold to recipients will be made available at the discretion of GSA through State agencies to appropriate public agencies and eligible nonprofit tax-exempt activities for a period of 21 calendar days following the period of Federal utilization screening as provided in § 101-49.202(a).

* * * * *

15. Section 101-49.302 is amended by revising paragraph (a) and paragraph (b)(3) to read as follows:

§ 101-49.302 Requests by public agencies and nonprofit tax-exempt activities.

(a) All transfers of gifts and decorations to the State agencies for donation to public agencies and eligible nonprofit tax-exempt activities shall be accomplished by use of SF 123, Transfer Order Surplus Personal Property (see § 101-44.4901-123). The SF 123, with any additional required documentation, shall be submitted for approval to the General Services Administration, Property Management Division (FBP), Washington, DC 20406. The SF 123 shall be prepared in accordance with the instructions in § 101-44.4901-123-1 and shall be conspicuously marked "FOREIGN GIFTS AND/OR DECORATIONS."

(b) * * *

* * * * *

(3) Details on the planned utilization of the gift or decoration, including where and how it will be used and how it will be safeguarded.

16. Section 101-49.304 is amended by revising paragraphs (b) and (e), and adding paragraphs (f) and (g) to read as follows:

§ 101-49.304 Conditions of donation.

* * * * *

(b) There shall be a period of restriction which will expire after the gift or decoration has been used for the purpose stated in the letter of intent for a period of 10 years, except that GSA may restrict the use of the gift or decoration for such period as may be prescribed by GSA when the inherent character of the property justifies such action.

* * * * *

(e) If, at any time during the period of restriction, the gift or decoration is no longer suitable, usable, or needed by the donee for the purpose stated in the letter of intent, the donee shall promptly notify the General Services Administration, Property Management Division (FBP), Washington, DC 20406, through the State agency, and upon demand by GSA, title and right to possession of the gift or decoration shall revert to the U.S. Government. In this event, the donee shall comply with transfer or disposition instructions furnished by GSA through the State agency, with costs of transportation, handling, and reasonable insurance during transportation to be paid by the donee or as directed by GSA.

(f) The donee shall comply with all additional conditions covering the handling and use of any gift or decoration imposed by GSA.

(g) Upon the donee's failure to comply with any applicable condition or limitation during the period of restriction, the State agency may demand return of the gift or decoration and, upon demand, title and right to possession of the gift or decoration shall revert to the U.S. Government. In this event, the donee shall return the gift or decoration in accordance with instructions furnished by the State agency, with costs of transportation, handling, and reasonable insurance during transportation to be paid by the donee or as directed by the State agency. If the gift or decoration is lost, stolen, or cannot legally be recovered or returned for any other reason, the donee shall pay to the U.S. Government the fair market value of the gift or decoration at the time of its loss, theft, or at the time that it became unrecoverable as determined by GSA. If the gift or decoration is damaged or destroyed, the State agency may require the donee to:

(1) Return the item and pay the difference between its former fair market value and its current fair market value, or

(2) Pay the fair market value, as determined by GSA, of the item had it not been damaged or destroyed.

17. Section 101-49.307 is revised to read as follows:

§ 101-49.307 Donation of gifts withdrawn from sale.

Gifts that are being offered for public sale may be withdrawn and approved for donation in accordance with § 101-44.107.

Subpart 101-49.4—Sale or Destruction of Foreign Gifts and Decorations

18. Section 101-49.400 is revised to read as follows:

§ 101-49.400 Scope of subpart.

This subpart prescribes policies and procedures governing the sale of foreign gifts and decorations to recipients and the disposal by either sale or destruction of foreign gifts and decorations which GSA has determined are not needed for Federal utilization or donation.

Dated: March 31, 1988.

Paul Trause,

Acting Administrator of General Services.

[FR Doc. 88-8486 Filed 4-18-88; 8:45 am]

BILLING CODE 6820-24-M

FEDERAL COMMUNICATIONS COMMISSION

47 CFR Part 73

[MM Docket No. 87-115; RM-5538]

Radio Broadcasting Services; Seaside, CA

AGENCY: Federal Communications Commission.

ACTION: Final rule.

SUMMARY: This document allots Channel 278A to Seaside, California, as that community's second local FM service, in response to a petition filed on behalf of Dr. H. H. Lusk. The allotment is made with a site restriction 4.7 kilometers southwest of Seaside. The restricted site coordinates are 36-34-45 and 121-52-05. With this action, the proceeding is terminated.

DATES: *Effective* May 31, 1988. The window period for filing applications on

Channel 278A at Seaside, California, will open on June 1, 1988, and close on July 1, 1988.

FOR FURTHER INFORMATION CONTACT: Nancy Joyner, Mass Media Bureau, (202) 634-6530. Questions related to the window application filing process should be addressed to the Audio Services Division, FM Branch, Mass Media Bureau, (202) 632-0394.

SUPPLEMENTARY INFORMATION: This is a summary of the Commission's Report and Order, MM Docket No. 87-115, adopted March 23, 1988, and released April 13, 1988. The full text of this Commission decision is available for inspection and copying during normal business hours in the FCC Dockets Branch (Room 230), 1919 M Street NW., Washington, DC. The complete text of this decision may also be purchased from the Commission's copy contractors, International Transcription Service, (202) 857-3800, 2100 M Street NW., Suite 140, Washington, DC 20037.

List of Subjects in 47 CFR Part 73

Radio broadcasting.

PART 73—[AMENDED]

1. The authority citation for Part 73 continues to read as follows:

Authority: 47 U.S.C. 154, 303.

§ 73.202 [Amended]

2. Section 73.202(b), the Table of FM Allotments, is amended by revising the entry for Seaside, California, to add Channel 278A.

Federal Communications Commission.

Steve Kaminer,

Deputy Chief, Policy and Rules Division, Mass Media Bureau.

[FR Doc. 88-8525 Filed 4-18-88; 8:45 am]

BILLING CODE 6712-01-M

---

47 CFR Part 73

[MM Docket No. 86-430; RM-5310 and 5687]

Radio Broadcasting Services; Bogue Chitto and Utica, MS

AGENCY: Federal Communications Commission.

ACTION: Final rule.

SUMMARY: The Notice of Proposed Rule Making was issued in response to a petition filed by Bogue Chitto Broadcasting Company, requesting the allotment of FM Channel 225A to Bogue Chitto. Petitioner filed supporting comments but has since withdrawn those comments. As stated in the Appendix to the Notice, continuing interest is required before a channel will be allocated. Therefore, in accordance with the Commission's policy, no further consideration will be given to the allocation of FM Channel 225A at Bogue Chitto, Mississippi.

A counterproposal was filed by Chautauqua Broadcasting Company, Inc. seeking the allotment of FM Channel 225A to Utica, Mississippi. Chautauqua Broadcasting indicated its intention to file an application for the use of the channel at Utica. Channel 225A can be allocated to Utica, Mississippi, in compliance with the spacing requirements provided there is a site restriction 10.5 kilometers (6.5 miles) northeast of the community. The site restriction will prevent a conflict with Station KQID, Channel 226C, Alexandria, Louisiana. The coordinates for the restricted site are 32-08-28 and 90-31-06. With this action, this proceeding is terminated.

DATES: *Effective* May 31, 1988. The window period for filing applications will open on June 1, 1988, and close on July 1, 1988.

FOR FURTHER INFORMATION CONTACT: Kathleen Scheuerle, Mass Media Bureau, (202) 634-6530.

SUPPLEMENTARY INFORMATION: This is a summary of the Commission's Report and Order, MM Docket No. 86-430, adopted March 24, 1988, and released April 13, 1988. The full text of this Commission decision is available for inspection and copying during normal business hours in the FCC Dockets Branch (Room 230), 1919 M Street NW., Washington, DC. The complete text of this decision may also be purchased from the Commission's copy contractors, International Transcription Service, (202) 857-3800, 2100 M Street NW., Suite 140, Washington, DC 20037.

List of Subjects in 47 CFR Part 73

Radio broadcasting.

PART 73—[AMENDED]

1. The authority citation for Part 73 continues to read as follows:

Authority: 47 U.S.C. 154, 303.

§ 73.202 [Amended]

2. In § 73.202(b), the Table of FM Allotments is amended under Mississippi by adding FM Channel 225A to Utica.

Federal Communications Commission.

Steve Kaminer,

Deputy Chief, Policy and Rules Division, Mass Media Bureau.

[FR Doc. 88-8527 Filed 4-18-88; 8:45 am]

BILLING CODE 6712-01-M

---

47 CFR Part 73

[MM Docket No. 87-323; RM-5341]

Radio Broadcasting Services; Webb City, MO

AGENCY: Federal Communications Commission.

ACTION: Final rule.

SUMMARY: This document substitutes FM Channel 230C2 for Channel 232A at Webb City, Missouri, in response to a petition filed by J. R. Communications Company. We shall also modify the license of Station KIKQ to specify operation on Channel 230C2 in lieu of Channel 232A. The coordinates for the current site are 37-14-34 and 94-30-21. With this action, this proceeding is terminated.

EFFECTIVE DATE: May 31, 1988.

FOR FURTHER INFORMATION CONTACT: Kathleen Scheuerle, Mass Media Bureau, (202) 634-6530.

SUPPLEMENTARY INFORMATION: This is a summary of the Commission's Report and Order, MM Docket No. 87-323, adopted March 28, 1988, and released April 13, 1988. The full text of this Commission decision is available for inspection and copying during normal business hours in the FCC Dockets Branch (Room 230), 1919 M Street NW., Washington, DC. The complete text of this decision may also be purchased from the Commission's copy contractors, International Transcription Service, (202) 857-3800, 2100 M Street NW., Suite 140, Washington, DC 20037.

List of Subjects in 47 CFR Part 73

Radio broadcasting.

PART 73—[AMENDED]

1. The authority citation for Part 73 continues to read as follows:

Authority: 47 U.S.C. 154, 303.

§ 73.202 [Amended]

2. In § 73.202(b), the Table of FM Allotments under Missouri is amended by deleting Channel 232A and adding Channel 230C2 at Webb City.

Federal Communications Commission.

Steve Kaminer,

Deputy Chief, Policy and Rules Division, Mass Media Bureau.

[FR Doc. 88-8528 Filed 4-18-88; 8:45 am]

BILLING CODE 6712-01-M

47 CFR Part 73

[MM Docket No. 87-59; RM-5535]

Radio Broadcasting Services; Outlook, MT

AGENCY: Federal Communications Commission.

ACTION: Final rule.

SUMMARY: This document allocates FM Channel 289C to Outlook, Montana, in response to a petition filed by Timothy D. Martz. Canadian concurrence has been obtained for this allotment. The coordinates for this allotment are 48-53-18 and 104-46-42. With this action, this proceeding is terminated.

DATES: *Effective* May 31, 1988. The window period for filing applications will open on June 1, 1988, and close on July 1, 1988.

FOR FURTHER INFORMATION CONTACT: Kathleen Scheuerle, Mass Media Bureau, (202) 634-6530.

SUPPLEMENTARY INFORMATION: This is a summary of the Commission's Report and Order, MM Docket No. 87-59, adopted March 28, 1988, and released April 13, 1988. The full text of this Commission decision is available for inspection and copying during normal business hours in the FCC Dockets Branch (Room 230), 1919 M Street NW., Washington, DC. The complete text of this decision may also be purchased from the Commission's copy contractors, International Transcription Service, (202) 857-3800, 2100 M Street, NW., Suite 140, Washington, DC 20037.

List of Subjects in 47 CFR Part 73

Radio broadcasting.

PART 73—[AMENDED]

1. The authority citation for Part 73 continues to read as follows:

Authority: 47 U.S.C. 154, 303.

§ 73.202 [Amended]

2. In § 73.202(b), the Table of FM Allotments is amended under Montana by adding Channel 289C at Outlook.

Federal Communications Commission.

Steve Kaminer,

Deputy Chief, Policy and Rules Division, Mass Media Bureau.

[FR Doc. 88-8529 Filed 4-18-88; 8:45 am]

BILLING CODE 6712-01-M

---

47 CFR Part 73

[MM Docket No. 87-129; RM-5681]

Radio Broadcasting Services; Marlboro, VT

AGENCY: Federal Communications Commission.

ACTION: Final rule.

SUMMARY: This document allots Channel 268A to Marlboro, Vermont, as that community's first FM service, at the request of Marrian Akley. A site restriction of 2.7 kilometers (1.7 miles) northwest of the city is required. In addition, Canadian concurrence has been obtained. With this action, this proceeding is terminated.

DATES: *Effective* May 31, 1988. The window period for filing applications will open on June 1, 1988, and close on July 1, 1988.

FOR FURTHER INFORMATION CONTACT: Patricia Rawlings, (202) 634-6530.

SUPPLEMENTARY INFORMATION: This is a summary of the Commission's Report and Order, MM Docket No. 87-129, adopted March 24, 1988, and released April 13, 1988. The full text of this Commission decision is available for inspection and copying during normal business hours in the FCC Dockets Branch (Room 230), 1919 M Street NW., Washington, DC. The complete text of this decision may also be purchased from the Commission's copy contractors, International Transcription Service, (202) 857-3800, 2100 M Street NW., Suite 140, Washington, DC 20037.

List of Subjects in 47 CFR Part 73

Radio broadcasting.

PART 73—[AMENDED]

1. The authority citation for Part 73 continues to read as follows:

Authority: 47 U.S.C. 154, 303.

§ 73.202 [Amended]

2. Section 73.202(b), the Table of FM Allotments is amended under Vermont, by adding Channel 268A to Marlboro.

Steve Kaminer,

Deputy Chief, Policy and Rules Division, Mass Media Bureau.

[FR Doc. 88-8530 Filed 4-18-88; 8:45 am]

BILLING CODE 6712-01-M

---

47 CFR Part 73

[MM Docket No. 86-148; RM-4931]

Television Broadcasting Services; Grand Junction, CO

AGENCY: Federal Communications Commission.

ACTION: Final rule.

SUMMARY: This document allots VHF television Channel 11 to Grand Junction, Colorado, and dismisses a counterproposal by W. Russell Withers, Jr. to allocate VHF Channel *13 to Grand Junction reserved for noncommercial educational use and dereserve vacant UHF Channel *18 for commercial use. The counterproposal was dismissed for lack of an interest in either of these allotments. With this action, this proceeding is terminated.

EFFECTIVE DATE: May 23, 1988.

FOR FURTHER INFORMATION CONTACT: Robert Hayne, Mass Media Bureau, (202) 634-6530.

SUPPLEMENTARY INFORMATION: This is a summary of the Commission's Report and Order, MM Docket No. 86-148, adopted March 15, 1988, and released April 11, 1988. The full text of this Commission decision is available for inspection and copying during normal business hours in the FCC Dockets Branch (Room 230), 1919 M Street NW., Washington, DC. The complete text of this decision may also be purchased from the Commission's copy contractors, International Transcription Service, (202) 857-3800, 2100 M Street NW., Suite 140, Washington, DC 20037.

List of Subjects in 47 CFR Part 73

Television broadcasting.

PART 73—[AMENDED]

1. The authority citation for Part 73 continues to read as follows:

Authority: 47 U.S.C. 154, 303.

§ 73.606 [Amended]

2. Section 73.606, the Television Table of Allotments, is amended under Colorado by adding Channel 11+ at Grand Junction.

Federal Communications Commission.

Steve Kaminer,

Deputy Chief, Policy and Rules Division, Mass Media Bureau.

[FR Doc. 88-8526 Filed 4-18-88; 8:45 am]

BILLING CODE 6712-01-M

DEPARTMENT OF THE TREASURY

48 CFR Part 1033

Acquisition Regulations; Submission and Disposition of Protests

AGENCY: Departmental Offices, Treasury.

ACTION: Final rule.

SUMMARY: This regulation establishes uniform procedures in 48 CFR Part 1033 for submission and disposition of protests filed with the Department of the Treasury. The regulation is intended to provide standard time frames for filing of agency-level protests, a clear format for such protests, and guidance to Treasury bureau procurement offices for handling agency protests.

EFFECTIVE DATE: April 19, 1988.

SUPPLEMENTARY INFORMATION:

A. Public Comments

A notice of proposed rule was published in the **Federal Register** on December 24, 1987 (52 FR 48729–48730). Two sources made public comments which recommended a total of 21 changes. As a result of these comments, revisions were made to the regulation as follows:

1. Additional objectives were added to the policy statement in 1033.103(a).
2. Details were added to 1033.103(b)(1) regarding the appropriate contracting officer to receive protests.
3. The procedures for filing protests were revised in 1033.103(b)(2), 1033.103(b)(3), 1033.103(b)(6), and 1033(b)(9) to mirror more closely the GAO bid protest regulations (4 CFR 21.2(a)(1) and (a)(2), 4 CFR 21.4(b)) and FAR 33.103 and 33.104(a)(2).
4. Provision was made for an informal conference in 1033.103(b)(5).
5. Various editorial corrections and clarifications were made.

B. Special Analyses

It is hereby certified that the proposed rule will not have a significant economic impact on a substantial number of small entities. Accordingly, the analysis requirements of the Regulatory Flexibility Act (5 U.S.C. 601 et seq.) do not apply. The regulation clarifies protest procedures and does not affect the rights of any entity to make a protest.

This document relates to agency organization and management. Accordingly, it is not subject to Executive Order 12291. This final rule is not subject to the delayed effective date requirement of 5 U.S.C. 553(d) pursuant to 5 U.S.C. 553(a)(2), which exempts from section 553 matters relating to agency management or contracts.

C. Paperwork Reduction Act

The collection of information contained in the proposed regulation has been approved by the Office of Management and Budget pursuant to section 3504(h) of the Paperwork Reduction Act (44 U.S.C. 3501) and has been assigned OMB Control Number 1505–01C7, expiration date 2/29/89.

List of Subjects in 48 CFR Part 1033

Government procurement, Protests, Disputes, Appeals.

Dated: April 11, 1988.

Thomas P. O'Malley,

Director, Office of Procurement [Procurement Executive].

Title 48 of the Code of Federal Regulations is amended as set forth below:

PART 1033—PROTESTS, DISPUTES, AND APPEALS

1. The authority citation for Part 1033 continues to read as follows:

Authority: 41 U.S.C. 418b (a) and (b), as delegated by Department of the Treasury Orders 101–30 and Treasury Directive 12–11.

2. Subpart 1033.1, consisting of section 1033.103, is added to read as follows:

Subpart 1033.1—Protests

1033.103 Protests to the Agency.

(a) *Policy.* It is the Department's policy to resolve protests in an informal manner whenever possible. Protesters are strongly encouraged to address their concerns to the contracting officer prior to resorting to litigation or other formal, external means of resolution. The objectives of the following procedures are to resolve agency protests effectively, to help build confidence in the Department's procurement system, to reduce the need to file protests at GAO or GSBCA, and to provide both the Department and the protester maximum information regarding their respective positions.

(b) *Procedures.* (1) Agency protest may be submitted by interested parties to the contracting officer, who will normally be designated in FAR provision 52.233–2 of the solicitation.

(2) Protests based on alleged improprieties in a solicitation which are apparent prior to bid opening or the closing date for receipt of initial proposals shall be filed prior to bid opening or the closing date for receipt of initial proposals. In negotiated acquisitions, alleged improprieties which do not exist in the initial solicitation but which are subsequently incorporated into the solicitation must be protested not later than the next closing date for receipt of proposals following the incorporation.

(3) In cases other than those covered in paragraph (b)(2) of this section, protests shall be filed not later than 10 working days after the basis of protest is known or should have been known, whichever is earlier.

(4) Protests shall be in writing and shall include, as a minimum, the following information:

(i) Name, address, and telephone number of the protestor;

(ii) Solicitation or contract number;

(iii) Detailed statement of the legal and factual grounds for the protest, including copies of relevant documents;

(iv) Request for a ruling by the contracting officer to whom the protest is submitted;

(v) Statement as to the form of relief requested.

(5) Protest submissions shall be concise, logically arranged, and state sufficient grounds of protest. Failure to comply with any of the above requirements may be grounds for dismissal of the protest. A protester may request an informal conference with the contracting officer, which may be granted at the latter's sole discretion.

(6) Upon receipt of an agency protest, the contracting officer shall:

(i) Immediately notify legal counsel and the Departmental Office of Procurement (MMK) and provide each with a copy of the protest;

(ii) Prepare a report as prescribed in FAR 33.104(a)(2), except that, if the contract action or contract performance continues after receipt of the protest, the report shall include any determination prescribed in FAR 33.103(a) or 1033.103(b)(9) below;

(iii) Obtain review of the protest response by legal counsel and forward the protest response for MMK review and approval at least three working days prior to the due date; and

(iv) Ensure that the protest response is received by the protester no later than 25 working days after receipt of the protest.

(7) If the contracting officer and the protester agree on corrective action, a report is not required; however, in addition to amending the solicitation or taking other corrective action, the contracting officer shall inform the protester in writing of the proposed corrective action and shall obtain from the protester a written notice withdrawing the protest. A copy of this notice and any amendment shall be provided to MMK.

(8) If a written protest before award has been lodged with the contracting officer, only the bureau chief procurement officer may make the determination described in FAR 33.103(a). Prior to making an award of a contract under the circumstances in FAR 33.103(a), the advice of legal counsel shall be obtained.

(9) If a written protest after award has been lodged with the contracting officer,

the bureau chief procurement officer may authorize contract performance notwithstanding the pending protest if he or she makes a written determination that (i) performance of the contract is in the Government's best interest, or (ii) urgent and compelling circumstances significantly affecting interests of the United States do not permit waiting for the protest decision. A copy of this determination shall be forwarded to MMK.

(Approved by the Office of Management and Budget under control number 1505-0107)

[FR Doc. 88-8516 Filed 4-18-88; 8:45 am]

BILLING CODE 4810-25-M

DEPARTMENT OF COMMERCE

National Oceanic and Atmospheric Administration

50 CFR Part 675

[Docket No. 71147-8002]

Groundfish of the Bering Sea and Aleutian Islands Area

AGENCY: National Marine Fisheries Service (NMFS), NOAA, Commerce.

ACTION: Notice of inseason adjustment.

SUMMARY: NOAA announces the apportionment of amounts of Alaska groundfish to the joint venture processing (JVP) portion of the domestic annual harvest (DAH) under provisions of the Fishery Management Plan for the Groundfish Fishery of the Bering Sea and Aleutian Islands Area (FMP). Groundfish are apportioned according to the regulations implementing the FMP. The intent of this action is to assure optimum use of these groundfish by allowing domestic fisheries to proceed without interruption.

DATES: Effective April 14, 1988. Comments will be accepted through April 29, 1988.

ADDRESS: Comments should be mailed to Robert W. McVey, Director, Alaska Region, National Marine Fisheries Service, P.O. Box 21668, Juneau, AK 99802-1668, or be delivered to Room 453, Federal Building, 709 West Ninth Street, Juneau, Alaska.

FOR FURTHER INFORMATION CONTACT: Janet E. Smoker (Resource Management Specialist, NMFS), 907-586-7230.

SUPPLEMENTARY INFORMATION: The FMP governs the groundfish fishery in the exclusive economic zone under the Magnuson Fishery Conservation and Management Act. The FMP was developed by the North Pacific Fishery Management Council (Council) and implemented by rules appearing at 50 CFR 611.93 and Part 675. The total allowable catch (TAC) for various goundfish species are apportioned initially among DAH, reserves, and the total allowable level of foreign fishing (TALFF). The reserve amount, in turn, is to be apportioned to DAH and/or TALFF during the fishing year, under 50 CFR 611.93(c) and 675.20(b). As soon as practicable after April 1, June 1, August 1, and on such other dates as are necessary the Secretary of Commerce apportions to DAH all or part of the reserve that he finds will be harvested by U.S. vessels during the remainder of the year, except that part or all of the reserve may be withheld if an apportionment would adversely affect the conservation of groundfish resources or prohibited species.

The initial specifications of domestic annual processing (DAP) for 1988 were based on the projected needs of the U.S. processing industry as assessed by a mail survey sent by the Director, Alaska Region, NMFS (Regional Director) to fishermen and processors in October, 1987. After fifteen percent of the Bering Sea and Aleutian Islands (BSA) total allowable catch (TAC) was placed in the non-specific reserve, as required at § 675.20(a)(3), the initial specifications for DAP were determined, and the remaining amounts were provided to JVP (53 FR 894, January 14, 1988). No initial specification was provided for TALFF because DAH needs exceeded the TAC.

On January 14, JVP was supplemented by 804 mt of the nonspecific reserve to provide necessary bycatch of Greenland turbot, Pacific ocean perch, rockfish, sablefish, and squid.

Reapportionment (Table 1)

TABLE 1.—BERING SEA/ALEUTIANS REAPPORTIONMENTS OF TAC

(All values are in metric tons)

		Current	This action	Revised
Yellowfin sole	DAP	26,356		26,356
TAC=254,000; ABC=254,000	JVP	189,544	+8,000	197,544
Other Flatfish	DAP	26,403		26,403
TAC=131,369; ABC=331,900	JVP	85,261	+10,000	95,261
Pacific cod	DAP	87,416		87,416
TAC=200,000; ABC=385,300	JVP	82,584	+6,000	88,584
Total (TAC=2,000,000)	DAP	792,520		792,520
	JVP	908,284	+24,000	932,284
	RESERVES	299,196	−24,000	275,196

The following actions are taken by this notice to reapportion groundfish from the non-specific reserve to BSA fisheries.

To the BSA JVP

In the Bering Sea, about ninety U.S. catcher boats delivering fish to about eighty foreign processors are conducting directed fisheries on yellowfin sole. At current catch rates, the JVP of yellowfin sole will be reached on April 10. To provide for continued JVP fishing for yellowfin sole up to the scheduled April 16 reopening for pollock and for bycatch amounts in the pollock fishery, 8,000 mt of the non-specific reserve is apportioned to the Bering Sea yellowfin sole JVP. Similarly, to prevent JVP quotas of "other flatfish" and Pacific cod being reached prior to April 16 and to provide bycatch amounts for the pollock fishery, 10,000 mt of "other flatfish" and 6,000 mt of Pacific cod are apportioned from the non-specific reserve to JVP.

These apportionments do not result in overfishing of the yellowfin sole, "other flatfish", or Pacific cod stocks, as in each case the resulting species TAC is less than its Acceptable Biological Catch (ABC).

Comments and Responses

In accordance with 50 CFR 611.93(c) and 675.20(b), aggregated reports on U.S. catches of Alaska groundfish and the processing of those groundfish were available for public inspection to facilitate informed public comment. In addition, those provisions afforded the public an opportunity to submit comments on the extent to which U.S.

fishermen will harvest and the extent to which U.S. processors will process Alaska groundfish. One comment was received.

Comment: Continuous fishing and processing are critical factors for the success of JVP operations. Amounts of pollock excess to the needs of DAP operations should be promptly apportioned to JVP from reserves and/or DAP in order to allow the JVP pollock fishery to proceed without unnecessary interruption after it reopens on April 16.

Response: At this time, there is considerable uncertainty about DAP needs for pollock for the remainder of 1988. The Regional Director has sent out the second DAP survey for 1988 groundfish production needs, to be returned by May 6. Analyses of the returns will serve as a basis for determining pollock amounts excess to the 1988 needs of DAP, which will then be apportioned to JVP in a timely manner.

Classification

This action is taken under the authority of 50 CFR 675.20(b) and complies with Executive Order 12291.

The Assistant Administrator for Fisheries, NOAA finds for good cause that it is impractical and contrary to the public interest to provide prior notice and comment. Immediate effectiveness of this notice is necessary to benefit fishermen who otherwise would have to forego substantial amounts of other groundfish species if fishing were closed as a result of achieving previously specified JVPs. However, interested persons are invited to submit comments in writing to the address above for 15 days after the effective date of this notice.

List of Subjects in 50 CFR Part 675

Fish, Fisheries, Reporting and recordkeeping requirements.

Authority: 16 U.S.C. 1801 *et seq.*

Dated: April 14, 1988.

Ann D. Terbush,

Acting, Director of Fishery Conservation and Management.

[FR Doc. 88-8564 Filed 4-14-88; 4:42 pm]

BILLING CODE 3510-22-M

BEST COPY AVAILABLE

VOL 53 ISS 75 AP 19 1988 UMI

Proposed Rules

Federal Register
Vol. 53, No. 75
Tuesday, April 19, 1988

This section of the FEDERAL REGISTER contains notices to the public of the proposed issuance of rules and regulations. The purpose of these notices is to give interested persons an opportunity to participate in the rule making prior to the adoption of the final rules.

DEPARTMENT OF AGRICULTURE

Federal Crop Insurance Corporation

7 CFR Part 401

[Amdt. No. 24; Docket No. 5513S]

General Crop Insurance Regulations

AGENCY: Federal Crop Insurance Corporation, USDA.

ACTION: Withdrawal of notice of proposed rulemaking.

SUMMARY: The Federal Crop Insurance Corporation (FCIC) publishes this notice of the purpose of withdrawing a Notice of Proposed Rulemaking (NPRM) amending the General Crop Insurance Regulations (7 CFR Part 401). FCIC has determined that the effect of the proposed rule; changing the level of assigned coverage from level 2 to level 1 when an insured does not elect a coverage level, is inadequate for the purpose of achieving the intent of the Board of Directors of FCIC.

FOR FURTHER INFORMATION CONTACT: Peter F. Cole, Secretary, Federal Crop Insurance Corporation, U.S. Department of Agriculture, Washington, DC 20250, telephone (202) 447-3325.

SUPPLEMENTARY INFORMATION: On Wednesday, December 2, 1987, FCIC published an NPRM in the **Federal Register** at 52 FR 45830, which proposed to amend the General Crop Insurance Regulations (7 CFR Part 401) to provide that the assigned level of coverage would be level 1 instead of the current level 2 if an insured did not elect coverage.

Upon review, FCIC determined that this action would not be taken at this time. The question of coverage level is under study at this time in connection with the sectional Production History Program. Therefore we believe that the proposed rule published at 52 FR 45830 should be and is hereby withdrawn.

Done in Washington, DC, on April 3, 1988.

John Marshall,

Manager, Federal Crop Insurance Corporation.

[FR Doc. 88-8456 Filed 4-18-88; 8:45 am]

BILLING CODE 3410-08-M

DEPARTMENT OF TRANSPORTATION

Office of the Secretary; Research and Special Programs Administration

14 CFR Part 298

[Docket No. 45584; Notice No. 88-6]

Aviation Economic Regulations; Exemptions for Air Taxi Operations

AGENCY: Research and Special Programs Administration, DOT.

ACTION: Notice of proposed rulemaking.

SUMMARY: The Department of Transportation (DOT) is proposing to amend Part 298 to require commuter air carriers to file Schedule F-1 "Report of Financial Data" of RSPA Form 298-C. This schedule is needed to obtain quarterly financial data (Total Operating Revenues, Total Operating Expenses, Net Profit or (Loss) and Passenger Revenues-Scheduled Service) from commuter air carriers providing scheduled passenger service. The information will be used primarily by the Department to monitor the continuing fitness of commuter air carriers as required by section 401(r) of the Federal Aviation Act of 1958, as amended. Secondarily, the financial information will benefit the Department's work in other program areas. For example, the data will assist in the administration of the Aviation Trust Fund and the Loan Guarantee Programs, in econometric modeling and regulatory cost-benefit analyses which supports aviation policy and regulatory decisions, and in FAA's allocation planning for its inspection resources.

DATES: Comments on the proposed rule must be received on or before June 20, 1988.

ADDRESS: Comments should be directed to the Docket Clerk, Docket 45584, Room 4107, Office of The Secretary, Department of Transportation, 400 Seventh Street SW., Washington, DC 20590. Communications should identify the regulatory docket number and be submitted in duplicate to the DOT rules docket. Commenters wishing the Department to acknowledge receipt of their comments must submit a self-addressed stamped postcard on which the following statement is made: Comments on Docket No. 45584. The postcard will be date/time stamped and returned to the commenter. All communications received before the closing date for comments will be considered by the Administrator. Also, this proposal may be changed in light of comments received. All comments submitted will be available for examination in the Rules Docket both before and after the closing date for comments. A report summarizing each substantive public contact concerned with this rulemaking will be filed in the docket.

FOR FURTHER INFORMATION CONTACT: Jack M. Calloway or Richard G. Minick, Office of Aviation Information Management, DAI-1, Research and Special Programs Administration, Department of Transportation, 400 Seventh Street SW., Washington DC 20590, at (202) 366-4383 or (202) 366-4389, respectively.

SUPPLEMENTARY INFORMATION: Commuter air carriers evolved from the air taxi industry. Beginning with the enactment of the Civil Aeronautics Act of 1938 and continuing with the Federal Aviation Act of 1958 (FAAct), small aircraft operators have been exempted from most economic regulations. Commuter air carriers have been looked on as providing traffic feed to the certificated air carriers and connecting small isolated communities to the U.S. air transportation system. This is still their primary role today.

When Congress enacted the Airline Deregulation Act of 1978 (Pub. L. 95-504, October 24, 1978) (ADA), one of its primary objectives was to give more freedom to large certificated air carriers to enter and exit the domestic market place. Recognizing that this flexibility might result in many small communities receiving significantly reduced service or loss of service from certificated air carriers, the Small Community Air Service Program under section 419 was established by the ADA to guarantee a continuation of domestic service to small communities during the process of deregulation. Under this program, certain communities were guaranteed a

level of "essential air service", with Federal subsidy if necessary.

Section 419 gave added importance to commuters and recognized their contributions to the overall air transportation system. Under section 419, all commuters must undergo a fitness determination. The ADA also added section 401(r) to the Federal Aviation Act of 1958. Section 401(r) provides that the fitness requirement for air carriers is a continuing one and directs the Department to monitor the fitness of carriers it has found fit initially.

Since the inception of uniform traffic and capacity reporting for commuters in 1969, the commuter airline industry has grown in terms of passenger enplanements approximately 227 percent in the last decade and a half. Certificated air carrier enplanements have grown 131 percent. The high commuter growth rate compared to that of the certificated air carriers providing scheduled domestic passenger service during this same period has resulted in part because of the rapid growth of marketing alliances between certificated air carriers and commuters, whereby the certificated air carrier is assured of the commuter's traffic feed at the hub. Another major feature of these alliances is code sharing. Under code sharing, flights operated by the commuter are identified by the two-letter designator code of its partner in the computer reservation system and on passenger tickets. Another feature of many of the alliances is that the commuter aircraft is painted with the same colors, scheme, and logo of the partner, thus obscuring the identity of the commuter.

Growth rates for commuter airlines and certificated carriers are highlighted in the following table.

SCHEDULED SERVICE DOMESTIC PASSENGERS ENPLANED (000)

	Calendar year—December 31		Fiscal year—June 30	Growth between (percent)
	1970	1985	1986	1970–85
Commuters (excludes regionals)	[1] 4,270	[2] 13,970	[3] 14,486	227
Large certificated carriers	[4] 153,662	[5] 355,186	[6] 370,898	131

[1] *Commuter Air Carrier Traffic Statistics Year Ended December 31, 1970*, September 1971 edition.
[2] *Air Carrier Industry Scheduled Service Traffic Statistics Quarterly*, December 1985 edition.
[3] *Air Carrier Industry Scheduled Service Traffic Statistics Quarterly*, June 1986 edition.
[4] *Handbook of Airline Statistics*, 1973 edition.
[5] *Air Carrier Traffic Statistics*, December 1985 edition.
[6] *Air Carrier Statistics*, June 1986 edition.

FAA forecasts (FAA Aviation Forecasts Fiscal Years 1987–1998 (FAA-APO-87-1)) a growth rate for commuters and regional air carriers for the next 10 years of about 6.7 percent annually. Projecting the FY 1986 passenger enplanements of 14.5 million forward at the 6.7 percent growth rate shows that in the next decade the commuter industry will almost double or grow to an estimated 27.7 million domestic passenger enplanements.

Need for Data

The Department has reviewed its need for information in this rapidly expanding and increasingly important segment of the air transportation industry. In view of its responsibility to administer its mandated aviation responsibilities, and under the authority of section 407(a) of the FAAct, the Department of Transportation is proposing to collect four financial data elements on a quarterly basis from the commuter air carriers providing scheduled passenger service. The elements are (1) Total Operating Revenues, (2) Total Operating Expenses, (3) Net Income or (Loss), and (4) Passenger Revenues-Scheduled Service. They would be filed on RSPA Form 298-C, Schedule F-1 "Report of Financial Data." A copy of this schedule is included as Exhibit A to this rule.

Monitoring Continuing Fitness

Section 419 of the FAAct requires the Department to find all commuters "fit, willing, and able" to conduct scheduled passenger service as a prerequisite to providing such service to any eligible point. This fitness requirement is similar to that imposed on carriers seeking certificate authority under sections 401 and 418 of the FAAct.

In determining a carrier's fitness, the Department reviews three aspects of the carrier's operation: (1) The qualifications of its management team; (2) its disposition to comply with laws and regulations; and (3) its financial posture. In the last area, the Department must be able to determine that a prospective carrier has sufficient financial resources to conduct its proposed operation without imposing an undue risk on the traveling public. All applicants for commuter authority are required to file data pertaining to each of these areas as specified in 14 CFR Part 204 of the Department's Regulations.

Once a carrier has been found fit initially, section 401(r) of the FAAct requires that the carrier remain fit and directs the Department to monitor the continuing fitness of such carriers. While the Department reviews publicly available information on commuter operations, and periodically requires reports from specific commuters pertaining to their continuing fitness, there is no regular or recurrent means for receiving financial information on commuters. This differs from the situation involving certificated carriers which are required to file recurrent financial data.

In light of the increasingly important role played by commuters in the air transportation system it has become essential for the Department to have the ability to monitor the financial condition of commuter carriers as part of the Department's continuing fitness oversight responsibilities.

The filing of the proposed financial information would parallel that already submitted by small certificated carriers which operate aircraft and service of a size and nature similar to commuters.

Econometric Models

The reported financial data would be used in FAA econometric models to evaluate important policy issues such as the effects of changes in costs and taxes on demand for commuter aviation activity and total tax revenues. A valid financial base is necessary to project commuter costs and yields, and produce reliable traffic estimates. Unreliable traffic estimates could result in airport planning errors that produce either congested airports or underutilized airports. Errors in planning aviation airspace improvement programs could

materially affect safety of life and property and involve millions of dollars of unnecessary costs to commuter air carriers and the Federal Government.

Aviation Trust Fund

The Aviation Trust Fund Act requires the FAA to twice annually provide the Treasury Department and the OMB with adjusted estimates of aviation trust fund revenues. The two basic elements used to develop commuter revenue estimates are passenger revenues and revenue passenger miles. Without commuter revenue, the FAA has been estimating this statistic from the revenue information reported by small certificated air carriers. Small certificated air carriers are the most similar to commuters of any group reporting revenue data. The proposed data will provide the FAA with more accurate estimates for the commuter sector and provide a benchmark to review the overall reliability of its past estimates.

Regulatory Analysis and Evaluations

The proposed financial data will also assist the Department in its regulatory analysis functions. These data will aid in the internal review and revision of current regulation and in the formulation of new regulations. Any changes to existing regulations and the promulgation of new regulations must be justified based on cost/benefit analyses. The four requested financial data elements will provide some of the information necessary for the conduct of these analyses and evaluations and a baseline from which to evaluate comments by carriers on the economic impact of proposed changes to existing regulations and/or proposed new regulations.

Loan Guarantee Program

With the passage of the ADA, commuter air carriers were permitted to participate in the Loan Guarantee Program whereby the FAA guarantees the loan for the purchase of aircraft. The program expired in October 1983, but FAA has guaranteed payments through the mid-1990's. In some cases, commuters participating in the Aircraft Loan Guarantee Program have experienced financial difficulties and defaulted on their loans. Because of the budgetary difficulties for the Government created by defaults, the FAA will use the financial data to increase its monitoring efforts to identify potential problem carriers and to evaluate their financial posture in the context of the commuter industry as a whole.

Air Carrier Inspection Program

The FAA uses a variety of information to develop plans for allocation of its inspection resources for air carriers operating small aircraft. These include: accident, incident and enforcement statistics; operations facts (training, experience, etc.); aircraft descriptive data (owner, location, etc.); exposure statistics (traffic and capacity data reported to DOT on Form 298–C, Schedule A–1); and, financial data (reported to DOT by small certificated air carriers on Form 298–C, Schedule F–1). FAA plans to use commuter air carrier financial information to improve their planning process, including trend analysis and industry comparisons. It is anticipated this will facilitate the FAA's objectives to make optimal use of its inspection resources.

Alternate Reporting

As an alternative to the mandatory reporting proposed by this rulemaking, the CAB attempted to collect financial data from commuter air carriers on a voluntary basis in order to evaluate the initial and continuing fitness of these carriers. Scheduled passenger commuters subject to the section 419(c)(2) fitness provisions of the ADA were requested to voluntarily submit financial information to Dun and Bradstreet (D&B) for the four quarters of 1980 and 1981. It was believed that this voluntary program would be the most cost effective method of obtaining financial information from the commuters; however, it was also realized that the success of this program would depend entirely on the cooperation of the commuter carriers.

Prior to each submission deadline, carriers were contacted by letter and/or by telephone. Even though it was stressed that voluntary submission of financial statements to D&B represented the least costly and least burdensome way for the commuters to provide the financial data needed by the CAB, compliance with the request never reached 45 percent for any given quarter. For December 1981, the last quarter requested, only 21 percent of the commuters responded.

In addition to the apparent reluctance of commuters to voluntarily provide financial information to D&B, major problems were encountered concerning the uniformity of the information submitted by the commuters. The financial data that were received differed significantly as to the accounts and accounting treatment and varied widely as to reporting periods. Because of this, the information received could not be used for comparative analyses, thereby lessening its utility as an analytical tool.

The filings with the Securities and Exchange Commission (SEC) were recently reviewed by the Department as an alternate source for financial data. Of the approximately 140 commuters reporting traffic data to the Department, only six were filing financial data with SEC. This small number precluded the SEC filings from being considered a viable alternate data source.

Confidentiality

One major factor that seemed to encourage noncompliance with the voluntary system was the carriers' concern that their financial data would be publicly disclosed. Many commuters are privately or closely held, and their owners believe that disclosure of their financial data is not required in the interest of the public. The financial information filed by the commuters on RSPA Form 298–C, Schedule F–1 "Report of Financial Data" would be accorded a three year confidentiality period under § 298.62(d) of Part 298 (14 CFR 298.62(d)). This is the same confidential treatment accorded this schedule for small certificated air carriers. Aggregated data that does not identify individual carriers may be released any time. There is no absolute guarantee that the financial information can be withheld from disclosure if requested under the Freedom of Information Act. If such requests are filed, they will be dealt with on a case-by-case basis including contact with the commuter prior to release of information.

Individual carrier financial data withheld from public disclosure may be released by the Department to: (1) Parties to any proceeding before the Department to the extent such information is relevant and material to the issues in the proceeding upon a determination to this effect by the Department or the administrative law judge assigned to the case; (2) such persons and in such circumstances as the Department determines to be in the public interest or consistent with its regulatory functions and responsibilities, and (3) agencies and other components of the Federal Government for their internal use only. Certain information submitted in the Form 41 report has been accorded confidential treatment under similar guidelines, and the system has worked quite well. (Part 241, section 22(b).)

Administrative Notices

Executive Order 12291, Regulatory Flexibility Act, and Paperwork Reduction Act of 1980.

Executive Order 12291

This proposed action has been reviewed under Executive Order 12291, and it has been determined that this is not a major rule. It will not result in an annual effect on the economy of $100 million or more. There will be no increase in production costs or prices for customers, individual industries, Federal, State or local governments, agencies or geographical regions. Furthermore, this proposed rule would not adversely affect competition, employment, investment, productivity, innovation, or the ability of United States based enterprises to compete in domestic or export markets. This proposed regulation would result in a very slight increase in reporting burden for commuter air carriers.

This proposed regulation is not significant under the Department's Regulatory Policies and Procedures, dated February 26, 1979, as it does not involve important Departmental policies. Its economic impact is minimal and full regulatory evaluation is not required. See Regulatory Flexibility Act Section on costs for the industry for implementing this proposal.

Regulatory Flexibility Act

The Regulatory Flexibility Act (Pub. L. 96–354), requires regulatory flexibility analyses for rules that, if adopted, will have a "significant economic impact on a substantial number of small entities." Under the Act, both an increase or decrease in economic impact must be considered by the agency.

Under DOT's definition, a direct air carrier will be considered a "small entity" if it provides air transportation only with small aircraft as defined in 14 CFR 399.73 (up to 60 seats and/or 18,000 pounds payload capcity). The proposed changes would affect commuter air carriers providing scheduled passenger service. The group fits the definition of "small entity" within the meaning of the Act and DOT definition. However, DOT tentatively finds that the addition of financial data reporting will not have a significant economic impact on scheduled passenger commuter air carriers.

The proposed rule would add four financial data elements that would be filed on a quarterly basis. These financial data elements would be: (1) Total Operating Revenues, (2) Total Operating Expenses, (3) Net Income or (Loss), and (4) Passenger Revenues-Scheduled Service. It is estimated that the proposed reporting requirement will result in a very slight increase in costs for commuters. Early in 1980, the CAB audit staff conducted a survey of commuters to determine, among other things, the marginal costs attributable to filing a balance sheet, income statement and appropriate notes on a quarterly basis. The balance sheet contained 26 asset, liability, and stockholder accounts while the income statement contained 19 income and expense accounts. Based on the survey, it was estimated that the average first year costs, including start-up costs, would be $1900 per carrier. The annual recurring costs after the first year was estimated at $1200 per carrier. Adjusting for inflation, these costs for 1986 would be estimated at $2500 and $1600, respectively.

The four income and expense data elements proposed in this rule represent a great deal less data than the CAB survey considered. The financial data are of a type generally maintained by all companies for Federal and State tax reporting as well as their own management purposes. In fact, with respect to passenger revenues, carriers are required to file with the Internal Revenue Service a quarterly excise tax return on the transportation of passengers, but such returns are confidential (26 CFR 49.6011(a)–1). Furthermore, in 1984 the CAB issued the instruction pamphlets "The Voluntary Accounting System for Small Air Carriers-Revenues and Expenses, and Balance Sheet." Carriers implementing that accounting system would already have the four data elements available. Consequently, it is estimated that the start-up and recordkeeping costs would be nominal with small recurring costs. Based on a per element cost using 1986 figures, the first year costs for a carrier would be approximately $225 with recurring costs of approximately $150 thereafter. On an industry basis, first year costs would be approximately $31,500 with $21,000 in recurring costs thereafter.

I certify that this rule will not have a significant economic impact on the scheduled passenger commuter air carrier industry.

Paperwork Reduction Act of 1980

The collection-of-information requirements in this proposal are subject to the Paperwork Reduction Act (Pub. L. 96–511, 44 U.S.C. Chapter 35). These requirements will be submitted to the Office of Management and Budget (OMB) for review and comment. Persons may submit comments on the information collection requirements to OMB. Comments should be directed to Sam Fairchild, Office of Information and Regulatory Affairs, Office of Management and Budget, Washington, DC 20503. A copy of any comments sent to OMB should also be sent to the DOT rules docket at the address noted above.

List of Subjects in 14 CFR Part 298

Air carriers, Registration, Insurance, Reporting.

Proposed Rule

Accordingly, the Department of Transportation proposes to amend 14 CFR Part 298, *Exemptions for Air Taxi Operations* as follows:

PART 298—[AMENDED]

1. The authority citation for Part 298 continues to read:

Authority: Secs. 204, 401, 407, 416, 418, 419, Pub. L. 85–726, as amended, 72 Stat. 743, 754, 766, 711; 91 Stat. 1284; 49 U.S.C. 1324, 1371, 1377, 1386, 1388.

2. Section 298.62 would be amended by revising paragraph (a) and republishing paragraph (c) to read as follows:

§ 298.62 Reporting of financial data.

(a) Each commuter air carrier and each small certificated air carrier shall file RSPA Form 298–C, Schedule F–1 "Report of Financial Data." This report shall be filed quarterly as set forth in § 298.60.

* * * * *

(c) This schedule shall be used to report financial data for the overall or system operations of the carrier. At the option of the carrier, the data may be reported in whole dollars by dropping the cents. Financial data shall be reported in the following categories:

(1) Line 1 "Total Operating Revenues" shall include gross revenues accruing from services ordinarily associated with air transportation and air transportation-related services. This category shall include revenue derived from scheduled service operations, revenue derived from nonscheduled service operations, amounts of compensation paid to the carrier under section 419 of the Federal Aviation Act and other transport-related revenue such as in-flight sales, restaurant and food service (ground), rental of property or equipment, limousine service, cargo pick-up and delivery charges, and fixed-based operations involving the selling or servicing of aircraft, flying instructions, charter flights, etc.

(2) Line 2 "Total Operating Expenses" shall include expenses of a character usually and ordinarily incurred in the performance of air transportation and air transportation services. This category shall include expenses incurred: Directly in the in-flight operation of aircraft; in the holding of

aircraft and aircraft personnel in readiness for assignment to an in-flight status; on the ground in controlling and protecting the in-flight movement of aircraft; landing, handling or servicing aircraft on the ground; selling transportation; servicing and handling traffic; promoting the development of traffic; and administering operations generally. This category shall also include expenses which are specifically identifiable with the repair and upkeep of property and equipment used in the performance of air transportation, all depreciation and amortization expenses applicable to property and equipment used in providing air transportation services, all expenses associated with the transport-related revenues included on line 1 of this schedule, and all other expenses not specifically mentioned which are related to air transport operations. Interest expense and other nonoperating expenses attributable to financing or other activities which are extraneous to and not an integral part of air transportation or its incidental services shall not be included in this category.

(3) Line 3 "Net Income or (Loss)" shall reflect all operating and nonoperating items of profit and loss recognized during the period except for prior period adjustments.

(4) Line 4 "Passenger Revenues-Scheduled Service" shall include revenue generated from the transportation of passengers between pairs of points which are served on a regularly scheduled basis.

* * * * *

Issued in Washington, DC on April 12, 1988.

M. Cynthia Douglass,

Administrator, Research and Special Programs Administration, DOT.

Editorial Note: This form will not appear in the Code of Federal Regulations.

Exhibit A—RSPA Form 298–C, Schedule F–1

REPORT OF FINANCIAL DATA	Air Carrier (Corporate name including DBA) _____ Quarter Ended _____ 19__
Financial	
(1) Total Operating Revenues	_____
(2) Total Operating Expenses	_____
(3) Net Income	_____
(4) Passenger Revenues--Scheduled Service	_____

RSPA Form 298-C Schedule F-1

[FR Doc. 88–8444 Filed 4–18–88; 8:45 am]

BILLING CODE 4910-62-M

DEPARTMENT OF HEALTH AND HUMAN SERVICES

Food and Drug Administration

21 CFR Part 332

[Docket No. 87N–0053]

Antiflatulent Drug Products for Over-the-Counter Human Use; Proposed Amendment of Monograph; Extension of Time for Comments

AGENCY: Food and Drug Administration.

ACTION: Notice of proposed rulemaking; extension of comment period.

SUMMARY: The Food and Drug Administration (FDA) is extending to May 27, 1988, the period for submission of comments on the proposed amendment to the monograph for over-the-counter (OTC) antiflatulent drug products. This action responds to a request to extend the comment period.

DATE: Comments by May 27, 1988.

ADDRESS: Written comments to the Dockets Management Branch (HFA–305), Food and Drug Administration, Rm. 4–62, 5600 Fishers Lane, Rockville, MD 20857.

FOR FURTHER INFORMATION CONTACT: William E. Gilbertson, Center for Drug Evaluation and Research (HFN–210), Food and Drug Administration, 5600 Fishers Lane, Rockville, MD 20857, 301–295–8000.

SUPPLEMENTARY INFORMATION: In the **Federal Register** of January 29, 1988 (53 FR 2716), FDA issued a notice of proposed rulemaking to amend the monograph for antiflatulent drug products for OTC human use. This notice of proposed rulemaking is part of the ongoing review of OTC drug products conducted by the agency. Interested persons were given until March 29, 1988, to submit comments.

One manufacturer informed the agency that information it received on certain protocol parameters for testing an ingredient in this drug class was received too late in the comment period (on March 8, 1988) for it to adequately respond before the comment period closed on March 29, 1988. The company, therefore, requested a 60-day extension of the comment period until May 27,

1988, to allow adequate time to fully evaluate the feedback information and to prepare comments to the proposed monograph amendment.

FDA has carefully considered the request and believes an extension of the time period to allow full opportunity for informed comments on the proposed monograph amendment is in the public interest. Accordingly, the period for submission of comments is extended to May 27, 1988. Comments may be seen in the Dockets Management Branch (address above) between 9 a.m. and 4 p.m., Monday through Friday.

Dated: April 13, 1988.

Ronald G. Chesemore,

Acting Associate Commissioner for Regulatory Affairs.

[FR Doc. 88-8453 Filed 4-18-88; 8:45 am]

BILLING CODE 4160-01-M

---

21 CFR Part 357

[Docket No. 81N-0106]

Digestive Aid Drug Products for Over-the-Counter Human Use; Proposed Rulemaking; Extension of Time for Comments

AGENCY: Food and Drug Administration.

ACTION: Notice of proposed rulemaking; extension of comment period.

SUMMARY: The Food and Drug Administration (FDA) is extending to May 27, 1988, the period for submission of comments on the proposed rulemaking to establish conditions under which over-the-counter (OTC) digestive aid drug products are generally recognized as safe and effective and not misbranded. This action responds to a request to extend the comment period.

DATE: Comments by May 27, 1988.

ADDRESS: Written comments to the Dockets Management Branch (HFA-305), Food and Drug Administration, Rm. 4-62, 5600 Fishers Lane, Rockville, MD 20857.

FOR FURTHER INFORMATION CONTACT: William E. Gilbertson, Center for Drug Evaluation and Research (HFN-210), Food and Drug Administration, 5600 Fishers Lane, Rockville, MD 20857, 301-295-8000.

SUPPLEMENTARY INFORMATION: In the Federal Register of January 29, 1988 (53 FR 2706), FDA issued a notice of proposed rulemaking to establish conditions under which digestive aid drug products for OTC human use are generally recognized as safe and effective and not misbranded. This notice of proposed rulemaking is part of the ongoing review of OTC drug products conducted by the agency. Interested persons were given until March 29, 1988, to submit comments.

One manufacturer informed the agency that information it received on certain protocol parameters for testing an ingredient in this drug class was received too late in the comment period (on March 8, 1988) for it to adequately respond before the comment period closed on March 29, 1988. The company, therefore, requested a 60-day extension of the comment period until May 27, 1988, to allow adequate time to fully evaluate the feedback information and to prepare comments to the notice of proposed rulemaking.

FDA has carefully considered the request and believes an extension of the time period to allow full opportunity for informed comments on the proposed rule is in the public interest. Accordingly, the period for submission of comments is extended to May 27, 1988. Comments may be seen in the Dockets Management Branch (address above) between 9 a.m. and 4 p.m., Monday through Friday.

Dated: April 13, 1988.

Ronald G. Chesemore,

Acting Associate Commissioner for Regulatory Affairs.

[FR Doc. 88-8450 Filed 4-18-88; 8:45 am]

BILLING CODE 4160-01-M

FEDERAL COMMUNICATIONS COMMISSION

47 CFR Part 73

[MM Docket No. 87-121; FCC 88-73]

Broadcast Services; Short-Spaced FM Station Assignments by Use of Directional Antennas

AGENCY: Federal Communications Commission.

ACTION: Proposed rule.

SUMMARY: This action proposes the adoption of provisions for non-interfering short-spaced commercial FM station assignments and expanded use of directional atenna for that purpose. FM directional antennas have been successfully used for several years, and their use in short-spaced situations may offer some licensees the opportunity to select alternative antenna sites that would enhance their broadcast coverage. This action invites comments on some specific and related issues that would allow routine authorization of short-spaced FM station facilities.

DATES: Interersted parties may file comments on or before May 27, 1988, and reply comments on or before June 27, 1988.

ADDRESS: Federal Communications Commission, Washington, DC 20554.

FOR FURTHER INFORMATION CONTACT: Bernard Gorden, Mass Media Bureau, (202) 632-9660.

SUPPLEMENTARY INFORMATION: This is a summary of Commission's Notice of Proposed Rule Making adopted February 25, 1988, and released March 30, 1988. The full text of this action is available for inspection and copying during normal business hours in the FCC Dockets Branch (Room 230), 1919 M Street, Northwest, Washington, DC. The complete text of this action may also be purchased from the Commission's copy contractors, International Transcription Services, (202) 857-3800, 2100 M Street, NW., Suite 140, Washington, DC 20037.

Summary of Notice of Proposed Rule Making

1. Interference among commercial FM stations on channels 221 to 300 is currently controlled by requiring that adjacent and co-channel stations be geographically separated by certain minimum distances. Two conditions are assumed in determining these distances: (1) That all stations are operating at the maximum power and antenna height permitted for their class; and (2) that transmitting antennas are omi-directional.

2. Currently, the Commission does not normally account for directional antenna characteristics in spacing FM channel allotments or station assignments. However, directional antennas are beneficial in some station assignment circumstances and are so authorized on occasion. Thus, they could be of special significance in short-spacing situations.

3. This notice proposes to permit non-interfering short-spacing of commercial FM stations and, where needed, the use of directional antenna systems for the express purpose of accomodating such short-spaced transmitter/antenna site locations. In this action, the Commission proposes to permit short-spaced facilities on the basis of prohibiting specified interfering contours from overlapping specified service contours of the various classes of protected stations and allotments. The Commission also proposes certain directional antenna radiation pattern restrictions, antenna height considerations, and certain antenna data filing requirements.

4. This is non-restricted notice and comment rule making proceeding. *See* § 1.1231 of the Commission's Rules, 47 CFR 1.1231, for rules governing permissible *ex parte* contracts.

5. Pursuant to the Regulatory Flexibility Act of 1980, 5 U.S.C. 603, the Commission notes that adoption of these proposals will provide broadcasters with increased flexibility in selecting the most beneficial antenna site. Public comment is requested on the initial regulatory flexibility analysis set out in full in the Commission's compete action.

6. The proposal contained herein has been analyzed with respect to the Paperwork Reduction Act of 1980 and found to impose a new or modified information collection requirement on the public. Implementation of any new or modified requirement will be subject to approval by the office of Management and Budget as prescribed by the Act.

7. Pursuant to applicable procedures set forth in §§ 1.415 and 1.419 of the Commission's Rules, 47 CFR 1.415 and 1.419, interested parties may file comments on or before May 27, 1988, and reply comments on or before June 27, 1988. All relevant and timely comments will be considered by the Commission before final action is taken in this proceeding.

Federal Communications Commission.

H. Walker Feaster III,

Acting Secretary.

[FR Doc. 88-8534 Filed 4-18-88; 8:45 am]

BILLING CODE 6712-01-M

47 CFR Part 97

[PR Docket No. 88-139; FCC 88-121]

Amateur Radio Services

AGENCY: Federal Communications Commission.

ACTION: Proposed rules.

SUMMARY: This document proposes rules to create a regulatory environment that will encourage modern techniques, technology and uses of amateur radio. These rules are being proposed because advances in technology and operating practices have made the current amateur rules difficult to apply to modern communications practices. This action also will eliminate unnecessary rules, clarify certain rules and codify existing policies. The total body of the rules will be reduced by roughly 40 percent.

DATES: Comments are due on or before August 31, 1988. Reply comments are due on or before October 31, 1988.

ADDRESS: Federal Communications Commission, 1919 M Street, NW., Washington, DC 20554.

FOR FURTHER INFORMATION CONTACT: John J. Borkowski, Special Services Divison, Private Radio Bureau, (202) 632-4964.

SUPPLEMENTARY INFORMATION: This is a summary of the Commission's *Notice of Proposed Rule Making*, PR Docket No. 88-139, adopted March 24, 1988, and released April 13, 1988.

The full text of this Commission decision is available for inspection and copying during normal business hours in the FCC Dockets Branch (Room 230), 1919 M Street, NW., Washington, DC. The complete text of this decision may also be purchased from the Commission's copy contractor, International Transcription Service (202) 857-3800, 2100 M Streets, NW., Suite 140, Washington, DC 20037.

Summary of Notice of Proposed Rule Making

I. Introduction

1. In this *Notice of Proposed Rule Making (Notice)* we propose to reorganize Part 97 of the Code of Federal Regulations, 47 CFR Part 97. This rule part governs the amateur radio services. [1] This revision is being proposed because advances in technology and changes in operating practices have made the current rules—which are based on concepts associated with telegraphy and telephony—difficult to apply to modern amateur communication practices. This *Notice* proposes rules to create a regulatory environment that will encourage modern techniques, technology and uses of amateur radio.

2. We also desire to eliminate unnecessary rules. Many rules in Part 97 are redundant; others are obsolete. Still others duplicate extensive details that are contained in other FCC rule parts and in the *International Telecommunication Union (ITU) Radio Regulations*. The deletion of these unnecessary rules together with a reorganization of the remaining rules will reduce the total body of amateur service rules by roughly 40 percent. This proceeding also provides an excellent opportunity to clarify certain rules and to codify certain existing policies that have grown in importance as modern amateur communiction practices have evolved. It is also a timely opportunity to clarify the terminology used in the rules.

3. We wish to recognize and encourage the experimental nature of the amateur service. It is appropriate to avoid, to the extent possible, placing in the rules detailed regulations and specifications for the configuration and operation of various amateur communications systems. Such regulations and specifications would reduce the flexibility that is a hallmark of a service free to branch out and follow an infinite number of paths. A basic amateur service license document encompasses both an operator license and a station license. Our regulatory approach is to state the basic requirements that each amateur operator and station must observe. This enables amateur operators to utilize their individual stations in creating and pioneering communication systems that are limited only by their personal interests, imagination and technical skills.

II. Background

4. Part 97 last underwent a major restructuring in 1951,[2] at a time when most communication systems in the amateur service utilized high frequency, hand keyed telegraphy and amplitude modulated telephony. Over the years a host of new technologies emerged and became popular in the amateur service:

[1] The services consist of the amateur service, the amateur-satellite service and the radio amateur civil emergency service (RACES). Of the three, the amateur service and the amateur-satellite service are recognized internationally. RACES exists only in the United States.

[2] *See Report and Order*, Docket 9295, 42 FCC 198 (1951).

single-sideband and frequency modulated telephony, very-high and ultra-high frequency repeaters, radioteleprinting, satellite transponders, digital communications, television, etc. Rule additions and revisions to accommodate these technologies have been adopted as needed. The result is a patchwork of rules that can be confusing, particularly to prospective licensees.[3]

5. The desire and ability in the amateur community to assimilate and apply new technology has led to the development of new uses of amateur stations in communication systems.[4] The result has been to alter dramatically the landscape of amateur radio regulation. Amateur operators continue to find new ways to utilize their stations in communication systems, particularly for serving the public during communication emergency situations. Moreover, enabling legislation [5] has made it possible for the FCC to accept the voluntary services of amateur operators in performing functions formerly done by FCC staff. Amateurs serving as volunteer examiners (VEs) prepare, administer and coordinate operator license examinations. Amateur operators also assist our Field Operations Bureau with monitoring functions. These trends will continue. Therefore, it is necessary and timely to reorganize and clarify the rules in recognition of these advancements and to lay the framework upon which future advancements can be incorporated.

III. Proposal

6. Our starting point for reorgnization of the rules is the definition of the amateur service. It is recognized internationally and domestically as:

> A radiocommunication service for the purpose of self-training, intercommunication and technical investigations carried out by amateurs, that is, by duly authorized persons interested in radio technique solely with a personal aim and without pecuniary interest.[6]

This statement of the basis for the amateur service is fundamental to the regulations we and telecommunication regulatory agencies in other countries are to provide.[7]

7. In the United States Part 97 embodies the rules for the amateur services. It begins with a recitation of fundamental purpose, expressed in five principles in § 97.1, 47 CFR 97.1. These principles were adopted by the Commission in Docket 9295 (see paragraph 4 above) as a prospectus of the accomplishments expected to result from the activities of a healthy radio service functioning within the rules shaped toward this end. Section 97.1 stands as a general statement of objectives for the amateur service in the United States, and is continued and emphasized in the proposed rules.

8. We propose to restructure Part 97 into six subparts and four appendices as shown in the Appendix. Subpart A, General Provisions, contains those rules concerned principally with license and station location requirements. Subpart B, Fundamental Purposes of the Amateur Service, organizes appropriate rules into groupings relating to the five principles of purpose expressed in § 97.1: serving the public, advancing the radio art, advancing skills, training operators and enhancing international goodwill. Subpart C, Station Operation Standards, is comprised of those standards that generally apply to all types of amateur station operation. Subpart D, Special Operations, contains the requirements that apply only to non-standard operations such as beacons and repeaters, the amateur-satellite service and the RACES. The remaining technical standards are organized in Subpart E, Technical Standards. The requirements for the preparation and administration of operator examinations are in Subpart F, Qualifying Examination Systems. Appendix 1 lists the geographic areas where the amateur service is regulated by the Commission. Appendix 2 lists volunteer-examiner coordinator (VEC) regions. Appendix 3 is a glossary of terms used in the proposed rules. Appendix 4 is summary of the frequency sharing requirements for the amateur radio services stated in §§ 2.105 and 2.106, 47 CFR 2.105 and 2.106.

9. In addition to the glossary of terms in Appendix 3, we define terms where they first appear in the rules. Each term requiring definition is italicized when first used, followed by the parenthetical definition. For consistency in references to frequencies, the following terminology is used: frequency range (VHF, UHF, etc.), wavelength band (10 m, 70 cm, etc.), frequency segment (50.1–51.0 MHz, etc.), channel and frequency. Standard symbols for technical units are used throughout (dB, W, etc.).

10. We believe this format will make the rules easier to use and understand. We shall discuss each new subpart in detail.

A. New Subparts

11. *Subpart A—General Provisions.* In this subpart, we assembled those rules that are basically concerned with license requirements and limitations on station location. The statement of the five principles of purpose remain as § 97.1. We brought together into proposed § 97.3 the definition of the three radio services governed by Part 97. The rules that establish the various types of operator and station authorizations, together with the application and procedural requirements, are contained in this subpart. Limitations on the location of an amateur station and on the height of an antenna and its associated support structure are also incorporated. Additionally, § 97.9 defines the various classes of amateur operator licenses.

12. Section 97.11 includes rules for stations aboard ships or aircraft. We propose to delete current § 97.101(c), 47 CFR 97.101(c), requiring that the electrical installation of an amateur station aboard ship or aircraft be in accord with other government rules. This is redundant. However, to promote safe aircraft operations during adverse weather conditions, we would add language providing that amateur equipment shall not be operated while any aircraft is operating under Instrument Flight Rules unless the equipment has been found to comply with all Federal Aviation Administration rules. Also, we propose to clarify that the use of a common antenna in voluntary ship radio installations does not violate the rule requiring that an amateur station must be separate from and independent of all other radio apparatus installed on the same ship.

13. In § 97.13(b) we state clearly that amateur stations in close proximity to Commission field monitoring facilities must protect these facilities from harmful interference. The Engineer-in-Charge of the local field office may impose operating restrictions on any amateur station failing to protect Commission monitoring facilities from harmful interference.

---

[3] Understanding of our rules is a requirement for an amateur operator license. A significant percentage of the questions that must be answered in each written examination is based upon our rules.

[4] For example, amateur operators in the United States and Canada operate a system of some 12,000 repeater stations.

[5] Public Law 97–259, 96 Stat. 1087 (codified in pertinent part at 47 U.S.C. 154(f)(4) (1982)).

[6] *See* No. 53 of the *ITU Radio Regulations* (Geneva, 1979). *See also* 47 U.S.C. 153(q).

[7] The basis and purpose of RACES is to provide for civil defense communications by amateur stations, particularly during an emergency that necessitates invoking of the President's War Emergency Powers under section 706 of the Communications Act of 1934, as amended, 47 U.S.C. 606.

14. In § 97.25 we update the procedural rules relating to Commission modification of an amateur station license. These rules are governed by section 316 of the Communications Act of 1934, as amended, 47 U.S.C. 316. This section of the Act was amended by Pub. L. 98-214, 97 Stat. 1467 (1983). Proposed § 97.25 conforms to the provisions of 47 U.S.C. 316.

15. Current § 97.95, 47 CFR 97.95, specifies rules for amateur station operation away from the licensed fixed station location. The original concept of a fixed station location revolved around an amateur operator's "ham shack"—a room or small building where the station's transmitting and receiving devices were located. More often than not, these devices were built by the amateur operator, and, because of the state of technology at that time, incorporated delicate and bulky components including vacuum tubes, transformers and capacitors that made the devices not very portable. Today's amateur stations often employ commercially manufactured equipment. In the age of the microprocessor and the integrated circuit this equipment is highly portable. It is common for amateur operators to carry hand-held transceivers capable of accessing many local repeaters in urban areas and also capable of reasonably good line-of-sight communication. It appears that the concept of fixed station operation no longer carries with it the same connotation it did previously. For this reason, we propose to delete current rules that relate to station operation away from the authorized fixed station location.

16. *Subpart B—Fundamental Purposes of the Amateur Service.* In this subpart, we use each one of five principles of purpose discussed in paragraph 7 above, as a subheading for the rules related to that principle.

17. *Serving the Public.* Under the first heading, serving the public, the existing provisions in the rules and the special provisions in the ITU *Radio Regulations* pertaining to providing communications during emergencies are stated. These specifically include assisting in meeting essential communication needs when normal communications systems are overloaded, damaged or disrupted because of a natural disaster.[8] We have included the general international provision for assisting stations in distress.[9] We have also included our existing policy that it is permissible for an amateur station to provide communications for public gatherings if the public is the main beneficiary. The proposed rules provide additional clarity in defining permitted operations consistent with providing operating flexibility.

18. *Advancing the Radio Art.* Under the second heading in Subpart B, advancing the radio art, are the emission types authorized for the various frequency bands and segments. It is our intent that amateur operators in the United States be allowed to experiment with the full range of modulation types. However, in order to comply with international regulations, we are obligated to limit the interference potential of amateur stations, especially those transmitting in frequency bands shared with other services.

19. The principal use of emission designators in regulations for the amateur service is to relegate the transmission of certain inharmonious emission types to different segments of the frequency bands. Originally, emission designators were generally used to reserve a segment of a frequency band for telegraphy transmissions. Although the remainder of each frequency band could be used for either telegraphy or telephony transmissions, as a practical matter it was regarded as the telephony subband. As the amateur service has developed, other specific emission types have been authorized in somewhat piecemeal fashion.

20. Authorized emissions became even more confusing when the Commission's Rules were revised to incorporate the system of designators adopted in the Final Acts of the 1979 WARC.[10] Almost 1300 designators replaced the previus system of 14 designators used in Part 97. The greater specificity had the unintended effect of restricting previously permitted operations. We propose to remedy this with a much simpler system using terminology that is already familiar to most amateur operators.[11] This approach should eliminate the inadvertently imposed restrictions while continuing necessary emission type segregation. Additionally, the designators would be unambiguous and easy to understand, even for prospective Novice operators. The multitude of designators are categorized under the following nine terms and cross referenced to Part 2 of the Rules [12].

1. *CW*—Single-channel amplitude-shift-keyed telegraphy emissions in international Morse code for aural or automatic reception.

2. *MCW*—Single-channel modulated tone telegraphy emissions in international Morse code for aural or automatic reception.

3. *Phone*—Telephony emissions.

4. *Image*—Single-channel emissions for facsimile and television.

5. *RTTY*—Single-channel emissions for narrowband direct-printing.

6. *Data*—Data emissions, including packet radio.

7. *Pulse*—Pulse emissions.

8. *SS*—Spread-spectrum emissions.

9. *Test*—Emissions containing no modulation or no information for on-the-air transmitter adjustment, two-tone amplifier linearity testing, antenna measurements, direction finding, ranging, etc.

21. Certain rule provisions for digital and spread-spectrum transmissions currently include exceptions to permit international use if special arrangements are made between the United States and the administration of any other country concerned. We propose to delete these exceptions. No such arrangements currently exist. Should the United States ever make such arrangements, we will provide public notice as we currently do for international third-party traffic and reciprocal arrangements.

22. *Advancing Skills.* Today's society is increasingly electronics-oriented. Maintenance of a pool of persons knowledgeable in electronics and innovative communications technology is clearly in the public interest.[13] There is a critical shortage of personnel skilled in the electronic arts and sciences. Yet there is a close vocational and avocational relationship between electronic competency and the skills and techniques of amateur radio.[14] Amateur radio is the only national reserve of trained communicator/technicians.[15]

[8] *See* Resolution No. 640, ITU *Radio Regulations* (Geneva, 1979).

[9] *See* No. 347 of the ITU *Radio Regulations* (Geneva, 1979).

[10] See *Third Report and Order*, General Docket No. 80-739, 49 FR 48694 (184).

[11] P. Rinaldo, *A Working Paper on Designation of Emissions in the Amateur Service*, (1987).

[12] The descriptions following each term in this text are for informational purposes only and are not complete. For a complete definition of each proposed emission descriptor see the proposed rules.

[13] *Comments of the Capitol Hill Amateur Radio Society*, in response to the Notice of Proposed Rule Making in PR Docket No. 83-28, 48 FR 4855 (1983).

[14] *Comments of the Emerson Electric Amateur Radio Club*, in response to the *Notice of Proposed Rule Making* in PR Docket No. 83-28, 48 FR 4855 (1983).

[15] *Comments of the American Radio Relay League, Inc.*, in response to the *Notice of Proposed Rule Making* in PR Docket No. 83-28, 48 FR 4855 (1983).

VOL 53 ISS 75 APR 19 1988 UMI

For this reason, it is in the public interest, convenience and necessity to maintain and enlarge the pool of amateur operators. Our primary tool to achieve this end is in providing the motivation to upgrade class of license through increased privileges to each higher operator license class.

23. The incentive licensing structure was established to assure that amateur operators enhance their skills as they remain in the amateur service. *See Report and Order*, Docket 15928, 32 FR 12682 (1967). In the past ten years, we have seen the highest of the five amateur operator classes, Amateur Extra, more than double from 18,794 amateur operators as of January 31, 1978, to 43,902 amateur operators as of December 31, 1987. The proportion of licensed amateur operators that are Amateur Extra has almost doubled as well. As of January 31, 1978, 5.68% of all amateur operators were Amateur Extra. As of December 31, 1987, that figure had risen to 10.12%.

24. To help clarify the privileges associated with each operator class, we propose to restructure the frequency table without actually affecting amateur operator frequency privileges. We reorganized and relocated to Appendix 4 the summary of frequency sharing limitations that are specified in §§ 2.105 and 2.106, 47 CFR 2.105 and 2.106. We provide a cross-reference to these rule sections in proposed § 97.203(a) to make amateur operators aware that additional considerations in the use of a particular frequency segment may apply. We expect that annotated versions of our rules offered by publishers will continue to bring relevant frequency sharing requirements to the attention of amateur operators.

25. *Training Operators.* The fourth heading in Subpart B, training operators, incorporates operator examination requirements. These are the rules that place all amateur operators on notice of what they need to know to advance in the amateur service. Each amateur operator license conveys broad privileges to the holder. These privileges are many and they are diverse. Amateur operators are allowed to communicate using telegraphy, voice, teleprinting, packet radio, facsimile, television and other modes. They are allowed to communicate with amateur operators in other countries and, in some cases, send messages for third parties. An amateur operator is allowed to build, repair and modify amateur station transmitters. For such a flexible radio service to be practical, all amateur operators must thoroughly understand their responsibilities and have the skills necessary to operate an amateur station properly. Preparation for the various operator examinations helps operators to learn and hone the required skills. This subpart clearly defines the requirements for examinations at each skill level.

26. *International Goodwill.* The rules derived from the amateur service international communications requirements now in Appendix 2 are under the fifth heading, enhancing international goodwill. Transmissions between amateur stations of different countries are limited by international law to messages of a technical nature relating to tests and to remarkss of a personal character that are so unimportant as not to justify recourse to the public telecommunications service.[16] We noted under this heading that we issue public notice of international arrangements for the amateur service upon notification from the U.S. State Department that an exchange of notes has occurred.

27. The amateur service is the only service outside of the common carrier services where two-way communications between private individuals in different countries are permitted. Practically every country allows some form of amateur radio communications. As as result, the amateur service is a potentially strong and credible projector of a nation's image abroad. A large segment of the world's radio amateur population regularly engages in distant contacts. In these contacts, amateur operators of different nations engage in personal dialogue. The amateur operator is usually representative of his/her country at the "grass roots" level. The amateur operator talks about subjects that are of day-to-day interest to other amateur operators contacted in other countries. This one-on-one dialogue that is made possible by workwide amateur radio is an important cultural exchange.[17] International amateur communications are a basis for opinions formed of the United States worldwide. That is why one of the fundamental purposes of the amateur service in the United States is to foster international goodwill. The importance of this aspect of the amateur service is highlighted in this subpart.

28. *Alien reciprocal operating privileges.* Over the past decade we have issued approximately 130 alien reciprocal operating permits in the amateur service each month. At any given time about 1,500 of these authorizations are outstanding. Currently Subpart G of Part 97 contains the regulations for operating in accord with these permits. We propose to eliminate Subpart G in favor of conveying necessary information concerning alien operator privileges in the new Subpart B and information on obtaining an alien permit in the new Subpart A. Much of the latter information is also contained in FCC application form 610-A, *Application of Alien Amateur Radio Licensee For Permit To Operate in the United States.*

29. *Subpart C—Station Operation Standards.* In this subpart we centralize all amateur station operation standards. This subpart includes much of current Subparts D and E. We divide the amateur station operation standards into two sets. The basic standards are those common to all amateur station operations. The special operations are rules for specific types of amateur station operation.

30. *Frequency sharing.* We do not assign stations or designate transmitting frequency channels in the amateur service. Rather, we rely upon the control operator to select the station's transmitting channel from those frequencies available prior to causing or allowing the station to transmit. The frequency agility of amateur stations makes it possible for all amateur operators to cooperate in sharing all authorized amateur service frequency bands. Good amateur practice requires that the control operator monitor prospective transmitting channels and then select a channel where the station's transmissions will not cause harmful interference and will minimize incidental interference to other on-going communications. We propose to codify this concept under Subpart C with a new § 97.203 called "frequency sharing." Certain duties are inherent in any shared frequency environment—namely, cooperation in channel selection and use to prevent harmful interference and to make the most effective use of the frequencies. We propose to state these duties explicitly in the rules.

31. With the exception of frequency subbands that are currently designated in Part 97 to protect telegraphy and certain other forms of non-voice communication, the Commission and amateur operators rely upon informal arrangements within the amateur community, called voluntary band plans, to assist in achieving the goal of preventing harmful interference. It has been our experience that, consistent

---

[16] *See* No. 2732 of the ITU *Radio Regulations* (Geneva, 1979).

[17] Stanford Research Institute, *Amateur Radio: An International Resource for Technological, Economic, and Sociological Development* (1986), at 61.

with good amateur practice, amateur operators adhere to these voluntary band plans with excellent results for the service. As a general proposition, we favor voluntary band plans over Commission-imposed subbands in the amateur service. Rule-mandated band plans may result in station operation inflexibility and increased enforcement and regulatory burdens.

32. *Station licensee responsibilities.* In proposed § 97.205, the responsibilities of an amateur station licensee are stated. Section 97.205(c) clarifies Commission authority to inspect amateur stations. This authority is currently spread among three separate rules addressing authorized apparatus and amateur station and operator licenses. *See* 47 CFR 97.81(b), 97.82 and 97.83. The new rule would unify Commission inspection authority contained in these rules and clarify current Commission policy that the amateur station, including station records, is subject to inspection by Commission personnel.

33. *Control operator duties.* In proposed § 97.207, the duties of a licensed station control operator are stated. By making decisions about equipment suitability, frequency selection, emission modes, message content, etc., the control operator is the key to proper operation of an amateur station. Without the control operator, unidentified and unauthorized uses of the frequencies are possible. Should this occur, the legitimacy of the service is imperiled.[18] Section 97.209 defines control point. Section 97.211 addresses specific forms of station control. In § 97.211(c) we propose to clarify our authority to require any station under automatic control to discontinue operation upon notification from the Engineer-in-Charge of a Commission field office that the station is transmitting improperly or causing harmful interference to other stations.

34. *Points of communication and permissible one-way communications.* We are expanding and clarifying the rules relating to points of communication and permissible one-way communications. This includes the blanket waiver for the retransmission of space shuttle communications authorized by the Chief, Private Radio Bureau, on September 6, 1983.[19] In proposed § 97.217, we simplify the rules concerning station identification procedures. In § 97.217(b)(4) we make provisions for amateur stations transmitting television to perform the station identification procedure using our color broadcast standards as well as monochrome. We also add § 97.217(g) to provide for a self-assigned identifier to be appended to a station call sign in the identification procedure. Such an identifier can be useful to the station as an efficient means of announcing the fact that the station is participating in a contest or a special event. Additionally, we specifically incorporate in the rules the basic premise that the amateur service has its own objectives and is not intended to be used as an alternative to other radio services or communications facilities.[20]

35. *Swap nets.* Business communications are prohibited in the amateur service. *See* 47 CFR 97.110. We relocated this prohibition in proposed § 97.219(c). We added the exception that communications to inform other amateur operators of the availability of, or the need for, amateur station apparatus are not considered to be business communications. This type of communication is usually found in the context of "swap nets." A swap net is a series of communications between two or more amateur stations conducted for the purpose of buying and selling amateur equipment.

36. Current policy permits amateur stations to transmit information about the availability of amatuer radio equipment, notwithstanding § 97.110, 47 CFR 97.110, prohibiting business communications. In this context, amateur radio equipment is equipment normally used in an amateur station by an amateur operator. An asking price may be mentioned, but no subsequent negotiations or bartering may take place. If interest is expressed, the amateur operators should exchange mailing addresses or telephone numbers and finish negotiations using means of communication other than amateur service frequencies. Dealers may not take advantage of this exception. Amateur operators who derive a profit by buying and selling amateur radio equipment on a regular basis are considered dealers and violate the business prohibition if they use amateur service frequencies for this purpose. Proposed § 97.219(c) codifies these policies.

37. *Broadcast-related activities.* Questions frequently arise concerning the amateur service and broadcast-related activities. Broadcasting and broadcast-related activities are prohibited in the amateur service. *See* 47 CFR 97.113. An amateur station may not be used for any activity directly related to program production or newsgathering for broadcast purposes. However, in 1985 and 1986 we indicated in the texts of orders relating to amateur and broadcast services that we would permit amateur to convey news information in certain limited and unique circumstances. Those circumstances are if: (1) The event is unforeseen; (2) the news information is directly related to the event; (3) the event involves the safety of human life or the immediate protection of property; and (4) the news information cannot be transmitted by any means other than amateur radio because of the remote location of the originating transmission or because normal communications have been disrupted.[21] We propose to incorporate this policy in § 97.219(f).

38. *Quiet hours.* We propose to remove certain specific time periods for the imposition of restrictions against amateur station transmissions in § 97.131(a), 97.133 and 97.135, 47 CFR 97.131(a), 97.133 and 97.135. Their purpose is to protect the domestic broadcast service from harmful interference. We believe that the necessary authority is contained in current § 97.131(b), 47 CFR 97.131(b). We have recodified this rule as proposed § 97.221, which states that the Commission may restrict operations of amateur stations as necessary to prevent harmful interference.

39. *Damage to equipment.* We propose to remove current § 97.127, 47 CFR 97.127, prohibiting a licensed amateur operator from damaging any radio apparatus or installation is any licensed station. This rule inherently involves an overlap of Federal and local jurisdiction. The underlying facts of such a violation would also necessarily constitute vandalism. We often receive complaints from people whose equipment was damaged seeking help based upon this rule. Complaints in the first instance in such a circumstance should be directed to local law enforcement authorities, who are in a position to provide some immediate assistance. Removal of this rule would not in any way diminish our authority to suspend an amateur operator license for such conduct. *See* 47 U.S.C. 303(m)(1)(C).

40. *Notices of violation.* Finally, we remove rules that specify what an amatuer station licensee must do upon receipt of a notice of violation. Such rules are unnecessary. The correspondence itself specifies what is required, and clearly states any

[18] *See Memorandum Opinion and Order.* PR Docket No. 85-105, 1 FCC Rcd 166 (1986).

[19] *See Order.* Mimeo Number 6366 (1983).

[20] *See Order.* FCC 83-298, adopted June 29, 1983.

[21] *See Report and Order.* BC Docket No. 79-47, 101 FCC 2d 32 (1985) at paragraph 22, *aff'd Memorandum Opinion and Order.* 103 FCC 2d 917 (1986), at paragraph 8.

VOL 53 ISS 75 AP 19 1988 UMI

penalties that may result from failure to respond or comply.

41. *Subpart D—Special Operations.* In this subpart we assemble present and proposed provisions for those particular types of amateur operations that require special explanations or limitations. We propose to include auxiliary, beacon and repeater operations, remote control of amateur stations and model craft, and amateur-satellite and RACES operations in this subpart.

42. *Auxiliary operation.* We propose to delete the provisions of current § 97.86(b), 47 CFR 97.86(b). This rule was intended to facilitate so-called "split-site-repeaters," where an auxiliary link is used to relay signals received at a distant receiving site to the station in repeater operation. It appears this provision is unnecessary. No amateur service rule prohibits such a practice.

43. *Beacon operation.* We conformed the minimum interval for an amateur station in beacon operation to perform the station identification procedure to the interval for all other forms of amateur station operation—once every 10 minutes.

44. *Remote control.* In some cases, particularly in instances where an amateur station is situated on a hilltop or atop a tall building, it is neither desirable nor practical to have the control operator physically present at the transmitter site. The control operator may perform the necessary duties from a remote control point through a control link. This control link can be a dedicated wire line or public telephone interconnection from the control point to the remotely controlled station. Alternatively, an amateur station in auxiliary operation at the control point can be used to transmit control commands to the remotely controlled station. *See* 47 CFR 97.88 (radio remote control of an amateur station). We redrafted this rule as proposed § 94.307.

45. The control operator must be able to control the station from the remote control point just as effectively as at a control point physically at the station site. Should the control link fail, the remotely controlled station's transmissions must cease after no more than three minutes. Many remotely controlled amateur stations operators include a three-minute time out timer in the control circuitry in order to meet this requirement. We believe, however, that the requirement to cease transmission in three minutes may be unduly restrictive, particularly with respect to repeaters that are otherwise functioning properly. Therefore, we request comments on whether this time limit can be further relaxed, and, if so, what time limit would be appropriate. Further, we have removed the provisions of § 97.88(c), 47 CFR 97.88(c), that require the control operator of a remotely controlled amateur station to monitor continuously the station's transmitting and receiving frequencies. These provisions would no longer be necessary because of the consolidation of control operator duties in proposed § 97.207 and explicit frequency sharing requirements in proposed § 97.203.

46. *Amateur-Satellite Service.* This subpart also includes the rules that apply to the amateur-satellite service. This service epitomizes the experimental nature of the amateur radio services and the dedication and ability of amateur operators to contribute to the advancement of the radio art. It has enabled amateur operators to participate directly in space programs and has generated tremendous interest in space communications by amateur operators. OSCAR 1, the first amateur radio satellite, was launched into orbit in December, 1961. Since that time, with a series of OSCAR satellites, amateur operators have continued their efforts to experiment to achieve reliable, predictable long-distance and long-duration radio communications on HF and shorter wavelength bands. The amateur-satellite service was incorporated into the amateur service rules following its recognition in the Final Acts of the 1971 Space WARC (World Administrative Radio Conference). Today, amateur OSCAR satellites are used for real-time and delayed transmission from anywhere beyond the major portion of the earth's atmosphere. We have replaced current detailed notification of intended space operation in the amateur-satellite service by reference to the requirements in the ITU *Radio Regulations.*

47. *Subpart E—Technical Standards.* This subpart is comprised of the technical standards that must be met by amateur stations. We assembled the limitations on spurious emission under proposed § 97.401 and the limitation on maximum transmitting power under proposed § 97.403. The provisions for digital and spread spectrum communications and external radio frequency power amplifiers are also consolidated in this subpart. We eliminated the redundant requirement that stations transmitting spread spectrum take steps to protect amateur stations in repeater operation. Repeater operation is adequately protected by the control operator and frequency sharing requirements.

48. As discussed in paragraph 30 above, we do not assign specific frequency channels to amateur stations. Nor do we divide the amateur service frequency bands into specific channels of a particular bandwidth. Therefore, considering the multitude of different emission types that could be transmitted, there is no need to specify precisely the maximum bandwidth that a transmitted signal may occupy. Our primary spectrum conservation approach is to encourage the good amateur practice of each amateur station transmitting in a manner that ensures that its signals are not unnecessarily broad. To this end, proposed § 97.401 generally requires an amateur station transmission to occupy no more channel bandwidth than necessary for the information rate and emission type transmitted.

49. While proposed § 97.405 for digital communications is under this subpart, as a practical matter most of the relevant information about availability of particular channels for certain types of digital communications would be contained in proposed § 97.131 (authorized emission types). We currently authorize certain standard digital communications, such as baudot, ASCII and AMTOR, that use personal computers or teleprinting machines with alphanumeric keyboards.[22]

50. We also permit the transmission of experimental digital codes on the 6 meter and shorter wave length bands in the amateur services. Amateur operators have taken advantage of this provision to be innovative in the area of digital transmissions. Packet radio is a currently burgeoning digital communications field. Packets are individual short bursts of digitally encoded data that take only milliseconds to send. Packet radio employs the time sharing capabilities of digital technology to conserve spectrum. The proposed rules provide flexibility to encourage continued development of efficient digital codes.

51. *Subpart F—Qualifying Examination Systems.* This subpart centralizes the rules concerning the preparation, administration and coordination of amateur operator examinations. The Commission prepared, administered and coordinated examinations for Technician, General, Advanced and Amateur Extra Class operator licenses until the VEC system became fully operational in 1984. On December 1, 1983, final rules went into effect pursuant to Pub. L. 97-259, 96 Stat. 1087 (1982), that authorized the

[22] Baudot (also called Murray or International Telegraphy Alphabet No. 2) is the five-character binary code widely used for RTTY transmissions. ASCII is seven-character binary code also used for RTTY transmissions. AMTOR is an error correcting digital teleprinter code.

Commission to accept and employ the voluntary and uncompensated services of amateur operators in the preparation and administration of amateur operator examinations. *See Report and Order*, PR Docket No. 83-27, 48 FR 45653 (1983). Subsequently, the Communications Act was further amended to allow limited reimbursement of out-of-pocket costs incurred by VEs and VECs in connection with the preparation, processing or administration of examinations for amateur operator licenses. *See* Pub. L. 98-214, 97 Stat. 1467 (1983). We then adopted rules to implement this legislation. *See Report and Order*, PR Docket No. 84-265, 49 FR 30472 (1984).

52. Two volunteer examiner systems—one for the Novice Class operator license and one for all other operator class licenses—are now in place. All rules relating to the way in which VEs must conduct the preparation and administration of amateur operator examinations are under the heading of operator license examinations. All rules relating to the way in which volunteer-examiner coordinators (VECs) must coordinate amateur operator examinations are under the heading of volunteer-examiner coordinators. A final separate heading covers examination expense reimbursement. Additionally, we deleted the references to disposition and retention of examination papers in § 97.26(f), 97.27(d) and 97.28(h), 47 CFR 97.26(f), 97.27(d) and 97.28(h). The rules should not hamper the increasing use of personal computers in administering paperless examinations.

53. *Appendices.* We removed the current appendices to Part 97. Classification of emissions, now in Appendix 3, would be replaced by the system proposed in Subpart B. The other appendices are extracts or excerpts from international treaties and conventions. To the extent required, they are directly incorporated into the proposed rules. Four new appendices would be added. New Appendix 1 lists the geographic areas where the amateur service is regulated by the Commission. New Appendix 2 specifies the VEC regions currently listed in § 97.507(b), 47 CFR 97.507(b). New Appendix 3 is a glossary index, listing the locations throughout the rules where terms are defined. New Appendix 4 is a summary of the sharing requirements currently listed in § 97.7(g), 47 CFR 97.7(g).

IV. Conclusion

54. This reorganization of the rules achieves the objectives we delineated at paragraphs 2 through 8 above. We seek comments on the proposed rules, and we urge interested parties to recommend additional consolidations, clarifications and reductions in regulatory burdens. We also seek the comments of publishers and distributors of commercial versions of Part 97. Accordingly, we propose to revise Part 97 to modify, clarify and update the amateur radio services rules, as set forth in Appendix A. Cross reference lists for the current and proposed rules are set forth in Appendices B and C.[23]

55. For purposes of this non-restricted notice and comment rule making proceeding, members of the public are advised that *ex parte* presentations are permitted except during the Sunshine Agenda period. *See generally* 47 CFR 1.1206(a). The Sunshine Agenda period is the period of time which commences with the release of a public notice that a matter has been placed on the Sunshine Agenda and terminates when the Commission (1) releases the text of a decision or order in the matter; (2) issues a public notice stating that the matter has been deleted from the Sunshine Agenda; or (3) issues a public notice stating that the matter has been returned to the staff for further consideration, whichever occurs first. 47 CFR 1.202(f). During the Sunshine Agenda period, no presentations, *ex parte* or otherwise, are permitted unless specifically requested by Commission or staff for the clarification or adduction of evidence or the resolution of issues in the proceeding. 47 CFR 1.1203.

56. In general, an *ex parte* presentation is any presentation directed to the merits or outcome of the proceeding made to decisionmaking personnel which (1) if written, is not served on the parties to the proceeding, or (2), if oral, is made without advance notice to the parties to the proceeding and without opportunity for them to be present. 47 CFR 1.1202(b). Any person who submits a written *ex parte* presentation must provide on the same day it is submitted a copy of same to the Commission's secretary for inclusion in the public record. Any person who makes an oral *ex parte* presentation that presents data or arguments not already reflected in that person's previously-filed written comments, memoranda, or filings in the proceeding must provide on the day of the oral presentation a written memorandum to the Secretary (with a copy to the Commissioner or staff member involved) which summarizes the data and arguments. Each *ex parte* presentation described above must state on its face that the Secretary has been served, and must also state by docket number the proceeding to which it relates. 47 CFR 1.1206.

57. Authority for issuance of this *Notice* is contained in sections 4(i) and 303(r) of the Communications Act of 1934, as amended, 47 U.S.C. 154(i) and 303(r). Pursuant to applicable procedures set forth in §§ 1.415 and 1.419 of the Commission's Rules, 47 CFR 1.415 and 1.419, interested parties may file comments on or before August 31, 1988 and reply comments on or before October 31, 1988. All relevant and timely comments will be considered by the Commission before final action is taken in this proceeding. To file formally in this proceeding, participants must file an original and five copies of all comments, reply comments and supporting comments. If participants want each Commissioner to receive a personal copy of their comments, an original and nine copies must be filed. Comments and reply comments should be sent to Office of the Secretary, Federal Communications Commission, Washington, DC 20554. Comments and reply comments will be available for public inspection during regular business hours in the Dockets Reference Room (Room 239) of the Federal Communications Commission, 1919 M Street NW., Washington, DC 20554.

58. In accordance with section 605 of the Regulatory Flexibility Act of 1980, 5 U.S.C. 605, the Commission certifies that these rules would not, if promulgated, have a significant economic impact on a substantial number of small entities, because these entities may not use the amateur radio services for commercial radiocommunication. See 47 CFR 97.3(b). Moreover, the proposed rules would not require the use of or significantly enhance the sale of any additional amateur radio service apparatus.

59. The proposal contained herein has been analyzed with respect to the Paperwork Reduction Act of 1980 and found to contain no new or modified form, information collection and/or record keeping, labeling, disclosure, or record retention requirements; and will not increase or decrease burden hours imposed on the public.

60. *It is ordered*, That the Secretary shall cause a copy of this *Notice* to be served upon the Chief Counsel for Advocacy of the Small Business Administration.

Federal Communications Commission.

H. Walker Feaster III,

Acting Secretary.

[FR Doc. 88-8533 Filed 4-18-88; 8:45 am]

BILLING CODE 6712-01-M

[23] Appendices A, B and C are not attached to this Summary, but are available as part of the complete released document as described above.

DEPARTMENT OF THE INTERIOR

Fish and Wildlife Service

50 CFR Part 17

Endangered and Threatened Wildlife and Plants; Proposal To Determine Five Texas Cave Invertebrates To Be Endangered Species

AGENCY: Fish and Wildlife Service Interior.

ACTION: Proposed rule.

SUMMARY: The Service proposes to determine endangered status under the authority of the Endangered Species Act of 1973, as amended, for five species of cave-dwelling, invertebrate animals in Texas. The five species are the Tooth Cave pseudoscorpion (*Microcreagris texana*), the Tooth Cave spider (*Leptoneta myopica*), the Bee Creek Cave harvestman (*Texella reddelli*), the Tooth Cave ground beetle (*Rhadine persephone*), and the Kretschmarr Cave mold beetle (*Texamaurops reddelli*). Each of these species is known from only six or fewer small, shallow, dry caves near Austin in Travis and Williamson Counties, Texas. Urban, industrial, and highway expansion are planned or ongoing in the area containing the cave habitat of these species. This development could result in filling or collapse of those shallow caves, disturbances of water drainage patterns that affect cave habitat, introduction of exotic competitive and predatory insects and other organisms, and pollution of the cave systems with pesticides, fertilizers, oils, and other harmful substances. A final determination that these five species are endangered would implement for them the protections provided by the Endangered Species Act. The Service seeks data and comments from the public on this proposal.

DATES: Comments from all interested parties must be received by June 20, 1988. Public hearing requests must be received by June 3, 1988.

ADDRESSES: Comments and materials concerning this proposal should be sent to the Regional Director, U.S. Fish and Wildlife Service, P.O. Box 1306, 500 Gold Avenue SW., Albuquerque, New Mexico 87103. Comments and materials received will be available for public inspection, by appointment, during normal business hours at the above address.

FOR FURTHER INFORMATION CONTACT: Dr. Steven M. Chambers, Fish and Wildlife Biologist, U.S. Fish and Wildlife Service Regional Office, Albuquerque, New Mexico (See **ADDRESSES** above) (505/766-3972 of FTS 474-34972).

SUPPLEMENTARY INFORMATION:

Background

The Tooth Cave pseudoscorpion, *Microcreagris texana* (family Neobisiidae), was first described by Muchmore (1969) from a specimen collected in Tooth Cave, Travis County, by James Reddell in 1965. It reaches a lenght of about 4 millimeters (mm) (about 3/16 inch) and resembles a tiny, tailless scorpion. Pseudoscorpions lack a stinger and are harmless to humans. They use their pincers to prey on small insects and other arthropods. The Tooth Cave pseudoscorpion is eyeless and troglobitic (lives only in caves). It is known only from Tooth and Amber Caves, both in Travis County, Texas.

The Tooth Cave spider, *Leptoneta myopica* (family Leptonetidae), was first collected by James Reddell in 1963, and later described by Gertsch (1974). It has been found only in Tooth Cave, Travis County Texas. This spider is very small, up to 1.6 mm (about 1/16 inch) in total length, pale-colored, and has relatively long legs. It is a troglobite, although reduced eyes are present. The Tooth Cave spider is sedentary and spins webs from the ceiling and walls of Tooth Cave.

The Bee Creek Cave harvestman, *Texella reddelli* (family Phalangodidae), was first described by Goodnight and Goodnight (1967) from a specimen collected by James Reddell and David McKenzie from Bee Creek Cave (erroneously reported as "Pine Creek Cave"), Travis County. This light yellowish-brown harvestman has relatively long legs that extend from a small body (2 mm, or less than 1/8 inch, in length). It is an eyeless troglobite and is probably predatory. The Bee Creek Cave harvestman lives in Tooth, Bee Creek, McDonald, Weldon, and Bone Caves in Travis and Williamson Counties, Texas. The *Texella* reported by Reddell (1984) from Root Cave, Travis County, may also be this species.

The Tooth Cave ground beetle, *Rhadine persephone* (family Carabidae), was first described by Barr (1974) from specimens collected in the Tooth Cave by W.M. Andrews, R.W. Mitchell, and T.C. Barr in 1965. This species is a small (7–8 mm or about 5/16 inch in length), reddish-brown beetle. It is troglobitic and has only rudimentary eyes. It probably feeds on cave cricket eggs, which have been determined to be a major food of another troglobite species of *Rhadine* (Mitchell 1968). The Tooth Cave ground beetle is known only from Tooth and Kretschmarr Caves, Travis County, Texas.

The Kretschmarr Cave mold beetle, *Texamaurops reddelli*, was first described by Barr and Steeves (1963) from a specimen collected in Kretschmarr Cave by James R. Reddell and David McKenzie in 1963. This species is a very small (less than 3 mm, or about 1/8 inch, in length) dark-colored, short-winged, beetle with elongated legs. This member of the family Pselaphidae is an eyeless troglobite and is known only from Kretschmarr, Amber, Tooth, and Coffin Caves in Travis and Williamson Counties, Texas.

The caves inhabited by these five species are relatively small. The largest, McDonald Cave, consists of less than 60 meters (m) (about 200 feet) of passage, and most of the others are considerably smaller. These caves occur in isolated "islands" of the Edwards Limestone formation that were separated from one another when stream channels cut through the overlying limestone to lower rock layers. This fragmentation of habitat has resulted in the isolation of groups of caves that have developed their own, highly localized faunas.

In addition to the five species that are the subject of this proposal, these caves and others in the area support a number of other uncommon and scientifically significant species. Available habitat of this type is very limited, and many of these caves have been lost or are threatened with imminent loss.

The Service was first notified of the possible status of these five species by an August 20, 1984, letter from the Travis Audubon Society, Austin, Texas. The Conservation Committee of the Travis Audubon Society then petitioned the Service on February 8, 1985, to list these five and one other species (the Tooth Cave rove beetle, *Cylindropsis* sp.) as endangered. The Service evaluated this petition and on May 1, 1985, found that the petition did present substantial information indicating that the requested action may be warranted. A notice of that finding was published in the **Federal Register** on July 18, 1985 (50 FR 29238). On February 19, 1986, the Service found that the petitioned action was warranted but that such action was precluded by work on other pending proposals, in accordance with section 4(b)(3)(ii) of the Act. A notice of that finding was published on August 20, 1986 (51 FR 29672). On July 1, 1987 (52 FR 24487), the Service published a notice that the petitioned action was again warranted but precluded for the five species addressed in the present proposed rule. That same notice also announced the finding that listing was not warranted for the sixth species named in the petition, the Tooth Cave

blind rove beetle (*Cylindropsis* sp.). This conclusion was based on the determination that the single known specimen was in such poor condition that it could not provide adequate material for taxonomic evaluation and description; furthermore, the best available scientific information indicates that the taxon it represents is extinct.

Summary of Factors Affecting the Species

Section 4(a)(1) of the Endangered Species Act (16 U.S.C. 1531 *et seq.*) and regulations (50 CFR Part 424) promulgated to implement the listing provisions of the Act set forth the procedures for adding species to the Federal Lists. A species may be determined to be an endangered or threatened species due to one or more of the five factors described in section 4(a)(1). These factors and their application to the Tooth Cave pseudoscorption (*Microcreagris texana*), Tooth Cave spider (*Leptoneta myopica*), Bee Creek Cave harvestman (*Texella reddelli*), Tooth Cave ground beetle (*Rhadine persephone*), and Kretschmarr Cave mold beetle (Texamaurops reddelli) are as follows:

A. The Present or Threatened Destruction, Modification, or Curtailment of Its Habitat or Range

The primary threat to the five species comes from potential loss of habitat owing to anticipated development activities. Proximity of the caves inhabited by these species to the City of Austin makes them vulnerable to the continuing expansion of the Austin metropolitan area. Road, industrial, residential, and commercial developments that would adversely affect these species have already been proposed. Tooth, Amber, Kretschmarr, Kretschmarr Salamander, McDonald, and Root Caves are in an area for which a major residential, commercial, and industrial development has been proposed. This area includes the entire known ranges of the Tooth Cave pseudoscorption, the Tooth Cave spider, and the Tooth Cave ground beetle, all but one known locality of the Kretschmarr Cave mold beetle, and a large portion of the habitat of the Bee Creek Cave harvestman. Unless proper safeguards can be devised, this development could result in the filling in or collapsing of caves during road and building site preparation, and in alteration of drainage patterns that could affect the cave habitat. These species inhabit dry cave habitats that depend on some infiltration of groundwater. Disruption of this input would be harmful, as would excess input of water that would flood the caves. Flooding of habitat could also result from proposed no-discharge sewage effluent irrigation. Development of this area could also increase the flow of sediment, pesticides, fertilizers, and general urban runoff into the caves. Land alterations in this area have already been noted (Reddell 1984). Landmarks have been altered so that it is difficult to relocate some caves, and large boulders have been placed in the entrance of Kretschmarr Cave on two occasions (Reddell 1984). This cave is an important habitat for the beetles included in this proposal. Development in this area is also likely to increase human visitation and vandalism in the caves, which are so small that even occasional episodes could adversely alter the cave habitat.

Tooth Cave is near one alternative route for a proposed water pipeline from Lake Travis. Even if it is bypassed by the direct path of the pipeline, operation of heavy construction equipment or blasting could adversely affect Tooth Cave and other caves in the area inhabited by these species.

Weldon Cave, which supports a population of the Bee Creek Cave harvestman, is in or very near the path of a proposed road extension. Residential development is also occurring in this area, and is likely to be stimulated by the improved access provided by this road.

It is likely that most, if not all, or the five cave species occupied other caves that have already been lost to earlier development. This may have been the fate of Coffin Cave, which is historic habitat of the Tooth Cave mold beetle. Recent attempts to relocate this cave have not been successful.

B. Overutilization for Commercial, Recreational, Scientific, or Educational Purposes

No threat from overutilization of these species is known to exist at this time. Collection for scientific or educational purposes could become a threat if localities become generally known.

C. Disease or Predation

As the human population of the area around these caves increases, the problems of predation by and competition with exotic (non-native) species also increases. Human habitation introduces a complement of exotic invertebrate species into many areas, particularly in semiarid areas such as the plateau northwest of Austin. These predatory species are transported into the area in various accompaniments of human occupation, including landscaping plants. Buildings, lawns, and shrubbery provide habitat from which these highly adaptable species can disperse. The relative accessibility of the shallow caves leaves them especially vulnerable to invasion by introduced invertebrate predators or competitors such as sowbugs and cockroaches.

D. The Inadequacy of Existing Regulatory Mechanisms

There are currently no laws that protect any of these species or that directly address protection of their habitat. Cave protection laws of the City of Austin do not apply because these areas are all outside the city limits.

E. Other Natural or Manmade Factors Affecting Its Continued Existence

These species are extremely vulnerable to losses because of their severely limited range and habitat and because of the naturally limited ability to colonize new habitats. These troglobitic species have little or no ability to move appreciable distances on the surface. The division of the limestone habitat into "islands" limits the mobility of the species through channels within the limestone. Moisture regimes, food supply, and other factors may also limit subsurface migrations and may account for the different distribution patterns seen among these five species.

The specific climate factors within the caves, such as humidity, are affected by input through the cave entrance, the overlying soils, and the rocks in which the caves are formed. As discussed under factor A above, surface alterations can affect these conditions, as well as facilitate the flow of pollutants into the habitat.

The very small size of these habitats, in addition to the fragile nature of cave ecosystems in general, make these species vulnerable to even isolated acts of vandalism. As the human population of the area increases, the likelihood of such acts also increases.

The Service has carefully assessed the best scientific and commercial information available regarding the past, present, and future threats faced by these species in determining to propose this rule. Based on this evaluation, the preferred action is to list the Tooth Cave pseudoscorpion, the Tooth Cave spider, the Bee Creek Cave harvestman, the Tooth Cave ground bettle, and the Kretschmarr Cave mold beetle as endangered species. These species require the maximum possible protection provided by the Act because their extremely small, vulnerable, and

limited habitats are within an area that can be expected to experience continuing pressures from economic and population growth. Critical habitat has not been proposed for reasons given in the next section.

Critical Habitat

Section 4(a)(3) of the Act, as amended, requires that, to the maximum extent prudent and determinable, the Secretary designate any habitat of a species which is considered to be critical habitat at the time the species is determined to be endangered or threatened. The Service finds that designation of critical habitat is not prudent for these species at this time. Their cave habitats are at the edge of an expanding urban area with a growing population. Increased human population density increases the likelihood of acts of vandalism that could irreversibly damage the caves. All involved parties and land owners will be notified of the location and importance of protecting these species' habitats. Protection of these habitats will be addressed through the recovery process and through the section 7 jeopardy standard. Therefore, it would not be prudent to determine critical habitat for these species at this time.

Available Conservation Measures

Conservation measures provided to species listed as endangered or threatened under the Endangered Species Act include recognition, recovery actions, requirements for Federal protection, and prohibitions against certain practices. Recognition through listing encourages and results in conservation actions by Federal, State, and private agencies, groups, and individuals. The Endangered Species Act provides for possible land acquisition and cooperation with the States and requires that recovery actions be carried out for all listed species. Such actions are initiated by the Service following listing. The protection required of Federal agencies and the prohibitions against taking and harm are discussed, in part, below.

Section 7(a) of the Act, as amended, requires Federal agencies to evaluate their actions with respect to any species that is proposed or listed as endangered or threatened and with respect to its critical habitat, if any is being designated. Regulations implementing this interagency cooperation provision of the Act are codified at 50 CFR Part 402. Section 7(a)(4) requires Federal agencies to confer informally with the Service on any action that is likely to jeopardize the continued existence of a proposed species or result in destruction or adverse modification of proposed critical habitat. If a species is listed subsequently, section 7(a)(2) requires Federal agencies to ensure that activities they authorize, fund, or carry out are not likely to jeopardize the continued existence of such a species or to destroy or adversely modify its critical habitat. If a Federal action may affect a listed species or its critical habitat, the responsible Federal agency must enter into formal consultation with the Service. No Federal involvement has been identified at this time. As development progresses the Federal Housing Authority, the Federal Highway Administration, and the Environmental Protection Agency may become involved in funding or permitting projects. Any involvement by these Federal agencies in development in the area of these caves could be a subject of consultation with the Service.

The Act and implementing regulation found at 50 CFR 17.21 set forth a series of general prohibitions and exceptions that apply to all endangered wildlife. These prohibitions, in part, make it illegal for any person subject to the jurisdiction of the United States to take, import or export, ship in interstate commerce in the course of commercial activity, or sell or offer for sale in interstate or foreign commerce any endangered fish or wildlife species. It also is illegal to possess, sell, deliver, carry, transport, or ship any such wildlife that has been taken illegally. Certain exceptions would apply to agents of the Service and State conservation agencies.

Permits may be issued to carry out otherwise prohibited activities involving endangered wildlife species under certain circumstances. Regulations governing permits are at 50 CFR 17.22. Such permits are available for scientific purposes, to enhance the propagation or survival of the species, and/or for incidental take in connection with otherwise lawful activities.

Public Comments Solicited

The Service intends that any final action resulting from this proposal will be as accurate and as effective as possible. Therefore, any comments or suggestions from the public, other concerned government agencies, the scientific community, industry, or any other interested party concerning any aspect of this proposal are hereby solicited. Comments particularly are sought concerning:

(1) Biological, commercial trade, or other relevant data concerning any threat (or lack thereof) to these species;

(2) The location of any additional populations of these species and the reasons why any habitat should or should not be determined to be critical habitat as provided by section 4 of the Act;

(3) Additional information concerning the range and distribution of these species; and

(4) Current or planned activities in the subject area and their possible impacts on these species.

Final promulgation of the regulations on these species will take into consideration the comments and any additional information received by the Service, and such communications may lead to adoption of final regulations that differ from this proposal.

The Endangered Species Act provides for a public hearing on this proposal, if requested. Requests must be filed within 45 days of the date of publication of the proposal. Such requests must be made in writing and addressed to the Regional Director (see **ADDRESSES** section).

National Environmental Policy Act

The Fish and Wildlife Service has determined that an Environmental Assessment, as defined under the authority of the National Environmental Policy Act of 1969, need not be prepared in connection with regulations adopted pursuant to section 4(a) of the Endangered Species Act of 1973, as amended. A notice outlining the Service's reasons for this determination was published in the **Federal Register** on October 25, 1983 (48 FR 49244).

References Cited

Barr, T.C., Jr. 1974. Revision of *Rhadine* LeConte (Coleoptera, Carabidae). I. The *subterranea* group. American Museum Novitates No. 2539. 30 pp.

Barr, T.C., Jr. and H.R. Steeves, Jr. 1963. *Texamaurops*, a new genus of pselaphids from caves, in central Texas (Coleoptera: Pselaphidae). The Coleopterists' Bulletin 17:117–120.

Gertsch, W.J. 1974. The spider family Leptonetidae in North America. The Journal of Arachnology 1:145–203.

Goodnight, C.J. and M.L Goodnight. 1967. Opilionids from Texas caves (Opiliones, Phalangodidae). American Museum Novitates No. 2301. 8 pp.

Mitchell, R.W. 1968. Food and feeding habits of the troglobitic carabid beetle *Rhadine subterranea*. International Journal of Speleology 3:249–270.

Muchmore, W.B. 1969. New species and records of cavernicolous pseudoscorpions of the genus *Microcreagris* (Arachnida, Chelonethida, Neobisiidae, Ideobisiinae). American Museum Novitates No. 2932. 21 pp.

Reddell, J.R. 1984. Report on the Caves and Cave Fauna of the Parke, Travis County, Texas. Unpublished report to the Texas System of Natural Laboratories. 25 pp.

Author

The primary author of this proposed rule is Dr. Steven M. Chambers, Fish and Wildlife Biologist, Office of Endangered Species, U.S. Fish and Wildlife Service, P.O. Box 1306, Albuquerque, New Mexico 87103 (505/766-3972 or FTS 474-3972).

List of Subjects in 50 CFR Part 17

Endangered and threatened wildlife, Fish, Marine mammals, Plants (agriculture).

Proposed Regulations Promulgation

Accordingly, it is hereby proposed to amend Part 17, Subchapter B of Chapter I, Title 50 of the Code of Federal Regulations, as set forth below:

PART 17—[AMENDED]

1. The authority citation for Part 17 continues to read as follows:

Authority: Pub. L. 93-205, 87 Stat. 884; Pub. L 94-359, 90 Stat. 911; Pub. L. 95-632, 92 Stat. 3751; Pub. L. 96-159, 93 Stat. 1225; Pub. L. 97-304, 96 Stat. 1411 (16 U.S.C. 1531 *et seq.*); Pub. L. 99-625, 100 Stat. 3500 (1986), unless otherwise noted.

2. It is proposed to amend § 17.11(h) by establishing a new taxonomic group heading, "Arachnids", to follow the entries under "Insects" on the List of Endangered and Threatened Wildlife.

3. It is further proposed to amend § 17.11(h) by adding the following, in alphabetical order under the two indicated taxonomic group headings, to the List of Endangered and Threatened Wildlife.

§ 17.11 Endangered and threatened wildlife.

* * * * *

(h) * * *

Species: Common name	Species: Scientific name	Historic range	Vertebrate population where endangered or threatened	Status	When listed	Critical habitat	Special rules
INSECTS:							
Beetle, Kretschmarr Cave moss	*Texamaurops reddelli*	U.S.A. (TX)	NA	E		NA	NA
Beetle, Tooth Cave ground	*Rhadine persephone*	U.S.A. (TX)	NA	E		NA	NA
ARACHNIDS:							
Harvestman, Bee Creek Cave	*Texella reddelli*	U.S.A. (TX)	NA	E		NA	NA
Pseudoscorpion, Tooth Cave	*Microcreagris texana*	U.S.A. (TX)	NA	E		NA	NA
Spider, Tooth Cave	*Leptoneta myopica*	U.S.A. (TX)	NA	E		NA	NA

Dated: March 25, 1988.

Susan Recce,

Assistant Secretary for Fish and Wildlife and Parks.

[FR Doc. 88-8520 Filed 4-18-88; 8:45 am]

BILLING CODE 4310-55-M

DEPARTMENT OF COMMERCE

National Oceanic and Atmospheric Administration

50 CFR Part 653

[Docket No. 80468-8068]

Red Drum Fishery of the Gulf of Mexico

AGENCY: National Marine Fisheries Service (NMFS), NOAA, Commerce.

ACTION: Proposed rule.

SUMMARY: NOAA issues this proposed rule to implement Amendment 2 to the Fishery Management Plan for the Red Drum Fishery of the Gulf of Mexico (FMP). This proposed rule would (1) set total allowable catch (TAC) of red drum from the primary area of the exclusive economic zone (EEZ) at zero by reducing recreational and commercial quotas to zero, thereby extending the existing prohibitions on the harvest or possession of red drum in the secondary areas to the entire Gulf of Mexico EEZ and (2) make technical corrections to the specification of the fishing year and to the allowable catch and allocation procedures. The intended effect of this rule is to protect the red drum spawning stock from overfishing.

DATE: Written comments on this proposed rule will be received until Saturday, May 21, 1988.

ADDRESS: Comments on the proposed rule and requests for copies of Amendment 2 and its associated documents should be sent to William R. Turner, Southeast Region, National Marine Fisheries Service, 9450 Koger Boulevard, St. Petersburg, FL 33702.

FOR FURTHER INFORMATION CONTACT: William R. Turner, 813-893-3722.

SUPPLEMENTARY INFORMATION: The red drum fishery is managed under the FMP and its implementing regulations at 50 CFR Part 653, as provided by the Magnuson Fishery Conservation and Management Act (Magnuson Act). Amendment 1 to the FMP, prepared by the Gulf of Mexico Fishery Management Council (Council) and implemented October 16, 1987 (52 FR 34918; September 16, 1987), divided the EEZ into primary and secondary areas, prohibited the harvest or possession of red drum from the secondary areas (waters off Texas and Florida), and established an annual TAC in the primary area (waters off Louisiana, Mississippi, and Alabama). Under the TAC, annual quotas were etablished at zero for the directed commercial fishery, 200,000 pounds as incidental commercial catch in the shrimp fishery, 100,000 pounds as incidental catch in other commercial fisheries, and 325,000 pounds for the recreational fishery. The regulations also imposed a recreational bag limit of one red drum per person per trip in or from the primary area.

Under Amendment 1, the procedures for specification of TAC and allowable catch provide that, by October each year, NMFS' Southeast Fisheries Center (SEFC) is to prepare a stock assessment for the fishery, examining all the parameters related to the condition of the stock. A scientific stock assessment group (Group), appointed by the Council from qualified fishery scientists throughout the Gulf region, is to review the stock assessment reports and specify a range of acceptable biological catch (ABC) and the risks of adversely impacting the spawning stock biomass (SSB) associated with each harvest level within ABC. The Council then reviews the Group's report, sets TAC for the fishery, and allocates that TAC among the user groups. Under Amendment 1,

revision of the TAC and allocation levels requires amendment of the FMP.

In accordance with the management objectives of Amendment 1, the Council also requested that the States take appropriate steps within their respective geographical areas of authority to provide an escapement rate of juvenile fish to the spawning stock equivalent to 20 percent of those that would have escaped in the absence of any nearshore fishery. This level of escapement was estimated by scientists as the amount necessary to maintain the spawning stock at a level that would prevent recruitment failure and collapse of the fishery. A cooperative State/Federal management approach is essential to effective and successful management of this resource because of the interdependent relationship of nearshore and offshore stocks; juvenile red drum occur in nearshore and inshore waters, while mature adults generally occur offshore. Overfishing of either group adversely impacts the resource in both areas. Insufficient recruitment of juveniles to the offshore spawning stock results in too few spawners to replenish the population in nearshore waters.

Present Situation

SEFC's October 1987 stock assessment report indicated that the mortality rates of juvenile red drum from State waters continued to be excessively high during 1983–1986 and that the annual rate of juvenile escapement to the offshore adult stock for this period was less than two percent for all areas examined. The report also observed that length-frequency and aging studies indicated that adult red drum under 12 years of age were poorly represented in the spawning stock.

The report concluded that, given the high mortality rate associated with the fishery on juveniles, any significant increase in fishing mortality on adults would likely endanger recruitment inshore. This results from both the lowering of the number of spawners and the compression of the age distribution of spawners into the first few reproductive years. The report concluded that a 20 percent spawning stock biomass per recruit (SSBR) ratio (defined in § 653.2) was a reasonable goal or threshold for maintaining the spawning stock. However, it was also concluded that the goal of 20 percent escapement of juveniles established in Amendment 1 was incompatible with this spawning stock goal because of natural and fishing mortality on the adults.

The Group presented its first report to the Council under Amendment 1 procedures on December 2, 1987. Reviewing the most recent information available, including the information determined from adult red drum schools sampled by purse seine for mark-recapture and aging studies, the Group observed low recruitment of recent year classes to the spawning stock; fish younger than 12 years of age were poorly represented in the samples. Further, the Group noted that fishing mortality rates on juveniles are sufficiently high to drive the adult stock below the 20 percent SSBR goal or threshold for maintaining the spawning stock. The Group also observed that 1983–1986 exploitation rates were greatly in excess of levels that would allow realization of the management goal of 20 percent escapement of juveniles from the nearshore waters. From this information, the Group concluded:

> The most liberal interpretations of the data available suggest that, at present, escapement of juveniles to the adult stock is less than two percent, because inshore fishing mortality remains high in all States. Limited observatrions on the age composition of the offshore stock also support the contention that few fish have reached breeding age during recent years. This possible major decline in recruitment to the adult stock underscores the importance of maintaining and protecting all remaining breeding fish.

The Group recommended that the Council (1) set the ABC for the EEZ at zero until necessary escapement levels are attained, and (2) maintain the 20 percent SSBR ratio as an appropriate spawning stock goal or threshold, but increase the juvenile escapement rate from 20 to 30 percent in order to meet that goal. The Group agreed that the fishing mortality rate for adults (both recreational and commercial) is probably in the range of three to five percent, even with no allowable harvest in the EEZ, because there is a limited harvest of adults from nearshore waters and a limited incidental catch of red drum in other fisheries.

In December 1987, the Council adopted the report of the Group and initiated Amendment 2 to the FMP to set TAC at zero. The Council requested the Regional Director, NMFS, to initiate emergency action under section 305(e) of the Magnuson Act to reduce mortality on the SSB to zero in the EEZ until Amendment 2 could be implemented. Further, the Council requested each State to adopt rules that eventually would result in a juvenile escapement rate of 30 percent.

The Secretary of Commerce (Secretary) implemented an emergency rule (53 FR 244, January 6, 1988) that set TAC at zero and prohibited harvest or possession of red drum in or from the primary area of the Gulf of Mexico EEZ from January 1 through March 30, 1988. At the Council's request, the Secretary extended this rule for an additional 90 days, through June 28, 1988 (53 FR 7368, March 8, 1988).

Amendment 2 and this rule propose to continue the zero TAC and the harvest and possession implemented for the primary area by the interim emergency rule. When an SEFC stock assessment report and a Group recommendation indicate that red drum in the EEZ may be safely harvested without adversely impacting the SSB, the Counsil may allow resumption of the fishery by further amendment of the FMP.

Amendment 2 modifies Management Objective 1 and the statement of optimum yield in the FMP to provide for a 30 percent escapement rate for juvenile red drum (rather than 20 percent) to achieve and maintain the 20 percent SSBR ratio necessary to assure that recruitment overfishing does not occur. Amendment 2 and this rule also revise the procedure for determining allowable catch and allocations to provide a more scientifically correct description of the stock assessment and the Group review portions of this procedure. Amendment 2 also includes, as an addendum, revision of FMP Section 6.0 describing the habitat requirements of the stock to comply with a requirement recently added to the Magnuson Act by amendment.

This rule proposes to modify the reports required by § 635.5 from dealers and processors by eliminating the separate data elements for red drum harvested from the EEZ and those harvested from State waters. Accordingly, it is no longer necessary to retain the proviso at § 635.5(g) that States may require additional reports from dealers and processors. The authority of the States to collect data regarding red drum harvested from their waters is not affected by this action.

Concomitant with these changes, this rule proposes to delete definitions no longer used, add two new definitions, remove paragraphs and sections no longer applicable, and change "seasons" to "fishing year" to simplify and more properly designate the time period described in that section.

Classification

Section 304(a)(1)(D)(ii) of the Magnuson Act, as amended by Pub. L. 99–659, requires the Secretary to publish regulations proposed by the Council within 15 days of receipt. At this time the Secretary has not determined that the FMP amendment this rule would

implement is consistent with the national standards, other provisions of the Magnuson Act, and other applicable law. The Secretary, in making that determination, will take into account the data, views, and comments received during the comment period.

The Council prepared an environmental assessment (EA) for Amendment 2 describing the impact on the environment as a result of this rule. You may obtain a copy of the EA (see **ADDRESS**).

The Under Secretary, NOAA, determined that this proposed rule is not a "major rule" requiring the preparation of a regulatory impact analysis under Executive Order 12291. Amendment 2 would continue measures implemented by the Secretary's emergency rule to protect the red drum spawning stock while the States take actions to increase the escapement of juvenile red drum to the SSB.

The Council prepared a draft regulatory impact review (RIR) that concluded the proposed rule will have the following economic effects. Greater long-term benefits will result than from other management alternatives considered (1) in terms of maintenance and restoration of the SSB, thereby preventing recruitment overfishing and collapse of the stock, and (2) in terms of increased production for eventual harvest.

The revision to 30 percent in the escapement goal of juvenile red drum to the offshore spawning stock is not expected to have an immediate impact on the fishery. This is because actual escapement levels, now less than 2 percent, are far below the current 20 percent goal; harvest or possession of red drum from the secondary areas is already prohibited; and the TAC for the directed commercial fishery is currently set at zero in the primary area. The major effect of this revision will be a possible extension of the time that the TAC will be held at zero in an effort to rebuild the resource and prevent overfishing. The economic effects cannot be estimated, but the increased benefits of sustained harvests over the long term from the protection of the resource is expected to more than offset any potential costs from keeping the fishery closed an additional amount of time.

Although directed commercial fishing is currently set at zero, the proposed action to close the primary area to all harvest of red drum will serve to eliminate any bycatch by shrimp and other net vessels. This reduction in catch will have a minimal impact because the 1987 bycatch of 8,100 pounds by shrimp vessels and 19,700 pounds by other net vessels represents a very small percentage of those vessels' gross revenue (likely less than 1 percent in most cases). Other factors that would further mitigate any effects of this action include (1) the industry has already adjusted to the effects of the rule as a result of a prohibition of fishing in the primary area by an emergency rule implemented on January 1, 1988, and (2) bycatch by shrimp vessels is now negligible, because the requirement to use turtle excluder devices by some shrimp vessels will greatly reduce, if not eliminate, red drum bycatch by these vessels. Consumers of red drum are not expected to be significantly impacted by the ban on commercial fishing because red drum appear to have good substitutes, indicating a highly elastic demand curve and, therefore, a small loss in consumer surplus.

Recreational fishermen will also be impacted in the primary area since both private and charter vessels will be required to reduce their retention of red drum by the 325,000-pound annual quota currently allowed. The impact on fishermen is expected to be relatively small, since the current bag limit is only one fish per individual, and fishermen will still be able to catch the fish, but must release any red drum caught. There may be a monetary impact on charter vessel operators if they lose trips directed on red drum as a result of the proposed action. A maximum gross annual economic loss to the 63 charter vessels operating from Mississippi and Louisiana was estimated to be $44,847 or an average of $712 per vessel (no Alabama trips in the primary area targeted red drum). As in the commercial fishery, the maximum impacts will be mitigated since the industry has already made necessary adjustments due to the emergency rule; charter vessels may shift their activities to targeting other species; and many fishermen may find a trip satisfying by hooking and releasing red drum.

The proposed action will not increase Federal enforcement costs, because the cost of enforcing the zero TAC equals the cost of enforcing bag and incidental catch limits. You may obtain a copy of the draft RIR (see **ADDRESS**).

This proposed rule is exempt from the procedures of Executive Order 12291 under section 8(a)(2) of that order. It is being reported to the Director, Office of Management and Budget, with an explanation of why it is not possible to follow procedures of the order.

The General Counsel of the Department of Commerce certified to the Small Business Administration that this proposed rule, if adopted, will not have a significant economic impact on a substantial number of small entities. A summary of effects is included above. As a result, a regulatory flexibility analysis was not prepared.

This rule does not contain a collection-of-information requirement subject to the Paperwork Reduction Act. The collection-of-information requirements applicable to commercial vessels that take red drum as incidental catch are proposed to be removed by this rule. The collection-of-information requirements of the FMP were approved under OMB Control Number 0648-0177.

The Assistant Administrator for Fisheries, NOAA, determined that this rule will be implemented in a manner that is consistent to the maximum extent practicable with the approved coastal zone management programs of Florida, Alabama, Mississippi, and Louisiana. Texas does not have an approved coastal zone management program. These determinations have been submitted for review by the responsible State agencies under section 307 of the Coastal Zone Management Act.

This proposed rule does not contain policies with federalism implications sufficient to warrant preparation of a federalism assessment under Executive Order 12612.

List of Subjects in 50 CFR Part 653

Fisheries, Fishing, Reporting and recordkeeping requirements.

Dated: April 13, 1988.

James E. Douglas, Jr.,

Acting Assistant Administrator For Fisheries, National Marine Fisheries Service.

For reasons set forth in the preamble, 50 CFR Part 653 is proposed to be amended as follows:

PART 653—RED DRUM FISHERY OF THE GULF OF MEXICO

1. The authority citation for Part 653 continues to read as follows:

Authority: 16 U.S.C. 1801 *et seq.*

2. In § 653.2, the definitions for *Commercial fishing (fishery), Directed commercial red drum fishing (fishery), Recreatinal fishing (fishery),* and *Trip* are removed; and new definitions for *Overfishing* and *Spawning stock biomass per recruit (SSBR) ratio* are added in alphabetical order to read as follows:

§ 653.2 Definitions.

* * * * *

Overfishing means a fishing mortality rate that prohibits attaining the spawning stock goal or threshold, which

is established at a 20 percent spawning stock biomass per recruit (SSBR) ratio.

* * * * *

Spawning stock biomass per recruit (SSBR) ratio is an index of the impact of fishing mortality on the lifetime reproductive potential of recruits to the population. With no fishing mortality, the SSBR is 100 percent. Combinations of fishing mortality and the average age at which a year class becomes subject to exploitation in the fishery give rise to lower levels of SSBR, all of which can be expressed as percentages of the maximum.

* * * * *

§ 653.3 [Amended]

3. In § 653.3, paragraph (d) is removed.

§ 653.4 [Amended]

4. In § 653.4, the text is removed and the section heading is reserved.

5. In § 653.5, paragraphs (a), (b), (c)(4), (c)(5), (d), (f), and (g) are removed; paragraphs (c) and (e) are redesignated as paragraphs (a) and (b), respectively; in newly redesignated paragraph (a)(2), the word "and" is added after the semicolon; and newly redesignated paragraph (a)(3) is revised to read as follows:

§ 653.5 Reporting requirements.

(a) * * *

(3) Total poundage of red drum received during the reporting period, by each type of gear used for harvest.

* * * * *

6. In § 653.7, paragraphs (a)(1), (2), (3), (8), (17), (19), (21), and (22) are removed; paragraphs (a)(4) through (7), (20), and (9) through (16) are redesignated (a)(1) through (13), respectively; in newly redesignated paragraphs (a)(1), (2), (5), and (8), the references to "§ 653.4(a)", "§ 653.5(e)", "§ 653.22(c)", and "(a)(10)" are revised to read "§ 653.5(a)", "§ 653.5(b)", "§ 653.22(b)", and "(a)(8)", respectively; and newly redesignated paragraph (a)(4) is revised, to read as follows:

§ 653.7 Prohibitions.

(a) * * *

* * * * *

(4) Retain on board a vessel or possess red drum in or from the secondary or primary areas of the EEZ as specified in § 653.22(a);

* * * * *

7. Section 653.20 is revised to read as follows:

§ 653.20 Fishing year.

The fishing year for red drum begins on January 1 and ends on December 31.

8. Section 653.21 is revised to read as follows:

§ 653.21 Quotas.

TAC is zero for each fishing year.

9. In § 653.22, paragraph (a) is revised; paragraphs (b), (d), and (e) are removed; and paragraph (c) is redesignated (b), to read as follows:

§ 653.22 Harvest and landing limitations.

(a) *Harvest from the EEZ.* No red drum may be harvested or possessed in or from the secondary or primary areas of the EEZ. Red drum in the EEZ must be released immediately with a minimum of harm.

* * * * *

§ 653.23 [Amended]

10. In § 653.23, the text is removed and the section heading is reserved.

11. In § 653.24, paragraph (a)(4) is revised; in paragraph (b)(1), the words "through fishing" are removed; and paragraphs (b)(2), (3), and (4) are revised to read as follows:

§ 653.24 Allowable catch and allocation procedures.

(a) * * *

(4) Reexamine the spawning stock requirements (established as a spawning stock goal or threshold of a 20 percent SSBR ratio in relation to an unfished stock) and specify escapement levels of juvenile fish necessary to achieve these requirements;

* * * * *

(b) * * *

* * * * *

(2) Include consideration of fishing mortality rates, abundance relative to the established spawning stock goal or threshold, trends in recruitment, and whether overfishing is occurring;

(3) In specifying ABC, separately identify the quantity of the offshore population, in excess of the spawning stock goal or threshold, that may be harvested;

(4) When requested by the Council, include information on the levels of bag limits, size limits, specific gear harvest limits, and other restrictions required to attain the necessary escapement goal or prevent a user group from exceeding its allocation or quota under a TAC specified by the Council and on the economic and social impacts of such limits and restrictions.

* * * * *

Appendix A to Part 653 [Amended]

12. The Appendix to Part 653 is removed.

[FR Doc. 88-8535 Filed 4-14-88; 4:29 pm]

BILLING CODE 3510-22-M

BEST COPY AVAILABLE

Notices

Federal Register
Vol. 53, No. 75
Tuesday, April 19, 1988

This section of the FEDERAL REGISTER contains documents other than rules or proposed rules that are applicable to the public. Notices of hearings and investigations, committee meetings, agency decisions and rulings, delegations of authority, filing of petitions and applications and agency statements of organization and functions are examples of documents appearing in this section.

DEPARTMENT OF AGRICULTURE

Food and Nutrition Service

Commodity Distribution Reform Act and WIC Amendments of 1987; Implementation

AGENCY: Food and Nutrition Service, USDA.

ACTION: Notice of implementation of Pub. L. 100-237, the Commodity Distribution Reform Act and WIC Amendments of 1987.

SUMMARY: This notice is to advise interested parties (including State Distribution Agencies, State Child Nutrition Program Directors, school food service directors, recipients of donated foods, farmers, food processing companies, and the general public), of how the U.S. Department of Agriculture (USDA) has implemented or intends to implement several key provisions of the Commodity Distribution Reform Act and WIC Amendments of 1987, hereafter referred to as the "Act." The provisions of the Act will be implemented either through regulations to be issued in the near future or other Departmental actions. This notice gives an overview of the Department's plans and details several actions already undertaken.

EFFECTIVE DATE: April 19, 1988.

FOR FURTHER INFORMATION CONTACT: Alberta C. Frost, Director, Food Distribution Division, 3101 Park Center Drive, Room 502, Alexandria, Virginia 22302 or telephone (703) 756-3680.

SUPPLEMENTARY INFORMATION: This action has been reviewed under Executive Order 12291 and Secretary's Memorandum No. 152. It has been classified as "nonmajor," because it meets none of the criteria in the Executive Order: The action will not have an annual effect on the economy of $100 million or more; will not cause a major increase in costs or prices for consumers, individual industries, Federal, State or local government agencies, or geographical regions; and will not have significant adverse effects on competition, employment, investment, productivity, innovation, or on the ability of U.S.-based enterprises to compete with foreign-based enterprises in domestic or export markets.

This action is not a rule as defined by the Regulatory Flexibility Act (5 U.S.C. 601-612) and thus is exempt from the provisions of the Act.

These programs are listed in the Catalog of Federal Assistance under No. 10.550 and are subject to the provisions of Executive Order 12373, which requires intergovernment consultation with State and local officials. (See 7 CFR Part 3015. Subpart V and final rule related notice published at 48 FR 29114, June 24).

This notice imposes no new reporting or recordkeeping provisions that are subject to Office of Management and Budget review pursuant to the Paperwork Reduction Act of 1980 (44 U.S.C. 3507)

Background

Through the Food Distribution Program, USDA donates foods to various food programs to meet some of the nutritional needs of many children and adults in this country. The program also helps to expand markets for food that American farmers produce.

People that the program serves include:

- Children, through the National School Lunch Program (NSLP), the Child Care Food Program (CCFP), School Breakfast Program (SBP) and the Summer Food Service Program (SFSP). Also, children in nonprofit summer camps, and schools that get USDA commodities but do not participate in the NSLP.
- Indian households on reservations that participate in the Food Distribution Program (FDPIR).
- Needy people in the charitable institution program (CIP).
- Elderly people and their spouses, through nutrition programs for the elderly (NPE), authorized by Titles III and VI of the Older Americans Act.
- Pregnant and breastfeeding women, infants, and children up to 6 years of age and, in some cases, elderly people who live in areas that the Commodity Supplemental Food Program (CSFP) serves.
- Eligible people who live in a declared disaster area.
- Needy households that participate in the Temporary Emergency Food Assistance Program (TEFAP).

To aid American farmers, USDA buys food under price-support and surplus removal legislation. USDA also makes direct purchases of food for the nutrition programs. This food is made available to States and Indian reservations. USDA pays for the initial processing and packaging of the food and for transporting it to designated points within each State. State distributing agencies (DAs) are then responsible for storing the food, transporting it throughout the State, and distributing it at the local level to eligible recipient agencies (RAs) in the various food programs.

The foods that USDA donates may vary from time to time depending on what farm products are available. Because of the special nutritional needs of participants in FDPIR, NPE, and CSFP, USDA also purchases certain specified foods for these programs.

State distributing agencies have current information on the foods USDA has available for donation. USDA has available quarterly reports showing what foods each State distribute and the quantities that were distributed to each category of eligible recipient.

On January 8, 1988 President Reagan signed Pub. L. 100-237, "The Commodity Distribution Reform Act and WIC Amendments of 1987". This legislation is the first to be devoted primarily to the Food Distribution Program administered by USDA. The pupose of the legislation is to improve the manner in which commodities purchased by the Department are distributed to RAs, to improve the quality of commodities, and to increase the degree to which such distribution responds to the needs of RAs. The provisions of the Act will strengthen the Department's ongoing process of program review and improvement. The Department recognizes the importance of improving the Food Distribution Program. Actions taken prior to the enactment of the Act demonstrate the Department's continuing commitment to improve commodities and program operations in response to RA needs.

Last year, the Secretary established a special task force to review throughly commodity distribution operations and to pursue aggressively the improvement of the Food Distribution Program. Senior level officials from the three agencies responsible for commodity operation, the Agricultural Marketing Service (AMS), Agricultural Stabilization and Conservation Service (ASCS) and the Food and Nutrition Service (FNS) were appointed to the Task Force. The work of the Task Force initially focused on concerns from RAs participating in school food assistance programs. The role of the task Force has since expanded to address commodity distribution issues for all programs receiving commodities. On June 5, 1987, the Task Force issued a report outlining commitments to address all RA needs and concerns. Throughout the current School year the Task Force fulfilled its commitments to improve communication, to increase the variety and quality of foods, to offer better packaging, and to improve State DAs' performance and the commodity delivery system. The Secretary implemented over twenty changes in procurement and distribution activities and commodity specifications in response to RA requests. In this school year alone, over eight new forms of commodities were added and four changes in packaging specifications occurred. Several procurement procedures and contracting requirements changed resulting in improved performance in the area of distribution and delivery. The Task Force is now establishing new goals for School Year/Fiscal Year 1989 which will be announced in September 1988.

Implementation Plans for Pub. L. 100-237

The following lists the sections of the law, brief descriptions and the implementation method for each provision of the legislation. In general, Federal actions taken in response to provisions of the law directed at USDA operations are being announced through this notice. Provisions affecting States will be implemented either through proposed, interim or final regulations.

Section	Description	Implementation method
3(a) (1), (2)	Commodity specification development	**Federal Register** (FR) notice.
3(a)(3)	National Advisory Council	FR notice.
3(b)(1)(A)	Optional package sizes and form	Do.
3(b)(1)(B)	Procedures to monitor state distribution agencies	Administrative procedures.
3(b)(2)	Technical assistance and recipes	FR notice.
3(b)(3)	Summaries of specifications	Interim rules.
3(b)(4)	Advance distribution notice	FR notice.
3(b)(5)	Replacement procedures	Interim rules.
3(b)(6)	Monitor commodities in storage	FR notice.
3(b)(7)	Commodity value	Interim rules.
3(b)(8)	Ordering timeframes	FR notice.
3(c)	Purchase requirements	Do.
3(d) (1), (2), (3), (4)	Duties of state distributing agencies	Proposed rules.
3(d)(5)	State processing	Interim rules.
3(e)(1)(A)	Assessment fees	Proposed rules.
3(e)(1)(B)	Performance standards	Do.
3(e)(1)(C)	Allocation procedures	Do.
3(e)(1)(D)	Delivery schedules	Interim rules.
3(f)(1)	Cost benefit analysis	FR notice.
3(f)(2)	Semi-annual recipient agency information	Interim rules.
3(g)	Commodity field testing	FR notice.
3(h)	"Buy American"	Interim rules.
3(i)	Uniform regional interpretation	Administrative procedure.
3(j)	Per meal value	Interim rules.
5	CLOC/CASH extension	Administrative procedure.
6	National donated commodity processing extension	Interim rules.

Commodity Specification Development

Section 3(a) of the Act covers specification development, lists affected programs and establishes a National Advisory Council to assist the Secretary in the development of specifications. This subsection requires, in developing specifications under which commodities are purchased, that the Secretary consult with a National Advisory Council and consider semiannual recipient agency information received under section 3(f)(2) and the results of commodity field testing, required under section 3(g). This subsection also requires the Secretary to ensure that commodities are of the quality, size and form most usable by RAs. Further, to the maximum extent practicable, commodities must be consistent with the Dietary Guidelines for Americans issued jointly by USDA and the Department of Health and Human Services (DHHS). These guidelines recommend, among other things, moderate levels of fat, salt and sugar in the diet.

This provision applies to the following programs: CSFP, FDPIR, NSLP, CCFP, NPE, SBP, Commodity School Program and to the extent practicable, TEFAP and CIP.

The Department has always considered information from annual State Food Distribution Advisory Council Reports, quarterly complaint reports and informal acceptability surveys in developing and improving commodity specifications. This year, in targeting commodities for improvements in packaging and specifications, the Secretary gave significant weight to existing recipient agency information. In addition, USDA routinely conducts small scale pilot purchases to evaluate new processed commodities. Recent improvements in chicken nugget specifications and increased purchases of popular fish nuggets demonstrate the Department's consideration of and reaction to recipient agency information.

USDA already considers the Dietary Guidelines, the needs of the Indian and elderly populations, and the NSLP meal pattern requirements when developing commodity product specifications for all new processed products. Most commodity specifications attempted to keep sugar, fat and salt content to a moderate level. Over the last several years, USDA has made significant improvements, e.g., the fat content in frozen ground beef has been reduced from 28 percent to a maximum of 24 percent (with most product averaging 21.5); salt in canned meat and poultry has been reduced; and canned fruits are

only packed in light syrup or fruit juice. Only low saturated fat vegetable oil is permitted in refried beans, a new product introduced this year.

As a result of the new legislation, the Department will increase the field testing of commodities, design formal acceptability survey procedures, improve complaint reporting and use semi-annual data from RAs in determining the forms and quality of commodities to provide to RAs. Later this year, when available, the Secretary will also use the National Advisory Council guidance to develop commodity specifications. Further, as a part of the ongoing process to reduce the fat, salt and sugar content of commodities, the Department is reexamining current contents of all commodities to establish the lowest possible sugar, fat and salt levels while maintaining product acceptability and reasonable costs.

National Advisory Council

Section 3(a)(3) of the Act requires the Secretary to establish an Advisory Council to provide guidance with respect to commodity specifications. Currently, FNS is setting up the charter for the council and reviewing nominations for Council membership in accordance with existing Departmental guidelines.

Optional Package Sizes and Forms

Section 3(b)(1)(A) of the Act requires the Secretary to implement a system to provide recipient agencies optional packaging and forms of commodities. This provision applies to CSFP, FDPIR, NSLP, SFSP, SBP, CCFP, NPE, CIP, Commodity School Program, summer camps and TEFAP.

In enacting Pub. L. 100-237, Congress intended for the Secretary to provide a reasonable range of options, where a significant portion of the RAs have expressed a desire for an alternative form or package size. The intent was reflected in the Act's legislative history. On December 17, 1987 Congressmen Panetta and Goodling agreed that this requirement should not be interpreted to mean that any single recipient agency could require a size or package that is unique and not desired by other recipient agencies.

The Department continually strives to increse the variety of commodities available and to provide pack size options in response to RA needs. Using State advisory council reports, comments from regional/State meetings and acceptability survey data, the Department determines if product quality, form and/or packaging is acceptable. The existing ordering system provides State DAs with a wide selection of different package sizes and forms of commodities. For example, currently State DAs may order frozen ground beef in five different forms; and 48 different pack sizes and varieties of flour are available to order.

In FDPIR and CSFP, commodities are packed in consumer size packages and a wide variety of foods are available. For infant participants, two types of infant formula (both soy and milk-based) are available under CSFP and infant cereal is available through FDPIR and CSFP. In the future, the Department will also consider the semiannual information from recipient agencies required under section 3(f)(2) of the Act when selecting optional forms and package sizes for commodities.

It should be noted that State DAs are under some constraints when ordering commodities. For cost effective procurement and shipping, the Department purchases commodities in full truck load quantities (about 40,000 pounds). Therefore, the total demand for a specific type of commodity within a State or distribution area clearly affects which types can be ordered.

The State performance standard regulations required under section 3(e)(1)(B) of the Act will direct State agencies to notify RAs of available ordering options and take their preferences into account when ordering or accepting commodities for donation.

To make commodities available in more processed forms and more convenient sizes, FNS plans to pilot test a State Option Contract (SOC) system for School Year 1989. Under a SOC system, the Department will purchase a processed commodity and the State will reimburse the Department for the cost of processing. This should increase the availability of desired processed products without reducing actual amounts of foods going to RAs.

Procedures to Monitor State Distributing Agencies

Section 3(b)(1)(B) of the Act requires the implementation of procedures to monitor the manner in which State DAs carry out their responsibilities. Voluntary State performance standards, developed with the assistance of the American School Food Service Association (ASFSA) and the National Association of State Agencies for Food Distribution (NASAFD), have been in effect for School Year 1988. Through the existing management evaluation process, FNS will monitor how States carryout their responsibilities under both the voluntary standards and later the mandatory performance standards to be established pursuant to section 3(e)(1)(B) of the Act.

Technical Assistance and Recipes

Under section 3(b)(2) of the Act, the Secretary is required to provide technical assistance to RAs on the use of commodities, including handling, storage and menu planning. The Secretary is also required to distribute to all RAs suggested recipes for the use of donated commodities. Technical assistance in the form of fact sheets, which contain storage, handling, preparation and cooking information, has been available to RAs since October 1987. A booklet containing the nutritive values of commodities was also distributed to State DAs in October 1987 for dissemination to RAs. Additional copies of both publications will be available for distribution this year. The USDA Recipe Cards (with recipes using commodities) will be printed and disseminated to school food authorities this summer. The Department is exploring options beyond current efforts on how to provide recipes to other RAs.

Commodity Specification Summaries

Section 3(b)(3) of the Act requires that summaries of commodity specifications be made available to State DAs and that State DAs make such summaries available to RAs upon request. As puchases occur, FNS routinely disseminates purchase documents (containing detailed specifications) to State DAs receiving a particular commodity. Because these highly technical documents are difficult to interpret, FNS summarized essential specification information in an instruction (FNS 716-1) which was originally disseminated to State DAs in 1983. This instruction has been updated and over 23,000 copies were printed and distributed to State DAs in October 1987. Additional copies will be printed and made available for distribution in 1988. Interim regulations will require State DAs to make these summaries of commodity specification available to RAs.

Advance Distribution Notice

Section 3(b)(4) of the Act requires the Secretary to implement a system to provide not less than 60 days advance notice to recipient agencies and State DAs of the types and quantities of commodities to be distributed. Emergency purchases and purchases of perishable fruits and vegetables are exempted from the 60-day advance notification requirement.

For surplus removal commodities (meat, poultry, fish, fruit and vegetable products), the Department typically provides State DAs well over 60 days notice regarding the types and quantities

of commodities scheduled for distribution. Traditionally, FNS notifies State DAs in the spring of the types of commodities available, shipping timeframes, ordering options and anticipated purchase quantities for the upcoming school year. The State DAs in turn notify FNS of the desired form, amount accepted and requested shipping timeframes. Depending on the commodity, shipments begin between July and November and continue over several months. While there are instances where, because of market conditions, the quantities purchased are less than anticipated, the majority of purchase projections are accurate and the Department makes a good faith effort to purchase the amounts requested by DAs.

State DAs determine the distribution schedules and types and quantities to order for continually available commodities such as grain, dairy, peanut and oil products. Within the established funds available or allocations of commodities provided by USDA. State DAs have discretion over the timeframes, quantities and forms in which these commodities are ordered.

To ensure that RAs receive notification, current voluntary performance standards for State DAs specify that they provide timely delivery schedules and purchase information to RAs. These requirements will be incorporated into proposed rules containing State DA performance standards to be issued in the near future. Management reviews will note whether or not State DAs are complying with the notification requirements.

Monitor Commodities in Storage

Under section 3(b)(6) of the Act, the Secretary must monitor the condition of commodities designated for donation to RAs that are being stored by or for the Secretary to ensure that high quality is maintained. The Department already has strict inspection requirements in place to maintain the quality of commodities in storage. All commodities in storage are periodically reinspected in accordance with procedures set forth in the Commodity Inspection and Maintenance Handbook No. 2—IM, Revision 3. This handbook was updated in June 1985 to revise official temperature and humidity requirements and inspection schedules for dairy products.

Ordering Timeframes

Section 3(b)(8) of the Act requires that State DAs receive commodities not more than 90 days after such commodities are ordered, unless the DA specifies a longer delivery period. Recently, USDA reduced the minimum lead-time for the submission of orders for grain, peanut, and oil products by five days. Now State DAs need only submit these orders to FNS 65 to 70 days in advance of the requested month of shipment. Commodities ordered for the first half of the month are received within 90 days of the submission of the order. Most of the commodities ordered will be received within the 90-day period after submitting the order. However, some commodities ordered for the second half of the month shipping period could be received beyond the 90-day period in the law. The Department is examining options for ways to minimize or eliminate this and other delivery problems.

For example, to ensure State DAs receive commodities promptly, USDA tested a delivery period purchase system this school year. Delivery period purchasing requires vendors to deliver commodities during a specific period of time. In contrast, shipment period purchasing requires vendors to ship commodity during a specific period. The effects of delivery period purchasing will be analyed this spring. The factors to be analyzed include the impact on the submission of bids, product cost and the reliability of deliveries. The Department will also examine whether States have been promptly submitting consignee receipts since payments to vendors under delivery purchasing depend on these receipts. If consignee receipts are prompty submitted and if this method of purchasing is found to increase the reliability of commodity shipments without substantially increasing costs, USDA will consider the extension of delivery period purchasing for School Year 1989.

Orders for meat, polutry, fish, fruit and vegetable products are submitted to FNS as purchases take place, but no less than 30 days prior to shipment. Therefore, these surplus removal products are received within 90 days of submitting delivery orders to FNS.

Purchase Requirement

Under section 3(c)(1) of the Act, the Secretary may not refuse any vendor's offer in response to an invitation to bid solely on the basis that the vendor's offer provides less than the total poundage ordered for a destination, provided that the bid meets minimum truckload requirements. This section pertains to all commodities purchased against program entitlements, but makes exception for compliance with the Department's surplus removal responsibilities. For example, if the Department solicits bids for 80,000 pounds of an item to a destination and a vendor submits a bid for 40,000 pounds, that bid must be considered under the same criteria as a bid for 80,000 pounds. This provision is effective immediately for all entitlement commodities and the Department is now considering all such bids. Bids must, however, as stated in the law, be provided in the standard order sizes indicated in the purchase announcement requesting bids. This provision will allow more small businesses to participate fully in purchase programs.

Under section 3(c)(2) of the Act the Secretary may not enter into a contract for the purchase of entitlement commodities without considering the previous history and current patterns of the bidding party with respect to compliance with applicable meat inspection laws and other standards relating to the wholesomeness of food for human consumption. While never specified in previous legislation, the Department's ongoing practice is to maintain vendor history files and to monitor closely vendors' compliance with all laws regarding inspection and the safety of foods.

Prior to accepting bids from potential vendors, contracting officers determine whether they are responsibile food processors and reliable suppliers. Under an established system, the appropriate Federal inspectors and graders alert contracting officers to any deviations at a vendor's processing plants. Procurement announcements also require that vendors comply with applicable laws regarding wholesome food processing. In the past, vendors have had contracts terminated and have been debarred from bidding because of non-compliance. The Department intends to continue strict monitoring of existing and potential vendors' compliance with meat inspection and food wholesomeness laws and regulations.

Cost Benefit Anaylsis

Section 3(f)(1) of the Act requires the Secretary to establish procedures before October 4, 1988 to provide for a systematic review of the cost and benefits of providing commodities of the kind and quantity that are suitable to the needs of RAs. Prior to purchasing surplus removal commodities (meat, fish, poultry, fruit and vegetable products) AMS analyzes the costs of each purchase. The AMS purchase analysis includes assessing the quantity and type of commodities available and the needs of RAs. Using recipient agency data and Department commodity outlook projections, purchase plans are developed.

The Department offers each State DA its prorate share of the anticipated purchase quantity. Timeframes for shipping products and ordering options are provided to DAs at the time the offer is made. The quantity of commodity purchased, the form and the timeframes depend on the State DAs' acceptance requests. After purchases have been shipped to RAs, FNS uses existing communication mechanisms (complaint reports, acceptability surveys, and State Advisory Council Reports) to determine the RA benefit of specific commodities and whether purchases were suitable.

As required by law, the Department intends to formalize procedures for the analysis of RA needs to determine the suitability of purchases and the benefits derived from these purchases.

Commodity Field Testing

Section 3(g) of the Act requires ongoing field testing of present and anticipated commodity purchases. USDA currently has informal procedures for testing commodities. Small pilot purchases take place prior to offering large quanitities of new commodities to States. RAs receiving the new commodity are asked to participate in informal acceptability surveys. The results of these surveys are used to determine the need for specification changes and whether to pursue additional purchases. The Department does however intend to establish more formal field testing procedures.

"Buy American"

Section 3(h) of the Act mandates that the Secretary require that recipient agencies purchase, whenever possible, only food products produced in the United States. The requirement may be waived when RAs have unusual or ethnic preferences in food products or when the Secretary considers appropriate. RAs in Alaska, Hawaii, Guam, American Samoa, Puerto Rico, Virgin Islands, and the Commonwealth of Northern Mariana Islands are exempted from this requirement. This provision is effective as of the enactment of the law, January 8, 1988. Interim rules regarding the Secretary's implementation of this requirement will be forthcoming.

Uniform Interpretation

Section 3(i) of the Act requires the Secretary to take such actions as are necessary to ensure that regional offices of USDA interpret uniformly across the United States policies and regulations issued to implement this Act. The Department continues to review for consistency all policies and guidelines issued by regional offices related to provisions in this section. In addition, to ensure consistent monitoring of State DAs, FNS developed national guidelines to monitor the manner in which State DAs carry out their responsibilities.

Per Meal Value of Donated Foods

Section 3(j) of the Act amends section 6(e) of the National School Lunch Act by requiring that each State DA offer each school food authority not less than the national average per meal value of donated foods. Each offer shall include the full range of commodities to the extent that quantities requested are sufficient to allow efficient delivery to and within the State. This provision is effective upon enactment of the law. In the near future, the Department will issue interim rules with specific guidelines for implementing this provision.

Dated: April 13, 1988.

Sonia F. Crow,

Acting Administrator.

[FR Doc. 88-8501 Filed 4-18-88; 8:45 am]

BILLING CODE 3410-30-M

DEPARTMENT OF COMMERCE

Foreign-Trade Zones Board

[Docket 20-88]

Foreign-Trade Zone 82, Mobile, AL; Application for Expansion

An application has been submitted to the Foreign-Trade Zones Board (the Board) by the City of Mobile, Alabama, grantee of Foreign-Trade Zone 82, requesting authority to expand the zone to include additional acreage within the Brookley Complex and adjacent Brookley Airport, within the Mobile Customs port of entry. The application was submitted pursuant to the provisions of the Foreign-Trade Zones Act, as amended (19 U.S.C. 81a-81u), and the regulations of the Board (15 CFR Part 400). It was formally filed on April 8, 1988.

The Mobile zone was approved on February 24, 1983 (Board Order 208, 48 FR 9052, 3/3/83), and presently covers 13 acres within the Brookley Complex. The grantee has requested authority to include the entire Brookley Complex (368 acres) within the zone, and to expand the zone to include part of the adjacent Brookley Airport (667 acres). Both parcels are owned by the Mobile Airport Authority, a public corporation. The expansion is being requested to alow the City to market the zone more effectively as part of its economic development efforts.

No manufacturing approvals are being sought in the application. Such approvals would be requested from the Board on a case-by-case basis.

In accordance with the Board's regulations, an examiners committee has been appointed to investigate the application and report to the Board. The committee consists of: Joseph Lowry (Chairman), Foreign-Trade Zones Staff, U.S. Department of Commerce, Washington, DC 2030; David L. Willette, District Director, U.S. Customs Service, South Central Region, 250 North Water St., P.O. Box 2748, Mobile, AL 36652; and Colonel Larry Bonine, District Engineer, U.S. Army Engineer District, Mobile, P.O. Box 2288, Mobile, AL 26628-0001.

Comments concerning the proposed expansion are invited in writing from interested parties. They should be addressed to the Board's Executive Secretary at the address below and postmarked on or before May 31, 1988.

A copy of the application is available for public inspection at each of the following locations:

U.S. Customs District Office, 250 N. Water St., Mobile, AL 36652.

Office of the Executive Secretary, Foreign-Trade Zones Board, U.S. Department of Commerce, 14th & Pennsylvania Ave., NW., Room 1529 Washington, DC 20230.

Dated: April 13, 1988.

John J. Da Ponte, Jr.,

Executive Secretary

[FR Doc. 88-8555 Filed 4-18-88; 8:45 am]

BILLING CODE 3510-DS-M

International Trade Administration

Quarterly Update of Foreign Government Subsidies on Articles of Quota Cheese

AGENCY: International Trade Administration/Import Administration, Commerce.

ACTION: Notice of quarterly update of foreign government subsidies on articles of quota cheese.

SUMMARY: The Department of Commerce, in consultation with the Secretary of Agriculture, has prepared a quarterly update to its annual list of foreign government subsidies on articles of quota cheese. We are publishing the current listing of those subsidies that we have determined exist.

EFFECTIVE DATE: April 1, 1988.

FOR FURTHER INFORMATION CONTACT: Patricia W. Stroup or Paul J. McGarr, Office of Compliance, International Trade Administration, U.S. Department

of Commerce, Washington, DC 20230, telephone: (202) 377-2786.

SUPPLEMENTARY INFORMATION: Section 702(a) of the Trade Agreements Act of 1979 ("the TAA") requires the Department of Commece ("the Department") to determine, in consultation with the Secretary of Agriculture, whether any foreign government is providing a subsidy with respect to any article of quota cheese, as defined in section 701 (c)(1) of the TAA, and to publish an annual list and quarterly updates of the type and amount of those subsidies.

The Department has developed, in consultation with the Secretary of Agriculture, information on subsidies (as defined in section 702(h)(2) of the TAA) being provided either directly or indirectly by foreign governments on articles of quota cheese.

In the current quarter, the Department has determined that the subsidy amounts have changed for each of the countries for which subsidies were identified in our January 1, 1988 annual subsidy list. The appendix to this notice lists the country, the subsidy program or programs, and the gross and net amount of each subsidy on which information is currently available.

The Department will incorporate additional programs which are found to constitute subsidies, and additional information on the subsidy programs listed, as the information is developed.

The Department encourages any person having information on foreign government subsidy programs which benefit articles of quota cheese to submit such information in writing to the Acting Assistant Secretary for Import Administration, U.S. Department of Commerce, 14th Street and Constitution Avenue, NW., Washington, DC 20230.

This determination and notice are in accordance with section 702(a) of the TAA (19 U.S.C. 1202 note).

Joseph A. Spetrini,

Acting Assistant Secretary Import Administration.

Date: April 13, 1988.

APPENDIX.—QUOTA CHEESE SUBSIDY PROGRAMS

Country	Program(s)	Gross [1] subsidy	Net [2] subsidy
Belgium	European Community (EC) Restitution Payments	0.0¢/lb.	0.0¢/lb.
Canada	Export Assistance on Certain Types of Cheese	26.9¢/lb.	26.9¢/lb.
Denmark	EC Restitution Payments	0.0¢/lb.	0.0¢/lb.
Finland	Export Subsidy	104.2¢/lb.	104.2¢/lb.
	Indirect Subsidies	22.7¢/lb.	22.7¢/lb.
		126.9¢/lb.	126.9¢/lb.
France	EC Restitution Payments	0.0¢/lb.	0.0¢/lb.
Greece	EC Restitution Payments	0.0¢/lb.	0.0¢/lb.
Ireland	EC Restitution Payments	0.0¢/lb.	0.0¢/lb.
Italy	EC Restitution Payments	0.0¢/lb.	0.0¢/lb.
Luxembourg	EC Restitution Payments	0.0¢/lb.	0.0¢/lb.
Netherlands	EC Restitution Payments	0.0¢/lb.	0.0¢/lb.
Norway	Indirect (Milk) Subsidy	19.6¢/lb.	19.6¢/lb.
	Consumer Subsidy	43.4¢/lb.	43.4¢/lb.
		63.0¢/lb.	63.0¢/lb.
Spain	EC Restitution Payments	0.0¢/lb.	0.0¢/lb.
Switzerland	Deficiency Payments	113.6¢/lb.	113.6¢/lb.
United Kingdom	EC Restitution Payments	0.0¢/lb.	0.0¢/lb.
West Germany	EC Restitution Payments	0.0¢/lb.	0.0¢/lb.

[1] Defined in 19 U.S.C. 1677(5).
[2] Defined in 19 U.S.C. 1677(6).

[FR Doc. 88-8556 Filed 4-18-88; 8:45 am]
BILLING CODE 3510-DS-M

Short-Supply Review on Certain Steel Strip; Request for Comments

AGENCY: Import Administration/International Trade Administration, Commerce.

ACTION: Notice and request for comments.

SUMMARY: The Department of Commerce hereby announces its review of a request for short supply under Article 8 of the U.S.-EC Arrangement on Certain Steel Products with respect to certain bonderized cold-rolled steel strip for use in manufacturing needle roller bearing shells.

DATE: Comments must be submitted on or before April 29, 1988.

ADDRESS: Send all comments to Nicholas C. Tolerico, Director, Office of Agreements Compliance, Import Administration, U.S. Department of Commerce, Room 7866, 14th Street and Constitution Avenue NW., Washington, DC 20230.

FOR FURTHER INFORMATION CONTACT: Richard O. Weible, Office of Agreements Compliance, Import Administration, U.S. Department of Commerce, Room 3099, 14th Street and Constitution Avenue NW., Washington, DC 20230, (202) 377-0159.

SUPPLEMENTARY INFORMATION: Article 8 of the U.S.-EC Arrangement on Certain Steel Products provides that if the U.S. "* * * determines that because of abnormal supply or demand factors, the US steel industry will be unable to meet demand in the USA for a particular product (including substantial objective evidence such as allocation, extended delivery periods, or other relevant factors), an additional tonnage shall be allowed for such product."

We have received a short-supply request for two grades (MRST 443 and C15M) of special cold-rolled steel strip, bonderized on one side only, for use in deep-drawing needle roller bearing shells or housings. Steel strip to specification MRST 443 ranges from 22.0 mm to 202.0 mm in width, 0.5 mm to 1.2 mm in thickness, and conforms to DIN specification 1624. Steel strip to specification C15M ranges from 40.5 mm to 179.0 mm in width, 0.77 mm to 1.20 mm in thickness, and conforms to DIN specification 1544.

Any party interested in commenting on this request should send written comments as soon as possible, and no later than April 29, 1989. Comments should focus on economic factors

involved in granting or denying this request.

Commerce will maintain this request and all comments in a public file. Anyone submitting business proprietary information should clearly identify that portion of their submission and also provide a non-proprietary submission which can be placed in the public file. The public file will be maintained in the Central Records Unit, Room B-099, Import Administration, U.S. Department of Commerce at the above address.

Joseph A. Spetrini,

Acting Assistant Secretary for Import Administration.

April 13, 1988.

[FR Doc. 88-8560 Filed 4-18-88; 8:45 am]

BILLING CODE 3510-DS-M

Short-Supply Review on Certain Special Shapes; Request for Comments

AGENCY: Import Administration/International Trade Administration, Commerce.

ACTION: Notice of request for comments.

SUMMARY: The Department of Commerce hereby announces its review of a request for a short-supply determination under Article 8 of the U.S.-EC Arrangement on Certain Steel Products, with respect to certain heavy steel special shapes.

DATE: Comments must be submitted on or before April 29, 1988.

ADDRESS: Send all comments to Nicholas C. Tolerico, Director, Office of Agreements Compliance, Import Administration, U.S. Department of Commerce, Room 7866, 14th Street and Constitution Avenue NW., Washington, DC 20230.

FOR FURTHER INFORMATION CONTACT: Richard O. Weible, Office of Agreements Compliance, Import Administration, U.S. Department of Commerce, Room 7866, 14th Street and Constitution Avenue NW., Washington, DC 20230, (202) 377-0159.

SUPPLEMENTARY INFORMATION: Article 8 of the U.S.-EC Arrangement on Certain Steel Products provides that if the U.S. "* * * determines that because of abnormal supply or demand factors, the US steel industry will be unable to meet demand in the USA for a particular product (including substantial objective evidence such as allocation, extended delivery periods, or other relevant factors) an additional tonnage shall be allowed for such product or products * * *."

We have received a short-supply request for certain heavy special shapes including track shoe sections, track sprocket segment sections, and ripper shank profiles, that are used in the manufacture and assembly of earthmoving, construction, and materials handling machinery.

Any party interested in commenting on this request should send written comments as soon as possible, and no later than April 29, 1988. Comments should focus on the economic factors involved in granting or denying this request.

Commerce will maintain this request and all comments in a public file. Anyone submitting business proprietary information should clearly identify the business proprietary portion of the submission and also provide a non-proprietary submission which can be placed in the public file. The public file will be maintained in the Central Records Unit, Room B-099, Import Administration, U.S. Department of Commerce at the above address.

Joseph A. Spetrini,

Acting Assistant Secretary for Import Administration.

April 13, 1988.

[FR Doc. 88-8561 Filed 4-18-88; 8:45 am]

BILLING CODE 3510-DS-M

Short-Supply Review on Certain Semi-Finished Steel Slabs: Request for Comments

AGENCY: Import Administration/International Trade Administration, Commerce.

ACTION: Notice and request for comments.

SUMMARY: The Department of Commerce hereby announces its review of a request for a short-supply determination under Article 8 of the U.S.-EC Arrangement Concerning Trade in Certain Steel Products, the U.S.-Brazil Arrangement Concerning Trade in Certain Steel Products, and the U.S.-Korea Arrangement Concerning Trade in Certain Steel Products, with respect to various sizes and grades of carbon semi-finished steel slabs.

DATE: Comments must be submitted no later than April 29, 1988.

ADDRESS: Send all comments to Nicholas C. Tolerico, Director, Office of Agreements Compliance, Import Administration, U.S. Department of Commerce, Room 7866, 14th Street and Constitution Avenue NW., Washington, DC 20230.

FOR FURTHER INFORMATION CONTACT: Richard O. Weible, Office of Agreements Compliance, Import Administration, U.S. Department of Commerce, Room 7866, 14th Street and Constitution Avenue NW., Washington, DC 20230, (202) 377-0159.

SUPPLEMENTARY INFORMATION: Article 8 of the U.S.-EC, the U.S.-Brazil, and the U.S.-Korea steel arrangements provide that if the U.S. determines that because of abnormal supply or demand factors, the U.S. steel industry will be unable to meet demand in the USA for a particular product (including substantial objective evidence such as allocation, extended delivery periods, or other relevant factors), an additional tonnage shall be allowed for such product.

We have received a short-supply request for carbon semi-finished steel slabs ranging from 4 to 12 inches in thickness and 60 to 85 inches in width, having a maximum weight of 47,000 pounds, and used to produce ASTM specification A-36 and A-285 grade C plate.

Any party interested in commenting on this request should send written comments as soon as possible, and no later than April 29, 1988. Comments should focus on the economic factors involved in granting or denying this request.

Commerce will maintain this request and all comments in a public file. Anyone submitting business proprietary information should clearly so label the business proprietary portion of the submission and also provide a non-proprietary submission which can be placed in the public file. The public file will be maintained in the Central Records Unit, Room B-099, Import Administration, U.S. Department of Commerce, at the above address.

Joseph A. Spetrini,

Acting Assistant Secretary for Import Administration.

April 13, 1988.

[FR Doc. 88-8559 Filed 4-18-88; 8:45 am]

BILLING CODE 3510-DS-M

National Bureau of Standards

National Voluntary Laboratory Accreditation Program; Public Workshop

AGENCY: National Bureau of Standards, Commerce.

ACTION: Notice of public workshop.

SUMMARY: The National Bureau of Standards (NBS) will host a public workshop on July 14-15, 1988 to provide interested parties an opportunity to participate in the development of technical requirements for accrediting laboratories that perform bulk asbestos analysis.

DATES: The workshop will be held on Thursday July 14 from 7:00 p.m. to 10:00 p.m. and Friday July 15 from 9:00 a.m. to noon. Persons planning to attend the workshop should inform Dr. Lawrence Galowin, NVLAP, National Bureau of Standards, Admin. A527, Gaithersburg, MD 20899, by June 10, 1988, in order to obtain draft technical documents to be reviewed at the workshop.

Place: The workshop will be held at Bentley Hall, Johnson State College in Johnson, Vermont (approximately 45–50 miles from Burlington, VT.) as part of the Johnson Conference, "Asbestos—Measurement Research and Laboratory Accreditation" July 10–15, 1988 sponsored by The American Society for Testing and Materials, ASTM Committee D22.

SUPPLEMENTARY INFORMATION:

Background

This notice is issued in accordance with the NVLAP Procedures (15 CFR Part 7). In a **Federal Register** Notice dated October 26, 1987 (52 CFR 39977–39978) the National Bureau of Standards (NBS) announced the establishment of an accreditation program for laboratories that perform analyses for asbestos content in (1) bulk insulation and building material collected during public school inspections, and (2) airborne particulates collected following asbestos abatement projects. Establishment of the program is pursuant to section 206d of Pub. L. 99–519, the Asbestos Hazard Emergency Response Act (AHERA) of October 1986. Accreditation will be offered to all laboratories under procedures of the National Voluntary Laboratory Accreditation Program (NVLAP).

Technical criteria, requirements, and procedures for accreditation of laboratories performing analysis of asbestos content by polarized light microscopy (PLM), in bulk insulation and building materials, have been developed and will be presented at the workshop. All interested parties will have an opportunity to comment on all phases of the program. The workshop is part of the NVLAP process of assuring that accreditation programs are of high technical quality and are relevant to the needs of those affected by accreditation.

The following plans for the workshop have been established:

1. *Purpose:* The workshop will provide all interested persons with an opportunity to: (1) Participate in the development of technical criteria, requirements, and procedures for evaluation and accreditation of laboratories that perform analysis of bulk asbestos by Polarized Light Microscopy (PLM); and (2) discuss standards and/or other protocols applicable to the accreditation program.

2. *Procedure:* The workshop will be an informal meeting. The presiding NBS chairperson will allocate the time available for discussion of each issue to be addressed, and exercise such authority as may be necessary to insure the equitable and efficient conduct of the workshop and to proceed in an orderly manner.

3. *Provisions:* This workshop will be open to the public. No registration fee is required for the public workshop; housing is the responsibility of attendees.

Documents in Public Record

Summary minutes of the meeting will be prepared and made available for inspection and copying in the NVLAP program office, Room A527 Administration Buliding, Gaithersburg, Maryland.

Ernest Ambler,

Director.

Date: April 13, 1988.

[FR Doc. 88–8475 Filed 4–18–88; 8:45 am]

BILLING CODE 3510-13-M

National Oceanic and Atmospheric Administration

Marine Mammals; Issuance of Permit; Indianapolis Zoological Society (P409)

On Decembr 31, 1987, notice was published in the **Federal Register** (52 FR 49463) that an application had been filed by the Indianapolis Zoological Society, 1200 West Washington Street, Indianapolis Indiana 46222 to take Atlantic bottlenose dolphins (*Tursiops truncatus*) and Pacific false killer whales (*Pseudorca crassidens*) for public display.

Notice is hereby given that on April 13, 1988, as authorized by the provisions of the Marine Mammal Protection Act (16 U.S.C. 1361–1407), the National Marine Fisheries Service issued a Permit for the above taking subject to certain conditions set forth therein.

The Permit is available for review by interested persons in the following offices:

Office of Protected Resources and Habitat Programs, National Marine Fisheries Services, 1825 Connecticut Avenue NW., Room 805, Washington, DC;

Director, Northeast Region, National Marine Fisheries Service, 14 Elm Street, Federal Building, Gloucester, Massachusetts 01930; and

Diretor, Southeast Region, National Marine Fisheries Service, 9450 Koger Boulevard, St. Petersburg, Florida 33702.

Date: April 13, 1988.

Nancy Foster,

Director of Protected Resources and Habitat Programs, National Marine Fisheries Services.

[FR Doc. 88–8478 Filed 4–18–88; 8:45 am]

BILLING CODE 3510-22-M

National Marine Fisheries Service, Marine Mammals; Issuance of Permits; Kyushu African Lion Safari Co. Ltd. (P412)

On March 18, 1988, Notice was published in the **Federal Register** (53 FR 8944), that an application had been filed with the National Marine Fisheries Service by Kyushu African Lion Safari Co. Ltd., of Japan for a permit to take and export four (4) rehabilitated beached/stranded or captive born California sea lions (*Zalophus californianus*) for public display.

Notice is hereby given that on April 14, 1988, and as authorized by the provisions of the Marine Mammal Protection Act of 1972 (16 U.S.C. 1361–1407), the National Marine Fisheries Service issued a Public Display Permit for the above taking to Kyushu African Lion Safari subject to certain conditions set forth therein.

The Permit is available for review in the following offices:

Assistant Administrator for Fisheries, National Marine Fisheries Service, 1825 Connecticut Avenue NW., Washington, DC; and

Director, Southwest Region, National Marine Fisheries Service, 300 South Ferry Street, Terminal Island, California 90731.

Date: April 14, 1988.

Nancy Foster,

Director, Office of Protected Resources and Habitat Programs, National Marine Fisheries Service.

[FR Doc. 88–8477 Filed 4–18–88; 8:45 am]

BILLING CODE 3510-22-M

Marine Mammals; Application for Permit; John G. Shedd Aquarium (P396A)

Notice is hereby given that an Applicant has applied in due form for a Permit to take marine mammals as authorized by the Marine Mammal Protection Act of 1972 (16 U.S.C. 1361–1407), and the Regulations Governing the Taking and Importing of Marine Mammals (50 CFR Part 216).

1. *Applicant:* John G. Shedd Aquarium, 1200 South Lakeshore Drive, Chicago, Illinois 60605.

2. *Type of Permit:* Public Display.

3. *Name and Number of Marine Mammals:* Pacific white-sided dolphin (*Lagenorhynchus obliquidens*), 8

4. *Type of Take:* Capture/maintain in captivity.

5. *Location of Activity:* Monterey Bay, California or the Santa Catalina Channel in the Southern California Bight Area.

6. *Period of Activity:* 4 years.

The arrangements and facilities for transporting and maintaining the marine mammals requested in the above described application have been inspected by a licensed veterinarian, who has certified that such arrangements and facilities are adequate to provide for the well-being of the marine mammals involved.

Concurrent with the publication of this notice in the **Federal Register**, the Secretary of Commerce is forwarding copies of this application to the Marine Mammal Commission and the Committee of Scientific Advisors.

Written data or views, or requests for a public hearing on this application should be submitted to the Assistant Administrator for Fisheries, National Marine Fisheries Service, U.S. Department of Commerce, Washington, DC 20235, within 30 days of the publication of this notice. Those individuals requesting a hearing should set forth the specific reasons why a hearing on this particular application would be appropriate. The holding of such hearing is at the discretion of the Assistant Administrator for Fisheries.

All statements and opinions contained in this application are summaries of those of the Applicant and do not necessarily reflect the views of the National Marine Fisheries Service.

Documents submitted in connection with the above application are available for review in the following offices:

Office of Protected Resources and Habitat Programs, National Marine Fisheries Service, 1825 Connecticut Avenue NW. Room 805, Washington, DC.;

Director, Southwest Region, National Marine, Fisheries Service, 300 South Ferry Street, Terminal Island, California 90731; and

Director, Northeast Region, National Marine Fisheries Service, 14 Elm Street, Federal Building, Gloucester, Massachusetts 01930.

Date: April 14, 1988.

Nancy Foster,

Director, Office of Protected Resources and Habitat Programs National Marine Fisheries Service.

[FR Doc. 88-8480 Filed 4-18-88; 8:45 am]

BILLING CODE 3510-22-M

Marine Mammals; Application for Permit; Theater of the Sea (P92C)

Notice is hereby given that an Applicant has applied in due form for a Permit to take marine mammals as authorized by the Marine Mammal Protection Act of 1972 (16 U.S.C. 1361–1407), and the Regulations Governing the Taking and Importing of Marine Mammals (50 CFR Part 216).

1. Applicant: Theater of the Sea, P.O. Box 407, Islamorada, Florida 33036.

2. Type of Permit: Public Display.

3. Name and Number of Marine Mammals: Atlantic bottlenose dolphin *(Tursiops truncatus)*, 6.

4. Type of Take: Capture and maintain for show performances and in the human/dolphin swin programs.

5. Location of Activity: Charlotte Harbor and Sarasota, Florida, not to extend farther north than Crystal River.

6. Period of Activity: 3 Years.

The arrangements and facilities for transporting and maintaining the marine mammals requested in the above described application have been inspected by a licensed veterinarian, who has certified that such arrangements and facilities are adequate to provide for the well-being of the marine mammals involved.

Concurrent with the publication of this notice in the **Federal Register**, the Secretary of Commerce is fowarding copies of this application to the Marine Mammal Commission and the Committee of Scientific Advisors.

Written data or views, or requests for a public hearing on this application should be submitted to the Assistant Administrator for Fisheries, National Marine Fisheries Service, U.S. Department of Commerce, Washington, DC 20235, within 30 days of the publication of this notice. Those individuals requesting a hearing should set forth the specific reasons why a hearing on this particular application would be appropriate. The holding of such hearing is at the discretion of the Assistant Administrator for Fisheries.

All statements and opinions contained in this application are summaries of those of the Applicant and do not necessarily reflect the views of the National Marine Fisheries Services.

Documents submitted in connection with the above application are available for review by interested persons in the following offices:

Office of Protected Resources and Habitat Programs, National Marine Fisheries Service, 1825 Connecticut Avenue NW., Rm. 805, Washington, DC; and

Director, Southeast Region, National Marine Fishieries Service, 9450 Koger Boulevard, St. Petersburg, Florida 33702.

Date: April 14, 1988.

Nancy Foster,

Director, Office of Protected Resources and Habitat Programs, National Marine Fisheries Service.

[FR Doc. 88-8481 Filed 4-18-88; 8:45am]

BILLING CODE 3510-22-M

Marine Mammals; Application for Permit; Dr. Randall S. Wells (P319A)

Notice is hereby given that an Applicant has applied in due form for a Permit to take marine mammals as authorized by the Marine Mammal Protection Act of 1972 (16 U.S.C. 1361–1407), and the Regulations Governing the Taking and Importing of Marine Mammals (50 CFR Part 216).

1. Applicant: Dr. Randall S. Wells, Dolphin Biology Research Associates, Inc., 163 Siesta Drive, Sarasota, Florida 34242.

2. Type of Permit: Scientific Research.

3. Name and Number of Marine Mammals: Atlantic bottlenose dolphins (*Tursiops truncatus*), 3,000.

4. Type of Take: The Applicant proposes to take bottlenose dolphins by inadvertent harassment during approach from small boats to conduct photographic identification censuses, behavioral observations, and underwater acoustic recordings over a 5-year period. Animals may be approached repeatedly but not more than twice each day. The objectives of the NMFS sponsored studies are detection of large-scale changes in abundance in the Southeast U.S. and establishment of archival database(s) for long-term trend detection. This information will provide data necessary to determine if modification of dolphin take quotas are necessary. The behavioral observations and underwater acoustics studies will provide data on patterns of social interactions between males and females and provide new insights into the possible functions of some animals' acoustic emissions.

5. Location and Duration of Activity: Central west coast of Florida from Crystal River southward to Fort Myers over a 5-year period.

Concurrent with the publication of this notice in the **Federal Register**, the Secretary of Commerce is forwarding copies of this application to the Marine Mammal Commission and the Committee of Scientific Advisors.

Written data or views, or requests for a public hearing on this application should be submitted to the Assistant Administrator for Fisheries, National Marine Fisheries Service, U.S. Department of Commerce, Washington, DC 20235, within 30 days of the publication of this notice. Those individuals requesting a hearing should set forth the specific reasons why a hearing on this particular application would be appropriate. The holding of such hearing is at the discretion of the Assistant Administrator for Fisheries. All statements and opinions contained in this application are summaries of those of the Applicant and do not necessarily reflect the views of the National Marine Fisheries Service.

Documents submitted in connection with the above application are available for review by interested persons in the following offices:

Office of Protected Resources and Habitat Programs, National Marine Fisheries Service, 1825 Connecticut Avenue NW., Rm. 805, Washington, DC; and

Director, Southeast Region, National Marine Fisheries Service, 9450 Koger Boulevard, St. Petersburg, Florida 33702.

Date: April 13, 1988.

Nancy Foster,

Director, Office of Protected Resources and Habitat Programs.

[FR Doc. 88-8482 Filed 4-18-88; 8:45 am]

BILLING CODE 3510-22-M

Marine Mammals; Issuance of Permit; Dr. Bernd Wursig (P36A)

On November 20, 1987, notice was published in the **Federal Register** (52 FR 44622) that an application had been filed by Dr. Bernd Wursig, Associate Professor of Marine Biology, and Ms. Nancy Black, Moss Landing Marine Laboratories, Moss Landing, California 95039, for a permit to take by harassment Pacific white sided dolphins (*Lagenorhynchus obliquidens*) for the purposes of scientific research.

Notice is hereby given that on April 13, 1988, and as authorized by the provisions of the Marine Mammal Protection Act of 1972 (16 U.S.C. 1361–1407), the National Marine Fisheries Service issued a Permit for the above taking subject to certain conditions set forth therein.

The Permit is available for review by interested persons in the following office:

Assistant Administrator for Fisheries, National Marine Fisheries Service, 1825 Connecticut Avenue NW., Room 805, Washington, DC 20235; and

Director, Southwest Region, National Marine Fisheries Service, 300 South Ferry Street, Terminal Island, California 90731.

Dated: April 13, 1988.

Nancy Foster,

Director, Office of Protected Resources and Habitat Programs, National Marine Fisheries Service.

[FR Doc. 88-8479 Filed 4-18-88; 8:45 am]

BILLING CODE 3510-22-M

COMMITTEE FOR THE IMPLEMENTATION OF TEXTILE AGREEMENTS

Request for Public Comment on Bilateral Textile Consultations With the Government of Hong Kong

April 13, 1988.

AGENCY: Committee for the Implementation of Textile Agreements (CITA).

ACTION: Requesting public comment.

Authority: Executive Order 11651 of March 3, 1972, as amended; section 204 of the Agricultural Act of 1956, as amended (7 U.S.C. 1854)

FOR FURTHER INFORMATION CONTACT: Janet Heinzen, International Trade Specialist, Office of Textiles and Apparel, U.S. Department of Commerce, (202) 377–4212.

SUPPLEMENTARY INFORMATION: On March 15, 1988, the Government of the United States requested consultations with the Government of Hong Kong with respect to staple artificial fabric in Category 611. This request was made on the basis of the current Bilateral Textile Agreement between the Governments of the United States and Hong Kong.

If no solution is agreed upon in consultations between the two governments, the United States may request the Government of Hong Kong to limit exports in Category 611, produced or manufactured in Hong Kong and exported to the United States during 1988. The United States reserves the right to control imports at the established level.

A description of the textile categories in terms of T.S.U.S.A. numbers is available in the CORRELATION: Textile and Apparel Categories with Tariff Schedules of the United States Annotated (see **Federal Register** notice 52 FR 47745, dated December 11, 1987).

Anyone wishing to comment or provide data or information regarding the treatment of Category 611, under the agreement with the Government of Hong Kong, or in any other respect thereof, or to comment on domestic production or availability of man-made fiber textiles included in the category, is invited to submit such comments or information in ten copies to Mr. James H. Babb, Chairman, Committee for the Implementation of Textile Agreements, International Trade Administration, U.S. Department of Commerce, Washington, DC 20230. Comments or information submitted in response to this notice will be available for public inspection in the Office of Textiles and Apparel, Room 3100, U.S. Department of Commerce, 14th and Constitution Avenue NW., Washington, DC.

Further comment may be invited regarding particular comments or information received from the public which the Committee for the Implementation of Textile Agreements considers appropriate for further consideration.

The solicitation of comments regarding any aspect of the agreement or the implementation thereof is not a waiver in any respect of the exemption contained in 5 U.S.C. 553(a)(1) relating to matters which constitute "a foreign affairs function of the United States."

William J. Dulka,

Acting Chairman, Committee for the Implementation of Textile Agreements.

[FR Doc. 88-8518 Filed 4-14-88; 2:09 pm]

BILLING CODE 3510-DR-M

DEPARTMENT OF DEFENSE

Department of the Army

Extension of Public Comment Period for Draft Environmental Impact Statement for the Biological Aerosol Test Facility; Dugway Proving Ground, Utah

AGENCY: Department of the Army, Department of Defense.

ACTION: Notice to extend the Public Comment Period for the Proposed Biological Aerosol Test Facility, Dugway Proving Ground, Utah.

---

1. SUMMARY: The Department of the Army, as Executive Agency for the Department of Defense (DOD), published a Draft Environmental Impact Statement for the Biological Aerosol Test Facility, Dugway Proving Ground, Utah, in late February 1988. The public comment period was originally scheduled to end on March 28, 1988. The

Commander, Dugway Proving Ground, extended the public comment period to April 14, 1988. The Army now extends the pubilc comment period for the Draft Environmental Impact Statement. A notice will be published at least 30 days in advance when the public comment period will be closed.

2. The Draft EIS for the Biological Aerosol Test Facility may be obtained by contacting Ms. Kathy Whitaker at commercial telephone (801) 831-2116, or by writing to the following address: Commander, U.S. Army Dugway Proving Ground, STEDP-PA, Dugway, Utah 84022-5000. Written comments should be submitted to the same address.

Lewis D. Walker,

Deputy for Environment, Safety and Occupational Health OASA (I&L).

[FR Doc. 88-8495 Filed 4-18-88; 8:45 am]

BILLING CODE 3710-08-M

Department of the Navy

Navy Resale Advisory Committee; Partially Closed Meeting

Pursuant to the provisions of the Federal Advisory Committee Act (5 U.S.C. app.), notice is hereby given that the Navy Resale System Advisory Committee will meet on May 28, 1988, in the Savoy Room, the Ritz-Carlton Hotel, 160 East Pearson Street, Chicago, Illinois, 60611. The meeting will consist of two sessions: the first from 8:00 a.m. to 8:50 a.m.; and the second from 9:00 a.m. until 4:00 p.m. The purpose of the meeting is to examine policies, operations, and organization of the Navy Resale System and to submit recommendations to the Secretary of the Navy. The agenda will include discussions of the organization of the Resale System, planning, financial management, merchandising, field support, and industrial relations.

The Secretary of the Navy has determined in writing that the public interest requires that the second session of the meeting be closed to the public because it will involve discussions of information pertaining solely to trade secrets and confidential commercial or financial information. These matters fall within the exemptions listed in subsections 552b (c)(2)(4), and (9)(B) of WR 18 April 86 Title 5, United States Code. Therefore, the second session will be closed to the public.

For further information concerning this meeting, contact: Commander W. T. Kaloupek, SC, USN, Naval Supply Systems Command, NAVSUP 09B, Room 606, Crystal Mall, Building No. 3, Arlington, Virginia 22202, Telephone Number: (202) 695-5457.

Date: April 14, 1988.

W.R. Babington, Jr.,

Commander, JAGC, USN, Federal Register Liaison Officer.

[FR Doc. 88-8521 Filed 4-18-88; 8:45 am]

BILLING CODE 3810-AE-M

Naval Research Advisory Committee; Closed Meeting

Pursuant to the provisions of the Federal Advisory Committee Act (5 U.S.C. App.), notice is hereby given that the Naval Research Advisory Committee Panel on Superconductivity will meet on May 3-4, 1988. The meeting will be held at the Office of the Chief of Naval Research, 800 N. Quincy St., Arlington, VA. The meeting will commence at 8:00 a.m. and terminate at 5:30 p.m. on May 3; and commence at 8:00 a.m. and terminate at 4:00 p.m. on May 4, 1988. All sessions of the meeting will be closed to the public.

The purpose of the meeting is to provide briefings for the panel members on the benefits, barriers and strategies related to superconducting materials for naval applications. The agenda will include a program overview, discussions addressing material and application requirements, and the Navy's perspective on requirements. These briefings and discussions will contain classified information that is specifically authorized under criteria established by Executive Order to be kept secret in the interest of national defense and is in fact properly classified pursuant to such Executive Order. The classified and nonclassified matters to be discussed are so inextricably intertwined as to preclude opening any portion of the meeting. Accordingly, the Secretary of the Navy has determined in writing that the public interest requires that all sessions of the meeting be closed to the public because they will be concerned with matters listed in section 552b(c)(1) of Title 5, United States Code.

For further information concerning this meeting contact: Commander L. W. Snyder, U.S. Navy, Office of Naval Research, 800 North Quincy Street, Arlington, VA 22217-5000, Telephone Number: (202) 696-4879.

Date: April 14, 1988.

W. R. Babington, Jr.,

Commander, JAGC, U.S. Navy, Federal Register Liaison Officer.

[FR Doc. 88-8522 Filed 4-18-88; 8:45 am]

BILLING CODE 3810-AE-M

DEPARTMENT OF EDUCATION

Education Appeal Board; Applications for Review

AGENCY: Department of Education.

ACTION: Notice of applications for review accepted for hearing by the Education Appeal Board.

SUMMARY: This notice lists the applications for review accepted for hearing by the Education Appeal Board (the Board) between December 28, 1987 and March 31, 1988. The Chairman has prepared a summary of each appeal to help potential intervenors. In addition, the notice explains how interested third parties may intervene in proceedings before the Board.

FOR FURTHER INFORMATION CONTACT: The Honorable Ernest C. Canellos,

Chairman, Education Appeal Board, 400 Maryland Avenue SW. (Room 3053, FOB-6), Washington, DC 20202. Telephone: (202) 732-1754.

SUPPLEMENTARY INFORMATION: Under sections 451 through 454 of the General Education Provisions Act (20 U.S.C. 1234 et seq.), the Board has authority to conduct (1) audit appeal hearings, (2) withholding, termination, and cease and desist hearings initiated by the Secretary of Education (the Secretary), and (3) other proceedings designated by the Secretary as being within the jurisdiction of the Board.

The Secretary has designated the Board as having jurisdiction over appeal proceedings related to final audit determinations, the withholding or termination of funds, and cease and desist actions for most grant programs administered by the Department of Education (the Department). The Secretary also has designated the Board as having jurisdiction to conduct hearings concerning most Department-administered programs that involve (a) a determination that a grant is void, (b) the disapproval of a request for permission to incur an expenditure during the term of a grant, or (c) determinations regarding cost allocation plans or special rates negotiated with specified grantees.

Regulations governing Board jurisdiction and procedures are set forth in 34 CFR Part 78.

Applications Accepted

Appeal of the California State Department of Rehabilitation, Docket No. 27(263)87, ACN: 09-40103

The State Department of Rehabilitation (State) appealed a final letter of determination issued by the Regional Commissioner of the Rehabilitation Services Administration. The underlying audit reviewed programs conducted under the Rehabilitation Act of 1973, as amended, during fiscal year 1984.

The Commissioner concluded that the State improperly allocated indirect costs in the conduct of its various programs and failed to develop an approved cost allocation program.

The Department seeks a refund of $7,763,552. The State disputes all liability.

Appeal of the Appalachian State University (NC), Docket No. 1(265)88, ACN: 04-75068

The University appealed a final letter of determination issued by the Grants and Contracts Service (GCS). The underlying audit reviewed the University's administration of the Upward Bound and Project Sunrise programs conducted between July 1, 1985 and June 30, 1986.

GCS determined that the University failed to provide sufficient documentation to establish its "in kind" participation in the subject program.

The Department seeks a refund of $17,498. The University disputes liability for all but $256.

Appeal of the University of Wisconsin, Docket No. 2(266)88, ACN: 05-70307

The University appealed a final letter of determination issued by Grants and Contracts Service (GCS). The underlying audit reviewed the University's High School Equivalency Program conducted between October 1, 1982 and August 31, 1986.

GCS determined that the University incurred excessive costs for housing and meals, failed to document travel records for recruiters' activities, and incurred excessive fleet car penalties for vehicles used to transport recruiters.

The Department seeks a refund of $48,943. The University admits liability for fleet car penalties and excessive meals amounting to $6,460, but disputes all remaining liability.

Appeal of the State of Rhode Island, Docket No. 3(267)88, ACN: 01-62002

The State appealed a final letter of determination issued jointly by the Assistant Secretaries of Special Education and Rehabilitative Services, Vocational and Adult Education, and Elementary and Secondary Education. The underlying single-State audit, conducted by the State's Auditor General, reviewed various State-operated, federally-funded, education programs.

The Assistant Secretaries determined that certain expenditures were not authorized, or they were not properly documented; and, unemployment compensation payments were improperly charged to federal grants.

The Department seeks a refund of $22,173. The State argues that the final letter of determination was directed to the State's Commissioner of Education yet, some of the findings relate to programs under the auspices of other State agencies, over which the Commissioner has no control. As to those claims over which the Commissioner has responsibility, the State disputes liability in its entirely.

Appeal of Institutional Development and Economic Affairs Service, Inc., (IDEAS), Docket No. 4(268)88, ACN: 08-60501

IDEAS appealed a final letter of determination issued by the Grants and Contracts Service (GCS). The underlying audit reviewed eight grants from the Department that were administered by IDEAS during the five years ending October 31, 1985.

GCS determined that improper costs were applied against the grants; costs were incurred after the grant period; and costs charged to the grant exceeded the costs which were incurred.

The Department seeks a refund of $65,983. IDEAS disputes all liability.

Appeal of the Illinois State Library, Docket No. 5(269)88, ACN: 05-75137

The State Library appealed a final letter of determination issued by the Assistant Secretary for Educational Research and Improvement. The underlying single-State audit reviewed costs charged under the Library Services and Construction Act (LSCA) for the period July 1, 1984 through June 30, 1986.

The Assistant Secretary sustained the audit findings that the State Library used LSCA funds to benefit non-public libraries, and the State Library failed to recover scholarships from those recipients who refused to pursue careers in public library administration.

The Departent seeks repayment of $1,786,278. The State Library denies all liability.

Intervention

Regulations in 34 CFR 78.43 provide that an interested person, group or agency may file an application to the Board Chairman to intervene in an appeal before the Board.

An application to intervene must indicate to the satisfaction of the Board Chairman or, as appropriate, the Panel Chairperson, that the potential intervenor has an interest in, and information relevant to, the specific issues raised in the appeal. If an application to intervene is approved, the intervenor becomes a party to the proceedings.

Applications to intervene, or questions, should be addressed to the Board Chairman at the address provided above.

(20 U.S.C. 1234)

(Catalog of Federal Domestic Assistance No. not applicable)

Dated: April 13, 1988.

Michelle Easton,

Acting Deputy Under Secretary, Intergovernmental and Interagency Affairs.

[FR Doc. 88-8504 Filed 4-18-88; 8:45 am]

BILLING CODE 4000-01-M

DEPARTMENT OF ENERGY

Economic Regulatory Administration

[ERA Docket No. 88-14-NG]

Natural Gas Marketing Services Cooperative Association Inc., Application To Import Natural Gas From Canada

AGENCY: Department of Energy Economic Regulatory Administration, DOE.

ACTION: Notice of application for blanket authorization to import natural gas.

SUMMARY: The Economic Regulatory Administration (ERA) of the Department of Energy (DOE) gives notice of receipt on March 21, 1988, of an application filed by Natural Gas Marketing Services Cooperative Association Inc. (NGMS) for blanket authorization to import up to a maximum of 3.6 Bcf of natural gas from a variety of Canadian suppliers over a two-year term beginning on the date of first delivery.

The application is filed with the ERA pursuant to section 3 of the Natural Gas Act and DOE Delegation Order No. 0204-111. Protests, motions to intervene, notices of intervention and written comments are invited.

DATE: Protests, motions to intervene or notices of intervention, as applicable, requests for additional procedures and written comments are to be filed no later than May 19, 1988.

FOR FURTHER INFORMATION CONTACT:

John Boyd, Natural Gas Division, Economic Regulatory Administration, Forrestal Building, Room GA-076, 1000 Independence Avenue SW., Washington, DC 20585, (202) 586-4523.

Diane Stubbs, Natural Gas and Mineral Leasing, Office of General Counsel, U.S. Department of Energy, 1000 Independence Avenue SW., Washington, DC 20585, (202) 586-6667.

SUPPLEMENTARY INFORMATION: NGMS is a Pennsylvania corporation and a wholly owned subsidiary of Fox Oil and Gas, Inc. NGMS intends to utilize existing facilities of U.S. and Canadian pipelines for the transportation of its imported gas supplies.

NGMS requests that an authorization be granted on an expedited basis. An ERA decision on MGMS's request for expedited treatment will not be made until all responses to this notice have been received and evaluated.

The decision on this application will be made consistent with the DOE's gas import policy guidelines, under which the competitiveness of an import arrangement in the markets served is the primary consideration in determining whether it is in the public interest (49 FR 6684, February 22, 1984). Parties that may oppose this application should comment in their responses on the issue of competitiveness as set forth in the policy guidelines. The applicant asserts that this import arrangement is competitive. Parties opposing the arrangement bear the burden of overcoming this assertion.

Public Comment Procedures

In response to this notice, any person may file a protest, motion to intervene or notice of intervention, as applicable, and written comments. Any person wishing to become a party to the proceeding and to have the written comments considered as the basis for any decision on the application must, however, file a motion to intervene or notice of intervention, as applicable. The filing of a protest with respect to this application will not serve to make the protestant a party to the proceeding, although protests and comments received from persons who are not parties will be considered in determining the appropriate action to be taken on the application. All protests, motions to intervene, notices of intervention, and written comments must meet the requirements that are specified by the regulations in 10 CFR Part 590.

Protests, motions to intervene, notices of intervention, requests for additional procedures, and written comments should be filed with the Natural Gas Divsion, Office of Fuels Programs, Economic Regulatory Administration, Room GA-076, RG-23, Forrestal Building, 1000 Independence Avenue SW., Washington, DC 20585, (202) 586-9478. They must be filed no later than 4:30 p.m. e.d.t., May 19, 1988.

The Administrator intends to develop a decisional record on the application through responses to this notice by parties, including the parties' written comments and replies thereto. Additional procedures will be used as necessary to achieve a complete understanding of the facts and issues. A party seeking intervention may request that additional procedures be provided, such as additional written comments, an oral presentation, a conference, or trial-type hearing. Any request to file additional written comments should explain why they are necessary. Any request for an oral presentation should identify the substantial question of fact, law, or policy at issue, show that it is material and relevant to a decision in the proceeding, and demonstrate why an oral presentation is needed. Any request for a conference should demonstrate why the conference would materially advance the proceeding. Any request for a trial-type hearing must show that there are factual issues genuinely in dispute that are relevant and material to a decision and that a trial-type hearing is necessary for a full and true disclosure of the facts.

If an additional procedure is scheduled, the ERA will provide notice to all parties. If no party requests additional procedures, a final opinion and order may be issued based on the official record, including the application and responses filed by parties pursuant to this notice, in accordance with 10 CFR 590.316.

A copy of NGMS's application is available for inspection and copying in the Natural Gas Division Docket Room, GA-076-A at the above address. The docket room is open between the hours of 8:00 a.m. and 4:30 p.m., Monday through Friday, except Federal holidays.

Issued in Washington, DC, April 12, 1988.

Constance L. Buckley,

Director, Natural Gas Division, Office of Fuels Programs, Economic Regulatory Administration.

[FR Doc. 88-8579 Filed 4-18-88; 8:45 am]

BILLING CODE 6450-01-M

Energy Information Administration

Agency Collections Under Review by the Office of Management and Budget

AGENCY: Energy Information Administration, DOE.

ACTION: Notice of requests submitted for clearance to the Office of Management and Budget.

SUMMARY: The Energy Information Administration (EIA) has submitted the energy information collection(s) listed at the end of this notice to the Office of Management and Budget (OMB) for approval under provisions of the Paperwork Reduction Act (44 U.S.C. Chapter 35).

The listing does not contain information collection requirements contained in new or revised regulations which are to be submitted under 3504(h) of the Paperwork Reduction Act, nor management and procurement assistance requirements collected by the Department of Energy (DOE).

Each entry contains the following information: (1) The sponsor of the collection (the DOE component or Federal Energy Regulatory Commission (FERC)); (2) collection number(s); (3) current OMB docket number (if applicable); (4) collection title; (5) type

of request, e.g., new, revision, or extension; (6) frequency of collection; (7) response obligation, i.e., mandatory, voluntary, or required to obtain or retain benefit; (8) affected public; (9) an estimate of the number of respondents per report period; (10) an estimate of the number of responses annually; (11) annual respondent burden, i.e., an estimate of the total number of hours needed to respond to the collection; and (12) a brief abstract describing the proposed collection and the respondents.

DATES: Comments must be filed by May 19, 1988.

ADDRESS: Address comments to the Department of Energy Desk Officer, Office of Information and Regulatory Affairs, Office of Management and Budget, 726 Jackson Place NW., Washington, DC 20503. (Comments should also be addressed to the Office of Statistical Standards, at the address below.)

FOR FURTHER INFORMATION AND COPIES OF RELEVANT MATERIALS CONTACT: Carole Patton, Office of Statistical Standards (EI-70), Energy Information Administration, M.S. 1H-023, Forrestal Building, 1000 Independence Avenue SW., Washington, DC 20585, (202) 586-2222.

SUPPLEMENTARY INFORMATION: If you anticipate that you will be submitting comments, but find it difficult to do so within the period of time allowed by this Notice, you should advise the OMB DOE Desk Officer of your intention to do so as soon as possible. The Desk Officer may be telephoned at (202) 395-3084.

The energy information collection submitted to OMB for review was:

1. Federal Energy Regulatory Commission.
2. FERC-549.
3. 1902-0086.
4. NGPA Title III Transactions.
5. Extension.
6. On Occasion.
7. Mandatory.
8. Businesses or other for profit.
9. 294 respondents.
10. 4,900 responses.
11. 13,230 hours.
12. The purpose of this application and filing requirement is to ensure that fair and equitable rates are charged for certain transportation and sales transactions in accordance with Title III of the Natural Gas Policy Act. Respondents are natural gas pipeline companies.

Statutory Authority: Secs. 5(a), 5(b), 13(b), and 52, Pub. L. 93-275, Federal Energy Administration Act of 1974, (15 U.S.C. 764(a), 764(b), 772(b) and 790(a)).

Issued in Washington, DC, April 14, 1988.

Yvonne M. Bishop,

Director, Statistical Standards, Energy Information Administration.

[FR Doc. 88-8578 Filed 4-18-88; 8:45 am]

BILLING CODE 6450-01-M

Federal Energy Regulatory Commission

[Docket Nos. EC88-17-000, et al.]

Gulf States Utilities Co. et al.; Electric Rate, Small Power Production, and Interlocking Directorate Filings

April 15, 1988.

Take notice that the following filings have been made with the Commission:

1. Gulf States Utilities Company

[Docket No. EC88-17-000]

Take notice that on April 6, 1988, Gulf States Utilities Company (Gulf States) tendered for filing an application seeking an order pursuant to section 203 of the Federal Power Act authorizing the sale of a substation by Gulf States to the Department of Energy (DOE). This facility serves the DOE's Strategic Petroleum Reserve located in Hackberry, Louisiana.

Comment date: May 2, 1988, in accordance with Standard Paragraph E at the end of this notice.

2. Iowa Public Serivce Company

[Docket No. ES88-34-000]

Take notice that on April 5, 1988, Iowa Public Service Company filed its application with the Federal Energy Regulatory Commission, pursuant to section 204 of the Federal Power Act, seeking an order (1) authorizing it to issue and sell, in one or more public offerings or private placements, prior to April 30, 1990, fixed rate debt in the form of secured First Mortgage Bonds in aggregate principal amount of not more than $60,000,000 and (2) exempting the issuance from competitive bidding pursuant to 18 CFR 34.2(b)(2).

Comment date: May 4, 1988, in accordance with Standard Paragraph E at the end of this notice.

3. Patrick J. Chambers, Jr.

[Docket No. ID-1719-002]

Take notice that on April 6, 1988, Patrick J. Chambers, Jr. tendered for filing a supplemental application for authorization under section 305(b) of the Federal Power Act and Part 45 of the Regulations of the Federal Energy Regulatory Commission to hold the following interlocking positions:

Position	Corporation	Classification
Director, Senior Vice President and Chief Financial Officer.	Orange and Rockland Utilities, Inc.	Public Utility.
Director, Senior Vice President and Chief Financial Officer.	Rockland Electric Company.	Public Utility.
Director, Senior Vice President and Chief Financial Officer.	Pike County Light & Power Company.	Public Utility.
Director	Midlantic National Bank/North.	National Banking Association—Affiliate of Authorized Foreign Underwriter.

Comment date: May 2, 1988, in accordance with Standard Paragraph E at the end of this notice.

4. John Stavropoulos

[Docket No. ID-2336-000]

Take notice that on April 8, 1988, John Stavropoulos tendered for filing an application for authorization under section 305(b) of the Federal Power Act and Part 45 of the Regulations of the Federal Energy Regulatory Commission to hold the following positions:

Position	Corporation
Director	Central Illinois Public Service Company.
Director	First Chicago Corporation.
Director	First National Bank of Chicago.

Comment date: May 2, 1988, in accordance with Standard Paragraph E at the end of this notice.

5. Arizona Public Service Company

[Docket No. EC88-16-000]

Take notice that on April 7, 1988, Arizona Public Service Company (APS) tendered for filing an application for sale of certain electrical facilities, generally including 5¾ miles of a 69kV transmission line, conductors and poles to Salt River Project Agricultural Improvement and Power District (District). APS is constructing a 230kV line to serve the area, and the ownership of the facilities by Company is no longer necessary. District is able to utilize the facilities instead of Company's removing them. No customer of either party will be affected by the proposed sale.

A request for reduction in filing fee from $10,300 to $3,930 has been sought due to the small amount involved in the sale, approximately $110,000, and the minimal time which should be required to review this Application.

Copies of the filing were served upon the District and the Arizona Corporation Commission. Approval of the filing is requested as soon as possible, but in no event later than forty-five (45) days from the filing date.

Comment date: May 2, 1988, in accordance with Standard Paragraph E at the end of this document.

6. Central Vermont Public Service Corporation, Lyndonville Electric Department, Village of Johnson Water and Light Department, and Village of Hyde Park Water and Light Department

[Docket No. EL88-19-000]

Take notice that on April 6, 1988, Central Vermont Public Service Corporation (Central Vermont or the Company), Lyndonville Electric Department, Village of Johnson Water and Light Department, and Village of Hyde Park Water and Light Department (the Villages) tendered for filing, pursuant to Rule 207(a)(2) of the Commission's Rules of Practice and Procedure (18 CFR 385.207(a)(2)), a joint petition for a Declaratory Order. The petitioners request the Commission to resolve a controversy between the Company and the Villages over whether the Villages are required by their contracts with the Company, which are filed rate schedules, to take and pay, after November 1, 1988, for amounts of power they have previous designated to be proved to them after that date under procedures described under the contracts; or whether, instead, the notice of termination of the Contracts filed by the Company relieves the Villages of any obligation to take and pay for such capacity and energy.

Comment date: May 2, 1988, in accordance with Standard Paragraph E at the end of this notice.

7. Kansas City Power & Light Company

[Docket No. ES88-35-000]

Take notice that on April 6, 1988, Kansas City Power & Light Company filed an application with the Federal Energy Regulatory Commission seeking authority, pursuant to section 204 of the Federal Power Act, to issue not more than $300 million of Short-Term Debt and Instruments on or before June 30, 1990, which would mature no later than June 30, 1991.

Comment date: May 5, 1988, in accordance with Standard Paragraph E at the end of this notice.

Standard Paragraph

E. Any person desiring to be heard or to protest said filing should file a motion to intervene or protest with the Federal Energy Regulatory Commission, 825 North Capitol Street, NE., Washington, DC 20426, in accordance with Rules 211 and 214 of the Commission's Rules of Practice and Procedure (18 CFR 385.211 and 385.214). All such motions or protests should be filed on or before the comment date. Protests will be considered by the Commission in determining the appropriate action to be taken, but will not serve to make protestants parties to the proceeding. Any person wishing to become a party must file a motion to intervene. Copies of this filing are on file with the Commission and are available for public inspection.

Lois D. Cashell,

Acting Secretary.

[FR Doc. 88-8563 Filed 4-18-88; 8:45 am]

BILLING CODE 6717-01-M

[Docket Nos. ER88-328-000 et al.]

Tucson Electric Power Co. et al.; Electric Rate, Small Power Production, and Interlocking Directorate Filings

April 14, 1988.

Take notice that the following filings have been made with the Commission:

1. Tucson Electric Power Company

[Docket No. ER88-328-000]

Take notice that on April 6, 1988, Tucson Electric Power Company (Tucson) tendered for filing an Interconnection Agreement (Agreement) between Tucson and the City of Anaheim, California. The primary purpose of the Agreement is to establish the terms and conditions for the interconnection of the electrical systems of Tucson and the City of Anaheim and the exchange of economy energy, emergency assistance energy, and banked energy between the two systems. Tucson states that services may be provided under Service Schedule A to the Agreement entitled "Economy Energy Interchange," Service Schedule B entitled "Emergency Assistance," or Service Schedule C entitled "Banked Energy."

Tucson requests an effective date of February 16, 1988, and therefore requests waiver of the Commission's notice requirements.

Tucson states that copies of the filing were served upon the City of Anaheim.

Comment date: April 28, 1988, in accordance with Standard Paragraph E at the end of this notice.

2. Portland General Electric Company

[Docket No. ER88-278-000]

Take notice that on April 7, 1988, Portland General Electric Company (Portland) tendered for filing an amendment to its filing made by its letter dated March 1, 1988 in order to provide cost data in support of the rate proposed in the Amendment to the PGE Rate Schedule FERC No. 22, the Agreement entitled Pacific-Portland Sales and Exchange Agreement dated August 25, 1972, between Pacific Gas and Electric Company and Portland.

Portland requests, if necessary, a waiver of the Commission's notice requirements in order to begin service under the Amendment on May 1, 1988.

Copies of the filing have been served upon Pacific Gas and Electric Company, Southern California Edison Company, the Oregon Public Utility Commission and the California Public Utilities Commission.

Comment date: April 28, 1988, in accordance with Standard Paragraph E at the end of this document.

3. Public Service Company of New Mexico

[Docket Nos. ER88-242-000 and ER88-274-000]

Take notice that on April 8, 1988, Public Service Company of New Mexico tendered for filing a supplement to the incremental charge for energy and up to charge for demand.

A copy of this filing has been served upon all parties affected by this proceeding.

Comment date: April 28, 1988, in accordance with Standard Paragraph E at the end of this notice.

4. Idaho Power Company

[Docket No. ER88-330-000]

Take notice that on April 7, 1988, Idaho Power Company (Idaho Power Company) tendered for filing the Average System Cost (ASC) determined by the Bonneville Power Administration (BPA), BPA's written ASC report, and Idaho Power's ASC schedules (Appendix 1) for Idaho Power's Idaho exchange jurisdiction. Idaho Power also submitted its agreement with and/or objections to BPA's Average System Cost determination.

The ASC rates filed have been determined pursuant to the Revised Average System Cost Methodology approved by the Commission in its Order No. 400 issued October 1, 1984 in Docket No. RM84-16-000, and section

5(c) of the Pacific Northwest Electric Power Planning and Conservation Act (16 U.S.C. 830–839h). This act provides for the exchange of electric power between Idaho Power and BPA for the benefit of Idaho Power's residential and farm customers.

A copy of the filing has been served upon BPA and all parties to Idaho Power's Appendix 1 filing with BPA.

Comment date: April 28, 1988, in accordance with Standard Paragraph E at the end of this notice.

5. Gulf States Utilities Company

[Docket No. ER86–558–017]

Take notice that on March 10, 1988, Gulf States Utilities Company (Gulf States) tendered for filing a compliance and refund report. Gulf States states that the total amount of refunds to the Sam Rayburn Dam Electric Cooperative, Inc., Sam Rayburn G&T, Inc. and Say Rayburn Municipal Power Agency was $1,508,557.86.

A copy of this filing has been served upon all parties affected by this proceeding.

Comment date: April 28, 1988, in accordance with Standard Paragraph E at the end of this notice.

6. Ohio Edison Company

[Docket No. ER88–329–000]

Take notice that on April 6, 1988, Ohio Edison Company (Ohio Edison) tendered for filing proposed rates for full requirements service to twenty municipal wholesale customers and partial requirements service to the City of Oberlin, said customers currently taking service through American Municipal Power-Ohio, Inc. (AMP-Ohio) under FERC Rate Schedule No. 150. This filing is pursuant to Article III of the Settlement Agreement among the Company, AMP-Ohio, and the municipal wholesale customers of Ohio Edison (WCOE), as approved by the Commission on March 24, 1984 in Case No. ER80–454, et al., 26 FERC Sec. 61,359.

Ohio Edison states that the proposed changes would result in increased revenues of $6.8 million for full and partial requirements service to jurisdictional customers based upon data for the twelve month period ending December 31, 1988 as filed herein.

Ohio Edison proposes an effective date of October 1, 1988.

Ohio Edison further states that the reason for the proposed increase is that rates for service to its municipal wholesale customers are no longer just and reasonable, being below the cost of providing service to these customers, inadequate to provide a basis for attracting capital on reasonable terms, and inadequate to provide a return on new generating facilities added in part to serve wholesale customers.

According to Ohio Edison, copies of the filing were served on the Company's jurisdictional customers affected by the proposed changes and the Public Utilities Commission of Ohio.

Comment date: April 28, 1988, in accordance with Standard Paragraph E at the end of this notice.

7. Pacific Gas and Electric Company

[Docket No. ER88–331–000]

Take notice that on April 11, 1988, Pacific Gas and Electric Company (PG&E) tendered for filing revised rate schedules from firm system sales to the cities of Anaheim, Azusa, Banning, Colton, and Riverside (Southern Cities).

The agreements between PG&E and the Southern Cities require an annual recalculation of rates for electric capacity. These rates are an average of the Southern Cities' partial requirements capacity rates from Southern California Edison Company (SCE) and PG&E's incremental costs of providing service. PG&E's costs are unchanged, but the SCE rates have decreased, resulting in lower capacity rates from PG&E.

PG&E has requested waivers to allow these rate schedule changes to be made effective, retroactively, on March 1, 1988.

Copies of this filing have been served upon the Southern Cities and the California Public Utilities Commission. In addition, copies of this filing are available for public inspection in a convenient form and place during normal business hours at PG&E's General Office in San Francisco.

Comment date: April 28, 1988, in accordance with Standard Paragraph E at the end of this notice.

8. Pacific Power & Light Company, an assumed business name of PacifiCorp

[Docket No. ER88–327–000]

Take notice that on April 5, 1988, Pacific Power & Light Company (Pacific), an assumed business name of PacifiCorp tendered for filing, accordance with § 35.12 of the Commission's Regulations, a Letter Agreement, Contract No. DE–MS79–88BP92402, between Pacific and Bonneville Power Administration (Bonneville). The Letter Agreement provides for temporary transfer service across Pacific's Libby substation to enable Bonneville to serve its City of Troy, Montana load.

Pacific requests, pursuant to § 35.11 of the Commission's Regulations, that a waiver of prior notice be granted and that an effective date of December 14, 1987, corresponding to the commencement of service by Pacific, be assigned to the Letter Agreement.

Copies of this filing have been supplied to Bonneville Power Administration and to the Montana Public Service Commission.

Comment date: April 28, 1988, in accordance with Standard Paragraph E at the end of this notice.

9. Douglas W. Booth

[Docket No. ID–2335–000]

Take notice that on April 6, 1988, Douglas W. Booth tendered an application for authorization under section 305(b) of the Federal Power Act to hold the following positions:

Position	Corporation
President, Chief Operating Officer and Director.	Duke Power Company.
Director	Barclays American Corporation.

Comment date: April 28, 1988, in accordance with Standard Paragraph E at the end of this notice.

Standard Paragraph

E. Any person desiring to be heard or to protest said filing should file a motion to intervene or protest with the Federal Energy Regulatory Commission, 825 North Capitol Street NE., Washington, DC 20426, in accordance with Rules 211 and 214 of the Commission's Rules of Practice and Procedure (18 CFR 385.211 and 385.214). All such motions or protests should be filed on or before the comment date. Protests will be considered by the Commission in determining the appropriate action to be taken, but will not serve to make protestants parties to the proceeding. Any person wishing to become a party must file a motion to intervene. Copies of this filing are on file with the Commission and are available for public inspection.

Lois D. Cashell,

Acting Secretary.

[FR Doc. 88–8483 Filed 4–18–88; 8:45 am]

BILLING CODE 6717-01-M

[Project No. 3863–001]

Floyd N. Bidwell; Availability of Environmental Assessment

April 13, 1988.

In accordance with the National Environmental Policy Act of 1969 and the Federal Energy Regulatory

Commission's (Commission's) regulations, 18 CFR Part 380 (Order No. 486, 52 FR 47897), the Office of Hydro Licensing has reviewed the application for major license for the proposed Lost Creek No. 1 Hydroelectric Project on Lost Creek in Shasta County, California, and has prepared an Environmental Assessment (EA) for the proposed project. In the EA, the Commission's staff has analyzed the potential environmental impacts of the proposed project and has concluded that approval of the proposed project, with appropriate mitigation measures, would not constitute a major federal action significantly affecting the quality of the human environment.

Copies of the EA are available for review in the Public Reference Branch, Room 1000, of the Commission's offices at 825 North Capitol Street NE., Washington, DC 20426.

Comments should be filed within 30 days from the date of this notice and should be addressed to Lois D. Cashell, Acting Secretary, Federal Energy Regulatory Commission, 825 North Capitol Street NE., Washington, DC 20426. Please affix Project No. 3863-001 to all comments. For further information, please contact Tom Camp, Environmental Assessment Coordinator, at (202) 376-9801.

Lois D. Cashell,

Acting Secretary.

[FR Doc. 88-8487 Filed 4-18-88; 8:45 am]

BILLING CODE 6717-01-M

[Project Nos. 3021-016, et al.]

Hydroelectric Applications (Allegheny Electric Co-op., Inc., et al.); Applications Filed with the Commission

Take notice that the following hydroelectric applications have been filed with the Federal Energy Regulatory Commission and are available for public inspection:

1 a. *Type of Application:* Transfer of License.

b. *Project No.:* 3021-016.

c. *Date Filed:* November 23, 1987.

d. *Applicant:* Allegheny Electric Cooperative, Inc. (licensee), Allegheny Hydro No. 8, L.P., and Allegheny Hydro No. 9, L.P. (transferees).

e. *Name of Project:* Allegheny River Locks and Dams Nos. 8 and 9.

f. *Location:* On the Allegheny River in Armstrong County, Pennsylvania.

g. *Filed Pursuant to:* Federal Power Act, 16 U.S.C. 791(a)-825(r).

h. *Contact Person:*

Mr. Anthony C. Adonizio, Deputy General Counsel, Allegheny Electric Cooperative, Inc., P.O. Box 1266, Harrisburg, PA 17108

Mr. Bruce Wrobel, Allegheny Hydro No. 8, L.P., 885 Third Avenue—Suite 3040, New York, NY 10022

Mr. Bruce Wrobel, Allegheny Hydro No. 9, L.P., 885 Third Avenue—Suite 3040, New York, NY 10022

i. *FERC Contract:* Michael Dees (202) 376-9830.

j. *Comment Date:* May 13, 1988.

k. *Description of Transfer:* On November 23, 1987, Allegheny Electric Cooperative, Inc. (licensee), Allegheny Hydro No. 8, L.P., and Allegheny Hydro No. 9, L.P. (transferres), filed a joint application for transfer of the major license for the Allegheny River Locks and Dams Nos. 8 and 9 Project No. 3021. The proposed transfer will not result in any changes in the project. The transferees state that they would comply with all the terms and conditions of the license.

l. *This notice also consists of the following standards paragraphs:* B and C.

2 a. *Type of Application:* Surrender of License.

b. *Project No.:* 3307-007.

c. *Date Filed:* January 11, 1988.

d. *Applicant:* Tionesta Associates.

e. *Name of Project:* Tionesta Lake.

f. *Location:* On Tionesta Creek in Forest County, Pennsylvania.

g. *Filed Pursuant to:* Federal Power Act, 16 U.S.C. 791(a)-825(r).

h. *Applicant Contact:* Mr. Robert L. Winship, 99 Bedford Street, Boston, MA 02111, (617) 357-9029.

i. *FERC Contract:* Michael Dees (202) 376-9830

j. *Comment Date:* May 12, 1988.

k. *Description of Project:* On January 26, 1984, a license was issued to construct, operate, and maintain the Tionesta Lake Project No. 3307 at the U.S. Army Corps of Engineers' Tionesta Dam. The project would consist of: (1) A 125-foot-long steel liner to be installed in the downstream end of the Corp's 1,875-foot-long, 19-foot-diameter concrete outlet tunnel; (2) a 40-foot-long, 12-foot-diameter steel penstock; (3) a 74-foot by 38-foot concrete powerhouse containing one generating unit with an installed capacity of 5.0 MW; (4) a 90-foot-long, 24-foot-wide tailrace channel; (5) a stilling basin; (6) a 1-mile-long, 34.5-kV transmission line; and (7) appurtenant facilities.

Licensee states that no construction occurred and that the project is no longer economically feasible because of the high cost to wheel energy to a purchaser.

On December 20, 1985, the deadline for the start of project construction was extended two years to January 25, 1988. No further extensions are allowed by the Federal Power Act.

l. *This notice also consists of the following standards paragraphs:* B and C.

3 a. *Type of Application:* Surrender of License.

b. *Project No.:* 7042-007.

c. *Date Filed:* February 12, 1988.

d. *Applicant:* Cities of Minden, Natchitoches, and Ruston, Louisiana.

e. *Name of Project:* John H. Overton Lock and Dam No. 2.

f. *Location:* On the Red River in Rapides Parish, Louisiana.

g. *Filed Pursuant to:* Federal Power Act 16 U.S.C. 791(a)-825(r).

h. *Applicant Contact:* Mr. Ralph L. Laukhuff, Jr., Forte and Tablada, Inc., P.O. Box 64844, Baton Rouge, LA 70896, (504) 927-9321.

i. *FERC Contact:* Eddie Lee (202) 376-9828.

j. *Comment Date:* May 12, 1988.

k. *Description of Application:* The license for this project was issued June 20, 1985, for an installed capacity of 25.5 MW. The licensees state that it has determined that the project would be economically infeasible. No construction has commenced at the project site.

l. *This notice also consists of the following standard paragraphs:* B and C.

4 a. *Type of Application:* Amendment of License.

b. *Project No.:* 8296-005.

c. *Date Filed:* December 1, 1987.

d. *Applicant/Licensee:* Malacha Power Project, Incorporated.

e. *Name of Project:* Muck Valley Hydroelectric Project.

f. *Location:* On Pit River, in Lassen County, California; partially on the U.S. Bureau of Land Management lands.

g. *Filed Pursuant to:* Federal Power Act, 16 U.S.C. 791(a)-825(r).

h. *Applicant Contact:* Mr. Robert Mooney, President, Malacha Power Project, Inc., 1555 Shoreline Drive, Suite 100, Boise, ID 83702.

i. *FERC Contact:* Mr. Ahmad Mushtaq, (202) 376-1900.

j. *Comment Date:* May 13, 1988.

k. *Description of Proposed Action:* The licensee seeks Commission authorization to modify its originally licensed 16-mile-long transmission line by (a) utilizing a 1.9-mile-long segment of the original line, and (b) re-routing and lengthening the remaining portion to 16.1 miles along a new alignment.

l. *This notice also consists of the following standard paragraphs:* B and C.

5 a. *Type of Application:* Preliminary Permit.

b. *Project No.:* 10549-000.

c. *Date Filed:* February 26, 1988.

d. *Applicant:* Chasm Hydro, Inc.

e. *Name of Project:* Fort Covington Dam.

f. *Location:* On the Salmon River in Franklin County, New York.

g. *Filed Pursuant to:* Federal Power Act, 16 U.S.C. 791(a)–825(r).

h. *Applicant Contact:* Mr. John H. Dowd, Box 319, Chateaugay, New York 12920, (518) 371–4299.

i. *FERC Contact:* Steven H. Rossi, (202) 376–9814.

j. *Comment Date:* June 3, 1988.

k. *Description of Project:* The proposed project would consist of: (1) An existing 20.5-foot-high, 257-foot-long concrete gravity dam; (2) a reservoir with a surface area of 14.3 acres, a storage capacity of 45 acre-feet, and a normal water surface elevation of 156 feet m.s.l.; (3) two existing 6.75-foot by 8.5-foot intake gates; (4) a new powerhouse containing one generating unit with a capacity of 425 kW; (5) a new transmission line, 100 feet long; and (6) appurtenant facilities. The applicant estimates the average annual generation would be 2,200,000 kWh. The existing dam is owned by Northern Hydro Consultants, Inc., Chateaugay, New York. The applicant estimates that the cost of the studies under permit would be $36,750.

l. *Purpose of Project:* Project power would be sold to Niagara Mohawk Power Corporation.

m. *This notice also consists of the following standard paragraphs:* A5, A7, A9, A10, B, C, and D2.

6 a. *Type of Application:* New Minor License.

b. *Project No.:* 2388–001.

c. *Date Filed:* July 23, 1987.

d. *Applicant:* The City of Holyoke, Gas & Electric Department.

e. *Name of Project:* Number 3 Hydro Unit.

f. *Location:* First and Second Level Canals of the Holyoke Canal Systems off the Connecticut River in Hampden County, Massachusetts.

g. *Filed Pursuant to:* Federal Power Act 16 U.S.C. 791 (a)–825(r).

h. *Applicant Contact:* Mr. George E. Leary, The City of Holyoke, Gas & Electric Department, 70 Suffolk Street, Holyoke, MA 01040, (413) 536–9311.

i. *FERC Contact:* Steven H. Rossi (202) 376–9814.

j. *Comment Date:* June 2, 1988.

k. *Description of Project:* The existing operating project commenced operation in 1940 and was issued an initial license in 1965, which will expire in 1990. The licensee has filed for a new license for the continued operation of the project. The existing project consists of: (1) An intake trashrack about 47 feet long and 11 feet high covering an opening in the Holyoke Second Level Canal; (2) two headgates about 11 feet square; (3) two low pressure brick penstocks each about 85 feet long and 93 square feet in cross section; (4) a reinforced concrete powerhouse about 42 feet long, 34 feet wide, and 28 feet high, housing one turbine-generator unit rated at 450 kW with an average head of 12.5 feet; (5) an open tailrace about 118 feet long, 29.7 feet wide, and 10 feet deep; (6) 4.8–kV generator leads that connect directly to the 4.8–kV area distribution system; and (7) appurtenant facilities. The project generates an average of 2,466 MWh annually.

l. *Purpose of Project:* Project power would continue to be sold to the customers of the City of Holyoke, Gas and Electric Department.

m. *This notice also consists of the following standard paragraphs:* B and C.

7 a. *Type of Application:* Surrender of License.

b. *Project No.:* 7043–006.

c. *Date Filed:* February 2, 1988.

d. *Applicant:* Cities of Minden, Natchitoches, and Ruston, Louisiana.

e. *Name of Project:* Red River Lock and Dam No. 1.

f. *Location:* On the Red River in Avoyelles and Catahoula Parishes, Louisiana.

g. *Filed Pursuant to:* Federal Power Act, 16, U.S.C. 791(a)–825(r).

h. *Applicant Contact:* Mr. Ralph L. Laukhuff, Jr., Forte and Tablada, Inc., P.O. Box 64844, Baton Rouge, LA 70896, (504) 927–9321.

i. *FERC Contact:* Ed Lee on (202) 376–9828.

j. *Comment Date:* May 13, 1988.

k. *Description of Application:* The license for this project was issued on August 30, 1985, for an installed capacity of 18 MW. The licensees state that it has determined that the project would be economically infeasible. No construction has commenced at the project site.

l. *This notice also consists of the following standard paragraphs:* B and C.

8 a. *Type of Application:* Surrender of License.

b. *Project No.:* 8350–004.

c. *Date Filed:* December 31, 1987.

d. *Applicant:* Littleville Power Company, Inc.

e. *Name of Project:* Littleville Dam Project.

f. *Location:* On the Middle Branch of the Westfield River in Hampden and Hampshire Counties, Massachusetts.

g. *Filed Pursuant to:* Federal Power Act 16 U.S.C 791(a)–825(r).

h. *Applicant Contact:* Mr. John J. Furman, Littleville Power Company, Inc., 36 Canal Drive, Westfield, Massachusetts 01085, (413) 568–6510.

i. *FERC Contact;* Steven H. Rossi, (202) 376–9814.

j. *Comment Date:* May 18, 1988.

k. *Description of Proposed Surrender:* The proposed project would have utilized the U.S. Army Corps of Engineers' Littleville Dam and would have consisted of : (a) A bifurcation at the existing water supply conduit; (b) a 4-foot-diameter and 52-foot-long steel penstock; (c) a powerhouse with 2 turbine-generator units with installed capacities of 800 kW and 260 kW; (d) a 200-foot-long tailrace channel; (e) 0.48-volt generator leads, a 0.48/23–kV, 1.5–MVA step-up transformer, a 23–kV and 3,500-foot-long transmission line; and (f) other appurtenances necessary to connect the project to the Western Massachusetts Electric Company's system. The proposed project would have generated up to 3,050,000 kWh annually.

The licensee states that due to delays in obtaining a long-term power sales contract, it wishes to surrender its license.

l. *This notice also consists of the following standard paragraphs:* B, C and D2.

9 a. *Type of Application:* Preliminary Permit.

b. *Project No.:* 10543–000.

c. *Date Filed:* February 16, 1988.

d. *Applicant:* Public Utility District No. 1 of Asotin County.

e. *Name of Project:* Asotin Hydroelectric Project.

f. *Location:* At mile 146.8 on the Snake River in T6, 7, 8, 9, 10N, R46 and 47E near Asotin in Asotin County, Washington, and Nez Perce County, Idaho.

g. *Filed Pursuant to:* Federal Power Act, 16 U.S.C. 791 (a)–825(r).

h. *Applicant Contact:* Mr. Scott C. Broyles, P.O. Box 208, Clarkston, WA 99403, (509) 785–1636.

i. *FERC Contact:* Ms. Julie Bernt, (202) 376–1936.

j. *Comment Date:* May 19, 1988.

k. *Competing Application:* Project No. 10530; Date Filed: December 23, 1987; Due Date: April 11, 1988.

l. *Description of Project:* The proposed project would consist of: (1) A 160-foot-high dam at elevation 868 msl; (2) an ogee-shaped 370-foot-wide spillway at elevation 792.5 feet msl; (3) a reservoir with a normal pool elevation of 842.5 feet msl, a surface area of 3,900 acres, and a storage area of 250,000 acre-feet; (4) a powerhouse which forms the right side of the dam and which contains four generating units each with a rated capacity of 96 MW; and (5) a 1.9-mile-

long transmission line. Applicant estimates the average annual energy production to be 1,708 GWh and the cost of the work to be performed under the preliminary permit to be $40,000.

m. *Purpose of Project:* Power produced would be marketed through a consortium of regional utilities.

n. *This notice also consists of the following standard paragraphs:* A8, A10, B, C and D2.

Standard Paragraphs

A5. Preliminary Permit

Anyone desiring to file a competing application for preliminary permit for a proposed project must submit the competing application itself, or a notice of intent to file such an application, to the Commission on or before the specified comment date for the particular application (see 18 CFR 4.36 (1985)). Submission of a timely notice of intent allows an interested person to file the competing preliminary permit application no later than 30 days after the specified comment date for the particular application.

A competing preliminary permit application must conform with 18 CFR 4.30(b) (1) and (9) and 4.36.

A7. Preliminary Permit

Any qualified development applicant desiring to file a competing development application must submit to the Commission, on or before the specified comment date for the particular application, either a competing development application or a notice of intent to file such an application. Submission of a timely notice of intent to file a development application allows an interested person to file the competing application no later than 120 days after the specified comment date for the particular application.

A competing license application must conform with 18 CFR 4.30(b) (1) and (9) and 4.36.

A8. Preliminary Permit

Public notice of the filing of the initial preliminary permit application, which has already been given, established the due date for filing competing preliminary permit and development applications or notices of intent. Any competing preliminary permit or development application, or notice of intent to file a competing preliminary permit or development application, must be filed in response to and in compliance with the public notice of the initial preliminary permit application. No competing applications or notices of intent to file competing applications may be filed in response to this notice.

A competing license application must conform with 18 CFR 4.30(b) (10) and (9) and 4.36.

A9. Notice of Intent

A notice of intent must specify the exact name, business address, and telephone number of the prospective applicant, include an unequivocal statement of intent to submit, if such an application may be filed, either (1) a preliminary permit application or (2) a development application (specify which type of application), and be served on the applicant(s) named in this public notice.

A10. Proposed Scope of Studies Under Permit

A preliminary permit, if issued, does not authorize construction. The term of the proposed preliminary permit would be 36 months. The work proposed under the preliminary permit would include economic analysis, preparation of preliminary engineering plans, and a study of environmental impacts. Based on the results of these studies the Applicant would decide whether to proceed with the preparation of a development application to construct and operate the project.

B. Comments, Protests, or Motions to Intervene

Anyone may submit comments, a protest, or a motion to intervene in accordance with the requirements of the Rules of Practice and Procedure, 18 CFR 385.210, 385.214. In determining the appropriate action to take, the Commission will consider all protests or other comments filed, but only those who file a motion to intervene in accordance with the Commission's Rules may become a party to the proceeding. Any comments, protests, or motions to intervene must be received on or before the specified comment date for the particular application.

C. Filing and Service of Responsive Documents

Any filings must bear in all capital letters the title "COMMENTS", "NOTICE OF INTENT TO FILE COMPETING APPLICATION", "COMPETING APPLICATION", "PROTEST" or "MOTION TO INTERVENE", as applicable, and the Project Number of the particular application to which the filing is in response. Any of the above named documents must be filed by providing the original and the number of copies required by the Commission's regulations to: Secretary, Federal Energy Regulatory Commission, 825 North Capitol Street NE., Washington, DC 20426. An additional copy must be sent to: Director, Division of Project Management, Federal Energy Regulatory Commission, Room 203–RB, at the above address. A copy of any notice of intent, competing application or motion to intervene must also be served upon each representative of the Applicant specified in the particular application.

D2. Agency Comments

Federal, State, and local agencies are invited to file comments on the described application. (A copy of the application may be obtained by agencies directly from the Applicant.) If an agency does not file comments within the time specified for filing comments, it will be presumed to have no comments. One copy of an agency's comments must also be sent to the Applicant's representatives.

Dated: April 14, 1988.

Lois D. Cashell,

Acting Secretary.

[FR Doc. 88–8562 Filed 4–18–88; 8:45 am]

BILLING CODE 6717-01-M

[Docket Nos. CP88–329–000 et al.]

United Gas Pipe Line Co. et al.; Natural Gas Certificate Filings

April 14, 1988.

Take notice that the following filings have been made with the Commission:

1. United Gas Pipe Line Company

[Docket No. CP88–329–000]

Take notice that on April 4, 1988, United Gas Pipe Line Company (United), P.O. Box 1478, Houston, Texas 77251–1478, filed in Docket No. CP88–329–000 an application pursuant to section 7(c) of the Natural Gas Act for a certificate of public convenience and necessity authorizing the implementation of two new services for its distribution customers under rate schedules GO and FRO and in addition, offer all of its firm sales customers the option to convert up to 100 percent of their firm sales entitlements to firm transportation service on an expedited basis pursuant to rate schedule ACO, all as more fully set forth in the application which is on file with the Commission and open to public inspection.

United states that concurrent with this certificate application, it has proposed in Docket No. RP88–92–000 to eliminate or discontinue enforcing the "full requirements" provisions contained in currently effective service agreements as of the date the proposed tariff sheets are allowed to become effective. It is asserted that service under the proposed rate schedule FRO (full requirements

option) would entitle customers that commit to purchase all of their gas supply requirements from United to be charged for that service based upon a one-part volumetric rate. Rate schedule FRO service would be available only for customers whose single non-coincidental peak day purchases over the past three years have not exceeded 7,000 Mcf. United avers that it would be obligated to provide FRO coustomers with all of their gas requirements. It is stated that service under the proposed rate schedule GO (G Optional) would be available to United's existing customers served under rate schedules G-S/G-N and would entitle a customer to receive either sales or transportation service from United up to that customer's Current Entitlement Quantity (CEQ) nomination at a rate that would make United economically indifferent as to whether such customers purchase or transport gas.

United is also proposing to offer all of its firm jurisdictional sales customers the option to convert their firm sales entitlement to firm transportation service by a percentage greater than that provided for under current Commission regulations. It is stated that the new service under proposed rate schedule ACO (Accelerated Conversion Option) would allow United's firm jurisdictional sales customers to convert up to 100 percent of their firm sales entitlements to firm transportation service on an expedited basis, contingent upon the customer's agreement to remain responsible for certain transition costs and subject to certain operating conditions. It is averred that the customers would also have the right to convert ACO service to firm transportation services under rate schedule FTS, under the same increments and intervals as are provided by the Commission's Order No. 436 regulations for the conversion of firm sales to firm transportation service.

United has further requested that this certificate filing be consolidated with its March 31, 1988, rate filing in Docket No. RP88-92-000. It has also requested that the Commission expeditiously act upon this application, or, alternatively, authorize United to commence service under the proposed rate schedules on a temporary basis on the date the tariff sheets incorporated in Docket No. RP88-92-000 are followed to be made effective.

Comment date: April 25, 1988, in accordance with Standard Paragraph F at the end of this notice.

2. Northwest Pipeline Corporation

[Docket No. CP88-323-000]

Take notice that on March 31, 1988, Northwest Pipeline Corporation (Northwest), P.O. Box 8900, Salt Lake City, Utah 84108-0900, filed in Docket No. CP88-323-000 an application pursuant to section 7(c) of the National Gas Act (NGA) and the Regulations thereunder for a blanket certificate of public convenience and necessity authorizing Northwest to provide discounted gathering services as more fully set forth in the application which is on file with the Commission and open to public inspection.

Northwest states that by order of March 1, 1988, in Docket No. RP86-57-003, the Commission required Northwest to obtain a certificate under section 7(c) of the NGA before commencing discount gathering service under Northwest's revised Sheet No. 2-B of Northwest's FERC Gas Tariff, Volume No. 2, which the Commission previously had accepted for filing by Letter Order dated July 23, 1986.

Northwest states that in compliance with the order of March 1, 1988, it requests authorization to provide discounted gathering services pursuant to section 7(c) of the NGA and in accordance with Sheet No. 2-B of Northwest's FERC Gas Tariff, Original Volume No. 2. Further, Northwest states that since the Commission gave no indication prior to its March 1, 1988, order, that a section 7(c) certificate was required for Northwest's discount gathering services, Northwest requests that the Commission grant the required section 7(c) authorizations retroactively to the date Northwest implemented its discount gathering rate proposal, namely July 24, 1986.

Comment date: May 5, 1988, in accordance with Standard Paragraph F at the end of this notice.

Standard Paragraph

F. Any person desiring to be heard or make any protest with reference to said filing should on or before the comment date file with the Federal Energy Regulatory Commission, 825 North Capitol Street, NE., Washington, DC 20426, a motion to intervene or a protest in accordance with the requirements of the Commission's Rules of Practice and Procedure (18 CFR 385.211 and 385.214) and the Regulations under the Natural Gas Act (18 CFR 157.10). All protests filed with the Commission will be considered by it in determining the appropriate action to be taken but will not serve to make the protestants parties to the proceeding. Any person wishing to become a party to a proceeding or to participate as a party in any hearing therein must file a motion to intervene in accordance with the Commission's Rules.

Take further notice that, pursuant to the authority contained in and subject to jurisdiction conferred upon the Federal Energy Regulatory Commission by sections 7 and 15 of the Natural Gas Act and the Commission's Rules of Practice and Procedure, a hearing will be held without futher notice before the Commission or its designee on this filing if no motion to intervene is filed within the time required herein, if the Commission on its own review of the matter finds that a grant of the certificate is required by the public convenience and necessity. If a motion for leave to intervene is timely filed, or if the Commission on its own motion believes that a formal hearing is required, further notice of such hearing will be duly given.

Under the procedure herein provided for, unless otherwise advised, it will be unnecessary for the applicant to appear or be represented at the hearing.

Lois D. Cashell,

Acting Secretary.

[FR Doc. 88-8554 Filed 4-18-88; 8:45 am]

BILLING CODE 6717-01-M

[Docket No. RP88-100-000]

Commercial Pipeline Company, Inc.; Request for Waiver of Purchased Gas Adjustment Requirements or, in the Alternative, Request for Waiver of Certain Requirements

April 13, 1988.

Take notice that on April 5, 1988, Commercial Pipeline Company, Inc. (Commercial) filed a request for waiver of the regulations and requirements established by Commission Order Nos. 483 and 483-A in order to permit Commercial to operate under its existing purchased gas adjustment (PGA) clause pending approval of the "Joint Abbreviated Application of Greeley Gas Company to Acquire and Operate Facilities and Commercial Pipeline Company, Inc. to Abandon Facilities and Service" filed on March 31, 1988. Commercial states that that acquisition and abandonment application requests, *inter alia*, the cancellation of Commercial's FERC Gas Tariff, which includes Commercial's PGA mechanism, and expedited consideration by the Commission in order to obtain approval of that application by July 31, 1988. Therefore, Commercial requests a total waiver of the Order No. 483 PGA regulations because of the anticipated

BEST COPY AVAILABLE

elimination of Commercial's tariff and PGA clause.

If the Commission does not grant Commercial a total waiver of the new PGA requirements, Commercial requests waiver of: (1) The requirement that Commercial make a June 1, 1988 transition filing and a July 1, 1988 quarterly filing; (2) Order Nos. 483 and 483–A to the extent necessary to permit Commercial to keep in effect rates filed in Docket No. TA88–2–44 to be effective May 1, 1988; (3) the requirement that Commercial's PGA filings be made on 9-track magnetic computer tape; and (4) the filing fee required to accompany the May 1, 1988 filing of new terms and conditions to Commercial's FERC Gas Tariff necessary to implement Order Nos. 483 and 483–A.

Any person desiring to be heard or to protest said filing should file a motion to intervene or a protest with the Federal Energy Regulatory Commission, 825 North Capitol Street, NE., Washington, DC 20426, in accordance with Rules 214 and 211 of the Commission's Rules of Practice and Procedure (18 CFR 385.214, 385.211). All such motions or protests should be filed on or before April 20, 1988. Protests will be considered by the Commission in determining the appropriate action to be taken, but will not serve to make protestants parties to the proceeding.

Any person wishing to become a party must file a motion to intervene. Copies of this filing are on file with the Commission and are available for public inspection.

Lois D. Cashell,

Acting Secretary.

[FR Doc. 88–8484 Filed 4–18–88; 8:45 am]

BILLING CODE 6717–01–M

[Project No. 3115–002 California]

Merced Irrigation District; Surrender of Exemption

April 15, 1988.

Take notice that Merced Irrigation District exemptee for the proposed Escaladiam Project No. 3115, has requested that its exemption be terminated. The exemption was issued on November 10, 1980. The project would have been located at Escaladiam Canal, in Merced County, California. No construction has commenced at this project.

The Exemptee filed the request on February 4, 1988, and the exemption for Project No. 3115 shall remain in effect through the thirtieth day after issuance of this notice unless that day is a Saturday, Sunday or holiday as described in 18 CFR 385.2007, in which case the exemption shall remain in effect through the first business day following that day. New applications involving this project site, to the extent provided for under 18 CFR Part 4, may be filed on the next business day.

Lois D. Cashell,

Acting Secretary.

[FR Doc. 88–8486 Filed 4–18–88; 8:45 am]

BILLING CODE 6717–01–M

[Docket No. CI88–89–000]

Valence Operating Co., et al; Joint Application for Permanent Abandonment

April 15, 1988.

Take notice that on November 2, 1987, as supplemented on December 17, 1987, and January 7 and 29, February 17 and March 1, 1988, Valence Operating Company, *et al.*, Kaiser-Francis Oil Company, Chevron U.S.A. Inc. and J. M. Huber Corporation (Applicants),[1] filed an application pursuant to section 7(b) of the Natural Gas Act and § 2.77 of the Commisison's rules requesting permanent abandonment of their sales of gas to Panhandle Eastern Pipe Line Company (Panhandle) from Section 6 and 18, T24N–R13W, and Sections 31 and 32, T25N.R13W, Woods County, Oklahoma. Applicants are also requesting three-year limited-term pregranted abandonment authority to allow Applicants or their new purchaser to change resale purchasers as interstate spot market contracts expire or are terminated.

In support of their joint application Applicants that they are suffering substantially reduced takes without payment from Panhandle. In May and June of 1987, according to Applicants, Panhandle purchased approximately 1.5% to 2% of the producing capacity of the wells. Applicants state that the wells are no longer able to meet the line pressure in Panhandle's system on a consistent, economic basis and neither party can justify the expense of compression facilities. Applicants propose to sell the gas under a percentage-of-proceeds contract to Union Texas Products Corporation (Union Texas). Applicants state that Union Texas operates a low pressure pipeline facility in the vicinity which is connected to a Union Texas processing plant. According to Applicants, residue gas attributable to their gas will be resold by Union Texas at the tailgate of its plant in the spot market primarily in interstate commerce. Applicants state that the requested abandonment authorization is part of a package settlement which they have reached with Panhandle. Applicants state that they have agreed not to pursue claims for past take-or-pay liability under the contracts in return for a complete and permanent release of the gas. Applicants state that deliverability of the gas involved in the abandonment request is approximately 1,300 Mcf/day and that such gas is NGPA section 104 flowing gas.

Applicants request that their application be considered on an expedited basis under procedures established by Order No. 436, Docket No. RM85–1–000, at 18 CFR 2.77.[2]

Since Applicants have requested that their application be considered on an expedited basis, all as more fully described in the application which is on file with the Commission and open to public inspection, any person desiring to be heard or to make any protest with reference to said application should on or before 15 days after the date of publication of this notice in the Federal Register, file with the Federal Energy Regulatory Commission, Washington, DC 20426, a petition to intervene or a protest in accordance with the requirements of the Commission's Rules of Practice and Procedure (18 CFR 385.211, 385.214). All protests filed with the Commission will be considered by it in determining the appropriate action to be taken but will not serve to make the protestants parties to the proceeding. Any person wishing to become a party to a proceeding must file a petition to intervene in accordance with the Commission's rules.

Under the procedure herein provided for, unless otherwise advised, it will be

---

[1] The *et al.* party to Valence Operating Company's application is Devon Drilling Company, a non-signatory party to Valence's contract with Panhandle. The joint applicants are Kaiser-Francis Oil Company, which operates under a small producer certificate in Docket No., CS73–605, and Chevron U.S.A. Inc. and J. M. Huber Corporation, which sell gas pursuant to large producer certificates in Docket Nos. CI64–526 and CI64–197, respectively.

[2] The United States Court of Appeals for the District of Columbia vacated the Commission's Order No. 436 on June 23, 1987. In vacating Order No. 436, the Court rejected challenges to the Commission's statement of policy in § 2.77 of its Regulations. Section 2.77 states that the Commission will consider on an expedited basis applications for certificate and abandonment authority where the producers assert they are subject to substantially reduced takes without payment or where the parties have entered into a take-or-pay buy-out pursuant to § 2.76. On August 7, 1987, the Commission issued Order No. 500 which promulgated interim regulations in response to the court's remand (40 FERC § 61,172 (1987)). These interim regulations became effective on September 15, 1987.

unnecessary for Applicants to appear or to be represented at the hearing.

Lois D. Cashell,

Acting Secretary.

[FR Doc. 88-8485 Filed 4-18-88; 8:45 am]

BILLING CODE 6717-01-M

FEDERAL DEPOSIT INSURANCE CORPORATION

Information Collection Submitted to OMB for Review

AGENCY: Federal Deposit Insurance Corporation.

ACTION: Notice of information collection submitted to OMB for review and approval under the Paperwork Reduction Act of 1980.

TITLE OF INFORMATION COLLECTION: Transfer Agent Registration and Amendment Form (OMB No. 3064-0026).

BACKGROUND: In accordance with requirements of the Paperwork Reduction Act of 1980 (44 U.S.C. Chapter 35), the FDIC hereby gives notice that it has submitted to the Office of Management and Budget a request for the review and approval of the information collection system identified above.

ADDRESS: Written comments regarding the submission should be addressed to Robert Neal, Office of Information and Regulatory Affairs, Office of Management and Budget, Washington, DC 20503 and to John Keiper, Assistant Executive Secretary, Federal Deposit Insurance Corporation, Washington, DC 20429.

COMMENTS: Comments on this collection of information should be submitted on or before May 19, 1988.

FOR FURTHER INFORMATION CONTACT: Requests for a copy of the submission should be sent to John Keiper, Assistant Executive Secretary, Federal Deposit Insurance Corporation, Washington, DC 20429, telephone (202) 898-3810.

SUMMARY: The FDIC is requesting OMB approval to revise form TA-1 used by an insured nonmember bank to register with the FDIC as a transfer agent as required by the Securities Exchange Act of 1934 (15 U.S.C. 78q). The proposed changes pertain only to the style and format of the form. There are no changes in the form's data content. The changes are expected to ease the preparation of the form.

The aggregate annual reporting burden imposed on insured nonmember banks in using the revised form is 14 hours.

Dated: April 14, 1988.

Federal Deposit Insurance Corporation.

Hoyle L. Robinson,

Executive Secretary.

[FR Doc. 88-8586 Filed 4-18-88; 8:45 am]

BILLING CODE 6714-01-M

Privacy Act of 1974; Publication of New System of Records

AGENCY: Federal Deposit Insurance Corporation ("FDIC").

ACTION: Notice of establishment of New System of Records: "Insured Bank Liquidation Records."

SUMMARY: The FDIC, when it acts as liquidator or receiver of certain of the assets of a failed insured bank or a failing insured bank provided open-bank assistance by the FDIC, maintains files on individuals who were indebted to the closed or assisted bank or who otherwise had outstanding obligations to the bank. In the opinion of the FDIC, when it is acting as a liquidator or receiver, it is not an agency subject to the Privacy Act of 1974. The FDIC has, however, determined to comply voluntarily with the Privacy Act's requirements and, thus, following a 60-day public comment period, is giving notice of the establishment in final form of a new system of records, entitled "Insured Bank Liquidation Records."

DATE: Effective on October 1, 1988.

FOR FURTHER INFORMATION CONTACT: Robert E. Feldman, Assistant Executive Secretary, FDIC, 550 17th Street, NW., Washington, DC 20429, telephone (202) 898-3811.

SUPPLEMENTARY INFORMATION: The FDIC is establishing a new system of records, pursuant to the Privacy Act of 1974 (5 U.S.C. 552a), concerning records of individuals who had obligations with FDIC-insured institutions that have failed or that were provided open-bank assistance by the FDIC and for which the FDIC is acting in its corporate capacity or in its receivership capacity as liquidator of certain of the institutions' assets. Notice of the proposal to establish the "Insured Bank Liquidation Records" system was published in the **Federal Register** on November 17, 1987 (52 FR 43,943). In addition, a report on the proposal to establish the system was submitted to the Office of Management and Budget ("OMB") and Congress in accordance with OMB requirements.

The Supplementary Information section of the **Federal Register** notice describing the proposal restated the FDIC's position that it is not subject to the Privacy Act as a matter of law when it is acting as liquidator or receiver. However, the FDIC's Board of Directors nevertheless determined that it is sound public policy to comply voluntarily with the Privacy Act's requirements when the FDIC acts as liquidator or receiver. Upon determining to comply voluntarily with the act's requirements, it became necessary to take the appropriate steps to create a system of records related to the credit or loan files held by a failed or assisted institution and FDIC assets files about obligors of those institutions.

The Supplementary Information section also stated that information in the system would be available to an individual covered by the system except to the extent that it has been compiled in reasonable anticipation of a civil action or proceeding, including collection actions or foreclosures, citing 5 U.S.C. 552a(d)(5) for that proposition. Therefore, the conclusion was reached that, for example, where a loan is in default, the FDIC would not disclose to the individual information such as appraisals, analyses of collection strategy or recovery, or legal memoranda. For a fuller explanation of the proposal, the reader is directed to the November 17, 1987, **Federal Register** notice.

The FDIC received two comments from the public in response to the proposal—one from Legal Aid of Western Missouri, St. Joseph, Missouri, the other from Farmers' Legal Action Group Inc., St. Paul, Minnesota. Legal Aid of Western Missouri challenged the FDIC's statement in its proposal "that it is not an agency for purposes of the Privacy Act when it acts as a liquidator or receiver." For the purposes of determining whether to finalize the proposal and establish the "Insured Bank Liquidation Records" system, the issue of whether FDIC is as a matter of law subject to the Privacy Act when it acts as liquidator or receiver is moot. Whether the FDIC as liquidator or receiver is subject to the Privacy Act as a matter of law or whether the FDIC determines to comply voluntary with the act's provisions, the outcome is the same; i.e., it is necessary to establish systems of records, when appropriate, for records held by the FDIC as liquidator or receiver.

Both commenters argued that an individual covered by the system should be entitled to an appraisal of his or her property as a matter of public policy. The commenters also contended that appraisals are not exempt from disclosure under paragraph (d)(5) of the Privacy Act (5 U.S.C. 552a(d)(5)). Paragraph (d)(5) provides that "nothing in the (Privacy Act) shall allow an individual access to any information

compiled in reasonable anticipation of a civil action or proceeding." The exemption differs from the other exemptions permitted by the Privacy Act in that it is "self-executing." In other words, the exemption is effective by virtue of its inclusion in the act. By contrast, the other exemptions may be used only following public notice and comment procedures and inclusion in an agency's Privacy Act rules and regulations. The nature of the paragraph (d)(5) exemption dictates that determinations as to the exempt nature of certain information must be made on a case-by-case basis. The FDIC was simply asserting in the Supplementary Information section of the proposal its conclusion that, as a general rule, appraisals would be exempt under paragraph (d)(5). The contrary assertions of the commenters simply represent their legal interpretations of the paragraph (d)(5) exemption. They do not alter the fact that it is necessary for the FDIC to adopt a system of records to cover records about obligors of failed or assisted institutions held by FDIC as receiver or liquidator in order to be in compliance with the technical record keeping requirement of the Privacy Act. Therefore, the comments concerning paragraph (d)(5) present no bar to the adoption of the system.

Finally, both commenters expressed concerns about the first routine use of the proposed system of records. That routine use provides that information in the system may be disclosed "to prospective purchasers of the individual's obligation(s) for the purpose of informing the prospective purchaser about the nature and quality of obligations to be purchased." The Farmers' Legal Action Group, Inc., states that this could constitute a gross intrusion into an individual's privacy which may be in violation of the Privacy Act's disclosure prohibitions. Both commenters suggest that the routine use be modified so that disclosure can only be made to prospective purchasers after removing identifying information (e.g., name, address, and telephone numbers). In the alternative, Legal Aid of Western Missouri suggests that disclosure be made only with the consent of the individual.

As a matter of current practice, information about loans is provided whenever possible to prospective purchasers in summary fashion only. This means that the FDIC currently routinely eliminates names and other identifying information from material provided to prospective purchasers. There are occasions, however, where a prospective purchaser, in performing with due diligence an analysis of assets to be purchased in order to estimate the risks and rewards associated with buying them, can only confirm the existence of a legally collectible loan when all identifying information, including names, addresses, and telephone numbers have been supplied. Under such circumstances, the FDIC will, after careful analysis, release all necessary information about a loan. The first routine use will continue to permit this type of disclosure to prospective purchasers because such disclosure is self-evidently compatible with the purpose for which the information is requested, therefore satisfying the requirements for routine use established in paragraph (a)(7) of the Privacy Act (5 U.S.C. 552a(a)(7)). As the routine use is a proper routine use, the consent of the individual who is the subject of the record is not required, *See* 5 U.S.C. 552a(b).

Accordingly, after fully considering the comments received in response to the proposal, the FDIC's Board of Directors establishes the following system of records:

FDIC 30-64-0013

SYSTEM NAME:

Insured Bank Liquidation Records.

SYSTEM LOCATION:

Designated FDIC regional offices (liquidation), consolidated field offices, and sites of failed FDIC-Insured institutions. A list of the designated locations is available from the Operations Branch of the FDIC's Division of Liquidation, 550 17th Street, NW., Washington, DC. 20429.

CATEGORIES OF INDIVIDUALS COVERED BY THE SYSTEM:

Individuals who were obligors of FDIC-insured institutions that have failed or that were provided open-bank assistance by the FDIC and for which the FDIC is acting as liquidator or receiver of certain of the institutions' assets.

CATEGORIES OF RECORDS IN THE SYSTEM:

Contains the obligor's credit or loan files held by the closed or assisted institution, which files may include the loan and related documents, correspondence, and bank officer notes; FDIC asset files, including information relating to the obligor's financial condition, such as financial statements, income tax returns, asset or collateral verifications, appraisals, and sources of payment; intra-agency memoranda or notes relating to the liquidation of the obligation; correspondence; and any other documents related to the liquidation of the asset. Records held by the FDIC as receiver are a part of this system only to the extent that the state law governing the receivership is not inconsistent or does not otherwise establish specific requirements.

AUTHORITY FOR MAINTENANCE OF THE SYSTEM:

12 U.S.C. 1819, 1821, 1823; applicable state laws governing the liquidation of assets of failed financial institutions.

ROUTINE USES OF RECORDS MAINTAINED IN THE SYSTEM, INCLUDING CATEGORIES OF USERS AND THE PURPOSES OF SUCH USE:

Information in the system may be disclosed:

(1) To prospective purchasers of the individual's obligation(s) for the purpose of informing the prospective purchasers about the nature and quality of obligation(s) to be purchased.

(2) To persons performing services for the FDIC in connection with the liquidation of an individual's obligations, such as appraisers, outside counsel, and collection agencies, and auditing or accounting firms retained to assist in an audit or investigation of FDIC's liquidation activities.

(3) To participants in the obligation in order to fulfill any contractual or incidental responsibilities in connection with the participation agreement.

(4) To Federal or state agencies, such as the Farmers Home Administration, or to financial institutions where information is relevant to an application or request by the individual for a loan, grant, financial benefit, or other entitlement.

(5) To Federal or state agencies, such as the Internal Revenue Service or state taxation authorities, in the performance of their governmental duties, such as obtaining information regarding income, including the reporting of income resulting from a compromise of an obligation.

(6) To apprise courts of competent jurisdiction supervising the FDIC's liquidation or receivership functions of information required by statute to be disclosed to the court and necessary to obtain approvals from the court for the disposal of assets and the disposition of claims and other related issues.

(7) To Federal or state bank examiners for the purposes of examining borrowing relationships in operating banks that may be related to an obligation of an individual covered by this system.

(8) To a court, magistrate, or administrative tribunal in the course of presenting evidence, including disclosures to counsel or witnesses in

the course of civil discovery, litigation, or settlement negotiations or in connection with criminal proceedings.

(9) To the appropriate federal, state, or local agency or authority responsible for investigating or prosecuting a violation of or for enforcing or implementing a statute, rule, regulation, or order, when the information indicates a violation or potential violation of law, whether civil, criminal, or regulatory in nature, and whether arising by general statute or particular program statute, or by regulation, rule, or order issued pursuant thereto.

(10) To a congressional office in response to an inquiry made at the request of the individual to whom the record pertains.

DISCLOSURES TO CONSUMER REPORTING AGENCIES:

Disclosures may be made from this system, pursuant to 5 U.S.C. 552a(b)(12), to "consumer reporting agencies" as defined in the Fair Credit Reporting Act (15 U.S.C. 1681a(f)) or the Federal Claims Collection Act of 1966 (31 U.S.C. 3701(a)(3)).

POLICIES AND PRACTICES FOR STORING, RETRIEVING, ACCESSING, RETAINING, AND DISPOSING OF RECORDS IN SYSTEM:

STORAGE:

Maintained in file folders and on computer discs and tapes.

RETRIEVABILITY:

Indexed by name of failed or assisted insured institution and by name of the individual.

SAFEGUARDS:

File folders are stored in lockable file cabinets and/or in secured vault areas accessed only by authorized personnel. Computer records are accessed only by authorized personnel.

RETENTION AND DISPOSAL:

Credit or loan files of the failed or assisted bank are maintained for the period of time provided under applicable state or Federal laws pursuant to which the FDIC liquidates the obligations. FDIC asset files and information maintained in an online capacity are retained as long as needed.

SYSTEM MANAGER(S) AND ADDRESSES:

The appropriate FDIC regional director (liquidation) for records maintained in FDIC regional offices; the appropriate FDIC Bank Liquidation Specialist-in-Charge for records maintained in consolidated field offices or at the site of a failed or assisted institution.

NOTIFICATION PROCEDURE:

Requests must be in writing and addressed to the Office of the Executive Secretary, 550 17th Street, NW, Washington, DC 20429. The request must contain the individual's name and address and the name and address of the failed or assisted institution at which the individual has an obligation.

RECORD ACCESS PROCEDURES:

Same as "Notification" above.

CONTESTING RECORD PROCEDURES:

Same as "Notification" above.

RECORD SOURCE CATEGORIES:

Information is obtained from the individual on whom the record is maintained; appraisers retained by the originating bank or the FDIC; investigative and/or research companies; credit bureaus and/or services; references named by the individual; attorneys or accountants retained by the originating bank or the FDIC; participants in the obligation(s) of the individual; officers and employees of the failed or assisted bank; congressional offices that may initiate an inquiry; and other parties providing services to the FDIC in its capacity as liquidator or receiver.

SYSTEMS EXEMPTED FROM CERTAIN PROVISIONS OF THE ACT:

None.

By direction of the Board of Directors.

Dated at Washington, D.C., this 13th day of April, 1988.

Federal Deposit Insurance Corporation.

Hoyle L. Robinson,

Executive Secretary.

[FR Doc. 88-8582 Filed 4-18-88; 8:45 am]

BILLING CODE 6714-01-M

Proposed Statement of Policy Regarding Independent External Audits of State Nonmember Banks

AGENCY: Federal Deposit Insurance Corporation (FDIC).

ACTION: Request for comments.

SUMMARY: The FDIC hereby requests comments on a proposed Statement of Policy which is intended to provide more explicit guidance to banks on the position of the Federal Deposit Insurance Corporation regarding independent external audits of state nonmember banks.

DATE: Comments on the proposal must be received by June 20, 1988.

ADDRESS: All comments should be submitted to Hoyle L. Robinson, Executive Secretary, Federal Deposit Insurance Corporation, 550 17th Street NW., Washington, DC 20429, or delivered to Room 6108 at the same address, between the hours of 9:00 a.m. and 5:00 p.m. on business days.

FOR FURTHER INFORMATION CONTACT: Doris L. Marsh, Examination Specialist, Division of Bank Supervision, Federal Deposit Insurance Corporation, 550 17th Street NW., Washington, DC 20429, telephone (202) 898-6903.

SUPPLEMENTARY INFORMATION: The FDIC believes that a strong auditing program combined with an annual audit of a bank's financial statements by an independent certified public accountant substantially lessens the risk that a bank will not detect potentially serious problems. The large number of financial institutions experiencing financial difficulties as a result of fraud, insider abuse and mismanagement in recent years has made an audit program even more important. The examination staff has for any years been criticizing banks that lack an adequate internal auditing program, and has long encouraged independent external audits. Many banks now supplement their internal auditing programs by obtaining independent external audits voluntarily or as a result of Federal Reserve bank holding company regulations or because of Securities and Exchange Commission requirements. However, a number of banks, particularly smaller institutions, have decided not to have an external audit for various reasons. The FDIC staff has been working to find an economical and practical external review alternative for these banks.

Nevertheless, the FDIC continues to believe in the value of independent external audits for banks and will continue to strongly encourage all banks to obtain them. In an effort to provide more explicit guidance to banks on the FDIC's position with respect to external audits, the FDIC proposes to adopt a Statement of Policy that is similar to the policy of the Office of the Comptroller of the Currency for national banks.

The text of the proposed policy statement follows:

Statement of Policy Regarding Independent External Audits of State Nonmember Banks

1. The FDIC believes that a strong internal auditing program combined with an annual audit of a bank's financial statements by an independent certified public accountant substantially lessens the risk that a bank will not detect potentially serious problems. A strong internal auditing program establishes the proper control environment and promotes accuracy

and efficiency in a bank's operations. The independent external audit complements this program by providing an objective outside view of the bank's operations. A review of both a bank's external audit and internal auditing programs has been and will continue to be a part of the FDIC's examination procedures.

2. An annual external audit by a certified public accounting firm, the FDIC believes, should be considered by a bank's board of directors as part of the cost of operating a bank in a safe and sound manner. An external audit benefits management by assisting in the establishment of appropriate operating policies, internal controls, internal auditing programs, and management information systems. In addition, an audit assists boards of directors in fulfilling their fiduciary responsibilities and provides them greater assurance that financial reports are accurate and provide adequate disclosure.

3. For these reasons, the FDIC strongly encourages all state nonmember banks to engage an independent certified public accounting firm to conduct an audit of their financial statements annually regardless of the nature of their internal auditing procedures. The FDIC believes that a bank can derive the greatest benefits from an audit that is performed in accordance with generally accepted auditing standards and is of sufficient scope to enable the auditor to express an opinion on the bank's financial statements.

4. An audit performed as of a quarter-end date when the Reports of Condition and Income are prepared is preferable and would permit the certified public accountant to assist the bank in the preparation and/or review of those reports. A bank may find it more cost effective to be audited during the accounting firms' less busy periods. The audit firm chosen should be experienced in auditing banks and knowledgeable about banking regulations in order to provide the bank with the most effective service.

5. The board of directors or audit committee of each state nonmember bank that does not already engage an independent certified public accounting firm to conduct an annual audit performed in accordance with generally accepted auditing standards and of sufficient scope to enable the auditor to express an opinion on the bank's (or the parent holding company's consolidated) financial statements taken as a whole generally should analyze the bank's need for external audit coverage annually and record its deliberations in the board or committee's minutes.

6. If, after due consideration, the board of directors or audit committee determines that an annual audit by an independent certified public accounting firm is not necessary for a bank, the reasons for this assessment should be fully documented in the board or committee minutes. In its evaluation, the board generally should consider not only the cost of an audit, but also the potential benefits, including possible cost savings from lower fidelity and other indemnity insurance premiums, and potentially fewer defalcations or lower losses from defalcations. Other indirect benefits of an audit, such as improvements in internal controls; more reliable financial reports to the bank's board of directors, stockholders, bank customers, and the public; greater assurance to bank customers and the public that the bank is being operated in a safe and sound manner; and assistance with the preparation and review of Reports of Condition and Income to assure accurate and timely filing, among other items, should also be carefully weighed.

7. The FDIC recognizes that the board of directors or audit committee may determine that a bank does not need an annual audit by an independent certified public accounting firm (which is the only type of firm that may perform an audit of the bank's financial statements). Without an annual audit, a full review of alternative and/or supplemental approaches such as a review of internal controls or other areas, specified auditing procedures, or a "review" of the financial statements by an independent auditor, is appropriate. In addition to certified public accounting firms, other firms with bank auditing experience and expertise that are independent of the bank may be available to provide acceptable reviews of limited scope auditing work at a reasonable cost. The board of directors or the audit committee should also review this limited scope approach annually as part of its analysis of the bank's external auditing needs to determine whether it provides sufficient substantive external coverage of the bank's risk areas to constitute an acceptable external auditing program. If the bank's outside firm is simply obtaining confirmations of deposits and loans, for example, the board or committee should consider expanding the scope of the auditing work performed. Alternatives could include additional procedures to test: The valuation or collectibility of loans, investments, and repossessed and foreclosed collateral; internal controls; insider transactions; and the reasonableness of the allowance for loan losses. Another alternative would be for the board or committee to reconsider obtaining an audit performed by an independent certified public accountant.

8. The FDIC believes that an annual audit by an independent certified public accounting firm should be an integral part of the safe and sound management of a bank. As a consequence, applicants for deposit insurance coverage after the effective date of this statement of policy will generally be expected to commit their bank to obtain an audit by an independent certified public accountant annually for at least the first three years after deposit insurance coverage is granted.[1] The FDIC may determine on a case-by-case basis that an independent audit is unnecessary where an applicant can demonstrate that the benefits derived from an external audit can be substantially provided by internal expertise or other outside sources, or where the applicant is owned by another company and will undergo an audit performed by an independent certified public accounting firm as part of an audit of the consolidated financial statements of its parent company.

9. Whether currently or newly insured, the FDIC requests each state nonmember bank that undergoes any auditing work by an outside firm, regardless of the scope of the work, to furnish a copy of any reports by the auditor, including any management letters, to the appropriate FDIC regional office as soon as possible after their receipt by the bank.

10. In addition, the FDIC requests each bank to promptly notify the appropriate FDIC regional office when any firm is initially engaged to perform auditing procedures and when a change in auditing firms occurs.

11. Any state nonmember bank owned by another company that directly or indirectly undergoes an audit performed by an independent certified public accouting firm as part of an audit of the consolidated financial statements of its parent company may, at its option, send one copy of the comparable reports by the auditor or notification of the change

[1] Operating non-FDIC insured institutions should also note that the FDIC expects, unless waived in writing by the FDIC, any applicant with more than $50 million in assets to have an audit of its financial statements conducted by a certified public accounting firm prior to submitting an application, and requests that a copy of the auditor's report be included as part of the application. The FDIC may require such an audit, on a case-by-case basis, for applicants with assets of $50 million or less. Please see the June 9, 1987 Statement of Policy Regarding Applications for Federal Deposit Insurance by Operating Non-FDIC Insured Institutions, as amended June 24, 1987.

VOL 53 ISS 75 AP 19 1988 UMI

in accountants for the consolidated company to the appropriate regional director. If several banks supervised by the same FDIC regional office are owned by one parent company, a single copy of each report applicable to the consolidated company may be submitted to the regional office on behalf of all of the affiliated banks.

12. An annual independent external audit complements both the FDIC's supervisory process and bank internal auditing programs by further identifying or clarifying issues of potential concern or exposure, and it can greatly aid management in taking corrective action, particularly when weaknesses are detected in internal control or management information systems. For these reasons, an annual audit performed by an independent certified public accounting firm or specified auditing procedures will be a condition of future enforcement actions when deemed necessary or if it appears that any of the following conditions may exist:

(a) There are inadequate internal controls and internal auditing procedures;

(b) The directorate is generally uninformed in the area of internal controls;

(c) There is evidence of insider abuse;

(d) There are known or suspected defalcations;

(e) There is known or suspected criminal activity;

(f) Where it appears that director liability may exist;

(g) Where direct verification is warranted; and/or

(h) Where questionable transactions with affiliates have occurred.

13. Such an enforcement action may also require that (a) the bank provide to the appropriate FDIC regional office a copy of the auditor's report and any management letter received from the auditor promptly after the completion of any auditing work and that (b) the bank notify the regional office in advance of the time and date of any meeting between management and the auditor at which any auditing findings are to be presented.

By order of the Board of Directors. Dated at Washington, DC, this 13th day of April, 1988.

Federal Deposit Insurance Corporation.

Hoyle L. Robinson,

Executive Secretary.

[FR Doc. 88-8581 Filed 4-18-88; 8:45 am]

BILLING CODE 6714-01-M

FEDERAL EMERGENCY MANAGEMENT AGENCY

Availability of Environmental Assessment of Radiological Instrumentation Test Facility; Mt. Weather, VA

AGENCY: Federal Emergency Management Agency (FEMA).

ACTION: Notice of availability of a material storage building construction plan, an environmental assessment, and finding of no significant impact.

SUMMARY: FEMA has prepared construction plans and an environmental assessment on the proposed construction of a material storage building (MSB) at the site of the Radiological Instrument Test Facility (RITF) in Mt. Weather, Virginia. Based on an analysis of an environmental impact study a finding of no significant impact has been determined.

Background

RITF provides the basic support for the national radiological instrumentation program. Approximately one year ago the facility relocated from the Washington Navy Yard to Mt. Weather. It is now consolidating radioactive material, radiological equipment, and other material into one central location. The MSB is required to house these items.

Proposed Action

Construct an MSB adjacent to the RITF for the purpose of storing radioactive material, radiological instrumentation, calibrators, and other extraneous material belonging to FEMA.

Environmental Impact of the Proposed Action

The location for the MSB is in a Federal compound in a rural, sparsely populated area. The nearest residence to the construction site outside the fenced-in secure government facility is approximately one-half mile. Within the facility, the construction will be a minimum of 25 feet above and parallel to the west side of RITF Building 218 no nearer than 20 feet to that building. To the south, approximately 200 feet and at the same level is Building 201, another storage building. A gravel road, to the north of that structure, will be extended by approximately 200 feet to the MSB loading dock. To the north of the gravel road the land is rocky and barren.

Use of the new structure will have no significant impact on the atmosphere from an oil heater and air conditioner. Noise generated during operations at the MSB will be minimal. Radioactive materials stored in the building will be of the sealed source (encapsulated) type and encased in shielded containers. Container surface radiation levels will adhere to Nuclear Regulatory Commission (NRC) regulations. A comprehensive monitoring system to detect radiation levels will be installed as well as a fire alarm system.

Finding of No Significant Impact

Based on the environmental assessment, we conclude that the proposed action will not have a significant effect on the quality of the human environment. Therefore, an environmental impact statement for the proposed construction will not be prepared.

For further information and for Single Copies of the Plans and Environmental Assessment Contact: Michael S. Pawlowski, Emergency Management Systems Support, Federal Emergency Management Agency, 500 C Street SW., Room 607, Washington, DC 20472, Telephone No. (202) 646-3080.

Grant C. Peterson,

Associate Director, State and Local Programs and Support.

Issued at Washington, DC.

[FR Doc. 88-8492 Filed 4-18-88; 8:45 am]

BILLING CODE 6718-21-M

FEDERAL MARITIME COMMISSION

Agreement(s) Filed

The Federal Maritime Commission hereby gives notice of the filing of the following agreement(s) pursuant to section 5 of the Shipping Act of 1984.

Interested parties may inspect and obtain a copy of each agreement at the Washington, DC Office of the Federal Maritime Commission, 1100 L Street, NW., Room 10325. Interested parties may submit comments on each agreement to the Secretary, Federal Maritime Commission, Washington, DC 20573, within 10 days after the date of the **Federal Register** in which this notice appears. The requirements for comments are found in § 572.603 of Title 46 of the Code of Federal Regulations. Interested persons should consult this section before communicating with the Commission regarding a pending agreement.

Agreement No: 202-007590-047

Title: United States/Colombia Conference

Parties: Crowley Caribbean Transport, Inc. Flota Mercante Grancolombia, S.A. Lykes Bros. Steamship Co., Inc. CTMT, Inc.

Synopsis: The proposed amendment would restate the agreement and would make certain changes in procedures related to voting. It would also make changes in matters which can only be considered at owner's meetings and in independent action provisions with respect to compensation payable to freight forwarders.

Agreement No: 202-010636-039

Title: U.S. Atlantic-North Europe Conference ("Conference")
Parties: Atlantic Container Line, B.V. Dart-ML Limited Hapag-Lloyd AG Sea-Land Service, Inc. P & O Containers (TFL) Limited Compagnie Generale Maritime (CGM) Nedlloyd Lijnen, B.V. A.P. Moller-Maersk Line
Synopsis: The proposed amendment provides that any member which did not offer service in the trade as of September 29, 1987 and which is not a party to the U.S.-North Europe Compliance Agreement shall be policed by an independent neutral body under the rules and procedures set forth in the Conference Agreement. The parties have requested a shortened review period.

Agreement No: 202-011189

Title: CCNI/CPV Service Agreement
Parties: Compania Peruana de Vapores Compania Chilena de Navegacion Interoceanica SA
Synopsis: The proposed agreement would permit the parties to pool revenues in the trade between U.S. Atlantic Coast ports, and inland and coastal points (including Canadian inland and coastal points) via such ports, and ports on the West Coast of South America, and inland and coastal points via such ports. The parties would initially operate a total of three vessels in the trade, each with a capacity of 400-500 TEU's. The parties have requested a shortened review period.

Agreement No: 202-011190

Title: Iberia/United States Cooperation Agreement
Parties: South Europe/U.S.A. Freight Conference Atlantic Container Line BV Gulf Container Line (GCL) BV
Synopsis: The proposed agreement would permit the parties to agree upon rates, charges, service contracts and other related matters concerning the transportation of cargo from ports and points in Spain and Portugal to U.S. Atlantic and Gulf ports and U.S. interior and coastal points via such ports.

By Order of the Federal Maritime Commission.

Dated: April 14, 1988.

Joseph C. Polking,
Secretary.

[FR Doc. 88-8580 Filed 4-18-88; 8:45 am]

BILLING CODE 6730-01-M

[Docket No. 88-13]

Dominican Ferries P.R., Inc., Marinvest Funds, S.A. v. Commonwealth of Puerto Rico, et al.; Filing of Complaint and Assignment

Notice is given that a complaint filed by Dominican Ferries P.R., Inc. and Marinvest Funds, S.A. ("Dominican/Marinvest") against the Commonwealth of Puerto Rico; Hector Rivera Cruz, Secretary of Justice for the Commonwealth of Puerto Rico; Dario Hernandez Torres, Secretary of Transportation and Public Works for the Commonwealth of Puerto Rico; Pedro Ortiz Alvarez, Secretary of Consumer Affairs for the Commonwealth of Puerto Rico; Carlos Lopez Feliciano, Superintendent of Police for the Commonwealth of Puerto Rico; Juan Antonio Garcia, Insurance Commissioner for the Commonwealth of Puerto Rico; Ramon Vega Diaz, Jr., and Roberto Baco Dapena, in their capacities as members of, and collectively as, the Commonwealth of Puerto Rico's Interagency Coordinating Board to Combat Illegal Appropriation of Automobiles (hereinafter collectively, "the Commonwealth"), was served April 13, 1988. Dominican/Marinvest allege that the Commonwealth has violated sections 10(b)(11), 10(b)(12) and 10(d)(1), Shipping Act of 1984, 46 U.S.C. app sections 1709(b)(11), 1709(b)(12) and 1709(d)(1) through the passage of certain legislation—The Vehicular Property Protection Act—and regulations implementing that Act. Specifically, it is alleged that the regulations, and in particular a requirement that bonds must be posted if persons desire to ship their motor vehicles abroad for tourism purposes, (if the vehicle is financed with credit) "has had an immediate and irreparable impact on Complaints' operations."

This proceeding has been assigned to Administrative Law Judge Charles E. Morgan ("Presiding Officer"). Hearing in this matter, if any is held, shall commence within the time limitations prescribed in 46 CFR 502.61. The hearing shall include oral testimony and cross-examination in the discretion of the Presiding Officer only upon proper showing that there are genuine issues of material fact that cannot be resolved on the basis of sworn statements, affidavits, depositions, or other documents or that the nature of the matter in issue is such that an oral hearing and cross-examination are necessary for the development of an adequate record. Pursuant to the further terms of 46 CFR 502.61, the initial decision of the Presiding Officer in this proceeding shall be issued by April 13, 1988, and the final decision of the Commission shall be issued by August 14, 1989.

Joseph C. Polking,
Secretary.

[FR Doc. 88-8489 Filed 4-18-88; 8:45 am]

BILLING CODE 6730-01-M

Truck Detention Charges At California Ports Enlargement of Time To Reply to Petition for Rulemaking

The Commission on March 18, 1988 (53 FR 8976), published a notice of filing of petition by the California Trucking Association seeking the promulgation of a truck detention rule applicable at California ports. The notice requested the submission by interested persons on or before April 15, 1988, of views, arguments, or data in response to the petition.

Upon request of interested persons, and good cause appearing, the time for submission of responses (in an original and 15 copies) to the above-referenced petition is enlarged to May 2, 1988.

Joseph C. Polking,
Secretary.

[FR Doc. 88-8584 Filed 4-18-88; 8:45 am]

BILLING CODE 6730-01-M

Shipping Conditions in the United States/Korea Trade; Enlargement of Time to Reply to Petition

The Commission on March 16, 1988 (53 FR 8697) published a notice of filing by Navios Management, Inc. d/b/a Pacific America Line ("PACAM") of a petition for rulemaking (P3-88) under section 19 of the Merchant Marine Act, 1920, 46 U.S.C. app 876. The notice requested that interested persons submit views, arguments, and/or data on or before April 15, 1988, in response to the petition.

Hyundai Merchant Marine Co., Ltd. and Pan Ocean Shipping Company, Ltd., have filed requests for an enlargement of time until May 31, 1988, to respond to the petition. The United States Department of State has also requested an extension, until May 17, 1988, to file comments. PACAM has filed a reply in opposition to any extension.

The requests all refer to the scheduling of renewed discussions with

the Government of Korea, which will include the topic raised by PACAM in its petition, as a basis for additional time to respond.

Good cause appearing, the Commission has determined to grant some additional time to file comments and the period for submission of responses (in an original and 15 copies) is enlarged to May 17, 1988.

By the Commission.

Joseph C. Polking,

Secretary.

[FR Doc. 88-8488 Filed 4-18-88; 8:45 am]

BILLING CODE 6735-01-M

FEDERAL RESERVE SYSTEM

Federal Open Market Committee; Domestic Policy Directive of February 9-10, 1988

In accordance with § 217.5 of its rules regarding availability of information, there is set forth below the domestic policy directive issued by the Federal Open Market Committee at its meeting held on February 9-10, 1988.[1] The directive was issued to the Federal Reserve Bank of New York as follows:

The information reviewed at this meeting indicated that economic activity continued to expand rapidly in the fourth quarter but that the advance reflected a build-up in inventories as domestic final demands weakened. The growth in output appeared to have slowed around year-end. Total nonfarm payroll employment rose much less in January than on average over the previous three months; the manufacturing sector also recorded reduced employment growth in January. The civilian unemployment rate, at 5.8 percent in January, was unchanged from December. Growth in industrial production moderated further in December. Retail sales picked up in December, buoyed by improved auto sales, but remained below levels reached during the summer. Indicators of business capital spending were mixed late in the year. Housing starts fell markedly in December, and were down somewhat on balance in the fourth quarter from the average pace in the second and third quarters. The nominal U.S. merchandise trade deficit declined substantially in November. For October and November combined, the deficit rose slightly from the average rate in the third quarter, but in real terms the deficit was estimated to have narrowed further. The rise in consumer prices slowed and producer prices fell in late 1987, reflecting declines in energy prices; wage trends have shown little change in recent months.

Most interest rates were down substantially on balance since the Committee's meeting in mid-December. In the Treasury securities market, long-term yields fell considerably more than short-term rates. Broad indexes of stock prices rose somewhat on balance over the intermeeting period in still relatively volatile trading. The trade-weighted foreign exchange value of the dollar in terms of the other G-10 currencies declined further in the second half of December but recovered after the turn of the year and has increased moderately on balance since the December meeting.

Growth of M2 and M3 strengthened substantially in January after slowing over November and December. For 1987 as a whole, expansion of M2 fell considerably below the lower end of the range established by the Committee for the year, while growth of M3 was at the lower end of its range. Growth of M1 surged in January following two months of declines. For the year 1987, M1 growth was marginally below that of nominal GNP, and expansion in total domestic nonfinancial debt was at the midpoint of the Committee's monitoring range for the year.

The Federal Open Market Committee seeks monetary and financial conditions that will foster reasonable price stability over time, promote growth in output on a sustainable basis, and contribute to an improved pattern of international transactions. In furtherance of these objectives, the Committee at this meeting established growth ranges of 4 to 8 percent for both M2 and M3, measured from the fourth quarter of 1987 to the fourth quarter of 1988. The monitoring range for growth in total domestic nonfinancial debt was set at 7 to 11 percent for the year.

With respect to M1, the Committee again decided not to establish a specific target for 1988. The behavior of this aggregate in relation to economic activity and prices has become very sensitive to changes in interest rates, among other factors, as evidenced by sharp swings in its velocity in recent years. Consequently, the appropriateness of changes in M1 this year will continue to be evaluated in the light of the behavior of its velocity, developments in the economy and financial markets, and the nature of emerging price pressures.

In the implementation of policy for the immediate future, the Committee seeks to maintain the slightly reduced degree of pressure on reserve positions sought in recent days. The Committee agrees that the current more normal approach to open market operations remains appropriate; still sensitive conditions in financial markets and uncertainties in the economic outlook may continue to call for some flexibility in operations. Taking account of conditions in financial markets, somewhat lesser reserve restraint or somewhat greater reserve restraint would be acceptable depending on the strength of the business expansion, indications of inflationary pressures, developments in foreign exchange markets, as well as the behavior of the monetary agregates. The contemplated reserve conditions are expected to be consistent with growth in both M2 and M3 over the period from November through March at annual rates of about 6 to 7 percent. The Chairman may call for Committee consultation if it appears to the Manager for Domestic Operations that reserve conditions during the period before the next meeting are likely to be associated with a federal funds rate persistently outside a range of 4 to 8 percent.

By order of the Federal Open Market Committee, April 12, 1988.

Normand Bernard,

Assistant Secretary, Federal Open Market Committee.

[FR Doc. 88-8457 Filed 4-18-88; 8:45 am]

BILLING CODE 6210-01-M

[1] Copies of the Record of policy actions of the Committee for the meeting of February 9-10, 1988, are available upon request to The Board of Governors of the Federal Reserve System, Washington, DC 20551.

Danville Bank Corp., et al.; Formations of; Acquisitions by; and Mergers of Bank Holding Companies

The companies listed in this notice have applied for the Board's approval under section 3 of the Bank Holding Company Act (12 U.S.C. 1842) and § 225.14 of the Board's Regulation Y (12 CFR 225.14) to become a bank holding company or to acquire a bank or bank holding company. The factors that are considered in acting on the applications are set forth in section 3(c) of the Act (12 U.S.C. 1842(c)).

Each application is available for immediate inspection at the Federal Reserve Bank indicated. Once the application has been accepted for processing, it will also be available for inspection at the offices of the Board of Governors. Interested persons may express their views in writing to the Reserve Bank or to the offices of the Board of Governors. Any comment on an application that requests a hearing must include a statement of why a written presentation would not suffice in lieu of a hearing, identifying specifically any questions of fact that are in dispute and summarizing the evidence that would be presented at a hearing.

Unless otherwise noted, comments regarding each of these applications must be received not later than May 12, 1988.

A. **Federal Reserve Bank of Philadelphia** (Thomas K. Desch, Vice President) 100 North 6th Street, Philadelphia, Pennsylvania 19105:

1. *Danville Bank Corporation,* Danville, Pennsylvania; to become a bank holding company by acquiring 100 percent of the voting shares of The First National Bank of Danville, Danville, Pennsylvania.

B. **Federal Reserve Bank of Richmond** (Lloyd W. Bostian, Jr., Vice President) 701 East Byrd Street, Richmond, Virginia 23261:

1. *Freedom Bancshares, Inc.,* Belington, West Virginia; to become a bank holding company by acquiring 100 percent of the voting shares of Belington Bank, Belington, West Virginia.

C. **Federal Reserve Bank of Chicago** (David S. Epstein, Vice President) 230 South LaSalle Street, Chicago, Illinois 60690:

1. *Gillespie Bancshares, Inc.*, DeSoto, Wisconsin; to become a bank holding company by acquiring 86 percent of the voting shares of DeSoto State Bank, DeSoto, Wisconsin.

Board of Governors of the Federal Reserve System, April 13, 1988.

James McAfee,

Associate Secretary of the Board.

[FR Doc. 88-8458 Filed 4-18-88; 8:45 am]

BILLING CODE 6210-01-M

Equimark Managing Partners; Formation of, Acquisition by, or Merger of Bank Holding Companies; and Acquisition of Nonbanking Company

The company listed in this notice has applied under § 225.14 of the Board's Regulation Y (12 CFR 225.14) for the Board's approval under section 3 of the Bank Holding Company Act (12 U.S.C. 1842) to become a bank holding company or to acquire voting securities of a bank or bank holding company. The listed company has also applied under § 225.23(a)(2) of Regulation Y (12 CFR 225.23(a)(2)) for the Board's approval under section 4(c)(8) of the Bank Holding Company Act (12 U.S.C. 1843 (c)(8)) and § 225.21(a) of Regulation Y (12 CFR 225.21(a)) to acquire or control voting securities or assets of a company engaged in a nonbanking activity that is listed in § 225.25 of Regulation Y as closely related to banking and permissible for bank holding companies, or to engage in such an activity. Unless otherwise noted, these activities will be conducted throughout the United States.

The application is available for immediate inspection at the Federal Reserve Bank indicated. Once the application has been accepted for processing, it will also be available for inspection at the offices of the Board of Governors. Interested persons may express their views in writing on the question whether consummation of the proposal can "reasonably be expected to produce benefits to the public, such as greater convenience, increased competition, or gains in efficiency, that outweigh possible adverse effects, such as undue concentration of resources, decreased or unfair competition, conflicts of interests, or unsound banking practices." Any request for a hearing on this question must be accompanied by a statement of the reasons a written presentation would not suffice in lieu of a hearing, identifying specifically any questions of fact that are in dispute, summarizing the evidence that would be presented at a hearing, and indicating how the party commenting would be aggrieved by approval of the proposal.

Comments regarding the application must be received at the Reserve Bank indicated or the offices of the Board of Governors not later than May 11, 1988.

A. **Federal Reserve Bank of Cleveland** (John J. Wixted, Jr., Vice President) 1455 East Sixth Street, Cleveland, Ohio 44101:

1. *Equimark Managing Partners*, Pittsburgh, Pennsylvania; to become a bank holding company by acquiring 35 percent of the voting shares of Equimark Corporation, Pittsburgh, Pennsylvania, and thereby indirectly acquire Equibank, Pittsburgh, Pennsylvania; Heritage National Bank, Pittsburgh, Pennsylvania; Equibank (Delaware), N.A., Wilmington, Delaware; The Liberty Financial Group, Inc., Philadelphia, Pennsylvania, and its subsidiary, Liberty Savings Bank, Horsham, Pennsylvania; and Equipmanagement, Inc., Pittsburgh, Pennsylvania; and thereby engage in providing management consulting, investment advisory, loan collection, and real estate appraisal services to nonaffiliated depository institutions pursuant to §§ 225.25(b)(4), 225.25(b)(11), 225.25(b)(14), and 225.25(b)(23) of the Board's Regulation Y.

Board of Governors of the Federal Reserve System, April 13, 1988.

James McAfee,

Associate Secretary of the Board.

[FR Doc. 88-8459 Filed 4-18-88; 8:45 am]

BILLING CODE 6210-01-M

DEPARTMENT OF HEALTH AND HUMAN SERVICES

Centers for Disease Control

Stress Control Strategies in Computer-Mediated Work; Open Meeting

The following meeting will be convened by the National Institute for Occupational Safety and Health (NIOSH) of the Centers for Disease Control (CDC) and will be open to the public for observation and participation, limited only by the space available.

Date: June 10, 1988.

Time: 10:30 a.m.—3:00 p.m.

Place: Room B-28, Robert A. Taft Laboratories, 4676 Columbia Parkway, Cincinnati, Ohio 45226.

Purpose: To review a research project protocol on the effects of distributed rest breaks and physical exercise on affective and somatic strains in data entry-work.

Additional information may be obtained from: Steven L. Sauter, Ph.D., Division of Biomedical and Behavioral Sciences, NIOSH, CDC, 4676 Columbia Parkway, Mail Stop C-24, Cincinnati, Ohio 45226. Telephones: FTS: 684-8293, Commercial: 513/533-8293.

Dated: April 13, 1988.

Elv' ı Hilyer,

As ociate Director for Policy Coordination, Centers for Disease Control.

[FR Doc. 88-8491 Filed 4-18-88; 8:45 am]

BILLING CODE 4160-19-M

Food and Drug Administration

[Docket No. 77F-0161]

Monsanto Co.; Withdrawal of Food Additive Petition

AGENCY: Food and Drug Administration.

ACTION: Notice.

SUMMARY: The Food and Drug Administration (FDA) is announcing the withdrawal without prejudice of the petition (FAP 7B3273) proposing that the food additive regulations be amended to provide for the safe use of acrylonitrile/butadiene/styrene copolymers containing not more than 50 percent of polymerized acrylonitrile for use in repeated use food-contact applications.

FOR FURTHER INFORMATION CONTACT: Gillian Robert-Baldo, Center for Food Safety and Applied Nutrition (HFF-335), Food and Drug Administration, 200 C St. SW., Washington, DC 20204, 202-472-5690.

SUPPLEMENTARY INFORMATION: In the **Federal Register** of July 26, 1977 (42 FR 38017), FDA published a notice that it had filed a petition (FAP 7B3273) from the Monsanto Co., c/o Jerome H. Heckman, Keller & Heckman, 1150 17th St. NW., Washington, DC 20036, that proposed to amend the food additive regulations to provide for the safe use of acrylonitrile/butadiene/styrene copolymers containing not more than 50 percent polymerized acrylonitrile for use in food-contact surfaces. In the **Federal Register** of March 26, 1985 (50 FR 11946), FDA published an amended filing notice for the petition to further limit the use of acrylonitrile/butadiene/styrene copolymers for repeated use food-contact applications only.

The Monsanto Co. has now requested further amendment of the notice to restrict the acrylonitrile component in acrylonitrile/butadiene/styrene copolymers to not more than 30 percent, as currently provided for in § 181.32 *Acrylonitrile copolymers and resins* (21 CFR 181.32). Therefore, the Monsanto

Co. is also withdrawing the petition without prejudice to a future filing (21 CFR 171.7).

Dated: April 8, 1988.

Fred R. Shank,

Acting Director, Center for Food Safety and Applied Nutrition.

[FR Doc. 88-8449 Filed 4-18-88; 8:45 am]

BILLING CODE 4160-01-M

[Docket No. 88E-0110]

Determination of Regulatory Review Period for Purposes of Patent Extension; Cefmax

AGENCY: Food and Drug Administration.

ACTION: Notice.

SUMMARY: The Food and Drug Administration (FDA) has determined the regulatory review period for Cefmax and is publishing this notice of that determination as required by law. FDA has made the determination because of the submission of an application to the Commissioner of Patents and Trademarks, Department of Commerce, for the extension of a patent which claims that human drug product.

ADDRESSES: Written comments and petitions should be directed to the Dockets Management Branch (HFA-305), Food and Drug Administration, Rm. 4-62, 5600 Fishers Lane, Rockville, MD 20857.

FOR FURTHER INFORMATION CONTACT: Philip L. Chao, Office of Health Affairs (HFY-20), Food and Drug Administration, 5600 Fishers Lane, Rockville, MD 20857, 301-443-1382.

SUPPLEMENTARY INFORMATION: The Drug Price Competition and Patent Term Restoration Act of 1984 (Pub. L. 98-417) generally provides that a patent may be extended for a period of up to 5 years so long as the patented item (human drug product, medical device, food additive, or color additive) was subject to regulatory review by FDA before the item was marketed. Under that act, a product's regulatory review period forms the basis for determining the amount of extension an applicant may receive.

A regulatory review period consists of two periods of time: a testing phase and an approval phase. For human drug products, the testing phase begins when the exemption to permit the clinical investigations of the drug becomes effective and runs until the approval phase being. The approval phase starts with the initial submission of an application to market the human drug product and continues until FDA grants permission to market the drug product. Although only a portion of a regulatory review period may count toward the actual amount of extension that the Commissioner of Patents and Trademarks may award (for example, half the testing phase must be subtracted as well as any time that may have occurred before the patent was issued), FDA's determination of the length of a regulatory review period for a human drug product will include all of the testing phase and approval phase as specified in 35 U.S.C. 156(g)(1)(B).

FDA recently approved for marketing the human antibiotic drug product Cefmax (Cefmenoxime Hydrochloride) which is indicated in the treatment of infections caused by susceptible strains of the designated microorganisms in the diseases listed below:

1. Lower respiratory tract infections (pneumonia and bronchitis) caused by *Streptococcus pneumoniae, Haemophilus influenzae, Klebsiella pneumoniae, Staphylococcus aureus, Escherichia coli,* and *Proteus mirabilis.*

2. Urinary tract infections (complicated and uncomplicated) caused by *E. coli, K. pneumoniae,* and *P. mirabilis.*

Subsequent to this approval, the Patent and Trademark Office received a patent term restoration application for Cefmax (U.S. Patent No. 4,298,607) from Takeda Chemical Industries, Ltd., and requested that FDA's assistance in determining the product's eligibility for patent term extension. In a letter dated March 31, 1988, FDA advised the Patent and Trademark Office that the product had undergone a regulatory review period and that the drug's active ingredient, Cefmenoxime Hydrochloride, represented the first permitted commercial marketing or use. The **Federal Register** notice now represents FDA's determination of the product's regulatory review period.

FDA has determined that the applicable regulatory review period for Cefmax is 2,875 days. Of this time, 1,228 days occurred during the testing phase of the regulatory review period, while 1,647 days occurred during the approval phase. These periods of time were derived from the following dates:

1. *The date an exemption under section 505(i) of the Federal Food, Drug, and Cosmetic Act became effective:* February 17, 1980. The applicant claims that an investigational new drug (IND) application for Cefmax became effective on February 18, 1980. However, FDA records indicate that the IND became effective on February 17, 1980.

2. *The date the application was initially submitted with respect to the human drug product under section 507 of the Federal Food, Drug, and Cosmetic Act:* June 28, 1983. The applicant claims that a new drug application for the antibiotic (NDA 50-571) was initially submitted on February 6, 1984. However, FDA records indicate that NDA 50-571 was initially submitted on June 28, 1983.

3. *The date the application was approved:* December 30, 1987. FDA has verified the applicant's claim that NDA 50-571 was approved on December 30, 1987.

This determination of the regulatory review period establishes the maximum potential length of a patent extension. However, the U.S. Patent and Trademark Office applies several statutory limitations in its calculations of the actual period for patent extension. In its application for patent extension, this applicant seeks 2 years of patent term extension.

Anyone with knowledge that any of the dates as published is incorrect may, on or before June 20, 1988, submit to the Dockets Management Branch (address above) written comments and ask for a redetermination. Furthermore, any interested person may petition FDA, on or before October 17, 1988, for a determination regarding whether the applicant for extension acted with due diligence during the regulatory review period. To meet its burden, the petition must contain sufficient facts to merit an FDA investigation. (See H. Rept. 857, Part 1, 98th Cong., 2d Sess., pp. 41-42, 1984.) Petitions should be in the format specified in 21 CFR 10.30.

Comments and petitions should be submitted to the Dockets Management Branch (address above) in three copies (except that individuals may submit single copies) and identified with the docket number found in brackets in the heading of this document. Comments and petitions may be seen in the Dockets Management Branch between 9 a.m. and 4 p.m., Monday through Friday.

Dated: April 12, 1988.

Stuart L. Nightingale,

Associate Commissioner for Health Affairs.

[FR Doc. 88-8452 Filed 4-18-88; 8:45 am]

BILLING CODE 4160-01-M

Public Meeting; Issues Concerning AIDS Vaccine Development and Testing

AGENCY: Food and Drug Administration.

ACTION: Notice.

SUMMARY: The Food and Drug Administration (FDA) is announcing a forthcoming public meeting to discuss issues concerning acquired immune deficiency syndrome (AIDS) vaccine development and testing. This discussion is intended primarily to

provide information to assist Public Health Services (PHS) employees in preparing a report for presentation at the PHS Planning Conference for Prevention and Control of AIDS to be held in June 1988.

DATE: The meeting will be held on April 25, 1988, 9 a.m. to 4 p.m.

ADDRESS: The meeting will be held in Conference Rm. 10, Bldg. 31, National Institutes of Health, 9000 Rockville Pike, Bethesda, MD.

FOR FURTHER INFORMATION CONTACT: Deborah J. Henderson, Center for Biologics Evaluation and Research (HFB-1), Food and Drug Administraton, 8800 Rockville Pike, Bethesda, MD 20892, 301-496-0561.

SUPPLEMENTARY INFORMATION: The meeting is being sponsored by FDA to discuss issues concerning AIDS vaccine development and testing. The primary purpose of the meeting is to provide interested persons an opportunity to present information to be used by PHS empolyees in preparing a report for presentation at the PHS Planning Conference for Prevention and Control of AIDS scheduled to be held in June 1988.

Interested persons requesting to present data, information, or views, orally or in writing, should notify the contact person before April 21, 1988.

Dated: April 13, 1988.

Ronald G. Chesemore,

Acting Associate Commissioner for Regulatory Affairs.

[FR Doc. 88-8448 Filed 4-14-88; 10:24 am]

BILLING CODE 4160-01-M

National Institutes of Health

National Cancer Institute; Cancellation of Meeting of the Biometry and Epidemiology Contract Review Committee

Notice of the meeting of the Biometry and Epidemiology Contract Review Committee, National Cancer Institute, National Institutes of Health, scheduled for May 10, 1988, published in the **Federal Register** (53 FR 10949) on April 4, 1988, is hereby cancelled due to circumstances beyond our control. This meeting will be rescheduled at a later date.

For further information, please contact Dr. Harvey Stein, Executive Secretary, Biometry and Epidemiology Contract Review Committee, National Cancer Institute, Westwood Building, Room 804, National Institutes of Health, Bethesda, Maryland 20892 (301/496-7030).

Dated: April 12, 1988.

Betty J. Beveridge,

Committee Management Office, NIH.

[FR Doc. 88-8515 Filed 4-18-88; 8:45 am]

BILLING CODE 4140-01-M

National Cancer Institute; Amended Notice of Meeting of the Developmental Therapeutics Contracts Review Committee

Notice is hereby given to amend the notice of the Developmental Therapeutics Contracts Review Committee meeting which was published in the **Federal Register** (53 FR 10437) on March 31, 1988.

The Committee originally scheduled for a two day meeting will now be held on May 6 only, from 8 a.m. to adjournment at the Linden Hill Hotel & Racquet Club, Forest Hills Conference Room, 5400 Pooks Hill Road, Bethesda, Maryland 20814. The meeting will be closed to the public from 8:30 a.m. to adjournment.

Dated: April 12, 1988.

Betty J. Beveridge,

Committee Management Oficer, NIH.

[FR Doc. 88-8514 Filed 4-18-88; 8:45 am]

BILLING CODE 4140-01-M

DEPARTMENT OF HOUSING AND URBAN DEVELOPMENT

Office of Administration

[Docket No. N-88-1802]

Submission of Proposed Information Collection to OMB

AGENCY: Office of Administration, HUD.

ACTION: Notice.

SUMMARY: The proposed information collection requirement described below has been submitted to the Office of Managmeent and Budget (OMB) for review, as required by the Paperwork Reduction Act. The Department is soliciting public comments on the subject proposal.

ADDRESS: Interested persons are invited to submit comments regarding this proposal. Comments should refer to the proposal by name and should be sent to: John Allison, OMB Desk Officer, Office of Management and Budget, New Executive Office Building, Washington, DC 20503.

FOR FURTHER INFORMATION CONTACT: David S. Cristy, Reports Management Officer, Department of Housing and Urban Development, 451 7th Street, Southwest, Washington, DC 20410, telephone (202) 755-6050. This is not a toll-free number. Copies of the proposed forms and other available documents submitted to OMB may be obtained from Mr. Cristy.

SUPPLEMENTARY INFORMATION: The Department has submitted the proposal for the collection of information, as described below, to OMB for review, as required by the Paperwork Reduction Act (44 U.S.C. Chapter 35).

The Notice lists the following information: (1) The title of the information collection proposal; (2) the office of the agency to collect the information; (3) the description of the need for the information and its proposed use; (4) the agency form number, if applicable; (5) what members of the public will be affected by the proposal; (6) how frequently information submissions will be required; (7) an estimate of the total numbers of hours needed to prepare the information submission; (8) whether the proposal is new or an extension, reinstatement, or revision of an information collection requirement; and (9) the names and telephone numbers of an agency official familiar with the proposal and of the OMB Desk Officer for the Department.

Authority: Sec. 3507 of the Paperwork Reduction Act, 44 U.S.C. 3507; Section 7(d) of the Department of Housing and Urban Development Act, 42 U.S.C. 3535(d).

Date: April 13, 1988.

John T. Murphy,

Director, Information Policy and Management Division.

Proposal: Housing Discrimination Complaint Forms (English/Spanish Version)

Office: Fair Housing and Equal Opportunity

Description of the Need for the Information and its Proposed Use: Pursuant to Pub. L. 90-284, any person who believes he/she has been or is about to be injured by a discriminatory housing practice on the basis of race, color, religion, sex, or national origin may file a complaint with the Secretary of HUD using this form. HUD needs the information provided on the form for the basis of an investigation of a housing discrimination complaint

Form Number: HUD-903 and 903A

Respondents: Individuals or Households, State or Local Governments, and Businesses or Other For-Profit

Frequency of Respondents: On Occasion

Estimated Burden Hours: 5,350

Status: Extension

Contact: Wagner D. Jackson, HUD, (202) 755-5733; John Allison, OMB, (202) 395-6880.

Date: April 13, 1988.

[FR Doc. 88-8524 Filed 4-18-88; 8:45 am]

BILLING CODE 4210-01-M

Office of Environment and Energy

[Docket No. I-88-147]

Intention To Prepare Environmental Impact Statement; the Harris Branch Project, Austin, TX

The Department of Housing and Urban Development, Fort Worth, Texas Regional Office intends to prepare an Environmental Impact Statement (EIS) for The Harris Branch Project located in Austin, Texas as described in the appendix to this Notice. This Notice is required by the Council on Environmental Quality under its rule (40 CFR part 1500).

Interested individuals, governmental agencies, and private organizations are invited to submit information and comments concerning the project to the specific person or address indicated in the appropriate part of the appendix.

Particularly solicited is information on reports or other environmental studies planned or completed in the project area, major issues and data which the EIS should consider, and recommended mitigating measures and alternatives associated with the proposed project. Federal agencies having jurisdiction by law, special expertise or other special interests should report their interests and indicate their readiness to aid the EIS effort as a "cooperating agency."

This Notice shall be effective for one year. If one year after the publication of the Notice in the **Federal Register** a Draft EIS has not been filed on a project, then the Notice for that project shall be cancelled. If a Draft EIS is expected more than one year after the publication of the Notice in the **Federal Register**, then a new and updated Notice of Intent will be published.

Issued at Washington, DC, date April 12, 1988.

Richard H. Broun,

Director, Office of Environment and Energy.

Appendix—EIS on the Harris Branch Project, City of Austin, Texas

The Department of Housing and Urban Development, Fort Worth, Texas Regional Office, intends to prepare an Environmental Impact Statement (EIS) on the subject project in the City of Austin, Texas. The Department hereby solicits comments and information for consideration in this EIS.

Description

The Harris Branch Project is located along Gile Road, north at U.S. Highway 290, within the City of Austin, and in the northeastern portion of Travis County, Texas. The project as proposed consists of 2,170 acres of land for development with 3,621 single-family detached dwelling units, 2,118 single-family attached units, 4,573 multi-family units, 670 acres of retail space, office and industrial development, and 497 acres for public use. Completion is anticipated in about 10 years with housing for approximately 30,000 persons. The City of Austin approved the preliminary development plan and zoning. The Provident Development Company and the Capital Area Development Company have filed an application for mortgage insurance with the San Antonio, Texas HUD Office.

Need

The total project exceeds HUD's 2500 unit EIS threshold (24 CFR 50.42(b)(3)). The application is on file requesting Mortgage Insurance under Title II, section 203(b) of the Housing and Community Development Act of 1974 (Pub. L. 93-383).

Alternatives

At this point HUD perceives the relevant alternatives as: (1) Acceptance of the project as submitted for mortgage Insurance; (2) acceptance of the project with modification and mitigation measures; and (3) rejection of the project for mortgage insurance.

Scoping

This notice is part of the EIS scoping process and, as such, will be used by HUD to determine significant environmental issues, define the study boundary, identify data which the EIS should address, and identify cooperating agencies. No formal scoping meeting is anticipated.

Comments

To assist in the preparation of the Environmental Impact Statement, Federal, State, and local agencies, and other interested persons and organizations are invited to participate in the scoping process by submitting comments on the project and its potential impacts. All comments received within 30 days of this invitation will be considered in the Environmental Impact Statement. Please submit all comments to: I. J. Ramsbottom, Regional Environmental Officer, U.S. Department of Housing and Urban Development, P.O. Box 2905, Fort Worth, Texas 76113. The commercial telephone number of this office is 817-885-5482. The FTS number is 728-5482. These are not toll free numbers.

[FR Doc. 88-8523 Filed 4-18-88; 8:45 am]

BILLING CODE 4210-29-M

DEPARTMENT OF THE INTERIOR

Bureau of Land Management

[OR-943-08-4220-10; GP-08-118; OR-42920(WASH)]

Public Meeting; North Cascades Scenic Highway Zone Proposed Withdrawal; Washington

AGENCY: Bureau of Land Management, Interior.

ACTION: Notice.

SUMMARY: This notice announces the schedule and agenda for a forthcoming public meeting that will provide an opportunity for public involvement regarding the Forest Service's application for protective withdrawal of the North Cascades Scenic Highway Zone.

EFFECTIVE DATE: May 25, 1988.

FOR FURTHER INFORMATION CONTACT: Champ Vaughan, BLM, Oregon/Washington State Office, P.O. Box 2965, Portland, Oregon 97208, 503-231-6905.

SUPPLEMENTARY INFORMATION: Notice is hereby given that a public meeting will be held to provide an opportunity for public involvement regarding the application by the Forest Service, U.S. Department of Agriculture, for a 20-year protective withdrawal as to approximately 9,000 acres of national forest lands within the North Cascades Scenic Highway Zone. The lands involved are within the Mt. Baker, Okanogan, and Wenatchee National Forests in Whatcom, Skagit, Chelan, and Okanogan Counties, Washington, and are located adjacent to State Highway 20 for a distance of approximately 38 miles between the easterly boundary of the Ross Lake National Recreation Area and the Early Winters Ranger Station.

The meeting will begin at 7 pm, Wednesday, May 25, 1988, in the Okanogan National Forest Supervisor's Office, 1240-2nd Ave. South, Okanogan, Washington. The agenda will include (1) an information briefing by the Bureau of Land Management; (2) an information briefing by the Forest Service; (3) oral statements by interested parties; and (4) question and answer period.

The meeting is open to the public. Interested parties may make oral statements at the meeting and/or may file written statements with the Bureau of Land Management, Oregon/

Washington State Office. Oral statements should be limited to five minutes per party. All statements received will be considered by the Bureau of Land Management and the Forest Service before any recommendation concerning the proposed land withdrawal is submitted to the Secretary of Interior for final action under the authority of section 204 of the Federal Land Policy and Management Act of 1976 (43 U.S.C. 1714).

Dated: April 8, 1988.

B. LaVelle Black,

Chief, Branch of Lands and Minerals Operations.

[FR Doc. 88-8469 Filed 4-18-88; 8:45 am]

BILLING CODE 4310-33-M

[CO-940-08-4220-10; C-48465]

Proposed Withdrawal; Proposed Public Meeting; Colorado

AGENCY: Bureau of Land Management, Interior.

ACTION: Notice.

SUMMARY: The Bureau of Land Management proposes to withdraw 7,891 acres of public lands and/or public minerals to protect scenic and recreational values in the Ruby Canyon segment of the Colorado River. This notice will segregate the site from surface entry and mining for up to 2 years pending final determination on this application. The lands have been and will continue to be open to mineral leasing.

DATE: Comments and requests to be heard should be received on or before July 18, 1988.

ADDRESS: Correspondence should be addressed to the State Director, Colorado State Office, 2850 Youngfield Street, Lakewood, Colorado 80215.

FOR FURTHER INFORMATION CONTACT: Doris E. Chelius, BLM Colorado State Office, (303) 236-1768.

SUPPLEMENTARY INFORMATION: On April 13, 1988, a petition was approved allowing the Bureau of Land Management to make application to withdraw the following described public lands from settlement, sale, location or entry, under the general land laws, including the mining laws, subject to valid existing rights, pursuant to the authority vested in the Secretary of the Interior by section 204 of the Federal Land Policy and Management Act of 1976, 90 Stat. 2751, 43 U.S.C. 1714:

Ute Principal Meridian

T. 1 N., R. 3 W.,
sec. 6, lots 6 and 8;
sec. 7, lots 1, 2, 3*, 4*, 5*, and 6 thru 9;
sec. 8, lots 2*, 3, 4*, 5*, 6*, and S½NE¼SW¼;
sec. 9, lot 4;
sec. 17, lot 4, S½NE¼, and SE¼NW¼;
sec. 18, lot 1, N½NE¼, and NE¼NW¼.

Sixth Principal Meridian

T. 10 S., R. 103 W.,
sec. 5, S½SW¼ and W½SW¼SE¼;
sec. 6, SE¼SW¼ and S½SE¼;
sec. 7, lots 1 thru 4, 7, 8, SE¼NE¼, W½NW¼, W½SE¼, and E½E½SE¼;
sec. 8, lots 2, 3, 6, 7, and W½W½E½;
sec. 15, lots 2 thru 9, S½N½NW¼, and E½SW¼SW¼;
sec. 16, lots 1 thru 4, 6 thru 8, W½NE¼NE¼, SE¼NE¼NE¼, NW¼NE¼, N½NW¼, and N½SW¼SW¼;
sec. 17, lots 2, 3, 5 thru 7, W½NW¼NE¼, S½NE¼, N½SW¼SW¼, and SE¼SE¼;
sec. 18, lots 2, 8 thru 11, W½E½, E½E½NE¼, E½NE¼SE¼, and NE¼SE¼SE¼;
sec. 19, lots 1, 3, 4, NW¼NE¼, N½SW¼NE¼, SE¼NW¼, NW¼SW¼, and N½NE¼SW¼;
sec. 22, lots 5 thru 8, NE¼NW¼, E½SE¼NE¼, and E½NE¼SW¼;
sec. 27, lot 1.

T. 10 S., R. 104 W.
sec. 12, E½E½E½;
sec. 13, E½E½E½;
sec. 23, lots 1 thru 4, E½SW¼NE¼, and E½W½SE¼;
sec. 24, lots 1 thru 9, NW¼NE¼, N½NW¼, E½SW¼, and N½SE¼;
sec. 25, lots 1 thru 4, E½W½, and SW¼SW¼;
sec. 26, lots 1 thru 7, E½NW¼NE¼, SW¼NE¼, and S½NW¼;
sec. 27, lots 1 thru 9, S½NE¼, and SE¼NW¼;
sec. 28, lots 1 thru 3, S½SE¼NE¼, and W½SE¼;
sec. 32, lots 1 thru 7, NE¼SW¼, SE¼NW¼SW¼, and N½SE¼;
sec. 33, lots 1 thru 12, NW¼NE¼, and E½SE¼NW¼;
sec. 34, N½N½NE¼, N½N½NE¼NW¼, W½NW¼, and NW¼SW¼;
sec. 35, N½NW¼NE¼ and N½N½NW¼.

T. 11 S., R. 104 W.,
sec. 2, lots 3 and 4;
sec. 4, lots 1 thru 4, S½NW¼, and SW¼;
sec. 5, lot 1, SE¼NE¼, E½SW¼NE¼*, E½SE¼SW¼, N½SE¼, and SE¼SE¼;
sec. 7, lots 1 thru 4;
sec. 8, E½NE¼, N½NW¼, SW¼NW¼, and S½;
sec. 9, NW¼NW¼, W½SW¼NW¼, and W½W½SW¼.

*Minerals only.

The areas described aggregate 7,646.91 acres of public land and 244.04 acres of private lands with public minerals in Mesa County.

The purpose of the proposed withdrawal is to protect the Ruby Canyon segment of the Colorado River which is currently being considered by Congress for designation as a scenic river. This proposed withdrawal is in conformance with the Grand Junction Resource Area Resource Management Plan which recommends this canyon for scenic and recreational use.

For a period of 90 days from the date of publication of this notice, persons who desire to make comments in connection with this action or persons who desire to be heard at a meeting on this matter should submit their comments or requests in writing to the Colorado State Director. A public meeting will be scheduled in connection with this action pursuant to 43 CFR 2310.3-1, and will be conducted in accordance with Bureau of Land Management Manual Section 2351.16B. Notice of the time and place of such meeting will be published in the **Federal Register** at least 30 days prior to the meeting.

This application will be processed in accordance with regulations set forth in 43 CFR Part 2300.

For a period of 2 years from date of publication of this notice in the **Federal Register**, the land will be segregated as specified above, unless the application is denied or cancelled or the withdrawal is approved prior to that date. Temporary uses which may be permitted during this segregative period are those which will not alter existing values of the land.

James D. Crisp,

Chief, Branch of Adjudication.

April 13, 1988.

[FR Doc. 88-8549 Filed 4-18-88; 8:45 am]

BILLING CODE 4310-JB-M

[ID-060-08-4333-12; No. ID 060-6]

Restriction Order; Emerald Empire Resource Area, Idaho

AGENCY: Bureau of Land Management, Interior.

ACTION: Restrictive order.

SUMMARY: Notice is hereby given in accordance with title 43, Code of Federal Regulations, 8364.1, that the following acts are prohibited on certain lands administered by the Bureau of Land Management, Emerald Resource Area:

1. Camping by any person or group of persons at developed camping areas as posted for a period longer than fourteen (14) consecutive days.

2. Camping by any person or group of persons at developed day-use sites as posted. For the purpose of this restriction, camping is defined as occupancy for a period exceeding twelve (12) consecutive hours.

3. Camping by any person or group of persons at any one undeveloped site or location or within one mile of that

location for a period exceeding twenty-one (21) consecutive days.

This restriction is effective immediately, and will remain in effect until revoked or rescinded.

These restrictions do not apply to:

1. Any federal, state or local officer, or any member of an organized rescue or fire-fighting force in the performance of an official duty.

2. Any BLM employee, agent, contractor, cooperator or volunteer while in the performance of an official duty.

3. Any person who is expressly authorized by the Authorized Officer to occupy lands.

These restrictions are necessary to:

(a) Preclude any individual or group from camping at one location for a long period, thereby denying others an opportunity to also use the location for recreational purposes.

(b) Protect the lands from the effects of long-term camping.

(c) Prevent unauthorized, non-recreational occupancy of the public lands from occurring under the guise of recreation.

(d) Preclude camping at day-use sites not designed with facilities to accomodate overnight use.

Violation of this order is punishable by a fine not to exceed $1,000 and/or imprisonment not to exceed 12 months. (35 U.S.C. 1733(a)).

Signed at Coeur d'Alene, Idaho, this 11th day of April, 1988.

Fritz U. Rennebaum,

District Manager.

[FR Doc. 88-8467 Filed 4-18-88; 8:45 am]

BILLING CODE 4310-GG-M

[ES-940-08-4520-13; ES-038369, Group 21]

Filing of Plats of Dependent Resurvey, Subdivisions of Sections and Survey of the Rend Lake Acquisition Boundary; Illinois

April 11, 1988.

1. The plat, in seven sheets, of the dependent resurvey of a portion of the south boundary and the east boundary, Township 5 South, Range 2 East, a portion of the east boundary, Township 5 South, Range 1 East, a portion of the subdivisional lines and the survey of the subdivision of sections 8, 16, 17, 20, 21, 24, 25, 29, 30 and 33 and the Rend Lake acquisition boundary, Township 5 South, Range 2 East, Third Principle Meridian, Illinois, will be officially filed in the Eastern States Office, Alexandria, Virginia at 7:30 a.m., on May 26, 1988.

2. The dependent resurvey and survey was made at the request of the Corps of Engineers.

3. All inquiries or protests concerning the technical aspects of the dependent resurvey and survey must be sent to the Deputy State Director for Cadastral Survey and Support Services, Eastern States Office, Bureau of Land Management, 350 South Pickett Street, Alexandria, Virginia 22304, prior to 7:30 a.m., May 26, 1988.

4. Copies of the plats will be made available upon request and prepayment of the reproduction fee of $4.00 per copy.

Lane J. Bouman,

Deputy State Director for Cadastral Survey and Support Services.

[FR Doc. 88-8503 Filed 4-18-88; 8:45 am]

BILLING CODE 4310-GJ-M

[MT-940-08-4520-11]

Land Resource Management; Montana

AGENCY: Bureau of Land Management, Montana State Office, Interior.

ACTION: Notice of filing of plats of survey.

SUMMARY: Plats of survey of the lands described below accepted March 17, 1988, were officially filed in the Montana State Office effective 10 a.m. on April 4, 1988.

Principal Meridian, Montana

T. 7 S., R. 12 W.,

The plat represents the dependent resurvey of a portion of the north boundary, a portion of the subdivisional lines; and the survey of the subdivision of section 5 and the centerline of Montana State Highway Number 278, in the SW¼ of section 5, Township 7 South, Range 12 West, Principal Meridian, Montana. The area described is in Beaverhead County.

This survey was executed at the request of the Butte District Office for the administrative needs of the Bureau.

Principal Meridian, Montana

T. 4 S., R. 12 E.,

The plat represents the dependent resurvey of a portion of the Homestead Entry Survey No. 41, the dependent resurvey of a portion of Tract 37 and the survey of Tract 38 in unsurveyed Township 4 South, Range 12 East, Principal Meridian, Montana. The area described is in Park County.

This survey was executed at the request of the U.S. Forest Service to facilitate a proposed land exchange.

Effective Date: April 4, 1988.

FOR FURTHER INFORMATION CONTACT: Bureau of Land Management, 222 North 32nd Street, P.O. Box 36800, Billings, Montana 59107.

John A. Kwiatkowski,

Acting State Director.

Dated: April 11, 1988.

[FR Doc. 88-8462 Filed 4-18-88; 8:45 am]

BILLING CODE 4310-DN-M

[NM-940-084520-1]

Filing of Plat of Survey; New Mexico

April 11, 1988.

The plats of surveys described below were officially filed in the New Mexico State Office, Bureau of Land Management, Santa Fe, New Mexico, effective at 10:00 a.m. on the dates shown.

The survey representing the dependent resurvey of a portion of the north boundary of the Bosque del Apache Grant, the New Mexico Principal Meridian, the subdivisional lines, and certain small holding claim boundaries, and the subdivision of sections 7 and 18, Township 5 South, Range 1 East, New Mexico Principal Meridian, New Mexico, executed under Group 768, filed April 11, 1988.

The survey representing the survey of certain lot boundaries in section 1, Township 4 South, Range 1 West, New Mexico Principal Meridian, New Mexico, executed under Group 768, Filed April 11, 1988.

These surveys were requested by the Area Manager, Socorro, New Mexico.

The survey representing the dependent resurvey of a portion of the west boundary, a portion of the subdivisional lines, and the adjusted record meanders of the left bank of the Canadian River in sections 30 and 32, the subdivision of sections 30 and 32, the survey of the meanders of the 1985 left bank of the Canadian River in sections 30, 31 and 32, and the survey of division of accretion lines in sections 30 and 32, Township 15 North, Range 13 West, Indian Meridian, Oklahoma, executed under Group 51, Oklahoma, filed April 11, 1988.

The survey representing the dependent resurvey of a portion of the subdivisional lines and the adjusted record meanders of the left bank of the Canadian River in sections 23, 24 and 25, Township 15 North, Range 14 West, Indian Meridian, Oklahoma, filed April 11, 1988.

These surveys were requested by the Area Director, Bureau of Indian Affairs, Anadarko, Oklahoma.

The supplemental plat representing the Southwest one-quarter of section 28, Township 23 North, Range 10 East, New

Mexico Principal Meridian, New Mexico, filed April 11, 1988.

This survey was requested by Branch of Lands & Minerals, New Mexico State Office.

These plats will be in the open files of the New Mexico State Office, Bureau of Land Management, P.O. Box 1449, Santa Fe, New Mexico 87504. Copies of the plats may be obtained from the office upon payment of $2.50 per sheet.

Kelley R. Williamson,

Acting Chief, Branch of Cadastral Survey.

[FR Doc. 88-8468 Filed 4-18-88; 8:45 am]

BILLING CODE 4310-FB-M

Minerals Management Service

Development Operations Coordination Document; Amerada Hess Corp.

AGENCY: Minerals Management Service, Interior.

ACTION: Notice of the receipt of a proposed Development Operations Coordination Document (DOCD).

SUMMARY: Notice is hereby given that Amerada Hess Corporation has submitted a DOCD describing the activities it proposes to conduct on Lease OCS-G 4541, Block 568, Matagorda Island Area, offshore Texas. Proposed plans for the above area provide for the development and production of hydrocarbons with support activities to be conducted from an existing onshore base located at Port O'Connor, Texas.

DATE: The subject DOCD was deemed submitted on April 8, 1988.

ADDRESS: A copy of the subject DOCD is available for public review at the Public Information Office, Gulf of Mexico OCS Region, Minerals Management Service, 1201 Elmwood Park Boulevard, Room 114, New Orleans, Louisiana (Office Hours: 8 a.m. to 4:30 p.m., Monday through Friday).

FOR FURTHER INFORMATION CONTACT: Mr. W. Williamson; Minerals Management Service, Gulf of Mexico OCS Region, Field Operations, Plans, Platform and Pipeline Section, Exploration/Development Plans Unit; Telephone (504) 736-2874.

SUPPLEMENTARY INFORMATION: The purpose of this Notice is to inform the public, pursuant to section 25 of the OCS Lands Act Amendments of 1978, that the Minerals Management Service is considering approval of the DOCD and that it is available for public review.

Revised rules governing practices and procedures under which the Minerals Management Service makes information contained in DOCDs available to affected States, executives of affected local governments, and other interested parties became effective December 13, 1979 (44 FR 53685). Those practices and procedures are set out in revised § 250.34 of Title 30 of the CFR.

Dated: April 11, 1988.

J. Rogers Pearcy,

Regional Director, Gulf of Mexico OCS Region.

[FR Doc. 88-8461 Filed 4-18-88; 8:45 am]

BILLING CODE 4310-MR-M

Development Operations Coordination Document; Amoco Production Co.

AGENCY: Minerals Management Service, Interior.

ACTION: Notice of the receipt of a proposed Development Operations Coordination Document (DOCD).

SUMMARY: Notice is hereby given that Amoco Production Company has submitted a DOCD describing the activities it proposes to conduct on Lease OCS-G 2113, Block 322, Eugene Island Area, offshore Louisiana. Proposed plans for the above area provide for the development and production of hydrocarbons with support activities to be conducted from an existing onshore base located at Fourchon, Louisiana.

DATE: The subject DOCD was deemed submitted on April 8, 1988.

ADDRESS: A copy of the subject DOCD is available for public review at the Public Information Office, Gulf of Mexico OCS Region, Minerals Management Service, 1201 Elmwood Park Boulevard, Room 114, New Orleans, Louisiana (Office Hours: 8 a.m. to 4:30 p.m., Monday through Friday).

FOR FURTHER INFORMATION CONTACT: Ms. Angie D. Gobert; Minerals Management Service, Gulf of Mexico OCS Region, Field Operations, Plans, Platform and Pipeline Section, Exploration/Development Plans Unit; Telephone (504) 736-2876.

SUPPLEMENTARY INFORMATION: The purpose of this Notice is to inform the public, pursuant to section 25 of the OCS Lands Act Amendments of 1978, that the Minerals Management Service is considering approval of the DOCD and that it is available for public review.

Revised rules governing practices and procedures under which the Minerals Management Service makes information contained in DOCDs available to affected States, executives of affected local governments, and other interested parties became effective December 13, 1979 (44 FR 53685). Those practices and procedures are set out in revised § 250.34 of Title 30 of the CFR.

Date: April 11, 1988.

J. Rogers Pearcy,

Regional Director, Gulf of Mexico OCS Region.

[FR Doc. 88-8463 Filed 4-18-88; 8:45 am]

BILLING CODE 4310-MR-M

Development Operations Coordination Document; Exxon Co., U.S.A.

AGENCY: Minerals Management Service, Interior.

ACTION: Notice of the receipt of a proposed Development Operations Coordination Document (DOCD).

SUMMARY: Notice is hereby given that Exxon Company, U.S.A. has submitted a DOCD describing the activities it proposes to conduct on Leases OCS-G 1096 and 3188, Blocks 99 and 100, respectively, West Delta Area, offshore Louisiana. Proposed plans for the above area provide for the development and production of hydrocarbons with support activities to be conducted from an existing onshore base located at Grand Isle, Louisiana.

DATE: The subject DOCD was deemed submitted on April 6, 1988.

ADDRESS: A copy of the subject DOCD is available for public review at the Public Information Office, Gulf of Mexico OCS Region, Minerals Management Service, 1201 Elmwood Park Boulevard, Room 114, New Orleans, Louisiana (Office Hours: 8 a.m. to 4:30 p.m., Monday through Friday).

FOR FURTHER INFORMATION CONTACT: Mr. W. Williamson, Minerals Management Service, Gulf of Mexico OCS Region, Field Operations, Plans, Platform and Pipeline Section, Exploration/Development Plans Unit; Telephone (504) 736-2874.

SUPPLEMENTARY INFORMATION: The purpose of this Notice is to inform the public, pursuant to section 25 of the OCS Lands Act Amendments of 1978, that the Minerals Management Service is considering approval of the DOCD and that it is available for public review.

Revised rules governing practices and procedures under which the Minerals Management Service makes information contained in DOCDs available to affected States, executives of affected local governments, and other interested parties became effective December 13, 1979 (44 FR 53685). Those practices and procedures are set out in revised § 250.34 of Title 30 of the CFR.

Date: April 11, 1988.

J. Rogers Pearcy,

Regional Dirctor, Gulf of Mexico OCS Region.

[FR Doc. 88-8464 Filed 4-18-88; 8:45 am]

BILLING CODE 4310-MR-M

Development Operations Coordination; Hall-Houston Oil Co.

AGENCY: Minerals Management Service, Interior.

ACTION: Notice of the receipt of a proposed Development Operations Coordination Document (DOCD).

SUMMARY: Notice is hereby given that Hall-Houston Oil Company has submitted a DOCD describing the activities it proposes to conduct on Lease OCS-G 5727, Block 244, Main Pass Area, offshore Alabama. Proposed plans for the above area provide for the development and production of hydrocarbons with support activities to be conducted from an existing onshore base located at Venice, Louisiana.

DATE: The subject DOCD was deemed submitted on April 8, 1988. Comments must be received by May 4, 1988, or 15 days after the Coastal Management Section receives a copy of the plan from the Minerals Management Service.

ADDRESSES: A copy of the subject DOCD is available for public review at the Public Information Office, Gulf of Mexico OCS Region, Minerals Management Service, 1201 Elmwood Park Boulevard, Room 114, New Orleans, Louisiana (Office Hours: 8 a.m. to 4:30 p.m., Monday through Friday). A copy of the DOCD and the accompanying Consistency Certification are also available for public review at the Coastal Management Section Office located on the 10th Floor of the State Lands and Natural Resources Building, 625 North 4th Street, Baton Rouge, Louisiana (Office Hours: 8 a.m. to 4:30 p.m., Monday through Friday). The public may submit comments to the Coastal Management Section, Attention OCS Plans, Post Office Box 44487, Baton Rouge, Louisiana 70805.

FOR FURTHER INFORMATION CONTACT: Mr. W. Williamson; Minerals Management Service, Gulf of Mexico OCS Region, Field Operations, Plans, Platform and Pipeline Section Exploration/Development Plans Unit; Telephone (504) 736-2874.

SUPPLEMENTARY INFORMATION: The purpose of this Notice is to inform the public, pursuant to section 25 of the OCS Lands Act Amendments of 1978, that the Minerals Management Service is considering approval of the DOCD and that it is available for public review. Additionally, this Notice is to inform the public, pursuant to § 930.61 of Title 15 of the CFR, that the Coastal Management Section/Louisiana Department of Natural Resources is reviewing the DOCD for consistency with the Louisiana Coastal Resources Program.

Revised rules governing practices and procedures under which the Minerals Management Service makes information contained in DOCDs available to affected States, executives of affected local governments, and other interested parties became effective December 13, 1979 (44 FR 53685).

Those practices and procedures are set out in revised § 250.34 of Title 30 of the CFR.

Date: April 11, 1988.

J. Rogers Pearcy,

Regional Director, Gulf of Mexico OCS Region.

[FR Doc. 88-8465 Filed 4-18-88; 8:45 am]

BILLING CODE 4310-MR-M

National Park Service

Golden Gate National Recreation Area; Minor Boundary Change and Addition of Certain Lands

By virtue of the authority contained in section 5 of the Act of June 10, 1977 (91 Stat. 210) as amended and section 2(b) of the Act of October 27, 1972 (86 Stat. 1299), notice is hereby given that the boundaries of Golden Gate National Recreation Area are modified to include the following described lands:

All that certain real property situated in the City of Pacifica, County of San Mateo, State of California, described as follows:

Portion of "Part 1" shown on portion of the Rancho San Pedro, the property of David Mahoney, Richard and Robert Tobin, recorded November 19, 1875 in book 1 of maps at page 24, and also being portion of the lands shown on survey of 398.284 acre tract filed August 17, 1943 in book 1 of licensed land surveyors maps at page 78, records of San Mateo County, more particularly described as follows:

Beginning at the northeasterly corner of said Part 1 and running thence along the easterly line of said Part 1 (according to the calls shown on the above named licensed survey), south 1°56' west 836.48 feet to the true point of beginning; thence from said true point of beginning along said easterly line of said Part 1 above referred to south 1°56' west 300 feet to the northerly line of property described in deed to James C. Laskey, dated April 10, 1947 and recorded May 19, 1947 in book 1347 of official records of San Mateo county at page 346; thence along said northerly line north 88°07' 30" west 405.95 feet to the easterly line of the state highway as described in deed to state of California, recorded March 6, 1941 in book 942 official records of San Mateo county at page 334; thence along said easterly line of the state highway north 1°52' 30" east 300 feet to the southerly line of the lands described in deed from Pennelope C. Halstead to Perry Liebman and Ysabel Liebman, his wife, in joint tenancy, recorded August 27, 1954 in Book 2640 of official records of San Mateo county at page 490 (81762-L); thence along the last named line south 88°07' 30" east 405.95 feet, more or less, to the point of beginning.

Excepting therefrom the following described parcel of land:

Beginning at the northwesterly corner of that parcel of land described in the deed to C. Theodore Plummer, recorded March 16, 1955 in book 2760 of official records of San Mateo county at page 398 (34302-M), said corner being also on the easterly line of that parcel of land described in the deed to state of California, recorded March 6, 1941 in book 942 of official records of San Mateo county at page 334; thence along the northerly line of first said parcel (2760 or 398), south 87°11'13" east, 143.01 feet to a line parallel with and distant 25.00 feet southeasterly, at right angles, from the "FR2" line of the Department of Public Works' survey for the state freeway in San Mateo county, road IV-SM-56-PFA; thence along said parallel line south 27°40'02" west 138.04 feet and along a tangent curve to the left with a radius of 775.00 feet, through an angle of 8°50'24" an arc length of 119.57 feet; thence south 72°00'01" east, 22.63 feet; thence along a tangent curve to the right with a radius of 61.00 feet, through an angle of 72°55'18", an arc length of 76.64 feet to the southerly line of first said parcel (2760 or 398); thence along last said line north 87°11'13" west, 110.11 feet to the above-said easterly line of the above-said parcel (942 or 334); thence along last said line north 2°48'47" east, 299.98 feet to the point of beginning.

Donald P. Hodel,

Secretary of the Interior.

[FR Doc. 88-8553 Filed 4-18-88; 8:45 am]

BILLING CODE 4310-70-M

Negotiate Concession Contract; Rock Creek Park Horse Centre, Inc.

Pursuant to the provisions of section of the Act of October 9, 1965 (79 Stat. 969; 16 U.S.C. 20), public notice is hereby given that sixty (60) days after the date of publication of this notice, the Department of the Interior, through the Director of the National Park Service, proposes to negotiate a concession contract with Rock Creek Park Horse Centre, Inc., authorizing it to continue to provide horseback riding and boarding facilities and services for the public at Rock Creek Park, Washington, DC, for a period of five years from January 1, 1988, through December 31, 1992.

This contract renewal has been determined to be categorically excluded from the procedural provisions of the National Environmental Policy Act and

no environmental document will be prepared.

The foregoing concessioner has performed its obligations to the satisfaction of the Secretary under an existing contract which expires by limitation of time on December 31, 1987, and therefore, pursuant to the Act of October 9, 1965, as cited above, is entitled to be given preference in the renewal of the contract and in the negotiation of a new contract as defined in 36 CFR 51.5.

The Secretary will consider and evaluate all proposals received as a result of this notice. Any proposal, including that of the existing concessioner, must be postmarked or hand delivered on or before the sixtieth (60th) day following publication of this notice to be considered and evaluated.

Interested parties should contact the Regional Director, National Capital Region, Washington, DC, for information as to the requirements of the proposed contract.

Date: March 18, 1988.

Ronald N. Wrye,

Acting Regional Director, National Capital Region.

[FR Doc. 88-8552 Filed 4-18-88; 8:45 am]

BILLING CODE 4310-70-M

National Register of Historic Places; Pending Nominations; Alaska et al.

Nominations for the following properties being considered for listing in the National Register were received by the National Park Service before April 9, 1988. Pursuant to § 60.13 of 36 CFR Part 60 written comments concerning the significance of these properties under the National Register criteria for evaluation may be forwarded to the National Register, National Park Service, U.S. Department of the Interior, Washington, DC 20243. Written comments should be submitted by May 4, 1988.

Beth Boland,

Acting Chief of Registration, National Register.

ALASKA

Juneau County

Juneau vicinity, *Twin Glacier Camp*, Along the Taku River

ARIZONA

Maricopa County

New River, *Sun-up Ranch*, W. Frontage Rd. off Black Canyon Hwy./I-17

ARKANSAS

Pope County

Russellville, *White, John W., House*, 1509 W. Main St

CALIFORNIA

Contra Costa County

Concord, *Galindo, Don Francisco, House*, 1721 Amador Ave.

Orange County

San Juan Capistrano, *Esslinger Building*, 31866 Camino Capistrano

San Diego County

San Diego, *San Diego Civic Center*, 1600 Pacific Hwy.

San Joaquin County

Lodi, *Woman's Club of Lodi*, 325 W. Pine St.

Stanislaus County

Modesto, *Wood, Walter B., House*, 814 Twelfth St.

Trinity County

Lewiston, *Lewiston Historic District*, Roughly Deadwood, Turnpike, and Schoolhouse Rds.

MINNESOTA

Morrison County

Pike's, Zebulon, 1805-1806 Wintering Quarters

NEVADA

Clark County

Las Vegas, *Las Vegas Grammar School*, 400 Las Vegas Blvd., S.

OHIO

Franklin County

Canal Winchester, *Columbus Street Historic District*, 8-129 E. Columbus St. and 57 S. High St.

SOUTH CAROLINA

Georgetown County

Richmond Hill Plantation Archeological Sites (38GE256, 38GE262, 38GE266, 38GE283, 38GE306) (Georgetown County Rice Culture c. 1750-1910 MPS

Georgetown vicinity, *Belle Isle Rice Mill Chimney (Georgetown County Rice Culture c. 1750-1910 MPS)*, Cat Island

Georgetown vicinity, *Beneventum Plantation House (Georgetown County Rice Culture c. 1750-1910 MPS)*, Off CR 431

Georgetown vicinity, *Fairfield Rice Mill Chimney (Georgetown County Rice Culture c. 1750-1910 MPS)*, Off US 17

Georgetown vicinity, *Keithfield Plantation (Georgetown County Rice Culture c. 1750-1910 MPS)*, Off CR 52

Georgetown vicinity, *Milldam Rice Mill and Rice Barn (Georgetown County Rice Culture c. 1750-1910 MPS)*, Off CR 30

Georgetown vicinity, *Nightingale Hall Rice Mill Chimney (Georgetown County Rice Culture c. 1750-1910 MPS)*, Off CR 52

Georgetown vicinity, *Pee Dee River Rice Planters Historic District (Georgetown County Rice Culture c. 1750-1910 MPS)*, Along the Pee Dee and Waccamaw Rivers

Georgetown vicinity, *Rural Hall Plantation House (Georgetown County Rice Culture c. 1750-1910 MPS)*, Off CR 179

Georgetown vicinity, *Weehaw Rice Mill Chimney (Georgetown County Rice Culture c. 1750-1910 MPS)*, Off CR 325

Plantersville, *Summer Chapel Rectory, Prince Frederick's Episcopal Church (Georgetown County Rice Culture c. 1750-1910 MPS)*, CR 52

Plantersville, *Summer Chapel, Prince Frederick's Episcopal Church (Georgetown County Rice Culture c. 1750-1910 MPS)*, CR 52

TEXAS

Cameron County

Brownsville, *Celaya-Creager House*, 441 E. Washington St.

WYOMING

Laramie County

Cheyenne, *Downtown Cheyenne Historic District (Boundary Increase)*, Roughly bounded by Nineteenth St., Capital Ave., Seventeenth St., and Carey Ave.

Cheyenne, *Lakeview Historic District*, Roughly bounded by Twenty-Seventh, Seymour, Maxwell, and Warren

Sublette County

Boulder vicinity, *Jensen Ranch*, Martin Jensen County Rd.

[FR Doc. 88-8312 Filed 4-18-88; 8:45 am]

BILLING CODE 4310-70-M

Appalachian Trail Route Change

A Notice of a proposed relocation of the Appalachian Trail right-of-way and Trail routes within the right-of-way was published on February 25, 1988 (53 F.R. 5471) to provide an opportunity for public review and comment. No comments were received on the proposals. An Environmental Assessment has been prepared, and a Finding of No Significant Impact for the relocation is on file in the Appalachian Trail Project Office, National Park Service, Harpers Ferry, West Virginia 25425. This notice confirms this right-of-way relocation as the official route of the Appalachian Trail.

Charles R. Rinaldi,

Acting Project Manager.

March 31, 1988.

[FR Doc. 88-8551 Filed 4-18-88; 8:45 am]

BILLING CODE 4310-70-M

Office of Surface Mining Reclamation and Enforcement

[Federal Coal Leases W-0271199, W-0271200, and W-0271201; OSMRE-EIS-24]

Availability of the Draft Environmental Impact Statement on the Proposed Dry Fork Mine, Campbell County, WY

AGENCY: Office of Surface Mining Reclamation and Enforcement, Interior.

ACTION: Notice of availability of a draft environmental impact statement.

SUMMARY: The Office of Surface Mining Reclamation and Enforcement (OSMRE) is making available a draft environmental impact statement (EIS) on the proposed Dry Fork mine. The EIS has been prepared to assist the Department of the Interior in making a decision on the mining plan submitted by Phillips Petroleum Company (PPC) for their proposed surface coal mine, located approximately 5 miles north and east of Gillette, Wyoming. OSMRE is requesting that any interested party submit written comments on the draft EIS to assist with the preparation of the final EIS. OSMRE may hold a public meeting in the vicinity of the mine to receive oral comments if substantial interest is expressed.

DATES: Comment Period: Written comments on the draft EIS must be received by 4:00 p.m. (MDT), June 10, 1988, at the location listed below, under "ADDRESSES."

Public Meetings: Expressions of interest in a public meeting should be submitted by 4:00 p.m. (MDT) on May 6, 1988 at the location listed below, under "ADDRESSES."

ADDRESSES: Written comments, expressions of interest for a public meeting, and/or requests for additional copies of the draft EIS: Hand-deliver or mail to Raymond L. Lowrie, Assistant Director, Office of Surface Mining Reclamation and Enforcement, Western Field Operations, Brooks Towers, Second Floor, 1020–15th Street, Denver, Colorado 80202, Attention: Floyd McMullen.

FOR FURTHER INFORMATION CONTACT: Floyd McMullen, Dry Fork EIS Project Leader (telephone: 303–844–3104) at the Denver, Colorado, location given under "ADDRESSES."

SUPPLEMENTARY INFORMATION: PPC's proposed Dry Fork mine would be a new surface coal mine located in Campbell County, Wyoming, 5 miles north and east of the city of Gillette. The draft EIS analyzes the probable impacts that would result should the Secretary of the Interior approve the mining plan for, and PPC subsequently develop, the proposed mine. The EIS also analyzes the probable cumulative impacts that would result from surface coal mining operations not only at the proposed Dry Fork mine but also at the one mine proposed for operation and the six mines currently operating in its vicinity north and east of Gillette.

The life-of-mine (permit) area for the proposed Dry Fork mine, comprising 3,798 acres, is currently used for ranching and wildlife habitat. By mining the proposed life-of-mine area, PPC would extract 226 million tons of low-sulphur subbituminous coal over 34 years and, in the process, would disturb 2,905 acres. The peak annual production rate from the mine would be 15 million tons.

Altogether, the life-of-mine areas for the proposed Dry Fork mine and the other one proposed and six existing mines north and east of Gillette comprise 30,424 acres. Upon completion of mining and related activities, these eight mines would have disturbed about 21,744 acres and produced about 2.1 billion tons of coal.

Three alternatives that treat the available range of decision are evaluated in the EIS. These include: approval of the proposed mining plan with conditions; approval of the proposed mining plan with additional mitigation measures over and above the standard conditions of approval imposed under the first alternative; and disapproval of the proposed mining plan. OSMRE has identified "approval of the proposed mining plan with conditions" as the preferred alternative.

If substantial interest is shown, OSMRE may hold a public meeting on the draft EIS during the comment period. If a public meeting is needed, notice will be given in the **Federal Register** and the Gillette News-Record newspaper. Details regarding the meeting will be provided in the public notice.

Date: April 12, 1988.

Brent Walquist,

Assistant Director, Program Policy.

[FR Doc. 88–8490 Filed 4–18–88; 8:45 am]

BILLING CODE 4310-05-M

DEPARTMENT OF JUSTICE

Drug Enforcement Administration

Manufacturer of Controlled Substances; Application; Penick Corp.

Pursuant to § 1301.43(a) of Title 21 of the Code of Federal Regulations (CFR), this is notice that on March 2, 1988, Penick Corporation, 158 Mount Olivet Avenue, Newark, New Jersey 07114, made application to the Drug Enforcement Administration (DEA) for registration as a bulk manufacturer of the basic classes of controlled substances listed below:

Drug	Schedule
Pholcodine (9314)	I
Alphacetylmethadol (9603)	I
Codeine (9050)	II
Dihydrocodeine (9120)	II
Oxycodone (9143)	II
Hydromorphone (9150)	II
Diphenoxylate (9170)	II
Ethylmorphine (9190)	II
Hydrocodone (9193)	II
Pethidine (meperidine) (9230)	II
Methadone (9250)	II
Methadone-Intermediate, 4-cyano-2-dimethylamino-4, 4-diphenyl butane (9254)	II
Morphine (9300)	II
Thebaine (9333)	II
Opium extracts (9610)	II
Opium fluid (9620)	II
Tincture of opium (9630)	II
Powdered opium (9639)	II
Granulated opium (9640)	II
Mixed alkaloids of opium (9648)	II
Concentrate of poppy straw (9670)	II
Phenazocine (9715)	II
Fentanyl (9801)	II

Any other such applicant and any person who is presently registered with DEA to manufacture such substances may file comments or objections to the issuance of the above application and may also file a written request for a hearing thereon in accordance with 21 CFR 1301.54 and in the form prescribed by 21 CFR 1316.47.

Any such comments, objections or requests for a hearing may be addressed to the Deputy Assistant Administrator, Drug Enforcement Administration, United States Department of Justice, 1405 I Street NW., Washington, DC 20537, Attention: DEA Federal Register Representative (Room 1112), and must be filed no later than (30 days from publication).

Gene R. Haislip,

Deputy Assistant Administrator, Office of Diversion Control, Drug Enforcement Administration.

Dated: April 12, 1988.

[FR Doc. 88–8519 Filed 4–18–88; 8:45 am]

BILLING CODE 4410-09-M

DEPARTMENT OF LABOR

Employment and Training Administration

Investigations Regarding Certifications of Eligibility to Apply for Worker Adjustment Assistance; Arvin Industries, Inc. et al.

Petitions have been filed with the Secretary of Labor under section 221 (a) of the Trade Act of 1974 ("the Act") and are identified in the Appendix to this notice. Upon receipt of these petitions, the Director of the Office of Trade Adjustment Assistance, Employment and Training Administration, has

instituted investigations pursuant to section 221 (a) of the Act.

The purpose of each of the investigations is to determine whether the workers are eligible to apply for adjustment assistance under Title II, Chapter 2, of the Act. The investigations will further relate, as appropriate, to the determination of the date on which total or partial separations began or threatened to begin and the subdivision of the firm involved.

The petitioners or any other persons showing a substantial interest in the subject matter of the investigations may request a public hearing, provided such request is filed in writing with the Director, Office of Trade Adjustment Assistance, at the address shown below, not later than April 29, 1988.

Interested persons are invited to submit written comments regarding the subject matter of the investigations to the Director, Office of Trade Adjustment Assistance, at the address shown below, not later than April 29, 1988.

The petitions filed in this case are available for inspection at the Office of the Director, Office of Trade Adjustment Assistance, Employment and Training Administration, U.S. Department of Labor, 601 D Street, NW., Washington, DC 20213.

Signed at Washington, DC, this 11th day of April, 1988.

Marvin M. Fooks,

Director, Office of Trade Adjustment Assistance.

APPENDIX

Petitioner Union/Workers/Firm	Location	Date received	Date of petition	Petition No.	Articles produced
Arvin Industries, Inc. (Workers)	Princeton, KY	4/11/88	3/31/88	20,583	Exhaust systems.
Break Systems, Inc. (Company)	Stratford, CT	4/11/88	3/21/88	20,584	Brake linings.
Bourns, Inc. (Workers)	Ames, IA	4/11/88	3/22/88	20,585	Electric components.
C.M. Offray & Son (Workers)	Frackville, PA	4/11/88	3/31/88	20,586	Distribution facility.
Centerline Metal Products (UAW)	Roseville, MI	4/11/88	3/28/88	20,587	Auto parts.
Curtis Bay Towing (MEBA)	Philadelphia, PA	4/11/88	2/26/88	20,588	Dock ships (towing).
McAllister Towing (MEBA)	Philadelphia, PA	4/11/88	2/26/88	20,589	Dock ships (towing).
Taylor Marine (MEBA)	Philadelphia, PA	4/11/88	2/26/88	20,590	Dock ships (towing).
Deminex U.S. Oil Co. (Workers)	Dallas, TX	4/11/88	3/21/88	20,591	Crude oil and natural gas.
Doehler Jarvis/Farley Metals, Inc. (UAW)	Toledo, OH	4/11/88	3/30/88	20,592	Aluminum castings.
Florsheim Shoe Co. (Capaha Plant) (ACTWU)	Cape Girardeau, MO	4/11/88	4/2/88	20,593	Men's dress shoes.
General Electric Co., (USWA)	Salem, VA	4/11/88	3/24/88	20,594	Drive systems and its components.
Gilbert & Bennett Mfg. Co. (USWA)	Georgetown, CT	4/11/88	3/29/88	20,595	Wire fensing.
Haven-Busch Co. (Ironworkers)	Grandville, MI	4/11/88	3/24/88	20,596	Fabricated structural steel.
ITW Cortron (Workers)	Elmhurst, IL	4/11/88	3/29/88	20,597	Computer keyboards.
International Paper Co. (IWA)	Gardiner, OR	4/11/88	3/28/88	20,598	Douglas fir lumber.
Lee-Man Mining Co, Mine No. 1 (Workers)	Big Stone Gap, VA	4/11/88	3/30/88	20,599	Coal mining.
Lee-Man Mining Co, Mine No. 2 (Workers)	Big Stone Gap, VA	4/11/88	3/30/88	20,600	Coal mining.
Triumph-Adler-Royal (Workers)	Manchester, CT	4/11/88	3/30/88	20,601	Warehousing of typewriter ribbons.
USX Corporation (USWA)	Vandergrift, PA	4/11/88	3/21/88	20,602	Electrical steel products.
W.R. Grace (Davison Chemical) (Teamsters)	Cincinnati, OH	4/11/88	4/4/88	20,603	Cracking catalysts.
Wetterau, Inc., Pittsburgh Div. (Workers)	Belle Vernon, PA	4/11/88	3/29/88	20,604	Sorting and computation of mfr's coupons for grocery industry.

[FR Doc. 88-8594 Filed 4-18-88; 8:45 am]

BILLING CODE 4510-30-M

Determinations Regarding Eligibility To Apply for Worker Adjustment Assistance; A.O. Smith Automotive Co. et al.

In accordance with section 223 of the Trade Act of 1974 (19 U.S.C. 2273) the Department of Labor herein presents summaries of determinations regarding eligibility to apply for adjustment assistance issued during the period April 4, 1988–April 11, 1988.

In order for an affirmative determination to be made and a certification of eligibility to apply for adjustment assistance to be issued, each of the group eligibility requirements of section 222 of the Act must be met.

(1) That a significant number or proportion of the workers in the workers' firm, or an appropriate subdivision thereof, have become totally or partially separated.

(2) That sales or production, or both, of the firm or subdivision have decreased absolutely, and

(3) That increases of imports of articles like or directly competitive with articles produced by the firm or appropriate subdivision have contributed importantly to the separations, or threat thereof, and to the absolute decline in sales or production.

Negative Determinations

In each of the following cases the investigation revealed that criterion (3) has not been met. A survey of customers indicated that increased imports did not contribute importantly to worker separations at the firm.

In the following cases the investigation revealed that criterion (3) has not been met for the reasons specified.

TA-W-20, 443; A.O. Smith Automotive Co., Milwaukee, WI

Increased imports did not contribute importantly to workers separations at the firm.

TA-W-20, 449; JPI Transportation Products, Inc., Engine Product Group, Cleveland, OH

Increased imports did not contribute importantly to workers separations at the firm.

TA-W-20, 496; Tee Oil, Inc., Lafayette, LA

The workers' firm does not produce an article as required for certification under Section 222 of the Trade Act of 1974.

TA-W-20, 487; Dow Corning Corp., Springfield Smelter Springfield, OR

U.S. imports of silicon metal declined absolutely and relative to domestic production in 1986 compared to 1985 and in the first three quarters of 1987 compared to the same period in 1986.

Affirmative Determinations

TA-W-20, 412; M. Smith, Inc., Philadelphia, PA

A certification was issued covering all workers of the firm separated on or after January 11, 1987 and before February 25, 1988.

TA-W-20, 472; Bill J. Graham Oil and Gas, Midland, TX

A certification was issued covering all workers of the firm separated on or after January 6, 1987.

TA-W-20, 494; Southwestern Sunbelt Cement Co., El Paso, TX

A certification was issued covering all workers of the firm separated on or after January 4, 1988.

I hereby certify that the aforementioned determinations were issued during the period April 4-8, 1988. Copies of these determinations are available for inspection in Room 6434, U.S. Department of Labor, 601 D Street, NW., Washington, DC 20213 during normal business hours or will be mailed to persons who write to the above address.

Dated: April 12, 1988.

Marvin M. Fooks,

Director, Office of Trade Adjustment Assistance.

[FR Doc. 88-8595 Filed 4-18-88; 8:45 am]

BILLING CODE 4510-30-M

[TA-W-13,350]

Further Determination on Remand; Puna Sugar Co., Ltd., Keaau, HI

Pursuant to the U.S. Court of International Trade remand dated January 28, 1988 in *ILWU Local 142*, v. *Donovan* (USCIT 83-5-00779) and after having obtained an extension the Department is issuing a further determination on remand.

The Court's remand orders that the Department conduct and complete its investigation on exports of refined sugar under the drawback program, 19 U.S.C. 1313 as required by the issues raised in this case and report its findings within 60 days from the date of the Court's order.

Puna was one of five sugar cane plantations owned by American Factors, Ltd., (Amfac) which was a part owner of the California and Hawaiian (C&H) sugar refinery cooperative in San Francisco. Puna had a captive market for its raw sugar since C&H took all of Puna's production.

The basis for the Department's initial denial is that Puna's sole customer of raw sugar, C & H in San Francisco, California, does not import raw or refined sugar. Therefore, the "contributed importantly" test of the increased import criterion of the Group Eligibility Requirements of the Trade Act of 1974 was not met. Moreover, Amfac shut down the Puna plantation because of its low yields, high operating costs and poor working conditions. Additionally, C & H, the sole customer of Puna, had increased sales, of refined sugar, in quantity, in 1981 compared to 1980.

Although C & H reported a very small decline (about 3 percent) in refined sugar sales in 1982 compared to 1981, none of the surveyed customers reported any import purchases. The survey did find, however, that large industrial customers, especially bottlers, were reducing their purchases of refined sugar for domestic high fructose corn syrup (HFCS). The Department's survey of C & H's customers accounted for a substantial share of C & H's 1982 sales. Therefore, there is no evidence that imports of raw sugar contributed importantly to declines in production and/or sales and employment at Puna or C & H. Accordingly, the mere fact that U.S. aggregate imports of raw sugar increased in 1981 would not, in itself, form a basis for certifying workers laid off at Puna in 1982.

Although the Court required the Department to further investigate exports of refined sugar under the drawback program, further investigation did not provide any additional relevant information on drawbacks. However, this issue is not relevant to the Department's determination, since there is no evidence that Puna's layoffs were caused by increased imports. The Department's discussion on drawbacks in its reconsideration notice was only to show the reason why some imported raw sugar was refined and exported in 1981. The drawback discussion is not part of the statutory group eligibility test; consequently, there is no purpose in pursuing the drawback discussion.

Further, the Department continues to hold the view that substantial and continuing shifts to HFCS is responsible for the downward trend in refined sugar consumption in the U.S. and explains the lower level of production and imports. Investigative findings show that HFCS was substituted increasingly for refined sugar during the period under investigation.

Conclusion

After reconsideration, I reaffirm the original denial of eligibility to apply for adjustment assistance to workers of Puna Sugar Company, Keaau, Hawaii.

Signed at Washington, DC, this 11th day of April, 1988.

Harold A. Bratt,

Deputy Director, Office of Program Management, UIS.

[FR Doc. 88-8596 Filed 4-18-88; 8:45 am]

BILLING CODE 4510-30-M

Occupational Safety and Health Administration

Nevada State Standards; Approval

1. Background

Part 1953 of Title 29, Code of Federal Regulations, prescribes procedures under section 18 of the Occupational Safety and Health Act of 1970 (hereinafter called the Act) by which the Regional Administrator for Occupational Safety and Health (hereafter called Regional Administrator), under a delegation of authority from the Assistant Secretary of Labor for Occupational Safety and Health (hereafter called the Assistant Secretary) (29 CFR 1953.4) will review and approve standards promulgated pursuant to a State plan which has been approved in accordance with section 18(e) of the Act and 29 CFR Part 1902. On January 4, 1974, notice was published in the **Federal Register** (39 FR 1008) of the approval of the Nevada plan and the adoption of Subpart W to Part 1952 of Title 29 containing the decision. The Nevada plan provides for the adoption of Federal standards as State standards by reference.

By memo's dated February 2, 3, 4, and 5, 1988, from Nancy C. Barnhart to Frank Strasheim and incorporated as part of the plan, the State submitted State standard revisions identical to 29 CFR 1919.1200, Hazard Communication (August 24, 1987, 52 FR 31852); 29 CFR 1910.1028, Benzene (September 11, 1987, 52 FR 34460); 29 CFR 1926, Construction Industry Test and Inspection Records (September 28, 1987, 52 FR 36378); 29 CFR 1910.268, Telecommunication Training Records (September 28, 1987, 52 FR 36384); and 29 CFR 1910.1048 and 29 CFR 1926.55, Formaldehyde (December 4, 1987, 52 FR 46168). These standards are contained in the Division of Occupational Safety and Health Standards for General Industry and Construction Standards. The subject standards, 29 CFR 1910.1200, Hazard Communication; 29 CFR 1910.1028, Benzene; 20 CFR 1926, Construction Industry Test and Inspection Records; 29 CFR 1910.268, Telecommunication Training Records; and 29 CFR 1910.1048, Formaldehyde were adopted by reference on September 23, 1987;

BEST COPY AVAILABLE

December 10, 1987; October 28, 1987 and February 2, 1988 respectively, pursuant to Nevada State law, section 618.295.

2. Decision

Having reviewed the State submission in comparison with the Federal standards, it has been determined that the standards are identical to the Federal standards and accordingly are approved.

3. Location of Supplement for Inspection and Copying

A copy of the standards supplement, along with the approved plan, may be inspected and copied during normal business hours at the following locations: Office of the Regional Administrator, Occupational Safety and Health Administration, 71 Stevenson Street, Room 415, San Francisco, CA 94105; and Director, Division of Occupational Safety and Health, 1370 South Curry Street, Carson City, Nevada 89710; and Directorate of Federal-State Operations, Room N3700, 200 Constitution Avenue, NW, Washington, DC 20210.

4. Public Participation

Under 29 CFR 1953.2(c), the Assistant Secretary may prescribe alternative procedures to expedite the review process or for other good cause which may be consistent with applicable laws. The Assistant Secretary finds that good cause exists for not publishing the supplement to the Nevada State plan as a proposed change and making the Regional Administrator's approval effective upon publication for the following reasons:

1. The standards are identical to the Federal Standards which were promulgated in accordance with federal law including meeting requirements for public participation.

2. The standards were adopted in accordance with procedural requirements of State law and further participation would be unnecessary.

This decision is effective April 19, 1988.

(Sec. 18, Pub. L. 91-596, 84 Stat. 1608 (29 U.S.C. 667)).

Signed at San Francisco, California, this 18th day of February, 1988.

Frank Strasheim,

Regional Administrator.

[FR Doc. 88-8588 Filed 4-18-88; 8:45 am]

BILLING CODE 4510-26-M

Nevada State Standards; Approval

1. Background

Part 1953 of Title 29, Code of Federal Regulations, prescribes procedures under section 18 of the Occupational Safety and Health Act of 1970 (hereinafter called the Act) by which the Regional Administrator for Occupational Safety and Health (hereinafter called Regional Administrator), under a delegation of authority from the Assistant Secretary of Labor for Occupational Safety and Health (hereinafter called the Assistant Secretary) (29 CFR 1953.4) will review and approve standards promulgated pursuant to a State plan which has been approved in accordance with section 18(e) of the Act and 29 CFR Part 1902. ON January 4, 1974, notice was published in the **Federal Register** (39 FR 1008) of the approval of the Nevada plan and the adoption of Subpart W to Part 1952 of Title 29 containing the decision. The Nevada plan provides for the adoption of Federal standards as State standards by reference.

By letter dated November 6, 1987, from Nancy C. Barnhart to Raymond J. Owen and incorporated as part of the plan, the State submitted State standard revisions identical to 29 CFR 1928.110, Field Sanitation (May 1, 1987, 52 FR 16050). The standard is contained in the division of Occupational Safety and Health Standards for Agriculture. The subject standard, 29 CFR 1928.110, Field Sanitation was adopted by reference on May 30, 1987 pursuant to Nevada State law, section 618.295.

2. Decision

Having reviewed the State submission in comparison with the Federal standard, it has been determined that the standard is identical to the Federal standard and accordingly is approved.

3. Location of Supplement for Inspection and Copying

A copy of the standards supplement, along with the approved plan, may be inspected and copied during normal business hours at the following locations: Office of the Regional Administrator, Occupational Safety and Health Administration, 71 Stevenson Street, Fourth Floor, San Francisco, CA 94105; and Director, Division of Occupational Safety and Health, 1370 South Curry Street, Carson City, Nevada 89710; and Directorate of Federal Compliance and State Programs, Room N3700, 200 Constitution Avenue NW., Washington, DC 20210.

4. Public Participation

Under 29 CFR 1953.2(c), the Assistant Secretary may prescribe alternative procedures to expedite the review process or for other good cause which may be consistent with applicable laws. The Assistant Secretary finds that good cause exists for not publishing the supplement to the Nevada State plan as a proposed change and making the Regional Administrator's approval effective upon publication for the following reasons;

1. The standard is identical to the Federal Standard which was promulgated in accordance with Federal law including meeting requirements for public participation.

2. The standard was adopted in accordance with procedural requirements of State law and further participation would be unnecessary.

This decision is effective April 19, 1988.

(Sec. 18, Pub. L. 91-596, 84 Stat. 1608 (29 U.S.C. 667))

Signed at San Francisco, California, this 4th day of December, 1987.

Frank Strasheim,

Regional Administrator.

[FR Doc. 88-8589 Filed 4-18-88; 8:45 am]

BILLING CODE 4510-26-M

Oregon State Standards; Approval

1. Background

Part 1953 of Title 29, Code of Federal Regulations, prescribes procedures under section 18 of the Occupational Safety and Health Act of 1970 (hereinafter called the Act) by which the Regional Administrator for Occupational Safety and Health (hereinafter called Regional Administrator) under a delegation of authority from the Assistant Secretary of Labor for Occupational Safety and Health (hereinafter called the Assistant Secretary) (29 CFR 1953.4) will review and approve standards promulgated pursuant to a State plan which has been approved in accordance with section 18(c) of the Act and 29 CFR Part 1902. On December 28, 1972, notice was published in the **Federal Register** (37 FR 28628) of the approval of the Oregon plan and the adoption of Subpart D to Part 1952 containing the decision.

The Oregon plan provides for the adoption of State standards which are at least as effective as comparable Federal standards promulgated under section 6 of the Act. Section 1953.20 provides that where any alteration in the Federal program could have an adverse impact on the at least as effective as status of the State program, a program change supplement to a State plan shall be required.

In response to Federal standards changes, the State submitted, by letter dated March 18, 1987, from William J. Brown, Director, Workers' Compensation Department, to James W.

Lake, Regional Administrator, standards comparable to 29 CFR 1926.400 through 1926.449, Electrical Standards for Construction, as published in the **Federal Register** on July 11, 1986 (51 FR 25294). These standards were adopted effective by the State on January 15, 1987 after the Notice of Proposed Amendment of Rules was mailed, on December 4, 1986, to those on the Workers' Compensation Department mailing list established pursuant to OAR 436-10-000 and to those on the Department's distribution mailing list as their interest appeared. A public hearing was not held for this adoption. During the designated response period, a letter was received from Portland General Electric Company (PGE). Issues raised concerned application of construction electrical rules to facilities owned and operated by PGE for the purpose of transmission and distribution of electrical power. These issues were resolved by discussion and a subsequent written response. Approval of these Rules, OAR Chapter 437, Division 83, Electrical Safety in Construction, was withheld due to the omission of one phrase and several errors in the text that altered the intent of five (5) rules. On April 24, 1987 this standard submission was returned to the State for corrections.

By letter dated September 27, 1987, from Darrel D. Douglas, Administrator, Accident Prevention Division, Workers' Compensation Department, to James W. Lake, Regional Administrator, the State re-submitted for approval OAR 437 Division 83, Electrical Safety in Construction, following the corrections of the omission and errors to the original submission.

2. Decision

Having reviewed the State submissions in comparison with the Federal standard, it has been determined that the State standard is identical to the Federal standard.

3. Location of Supplement for Inspection and Copying

A copy of the standards supplement, along with the approved plan, may be inspected and copied during normal business hours at the following locations: Office of the Regional Administrator, Occupational Safety and Health Administration, Room 6003, Federal Office Building, 909 First Avenue, Seattle, Washington 98174; Workers' Compensation Department, Labor and Industries Building, Salem, Oregon 97310; and the Office of State Programs, Room N-3476, 200 Constitution Avenue NW., Washington, DC 20210.

4. Public Participation

Under 29 CFR 1953.2(c) the Assistant Secretary may prescribe alternative procedures to expedite the review process or for other good cause which may be consistent with applicable laws. The Assistant Secretary finds that good cause exists for not publishing the supplement to the Oregon State Plan as a proposed change and making the Regional Administrator's approval effective upon publication for the following reasons:

1. The standards are identical to the Federal standards which were promulgated in accordance with Federal law including meeting requirements for public participation.

2. The standards were adopted in accordance with the procedural requirements of State law and further participation would be unnecessary.

This decision is effective April 19, 1988.

(Sec. 18, Pub. L. 91-596, 84 Stat. 1608 (29 U.S.C. 667))

Signed at Seattle, Washington, this 13th day of October 1987.

Carl A. Halgren,

Acting Regional Administrator.

[FR Doc. 88-8590 Filed 4-18-88; 8:45 am]

BILLING CODE 4510-26-M

NATIONAL AERONAUTICS AND SPACE ADMINISTRATION

[Notice (88-37)]

NASA Advisory Council (NAC), Aeronautics Advisory Committee (AAC); Meeting

AGENCY: National Aeronautics and Space Administration.

ACTION: Notice of meeting.

SUMMARY: In accordance with the Federal Advisory Committee Act, Pub. L. 92-463, as amended, the National Aeronautics and Space Administration announces a forthcoming meeting of the NASA Advisory Council, Aeronautics Advisory Committee, Ad Hoc Review Team on Flight Research and Technology.

DATES AND TIMES: May 18, 1988, 8 a.m. to 4 p.m.; and May 19, 1988, 8 a.m. to 4 p.m.

ADDRESS: Jet Propulsion Laboratory, National Aeronautics and Space Administration, Room 102, Building 198, 4800 Oak Grove Drive, Pasadena, CA 91109.

FOR FURTHER INFORMATION CONTACT: Mr. Jack Levine, Office of Aeronautics and Space Technology, National Aeronautics and Space Administration, Washington, DC 20546, 202/453-2835.

SUPPLEMENTARY INFORMATION: The NAC Aeronautics Advisory Committee (AAC) was established to provide overall guidance to the Office of Aeronautics and Space Technology (OAST) on aeronautics research and technology activities. Special ad hoc review teams are formed to address specific topics. The Ad Hoc Review Team on Flight Research and Technology, chaired by Mr. Joseph T. Gallagher, is comprised of six members. The meeting will be open to the public up to the seating capacity of the room (approximately 20 persons including the team members and other participants).

Type of Meeting: Open.

Agenda:

May 18, 1988

8 a.m.—Review of Presentation Material.
10 a.m.—Discussion of Findings and Conclusions.
1 p.m.—Assignment of Working Groups.
2 p.m.—Working Group Activities.
4 p.m.—Adjourn.

May 19, 1988

8 a.m.—Working Group Activities.
1 p.m.—Convene Working Groups—Review of Final Report Elements.
4 p.m.—Adjourn.

April 12, 1988.

Ann Bradley,

Advisory Committee Management Officer, National Aeronautics and Space Administration.

[FR Doc. 88-8473 Filed 4-18-88; 8:45 am]

BILLING CODE 7510-01-M

NATIONAL COMMISSION TO PREVENT INFANT MORTALITY

Open Hearing

AGENCY: National Commission to Prevent Infant Mortality.

ACTION: Notice of open hearing.

SUMMARY: In accordance with Pub. L. 99-660, notice is given of the 5th hearing of the National Commission to Prevent Infant Mortality. The purpose of this hearing is to receive testimony from organizations and individuals on what their priorities and recommendations are for promoting infant health in the United States.

DATE: May 20, 1988.

TIME: 9:30 a.m.-12:30 p.m.

ADDRESS: Room SD-608, Senate Dirksen Bldg., 1st Street and Constitution Avenue NE., Washington, DC 20210.

FOR FURTHER INFORMATION: Anne Hockett, 202-472-1362.

Rae K. Grad,

Executive Director.

[FR Doc. 88-8502 Filed 4-18-88; 8:45 am]

BILLING CODE 5420-SK-M

NUCLEAR REGULATORY COMMISSION

[Docket No. 50-302]

Florida Power Corp.; Environmental Assessment and Finding of No Significant Impact

The U.S. Nuclear Regulatory Commission (the Commission) is considering issuance of an amendment to Facility Operating License No. DPR-72, issued to Florida Power Corporation (the licensee), for operation of the Crystal River Unit 3 Nuclear Generating Plant, located in Citrus County, Florida.

Environmental Assessment

Identification of Proposed Action

The proposed amendment would revise the provisions in the Technical Specifications (TS) related to actions to be taken when one of the batteries or battery chargers supplying DC control power to the 230 KV switchyard breakers is inoperable, and to the time the unit may operate with the battery inoperable.

The proposed action is in accordance with the licensee's application for amendment dated January 20, 1988.

The Need for the Proposed Action

The proposed change to the TS is required in order to provide more appropriate corrective actions for an inoperable battery or charger, to allow surveillance testing of the batteries within the action statement time interval and to clarify surveillances and equipment required to be operable during shutdown.

Environmental Impacts of the Proposed Action

The Commission has completed its evaluation of the proposed revisions to the TS. The proposed revisions woud add: (1) Conservative and/or more restrictive Limiting Conditions for Operation, which would also reduce unnecessary operation of the diesel generators and would reduce risk to personnel and equipment, and (2) clarification to surveillance requirements during shutdown. Therefore, the proposed changes do not increase the probability or consequences of accidents, no changes are being made in the types of any effluents that may be released offsite, and there is no significant increase in the allowable individual or cumulative occupational radiation exposure. Accordingly, the Commission concludes that this proposed action would not result in any significant radiological environmental impacts.

With regard to potential nonradiological impacts, the proposed change to the TS involves systems located within the restricted area as defined in 10 CFR Part 20. it does not affect nonradiological plant effluents and has no other environmental impact. Therefore, the Commission concludes that there are no significant nonradiological environmental impacts associated with the proposed amendment.

The Notice of Consideration of Issuance of Amendment and Opportunity for Hearing in connection with this action was published in the **Federal Register** on March 22, 1988 (53 FR 9386). No request for hearing or petition for leave to intervene has been filed following this notice.

Alternatives to the Proposed Action

Since the Commission concluded that there are not significant environmental effects that would result from the proposed action, any alternatives with equal or greater environmental impacts need not be evaluated.

The principal alternative would be to deny the requested amendment. This would not redue environmental impacts of plant operation and would result in reduced operational flexibility.

Alternative Use of Resources

This action does not involve the use of any resources not previously considered in the Final Environmental Statement for the Crystal River Unit 3, dated May 1973.

Agencies and Persons Consulted

The NRC staff reviewed the licensee's request and did not consult other agencies or persons.

Finding of No Significant Impact

The Commission had determined not to prepare an environmental impact statement for the proposed license amendment.

Based upon the foregoing environmental assessment, we conclude that the proposed action will not have a significant effect on the quality of the human environment.

For further details with respect to this action, see the application for the amendment dated January 20, 1988, which is available for public inspection at the Commission's Public Document Room, 1717 H Street NW., Washington, DC, and at the Crystal River Public Library, 668 N.W. First Avenue, Crystal River, Florida 32629.

For the Nuclear Regulatory Commission.

Herbert N. Berkow,

Director, Project Directorate II-2, Division of Reactor Projects I/II, Office of Nuclear Reactor Regulation.

[FR Doc. 88-8506 Filed 4-18-88; 8:45 am]

BILLING CODE 7590-01-M

[Docket No. 50-397]

Washington Public Power Supply System; Issuance of Amendment to Facility Operation License

The U.S. Nuclear Regulatory Commission (Commission) has issued Amendment No. 54 to Facility Operating License No. NPF-21, issued to Wahington Public Power Supply System (the licensee), which revised the Technical Specifications for operation of the Nuclear Project No. 2, located in Benton County, Washington.

The amendment was effective as of the date of issuance.

The amendment modified the Technical Specifications to revise snubber functional testing sampling plans.

The application for the amendment complies with the standards and requirements of the Atomic Energy Act of 1954, as amended (the Act), and the Commission's rules and regulations. The Commission has made appropriate findings as required by the Act and the Commission's rules and regulations in 10 CFR Chapter I, which are set forth in the license amendment.

Notice of Consideration of Issuance of Amendments and Opportunity for Prior Hearing in connection with this action was published in the **Federal Register** on March 7, 1988 (53 FR 7269). No request for a hearing or petition for leave to intervene was filed following this notice.

The Commission has prepared an Environmental Assessment related to the action and has concluded that an environmental impact statement is not warranted because there will be no environmental impact attributable to the action beyond that which has been predicted and described in the Commission's Final Environmental Statement for the facility dated December 1981.

For further details with respect to the action see (1) the application for amendent dated December 1, 1987, as revised March 18, 1988, (2) Amendment No. 54 to License No. NPF-21, (3) the Commission's related Safety Evaluation

and (4) the Commission's Environmental Assessment. All of these items are available for public inspection at the Commission's Public Document Room, 1717 H Streeet NW., and at the Richland City Library, Swift and Northgate Streets, Richland, Washington 99352. A copy of items (2), (3) and (4) may be obtained upon request addressed to the U.S. Nuclear Regulatory Commission, Washington, DC 20555, Attention: Director, Division of Reactor Projects III, IV, V and Special Projects.

Dated at Rockville, Maryland, this 11th day of April 1988.

For the Nuclear Regulatory Commission.

Robert B. Samworth,

Senior Project Manager, Project Directorate V, Division of Reactor Projects—III, IV, V and Special Projects, Office of Nuclear Reactor Regulation.

[FR Doc. 88-8507 Filed 4-18-88; 8:45 am]

BILLING CODE 7590-01-M

OFFICE OF PERSONNEL MANAGEMENT

Proposed Revision of SF 50-A Submitted to OMB for Clearance

AGENCY: Office of Personnel Management.

ACTION: Notice.

SUMMARY: In accordance with the Paperwork Reduction Act of 1980 (44 U.S.C. Chapter 35), this notice announces the proposed revision of SF 50-A, Notice of Short-Term Employment, which was submitted to OMB for clearance. SF 50-A is completed by applicants for temporary Federal employment for 1 year or less. Approximately 62,500 forms are completed each year, and the application portion of the form takes approximately 12 minutes to complete, for a total of 12,500 hours. For copies of this proposal, call C. Ronald Trueworthy, Agency Clearance Officer, on (202) 632-0261.

DATE: Comments on this proposal should be received by April 29, 1988.

ADDRESSES: Send or deliver comments to—

C. Ronald Trueworthy, Agency Clearance Officer, U.S. Office of Personnel Management, Room 6410, 1900 E Street NW., Washington, DC 20415,

and

Joesph Lackey, Information Desk Officer, Office of Information and Regulatory Affairs, Office of Management and Budget, Room 3235, Washington, DC 20503.

FOR FURTHER INFORMATION CONTACT: Carol E. Porter, (202) 632-4453, U.S. Office of Personnel Management.

Constance Horner,

Director.

[FR Doc. 88-8494 Filed 4-18-88; 8:45 am]

BILLING CODE 6325-01-M

PRESIDENTIAL COMMISSION ON THE HUMAN IMMUNODEFICIENCY VIRUS EPIDEMIC

AIDS in the Workplace and the Safety of the Blood Supply; Public Meeting

Notice is hereby given, pursuant to Pub. L. 92-463, the the Presidential Commission on the Human Immunodeficiency Virus Epidemic will hold a public meeting on "AIDS in the Workplace and the Safety of the Blood Supply" Monday, May 9, 1988, at 9:00 a.m. to 5:30 p.m.; Tuesday, May 10, 1988, 8:30 a.m. to 6:00 p.m.; and Wednesday, May 11, 1988, at 9:00 a.m. to 4:00 p.m. at the Indiana University Executive Conference Center, 850 West Michigan Street, Indianapolis, Indiana.

The purpose of the meeting is to receive testimony from representatives of the public and private sectors on the impact of AIDS on business, industry, and the Federal Government. Testimony will also be received on health care worker safety and safety of the blood supply.

Records shall be kept of all Commission proceedings and shall be available for public inspection during regular office hours at 655-15th Street, NW., Suite 901, Washington, DC 20005.

Polly L. Gault,

Executive Director.

[FR Doc. 88-8622 Filed 4-15-88; 11:22 am]

BILLING CODE 4160-15-M

SECURITIES AND EXCHANGE COMMISSION

[Release No. 34-25580; File Nos. 4-218 and S7-433]

Joint Industry Plan; Order Approving Amendments to the Consolidated Quotation Plan and Consolidated Transaction Plan Fee Schedules

I. Introduction

On December 7, 1987, the paticipants in the Consolidated Tape Association ("CTA") and Consolidated Quotation System ("CQS") submitted amendments [1] to the Plan governing the operation of the consolidated quotation reporting system ("CQ Plan") the Plan governing the operation of the consolidated transaction reporting plan ("CTA Plan").[2] The Commission received three comments on the proposed amendments and one comment from the American Stock Exchange ("Amex"), the Network B Plan administrator, in response.[3] This order approves the amendments.

II. Description of the Amendments and Plan Participants' Rationale

The purpose of the amendments is to revise Network B [4] fees to accommodate "Other Services" (services subscribers offer customers that differ from conventional services);[5] raise the

[1] The amendments to the CQ and CTA Plans were submitted pursuant to Rule 11Aa3-2 under the Securities Exchange Act of 1934 ("Act"). Rule 11Aa3-2(c) (4) empowers the Commission to summarily put into effect on a temporary basis a Plan amendment "if the Commission finds that such action is necessary or appropriate in the public interest, for the protection of investors or the maintenance of fair and orderly markets, to remove impediments to, and perfect mechanisms of, a national market system or otherwise in furtherance of the purpose of the Act." The CTA Plan amendments also were submitted pursuant to Rule 11Aa3-1 under the Act.

[2] The participants originally submitted the amendments on March 31, 1987. *See* Securities Exchange Act Release No. 24334 (April 13, 1987), 52 FR 12997. On August 12, 1987, the participants withdrew those amendments and refiled them pursuant to Rule 11Aa3-2(c)(4). *See* Securities Exchange Act Release No 24797 (August 13, 1987), 52 FR 31108. On December 7, 1987, the participants again withdrew the amendments and resubmitted them pursuant to Rule 11Aa3-2(c)(4). *See* Securities Exchange Act Release No. 25193 (December 14, 1987), 52 FR 48172. The Commission requested that the participants resubmit the amendments to allow the Commission adequate time to review them and to review the comment letters submitted on the proposal.

[3] *See* letters from Paul Zurkowski, President, Information Industry Association ("IIA") to Jonathan Katz, Secretary, SEC, dated June 5, 1987 ("IIA June 5, 1987, letter"); from Carrie E. Dwyer, Senior Vice President and General Counsel, to Jonathan G. Katz, Secretary, SEC, dated August 24, 1987 ("Amex August 25, 1987, letter"); from Tess Lander/Mickley, Vice President-Branch Systems, on behalf of IIA, to Jonathan G. Katz, Secretary, SEC, dated September 29, 1987; from Kenneth B. Allen, Senior Vice President, Government Relations IIA, to Jonathan G. Katz, Secretary, SEC, dated October 27, 1987.

[4] "Network B" refers to the consolidated data stream representing transactions and quotation data on eligible securities that are listed on the American Stock Exchange ("Amex") or that are traded on regional exchanges but substantially meet the Amex listing standards.

[5] Examples of "Other Services" are services that allow customers to: (1) Obtain real-time stock market information over the telephone through an automated process involving a computer-generated voice; or (2) obtain real-time stock market information over a leased printer located in their homes or offices.

Network B analysis programs charge; and establish a new combined, lower fee for receipt of Network B last sale and bid-ask data by non-professional subscribers. The amendments also make several conforming and technical changes.[6]

First, the amendments incorporate into the CTA and CQ Plans new fees for Other Services that are substantially lower than other professional Network B charges. In effect, the new fees are charged on the basis of "device equivalency," as if the broker-dealer or vendor were serving its customers by manual interrogation of a last sale data base.

Second, the amendments reduce the monthly fees vendors pay on behalf of their non-professional customers to provide them with Network B data. Previously vendors paid $5.00 under the CTA Plan and $4.00 under the CQ Plan. The amendment provides for a single, combined monthly fee of $3.00 for CTA and CQS data.

Finally, the amendments increase the monthly Network B analysis programs charge from $50 to $200. Use of CTA and CQS data for other categories of computer programs (for example, compilation of stock tables and operations control programs) requires payment of a monthly fee of $200 per category.

The participants stated that they designed the amendments to permit wider dissemination of market data by making it less expensive for individual investors. They believe that the new fees also offer greater flexibility to broker-dealers and vendors in designing new market data services. Finally, the participants stated that they believe the amendments fulfill the national market system objectives of dissemination of last sale information and thus are consistent with section 11A of Securities Exchange Act of 1934.

III. Comments

As noted above, the Commission received three comments from IIA. The first letter supported some of the proposed amendments and raised concerns about others.[7] IIA applauded the combination and reduction of non-professional fees as increasing investors' access to financial market data. IIA objected, however, to the increase in the analysis programs charge.

Additionally, IIA observed that some of the other amendments, such as the automated voice response charge and the real-time market check charge, lacked sufficient specificity. With respect to the automated voice response charge, IIA specifically objected to the reference in the fee schedule that these charges would be calculated on a "device equivalency" basis. Although IIA welcomed the use of the concept and believed that it appropriately recognizes vendor innovation, it believed that the fee schedule should specify exactly to what vendor services it would apply. IIA similarly was concerned that the application of the real-time market check charge had not been indicated clearly.

In its letter Amex responded to each of these concerns. First, Amex clarified the three new dissemination methods in the "Other Services" category[8] and explained that charging the broker-dealer or vendor for these uses of the data on a "device equivalency" basis meant the charges would be calculated by determining the total number of data requests that can be processed at the same time by the automated equipment used.[9] Amex also stated that under the new fee schedule, the customers offered these services by their broker-dealers no longer would be considered "subscribers" and thus would not be subject to the standard subscriber fees and subscriber agreements required under the Plan. The new fee schedule thus would make these services more widely available to individual investors who otherwise might not be willing or able to pay the regular subscriber fees.

Amex also justified raising the analysis programs charge, which is levied for use of Network B data in analysis programs leading to purchase/sell or other trading decisions, including arbitrage, options analysis and other trading programs. Amex stated that this charge has not been raised since it was established 10 years ago. Amex believes the increase corrects an inequitable allocation of the computer program charges that, until now, have been borne primarily by those vendors paying for stock table and operation control programs.

IV. Discussion

Rule 11Aa3–2(c)(2) under the Act requires the Commission to approve an amendment to an effective national market system plan if it finds that the amendment is necessary or appropriate in the public interest, for the protection of investors and the maintenance of fair and orderly markets, to remove impediments to, and perfect the mechanisms of, a national market system, or otherwise in furtherance of the purposes of the Act. Section 11A(a)(1)(C)(iii) of the Act states that "[i]t is in the public interest and appropriate for the protection of investors and the maintenance of fair and orderly markets to assure * * * the availability to brokers, dealers, and investors of information with respect to quotations for and transactions in securities." As a general matter, these standards require that fees charged under the CTA and the CQ Plans be fair and reasonable. The Commission believes the amendments meet these standards.

First, the fees for "Other Services" were in effect under experimental authority granted the CQS and CTA before the Commission granted temporary effectiveness. Moreover, making these fees a permanent part of the CTA and CQS Network B Plan fee structure will enable a greater number of investors to receive last sale and quotation data at significantly lower cost. These new charges should encourage innovation among broker-dealers and investors in creating new methods of providing information to customers.

The Commission believes that these charges, as clarified in Amex's August 25, 1987, letter, are sufficiently defined. The Commission believes that the new charges are a legitimate attempt to bring the CTA/CQS Network B fee schedules into line with the innovations of the vendor industry. Originally, the fee schedules were based primarily on the notion that subscribers accessed the data through simple interrogation methods and low speed tickers. As IIA noted in its comment letter, rapid innovation in the industry has caused this approach to be seriously outmoded. The Commission believes that the "Other Services" charges are appropriately based on a usage notion, just as are the interrogation unit charges. For example, the fee schedule provides that vendors or broker-dealers that provide automated voice response service for customers will pay

---

[6] The Commission recently approved similar changes to the CTA and CQ Plans Network A fee schedules. *See* Securities Exchange Act Release No. 24130 (February 20, 1987), 52 FR 6413 (March 3, 1987).

[7] *See* IIA June 5, 1987, letter. Several of the comments IIA made went beyond the scope of the proposed amendments and thus are not dealt with here.

The primary purpose of the second letter was to summarize a meeting between Amex and IIA to discuss IIA's concerns about the amendments. The third comment letter stated that IIA was satisfied with Amex's explanaton of the perceived ambiguities in and other difficulties with the amendments.

[8] *See* Amex August 25, 1987, letter.

[9] For the new real-time market check category under Other Services, however, the broker-dealer would pay a flat monthly fee of $100.00.

subscriber charges based on the total number of simultaneous customer requests for information from the subscriber's automated system that are possible. The Commission also believes that the CTA/CQS have structured the Other Services charges to be flexible enough to accommodate further innovation without requiring an amendment to the plan each time a vendor or broker-dealer develops a new service or data us. This appears to be a sensible approach.

The Commission also believes that the larger program analysis charges similarly reflect the economic reality that a broker-dealer that uses market data in, for example, its market making program, gets significantly greater use from that data feed than does a individual using an interrogation device. Further, if the CTA/CQS failed to recognize that fact and charged the same fees for interrogation devices and for computer analysis program uses, they would be requiring smaller users of the data to subsidize larger users, a result the Commission would be reluctant to sanction.

The final issue to be addressed is the proposed new non-professional fee. The Commission views the reduction and consolidation of the fees for non-professional receipt of transaction and quotation data to $3.00 per interrogation unit as a substantial reduction and a positive step towards making market information more affordable and, thus, more widely distributed to individual consumers.

V. Conclusion

For the reasons discussed above, the Commission finds the amendments to the CTA and CQS Network B fee schedules to be consistent with the Act, particularly section 11A(a)(1) and Rules 11Aa3–1 and 11Aa3–2.

It is therefore ordered, pursuant to section 11A of the Act, that the Amendments to the CTA and CQ Plans be, and hereby are, approved.

For the Commission, by the Division of Market Regulation, pursuant to delegated authority.

Jonathan G. Katz,

Secretary.

Dated: April 12, 1988.

[FR Doc. 88–8572 Filed 4–18–88; 8:45 am]

BILLING CODE 8010–01–M

[Release No. 34–25570; File No. SR–CBOE–88–04]

Self-Regulatory Organizations; Proposed Rule Change by the Chicago Board Options Exchange, Inc. Relating to Market Maker Support of Exchange Sponsored Automated Programs

Pursuant to section 19(b)(1) of the Securities Exchange Act of 1934, 15 U.S.C. 78s(b)(1), notice is hereby given that on March 23, 1988 the Chicago Board Options Exchange, Incorporated filed with the Securities and Exchange Commission the proposed rule change as described in Items I, II and III below, which Items have been prepared by the self-regulatory organization. The Commission is publishing this notice to solicit comments on the proposed rule change from interested persons.

I. Self-Regulatory Organizations Statement of the Proposed Rule Change

The Chicago Board Options Exchange, Inc. ("CBOE" or "Exchange") pursuant to Rule 19b–4, hereby proposes the following rule changes: (Additions are italicized; there are no deletions.)

Obligations of Market Makers

Rule 8.7 No Change.

. . . Interpretations and Policies:

.01–.06 No Change.

.07 Market-Makers are expected to participate in and support Exchange sponsored automated programs, including but not limited to the Retail Automatic Execution System and Auto Quote.

Evaluation of Trading Crowd Performance

Rule 8.12 No Change.

. . . Interpretations and Policies:

.01 No Change.

.02 The quality of markets shall include consideration of a trading crowd's participation in and support for Exchange sponsored automated programs, including but not limited to the Retail Automatic Execution System and Auto Quote.

II. Self-Regulatory Organization's Statement of the Purpose of, and Statutory Basis for, the Proposed Rule Change

In its filing with the Commission, the self-regulatory organization included statements concerning the purpose of and basis for the proposed rule change and discussed any comments it received on the proposed rule change. The text of these statements may be examined at the places specificd in Item IV below and is set forth in sections (A), (B), and (C) below.

(A) Self-Regulatory Organization's Statement of the Purpose of, and the Statutory Basis for, the Proposed Rule Change

The purpose of the proposed rule change is to clarify that market-maker's performance includes participation in and support for Excange sponsored automated programs. In particular, the Exchange has been promoting the use of its Retail Automatic Execution System ("RAES") and Auto Quote. In available series, RAES provides automatic execution for small customer orders at the disseminated bid in the case of a sale, or offer in the case of a buy. In other contexts, the Commission has recognized the public benefits of this automatic execution system.

Auto Quote allows market-makers to apply an algorithm for the automatic updating of market quotes. To the extent utilizled, Auto Quote assures against the dissemination of stale quotations in inactive option series. Other automated programs are also under consideration, which like RAES and Auto Quote, will be designed to enhance market quality. Market-makers are expected, as part of their responsibilities, to participate in these programs.

The Exchange believes that the proposed rule change is consistent with the provisions of the Securities Exchange Act of 1934 ("the Act") and the rules and regulations thereunder, including in particular section 6(b)(5) in that the proposed rule change is intended to enhance the quality of markets and provide a more efficient market mechanism.

(B) Self-Regulatory Organization's Statement on Burden on Competition

The Exchange does not believe that this proposed rule change will impose any burden on competition.

(C) Self-Regulatory Organization's Statement on Comments on the Proposed Rule Change Received from Members, Participants or Others

Comments were neither solicited nor received

III. Date of Effectiveness of the Proposed Rule Change and Timing for Commission Action.

Within 35 days of the date of publication of this notice in the **Federal Register** or within such longer period (i) as the Commission may designate up to 90 days of such date if it finds such longer period to be appropriate and publishes its reasons for so finding or (ii) as to which the self-regulatory organization consents, the Commission will:

(A) By order approve such proposed rule change, or

(B) Institute proceedings to determine whether the proposed rule change should be disapproved.

IV. Solicitation of Comments

Interested persons are invited to submit written data, views and arguments concerning the foregoing. Persons making written submission should file six copies thereof with the Secretary, Securities and Exchange Commission, 450 Fifth Street, Washington, DC 20549. Copies of the submission, all subsequent amendments, all written statements with respect to the proposed rule change that are filed with the Commission, and all written communications relating to the proposed rule change between the Commission and any person, other than those that may by withheld from the public in accordance with the provisions of 5 U.S.C. 552, will be available for inspection and copying the Commission's Public Reference Section, 450 Fifth Street NW., Washington, DC. Copies of such filing will also be available for inspection and copying at the principal office of the above-mentioned self-regulatory organization. All submissions should refer to the file number in the caption above and should be submitted by May 10, 1988.

For the Commission by the Division of Market Regulation, pursuant to delegated authority.

Dated: April 11, 1988.

Jonathan G. Katz,

Secretary.

[FR Doc. 88-8573 Filed 4-18-88; 8:45 am]

BILLING CODE 8010-01-M

[Release No. 34-25571; File No. SR-CBOE-88-03]

Self-Regulatory Organizations; Chicago Board Options Exchange, Inc.; Order Granting Accelerated Approval to Proposed Rule Change

On February 25, 1988, the Chicago Board Options Exchange, Inc. ("CBOE" or "Exchange"), submitted to the Securities and Exchange Commission ("Commission"), pursuant to section 19(b) of the Securities Exchange Act of 1934 ("Act") [1] and Rule 19b-4 thereunder,[2] a proposed rule change to extend the pilot program in CBOE's Retail Automatic Execution System ("RAES") [3] in equity options for four months. The RAES equity options pilot has been in place since October 1986 pursuant to Commission approval.[4]

The Exchange proposes to extend the pilot program in RAES in equity options through June 30, 1988 or until RAES for equities is approved on a permanent basis.[5] Additionally, the Exchange proposes to extend the use of RAES, as it deems appropriate, in up to an additional 105 equity option classes (the remainder of equity classes not now subject to the pilot).[6] The Exchange believes that extending RAES trading to additional equity classes will enable additional public customers to take advantage of RAES' automatic execution facilities. The Exchange believes that the continuation and expansion of the RAES program in equity options is appropriate and in the public interest. The extension of this pilot will enable the Exchange to continue the RAES pilot without interruption and to extend the use of RAES to additional equity option classes.

The CBOE has requested accelerated approval of the proposed rule change. The Commission finds good cause for approving the proposed rule change prior to the thirtieth day after the date of publication of the proposal in the **Federal Register** in that the system for equity options has not experienced significant problems during the course of the pilot.[7] Moreover, the Commission believes that orders for other individual equity options, not presently utilizing RAES, will similarly benefit from the efficiencies of the system. Finally, extension of the system to additional options will allow the CBOE to gain experience with a full system on a pilot basis before such time as the Commission may approve the program on a permanent basis. The Commission has determined to grant accelerated approval to the extension of RAES to additional classes in that (1) it will increase the efficiency of options order routing, and (2) reduce broker-dealer confusion as to which options classes subject to the RAES system.

For the above reasons, the Commission finds that the proposed rule change is consistent with the requirements of the Act and the rules and regulations thereunder applicable to a national securities exchange, in particular the requirements of section 6 [8] and the rules and regulations thereunder.

Interested persons are invited to submit written data, views and arguments concerning the foregoing. Persons making written submissions should file six copies thereof with the Secretary, Securities and Exchange Commission, 450 Fifth Street NW., Washington, DC 20549. Copies of the submission, all subsequent amendments, all written statements with respect to the proposed rule change that are filed with the Commission, and all written communications relating to the proposed rule change between the Commission and any persons, other than those that may be withheld from the public in accordance with the provisions of 5 U.S.C. 552, will be available for inspection and copying in the Commission's Public Reference Section, 450 Fifth Street NW., Washington, DC 20549. Copies of such filing will also be available for inspection and copying at the principal office of the above-mentioned self-regulatory organization. All submissions should refer to the file number in the caption above and should be submitted by May 10, 1988.

It is therefore ordered, pursuant to section 19(b)(2) of the Act,[9] that the proposed rule change referenced above be, and hereby is, approved.

For the Commission, by the Division of Market Regulations, pursuant to delegated authority.[10]

---

[1] 15 U.S.C. 78s(b)(1) (1982).

[2] 17 CFR 240.19b-4 (1986).

[3] RAES automatically executes public customer market and marketable orders of a certain size against participating market makers in the CBOE trading crowd at the best bid or offer reflected in the CBOE quotation system. A more detailed description of RAES is provided in Securities Exchange Act Release No. 21695 (January 28, 1985), 50 FR 4823, and No. 22015 (May 6, 1985), 50 FR 19832.

[4] Securities Exchange Act Release No. 23490 (August 1, 1986), 51 FR 28788.

[5] The Commission currently is reviewing CBOE's proposal to allow RAES' use, on a permanent basis, in equity options. *See* File No. SR-CBOE-87-35, noticed in Securities Exchange Act Release No. 34-24916 (September 11, 1987), 52 FR 35506.

[6] 19 additional equity option classes were added to the Exchange proposal of 86 equity classes in order that RAES could be extended to all existing equity classes traded on the CBOE. Telephone conversation between Nancy R. Crossman, Associate General Counsel, CBOE, and Mark McNair, Staff Attorney, Division of Market Regulation, SEC, March 21, 1988.

[7] A report by the Commission's Division of Market Regulation, *The October 1987 Market Break: A Report by the Division of Market Regulation*, U.S. Securities and Exchange Commission (February 1988), noted problems in the options small order execution systems during the market break. While these problems primarily related to the systems' capacity to handle index options orders, RAES did experience a decrease in the number of market makers who elected voluntarily to participate in the system for equity options during the week of October 19, 1987. The CBOE presently is studying means to increase market maker participation levels and ensure the continued availability of its RAES system during periods of high volatility. Before approving the RAES system for equity options on a permanent basis, the Commission expects that the CBOE will have put in place the necessary enhancements to ensure increased market maker participation.

[8] U.S.C. 78f (1982).

[9] 15 U.S.C. 78s(b)(2) (1982).

[10] 17 CFR 200.30-3(a)(12) (1985).

Dated: April 11, 1988.

Shirley E. Hollis,

Assistant Secretary.

[FR Doc. 88-8574 Filed 4-18-88; 8:45 am]

BILLING CODE 8010-01-M

[Release No. 34-25586; File No. SR-DTC-88-4]

Self-Regulatory Organizations; Depository Trust Company; Notice of Filing and Immediate Effectiveness of Proposed Rule Change

Pursuant to section 19(b) of the Securities Exchange Act of 1934 ("Act"), notice is hereby given that on March 29, 1988, the Depository Trust Company ("DTC") filed with the Securities and Exchange Commission ("Commission") a proposed rule change. The proposal includes collateralized mortgage obligations ("CMOs") as eligible securities in DTC's Same Day Funds Settlement ("SDFS") Service. The Commission is publishing this notice to solicit comments on the proposed rule change from interested persons.

On July 9, 1987, the Commission approved, on a temporary basis, a DTC proposal that established DTC's SDFS Service.[1] The SDFS Service provides full depository and transaction settlement services for certain securities transactions settling in same-day funds. Initially, only transactions involving municipal notes with a maturity of one year or less were eligible for the SDFS Service. DTC stated that based upon initial performance and DTC participant requests it would consider expanding the SDFS Service to include other transactions.[2]

Pilot operation of the SDFS system began on June 26, 1987, with transactions in municipal notes. The number of eligible municipal note issues adn volume of transactions processed, including several primary distributions by book-entry, has guadually increased. Bsed upon SDFS Service performance and participant requests, DTC has expanded the SDFS Service to include zero coupon bonds backed by U.S. Government securities, municipal bonds with demand ("put") options and medium-term notes.[3] To date, DTC has not experienced, nor is it aware that SDFS participants and settling banks have experienced any significant operational problems in using the SDFS system.

DTC represents that it has acted to ensure accurate collateralization of CMO transactions.[4] Prior to making eligible CMOs for the SDFS Service, DTC will contract with a third-party vendor of securities evaluation services to obtain daily information on the value of CMOs. SDFS settlement prices as well as quotations from SDFS participants would be potential additional information sources for determining the value of these securities.

The proposal also provides that DTC's mandatory book-entry receipt procedure applies to transactions in CMOs. Under DTC's book-entry receipt procedure, DTC's facilities cannot be used to reclaim a book-entry delivery for the sole reason that the delivery has been by book-entry, except where the parties to the trade had agreed to settle the trade by a physical delivery and the trade confirmation so specified.

DTC believes the proposed rule change is consistent with the requirements of the Act in that it promotes the prompt and accurate clearance and settlement of securities transactions that settle in same-day funds. Furthermore, DTC believes the proposal effects a change in the SDFS Service that (1) does not adversely affect the safeguarding of securities or funds in DTC's custody or control and (2) does not significantly affect the respective rights or obligations of DTC or persons using the SDFS Service. DTC designates that part of the proposed rule change relating to the applicability of its mandatory book-entry receipt procedures as a stated policy practice or interpretation with respect to the meaning, administration, or enforcement of DTC's existing procedures for reclaiming book-entry deliveries.

The foregoing change has become effective, pursuant to section 19(b)(3)(A) of the Act and subparagraph (e) of Rule 19b-4. At any time within 60 days of the filing of such proposed rule change, the Commission may summarily abrogate such rule change if it appears to the Commission that such action is necessary or appropriate in the public interest, for the protection of investors, or otherwise in furtherance of the purposes of the Act.

Interested persons are invited to submit written data, views and arguments concerning the submission within 21 days after the date of publication in the **Federal Register**. Persons desiring to make written comments should file six copies thereof with the Secretary of the Commission, Securities and Exchange Commission, 450 Fifth Street, NW., Washington, DC 20549. Reference should be made to File No. SR-DTC-88-4.

Copies of the submission, all subsequent amendments, all written statements with respect to the proposed rule change that are filed with the Commission, and all written communications relating to the proposed rule change between the Commission and any person, other than those that maybe withheld from the public in accordance with the provisions of 5 U.S.C. 552, will be available for inspection and copying at the Commission's Public Reference Room, 450 Fifth Street, NW., Washington, DC 20549. Copies of the filing (File No. SR-DTC-88-4) and of any subsequent amendments also will be available for inspection and copying at DTC's principal office.

For the Commission, by the Division of Market Regulation pursuant to delegated authority.

Dated: April 13, 1988.

Shirley E. Hollis,

Assistant Secretary.

[FR Doc. 88-8575 Filed 4-18-88; 8:45 am]

BILLING CODE 8010-01-M

[Release No. 34-25575; File No. SR-NSCC-88-01]

Self-Regulatory Organizations; National Securities Clearing Corporation; Order Approving Proposed Rule Change

The National Securities Clearing Corporation ("NSCC") on January 19, 1988, filed a proposed rule change under section 19(b)(1) of the Securities Exchange Act of 1934 ("Act"). As described below, the proposal would authorize NSCC to provide clearing services for foreign securities. Notice of the proposal appeared in the **Federal Register** on March 3, 1988.[1] No

---

[1] Securities Exchange Act Release No. 24669 (July 9 1987), 52 FR 26613.

[2] Transaction to be included would involve the following securities: (1) zero coupon bonds based on U.S. Government securities; (2) municipal bonds with short-term demand ("put") options; (3) CMOs, (4) auction-rate and tender-rate preferred stock and notes, and (5) medium-term notes.

[3] *See* Securities Exchange Act Release No. 25478 (March 17, 1988) 53 FR 9530 (medium-term notes); Release No. 25317 (February 5, 1988) 53 FR 4249 (municipal bonds with short-term demand ("put") options); Release No. 25031 (October 15, 1987) 52 FR 38982 (zero coupon bonds).

[4] DTC requires collateralization of each SDFS Service transaction. DTC tracks continuously the value of each participant's collateral by obtaining market value data from bank lenders, third-party vendors of that information, from its participants, and from settlement values of SDFS securities transactions. On each SDFS Service transactions, DTC will "haircut" (or discount the value of) SDFS securities coming into a participant's account. A receiving participant must have sufficient collateral to cover the difference between the value paid for the SDFS securities and their discounted value.

[1] Securities Exchange Act Release No. 25396 (February 25, 1988), 53 FR 6902.

comments were received. This order approves the proposal.

1. Description of the Proposal

The proposal would authorize NSCC to provide: (1) Comparison services for transactions in foreign securities, and (2) member-to-member receive and deliver instructions for transactions in such securities.[2] NSCC would compare transactions in such securities in its current over-the-counter comparison system. The compared transactions then would enter NSCC's proposed Foreign Securities Accounting Operation ("FASO"), which would be similar to NSCC's current Balance Order Accounting Operation.

In FASO, NSCC would: (1) Net transactions in foreign securities on a member-to-member basis; [3] and (2) issue member-to-member receive and deliver settlement instructions, which would signify the netted position of each member with respect to its transactions with another member in each foreign security in which it had activity. All netted trades would settle at a uniform price, with a resulting cash clearing adjustment through NSCC. NSCC would charge its regular comparison fees for this service, as well as a separate fee of $2 per trade side for each compared trade. Some trades would be processed without netting. Trade-for-trade processing would apply to: (1) Transactions identified as "special trades," and (2) all transactions compared or otherwise entered into on the fourth day after trade date ("T+4") or thereafter.[4]

NSCC, under the proposal, would not guarantee the settlement of NSCC transactions or the payment of clearance cash adjustments. In the event any NSCC member should fail to make settlement with NSCC, NSCC would: (1) Reverse its foreign security clearing cash adjustment debits and credits with that member, and (2) nullify the netted member-to-member foreign securities receive and deliver instructions issued that day with respect to that member.

NSCC states, however, that in all other respects FASO receive and deliver instructions would be treated like balance orders. NSCC emphasizes, in particular, that, unless it should provide otherwise, it would conduct the member-to-member netting in the same manner as it conducts net balance orders with respect to: (1) The issuance of netted member-to-member receive and deliver instructions, (2) the establishment of a uniform settlement price, and (3) the calculation of a foreign security clearance cash adjustment.[5]

2. NSCC's Rationale for the Proposal

The proposed rule change would allow NSCC, for the first time, to compare and net transactions in foreign security issues. NSCC believes that the proposal would pose no burden on competition. NSCC states that the proposal is consistent with the Act, particularly section 17A of the Act, in that it would promote the prompt and accurate clearance and settlement of securities transactions.

3. Discussion of the Proposal

The Commission believes that the proposal is consistent with the Act and that it should promote the prompt and accurate clearance and settlement of securities transactions.[6] The Commission also believes that the proposal will extend centralized clearing services to transactions in foreign securities and thereby constitute a significant step forward in establishing more efficient, more effective, and safer clearing and settlement procedures, as was contemplated by Congress in the 1975 amendments to the Act.[7]

The Commission notes, however, that NSCC would not guarantee transactions under the proposal. NSCC would be relying on its ability to reverse debits and credits to a defaulting member's account as a means to avoid potential losses to itself. Because FASO processing would centralize adjustments at NSCC, payment errors and multiple member defaults would pose risks to NSCC. To protect itself against those risks, NSCC would require members using FASO to contribute to the NSCC's clearing fund. Clearing fund requirements would be based on the inclusion of a member's cash adjustments inot the following formula: (1) 2½% of a member's average daily settlement debits and credits or (2) 5% of a member's daily envelope settlement system's debits, whichever is greater, subject to certain adjustments.[8] Under the circumstances, this appears to be a matter of business judgment for NSCC. In virtually all other respects, the Commission understands that NSCC would be applying the well-established legal and operating procedures of its Balance Order Accounting Operation.

4. Conclusion

For the reasons discussed in this Order, the Commission finds that NSCC's proposed rule change is consistent with the Act, particularly section 17A of the Act in that it would promote the prompt and accurate clearance and settlement of securities transactions.

It is therefore ordered, pursuant to section 19(b)(2) of the Act, that the proposed rule change (SR-NSCC-88-01) be, and hereby is, approved.

For the commission, by the Division of Market Regulation pursuant to delegated authority.

Jonathan G. Katz,

Secretary.

Dated: April 12, 1988.

[FR Doc. 88-8569 Filed 4-18-88; 8:45 am]

BILLING CODE 8010-01-M

---

[2] NSCC's proposal would provide that with respects to contracts for foreign securities, they may be submitted to NSCC for processing as long as they do not contravene requirements of section 5 of the Securities Act of 1933. *See* proposed NSCC Rule 5, section 1.

[3] Under trade-for-trade processing, settlement and delivery are handled directly between trading partners, on a contract-by-contract basis.

[4] NSCC rules defines a "special trade" as a transaction where both buyer and seller agree to settle on a trade-for-trade basis or where NSCC designates settlement on a trade-for-trade basis. *See* NSCC Procedures, Section II.B.1. (final paragraph). *See also* Securities Exchange Act Release No. 25212 (December 18, 1987), 52 FR 48894.

[5] For rules governing NSCC's Balance Order Accounting Operation, *See* NSCC Procedures, Section V.

[6] *See* section 17A(b)(3)(F) of the Act.

[7] *See* section 17A(a) of the Act; S. Rep. 249, Doc. No. 75, 94th Cong. 1st Sess., 53-55 (1975).

[8] For full details on required clearing fund contributions, *see* NSCC's Procedures, Section XIV.A.I.

[Release No. 34-25576; File No. SR-OCC-87-22]

Self-Regulatory Organizations; Options Clearing Corp.; Filing of Proposed Rule Change

Pursuant to section 19(b) of the Securities Exchange Act of 1934 (the "Act"), 15 U.S.C. 78s(b)(1), notice is hereby given that on December 11, 1987, Options Clearing Corporation ("OCC") filed with the Securities and Exchange Commission (the "Commission") the proposed rule change described below. The proposal would give OCC greater flexibility in dealing with financially troubled Clearing Members and in responding to Clearing Member insolvencies. The Commission is publishing this notice to solicit comments on the proposal.

I. Description of the Proposal

The proposed rule change would give OCC additional alterntatives in dealing with Clearing Members that are experiencing financial or operational difficulties and would give OCC greater flexibility in dealing with Clearing

Member failures, particularly in extraordinary market conditions. Specifically, the proposal would amend OCC Rule 305 regarding restrictions on certain transactions and positions, and Rules 1104 and 1106 dealing with suspension of a Clearing Member. Additionally, the proposal would amend Article VIII, section 5 of OCC's By-Laws with respect to application of OCC's Clearing Funds.

The proposed amendments to Rule 305 would expand OCC's authority in dealing with Clearing Members that are experiencing financial or operational difficulties. Currently, under Rule 305, OCC's Chairman or President can restrict those members' opening transactions and require such Clearing Members to reduce or eliminate uncovered short positions.[1] The proposal, among other things, would extend OCC's authority to unsegregated long positions [2] and any short positions, whether covered or uncovered.[3] The proposal also would permit OCC to require financially troubled Clearing Members to hedge unsegregated long positions or uncovered short positions as an alternative to liquidation. Additionally, the proposed change to Rule 305 would clarify that OCC's authority to require the transfer of accounts or positions maintained by the Clearing Member with OCC to another Clearing Member includes accounts maintained by customers with the Clearing Member, *e.g.*, market-maker or specialist accounts.

The proposed changes to Rule 1104 would give OCC greater flexibility in dealing with suspended Clearing Members in extraordinary market conditions. Generally, in the event of OCC's suspension of an OCC Clearing Member, current policy would require OCC promptly to convert all of the Clearing Member's margin deposits to cash. In extraordinary market conditions, it might not be possible to convert some types of margin deposits (*e.g.*, common stocks) to cash in an orderly manner. Therefore, proposed Rule 1104(b) would enable OCC to defer liquidation of a suspended member's margin deposits.

The proposed changes to Rule 1106 also would give OCC increased flexibility in dealing with positions maintained for a suspended Clearing Member. Currently, under Rule 1106, OCC's policy is to effect an immediate liquidation of a failed firm's options positions. Because of the size and nature of a suspended Clearing Member's options positions or a lack of market liquidity, liquidation could be difficult and it might be advisable to maintain the positions. Thus, proposed Rule 1106(d) would authorize the Chairman or President of OCC to determine to maintain positions that would otherwise be closed out.[4]

The proposal would enable the President or Chairman of OCC to authorize hedge transactions to protect OCC against a decline in the value of the margin deposits OCC had determined not to liquidate or the open positions OCC had elected to maintain (*i.e.*, unsegregated long positions or short positions).[5] Additionally, the proposal would broaden the range of hedging transactions that OCC may engage in. In addition to hedge positions consisting of options relating to the same underlying interest, proposed amendments to OCC Rule 1106(e) would authorize hedge positions in options on similar underlying interests, as well as hedge positions in the underlying interest and futures contracts. Hedging transactions could include the establishment of variable hedges that would be adjusted from time to time during the life of the hedged positions. All hedging transactions would be required to be reported to OCC's Margin Committee on a daily basis. Moreover, because a single hedging position may relate to positions in more than one account, Rule 1106(e) would authorize OCC to make binding allocations among accounts carried by a suspended Clearing Member of reasonable costs, gains and losses incurred by OCC in hedging transactions.

The proposed rule change also would amend Article VIII, Section 5 of OCC's By-Laws regarding application of OCC's Clearing Funds. Specifically, the proposal would eliminate the current 24-hour waiting period between the time when a loss is charged to a defaulting Clearing Member's Clearing Fund deposit and the time when any excess may be charged *pro-rata* against the Clearing Fund deposits of non-defaulting Clearing Members. Additionally, the proposal would permit OCC to borrow against the Clearing Funds to finance hedging transactions.

II. OCC's Rationale for the Proposal

OCC believes that the proposed rule change is consistent with the purposes and requirements of section 17A of the Act. OCC states in its filing that the proposed rule change would serve the public interest by providing OCC with greater flexibility in dealing with financially troubled Clearing Members and responding to Clearing Member insolvencies.

Generally, OCC believes that the preferred response to Clearing Member failure is to close out the firm's short positions and liquidate assets. OCC believes, however, that in extraordinary circumstances a close-out or liquidation could be difficult or inadvisable. OCC believes that an effective hedge at a reasonable cost, either in options, the underlying interests or futures contracts, could, in such circumstances, be a viable alternative to liquidation. Moreover, with respect to Clearing Members experiencing financial or operational difficulties, OCC believes the proposal would give it needed flexibility by enabling OCC to require a financially troubled Clearing Member to: (1) Reduce or eliminate unsegregated long positions as well as covered or uncovered short positions; or (2) hedge unsegregated long positions or uncovered short positions as an alternative to liquidation.

OCC also believes that amendments to application of the OCC Clearing Funds are appropriate. Currently, OCC must wait 24 hours before a loss in excess of a defaulter's Clearing Fund and margin deposits may be charged *pro-*

---

[1] Such action must be based on a determination by OCC's President or Chairman that the financial or operational condition of the member makes such action necessary or advisable for the protection of OCC, other OCC members, or the general public. OCC's Interpretations and Policies list nine non-exclusive situations that would justify action under Rule 305. *See also* Chicago Board Options Exchange Rules 4.10 and 13.3, and New York Stock Exchange Rule 709, which authorize restrictions on exchange members' options activity. Rule 305(b) enables an affected member to appeal and be heard before OCC's Margin Committee.

[2] Although long positions represent assets rather than liabilities, unsegregated long positions reduce OCC's margin requirements. If a troubled Clearing Member carried large concentrations of unsegregated long positions in volatile options, a decrease in the value of those positions might create a margin deficiency that the Clearing Member would be unable to satisfy with other forms of margin.

[3] Although covered short positions pose no direct risk to OCC, the maintenance of such positions for the accounts of margin customers could pose a risk to a financially troubled Clearing Member, because customers would be exposed to margin calls which they might not be able to meet in the event of a decline in the value of the underlying asset (*e.g.*, corporate equity securities, foreign currency or U.S. Treasury securities). OCC states in its filing that it would not anticipate using the authority under the proposal for covered short positions carried in cash accounts.

[4] Action under Rule 1106(d) could affect the timing and outcome of a liquidation by the Securities Investor Protection Corporation ("SIPC") where a suspended Clearing Member has public customers. OCC states in its filing that in response to a request by SIPC staff, the proposal provides that OCC would apply proposed Rule 1106(d) only in cases where OCC determines that an outright liquidation of a suspended Clearing Member's positions would likely result in a loss to OCC.

[5] The proposal would require that any action taken pursuant to Rules 1104(b), 1106(d) or 1106(e) be reported to OCC's Board of Directors within 24 hours.

rata against the Clearing Fund deposits of non-defaulting Clearing Members. OCC believes this waiting period creates unnecessary delay and should be eliminated. OCC states that the waiting period was probably intended to give a defaulting Clearing Member time in which to respond to OCC's demand to make up the deficiency in its Clearing Fund deposit. However, OCC believes the likelihood that a defaulting Clearing Member would be able to cure its default within 24 hours is small. Moreover, the 24-hour delay could impair OCC's ability to pay non-defaulting Clearing Members.

OCC also believes it is appropriate to borrow against the Clearing Funds to finance hedging transactions without reference to OCC's ability to realize on a suspended firm's margin and Clearing Fund deposits. OCC believes that in any case where OCC has the authority to hedge it is preferable to finance hedging transactions by borrowing against the Clearing Fund than by making a *pro-rata* charge.[6] OCC states in its filing that the ultimate outcome of the hedging program, and thus the final amount of the *pro-rata* charge, if any, will not be determinable until all open positions of the suspended Clearing Member and all hedge positions are closed out.

III. Request for Comments

Within 35 days of the date of publication of this notice in the **Federal Register** or within such longer period (i) as the Commission may designate up to 90 days of such date if it finds such longer period to be appropriate and publishes its reason for so finding or (ii) as to which the self-regulatory organization consents, the Commission will by order approve such proposed change or institute proceedings to determine whether the proposed rule change should be disapproved.

Interested persons can submit written comments about the proposal by filing six copies of their comments with the Secretary, Securities and Exchange Commission, 450 Fifth Street NW., Washington, DC 20549. Copies of the filing, all subsequent amendments, all written statements with respect to the proposed rule change that are filed with the Commission and all written communications relating to the proposed rule change between the Commission and any person, other than those that may be withheld from the public in accordance with the provisions of 5 U.S.C. 552, will be available for inspection and copying in the Commission's Public Reference Section, 450 Fifth Street NW., Washington, DC 20549. Copies of the filing also will be available for inspection and coping at OCC's principal office. All comments should refer to file number SR-OCC-87-22 and should be submitted by May 10, 1988.

For the Commission, by the Division of Market Regulation pursuant to delegated authority.

Jonathan G. Katz,

Secretary.

Dated: April 11, 1988.

[FR Doc. 88-8568 Filed 4-18-88; 8:45 am]

BILLING CODE 8010-01-M

[6] *See* Securities Exchange Act Release No. 16900 (June 17, 1980), 45 FR 41920. In setting out the standards to be used by the Division of Market Regulation in reviewing and making recommendations with respect to the registration of clearing agencies, the Division has stated that, in addition to the defaults of participants, the Clearing Fund should be used to protect the clearing agency from losses (not including day-to-day operating expenses) such as losses of securities not covered by insurance or other resources of the clearing agency. The Release specifically provides for temporary use of a limited portion of the Clearing Fund to meet unexpected and unusual clearing agency requirements for funds. However, the Release goes on to suggest that a portion of the Clearing Fund may be used for a legitimate purpose for a longer period of time, provided that: (i) The funds are properly protected; (ii) the funds are used to facilitate the process of clearance and settlement; and, (iii) participants and the Commission specifically approve such use during registration proceedings. *Id.*, 45 FR at 41929. Nevertheless, in an Order concerning the structure of National Securities Clearing Corporation's ("NSCC") Clearing Fund, the Commission recognized that the universe of permissible uses is larger than unanticipated uses and specially approved certain other uses. In that Order, the Commission approved NSCC's short-term pledge of Clearing Fund assets other than cash as collateral for loans to satisfy temporary losses or liabilities incident to its clearance and settlement business. In NSCC's program, the pledge of Clearing Fund assets, if not repaid within 30 days, results in the pledge being deemed a Clearing Fund assessment under NSCC's rules. Securities Exchange Act Release No. 19230 (November 10, 1982), 47 FR 51969.

[Release No. 34-25577; SR-PSE-88-02]

Self-Regulatory Organizations; Proposed Rule Change by the Pacific Stock Exchange Inc. Relating to the Amendment of PSE Rules Concerning the Granting of Compensation or Gratuities Given by Exchange Members to Employees of the Exchange or to Those of Other Exchange Members

Pursuant to section 19(b)(1) of the Securities Exchange Act of 1934, 15 U.S.C. 78s(b)(1), notice is hereby given that on February 26, 1988 the Pacific Stock Exchange Inc. filed with the Securities and Exchange Commission the proposed rule change as described in Items I, II and III below, which Items have been prepared by the self-regulatory organization. The Commission is publishing this notice to solicit comments on the proposed rule change from interested persons.

I. Self-Regulatory Organization's Statement of the Terms of Substance of the Proposed Rule Change

On June 24, 1985, the Securities and Exchange Commission ("SEC") approved Pacific Stock Exchange ("PSE" or "Exchange") Rule Filing 85-10 (Release No. 34-22167) which amended PSE Rule VIII, section 2(d), which changed the requirement of prior Exchange approval, before a member's registered employee engages in dual employment. At this time the PSE is submitting this rule filing for the purpose of amending PSE Rule VIII, sections 3(d) ("Member Compensation Only") and 3(g) ("Gratuities, Employees") in order to clarify and conform their meanings in relation to previously amended section 2(d).

II. Self-Regulatory Organization's Statement of the Purpose of, and Statutory Basis for the Proposed Rule Change

In its filing with the Commission, the self-regulatory organization included statements concerning the purpose of and basis for the proposed rule change and discussed any comments it received on the proposed rule change. The text of these statements may be examined at the places specified in Item IV below. The self-regulatory organization has prepared summaries, set forth in sections (A), (B), and (C) below, of the most significant aspects of such statements.

(A) Self-Regulatory Organization's Statement of the Purpose of the Proposed Rule Change

On June 24, 1985, the Securities and Exchange Commission approved PSE Rule Filing 85-10 (Release No. 34-22167), which amended PSE Rule VIII, section 2(d).

Rule VIII, section 2(d) originally provided that for a registered employee of a member to engage in "any other business or be employed by another employer in any capacity" it would be necessary for the employee to receive written permission from the Exchange. As amended, section 2(d) eliminated the requirement of Exchange permission and substituted the single requirement that any such dual employment be approved by the principal employer or member organization of the registered employee. This was based upon the recognition that prior approval by the Exchange imposes an unnecessary burden upon the PSE, since the member

is the party with the most logical and direct interest in supervising and approving such an action and, unlike the PSE, the member is in the best position to determine if a conflict of interest exists. This view point was recognized by New York Stock Exchange ("NYSE") in the adoption of their rule 346(b).[1]

Following a recent inquiry from a PSE member firm concerning section 2(d), it became apparent that Rule VIII, sections 3(d) "Member Compensation Only" and 3(g) "Gratuities, Employees," should be amended to clarify their meanings in relation to previously amended section 2(d). It is the belief of the Exchange that the substance of the proposed amendments reflects a need to clarify the language of these sections so as to make them internally consistent and not to make any substantive changes.

The change proposed to section 3(d) reflects the desire to eliminate required Exchange approval and substitute the clarification that such compensation be granted only if the member has previously complied with the requirements of section 2(d). As stated in the discussion of section 2(d), this reflects the recognition that Exchange approval instead of member approval is inconsistent and illogical when one considers which entity is really in the best position to monitor this activity.

The changes proposed in section 3(g) reflect a desire to clarify that Exchange permission is only required where the proposed gratuity is extended to an Exchange employee. When such gratuity is given to a non-exchange employee, then the Exchange is not required to give its consent.

The proposed rule changes are consistent with section 6(b) of the Securities Exchange Act of 1934 in general, and section 6(b)(5) in particular, in that it helps to prevent unfair discrimination between customers, issuers, brokers or dealers or an attempt to regulate outside of any authority which is not conferred on the Exchange by the title of the Act or in matters outside the administration of the Exchange.

(B) Self-Regulatory Organization's Statement on the Burden on Competition

The proposed rule change imposes no burden on competition.

[1] The Commission notes that NYSE Rule 350, with some exceptions, continues to require written consent of both the employee and the Exchange for compensation or gratuities given by one member to a floor employee of another member or member organization.

(C) Self-Regulatory Organization's Statement on Comments on the proposed Rule Change Received from Members, Participants or Others

Comments on the proposed rule change were neither solicited nor received by the Exchange.

III. Date of Effectiveness of the Proposed Rule Change and Timing

Within 35 days of the date of publication of this notice in the **Federal Register** or within such longer period (i) as the Commission may designate up to 90 days of such date if it finds such longer period to be appropriate and publishes its reasons for so finding or (ii) as to which the self-regulatory organization consents, the Commission will:

(A) By order approve such proposed rule change, or

(B) Institute proceedings to determine whether the proposed rule change should be disapproved.

IV. Solicitation of Comments

Interested persons are invited to submit written data, views and arguments concerning the foregoing. Persons making written submissions should file six copies thereof with the Secretary, Securities and Exchange Commission, 450 Fifth Street, NW., Washington, DC 20549. Copies of the submission, all subsequent amendments, all written statements with respect to the proposed rule change that are filed with the Commission, and all written communications relating to the proposed rule change between the Commission and any person, other than those that may be withheld from the public in accordance with the provisions of 5 U.S.C. 552, will be available for inspection and copying in the Commission's Public Reference Section, 450 5th Street, NW., Washington, DC. Copies of such filing will also be available for inspection and copying at the principal office of the above-mentioned self-regulatory organization. All submissions should refer to the file number in the caption above and should be submitted by May 10, 1988.

For the Commission by the Division of Market Regulation, pursuant to delegated authority.

Jonathan G. Katz,

Secretary.

Dated: April 12, 1988.

[FR Doc. 88-8570 Filed 4-18-88; 8:45 am]

BILLING CODE 8010-01-M

[Release No. IC-16366; (812-7005)]

College and University Facility Loan Trust Two; Application

April 14, 1988.

AGENCY: Securities and Exchange Commission ("SEC").

ACTION: Notice of application for exemption under the Investment Company Act of 1940 (the "1940 Act").

Applicant: The First National Bank of Boston, not in its individual capacity, but solely as trustee (the "Applicant" or "Owner Trustee"), on behalf of the College and University Facility Loan Trust Two (the "Trust").

Relevant Sections of the 1940 Act: Exemption requested under Section 6(c) from the provisions of sections 10(h), 14(a), 16(a), 17(a), 18(a), (c) and (i) and 32(a) of the 1940 Act.

Summary of the Application: The Applicant, serving as Owner Trustee on behalf of the Trust, seeks an order to permit the issuance and sale by the Trust of debt securities and senior and junior certificates of beneficial interest in the Trust, collateralized by certain loans originated by the United States Department of Education ("ED"), in connection with the Federal government's loan asset sale program.

Filing Date: The Application was filed on March 18, 1988, and amended on March 25, 1988, April 5, 1988 and April 13, 1988.

Hearing or Notification of Hearing: If no hearing is ordered, the application will be granted. Any interested person may request a hearing on this application, or ask to be notified if a hearing is ordered. Any requests must be received by the SEC by 5:30 P.M. on May 2, 1988. Request a hearing in writing, giving the nature of your interest, the reason for the request, and the issues you contest. Serve the Applicant with the request, either personally or by mail, and also send it to the Secretary of the SEC, along with proof of service by affidavit, or, for lawyers, by certificate. Request notification of the date of a hearing by writing to the Secretary of the SEC.

ADDRESSES: Secretary, SEC, 450 5th Street, NW., Washington, DC 20549; Applicant, c/o Christopher J. Kell, Esq., Skadden, Arps, Slate, Meagher & Flom, 919 Third Avenue, New York, New York 10022-9932.

FOR FURTHER INFORMATION CONTACT: Karen L. Skidmore, Special Counsel (202) 272-3023; or Regina Hamilton, Staff Attorney (202) 272-2856 (Division of Investment Management).

SUPPLEMENTARY INFORMATION: The following is a summary of the application. The complete application is available for a fee from either the SEC's Public Reference Branch in person or the SEC's commercial copier which may be contacted at (800) 231-3282 (in Maryland (303) 258-4300).

Applicant's Representations

1. The Trust has been organized as a Massachusetts business trust pursuant to a Declaration of Trust (the "Declaration of Trust") filed by The First National Bank of Boston with the Commonwealth of Massachusetts on March 11, 1988, and will register with the Commission as a closed-end, management investment company. The Trust has been organized for the purpose of acquiring certain loans (the "Loans") from ED, pursuant to a loan sale agreement (the "Loan Sale Agreement"), in exchange for equity interests and proceeds of debt securities to be issued by the Trust. The Loans were made by ED, under the College Housing Loan Program ("CHLP") and the Academic Facilities Loan Program ("AFLP") (or made, and assigned to ED, by the United States Department of Housing and Urban Development, by the former United States Department of Health, Education and Welfare under AFLP or by the former United States Housing and Home Finance Agency under CHLP) to public and private universities and colleges throughout the United States.

2. The Loans will be sold by ED pursuant to congressional directives found in Section 7005 of the Omnibus Budget Reconciliation Act of 1986 (the "Budget Act"), Pub. L. 99-509, section 7005, 100 Stat. 1874, 1949 (1986), and section 783 of the Higher Education Act of 1965, as amended by the Higher Education Amendments of 1986 (the "Education Act"), 20 U.S.C. 1132i-2 (1987) and Section 3101 of the Omnibus Budget Reconciliation Act of 1987, Pub. L. 100-203, section 3101, H.R. 3545, 100th Cong., 1st Sess., 133 Cong. Rec. H12114 (1987) (the "Budget Act"), and in accordance with the Guidelines for Loan Asset Sales, dated February 9, 1988, prepared by the Federal Credit Policy Working Group and issued by the United States Office of Management and Budget (the "Guidelines"). The Budget Act and the Education Act require ED to net approximately $314 million from certain dispositions of its loan assets during fiscal year 1988.

3. The proposed transaction has been designed to implement the objectives of the Budget Act and the Guidelines by: (a) Providing for the sale of Loans without recourse to the Federal Government; (b) providing for the transfer of servicing responsibilities for the Loans to a private section loan servicer;' and (c) ensuring that interest on the securities issued to finance the acquisition of the Loans by the Trust (and thus, in effect, the future interest payments on the Loans themselves) will be subject to full Federal income tax.

4. The proposed transaction that is the subject of this application involves the issuance of securities by the Trust to finance the Trust's purchase of the Loans from ED. All Loans but three [1] have been selected on a random selection basis from ED's portfolio of non-delinquent loans (the "Portfolio"). In order to be eligible for selection from ED's Portfolio, the Loans must not have been delinquent (*i.e.*, more than 30 days late in the payment of any installment of principal and interest) during the one-year period preceding March 31, 1988. Pursuant to the Loan Sale Agreement between the Owner Trustee and ED, ED will sell the Loans to the Trust in exchange for: (a) The proceeds from the issuance of certain debt securities (the "Bonds"); and (b) senior and junior certificates evidencing ownership of beneficial interests in the net assets of the Trust (the "Certificates").

5. Under the Loan Sale Agreement, ED will be required during a limited period of time following issuance of the Bonds ("Warranty Period"), to cure the breach of any warranty; to deliver to the Trust substitute Loans conforming to ED's warranties under the Loan Sale Agreement; or, in ED's sole discretion, to make cash payments in lieu thereof. Under the Loan Sale Agreement, the substitute Loans will be required to have equal or greater principal amounts and equal or greater cumulative payments of principal and interest as of any "Payment Date" (each date on which principal of and/or interest on the Bonds is due) as the Loans not meeting ED's warranties ("Non-Conforming Loans") that are being replaced. The obligation of ED to substitute Loans may be subject to the feasibility of ED's delivering from the loans remaining in its Portfolio, Loans conforming to its warranties and having the required principal amounts and cash flow. Notice will be given by the Bond Trustee and the Owner Trustee to the Bondholders and the Certificateholders of such substitution within five days after such substitution as contemplated by section 26(a)(4)(B) of the 1940 Act. With the exception of such limited right of curing the breach, loan substitution and cash payment, the loans will be transferred to the Trust without recourse of any kind to ED.

6. The Trust will issue four maturities of collateralized sequential pay Bonds in an aggregate principal amount currently estimated at $445,000,000 expected to be issued at a discount to yield net proceeds of approximately $292,000,000. The Bonds will be secured by a first priority perfected security interest in the Loans pursuant to an indenture (the "Indenture") between the Owner Trustee and a corporate trustee acting as bond trustee (the "Bond Trustee"). The Bond Trustee and Owner Trustee and any successors thereto will be banks and will be required to have at all times an aggregate capital, surplus and undivided profits of not less than $50,000,000.

7. The Bonds will be registered under the Securities Act of 1933 (the "1933 Act") pursuant to a registration statement (the "Registration Statement") on Form N-2. The Indenture will be qualified under the Trust Indenture Act of 1939 ("1939 Act"). The Bonds will be rated in the highest rating category ("AAA" or "Aaa") by at least one nationally recognized statistical rating organization ("Rating Agency") not affiliated with the Trust. The Trust will offer the Bonds through the underwriters (the "Underwriters") named in the prospectus included in the Registration Statement (the "Prospectus").

8. The Bonds are expected to be issued as sequential pay Bonds in four maturities. Each maturity of Bonds will have a fixed interest rate and stated maturity date and will be amortized on each Payment Date in a manner such that, assuming principal of and interest on the Loans is paid when due, the overcollateralization levels specified in the indenture will be maintained (to the extent of available moneys therefor under the Indenture). Interest on the Bonds will be payable on each Payment Date. Aggregate principal amounts, initial public offering prices, maturity dates and interest rates of each maturity will be determined in light of market conditions at the time of the pricing of the Bonds so as to achieve the highest return to ED both in terms of net proceeds of the Bonds and the value of the Certificates. The Bonds are currently expected to be issued at substantial discounts below par if it is determined at the time of pricing of the Bonds that the sale of the Bonds with original issue discount will reduce the yield on the Bonds below the yield which the Bonds would bear if issued at par. The Bonds

[1] Three Loans were not selected randomly due to their large size relative to other loans in the Portfolio and because they were analyzed separately by the Rating Agencies.

will not be subject to redemption prior to maturity other than through amortization of principal as described above.

9. The Certificates will evidence ownership of beneficial interest in the net assets of the Trust and accordingly will entitle holders to shares of the cash flow of the Trust after the funding of certain funds and payment of all principal and interest payments on the Bonds then due. Such distributions to the Certificateholders shall be made semi-annually on or immediately following each Payment Date in respect of the Bonds. It is expected that ED will retain the Certificates until a performance history for the Trust has been established.

10. For certain tax reasons, described in the application, the Certificates will be issued by the Owner Trustee in two classes with different rights as to distributions. On each date on which the Owner Trustee makes a distribution to the Certificateholders, one class of Certificateholders will receive a specified return on the Certificates' value assigned to that Class prior to distributions to the other class. The Certificates will be transferable, subject to the limitations described below and in the application. The Certificates will not be redeemable at the option of the holders. The holders of the Certificates will not be liable for payment of principal of, or interest on, the Bonds or for any other liabilities of the Trust.

11. The Owner Trustee will contract with General Electric Capital Corporation (formerly, General Electric Credit Corporation) (the "Servicer") as servicer of the Loans under a servicing agreement ("Servicing Agreement"). Under the Servicing Agreement, the Servicer will administer, service, collect and enforce the Loans on behalf of the Trust. The Servicing Agreement will not permit the Servicer to resign so long as any Loans are outstanding except upon a determination that its duties thereunder are no longer permissible under applicable law or if the Servicer has obtained a successor Servicer satisfactory to the Bond Trustee and the Owner Trustee, the appointment of which will not cause the rating on the Bonds to be reduced. The fees of the Servicer will be disclosed in the Prospectus. The Owner Trustee will assign the Loans and its rights under the Loan Sale Agreement and the Servicing Agreement to the Bond Trustee pursuant to the Indenture as security for the Bonds.

12. The Indenture will provide for three Funds, the Revenue Fund, the Expense Fund and the Liquidity Fund (the "Funds"), and for one account, the Breach Account. The Revenue Fund, to be held by the Bond Trustee under the Indenture as security for the Bonds, will be credited with all payments due on the Loans and received after May 2, 1988 (the "Cut-Off Date"), net of the fees of the Servicer, all earnings on the Investment Agreement (described below and in the application), and any required transfers from the Expense Fund, the Liquidity Fund and the Breach Account. Amounts credited to the Revenue Fund will be applied on each Payment Date in the following order of priority: First, to pay principal at maturity of and interest on the Bonds due on such Payment Date; second, to pay scheduled Administrative Expenses ("Administrative Expenses" will include fees and expenses of the Bond Trustee, the Trust's auditors and accountants, and of the Owner Trustee, and Servicer Advances (defined below) not previously paid) then due and not previously paid from the Expense Fund; third, to fund the Expense Fund to the required level set forth in the Indenture; fourth, to fund the Liquidity Fund to the required level set forth in the Indenture; fifth, to pay Administrative Expenses not paid pursuant to the second application of funds described above; and sixth, to amortize principal of the Bonds in the manner described in paragraph 8. Any remaining amounts in the Revenue Fund on such Payment Date (other than certain specified amounts received prior to such date) will be promptly paid over by the Bond Trustee to the Owner Trustee for distribution to the Certificateholders after payment of any expenses of the Trust not payable by the Bond Trustee as Administrative Expenses (including any indemnities payable by the Trustee).

13. The Expense Fund will be available to be used on a monthly basis for reimbursement of advances made by the Servicer for the purpose of collecting amounts due on the Loans or for the protection of collateral that is security for any Loan ("Servicer Advances") and, on each Payment Date, to pay scheduled payments on the Bonds, as necessary, and Administrative Expenses. The Liquidity Fund, as necessary, will be used to pay scheduled payments on the Bonds and to pay scheduled Administrative Expenses not previously paid from the Expenses Fund or the Revenue Fund. The Breach Account will hold cash received from ED with respect to certain defective Loans. Amounts in the Breach Account will be available to pay any shortfalls in scheduled payments on such Loans up to the Cash Value of the Breach (as defined in the Application) for such Loans. Any amounts remaining in the Breach Account after all Bonds have been paid in full will be transferred to Ed.

14. In order to provide for earnings on the Funds referred to above without creating investment discretion in the Bond Trustee, the Indenture will require the Bond Trustee prior to the issuance of the Bonds, to enter into an investment agreement (the "Investment Agreement") with a financial institution. Such institution will be (a) a national bank, or a banking institution organized under the laws of any State or the District of Columbia the business of which is substantially confined to banking and is supervised by the State banking commission or similar official, or a foreign bank subject to substantially the same supervision under the International Banking Act of 1978; (b) an insurance company, subject to the supervision of the insurance commissioner, bank commissioner or any agency or officer performing like functions, of any State or the District of Columbia; or (c) a United States government agency or government sponsored corporation, in each case, whose obligations are rated in, or eligible to be pledged as collateral for securities rated in, the highest rating category ("AAA" or "Aaa") by the same Rating Agency or Agencies which rate the Bonds. In order to assure that the Trust receives a fair return on the Investment Agreement, the Trust will ask qualified institutions to submit bids shortly before the Bonds are priced. The identity of the Investment Agreement provider ("Provider") selected will be disclosed in the Prospectus.

15. The Investment Agreement will have a term equal to the final maturity of the Bonds. The Indenture will require the Bond Trustee to invest under the Investment Agreement all amounts held under the Indenture and credited from time to time to the Funds except that $50,000 in the Expense Fund may be invested in securities described in paragraph 17. The Investment Agreement will bear a fixed or variable interest rate or rates specified in the Investment Agreement and disclosed in the Prospectus. If the Investment Agreement bears a variable interest rate or rates, such rate or rates will be pegged to a published financial index specified in the Indenture and disclosed in the Prospectus. At no time, however, will such variable rate or rates be permitted to fall below the weighted average rate on the Loans.

16. The Investment Agreement will not be terminable or assignable by the Provider, except that if the Provider is a bank which is a principal subsidiary of a

bank holding company, the Provider may be permitted to assign its obligations under the Investment Agreement to its parent corporation if the long-term debt rating of the parent by each Rating Agency rating the Bonds is at least as high as that of the Bonds (*i.e.*, AAA or Aaa, the same as the original Provider). The Investment Agreement will terminate if the Bond Trustee or the Owner Trustee should inform the Provider that any Rating Agency rating the Bonds has indicated that such Rating Agency has determined that the continuation of the Investment Agreement with the Provider will adversely affect such Rating Agency's rating of the Bonds. In the event of such termination, the Bond Trustee will enter into a substitute investment agreement that would not result in a reduction in the rating of the Bonds, if such an agreement can be procured. Any such substitute agreement would be permitted only with the financial institutions described above. If the Investment Agreement is with an entity other than a United States government agency or government sponsored corporation, in the event that in excess of twenty-five percent of the assets of the Trust are invested in the Investment Agreement, the Bond Trustee will be required, in order to maintain the Trust's status as a regulated investment company under the Internal Revenue Code, to invest any such excess amounts in an additional investment agreement meeting all of the requirements of a substitute agreement specified above or, if no such additional investment agreement can be procured, in the kinds of investments described in paragraph 17 for instances when no substitute agreement can be procured.

17. If no such substitute investment agreement can be procured, amounts in the Funds will be invested by the Bond Trustee only in (a) obligations issued by the United States (and supported by its full faith and credit); or (b) purchase agreements with respect to such obligations and overcollateralized on a basis that will not result in a reduction in the ratings of the Bonds. All such investments must mature before the next scheduled distribution date and with respect to $50,000 on deposit in the Expense Fund, such investments must mature monthly. In addition, after final payment of the Bonds, any amounts paid over the Bond Trustee to the Owner Trustee for distribution to Certificate-holders may be invested, pending distribution, in the same investments described above and any demand or time deposit or certificate of deposit which is fully insured by the Federal Deposit Insurance Corparation.

18. The Bonds will not be redeemable at the option of the holders and, except in the event of default on the Bonds followed by an acceleration, holders of the Bonds will not be entitled to compel the liquidation of the Loans in order to redeem the Bonds prior to maturity.

19. At the date of issuance of the Bonds, the principal balance of the Bonds will not exceed the Collateral Value of the Loans (as defined in the application) reduced by an initial reduction factor which is expected to be approximately 93% (which is equivalent to an overcollateralization level expected to be approximately 8%). Payments of principal of the Bonds in accordance with the reduction factors set forth in the Indenture are expected to cause the level of overcollateralization to increase over time. When the maximum overcollateralization level is determined at the pricing of the Bonds, the Applicant undertakes to amend the application in order to inform the SEC of such maximum level. It is expected that the maximum level of overcollateralization will be between 25% and 30%. This level of overcollateralization is required in order to obtain the highest investment grade rating on the Bonds.

20. Neither the holders of the Certificates, the Owner Trustee nor the Bond Trustee will be able to impair the security afforded by the Loans to the holders of the Bonds. Without the consent of each Bondholder to be affected, the Indenture may not be amended so as to: (a) Change the stated maturity of any Bond; (b) reduce the principal amount of or the rate of interest on any Bond; (c) change the priority of payment on any maturity of Bonds; (d) impair or adversely affect the Loans securing any maturity of Bonds; (e) permit the creation of a lien ranking prior to or on a parity with or subordinate to the lien of the Indenture with respect to the assets pledged under the Indenture; or (f) otherwise deprive the Bondholders of the security afforded by the lien of the Indenture. The sale of the Certificates by ED or any other holder will not alter the payment of cash flows under the indenture, including the amounts to be deposited in the Funds or Breach Account created pursuant to the Indenture to support payments of principal of and interest on the Bonds.

21. The interests of the Bondholders will not be compromised or impaired by the ability of the Trust to issue the Certificates, and there will not be a conflict of interest between the Bondholders and the holders of the Certificates in the Trust for several reasons, including the following:

(a) The Indenture will subject the Loans, the various Funds and the Breach Account held under the Indenture, and the Investment Agreement to a first priority perfected security interest in favor of the Bond Trustee for the benefit of the Bondholders. The Indenture will further provide that no amounts may be released from the lien of the Indenture to be remitted to the Owner Trustee (or the holders of Certificates) on any Payment Date until: (i) The Bond Trustee has made the scheduled payment of principal of and interest on the Bonds on such Payment Date; (ii) all Administrative Expenses then due have been paid; (iii) any required deposits have been made to the Expense Fund, the Liquidity Fund and the Breach Account; and (iv) the Bond Trustee has paid principal of the Bonds on such Payment Date in the manner described in paragraph 8.

(b) The holders of the Certificates will be entitled to receive current distributions representing the residual payments on the Loans in accordance with the terms of the Indenture and the Declaration of Trust. Except for such rights to receive residual payments, the holders of the Certificates will have no rights in, or discretionary control over, the Trust while the Bonds are outstanding other than the right to replace the Owner Trustee for breach of fiduciary duty, willful misfeasance, bad faith, gross negligence or reckless disregard of its duties under the Declaration of Trust and to replace the Trust's auditors with respect to the responsibilities of the auditors other than those arising under the Indenture. The holders of the Certificates will have the right to replace the Servicer for breach of the Servicing Agreement only after all Bonds have been paid.

(c) The Bonds will only be issued if they have been rated in the highest rating category by at least one Rating Agency not affiliated with the Trust.

22. The Trust expects to make certain payments to cover various costs to be paid or reimbursed at the closing of the sale of the Bonds and Certificates, as well as various ongoing costs and expenses, all such costs and expenses being fully described in the application and Prospectus. Should the Trust expect to make any other payments not described in the application, Applicant will submit an amendment to this application to the Commission requesting that those fees be exempted from the provisions of section 26(a)(2) of the 1940 Act and stating that the

amounts thereof will be disclosed in the Prospectus.

23. Upon payment of the Bonds in full and the discharge of the Indenture, any remaining assets of the Trust held by the Bond Trustee will be transferred to the Owner Trustee. Any cash assets will then be distributed to the holders of the Certificates. Any remaining Loans will be retained by the Owner Trustee and cash flows from the Loans will be distributed by the Owner Trustee to the holders of the Certificates at least monthly on a pass-through basis after payment of the fees and expenses of the Owner Trustee, the Servicer and the Trust's accountants and auditors. Upon final payment of the Loans, any remaining assets of the Trust will be distributed to the Certificateholders and the Trust will be terminated.

24. In order to allow the Trust to register with the Commission as a closed-end management investment company, exemptive relief is required from the provisions of the 1940 Act specified below.

Applicant's Legal Conclusions

1. Section 10(h)

Section 10(h) of the 1940 Act applies certain of the restrictions of section 10 (a), (b) and (c) of the 1940 Act to the board of directors of the depositor of a registered management company which is an unincorporated company not itself having a board of directors, as will be the case with the Trust. ED, by conveying the Loans to the Trust, might be deemed to be the depositor of the Trust. However, ED, as a Federal department in the Executive Branch, has no board of directors nor can it elect or appoint a board of directors. Except for its limited rights as a Certificateholder, ED would not have any discretion over the administration of the trust under the Declaration of Trust and the Indenture. Moreover, the Trust will operate as a passive entity without the traditional methods of management and investment.

2. Section 14(a)

Section 14(a)(1) of the 1940 Act provides that no investment company shall make a public offering of securities of which such company is the issuer unless such company has a net worth of at least $100,000. On the date of issuance of the Bonds and the certificates, the aggregate scheduled payments of principal of and interest on the Loans plus the amount on deposit in the Funds will exceed the aggregate scheduled payments of principal of and interest on the Bonds by substantially more than $100,000. Thus, the net worth of the Trust will exceed $100,000 on the date of issuance of the Bonds and the Certificates. Prior to the issuance and delivery of the Bonds to the Underwriters, the Underwriters will agree to purchase the Bonds subject to customary conditions of the closing. The Underwriters will not be entitled to purchase less than all of the Bonds. Accordingly, either the offering will not be completed at all or the Trust will have a net worth in excess of $100,000 on the date of issuance of the Bonds and the Certificates. Based on the determination of the independent evaluator, it is not anticipated that the net worth of the Trust will fall below that minimum level until the Bonds and the Certificates have been retired.

3. Section 16(a)

Section 16(a) of the 1940 Act requires that no person shall serve as director of a registered investment company unless elected to that office by the holders of the outstanding voting securities of such company. The powers of the Bond Trustee and the Owner Trustee are so circumscribed that neither the Bond Trustee nor the Owner Trustee should be deemed a director within the meaning of section 2(a)(12) of the 1940 Act. Election or subsequent ratifications of the Owner Trustee or the Bond Trustee are not necessary in the public interest or to protect investors, and the additional expense for the Trust is not justified. The Trust will be a passive entity that will not require investment management. Similar to a unit investment trust, neither the Owner Trustee nor the Bond Trustee will be authorized to manage the Trust's portfolio of Loans. The activities of the Owner Trustee will be carefully limited to receipt of payments from the Bond Trustee while the Bonds are outstanding and of payments on the Loans thereafter and to making current distributions to certificateholders of the amounts received. Moreover, the Trust has agreed to comply with section 26 of the 1940 Act as if it were a unit investment trust, including the requirements in that section regarding entities acting on behalf of the Trust and the limitations on expenses set forth therein. Finally, exemption from section 16(a) of the 1940 Act is necessary in light of the exemption requested from section 18(i) of the 1940 Act discussed below to permit the issuance of only non-voting securities.

4. Section 17(a)

An exemption from section 17(a) of the 1940 Act is sought to permit the Trust to acquire Loans from ED in exchange for the certificates and the proceeds of the Bonds issued by the Trust and to effect substitutions for Non-Conforming Loans thereafter and to make cash payments to the Trust in lieu thereof or to cure the breach. Such payments must be in amounts adequate to replace the cash flows from the Non-Conforming Loans or, in cases where the defects affect collateral for Loans, to replace the defective collateral. Cash payments received by the Trust from ED for Non-Conforming Loans which are not deposited in the Breach Account will be treated like other revenues received in respect of the Loans and will be deposited to the credit of the Revenue Fund and invested under the Investment Agreement. Cash payments received by the Trust from ED for Non-Conforming Loans to replace defective collateral securing Loans will be deposited to the credit of the Breach Account and invested under the Investment Agreement and, if necessary, in government obligations and repurchase agreements with respect to government obligations. Amounts on deposit in the Breach Account will be available for transfer to the Revenue Fund on each Payment Date to the extent of any shortfalls in the payments on such Loans up to the Cash Value of the Breach of such Loan on deposit in the Breach Account. Consequently, provision for such payments will provide protection for Bondholders, in the event defects in the Loans are identified, at least as great as the protection afforded by the other remedies available to the Trust under the Loan Sale Agreement. Section 17(a) of the 1940 Act prohibits specified transactions between certain persons related to a registered investment company and such investment company. ED would otherwise be prohibited from entering into the above transactions under section 17(a) of the 1940 Act because ED may either be considerd an "affiliated person" under section 2(a)(3) of the 1940 Act or a "promoter" under section 2(a)(30) of the 1940 Act.

Section 17(a) of the 1940 Act specifically excepts sales which involve securities deposited with the trustee of a unit investment trust. Although the Trust is not a unit investment trust, its structure is very similar to one in that both entities involve the deposit into a trust by a related person of a predetermined fixed portfolio of securities. Moreover, the transactions would meet the requirements of section 17(b) of the 1940 Act, the provision granting the Commission authority to exempt transactions under section 17(a) of the 1940 Act, in that the terms of the exchange will be reasonable and fair

and do not involve overreaching on the part of any person concerned.

In order to establish the reasonableness and fairness of the price of the Loans received by ED, ED's financial advisor will advise ED that the proceeds of the Bonds, less transaction costs, plus the Certificates representing the residual interest in the Trust, represent a fair price for the Loans. In order to establish that the price paid by the Trust for the Loans is reasonable and fair to the Trust, the Trust will retain an independent, qualified evaluator (not including any Underwriter for the Bonds or the Certificates) which will determine that the consideration to be paid by the Trust for the Loans is reasonable and fair.

5. Section 18(a)

Section 18(a) of the 1940 Act prohibits a registered closed-end investment company from issuing any class of senior securities unless certain asset coverage requirements are met. The Trust will have an asset coverage ratio immediately after the sale of the Bonds and Certificates currently expected to be approximately 8 percent. The proposed transaction, in view of the overcollaterization of the Trust and the nature of the investors in the Certificates, adequately protects against the dangers of excessive leveraging, the concern underlying section 18(a) of the 1940 Act. As a condition to the issuance of the Bonds, the Trust will obtain a determination from an independent, qualified evaluator that the aggregate scheduled payments on the Loans plus the initial deposit in the Funds and reinvestment earnings will exceed the aggregate scheduled payments of principal and interest on the Bonds by an amount adequate to provide for payment of the Bonds in light of the payment terms and past experience on the Loans. Moreover, the Certificates may only be sold to sophisticated institutional investors having sufficient expertise to evaluate the risks involved in acquiring either Class of Certificates.

6. Section 18(c)

The Applicant is seeking an exemption from section 18(c) of the 1940 Act to permit the Trust to issue the Bonds in four maturities. Section 18(c) of the Act makes it unlawful for any registered investment company to have more than one class of senior security of debt or equity. Here, each maturity of Bonds will be secured by collateral equally and ratably with every other maturity and all maturities will have the benefit of the same covenants and rights on default. Moreover, no action by the Owner Trustee or the Certificateholders can affect the timely payment of Bonds, and no action by the Bondholders of one maturity can affect the timely payments of Bonds of any other maturity. All of the assets of the Trust will be pledged to the Bond Trustee and the Owner Trustee will not be permitted to borrow against the assets of the Trust. Further, Loans will not be permitted to be removed from the Trust or substituted for other assets, except under limited circumstances.

7. Section 18(i)

Under section 18(i) of the 1940 Act, a registered investment company may not issue stock which does not have equal voting rights with every other class of stock. The Trust will operate essentially as a unit investment trust, to which section 18(i) of the 1940 Act does not apply. Given the lack of discretion vested in the Certificateholders and the Owner Trustee, voting rights would have very little actual effect on the operation of the Trust and would not enhance investor protection.

8. Section 26

Applicant has agreed that it will be subject to section 26 of the 1940 Act (with certain exceptions) as though it were a unit investment trust within the meaning of section 4(2) of the 1940 Act. With respect to sections 26(a)(2) (B) and (C), the Applicant has requested to be able to pay certain costs and expenses described in the application. The Applicant believes that the payment of those costs and expenses will be fair and reasonable in light of the requirements of the offering and sale of Bonds and the ongoing servicing requirements for the Loans. To the extent any administrative costs and fees are determined on the basis of a percentage of outstanding Bonds, the Applicant has specifically considered the fairness of such percentage formula under the Indenture and that the practice of determining fees in this manner is fair within the meaning of Section 26 of the Act. The Applicant further believes that the granting of the Order sought by this application will satisfy the provisions of section 26(b) of the 1940 Act relating to substitution of collateral to the extent Loan substitution is made as described in the application.

9. Section 32(a)

Sections 32(a)(1) and 32(a)(3) of the 1940 Act require the independent public accountant filing the investment company's financial statements to be selected annually by a vote of a majority of the board of directors and ratified annually by a majority of the voting securities of the investment company. The Trust, however, will not have voting securities. The initial auditors will be selected and disclosed in the Prospectus prior to the issuance of the Bonds and Certificates. Both the Bond Trustee and the Owner Trustee will have the right to remove the auditors for the Trust. Moreover, the Trust will not engage in any investing or reinvesting of securities, except to a limited extent. As a result, the Trust's financial statements will be primarily records of receipts and distributions, and audits of the Trust's financial statements will be straightforward and will not involve complex auditing and accounting principles. Therefore, the additional expense of ratification of the auditors would not be justified given the nature of the Trust.

10. Section 6(c)

For the reasons stated above, the requested exemptions are consistent with the section 6(c) standards. The relief requested is appropriate in the public interest, because: (a) The Trust's activities will promote the public interest by permitting ED to sell its loan assets pursuant to the directives under the Budget Act and the Education Act and will provide investors with a highly rated security; (b) the Trust may be unable to proceed fully and in a timely manner with its proposed activities if the uncertainties concerning the applicability of the above sections are not removed; and (c) the activities of the Trust are not the types of activities intended to be prevented by the 1940 Act.

Applicant's Conditions

Applicant agrees that is the requested order is granted it will be expressly conditioned on the following conditions:

A. Conditions Relating to the Bonds

(1) The Bonds will be registered under the 1933 Act. The Indenture will be qualified under the 1939 Act.

(2) The Loans, the Funds, the Breach Account and the investments securing the Bonds ("Collateral") will be held by the Bond Trustee. The Bond Trustee may not be an affiliate (as the term "affiliate" is defined in Rule 405 under the 1933 Act, 17 CFR 230.405) of the Trust. The Bond Trustee will be provided with a first priority perfected security interest in the Collateral. The Servicer will not be affiliated with either the Bond Trustee or the Owner Trustee.

(3) The initial collateral for the Bonds will consist only of the Loans and any moneys initially deposited to the credit of the Funds which are invested in the Investment Agreement. No Loans may

be released from the lien of the Indenture prior to the payment of the Bonds (except upon the acceleration of defaulted Loans) or substituted except pursuant to the limited substitution obligations of ED under the warranties of ED contained in the Loan Sale Agreement described in the application. Any such substitute collateral may consist only of Loans and will: (a) Be of equal quality as the Non-Conforming Loans being replaced in that they will be covered by the warranties of ED contained in the Loan Sale Agreement (subject to the limitation on ED's obligation to replace Non-Conforming Loans during the Warranty Period) and will be selected from ED's Portfolio in a manner so as to not adversely affect the rating on the Bonds; (b) have equal or greater principal amounts and cash flows as the Non-Conforming Loans being replaced, subject to the cash payment option and credit to ED for prior substitutions of Substitute Loans with cumulative payments in excess of the Non-Conforming Loan being replaced; and (c) meet the conditions set forth in paragraph (2) above. The replacement of such Substitute Loans for any Non-Conforming Loans will not affect the level of collateralization on which the original rating or ratings on the Bonds were based or affect the rating or ratings on the Bonds.

(4) The Bonds will be rated in the highest bond rating category by at least one Rating Agency that is not affiliated with the Trust. The Bonds will not be considered "redeemable securities" within the meaning of section 2(a)(32) of the 1940 Act.

(5) No lees often than annually, an independent public accountant will audit the books and records of the Trust and, in addition, report on whether the anticipated payments of principal of and interest on the Collateral continue to be adequate to pay the principal of and interest on the Bonds in accordance with their terms. Upon completion, copies of the auditor's reports will be provided to the Bond Trustee and the Owner Trustee and will be made available to the Bondholders and the Certificateholders.

(6) At the time of the deposit of the Collateral with the Trust, the scheduled payments to be received by the Bond Trustee on the Collateral will be more than sufficient to make all payments of principal of and interst on the Bonds. The Collateral will pay down as the Loans are repaid, but will not be released from the lien of the Indenture prior to the payment of the Bonds (except upon the acceleration of defaulted Loans and substitutions of Non-Conforming Loans).

B. Conditions Relating to the Certificates

(1) The Certificates will be offered and sold to sophisticated institutional investors. Such institutional investors may include one or more banks, savings and loan associations, insurance companies, pension funds and other large institutional investors (*i.e.*, having assets of not less than $100,000,000), that have such knowledge and experience in financial and business matters so as to be capable of evaluating the risks of the purchase of the Certificates because of direct and significant experience in making investment in similar asset-backed securities ("Eligible Investors"). (Any Mutual Funds which may purchase Certificates will continue to be required to satisfy themselves that purchase of such Certificates complies with the provisions of section 12(d)(1) of the 1940 Act.)

(2) The sale of the Certificates will occur pursuant to private placements exempt from the registration requirements of the 1933 Act under section 4(a) thereof.

(3) Sales of the Certificates will be to a limited number, not exceeding 100, of sophisticated institutional investors. Each purchaser of Certificates will be required to represent that it is acquiring its Certificates for investment for its own account and not as nominee for undisclosed investors and to agree that it will not resell its Certificates except to other Eligible Investors pursuant to private placements subject to the same representation and agreement and subject to the above limitation on the number of Certificateholders. (The Declaration of Trust will provide that the Owner Trustee may not register any transfer of Certificates if, following such transfer, the number of Certificateholders would exceed one hundred.)

(4) Neither the Trust nor any Certificateholder will be affiliated with the Bond Trustee. No holder of a controlling interest in the Trust (as such term is defined in Rule 405 of the 1933 Act) nor the Trust, will be affiliated with either (a) any custodian which may hold the Collateral on behalf of the Bond Trustee; or (b) any statistical Rating Agency rating the Bonds.

(5) The Certificates will not be redeemable at the option of the holders.

C. Other Conditions

(1) All administrative fees and expenses in connection with the administration of the Trust will be paid or provided for in a manner satisfactory to each Rating Agency rating the Bonds. The Trust will provide for the payment of administrative fees and expenses incurred in connection with the issuance of the Bonds and the administration of the Trust by the following methods:

(a) The Expense Fund will be established with the Bond Trustee under the Indenture to provide for the payment of such fees and expenses. Such fees will be either fixed amounts or will determined as a percentage of the aggregate outstanding principal amount of the Bonds, or a combination of both, in any case as determined prior to the establishment of the Expense Fund. Thereafter, the Bond Trustee will look solely to the Expense Fund for the payment of certain fees and expenses and, to the extent there are not sufficient moneys in the Expense Fund, then to the Revenue Fund. The procedure used to calculate the anticipated level of fees and expenses will provide for funds sufficient to pay such fees and expenses.

(b) The Bonds will be secured by Collateral, the value of which is in excess of the amount necessary to make payments of principal and interest on the Bonds, and such excess or a portion thereof will be applied to the payment of such fees and expenses, and may be used in combination with the other method described above. The anticipated level of fees and expenses will be more than adequately provided for by the above methods.

(2) Applicant agrees that the Trust will comply with the provisions of section 26 of the 1940 Act as though it were a unit investment trust within the meaning of section 4(2) of the 1940 Act, provided that for purposes of sections 26(a)(4) (A) and (B) of the 1940 Act, the Bond Trustee and the Owner Trustee shall perform the recordkeeping and notice responsibilities of the depositor or its agent as provided therein, and the requirements of section 26(a)(2) (B) and (C) shall not prevent the Trust from paying certain expenses described in the application.

(3) The Owner Trustee will be required under the Declaration of Trust, and, to the extent stated in the application, the Board Trustee will be required under the Indenture, to monitor compliance by the Trust with the requirements of the 1940 Act and to fulfill the Trust's ongoing obligations under the 1940 Act including, without limitation, the filings of periodic reports with the Commission as and when required by the 1940 Act.

(4) To alleviate any potential conflict of interest between the Bondholders and the Certificateholders, the Applicant further agrees that the above

representations regarding the Certificates may be made express conditions to the requested Order.

Therefore, Applicant requests that the Commission enter an order pursuant to section 6(c) of the 1940 Act exempting the Trust from sections 10(h), 14(a), 16(a), 17(a), 18(a), (c) and (i) and 32(a) of the 1940 Act.

For the Commission, by the Division of Investment Management, under delegated authority.

Shirley E. Hollis,

Assistant Secretary.

[FR Doc. 88-8623 Filed 4-18-88; 8:45 am]

BILLING CODE 8010-01-M

Goldcor, Inc., 500-1; Order of Suspension of Trading

April 13, 1988.

It appears to the Securities and Exchange Commission that there is a lack of adequate current information concerning the securities of Goldcor, Inc. ("Goldcor"), and that questions have been raised about the adequacy and accuracy of publicly disseminated information concerning, among other things, Goldcor's financial condition, assets, business operations, securities transactions, and other matters, and the Commission is of the opinion that the public interest and the protection of investors require a suspension of trading in the securities of Goldcor.

Therefore, it is ordered, pursuant to section 12(k) of the Securities Exchange Act of 1934, that trading in the common stock of Goldcor, over-the-counter or otherwise, is suspended for the period from 9:00 a.m., April 14, 1988, through 11:59 p.m. (EDT) on April 23, 1988.

By the Commission.

Jonathan G. Katz,

Secretary.

[FR Doc. 88-8567 Filed 4-18-88; 8:45 am]

BILLING CODE 8010-01-M

[Release No. IC-16363; 812-6954]

New England Mutual Life Insurance Co. et al.

April 13, 1988.

AGENCY: Securities and Exchange Commission (the "Commission").

ACTION: Notice of application for exemption under the Investment Company Act of 1940 ("1940 Act").

Applicants: New England Mutual Life Insurance Company ("The New England"), New England Variable Life Insurance Company ("NEVLICO"), New England Variable Life Separate Account ("Variable Account"), and New England Securities Corporation ("New England Securities").

Relevant 1940 Act Sections and Rules: Exemptions requested under section 6(c) from those provisions of the 1940 Act and those rules specified in paragraph (b) of Rule 6e-2 thereunder, other than sections 7 and 8(a), and, in addition, exemptions from the provisions of sections 2(a)(32), 2(a)(35), 22(c), 26(a)(1), 26(a)(2), 27(a)(1), 27(a)(3), 27(c)(1), 27(c)(2), 27(d) and 27(f) and Rules 6e-2(b)(1), (b)(12), (b)(13)(i), (b)(13)(ii), (b)(13)(iii), (b)(13)(iv), (b)(13)(v), (b)(13)(viii), (c)(1) and (c)(4) and 22c-1 and 27f-1.

Summary of Application: Applicants seek an order to permit them to issue variable life insurance policies, in reliance on 1940 Act Rules 6c-3 and 6e-2, that provide for: (i) A death benefit that will not always vary based on investment experience; (ii) both a contingent deferred sales charge and a sales charge deducted from premiums; (iii) a contingent deferred administrative charge; (iv) deduction of cost of insurance charges from the policy's account value, charges for substandard mortality risks and incidental insurance benefits, and a minimum death benefit guarantee charge; (v) values and charges based on the 1980 Commissioners' Standard Ordinary Mortality Tables; and (vi) the holding of mutual fund shares funding the Variable Account without the use of a trustee, in an open account arrangement and without a trust indenture.

Filing Date: January 8, 1988.

Hearing or Notification of Hearing: If no hearing is ordered, the Application will be granted. Any interested person may request a hearing on this Application, or ask to be notified if a hearing is ordered. Any requests must be received by the Commission by 5:30 p.m., on May 6, 1988. Request a hearing in writing, giving the nature of your interest, the reason for the request, and the issues you contest. Serve the Applicants with the request, either personally or by mail, and also send it to the Secretary of the Commission, along with proof of service by affidavit, or, for lawyers, by certificate. Request notification of the date of a hearing by writing to the Secretary of the Commission.

ADDRESSES: Secretary, SEC, 450 Fifth Street NW., Washington, DC 20549. The New England, NEVLICO, the Variable Account and New England Securities, 501 Boylston Street, Boston, MA 02117.

FOR FURTHER INFORMATION CONTACT: Heidi Stam, Staff Attorney (202) 272-3017 or Lewis B. Reich, Special Counsel (202) 272-2061 (Division of Investment Management).

SUPPLEMENTARY INFORMATION: Following is a summary of the Application; the complete Application is available for a fee from either the Commission's Public Reference Branch in person or the Commission's commercial copier (800) 231-3282 (in Maryland (301) 734-1400).

Applicants' Representations

1. NEVLICO is a wholly-owned subsidiary of The New England, a mutual life insurance company organized in Massachusetts in 1835. The Variable Account is a separate investment account of NEVLICO, and is registered under the 1940 Act as a unit investment trust.

2. Applicants request exemptions from Rule 6e-2(c)(1) and from all sections of the 1940 Act and rules thereunder specified in Rule 6e-2(b) (other than sections 7 and 8(a)), under the same terms and conditions (except as otherwise set forth herein and in the Application) applicable to a separate account that satisfies the conditions set forth in Rule 6e-2(a), to the extent necessary to permit the offer and sale of certain variable life insurance policies ("Policies") in reliance on Rule 6e-2. Applicants request this relief because the death benefit will not always vary based on investment performance, and the Policy contains several other features not originally contemplated by Rule 6e-2.

3. Policy owners have a choice between two forms of death benefit under a Policy. Death benefit Option 1 is the greater of (a) the face amount or (b) the cash value divided by the net single premium factor. Death benefit Option 2 is the greater of (a) the face amount plus any excess of the cash value over the Policy's "tabular cash value" or (b) the cash value divided by the net single premium factor. The net single premium factor is that necessary to qualify the Policy as life insurance for federal income tax purposes. The death benefit under the Policy will vary based on investment experience when the net single premium factor computation of death benefit is applicable. Death benefit Option 2 also varies with investment experience whenever the Policy's cash value exceeds its "tabular cash value."

4. Under the terms of the Policy premiums in excess of the required premiums may be paid, and, if the Policy's cash value exceeds its "tabular cash value," no required premium need be paid (if nonpayment would not result

in any Policy loan exceeding the Policy loan value).

5. The premium and other flexible options under the Policy are a potential benefit to Policy owners. For example, they may be able to make premium payments in accordance with their own personal financial cycle, or at times during the year when they perceive the securities markets to present favorable investment opportunities.

6. Applicants request exemptions from sections 2(a)(35), 26(a)(2), 27(a) (1) and (3), 27(c)(2) and Rules 6e–2(b)(1), (b)(13)(i), (b)(13)(ii) and (c)(4), to the extent necessary to permit a contingent deferred sales charge to be deducted without refunds, as described herein and in the Application, upon surrender, partial surrender or lapse of a Policy. Applicants also request exemptions from sections 2(a)(32), 22(c), 27(c)(1) and 27(d) and Rules 6e–2(b)(12), (b)(13)(iv), (b)(13)(v) and 22c–1 to the extent necessary to permit a contingent deferred sales load and a contingent deferred administrative charge to be deducted, as described herein and in the Application, upon surrender, partial surrender or lapse of Policy.

7. Among other charges, NEVLICO will deduct a premium expense charge of 8% of each premium paid. This deduction is for sales expenses (6%) and state premium taxes (2%). NEVLICO will also deduct a contingent deferred sales charge upon surrender, partial surrender or lapse of a Policy during the first fifteen Policy years. The contingent deferred sales charge is based on the lesser of (a) the sum of the scheduled basic premiums payable up to the date of surrender or lapse, whether or not each such premium has been paid or (b) the sum of the actual premiums paid to date, including the charges for supplementary benefits provided by rider, extra premiums for substandard risk classification and the Policy administrative charge. The maximum percentages are as follows:

For policies which are surrendered or lapse during policy year	The maximum deferred sales charge is the following percentage of one annual basic scheduled premium	Which is equal to the following percentage of the scheduled premiums due to date of surrender or lapse
Entire Year 1	24.00	24.00
Entire Year 2	28.00	14.00
Entire Year 3	32.00	10.67
Entire Year 4	36.00	9.00
Entire Year 5	40.00	8.00
Entire Year 6	44.00	7.33
Entire Year 7	48.00	6.86
Entire Year 8	52.00	6.50
Entire Year 9	56.00	6.22
Entire Year 10	60.00	6.00
Last Month of Year 110	48.00	4.36
Last Month of Year 12	36.00	3.00
Last Month of Year 13	24.00	1.85
Last Month of Year 14	12.00	0.86
Last Month of Year 15 and thereafter	0.00	0.00

8. The deferred administrative charge is designed to compensate NEVLICO for administrative expenses, including medical examinations, insurance underwriting costs and costs incurred in processing applications and establishing Policy records. This charge is assessed in the following amounts:

For policies which are surrendered or lapse during	Charge will be the following amount per $1,000 of face amount
Entire Years 1–10	$5.00
Last Month of Year 11	4.00
Last Month of Year 12	3.00
Last Month of Year 13	2.00
Last Month of Year 14	1.00
Last Month of Year 15 and thereafter	0.00

9. The scheduled premiums under a Policy include an additional amount if the insured is in a substandard risk category or if optional fixed insurance benefits have been added to the Policy by rider. If a scheduled premium is not paid pursuant to the flexibility features of the Policy, 92% of this additional amount will be deducted from the Policy's cash value. The remaining 8% will be collected by NEVLICO out of any unscheduled payments which are made, pursuant to the premium expense charge referred to above.

10. The deferred sales charge, if calculated as a percentage of scheduled premiums due each year, decreases from year to year. The sales charges imposed against scheduled premiums and against unscheduled payments, when separately analyzed, each comply with the "stair-step" requirements. Scheduled premiums are subject to a level charge of 6% through the fifteenth Policy year, which is reduced to zero thereafter, and unscheduled payments are subject to a level charge of 6% throughout the life of the Policy. The continuation of the sales charge against unscheduled payments reflects the fact that NEVLICO incurs greater distribution costs in connection with unscheduled payments than scheduled premiums after the fifteenth Policy year. Moreover, the sales charges are not designed to generate more revenues from later payments than from earlier payments.

11. Applicants assert that the deduction of part of the sales charge and the administrative charge as a deferred charge on surrender, partial surrender of lapse will be more favorable to Policy owners than deduction of the same charge from premiums. First, the amount of the Policy owner's premium payment that will be allocated to the Variable Account, and be available to earn a return for the Policy owner, will be greater than it would be if the sales and administrative charges were deducted from premiums. Second, Applicants represent that the total dollar amount of sales load under a Policy is no higher than would be permitted, by Rule 6e–2(b)(13), if taken entirely as front-end deductions from premiums under a Policy for which all scheduled premiums have been paid, as well as any additional payments actually made by the Policy owner. For a Policy owner who does not lapse or surrender in the early Policy years, the dollar amount of sales load is lower than would be permitted if taken entirely as front-end deductions. Similarly, Applicants represent that the total dollar amount of deferred administrative charge under a Policy is no higher than if the charge were taken in full for the first Policy year and is less for Policy owners who do not lapse or surrender prior to the fifteenth Policy year. Third, the cost of insurance charge imposed will be less than it would otherwise be if the same amount of sales and administrative charges were deducted from premium payments, because the allocation of a greater amount of the Policy owner's premium to the Variable Account reduces the amount at risk upon which the cost of insurance is based. Fourth, if NEVLICO is not permitted to charge a sales load in the form of a contingent deferred charge, it would have to deduct the sales load entirely from the premiums, thereby charging persisting Policy owners more than may otherwise be necessary to recover the distribution costs attributable to such Policy owners. Applicants contend that their charge structure, by contrast, provides greater equity among Policy owners.

BEST COPY AVAILABLE

12. Applicants request exemptions from sections 26(a)(2) and 27(c)(2) and Rule 6e–2(b)(13)(iii), to the extent necessary to permit deduction from cash value of charges for cost of insurance, substandard risks and incidental insurance benefits, and a minimum death benefit guarantee charge.

13. Cost of insurance charges will be deducted from cash value on the first day of each Policy month at rates that do not exceed those prescribed in the 1980 Commissioners' Standard Ordinary Mortality Tables ("1980 CSO Tables"). Applicants state that deduction of these charges from cash value is reasonable and in accordance with the practice of most other variable life insurance policies.

14. Applicants represent that the deduction of a portion of the charges for substandard risks and incidental insurance benefits from cash value, as described above, is also reasonable and appropriate. If all such charges were required to be deducted solely from premiums, it would be necessary, according to Applicants, for NEVLICO (a) to reduce the premium flexibility under the Policy and/or (b) further limit the classes of insureds for whom the Policy will be available and limit or eliminate the kinds of rider benefits which NEVLICO intends to make available. Applicants argue that these results would be undesirable from the standpoint of purchasers and prospective purchasers of Policies.

15. The minimum death benefit guarantee charge compensates NEVLICO for the risk that NEVLICO assumes in guaranteeing death benefits under the Policies, including the risk that the cash value will not be sufficient to support the guarantees.

16. NEVLICO makes the following representations and undertakings: (A) The level of the minimum death benefit guarantee charge is reasonable in relation to the risks assumed by NEVLICO under the Policy. The methodology used to support this representation is based on an analysis of the pricing structure of the Policies, including all charges, and an analysis of the various risks, including special risks arising out of Policy provisions that allow unscheduled premium payments and skipping premium payments. NEVLICO undertakes to keep and make available to the Commission on request the documents or memoranda used to support this representation. (B) NEVLICO has concluded that the proceeds from the sales charges may not cover the expected costs of distribution. Surplus arising from the minimum death benefit guarantee charge (among other sources) may be used to cover the distribution costs. There is a reasonable likelihood that the distribution financing arrangement of the Variable Account will benefit the Variable Account and Policy owners. NEVLICO undertakes to keep and make available to the Commission on request a memorandum setting forth the basis of this representation. (C) The Variable Account will invest only in management investment companies that have undertaken, in the event they should adopt any plan under Rule 12b–1 to finance distribution expenses, to have a board of directors (or trustees, as appropriate), a majority of whom are not interested persons of NEVLICO, formulate and approve such plan.

17. Applicants request exemptions from section 27(a)(1) and Rules 6e–2 (b)(1), (b)(13)(i) and (c)(4), to the extent necessary to permit cost of insurance to be calculated, for purposes of testing compliance with Rule 6e–2, based on the 1980 CSO Tables.

18. Maximum cost of insurance charges based on the 1980 CSO Tables, which are used under the Policy, are generally lower than those based on the 1958 Commissioners' Standard Ordinary Mortality Table ("1958 CSO Table"). In establishing premium rates and determining reserve liabilities for the Policies, NEVLICO also uses the 1980 CSO Tables. For the most part, this will result in lower charges and higher Policy values than if such deductions were to be based upon the 1958 CSO Table. Furthermore, the mortality rates reflected in the 1980 CSO Tables more nearly approach the mortality experience which NEVLICO believes will pertain to the Policy.

19. Applicants request exemptions from sections 26(a)(1), 26(a)(2) and 27(c)(2) and Rule 6e–2(b)(13)(iii) to the extent necessary to permit the holding of fund shares by NEVLICO and the Variable Account under an open account arrangement, without having possession of share certificates and without a trust indenture or other such instrument.

20. Current industry practice calls for unit investment trust separate accounts, such as the Variable Account, to hold shares of underlying management investment companies in uncertificated form. This practice is thought to contribute to efficiency in the purchase and sale of such shares by separate accounts and to bring about cost savings generally.

For the Commission, by the Division of Investment Management, pursuant to delegated authority.

Shirley E. Hollis,

Assistant Secretary.

[FR Doc. 88–8576 Filed 4–18–88; 8:45 am]

BILLING CODE 8010-01-M

SMALL BUSINESS ADMINISTRATION

Action Subject to Intergovernmental Review

AGENCY: Small Business Administration.

ACTION: Notice of Action subject to intergovernmental review under Executive Order 12372.

SUMMARY: This notice provides for public awareness of SBA's intention to refund nine presently existent Small Business Development Centers (SBDCs) on September 30, 1988. Currently there are 52 SBDCs operating in the SBDC program. The following SBDCs are intended to be refunded, subject to the availability of funds: Delaware, Iowa, Kentucky, Louisiana, Massachusetts, Michigan, New York (Upstate), Texas (Houston), and Vermont. This notice also provides a description of the SBDC program by setting forth a condensed version of the program announcement which has been furnished to each of the SBDCs to be refunded. This publication is being made to provide the State single points of contact, designated pursuant to Executive Order 12372, and other interested State and local entities, the opportunity to comment on the proposed refunding in accord with the Executive Order and SBA's regulations found at 13 CFR Part 135.

DATE: Comments will be accepted through August 17, 1988.

ADDRESS: Comments should be addressed to Ms. Janice E. Wolfe, Deputy Associate Administrator for SBDC Program, U.S. Small Business Administration, 1441 L Street, NW., Wash. DC 20416.

FOR FURTHER INFORMATION CONTACT: Same as above.

Notice of Action Subject to Intergovernmental Review

SBA is bound by the provisions of Executive Order 12372, "Intergovernmental Review of Federal Programs." SBA has promulgated regulations spelling out its obligations under that Executive Order. See 13 CFR Part 135, effective September 30, 1983.

In accord with these regulations, specifically § 135.4, SBA is publishing this notice to provide public awareness of the pending application of nine

presently existent Small Business Development Centers (SBDCs) for refunding. Also, published herewith is an annotated program announcement describing the SBDC program in detail.

This notice is being published four months in advance of the expected date of refunding these SBDCs. Relevant information identifying these SBDCs and providing their mailing address is provided below. In addition to this publication, a copy of this notice is being simultaneously furnished to the affected State single point of contact which has been established under the Executive Order.

The State single points of contact and other interested State and local entities are expected to advise the relevant SBDC of their comments regarding the proposed refunding in writing as soon as possible. The SBDC proposal cannot be inconsistent with any area-wide plan providing assistance to small business, if there is one, which has been adopted by an agency recognized by the State government as authorized to do so. Copies of such written comments should also be furnished to Ms. Janice E. Wolfe, Deputy Associate Administrator for SBDC Programs, U.S. Small Business Administration, 1441 L Street, NW., Washington, D.C. 20416. Comments will be accepted by the relevant SBDC and SBA for a period of 120 days from the date of publication of this notice. The relevant SBDC will make every effort to accommodate these comments during the 120-day period. If the comments cannot be accommodated by the relevant SBDC, SBA will, prior to refunding the SBDC, either attain accommodation of any comments or furnish an explanation of why accommodation cannot be attained to the commenter prior to refunding the SBDC.

Description of the SBDC Program

The Small Business Development Center (SBDC) Program is a Business Development program of the U.S. Small Business Administration (SBA). The SBDC operates under the general management and oversight of SBA, but with recognition that a partnership exists between the Agency and the SBDC for the delivery of assistance to the small business community. SBDC services shall be provided pursuant to a negotiated Cooperative Agreement with full participation of both parties. SBDCs operate on the basis of a state plan to provide assistance within a state or designated geographical area. The initial plan must have the written approval of the Governor. As a condition to any financial award made to an applicant, non-Federal funds must be provided from sources other than the Federal Government. SBDCs operate under the provisions of Pub. L. 96-302, as amended by Pub. L. 98-395, a Notice of Award (Cooperative Agreement) issued by SBA, and the provisions of this Program Announcement.

Purpose and Scope

The SBDC Program is designed to provide quality assistance to small businesses in order to promote growth, expansion, innovation, increased productivity and management improvement. To accomplish these objectives, SBDCs link resources of the Federal, State, and local governments with the resources of the educational system and the private sector to meet the specialized and complex needs of the small business community. SBDCs also coordinate with other SBA programs of business development and utilize the expertise of these affiliated resources to expand services and avoid duplication of effort.

Program Objectives

The overall objective of the SBDC Program is to leverage Federal dollars and resources with those of the state, academic community and private sector to:

(a) Strengthen the small business community;

(b) Contribute to the economic growth of the communities served;

(c) Make assistance available to more small businesses than is now possible with present Federal resources;

(d) Create a broader based delivery system to the small business community.

SBDC Program Organization

SBDCs are organized to provide maximum services to the local small business community. The lead SBDC receives financial assistance from the SBA to operate a statewide SBDC Program. In states where more than one organization receives SBA financial assistance to operate an SBDC, each lead SBDC is responsible for Program operations throughout a specific regional area to be served by the SBDC. The lead SBDC is responsibile for establishing a network of SBDC subcenters to offer service coverage to the small business community. The SBDC network is managed and directed by a full-time Director. SBDCs must ensure that at least 80 percent of Federal funds provided are used to provide services to small businesses. To the extent possible, SBDCs provide services by enlisting volunteer and other low cost resources on a statewide basis.

SBDC Services

The specific types of services to be offered are developed in coordination with the SBA district office which has jurisdiction over a given SBDC. SBDCs emphasize the provision of indepth, high-quality assistance to small business owners or prospective small business owners in complex areas that require specialized expertise.

These areas may include, but are not limited to: Management, marketing, financing, accounting, strategic planning, regulation and taxation, capital formation, procurement assistance, human resource management, production, operations, economic and business data analysis, engineering, technology transfer, innovation and research, new product development, product anaylsis, plant layout and design, agri-business, computer application, business law information, and referral (any legal services beyond basic legal information and referral require the endorsement of the State Bar Association,) exporting, office automation, site selection, or any other areas of assistance required to promote small business growth, expansion, and productivity within the State. The SBDC shall also ensure that a full range of business development and technical assistance services are made available to small businesses located in rural areas.

The degree to which SBDC resources are directed towards specific areas of assistance is determined by local community needs, SBA priorities and SBDC Program objectives and agreed upon by the SBA district office and the SBDC.

The SBDC must offer quality training to improve the skills and knowledge of existing and prospective small business owners. As a general guideline, SBDCs should emphasize the provision of training in specialized areas other than basic small business management subjects. SBDCs should also emphasize training designed to reach particular audiences such as members of SBA priority and special emphasis groups.

SBDC Program Requirements

The SBDC is responsible to the SBA for ensuring that all programmatic and financial requirements imposed upon them by statute or agreement are met. The SBDC must assure that quality assistance and training in management and technical areas are provided to the State small business community through the State SBDC network. As a condition of this agreement, the SBDC must

perform, but not be limited to, the following activities:

(a) The SBDC ensures that services are provided as close as possible to small business population centers. This is accomplished through the establishment of SBDC subcenters.

(b) The SBDC ensures that lists of local and regional private consultants are maintained at the lead SBDC and each SBDC subcenter. The SBDC utilizes and provides compensation to qualified small business vendors such as private management consultants, private consulting engineers, and private testing laboratories.

(c) The SBDC is responsible for the development and expansion of resources within the State, particularly the development of new resources to assist small business that are not presently associated with the SBA district office.

(d) The SBDC ensures that working relationships and open communications exist within the financial and investment communities, and with legal associations, private consultants, as well as small business groups and associations to help address the needs of the small business community.

(e) The SBDC ensures that assistance is provided to SBA special emphasis groups throughout the SBDC network. This assistance shall be provided to veterans, women, exporters, the handicapped, and minorities as well as any other groups designated a priority by SBA. Services provided to special emphasis groups shall be performed as part of the Cooperative Agreement.

Advance Understandings

The Lead SBDC and all SBDC subcenters shall operate on a forty (40) hour week basis, or during the normal business hours of the State or Host Organization, throughout the calendar year. The amount of time allowed the Lead SBDC and subcenters for staff vacations and holidays shall conform to the policy of the Host organization.

Date: April 11, 1988.

James Abdnor,

Administrator.

Addresses of Relevant SBDC Directors

Ms. Helene Bulter, State Director, University, of Delaware, Suite 005—Purnell Hall, Neward, Delaware 19711, (302) 451–2747

Mr. Jerry Owen, State Director, University of Kentucky, 18 Porter Building, Lexington, Kentucky 40506–0205, (606) 257–7668

Mr. John Ciccarelli, State Director, University of Massachusetts, School of Management, Amherst, Massachusetts 01003, (413) 549–4930—Ext. 303

Mr. James L. King, State Director, State University of New York, SUNY (Upstate), State University Plaza, Albany, New York 12246, (518) 443–5398

Mr. Norris Elliott, State Director, University of Vermont, Extension Service, Morrill Hall, Burlington, Vermont 05405, (802) 656–4479

Mr. Ronald Manning, State Director, Iowa State University, College of Business Administration, 137 Lynn Avenue, Ames, Iowa 50010, (515) 292–6351

Dr. John Baker, State Director, Northeast Louisiana University, Administrative Bldg.—Room 2–57, University Drive, Monroe, Louisiana 71209, (318) 342–2464

Dr. Norman Schlafmann, State Director, Wayne State University, 2727 Second Avenue, Detroit, Michigan 48201, (313) 577–4848

Dr. Jon Goodman, Area Director, University of Houston, 401 Louisiana, Eight Floor, Houston, Texas 77002, (713) 223–1141

[FR Doc. 88–8547 Filed 4–18–88; 8:45 am]

BILLING CODE 8025–01–M

Action Subject to Intergovernmental Review

AGENCY: Small Business Administration.

ACTION: Notice of action subject to intergovernmental review under Executive Order 12372.

SUMMARY: This notice provides for public awareness of SBA's intention to refund fifteen presently existent Small Business Development Centers (SBDCs) on October 1, 1988. Currently there are 52 SBDCs operating in the SBDC program. The following SBDCs are intended to be refunded, subject to the availability of funds: Alabama, Alaska, Connecticut, Mississippi, Missouri, New York (Downstate), North Dakota, Ohio, Puerto Rico, Texas (Dallas), Texas (Lubbock), Texas (San Antonio), Virgin Islands, West Virginia and Wyoming. This notice also provides a description of the SBDC program by setting forth a condensed version of the program announcement which has been furnished to each of the SBDCs to be refunded. This publication is being made to provide the State single points of contact, designated pursuant to Executive Order 12372, and other interested State and local entities, the opportunity to comment on the proposed refunding in accord with the Executive Order and SBA's regulations found at 13 CFR Part 135.

DATE: Comments will be accepted through August 17, 1988.

ADDRESS: Comments should be addressed to Ms. Janice E. Wolfe, Deputy Associate Administrator for SBDC Program, U.S. Small Business Administration, 1441 L Street, NW., Wash. DC 20416.

FOR FURTHER INFORMATION CONTACT: Same as above.

Notice of Action Subject to Intergovernmental Review

SBA is bound by the provisions of Executive Order 12372, "Intergovernmental Review of Federal Programs." SBA has promulgated regulations spelling out its obligations under that Executive Order. See 13 CFR Part 135, effective September 30, 1983.

In accord with these regulations, specifically 135.4, SBA is publishing this notice to provide public awareness of the pending application of fifteen presently existent Small Business Development Centers (SBDCs) for refunding. Also, published herewith is an annotated program announcement describing the SBDC program in detail.

This notice is being published four months in advance of the expected date of refunding of these SBDCs. Relevant information identifying these SBDC and providing their mailing address is provided below. In addition to this publication, a copy of this notice is being simultaneously furnished to each affected State single point of contact which has been established under the Executive Order.

The State single points of contact and other interested State and local entities are expected to advise the relevant SBDC of their comments regarding the proposed refunding in writing as soon as possible. The SBDC proposal cannot be inconsistent with any area-wide plan providing assistance to small business, if there is one, which has been adopted by an agency recognized by the State government as authorized to do so. Copies of such written comments should also be furnished to Ms. Janice E. Wolfe, Deputy Associate Administrator for SBDC Programs, U.S. Small Business Administration, 1441 L Street NW., Washington, DC 20416. Comments will be accepted by the relevant SBDC for a period of 120 days from the date of publication of this notice. The relevant SBDC will make every effort to accommodate these comments during the 120-day period. If the comments cannot be accommodated by the relevant SBDC, SBA will, prior to refunding the SBDC, either attain accommodation of any comments or

furnish an explanation of why accommodation cannot be attained to the commentor prior to refunding the SBDC.

Description of the SBDC Program

The Small Business Development Center (SBDC) Program is a Business Development program of the U.S. Small Business Administration (SBA). The SBDC operates under the general management and oversight of SBA, but with recognition that a partnership exists between the Agency and the SBDC for the delivery of assistance to the small business community. SBDC services shall be provided pursuant to a negotiated Cooperative Agreement with full participation of both parties. SBDCs operate on the basis of a state plan to provide assistance within a state or designated geographical area. The initial plan must have the written approval of the Governor. As a condition to any financial award made to an applicant, non-Federal funds must be provided from sources other than the Federal Government. SBDCs operate under the provisions of Pub. L. 96–302, as amended by Pub. L. 98–395, a Notice of Award (Cooperative Agreement) issued by SBA, and the provisions of this Program Announcement.

Purpose and Scope

The SBDC Program is designed to provide quality assistance to small businesses in order to promote growth, expansion, innovation, increased productivity and management improvement. To accomplish these objectives, SBDCs link resources of the Federal, State, and local governments with the resources of the educational system and the private sector to meet the specialized and complex needs of the small business community. SBDCs also coordinate with other SBA programs of business development and utilize the expertise of these affiliated resources to expand services and avoid duplication of effort.

Program Objectives:

The overall objective of the SBDC Program is to leverage Federal dollars and resources with those of the state, academic community and private sector to:

(a) Strengthen the small business community;

(b) Contribute to the economic growth of the communities served;

(c) Make assistance available to more small businesses than is now possible with present Federal resources;

(d) Create a broader based delivery system to the small business community.

SBDC Program Organization

SBDCs are organized to provide maximum services to the local small business community. The lead SBDC receives financial assistance from the SBA to operate a statewide SBDC Program. In states where more than one organization receives SBA financial assistance to operate an SBDC, each lead SBDC is responsible for Program operations throughout a specific regional area to be served by the SBDC. The lead SBDC is responsible for establishing a network of SBDC subcenters to offer service coverage to the small business community. The SBDC network is managed and directed by a full-time Director. SBDCs must ensure that at least 80 percent of Federal funds provided are used to provide services to small businesses. To the extent possible, SBDCs provide services by enlisting volunteer and other low cost resources on a statewide basis.

SBDC Services

The specific types of services to be offered are developed in coordination with the SBA district office which has jurisdiction over a given SBDC. SBDCs emphasize the provision of indepth, high-quality assistance to small business owners or prospective small business owners in complex areas that require specialized expertise.

These areas may include, but are not limited to: Management, marketing, financing, accounting, strategic planning, regulation and taxation, capital formation, procurement assistance, human resource management, production, operations, economic and business data analysis, engineering, technology transfer, innovation and research, new product development, product analysis, plant layout and design, agri-business, computer application, business law information, and referral (any legal services beyond basic legal information and referral require the endorsement of the State Bar Association) exporting, office automation, site selection, or any other areas of assistance required to promote small business growth, expansion, and productivity within the State. The SBDC shall also ensure that a full range of business development and technical assistance services are made available to small businesses located in rural areas.

The degree to which SBDC resources are directed towards specific areas of assistance is determined by local community needs, SBA priorities and SBDC Program objectives and agreed upon by the SBA district office and the SBDC.

The SBDC must offer quality training to improve the skills and knowledge of existing and prospective small business owners. As a general guideline, SBDCs should emphasize the provision of training in specialized areas other than basic small business management subjects. SBDCs should also emphasize training designed to reach particular audiences such as members of SBA priority and special emphasis groups.

SBDC Program Requirements

The SBDC is responsible to the SBA for ensuring that all programmatic and financial requirements imposed upon them by statute or agreement are met. The SBDC must assure that quality assistance and training in management and technical areas are provided to the State small business community through the State SBDC network. As a condition of this agreement, the SBDC must perform, but not be limited to, the following activities:

(a) The SBDC ensures that services are provided as close as possible to small business population centers. This is accomplished through the establishment of SBDC subcenters.

(b) The SBDC ensures that lists of local and regional private consultants are maintained at the lead SBDC and each SBDC subcenter. The SBDC utilizes and provides compenstion to qualified small business vendors such as private management consultants, private consulting engineers, and private testing laboratories.

(c) The SBDC is responsible for the development and expansion of resources within the State, particularly the development of new resources to assist small business that are not presently associated with the SBA district office.

(d) The SBDC ensures that working relationships and open communications exist within the financial and investment communities, and with legal associations, private consultants, as well as small business groups and associations to help address the needs of the small business community.

(e) The SBDC ensures that assistance is provided to SBA special emphasis groups throughout the SBDC network. This assistance shall be provided to veterans, women, exporters, the handicapped, and minorities as well as any other groups designated a priorty by SBA. Services provided to special emphasis groups shall be performed as part of the Cooperative Agreement.

Advance Understandings

The Lead SBDC and all SBDC subcenters shall operate on a forty (40)

hour week basis, or during the normal business hours of the State or Host Organization, throughout the calendar year. The amount of time allowed the Lead SBDC and subcenters for staff vacations and holidays shall conform to the policy of the Host organization.

Date: April 11, 1988.

James Abdnor,

Administrator.

Addresses of Relevant SBDC Directors

Dr. Jeff Gibbs, State Director, University of Alabama/B'ham, 1717 11th Ave. South, Suite 419, Birmingham, Alabama 35294, (205) 934–7260

Mr. John O'Connor, State Director, University of Connecticut, Box U–41, Room 422, 368 Fairfield Road, Storrs, Connecticut 06268, (203) 486–4135

Dr. Robert Brockhaus, Acting State Director, St. Louis University, 3674 Lindell Boulevard, St. Louis, Missouri 63108, (314) 534–7204

Mr. Terry Stallman, State Director, ND Economic Dev. Commission, Liberty Memorial Building, Bismarck, North Dakota 58505, (701) 224–2810

Mr. Jose Romaguera, SBDC Director, University of Puerto Rico, Box 5253—College Station, Mayaguez, Puerto Rico 00709, (809) 834–3590 or 834–3790

Mr. Ted Cadou, Area Director, Texas Tech University, 2005 Broadway, Lubbock, Texas 79401, (806) 744–5343

Dr. Solomon Kabuka, Jr., SBDC Director, University of the Virgin Islands, Box 1087, St. Thomas, US Virgin Islands 00801, (809) 776–3206

Ms. Janet Nye, State Director, Anchorage Community College, 430 West 7th Avenue, Suite 115, Anchorage, Alaska 99501, (907) 274–7232

Dr. Robert D. Smith, State Director, University of Mississippi, 3825 Ridgewood Road, Jackson, Mississippi 39211, (601) 982–6760

Mr. James L. King, State Director, State University of New York, SUNY (Downstate), State University Plaza, Albany, New York 12246, (518) 443–5398

Mr. Jack Brown, State Director, Ohio Department of Development, 30 East Broad Street, Columbus, Ohio 43266–1001, (614) 466–5111

Dr. Norbet R. Dettman, Area Director, Dallas Community College, 302 North Market, Third Floor, Dallas, Texas 75202–3299, (214) 747–0555

Mr. Henry Travieso, Area Director, University of Texas/San Antonio, San Antonio, Texas 78285, (512) 224–0791

Ms. Eloise Jack, State Director, Governor's Office of Community and Industrial Development, 1115 Virginia Street, East Charleston, West Virginia 25310, (304) 348–2960

Mr. MacRay Bryant, State Director, Casper Community College, 130 North Ash, Suite A, Casper, Wyoming 82601, (307) 235–4825

[FR Doc. 88–8548 Filed 4–18–88; 8:45 am]

BILLING CODE 8025–01–M

[License No. 06/06–0186]

Southwest Venture Capital, Inc.; Surrender of License

Notice is hereby given that Southwest Venture Capital, Inc., 2700 East 51st Street, Suite 340, Tulsa, Oklahoma 74105 has surrendered its license to operate as a small business investment company under the Small Business Investment Act of 1958, as amended (the Act). Southwest Venture Capital, Inc. was licensed by the Small Business Administration on December 27, 1976.

Under the authority vested by the Act and pursuant to the Regulations promulgated thereunder, the surrender was accepted on April 5, 1988 and accordingly, all rights, privileges, and franchises derived therefrom have been terminated.

(Catalog of Federal Domestic Assistance Program No. 59.011, Small Business Investment Companies)

Robert G. Lineberry,

Deputy Associate Administrator for Investment.

Dated: April 13, 1988.

[FR Doc. 88–8545 Filed 4–18–88; 8:45 am]

BILLING CODE 8025–01–M

Region I Advisory Council; Public Meeting

The U.S. Small Business Administration, Region I Advisory Council, located in the geographical area of Montpelier, Vermont, will hold a public meeting at 4:30 p.m. on Wednesday, May 18, 1988 at the Radisson Hotel, Burlington, Vermont, to discuss such matters as may be presented by members, staff of the U.S. Small Business Administration, or others present.

For further information, write or call Ora H. Paul, District Director, U.S. Small Business Administration, Federal Building, 87 State Street, P.O. Box 605, Montpelier, Vermont 05602—(802) 828–4422.

Jean M. Nowak,

Director, Office of Advisory Councils.

April 13, 1988.

[FR Doc. 88–8544 Filed 4–18–88; 8:45 am]

BILLING CODE 8025–01–M

Region II Advisory Council; Public Meeting

The U.S. Small Business Administration, Region II Advisory Council, located in the geographical area of Puerto Rico and Virgin Islands, will hold a public meeting at 9:00 a.m. on Friday, May 6, 1988 at the Federal Building, Carlos Chardon Avenue, Hato Rey, Puerto Rico, Room 691, to discuss such matters as may be presented by members, staff of the U.S. Small Business Administration, or others present.

For further information, write or call Wilfred Benitez Robles, District Director, U.S. Small Business Administration, Federal Building, Room 691, Carlos Chardon Avenue, Hato Rey, Puerto Rico 00918—(809) 753–4002.

Jean M. Nowak,

Director, Office of Advisory Councils.

April 13, 1988.

[FR Doc. 88–8539 Filed 4–18–88; 8:45 am]

BILLING CODE 8025–01–M

Region III Advisory Council, Public Meeting

The U.S. Small Business Administration, Region III Advisory Council, located in the geographical area of Baltimore, Maryland, will hold a public meeting from 5:30 p.m. to 7:30 p.m. Wednesday, June 1, 1988 at the Blue Cross and Blue Shield of Maryland, 2nd Floor, 700 Joppa Road, Towson, Maryland, to discuss such matters as may be presented by members, staff of the U.S. Small Business Administration, or others present.

For further information, write or call Charles J. Gaston, District Director, U.S. Small Business Administration, 10 North Calvert Street, 3rd Floor, Baltimore, Maryland 21202—(301) 962–2054.

Jean M. Nowak,

Director, Office of Advisory Councils.

April 13, 1988.

[FR Doc. 88–8538 Filed 4–18–88; 8:45 am]

BILLING CODE 8025–01–M

Region III Advisory Council; Public Meeting

The U.S. Small Business Administration, Region III Advisory Council, located in the geographical area of Clarksburg, West Virginia, will hold a public meeting at 9:00 a.m. on Wednesday, May 18, 1988, at the Monongahela Power Company, Southern Division Office, 801 State Street, Gassaway, WV 26624, to discuss

such matters as may be presented by members, staff of the U.S. Small Business Administration, or others present.

For further information, write or call Marvin P. Shelton, District Director, U.S. Small Business Administration, P.O. Box 1608, Clarksburg, WV 26302-1608—(304) 622-6601.

Jean M. Nowak,

Director, Office of Advisory Councils.

April 13, 1988.

[FR Doc. 88-8540 Filed 4-18-88; 8:45 am]

BILLING CODE 8025-01-M

Region VII Advisory Council; Public Meeting

The U.S. Small Business Administration, Region VII Advisory Council, located in the geographical area of Des Moines, Iowa, will hold a public meeting at 10:00 a.m. on Tuesday, May 10, 1988 at the Des Moines Botanical Center, 909 East River Drive, Des Moines, Iowa 50316, to discuss such matters as may be presented by members, staff of the U.S. Small Business Administration, or others present.

For further information, write or call Conrad Lawlor, District Director, U.S. Small Business Administration, Federal Building, Room 749, 210 Walnut Street, Des Moines, Iowa 50309—(515) 284-4422.

Jean M. Nowak,

Director, Office of Advisory Councils.

April 13, 1988.

[FR Doc. 88-8541 Filed 4-18-88; 8:45 am]

BILLING CODE 8025-01-M

Region IX Advisory Council; Public Meeting

The U.S. Small Business Administration, Region IX Advisory Council, located in the geographical area of Las Vegas, Nevada, will hold a public meeting from 10:00 a.m. to 12:00 p.m. on Thursday, May 5, 1988 at the Small Business Administration Office, 301 E. Stewart Ave., Downtown Station Post Office Building, 3rd Floor, Las Vegas, Nevada, to discuss such matters as may be presented by members, staff of the U.S. Small Business Administration, and others present.

For further information, write or call Elizabeth Sutton, Secretary for the Advisory Council, U.S. Small Business Administration, 301 E. Stewart, P.O. Box 7527, Las Vegas, NV 89125—(702) 388-6611.

Jean M. Nowak,

Director, Office of Advisory Councils.

April 13, 1988.

[FR Doc. 88-8543 Filed 4-18-88; 8:45 am]

BILLING CODE 8025-01-M

Region X Advisory Council; Public Meeting

The U.S. Small Business Administration, Region X Advisory Council, located in the geographical area of Portland, Oregon, will hold a public meeting at 10:00 a.m. on Wednesday, May 4, 1988 at the Edith Green-Wendell Wyatt Federal Building, 1220 S.W. Third Ave., Room 1573, Portland, Oregon, to discuss such matters as may be presented by members, staff of the U.S. Small Business Administration, or others present.

For further information, write or call John L. Gilman, District Director, U.S. Small Business Administration, 1220 S.W. Third Ave., Room 676, Portland, Oregon 97204-2882—(503) 294-5221.

Jean M. Nowak,

Director, Office of Advisory Councils.

April 13, 1988.

[FR Doc. 88-8542 Filed 4-18-88; 8:45 am]

BILLING CODE 8025-01-M

[License No. 06/06-0295]

MCap Corp; Issuance of a Small Business Investment Company License

On October 27, 1987, a notice was published in the **Federal Register** (Vol. 52, No. 207, Page 41379) stating that an application has been filed by MCap Corp, Dallas, Texas, with the Small Business Administration (SBA) pursuant to the Regulations governing small business investment companies (31 CFR 107.102 (1988)) for a license as a small business investment comany.

Interested parties were given until close of business October 26, 1987, to submit their comments to SBA. No comments were received.

Notice is hereby given that, pursuant to section 301(c) of the Small Business Investment Act of 1958, as amended, after having considered the application and all other pertinent information, SBA issued License No. 06/06-0295 on March 31, 1988, to MCap Corp to operate as a small business investment company.

(Catalog of Federal Domestic Assistance Program No. 59.011, Small Business Investment Companies)

Robert G. Lineberry,

Deputy Associate Administrator for Investment.

Dated: April 13, 1988.

[FR Doc. 88-8546 Filed 4-18-88; 8:45 am]

BILLING CODE 8025-01-M

DEPARTMENT OF TRANSPORTATION

Office of the Secretary

[Docket 45581; Order 88-4-40]

Preliminary Investigation of Texas Air Corp. and its Subsidiaries

April 13, 1988.

Order

The Department is charged under the Federal Aviation Act of 1958 ("Act"), 49 U.S.C. 1301 *et seq.*, with exercising its powers and duties so as to assign and maintain safety as the highest priority in air commerce; to promote a viable, privately owned Unites States air transport industry; and to encourage fair wages and equitable working conditions. Among the Department's duties under the Act are the review of the continuing fitness, willingness and ability of air carriers to engage in air transportation under section 401(r) of the Act. Section 204 of the Act confers on the Department the general powers to conduct investigations as the Department shall deem necessary to carry out its powers and duties. Section 407 empowers the Department to require periodic and special reports from any air carrier, to require any air carrier to answer questions on any matter concerning which the Department may deem information to be necessary, and to have access to all properties, accounts, and documents of any air carrier. The powers conferred by section 407 also apply, where necessary, to persons having a control over, or affiliated with, any air carrier. The Department is also authorized by section 415 of the Act to inquire into the management of the business of any air carrier and to obtain full and complete reports and other information in the exercise and performance of its statutory duties, and is authorized by section 1002(b) to institute investigations on its own initiative concerning any question that may arise under the Act. Finally, the Department is empowered by section 1004 of the Act to issue and enforce subpoenas requiring the attendance and testimony of witnesses and the production of documents

relating to any matter under investigation.

Texas Air Corporation owns and controls several air carriers, including Continental Airlines, Eastern Air Lines, Rocky Mountain Airways, Britt Airways, Bar Harbor Airlines, and Provincetown-Boston Airlines. The recent activities of the Texas Air and its carriers—particularly Continental and Eastern—raise questions concerning whether the carriers can and are disposed to comply with the safety and economic rules applicable to air carriers and, without remedial action, whether they remain fit to provide air transportation. Because this possibility raises serious concerns, we find it necessary to institute an informal preliminary investigation on an expedited basis to inquire into the management of the Texas Air carriers and their corporate parent and affiliates. This investigation is needed, among other reasons, to determine whether the Texas Air carriers' operations are complying with all applicable requirements or whether they contain serious flaws requiring the initiation of a full-blown continuing fitness investigation and/or possible enforcement action.

Areas Requiring Investigation

Section 401(r) of the Act requires that certificated carriers like Continental and Eastern remain fit. The Department has defined fitness as including three elements: A disposition to comply with all legal and regulatory requirements; a financial plan which, if successfully carried out, will allow the carrier to operate without undue risk to the public; and a competent management. Recent events show that the continuing fitness of the Texas Air carriers may require examination.

Analysis of the Texas Air firms' finances and filings with the Securities and Exchange Commission suggests a need to examine the carriers' financial fitness. The financial transactions between Texas Air and the persons controlling Texas Air, on the one hand, and Continental and Eastern, on the other hand, raise questions concerning whether substantial funds and other resources are being diverted from the air carrier subsidiaries. For example, Texas Air moved Eastern's computer reservations system into a separate subsidiary in exchange for a note, the principal amount of which may be less than the system's fair market value. Texas Air also charges both carriers substantial fees for mangement services, fuel purchases, and other activities. In addition, although Texas Air agreed to reimburse Eastern for $16 million of expenses incurred in connection with the Texas Air-Eastern acquisition, Eastern has received no cash and instead holds a non-interest bearing demand note. In March 1987 Eastern purchases unsecured notes issued by a Continental affiliate for their fair market value, $25 million; this transaction would not benefit Eastern's cash position.[1]

These transactions run the risk of weakening the airline subsidiaries, and might therefore place in question Texas Air's commitment to ensuring that its carriers will retain the financial resources necessary for assuring safe and adequate air transportation for the public. This is particularly troublesome in view of the large losses suffered by each carrier in recent periods; Continental, for example, had a loss of $258 million in 1987.

In addition, new questions have been raised concerning whether these carriers' operations entirely satisfy the Federal Aviation Administration's safety requirements. The FAA has today taken enforcement action against Eastern and proposed an $823,500 civil penalty for violations of its safety regulations. Many of those alleged violations are in areas already covered by a recent enforcement settlement of $9.5 million. While the FAA is continuing to conduct its own investigations of any potential safety problems, possible additional violations of safety requirements, if widespread, would also raise substantial questions as to the carriers' continuing disposition to comply with applicable legal requirements.

The Texas Air carriers' compliance disposition has also been called into question by the several district court rulings, some on appeal, that Eastern, under Texas Air's management, has violated its Railway Labor Act obligations, collective bargaining agreements, and a district court injunction.

In view of all the circumstances, the Department believes that the public interest requires that an informal, nonadjudicatory fact-finding investigation be instituted pursuant to the powers conferred on the Department by sections 204(b), 401(r), 407, 415, 1002(b), and 1004 of the Act. The purpose of this inquiry is to inquire into the management and business practices of Continental and Eastern and accumulate data with respect to their operational and financial practices and activities. We find it necessary for the proper conduct of this investigation to extend its coverage to those persons controlling and affiliated with Continental and Eastern. The information produced by this investigation may form the basis for recommendations by the Department with regard to voluntary actions by Texas Air or its subsidiaries, for recommendations to Congress, or for formal proceedings under Title IV of the Act.[2]

The Department finds that an inspection and examination of the accounts, records, and memoranda, including documents, papers, and correspondence, of Continental and Eastern, their affiliates, and the persons controlling them; the taking of depositions and other sworn testimony of their directors, officers, employees, consultants, and financial advisors; and the production of reports may be necessary to the effective conduct of this investigation.

Since this is a preliminary fact-finding investigation which will not result in any adjudicatory action on the part of the Department in this proceeding, it is appropriate to utilize nonpublic procedures similar to those employed pursuant to Part 305 of the Department's rules. 14 CFR Part 305. Moreover, an informal, nonpublic investigation is appropriate because the subject matter encompasses the internal affairs of private corporations and will involve the examination of confidential matters including future economic prospects and forecasts, some of which are protected form disclosure.[3]

The Department will generally follow the procedures set forth in 14 CFR Parts 240 and 305 and 14 CFR 385.22. The Office of the Assistant General Counsel for Aviation Enforcement and Proceedings and the Office of Aviation Analysis, under the direction of the Deputy General Counsel, will be primarily responsible for the conduct of the investigation. Other Department employees may assist in the investigation as well. The terms "investigation attorney," "special

[1] Other transactions may have the effect of transferring cash from Eastern to Continental. Eastern, for example, paid Continental $22.5 million in December 1987 in connection with Continental's agreement to operate services for Eastern in the event of a strike. Eastern must also compensate Continental for its estimated net cost of operating the services.

[2] In response to an order of the Court of Appeals for the District of Columbia Circuit (*Air Line Pilots Ass'n v. U.S. Department of Transportation*, 838 F.2d 563 (D.C. Cir. 1988)), we are conducting a separate investigation in Docket 44346 or the possible need to impose labor protective provisions on our approval of Texas Air's acquisition of Eastern.

[3] The public release of the information obtained will be governed by applicable Department rules.

agent," and "auditor" as used in 14 CFR Parts 240 and 305 and 14 CFR 385.22 shall include any Department employees designated by the Deputy General Counsel for those purposes.

It is our intention that the preliminary investigation be concluded within 30 days.

Accordingly

1. The Department insitutes an informal nonadjudicatory proceeding pursuant to sections 204(a), 401(r), 407, 415, 1002(b), and 1004 of the Federal Aviation Act of 1958, as amended, to inquire into the management and business practices of Continental Airlines, Inc., Eastern Air Lines, Inc., their affiliates, and the persons controlling them, and accumulate, compile, and evaluate information, data, testimony, and the like, with respect to the carriers' past, current, and future operational and financial practices and activities.

2. The investigation ordered in paragraph 1 shall be conducted under 14 CFR 240, 305, and 385.22 by the Office of the Assistant General Counsel for Aviation Enforcement and Proceedings and the Office of Aviation Analysis under the direction of the Deputy General Counsel, together with such persons as the Deputy General Counsel may designate, including employees of any staff components of the Department.

3. Pursuant to 14 CFR 305.10, this order shall be published in the **Federal Register**.

Matthew V. Scocozza,

Assistant Secretary for Policy and International Affairs.

[FR Doc. 88-8447 Filed 4-18-88; 8:45 am]

BILLING CODE 4910-62-M

Applications for Certificates of Public Convenience and Necessity and Foreign Air Carrier Permits Filed During the Week Ending April 8, 1988

The following applications for certificates of public convenience and necessity and foreign air carrier permits were filed under Subpart Q of the Department of Transportation's Procedural Regulations (See 14 CFR 302.1701 et. seq.). The due date for answers, conforming application, or motion to modify scope are set forth below for each application. Following the answer period DOT may process the application by expedited procedures. Such procedures may consist of the adoption of a show-cause order, a tentative order, or in appropriate cases a final order without further proceedings.

Docket No. 45559

Date Filed: April 4, 1988.

Due Date for Answers, Conforming Applications, or Motion to Modify Scope: May 2, 1988.

Description: Application of Challenge Air International, Inc. pursuant to section 401 (d)(1) of the Act and Subpart Q of the Regulations, submitting a notice of intent to resume service in domestic, overseas and foreign air transportation.

Docket No. 45560

Date Filed: April 4, 1988.

Due Date for Answers, Conforming Applications, or Motions to Modify Scope: May 2, 1988.

Description: Application of Tower Air, Inc. pursuant to section 401 of the Act and Subpart Q of the Regulations applies for amendment of its certificate of public convenience and necessity to operate Route 401 authorizing it to engage in scheduled foreign air transportation of persons, property and mail, on a permissive basis, between Miami and Orlando, Florida, on the one hand, and Copenhagen, Denmark, Oslo, Norway and Stockholm, Sweden, on the other hand.

Docket No. 45562

Date Filed: April 5, 1988.

Due Date for Answers Conforming Applications, or Motions to Modify Scope: May 3, 1988.

Description: Application of British Airways PLC and British Caledonian Airways Limited, pursuant to section 402 of the Act and Subpart Q of the Regulations requests the Department to issue an order transferring BCAL's foreign air carrier permit authority and amending British Airways' foreign air carrier permit authority.

Docket No. 45569

Date Filed: April 8, 1988.

Due Date for Answers, Conforming Applications, or Motions to Modify Scope: May 6, 1988.

Description: Application of Virgin Atlantic Airways Limited pursuant to section 402 of the Act and Subpart Q of the Regulations requests an amendment of its foreign air carrier permit to perform scheduled combination air transportation of passengers, cargo and mail between London (Gatwick) and New York (JFK).

Docket No. 45570

Date Filed: April 8, 1988.

Due Date for Answers, Conforming Applications, or Motions to Modify Scope: May 6, 1988.

Description: Application of Virgin Atlantic Airways Limited pursuant to section 402 of the Act and Subpart Q of the Regulations requests an amendment of its foreign air carrier permit to perform scheduled combination air transportation of passengers, cargo and mail between London (Gatwick) and Los Angeles, California commencing March 1, 1989.

Phyllis T. Kaylor,

Chief, Documentary Service Division.

[FR Doc. 88-8446 Filed 4-18-88; 8:45 am]

BILLING CODE 4910-62-M

[Order 88-4-41. Docket 45582]

Order Instituting Japan Charter Authorization Proceeding (1988/1989)

AGENCY: Department of Transportation.

ACTION: Institution of the *Japan Charter Authorization Proceeding (1988/1989).*

SUMMARY: U.S. air carriers may operate only 300 one-way charter flights per year between the United States and Japan under the terms of an Interim Aviation Agreement dated September 7, 1982. The aeronautical authorities of each country allocate the charter flights among their carriers. The Department has decided to institute an evidentiary proceeding before an Administrative Law Judge to determine how these flights should be allocated among U.S. carriers for the October 1, 1988-September 30, 1989 period. We used similar procedures last year to award these charter authorizations to 13 U.S. carriers for operation during the current charter year. The Department is inviting interested direct air carriers to file applications to operate the Japan charters at issue.

DATES: Petitions for reconsideration of Order 88-4-41 are due April 25, 1988; answers are due not later than May 2, 1988. Applications containing service proposals and supporting information, and petitions for leave to intervene are due not later than April 29, 1988; answers and requests for an oral evidentiary hearing are due not later than May 13, 1988. Parties interested in participating may obtain a service copy of the order by calling the Documentary Services Division (202) 366-9327 or by writing to the address below.

ADDRESS: Applications, supporting information, petitions for leave to intervene, petitions for reconsideration and requests for an oral evidentiary hearing should be filed in Docket 45582, addressed to the Documentary Services Division, U.S. Department of Transportation, 400 Seventh Street SW., Room 4107, Washington, DC 20590, and should also be served on the Office of

Hearings, Room 9228, at the same address.

Dated: April 13, 1988.

Matthew V. Scocozza,

Assistant Secretary for Policy and International Affairs.

[FR Doc. 88-8445 Filed 4-18-88; 8:45 am]

BILLING CODE 4910-62-M

[Docket No. 45582]

Japan Charter Authorization Proceeding (1988/1989); Assignment of Proceeding

Served: April 14, 1988.

This proceeding has been assigned to Administrative Law Judge Ronnie A.Yoder. All future pleadings and other communications regarding the proceeding shall be served on him at the Office of Hearings, M-50, Room 9228, Department of Transportation, 400 Seventh Street, SW., Washington, DC 20590. Telephone: (202) 366-2142.

William A. Kane, Jr.,

Chief Administrative Law Judge.

[FR Doc. 88-8585 Filed 4-18-88; 8:45 am]

BILLING CODE 4910-62-M

Federal Railroad Administration

[BS-Ap-No. 2706]

CSX Transportation Co., City of Jackson, OH; Public Hearing

The CSX Transportation Rail Transport Group and the City of Jackson, Ohio, have petitioned the Federal Railroad Administation (FRA) seeking approval of the proposed discontinuance of the signal systems currently installed on its line between East Norwood, Ohio, and Belpre, Ohio, a distance of approximately 183 miles. This proceeding is identified as FRA Block Signal Application No. 2706.

After examining the carrier's proposal and the available facts, the FRA has determined that a public hearing is necessary before a final decision is made on this proposal.

Accordingly, a public hearing is hereby set for 10 a.m. on May 25, 1988, in Room 5515 of the John Weld Peck Federal Office Building at 550 Main Street in Cincinnati, Ohio.

The hearing will be an informal one, and will be conducted in accordance with Rule 25 of the FRA Rules of Practice (49 CFR 211.25), by a representative designated by the FRA.

The hearing will be a nonadversary proceeding and, therefore, there will be no cross-examination of persons presenting statements. The FRA representative will make an opening statement outlining the scope of the hearing. After all initial statements have been completed, those persons who wish to make brief rebuttal statements will be given the opportunity to do so in the same order in which they made their initial statements. Additional procedures, if necessary for the conduct of the hearing, will be announced at the hearing.

Issued in Washington, DC, on April 11, 1988.

J. W. Walsh,

Associate Administrator for Safety.

[FR Doc. 88-8443 Filed 4-18-88; 8:45 am]

BILLING CODE 4910-06-M

DEPARTMENT OF THE TREASURY

Public Information Collection Requirements Submitted to OMB for Review

Date: April 13, 1988.

The Department of Treasury has submitted the following public information collection requirement(s) to OMB for review and clearance under the Paperwork Reduction Act of 1980, Pub. L. 96-511. Copies of the submission(s) may be obtained by calling the Treasury Bureau Clearance Officer listed. Comments to the OMB reviewer listed and to the Treasury Department Clearance Officer, Department of the Treasury, Room 2224, 15th and Pennsylvania Avenue NW., Washington, DC 20220.

Internal Revenue Service

OMB Number: 1545-0197
Form Number: Forms 5300, 5301 and Schedule T (Form 5300)
Type of Review: Extension
Title: Application for Determination for Defined Benefit Plan for Pension Plans Other Than Money Purchase Plans; Application for Determination for Defined Contribution Plan for Profit-Sharing, Stock Bonus and Money Purchase Plans
Description: IRS needs certain information on the financing and operation of employee benefit plans set up by employers. IRS uses Forms 5300, 5301 and Schedule T (Form 5300) to obtain the information needed to determine whether the plans qualify under Code sections 401(a), and 501(a) for the related trust as tax exempt.
Respondents: Individuals or households, Businesses or other profit, Small businesses or organizations
Estimated Burden: 400,753 hours
Clearance Officer: Garrick Shear (202) 535-4297, Internal Revenue Service, Room 5571, 1111 Constitution Avenue NW., Washington, DC 20224
OMB Reviewer: Milo Sunderhauf (202) 395-6880, Office of Management and Budget, Room 3208, New Executive Office Building, Washington, DC 20503.

Lois K. Holland,

Departmental Reports Management Officer.

[FR Doc. 88-8536 Filed 4-18-88; 8:45 am]

BILLING CODE 4810-25-M

Public Information Collection Requirements Submitted to OMB for Review

Date: April 15, 1988

The Department of Treasury has submitted the following public information collection requirement(s) to OMB for review and clearance under the Paperwork Reduction Act of 1980, Pub. L. 96-511. Copies of the submission(s) may be obtained by calling the Treasury Bureau Clearance Officer listed. Comments to the OMB reviewer listed and to the Treasury Department Clearance Officer, Department of the Treasury, Room 2224, 15th and Pennsylvania Avenue NW., Washington, DC 20220.

Bureau of Alcohol, Tobacco and Firearms

OMB Number: New
Form Number: 5261
Type of Review: New Collection
Title: Notice of Maturing Treasury Note
Description: Form 5261 is used by owner, to have redemption proceeds of a security reinvested at maturity in a new security in the same form of registration.
Respondents: Individuals or households, Businesses or other for-profit
Estimated Burden: 15,000 hours

OMB Number: New
Form Number: 5262
Type of Review: New Collection
Title: Reinvestment Request for Treasury Notes and Bonds
Description: Form 5262 is used to request the reinvestment of a Treasury note or bond at maturity, to cancel a reinvestment request or change a reinvestment that was previously requested.
Respondents: Individuals or households, Businesses or other for-profit
Estimated Burden: 14,000 hours
Clearance Officer: Nancy Veret (202) 376-3902, Bureau of the Public Debt, Room 445, 999 E Street NW., Washington, DC 20226
OMB Reviewer: Milo Sunderhauf (202) 395-6880 Office of Management and Budget Room 3208, New Executive

Office Building, Washington, DC 20503.

Lois K. Holland,

Departmental Reports Management Officer.

[FR Doc. 88-8537 Filed 4-18-88; 8:45 am]

BILLING CODE 4810-25-M

Internal Revenue Service

[Delegation Order No. 228]

Delegation of Authority to Abate Interest Due to IRS Error or Delay

AGENCY: Internal Revenue Service, Treasury.

ACTION: Delegation of authority.

SUMMARY: This Delegation Order delegates the authority to abate assessed and unassessed interest due to IRS error or delay to certain IRS officials. The authority to abate interest, which is discretionary on the part of IRS, is permitted by new Internal Revenue Code section 6404(e)(1) which was enacted as part of the Tax Reform Act of 1986 (Pub. L. 99-514). The text of the Delegation Order is attached.

EFFECTIVE DATE: May 2, 1988.

FOR FURTHER INFORMATION CONTACT: Bob Curran, EX:E:D, 1111 Constitution Avenue, NW., Washington, DC 20224, (202) 566-3632.

Vernon R. Engen,

Acting Director, Office of Examination Programs.

Pursuant to the authority vested in the Commissioner of Internal Revenue by Treasury Order No. 150-10, the following officials are authorized to abate assessed and unassessed interest due to IRS error or delay under section 6404(e)(1) of the Internal Revenue Code: Chiefs of Appeals, Division Chiefs for Examination, Collection, Employee Plans and Exempt Organizations, Compliance, and Tax Accounts, and District Directors, Streamlined Districts.

This authority may be redelegated to Associate Chiefs of Appeals, District and Service Center Branch Chiefs in the above Divisions, and Section Chiefs in Streamlined Districts, and may not be further redelegated.

In any instance in which an IRC section 6404(e)(1) claim for interest abatement is immediately disallowable by statute, the assigned interest abatement coordinator is delegated authority to deny the claim. This authority may not be redelegated.

To the extent that the authority previously exercised consistent with this order may require ratification, it is hereby approved and ratified.

Michael J. Murphy,

Senior Deputy Commissioner.

Date: April 11, 1988.

[FR Doc. 88-8557 Filed 4-18-88; 8:45 am]

BILLING CODE 4830-01-M

Performance Review Board Membership

AGENCY: Internal Revenue Service, Treasury.

ACTION: Notice of Members of Senior Executive Service Performance Review Board.

DATE: Performance Review Board effective April 4, 1988.

FOR FURTHER INFORMATION CONTACT: DiAnn Kiebler, HR:H:E, Room 3515, 1111 Constitution Avenue, NW., Washington, DC 20224, Telephone No. (202) 566-4633 (not a toll free number).

SUPPLEMENTARY INFORMATION: Pursuant to section 4314(c)(4) of the Civil Service Reform Act of 1978, the members of the Internal Revenue Service's Senior Executive Service Performance Review Board for senior executives other than Assistant Commissioners, Regional Commissioners and executives in Inspection are as follows:

Michael J. Murphy, Senior Deputy Commissioner, Chairperson Michael P. Dolan, Assistant Commissioner (Human Resources Management and Support)

Robert I. Brauer, Assistant Commissioner (Employee Plans and Exempt Organizations)

Thomas P. Coleman, Regional Commissioner, Western Region

Richard C. Voskuil, Regional Commissioner, Southwest Region

Daniel N. Capozzoli, Assistant Commissioner (Computer Services), Alternate

Cornelius J. Coleman, Regional Commissioner, North Atlantic Region, Alternate

This document does not meet the criteria for significant regulations set forth in paragraph 8 of the Treasury Directive appearing in the **Federal Register** for Wednesday, November 8, 1978 (43 FR 52122).

Michael J. Murphy,

Acting Commissioner.

[FR Doc. 88-8558 Filed 4-18-88; 8:45 am]

BILLING CODE 4830-01-M

VETERANS ADMINISTRATION

Geriatrics and Gerontology Advisory Committee; Meeting

The Veterans Administration gives notice under Pub. L. 92-463 that a meeting of the Geriatrics and Gerontology Advisory Committee (GGAC) will be held in the Administrator's Conference Room on the 10th floor of the Veterans Administration Central Office, 810 Vermont Avenue NW., Washington, DC on May 9-10, 1988. The purpose of the Geriatrics and Gerontology Advisory Committee is to advise the Administrator and the Chief Medical Director relative to the care and treatment of the aging veterans, and to evaluate the Geriatric Research, Education and Clinical Centers established by the Department of Medicine and Surgery.

The meeting will convene at 8:30 a.m. on May 9 and adjourn at 4:30 p.m. On May 10, the meeting will convene at 8:30 a.m. and adjourn at noon. The theme will include the future of Geriatrics and Extended Care within the VA system. The Committee will receive short overviews of geriatric initiatives and status in the research, academic and patient care programs followed by an open question and answer session. The GGAC will receive an update on administrative details to include a case mix of programs, GRECC budgets, the Office of Geriatrics and Extended Care and the interaction between the GGAC with other committees such as the Special Medical Advisory Group (SMAG).

Because the capacity is limited, it will be necessary for those wishing to attend to contact Jacqueline Holmes, Program Assistant, Office of Assistant Chief Medical Director for Geriatrics and Extended Care, Veterans Administration Central Office (phone 202/233-3781) prior to May 2, 1988.

Dated: April 12, 1988.

By direction of the Administrator.

Rosa Maria Fontanez,

Committee Management Officer.

[FR Doc. 88-8470 Filed 4-18-88; 8:45 am]

BILLING CODE 8320-01-M

Sunshine Act Meetings

Federal Register
Vol. 53, No. 75
Tuesday, April 19, 1988

This section of the FEDERAL REGISTER contains notices of meetings published under the "Government in the Sunshine Act" (Pub. L. 94-409) 5 U.S.C. 552b(e)(3).

FEDERAL RESERVE SYSTEM BOARD OF GOVERNORS

TIME AND DATE: 11:00 a.m., Monday, April 25, 1988.

PLACE: Marriner S. Eccles Federal Reserve Board Building, C Street entrance between 20th and 21st Streets, NW., Washington, DC 20551.

STATUS: Closed.

MATTERS TO BE CONSIDERED

1. Proposals regarding the System's risk exposure on book-entry overdrafts.
2. Personnel actions (appointments, promotions, assignments, reassignments, and salary actions) involving individual Federal Reserve System employees.
3. Any items carried forward from a previously announced meeting.

CONTACT PERSON FOR MORE INFORMATION: Mr. Joseph R. Coyne, Assistant to the Board; (202) 452-3204. You may call (202) 452-3207, beginning at approximately 5 p.m. two business days before this meeting, for a recorded announcement of bank and bank holding company applications scheduled for the meeting.

Date: April 15, 1988.

William W. Wiles,

Secretary of the Board.

[FR Doc. 88-8681 Filed 4-15-88; 4:00 pm]

BILLING CODE 6210-01-M

EQUAL EMPLOYMENT OPPORTUNITY COMMISSION

DATE AND TIME: 9:30 a.m. (eastern time) Tuesday, April 26, 1988.

PLACE: Clarence M. Mitchell, Jr., Conference Room, No. 200-C on the Second Floor of the Columbia Plaza Office Building, 2401 E Street, NW., Washington, DC 20507.

STATUS: Part of the Meeting will be Open to the Public and Part will be Closed to the Public.

MATTERS TO BE CONSIDERED:

Open Session

1. Announcement of Notation Vote(s)
2. A Report on Commission Operations (Optional)

Closed Session

Litigation Authorization: General Counsel Recommendations

Note.—Any matter not discussed or concluded may be carried over to a later meeting. (In addition to publishing notices on the EEOC Commission meetings in the **Federal Register**, the Commission also provides a recorded announcement a full week in advance on future Commission sessions. Please telephone (202) 634-6748 at all times for information on these meetings.)

CONTACT PERSON FOR MORE INFORMATION: Hilda D. Rodriguez, Executive Officer (Acting) on (202) 634-6748.

Date: April 14, 1988.

Hilda D. Rodriguez,

Executive Officer (Acting) Executive Secretariat.

[FR Doc. 88-8637 Filed 4-15-88; 11:06 am]

BILLING CODE 6750-06-M

NUCLEAR REGULATORY COMMISSION

DATE: Weeks of April 18, 25, May 2, and 9, 1988.

PLACE: Commissioners' Conference Room, 11555 Rockville Pike, Rockville, Maryland.

STATUS: Open and Closed.

MATTERS TO BE CONSIDERED:

Week of April 18

Thursday, April 21

10:00 a.m.
Briefing on Status of Program for Performance Indicators (Public Meeting)

11:30 a.m.
Affirmation/Discussion and Vote (Public Meeting) a. Draft Order in the TMI-2 Leak Rate Proceeding

2:00 p.m.
Discussion of Management-Organization and Internal Personnel Matters (Closed—Ex. 2 & 6)

Week of April 25—Tentative

Thursday, April 28

3:30 p.m.
Affirmative/Discussion and Vote (Public Meeting) (if needed)

Week of May 2—Tentative

Wednesday, May 4

10:00 a.m.
Annual Briefing on the State of the Nuclear Industry (Public Meeting)

2:00 p.m.
Briefing on NRC Point Papers for Consultation Draft of the Site Characterization Plan for Yucca Mountain (Public Meeting)

Thursday, May 5

10:00 a.m.
Briefing on Naturally Occurring and Accelerator-Produced Radioactive Materials (Public Meeting)

2:00 p.m.
Briefing on Status of Operator Requalification Program (Public Meeting)

3:30 p.m.
Affirmative/Discussion and Vote (Public Meeting) (if needed)

Week of May 9—Tentative

Thursday, May 12

10:00 a.m.
Briefing on Status of Unresolved Safety/Generic Issues (Public Meeting)

2:00 p.m.
Briefing on Efforts to License a HLW Repository and Status of Center for Nuclear Waste Repository Analysis (Public Meeting)

3:30 p.m.
Affirmation/Discussion and Vote (Public Meeting) (if needed)

Note. Affirmation sessions are initially scheduled and announced to the public on a time-reserved basis. Supplementary notice is provided in accordance with the Sunshine Act as specific items are identified and added to the meeting agenda. If there is no specific subject listed for affirmation, this means that no item has as yet been identified as requiring any Commission vote on this date.

TO VERIFY THE STATUS OF MEETINGS CALL (RECORDING): (301) 492-0292.

CONTACT PERSON FOR MORE INFORMATION: William Hill (301) 492-1661.

William M. Hill, Jr.,

Office of the Secretary.

April 14, 1988.

[FR Doc. 88-8664 Filed 4-15-88; 3:03 pm]

BILLING CODE 7590-01-M

SECURITIES AND EXCHANGE COMMISSION

"FEDERAL REGISTER" CITATION OF PREVIOUS ANNOUNCEMENT: (53 FR 11589 April 7, 1988).

STATUS: Closed meeting.

PLACE: 450 5th Street, NW., Washington, DC.

DATE PREVIOUSLY ANNOUNCED: Monday, April 4, 1988.

VOL 53 ISS 75 AP 19 1988 UMI

CHANGES IN THE MEETING: Additional item.

The following item was considered at the closed meeting on Tuesday, April 12, 1988, at 2:30 p.m.

Report of Investigation.

Commissioner Peters, as duty officer, determined that Commission business required the above change.

At times in Commission priorities require alterations in the scheduling of meeting items. For further information and to ascertain what, if any, matters have been added, deleted or postponed, please contact: Alden Adkins at (202) 272–2014.

Shirley E. Hollis,

Assistant Secretary.

April 13, 1988.

[FR Doc. 88–8577 Filed 4–4–88; 4:55 pm]

BILLING CODE 8010–01–M

Corrections

Federal Register
Vol. 53, No. 75
Tuesday, April 19, 1988

This section of the FEDERAL REGISTER contains editorial corrections of previously published Presidential, Rule, Proposed Rule, and Notice documents and volumes of the Code of Federal Regulations. These corrections are prepared by the Office of the Federal Register. Agency prepared corrections are issued as signed documents and appear in the appropriate document categories elsewhere in the issue.

DEPARTMENT OF COMMERCE

Foreign-Trade Zones Board

[Order No. 377]

Approval for Expansion of Foreign-Trade Zone No. 66, Wilmington, North Carolina, Within the Wilmington Customs Port of Entry

Correction

In notice document 88-8216 appearing on page 12446 in the issue of Thursday, April 14, 1988, the heading was incorrect and should read as set forth above.

BILLING CODE 1505-01-D

DEPARTMENT OF THE INTERIOR

Bureau of Land Management

[AZ-940-08-4212-13; A-13138]

Arizona; Conveyance of Public Land; Order Providing for Opening of Land

Correction

In the issue of Wednesday, January 20, 1988, on page 1540 in the second column, a correction to FR Doc. 87-28304 appeared. The first line of the first correction was inaccurate and should have appeared as follows:

"NE¼, NW¼SW¼NE¼NW¼, S½S½".

BILLING CODE 1505-01-D

DEPARTMENT OF THE INTERIOR

Bureau of Land Management

[ES-940-08-4520-13; ES-038344, Group 10]

North Carolina; Filing of Plat of Dependent Resurvey

Correction

In notice document 88-7228 appearing on page 10952 in the issue of Monday, April 4, 1988, make the following correction:

The docket number should read as set forth above.

BILLING CODE 1505-01-D

DEPARTMENT OF THE INTERIOR

Bureau of Land Management

[OR-943-08-4220-10; GP-08-100; OR-41565 and OR-41566 (WASH)]

Transfer of Jurisdiction of Lands; Oregon and Washington

Correction

In notice document 88-6992 beginning on page 10443 in the issue of Thursday, March 31, 1988, make the following corrections:

1. On page 10443, in the second column, under T. 1 N., R. 5 E., in Sec. 14, in the second line "SE¼ and NE¼" should read "SE¼NE¼".

2. On the same page, in the same column, under T. 1 N., R. 5 E., the 11th and 12th lines should read "Sec. 22, SW¼SW¼;".

3. On the same page, in the third column, under T. 2 N., R. 14 E., in Sec. 13, in the second line, "SE¼NE¼" should read "SE¼NW¼".

4. On the same page, in the same column, under the heading *Geothermal Oil and Gas Estate only*, under T. 3 N., R. 11 E., remove the first line and insert "Sec. 27, SW¼NW¼.".

5. On the same page, in the same column, the sixth line from the bottom should read "and approximately 2,584.60 acres in Clark, Klickitat, and Skamania Counties, Washington.".

BILLING CODE 1505-01-D

DEPARTMENT OF JUSTICE

48 CFR Part 2804

[Justice Acquisition Circular 88-1]

Amendments to the Justice Acquisition Regulation (JAR) Regarding Ratification of Unauthorized Commitments and Prompt Payment

Correction

In rule document 88-8114 beginning on page 12421 in the issue of Thursday, April 14, 1988, make the following correction:

2804.7001 [Corrected]

On page 12421, in the third column, amendatory instuction 2 should read as follows:

"2. Section 2804.7001 is amended by removing paragraphs (a) and (b)."

BILLING CODE 1505-01-D

DEPARTMENT OF TRANSPORTATION

Federal Aviation Administration

14 CFR Part 71

[Airspace Docket No. 88-AWA-2]

Proposed Establishment of Airport Radar Service Areas

Correction

In proposed rule document 88-4937 beginning on page 7468 in the issue of Tuesday, March 8, 1988, make the following correction:

On page 7470, in the first column, in the first complete paragraph, in the last line, "§ 91.98" should read "§ 91.88".

BILLING CODE 1505-01-D

VOL 53 ISS 75 AP 19 1988 UMI

federal register

Tuesday
April 19, 1988

Part II

Environmental Protection Agency

40 CFR Parts 302 and 355

Reporting Continuous Releases of Hazardous Substances; Proposed Rule

VOL 53 ISS 75 AP 19 1988 UMI

ENVIRONMENTAL PROTECTION AGENCY

40 CFR Parts 302 and 355

[FRL-3207-4]

Reporting Continuous Releases of Hazardous Substances

AGENCY: Environmental Protection Agency (EPA).

ACTION: Proposed rule.

SUMMARY: Section 103(a) of the Comprehensive Environmental Response, Compensation, and Liability Act of 1980 (CERCLA), as amended, requires that the person in charge of a vessel or facility from which a hazardous substance has been released in a quantity that is equal to or greater than its reportable quantity (RQ) shall immediately notify the National Response Center of the release. Section 102(b) sets an RQ of one pound for hazardous substances, except those for which RQs have been established pursuant to section 311(b)(4) of the Clean Water Act. Section 102(a) authorizes the U.S. Environmental Protection Agency (EPA) to adjust RQs for hazardous substances and to designate as hazardous substances those substances that, when released into the environment, may present substantial danger to the public health or welfare or the environment.

Section 103(f)(2) of CERCLA provides relief from the reporting requirements of section 103(a) for a release of a hazardous substance that is continuous, stable in quantity and rate, and either is a release from a facility for which notification has been given under section 103(c) or is a release for which notification has been given under section 103(a) for a period sufficient to establish the continuity, quantity, and regularity of such release. Section 103(f)(2) provides further that in such cases, notification shall be given annually or at such time as there is any statistically significant increase in the quantity released of any hazardous substance. This rule presents the Agency's proposed interpretation of the section 103(f)(2) reduced reporting requirements.

DATES: Comments must be submitted on or before June 20, 1988.

ADDRESSES: The toll-free telephone number of the National Response Center is 1-800/424-8802; in the Washington, DC metropolitan area, the number is 1-202/426-2675.

Comments: Comments should be submitted in triplicate to: Emergency Response Division, Superfund Docket Clerk, Attention: Docket Number 103(f) CR, Room LG-100, U.S. Environmental Protection Agency, 401 M Street SW., Washington, DC 20460.

Docket: Copies of materials relevant to this rulemaking are kept in Room LG-100, at the above address. The docket is available for inspection between 9:00 a.m. and 4:00 p.m. Monday through Friday, excluding Federal holidays. Appointments to review the docket can be made by calling 202/382-3046. As provided in 40 CFR Part 2, a reasonable fee (the first 50 pages are free and each additional page costs $.20) may be charged for copying services.

FOR FURTHER INFORMATION CONTACT:

Mr. Hubert Watters, Project Officer, Response Standards and Criteria Branch, Emergency Response Division (WH-548B), U.S. Environmental Protection Agency, 401 M Street SW., Washington, DC 20460;
or the
RCRA/Superfund Hotline, 1-800/424-9346; in Washington, DC, 1-202/382-3000.

SUPPLEMENTARY INFORMATION: The contents of today's preamble are listed in the following outline:

I. Introduction
A. Background
B. Relationship to Reporting Under Title III
C. Current Requirements
II. The Continuous Release Reduced Reporting Requirement
A. EPA's General Approach
B. Key Concepts Included in the Proposed Rule
1. "Continuous"
2. "Stable in Quantity and Rate"
3. "For a Period Sufficient to Establish the Continuity, Quantity, and Regularity of the Release"
4. "Statistically Significant Increase"
5. Annual and Statistically Significant Increase Reporting
III. Regulatory Analyses
A. Executive Order No. 12291
B. Regulatory Flexibility Act
C. Paperwork Reduction Act

I. Introduction

A. Background

The Comprehensive Environmental Response, Compensation, and Liability Act of 1980 (Pub. L. 96-510), 42 U.S.C. 9601 *et seq.* (CERCLA or the Act), enacted on December 11, 1980, and amended by the Superfund Amendments and Reauthorization Act of 1986 (SARA) (Pub. L. 99-499), establishes broad Federal authority to respond to releases or threats of releases of hazardous substances from vessels and facilities. Section 101(14) of the Act defines the term "hazardous substances" by reference to other environmental statutes with authority further granted to the U.S. Environmental Protection Agency (EPA) to designate additional hazardous substances under CERCLA section 102(a). The CERCLA list currently contains 721 hazardous substances.

Section 103(a) of the Act requires that, as soon as the person in charge of a vessel or facility has knowledge of a release of a hazardous substance from such vessel or facility in a quantity equal to or greater than the reportable quantity (RQ) for that substance, that person shall notify the National Response Center immediately. Section 102(b) of CERCLA establishes RQs for releases of hazardous substances at one pound, except for those substances for which RQs were established pursuant to section 311(b)(4) of the Clean Water Act (CWA). Section 102(a) of CERCLA authorizes EPA to adjust all of these RQs. (See 40 CFR 302.4).

Section 103(b) authorizes penalties, including criminal sanctions, for persons in charge of vessels or facilities who fail to report releases of hazardous substances that equal or exceed RQs. Section 109 of SARA amends section 103(b) of CERCLA, increasing the maximum penalties and years of imprisonment. Any person who, as soon as that person has knowledge of a reportable release, fails to report the release immediately pursuant to section 103(a) or who submits any information that he or she knows to be false or misleading, shall, upon conviction, be fined in accordance with the applicable provisions of Title 18, United States Code (not more than $250,000 or $500,000, depending upon whether the violator is an individual or an organization), or imprisoned for not more than three years (or not more than five years for second and subsequent convictions), or both. Notifications received under section 103(a) or information obtained by exploitation of such notifications cannot be used against any reporting person in any criminal case, except a prosecution for perjury or for giving a false statement. Section 109 of SARA also provides for a system of administrative penalties for violations of CERCLA section 103(a), enforceable through civil proceedings.

Section 103(f)(2) of CERCLA modifies the general notification requirements of section 103 for certain releases. Releases may be reported less frequently than otherwise would be required, if they are "continuous" and "stable in quantity and rate," and notification has been given: (1) Under section 103(a) "for a period sufficient to establish the continuity, quantity, and regularity" of

the release or (2) under section 103(c), which requires notification to the Federal government of the existence of certain facilities that are or have been used for storage, treatment, or disposal of hazardous wastes but do not have Resource Conservation and Recovery Act (RCRA) interim status or a permit. Section 103(f)(2) pertains only to releases that are continuous and stable in quantity and rate, and requires that notification be given "annually, or at such a time as there is any statistically significant increase" in the quantity of the hazardous substance released.

The primary function of CERCLA's notification requirements is to alert government officials to the existence of a situation that may require a government response to protect public health or welfare or the environment. The National Response Center, upon receiving notification of a release, immediately alerts the appropriate on-scene coordinator (OSC) who then evaluates the need for a Federal response. Because episodic releases are almost always unanticipated from a response perspective, they must be reported as they occur. Continuous releases, on the other hand, are predictable.

Thus, instead of reporting every release as it occurs, the person in charge of a vessel or facility is allowed to report certain continuous releases less often under section 103(f)(2). The purpose of this section is to reduce unnecessary release reporting. When a release occurs regularly and in relatively stable amounts, Federal response officials do not have to be notified each time such a release occurs to have the information needed to decide whether a response to the release is necessary. However, Federal response authorities will continue to need some notification of these releases. Section 103(f)(2) provides that notification of continuous releases shall be given: (1) In an annual report, and (2) at such times as there is a statistically significant increase in the quantity released. Such notification must be given by: (1) The owner or operator of a facility for which initial notification of the release was provided under section 103(c), or (2) the person in charge of a vessel or facility who has provided notification of the release under section 103(a) for a period sufficient to establish the continuity and quantity and regularity of the release. The person in charge of a vessel or facility, of course, always retains the option of continuing to report these releases as they occur under section 103(a).

On May 25, 1983, EPA published a Notice of Proposed Rulemaking (NPRM) (48 FR 23552) to clarify procedures for reporting releases and to adjust RQs for some CERCLA hazardous substances. In the preamble to the May 25, 1983 proposed rule, the Agency discussed the reduced reporting requirements for continuous releases and set forth a number of ideas that were under consideration. EPA specificially requested comments on the most feasible approach for continuous release notification, the information to be required, the criteria for identifying a statistically significant increase in the release, and any other relevant issues. The Agency stated at that time that such information would enable it to develop a system that imposed a minimal burden on both the regulated community and the government, while achieving the underlying statutory objectives. EPA received 45 letters with comments on the reduced reporting requirement for continuous releases. Those comments are addressed in Section II of this preamble. The reduced reporting requirement for continuous releases was discussed again in the preamble to a final rule adjusting RQs, published on April 4, 1985 (50 FR 13456). EPA noted that due to the complexity of the issues involved, the Agency would study the continuous release reduced reporting requirement further and would not promulgate, at that time, a regulation related to continuous releases.

It should be noted that other provisions of the Act may apply even where CERCLA does not require notification or provide for reduced notification requirements. For example, a party responsible for a release of a CERCLA hazardous substance that is not a federally permitted release is liable for the costs of cleaning up that release and for any natural resource damages, even if the release is not subject to the notification requirements of CERCLA. Similarly, proper reporting of a release in accordance with section 103(a) or section 103(f)(2) does not preclude liability for cleanup costs. The fact that a release of a hazardous substance is reported properly or that it is not subject to the notification requirements of CERCLA will not prevent EPA or other government agencies from seeking reimbursement for cleanup from responsible parties under section 107, or pursuing an enforcement action against responsible parties pursuant to section 106. Therefore, this rulemaking should not be interpreted as reflecting Agency policy or the applicable law with respect to other provisions of the Act.[1]

B. Relationship to Reporting Under Title III

Title III of SARA (sections 301–329) addresses emergency planning and community right-to-know and provides, among other things, emergency and annual notification requirements in addition to those included in section 103 of CERCLA. EPA has provided (52 FR 13377, April 22, 1987; 52 FR 38345, October 15, 1987; and 53 FR 4503, February 15, 1988) and will continue to provide regulations and guidance on the Title III requirements as necessary and appropriate.

With respect to emergency notification requirements, section 304 of SARA provides release reporting requirements that parallel the requirements of section 103(a) but are intended to make release information immediately available to State and local emergency officials as well as Federal response officials notified under CERCLA section 103. In addition, section 304(a) requires reporting of: (1) Releases for which notification is required under section 103(a) of CERCLA, and (2) releases of "extremely hazardous substances" that are not hazardous substances under CERCLA but that "occur in a manner which would require notification under section 103(a)" of CERCLA. Thus, continuous releases that require annual reporting under CERCLA section 103(f)(2) rather than immediate reporting under CERCLA section 103(a), are not reportable under section 304 of SARA (see 52 FR 13384). "Statistically significant increases" must, however, be reported under SARA Section 304. To clarify the type of releases that are defined as continuous releases, and thereby exempt from SARA section 304 reporting, today's rule proposes to revise the applicability section of the regulations implementing section 304 (40 CFR 355.40(a)) to: (1) Add the definitions of "continuous" and "statistically significant increase" provided in this rule, and (2) provide references to today's proposed changes to 40 CFR Part 302.[2] Thus, the interpretation of

[1] Moreover, all releases of CERCLA hazardous substances, including federally permitted releases, are subject to liability provisions of Federal statutes other than CERCLA, State statutes, and common law (see Senate Report No. 96–848 (1980), p. 46).

[2] Today's rule also proposes to add language to 40 CFR 355.40(a)(2) that was deleted inadvertently in publishing the final rule (52 FR 13396, April 22, 1987). The proposal adds paragraph (a)(2)(iv) and provides that releases exempt from CERCLA section 103(a) reporting under section 103(e) (which

Continued

continuous release proposed in today's rule will define clearly the scope of the releases reportable under SARA section 304.

Section 313 of SARA also requires annual release reporting similar to annual continuous release reporting under CERCLA section 103(f)(2). Under SARA section 313, covered facilities must submit, on July 1, each year, a Toxic Release Inventory form to the EPA Administrator and to the State official or officials designated by the Governor. Annual notification requirements under section 313, however, are different in scope and purpose from CERCLA section 103 reporting requirements. Section 313 requirements apply only to facilities in the Standard Industrial Classification (SIC) Major Groups 20 through 39 (unless the Administrator exercises his discretion granted in sections 313(b)(1)(B) or 313(b)(2) to add or delete SIC groups or individual facilities); CERCLA places no such restrictions on its applicability. Also, the universe of substances covered by CERCLA and section 313 notification is not the same, that is, some substances subject to CERCLA notification requirements are not subject to section 313 requirements, and certain additional substances not subject to the CERCLA notification requirements are subject to the section 313 notification requirements. The purpose of the reporting requirements differ as well; the purpose of the SARA section 313 reporting requirement is to create a Federal inventory, while the purpose of the CERCLA section 103 reporting requirements is to alert Federal response officials of episodic releases that may require emergency response. Therefore, because of these differences between the section 313 requirements and section 103 reporting, the Agency believes it is appropriate to proceed with this proposed rule regarding section 103 notification requirements.

The Agency recognizes, however, that the application of the annual report provision of the continuous release reduced reporting requirement and the reporting requirement for the Toxic Release Inventory under SARA section 313 may result in duplicative reporting. Some facilities will be subject to the reporting requirements of both CERCLA section 103(f)(2) and SARA section 313, and some of the data and information required under both reporting requirements are the same. Some of the information required to be submitted by section 103(f)(2), however, is not required to be submitted under section 313. The Agency will attempt to deal with this potential for overlap of reporting in two ways. The Agency will, to the extent feasible, indicate in the section 103(f)(2) guidance and in the section 313 instruction documents where answers to certain questions will be useful in answering questions for the other reporting requirement. In addition, the Agency will initiate discussions with users of the section 103(f)(2) data to determine if the data to be submitted under section 313 would be sufficient for their needs. If the data would be sufficient, the Agency will consider allowing persons in charge of facilities subject to both section 103(f)(2) and section 313 to submit only the section 313 form for those chemicals appearing on both lists. The Agency requests comments on these approaches to minimize the duplicative reporting requirements.

C. Current Requirements

Until this rule is published in final form and has become effective, the person in charge of a vessel or facility must comply with the requirements for reporting continuous releases as set forth in the statute. The person in charge of a facility or vessel from which there is a release of a hazardous substance that is continuous and stable in quantity and rate, who reports in compliance with section 103(f)(2)(A) for releases from facilities, or section 103(f)(2)(B) for releases from vessels or facilities, may provide notification under section 103(f)(2) (i.e., annually and in the event of a statistically significant increase), instead of under section 103(a). Parties subject to the notification provisions of section 103 may use this proposed rulemaking as guidance for interpretation of the statutory requirements. All other releases of CERCLA hazardous substances must be reported in accordance with section 103(a) whenever such releases equal or exceed the RQ.

II. The Continuous Release Reduced Reporting Requirement

A. EPA's General Approach

In developing this proposed rule, EPA has been guided by several goals—to develop a regulation that is flexible enough to cover the variety of possible continuous release scenarios that might arise, to make the proposal as self-implementing as possbile, to ensure continued notification of releases for which a Federal response may be necessary, and to minimize the burden on both the regulated community and the government to the extent possible without compromising public health and the environment. Specific efforts to address these goals will be described in Section II.B. of this preamble where EPA's approach on the key concepts of the proposed regulation is discussed.

Comments frequently made in response to the Agency's May 25, 1983 NPRM, mentioned above, seem to confuse the continuous release reduced reporting requirement with the federally permitted release reporting exemption. A number of commenters on the May 25, 1983 NPRM have urged EPA to rely primarily on reporting under existing permitting programs and not to impose additional reporting requirements for continuous releases. Today's proposed rule does not impose any additional reporting requirements. Further, if a release meets the requirements necessary to be classified as a federally permitted release, the release is exempt entirely from reporting under CERCLA section 103. Thus, the reduced reporting procedure of section 103(f) is not applicable to federally permitted releases because it only applies to releases that must be otherwise reported under section 103.

B. Key Concepts Included in the Proposed Rule

1. "Continuous"

EPA proposes to define "continuous" as a release that is: (1) Continuous without interruption or abatement; (2) continuous during operating hours; or (3) continuous during regularly-occurring batch processes. The period over which such releases are evaluated is 24 hours.

One type of release that EPA had considered in its May 25, 1983 NPRM (48 FR 23559), which several commenters suggested should qualify as continuous, is a routine, anticipated, intermittent release that is incidental to normal manufacturing or treatment processes or operations. EPA has chosen not to include such releases within the definition of continuous releases in this proposed rule because the Agency believes that such a broad definition may not be adequately protective of human health and the environment and because such releases may be impossible to define in a meaningful way.

Continuous releases under the standard dictionary definition of the term "continuous" are releases that occur without interruption. Intermittent releases are releases that cease and recommence in a variable manner and thus do not fall clearly within the

applies to the application, handling, or storage of a pesticide registered under the Federal Insecticide, Fungicide, and Rodenticide Act) also are exempt from reporting under SARA section 304.

VOL 53 ISS 75 AP 19 1988 UMI

meaning of the term "continuous." In addition, because of the variable nature of intermittent releases, the degree of certainty and predictability associated with them (in terms of commencement, cessation, and amount released) may be considerably lower than it is for truly continuous releases. Further, many if not most continuous releases are controlled by a plant process or operation. A substantial number of intermittent releases may not be subject to such controls. Finally, the phrase "routine, anticipated, intermittent release" appears to be extremely vague and thus many episodic releases that may need Federal response would not be reported under section 103(a) if the definition of "continuous release" included such intermittent releases.

The Agency has become aware, however, of situations in which certain intermittent releases may have a high degree of certainty and predictability associated with them. Examples of such releases include releases that are stable in quantity and rate and result from (1) production of a batch of a substance at the same time every week that, for example, is used in the plant production process throughout the week; (2) the start-up of a machine every workday morning and its shutdown every workday evening; and (3) the use of a hazardous substance at a facility every day or at the same time every week. The Agency is considering allowing these routine, anticipated, intermittent releases that are predictable and stable with respect to quantity, rate, and time of occurrence to be considered "continuous" releases and subject to the reduced reporting requirements of section 103(f)(2). The immediate reporting of such releases would not enhance the OSC's ability to determine if a Federal field response is necessary.

The Agency has identified two options under which predictable, routine, anticipated, intermittent releases would be exempted from episodic release reporting requirements. Under the first option, routine, anticipated, intermittent releases that are predictable and stable in quantity, rate, and time of occurrence would be a category of releases for which the Agency would grant an administrative exemption from section 103(a) reporting on the basis that response officials would not need such information on a per-occurrence basis. Thus, such releases would not be defined as "continuous" releases but would be subjected to analogous requirements pursuant to EPA's general rulemaking authority under CERCLA. Under the second option, EPA would redefine "continuous" to include these routine releases as continuous releases, subject to the reduced reporting requirements under section 103(f). The effect of both options is the same; routine, anticipated, intermittent releases that are predictable and stable in quantity, rate, and time of occurrence would be subject to reduced reporting requirements. The Agency solicits comments on the concept of treating these routine releases as "continuous" releases, on how "intermittent, routine, anticipated releases" could be defined meaningfully, and on the options discussed above.

2. "Stable in Quantity and Rate"

EPA considered both quantitative and qualitative indicators as possible standards by which to judge compliance with this statutory requirement. Quantitative measures, such as a predetermined percentage variation from the mean, are more difficult for EPA to establish because of the large number of different types of industries that may be releasing hazardous substances on a continuous basis and because of the different types of releases (i.e. amounts, frequency, location in the process, etc.). A qualitative measure, on the other hand, seems to be more appropriate because it provides greater flexibility to the regulated community without reducing the protection of human health and the environment.

EPA has selected a qualitative measure that describes a release that is stable in quantity and rate as one that has a predictable quantity and rate during normal operations and is not the result of malfunction or upset conditions. The Agency solicits comments and supporting data on this approach to "stable in quantity and rate" and on whether there are other qualitative and quantitative measures that might be appropriate.

3. "For a Period Sufficient To Establish the Continuity, Quantity, and Regularity of the Release"

A number of commenters on the May 25, 1983 NPRM were in favor of letting the releaser determine this element of the continuous release provision. One argument offered was that the statistically significant increase provision would serve as an incentive to quantify releases accurately. Other commenters supported the establishment of a single time period for release reporting that would be the "period sufficient," while still others preferred a specified number of release reports to establish the period sufficient for determining whether a release was continuous and stable in quantity and rate.

The Agency has attempted to be flexible on this point. Because the definition of "continuous" encompasses different types of releases, the time frame and nature of the documentation necessary to show continuity, quantity, and regularity may differ as well.

EPA proposes to allow the person in charge to make the determination of the period appropriate to the particular release at issue. The Agency has not defined an acceptable time frame for the appropriate period because the quantity of data will vary greatly; for example, a frequent release will result in the generation of enough data to establish the predictability of the release in a short time while an infrequent release will slowly produce enough data to establish predictability. Both examples, however, may be continuous releases subject to the section 103(f)(2) reduced reporting requirement. Because notifications under section 103(a) (codified at 40 CFR 302.6) may not provide sufficient information to establish the continuity and predictability of a release, the person in charge may supplement the notifications made under 40 CFR 302.6 with recent release data, and any other relevant information. However this determination is made, it must include, at a minimum, the basis for continuity and the basis for asserting stability of quantity and rate. The Agency has further decided that the information forming the basis of the determination should not be sent to EPA at the time this determination is made, although the basis for asserting continuity and stability of quantity and rate is to be included as part of the annual report. This information must be kept on file at the facility or, in the case of a vessel, at an office within the United States in either a port of call or place of regular berthing. EPA will request or inspect this information as necessary to enforce the requirements of this section.

If a release is continuous and stable in quantity and rate within the meaning of this regulation, but there is a substantial change in the composition or character of the release (other than in the amount) due to some process change or other factors, the changed release is considered a different release, and qualification for the continuous release reduced reporting requirement must be reestablished.

4. "Statistically Significant Increase"

In the preamble to the May 25, 1983 proposed rule, EPA indicated that three alternatives were under consideration

for defining statistically significant increase:

- Requiring reporting whenever a release falls outside some expected range based on statistical tests, such as the "Student t" test;
- Requiring reporting whenever the amount released exceeds the amount ordinarily released by some pre-established factor, such as 2, 5, or 10 times the daily average; or
- Letting the releaser determine what is a statistically significant increase.

Commenters on these options expressed varying opinions as to which was the most appropriate approach.

EPA has evaluated a number of approaches and has decided to remain flexible. The Agency proposes to allow the person in charge of the vessel or facility to select the appropriate statistical test for identifying statistically significant increases in releases. For purposes of comparison in the statistical tests, releases refer to the total amount released (at or above the RQ) over a 24 hour period. The Agency is defining statistically significant increases as increases that would occur less than five percent of the time under normal conditions (i.e., conditions that prevail during the period establishing the continuity, quantity, and regularity of the release). EPA has selected the five percent significance level for the Type I error rate;[3] this level allows EPA to fulfill its mandate to protect the public health and the environment. The Agency believes that requiring reporting under section 103(f)(2) for only those releases falling at or above the five percent significance level strikes an appropriate balance between reducing reporting requirements and its responsibility to protect the public health and the environment. EPA is interested in obtaining comments on this approach and solicits suggestions from interested parties with data supporting a Type I error rate other than that employed in this proposal.

The Agency believes that the nonparametric statistical test using an estimate of the 95th percentile (as described below and in Appendix C to § 302.8 of the proposed regulation) should be applicable to all release situations. Statistically significant increases would be defined as those increases that fall at or above the estimate of the 95th percentile. This concept of a statistically significant increase in a release is consistent with CERCLA section 103(f)(2) that requires reporting of an "increase in the quantity * * * above that previously reported or occurring." Under certain circumstances where the underlying distribution is known (e.g., if there is a normal distribution and extensive existing release data), the control chart test, Student t test, or some other method may be more appropriate. The control chart test and Student t test are used commonly by industry where sufficient data exist to justify the underlying parametric assumptions. See Appendix C and the Background Document in Support of the Proposed Continuous Release Reporting Requirements under section 103(f)(2) of CERCLA (Background Document) for further information on the nonparametric, control chart, and Student t tests.

Under today's proposal, use of a test other than the described nonparametric test requires a demonstration of the test's appropriateness with respect to the particular release. A parametric test may be preferred by a facility or vessel because the test may be used commonly for some other purpose or because a parametric test designed for a specific distribution may be more sensitive than the described nonparametric test applied to the same distribution. For the control chart or Student t test, the person in charge must demonstrate that the test is appropriate for the facility's or vessel's underlying release distribution. For any other alternative statistical methodology (including any alternative parametric or nonparametric test), the person in charge must demonstrate that the test is: (1) Sensitive enough to identify accurately at lease 60 percent of the releases in the top five percent of all releases,[4] or (2) at least equivalent in sensitivity to the most sensitive test among the nonparametric test, the control chart test, or the Student t test described in Appendix C. Sensitivity is defined to be the number of releases identified by the test that are actually in the top five percent divided by the total number of releases in the top five percent (see Appendix C). Requiring an alternative test to be at least as sensitive as the most sensitive test evaluated by the Agency is expected to result in releasers using the most sensitive statistical test available.

The Agency expects all demonstrations to be updated annually to verify the appropriateness of the test for the particular release. The demonstration should not be submitted to EPA when performed, although the results of the latest demonstration are to be included in the annual report required by the statute. The demonstration must be kept on file by the person in charge and made available for review by EPA as necessary.

Use of the three statistical tests specifically mentioned above is discussed in detail in Appendix C to this proposed rule. Only a brief description of each is included here. The Background Document in support of this rulemaking discusses other statistical options evaluated by EPA.

The Agency is interested in receiving comments on the specific statistical tests described herein, as well as other tests that might be appropriate to identify statistically significant increases.

Briefly, the nonparametric test evaluated by EPA and included in this rule requires all releases to be recorded by the person in charge. A release at or above the RQ will be a statistically significant increase (and therefore must be reported to the National Response Center) if it is greater than the largest of the nineteen most recent releases. If fewer than nineteen releases have occurred, then the release would need to be reported to the National Response Center if it exceeds the largest release to date. Because the person in charge always is comparing the latest release to the last nineteen, the largest five percent of the releases generally will be reported, regardless of the underlying distribution.

The Agency is aware that if two large releases occur within a short period of time, with the first release being larger than the second release, the nonparametric test will identify only the first release as a statistically significant increase. The Agency acknowledges that the nonparametric test would not identify as a statistically significant increase large releases in circumstances such as these, and the National Response Center will not be notified immediately of the second large release. However, the OSC would have been notified immediately of the first large release, would have received, at least, the initial annual report from the facility, and will receive an annual report reflecting the second large release: thus the OSC would be able generally to evaluate the need for a Federal response. In addition, the nonparametric test has the advantage of being simple and straightforward, not requiring expensive and sophisticated

[3] Type I error is the probability of falsely assuming a difference. In this instance, the Agency has set that probability at five percent.

[4] EPA selected 60 percent as the appropriate sensitivity level based upon a simulation involving 1,000 different sets of 30 data points applied to the Student t and nonparametric statistical tests. Each observation was simulated for normal, log-normal, uniform, and randomly generated distribution. The results showed the tests were capable of identifying releases (in the top five percent) at least 60 percent of the time. EPA believes, therefore, that any alternative statistical methodology should demonstrate at least equivalent sensitivity

statistical analysis. It will identify successfully situations where conditions at a facility are deteriorating; other tests might not identify as statistically significant increases releases that are gradually getting larger over time. The Agency requests comments regarding the inability of the proposed test to identify the second of two large releases and seeks suggestions for refining the test to account for this gap.

The control chart test is generally very effective in cases of 30 or more release data points. For a normal distribution, it triggers a report when an observation exceeds a certain number of standard deviations above the mean.[5] If the new recorded release is less than this number of standard deviations above the mean, the release is not considered a statistically significant increase, and the release data point is added to the release history and a new mean and standard deviation are calculated. This control chart test will identify dependably releases in the top five percent only when the underlying distribution is normal. Control chart tests for different known distributions also can be developed and would be accepted provided they meet the criteria specified in § 302.8(d)(3) of the proposed rule.

The Student t test involves the calculation of a test statistic and a comparison of this test statistic with the t statistic for the upper five percent significance level. The test statistic is calculated by subtracting the mean of all releases (excluding the newest release) from the newest release, and dividing this difference by the standard deviation. The test statistic obtained is then compared to a table of reporting triggers, and if it equals or exceeds the relevant reporting trigger, the release is a statistically significant increase.

EPA realizes that by using the tests described above for releases that are declining consistently over time, no statistically significant increase would be reported. In such situations, however, the Federal OSC will have information concerning previous reports received by the National Response Center. In addition, the OSC will receive the annual report from the facility or vessel (as described below), and will be able to evaluate the need for any Federal response based on the information contained in the annual report. In the situation described above, because releases of hazardous substances are declining steadily, it is anticipated that relatively few Federal responses would be necessary. The Agency solicits comments on this proposed approach that may result in delayed responses.

5. Annual and Statistically Significant Increase Reporting

While Congress intended to reduce the otherwise applicable reporting requirements for continuous releases (as compared to episodic releases), it did not intend to eliminate them entirely. Annual and statistically significant increase reporting are required by section 103(f)(2) and are necessary to meet the underlying objective of this provision. Annual reports are necessary to keep Federal response officials alerted to frequent, anticipated but potentially worrisome releases. Statistically significant increases must be reported immediately to the National Response Center because such releases are not distinguishable from other episodic releases. Thus, the Agency cannot agree with the several commenters who found the concept of annual reporting to be "unnecessary" and "burdensome" and requested its elimination. EPA has attempted to interpret this statutory requirement with the same flexibility as other requirements of section 103(f)(2) so as to minimize the burden associated with recording or calculating any unnecessary or marginally useful information and data, and still remain consistent with statutory objectives.

The proposed rule requires that annual notification be made in writing to the OSC predesignated under the National Contingency Plan for the geographical area where the releasing facility or vessel is located. EPA believes it more appropriate that these reports be provided directly to the OSCs, rather than to the National Response Center, because this is not an immediate release notification and no emergency response generally will be required with respect to continuous releases (except statistically significant increases as discussed below). Rather, the OSCs in the Regions should be kept aware of releasers who are exceeding RQs on a continuous basis. Additionally, the annual report will enhance the OSC's ability to evaluate whether a response action is necessary to address a statistically significant increase.

Submission of the annual report does not require or imply any EPA approval of the report or the information contained therein. Materials used to support the information contained in the annual report, as well as other materials relevant to statistically significant increases, alternative statistical methodologies, and the continuity and stability of the release, need not be sent to EPA but instead should be kept on file at the facility, or in the case of a vessel, at an office within the United States, in either a port of call or a place of regular berthing. EPA may request such information as necessary to enforce the reporting requirements for continuous releases.

The proposed regulation lists the following items for inclusion in the annual report for each substance:

- The name/identity of the hazardous substance, the Chemical Abstract Service Registry Number (CASRN) for the substance (if available), the media affected, and the annual total pounds or kilograms released;
- A short statement of the basis for asserting continuity and stability of quantity and rate;
- The inclusive dates and the number of times the amount of the release during any 24-hour period exceeded the reportable quantity;
- The number of times statistically significant increases occurred and were reported to the National Response Center;
- The amount in pounds or kilograms of the mean release and the single largest release; and
- The type of statistical test used to determine statistically significant increases and the results of the sensitivity analysis (if required) as set forth in Appendix C.

Reporting of statistically significant increases should be made to the National Response Center in the manner set forth in 40 CFR 302.6 for all other notifications of hazardous substance releases that equal or exceed an RQ (50 FR 13456, April 4, 1985). Such releases represent situations that will need to be evaluated immediately to determine the necessity for a response action. In determining whether a statistically significant increase has occurred and needs to be reported, the person in charge should use a 24-hour period for measuring the quantity released.

III. Regulatory Analyses

A. Executive Order No. 12291

Rulemaking protocol under Executive Order (E.O.) 12291 requires that proposed regulations be classified as major or nonmajor for purposes of review by the Office of Management and Budget (OMB). According to E.O. 12291, major rules are regulations that are likely to result in:

(1) An annual effect on the economy of $100 million or more; or

(2) A major increase in costs or prices for consumers, individual industries, Federal, State, or local government agencies, or geographic regions; or

[5] EPA has defined this "certain number" to be 1.8485, which takes into account the asymptotic reduction in estimated mean and variance caused by excluding all values deemed reportable when in reality only five percent should be correctly regarded as reportable.

BEST COPY AVAILABLE

(3) Significant adverse effects on competition, employment, investment, productivity, innovation, or on the ability of United States-based enterprises to compete with foreign-based enterprises in domestic or export markets.

The Background Document shows that today's proposed regulation is nonmajor, because adoption of the proposed rule will result in a cost to government and the regulated community of approximately $36 million ($35.7 million to the regulated community). At the same time, this proposal is expected to generate cost savings to the government and the regulated community of approximately $406 million ($328 million to the regulated community), yielding a net benefit of about $370 million ($292 million to the regulated community). Moreover, the proposed rule will not cause a major increase in costs or prices mentioned in (2) above or cause any of the significant adverse affects mentioned in (3) above.

This document has been submitted to OMB for review as required by E.O. 12291.

B. Regulatory Flexibility Act

The Regulatory Flexibility Act of 1980 requires that a Regulatory Flexibility Analysis be performed for all rules that are likely to have a "significant impact on a substantial number of small entities." EPA certifies that this proposed regulation will not have a significant impact on a substantial number of small entities and that a Regulatory Flexibility Analysis is not required. See Chapter Six of the Background Document referenced above.

C. Paperwork Reduction Act

The information collection requirements in this proposed rule have been submitted to the Office of Management and Budget (OMB) under the Paperwork Reduction Act of 1980, 44 U.S.C. 3501 *et. seq.* Submit comments on these requirements to the Office of Information and Regulatory Affairs; OMB; 726 Jackson Place NW., Washington, DC 20503, marked "Attention: Desk Officer for EPA." The final rule will respond to any OMB or public comments on the information collection requirements.

List of Subjects

40 CFR Part 302

Air pollution control, Chemicals, Hazardous materials transportation, Hazardous substances, Hazardous wastes, Intergovernmental relations, Natural resources, Nuclear materials, Pesticides and pests, Radioactive materials, Reporting and recordkeeping requirements, Superfund, Waste treatment and disposal, Water pollution control.

40 CFR Part 355

Chemical accident prevention, Chemical emergency preparedness, Chemicals, Community emergency response plan, Community right-to-know, Contingency planning, Extremely hazardous substances, Hazardous substances, Reportable quantity, Reporting and recordkeeping requirements, Threshold planning quantity.

Dated: April 10, 1988.

Lee M. Thomas,

Administrator.

For the reasons set out in the preamble, it is proposed to amend Title 40 of the Code of Federal Regulations as follows:

PART 302—DESIGNATION, REPORTABLE QUANTITIES AND NOTIFICATION

1. The authority citation for Part 302 continues to read as follows:

Authority: 42 U.S.C. 9602; 33 U.S.C. 1321 and 1361.

2. Part 302 is amended by adding § 302.8 to read as follows:

§ 302.8 Continuous releases.

(a) Except as provided in paragraph (c) of this section, no notification shall be required under § 302.6 of this part for any release of a hazardous substance that has been determined pursuant to paragraph (b) of this section to be: continuous without interruption or abatement, continuous during operating hours, or continuous during regularly-occurring batch processes, and also a release that is stable in quantity and rate. A release that is stable in quantity and rate means a release that is predictable in amount and rate of emission during normal operations and does not result from malfunction or upset conditions.

(b)(1) Except as provided in section 103(f)(2)(A) of CERCLA, the person in charge of the facility or vessel must provide notification under § 302.6 for a period sufficient to establish the requirements of paragraph (a) of this section. The period sufficient for a particular release shall be determined by the person in charge. Where necessary to establish the conditions set out in paragraph (a) of this section, the person in charge may rely on recent release data or other relevant information to supplement notification under § 302.6.

(2) All documents, materials, and other information used to support: the determination that the release meets the conditions of paragraph (a) of this section, the notifications made under paragraph (c) of this section, and the demonstration under paragraphs (d)(2) and (d)(3) of this section, shall be kept on file at the facility or, in the case of a vessel, at an office within the United States in either a port of call or a place of regular berthing. Such information shall be made available to EPA upon request as necessary to enforce the requirements of this section.

(c)(1) Notification shall be given for any release qualifying for reduced reporting under this section:

(i) Annually; and

(ii) At such times as an increase in the quantity of the hazardous substance being released during any 24-hour period represents a statistically significant increase as described in paragraph (d) of this section.

(2) Initial notification of a continuous release and subsequent annual notification in accordance with paragraph (c)(1)(i) of this section shall be made in writing to the Federal On-Scene Coordinator designated, pursuant to 40 CFR Part 300, for the geographical area where the releasing facility or vessel is located. Initial notification shall occur at the time the person in charge of the facility or vessel claims that its releases qualify for reduced reporting under this section. Annual notification shall occur on a date to be elected by the reporting entity in the initial notification. The date elected in the initial notification for submittal of subsequent annual notifications shall be no later than one year from the day of filing of the initial notification. The annual notification shall include for each substance for which the continuous release reduced reporting requirement is claimed the following information concerning the release during the applicable reporting period:

(i) The name/identity of the hazardous substance, the Chemical Abstracts Service Registry Number (CASRN) for the substance (if available), the media affected, and the annual total pounds or kilograms released;

(ii) The basis for asserting continuity and stability of quantity and rate;

(iii) The inclusive dates and the number of times the amount of the release during any 24-hour period exceeded the reportable quantity;

(iv) The number of times statistically significant increases occurred and were

reported to the National Response Center;

(v) The amount in pounds or kilograms of the mean release and the single largest release; and

(vi) Pursuant to paragraph (d) of this section, the type of statistical test used to determine statistically significant increases and the results of the sensitivity analysis (if required) as set forth in Appendix C.

(3) Notification of a statistically significant increase shall be made to the National Response Center in the manner set forth in § 302.6.

(d) For the purposes of this section, statistically significant increases are the largest five percent of all continuous releases. A determination of whether an increase is a "statistically significant increase" shall be made based upon:

(1) The nonparametric statistical test using a distribution-free estimate of the 95th percentile as described in Appendix C of this section;

(2) The control chart test or Student t test, in accordance with the procedures set forth in Appendix C of this section, if it can be demonstrated that the underlying release distribution is normal; or

(3) Any other alternative statistical methodology that can be demonstrated to be:

(i) Sufficiently sensitive to identify accurately the releases in the top five percent at least 60 percent of the time; or

(ii) At least equivalent in sensitivity to the most sensitive test among the nonparametric test, the control chart test, or the Student t test described in Appendix C of this section.

(e) Multiple concurrent releases of the same substance occurring at various locations with respect to contiguous plants or installations upon contiguous grounds that are under common ownership or control shall be added together in determining whether such releases constitute a continuous release under paragraph (a) of this section or a statistically significant increase under paragraph (d) of this section.

(f) The reduced reporting requirements provided for under this section shall apply only so long as the person in charge complies fully with all requirements of paragraphs (b) and (c) of this section. Failure of such compliance with respect to any release from the facility or vessel shall subject the person in charge to all of the reporting requirements of § 302.6 for each such release and to the penalties under § 302.7 for failure to notify, and to any other applicable penalties provided for by law.

Appendix C to § 302.8—Procedure for Determining Statistically Significant Increases

The purpose of this appendix is to describe procedures for determining statistically significant increases under 40 CFR 302.8(d). Statistical tests are to be used to determine whether a specific release represents a statistically significant increase. EPA has defined a statistically significant increase as an increase that would occur only less than five percent of the time under normal conditions. The choice of the appropriate statistical test to use depends upon the number of data points available to the person in charge of the vessel or facility from which a release occurs and the underlying release distribution. If a parametric test specified in the rule is employed, the person in charge must maintain on file at the facility a demonstration that the particular test used to identify statistically significant increases is appropriate for the release distribution being tested. Use of a statistical methodology not specified in the rule requires a demonstration that the methodology chosen is at least 60 percent accurate in identifying statistically significant increases or, if not, is at least equivalent insensitivity to the most sensitive test among the nonparametric test, the control chart test, or the Student t test described in the rule.

Section 1 of this appendix describes the nonparametric test identified by the Agency; Section 2 of this appendix describes the parametric tests evaluated by the Agency and considered generally acceptable; and Section 3 of this appendix discusses the demonstration required to show the appropriateness of a particular statistical methodology.

The statistical procedures descibed in this appendix assume that data used in the various tests are collected under the same circumstances and in the same manner. That is, the data set must be homogeneous. If the production process is altered, or if there are substantial increases or decreases in production levels, the data collection and analytical process must begin again.

1. Nonparametric Statistical Tests

The Agency evaluated a nonparametric test for situations where the person in charge of a vessel or facility may not know the underlying distribution of the releases. The nonparametric test evaluated by EPA is appropriate for situations where any number of data points are available. The test evaluated is a distribution-free statistical evaluation based on the estimate of the 95th percentile.

The nonparametric test evaluated by EPA requires that a release of an RQ or more be reported to the National Response Center if the release exceeds the largest of the 19 most recently recorded releases. If fewer than 19 releases have been recorded, then the release would need to be reported to the National Response Center if it exceeds the largest previous release recorded to date. In essence, this nonparametric test is always comparing the newest release to the immediately previous 19 releases and is generally identifying the largest five percent of all releases as statistically significant increases.

In the following example, the person in charge of a facility releasing a CERCLA hazardous substance with an RQ of 10 pounds has made reports to the National Response Center for a determination period sufficient to establish the continuity and stability of the release. After such determination is made, the person in charge begins to identify those releases that are statistically significant increases. Releases in the post-determination period are compared with releases from the determination period. Assume that only five releases occurred in the determination period, as follows:

Release A—40 pounds
Release B—45 pounds
Release C—30 pounds
Release D—40 pounds
Release E—20 pounds

Following written notification to the OSC, reports of statistically significant increases would need to be made to the National Response Center as noted:

Release 1—50 pounds; Report
Release 2—70 pounds; Report
Release 3—40 pounds; No Report
Release 4—150 pounds; Report
Release 5—60 pounds; No Report
Release 6—70 pounds; No Report
Release 7—60 pounds; No Report
Release 8—40 pounds; No Report
Release 9—70 pounds; No Report
Release 10—50 pounds; No Report
Release 11—100 pounds; No Report
Release 12—50 pounds; No Report
Release 13—60 pounds; No Report
Release 14—30 pounds; No Report
Release 15—70 pounds; No Report
Release 16—90 pounds; No Report
Release 17—40 pounds; No Report
Release 18—95 pounds; No Report
Release 19—100 pounds; No Report
Release 20—50 pounds; No Report
Release 21—30 pounds; No Report
Release 22—40 pounds; No Report
Release 23—90 pounds; No Report
Release 24—60 pounds; No Report
Release 25—110 pounds; Report

For each release 1 through 14, a report would be made to the National Response Center if it exceeds the largest previous release. Thus, releases, 1, 2 and 4 would be reported. Release 15 is then compared to releases A through 14 and is found not to be a statistically significant increase. Release 15 is then added to the release history and release A is deleted. Release 16 would be compared to releases B through 15. Because the release history contains at least one release that exceeds the 90 pounds in release 16, no report is needed. Release 16 is added to the release history and release B is deleted. For release 25, the relevant release history includes releases 6 through 24 (the most recent 19 releases). The 110 pounds in release 25 does need to be reported to the National Response Center because it exceeds the largest of the most recent 19 releases (even though release 4 is larger, it is no longer in the data base for purposes of comparison).

Over time, the nonparametric test will tend to identify successfully the largest five percent of all releases but it will not identify perfectly all outliers. The nonparametric test involves a sequential analysis, allowing for updating and modification of the reporting trigger. In the example above, the 100 pounds in releases 11 and 19 do not need to be reported but the 110 pounds in release 25 does need to be reported. This result occurs because the reporting trigger is being updated continually. Given the small amount of data available for releases A through 14, releases of less than 150 pounds do not appear to represent statistically significant increases. As more data become available, however, the test uses the newer data to reevaluate the reporting trigger.

A non parametric test is most appropriate in situations where the person in charge of the vessel or facility does not have historical data available and is unaware of the underlying release distribution. This nonparametric test does not require sophisticated statistical calculations; it is performed by simply comparing each new release to the most recent 19 releases.

2. Parametric Statistical Tests

EPA has analyzed the following two parametric tests for use in identifying a statistically significant increase and has found that when these tests reflect the appropriate underlying release distribution, they are sufficiently sensitive in identifying the largest five percent of all releases.

2.1 Student t Test

The Student t test is designed for use when the underlying release distribution is a normal distribution. The Student t test involves the calculation of a test value and a comparison of this test value with the t statistic. The test value is calculated by subtracting the mean of all releases (excluding the newest release) from the newest release, and dividing this difference by the standard deviation.

$$\text{Student t Test Value} = \frac{X_n - \bar{X}}{S},$$

where X_n is the most recent release, $\bar{X}$ is the mean or average of all releases excluding the newest release, and S is the sample standard deviation. $\bar{X}$ and S are calculated using the following formulas:

$$\bar{X} = \frac{X_1 + X_2 + \ldots + X_{n-1}}{n-1} \quad \text{and} \quad S = \sqrt{\frac{(X_1-\bar{X})^2 + (X_2-\bar{X})^2 + \ldots + (X_{n-1}-\bar{X})^2}{n-2}}$$

where n represents the number of releases in the data set.

The newest release is not included in the calculation of the mean and standard deviation for the Student t test. The test value obtained is compared to a table of reporting triggers shown in Exhibit 1. If the test value equals or exceeds the reporting trigger, the release is a statistically significant increase and must be reported to the National Response Center.

The Student t test is designed for use in situations when there are 30 or fewer data points, although it can be used when more than 30 data points are available. After 30 data points are accumulated, the Control Chart test (discussed in Section 2.2 below) and the Student t test are essentially synonymous because the reporting trigger is equivalent to a release of 1.645 standard deviations above the mean (see Exhibit 1).

EXHIBIT 1—STUDENT t TEST REPORTING TRIGGERS

	Reporting trigger at 95th percentile level
Number of observations:	
1	6.314
2	2.920
3	2.353
4	2.132
5	2.015
6	1.943
7	1.895
8	1.860
9	1.833
10	1.812
11	1.796
12	1.782
13	1.771
14	1.761
15	1.753

EXHIBIT 1—STUDENT t TEST REPORTING TRIGGERS—Continued

	Reporting trigger at 95th percentile level
16	1.746
17	1.740
18	1.734
19	1.729
20	1.725
21	1.721
22	1.717
23	1.714
24	1.711
25	1.708
26	1.706
27	1.703
28	1.701
29	1.699
inf	1.645

2.2 Control Chart Test

The Control Chart test can only be used when at least 30 releases have been recorded. The Control Chart test is a dynamic test in that uses prior releases to form a data set in which the mean and standard deviation are calculated. When a new release is recorded, its value is compared to the reporting trigger. For a normal distribution, the reporting trigger is defined to be the mean (X) plus 1.8485 times the standard deviation. If the newly recorded release is less than [$\bar{X}$ + (1.8485) (S)], then the release is not considered to be a statistically significant increase and does not need to be reported to the National Response Center. The release is then added to the release history and a new mean and standard deviation are calculated. If the next new release is greater than [$\bar{X}$ + (1.8485)(S)], then the release must be reported to the National Response Center and the release is not included in the release history; there is no recalculation of the mean and standard deviation.

This Control Chart test will dependably identify the top five percent of releases only when the underlying distribution is normal. If the underlying distribution is lognormal, for example, the Control Chart test as presented above will trigger reporting of fewer than five percent of the releases. An appropriate Control Chart test can be developed for any known distribution for which there is a specific mathematical equation for the cumulative distribution, or for which there exists a published table of the distribution. To use the Control Chart test to identify release in the top five percent, it is imperative that the underlying distribution be known.

Example

Release 1—10 pounds
Release 2—15 pounds
Release 3—70 pounds

Release 4—30 pounds
Release 5—60 pounds
Release 6—50 pounds
Release 7—40 pounds
Release 8—80 pounds
Release 9—70 pounds
Release 10—70 pounds
Release 11—30 pounds
Release 12—40 pounds
Release 13—50 pounds
Release 14—90 pounds
Release 15—47 pounds
Release 16—12 pounds
Release 17—25 pounds
Release 18—33 pounds
Release 19—75 pounds
Release 20—100 pounds
Release 21—110 pounds
Release 22—50 pounds
Release 23—105 pounds
Release 24—80 pounds
Release 25—40 pounds
Release 26—20 pounds
Release 27—60 pounds
Release 28—40 pounds
Release 29—90 pounds
Release 30—40 pounds

For the 30 releases shown above, the mean is 54.40 and the sample standard deviation is 28.14 (the general method for calculating a mean and standard deviation is described in Section 2.1 above). Any release greater than 106.42 pounds [54.40+(1.6585)(28.14)] must be reported to the National Response Center. If release 31 equals 90 pounds, it is less than the trigger value of 106.42 pounds and need not be reported to the National Response Center. This release is added to the data set and a new trigger value is calculated. The sample standard deviation now equals 28.39, the mean equals 55.55, and the trigger value is equal to 108.03. If release 32 is equal to 110 pounds, it must be reported to the National Response Center because it is greater than the trigger value of 108.03 pounds. The trigger value remains the same for the next release because the 110 pound release is not added to the release history and no new standard deviation is calculated.

3. Demonstration Requirements for Alternative Tests

Persons in charge who want to use a statistical test other than the nonparametric test discussed above need to demonstrate the appropriateness of the test. The demonstration must include the following:

• If the statistical test used is the Student t test or the Control Chart test described in Section 2 above the demonstration must show that the underlying release distribution is normal.

• For any other alternative test, the person in charge must present evidence that the sensitivity of the alternative test is at least 60 percent accurate in identifying the true outliers or, if not, is at least equivalent in sensitivity to the most sensitive test among the nonparametic test, the control chart test, or the Student t test, described above. The demonstration must be made on a data set of at least 100 data points. The actual outliers must first be identified by examining the test data base and determining which releases are in fact in the top 5 percent of all releases. This determination involves a straightforward observation of the test data base. The alternative test must then be applied to this same data set to determine the sensitivity of the test. Sensitivity is defined to be the fraction of release identified by the test that are actually in the top 5 percent of all releases over the total number of releases in the top 5 percent. This ratio must be at least 0.6 or the alternative test must be at least as sensitive as the three tests mentioned above.

For example, if the test data set contains 200 releases, the demonstration begins by first identifying the largest 10 releases in the data set (the largest 5 percent of all releases). The alternative test must then be applied to these 200 releases. The sensitivity of the alternative test is the number of correctly identified statistically significant increases over the total number of statistically significant increases. If the alternative test correctly identifies 7 of the 10 releases in the top 5 percent, then the sensitivity of the alternative test is 0.7 and the demonstration is complete and satisfactory. If the alternative test correctly identifies only 5 of the 10 releases in the top 5 percent, then the sensitivity of the alternative test is only 0.5. Although the sensitivity is less than 0.6, the alternative test would still be considered acceptable if the nonparametric test, control chart test, or Student t test outlined above applied to the same data set also are only capable of identifying 5 of the 10 releases in the top 5 percent. The sensitivity of the alternative test would then be equivalent to the sensitivity of the three tests described above and the demonstration would be complete and satisfactory.

All demonstrations must remain on file at the facility (or, in the case of a vessel, at an office within the United States in either a port of call or place of regular berthing) and must be made available to EPA upon request.

PART 355—EMERGENCY PLANNING AND NOTIFICATION

3. The authority citation for Part 355 is revised to read as follows:

Authority: 42 U.S.C. 11002 and 11048.

4. Section 355.40 is amended by revising paragraphs (a)(1) and (a)(2)(iii), adding (a)(2)(iv), and revising (a)(2)(v) and the note to paragraph (a) to read as follows:

§ 355.40 Emergency release notification.

(a) *Applicability.* (1) The requirements of this section apply to any facility:

(i) At which a hazardous chemical is produced, used, or stored; and

(ii) At which there is a release of a reportable quantity of any extremely hazardous substance or CERCLA hazardous substance.

(2) * * *

(iii) Any release that is:

(A) Continuous without interruption or abatement;

(B) Continuous during operating hours; or

(C) Continuous during regularly-occurring batch processes, and stable in quantity and rate, as determined in accordance with 40 CFR 302.8 (except for "statistically significant increases" defined in 40 CFR 302.8(d) as the largest five percent of all continuous releases and determined in accordance with the statistical methodologies described in § 302.8(d));

(iv) Any release of a pesticide product exempt from CERCLA section 103(a) reporting under section 103(e) of CERCLA; and

(v) Any release exempt from CERCLA section 103(a) reporting under section 101(22) of CERCLA.

Note: Releases of CERCLA hazardous substances are subject to the release reporting requirements of CERCLA section 103, codified at 40 CFR Part 302, in addition to the requirements of this part.

* * * * *

[FR Doc. 88-8550 Filed 4-18-88; 8:45 am]

BILLING CODE 6560-50-M

VOL
53
ISS
75
AP
19
1988
UMI

federal register

Tuesday
April 19, 1988

Part III

Department of Commerce

National Bureau of Standards

15 CFR Part 7

Privatization of Certain Functions of the National Voluntary Laboratory Accreditation Program; Request for Comments

DEPARTMENT OF COMMERCE

National Bureau of Standards

15 CFR Part 7

[Docket No. 80354-8054]

Privatization of Certain Functions of the National Voluntary Laboratory Accreditation Program

AGENCY: National Bureau of Standards, Commerce.

ACTION: Request for comments.

SUMMARY: The National Bureau of Standards (NBS) requests public comments on the feasibility, advisability and appropriateness of permitting private institutions to assume responsibility for the accreditation of laboratories in specified technical areas for which NBS now accredits laboratories under the procedures of the National Voluntary Laboratory Accreditation Program (NVLAP). NBS would withdraw from accreditation activities in the particular technical area if (1) public comments support the withdrawal of accreditation activities by NBS in the particular technical area; and (2) competent private organizations were identified that would be capable of performing accreditation in that technical area. NBS is considering this initiative in accord with the Administration's policy to privatize appropriate governmental activities. NVLAP accreditation activities will continue without interruption during the time when this initiative is under consideration.

DATE: Responses to this request for comments must be received by June 20, 1988.

ADDRESS: Comments should be mailed to Dr. Stanley I. Warshaw, Director, Office of Products Standard Policy, Room A602 ADMIN, National Bureau of Standards, Gaithersburg, MD 20899.

FOR FURTHER INFORMATION CONTACT: Stanley I. Warshaw, (301) 975-4000.

SUPPLEMENTARY INFORMATION: NVLAP is a voluntary program of NBS under which testing laboratories found competent to perform tests or types of tests in specific technical areas are accredited. NVLAP is completely self-sustaining from user fees paid to it by the laboratories it accredits, and receives no appropriated funds. The NVLAP accreditation procedures appear as part 7 of title 15 of the Code of Federal Regulations, and are summarized in brief below. Subpart A of the NVLAP procedures contains a description of the program and its objectives. Subpart B of the procedures describes how particular technical areas are selected for accreditation by the NVLAP program, and how the technical requirements for accreditation in a particular area are determined. In short, the decision to offer NVLAP accreditation in a particular technical area is made by NBS only after a notice and comment process in the **Federal Register** has established the need for accreditation. The technical requirements which a laboratory must meet in order to be accredited are then established by NBS, based on expert advice obtained through workshops and other means.

Once the requirements of Subpart B are met for a particular area, individual laboratories may request NBS accreditation and be evaluated by NVLAP under the procedures found at Subpart C of the NVLAP regulations. Upon the receipt of a request for accreditation from a laboratory, and after the payment of appropriate fees, NVLAP arranges, by contract or otherwise, for an assessment and evaluation of the laboratory by a qualified expert. After receiving the evaluation report, NBS either grants or denies the application for accreditation. A laboratory denied accreditation may seek a hearing to appeal the decision under the provisions of section 556 of Title 5 of the United States Code. The conditions and criteria upon which NBS's accreditation decisions are made may be found at Subpart D of the NVLAP regulations.

Consistent with the Administration's goal of privatizing appropriate Federal functions and activities, NBS is contemplating the feasibility, advisability and appropriateness of permitting private institutions to assume responsibility for the accreditation of laboratories in specified technical areas for which NBS now accredits laboratories under the NVLAP procedures. Private organizations would evaluate laboratories and would grant accreditation on their own behalf. NVLAP accreditation activities will continue without interruption during the time when this initiative is under consideration.

The process whereby NBS would withdraw from accreditation of laboratories in a specific technical area is envisioned to work as follows. In accordance with § 7.19 of the NVLAP procedures, the Director of NBS would issue a **Federal Register** notice stating that NBS was considering withdrawing from accreditation activity in a particular technical area. The notice would seek public comment on the proposed termination of accreditation, and would seek statements by private sector organizations of interest in undertaking accreditation activities in the technical area that NBS had proposed to vacate. NBS would end its accreditation activities in the particular technical area if (1) public comments support the withdrawal of accreditation activities by NBS in the particular area; and (2) competent private organizations were identified that would be capable of performing accreditation in that technical area. However, NBS will not withdraw from any accreditation activity mandated by statute, such as the Asbestos Hazard Emergency Response Act of 1986 (Pub. L. 99-519) or pending trade legislation. NBS would not monitor the continuing activities of any private organization that took over accreditation activities now performed by NVLAP, nor would NBS offer an appeals process for laboratories seeking accreditation or accredited by those private organizations.

Request for Comments

Comments are encouraged from interested parties on all aspects of the proposal described in this notice, including its feasibility, advisability and appropriateness. Comments are also requested on the following issues pertaining to the mechanics of the process of transferring specific accreditation activities to the private sector:

VOL 53 ISS 75 AP 19 1988 UMI

1. Should NBS establish criteria which potential private accrediting organizations must meet before NBS would withdraw from accreditation in a particular technical area? Further, should NBS formally recognize other accreditation organizations that satisfy these criteria?

2. What fees, if any, would be appropriate for NBS to charge to those private organizations that begin to operate functions now performed by NBS? (These fees might recover the cost of NBS close-out activities and the original development costs of the NVLAP program which were paid for from appropriated funds, as well as additional fees for market opportunity and enhancement through this action.)

Comments responding to this notice should be submitted not later than June 20, 1988 to Dr. Stanley I. Warshaw, Director, Office of Products Standard Policy, Room A602 ADMIN, National Bureau of Standards, Gaithersburg, MD 20899. All written Comments furnished in response to this notice will become part of the public record and will be available for inspection and copying in the Department's Central Reference and Records Inspection Facility, Herbert Hoover Building, Room 6628, 14th Street between E Street and Constitution Avenue NW., Washington, DC 20230.

Ernest Ambler,

Director.

[FR Doc. 88-8474 Filed 4-18-88; 8:45 am]

BILLING CODE 3510-13-M

VOL
53

ISS
75

AP
19

1988

UMI

federal register

Tuesday
April 19, 1988

Part IV

Department of Labor

Employment and Training Administration

Research, Evaluation, and Pilot and Demonstration Projects Program; Fiscal Year 1988; Availability of Funds and Request for Applications; Notice

DEPARTMENT OF LABOR

Employment and Training Administration

Research, Evaluation, and Pilot and Demonstration Projects Program; Fiscal Year 1988; Availability of Funds and Request for Applications

AGENCY: Employment and Training Administration, Labor.

ACTION: Notice of availability of funds and of Solicitation for Grant Applications.

SUMMARY: The Employment and Training Administration announces the availability of funds for its Stewart B. McKinney Homeless Assistance Act Job Training for the Homeless Demonstration Program for Fiscal Year 1988.

DATES: The closing for receipt of applications under this anouncement is June 20, 1988. To receive consideration, applications submitted by mail must be postmarked no later than June 13, 1988.

Hand-delivered applications must be received by 2:00 p.m., local time, on June 20, 1988. The term "postmark" means a printed, stamped or otherwise placed impression (exclusive of postage meter machine impression) that is readily identifiable without further action as having been supplied or affixed on the date of mailing by employees of the U.S. Postal Service.

ADDRESS: It is preferred that applications be mailed. Mail or hand deliver applications to: U.S. Department of Labor, Employment and Training Administration, Office of Financial and Administrative Management, Division of Acquisition and Assistance, Room C-4305, 200 Constitution Avenue, NW., Washington, DC 20210, Attention: John Mitchka, Reference: *SGA/DAA 103-88.*

FOR FURTHER INFORMATION CONTACT: John Mitchka, Division of Acquisition and Assistance, Telephone: (202) 523-7092.

SUPPLEMENTARY INFORMATION: The Employment and Training Administration (ETA) announces the availability of funds for its Job Training for the Homeless Demonstration Program for Fiscal Year 1988 and a Solicitation for Grant Applications under that program. Funding for these grants is authorized by the Stewart B. McKinney Homeless Assistance Act, Pub. L. 100-77, section 731(a), 101 Stat. 482, 528 (1987).

This program announcement consists of four parts. Part I provides background information on the ETA Research, Evaluation, and Pilot and Demonstration Projects Program. It describes the need for and the legislative background of job training for the homeless. Part II describes the program for which ETA solicits applications for funding of job training projects for homeless individuals. Part III describes the grant application process, and Part IV provides guidance on how to prepare and submit an application.

Part I—Background

A. ETA's PY 1987 and FY 1988 Research, Evaluation, and Pilot and Demonstration Program in Relation to Workforce 2000

This Solicitation for Grant Applications (SGA) notice, covering the general subject of job training for the homeless, is one of a series of such notices pertaining to different subject areas for which grant and contract awards will be made by ETA during Program Year 1987 (July 1, 1987–June 30, 1988) and during Fiscal Year 1988 (October 1, 1987–September 30, 1988), for research, evaluation, and pilot and demonstration (REP&D) projects. The other areas initially announced in 52 FR 41366 (October 27, 1987) are: State and Local Coordination, Labor Market Research, Workplace Literacy, Job Training Partnership Act, Employment Service/Unemployment Insurance/Labor Market Information, and Partnership.

These areas, which constitute the major portion of the PY 1987 and Fiscal Year 1988 REP&D Program, support the Department of Labor's (DOL) Workforce 2000 mission. According to recent DOL studies, the bulk of labor force entrants between now and the year 2000 will consist of groups that have been traditionally underutilized or have experienced labor market barriers—women, minorities, immigrants, and the homeless. At the same time, the employment base of the economy is changing in structure from that of manufacturing to services. Many new jobs will require higher levels of reading, communication, mathematical and problem-solving skills than at present.

We now face an unprecedented opportunity and need to help prepare those who have suffered chronic unemployment or underemployment—including homeless individuals—to meet the evolving requirements for workforce participation. The purpose of this program announcement is to solicit projects that will provide the information and data that are necessary before a national policy on training for the homeless may be developed.

In FY 1988, ETA will make grant awards for demonstration projects that provide for job training activities for homeless individuals. It is anticipated that a maximum of $7.359 million will be available to support approximately 25 demonstration projects nationwide. These funds must be expended by grantees by September 30, 1989.

B. The Homeless—Their Need for Employment and Training

No one knows exactly how many homeless people live in the United States. The estimates range from 250,000 to over 3 million individuals. It follows, therefore, that the number or proportion of the homeless who are employed, unemployed or employable is also unknown.

We do know that homeless persons often have a history of poverty. Further, while there are multiple and interrelated factors contributing to homelessness, the factor most often cited as contributing to homelessness is unemployment. Other factors often mentioned are the decline in the supply of low-income housing, and the deinstitutionalization of mentally ill patients.

We also know that the composition of the homeless population has changed. Unlike the stereotype of the Skid Row inhabitant of the past, in the 1980's the homeless are a heterogeneous population comprised of many subgroups. The homeless population is becoming younger, with an increase in minorities, women and families. There are more children (including runaways), veterans, immigrants, migrants, abuse victims, elderly, and handicapped people who are homeless. Many of the homeless are high school graduates and, despite unemployment being cited as a contributing factor to homelessness, many are employed.

While the unemployment rate has gone down dramatically since 1983, the impact the lower rate is having on those already homeless is unknown. Many homeless people acquire new problems from living on the streets and may not now be able to hold a job. Having no fixed address or home phone number compounds the difficulty in finding jobs.

C. Legislative Background

In July 1987, the Stewart B. McKinney Homeless Assistance Act (Pub. L. 100-77) (McKinney Act) became law. It is the first comprehensive Federal law to address the complex problem of homelessness in America.

The McKinney Act was the result of Congress responding to its findings that the Nation faces a crisis due to lack of shelter for a growing number of individuals and families. Congress further found that the problem is expected to become worse because "the

causes of homelessness are many and complex, and homeless individuals have diverse needs; [and] there is no single, simple solution to the problem because of the . . . different causes of homelessness, and the different needs of homeless individuals". Pub. L. 100–77, section 101(a)(3) and (4).

As part of the McKinney Act's comprehensive approach to addressing the problems of the homeless, Section 731 of the McKinney Act authorizes the Secretary of Labor to award grants for new job training demonstration projects for homeless individuals. The grants will be administered by ETA.

ETA also administers the Job Training Partnership Act (JTPA), the Nation's major job training program for economically disadvantaged adults and youth. 29 U.S.C. 1501 *et seq.* JTPA does not specifically target programs on homeless individuals, although JTPA funds are being used to provide job training for homeless individuals in a number of localities. The newly authorized job training demonstration program in Pub. L. 100–77 thus represents the first Federal effort specifically addressing employment-related problems of *all types* of homeless individuals.

In 1987, prior to the passage of the McKinney Act, the Office of the Assistant Secretary for Veterans' Employment and Training (OASVET) began targeted assistance for one subgroup of the homeless—the Jobs for Homeless Veterans Program—with discretionary funds set aside from Title IV, Part C, of JTPA (Veterans' Employment Programs). 29 U.S.C. 1721. Grantees (governmental units in selected cities) hire, train and supervise veterans who have experienced homelessness to perform outreach to homeless veterans.

The McKinney Act at Section 738 provides for Homeless Veterans' Reintegration Projects (HVRP). The experience of the Jobs for Homeless Veterans Program will be used in the design and implementation of the HVRP. This program is administered by OASVET. It is a separate effort from the job training demonstration program discussed in this solicitation.

Part II—Program Description

A. Program Purpose and Goals

ETA's demonstration program is designed to be highly responsive to the intent of the McKinney Act as specified in the statute and in the Conference report. It has an overall purpose and two supporting goals. The overall purpose is:

—To provide information and direction for the future of job training programs for homeless Americans. The conferees acknowledged "that additional information and data are necessary before a detailed national policy on training for the homeless may be developed."

The supporting goals are:

—To gain information on how to provide effective employment and training services to homeless individuals to address the employment-related causes of homelessness and their job training needs; and

—To learn how States, local public agencies, private nonprofit organizations, and private businesses can develop effective systems of coordination to address the causes of homelessness and meet the needs of the homeless, including attainment of transitional or permanent housing outside of shelters.

The focus is on knowledge building to inform national policy, program content, and system development

Recognizing the diversity of subgroups within the homeless population, ETA intends that the demonstration program as a whole will include the full spectrum of homeless people—not only the most job ready or those easiest to serve. Applicants may, however, propose projects that emphasize assistance to *subgroups* within the homeless population. These include—but are not limited to—the chronically mentally ill, substance abusers, families with children, single men, single women, and homeless youth. Because there is a separate program for homeless veterans under section 738 of the Act, applicants may not propose programs that are limited solely to veterans.

ETA suggests that the "case management" approach is a preferred method for providing job training for the homeless. That is, one or more managers are charged with moving an individual through all the services necessary for placement and retention (for at least 13 weeks) in a stable job. The case management approach provides homeless individuals with a personal advocate to help negotiate bureaucratic obstacles. This approach has proved useful where there are multiple problems and an array of individual needs. This is not the only model, however, and other approaches will be considered.

B. Target Population

For purposes of this solicitation, the target population includes persons 14 years of age or older who are homeless. The term "homeless" or "homeless individual" includes persons who lack a fixed, regular, and adequate nighttime residence. It also includes persons whose primary nighttime residence is either a supervised public or private shelter designed to provide temporary living accommodations; an institution that provides a temporary residence for individuals intended to be institutionalized; or a public or private place not designed for, or ordinarily used as, a regular sleeping accommodation for human beings.

C. Activities for Which Support Is Available

ETA is interested in demonstrating innovative and replicable approaches to providing job training to the target population. Each project must: (1) Provide coordination and outreach activities designed to achieve referral of homeless people to these demonstration projects; (2) provide in-shelter outreach and assessment activities and, where practicable, pre-employment services in order to increase participation of the target population; and (3) provide or contract for job training activities. These activities must include one or more of the following:

—Remedial education activities and basic skills instruction:

—Basic literacy instruction;

—Job search activities;

—Job counseling;

—Job preparatory training, including resume writing and interviewing skills; and

—Any other activities described in section 204 of JTPA which will contribute to carrying out the purposes and goals of these demonstration projects. (See Appendix A for the language of JTPA, section 204, 29 U.S.C. 1604).

Four of the activities in section 204 that ETA wishes to single out as especially important to the homeless population for placement and retention in stable jobs are institutional skill training, on-the-job training, work experience, and followup services.

Given the multiple problems and needs of many homeless individuals, ETA will give special consideration to applications that emphasize approaches to job training for adults (over age 21) that provide a continuity of service to individuals from application through the end of the retention-in-employment period. Applications that propose to serve homeless youth (ages 14 through 21) may emphasize approaches that emphasize employability enhancement, such as high school completion, rather than job placement.

D. Evaluation Component

All grantees will be required to participate in an evaluation process. Evaluation will be conducted at two levels: (1) Individual project evaluations; and (2) a national evaluation across all grantee projects. Each grantee must complete a preliminary evaluation of their project no later than July 1, 1989 (see II F 2 (c) below).

The national evaluation, to be managed by ETA as specified in section 736 of the McKinney Act, must provide for a preliminary evaluation of each project receiving assistance by September 30, 1988. This preliminary evaluation will be submitted by the Department of Labor to the Interagency Council on the Homeless. The national evaluation must be complete in the form of a final report to the President, to the Congress, and to the Interagency Council by April 1, 1990. In addition to the Department of Labor's evaluation, the Interagency Council must evaluate each project receiving assistance.

Both individual project evaluations and the national evaluation shall include (as specified by section 736(b) of the McKinney Act) information on:

—The number of homeless individuals served;
—The number of homeless individuals placed in jobs;
—The average length of training time under the project;
—The average training cost under the project; and
—The average retention rate of placements of homeless individuals after training. ETA defines the period over which retention is to be measured as 3 months (13 weeks).

Other measures, such as the number of homeless individuals placed in transitional or permanent housing outside of shelters, may be added to the national evaluation.

Grantees will participate in this effort by providing staff to administer the evaluation, make data available for the project and national evaluations, and submit preliminary and final individual project evaluation reports. Grantee budgets must include expected costs for evaluation activities. A grant will not be awarded unless it has included an evaluation component in its application. The national evaluation will be conducted to (1) determine the effectiveness of the national demonstration program and (2) compare, to the extent possible, outcomes in different programs and/or communities. Effectiveness will be measured primarily in terms of the degree to which grantees have met program performance standards. The national evaluation staff will provide technical assistance to grantees on all aspects of the evaluation (including developing formats for acquiring compatible information from the grantees), conduct aggregate-level data analysis, and prepare the preliminary and final national evaluation reports.

E. Coordination

Section 732 of the McKinney Act requires States to describe in their Comprehensive Homeless Assistance Plan (CHAP) how the State will coordinate job training demonstration projects with other services for homeless individuals under the Act. The CHAP is required in section 401 of the McKinney Act. To assist in this coordination, all applications must be reviewed for consistency prior to submittal to ETA by the organization in each State responsible for development of the CHAP.

F. Reporting Requirements

The grantee shall furnish the reports and documents listed below:

1. Financial Reports

The grantee shall submit to the Federal Representative, Department of Labor, an original and two copies of a monthly detailed account of expenditures. The detailed report of expenditures must include the same line items of cost categories as those specified in the grant budget.

2. Program Reports

(a) *Quarterly Progress Reports.* The grantee shall submit to the Federal Representative within 10 days following the end of each quarter, five copies of a quarterly progress report, which provides a detailed account of services provided during each quarter of grant performance. Reports shall include, in brief narrative form, such information as:

(1) A description of overall progress of work activities accomplished during the reported period;

(2) An indication of any current problems which may delay performance, and proposed corrective action, if any; and

(3) Program status and financial data/information relative to expenditure rate versus budget, anticipated staff changes, etc.

(b) *Detailed Content Outline of the Evaluation Report.* Five copies must be submitted by May 1, 1989.

(c) *Preliminary Evaluation Report.* This report shall summarize project activities and results and shall be submitted in 10 copies by July 1, 1989.

(d) *Final Evaluation Report.* This report shall summarize project activities and results and shall be submitted in 10 copies by the grant expiration date.

Part III—Application Process

A. Eligible Applicants

As specified in section 731(a) of the act, applications may be submitted by State and local public agencies, by private non-profit organizations, and by private businesses. Applications may also be submitted by Indian tribes as specified in section 782(b) of the Act.

Eligible applicants include—but are clearly *not* limited to—JTPA Private Industry Councils (PICs) and/or JTPA administrative entities at the State and local level. Individuals are not eligible to apply. ETA encourages applications that are developed jointly by State and local agencies, by private non-profit organizations and/or by private businesses because this helps to coordinate resources and achieve maximum benefit from the grant funds.

B. Federal Fiscal Requirements

Section 735 of the McKinney Act limits the Federal share of the cost of activities. ETA will make grant awards for at least 50 percent and no more that 90 percent of the cost of activities described in the application. Applicants are encouraged to provide the highest feasible non-Federal share of the cost of the project. High cost-sharing demonstrates applicant commitment to continue the activities and enables limited Federal resources to produce the maximum amount of information useful for the future of job training programs for homeless Americans.

Applicants are required to assure that they will pay the non-Federal share of the activities from non-Federal sources. The non-Federal share may be in cash or in kind, fairly evaluated, including plant, equipment and resources.

As specified in section 782(a)(1) of the McKinney Act, a minimum of $115,000 of the grants under this solicitation will be allocated to Indian-tribe applicants (1.5 percent of the FY 1988 appropriation).

Pursuant to section 735(c) of the McKinney Act, ETA will not make grants in any State under this solicitation in an aggregate in excess of $1.149 million (15 percent of the amount appropriated in FY 1988 for this grant program).

Grants to Indian tribes will count toward this per-State aggregate limitation.

C. Criteria for Screening and Review

All applications that meet the deadline will be screened to determine

completeness and conformity to the requirements of this announcement. Complete, conforming applications will then be reviewed and evaluated competitively against the evaluation criteria specified below in 2. Evaluation Criteria.

1. Screening Requirements

In order for an application to be in conformance it must include the following:

(a) Fact Sheet. This fact sheet must include the following: (1) Legal name of institution or organization submitting proposal; (2) address of institution or organization, including zip code; (3) telephone number of institution or organization, including area code; and (4) name, position, and telephone number of official who is approving the submission of the proposal. This person must be someone with legal authority to commit the organization to the proposed project.

(b) Budget Information (see Appendix B).

(c) Project Narrative: The narrative portion of the application must not exceed twenty-two (22) double-spaced pages, typewritten on one side of the paper only.

The narrative must address the elements specified in section 733 of the Act:

—A description of activities for which assistance is sought (what the project will do and how the project will be conducted);
—Plans for coordination and outreach activities, particularly with case managers and care providers, designed to achieve referral to the proposed project;
—Plans to offer in-shelter outreach and assessment activities and, where practicable, pre-employment services, to increase participation of homeless individuals;
—A description of the standards by which performance will be measured under the project (these standards need not bear any relationship to those required for adult and youth programs under Title II–A of JTPA, section 106);
—Assurance that a preliminary evaluation will be completed not later than the end of the first calendar year of project assistance; and
—Assurance that the applicant will pay the non-Federal share of the activities from non-Federal sources.

(d) Letter from the relevant State agency indicating that the application has been reviewed for consistency with the Comprehensive Homeless Assistance Plan, as specified above in II E.

2. Evaluation Criteria

Reviewers will score the applications, basing their scoring decisions on the following criteria.

(a) Need for the project: *20 points.* The application shall describe, in concrete terms, the problems of homeless individuals that prompt the applicant to propose the project. The application must discuss the need for the project in terms of its State and/or local significance, including estmates of the number of homeless individuals of the type proposed to be served in the area to be served. It must describe the importance of the issues to be addressed and how they relate to section 102. (Findings and Purpose) of the McKinney Act.

(b) Project Methodology: *40 points.* The application must describe specific plans for conducting the project in terms of the tasks to be performed.

Project methodology includes the following application elements, as specified in section 733 of the McKinney Act:

—A description of activities for which assistance is sought (what the project will do and how the project will be conducted);
—Plans for coordination and outreach activities, particularly with case managers and care providers, designed to achieve referral to the proposed project; Coordination includes other services for homeless individuals discussed in the State CHAP.
—Plans to offer in-shelter outreach and assessment activities and, where practicable, pre-employment services, to increase participation of homeless individuals;
—Assurance that a preliminary evaluation will be completed not later than the end of the first year of project assistance. The application will also be scored on its description of evaluation activities. This assurance and description must be consistent with the "Evaluation Component" section of Part II D, above.

In addition to these elements of the application contained in the McKinney Act, the application must include:

—Discussion of the "plausibility" of the proposed project—the key assumptions underlying the project and evidence to support why the approach proposed is likely to accomplish the project objectives.
—Discussion (preferably incorporating a chart) providing a time-phasing of tasks and their interrelationships and demonstrating how the project will be started up, operated and phased out or supported when the grant period ends on September 30, 1989, and
—Discussion (preferably including client flow chart) which depicts the planned sequence of services to be provided to clients and the role of each participating organization.

(c) Expected Outcomes: *10 points.* The proposed project is intented to result in a measurable, concrete reduction of a significant problem associated with homelessness that can be addressed by job training. Outcomes as opposed to process measures are preferred. These outcomes must include a clear description of project's performance standards as required by section 733(4) of the McKinney Act. For the homeless population, ETA is especially interested in a high number of placements for adults and a high retention rate of placements over at least a 13-week period.

(d) Level of effort: *20 points.* The resources needed to conduct the project must be specified including personnel, time, funds, and facilities. These resouces should be adequate to the work described in the application. The staff should be qualified and should have the skills required and demonstrated ability to produce the expected outcomes. The staffing pattern must clearly link responsibilities to project tasks. The total cost of the project must be reasonable in view of anticipated results. Collaborative efforts with other agencies or organizations must be clearly identified and written assurances referenced. A description by category (personnel, travel, etc.) of the total funds required and of the sources of outside support that will be used to meet the matching requirements must be included. The funds (total of Federal share and non-Federal share) must be specified. (See Appendix B). Projects proposing a higher non-Federal share will be considered more favorably under this criterion, other factors being equal.

(e) Organizational Capability: *10 points.* The application must provide a brief (maximum 2 pages double-spaced) background description of how the applicant organization (or the particular division of a larger organization which will have responsibility for this project) is organized and the types and quality of services it provides not included in the program narrative under level of effort. It may include descriptions of any current or previous relevant experience or describe the competence of the project team and its demonstrated

ability to produce results. It may include a description of the qualification of key staff described in a few paragraphs rather than in formal vitae. This statement must include the names of contact persons from two organizations to which the applicant organization was provided services within the past 6 months. The statement must include the position of these contact persons within their organizations and their telephone numbers.

These evaluation criteria correspond to the narrative section of the application as specified in Part IV below. The descriptions of the five criteria above should be considered in developing the program narrative.

Applicants are advised that discussions may be necessary in order to clarify any inconsistencies in their applications. The final decision on the award will be based on what is most advantageous to the Federal Government in terms of technical quality and other factors as determined by the ETA Grant Officer. Evaluation by reviewers are advisory only to the Grant Officer.

D. Closing Date for Receipt of Applications

The closing date for submittal of applications under this program announcement is June 20, 1988.

Part IV—Instructions for Completing Applications

A. Contents

You are required to send an original and five copies of an application. Each application must contain:

1. Fact Sheet [see Part III C 1(a)]
2. Budget Information (see Appendix B)
3. Project Narrative—should be no more than twenty-two (22) double-space typewritten pages, using one side of the paper only. Your narrative should provide information on how the application meets the evaluation criteria in Part III of this announcement.

We strongly recommend that you follow this format and page suggestions for the narrative:

a. Need for the Project (4 pages double-spaced).

b. Project Methodology (10 pages double-spaced).

c. Expected Outcomes (3 pages double-spaced).

d. Level of Effort: (3 pages double-spaced).

e. Organizational Capability Statement (2 pages double-spaced).

4. Letter from the appropriate State Agency reviewing application for consistency with the CHAP.

The application may also contain letters that show collaboration or substantive commitment to the project by organizations other than the applicant organization. ETA suggests but does not require that applicants obtain such letters from local Private Industry Councils (PICs) and from chief elected officials (as defined in JTPA, Section 4 [4], The State Governor or the governing body within a Service Delivery Area). Such letters are not part of the narrative and, therfore, are not counted against the twenty-two-page limit for the narrative.

Signed at Washington, DC, on April 13, 1988.

Roberts T. Jones,

Acting Assistant Secretary of Labor.

Appendix A—Section 204 of the Job Training Partnership Act

Sec. 204. Services which may be made available to youth and adults with funds provided under this title may include, but need not be limited to—

(1) job search assistance,

(2) job counseling,

(3) remedial education and basic skills training,

(4) institutional skill training,

(5) on-the-job training,

(6) programs of advanced career training which provide a formal combination of on-the-job and institutional training and internship assignments which prepare individuals for career employment,

(7) training programs operated by the private sector, including those operated by labor organizations or by consortia of private sector employers utilizing private sector facilities, equipment, and personnel to train workers in occupations for which demand exceeds supply,

(8) outreach to make individuals aware of, and encourage the use of employment and training services,

(9) specialized surveys not available through other labor market information sources,

(10) programs to develop work habits and other services to individuals to help them obtain and retain employment,

(11) supportive services necessary to enable individuals to participate in the program and to assist them in retaining employment for not to exceed 6 months following completion of training,

(12) upgrading and retraining

(13) education-to-work transition activities,

(14) literacy training and bilingual training,

(15) work experience,

(16) vocational exploration,

(17) attainment of certificates of high school equivalency,

(18) job development,

(19) employment generating activities to increase job opportunities for eligible individuals in the area,

(20) pre-apprenticeship programs,

(21) disseminating information on program activities to employers,

(22) use of advanced learning technology for education, job preparation, and skills training,

(23) development of job openings,

(24) on-site industry-specific training programs supportive of industrial and economic development,

(25) followup services with participants placed in unsubsidized employment,

(26) coordinated programs with other Federal employment-related activities,

(27) needs-based payments necessary to participation in accordance with a locally developed formula or procedure, and

(28) customized training conducted with a commitment by an employer or group of employers to employ an individual upon successful completion of that training.

Appendix B—Budget Information

Each applicant shall submit a project budget using the following format. In addition, a detailed breakdown supporting each budget line item is required.

	Government	Grantee contribution	Total
Direct costs:			
Staff salaries and wages	$ —	$ —	$ —
Fringe benefits for staff	—	—	—
Staff travel and per diem	—	—	—
Consultant fees	—	—	—
Materials and supplies	—	—	—
Communications	—	—	—
Subcontract	—	—	—
Total direct costs	$ —	$ —	$ —
Indirect costs	—	—	—
Total estimated cost*	$ —	$ —	$ —

[FR Doc. 88-8587 Filed 4-18-88; 8:45 am]

BILLING CODE 4510-30-M

federal register

Tuesday
April 19, 1988

Part V

Department of Agriculture

Commodity Credit Corporation

Proposed Determinations With Regard to the 1989 Wheat Program and Common Program Provisions; Notice

DEPARTMENT OF AGRICULTURE

Commodity Credit Corporation

Proposed Determinations With Regard to the 1989 Wheat Program and Common Program Provisions

AGENCY: Commodity Credit Corporation, USDA.

ACTION: Proposed determinations.

SUMMARY: The Secretary of Agriculture proposes to make the following determinations with respect to the 1989 crop of wheat: (a) The percentage reduction under an acreage reduction program (ARP); (b) whether an optional paid land diversion (PLD) should be established and, if so, the percentage of diversion under the program; (c) whether a marketing loan program should be implemented; (d) if a marketing loan program is implemented, whether the inventory reduction program should also be implemented; and (e) other related provisions.

The Secretary of Agriculture also proposes to make the following common program determinations with respect to the 1989 crops of wheat, feed grains, cotton (extra long staple (ELS) and upland) and rice: (a) Whether the production of approved nonprogram crops (ANPC) should be allowed on underplanted program crop permitted acreage ("0/92" and "50/92" conservation use (CU) acreage); (b) whether the production of alternative crops should be allowed on reduced acreage (acreage conservation reserve (ACR)); (c) whether haying and grazing of CU and ACR should be permitted; (d) whether to require offsetting or cross compliance; (e) whether advance recourse commodity loans should be made available; (f) whether a multiyear set-aside program should be implemented; and (g) whether producers should be permitted to increase a crop acreage base ("CAB") by an amount not to exceed 10 percent of farm acreage base ("FAB") if such producers decrease one or more other CAB's on such farm by a corresponding amount.

These determinations are made pursuant to the Agricultural Act of 1949, as amended (the "1949 Act"), and the Commodity Credit Corporation (CCC) Charter Act, as amended.

DATE: Comments must be received on or before May 16, 1988, in order to be assured of considerations.

ADDRESS: Dr. Orval Kerchner, Director, Commodity Analysis Division, USDA–ASCS, Room 3741, South Building, P.O. Box 2415, Washington, DC 20013.

FOR FURTHER INFORMATION CONTACT: Bradley Karmen, Agricultural Economist, Commodity Analysis Division, USDA–ASCS, Room 3740, South Building, P.O. Box 2415, Washington, DC 20013 or call (202) 447–4635. The Preliminary Regulatory Impact Analysis describing the options considered in developing this proposed determination and the impact of implementing each option is available on request from the above-named individual.

SUPPLEMENTARY INFORMATION: This notice has been reviewed under USDA procedures established in accordance with Executive Order 12291 and Departmental Regulation No. 1512–1 and has been designated as "major.".

It has been determined that these program provisions will result in an annual effect on the economy of $100 million or more.

The titles and numbers of the Federal assistance programs, as found in the catalogue of Federal Domestic Assistance, to which this notice applies are:

Titles	Numbers
Commodity Loans and Purchases	10.051
Cotton Production Stabilization	10.052
Feed Grains Production Stabilization	10.055
Wheat Production Stabilization	10.058
Rice Production Stabilization	10.065

It has been determined that the Regulatory Flexibility Act is not applicable to this notice since CCC is not required by 5 U.S.C. 553 or any other provision of law to publish a notice of proposed rulemaking with respect to the subject matter of these determinations.

It has been determined by environmental evaluation that this action will have no significant impact on the quality of the human environment. Therefore, neither an environmental assessment nor an Environmental Impact Statement is needed.

This program is not subject to the provisions of Executive Order 12372 which requires intergovernmental consultation with State and local officials. See the Notice related to 7 CFR Part 3015, Subpart V, published at 48 FR 29115 (June 24, 1983).

Certain determinations set forth in this notice with respect to the 1989 Wheat Program are required to be announced by the Secretary by June 1, 1988. In addition, it is necessary that the determinations for the 1989 crop be made in sufficient time for wheat producers to make planting decisions for their 1989 crop. Accordingly, the public comment period is limited to 30 days from the date this notice is filed with the Director, Office of the Federal Register in order to be assured of consideration. This will allow the Secretary time to consider the comments received before the program determinations are made. The comments received with respect to this notice of proposed determination will be reviewed in determining the provisions of the 1989 Wheat Program and Common Program Provisions.

Accordingly, the following program determinations are proposed to be made by the Secretary with respect to the 1989 crop of wheat.

a. *Acreage Reduction Program (ARP).* Section 107D(f) of the 1949 Act provides, with respect to the 1989 crop of wheat, that if the Secretary estimates, not later than June 1, 1988, that the quantity of wheat on hand in the United States on the first day of the marketing year (June 1, 1989) for such crop (not including any quantity of wheat of such crop) will be more than 1 billion bushels, the Secretary shall provide for an ARP under which the acreage planted to wheat for harvest on a farm would be limited to the wheat CAB for the farm for the crop reduced by not less than 20 percent nor more than 30 percent.

If the quantity is estimated to be 1 billion bushels or less, the Secretary may provide for an ARP under which the acreage planted to wheat for harvest on a farm would be limited to the wheat CAB for the farm for the crop reduced by not more 20 percent.

If a wheat ARP is announced, such limitation shall be achieved by applying a uniform percentage reduction to the wheat CAB for the crop for each wheat-producing farm. Producers who knowingly produce wheat in excess of the permitted wheat acreage for the farm shall be ineligible for wheat loans, purchases, and payments with respect to wheat produced on that farm. An acreage on the farm shall be devoted to ACR determined by dividing: (1) The product obtained by multiplying the number of acres required to be withdrawn from the production of wheat times the number of acres planted to such commodity by (2) the number of acres authorized to be planted to such commodity under the ARP announced by the Secretary.

The quantity of wheat on hand on June 1, 1989, is currently estimated to be below 1 billion bushels. Based upon such estimates, the Secretary may announce an ARP of not more than 20 percent.

Comments are requested as to the percentage level, if any, at which an ARP should be implemented for the 1989 crop of wheat.

b. *Paid Land Diversion (PLD):* Section 107D(f)(5)(A) of the 1949 Act provides

that the Secretary may make land diversion payments to producers of wheat, whether or not an ARP, set-aside program, or marketing quotas for wheat are in effect, if the Secretary determines that such land diversion payments are necessary to assist in adjusting the total national acreage of wheat to desirable goals. Such land diversion payments shall be made to producers who, to the extent prescribed by the Secretary, devote to approved ACR an acreage of cropland on the farm in accordance with land diversion contracts entered into by the Secretary with such producers.

The amounts payable to producers under land diversion contracts may be determined through the submission of bids for such contracts by producers in such manner as the Secretary may prescribe or through such other means as the Secretary determines appropriate. In determining the acceptability of contract offers, the Secretary shall take into consideration the extent of the diversion to be undertaken by the producers and the productivity of the acreage diverted. The Secretary shall limit the total acreage to be diverted under agreements in any county or local community so as not to adversely affect the economy of the county or local community.

Any additional acreage reduction under a PLD would be at a producer's option.

The Secretary does not intend to implement a PLD for the 1989 crop of wheat, since stocks are expected to be below 1.0 billion bushels on June 1, 1989, the lowest level since 1981. Accordingly, comments are requested with respect to the Secretary's intention or whether a need exists for an optional PLD and, if implemented, the provisions of such program.

c. *Marketing Loans and Loan Deficiency Payments:* Section 107D(a)(5) of the 1949 Act provides that the Secretary may permit a producer to repay a loan at a level that is the lesser of: (1) The announced loan level or (2) the higher of: (i) 70 percent of the basic loan level or (ii) prevailing world market price for wheat, as determined by the Secretary.

If the Secretary permits a producer to repay a loan as described above, the Secretary shall prescribe by regulation: (1) A formula to define the prevailing world market price for wheat and (2) a mechanism by which the Secretary shall announce periodically the prevailing world market price for wheat.

Section 107D(b) provides that the Secretary may, for the 1989 crop of wheat, make payments available to producers who, although eligible to obtain a loan or purchase agreement, agree to forgo obtaining such loan or agreement in return for such payments. The payment shall be computed by multiplying: (1) The loan payment rate by (2) the quantity of wheat the producer is eligible to place under loan.

For purposes of this section, the quantity of wheat eligible to be placed under loan may not exceed the product obtained by multiplying: (1) The individual farm program acreage for the crop by (2) the farm program payment yield established for the farm. The loan payment rate shall be the amount by which the announced loan level exceeds the level at which a loan may be repaid.

The Secretary does not intend to implement a marketing loan and other related provisions for the 1989 crop of wheat since other price support authorities permit adjustments in support levels that generally make wheat competitive in domestic and international markets. Accordingly, comments are requested with respect to the Secretary's intentions or whether the Secretary should implement marketing loans and "loan deficiency" payments for the 1989 crop of wheat and the formula and methodology for determining the prevailing world market price to be used if marketing loans are implemented.

d. *Inventory Reduction Program:* Section 107D(g) of the 1949 Act provides that the Secretary may, for the 1989 crop of wheat, make payments available to producers who: (1) Agree to forgo obtaining a loan or purchase agreement; (2) agree to forgo receiving deficiency payments; and (3) do not plant wheat for harvest in excess of the CAB reduced by one-half of any acreage required to be diverted from production under the announced ARP. Such payments shall be made in the form of wheat owned by CCC. Payments under this program shall be determined in the same manner as established with respect to the marketing loan program.

Accordingly, the implementation of this program is considered to be dependent on whether a marketing loan program is also instituted.

Comments are requested on whether they should be implemented for the 1989 crop of wheat.

e. *Other Related Provisions.* A number of other determinations must be made in order to carry out the wheat loan and purchase programs such as: (1) Commodity eligibility; (2) premiums and discounts for grades, classes, and other qualities; and (3) such other provisions as may be necessary to carry out the programs.

Consideration will be given to any data, views and recommendations that may be received relating to these issues.

The following program determinations are proposed to be made by the Secretary with respect to the *common program provisions* that are applicable to the 1989 crops of wheat, feed grains, cotton, and rice:

a. *0/92 and 50/92 Provisions: ANPC and/or Cu on Underplanted Program Permitted Acreage.* Sections 103A(c)(1) (B) and (G) and 101A(c)(1) (B) and (G) of the 1949 Act provided that if an ARP is in effect for upland cotton or rice and the producers on a farm: (1) Devote a portion of the permitted commodity acreage of the farm equal to more than 8 percent of the permitted commodity acreage of the farm for the crop to CU or ANPC and (2) actually plant on the farm the respective program crop for harvest on an acreage equal to at least 50 percent of the permitted acreage for such crop, such portion of the permitted program commodity acreage of the farm (i.e., the CAB minus reduced diverted acreage), in excess of 8 percent of such acreage which is devoted to CU or ANPC crops shall be considered to be planted to such program commodity for the purpose of determining the individual farm program acreage and for the purpose of determining the acreage on the farm required to be devoted to CU and producers shall be eligible for payments on such acreage.

Sections 107D(c)(1) (C) and (K) and 105(c)(1) (B) and (I) of the 1949 Act provide with respect to wheat and feed grains, if an ARP is in effect and the producers devote a portion of the permitted acreage equal to more than 8 percent of the permitted or all of such permitted to CU or ANPC, such portion of the permitted acreage in excess of 8 percent devoted to CU or ANPC shall be considered to be planted and shall receive deficiency payments on such acreage at a per bushel rate not less than the projected deficiency payment rate for such crop. The Secretary is required to implement the 0/92 program in such a manner as to minimize the adverse effect on agribusiness taking into consideration the total amount of wheat and feed grain acreage that has or will be removed from production under other price support production adjustment, or conservation program activities. No restrictions on the amount of acreage that may be taken out of production shall be imposed in the case of a county which producers were eligible to receive disaster emergency loans.

For rice and upland cotton, if a State or local agency has imposed in an area of a State or county a quarantine on the planting of a program commodity for

harvest on farms in such area, the State Agricultural Stabilization and Conservation (ASC) committee established under section 8(b) of the Soil Conservation and Domestic Allotment Act (16 U.S.C. 590h(b)) may recommend to the Secretary that deficiency payments be made, without regard to the 50 percent planting requirement for rice and cotton, to producers in such area who were required to forgo the planting of the program commodity for harvest on acreage in order to alleviate or eliminate the condition requiring such quarantine. If the Secretary determines that such condition exists, the Secretary may make such payments to such producers. To be eligible for such payments such producers must devote such acreage to CU or ANPC.

The program commodity CAB and farm program payment yield of the farm shall not be reduced due to the fact that such portion (or all) of the permitted acreage of the farm was devoted to CU.

Any acreage considered to be planted to a program commodity may not also be designated as CU acreage for the purpose of fulfilling any provisions under any ARP, set-aside program or PLD requiring that the producers devote a specified acreage to CU.

The Secretary may permit, subject to such terms and conditions as the Secretary may prescribe, all or any part of acreage otherwise required to be devoted to CU as a condition of qualifying for payments to be devoted to sweet sorghum or the production of guar, sesame, safflower, sunflower, castor beans, mustard seed, crambe, plantago ovato, flaxseed, triticale, rye, or commodities for which no substantial domestic production or market exists but that could yield industrial raw materials that are being imported, or likely yield industrial raw materials that are being imported, or likely to be imported, into the United States, or commodities grown for experimental purposes (including kenaf), except the Secretary may permit such acreage to be devoted to such production only if the Secretary determines that:

(1) The production is not likely to increase the cost of the price support program and will not affect farm income adversely; and

(2) The production is needed to provide an adequate supply of the commodity or, in the case of commodities for which no substantial domestic production or market exists but that could yield industrial raw materials, the production is needed to encourage domestic manufacture of such raw material and could lead to increased industrial use of such raw material to the long-term benefit of United States industry.

Comments are requested as to whether the Secretary should permit the production of ANPC on acreage otherwise required to be devoted to CU under the "0/92" and "50/92" programs.

b. *Uses of Reduced and Diverted Acreage.* Sections 107D(f)(4), 105C(f)(4), 103A(f)(3), 103(h)(8)(A), and 101A(f)(3) of the 1949 Act provide that the regulations issued by the Secretary with respect to acreage required to be devoted to ACR under the acreage limitation and diversion programs shall assure protection of such acreage from weeds and wind and water erosion.

The Secretary may permit, subject to such terms and conditions as the Secretary may prescribe, all or any part of such acreage to be devoted to sweet sorghum, or the production of guar, sesame, safflower, sunflower, castor beans, mustard seed, crambe, plantago ovato, flaxseed, triticale, rye, or other commodity, if the Secretary determines that such production is needed to provide an adequate supply of such commodities, is not likely to increase the cost of the price support program, and will not adversely affect farm income.

In determining the amount of land to be devoted to ACR under an ARP for wheat and feed grains with respect to land that has been farmed utilizing summer fallow practices, as defined by the Secretary, the Secretary shall consider the effects of soil erosion and such other factors as the Secretary considers appropriate.

The Secretary proposes: (1) That the planting of alternate crops on acreage required to be devoted to ACR for the 1989 wheat, feed grains, cotton and rice ARP and diversion programs would not be permitted and (2) that nationally ACR on reduced or diverted acreage remain unchanged from those in effect for the 1988 crops, including summer fallow rules. The summer fallow rules provide that land, in an area determined to be an area in which summer fallow is a common practice is eligible for designation as ACR if it has been planted to a crop in at least 1 of the previous 2 years. For all other areas, land is eligible for designation as ACR it it has been planted to a crop in at least 2 of the previous 3 years.

Comments on the planting of alternate crops and ACR on the reduced or diverted acreage are requested.

c. *Haying and Grazing of "0/92" and "50/92" CU, ARP and PLD Acreage.* Sections 1070D(f)(4)(c); 103A(f)(3)(c); 105C(f)(4)(c) and 101A(f)(3)(c) provide with respect to wheat, feed grains, upland cotton and rice, except as otherwise noted below, that haying and grazing of acreage designated as ACR or CU for the purpose of meeting any requirements established under an ARP, PLD or "0/92" and "50/92" programs shall be permitted, except during any 5-consecutive-month period that is established by the State ASC committee for a State. Such 5-month period shall be established during the 7-month period beginning April 1 and ending October 31 of a year. In the case of a natural disaster, the Secretary may permit unlimited haying and grazing of such acreage. Haying and grazing shall not be permitted for any crop, if the Secretary determines that haying and grazing would have an adverse economic effect.

Comments are requested on whether haying and grazing of ARP, PLD and "0/92" and "50/92" CU acreages should be prohibited due to an adverse economic effect.

d. *Cross and Offsetting Compliance Requirements.* Sections 107D(n)(1–2), 105C(n)(1–2), 103A(n)(1–2), 103(h)(16), and 101A(n)(1–2) of the 1949 Act provide with respect to wheat, feed grains, upland cotton, ELS cotton and rice, that the Secretary may not require as a condition of eligibility for loans, purchases, or payments, compliance on a farm with the terms and conditions of any other commodity program (strict cross compliance). However, if an ARP is established for a crop of wheat, feed grains, upland cotton, ELS cotton or rice, the Secretary may require that, as a condition of eligibility of producers on a farm for loans, purchases, or payments for such crops, the acreage planted for harvest on the farm to such commodities, shall not exceed the CAB for that commodity. This requirement is referred to as limited cross compliance.

Sections 103A(n)(3) and 101A(n)(3), which are applicable to upland cotton and rice, provide that the Secretary may not require producers on a farm, as a condition of eligibility for loans, purchases, or payments to comply with the terms and conditions of the upland cotton and rice programs with respect to any other farm operated by such producers (offsetting compliance). No similar requirements are applicable to wheat, feed grains, and ELS cotton. However, in accordance with sections 107D(i), 105C(i) and 103(h)(13) of the 1949 Act, the Secretary may issue regulations the Secretary determines necessary to carry out the wheat, feed grains, and ELS cotton programs. In some prior crop years, the Secretary has promulgated regulations providing for offsetting compliance requirements. If offsetting compliance is required, operators and owners of farms would

have to ensure that all of the farms in which they have an interest were either in compliance with the program requirements or the acreages of wheat, feed grains or ELS cotton planted to harvest on each of such farms did not exceed the wheat, feed grain or ELS cotton CAB established for such farms.

The Secretary intends to implement limited cross compliance requirements for the 1989 crops of wheat, feed grains, upland cotton, and rice and does not intend to impose offsetting compliance requirements for wheat, feed grains and ELS cotton.

Comments are requested concerning limited cross compliance for wheat, feed grains, upland cotton, and rice and offsetting compliance for wheat, feed grains and ELS cotton.

e. *Advance Recourse Loans.* Section 424 of the 1949 Act provides that the Secretary may make advance recourse loans to producers of those commodities for which nonrecourse loans are available if it is determined such a program is necessary to ensure that adequate operating credit is available to producers. These recourse loans may be made available under terms and conditions prescribed by the Secretary, except that the producer shall be required to obtain crop insurance for the crop as a condition of eligibility for a loan.

The Secretary does not intend to make advance recourse loans to producers for the 1989 crops. Accordingly, comments are requested with respect to the Secretary's intentions, or as to whether advance recourse loans should be offered for those commodities for which nonrecourse loans are available for the 1989 crops.

f. *Multiyear Set-Asides.* Section 1010 of the 1985 Act provides that the Secretary may enter into multiyear set-aside contracts for a period not to extend beyond the 1990 crops. Such contracts may be entered into only as a part of the programs in effect for wheat, feed grains, upland cotton, and rice and are available only to producers participating in one or more of such programs. Producers agreeing to a multiyear set-aside agreement would be required to devote the set-aside acreage to vegetative cover capable of maintaining itself through the contract period, to provide soil protection, water quality enhancement, wildlife protection, and natural beauty. Grazing of such acreage is prohibited except under major disaster conditions. Cost-share assistance must be provided for the establishment of vegetative cover.

The Secretary does not intend to implement a multiyear set-aside program. The acreage required to be devoted to ACR under the annual acreage limitation and, if authorized, PLD combined with acreage placed into the conservation reserve program are considered to be adequate for the purposes of supply management of program commodities.

Comments as to whether a multiyear set-aside program should be implemented are requested.

g. *Adjusting CAB's By Up To 10 Percent of FAB.* Section 503(b)(2) of the 1949 Act requires the establishment of a FAB for the 1989 crops of wheat, feed grains, upland cotton, and rice.

The FAB shall include: (1) The sum of the CAB's established for a farm and (2) the sum of (a) the average of the acreage planted to soybeans in 1986 through 1988 and (b) the average of the acreage on the farm devoted to CU in the normal course of farming operations in 1986 through 1988.

Section 505(a) of the 1949 Act provides that the Secretary may allow an upward adjustment of any CAB except such adjustment may not exceed 10 percent of the FAB. Any upward adjustment in a CAB established for a farm must be offset by an equivalent downward adjustment in one or more other CAB's established for such farm.

The Secretary proposes not to implement the option of adjusting CAB's by an amount not to exceed 10 percent of the FAB. Comments are requested on whether this option should be implemented.

Consideration will be given to any data, views and recommendations that may be received relating to these issues.

Authority: Secs. 107C, 107D, 107E, 107F, 109, and 110 of the Agricultural Act of 1949, as amended, 99 Stat. 1446, 1383, as amended, 1448, 91 Stat. 950, as amended, 951, as amended (7 U.S.C. 1445b–2, 1445b–3, 1445b–4, 1445b–5, 1445d and 1445e); secs. 4 and 5 of the CCC Charter Act, as amended, 62 Stat. 1070, 1072, as amended (15 U.S.C. 714b and 714c).

Signed at Washington, DC, on April 15, 1988.

Milton Hertz,

Executive Vice President, Commodity Credit Corporation.

[FR Doc. 88–8641 Filed 4–15–88; 1:52 pm]

BILLING CODE 3410-05-M

BEST COPY AVAILABLE

VOL
53

ISS
75

AP
19

1988

UMI

federal register

Tuesday
April 19, 1988

Part VI

Environmental Protection Agency

40 CFR Part 52

Approval and Promulgation of Implementation Plans; Indiana; Final and Proposed Rulemaking

ENVIRONMENTAL PROTECTION AGENCY

40 CFR Part 52

[FRL-3364-7]

Approval and Promulgation of Implementation Plans; Indiana

AGENCY: Environmental Protection Agency (USEPA).

ACTION: Notice of final rulemaking.

SUMMARY: Indiana has submitted at various times portions of a lead State Implementation Plan (SIP), as required by section 110(a)(2)(H) of the Clean Air Act. On September 29, 1984 (49 FR 38297), USEPA proposed to approve the Indiana lead SIP.

Among the comments received was the assertion that certain sources engaged in lead recovery operations in the State were not included in the plan proposed in the September 29, 1984, **Federal Register**. USEPA re-examined the emission inventory and determined that the State had failed to include process lead fugitive emissions in estimating the lead emissions from certain sources. Since the publication of this proposed approval, Indiana submitted additional information to satisfy the major deficiencies identified by USEPA.

On April 10, 1987 (52 FR 11696), USEPA published a supplemental notice reproposing approval of the Indiana Lead Plan, including Rule 325 IAC 15-1 (promulgated by the State on January 27, 1987), which contains source specific provisions applicable to seven lead sources. Public comments were received in response to this reproposal. In today's notice, USEPA is responding to the public comments received, and except for one lead source, RSR Quemetco (Marion County), is approving Indiana's lead plan. Elsewhere in today's **Federal Register**, USEPA is proposing to approve Indiana's plan for Quemetco.

EFFECTIVE DATE: This final rulemaking becomes effective on May 19, 1988.

ADDRESSES: Copies of the Indiana lead plan, public comments on the notice of proposed rulemaking and other materials relating to this rulemaking are available for inspection at the following addresses: (It is recommended that you telephone Anne E. Tenner, at (312) 353-2205, before visiting the Region V Office.)

U.S. Environmental Protection Agency, Region V, Air and Radiation Branch (5AR-26), 230 South Dearborn Street, Chicago, Illinois 60604.

Office of Air Management, Indiana Department of Environmental Management (IDEM), 105 South Meridian Street, P.O. Box 6015, Indianapolis, Indiana 46206-6015.

A copy of today's revision to the Indiana SIP is available for inspection at: U.S. Environmental Protection Agency, Public Information Reference Unit, 401 M Street, SW., Washington, DC 20460.

FOR FURTHER INFORMATION CONTACT: Anne E. Tenner, (312) 353-2205.

SUPPLEMENTARY INFORMATION:

I. Background

On October 5, 1978, USEPA promulgated National Ambient Air Quality Standards (NAAQS) for lead (43 FR 46258). Both primary and secondary standards were set at a level of 1.5 micrograms of lead per cubic meter of air ($\mu g/m^3$), maximum arithmetic mean as averaged over a calendar quarter. Section 110(a)(1) of the Clean Air Act (Act) requires each State to submit a plan which provides for the attainment and maintenance of the primary and secondary NAAQS.

The general requirements for a SIP are outlined in section 110(a)(2) of the Act and USEPA regulations at 40 CFR Part 51. Specific requirements for developing a lead SIP are set forth in 40 CFR Part 51 Subpart G[1] and the manual entitled "Updated Information on Approval and Promulgation of Lead Implementation Plans," July 1983. These provisions require the submission of air quality data, emissions data, air quality modeling, control strategies, demonstrations that the NAAQS will be attained within the timeframe specified by the Act, and provisions for insuring maintenance of the NAAQS.

Under 40 CFR 51.117 (formerly 40 CFR 51.80), an attainment demonstration is required: (1) In the vicinity of the following sources which emit five or more tons of lead per year—primary lead smelters, secondary lead smelters, primary copper smelters, lead gasoline additive plants, and lead-acid storage battery manufacturing plants that produce 2,000 or more batteries per day, (2) in the vicinity of any other stationary source that emits 25 or more tons of lead per year, or (3) in any other area that has had measured lead concentrations in excess of the NAAQS since January 1, 1974. Any source which meets the requirements of either (1) or (2) above is considered a "point source" for the purposes of today's rulemaking.

[1] The lead SIP requirements were formerly codified in a separate subpart, Subpart E, but these were recodified and redistributed within Subpart G, Control Strategy, on November 7, 1986 (51 FR 40655). Many of the former Subpart E requirements specific to lead are now found in 40 CFR 51.117.

In addition, USEPA established lead monitoring and data handling requirements in a September 3, 1981, **Federal Register** notice (46 FR 44159), which was codified at 40 CFR Part 58. Indiana's responses to all of these requirements are addressed in today's notice.

II. Indiana's Lead SIP

In the December 29, 1983 (48 FR 57313), **Federal Register**, the USEPA proposed disapproval of draft regulations submitted by Indiana as part of its lead SIP for the following reasons: (a) Lack of a complete emission inventory; (b) failure to demonstrate attainment of the lead national ambient air quality standards (NAAQS) in certain areas; and (c) lack of an adequate amibient lead monitoring plan. In response to USEPA's proposed rulemaking, the State committed to correct the deficiencies listed in the notice and did submit a revised plan. On September 29, 1984 (49 FR 38297), USEPA proposed to approve the Indiana lead SIP. On January 2, 1985 (50 FR 123), USEPA extended the public comment period at the request of the State of Indiana. Public comments were received in response to the December 29, 1983, and September 29, 1984, proposals.

Among the comments received was the assertion that certain sources engaged in lead recovery operations in the State were not included in the plan proposed in the September 29, 1984, **Federal Register**. USEPA re-examined the emission inventory and determined that the State had failed to include process lead fugitive emissions in estimating the lead emissions from certain sources. On April 19, 1985, the State committed to resolve these deficiencies in its emission inventory, as well as additional problems which USEPA had recognized since its proposals.

Since the publication of the proposed approval and the extension of the public comment period, Indiana submitted additional information to satisfy the major deficiencies identified by USEPA. These were submitted to USEPA on July 8, 1985, July 12, 1985, December 5, 1986, December 16, 1986, and February 18, 1987. Included in these submittals was a revised regulation limiting lead emissions, 325 IAC 15-1. Additional technical information was submitted to USEPA on the following dates: June 9, 1987, July 13, 1987, July 17, 1987, and July 22, 1987.

On April 10, 1987 (51 FR 11696), USEPA reproposed approval of the Indiana Lead Plan, including Rule 325 IAC 15-1 (promulgated by the State on

Jaunary 27, 1987) which contains source specific provisions applicable to seven lead sources. Public comments were received in response to this reproposal as well.

USEPA will address in the following pages the major elements of Indiana's lead plan. This includes the monitoring requirements, mobile source analyses, and stationary source requirements. USEPA will also respond to public comments submitted, and approve, with the exception of RSR Quemetco (Marion County), the Indiana lead plan.

Rule 325 IAC 15-1—Lead Emission Limitations

On July 30, 1986, the Indiana Air Pollution Control Board (IAPCB) preliminarily adopted revised 325 IAC 15-1. On September 30, 1986, the IDEM submitted 325 IAC 15-1 to USEPA for parallel processing. On December 3, 1986, the IAPCB adopted revised 325 IAC 15-1, which was modified based on public comments. This revised rule was submitted to USEPA on December 16, 1986. It was promulgated for State purposes on January 27, 1987, and resubmitted to USEPA on February 18, 1987.

The rule is divided as follows:

325 IAC 15-1-1.	Applicability.
325 IAC 15-1-2(a).	Source-specific provisions for: Refined Metals, Indianapolis; Chrysler Corporation Foundry, Indianapolis; Delco Remy Division of General Motors Corporation, Muncie; Oxide and Chemical Corporation, Brazil; U.S.S. Lead Refinery, East Chicago; and Hammond Lead Products, Inc. (HLP-Halox Division and Halstab Division), Hammond.
325 IAC 15-1-2(b).	Operation and Maintenance Programs.
325 IAC 15-1-3.	Control of Fugitive Lead Dust.
325 IAC 15-1-4	Methods to Determine Compliance.

Rule 325 IAC 15-1 applies only to those sources specifically listed in 325 IAC 15-1-2. Unless otherwise noted in the rule, compliance is required immediately. The site-specific emission limits and other requirements for these sources contained in 325 IAC 15-1-2 are discussed below. All of the subject sources are required to submit operation and maintenance programs designed to prevent deterioration of control equipment performance to the IDEM by June 1, 1987. These will be incorporated into individual operating permits. USEPA requested and the Indiana Office of Air Management (IOAM) agreed to submit these operation and maintenance programs to USEPA for comment prior to the State's approval of them and for information after the State adopts them.

325 IAC 15-1-3 requires all sources listed in 325 IAC 15-1-2 to comply with the following fugitive dust requirements:

(1) No source shall create or maintain outdoor storage of bulk materials containing more than 1.0% lead by weight of less than 200 mesh size particles.

(2) All materials containing more than 1.0% lead by weight of less than 200 mesh size particles shall be transported in closed containers or by enclosed conveying systems.

(3) Control programs shall be designed to minimize emissions of lead from all fugitive emission points. The programs shall include good housekeeping practices for the clean-up of spills and for minimizing emissions from loading and unloading areas as applicable. The program shall be submitted to the IOAM on or before June 1, 1987. The State shall submit these fugitive lead control plans to USEPA for approval as SIP revisions. Indiana has committed to USEPA that it intends to submit these plans to USEPA as revisions to the Indiana SIP by December 31, 1987.

325 IAC 15-1-4(a) establishes a test method (USEPA Reference Method 12, Appendix A of 40 CFR Part 60 and 325 IAC 3-2, Source Sampling Procedures) for determining compliance with the emission limits in 325 IAC 15-1-2. 325 IAC 15-1-4(b) requires sources with restrictions on their hours of operation to maintain logs indicating the actual hours of operation and submit quarterly summaries of these logs to the IDEM.

Action

USEPA is approving 325 IAC 15-1.

Indiana Lead Sources

The Indiana plan addresses areas of the State where there are point sources, under 40 CFR 51.117, and other sources which have significant lead emissions which could potentially cause violations of the lead NAAQS. These include both mobile and stationary source related sites.

A. Mobile Source Related Sites

1. Lake County—The Frank Borman Expressway (I-80/94) east of Cline Avenue (Indiana 912) to a point east of Indianapolis Boulevard (Indiana 52/US-20).

2. Clark County—Jeffersonville monitoring site at the junction of I-65/US-62.

3. Floyd County—See discussion in *Other Sites* below.

The Frank Borman Expressway was included as a study area due to the high volume of vehicular traffic. The geographic area was considered to be dominated by lead emissions from mobile sources. Indiana submitted an analysis for this site to demonstrate that the area is attaining the NAAQS. The analysis demonstrated that using the highest valid ambient quarterly lead level of 0.80 $\mu g/m^3$ (third quarter, 1982) the projected future (i.e., in three years ambient lead concentration is calculated to be 0.78 $\mu g/m^3$. (Note, actual monitored data for 1985 shows a maximum quarterly average concentration of 0.29 $\mu g/m^3$.

This demonstrates that the lead standard was attained in the Lake County study area in 1982 and will be maintained through continuation of the Federal program to phase down lead in leaded gasoline. Therefore, USEPA is approving this portion of the plan.

USEPA has also identified the Jeffersonville monitor in Clarke County at the junction of I-65 and US-62 as being a mobile source related site. There are no significant lead point sources in the vicinity of this monitor. An analysis was conducted by a contractor for USEPA. The analysis demonstrated that using the highest recorded ambient quarterly average of 1.74 $\mu g/m^3$ (fourth quarter, 1978), the projected future quarterly average is 0.67 $\mu g/m^3$. (Note, actual monitored data for 1985 shows a maximum quarterly average concentration of 0.20 $\mu g/m^3$.)

Therefore, the recent ambient air quality data verify that the standard for lead has been attained at the Jeffersonville lead monitor since 1979. Continued attainment is expected through the Federal program to phase-down lead in leaded gasoline. As a result, USEPA is approving this portion of the Plan.

B. Stationary Source Related Sites

Title 40 CFR 51.117 requires that a lead plan must address all areas in the vicinity of "point sources" of lead and any other areas that have had measured lead air concentrations in excess of the NAAQS since January 1974. The State identified the following as its lead point sources:

1. *Refined Metals, Inc.*, a secondary lead smelter located in Indianapolis (Marion County).

2. *U.S.S. Lead Refinery*, a secondary lead smelter in East Chicago (Lake County).

3. *Oxide and Chemical*, a lead oxide manufacturing plant located in Brazil (Clay County).

4. *G.M. Delco Remy*, a lead-acid storage battery manufacturing plant located in Muncie (Delaware County).

5. *Chrysler Corporation Foundry*, a grey iron foundry located in Indianapolis (Marion County).

6. *Hammond Lead Products*, lead oxide manufacturing plant located in Hammond (Lake County).

In addition, USEPA has identified RSR Quemetco, a secondary lead smelter located in Indianapolis (Marion County), as a possible lead point source. Each of these seven sources is addressed below:

Refined Metals. Regulation 325 IAC 15-1 requires Refined Metals to:

a. Install and operate hooding systems by June 1, 1987, for the blast furnace's skip hoist and charging area, the blast furnace's slag and tapping area, the casting area, the refinery kettles, and the lead dust furnace charging area. The hooding systems required for the operations listed above shall at least have a minimum of 90% capture efficiency. The emissions shall be vented to a control device with 99.5% control efficiency.

b. Install and operate enclosed screw conveyors by June 1, 1987, to transport lead flue dust to the lead dust furnace.

c. Comply with the emission limits for its M-1 baghouse stack, M-2 baghouse stack, and blast furnace fugitive emissions by June 1, 1987.

d. Limit the hours of operations for those sources whose emissions are specifically restricted by limits in 325 IAC 15-1-2(a)(1) to not more than 2,080 hours/quarter.

Modeled Attainment Demonstration. Indiana performed a computer dispersion modeling analysis consistent with USEPA Modeling Guidelines of the area surrounding Refined Metals. The maximum predicted quarterly concentration was 1.34 $\mu g/m^3$ for the third quarter of 1980 at a receptor located along the fenceline approximately 100 meters (m) northeast of the emission sources. Adding a 0.15 $\mu g/m^3$ background value [2] results in a total predicted concentration of 1.49 $\mu g/m^3$, thus demonstrating attainment of the lead NAAQS in the vicinity of Refined Metals. Additional discussion of this analysis may be found in the Technical Support Documents located at Region V.

Action. The proposed control measures, the implementation of fugitive dust control procedures, and the emission limits were evaluated by USEPA and were determined to meet the requirements of the Clean Air Act. However, USEPA noted that Indiana had not submitted its methodology to determine compliance with its 90% capture efficiency requirement for hooding systems. On January 12, 1988, Indiana committed to investigate this problem and will incorporate within the Refined Metals' operating permits specific criteria, i.e., process and control equipment design and operating parameters, for determining compliance with the capture efficiency provisions. These will be submitted to USEPA. USEPA is approving the Indiana lead Plan for Refined Metals, Inc. based, in part, on the January 12, 1988, commitment letter.

2. *U.S.S. Lead Refinery.* U.S.S. Lead is not currently in operation. Should U.S.S. Lead seek to operate its facility in East Chicago in the future, 325 IAC 15-1 limits the operating hours for its blast furnace stack, blast furnace fugitive emissions, refining kettles fugitive emissions, casting fugitive emissions, and the reverbatory furnace fugitive emissions each to 334 hours per quarter. In addition, U.S.S. Lead is required to meet the lead emission limits in Indiana Rule 325 IAC 15-1-2(a)(5) for these same sources. Emissions from the reverbatory furnace stack were neither included in Indiana's modeling demonstration nor in its rule. Therefore, USEPA proposed for comment that the reverbatory furnace stack had a 0.000 lbs/hour limit in Indiana's plan. Indiana did not comment negatively on this element in the proposal, and, thus, USEPA is approving a 0.000 lbs/hour limit for the reverbatory furnace stack. U.S.S. Lead is also required by Indiana's plan to implement the fugitive dust control procedures specified in 325 IAC 15-1-3(a).

Modeled Attainment Demonstration. The maximum predicted quarterly concentration was 1.35 $\mu g/m^3$ during the first quarter of 1978 at a receptor located along the fenceline approximately 130 m east of the emission sources. Adding the 0.15 $\mu g/m^3$ background value results in a total concentration of 1.50 $\mu g/m^3$, thus demonstrating attainment of the lead NAAQS in the vicinity of U.S.S. Lead. Additional discussion may be found in the Technical Support Documents located at Region V.

Action. The proposed control measures, the implementation of the fugitive dust control procedures specified in Indiana rule 325 IAC 15-1-3(a), and the emission limits were evaluated by USEPA and were determined to meet the requirements of the Clean Air Act. Therefore, USEPA is approving the Indiana Lead Plan for U.S.S. Lead.

3. *Oxide and Chemical Corporation.* Rule 325 IAC 15-1 requires Oxide and Chemical to limit its operation of the Franklin reactor to no more than 670 hours per quarter and to comply with lead emission limits specified in 325 IAC 15-1-2(a)(4) for Barton Reactors Nos. 1, 2, 3, and 4; Rake Furnace Kiln #2; and the Franklin Reactor. The facility is also required to implement the fugitive lead control program required by 325 IAC 15-1-3(a).

Modeled Attainment Demonstration. The maximum predicted quarterly concentration was 1.34 $\mu g/m^3$ for the first quarter of 1976 at a receptor located along the fenceline approximately 100 m from the emission sources. Adding a 0.15 $\mu g/m^3$ background value results in a total concentration of 1.49 $\mu g/m^3$, thus demonstrating attainment of the lead NAAQS in the vicinity of Oxide and Chemical. Additional discussion may be found in the Technical Support Documents located at Region V.

Action. The control measures, the implementation of the fugitive dust control procedures, and the emission limits were evaluated by USEPA and were determined to meet the requirements of the Clean Air Act. Therefore, USEPA is approving the Indiana lead Plan for Oxide and Chemical.

4. *Hammond Lead Products, Inc.* Hammond Lead Products has two facilities in Hammond, separated by several miles. The newer facility is the Halstab Division, regulated by 325 IAC 15-1-2(a)(7). The older facility consists of an old Halstab Plant, since closed, and the HLP-Halox Division, regulated by 325 IAC 15-1-2(a)(6).

Halstab Plant. Control measures in 325 IAC 15-1-2 for the new Halstab Plant include implementation of operation and maintenance procedures for the air pollution control devices, limiting the hours of operation for sources whose emissions are vented through certain named stacks (S-1, S-9, S-10, S-11, S-12, S-13, S-14, S-15, and S-16), and setting hourly emission limits for these stacks and others.

Modeled Attainment Demonstration (Halstab Plant). The maximum adjusted

[2] A 0.15 $\mu g/m^3$ background was consistently used in Indiana's lead plan. This background level was suggested in three documents developed by USEPA contractors. They are: (1) "Development of an Example Control Strategy for Lead" (draft), January 23, 1979; (2) "Technical Support Document for the Vehicular Lead Analysis for the State of Indiana (Hammond Area)", October 1979; and (3) "Technical Support Document for the Vehicular Lead Analysis for the State of Indiana (Jeffersonville Area)", October 1979. It was also used in the adjoining State of Kentucky lead plan. USEPA and Indiana have evaluated this suggested background level and find it acceptable.

VOL 53 ISS 75 AP 19 1988 UMI

quarterly predicted concentration was 1.13 $\mu g/m^3$ for the third quarter of 1978, at a receptor located along the fenceline approximately 200 m north of the emission sources. Adding a 0.15 $\mu g/m^3$ background value results in a total concentration of 1.28 $\mu g/m^3$, thus demonstrating attainment of the lead NAAQS in the vicinity of Hammond Lead Halstab Plant.

HLP-Halox Plant. The Plan requires the Halox Plant to achieve compliance with the lead emission limits in 325 IAC 15-1-2(a)(6) by June 1, 1987. In addition, Hammond Lead is required to further investigate fugitive emissions (see discussion below).

Modeled Attainment Demonstration (Halox Plant). The maximum adjusted quarterly predicted concentration was 1.07 $\mu g/m^3$ for the third quarter of 1978, at a receptor located along the fenceline approximately 200 m north of the emission sources. Adding a 0.15 $\mu g/m^3$ background value results in a total concentration of 1.22 $\mu g/m^3$, thus predicting attainment of the lead NAAQS in the vicinity of Hammond Lead HLP-Halox Plant. Additional discussion may be found in the Technical Support Documents located at Region V.

Monitored Violations—HLP-Halox Plant. Notwithstanding the modeled attainment demonstration, the ambient lead monitors near this plant continued to measure violations of the lead standard, despite some of the measures previously taken by Hammond Lead to reduce the lead emissions from the Halox plant. USEPA notified Indiana of this deficiency and requested the State to investigate the apparent inconsistency between the monitoring and modeling data.

The State was unable to determine if the discrepancy was due to all emission points not yet being in compliance with the regulation (compliance was not required until June 1, 1987), modeling under-predictions, or an incomplete emission inventory used in the modeling. To resolve this issue, the State, in 325 IAC 15-1-2(a)(B), (C), and (D), required Hammond Lead to investigate this discrepancy and included in the rule a schedule for implementing the study and adopting additional measures, if needed, to assure attainment and maintenance of the lead NAAQS.

More specifically, the rule requires Hammond Lead to investigate and submit an interim report to IDEM on or before June 30, 1987, on the nature, cause, and magnitude of fugitive emissions which escape through its 25 roof ventilators and from other processes and exhaust systems. By December 31, 1987, Hammond Lead must submit a revised and complete emission inventory of its lead sources, a final report on the result of the investigations referenced above, and a list of additional control strategies under consideration. By June 30, 1988, Hammond Lead must submit to IDEM revised lead emission limits, if necessary, and control measures to achieve compliance with these limits. IDEM will recommend a revised control strategy to the IAPCB for adoption. Hammond Lead Products will be required to comply with the revised control strategy adopted by the Board as expeditiously as practicable, but no later than December 31, 1989.

On June 9, 1987, Indiana sent to USEPA a letter from Hammond Lead Products to the State dated June 2, 1987, summarizing Hammond Lead Products' progress in the investigatory work and, as a result of the initial study, a schedule of activities relating to proposed control measures. Hammond Lead Products also indicated that, based on the result of the initial study, all the permitted lead sources are in compliance with the lead limits required by Rule 325 IAC 15-1. Hammond Lead Products concluded that the monitored violations are attributable to certain uncontrolled process fugitive emissions.

As a result, Hammond Lead Products proposed to identify the process fugitive emissions that may have potential impact on the monitors. In order to accomplish this task, Hammond Lead Products committed to pursue the following schedule:

June 30, 1987—Install special purpose monitors in the areas above the eaves and below the roof of the old plant building (Barton area, mill area, furnace area, and the front end). The purpose is to determine the level of fugitive emissions that would escape from the roof ventilators.

August 15, 1987—Install new fabric filters for the mill area. The purpose is to recycle the dust captured by the filters and to maintain a higher negative pressure system in the mill area.

September 1, 1987—Replace the existing fabric filter of the No. 1 silicate operation with a filter of larger capacity.

September 30, 1987—Complete process and ventilation drawings for the entire plant which is necessary for the engineering modifications.

In addition, Indiana committed to submit any revised control strategy developed for Hammond Lead Products as a SIP revision on or before December 31, 1988.

Action. The control limitations, fugitive dust control measures, operating restrictions, attainment plan, and further studies for the Hammond Lead Product's Halox and Halstab Plants were evaluated by USEPA and were determined generally to meet the requirements of the Clean Air Act. USEPA concurs with the State on the need for further study and is including the study in its rulemaking on the SIP.

USEPA is approving the Indiana lead plan for Hammond Lead-Halstab and Hammond Lead-Halox on the stipulation that Hammond Lead and the State adhere to the requirements of 325 IAC 15-1-2(a)(6)(B) through (D).

5. *GM Delco Remy.* Rule 325 IAC 15-1-2(a)(3) requires installation of ductwork to vent the emissions from the three vacuum cleaning lines through the Central Tunnel Systems' control devices and stacks by June 1, 1987. Further, 325 IAC 15-1-2(a)(3) contains enforceable emission limits for the lead sources at Delco Remy and 325 IAC 15-1-3 specifies procedures for controlling fugitive lead dust at the facility.

Modeled Attainment Demonstration. The maximum predicted quarterly concentration was 0.97 $\mu g/m^3$ for the third quarter of 1980, at a receptor located along the fenceline approximately 120 m from the emission sources. Adding a 0.15 $\mu g/m^3$ background value results in a total concentration of 1.12 $\mu g/m^3$, thus demonstrating attainment of the lead NAAQS in the vicinity of Delco Remy. Additional discussion may be found in the Technical Support Documents located at Region V.

Action. The control measures were evaluated by USEPA and were determined to meet the requirements of the Clean Air Act. Therefore, USEPA is approving the Indiana lead SIP for GM Delco Remy.

6. *Chrysler Corporation.* The only lead emissions at Chrysler are from the cupola. The control strategy restricts the cupola stack to a 0.55 lbs/hr limit and the fugitive emissions to 1.894 lbs/hr. Control measures are in place, and the source must currently be in compliance with both emission limitations.

Modeled Attainment Demonstration. The maximum adjusted predicted quarterly concentration was 1.22 $\mu g/m^3$ for the third quarter of 1980, at a receptor located approximately 170 m northeast of the emission sources. Adding a 0.15 $\mu g/m^3$ background value results in a total predicted concentration of 1.37 $\mu g/m^3$, thus demonstrating attainment of the lead NAAQS in the vicinity of Chrysler.

Action. The emission limitations were evaluated by USEPA and determined to meet the requirements of the Clean Air Act. Therefore, USEPA is approving the Indiana lead SIP for Chrysler Corporation.

7. *RSR Quemetco.* RSR Quemetco is a secondary lead smelter in Indianapolis. USEPA initially identified RSR Quemetco as a possible point source; i.e., greater than five tons/year emissions. On April 13, 1984, and May 4, 1984, the State confirmed that the blast furnace at RSR Quemetco was permanently shut down and has been deleted from the emission inventory. On May 4, 1984, the State submitted a revised emission inventory for RSR Quemetco which includes all stack and process fugitive lead emissions. This inventory shows that RSR Quemetco currently emits less than five tons/year of lead, because of the recent installation of additional controls. The revised emissions inventory includes emissions from two newly installed capture hoods on the casting operations and the reverberatory furnace tapping area, which are vented to a baghouse. Additional information on these controls was contained in the May 4, 1984, submittal.

These controls also limit total suspended particulate (TSP) emissions at RSR Quemetco. However, these controls limit TSP emissions to a greater extent than is necessary to meet the present particulate matter SIP requirements. Thus, there are no federal requirements to keep these controls operating at their current calculated efficiency.

Section 51.117 of Title 40 requires a demonstration of attainment in the vicinity of secondary lead smelters which emit five tons or more of lead per year. Prior to the installation of the capture hoods discussed above, which are not current federal requirments, emission estimates for RSR Quemetco exceeded five tons/year. As a result, a demonstration of attainment is still required to ensure that federally enforceable control measures are adequate to protect the lead NAAQS.

On May 4, 1984, the State of Indiana submitted a dispersion modeling analysis based on the Climatological Dispersion Model (CDM). Although the modeling analysis predicted that the lead emissions from RSR Quemetco will not result in a violation or interfere with attainment of the lead NAAQS, USEPA can no longer accept this outdated analysis, which did not use the current reference model, Industrial Source Complex Long Term (ISCLT), and did not use sufficient meteorological data. Thus, a modeling analysis consistent with USEPA modeling guidelines was still required.

The State committed to review its lead source inventory to ensure that RSR Quemetco, and other smaller sources of lead, do not have the potential to violate the lead NAAQS. It further committed to modify 325 IAC 15-1, if necessary, to assure that lead emissions from these smaller sources do not threaten the lead NAAQS and that their emissions do not increase above five tons/year.

On February 18, 1987, the State of Indiana determined that problems exist in Rule 325 IAC 15-1, with respect to the enforceability of the emission limits for RSR Quemetco and the fugitive dust control plans for the other sources emitting less than five tons/year of lead. On July 17, 1987, and September 23, 1987, the State submitted to USEPA a draft rule amending Rule 325 IAC 15-1.

The State requested that the amended rule be "parallel-processed" for approval as a SIP revision. The amendments include: (1) Site specific emission limits, fugitive dust control plans, and an operation and maintenance (O&M) program for RSR Quemetco and (2) fugitive dust control plan requirements for Exide Corporation, C & D Batteries, and General Battery Corporation. On February 3, 1988, the State submitted the amended rule as a SIP revision after it had been State promulgated. This amended rule provides an enforceable mechanism to prevent RSR Quemetco from increasing its current lead emissions. (In a January 12, 1988, letter, Indiana committed to clarify the capture efficiency requirements in the rule by amending RSR Quemetco's operating permits and to submit these permits to USEPA.)

In today's notice, USEPA is not taking final action on the RSR Quemetco portion of the Indiana lead plan. Instead, elsewhere in today's **Federal Register**, USEPA is proposing approval of the amendments to the Indiana lead SIP, including emission limits for RSR Quemetco, if the State submits a State promulgated copy of the amendments as a revision to the lead SIP by December 31, 1987. Additionally, the State has submitted during the public comment period an attainment demonstration for RSR Quemetco consistent with USEPA modeling guidelines. USEPA is proposing approval of this as well.

8. *Other Sites—New Albany-Floyd County.* USEPA reviewed all of its ambient monitoring data collected since 1974 and discovered that a violation of the standard occurred during the fourth quarter of 1978 at the site in New Albany in Floyd County. This area was not included in any of the mobile source or stationary source related sites listed above because of insufficient emissions data.

USEPA proposed disapproval of the New Albany plan in Floyd County in the December 29, 1983 (48 FR 57318), **Federal Register**, because the State had failed to submit information addressing this previously measured violation or to make a demonstration that the current plan would assure attainment and maintenance of the lead standard in Floyd County.

Section 51.117 of Title 40 requires that an analysis must be made in the vicinity of a monitor that has recorded a lead violation since 1974. During the fourth quarter of 1978, a concentration of 1.78 $\mu g/m^3$ was measured at the New Albany monitor, which was determined by the State to be caused by mobile source emissions. These emissions have subsequently been reduced due to the Federal phaseout of lead in gasoline. The State's submittal of April 13, 1984, contained an analysis using a 1978 base year and a 1984 projection year. This analysis demonstrated attainment of the lead NAAQS well before the projection year, and is consistent with the general rollback procedures for the lead SIPs. Therefore, it is considered to be acceptable.

The maximum measured quarterly average during the most recent year (1981) of available data (0.52 $\mu g/m^3$) is consistent with the projected maximum quarterly average of 0.52 $\mu g/m^3$. The monitor was discontinued after that year because the readings were so low.

Action. USEPA is approving the lead SIP for the New Albany area.

Gary—Lake County (U.S. Steel). The emission inventory indicates that the current lead emissions from U.S. Steel in Gary are less than 25 tons/year. 40 CFR 51.117 does not require a demonstration of attainment in such an area. However, to assure that the SIP is adequate to maintain the standard, USEPA required the State to install and operate an ambient lead monitor near this source. The State began to analyze for lead at the Gary Federal Building site in 1983 (the closest State-operated monitor at that time to U.S. Steel). The maximum measured quarterly average to date is 0.83 $\mu g/m^3$ (1985, 3rd quarter). This concentration is consistent with the State's assertion that the plan is adequate to protect the lead NAAQS in the Gary area.

Action. USEPA is approving the Indiana lead SIP for the U.S. Steel area in Gary.

Burns Harbor—Porter County (Bethlehem Steel). On November 21,

1983, the State committed to install a monitor to measure the impact of the lead emissions from Bethlehem Steel. The emission inventory indicates that the current lead emissions from Bethlehem Steel in Porter County are less than 25 tons/year. 40 CFR 51.117 does not require a demonstration of attainment in such an area. However, to assure that the SIP is adequate to maintain the NAAQS, USEPA required the State to install and operate an ambient lead monitor near this source.

On May 4, 1984, Indiana stated that Bethlehem Steel began to monitor for lead in May 1983, at two sites. The maximum measured quarterly average to date is 0.11 $\mu g/m^3$ (1984, 1st quarter). Because the measured values over a 3-year period were so low, the State discontinued (with USEPA approval) analysis of lead at these two sites in 1986.

Action. USEPA is approving the Indiana lead SIP for the Bethlehem Steel area.

East Chicago—Lake County (Inland Steel and LTV Steel). The emission inventory indicates that the current lead emissions from Inland Steel and LTV Steel in Lake County are less than 25 tons/year each. Although the emissions levels do not trigger the need for an attainment demonstration, pursuant to 40 CFR 51.117, the existence of measured violations in East Chicago since January 1, 1974, does necessitate an attainment demonstration. Futhermore, USEPA required the State to submit all available lead data for this area and to ensure that it is quality assured and representative.

Attainment Demonstration. The State's modeling analysis for the East Chicago area around Inland Steel and LTV Steel was submitted on April 13, 1984, and May 4, 1984. It predicts attainment in the Inland Steel/LTV Steel area. USEPA's review of this modeling is contained in a memorandum entitled "Indiana Lead SIP", dated June 15, 1984. USEPA finds that this modeling satisfies the requirements of 40 CFR 51.117 for a demonstration of attainment.

Monitoring Program. In the December 16, 1986, submittal, Indiana provided all lead data for the period 1983–1986 (2nd quarter) for the three monitors near Inland Steel and LTV Steel. All the measured concentrations were less than half of the NAAQS during this period.

Action. USEPA is approving the Indiana lead SIP for the Inland Steel/LTV Steel area in East Chicago.

Bluffton—Wells County (Corning Glass). The Bluffton area in the vicinity of the Corning Glass Company was identified as an area impacted by a major lead source. On November 21, 1983, however, the State indicated that this source was permanently shut down and has been taken out of the State's emission inventory. Further, Indiana indicated that if the source were to resume operation in the future, it would be subject to New Source Review. Consequently, no control strategy is necessary for this source. USEPA is approving this portion of the Plan.

Public Comments

USEPA is addressing public comments received in response to the proposals in the April 10, 1987 (51 FR 969), September 29, 1984 (49 FR 38297), and December 29, 1983 (48 FR 57313). Comments and responses to the April 10, 1987, proposed approval are:

(1) Hammond Lead Products—Hammond

Hammond Lead Products questioned the USEPA's authority to require a more detailed schedule of the Hammond lead study that would include increments of progress. Rationales for its objection are that:

(a) *Comment:* Enforceable dates of progress cannot be adopted without conducting further state rulemaking proceedings.

USEPA Response: A detailed schedule for the Hammond Lead Products study is necessary to insure that progress is being made toward completion of the required study. Since the "increment of progress" requirement of the Hammond Lead Plan does not in any way change the schedule in 325 IAC 15–2(a)(6), further State rulemaking proceedings are not necessary.

(b) *Comment:* On April 10, 1987 (52 FR 11696), USEPA stated that the control strategy for the two Hammond Lead facilities that are contained in the Indiana lead SIP met the requirement of the Clean Air Act. Therefore, the lack of a detailed schedule is insufficient to justify disapproval by USEPA of the lead plan for Hammond Lead Products.

USEPA Response: While USEPA finds the State's modeled demonstration of attainment of the lead NAAQS acceptable, USEPA believes that the State requirement to conduct further studies is also appropriate. Therefore, USEPA will include the further studies requirement in the SIP to ensure that these studies are carried out. (Section 45.2.3—Updated Information on Approval and Promulgation of the Lead Implementation Plan, dated July 1983.)

(c) *Comment:* At no time did USEPA object to the compliance schedule offered to Hammond Lead Products in the Indiana lead rule.

USEPA Response: USEPA did not object that the Indiana compliance schedule did not include increments of progress of Hammond Lead Products because the specific requirements are dependent on the findings and results of the first step of the study.

(d) *Comments:* Hammond Lead Products requested clarification concerning the possible action by USEPA if the State fails to submit an "interim and an enforceable date of progress" by June 9, 1987.

USEPA Response: If the State has not met this requirement, USEPA would have had to determine if the SIP were approvable. However, on June 2, 1987, Hammond Lead Products sent a letter to the State outlining the general strategy of the investigatory work and increments of progress of the tasks initiated. This action taken by Hammond Lead Products, therefore, eliminates this specific deficiency identified and makes moot Hammond Lead's comment.

(e) *Comment:* Hammond Lead Products requested that it participate in determining the site of the new lead monitor near the Halstab plant.

USEPA Response: USEPA has no objection to the above request. Hammond Lead Products should contact the State concerning this matter.

2. RSR Quemetco—Indianapolis

(a) *Comment:* RSR Quemetco maintained that: (i) Its facility is not a lead point source, (ii) there have been no monitored violations of the lead standard near this source, and (iii) the attainment demonstration conducted by the State showed compliance with the lead NAAQS. Therefore, the source does not believe that there is any basis to restrict the level of lead emissions from its facility.

USEPA Response: Although RSR Quemetco does not currently emit over five tons per year of lead, its current allowable emissions (based on control of TSP) are greater then five tons. Further, the attainment demonstration for RSR Quemetco, based on the facility's current actual lead emission levels, predicts a peak quarterly average concentration of 1.50 $\mu g/m^3$ lead, which is equal to the concentration level of the lead NAAQS.

Any increase in lead emissions at RSR Quemetco from the present level would likely violate the ambient lead standard. Limiting the lead emissions from RSR Quemetco at the current level will ensure that the lead NAAQS is protected and also provide an enforceable emission limit for this facility.

(b) *Comment:* RSR Quemetco objected to the preliminary adoption of the

revised rule 325 IAC 15-1 because the State and USEPA did not provide enough time or opportunity to participate in the process.

USREPA Reponse: With regard to the State rulemaking process, it is the State's reponsibility to advise concerned parties of its proposed rulemaking and follow both correct State rulemaking procedures and Federal SIP submission procedures. The time required for the notification process is dependent on the Federal requirements of 40 CFR 51.102, which requires 30-day notice prior to public hearing, and on the requirements of Indiana. In the case of the RSR Quemetco amendments to 325 IAC 15-1, the IAPCB notified the public of its public hearing on May 19-20, 1987 (RSR Quemetco was notified by the IOAM on May 14, 1987, of the public hearing), held a public hearing on June 24, 1987, and adopted the amendments on September 2, 1987. This meets both State and Federal requirements.

Additionally, elsewhere, in today's notice USEPA is proposing the February 3, 1988, rule, as adopted by the State, and another public comment period is being provided to give all interested parties opportunities to comment on the amended rule. Based on the merits of the rule and the comments received, USEPA will rulemake on the revised rule accordingly.

3. Indiana Department of Environmental Management (IDEM)

(a) *Comment:* The State of Indiana requested that USEPA review the guidance material for the fugitive dust program and provide comments to the State.

USEPA Response: The fugitive dust control program guidance is currently being reviewed. Comments will be sent to the State upon completion of review.

The following comments were submitted in response to USEPA's September 29, 1984, proposed approval.

1. Inland Steel, East Chicago

(a) *Comment:* Inland Steel requested USEPA to grant a 30-day extension to the public comment period to the September 29, 1984, proposal.

USEPA Response: USEPA granted an extension of the public comment period until January 15, 1985, on January 2, 1985 (50 FR 123).

(b) *Comment:* Inland Steel stated that the requirement for either annual or bi-annual stack testing for lead sources whose processes are unchanging should be eliminated.

USEPA Response: USEPA required the State to submit an acceptable compliance methodology. Although the State originally considered requiring annual or bi-annual stack tests, its plan now contains a stack test compliance method without a required frequency. USEPA finds this acceptable and is approving this element in Indiana's plan.

2. RSR Quemetco, Indianapolis

Comment: RSR Quemetco contended that other companies engaged in the lead recovery business were not listed in the September 29, 1984, reproposal.

USEPA Response: USEPA requested the State of Indiana to re-examine its emission inventory. In response to this request, Indiana reviewed and revised its emission inventory. These changes resulted in USEPA reproposing those portions of the Indiana lead plan on April 10, 1987, which included the revised inventory.

3. Hammond Lead Products

Comment: Hammond Lead Products disagreed with the lead emission limits for its Hammond and Halstab Plants. Hammond Lead Products recommended development of new emission limits to comply with the lead NAAQS.

USEPA Response: The CAA requires that the State submit an adequate plan for sources such as Hammond Lead Products (i.e., emission limits, compliance schedules, required technical support, etc.) sufficient to protect the lead NAAQS, but does not require any specified emission limits. These are left up to the discretion of the State. It is USEPA's understanding that, subsequent to Hammond Lead's comment, Indiana worked further with Hammond Lead to develop emission limits which are more acceptable to Hammond Lead. These are contained in Indiana's current plan.

4. U.S.S. Lead Refinery, Inc.—East Chicago

Comment: U.S.S. Lead requested an extension of the public comment period of the reproposed Indiana lead SIP.

USEPA Response: USEPA reproposed Indiana's Lead Plan on April 10, 1987, which allowed U.S.S. Lead to further comment.

USEPA received further additional comments in response to the December 20, 1983, (48 FR 57318) proposed rulemaking of the Indiana lead SIP. Following are the comments along with USEPA's response to these comments.

1. Bethlehem Steel—Burns Harbor

Comment: Bethlehem Steel's comments addressed USEPA's requirement to install and operate ambient lead monitors in the vicinity of the Burns Harbor plant. Bethlehem contended that this requirement was unnecessary and unwarranted because the State was not required to make an attainment demonstration in this area.

USEPA Response: Under 40 CFR Part 58, Appendix D, section 2.7, monitoring of ambient lead levels is required even near sources of less than "point source" size, i.e., 25 tons of lead per year for steel mills, if lead levels are expected to be of significant concern, such as in urbanized areas where children live and play. The State agreed to analyze for lead from two of Bethlehem Steel's TSP monitors.

This commitment was acceptable to USEPA. (Note, the monitoring data show no violations of the lead standard in this area).

2. Inland Steel—East Chicago

Comment: Inland Steel raised objection to its being listed as a major lead stationary source. Inland Steel also contended that the ambient lead data showing violations of the lead standard that occurred before 1980 at monitors in East Chicago were not considered valid because they do not meet the sampling criteria. The commentor argued that these data should not be used as evidence that the standard was violated.

USEPA Response: Since Inland Steel emits less than 25 tons/year of lead, it is not considered a major lead source under 40 CFR 51.117. However, air quality data showed violations of the ambient lead standard at two sites in East Chicago near Inland Steel and LTV Steel in 1977 and 1979. For this reason, Inland Steel was included in the emission inventory for the modeling analysis to assess attainment of the lead NAAQS in this area.

Representative ambient data that show violation of the standard must be used in the control strategy development, even if the applicable sampling criteria are not met. These sampling criteria were established mainly to insure that findings of attainment are sufficiently documented.

Comment: Inland Steel believes that USEPA made poor technical judgment on the attainment status of East Chicago area (near Inland Steel and LTV). USEPA failed to treat East Chicago similarly to the Metropolitan Louisville study area (Jeffersonville site), despite the fact that both areas met the same criteria for an attainment demonstration.

USEPA Response: Although the recent monitoring data from the two monitors near Inland Steel and LTV show no violations of the standard, USEPA was not convinced that the overall East Chicago study area is attaining the ambient lead standard for reasons cited earlier (i.e., monitored violations of other sites in the area and previous lack

of an adequate modeling analysis). Therefore, USEPA maintains that an attainment demonstration is necessary for this area.

There is a great difference between the Metropolitan Louisville study area (Jeffersonville) and the East Chicago study area. Emission inventory data in the Louisville study area showed no significant lead emitting point sources, while the East Chicago area has several lead point sources that impact the lead air quality in the area. Therefore, these two areas cannot be treated the same in an attainment demonstration.

LTV Steel—East Chicago

(a) *Comment:* LTV contended that a formal demonstration of attainment was not necessary in the East Chicago area (near Inland Steel and LTV). The area had achieved the attainment of the lead standard for the same reason and in the same manner as it was achieved in the area around the Jeffersonville monitor. The population and traffic densities in East Chicago are comparable to those of the Jeffersonville and New Albany, Indiana areas, which USEPA had identified as a mobile source related sites.

USEPA Response: As discussed above, USEPA maintains that an attainment demonstration is necessary. The Jeffersonville/New Albany and East Chicago areas are vastly different and cannot be treated the same in an attainment demonstration.

(b) *Comment:* LTV indicated that USEPA's conclusion "that economic downturn in recent years has been in part responsible for improved monitoring data since 1979" was unfounded. LTV provided steel production data for 1976–1983 showing increase in production at LTV's Indiana Harbor Works since 1980.

USEPA Response: USEPA based its conclusion on a report developed by USEPA's consultant dated September 30, 1984, entitled "Technical Support Document for the State Implementation for Lead in the State of Indiana." The report indicated that the steel industry production dropped by 33 percent in the year 1982 from the previous years.

4. Hammond Lead Products—Hammond

Comment: Hammond Lead Products noted that under 40 CFR 51.40(c) in Subpart D, the Administrator requires a revision to the SIP when necessary to prevent a national ambient air quality plan from being exceeded. Further, under USEPA's promulgation of the lead NAAQS, States were generally required to demonstrate attainment of the lead NAAQS by no later than December 31, 1982. Applying these requirements, Hammond Lead Products questioned why USEPA required a SIP revision for lead from them when the lead monitoring data for the period of 1980–1983 showed no violation of the standard.

USEPA Response: Section 51.40(c), Air Quality Maintenance Area Plans, does not apply to the lead SIP. The requirements for maintenance of the lead NAAQS are covered in 40 CFR 51.117. 40 CFR 51.117(a)(2) (Demonstration of Attainment) requires a lead plan in areas: (1) Near certain lead point sources and (2) any other areas that have measured lead concentrations in excess of the NAAQS for lead since 1974. Since Indiana has areas where there are point sources of lead and ambient concentrations of lead in excess of the NAAQS for lead, Indiana is therefore required to submit a lead plan to USEPA for approval as a SIP revision. USEPA notes that there have been extensive monitored violations of the lead NAAQS since 1985 in the vicinity of Hammond Lead and Hammond lead is a point source for lead, i.e., a secondary lead smelter emitting more than five tons of lead per year.

C. Monitoring Plans

On September 3, 1981 (46 FR 44159), USEPA published its final rules pertaining to Ambient Lead Monitoring and Data Handling, codified at 40 CFR Part 58. The rules call for the development of a State monitoring plan for lead and its inclusion into the surveillance and ambient monitoring program. These plans must meet USEPA's monitoring requirements, including scheduling requirements, requirements concerning the establishment of monitoring network, and data handling and reporting procedures.

On November 30, 1981, the State of Indiana submitted to USEPA a revision to its SIP which provides for the establishment of an air quality surveillance network for lead. The submittal included a description of the proposed network and commits the State to the implementation of statewide State and Local Air Monitoring Stations (SLAMS) and National Air Monitoring Stations (NAMS), operated in accordance with the criteria given in Subpart B of 40 CFR Part 58, Appendix E, section 7. Ambient air quality monitoring methodologies used in the SLAMS network will either follow those in 40 CFR Part 58, Appendix E, or will be equivalent. The quality assurance procedures of Appendix A of 40 CFR Part 58 will be followed in operating its SLAMS sites and processing/analyzing the air quality data.

The lead monitoring stations will be reviewed on an annual basis and modified as needed to eliminate unnecessary sites or to correct inadequacies indicated by the annual review. No changes will be made to the network unless prior approval is given by USEPA. The annual SLAMS summary report will be submitted to USEPA by July 1 of each year.

USEPA's original review of the Indiana lead monitoring plan revealed that it met all applicable requirements, with the exception of 40 CFR Part 58, Appendix D, section 2.7, which requires lead monitoring in the vicinity of significant lead sources. In an October 19, 1983, letter, USEPA informed the State that it was required to install lead monitors in these areas. The State of Indiana has installed lead monitors in certain identified areas as documented in its May 4, 1984, submittal and May 21, 1984, letter (which includes maps showing locations of monitors near stationary sources). In 1986, Indiana notified USEPA that six lead stations were discontinued due to historically low measured values.

In the December 16, 1986, submittal, Indiana provided all lead measurements for the period 1983–1986 (2nd or 3rd quarter). Source-oriented monitors are located near Hammond Lead-Halox, U.S.S. Lead, Refined Metals, and Delco Remy (note, the Delco Remy monitor was shutdown in the 3rd quarter of 1986 due to low monitored values—i.e., less than or equal to 0.12 $\mu g/m^3$ over the past three years). Although Hammond Lead-Halstab (new plant) is near the U.S.S. Lead oriented site, an additional site oriented to this plant was initiated in the early spring of 1987.

Oxide and Chemical previously operated two lead monitors near its plant during 1981. This limited monitoring data showed attainment of the lead standard. Because the final rule restricts the hours of operation for Oxide and Chemical's Franklin Reactor, the State and USEPA have determined that a new monitor is not necessary at this time in the vicinity of Oxide and Chemical.

In addition, a lead monitor is located 0.6 km northwest of RSR Quemetco in Indianapolis. The sampling frequency at this site was increased to once every day starting January 1987. Because of various constraints (i.e., wooded area, railroad tracks, and lack of power), it is not practical to locate a site closer to this facility.

Recent lead monitor data show violations of the quarterly lead standard

in the vicinity of Hammond Lead, Refined Metals, and U.S.S. Lead. Since U.S.S. Lead shut down in early 1986, no monitored violations have occurred. It is anticipated that the installation of new hooded systems at the Refined Metals plant in Indianapolis will eliminate the violations in the vicinity of this source. The sampling frequency at the Refined Metals site on South Arlington Avenue has been increased to once every two days, starting January 1987.

For the Hammond Lead site, compliance with the emission limits in the rule is predicted to result in attainment at the Summer Street site. However, 325 IAC 15-1 requires Hammond Lead to investigate further fugitive emissions not regulated by 325 IAC 15-1. The rule requires the submittal of an alternative control strategy, if necessary, by December 31, 1988. This control strategy will be designed to assure attainment and maintenance of the lead standard and will eliminate any uncertainty as to the adequacy of the current control strategy. The sampling frequency at the Summer Street site has been increased to once every two or three days in early spring 1987.

Action

USEPA is approving the revised Indiana Air Quality Surveillance Plan, including the recent deletions. USEPA notes that no violations of the lead NAAQS were monitored in Indiana in the second and third quarters of 1987, the two most recent quarters of data available to USEPA.

D. New Source Review (NSR)

In order to satisfy this requirement, USEPA published in the **Federal Register** on December 10, 1987 (52 FR 46762), a notice of final rulemaking approving Indiana New Source Review (NSR) rule (325 IAC 2-1-1) for lead.

III. Conclusion

USEPA has reviewed the State submittals and is approving the following:

Study Areas	USEPA's Final Action
A. *Mobile Source Related Sites:*	
1. Frank Borman Expressway (I-80/94) west of Cline Avenue (Indiana 912) to a point east of Indianapolis Boulevard (Indiana 152/US-20) (Lake County).	Approval.
2. Jeffersonville Monitoring Site at Junction of I-65/US-62. (Clark County).	Approval.
3. New Albany—Floyd County.	Approval.
B. *Stationary Source Related Sites:*	
1. Refined Metals, Inc., Indianapolis—Marion County.	Approval based on Indiana's commitment to incorporate additional design and operating criteria within Refined Metals' operating permit.
2. U.S.S. Lead Refinery, East Chicago—Lake County.	Approval.
3. Oxide and Chemical, Inc. Brazil—Clay County.	Approval.
4. Hammond Lead Products, Hammond—Lake County.	Approval under the stipulation that Indiana will implement the further studies required by 325 IAC 15-1-2(a)(6)(B), (C), and (D) and its June 9, 1987, commitment.
5. G.M. Delco Remy, Muncie—Delaware County.	Approval.
6. Chrysler Corporation Foundry, Indianapolis—Marion County.	Approval.
7. RSR Quemetco, Indianapolis—Marion County.	No Final Action; (Subject of separate rulemaking action).
C. *Other Sites:*	
1. U.S. Steel, Gary—Lake County.	Approval.
2. Bethlehem Steel, Burns Harbor—Porter County.	Approval.
3. Inland Steel and LTV Steel, East Chicago—Lake County.	Approval.
4. Corning Glass, Bluffton—Wells County.	Approval.
D. *Ambient Lead Monitoring Plan.*	Approval.
E. *New Source Review*	Approval; (Subject of Separate Rulemaking Action).

USEPA is approving the Indiana lead SIP, including 325 IAC 15-1 (promulgated by the State on January 27, 1987) with the exception of RSR Quemetco. USEPA will propose approval of the amendments to Rule 325 IAC 15-1 (as submitted on February 3, 1988) and the Indiana Lead Plan for RSR Quemetco and three other non-point sources (Exide Corporation in Logansport, C & D Batteries in Attica, and General Battery Corporation in Frankfort) in a future **Federal Register** notice.

Since USEPA is approving 325 IAC 15-1 and the other requirements in Indiana's lead plan, this approval will not affect in any way the existing SIP requirements as they apply to the sources in the lead plan, i.e., therefore the sources remain bound by the existing TSP, opacity, volatile organic compound, etc. SIP requirements.

Under Executive Order 12291, today's action is not "Major." The Office of Management and Budget has exempted this rule from the requirements of section 3 of Executive Order 12291.

Under section 307(b)(1) of the Act, petitions for judicial review of this action must be filed in the United States Court of Appeals for the appropriate circuit by June 20, 1988. This action may not be challenged later in proceedings to enforce its requirements. (See 307(b)(2).)

List of Subjects in 40 CFR Part 52

Air pollution control, Incorporation by reference, Intergovernmental relations, Lead.

Note.—Incorporation by reference of the State Implementation Plan for the State of Indiana was approved by the Director of the **Federal Register** on July 1, 1982.

Dated: March 28, 1988.

Lee M. Thomas,

Administrator.

Title 40 of the Code of Federal Regulations, Chapter I, Part 52, is amended as follows:

PART 52—APPROVAL AND PROMULGATION OF IMPLEMENTATION PLANS

1. The authority citation for Part 52 continues to read as follows:

Authority: 42 U.S.C. 7401-7642.

Indiana

2. Section 52.770 is amended by adding new paragraph (c)(65) as follows:

§ 52.770 Identification of plan.

* * * * *

(c) * * *

(65) On November 30, 1981, Indiana established its air quality surveillance network for lead. On November 21, 1983, Indiana notified USEPA that Corning Glass was shut down. On February 18, 1987, Indiana submitted its regulation to control lead emissions, 325 IAC 15-1.

(i) *Incorporation by reference.*

(A) 325 IAC 15-1, Lead Emission Limitations, effective February 27, 1987.

(B) Letter of February 18, from the State of Indiana to EPA.

(ii) *Additional material.* (A) A November 30, 1981, letter from Harry Williams, Technical Secretary, Indiana Air Pollution Control Board establishing Indiana's air quality surveillance network for lead.

(B) A November 21, 1983, letter from Harry Williams, Technical Secretary, confirming that the Corning Glass facility in Wells County was permanently shut down and had been taken out of the State's emission inventory.

(C) A June 9, 1987, letter from Timothy Method, Acting Assistant Commissioner, submitting a general strategy and additional increments of progress required of Hammond Lead.

* * * * *

3. New § 52.797 is added to read as follows:

§ 52.797 Control strategy: Lead.

Indiana's control strategy for lead is approved except as noted below:

(a) Indiana's plan for the vicinity of the RSR Quemetco facility in Marion County has not been acted upon.

(b) Indiana's plan for the vicinity of the Hammond Lead HLP-Halox facility is approved with the stipulation that Indiana and Hammond Lead adhere to the requirements of 325 IAC 15-1-2(a)(B), (C), and (D) and the State's June 9, 1987, commitments. See 40 CFR 52.770(c)(65)(ii)(C).

[FR Doc. 88-8037 Filed 4-18-88; 8:45 am]

BILLING CODE 6560-50-M

ENVIRONMENTAL PROTECTION AGENCY

40 CFR Part 52

[FRL-3364-8]

Approval and Promulgation of Implementation Plans; Indiana

AGENCY: U.S. Environmental Protection Agency (USEPA).

ACTION: Notice of proposed rulemaking.

SUMMARY: On April 10, 1987 (52 FR 11696), USEPA published a notice of reproposed rulemaking on the Indiana lead Plan, requiring that the Indiana Lead rule 325 IAC 15-1 be revised to provide an enforceable mechanism to prevent RSR Quemetco (Marion County) and other smaller sources from increasing their lead emissions above five tons/year.

In order to comply with this requirement, on February 3, 1988, the State submitted to USEPA a revised rule amending rule 325 IAC 15-1. The amendments include site-specific emission limits, a fugitive dust control plan, and an operation and maintenance (O&M) program for RSR Quemetco. The amended rule also requires an O&M program and fugitive dust control plans for Exide Corporation in Logansport, C & D Batteries in Attica, and General Battery Corporation in Frankfort.

USEPA proposes to approve revised rule 325 IAC 15-1 and the lead plans for RSR Quemetco and the three other lead sources (Exide Corporation, C & D Batteries, and General Battery Corporation).

DATE: Comments on this revision and on the proposed USEPA action must be received by June 20, 1988.

ADDRESSES: Copies of the SIP revision are available at the following addresses for review: (It is recommended that you telephone Anne E. Tenner, at (312) 353-2205, before visiting the Region V office.)

U.S. Environmental Protection Agency, Region V, Air and Radiation Branch (5AR-26), 230 South Dearborn Street, Chicago, Illinois 60604.

Office of Air Management, Indiana Department of Environmental Management, 105 South Meridian Street, P.O. Box 6015, Indianapolis, Indiana 46206-6015.

Comments on this proposed rule should be addressed to: (Please submit an original and three copies, if possible.)

Gary Gulezian, Chief, Regulatory Analysis Section, Air and Radiation Branch (5AR-26), U.S. Environmental Protection Agency, Region V, 230 South Dearborn Street, Chicago, Illinois 60604.

FOR FURTHER INFORMATION CONTACT: Anne E. Tenner, (312) 353-2205.

SUPPLEMENTARY INFORMATION: On April 10, 1987 (52 FR 11696), USEPA published a notice of re-proposal in the **Federal Register** on the Indiana Lead Plan requiring that the Indiana lead rule 325 IAC 15-1 be revised to provide an enforceable mechanism to prevent RSR Quemetco and other smaller sources from increasing their lead emissions above five tons/year.

In order to comply with this requirement, on July 17, 1987, the State submitted to USEPA a preliminary adopted rule amending rule 325 IAC 15-1. The State requested that the amended rule be "parallel processed" for approval as a SIP revision. The amendments include site-specific emission limits, fugitive dust control plans, and operation and maintenance programs for RSR Quemetco in Marion County. The amended rule also requires an O&M program and fugitive dust control plans for Exide Corporation in Logansport, C & D Batteries in Attica, and General Battery Corporation in Frankfort. The revised rule was submitted as finally promulgated by the State on February 3, 1988. This rule replaces existing rule 325 IAC 15-1.

USEPA proposes to approve (1) revised rule 325 IAC 15-1 and (2) the lead plans for RSR Quemetco and three other lead sources (Exide Corporation in Logansport, C & D Batteries in Attica, and General Battery Corporation in Frankfort). USEPA is proposing approval based, in part, on the State's January 12, 1988, commitment letter discussed further below. Additional information on the amendments to rule 325 IAC 15-1 are discussed in a Technical Support Document which may be found at Region V.

The amendments to rule 325 IAC 15-1 are discussed below:

325 IAC 15-1-2(a)(8)

Source	Facility description	Emission limitations (lbs/hr.)
RSR Quemetco Indianapolis.	Main smelter stack	0.805
	Refinery kettle baghouse stack.	0.003
	Kettle sanitary baghouse stack.	0.001
Fugitives	Reverberatory furnace.	0.177
	Refinery kettles	0.0001
	Casting	0.001
	Electric furnace	0.016

(A) Fugitive emissions from charging of the reverberatory furnace shall be controlled with an enclosed conveyor system designed to achieve a capture efficiency of at least 99%.

(B) Fugitive emissions from the refinery kettles shall be controlled by a system designed to achieve a capture efficiency of at least 99%.

(C) Fugitive emissions from the casting operation shall be controlled by a system designed to achieve a capture efficiency of at least 90%.

(D) Fugitive emissions from the electric arc furnace shall be controlled by a system designed to achieve a capture efficiency of at least 95%.

If RSR Quemetco complies with these emission limits its emissions will be less than five tons per year. However, Indiana did not submit its methodology to determine compliance with its 90%/95%/99% capture efficiency requirements. On January 12, 1988, Indiana committed to investigate this problem and will incorporate within RSR Quemetco's operating permits specific criteria, i.e., process and control equipment design and operating parameters, for determining compliance with the capture efficiency provisions. These will be submitted to USEPA. USEPA is proposing to approve the Indiana lead plan for RSR Quemetco based, in part, on Indiana's January 12, 1988, commitment letter.

325 IAC 15-1-2(b)

In addition to the sources listed in 325 IAC 15-1-2(a), the following sources shall comply with 325 IAC 15-1-2(c) and 325 IAC 15-1-3:[1]

(1) Exide Corporation, Logansport

(2) C & D Batteries, Attica

(3) General Battery Corporation, Frankfort.

325 IAC 15-1-2(c)

Operation and maintenance programs shall be designed to prevent deterioration of control equipment performance. For sources listed in 325 IAC 15-1-2(a)(1) thru (7),[2] these programs shall be submitted to the Office of Air Management on or before June 1, 1987. For sources listed in 325 IAC 15-1-2(a)(8) and 325 IAC 15-1-2(b), these programs shall be submitted to the Office of Air Management on or before February 1, 1988. These programs will be incorporated into the individual source's operations permits.

[1] 325 IAC 15-1-3, Control of Fugitive Dust, is Indiana's lead fugitive dust regulation, which is being approved elsewhere in today's **Federal Register**.

[2] Final rulemaking on the plans for the sources listed in 325 IAC 15-1-2(a)(1) thru (7) is being taken elsewhere in today's **Federal Register**.

VOL 53 ISS 75 AP 19 1988 UMI

Conclusion

The amendments to rule 325 IAC 15–1 are approvable as a revision to the Indians Lead Plan. The amendments also satisfy the requirements of the April 10, 1987 (52 FR 696), **Federal Register** notice proposing approval of a statewide lead plan.

As a result, USEPA is proposing to approve (1) the revised rule 325 IAC 15–1 (as submitted on February 3, 1988) and (2) the lead plans for RSR Quemetco and three other lead sources (Exide Corporation in Logansport, C & D Batteries in Attica, and General Battery Corporation in Frankfort). This proposed approval is based in part on the State's January 12, 1988, commitment letter.

Under 5 US.C. Section 605(b), the Administrator has certified that SIP approvals do not have a significant economic impact on a substantial number of small entities. (See 46 FR 8709).

The Office of Management and Budget has exempted this rule from the requirements of section 3 of Executive Order 12291.

Authority: 42 U.S.C. 7401—7642.

Dated: September 28, 1987.

Editorial Note: This document was received by the Office of the Federal Register on April 15, 1988.

Frank M. Covington,

Acting Regional Administrator.

[FR Doc. 88–8038 Filed 4–18–88; 8:45 am]

BILLING CODE 6560-50-M

VOL
53
ISS
75
AP
19
1988
UMI

Rea

INFORI

Federa

Index,
Public
Correct
Docum
Machin

Code

Index,
Printing

Laws

Public
Additio

Presid

Execut
Public
Weekly

The U

Genera

Other

Data b
Guide
Legal
Library
Privacy
Public
TDD f

FEDER

10519-1
10869-1
11031-1
11239-1
11487-1
11633-1
11815-1
11991-1
12137-1
12371-1
12509-1
12671-1
12759-1

Reader Aids

Federal Register
Vol. 53, No. 75
Tuesday, April 19, 1988

INFORMATION AND ASSISTANCE

Federal Register

Index, finding aids & general information	523-5227
Public inspection desk	523-5215
Corrections to published documents	523-5237
Document drafting information	523-5237
Machine readable documents	523-5237

Code of Federal Regulations

Index, finding aids & general information	523-5227
Printing schedules	523-3419

Laws

Public Laws Update Service (numbers, dates, etc.)	523-6641
Additional information	523-5230

Presidential Documents

Executive orders and proclamations	523-5230
Public Papers of the Presidents	523-5230
Weekly Compilation of Presidential Documents	523-5230

The United States Government Manual

General information	523-5230

Other Services

Data base and machine readable specifications	523-3408
Guide to Record Retention Requirements	523-3187
Legal staff	523-4534
Library	523-5240
Privacy Act Compilation	523-3187
Public Laws Update Service (PLUS)	523-6641
TDD for the deaf	523-5229

FEDERAL REGISTER PAGES AND DATES, APRIL

10519-10868 1
10869-11030 4
11031-11238 5
11239-11486 6
11487-11632 7
11633-11814 8
11815-11990 11
11991-12136 12
12137-12370 13
12371-12508 14
12509-12670 15
12671-12758 18
12759-12908 19

CFR PARTS AFFECTED DURING APRIL

At the end of each month, the Office of the Federal Register publishes separately a List of CFR Sections Affected (LSA), which lists parts and sections affected by documents published since the revision date of each title.

3 CFR

Proclamations:
5784 10519
5785 10521
5786 10523
5787 11031
5788 11489
5789 11809
5790 11811
5791 11813
5792 12365
5793 12367
5794 12369
5795 12671
5796 12673

Executive Orders:
12634 11041
12635 12134

Administrative Orders:
Memorandums:
Mar. 31, 1988 11039

Presidential Determinations:
No. 88-10 of February 29, 1988 11487

5 CFR
831 11633
842 11633
1633 11815

Proposed Rules:
1632 11864
2431 10885

7 CFR
2 11636
300 10525
301 11825
400 10526
426 12759
724 12675
725 12675
726 12675
907 12371
908 12371
910 ..... 10527, 11636, 12509
911 11830
917 11832
929 12373
946 11043
981 12374
1032 11637
1064 11590
1126 11638
1421 11239
3600 11639
3601 11639

Proposed Rules:
6 11091
53 10545
54 10545
401 12774
449 11299
916 12687
917 ..... 11669, 12691
918 11867
946 12423
949 10887
1030 10894
1065 12424
1106 11092
1497 11474
1498 11474
1530 11098
1700 11511
1701 10545
1900 12695
1980 12695

8 CFR

Proposed Rules:
3 11300
208 11300
236 11300
242 11300
253 11300

9 CFR
77 11491
92 ..... 11043, 12640

Proposed Rules:
78 12019

10 CFR
430 10869
600 12137
1010 ..... 11240, 12497

Proposed Rules:
2 11310
50 ..... 11311, 12425

12 CFR
202 11044
205 11046
226 ..... 11047, 11055
229 11832
265 ..... 11640, 12509
563 ..... 11242, 11243
611 12140
615 12140

13 CFR
308 12510

14 CFR
Ch. III 11004
39 ..... 11246, 11641-11643, 11837, 11838, 12141, 12376, 12511
71 ..... 10528, 11020, 11060, 11061, 11839-11841
97 ..... 11062, 12377
121 12358
135 12358

Proposed Rules:
Ch. I 11868
21 11869
23 11869
27 ..... 10826, 11162
29 ..... 10826, 11162
39 ..... 11674–11676, 11678, 11871, 12427
71 ..... 10546, 11100, 11101, 12668
73 11102
298 12774

15 CFR
370 12668
371 12668
373 12668
378 12668
379 12668
385 12668
399 12668
Proposed Rules:
7 12880

16 CFR
13 ..... 11247, 12379
Proposed Rules:
13 12534

17 CFR
30 11491
200 12412
230 11841
240 11841
Proposed Rules:
Ch. IV 12428
200 12429

18 CFR
37 11191
154 11191
157 ..... 11644, 11845
389 ..... 12676, 12677
Proposed Rules:
272 12704
274 12704

19 CFR
7 12143

20 CFR
10 11594
Proposed Rules:
10 11596

21 CFR
179 12756
184 11247
340 11731
444 ..... 12644, 12658
452 12414
510 11492
520 11063
522 ..... 11064, 11493
524 ..... 11064, 12512
540 11492
558 ..... 11065, 11251
561 ..... 11938, 12640
610 12760
640 12760
660 12760
800 11251
803 11251
807 11251
808 11251
809 11251
812 11251
813 11251
820 11251
860 11251
861 11251
862 11645
864 11251
866 11251
876 11251
895 11251
1002 11251
1005 11251
1010 11251
1020 11251
1030 11251
1040 11251
1050 11251
1308 ..... 10834, 10861, 10869
Proposed Rules:
133 11312
175 11402
176 11402
177 11402
178 11402
193 11938
332 12778
357 12779
561 11313

22 CFR
120 ..... 11494, 12099
121 ..... 11494, 12099
122 ..... 11494, 12099
123 ..... 11494, 12099
124 ..... 11494, 12099
125 ..... 11494, 12099
126 ..... 11494, 12099
127 ..... 11494, 12099
128 ..... 11494, 12099
514 10528
602 10529
706 11992
Proposed Rules:
204 11872
602 12430

23 CFR
650 11065
657 12766
658 12145
771 11065
1204 11255
1205 11255
Proposed Rules:
625 11875
626 11875
1309 11679

24 CFR
50 11224
200 11270
201 11997
203 ..... 10529, 11997
221 11224
234 11997
236 11224
241 11224
248 11224
Proposed Rules:
35 11164
200 ..... 11164, 12431
510 11164
511 11164
570 11164
882 11164
886 11164
888 12278
941 11164
965 11164
968 11164

25 CFR
61 11271

26 CFR
1 ..... 11002, 11066, 11162, 11731, 12000, 12149, 12513, 12677, 12678
602 ..... 11066, 11162, 11731, 12000
Proposed Rules:
1 ..... 11103, 11876, 12433, 12534, 12705

27 CFR
Proposed Rules:
4 12024
12 12024

28 CFR
0 ..... 10870, 10871, 11645
66 12099
71 11645

29 CFR
102 10872
1907 12102
1910 ..... 11414, 12102
2610 10530
2622 10530
2644 10531
2676 12514
Proposed Rules:
516 ..... 11590, 12497
530 ..... 11590, 12497
1910 11511
1915 11511
1917 11511
1918 11511
2550 11886
2580 11886

30 CFR
48 12415
75 11395
250 ..... 10596, 12227
256 ..... 10596, 12227
773 11606
934 11500
Proposed Rules:
20 12250
75 12250
77 ..... 12250, 12253
785 11685
823 11685
935 ..... 11887, 12705
948 11888

31 CFR
Proposed Rules:
103 11513

32 CFR
388 10876
706 12515
Proposed Rules:
45 12034

33 CFR
84 10532
100 ..... 11502, 12415
117 ..... 10533, 10534, 12416, 12417
165 ..... 12417, 12679
Proposed Rules:
100 ..... 11515, 12434, 12706
110 ..... 11395, 11515
117 ..... 11516, 11517, 12434, 12535, 12707, 12708

34 CFR
99 11942
600 11208
657 10820
668 11208
Proposed Rules:
105 10808

35 CFR
103 12516

36 CFR
1202 12150
1258 12150

38 CFR
36 11502

39 CFR
Proposed Rules:
111 11685

40 CFR
22 12256
24 12256
52 ..... 11068, 11273, 11655, 11847, 12417, 12896
60 ..... 11590, 12008, 12009, 12498, 12517
61 12517
180 ..... 11071, 11274, 11938, 12151, 12418, 12640
300 12680
372 12748
704 12522
707 12522
710 12522
712 12522
716 12522
717 12522
720 12522
721 12522
723 12522
750 12522
761 12522
763 12522
790 12522
796 12522
797 12522
799 12522
Proposed Rules:
52 ..... 11314, 11686, 11688, 12161, 12435, 12906
116 11889
117 11889
180 10895
261 12162
264 11742
265 11742
268 11742
271 11742
302 ..... 11889, 11890, 12868
355 12868
372 12035
761 11104
763 10546

795 12748
796 11104
799 12748

41 CFR

101-25 11847
101-40 11849
101-49 12766
Proposed Rules:
201-33 11518

42 CFR

405 ..... 11504, 12010
413 ..... 12016, 12641
416 11504
418 11504
434 12010
435 12681
436 12681
442 11504
482 11504
Proposed Rules:
405 ..... 12037, 12641
412 12641
413 12641
489 12641

43 CFR

Proposed Rules:
3160 11318
Public Land Orders:
6670 10535
6671 12419
6672 12420
6673 12420

44 CFR

67 ..... 11510, 12152
80 11275
82 11275
83 11275
205 12681
Proposed Rules:
61 10547
67 12536

45 CFR

36 11279
79 11656
96 11656
1611 12017
Proposed Rules:
303 12041
606 10896
1356 12436

46 CFR

572 11072
Proposed Rules:
Ch. I 11440
502 12440

47 CFR

0 11849
1 11851
2 ..... 10878, 11855
15 11861
22 11855
43 12526
63 12526
73 ..... 11668, 11863, 12152-12154, 12528, 12768-12770
90 ..... 11849, 12154
94 11855
Proposed Rules:
Ch. I 10549, 10550
43 12546
63 12546
68 12546
73 ..... 10905, 11690, 12167-12169, 12547-12549, 12779
97 12780

48 CFR

15 10828
25 12128
31 ..... 10828, 12128
52 ..... 10828, 12128
215 11073
227 10780
242 11073
252 ..... 10780, 11073
439 12748
452 12748
1033 12770
2804 ..... 12421, 12866
2832 12421
2852 12421
Proposed Rules:
43 11795
47 11795
52 ..... 11795, 12501
916 11318
931 11318
952 11318
1505 11519
1506 11519

49 CFR

387 12158
533 11074
571 ..... 11280, 12528
1160 10536
Proposed Rules:
171 ..... 11320, 12442
172 12442
173 ..... 11320, 12442
174 12442
175 12442
176 12442
177 ..... 11618, 12442
178 12442
179 12442
192 10906
383 12504
391 12504
571 11105
840 11520
1185 12443

50 CFR

17 ..... 10879, 11609, 11612
23 12497
285 11510
301 10536
672 11297
675 12772
Proposed Rules:
17 12787
18 12043
228 12169
644 11321
650 12709
653 12790
658 12046
683 12712

LIST OF PUBLIC LAWS

Note: No public bills which have become law were received by the Office of the Federal Register for inclusion in today's **List of Public Laws.**

Last List April 15, 1988

VOL 53 ISS 75 AP 19 1988 UMI

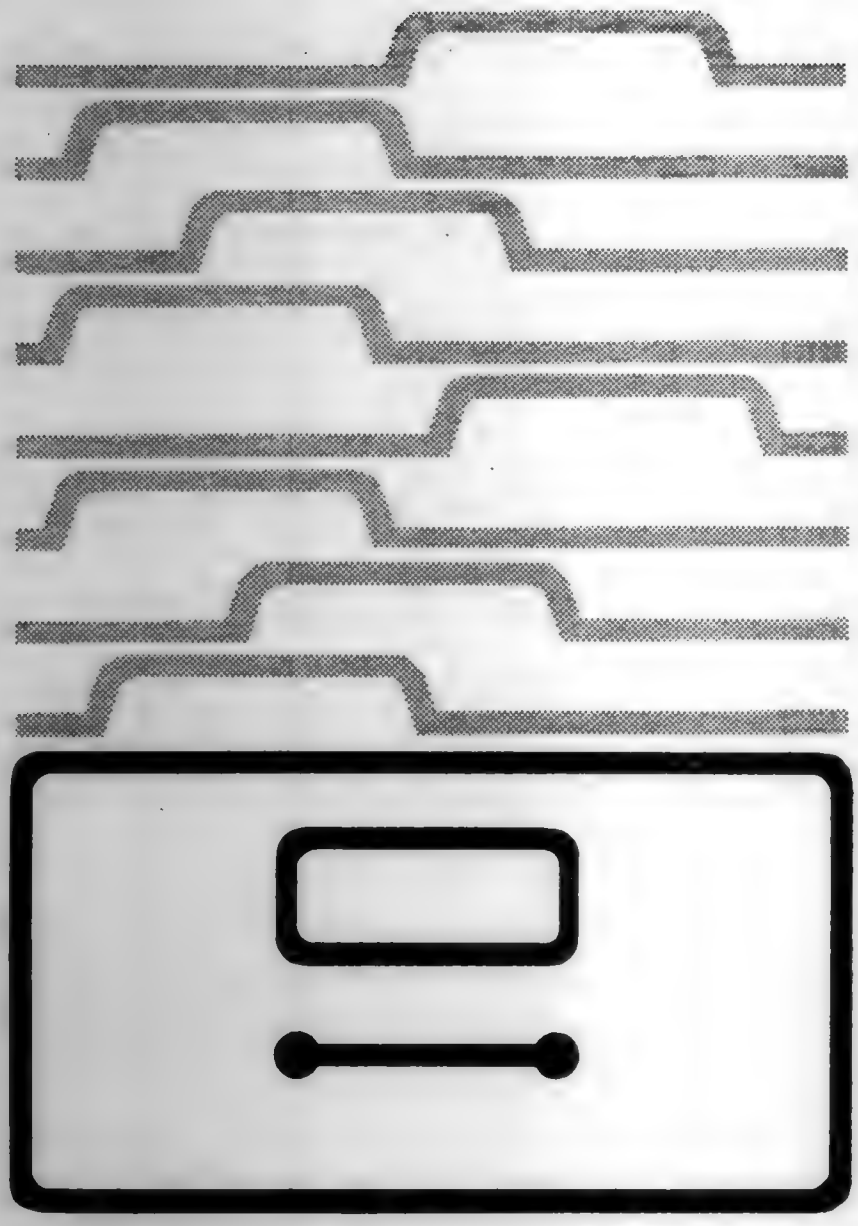

Guide to Record Retention Requirements

in the Code of Federal Regulations (CFR)

GUIDE: Revised January 1, 1986
SUPPLEMENT: Revised January 1, 1988

The GUIDE and the SUPPLEMENT should be used together. This useful reference tool, compiled from agency regulations, is designed to assist anyone with Federal recordkeeping obligations.

The various abstracts in the GUIDE tell the user (1) what records must be kept, (2) who must keep them, and (3) how long they must be kept.

The GUIDE is formatted and numbered to parallel the CODE OF FEDERAL REGULATIONS (CFR) for uniformity of citation and easy reference to the source document.

Compiled by the Office of the Federal Register, National Archives and Records Administration.

Order from Superintendent of Documents, U.S. Government Printing Office, Washington, D.C. 20402-9325.

Superintendent of Documents Publication Order Form

Order Processing Code: *6243

Charge your order. It's easy! MasterCard VISA

☐ **YES,** please send me the following indicated publications:

_____copies of the 1986 GUIDE TO RECORD RETENTION REQUIREMENTS IN THE CFR S/N 022-003-01123-4 at $10.00 each.

_____copies of the 1988 SUPPLEMENT TO THE GUIDE, S/N 069-000-00011-8 at $1.50 each.

1. The total cost of my order is $_____ (International customers please add an additional 25%). All prices include regular domestic postage and handling and are good through 8/88. After this date, please call Order and Information Desk at 202-783-3238 to verify prices.

Please Type or Print

2. _____
(Company or personal name)

_____
(Additional address/attention line)

_____
(Street address)

_____
(City, State, ZIP Code)

(_____)
(Daytime phone including area code)

3. Please choose method of payment:
☐ Check payable to the Superintendent of Documents
☐ GPO Deposit Account ☐☐☐☐☐☐☐–☐
☐ VISA or MasterCard Account
☐☐☐☐☐☐☐☐☐☐☐☐☐☐☐☐☐☐☐☐

_____
(Credit card expiration date)

Thank you for your order!

_____
(Signature) 2/88

4. **Mail To: Superintendent of Documents, Government Printing Office, Washington, D.C. 20402-9325** 200-421

nts

CFR)

ould be
compiled
ssist anyone

ll the user
ust keep
t.
d to
TIONS
reference to

Register,
ation.

prices
call

Documents

your order!

2/88

5 208-421

VOL
53

ISS
75

AP
19

1988

UMI

VOL
53

ISS
76

AP
20

1988

UMI

4-2
Vol

Unite
Gove
Printi
SUPERI
OF DOC
Washing

OFFICIA
Penalty

4-20-88
Vol. 53 No. 76

federal register

Wednesday
April 20, 1988

**********5-DIGIT 48106
A FR SERIA300S NOV 88 R
SERIALS PROCESSING
UNIV MICROFILMS INTL
300 N ZEEB RD
ANN ARBOR MI 48106

United States
Government
Printing Office
SUPERINTENDENT
OF DOCUMENTS
Washington, DC 20402

OFFICIAL BUSINESS
Penalty for private use, $300

SECOND CLASS NEWSPAPER
Postage and Fees Paid
U.S. Government Printing Office
(ISSN 0097-6326)

VOL
53

ISS
76

AP
20

1988

UMI

4-20-
Vol. 5
Pages

4-20-88
Vol. 53 No. 76
Pages 12909-13096

federal register

Wednesday
April 20, 1988

BEST COPY AVAILABLE

FEDERAL REGISTER Published daily, Monday through Friday, (not published on Saturdays, Sundays, or on official holidays), by the Office of the Federal Register, National Archives and Records Administration, Washington, DC 20408, under the Federal Register Act (49 Stat. 500, as amended; 44 U.S.C. Ch. 15) and the regulations of the Administrative Committee of the Federal Register (1 CFR Ch. I). Distribution is made only by the Superintendent of Documents, U.S. Government Printing Office, Washington, DC 20402.

The **Federal Register** provides a uniform system for making available to the public regulations and legal notices issued by Federal agencies. These include Presidential proclamations and Executive Orders and Federal agency documents having general applicability and legal effect, documents required to be published by act of Congress and other Federal agency documents of public interest. Documents are on file for public inspection in the Office of the Federal Register the day before they are published, unless earlier filing is requested by the issuing agency.

The **Federal Register** will be furnished by mail to subscribers for $340.00 per year, or $170.00 for 6 months in paper form, or $188.00 per year, or $94.00 for six months in microfiche form, payable in advance. The charge for individual copies is $1.50 for each issue, or $1.50 for each group of pages as actually bound. Remit check or money order, made payable to the Superintendent of Documents, U.S. Government Printing Office, Washington, DC 20402, or charge to your GPO Deposit Account or VISA or Mastercard.

There are no restrictions on the republication of material appearing in the **Federal Register**.

How To Cite This Publication: Use the volume number and the page number. Example: 52 FR 12345.

SUBSCRIPTIONS AND COPIES

PUBLIC

Subscriptions:

Paper or fiche	202-783-3238
Magnetic tapes	275-3328
Problems with public subscriptions	275-3054

Single copies/back copies:

Paper or fiche	783-3238
Magnetic tapes	275-3328
Problems with public single copies	275-3050

FEDERAL AGENCIES

Subscriptions:

Paper or fiche	523-5240
Magnetic tapes	275-3328
Problems with Federal agency subscriptions	523-5240

For other telephone numbers, see the Reader Aids section at the end of this issue.

VOL 53 ISS 76 APR 20 1988 UMI

Contents

Federal Register
Vol. 53, No. 76
Wednesday, April 20, 1988

Agriculture Department
See also Animal and Plant Health Inspection Service; Cooperative State Research Service; Soil Conservation Service
NOTICES
Agency information collection activities under OMB review, 12966

Animal and Plant Health Inspection Service
RULES
Interstate transportation of animals and animal products (quarantine):
Tuberculosis in cattle and bison—
State and area designations, 12913
Plant pests:
Genetically engineered organisms or products; interstate movement of microorganisms under specified conditions, exemption, 12910
Plant-related quarantine, domestic:
Hawaiian fruits and vegetables to Alaska; Sharwil avocados, 12909

Army Department
NOTICES
Privacy Act; systems of records, 12971

Arts and Humanities, National Foundation
See National Foundation on the Arts and the Humanities

Civil Rights Commission
NOTICES
Meetings; State advisory committees:
Alaska, 12966

Commerce Department
See International Trade Administration

Cooperative State Research Service
PROPOSED RULES
Small business innovation research grants program, 13046

Customs Service
RULES
Freedom of Information Act; implementation:
Uniform fee schedule and administrative guidelines, 12937

Defense Department
See Army Department

Delaware River Basin Commission
NOTICES
Hearings, 12972

Economic Regulatory Administration
NOTICES
Natural gas exportation and importation:
Great Lakes Gas Transmission Co., 12976

Energy Department
See also Economic Regulatory Administration; Federal Energy Regulatory Commission
NOTICES
Atomic energy agreements; subsequent arrangements, 12975
(2 documents)
Meetings:
Innovative Control Technology Advisory Panel, 12975, 12970
(2 documents)

Environmental Protection Agency
RULES
Pesticides; tolerances in food, animal feeds, and raw agricultural commodities:
AC 222,293, 12943
Myclobutanil, 12942
Water pollution control:
Ocean dumping site designations—
Gulf of Mexico; Pensacola, FL, Mobile, AL, and Gulfport, MS, 12944
PROPOSED RULES
Air pollution; standards of performance for new stationary sources:
State plans for designated facilities; publication requirements, 12962
Air quality implementation plans; approval and promulgation; various States:
Connecticut, 12962
NOTICES
Grants, State and local assistance:
Chesapeake Bay program, 12986
Pesticide applicator certification; Federal and State plans:
Texas, 12986
Pesticides; emergency exemptions, etc.:
Ozyfluorfen, 12987
Pyridate, 12988
Water Quality Act of 1987; implementation:
Guidance documents availbility, 12989

Executive Office of the President
See Presidential Documents

Export Administration
See International Trade Administration

Federal Aviation Administration
RULES
Airworthiness directives:
Bell Helicopter Textron, Inc., 12914
Teledyne Continental Motors, 12915
Teledyne Continental Motors; correction, 12914
Control zones, 12916
Transition areas, 12917, 12918
(2 documents)
PROPOSED RULES
Airworthiness directives:
SIAI Marchetti S.p.A., 12947
Transition areas, 12947
NOTICES
Organization, functions, and authority delegations:
Bellingham, WA, 13045
Freeland, MI, 13045
Jamestown, ND, 13045

Federal Communications Commission
RULES
Radio stations; table of assignments:
Florida, 12946
Maine, 12946
Michigan, 12946
PROPOSED RULES
Radio stations; table of assignments:
Kansas, 12963
Minnesota, 12964
South Carolina, 12964
NOTICES
Common carrier services:
Federal-State Joint Board proceedings; Commissioner appointed, 12990
(2 documents)
Applications, hearings, determinations, etc.:
Bayboro Broadcasting et al., 12991
Media Investment Corp. et al., 12991
Ying Hua Benns et al., 12991

Federal Deposit Insurance Corporation
NOTICES
Meetings; Sunshine Act, 13046

Federal Emergency Management Agency
NOTICES
Radiological emergency; State plans:
Illinois, 12992

Federal Energy Regulatory Commission
RULES
Electric utilities (Federal Power Act):
Generic determinations of rate of return on common equity for public utilities, 12931
NOTICES
Hydroelectric applications, 12976
Natural Gas Policy Act:
Self-implementing transactions (Tennessee Gas Pipeline Co. et al.), 12977
Applications, hearings, determinations, etc.:
Southern Natural Gas Co., 12986
Texas Gas Transmission Corp., 12986

Federal Maritime Commission
NOTICES
Agreements filed, etc., 12992
Automated tariff filing and information system; functionality, 13066

Federal Mediation and Conciliation Service
PROPOSED RULES
Arbitration policy, procedures, services, and roster of arbitrators, 12952

Federal Mine Safety and Health Review Commission
NOTICES
Meetings; Sunshine Act, 13046

Food and Drug Administration
NOTICES
Medical devices; premarket approval:
Armstrong Sterile Saline Solution, 12993

Health and Human Services Department
See also Food and Drug Administration; Health Care Financing Administration; Health Resources and Services Administration; Public Health Service; Social Security Administration
NOTICES
Organization, functions, and authority delegations:
Assistant Secretary for Health, 12992
Inspector General Office, 12993

Health Care Financing Administration
RULES
Medicare:
Payment conditions; correction, 12945

Health Resources and Services Administration
See also Public Health Service
NOTICES
National Disaster Medical System; medical manpower component establishment, 12994

Interior Department
See Land Management Bureau; Minerals Management Service; National Park Service

International Trade Administration
NOTICES
Antidumping:
Granular polytetrafluoroethylene resin from—
Italy, 12967
Japan, 12968
Trade adjustment assistance determination petitions:
Kasper Foundry Co. et al., 12970

International Trade Commission
NOTICES
Import investigations:
3.5" microdisks and media from Japan, 12999
Electrical conductor aluminum redraw rod from Venezuela, 12997
Programmable digital clock thermostats, 12998
Meetings; Sunshine Act, 13046

Justice Department
PROPOSED RULES
Privacy Act; implementation, 12951
NOTICES
Pollution control; consent judgments:
City of Geneva, Ohio, et al., 12999
Mid-Iowa Insulation Corp. et al., 13000
Signal Energy Systems, Inc., 13000
Privacy Act; systems of records, 13000–13005
(5 documents)

Labor Department
See Mine Safety and Health Administration

Land Management Bureau
NOTICES
Oil and gas leases:
Alaska, 12995

Maritime Administration
NOTICES
Applications, hearings, determinations, etc.:
Lykes Bros. Steamship Co., Inc., 13045

Mine Safety and Health Administration
NOTICES
Safety standard petitions:
Four "L" Coal Co., 13008
Raven Mining Co., 13009

VOL 53 ISS 76 AP 20 1988 UMI

Mine Safety and Health Federal Review Commission
See Federal Mine Safety and Health Review Commission

Minerals Management Service
NOTICES
Agency information collection activities under OMB review, 12995
Committees; establishment, renewal, termination, etc.:
Outer Continental Shelf Advisory Board, 12996
Outer Continental Shelf operations:
Chukchi Sea—
Lease sale, 13080
Leasing systems, 13092

National Aeronautics and Space Administration
RULES
Acquisition regulations:
Miscellaneous amendments, 13058

National Foundation on the Arts and the Humanities
NOTICES
Meetings:
Arts National Council, 13009

National Mediation Board
NOTICES
Meetings; Sunshine Act, 13046

National Park Service
NOTICES
Environmental statements; availability, etc.:
Lake Clark National Park and Preserve, AK, 12996
Wrangell-St. Elias National Park and Preserve, AK, 12996
Yellowstone National Park, ID, MT, and WY, 12997

National Science Foundation
NOTICES
Meetings:
Physics Advisory Committee, 13010

National Transportation Safety Board
NOTICES
Meetings; Sunshine Act, 13046

Nuclear Regulatory Commission
NOTICES
Meetings:
Reactor Safeguards Advisory Committee, 13036
Operation licenses, amendments; no significant hazards considerations:
Biweekly notices, 13010
Organization, functions, and authority delegations:
NRC Commission level offices relocation, 13036
Applications, hearings, determinations, etc.:
Commonwealth Edison Co., 13037
Duke Power Co., 13037

Presidential Documents
PROCLAMATIONS
Special observances:
Crime Victims Week (Proc. 5797), 13094

Public Health Service
See also Food and Drug Administration; Health Resources and Services Administration
NOTICES
Organization, functions, and authority delegations:
Health Resources and Services Administration and Indian Health Service, 12993

Securities and Exchange Commission
RULES
Registration requirements exemptions; Regulation D revisions and offers and sales of securities under employee benefit plans and employment contracts, 12918
Securities:
Disclosure requirements; Regulation S-K, Form 8-K, and Schedule 14A; changes in accountants and opinion shopping, 12924
PROPOSED RULES
Securities:
Disclosure requirements; Regulation S-K and Form 8-K; changes in accountants and resignations of Directors, filing provisions, 12948
NOTICES
Self-regulatory organizations; proposed rule changes:
New York Stock Exchange, Inc., 13041
Applications, hearings, determinations, etc.:
Drefus Foreign Investors GNMA Fund L.P. et al., 13038
Mutual Life Insurance Co. of New York et al., 13040
Public utility holding company filings, 13041

Social Security Administration
RULES
Supplemental security income:
Medicaid eligibility determinations, 12938

Soil Conservation Service
NOTICES
Environmental statements; availability, etc.:
Madison Canal, MD, 12966

Transportation Department
See also Federal Aviation Administration; Maritime Administration
NOTICES
Agency information collection activities under OMB review, 13042

Treasury Department
See also Customs Service
NOTICES
Notes, Treasury:
F-1995 series, 13045

Separate Parts In This Issue

Part II
Department of Agriculture, Cooperative State Research Service, 13048

Part III
National Aeronautics and Space Administration, 13058

Part IV
Federal Maritime Commission, 13066

Part V
Department of the Interior, Minerals Management Service, 13080

Part VI
The President, 13094

Reader Aids
Additional information, including a list of public laws, telephone numbers, and finding aids, appears in the Reader Aids section at the end of this issue.

VOL 53 ISS 76 AP 20 1988 UMI

CFR PARTS AFFECTED IN THIS ISSUE

A cumulative list of the parts affected this month can be found in the Reader Aids section at the end of this issue.

3 CFR
Proclamations:
5797 13094

7 CFR
318 12909
340 12910
Proposed Rules:
3403 13048

5 CFR
77 12913

14 CFR
39 (3 documents) 12914, 12915
71 (3 documents) 12916–12918
Proposed Rules:
39 12947
71 12947

17 CFR
200 12918
229 12924
230 12918
239 12918
240 12924
249 12924
Proposed Rules:
229 12948
249 12948

18 CFR
37 12931

19 CFR
103 12937

20 CFR
416 12938

21 CFR
193 12942
561 12942

26 CFR
Proposed Rules:
16 12951

29 CFR
Proposed Rules:
1404 12952

40 CFR
180 12943
228 12944
Proposed Rules:
52 12962
60 12962

42 CFR
405 12945
406 12945
409 12945
410 12945
413 12945
416 12945
421 12945
489 12945
498 12945

47 CFR
73 (3 documents) 12946
Proposed Rules:
73 (3 documents) 12963, 12964

48 CFR
1801 13056
1807 13056
1815 13056
1819 13056
1822 13056
1825 13056
1827 13056
1829 13056
1832 13056
1836 13056
1837 13056
1842 13056
1849 13056
1851 13056
1852 13056
1853 13056
1870 13056

VOL
53

ISS
76

AP
20

1988

UMI

Rul

This se
contains
general
of which
the Coc
publishe
U.S.C.
The Co
by the
Prices c
first FE
week.

DEPAR

Animal
Service

7 CFR

[Docket

Sharwil

AGENCY
Inspecti
ACTION:

SUMMA
"Hawai
regulati
Sharwil
permit,
amendm
a. Del
length r
b. Del
be "no
feet of t
The i
from Ha
prevent
fruit fly.
fruit fly.
avocado
flies wh
complia
moveme
the regu

EFFECTI
FOR FUR
Mr. L.H.
Planning
Room 6
Belcrest
301-436

SUPPLE

Backgro

The "
Vegetab
CFR 318

Rules and Regulations

Federal Register
Vol. 53, No. 76
Wednesday, April 20, 1988

This section of the FEDERAL REGISTER contains regulatory documents having general applicability and legal effect, most of which are keyed to and codified in the Code of Federal Regulations, which is published under 50 titles pursuant to 44 U.S.C. 1510.
The Code of Federal Regulations is sold by the Superintendent of Documents. Prices of new books are listed in the first FEDERAL REGISTER issue of each week.

DEPARTMENT OF AGRICULTURE

Animal and Plant Health Inspection Service

7 CFR Part 318

[Docket No. 88-003]

Sharwil Avocados to Alaska

AGENCY: Animal and Plant Health Inspection Service, USDA.

ACTION: Final rule.

SUMMARY: We are amending the "Hawaiian Fruits and Vegetables" regulations to allow movement of Sharwil avocados, under a limited permit, from Hawaii to Alaska. Our amendment:

a. Deletes the "at least 0.5 centimeter" length requirement for attached stems.

b. Deletes the requirement that there be "no Trifly host material within 100 feet of the packing facility."

The interstate movement of avocados from Hawaii must be regulated to prevent spread of the Mediterranean fruit fly, the melon fly, and the oriental fruit fly. However, the Sharwil variety of avocado will not be a host to these fruit flies when harvested and handled in compliance with the amended "limited movement to Alaska" requirements in the regulations.

EFFECTIVE DATE: May 20, 1988.

FOR FURTHER INFORMATION CONTACT: Mr. L.H. Tengan, Staff Officer, Program Planning Staff, PPQ, APHIS, USDA, Room 643, Federal Building, 6505 Belcrest Road, Hyattsville, MD 20782, 301-436-8247.

SUPPLEMENTARY INFORMATION:

Background

The "Hawaiian Fruits and Vegetables" regulations (contained in 7 CFR 318.13 *et seq.*, and referred to below as the regulations), among other things, regulate the movement of Sharwil avocados from Hawaii to Alaska. Regulation is necessary to prevent spread of the Mediterranean fruit fly (*Ceratitis capitata* (Wied.)); the melon fly (*Dacus cucurbitae* (Coq.)); and the oriental fruit fly (*Dacus dorsalis* (Hendel)). These fruit flies, commonly referred to as "Trifly," infest Hawaii, but do not occur in the other 49 states.

In a document published in the **Federal Register** on December 21, 1987 (52 FR 48272-48273, Docket Number 87-150), we proposed to amend the interstate movement of Sharwil avocados from Hawaii to Alaska provisions in the regulations by removing the following requirements:

a. Stems attached to Sharwil avocados must be at least 0.5 centimeter in length; and

b. No Trifly host material may be located within 100 feet of a packing facility.

We received one comment during the public comment period that ended January 5, 1988. The commenter objected to discontinuance of the 100-foot buffer zone, arguing that it "ensures no Trifly or host material presence in the immediate vicinity of the packaging of Hawaiian Sharwils."

We disagree. The regulations contain other provisions that ensure that Triflies and Trifly host materials will be kept out of packing facilities—even when a Trifly infestation exists within 100 feet of the facility. These provisions, which are effective and enforceable, are:

a. Paragraph (d)(1) of § 318.13-4g requires that packing facilities be maintained free of all Trifly host material.

b. Paragraph (d)(2) of § 318.13-4g requires that packing facilities be maintained free of Trifly.

c. Paragraph (d)(3) of § 318.13-4g requires that all doors and other openings to the packing facility be maintained under conditions determined by an inspector as adequate to prevent the entry of Trifly.

The commenter also expressed concern that Triflies, undetected in Sharwil avocados shipped from Hawaii to Alaska, might spread to the other 48 states.

We disagree. In a three-year study, Department entomologists conducted prepacking inspections of 114,122 Hawaiian Sharwil avocados harvested and packed in accordance with the requirements in the regulations. No Trifly eggs or larvae were found—even when severely damaged avocados were exposed to Trifly after the fruit had been moved to a laboratory. We are satisfied that this study establishes that Sharwil avocados are not a host to Trifly, and will not spread this pest from Hawaii, when harvested and handled in compliance with the regulations.

Based on the rationale set forth in the proposal and in this document, we are amending the regulations as proposed.

Executive Order 12291 and Regulatory Flexibility Act

We are issuing this rule in conformance with Executive Order 12291, and we have determined that it is not a "major rule." Based on information compiled by the Department, we have determined that this rule will have an effect on the economy of less than $100 million; will not cause a major increase in costs or prices for consumers, individual industries, federal, state, or local government agencies, or geographic regions; and will not cause a significant adverse effect on competition, employment, investment, productivity, innovation, or on the ability of United States-based enterprises to compete with foreign-based enterprises in domestic or export markets.

We do not believe that the changes we have proposed will affect the marketing of Hawaiian Sharwil avocados moved for sale in Alaska. There is no reason to believe that, because of this rule, the number of avocados that will be moved from Hawaii to Alaska will increase or decrease.

Under these circumstances, the Acting Administrator of the Animal and Plant Health Inspection Service has determined that this action will not have a significant economic impact on a substantial number of small entities.

Paperwork Reduction Act

This rule contains no information collection or recordkeeping requirements under the Paperwork Reduction Act of 1980 (44 U.S.C. 3501 *et seq.*).

Executive Order 12372

This program/activity is listed in the Catalog of Federal Domestic Assistance

under No. 10.025 and is subject to the provisions of Executive Order 12372, which requires intergovernmental consultation with state and local officials. (See 7 CFR Part 3015, Subpart V.)

List of Subjects in 7 CFR Part 318

Agricultural commodities, Avocados, Fruit, Guam, Hawaii, Plant diseases, Plant pests, Plants (agriculture), Puerto Rico, Quarantine, Transportation, Virgin Islands.

PART 318—HAWAIIAN AND TERRITORIAL QUARANTINE NOTICES

Accordingly, 7 CFR Part 318 is amended as follows:

1. The authority citation for Part 318 continues to read as follows:

Authority: 7 U.S.C. 150dd, 150ee, 150ff, 151–167; 7 CFR 2.17, 2.51, and 371.2(c).

2. In § 318.13–4g, paragraph (a) is amended by removing "which is at least 0.5 centimeter in length".

3. In § 318.13–4g, paragraph (c) is amended by removing "at least 0.5 centimeter in length".

4. In § 318.13–4g, paragraph (d)(1) is revised and a new footnote 2 is added as follows:

§ 318.13–4g Administrative instructions specifying conditions for limited permits for Sharwil avocados for movement to Alaska based on certain harvesting and handling provisions.

* * * * *

(d) * * *

(1) The packing facility is maintained free of all Trifly host material,[2] other than Sharwil avocados packed in accordance with the provisions of paragraph (e) of this section.

* * * * *

§ 318.13–13 [Amended]

5. In § 318.13–13, footnotes "2" and "3", and the references to the footnotes, are redesignated as "4" and "5", respectively.

§ 318.13–5 [Amended]

6. In § 318.13–5, footnote "1", and the reference to the footnote, is redesignated as "3".

[2] A list of Trifly host material will be attached to each compliance agreement with a packer. This list may also be obtained from Plant Protection and Quarantine offices in Hawaii (listed in telephone directories) or by writing National Programs, Plant Protection and Quarantine, Animal and Plant Health Inspection Service, Federal Building, 6505 Belcrest Road, Hyattsville, MD 20782.

Done in Washington, DC, this 15th day of April, 1988.

James W. Glosser,

Acting Administrator, Animal and Plant Health Inspection Service.

[FR Doc. 88–8691 Filed 4–19–88; 8:45 am]

BILLING CODE 3410-34-M

---

7 CFR Part 340

[Docket No. 88–019]

Genetically Engineered Organisms and Products; Exemption for Interstate Movement of Certain Microorganisms Under Specified Conditions

AGENCY: Animal and Plant Health Inspection Service, USDA.

ACTION: Final rule.

SUMMARY: This document amends the regulations pertaining to the introduction of certain genetically engineered organisms and products by exempting from regulation certain genetically engineered microorganisms which are moved interstate under specified conditions. This amendment removes unnecessary restrictions on the interstate movement of those microorganisms which do not present a risk of plant pest introduction or dissemination.

EFFECTIVE DATE: April 20, 1988.

FOR FURTHER INFORMATION CONTACT: John Payne, Staff Microbiologist, Biotechnology and Environmental Coordination Staff, Animal and Plant Health Inspection Service, U.S. Department of Agriculture, Room 406, Federal Building, 6505 Belcrest Road, Hyattsville, MD 20782, 301–436–7908.

SUPPLEMENTARY INFORMATION: On September 24, 1987, the Animal and Plant Health Inspection Service (APHIS) published a proposed rule in the **Federal Register** (52 FR 35921–35923) to amend the regulations in 7 CFR Part 340, pertaining to the introduction of certain genetically engineered organisms and products. The proposed rule set forth provisions which would exempt a person from having to obtain a permit for the interstate movement of certain genetically engineered microorganisms if the microorganisms were moved in accordance with certain specified conditions. APHIS indicated that the proposed exemption would remove unnecessary restrictions on the interstate movement of those microorganisms which do not present a risk of plant pest introduction or dissemination. Specifically, it was proposed that a limited permit for interstate movement would not be required for genetic material from any plant pest contained in *E. coli* strain K–12, sterile strains of *Saccharomyces cerevisiae*, or asporogenic (nonspore forming) strains of *Bacillus subtilis*, provided all of the following conditions are met:

(i) The microorganisms are shipped in a container that meets the requirements of § 340.6(b)(3) of this part;

(ii) The cloned genetic material is maintained on a nonconjugation proficient plasmid and the host does not contain other conjugation proficient plasmids or generalized transducing phages;

(iii) The cloned material does not include the complete infectious genome of a known plant pest;

(iv) The cloned genes are not carried on an expression vector if the cloned genes code for:

(a) A toxin to plants or plant products, or a toxin to organisms beneficial to plants; or

(b) Other factors directly involved in eliciting plant disease (i.e., cell wall degrading enzymes); or

(c) Substances acting as, or inhibitory to, plant growth regulators.

APHIS received 15 comments on the proposed rule. Commenters included academic researchers; companies engaged in genetic engineering; professional societies and trade associations; and a State department of agriculture. The majority of the commenters expressed general support for the proposed rule without suggesting specific wording changes. Seven commenters suggested specific wording changes either for purposes of clarification, or for purposes of broading the scope of the proposed exemption. Based on the rationale set forth in the proposed rule and in this document, APHIS has adopted the provisions of the proposed rule as a final rule with certain changes which clarify the provisions of the exemption.

Two commenters suggested specific wording changes which would have the effect of clarifying the language of the exemption. Both of these commenters noted that the wording of the exemption, as proposed, appeared to limit it solely to *E. coli* strain K–12 and not to its derivatives. One commenter suggested that the organism be identified as "*Escherichia coli* strain K–12 and its derivatives" noting that derivatives of the original strain K–12 have been developed that do not colonize in the human intestinal tract and which will not survive in the environment. The other commenter questioned whether it was the intention of APHIS to include genotypes of *E. coli* strain K–12, rather than limit the exemption solely to the

original K-12 strain. The commenter noted that almost all recombinant DNA research using K-12 host-vector systems is conducted with K-12 derived strains rather than the original strain. APHIS believes both commenters have provided wording changes which more specifically identify the *E. coli* organism. It was APHIS' intention to include the derivatives of the original *E. coli* strain K-12 with the original strain as organisms to be used for the interstate movement of plant pest genetic material under the specified conditions. As both the commenters noted, the derivatives are, like the original strain K-12, also inherently safe. The suggestions offered from both commenters have been accepted and incorporated into the final rule. As revised, the language in the final rule referencing *E. coli* now reads, "*Escherichia coli* genotype K-12 (strain K-12 and its derivatives)." It should be noted that another way of referring to the original strain K-12 and its derivatives is to use the term "genotype K-12." This revision in wording does not constitute a substantive change, but merely clarifies APHIS' original intent which was implicit in the preamble to the proposed rule. In the preamble, APHIS cited biosafety data on strain K-12 that in the context of that citation could only refer to derivatives of strain K-12 as well as the original K-12 strain.

One commenter noted that it is often advantageous to make and use gene libraries in expression vectors. The commenter indicated that it is very difficult to guarantee that a toxin gene is not present somewhere in the library. The commenter questioned whether the presence of a toxin gene somewhere in the library would mean that the person seeking to ship the genetic material would not meet the conditions for the exemption and would have to obtain a limited permit prior to interstate movement.

It appears that the commenter has misconstrued how APHIS would apply the provisions of the exemption. The presence of a toxin gene somewhere in a gene library would not be of significance in determining whether or not the provisions of the exemption had been complied with. What would be of significance is whether the toxin gene had been engineered to be expressed on the expression vector and not whether a single toxin gene incidentally appears somewhere in a gene library.

One commenter stated that the expression of a single gene coding for a factor directly or indirectly involved in eliciting plant disease should not be a matter or concern with respect to the risk of causing plant disease. The commenter further questioned why APHIS had included "cell wall degrading enzymes" as an example of a factor directly involved in eliciting plant disease.

APHIS agrees that most single genes from a plant pest are unlikely to confer plant pest characteristics on a previously benign recipient, but APHIS does not agree that all single genes carry no risk of conferring plant pest characteristics on an organism.

For example, the classes of genes that are referenced in § 340.2(b)(1)(iv) of the final rule, which code for toxins to plants or plant products, factors directly involved in eliciting plant disease, or substances acting as, or inhibitory to plant growth regulators, if expressed at high levels, would be capable of conferring plant pest characteristics on the three host microorganisms specified in the exemption (*E. coli*, sterile strains of *Saccharomyces cerevisiae*, and asporogenic strains of *Bacillus subtilis*).

APHIS agrees with the commenter that cell wall degrading enzymes cannot cause plant disease by themselves, but cell wall degrading enzymes are important in the disease inducing mileau of many microorganisms (See: Cell Wall Composition and Metabolism, Chap. 5 in: Goodman, R.N., Kiraly, Z., and Wood, K.R., The Biochemistry and Physiology of Plant Disease, University of Missouri Press, 1986). Experimental evidence has been published in at least two reports to support the position that a highly expressed enzyme that contributes to the degradation of plant cell walls can confer on derivatives of *E. coli* strain K-12 the ability to damage plants or plant parts (Keen and Tamaki, Journal of Bacteriology 168:595-606, 1986; and, Payne et al., Applied and Environmental Microbiology 53:2315-2320, 1987). Each of these studies showed that pectate lyase genes cloned from *Erwinia chrysanthemi* (a bacterium that incites the soft rot disease of potatoes), when expressed at high levels on an expression vector in *E. coli*, could confer on the *E. coli* the ability to cause rot symptoms in potato tubers. APHIS cannot, therefore, accept the commenter's suggestion to remove the phrase "cell wall degrading enzymes" as an example of a factor directly involved in plant disease, and of concern for its potential to confer plant pest characteristics on the host microorganisms. One commenter suggested that APHIS add another condition as an additional requirement for moving plant pest genetic material in the three host microorganisms. The commenter suggested that APHIS require that the cloned genetic material not code for a gene which extends the host range of a plant pest. This commenter further suggested that APHIS amend the exclusion so as not to require a permit for the interstate movement of *Agrobacterium* strains containing Ti plasmids. APHIS has not amended the rule to include this additional condition because the Agency is unaware of and has been unable to identify any gene that extends the host range of a plant pest, which if expressed in the three host microorganisms would have the potential to confer plant pest characteristics on these three microorganisms. APHIS rejects the commenter's suggestion that a person should be allowed to move strains of *Agrobacterium* containing Ti plasmids without a permit. Unlike the three host microorganisms specified in the exemption, *Agrobacterium tumefaciens* is a plant pest as defined by the Federal Plant Pest Act (FPPA: 21 U.S.C 150aa-jj), and in implementing regulations in 7 CFR Parts 330 and 340. *A. tumefaciens* incites diseases that cause substantial crop losses in vineyard and orchard crops. Ti plasmids are essential to the disease causing mechanism of *A. tumefaciens*. As such, under the FPPA and implementing regulations, a permit is required for the interstate movement of this microorganism or its plasmids. It has been shown in laboratory settings that the Ti plasmids of *A. tumefaciens* can be effectively disarmed, that is, can be made nonpathogenic.

APHIS is reviewing permit applications for the introduction of an organism containing a disarmed Ti plasmid examines the effectiveness of the disarming techniques as well as biosafety data on the organism.

One commenter requested that *Pseudomonas fluorescens*, biotype A, *Pseudomonas chlororaphis* (*P. fluorescens*, biotype D) and *Pseudomonas aureofaciens* (*P. fluorescens*, biotype E) be treated like the three host microorganisms for purposes of allowing the interstate movement of plant pest genetic material without a permit. The commenter further requested that the nonplant pest status be established for: (1) Native forms of the pseudomonads referenced above selected for their inherent resistance to antibiotics; (2) Genetically recombinant forms of the pseudomonads referenced above which meet the conditions specified in the exemption, and (3) Pseudomonads referenced above which have been genetically modified to contain *E. coli* K-12 genes which have been permanently inserted. APHIS disagrees with the commenter that the

three subgroups of the pseudomonads referenced above would be suitable organisms for the movement of plant pest genetic material. While the strains of *Pseudomonas* that make up the subgroups referenced by the commenter are not generally considered plant pests in and of themselves, APHIS believes that because they can persist in the environment much more readily than the three host microorganisms and because there is not sufficient biosafety data on these strains of *Pseudomonas* when used as cloning hosts, it would be ill advised to allow such strains to be used for the movement of plant pest genetic material, as set forth in the exemption. Accordingly, APHIS has not included these three subgroups of the pseudomonads in the final rule.

With respect to the commenter's request that the nonplant pest status be established for the pseudomonads referenced above, the proper way to make such a request would be to submit a petition under § 340.4 of the regulations.

Section 340.4 is entitled, "Petition to amend the list of organisms" and is intended to be used for petitioning APHIS to add or delete any genus, species, or subspecies of organisms on the list of plant pest organisms in § 340.2 of the regulations. The information submitted in the comment does not meet the requirements set forth in § 340.4 and as such does not serve as an adequate petition. APHIS will be able to consider the commenter's request for non plant pest status of these pseudomonads if the request is submitted in the form of a 340.4 petition.

One commenter suggested that § 340.2(b)(1)(iii) of the exemption be amended so as to prohibit the cloned genetic material from containing any portion of the genome of a plant pest rather than prohibiting the genetic material from containing the complete genome from a plant pest. The commenter did not present any examples where genetic material from a portion of the genome of a plant pest had been able to incite disease nor did the commenter present citations to the scientific literature where it had been documented that a portion of the genome from a plant pest when carried by any of the three host microorganisms would present a potential risk. APHIS has been unable to identify any situation where a risk plant pest introduction or dissemination would occur by allowing less than the complete infectious genome from a known plant pest to be carried by one of three host microorganisms under the conditions specified in the exemption. It should also be noted that this exemption is limited to the movement of certain microorganisms under specified conditions. One commenter suggested that the conditions of the exemption be made more inclusive. Specifically, the commenter suggested that APHIS add working to the exemption that would prohibit a person from shipping cloned genetic material on an expression vector in one of the three host microorganisms if the cloned genes code for a substance that is beneficial to an organism that indirectly causes damage to plants. The commenter failed to provide a specific example of the type or category of substance which the commenter was referring to and which the commenter thought APHIS should protect against. In the absence of a specific example of the type of substance which the commenter is referring to, APHIS finds this comment too hypothetical and not appropriate for consideration at this time. Further, APHIS believes that the specific conditions that are included in the rule cover those cases where a specific plant pest risk could be identified. Therefore, no change has been made to the rule based on this comment.

Executive Order 12291 and Regulatory Flexibility Act

This rule is issued in conformance with Executive Order 12291 and has been determined to be not a "major rule." Based on information compiled by the Department, it has been determined that the rule will not have a significant effect on the economy; will not cause a major increase in costs or prices for consumers, individual industries, Federal, State, or local government agencies, or geographic regions; and would not have a significant adverse effect on competition, employment, investment, productivity, innovation, or on the ability of United States-based enterprises to compete with foreign-based enterprises in domestic or export markets.

The effect of this rule is to exempt a person from having to obtain a limited permit when certain genetic material from a plant pest is moved interstate in certain microorganisms in accordance with specified conditions. A limited permit requires the submission of data about the nature of the organism, how it was produced, and a description of the contained facility at destination. Such data should already be available to the researcher. The rule relieves a person from having to submit an application to APHIS for a limited permit, which results in a savings of the time which would ordinarily be associated with the preparation of such a permit application. Therefore, the deletion of the requirement to submit the data to obtain a limited permit will not have a significant economic impact on a substantial number of small entities.

The conditions that have to be complied with under the exemption are those that a researcher would normally employ when using these microorganisms as gene libraries, except that a person cannot slip genes that code for substances harmful to plants or organisms beneficial to plants, when such genes are carried on an expression vector. If such types of genetic material are expressed on an expression vector, the exemption does not apply, and a limited permit would have to be obtained. It is expected that this exemption will affect at least several thousand research scientists, some of whom may be operating small businesses which would be deemed "small entities" under the Regulatory Flexibility Act. The rule exempts them from the requirement of having to obtain a limited permit under the circumstances described above.

Under these circumstances, the Administrator of the Animal and Plant Health Inspection Service has determined that this action will not have a significant economic impact on a substantial number of small entities.

Effective Date

Pursuant to the administrative procedure provisions in 5 U.S.C. 553, the Acting Administrator of the Animal and Plant Health Inspection Service finds good cause for making this rule effective less than 30 days after publication in the **Federal Register**. The Acting Administrator has determined that this rule should become effective upon publication because it has been determined that this rule relieves unnecessary restrictions. The rule exempts persons from having to obtain a limited permit when certain genetic material from a plant pest is moved interstate in specified microorganisms under conditions which do not present a risk of plant pest introduction or dissemination.

Paperwork Reduction Act.

This rule contains no information collection or recordkeeping requirements under the Paperwork Reduction Act of 1980 (44 U.S.C. 3501 *et seq.*).

Executive Order 12372

This program/activity is listed in the Catalog of Federal Domestic Assistance under No. 10.025 and is subject to the provisions of Executive Order 12372,

which requires intergovernmental consultation with State and local officials. (See 7 CFR Part 3015, Part V).

List of Subjects in 7 CFR Part 340

Agricultural commodities, Biotechnology, Genetic engineering, Plant diseases, Plant pests, Plants (Agriculture), Quarantine, Transportation.

PART 340—INTRODUCTION OF ORGANISMS AND PRODUCTS ALTERED OR PRODUCED THROUGH GENETIC ENGINEERING WHICH ARE PLANT PESTS OR WHICH THERE IS REASON TO BELIEVE ARE PLANT PESTS

Accordingly, 7 CFR Part 340 is amended as follows:

1. The authority citation for Part 340 continues to read as follows:

Authority: 7 U.S.C. 150aa–150jj, 151–167, 1622n; 31 U.S.C. 9701; 7 CFR 2.17, 2.51, and 371.2(c).

2. Section 340.1 is amended by adding the following definition of *"Expression vector"* in alphabetical order to the list of existing terms:

§ 340.1 Definitions.

* * * * *

Expression vector. A cloning vector designed so that a coding sequence inserted at a particular site will be transcribed and translated into protein.

* * * * *

3. The heading for § 340.2 "Groups of organism which are or contain plant pests" is revised to read "Groups of organisms which are or contain plant pests and exemptions."

4. In § 340.2, at the beginning of the introductory text, a new paragraph heading is added to read "(a) *Groups of organisms which are or contain plant pests.*"

5. In § 340.2 at the end of the text, a new paragraph (b) is added as follows:

§ 340.2 Groups of organisms which are or contain plant pests and exemptions.

* * * * *

(b) *Exemptions.* (1) A limited permit for interstate movement shall not be required for genetic material from any plant pest contained in *Escherichia coli* genotype K–12 (strain K–12 and its derivatives), sterile strains of *Saccharomyces cerevisiae*, or asporogenic strains of *Bacillus subtilis*, provided that all the following conditions are met:

(i) The microorganisms are shipped in a container that meets the requirements of § 340.6(b)(3) of this part;

(ii) The cloned genetic material is maintained on a nonconjugation proficient plasmid and the host does not contain other conjugation proficient plasmids or generalized transducing phages;

(iii) The cloned material does not include the complete infectious genome of a known plant pest;

(iv) The cloned genes are not carried on an expression vector if the cloned genes code for:

(A) A toxin to plants or plant products, or a toxin to organisms beneficial to plants; or

(B) Other factors directly involved in eliciting plant disease (i.e., cell wall degrading enzymes); or

(C) Substances acting as, or inhibitory to, plant growth regulators.

Done in Washington, DC, this 15th day of April, 1988.

James W. Glosser,

Acting Administrator, Animal and Plant Health Inspection Service.

[FR Doc. 88–8690 Filed 4–19–88; 8:45 am]

BILLING CODE 3410-34-M

---

9 CFR Part 77

[Docket No. 88–037]

Tuberculosis in Cattle and Bison; State Designations

AGENCY: Animal and Plant Health Inspection Service, USDA.

ACTION: Affirmation of interim rule.

SUMMARY: We are affirming without change an interim rule that amended the regulations governing the interstate movement of cattle and bison because of tuberculosis by raising the designations of the states of Virginia and Washington from modified accredited states to accredited-free states.

EFFECTIVE DATE: May 20, 1988.

FOR FURTHER INFORMATION CONTACT: Dr. Ralph L. Hosker, Senior Staff Veterinarian, Domestic Programs Support Staff, VS, APHIS, USDA, Room 815, Federal Building, 6505 Belcrest Road, Hyattsville, MD 20782, (301) 436–5438.

SUPPLEMENTARY INFORMATION:

Background

The "Tuberculosis" regulations (contained in 9 CFR Part 77 and referred to below as the regulations) regulate the interstate movement of cattle and bison because of tuberculosis.

In an interim rule published in the **Federal Register** and effective January 15, 1988 (53 FR 1002–1003, Docket 87–184), we amended the regulations by removing Virginia and Washington from the list of modified accredited states in § 77.1 and adding them to the list of accredited-free states in that section. Comments on the interim rule were required to be postmarked or received on or before March 15, 1988. We did not receive any comments. The facts presented in the interim rule still provide a basis for the rule.

Executive Order 12291 and Regulatory Flexibility Act

We are issuing this rule in conformance with Executive Order 12291, and we have determined that it is not a "major rule." Based on information compiled by the Department, we have determined that this rule will have an effect on the economy of less than $100 million; will not cause a major increase in costs or prices for consumers, individual industries, federal, state, or local government agencies, or geographic regions; and will not cause a significant adverse effect on competition, employment, investment, productivity, innovation, or on the ability of United States-based enterprises to compete with foreign-based enterprises in domestic or export markets.

For this action, the Office of Management and Budget has waived its review process required by Executive Order 12291.

Cattle and bison moved interstate are moved for slaughter, for use as breeding stock, or for feeding. Changing the status of the states of Virginia and Washington may affect the marketability of cattle and bison from these states since some prospective cattle and bison buyers prefer to buy cattle and bison from accredited-free states. This may result in some beneficial economic impact on some small entities. However, based on our experience in similar designations of other states, the impact should not be significant.

Under these circumstances, the Acting Administrator of the Animal and Plant Health Inspection Service has determined that this action will not have a significant economic impact on a substantial number of small entities.

Paperwork Reduction Act

This rule contains no information collection or recordkeeping requirements under the Paperwork Reduction Act of 1980 (44 U.S.C. 3501 *et seq.*).

Executive Order 12372

This program/activity is listed in the Catalog of Federal Domestic Assistance under No. 10.025 and is subject to the provisions of Executive Order 12372, which requires intergovernmental

consultation with state and local officials. (See 7 CFR Part 3015, Subpart V.)

List of Subjects in 9 CFR Part 77

Animal diseases, Bison, Cattle, Transportation, Tuberculosis.

PART 77—TUBERCULOSIS

Accordingly, we are adopting as a final rule, without change, the interim rule that amended 9 CFR Part 77 and that was published at 53 FR 1002–1003 on January 15, 1988.

Authority: 21 U.S.C. 111, 114, 114a, 115–117, 120, 121, 134b, 134f; 7 CFR 2.17, 2.51, and 371.2(d).

Done in Washington, DC, this 15th day of April, 1988.

James W. Glosser,

Acting Administrator, Animal and Plant Health Inspection Service.

[FR Doc. 88-8689 Filed 4-19-88; 8:45 am]

BILLING CODE 3410-34-M

DEPARTMENT OF TRANSPORTATION

Federal Aviation Administration

14 CFR Part 39

[Docket 86-ANE-27; Amdt. 39-5850]

Airworthiness Directives; Teledyne Continental Motors IO-360, TSIO-360, O-470, IO-470, TSIO-470, IO-520, TSIO-520, and IO-550 Series Engines Equipped With Oil Filters

AGENCY: Federal Aviation Administration (FAA), DOT.

ACTION: Final rule; correction.

SUMMARY: This document corrects a typographical error contained in Amendment No. 39-5850, which appeared in the Federal Register of February 12, 1988 at 53 FR 4115.

FOR FURTHER INFORMATION CONTACT: Jerry C. Robinette, aerospace Engineer, Propulsion Branch, ACE-140A, Atlanta Aircraft Certification Office, Federal Aviation Administration, 1669 Phoenix Parkway, Suite 210C, Atlanta, Georgia 30349; telephone (404) 991-3810.

Correction

In consideration of the foregoing, Amendment 39-5850 published in the Federal Register of February 12, 1988 at 53 FR 4116, is hereby corrected by removing the words "paragraph 6" in paragraph (a)(1)(ii) of the Amendment appearing on page 4116, second column, and adding "paragraph 7" in lieu thereof.

1. The authority citation for Part 39 continues to read as follows:

Authority: 49 U.S.C. 1354(a), and 1423; 49 U.S.C. 106(g) (Revised, Pub. L. 97-449, January 12, 1983); and 14 CFR 11.89.

Issued in Burlington, Massachusetts on April 8, 1988.

Timothy P. Forte,

Acting Director, New England Region.

[FR Doc. 88-8615 Filed 4-19-88; 8:45 am]

BILLING CODE 4910-13-M

---

14 CFR Part 39

[Docket No. 87-ASW-64; Amdt. 39-5874]

Airworthiness Directives; Bell Helicopter Textron, Inc., Model 214ST Helicopters

AGENCY: Federal Aviation Administration (FAA), DOT.

ACTION: Final rule.

SUMMARY: This amendment adopts a new airworthiness directive (AD) which requires a periodic visual inspection and retorque of the tail rotor intermediate gearbox assembly, a one-time removal of the intermediate gearbox assembly for a complete visual inspection, and removal of barrier tape which may have caused a loss of torque on the intermediate gearbox attachment bolts on Bell Model 214ST helicopters. The AD is prompted by two reports of cracks in intermediate gearbox mounting lugs. Cracking in the mounting lugs could result in failure of the intermediate gearbox and subsequent loss of helicopter directional control.

DATES: *Effective Date:* April 22, 1988.

The incorporation by reference of certain publications listed in the regulations is approved by the Director of the Federal Register as of April 22, 1988.

Compliance: As indicated in the body of AD.

ADDRESSES: The applicable alert service bulletin may be obtained from Bell Helicopter Textron, Inc., P.O. Box 482, Fort Worth, Texas 76101. Attention: Customer Support, or may be examined in the Rules Docket, Office of the Regional Counsel, FAA Southwest Region, 4400 Blue Mound Road, Fort Worth, Texas.

FOR FURTHER INFORMATION CONTACT: Mr. Tyrone D. Millard, FAA, Helicopter Certification Branch, ASW-170, 76193-0170, telephone (817) 624-5177.

SUPPLEMENTARY INFORMATION: There have been two reports of cracking in the tail rotor intermediate gearbox mounting lugs on 214ST helicopters. Cracking could occur due to vibration between the intermediate gearbox and gearbox support area. The vibration may be attributed to incorrect torque on the intermediate gearbox attachment bolts or to the use of barrier tape installed between the intermediate gearbox and gearbox support area, which could cause the loss of bolt torque. Cracking in the mounting lugs could result in separation of the intermediate gearbox from the tailboom and a subsequent loss of helicopter directional control. Since this condition is likely to exist or develop on other helicopters of the same type design, an AD is being issued which requires visual inspections, retorquing of the attachment bolts, and if necessary, a dye penetrant inspection to determine if cracks are present in the intermediate gearbox mounting lugs on Bell Model 214ST helicopters.

Since a situation exists that requires the immediate adoption of this regulation, it is found that notice and public procedure hereon are impracticable and good cause exists for making this amendment effective in less than 30 days.

The FAA has determined that this regulation is an emergency regulation that is not considered to be major under Executive Order 12291. It is impracticable for the agency to follow the procedures of Executive Order 12291 with respect to this rule since the rule must be issued immediately to correct an unsafe condition in aircraft. It has been further determined that this action involves an emergency regulation under DOT Regulatory Policies and Procedures (44 FR 11034; February 26, 1979). If this action is subsequently determined to involve a significant/major regulation, a final regulatory evaluation or analysis, as appropriate, will be prepared and placed in the regulatory docket (otherwise, an evaluation or analysis is not required). A copy of it, when filed, may be obtained from the Regional Rules Docket.

List of Subjects in 14 CFR Part 39

Air transportation, Aircraft, Aviation safety, Safety, Incorporation by reference.

Adoption of the Amendment

Accordingly, pursuant to the authority delegated to me by the Administrator, the Federal Aviation Administration amends § 39.13 of Part 39 of the Federal Aviation Regulations as follows:

PART 39—[AMENDED]

1. The authority citation for Part 39 continues to read as follows:

Authority: 49 U.S.C. 1354(a), 1421 and 1423; 49 U.S.C. 106(g) (Revised, Pub. L. 97-449, January 12, 1983); and 14 CFR 11.89.

§ 39.13 [Amended]

2. By adding the following new AD:

Bell Helicopter Textron, Inc.: Applies to Bell Helicopter Textron, Inc., Model 214ST helicopters certificated in any category. (Airworthiness Docket No. 87-ASW-64.)

Compliance is required as indicated, unless already accomplished.

(a) Within the next 25 hours' time in service after the effective date of this AD, and thereafter at intervals not to exceed 25 hours' time in service, perform an inspection of the tail rotor intermediate gearbox, P/N 214-040-009-001, as follows:

(1) Remove the fairings and covers as required to gain access to the intermediate gearbox.

(2) Visually inspect the three gearbox mounting lugs for cracks. If a crack indication is found, inspect using a fluorescent or dye penetrant method. If a crack is found, remove and replace the intermediate gearbox case with a serviceable part before further flight and accomplish the requirements of paragraphs (b)(3), (b)(5), and (b)(6) of this AD.

(3) If no cracks are found, verify that the washer stack-up is in accordance with figure 4, page 16, Section 65-20-00 of the Bell 214ST Maintenance Manual, Rev. 22, dated May 14, 1987, and determine that the torque on the three attachment bolts, P/N AN5H15A, is 100-140 in-lbs. Resecure the attachment bolts with MS20995C32 safety wire or equivalent.

(b) Within the next 250 hours' time in service after the effective date of this AD, remove and inspect the tail rotor intermediate gearbox, P/N 214-040-009-001, as follows:

(1) Remove the fairings and covers as required to gain access to the intermediate gearbox.

(2) Remove the intermediate gearbox and visually inspect the three gearbox mounting lugs for cracks. If a crack indication is found, inspect using a fluorescent or dye penetrant method. If a crack is found, remove and replace the intermediate gearbox with a serviceable part before further flight.

(3) Inspect the intermediate gearbox and intermediate gearbox support area of the tailboom for evidence of barrier tape. If barrier tape is present, it must be removed before further flight.

(4) Inspect the intermediate gearbox mounting lugs for evidence of excessive wear and bolt hole elongation. If wear or bolt hole elongation is beyond the limits specified on pages 35 and 36 in Section 65-20-07 or figure 26, page 48, Section 65-20-08, of the Bell 214ST Component Repair and Overhaul Manual, Rev. 12, dated April 15, 1986, remove and replace the intermediate gearbox case with a serviceable part before further flight.

(5) Inspect the intermediate gearbox tailboom attachment points for excessive wear or damage. If the wear or damage is beyond the limits specified in figure 16, page 40B, Section 53-11-00 of the Bell 214ST Maintenance Manual, Rev. 22, dated May 14, 1987, remove and replace the worn or damaged parts with serviceable parts before further flight.

(6) Clean the mounting surfaces of the intermediate gearbox and tailboom using methyl-ethyl-ketone (MEK), or equivalent safety solvent. Apply epoxy polyamide primer or zinc chromate primer to the mounting surfaces. Do not use barrier tape during reassembly. Install the gearbox while the primer is wet. The washer stack-up must comply with Figure 4, page 16, Section 65-20-00 of the Bell 214ST Maintenance Manual, Rev. 22, dated May 14, 1987. Torque the three attachment bolts, P/N AN5H15A, to 100-140 in-lbs. Secure the bolts with MS20995C32 safety wire or equivalent.

(c) Upon complying with paragraph (b) of this AD, the requirements in paragraph (a) of this AD no longer apply.

(d) In accordance with FAR §§ 21.197 and 21.199, the helicopter may be flown to a base where the requirements of this AD can be accomplished.

(e) An alternate method of compliance which provides an equivalent level of safety, may be used when approved by the Manager, Helicopter Certification Branch, Federal Aviation Administration, Fort Worth, Texas 76193-0170.

Note: Compliance with Parts I and II of Bell Helicopter Textron Alert Service Bulletin No. 214ST-87-40, dated 9/17/87, constitutes compliance with this AD.

The procedure shall be done in accordance with page 16, Section 65-20-00 and page 40b, Section 53-11-00 of the Bell 214ST Maintenance Manual, Rev. 22, dated May 14, 1987; and pages 35 and 36, Section 65-20-07 and page 48, Section 65-20-08 of the Bell 214ST Component Repair and Overhaul Manual, Rev. 12, dated April 15, 1986.

This incorporation by reference was approved by the Director of the Federal Register in accordance with 5 U.S.C. 552(a)(1) and 1 CFR Part 51. Copies may be obtained from Bell Helicopter Textron, Inc., P.O. Box 482, Fort Worth, Texas 76101, Attention: Customer Support. Copies may be inspected at the Office of the Regional Counsel, FAA, Southwest Region, 4400 Blue Mound Road, Fort Worth, Texas, or at the Office of the Federal Register, 1100 L Street NW., Room 8401, Washington, DC.

This amendment becomes effective April 22, 1988.

Issued in Fort Worth, Texas, on March 4, 1988.

Don P. Watson,

Acting Director, Southwest Region.

[FR Doc. 88-8614 Filed 4-19-88; 8:45 am]

BILLING CODE 4910-13-M

---

14 CFR Part 39

[Docket No. 87-ANE-62; Amdt. 39-5883]

Airworthiness Directives; Teledyne Continental Motors TSIO-520BE and CE Engines

AGENCY: Federal Aviation Administration (FAA), DOT.

ACTION: Final rule.

SUMMARY: This action publishes in the **Federal Register** and makes effective as to all persons an amendment adopting a new airworthiness directive (AD) which was previously made effective as to all known U.S. owners and operators of certain Teledyne Continental Motors TSIO-520 series engines by individual priority letter. The AD requires inspection to ensure proper fit or crush of the crankshaft bearing surfaces in the crankcase, replacement of piston pins, and imposes interim limitations on engine operation. The AD is needed to prevent possible failure of the crankshaft or the piston pins which could result in loss of engine power.

DATES: *Effective*—April 29, 1988, as to all persons except those persons to whom it was made immediately effective by individual priority letter AD 87-26-08, issued December 23, 1987, which contained this amendment.

Compliance Schedule—As prescribed in the body of the AD.

Incorporation by Reference—Approved by the Director of the Federal Register as of April 29, 1988.

ADDRESSES: The applicable Service Bulletin may be obtained from Teledyne Continental Motors, P.O. Box 90, Mobile, Alabama 36601. A copy of the service bulletin is contained in the Rules Docket, Docket Number 87-ANE-62, Office of the Regional Counsel, Federal Aviation Administration, New England Region, 12 New England Executive Park, Burlington, Massachusetts 01803, and may be examined between the hours of 8:00 a.m. and 4:30 p.m., Monday through Friday, except federal holidays.

FOR FURTHER INFORMATION CONTACT: Jerry Robinette, Aerospace Engineer, Propulsion Branch, ACE-140A, Atlanta Aircraft Certification Office, Federal Aviation Administration, 1669 Phoenix Parkway, Suite 210C, Atlanta, Georgia 30349; telephone (404) 991-3810.

SUPPLEMENTARY INFORMATION: On December 23, 1987, priority letter AD 87-26-08, was issued and made effective immediately as to all known U.S. owners and operators of certain Teledyne Continental TSIO-520 series engines. The AD requires inspection to ensure proper fit or crush of the crankshaft bearing surfaces in the crankcase, replacement of piston pins, and imposes interim limitations on engine operation. There have been seven crankshaft failures and six piston pin failures, all of which resulted in forced landings of aircraft equipped with TSIO-520BE engines. The TSIO-520CE has parts in common with the TSIO-520BE and operates in a similar environment. AD action was necessary

to prevent possible failure of the crankshaft or the piston pins with resultant loss of engine power.

Since it was found that immediate corrective action was required, notice and public procedure thereon were impracticable and contrary to public interest, and good cause existed to make the AD effective immediately by individual priority letter, issued December 23, 1987, as to all known U.S. owners and operators of certain TSIO-520 engines. These conditions still exist, and the AD is hereby published in the **Federal Register** as an amendment to Section 39.13 of Part 39 of the Federal Aviation Regulations to make it effective as to all persons.

Conclusion

The FAA has determined that this regulation is an emergency regulation that is not considered to be major under Executive Order 12291. It is impracticable for the agency to follow the procedures of Executive Order 12291 with respect to this rule since the rule must be issued immediately to correct an unsafe condition in aircraft. It has been further determined that this action involves an emergency regulation under DOT Regulatory Policies and Procedures (44 FR 11034; February 26, 1979). If this action is subsequently determined to involve a significant/major regulation, a final regulatory evaluation or analysis, as appropriate, will be prepared and placed in the regulatory docket (otherwise, an evaluation or analysis is not required). A copy of it, when filed, may be obtained by contacting the person identified under the caption "**FOR FURTHER INFORMATION CONTACT**".

List of Subjects in 14 CFR Part 39

Engines, Air transportation, Aircraft, Aviation safety, Incorporation by reference.

Adoption of the Amendment

Accordingly, pursuant to the authority delegated to me, the Federal Aviation Administration (FAA) amends Part 39 of the Federal Aviation Regulations (FAR) as follows:

PART 39—[AMENDED]

1. The authority citation for Part 39 continues to read as follows:

Authority: 49 U.S.C. 1354(a), 1421, and 1423; 49 U.S.C. 106(g) (Revised Pub. L. 97-449, January 12, 1983); and 14 CFR 11.89.

§ 39.13 [Amended]

2. By adding to § 39.13 the following new airworthiness directive (AD):

Teledyne Continental Motors (TCM): Applies to TSIO-520BE and CE engines.

Compliance is required as indicated, unless already accomplished.

To prevent possible failure of the crankshaft and piston pins, accomplish the following:

(a) Thru-bolt torque check:

(1) For TSIO-520BE engines, before further flight, accomplish in accordance with paragraph I of TCM Service Bulletin (SB) M87-25, dated December 15, 1987.

(2) For TSIO-520CE engines, within the next 25 hours of operation, accomplish in accordance with paragraph I of TCM SB M87-26, dated December 21, 1987.

(3) If the force required to rotate the propeller per paragraph IA of either SB is not within the normal 10 to 20 pounds, or the crankshaft has no end play, the engine must be removed from service.

(4) If after torqueing the thru-bolts per paragraph IC of either SB, the force required to rotate the propeller has increased above the previously recorded value by more than 3 pounds, or the crankshaft has no end play, the engine must be removed from service.

(b) Piston pin replacement and crankshaft bearing inspection:

(1) For TSIO-520BE engines, before further flight, accomplish in accordance with paragraph II of TCM SB M87-25, dated December 15, 1987.

(2) For TSIO-520CE engines, within the next 25 hours operation, accomplish in accordance with paragraph II of TCM SB M87-26, dated December 21, 1987.

(3) If there is evidence that the bearing has shifted per figure B of either SB, the engine must be removed from service.

(c) Final thru-bolt torque check and reassembly of engine:

(1) For TSIO-520BE engines, before further flight, accomplish in accordance with paragraph III of TCM SB M87-25, dated December 15, 1987.

(2) For TSIO-520CE engines, within the next 25 hours of operation, accomplish in accordance with paragraph III of TCM SB M87-26, dated December 21, 1987.

(3) If the force required to rotate the propeller per paragraph IIIA of either SB has increased above the value recorded in paragraph (a)(4) of this AD, or the crankshaft has no end play, the engine must be removed from service.

(d) For TSIO-520CE engines only, before further flight, fabricate and install on the aircraft instrument panel, as near as possible to the manifold pressure gauge and in clear view of the pilot, the following placard using letters at least 0.10 inch high: "Take-off—No change in Manifold Absolute Pressure (MAP) Climb—MAP 31 inches mercury or less Cruise—MAP 25 inches mercury or less".

(1) Place a copy of this AD in the pilot's operating handbook.

(2) Operate the aircraft in accordance with these power limitations.

(3) Placard and restrictions may be removed when the requirements of paragraph a(2), b(2), and c(2) of this AD have been accomplished, or upon installation of a serviceable engine.

(e) Make appropriate log book entry showing compliance with this AD.

(f) Aircraft may be ferried in accordance with the provisions of Federal Aviation Regulations (FAR) 21.197 and 21.199 to a base where the AD can be accomplished.

(g) Upon request, an equivalent means of compliance with the requirements of this AD may be approved by the Manager, Atlanta Aircraft Certification Office, Federal Aviation Administration, 1669 Phoenix Parkway, Suite 210C, Atlanta, Georgia 30349.

(h) Upon submission of substantiating data by an owner or operator through an FAA Maintenance Inspector, the Manager, Atlanta Aircraft Certification Office, Federal Aviation Administration, Central Region, may adjust the compliance times specified in this AD.

TCM Mandatory Service Bulletin M87-25, dated December 15, 1987, and TCM Mandatory Service Bulletin M87-26, dated December 21, 1987, identified and described in this document are incorporated herein and made a part thereof pursuant to 5 U.S.C. 552(a)(1).

All persons affected by this directive who have not already received these documents from the manufacturer may obtain copies upon request to Teledyne Continental Motors, P.O. Box 90, Mobile, Alabama 36601.

These documents may also be examined at the Office of the Regional Counsel, Federal Aviation Administration, New England Region, 12 New England Executive Park, Burlington, Massachusetts 01803, Room 311, Docket No. 87-ANE-62, between the hours of 8:00 a.m. and 4:30 p.m., Monday through Friday, except federal holidays.

This amendment becomes effective April 29, 1988 as to all persons except those persons to whom it was made immediately effective by individual priority letter, issued December 23, 1987, which contained this amendment.

Issued in Burlington, Massachusetts, on March 17, 1988.

Jack A. Sain,

Acting Director, New England Region.

[FR Doc. 88-8612 Filed 4-19-88; 8:45 am]

BILLING CODE 4910-13-M

---

14 CFR Part 71

[Airspace Docket No. 87-ANM-21]

Alteration to Control Zone, Portland, OR

AGENCY: Federal Aviation Administration (FAA), DOT.

ACTION: Final rule.

SUMMARY: The nature of this action is to reflect the name change of a navigational facility currently contained in the Portland, Oregon, control zone description. For operational reasons it is necessary to change the name and identifier of the Portland, Oregon,

VORTAC (PDX) to Battleground, Washington VORTAC (BTG).

EFFECTIVE DATE: 0901 U.T.C., May 5, 1988.

FOR FURTHER INFORMATION CONTACT: Robert L. Brown, ANM-535, Federal Aviation Administration, Docket No. 87-ANM-21, 17900 Pacific Highway South, C-68966, Seattle, Washington 98168, Telephone: (206) 431-2535.

SUPPLEMENTARY INFORMATION:

History

The Portland International Airport is located in Oregon. The Portland very high frequency, omni-directional radio range and tactical air navigational aid (VORTAC) is located in the State of Washington. According to Federal Aviation Regulations (FAR) guidelines, navigational aids not located within the confines of the airport boundaries should not retain that airport's name. Therefore, the Portland VORTAC has been renamed Battleground VORTAC (BTG). This action amends the current Portland Control Zone description.

The Rule

This amendment to Part 71 of the Federal Aviation Regulations (14 CFR Part 71) is to amend the description of the Portland Control Zone to read "Battleground" where "Portland" appears. Section 71.171 of Part 71 of the Federal Aviation Regulations was republished in Handbook 7400.6D dated January 4, 1988. Under the circumstances presented, the FAA concludes that there is an immediate need for a regulation to amend the description of the Portland Control Zone by deleting the word "Portland" and substituting the word "Battleground" where it appears. Therefore, I find that notice and public procedure under 5 U.S.C. 553(b) are unnecessary because this action is a minor amendment in which the public would not be particularly interested. In consideration of the immediate need to change the name in order to avoid any confusion, I find that good cause exists for making this rule effective in less than 30 days in order to promote the safe and efficient handling of air traffic in that area.

The FAA has determined that this regulation only involves an established body of technical regulations for which frequent and routine amendments are necessary to keep them operationally current.

It therefore—(1) is not a "major rule" under Executive Order 12291; (2) is not a "significant rule" under DOT Regulatory Policies and Procedures (44 FR 11034; February 26, 1979); and (3) does not warrant preparation of a regulatory evaluation as the anticipated impact is so minimal.

Since this is a routine matter that will only affect air traffic procedures and air navigation, it is certified that this rule will not have a significant economic impact in a substantial number of small entities under the criteria of the Regulatory Flexibility Act.

List of Subjects in 14 CFR Part 71

Aviation safety, Control zones.

Adoption of the Amendment

Accordingly, pursuant to the authority delegated to me, Part 71 of the Federal Aviation Regulations (14 CFR Part 71) is amended as follows:

PART 71—[AMENDED]

1. The authority citation for Part 71 continues to read as follows:

Authority: 49 U.S.C. 1348(a), 1510; Executive Order 10854; 49 U.S.C. 106(g) (Revised Pub. L. 97-449, January 12, 1983); 14 CFR 11.69.

§ 71.171 [Amended]

2. Section 71.171 is amended as follows:

Portland Oregon [Amended]

By removing the word "Portland VORTAC" and substituting the word "Battleground VORTAC."

Issued in Seattle, Washington, on March 31, 1988.

Temple H. Johnson, Jr.,

Manager, Air Traffic Division Northwest Mountain Region.

[FR Doc. 88-8813 Filed 4-19-88; 8:45 am]

BILLING CODE 4910-13-M

---

14 CFR Part 71

[Airspace Docket No. 87-AWP-35]

Revision to the Kingman, AZ; Transition Area

AGENCY: Federal Aviation Administration (FAA), DOT.

ACTION: Final rule.

SUMMARY: This action revises the Kingman, AZ, transition area and enlarges the 700 foot transition area to provide additional controlled airspace for aircraft on the Very High Frequency Omni-directional Range/Distance Measuring Equipment (VOR/DME) Runway 21 instrument approach procedure to the Kingman Municipal Airport. This action also enlarges the 1,200 foot transition area west of the Kingman Municipal Airport to provide additional controlled airspace for instrument flight rules (IFR) departures.

EFFECTIVE DATE: 0901 U.t.c., June 30, 1988.

FOR FURTHER INFORMATION CONTACT: Frank T. Torikai, Airspace and Procedures Specialist, Airspace and Procedures Branch AWP-530, Air Traffic Division, Western-Pacific Region, Federal Aviation Administration, 15000 Aviation Boulevard, Lawndale, California 90261, telephone (213) 297-1648.

SUPPLEMENTARY INFORMATION:

History

On January 14, 1988, the FAA proposed to amend Part 71 of the Federal Aviation Regulations (14 CFR Part 71) to revise the Kingman, AZ, transition area (53 FR 907). Interested parties were invited to participate in this rulemaking proceeding by submitting written comments on the proposal to the FAA. No comments objecting to the proposal were received. Except for editorial changes, this amendment is the same as that proposed in the notice. Section 71.181 of Part 71 of the Federal Aviation Regulations was republished in Handbook 7400.6D dated January 4, 1988.

The Rule

This amendment to Part 71 of the Federal Aviation Regulations revises the Kingman, AZ, transition area. This revision provides additional controlled airspace for aircraft on the VOR/DME RWY 21 instrument approach procedure to the Kingman Municipal Airport and for IFR departures from the Kingman Municipal Airport.

The FAA has determined that this regulation only involves an established body of technical regulations for which frequent and routine amendments are necessary to keep them operationally current. It, therefore—(1) is not a "major rule" under Executive Order 12291; (2) is not a "significant rule" under DOT Regulatory Policies and Procedures (44 FR 11034; February 25, 1979); and (3) does not warrant preparation of a regulatory evaluation as the anticipated impact is so minimal. Since this is a routine matter that will only affect air traffic procedures and air navigation, it is certified that this rule will not have a significant economic impact on a substantial number of small entities under the criteria of the Regulatory Flexibility Act.

List of Subjects in 14 CFR Part 71

Aviation safety, transition areas.

Adoption of the Amendment

Accordingly, pursuant to the authority delegated to me, Part 71 of the Federal

Aviation Regulations (14 CFR Part 71) is amended, as follows:

PART 71—[AMENDED]

1. The authority citation for Part 71 continues to read as follows:

Authority: 49 U.S.C. 1348(a), 1354(a), 1510; Executive Order 10854; 49 U.S.C. 106(g) (Revised Pub. L. 97-449, January 12, 1983); 14 CFR 11.69.

§ 71.181 [Amended]

2. Section 71.181 is amended as follows:

Kingman, AZ [Revised]

That airspace extending upward from 700 feet above the surface within a 5-mile radius of the Kingman Municipal Airport (lat. 35°15'34"N., long. 113°56'14"W.); and that airspace within 5 miles each side of the Kingman VOR 025° radial extending from the 5-mile radius area to 19 miles northeast of the VOR; that airspace extending upward from 1,200 feet above the surface within 5 miles southeast and 9 miles northwest of the Kingman VOR 025° and 205° radials, extending from 13 miles southwest to 38 miles northeast of the VOR; and that airspace bounded by a line beginning at lat. 35°24'46"N., long. 114°01'31"W.; to lat 35°06'44"N., long. 114°10'28"W.; to lat. 35°21'15"N., long. 114°13'25"W.;' to the point of beginning.

Issued in Los Angeles, California, on April 5, 1988.

Jacqueline L. Smith,

Manager, Air Traffic Division, Western-Pacific Region.

[FR Doc. 88-8617 Filed 4-19-88; 8:45 am]

BILLING CODE 4910-13-M

---

14 CFR Part 71

[Airspace Docket No. 87-AWP-34]

Revision to the Parker, CA, Transition Area

AGENCY: Federal Aviation Administration (FAA), DOT.

ACTION: Final rule.

SUMMARY: This action revises the Parker, CA, transition area. This provides controlled airspace for aircraft executing the Very High Frequency Omni-directional Range/Distance Measuring Equipment (VOR/DME-A) instrument approach procedure to the Avi Suquilla Airport, Parker, CA.

EFFECTIVE DATE: 0901 UTC, June 30, 1988.

FOR FURTHER INFORMATION CONTACT: Frank T. Torikai, Airspace and Procedures Specialist, Airspace and Procedures Branch, AWP-530, Air Traffic Division, Western-Pacific Region, Federal Aviation Administration, 15000 Aviation Boulevard, Lawndale, California 90261, telephone (213) 297-1648.

SUPPLEMENTARY INFORMATION:

History

On January 14, 1988, the FAA proposed to amend Part 71 of the Federal Aviation Regulations (14 CFR Part 71) to revise the Parker, CA, transition area (53 FR 908). Interested parties were invited to participate in this rulemaking proceeding by submitting written comments on the proposal to the FAA. No comments objecting to the proposal were received. Except for editorial changes, this amendment is the same as that proposed in the notice. Section 71.181 of Part 71 of the Federal Aviation Regulations was republished in Handbook 7400.6D dated January 4, 1988.

The Rule

This amendment to Part 71 of the Federal Aviation Regulations revises the Parker, CA, transition area. This action provides controlled airspace for aircraft executing the VOR/DME-A instrument approach procedure to the Avi Suquilla Airport, Parker, California.

The FAA has determined that this regulation only involves an established body of technical regulations for which frequent and routine amendments are necessary to keep them operationally current. It, therefore—(1) is not a "major rule" under Executive Order 12291; (2) is not a "significant rule" under DOT Regulatory Policies and Procedures (44 FR 11034; February 25, 1979); and (3) does not warrant preparation of a regulatory evaluation as the anticipated impact is so minimal. Since this is a routine matter that will only affect air traffic procedures and air navigation, it is certified that this rule will not have a significant economic impact on a substantial number of small entities under the criteria of the Regulatory Flexibility Act.

List of Subjects in 14 CFR Part 71

Aviation safety, Transition areas.

Adoption of the Amendment

Accordingly, pursuant to the authority delegated to me, Part 71 of the Federal Aviation Regulations (14 CFR Part 71) is amended, as follows:

1. The authority citation for Part 71 continues to read as follows:

Authority: 49 U.S.C. 1348(a), 1354(a), 1510; Executive Order 10854; 49 U.S.C. 106(g) (Revised Pub. L. 97-449, January 12, 1983); 14 CFR 11.69.

§ 71.181 [Amended]

2. §71.181 is amended as follows:

Parker, CA. [Revised]

That airspace extending upward from 700 feet above the surface within a 5.5 mile radius of Avi Suquilla Airport (lat. 34°09'03" N., long. 114°16'14" W.); and that airspace extending upward from 1200 feet above the surface within 10 miles northwest and 7 miles southeast of the Parker VORTAC 071° and 251° radials extending from 9 miles southwest to 29 miles northeast of the VORTAC.

Issued in Los Angeles, California, on April 7, 1988.

Jacqueline L. Smith,

Manager, Air Traffic Division, Western-Pacific Region.

[FR Doc. 88-8618 Filed 4-19-88; 8:45 am]

BILLING CODE 4910-13-M

SECURITIES AND EXCHANGE COMMISSION

17 CFR Parts 200, 230 and 239

[Release No. 33-6768; File No. S7-28-87]

Compensatory Benefit Plans and Contracts

AGENCY: Securities and Exchange Commission.

ACTION: Final rules..

SUMMARY: The Commission announces the adoption of a new Rule 701, new temporary Rules 702 and 703, and the new Form 701 which provide an exemption from the registration requirements of the Securities Act of 1933 (the "Securities Act") for offers and sales of securities pursuant to certain compensatory benefit plans or written contracts.

EFFECTIVE DATE: May 20, 1988.

FOR FURTHER INFORMATION CONTACT: Richard K. Wulff or John D. Reynolds, (202) 272-2644, Office of Small Business Policy Division of Corporation Finance, Securities and Exchange Commission, 450 Fifth Street, NW., Washington, DC 20549.

SUPPLEMENTARY INFORMATION: On January 16, 1987, the Commission published for comment [1] proposed Rule 701 which would be authorized by section 3(b) of the Securities Act, [2] to provide an exemption from the registration requirements of such Act for certain offers and sales of securities made pursuant to the terms of compensatory benefit plans or written compensation agreements by issuers that are not subject to the reporting requirements of section 13 or 15(d) of the

[1] Release No. 33-6683 (January 16, 1987) [52 FR 3015]. This proposal generated 28 comment letters.

[2] 15 U.S.C. 77a *et seq.*

Securities Exchange Act of 1934 (the "Exchange Act").[3] That notice of proposed rulemaking also published for comment a temporary Rule 702 which would establish a notification requirement to the Commission when a certain level of sales had been made pursuant to Rule 701. Form 701 was proposed to serve as the requisite notification. On July 30, 1987, the Commission published for comment [4] a reproposal consisting of Rules 701 and 702 and new temporary Rule 703, which would disqualify an issuer from the use of Rule 701 if it were found to have violated Rule 702.

Certain revisions to the proposals have been made and are addressed in this release.

I. Summary of the New Rules and Form

The concern which has been raised by many privately-held companies with regard to the regulatory and other costs involved in providing securities as compensatory measures or incentives is sought to be addressed by this regulatory series, designated Rules 701, 702, 703 and Form 701.

A. Rule 701

The substantive exemptive provision draws its authority from section 3(b) of the Securities Act and permits certain offers and sales of securities in connection with compensatory benefit plans and contracts to be effected without registration under the Securities Act.

(1) Preliminary Notes

Rule 701 is prefaced by six preliminary notes. The initial four notes are as initially proposed. The first note indicates that the antifraud provisions of the federal securities laws may require that disclosure be made to securities purchasers even though the rule dictates no specific disclosure requirements; furthermore, that the rule only relates to the Securities Act's registration requirements. The second note recognizes the applicability of state law to transactions such as the ones encompassed by Rule 701. The third note indicates that use of the rule does not constitute an exclusive election. The fourth note states that only issuers may use Rule 701, for it is not available for resales.

Two new notes have been added, which are designed to emphasize the extent of the exemption's coverage. The fifth preliminary note, included at the suggestion of commenters, makes clear that the purpose of the rule is to facilitate the use of securities for compensation. Rule 701 does not exempt offers and sales designed to raise capital. The final note, common to several of the Commission's exemptive rules, states that plans or schemes designed to evade the registration requirements of the Securities Act, while in technical compliance with Rule 701, are required to be registered.

(2) The Exemptive Provision

The exemption provided by Rule 701(a) and (b) permits the offer and sale of securities by a non-reporting company pursuant to the terms of compensatory benefit plans or written contracts between the issuer or its parents or majority-owned subsidiaries and their employees, directors, general partners, trustees (if a business trust), officers, consultants and advisers. Although the Commission originally believed that broadening the rule to include consultants could go beyond the compensatory purposes of the provision, commenters have repeatedly stated that this limitation is unnecessary because securities issuances to such parties also can be for compensatory and not capital raising purposes and thus there is no meaningful basis for distinguishing between issuances to them and to employees. The Commission has been persuaded by the commenters on this issue. In addition, the concern expressed by the Commission in the July release about use of the rule for noncompensatory purposes is addressed by new Preliminary Note 5 and the conditions in the exemption requiring a written plan or contract. Consequently, the rule has been modified to extend to consultants and advisers who provide bona fide services to a company, its parents or majority-owned subsidiaries.

Reproposed Rule 701 would have permitted offers up to $5 million and sales up to 15% of total assets in each of an issuer's fiscal years. In no event would sales in excess of $5 million have been permitted in any fiscal year. The Commission is concerned that a sales ceiling based solely on total assets would restrict the usefulness of the exemption to certain non-reporting companies, including new companies and service companies with low asset levels and start-up companies with research and development costs that may not have been capitalized. The final rule provides an alternative to the asset-based formula and permits in any event a minimum level of offers and sales. Under the rule, the amount of securities that may be subject to outstanding offers in reliance on Rule 701 plus the amount of securities sold in the preceding 12 months in reliance on Rule 701 may not exceed the greater of $500,000 or amounts determined under two different formulas. One formula limits this amount to 15% of the issuer's total assets measured at the end of the issuer's last fiscal year. The second formula restricts the amount to no more than 15% of the outstanding securities of the class being offered. In any case, the aggregate offering price of securities subject to outstanding offers and sold in the preceding 12 months may not exceed $5 million. The revisions to the levels of permissible offers and sales as well as the rolling 12-month period are intended to increase the flexibility and utility of the exemptive provision.

Under the rule, the aggregate amount of offers in any 12-month period may not exceed the permissible level of sales in such period. Therefore, the proposed provisions which would have permitted additional sales in the event of the effectiveness of a registration statement, the announcement of a business combination or the termination of employment as a result of the death or disability of a participant are unnecessary and have been deleted.

No change has been made in the provisions which make the exemption available for transactions within the description of the rule but commenced prior to its effectiveness, if the ultimate sales occur after the rule's adoption. As proposed, offers made by an issuer prior to its becoming subject to the Exchange Act reporting provisions may be consummated afterwards in reliance upon Rule 701. Issuers registered or required to be registered under the Investment Company Act of 1940 [5] may not use Rule 701.

In view of the compensatory nature of the transactions covered by the rule, aggregation principles only consider offerings under Rule 701 within the preceding 12-month period. The ceilings for other transactions made in reliance upon different rules promulgated pursuant to section 3(b) of the Securities Act are not affected by Rule 701 offers and sales. The addition of the formula permitting a number of shares to be offered and sold necessitates additional

[3] 15 U.S.C. 78a *et seq.* Foreign issuers submitting home country reports pursuant to Rule 12g3-2 [17 CFR 240.12g3-2] are eligible to rely on Rule 701. This position will permit U.S. employees to participate in securities offerings made under compensatory arrangements of such foreign issuers.

[4] Release No. 33-6726 (July 30, 1987) [52 FR 29033]. The Commission received an additional 9 comment letters regarding these revised proposals. The comment letters and summaries of the comments for the initial proposals and the reproposals (File No. S7-28-87) are available for public inspection and copying at the Commission's Public Reference Room, 450 Fifth Street, NW., Washington, DC 20549.

[5] 15 U.S.C. 80a-1 et seq.

wording to the aggregation principles, which now exclude numbers of shares from the respective calculations as well.

The possible integration of Rule 701 offerings with other offerings is a matter of concern and has been repeatedly raised by commenters and noted by the Commission. Rule 701 addresses this concern by specifically stating that all offers and sales pursuant to its rubric are deemed to be a part of a single, discrete offering; consequently, Rule 701 transactions need not be integrated into any other offering made by the issuer or vice versa. It should be noted, however, that as public offerings are permitted under Rule 701, a general solicitation issue may result where offering materials for a Rule 701 transaction are generally used and an issuer is relying upon some other exemption for a limited offering involving the same or a similar compensation plan or arrangement.

Rule 701 specifies that all cash, property, notes, cancellation of indebtedness and other consideration should be included in calculating the aggregate offering price of securities issued in reliance on the rule. Services rendered by an employee as part of his or her regular employment would not be considered additional consideration.[6] However, if securities are issued to consultants or advisers as payment for services, the value of such services should be included in the aggregate offering price.

A definition of "compensatory benefit plan" is contained in the rule, which is patterned on Rule 405.[7] In addition, the rule dictates that both plans and contracts relating to compensation be in writing and be delivered to participants. In this way, all parties involved in the transactions will have appropriate information in hand with respect to the governing terms of the transactions. As proposed, interests that would be separate securities in compensatory benefit plans [8] also are exempted by virtue of Rule 701.

The July reproposal required that the benefit plan be established by the issuer. As long as the issuance of the securities has been authorized by the issuer, there does not appear to be a need to require that the issuer also establish the plan; thus that requirement has been eliminated.

[6] It should be noted that generally accepted accounting principles require that compensation expense be recorded for any securities issued at less than fair market value.

[7] 17 CFR 230.405.

[8] *See* Release Nos. 33-6281 (January 15, 1981) [46 FR 8446], 33-6188 (February 1, 1980) [45 FR 8960].

(3) Limitations on Resales

As proposed, securities issued in a Rule 701 transaction were to have the status of securities acquired in a transaction under section 4(2) of the Securities Act, reflecting the Commission's concern that resales without an appropriate exemption or registration would permit Rule 701 to be used to carry out distributions beyond the employee-consultant group covered by the Rule. To obviate any confusion that might result from a reference to the "non-public" offering exemption in a rule which permits public offerings, Rule 701 securities have been defined to be "restricted securities" for purposes of Rule 144 [9] and be resold if the terms of that rule are fully complied with, including the holding period, notwithstanding that the offering may not be a private placement. The issuer's obligation to ensure that no improper distribution of these securities occurs without registration or appropriate exemption is now specified in the text of the Rule. When an issuer becomes subject to the reporting provisions of the Exchange Act, shares acquired in Rule 701 transactions may be resold 90 days thereafter without compliance with paragraphs (c), (d), (e) and (h) of Rule 144 if the person is not an affiliate of the issuer or under Rule 144 without compliance with paragraph (d), if an affiliate.

B. Temporary Rules 702 and 703

Rule 702 requires the filing of Form 701, a notification with the Commission no later than 30 days following the first sales which bring aggregate Rule 701 sales over $100,000, not $50,000 as proposed. Commenters suggested that a higher threshold for the filing requirement might cause more issuers to become aware of the responsibility before the notice became due thus resulting in broader compliance with the provision. To further broad compliance, the Commission has adopted the suggestion of the commenters. Annual amendments are required within 30 days after the close of the issuer's fiscal year. Failure to comply with the provisions of Rule 702 constitutes a violation of the Rule, for which the Commission can seek judicial relief. Rule 703 constitutes an issuer disqualifier from the use of Rule 701 where the issuer has been found to have violated Rule 702. The Commission has the authority to waive these disqualifications in appropriate cases for good cause shown by the issuer. In order to facilitate the processing of these waiver requests, the Commission is amending its delegation of authority rules to indicate that the Director of the Division of Corporation Finance may grant such applications.[10]

Both Rules 702 and 703 have been adopted on a temporary basis of five years. After that time, the Commission will review the need for these requirements.

[9] 17 CFR 230.144.

C. Form 701

Form 701 is a one-page notification, requiring disclosure about the issuer and the compensatory arrangements pursuant to which the securities are being offered. It also requires information about the amounts of securities offered and sold, the issuer's total assets and outstanding securities of the class offered. Changes to Form 701 have been made to conform the information requested to the terms of the rule.

II. Availability of Final Regulatory Flexibility Analysis

A Final Regulatory Flexibility Analysis in accordance with the Regulatory Flexibility Act regarding Rules 701, 702, 703 and Form 701 has been prepared. A summary of the corresponding Initial Regulatory Flexibility Analysis was included in the proposing release. Members of the public who wish to obtain a copy of the Final Regulatory Flexibility Analysis should contact John D. Reynolds in the Office of Small Business Policy, Division of Corporation Finance, U.S. Securities and Exchange Commission, 450 Fifth Street, NW., Washington, DC 20549.

III. Cost-Benefit Analysis

No specific data was provided on the Commission's request for costs and benefits of the proposals. It does appear however that there may be significant savings especially to small issuers and considerable benefits to compensated persons who have in the past been deprived of the opportunity to receive securities as an incentive or in payment for their services. The Commission believes that the rules will not adversely affect investor protection.

IV. Statutory Basis and Text of the Rules

The new rules and Form are being adopted pursuant to sections 3(b) and 19(a) of the Securities Act.

[10] In this regard, the Commission finds that in accordance with section 553(b) of the Administrative Procedure Act, 5 U.S.C. 553(b), this action relates solely to agency organization, procedure or practice and thus obviates the necessity for notice and prior publication.

List of Subjects in 17 CFR Parts 200, 230 and 239

Administrative practice and procedure, Freedom of information, Privacy, Reporting and recordkeeping requirements, Securities.

Text of Amendments

Accordingly, Title 17, Chapter II of the Code of Federal Regulations is amended as follows:

PART 200—ORGANIZATION: CONDUCT AND ETHICS: AND INFORMATION REQUESTS

1. The authority citation for Part 200 continues to read, in part, as follows:

Authority: Secs. 19, 23, 48 Stat. 85, 901, as amended, sec. 20, 49 Stat. 833, sec. 319, 53 Stat. 1173, secs. 38, 211, 54 Stat. 841, 851; 15 U.S.C. 77s, 78w, 79t, 77sss, 80a–37, 80b–11, unless otherwise noted. * * *

2. Section 200.30–1 is amended by adding a new paragraph (j) as follows:

§ 200.30–1 Delegation of authority to Director of Division of Corporation Finance.

* * * * *

(j) With respect to the Securities Act of 1933 (15 U.S.C. 77a *et seq.*) and Rule 701 thereunder (§ 230.701 of this chapter), to authorize the granting of applications under Rule 703(b) (§ 230.703(b) of this chapter) upon a showing of good cause that it is not necessary under the circumstances that an exemption under Rule 701 be denied.

PART 230—GENERAL RULES AND REGULATIONS, SECURITIES ACT OF 1933

3. The authority citation for Part 230 continues to read, in part, as follows:

Authority: Sections 230.100 to 230.174 issued under Sec. 19, 48 Stat. 85 as amended; 15 U.S.C. 77s, * * *

4. By revising § 230.144(a)(3) to read as follows:

§ 230.144 Persons deemed not to be engaged in a distribution and therefore not underwriters.

* * * * *

(a) * * *

(3) The term "restricted securities" means securities that are acquired directly or indirectly from the issuer, or from an affiliate of the issuer, in a transaction or chain of transactions not involving any public offering, or securities acquired from the issuer that are subject to the resale limitations of Regulation D or Rule 701(c) (§ 230.701(c) of this chapter) under the Act, or securities that are subject to the resale limitations of Regulation D and are acquired in a transaction or chain of transactions not involving any public offering.

* * * * *

5. By adding a new § 230.701 to read as follows:

§ 230.701 Exemption for offers and sales of securities pursuant to certain compensatory benefit plans and contracts relating to compensation.

Preliminary Notes: (1) Nothing in this rule is intended to be or should be construed as in any way relieving issuers or persons acting on behalf of issuers from providing disclosure to employees or other persons within the scope of the rule adequate to satisfy the antifraud provisions of the federal securities laws. The rule only provides an exemption from the registration requirements of the Securities Act of 1933 (the "Act") [15 U.S.C. 77a et seq.].

(2) Nothing in the rule obviates the need to comply with any applicable state law relating to the offer and sale of securities.

(3) Attempted compliance with the rule does not act as an exclusive election; the issuer can also claim the availability of any other applicable exemption.

(4) The rule is only available to the issuer of the securities and not to any affiliate of the issuer or to any other person for reselling the securities. The rule provides an exemption only for the transactions in which the securities are offered or sold by the issuer, not for the securities themselves.

(5) In view of the primary purpose of the rule, which is to provide an exemption from the registration requirements of the Act for securities issued in compensatory circumstances, the rule is not available for plans or schemes to circumvent this purpose, such as to raise capital. In such cases, registration or some other exemption from registration under the Act is required.

(6) The exemption provided by the rule is not available to any issuer for any transaction which, while in technical compliance with such rule, is part of a plan or scheme to evade the registration provisions of the Act. In such cases, registration under the Act is required.

(a) *Exemption.* Offers and sales of securities that satisfy the provisions of paragraphs (b) and (c) of this § 230.701 by an issuer that is not subject to the reporting requirements of section 13 or 15(d) of the Securities Exchange Act of 1934 (the "Exchange Act") [15 U.S.C. 78a et seq.] and is not an investment company registered or required to be registered under the Investment Company Act of 1940 [15 U.S.C. 80a–1 et seq.] shall be exempt from the provisions of section 5 of the Act by virtue of section 3(b) of the Act. Issuers may rely on this rule with respect to offers made prior to the adoption of this § 230.701 if in accordance with this section had it been in effect, or offers made pursuant to this § 230.701 prior to the issuer becoming subject to the reporting requirements of section 13 or 15(d) of the Exchange Act, and sales consummating such offers may be made thereafter in reliance upon this provision.

(b) *Conditions to be met.* (1) An exemption under this § 230.701 applies only to offers and sales of an issuer's securities (i) pursuant to a written compensatory benefit plan and interests in such a plan established by that issuer, its parents or majority-owned subsidiaries for the participation of their employees, directors, general partners, trustees (where the issuer is a business trust), officers, or consultants or advisers, provided that bona fide services shall be rendered by consultants or advisers and such services must not be in connection with the offer and sale of securities in a capital-raising transaction, or (iii) pursuant to a written contract relating to the compensation of such persons.

(2) For purposes of § 230.701 and 702, a compensatory benefit plan means any purchase, savings, option, bonus, stock appreciation, profit sharing, thrift, incentive, pension or similar plan.

(3) The issuer, its parent or majority-owned subsidiary shall provide each participant in a compensatory benefit plan with a copy of such plan. A copy of a written contract relating to compensation shall be provided to the parties.

(4)(i) Aggregate offering price means the sum of all cash, property, notes, cancellation of debt or other consideration to be received by the issuer for the issuance of the securities. Non-cash consideration should be valued in reference to bona fide sales of that consideration made within a reasonable time, or, in the absence of sales, on the fair value as determined by an accepted standard.

(ii) No adjustment to the aggregate offering price in this section shall be made for other offerings made in reliance upon other rules or regulations adopted pursuant to section 3(b) of the Act. The aggregate offering price under other rules and regulations adopted pursuant to section 3(b) shall not be reduced by offerings made under this § 230.701.

(iii) The number of shares permitted to be offered and sold under § 230.701(b)(5)(ii) shall not be reduced by the number of shares offered or sold in reliance upon other rules or regulations adopted pursuant to section 3(b) of the Act, or vice versa.

(5) The amount of securities offered and sold in reliance on § 230.701 shall not exceed the greater of $500,000 or the amount determined by (b)(5)(i) or (ii) of this section; provided, however, that the

BEST COPY AVAILABLE

aggregate offering price of securities of the issuer subject to outstanding offers made in reliance on § 230.701 plus securities of the issuer sold in the preceding 12 months in reliance on § 230.701 shall in no event exceed $5,000,000.

(i) The aggregate offering price of securities of the issuer subject to outstanding offers in reliance on § 230.701 plus securities of the issuer sold in the preceding 12 months in reliance on § 230.701 shall not exceed 15% of the total assets of the issuer, measured at the end of its last fiscal year; or

(ii) The number of securities of the issuer subject to outstanding offers in reliance on § 230.701 plus securities of the issuer sold in the preceding 12 months in reliance on § 230.701 shall not exceed 15% of the outstanding securities of that class. The outstanding securities of a class shall include securities of that class issuable pursuant to the exercise of outstanding options, warrants, rights or conversion of convertible securities, unless such options, warrants, rights or convertible securities were issued under § 230.701. If the securities offered or sold under § 230.701 are convertible securities, the number of securities subject to outstanding offers and sold under this subsection shall be deemed to be the shares of the securities into which such securities may be converted.

(6) Offers and sales exempt pursuant to this § 230.701 are deemed to be a part of a single, discrete offering and are not subject to integration with any other offering or sale whether registered under the Act or otherwise exempt from the registration requirements of the Act.

(c) *Resale limitations.* (1) Securities issued pursuant to this § 230.701 are deemed to be "restricted securities" as defined in § 230.144.

(2) Resales of such securities must be in compliance with the registration requirements of the Act or an exemption therefrom.

(3) Ninety days after the issuer becomes subject to the reporting requirements of section 13 or 15(d) of the Exchange Act, securities issued in a § 230.701 transaction may be resold by persons other than affiliates in reliance on § 230.144 without compliance with paragraphs (c), (d), (e) and (h) thereof, and by affiliates without compliance with paragraph (d) thereof.

6. By adding a new temporary § 230.702(T) to read as follows:

§ 230.702(T) Notice of sales pursuant to an exemption under § 230.701.

(a) The issuer shall file with the Commission five copies of a notice on Form 701 [17 CFR 239.701] not later than 30 days after the first sale of securities which brings the aggregate sales pursuant to benefit plans and/or contracts relating to compensation exempt from the registration requirements of the Act by § 230.701 above $100,000 and thereafter annually within 30 days following the end of the issuer's fiscal year.

(b) One copy of every notice on Form 701 shall be manually signed by a person duly authorized by the issuer.

(c) New filings and annual amendments must contain all the information requested on Form 701. Corrected filings need only report the name of the issuer and plan and the information being corrected. A separate filing is not required for each plan or contract relating to compensation.

(d) A notice on Form 701 is considered filed with the Commission under paragraph (a) of this § 230.702 on the date of its receipt at the Commission's principal offices in Washington, DC.

(e) This section shall be effective until [5 years from the effective date of the final rule].

7. By adding a new temporary § 230.703(T) to read as follows:

§ 230.703(T) Disqualifying provision relating to an exemption under § 230.701.

(a) No exemption under § 230.701 shall be available for an issuer if such issuer, any of its predecessors or affiliates have been subject to any order, judgment, or decree of any court of competent jurisdiction temporarily, preliminarily or permanently enjoining such person for failure to comply with § 230.702.

(b) Paragraph (a) of this section shall not apply if the Commission determines, upon a showing of good cause, that it is not necessary under the circumstances that the exemption be denied.

(c) This section shall be effective until [5 years from the effective date of the final rule].

PART 239—FORMS PRESCRIBED UNDER THE SECURITIES ACT OF 1933

8. The authority citation for Part 239 continues to read, in part, as follows:

Authority: The Securities Act of 1933, 15 U.S.C. 77a, *et. seq.*

9. By adding § 239.701 (Form 701) to read as follows:

§ 239.701 Form 701, report of sales securities pursuant to a compensatory benefit plan or contract relating to compensation.

This form shall be used for the report of sales of securities pursuant to a compensatory benefit plan or contract relating to compensation under Rule 701 (§ 230.701 of this chapter).

By the Commission.

April 14, 1988.

Shirley E. Hollis,

Assistant Secretary.

Note: Form 701 does not appear in the Code of Federal Regulations.

BILLING CODE 8010-01-M

OMB APPROVAL	
OMB Number:	3235-0347
Expires:	March 31, 1990
Estimated average burden hour per form	1

UNITED STATES
SECURITIES AND EXCHANGE COMMISSION
Washington, D.C. 20549

FORM 701

REPORT OF SALES OF SECURITIES PURSUANT TO A COMPENSATORY BENEFIT PLAN OR CONTRACT RELATING TO COMPENSATION

(Instructions on Reverse)

Please Type or Print

1. Name of Issuer:

2. Address of Principal Executive Offices: (Number, Street, City, State, Zip Code)

3. Telephone No. (Incl. Area Code):

4. Type of Business Organization:
a. ☐ Corporation b. ☐ Limited Partnership c. ☐ Business Trust d. ☐ Other (Please specify): _____

5. Type of Filing:
a. ☐ New Filing b. ☐ Annual Amendment c. ☐ Corrected Filing

6. Full Title of the Plan:

7. Description of Contract(s):

8. Type of Plan: (Check all applicable plans)
a. ☐ Profit Sharing b. ☐ Stock Appreciation c. ☐ Retirement d. ☐ Option e. ☐ Thrift
f. ☐ Incentive g. ☐ Savings h. ☐ Bonus i. ☐ Other (Please specify): _____

Or

9. ☐ Contract Relating to Compensation

10A. Issuer's Total Assets Last Fiscal Year:

10B. Outstanding Securities of the Class Being Offered:

11. Dollar Amount and Number of Securities Sold Pursuant to Rule 701 to Date:

	Dollar Amount	Number of Securities
a. Plans - $	_____	_____
b. Contracts - $	_____	_____

12. Dollar Amount and Number of Securities Sold Pursuant to Rule 701 in this 12-month Period:

	Dollar Amount	Number of Securities
a. Plans - $	_____	_____
b. Contracts - $	_____	_____

13. What is the aggregate offering price for all securities offered pursuant to Rule 701 during this 12-month period?

	Dollar Amount
a. Plans - $	_____
b. Contracts - $	_____

The Issuer has duly caused this Notice to be signed by the undersigned duly authorized person.

Issuer (Print or Type):	Signature:	Date:
Name of Signer (Print or Type):	Title of Signer (Print or Type):	

ATTENTION

Intentional misstatements or omissions of fact constitute federal criminal violations. (See 18 U.S.C. 1001.)

SEC 701 (4-88)

BILLING CODE 8010-01-C

Instructions

All Responses Should Be Typed or Printed

Who Must File:
All issuers making an offering of securities pursuant to a compensatory benefit plan or contract relating to compensation in reliance upon the exemption provided by Rule 701, 17 CFR 230.701.

When To File:
A notice must be filed no later than 30 days after the first sale of securities pursuant to compensatory benefit plans or contracts relating to compensation which cause aggregate sales to exceed $100,000, and thereafter annually within 30 days after the issuer's fiscal year end. A notice is deemed filed with the U.S. Securities and Exchange Commission on the date it is received by the Commission at the address below.

Where To File:
U.S. Securities and Exchange Commission, 450 Fifth Street, NW., Washington, DC 20549.

Copies Required:
Five (5) copies of this notice must be filed with the Commission, one of which must be manually signed. Any copies not manually signed must be photocopies of the manually signed copy or bear printed signatures.

Information Required:
New filings and annual amendments must contain all information requested. Corrected filings need only report the name of the issuer and plan and the information being corrected. A separate filing is not required for each plan or contract relating to compensation.

Whole Dollar Amounts Are Requested; Cents Should Be Rounded to the Nearest Dollar Amount.

Filing Fee:
There is no filing fee.

[FR Doc. 88-8566 Filed 4-19-88; 8:45 am]

BILLING CODE 8010-01-M

---

17 CFR Parts 229, 240 and 249

[Rel. Nos. 33-6766; 34-25578; IC-16356; FR-31; File No. S7-24-87]

Disclosure Amendments to Regulation S-K, Form 8-K and Schedule 14A Regarding Changes in Accountants and Potential Opinion Shopping Situations

AGENCY: Securities and Exchange Commission.

ACTION: Final Rules.

SUMMARY: The Securities and Exchange Commission ("Commission") today announced the adoption of amendments to Form 8-K, Regulation S-K and Schedule 14A related to disclosure concerning a change in a registrant's certifying accountant. These amendments clarify the circumstances in which registrants are deemed to have had disagreements with their former auditors; provide for more complete disclosures concerning the circumstances surrounding the change in accountants; and call for disclosure of certain issues discussed with the newly engaged auditor during the registrant's two most recent fiscal years and any subsequent interim period prior to the new accountant's engagement. The amendments also move the substance of the disclosure requirements for changes in accountants from Item 4 of Form 8-K to Item 304 of Regulation S-K and expand the time frame for disclosure concerning a change of accountants under Item 9(d) of Schedule 14A to parallel the time frame for such disclosure under Item 304(a) of Regulation S-K.

EFFECTIVE DATE: These amendments are effective May 20, 1988. All disclosures required by the rules as amended shall be made even though the underlying events occurred prior to the effective date, provided that the auditor change occurs after the effective date.

FOR FURTHER INFORMATION CONTACT: Robert E. Burns or John M. Riley, (202) 272-2130, Office of the Chief Accountant, or William H. Carter, (202) 272-2573, Division of Corporation Finance, Securities and Exchange Commission, 450 Fifth Street NW., Washington, DC 20549.

SUPPLEMENTARY INFORMATION:

I. Executive Summary

In July 1985, the Commission issued a concept release soliciting comments on the practice of opinion shopping and suggestions on the most practical and cost-effective manner of obtaining better disclosure of opinion shopping situations.[1] The term "opinion shopping" is generally understood to involve the search for an auditor willing to support a proposed accounting treatment designed to help a company achieve its reporting objectives even though that treatment might frustrate reliable reporting. Commentators generally recommended that if the Commission engaged in rulemaking, disclosures remain linked to changes in accountants. In June 1987, after reviewing these comments and monitoring private sector developments [2] and recommendations,[3] the Commission proposed amendments to the disclosure items concerning changes in registrants' certifying accountants.[4] The Commission is now adopting these proposals, with certain modifications suggested by commentators. The Commission is also publishing for comment related proposals in a companion release, Securities Act Release No. 33-6767.

The amendments adopted today move the substance of the disclosure requirements for changes in accountants from Item 4 of Form 8-K [5] to Item 304 of Regulation S-K,[6] and clarify and expand those requirements. The new item continues to require disclosure of "disagreements" with the registrant's former auditors and indicates that the term "disagreements" should be interpreted broadly, to include any difference of opinion on any matter of accounting principles or practices, financial statement disclosure, or auditing scope or procedures, which if not resolved to the former accountant's satisfaction would have caused it to refer to the subject matter of the disagreement in connection with its report. At the suggestion of commentators, however, the item has been modified to clarify that preliminary differences of opinion based on incomplete facts are not considered "disagreements" if those differences are later resolved by obtaining more complete factual information.

The amendments also identify certain "reportable events" that call for disclosure.

---

[1] Securities Act Release No. 6594 (July 1, 1985) [50 FR 28219]. The concept release noted there could be increased disclosures: (1) without regard to whether a disagreement had occurred if in connection with a change of accountants (i) the registrant solicited opinions from other accountants on specific accounting issues concerning existing or contemplated transactions, or (ii) the registrant engaged an accountant expressing an opinion different from its former accountant's position, (2) of any accounting issue for which a registrant asked for an opinion from an accountant other than its current accountant, or (3) of consultations with other accountants preceding a change in accounting principles.

[2] In July 1986 the Auditing Standards Board ("ASB") adopted Statement on Auditing Standards 50, *Reports on the Application of Accounting Principles* ("SAS 50"), to establish performance and reporting standards to be used when accountants provide written reports (or oral advice under certain circumstances) to non-audit clients on the application of generally accepted accounting principles or the type of opinion that may be rendered on a specific entity's financial statements. SAS 50 is described in Securities Act Release No. 6719 (June 18, 1987) [52 FR 24018].

[3] At the time that the Commission issued its rule proposal the National Commission on Fraudulent Financial Reporting ("NCFFR") had issued the Exposure Draft of its recommendations. In October 1987, it published its final report. One of the NCFFR's final recommendations states, "When a public company changes independent public accountants, it should be required by SEC rule to disclose the nature of any material accounting or auditing issue discussed with both its old and new auditor during the three-year period preceding the change." This recommendation was consistent with that in the Exposure Draft.

[4] Securities Act Release No. 6719 (June 18, 1987) [52 FR 24018].

[5] 17 CFR 249.308.

[6] 17 CFR 229.304.

Expanded disclosures have been adopted as proposed concerning: whether the audit committee (or board of directors) and the former auditor discussed the subject matter of reportable disagreements and events, whether the registrant granted the former auditor authorization to respond fully to inquiries of the successor auditor concerning those disagreements and reportable events, if any, and whether the former auditor resigned, declined to stand for re-election or was dismissed.

The proposed disclosure requirements concerning potential opinion shopping situations have been adopted, but with some modification. Under the adopted disclosure item, disclosure is required of only those issues discussed with the newly engaged auditors prior to their engagement that either (i) trigger SAS 50 [7] performance and reporting standards or (ii) were the subject of a reportable event or disagreement with the former auditor. The proposed requirements to name other accountants consulted on the disclosed issues, and to state their views to the extent they disagreed with the views of the new auditor, have been deleted due to the questionable relevance of such disclosures to opinion shopping situations.

Finally, the amendment to Schedule 14A,[8] Item 9, is adopted as proposed. Previously, this item had required disclosure of changes in accountants occurring since the date of the proxy statement for the most recent annual meeting of shareholders. Item 304(a), however, requires disclosure of changes in accountants occurring within the registrants two most recent fiscal years and any subsequent interim period. This amendment will conform the periods in Schedule 14A with those set forth in Item 304(a).

Proposal to update the disclosure requirements on Form N-SAR concerning changes in accountants and require parallel disclosures in this area on Forms N-SAR and 8-K were previously adopted and announced in Securities Exchange Act Release No. 25158 (November 30, 1987) [52 FR 46350]

II. Clarification of the Term "Disagreements"

Disclosure of "disagreements" between the registrant and its former auditor over accounting, auditing or financial reporting issues acts as an "early warning" of potentially troublesome areas, provides the accountant with a forum to disclose its concerns on these issues, and triggers additional disclosures under Item 304(b) of Regulation S-K.[9]

The Commission has historically stated that the term "disagreements" should be interpreted broadly.[10] Despite this position, some maintain that confusion exists concerning the scope of the term. In order to reduce the potential for such confusion an instruction to Item 304 has been adopted specifically to state that "disagreements" include any differences of opinion concerning any matter of accounting principles or practices, financial statement disclosure or auditing scope or procedure, which if not resolved to the satisfaction of the former accountant would have caused it to make reference in connection with its report to the subject of the disagreement. Commentators, however, indicated that the definition, as proposed, may have required disclosure of preliminary disagreements or differences of opinion based on incomplete information. The Commission has responded to this concern by adding a sentence in the instruction to state that initial differences of opinion based on incomplete facts or preliminary information are not considered to be "disagreements" if those differences are later resolved by obtaining additional, relevant facts or information. If the auditor is dismissed or resigns before initial differences of opinion are resolved, they would be reportable as "disagreements". This modification uses the language in the Statement on Auditing Standards recently adopted by the Auditing Standards Board concerning the auditor's communications with audit committees or equivalent representatives of the board of directors.[11] The effect of using this language, therefore, is that if the difference of opinion does not have to be communicated by the auditor to the audit committee under this standard because it is based on preliminary information or incomplete facts (but there is no difference of opinion when the registrant and the auditor obtain the relevant factual information), then it is not required to be disclosed as a "disagreement" under Item 304 of Regulation S-K.

Reportable Events

In the proposing release the Commission identified certain events that may not be literal "disagreements" because management may not have expressed a difference of opinion with the auditor's concern, but nonetheless should be disclosed.[12] These reportable events involve situations where the accountant has advised the registrant that it questions the accuracy or reliability of the registrant's financial statements, management's representations, the registrant's internal controls, or prior audits.

"Disagreements" and "reportable events" are similar in that they involve situations where the position of management may be considered to be generally at odds with that of the auditor. With a reportable "disagreement" the differing positions of management and the auditor have been expressed, either orally or in writing. A reportable event, however, requires only that the accountant advise the registrant of its concerns. If, therefore, the auditor is dismissed, resigns or declines to stand for re-election before the registrant responds (to either agree or disagree) to the auditor's concern, the event must be reported. The auditor may not therefore merely advise the registrant of its concern and then resign (or be dismissed) prior to receiving a response from management and walk away without disclosure of its concerns.

In order to clarify the significance of these "reportable events," they have been moved from the instruction to the body of Item 304. The new paragraph addressing "reportable events" incorporates the detailed disclosure requirements for "disagreements". The disclosure required for a "reportable event" is therefore the same as that required for a "disagreement".

In response to commentators' concerns, the Commission has clarified the list of reportable events in several respects. These events are now listed in paragraphs (A) through (D) of Item 304(a)(1)(v).

Paragraphs (A) and (B) are a codification of existing Commission positions announced in Accounting

---

[7] See note 2 *supra*.

[8] 17 CFR 240.14a-101.

[9] 17 CFR 229.304(b). Item 304(b) requires disclosure of what the accounting for a particular transaction or event that was the subject of a disagreement would have been under the former accountant's opinion, if the former accountant's view was different than the accounting treatment being accepted by the newly engaged accountant.

[10] *See, e.g.*, Accounting Series Release No. ("ASR") 165 (December 20, 1974).

[11] Statement on Auditing Standards No. 61, *Communication with Audit Committees or Others with Equivalent Authority and Responsibility*. This document has been approved for issuance as a final statement on auditing standards and will be available from the Auditing Standards Board, May 1, 1988.

[12] If management and the auditor had a difference of opinion regarding the auditor's concern, that difference of opinion would have been reportable as a disagreement. For example, a difference of opinion over whether an allegation regarding management's integrity should be investigated would constitute a disagreement regarding audit scope.

Series Release No. 165 (December 20, 1974). In that release, the Commission stated that a reportable disagreement exists if the accountant has advised the registrant that (1) the registrant did not have the internal controls necessary to develop reliable financial statements, (2) the accountant has discovered information that has led it to no longer be able to rely on management's representations, or (3) the accountant has discovered information that has made it unwilling to be associated with the financial statements prepared by management. Paragraph (B) has been amended to change the phrase, "the accountant has discovered information" to "information has come to the accountant's attention," to clarify the Commission's position that the manner in which the information was acquired by the accountant is irrelevant. A similar change has been made in paragraphs (C) and (D).

An additional clarification to paragraph (C) has been made from the proposal. This paragraph now requires disclosure where (1) the former accountant has advised the registrant that it must either significantly expand the scope of its audit or have an investigation conducted that may result in the auditor (A) determining that there are issues that materially impact current or past financial statements or audit reports or (B) being unwilling to rely on management's representations or be associated with the registrant's financial statements, and (2) the auditor resigns, declines to stand for re-election, or is dismissed before the expanded audit steps have been performed or the investigation has been completed. If, therefore, prior to the auditor leaving the engagement, the expanded audit procedures have been performed or the investigation has been completed to the former accountant's satisfaction, no disclosure is required under paragraph (C). It should be noted, however, that disclosure will be required pursuant to the reportable events listed in paragraphs (A), (B) or (D) if as a result of the expanded audit steps or investigation the former accountant advises the registrant that: the registrant lacks necessary internal controls, the accountant is no longer able to rely on management or be associated with its financial statements, or there are issues that materially impact current or past financial statements or audit reports that were not resolved to the former accountant's satisfaction prior to its resignation, dismissal or declination to stand for re-election. The change was made to avoid the implication that disclosures under paragraph (C) would be required only when the information that came to the accountant's attention may impact current or future financial statements and that information which may impact previously issued financial statements for either annual or interim periods would not have to be disclosed.

Paragraph (D) has been significantly revised in response to commentators' concerns. As proposed, paragraph (D) would have required disclosure of each time during approximately the past two years the accountant advised the registrant that the accountant had discovered information that may impact the fairness or reliability of audit reports or the underlying financial statements. Commentators were concerned with the breadth of this disclosure. The Commission has amended this paragraph to narrow the required disclosures. First, rather than disclosing information that "may impact" the fairness or reliability of financial statements or reports, disclosure will be required only if the former accountant has concluded that the information that has come to its attention does materially impact the financial statements or audit reports. Second, disclosure will not be required of those issues that have been resolved to the former accountant's satisfaction prior to its resignation, dismissal or declination to stand for re-election. Accordingly, paragraph (D) requires disclosure of those situations where information had come to the former accountant's attention, the former accountant concluded that the information materially impacts financial statements or audit reports (either previously issued or to be issued), and the matter was not resolved to the former accountant's satisfaction prior to its resignation, dismissal or declination to stand for re-election. In order not to be disclosed, however, the matter must be completely resolved to the auditor's satisfaction. If the matter is unresolved or not resolved to the auditor's satisfaction at the time it resigns, declines to stand for re-election or is dismissed, it must be disclosed notwithstanding management's concurrence with the auditor's concern. Further, if management addresses the auditor's concern by expressing a difference of opinion over the issue, then the matter would be disclosed as a "disagreement" (rather than as a "reportable event") whether or not eventually resolved to the auditor's satisfaction.

Paragraph (D) also has been clarified in several respects. First, the proposed paragraph (D) contained parenthetical language stating that disclosure would be required "(whether or not * * * [an] audit has been completed)." The purpose of this language was to indicate that the scope of the required disclosures would include not only prior audits and previously issued financial statements, but also information concerning audits currently in progress or contemplated, and the underlying annual and quarterly financial statements. In order to further clarify this position, the proposed parenthetical has been deleted and the paragraph has been revised to state that disclosure would be required if the information materially impacts, "(i) a previously issued audit report or the underlying financial statements, or (ii) the financial statements issued or to be issued covering the fiscal period(s) subsequent to the date of the most recent financial statements covered by an audit report." Second, several commentators noted that paragraph (D) would require disclosure of situations that would prevent, or should be have prevented, the auditor from rendering an unqualified report on the registrant's current or prior financial statements. Parenthetical language therefore has been added to paragraph (D) to emphasize this point. Finally, the Commission believes that the revision changing the proposed requirement to disclose information that "may impact" the fairness or reliability of financial statements or reports to a requirement to disclose information that the former accountant concluded "materially impacts" those items clarifies the distinction between paragraphs (C) and (D). Paragraph (C) is meant to encompass those situations where information came to the former accountant's attention that it was unable to thoroughly explore and thus reach a conclusion as to its implications prior to its resignation, dismissal or declination to stand for re-election. Paragraph (D) is meant to encompass those situations where the accountant has reached the conclusion that the information does have a material impact.

Letter From the American Institute of Certified Public Accountants ("AICPA")

By letter dated August 20, 1986, the AICPA proposed that the Commission amend the disclosure requirements concerning changes in accountants to include, among other things, disclosure of: whether the audit or similar committee of the board of directors and the former accountant discussed the subject matter of reportable

disagreements and events;[13] whether the registrant authorized the former accountant to respond fully to the inquiries of the successor auditor concerning such issues; and whether the former accountant resigned, declined to stand for re-election or was dismissed. Commentators were generally supportive of these proposals, and they have been adopted as proposed.

III. Disclosure of Potential Opinion Shopping Situations

SEC registrants may, of course, change auditors at their discretion. It is imperative, however, that when a new auditor is engaged that auditor possess the integrity, objectivity and independence required by professional and Commission standards.[14] The auditor must, at all times, maintain a "healthy skepticism" to ensure that a review of a client's accounting treatment is fair and impartial.[15] The willingness of an auditor to support a proposed accounting treatment that is intended to accomplish the registrant's reporting objectives even though that treatment might frustrate reliable reporting, indicates that there may be a lack of such skepticism and independence on the part of the auditor.[16] The search for such an auditor by management may indicate an effort by management to avoid the requirement for an independent examination of the registrant's financial statements. Engaging an accountant under such circumstances is generally referred to as "opinion shopping." Should this practice result in false or misleading financial disclosures the registrant and the accountant would be subject to enforcement and/or disciplinary action by the Commission.[17]

The National Commission on Fraudulent Financial Reporting,[18] the heads of seven major accounting firms,[19] and others have recommended expanded disclosures in this area.[20]

In order to provide increased public disclosure of possible opinion shopping situations, the Commission has adopted new disclosure requirements concerning consultations between the registrant and the newly engaged auditor that occurred within approximately two years prior to the engagement, if those discussions (1) were or should have been subject to SAS 50 [21] or (2) concerned the subject matter of a disagreement or reportable event with the former auditor. The information to be disclosed includes: (1) an identification of the issues that were the subject of those consultations; (2) a brief description of the newly engaged accountant's oral or written views on those issues as expressed to the registrant, with any written views received by the registrant filed as an exhibit to the document containing this disclosure; and (3) a statement by the registrant whether it consulted the former accountant on those issues, and if so, a summary of the former accountant's views. The new accountant will have the opportunity to review the registrant's summary of its views and furnish a letter (to be filed as an exhibit to the filing or report containing this disclosure) to provide additional information on clarify the registrant's summary of its views and comment on other disclosures under this item. The registrant also must request that the former accountant review the disclosure and provide a statement as to whether it agrees with the registrant's summary of its views, and if not, the respects in which it does not agree.

The adopted disclosure item is narrower than the proposal in two respects. First, the proposal would have required disclosure of any issue material to or expected in the future to be material to the registrant's financial statements that the registrant discussed with the newly engaged auditor during approximately two years prior to its engagement. The adopted disclosure item narrows the range of discloseable issues to those that were the subject of SAS 50 requirements or those that were the subject of reportable events or disagreements with the former auditors. Commentators were concerned with the breadth of the proposed disclosure requirement. These commentators indicated that the proposal could result in voluminous disclosures that would

---

[13] The AICPA's letter suggested that disclosure be provided when the former auditor provides a written communication to the audit committee or the board of directors that "specifically communicated concerns or conclusions regarding the integrity of management or the presence or materiality of possible irregularities or illegal acts that were not resolved to the former accountant's satisfaction." As discussed in the proposing release, such a letter would be encompassed by the broad term "disagreements," and the Commission's proposal, therefore, substituted language referring to the written communication with the term "disagreements." *See* Securities Act Release No. 6719 (June 18, 1987) [52 FR 24018].

[14] See, e.g., Rule 2-01(c), Regulation S-X, 17 CFR 210.2-01(c); Statement on Auditing Standards No. 1, AU Section 220. As recognized by the Commission and the courts, not only the fact but also the appearance of independence by the auditor is essential to the integrity of the securities markets. *U.S. v. Arthur Young*, 465 U.S. 805, 819 n. 15 (1984); Securities Act Release No. 33-6594 (July 1, 1985) [50 FR 28219]. Opinion shopping has an obvious and negative impact on the general public's perception of the professionalism exhibited by accountants and their firms.

[15] See, *In the Matter of Touche Ross & Co.*, Accounting and Auditing Enforcement Release ("AAER") No. 10 (November 13, 1983).

[16] As previously discussed, a disclosure requirement is being adopted as part of Item 304(a)(1)(iv) that pertains to limitations on discussions between successor and predecessor auditors concerning matters that were the subject of reportable events or disagreements. It should be noted, however, that Statement of Auditing Standards No. 7 states, "Inquiry of the predecessor is a necessary procedure . . . ," and stresses that such inquiries or consultations should include all matters that may "assist him in determining whether to accept the engagement." While this standard does not directly prohibit the accountant from accepting an engagement where limitations have been imposed on discussions between the new and former accountants; the new accountant should inquire as to the reasons and consider the implications of such limitations in deciding whether to accept the engagement. In the Commission's view, the imposition of limitations on such communication may materially impact the conduct of audits. Therefore, accountants accepting such engagements should ensure appropriate work paper documentation as to the nature of, and the reasons for, any such limitations and their responses thereto.

[17] For example, if the registrant's financial statements are materially misleading, the registrant may be in violation of Section 13(a) or 15(d) of the Securities Exchange Act of 1934 ("the Exchange Act"), 15 U.S.C. 78a et seq. If fraudulent activity has occurred, the registrant may have violated Section 17(a) of the Securities Act of 1933, 15 U.S.C. 77a et seq., or Section 10(b) of the Exchange Act. Among other areas of potential liability, the accountant may directly violate several sections of the federal securities laws, including Section 10(b) above, and may be subject to disciplinary action under Rule 2(e) of the Commission's Rules of Practice and Investigations, 17 CFR 201.2(e). *See, e.g., In the Matter of Frantz, Warrick, Strack & Associates*, AAER No. 88 (February 10, 1986); *In the Matter of Broadview Financial Corporation*, AAER No. 54 (April 17, 1985); *In the Matter of Stephen O. Wade; Ralph H. Newton, Jr.; Clark C. Burritt, Jr.*, AAER No. 32 (June 25, 1984); *In the Matter of Accounting for Gains and Losses Incurred in Connection With Certain Securities Transactions*, AAER No. 14 (October 6, 1983).

[18] See note 3 *supra*.

[19] See the April 1986 paper entitled "Recommendations to the AICPA Board of Directors: The Future Relevance, Reliability and Credibility of Financial Information" signed by the managing partners of seven major accounting firms.

[20] For a discussion of these recommendations, see the proposing release, Securities Act Release No. 6719, *supra*.

[21] See note 2 *supra*. Paragraph 2 of SAS 50 states: 2. This statement provides guidance that an accountant in public practice ("reporting accountant"), either in connection with a proposal to obtain a new client or otherwise, should apply—

a. When preparing a written report on the application of accounting principles to specified transactions, either completed or proposed ("specific transactions").

b. When requested to provide a written report on the type of opinion that may be rendered on a specific entity's financial statements.

c. When preparing a written report to intermediaries on the application of accounting principles not involving facts or circumstances of a particular principal ("hypothetical transactions").

This statement also applies to oral advice on the application of accounting principles to a specific transaction, or the type of opinion that may be rendered on an entity's financial statements, when the reporting accountant concludes the advice is intended to be used by a principal to the transaction as an important factor considered in reaching a decision.

not highlight the areas most important to investors, shareholders and the public. The Commission has therefore narrowed the disclosure requirement to those consultations that would be most likely to be relied on by registrants due to the auditor's compliance with the SAS 50 reporting, performance and documentation standards,[22] and those areas that have been the subject of contention between the registrant and the former auditor.

Second, the Commission has determined not to adopt the proposed disclosure requirement calling for the names of other accountants consulted on the listed issues and an indication of the extent the views of such other accountants materially differed from the views of the new accountant. After a review of the comments, it has been determined that effective disclosure would necessitate disclosing each consulted accountant's individual views on each issue. Further, commentators argued that the views of other accountants not subsequently engaged as the registrant's auditor may not be relevant. The Commission has therefore determined to adopt, at this time, only those disclosure requirements focusing on the registrant's relationship with its new and former auditors. The Commission staff monitors changes in accountants disclosures closely, however, and if necessary will readdress this area.

IV. Revision of Item 4, Form 8-K, and Item 9 of Schedule 14A

Previously, Item 304 of Regulation S-K referred to Item 4 of Form 8-K for the substantive disclosure requirements concerning changes in accountants. Each time Item 304 was incorporated into a disclosure form,[23] the preparer of the form had to consult not only Item 304, but also Form 8-K. The Commission has therefore moved the location of the substance of these requirements to Item 304 of Regulation S-K, and amended Item 4 of Form 8-K to refer to Item 304. This revision, however, is only a change in the location of the substantive disclosure requirements for changes in accountants and does not affect the use of Form 8-K as the most common vehicle for reporting changes in accountants.

The Commission has also amended Item 9(d) of Schedule 14A to conform the time frame in a proxy statement for disclosure concerning a change of accountants with that found in Item 304(a). The period for change in accountants disclosure under Item 304(a), the registrant's two most recent fiscal years and any subsequent interim period, was selected because the information requested under this item generally appears in reports or registration statements containing two years audited balance sheets and three years audited income statements. The disclosure concerning changes in accountants remains relevant for the periods that the financial statements audited by the former accountant continue to be presented. As proxy statements are preceded or accompanied by an annual report to shareholders meeting the same financial statement requirements, the Commission has determined that disclosure of change in accountants information should be presented for the same period as that required under Item 304(a).

V. Cost/Benefits Analysis

The Commission stated in the proposing release that the additional instruction to clarify the term "disagreements" and the requirement to disclose certain reportable events are a codification of existing Commission and staff interpretations; therefore, these proposals should not impose new costs or obligations on registrants. In adopting these disclosure requirements, the Commission has reduced the costs associated with this disclosure by not requiring disclosure of differences of opinion based on incomplete facts or preliminary information and requiring disclosure of certain "reportable events" that impact the fairness or reliability of financial statements or audit reports only if those events have not been resolved to the accountant's satisfaction. There should be negligible costs related to the disclosure of whether the former accountant resigned, declined to stand for re-election, or was dismissed; whether the audit committee or board of directors discussed the disagreement or reportable event with the former accountant; and whether the registrant authorized the former accountant to discuss the disagreement or reportable event with the new accountant, and any limitations on such discussions. This information should be readily available to the registrant and result in brief factual statements.

The proposal to require disclosure of potential opinion shopping situations would require the presentation of new information. The cost of obtaining this information, however, should be reduced to: (1) The availability of SAS 50 reports furnished by the new accountant prior to its engagement on the issues that are to be disclosed and (2) the existing requirement for the registrant to request a letter addressed to the Commission from the former accountant. There is no requirement in the proposals for a new evaluation of these issues by the new or former accountants. There would be only a description of previous positions expressed by the new and former accountant to the registrant. The Commission, in adopting the proposal, has reduced the potential costs of the disclosure from those that may have resulted from disclosures included in the original proposal by (1) Limiting disclosure to those issues either subject to SAS 50 or concerning a reportable event or disagreement between the former auditor and the registrant, and (2) not requiring disclosure of the names of other accountants consulted on the disclosed issues and the extent to which their views materially differed from the views of the newly engaged accountant. The benefits of this disclosure including exposing situations where opinion shopping may have occurred and providing information to shareholders and investors on various views regarding the accounting, auditing or financial disclosure issues that are, or may become, material to the registrant's financial statements.

Conforming the time frame in Item 9(d) of Schedule 14A with the time frame of Item 304(a) of Regulation S-K will not impose a significant cost on registrants because this information, except in rare cases, will simply consolidate information that has been previously disclosed.

VI. Certain Findings

Section 23(a)(2) of the Exchange Act [24] requires the Commission, in adopting rules under the Exchange Act, to consider the anti-competitive effect of such rules, if any, and to balance any impact against the regulatory benefits gained in terms of furthering the purposes of the Exchange Act. The Commission has considered the

[22] The Commission is aware that there may be valid reasons for obtaining the views of an independent accountant other than the registrant's current accountant, and that some registrants have a practice of routinely using a separate accountant for additional advice on complex issues. The Commission does not wish to interfere with such practices. When a registrant changes auditors, however, it is important for investors to be aware of any pre-existing relationships or understandings between the registrant and the new auditor and how the engagement of the new auditor may impact the registrant's accounting and reporting policies.

[23] Item 304 information is required by Forms S-1, S-2, S-4, S-11 and S-18 under the Securities Act of 1933, 17 CFR 239.11, 239.12, 239.25, 239.18 and 239.28 respectively, and Forms 10 and 10-K and Schedule 14A under the Securities Exchange Act of 1934, 17 CFR 249.210, 249.310 and 249.14a-101, respectively.

[24] 15 U.S.C. 78w(a)(2).

amendments and additions to Form 8-K, Regulation S-K and Schedule 14A in light of the standard cited in section 23(a)(2) and believes that adoption of these changes will not impose any burden on competition not necessary or appropriate in furtherance of the Exchange Act.

VII. Final Regulatory Flexibility Analysis

A final regulatory flexibility analysis in accordance with 5 U.S.C. 604 has been prepared regarding the amendments to Item 4 of Form 8-K, Item 304 of Regulation S-K and Item 9 of Schedule 14A. Members of the public who wish to obtain a copy of either the Final Regulatory Flexibility Analysis or the Initial Regulatory Flexibility Analysis should contact Robert E. Burns or John M. Riley, Office of the Chief Accountant, Securities and Exchange Commission, 450 Fifth Street NW., Washington, DC 20549.

VIII. Codification Update

The "Codification of Financial Reporting Policies" announced in Financial Reporting Release No. 1 (April 15, 1982) [47 FR 21028] is updated to:

1. Include a new paragraph 603.06 to include the text in topic II of this release, "Clarification of the Term Disagreements".

2. Include a new paragraph 603.07 to include the text in topic III of this release, "Disclosure of Potential Opinion Shopping Situations".

List of Subjects in 17 CFR Parts 229, 240 and 249

Reporting and recordkeeping requirements and securities.

IX. Text of Amendments

In accordance with the foregoing, Title 17, Chapter II of the Code of Federal Regulations is amended as follows:

PART 229—STANDARD INSTRUCTIONS FOR FILING FORMS UNDER THE SECURITIES ACT OF 1933 AND SECURITIES EXCHANGE ACT OF 1934 AND ENERGY POLICY AND CONSERVATION ACT OF 1975—REGULATION S-K.

1. The authority citation for Part 229 continues to read, in part, as follows:

Authority: Secs. 6, 7, 8, 10, 19(a), 48 Stat. 78, 79, 81, 85; secs. 12, 13, 14, 15(d), 23(a), 48 Stat. 892, 894, 901; secs. 205, 209, 48 Stat. 906, 908; sec. 203(a), 49 Stat. 704; secs. 1, 3, 8, 49 Stat. 1375, 1377, 1379; sec. 301, 54 Stat. 857; secs. 8, 202, 68 Stat. 685, 686; secs. 3, 4, 5, 6, 78 Stat. 565–568, 569, 570–574; sec. 1, 79 Stat. 1051; secs. 1, 2, 3, 82 Stat. 454, 455; secs. 1, 2, 3–5, 28(c), 84 Stat. 1435, 1497; sec. 105(b), 88 Stat. 1503; secs. 8, 9, 10, 11, 18, 89 Stat. 117, 118, 119, 155; 15 U.S.C. 77f, 77g, 77h, 77j, 77s(a), 78l, 78m, 78n, 78o(d), 78w(a).

2. By revising § 229.304 to read as follows:

§ 229.304 (Item 304) Changes in and disagreements with accountants on accounting and financial disclosure.

(a)(1) If during the registrant's two most recent fiscal years or any subsequent interim period, an independent accountant who was previously engaged as the principal accountant to audit the registrant's financial statements, or an independent accountant who was previously engaged to audit a significant subsidiary and on whom the principal accountant expressed reliance in its report, has resigned (or indicated it has declined to stand for re-election after the completion of the current audit) or was dismissed, then the registrant shall:

(i) State whether the former accountant resigned, declined to stand for re-election or was dismissed and the date thereof.

(ii) State whether the principal accountant's report on the financial statements for either of the past two years contained an adverse opinion or a disclaimer of opinion, or was qualified or modified as to uncertainty, audit scope, or accounting principles; and also describe the nature of each such adverse opinion, disclaimer of opinion, modification, or qualification.

(iii) State whether the decision to change accountants was recommended or approved by:

(A) Any audit or similar committee of the board of directors, if the issuer has such a committee; or

(B) The board of directors, if the issuer has no such committee.

(iv) State whether during the registrant's two most recent fiscal years and any subsequent interim period preceding such resignation, declination or dismissal there were any disagreements with the former accountant on any matter of accounting principles or practices, financial statement disclosure, or auditing scope or procedure, which disagreement(s), if not resolved to the satisfaction of the former accountant, would have caused it to make reference to the subject matter of the disagreement(s) in connection with its report. Also, (A) describe each such disagreement; (B) state whether any audit or similar committee of the board of directors, or the board of directors, discussed the subject matter of each of such disagreements with the former accountant; and (C) state whether the registrant has authorized the former accountant to respond fully to the inquiries of the successor accountant concerning the subject matter of each of such disagreements and, if not, describe the nature of any limitation thereon and the reason therefore. The disagreements required to be reported in response to this Item include both those resolved to the former accountant's satisfaction and those not resolved to the former accountant's satisfaction. Disagreements contemplated by this Item are those that occur at the decision-making level, i.e., between personnel of the registrant responsible for presentation of its financial statements and personnel of the accounting firm responsible for rendering its report.

(v) Provide the information required by paragraph (a)(1)(iv) of this Item for each of the kinds of events (even though the registrant and the former accountant did not express a difference of opinion regarding the event) listed in paragraphs (a)(1)(v) (A) through (D) of this section, that occurred within the registrant's two most recent fiscal years and any subsequent interim period preceding the former accountant's resignation, declination to stand for re-election, or dismissal ("reportable events"). If the event led to a disagreement or difference of opinion, then the event should be reported as a disagreement under paragraph (a)(1)(iv) and need not be repeated under this paragraph.

(A) The accountant's having advised the registrant that the internal controls necessary for the registrant to develop reliable financial statements do not exist;

(B) The accountant's having advised the registrant that information has come to the accountant's attention that has led it to no longer be able to rely on management's representations, or that has made it unwilling to be associated with the financial statements prepared by management;

(C) (*1*) The accountant's having advised the registrant of the need to expand significantly the scope of its audit, or that information has come to the accountant's attention during the time period covered by Item 304(a)(1)(iv), that if further investigated may:

(*i*) Materially impact the fairness or reliability of either: a previously issued audit report or the underlying financial statements; or the financial statements issued or to be issued covering the fiscal period(s) subsequent to the date of the most recent financial statements covered by an audit report (including information that may prevent it from rendering an unqualified audit report on those financial statements), or

(*ii*) Cause it to be unwilling to rely on management's representations or be associated with the registrant's financial statements, and

(*2*) Due to the accountant's resignation (due to audit scope limitations or otherwise) or dismissal, or for any other reason, the accountant did not so expand the scope of its audit or conduct such further investigation; or

(D) (*1*) The accountant's having advised the registrant that information has come to the accountant's attention that it has concluded materially impacts the fairness or reliability of either (*i*) a previously issued audit report or the underlying financial statements, or (*ii*) the financial statements issued or to be issued covering the fiscal period(s) subsequent to the date of the most recent financial statements covered by an audit report (including information that, unless resolved to the accountant's satisfaction, would prevent it from rendering an unqualified audit report on those financial statements), and

(*2*) Due to the accountant's resignation, dismissal or declination to stand for re-election, or for any other reason, the issue has not been resolved to the accountant's satisfaction prior to its resignation, dismissal or declination to stand for re-election.

(2) If during the registrant's two most recent fiscal years or any subsequent interim period, a new independent accountant has been engaged as either the principal accountant to audit the registrant's financial statements, or as an independent accountant to audit a significant subsidiary and on whom the principal accountant is expected to express reliance in its report, then the registrant shall identify the newly engaged accountant and indicate the date of such accountant's engagement. In addition, if during the registrant's two most recent fiscal years, and any subsequent interim period prior to engaging that accountant, the registrant (or someone on its behalf) consulted the newly engaged accountant regarding:

(i) Either: the application of accounting principles to a specified transaction, either completed or proposed; or the type of audit opinion that might be rendered on the registrant's financial statements, and either a written report was provided to the registrant or oral advice was provided that the new accountant concluded was an important factor considered by the registrant in reaching a decision as to the accounting, auditing or financial reporting issue; or

(ii) Any matter that was either the subject of a disagreement (as defined in paragraph 304(a)(1)(iv) and the related instructions to this item) or a reportable event (as described in paragraph 304(a)(1)(v)), then the registrant shall:

(A) So state and identify the issues that were the subjects of those consultations;

(B) Briefly describe the views of the newly engaged accountant as expressed orally or in writing to the registrant on each such issue and, if written views were received by the registrant, file them as an exhibit to the report or registration statement requiring compliance with this Item 304(a);

(C) State whether the former accountant was consulted by the registrant regarding any such issues, and if so, provide a summary of the former accountant's views; and

(D) Request the newly engaged accountant to review the disclosure required by this Item 304(a) before it is filed with the Commission and provide the new accountant the opportunity to furnish the registrant with a letter addressed to the Commission containing any new information, clarification of the registrant's expression of its views, or the respects in which it does not agree with the statements made by the registrant in response to Item 304(a). The registrant shall file any such letter as an exhibit to the report or registration statement containing the disclosure required by this Item.

(3) The registrant shall request the former accountant to furnish the registrant with a letter addressed to the Commission stating whether it agrees with the statements made by the registrant in response to this Item 304(a) and, if not, stating the respects in which it does not agree. The registrant shall file the former accountant's letter as an exhibit to the report or registration statement containing this disclosure. If the former accountant's letter is unavailable at the time of filing, it shall be filed by amendment within thirty days thereafter.

(b) If:

(1) In connection with a change in accountants subject to paragraph (a) of this Item 304, there was any disagreement of the type described in paragraph (a)(1)(iv) or any reportable event as described in paragraph (a)(1)(v) of this Item;

(2) During the fiscal year in which the change in accountants took place or during the subsequent fiscal year, there have been any transactions or events similar to those which involved such disagreement or reportable event; and

(3) Such transactions or events were material and were accounted for or disclosed in a manner different from that which the former accountants apparently would have concluded was required, the registrant shall state the existence and nature of the disagreement or reportable event and also state the effect on the financial statements if the method had been followed which the former accountants apparently would have concluded was required.

These disclosures need not be made if the method asserted by the former accountants ceases to be generally accepted because of authoritative standards or interpretations subsequently issued.

Instructions to Item 304: 1. The disclosure called for by paragraph (a) of this Item need not be provided if it has been previously reported as that term is defined in Rule 12b-2 under the Exchange Act (§ 240.12b-2 of this chapter); the disclosure called for by paragraph (a) must be provided, however, notwithstanding prior disclosure, if required pursuant to Item 9 of Schedule 14A (§ 240.14a-101 of this chapter). The disclosure called for by paragraph (b) of this section must be furnished, where required, notwithstanding any prior disclosure about accountant changes or disagreements.

2. When disclosure is required by paragraph (a) of this section in an annual report to security holders pursuant to Rule 14a-3 (§ 240.14a-3 of this chapter) or Rule 14c-3 (§ 240.14c-3 of this chapter), or in a proxy or information statement filed pursuant to the requirements of Schedule 14A or 14C (§ 240.14a-101 or § 240.14c-101 of this chapter), in lieu of a letter pursuant to paragraph (a)(2)(D) or (a)(3), prior to filing such materials with or furnishing such materials to the Commission, the registrant shall furnish the disclosure required by paragraph (a) of this section to any former accountant engaged by the registrant during the period set forth in paragraph (a) of this section and to the newly engaged accountant. If any such accountant believes that the statements made in response to paragraph (a) of this section are incorrect or incomplete, it may present its views in a brief statement, ordinarily expected not to exceed 200 words, to be included in the annual report or proxy or information statement. This statement shall be submitted to the registrant within ten business days of the date the accountant receives the registrant's disclosure. Further, unless the written views of the newly engaged accountant required to be filed as an exhibit by paragraph (a)(2)(B) of this Item 304 have been previously filed with the Commission the registrant shall file a Form 8-K concurrently with the annual report or proxy or information statement for the purpose of filing the written views as exhibits thereto.

3. The information required by Item 304(a) need not be provided for a company being acquired by the registrant that is not subject to the filing requirements of either section 13(a) or 15(d) of the Exchange Act, or, because of section 12(i) of the Exchange Act, has not furnished an annual report to security holders pursuant to Rule 14a-3 or Rule 14c-3 for its latest fiscal year.

4. The term "disagreements" as used in this Item shall be interpreted broadly, to include any difference of opinion concerning any matter of accounting principles or practices, financial statement disclosure, or auditing scope or procedure which (if not resolved to the satisfaction of the former accountant) would have caused it to make reference to the subject matter of the disagreement in connection with its report. It is not necessary for there to have been an argument to have had a disagreement, merely a difference of opinion. For purposes of this Item, however, the term disagreements does not include initial differences of opinion based on incomplete facts or preliminary information that were later resolved to the former accountant's satisfaction by, and providing the registrant and the accountant do not continue to have a difference of opinion upon, obtaining additional relevant facts or information.

5. In determining whether any disagreement or reportable event has occurred, an oral communication from the engagement partner or another person responsible for rendering the accounting firm's opinion (or their designee) will generally suffice as the accountant advising the registrant of a reportable event or as a statement of a disagreement at the "decision-making level" within the accounting firm and require disclosure under this Item.

PART 240—GENERAL RULES AND REGULATIONS, SECURITIES EXCHANGE ACT OF 1934

3. The authority citation for Part 240 continues to read, in part as follows:

Authority: Sec. 23, 48 Stat. 901, as amended, 15 U.S.C. 78w. * * *

4. By revising Item 9(d) of Schedule 14A (§ 240.14a-101) of this chapter to read as follows:

§ 240.14a-101 Schedule 14A. Information required in proxy statement.

* * * * *

Item 9. * * *

(d) If during the registrant's two most recent fiscal years or any subsequent interim period, (1) an independent accountant who was previously engaged as the principal accountant to audit the registrant's financial statements, or an independent accountant on whom the principal accountant expressed reliance in its report regarding a significant subsidiary, has resigned (or indicated it has declined to stand for re-election after the completion of the current audit) or was dismissed, or (2) a new independent accountant has been engaged as either the principal accountant to audit the registrant's financial statements or as an independent accountant on whom the principal accountant has expressed or is expected to express reliance in its report regarding a significant subsidiary, then, notwithstanding any previous disclosure, provide the information required by Item 304(a) of Regulation S-K (§ 229.304 of this chapter).

* * * * *

PART 249—FORMS, SECURITIES EXCHANGE ACT OF 1934

5. The authority citation for Part 249 continues to read in part as follows:

Authority: The Securities Exchange Act of 1934, 15 U.S.C. 78a, *et seq.*, unless otherwise noted.

6. By amending Item 4 of Form 8-K (§ 249.308 of this chapter) to read as follows:

Editorial Note: Form 8-K does not appear in the Code of Federal Regulations.

Form 8-K.

* * * * *

Item 4. Changes in Registrant's Certifying Accountant.

(a) If an independent accountant who was previously engaged as the principal accountant to audit the registrant's financial statements, or an independent accountant upon whom the principal accountant expressed reliance in its report regarding a significant subsidiary, resigns (or indicates it declines to stand for re-election after the completion of the current audit) or is dismissed, then provide the information required by Item 304(a)(1), including compliance with Item 304(a)(3), of Regulation S-K, § 229.304(a)(1) and (a)(3) of this chapter, and the related instructions to Item 304.

(b) If a new independent accountant has been engaged as either the principal accountant to audit the registrant's financial statements or as an independent accountant on whom the principal accountant has expressed, or is expected to express, reliance in its report regarding a significant subsidiary, then provide the information required by Item 304(a)(2), of Regulation S-K, § 229.304(a)(2) of this chapter.

Instruction. The resignation or dismissal of an independent accountant, or its declination to stand for re-election, is a reportable event separate from the engagement of a new independent accountant. On some occasions two reports on Form 8-K will be required for a single change in accountants, the first on the resignation (or declination to stand for re-election) or dismissal of the former accountant and the second when the new accountant is engaged. Information required in the second Form 8-K in such situations need not be provided to the extent it has been previously reported in the first such Form 8-K.

* * * * *

April 12, 1988.

Jonathan G. Katz,

Secretary.

[FR Doc. 88-8571 Filed 4-19-88; 8:45 am]

BILLING CODE 8010-01-M

DEPARTMENT OF ENERGY

Federal Energy Regulatory Commission

18 CFR Part 37

[Docket No. RM87-35-000]

Generic Determination of Rate of Return on Common Equity for Public Utilities

April 15, 1988.

AGENCY: Federal Energy Regulatory Commission, DOE.

ACTION: Notice of benchmark rate of return on common equity for public utilities.

SUMMARY: In accordance with § 37.5 of its regulations, the Federal Energy Regulatory Commission, by its designee the Director, Office of Economic Policy, issues the update to the "advisory" benchmark rate of return on common equity applicable to rate filings made during the period May through July 1988. This rate is set at 12.51 percent.

EFFECTIVE DATE: May 1, 1988.

FOR FURTHER INFORMATION CONTACT: Marvin Rosenberg, Office of Economic Policy, Federal Energy Regulatory Commission, 825 North Capitol Street NE., Washington, DC 20426, (202) 357-5283.

SUPPLEMENTARY INFORMATION:

Issued: April 15, 1988.

On January 27, 1988, the Federal Energy Regulatory Commission (Commission) issued a final rule which readopted the quarterly indexing procedure for establishing and updating the benchmark rate of return on common equity applicable to electric rate filings.[1] Based on this procedure, the Commission, by its designee, the Director of the Office of Economic Policy, determines that the benchmark rate of return on common equity applicable to rate filings made during the period May 1 through July 31, 1988, is 12.51 percent.

According to § 37.9 of the Commission's regulations,[2] each quarterly benchmark rate of return is set equal to the average cost of common equity for the jurisdictional operations of public utilities. This average cost is based on the average of the median dividend yields for the two most recent calendar quarters for a sample of 100

[1] Generic Determination of Rate of Return on Common Equity for Public Utilities, Order No. 489, 53 FR 3342 (Feb. 5, 1988), III FERC Stats. & Regs. ¶ 30,795 (Jan. 29, 1988).

[2] 18 CFR 37.9 (1987).

utilities. The average yield is used in the following formula with fixed adjustment factors (determined in the annual proceeding) to determine the cost rate:

$k_t = 1.02\ Y_t + 4.36$

where k_t is the average cost of common equity and Y_t is the average dividend yield.

The median dividend yields for the sample of utilities for the fourth quarter of 1987 and the first quarter of 1988 are 8.21 and 7.76 percent, respectively. The average is 7.99 percent. Using the latter yield produces an average cost of common equity of 12.51 percent. The attached appendix provides the supporting data for the latest quarter used in this update.

Specifically, this notice is intended to supplement the generic rate of return rule announced in Order No. 489, issued January 29, 1988 and effective on February 1, 1988.

List of Subjects in 18 CFR Part 37

Electric power rates, Electric utilities, Reporting and recordkeeping requirements.

In consideration of the foregoing, the Commission amends Part 37, Chapter I, Title 18 of the Code of Federal Regulations, as set forth below, effective May 1, 1988.

Douglas R. Bohi

Director, Office of Economic Policy.

PART 37—GENERIC DETERMINATION OF RATE OF RETURN ON COMMON EQUITY FOR PUBLIC UTILITIES

1. The authority citation for Part 37 continues to read as follows:

Authority: Federal Power Act, 16 U.S.C. 791a–825r (1982); Department of Energy Organization Act, 42 U.S.C. 7101–7352 (1982).

2. In § 37.9, paragraph (d) is revised to read as follows:

§ 37.9 Quarterly indexing Procedure.

* * * * *

(d) *Table of Quarterly Benchmark Rates of Return.* The following table presents the quarterly benchmark rates of return on common equity:

Benchmark applicability period (t)	Dividend increase adjustment factor (a)	Expected growth adjustment factor (b)	Current dividend yield (Y_t)	Cost of common equity (k_t)	Benchmark rate of return
2/1/86–4/30/86	1.02	4.54	9.03	13.75	13.75
5/1/86–7/31/86	1.02	4.54	8.37	13.08	13.25
8/1/86–10/31/86	1.02	4.54	7.49	12.18	12.75
11/1/86–1/31/87	1.02	4.54	6.75	11.43	12.25
2/1/87–4/30/87	1.02	4.63	6.44	11.20	11.20
5/1/87–7/31/87	1.02	4.63	6.54	11.30	11.30
8/1/87–10/31/87	1.02	4.63	6.97	11.74	11.74
11/1/87–1/31/88	1.02	4.63	7.49	12.27	12.27
2/1/88–4/30/88	1.02	4.36	7.90	12.42	12.42
5/1/88–7/31/88	1.02	4.36	7.99	12.51	12.51

Note: The Appendix will not be published in Code of Federal Regulations.

Appendix

Exhibit No. and title

1—Initial sample of utilities
2—Utilities excluded from the sample for the indicated quarter due to either zero dividends or a cut in dividends for this quarter or the prior three quarters
3—Annualized dividend yields for the indicated quarter for utilities retained in the sample.

Source of Data: Standard and Poor's Compustat Services, Inc., Utility COMPUSTAT II Quarterly Data Base.

Exhibit 1.
Exhibit 2.
Exhibit 3.

BILLING CODE 6717-01-M

VOL 53 ISS 76 AP 20 1988 UMI

EXHIBIT 1

SAMPLE OF UTILITIES

UTILITY	TICKER SYMBOL	INDUSTRY CODE	UTILITY	TICKER SYMBOL	INDUSTRY CODE
ALLEGHENY POWER SYSTEM	AYP	4911	MIDDLE SOUTH UTILITIES	MSU	4911
AMERICAN ELECTRIC POWER	AEP	4911	MIDWEST ENERGY CO	MWE	4931
ATLANTIC ENERGY INC	ATE	4911	MINNESOTA POWER & LIGHT	MPL	4911
BALTIMORE GAS & ELECTRIC	BGE	4931	MONTANA POWER CO	MTP	4931
BLACK HILLS CORP	BKH	4911	NECO ENTERPRISES INC	NPT	4911
BOSTON EDISON CO	BSE	4911	NEVADA POWER CO	NVP	4911
CAROLINA POWER & LIGHT	CPL	4911	NEW ENGLAND ELECTRIC SYSTEM	NES	4911
CENTERIOR ENERGY CORP	CX	4911	NEW YORK STATE ELEC & GAS	NGE	4931
CENTRAL & SOUTH WEST CORP	CSR	4911	NIAGARA MOHAWK POWER	NMK	4931
CENTRAL HUDSON GAS & ELEC	CNH	4931	NIPSCO INDUSTRIES INC	NI	4931
CENTRAL ILL PUBLIC SERVICE	CIP	4931	NORTHEAST UTILITIES	NU	4931
CENTRAL LOUISIANA ELECTRIC	CNL	4911	NORTHERN STATES POWER-MN	NSP	4931
CENTRAL MAINE POWER CO	CTP	4911	OHIO EDISON CO	OEC	4911
CENTRAL VERMONT PUB SERV	CV	4911	OKLAHOMA GAS & ELECTRIC	OGE	4911
CILCORP INC	CER	4931	ORANGE & ROCKLAND UTILITIES	ORU	4931
CINCINNATI GAS & ELECTRIC	CIN	4931	PACIFIC GAS & ELECTRIC	PCG	4931
CMS ENERGY CORP	CMS	4931	PACIFICORP	PPW	4931
COMMONWEALTH EDISON	CWE	4911	PENNSYLVANIA POWER & LIGHT	PPL	4911
COMMONWEALTH ENERGY SYSTEM	CES	4931	PHILADELPHIA ELECTRIC CO	PE	4931
CONSOLIDATED EDISON OF NY	ED	4931	PINNACLE WEST CAPITAL CORP	PNW	4911
DELMARVA POWER & LIGHT	DEW	4931	PORTLAND GENERAL CORP	PGN	4911
DETROIT EDISON CO	DTE	4911	POTOMAC ELECTRIC POWER	POM	4911
DOMINION RESOURCES INC-VA	D	4931	PUBLIC SERVICE CO OF COLO	PSR	4931
DPL INC	DPL	4931	PUBLIC SERVICE CO OF IND	PIN	4911
DUKE POWER CO	DUK	4911	PUBLIC SERVICE CO OF N H	PNH	4911
DUQUESNE LIGHT CO	DQU	4911	PUBLIC SERVICE CO OF N MEX	PNM	4931
EASTERN UTILITIES ASSOC	EUA	4911	PUBLIC SERVICE ENTERPRISE GP	PEG	4931
EMPIRE DISTRICT ELECTRIC CO	EDE	4911	PUGET SOUND POWER & LIGHT	PSD	4911
FITCHBURG GAS & ELEC LIGHT	FGE	4931	ROCHESTER GAS & ELECTRIC	RGS	4931
FLORIDA PROGRESS CORP	FPC	4911	SAN DIEGO GAS & ELECTRIC	SDO	4931
FPL GROUP INC	FPL	4911	SAVANNAH ELEC & POWER	SAV	4911
GENERAL PUBLIC UTILITIES	GPU	4911	SCANA CORP	SCG	4931
GREEN MOUNTAIN POWER CORP	GMP	4911	SIERRA PACIFIC RESOURCES	SRP	4931
GULF STATES UTILITIES CO	GSU	4911	SOUTHERN CALIF EDISON CO	SCE	4911
HAWAIIAN ELECTRIC INDS	HE	4911	SOUTHERN CO	SO	4911
HOUSTON INDUSTRIES INC	HOU	4911	SOUTHERN INDIANA GAS & ELEC	SIG	4931
I E INDUSTRIES INC	IEL	4931	ST JOSEPH LIGHT & POWER	SAJ	4931
IDAHO POWER CO	IDA	4911	TECO ENERGY INC	TE	4911
ILLINOIS POWER CO	IPC	4931	TEXAS UTILITIES CO	TXU	4911
INTERSTATE POWER CO	IPW	4931	TNP ENTERPRISES INC	TNP	4911
IOWA RESOURCES INC	IOR	4911	TUCSON ELECTRIC POWER CO	TEP	4911
IOWA-ILLINOIS GAS & ELEC	IWG	4931	UNION ELECTRIC CO	UEP	4911
IPALCO ENTERPRISES INC	IPL	4911	UNITED ILLUMINATING CO	UIL	4911
KANSAS CITY POWER & LIGHT	KLT	4911	UNITIL CORP	UTL	4911
KANSAS GAS & ELECTRIC	KGE	4911	UTAH POWER & LIGHT	UTP	4911
KANSAS POWER & LIGHT	KAN	4931	UTILICORP UNITED INC	UCU	4931
KENTUCKY UTILITIES CO	KU	4911	WASHINGTON WATER POWER	WWP	4931
LONG ISLAND LIGHTING	LIL	4931	WISCONSIN ENERGY CORP	WEC	4931
LOUISVILLE GAS & ELECTRIC	LOU	4931	WISCONSIN POWER & LIGHT	WPL	4931
MAINE PUBLIC SERVICE	MAP	4911	WISCONSIN PUBLIC SERVICE	WPS	4931

N = 100

EXHIBIT 2

UTILITIES EXCLUDED FROM THE SAMPLE FOR THE INDICATED QUARTER
DUE TO EITHER ZERO DIVIDENDS OR A CUT IN DIVIDENDS FOR
THIS QUARTER OR THE PRIOR THREE QUARTERS

YEAR=88 QUARTER=1

TICKER SYMBOL	UTILITY	REASON FOR EXCLUSION
CMS	CMS ENERGY CORP	DIVIDEND RATE WAS ZERO FOR THE QUARTER ENDING 03/31/88
CNH	CENTRAL HUDSON GAS & ELEC	DIVIDEND RATE REDUCED IN THE QUARTER ENDING 03/31/88
GSU	GULF STATES UTILITIES CO	DIVIDEND RATE WAS ZERO FOR THE QUARTER ENDING 03/31/88
LIL	LONG ISLAND LIGHTING	DIVIDEND RATE WAS ZERO FOR THE QUARTER ENDING 03/31/88
MSU	MIDDLE SOUTH UTILITIES	DIVIDEND RATE WAS ZERO FOR THE QUARTER ENDING 03/31/88
NGE	NEW YORK STATE ELEC & GAS	DIVIDEND RATE REDUCED IN THE QUARTER ENDING 03/31/88
NI	NIPSCO INDUSTRIES INC	DIVIDEND RATE WAS ZERO FOR THE QUARTER ENDING 09/30/87
NMK	NIAGARA MOHAWK POWER	DIVIDEND RATE REDUCED IN THE QUARTER ENDING 09/30/87
PIN	PUBLIC SERVICE CO OF IND	DIVIDEND RATE WAS ZERO FOR THE QUARTER ENDING 03/31/88
PNH	PUBLIC SERVICE CO OF N H	DIVIDEND RATE WAS ZERO FOR THE QUARTER ENDING 03/31/88
RGS	ROCHESTER GAS & ELECTRIC	DIVIDEND RATE REDUCED IN THE QUARTER ENDING 09/30/87

N= 11

EXHIBIT 3

ANNUALIZED DIVIDEND YIELDS FOR THE INDICATED QUARTER FOR UTILITIES RETAINED IN THE SAMPLE

YEAR=88 QUARTER=1

TICKER SYMBOL	PRICE, 1ST MONTH OF QRTR-HIGH	PRICE, 1ST MONTH OF QRTR-LOW	PRICE, 2ND MONTH OF QRTR-HIGH	PRICE, 2ND MONTH OF QRTR-LOW	PRICE, 3RD MONTH OF QRTR-HIGH	PRICE, 3RD MONTH OF QRTR-LOW	AVERAGE PRICE	DIVIDENDS, ANNUAL RATE	ANNUALIZED DIVIDEND YIELD
AEP	29.750	26.000	29.750	28.000	28.875	26.625	28.167	2.260	8.024
ATE	33.750	30.750	34.000	32.750	34.250	31.750	32.875	2.680	8.152
AYP	40.625	37.375	41.500	38.625	39.750	37.250	39.188	3.000	7.656
BGE	33.250	29.375	33.375	31.375	32.375	29.500	31.542	1.900	6.024
BKH	24.250	22.500	25.000	23.750	26.250	24.500	24.375	1.400	5.744
BSE	18.750	17.875	18.500	16.250	17.250	16.000	17.438	1.820	10.437
CER	34.250	29.500	34.750	31.250	33.250	30.750	32.292	2.400	7.432
CES	30.250	27.875	28.750	27.000	29.000	27.500	28.396	2.800	9.861
CIN	26.875	24.375	27.000	25.500	27.125	25.250	26.021	2.200	8.455
CIP	23.000	19.875	23.500	21.375	22.750	20.750	21.875	1.720	7.863
CNL	33.375	30.750	33.750	32.125	33.500	32.125	32.604	2.200	6.748
CPL	35.875	32.875	36.000	34.000	36.000	33.750	34.750	2.760	7.942
CSR	34.625	29.500	34.750	31.625	32.500	30.000	32.167	2.440	7.585
CTP	17.625	15.500	17.750	16.625	17.500	16.375	16.896	1.480	8.760
CV	23.625	21.250	25.750	22.500	25.000	22.500	23.438	1.900	8.107
CWE	30.750	26.875	30.500	27.250	29.125	26.375	28.479	3.000	10.534
CX	18.000	15.625	17.250	15.750	16.375	15.125	16.354	2.560	15.653
D	47.250	41.125	47.000	42.875	44.125	41.500	43.979	3.080	7.003
DEW	18.500	17.125	19.250	18.000	18.875	17.500	18.208	1.460	8.018
DPL	26.875	23.250	27.000	25.750	26.625	24.500	25.667	2.160	8.416
DQU	13.000	11.750	13.875	12.750	14.750	13.250	13.229	1.200	9.071
DTE	15.250	13.500	15.375	13.875	14.625	12.500	14.188	1.680	11.841
DUK	49.000	45.000	49.000	45.625	47.000	44.000	46.271	2.800	6.051
ED	47.250	42.000	47.500	44.250	45.625	42.875	44.917	3.200	7.124
EDE	30.625	29.875	31.875	30.250	31.500	30.125	30.708	2.120	6.904
EUA	29.250	25.375	27.625	24.000	26.125	24.125	26.083	2.300	8.818
FGE	24.750	21.625	27.500	23.250	28.500	26.875	25.750	1.600	6.214
FPC	37.500	32.000	37.750	35.500	35.875	33.125	35.292	2.480	7.027
FPL	31.875	28.375	32.500	30.500	31.000	28.625	30.479	2.120	6.956
GMP	26.750	24.625	26.625	25.125	26.750	24.500	25.729	1.860	7.229
GPU	31.500	27.250	31.375	29.875	32.750	31.000	30.625	1.200	3.918
HE	29.750	25.875	30.375	29.125	33.000	29.500	29.604	1.920	6.486
HOU	33.625	30.000	33.875	31.250	32.000	29.875	31.771	2.880	9.065
IDA	24.750	22.000	25.375	24.000	25.000	23.000	24.021	1.800	7.493
IEL	24.000	22.500	24.875	23.875	25.000	22.625	23.813	2.020	8.483
IOR	21.250	18.875	22.000	20.250	21.750	20.125	20.708	1.660	8.016
IPC	25.125	23.125	24.500	22.750	23.000	22.250	23.458	2.640	11.254
IPL	24.375	21.250	24.375	23.125	24.250	21.875	23.208	1.640	7.066
IPW	23.000	20.000	23.750	22.375	23.500	21.625	22.375	1.960	8.760
IWG	41.000	37.500	41.500	39.000	41.500	39.250	39.958	3.180	7.958
KAN	27.000	22.500	26.500	25.000	25.125	23.500	24.958	1.720	6.897
KGE	20.500	18.625	21.500	20.000	20.750	19.000	20.063	1.480	7.377
KLT	28.125	24.875	29.250	27.500	28.000	26.250	27.333	2.240	8.195
KU	19.625	17.500	20.625	19.125	20.375	18.500	19.292	1.340	6.946
LOU	33.875	30.250	35.500	34.000	35.375	31.250	33.375	2.660	7.970
MAP	25.375	23.750	26.250	25.375	26.250	26.000	25.500	1.800	7.059
MPL	25.500	21.000	26.500	24.500	25.000	22.750	24.208	1.720	7.105
MTP	35.500	30.250	35.250	32.625	35.000	33.000	33.604	2.680	7.975
MWE	19.000	16.625	19.875	18.500	19.625	18.625	18.708	1.520	8.125
NES	24.500	22.000	24.125	22.750	24.250	21.250	23.146	2.040	8.814
NPT	21.750	20.250	21.375	19.750	21.375	19.625	20.688	1.500	7.251

EXHIBIT 3 Continued

ANNUALIZED DIVIDEND YIELDS FOR THE INDICATED QUARTER FOR UTILITIES RETAINED IN THE SAMPLE

YEAR=88 QUARTER=1

TICKER SYMBOL	PRICE, 1ST MONTH OF QRTR-HIGH	PRICE, 1ST MONTH OF QRTR-LOW	PRICE, 2ND MONTH OF QRTR-HIGH	PRICE, 2ND MONTH OF QRTR-LOW	PRICE, 3RD MONTH OF QRTR-HIGH	PRICE, 3RD MONTH OF QRTR-LOW	AVERAGE PRICE	DIVIDENDS, ANNUAL RATE	ANNUALIZED DIVIDEND YIELD
NSP	32.375	29.500	33.375	31.125	32.625	29.875	31.479	2.020	6.417
NU	23.125	20.250	22.375	20.125	20.625	19.250	20.958	1.760	8.398
NVP	20.000	18.375	22.250	19.625	21.375	20.000	20.271	1.480	7.301
OEC	21.000	19.375	20.875	19.125	19.250	18.375	19.667	1.960	9.966
OGE	33.000	28.500	33.375	31.375	32.500	30.625	31.563	2.280	7.224
ORU	31.000	27.875	33.500	30.750	31.000	29.250	30.563	2.220	7.264
PCG	17.875	15.875	18.000	17.000	17.500	15.125	16.896	1.920	11.364
PE	21.250	18.500	21.250	18.500	19.500	18.000	19.500	2.200	11.282
PEG	26.875	25.500	26.875	24.125	24.750	22.750	24.813	2.000	8.060
PGN	24.250	21.250	24.750	23.000	24.250	21.500	23.167	1.960	8.460
PNM	22.375	19.000	21.500	16.750	18.750	17.000	19.229	2.920	15.185
PNW	29.750	27.875	29.125	27.250	28.000	26.875	28.146	2.800	9.948
POM	23.875	21.750	24.000	21.875	22.875	21.250	22.604	1.380	6.105
PPL	37.000	33.125	37.875	36.500	36.875	34.250	35.958	2.760	7.680
PPW	34.625	32.250	35.125	33.500	34.500	33.375	33.896	2.520	7.435
PSD	20.125	18.625	20.250	19.125	19.500	18.500	19.354	1.760	9.094
PSR	21.625	19.875	22.125	21.375	21.875	20.500	21.229	2.000	9.421
SAJ	25.000	19.000	23.375	22.000	23.500	21.500	22.063	1.400	6.346
SAV	23.750	20.875	24.500	22.500	24.625	23.750	23.333	1.000	4.286
SCE	34.000	29.125	33.750	32.125	33.500	30.250	32.125	2.380	7.409
SCG	32.625	28.500	33.125	32.250	33.125	30.500	31.688	2.400	7.574
SDO	33.750	30.000	34.000	32.125	33.625	31.000	32.417	2.600	8.021
SIG	38.000	34.500	37.500	36.000	37.000	35.000	36.333	2.260	6.220
SO	24.250	22.500	24.125	22.500	23.625	21.625	23.104	2.140	9.262
SRP	23.125	21.125	23.750	22.500	23.750	21.875	22.688	1.760	7.758
TE	23.500	21.750	24.375	23.250	24.000	22.250	23.188	1.340	5.779
TEP	58.500	50.625	59.875	56.250	59.750	55.250	56.708	3.900	6.877
THP	19.750	18.625	20.125	18.500	19.125	18.375	19.083	1.470	7.703
TXU	30.250	27.250	30.625	29.000	28.875	24.625	28.438	2.880	10.127
UCU	18.500	15.000	19.000	17.250	19.375	17.875	17.833	1.040	5.832
UEP	24.125	21.375	25.000	24.125	24.500	22.125	23.542	1.920	8.156
UIL	27.250	22.750	23.625	21.500	21.750	19.750	22.771	2.320	10.188
UTL	31.000	29.625	30.625	29.125	30.000	29.000	29.896	1.960	6.556
UTP	29.625	26.750	30.000	28.625	29.750	28.625	28.896	2.320	8.029
WEC	26.750	22.500	26.375	24.375	25.250	24.125	24.896	1.440	5.784
WPL	46.000	43.250	47.750	45.750	47.750	44.750	45.875	3.240	7.063
WPS	22.875	20.000	23.250	21.875	22.875	21.000	21.979	1.540	7.007
WMP	27.000	23.375	28.000	26.000	26.625	24.125	25.854	2.480	9.592

N= 89

[FR Doc. 88-8683 Filed 4-19-88; 8:45 am]

BILLING CODE 6717-01-C

DEPARTMENT OF THE TREASURY

Customs Service

19 CFR Part 103

[T.D. 88-22]

Availability of Information Compiled for Law Enforcement Purposes

AGENCY: Customs Service, Department of the Treasury.

ACTION: Final rule.

SUMMARY: This document amends the Customs Regulations to conform the regulations to certain changes made to the Freedom of Information Act (FOIA) by the Freedom of Information Reform Act of 1986. These changes altered the criteria used by Federal agencies to exempt records and information compiled for law enforcement purposes from disclosure. An agency may now exempt from disclosure investigatory records, the production of which "could reasonably be expected" to interfere with law enforcement proceedings. This standard ("could reasonably be expected") represents a lower threshold for withholding records. In addition, an agency can treat records as outside the scope of the FOIA if they pertain to a criminal proceeding or investigation, the subject is unaware of its pendency, and disclosure of the existence of such records could reasonably be expected to interfere with such proceedings.

The change finalizes regulations previously implemented on an interim basis.

EFFECTIVE DATE: May 20, 1988.

FOR FURTHER INFORMATION CONTACT: Lee H. Kramer, Regulations and Disclosure Law Branch, (202-566-8681).

SUPPLEMENTARY INFORMATION:

Background

The Anti-Drug Abuse Act of 1986 (Pub. L. 99-570), provides for a wide range of programs and measures to enhance efforts to counteract the problem of drug abuse in the U.S. Sections 1801-1804 of Title 1, Subtitle N of Pub. L. 99-570, cited as the "Freedom of Information Reform Act of 1986", amended the Freedom of Information Act (FOIA) (5 U.S.C. 552), relative to the availability of information compiled for law enforcement purposes. As amended by section 1802, 5 U.S.C. 552 (b)(7) now provides that an agency may exempt investigatory records compiled for law enforcement purposes, the production of which "could reasonably be expected" to interfere with law enforcement proceedings from disclosure. This standard ("could reasonably be expected") represents a lower threshold for withholding records. As amended, the statute provides that law enforcement records or information may be withheld when disclosure: (1) Could reasonably be expected to interfere with enforcement proceedings; (2) would deprive a person of a right to a fair trial or an impartial adjudication; (3) could reasonably be expected to constitute an unwarranted invasion of personal privacy; (4) could reasonably be expected to disclose the identify of a confidential source; (5) would disclose law enforcement techniques or investigation/prosecution guidelines; or (6) could reasonably be expected to endanger the life or physical safety of any individual. Changes were also made relative to an exemption for certain pending criminal investigations when the subject of the investigation or proceeding is not aware of its pendency and the disclosure of the existence of the records could reasonably be expected to interfere with enforcement proceedings. These statutory changes required conforming changes to § 103.12, Customs Regulations (19 CFR 103.12), which sets forth the type of U.S. Customs Service records which are exempt from disclosure under 5 U.S.C. 552. Accordingly, Customs amended Part 103, Customs Regulations, on an interim basis by publication of T.D. 87-137 in the **Federal Register** on November 10, 1987 (52 FR 43192), to confrom the regulations to the changes made to the Freedom of Information Act by the Freedom of Information Reform Act of 1986.

The November 10, 1987, **Federal Register** notice solicited public comments on the changes. No comments were received. Accordingly, it has been determined to adopt the interim regulations as published.

Executive Order 12291

Because this document will not result in a "major rule" as defined in E.O. 12291, Customs has not prepared a regulatory impact analysis.

Regulatory Flexibility Act

It is certified that the provisions of the Regulatory Flexibility Act (5 U.S.C. 601 *et seq.*) do not apply.

Drafting Information

The principal author of this document was Arnold L. Sarasky, Regulations and Disclosure Law Branch, U.S. Customs Service. However, personnel from other offices participated in its development.

List of Subjects in 19 CFR Part 103

Freedom of information.

Amendment to the Regulations

Part 103, Customs Regulations (19 CFR Part 103), is amended as set forth below:

PART 103—AVAILABILITY OF INFORMATION

1. The general authority citation for Part 103 continues to read as follows:

Authority: 5 U.S.C. 301, 552, 19 U.S.C. 66, 1624, 31 U.S.C. 483a.

2. Section 103.12 is amended by republishing the introductory text, revising paragraph (g) and adding new paragraphs (h) and (i), to read as follows:

§ 103.12 Exemptions.

Pursuant to 5 U.S.C. 552(b), the disclosure requirements of 5 U.S.C. 552(a) are not applicable to U.S. Customs Service records which relate to the following:

* * * * *

(g) *Certain investigatory records.* Records or information compiled for law enforcement purposes, but only to the extent that the production of such enforcement records or information:

(1) Could reasonably be expected to interfere with enforcement proceedings;

(2) Would deprive a person of a right to a fair trial or an impartial adjudication;

(3) Could reasonably be expected to constitute an unwarranted invasion of personal privacy;

(4) Could reasonably be expected to disclose the identity of a confidential source, including a State, local or foreign agency or authority or any private institution which furnished information on a confidential basis, and, in the case of a record or information compiled by a criminal law enforcement authority in the course of a criminal investigation, or by an agency conducting a lawful national security intelligence investigation, information furnished by a confidential source;

(5) Would disclose techniques for law enforcement investigations or prosecutions, or would disclose guidelines for law enforcement investigations or prosecutions if such disclosure could reasonably be expected to risk circumvention of the law; or

(6) Could reasonably be expected to endanger the life or physical safety of any individual.

(h) *Certain pending criminal investigations.* Whenever a request is made which involves access to records described in paragraph (g)(1) of this section and)—

(1) The investigation or proceeding involves a possible violation of criminal law; and

(2) There is reason to believe that the subject of the investigation or proceeding is not aware of its pendency, and disclosure of the existence of the records could reasonably be expected to interfere with enforcement proceedings, Customs may, during only such times as that circumstance continues, treat the records as not subject to the requirements of this part.

(i) *Certain informant records.* Whenever informant records maintained by Customs under an informant's name or personal identifier are requested by a third party according to the informant's name or personal identifier, Customs may treat the records as not subject to the requirements of this part unless the informant's status as an informant has been officially confirmed.

William von Raab,

Commissioner of Customs.

Approved: March 30, 1988.

Francis A. Keating II,

Assistant Secretary of Treasury.

[FR Doc. 88-8636 Filed 4-19-88; 8:45 am]

BILLING CODE 4820-02-M

DEPARTMENT OF HEALTH AND HUMAN SERVICES

Social Security Administration

20 CFR Part 416

[Reg. No. 16]

Supplemental Security Income for the Aged, Blind, and Disabled; Medicaid Eligibility Determinations

AGENCY: Social Security Administration, HHS.

ACTION: Final rule.

SUMMARY: We have revised our rules on the agreements under which we make Medicaid eligibility determinations on behalf of States for individuals who receive Supplemental Security Income (SSI) benefits. The revision provides that we may enter into an agreement with a State even though the State's Medicaid eligibility requirements differ from the requirements for SSI or for State supplementary payments, or both, in ways mandated by Federal law.

We also have rewritten and reorganized our existing rules for making Medicaid eligibility determinations.

DATE: These final regulations are effective April 20, 1988.

FOR FURTHER INFORMATION CONTACT: C.H. Campbell, Legal Assistant, Room 3-B-4 Operations Building, 6401 Security Boulevard, Baltimore, Maryland 21235, (301) 597-3408.

SUPPLEMENTARY INFORMATION: We published these regulations as a Notice of Proposed Rulemaking (NPRM) on May 9, 1986 (51 FR 17200), with a 60-day period for public comment. The comment received is discussed in this preamble.

Section 1634 of the Social Security Act authorizes us to enter into an agreement, with a State that wishes to do so, to make Medicaid eligibility determinations on behalf of the State for aged, blind, or disabled individuals. Our regulations for these agreements are in 20 CFR Part 416, Subpart U. Section 1634 is intended to give States the advantage of having us make Medicaid determinations on their behalf to prevent duplication of effort since we already considered many factors in making the SSI determinations that the State would consider in making the Medicaid determinations.

Our current regulations prohibit our entering into a section 1634 agreement with a State unless the Medicaid eligibility requirements the State asks us to apply are the same as either SSI requirements or State supplementary payment requirements, except that the State need not have us make Medicaid determinations for every category (aged people, blind people, and disabled people) of SSI beneficiary. We adopted the policy of making determinations only for States whose eligibility requirements for Medicaid are the same as those for the SSI program mainly to simplify the making of Medicaid eligibility determinations and keep down the cost to the States and to us.

Changes in Federal law, however, have mandated requirements for Medicaid eligibility that differ from the eligibility requirements for SSI and for State supplementary payments. As a result, a State's Medicaid eligibility requirements can no longer exactly correspond to the SSI eligibility requirements. Therefore, we are changing our regulations to provide that we may agree to make Medicaid determinations on behalf of a State *when its Medicaid eligibility requirements differ from the requirements for SSI or for State supplementary payments in ways mandated by Federal law.* These regulations address the legally mandated differences that involve Medicaid eligibility requirements for the applicant (1) to assign to the State certain rights to medical care payments by any third party and (2) to give the State information about any such rights that exist. These regulations, however, do not address integrating into the Medicaid determination process the Medicaid eligibility of individuals who have established Medicaid Qualifying Trusts. If our making Medicaid determinations in these trust situations requires exceptions to these regulations, we will address the problem in a separate rulemaking document.

The situations involving Medicaid and SSI program differences in which we will make Medicaid eligibility determinations for States under section 1634 of the Act are as follows:

1. Assignment of Third-Party Payment Rights

Section 2367 of Pub. L. 98-369, the Deficit Reduction Act of 1984, enacted July 18, 1984, amended sections 1902 and 1912 of the Act. Section 1902(a)(45), as added, requires that the State plan under title XIX include as a Medicaid eligibility requirement the assignment of rights to third-party medical payments. Section 1912(a)(1), as amended, mandates that States require, as a condition of Medicaid eligibility, that a person assign to the State his or her rights to any medical care support available under an order of a court or an administrative agency and any third-party payments for medical care (except Medicare). Section 1912(a)(1) (A) and (B) further requires as a condition of eligibility that the individual assign the rights of any other individual eligible under the State's Medicaid plan for whom he or she can legally make an assignment and cooperate in establishing paternity and obtaining medical care support and payments. Section 2367 of Pub. L. 98-369 was effective October 1, 1984, except that it grants additional time for compliance to States whose compliance requires State legislation.

Sections 1902(a)(45) and 1912(a)(1) are intended to give the States an efficient means of preventing or recovering Medicaid overpayments that result from payment by Medicaid of medical expenses for which someone else, such as an insurance company or an absent parent, is legally responsible.

We will apply the assignment requirement on behalf of States with section 1634 agreements when someone is applying for SSI benefits or State supplementary payments and is eligible for them. We do not plan to apply it in the SSI eligibility redetermination process.

We will explain the assignment of rights requirement to applicants and inform them that it is a condition of eligibility for Medicaid. We plan to have

applicants sign a form (in States where such rights are not automatically assigned by operation of State law) to provide for assignment of rights to payments by third-party payers. Such an assignment of rights would also be required on behalf of any other individual(s) eligible under the State Medicaid plan for whom the applicant can legally assign such rights. We also plan to provide the Medicaid agency with information on whether the assignment of rights requirement has been met with respect to an applicant.

2. Information About Third-Party Liability

To aid in accomplishing the purposes of sections 1902(a)(45) and 1912(a)(1), section 9503 of Pub. L. 99-272 (the Consolidated Omnibus Budget Reconciliation Act of 1985, enacted April 7, 1986) amended, among others, sections 1902(a)(25) and 1912(a)(1) of the Act. Section 1902(a)(25)(A), as amended, requires the State or local agency administering a State Medicaid plan to take all reasonable measures to ascertain the legal liability of third parties (including health insurers) to pay for care and services available under the plan, including the collection of sufficient information (as specified by the Secretary of Health and Human Services (HHS) in regulations) to enable the State to pursue claims against such third parties, with the information being collected at the time of any determination or redetermination of eligibility for Medicaid.

New subparagraph (C), added to section 1912(a)(1) by section 9503 of Pub. L. 99-272, mandates that a State Medicaid plan require as a condition of eligibility that a person cooperate with the State in identifying, and providing information to assist the State in pursuing, any third party who may be liable to pay for care and services available under the plan, unless the person has good cause for refusing to cooperate.

Section 9503 of Pub. L. 99-272 makes these provisions effective July 1, 1986, except that it grants additional time for compliance to States whose compliance requires State legislation.

An NPRM published May 28, 1986 (51 FR 19227) by the Health Care Financing Administration (HCFA), describes an agreement between us (the Social Security Administration (SSA)) and HCFA for use to make available, to interested State Medicaid agencies with section 1634 agreements, a third-party liability information program. Under this agreement, we collect, for purposes of identifying legally liable third parties, certain health insurance information from SSI applicants and recipients during the SSI initial application and eligibility redetermination processes. We transmit that information to the State Medicaid agency. In order to implement section 1902(a)(25)(A)(i) of the Act as amended, that NPRM proposed to require all States with section 1634 agreements to participate in the joint SSA/HCFA third-party liability information program.

To implement requirements of new section 1912(a)(1)(C) on behalf of States with section 1634 agreements, we will explain to SSI applicants, and to SSI recipients in the SSI eligibility redetermination process, that providing the specified information about third-party liability is a condition of eligibility for Medicaid. We will determine whether this eligibility requirement is met and inform the State Medicaid agency.

As with the assignment requirement, we will apply this requirement (and collect the health insurance information) only if the person is eligible for SSI or State supplementary payments.

This requirement to collect third-party liability information was not developed in our NPRM although, in our discussion on the assignment of rights in the NPRM, we mentioned the necessity for applicants to cooperate with State efforts to pursue third-party medical payments. The HCFA NPRM noted above, however, described this information collection requirement fully, noted that it was mandated by Federal law, and stated our intention to administer it. Consequently, we believe the public has been notified of our intent to administer this particular requirement.

3. Medicaid Qualifying Trusts

Section 9506 of Pub. L. 99-272 amended section 1902 of the Act by adding a new paragraph (k) on "Medicaid Qualifying Trusts" to section 1902 of the Social Security Act. The new paragraph (k) specifies that for purposes of Medicaid eligibility, the maximum amount of distributions that can be made from certain Medicaid qualifying trusts will be considered available to the individual, or spouse of the individual, who established the trust, whether or not the trust is irrevocable, or was established for purposes other than to enable a grantor to qualify for Medicaid, and whether or not the distributions are actually made. A Medicaid qualifying trust is defined as a trust or other similar legal device established, other than by will, by an individual (or spouse) under which the individual is a beneficiary and distribution of payments under the trust is determined at the discretion of one or more trustees. Prior to enactment of this legislation, there was no specific statutory provision concerning distributions from trusts and only the income and resources found to be actually available to individuals were considered in determining eligibility.

It is clear from the legislative history of section 9506 of Pub. L. 99-272 that Congress intended the integration of this provision in the Federal-State arrangements under which we make Medicaid determinations for States under section 1634 of the Act to be accomplished in a manner satisfactory to the Secretary. We are continuing to study how to accomplish this integration within present Federal-State arrangements. We may be able to process Medicaid determinations that involve this provision under the scope of §§ 416.2111 and 416.2116 of the attached regulations. However, it may be necessary to devise a new procedure to process these determinations, in which case we will later publish a new rule describing the procedure.

Public Comments

We received one public comment on the NPRM, from a State Medicaid agency. The agency said these regulations should provide for us to notify the State if a person who refused to assign third-party payment rights when applying for SSI and Medicaid later decides to sign the assignment form. We plan to consider the feasibility of this recommendation.

We also received from a State welfare department a letter of detailed questions, not presented as suggestions for changes in the regulations, about administrative arrangements under the State's section 1634 agreement. HCFA has replied directly to the State.

On its NPRM published May 28, 1986, HCFA received one comment concerning SSA collection of Medicaid third-party liability information. A State department of human services objected to being required to pay us for data which the State believes may not be valid, because after we get the information from the applicant we do not otherwise verify it. We concur with the HCFA response to this comment (52 FR 5967, 5971 (1987)): It is true that verification is the State's responsibility. However, our charges cover only obtaining and transmitting the information, and would have to be substantially higher if we were to independently verify the information.

VOL 53 ISS 76 AP 20 1988 UMI

Other Regulatory Changes

Our NPRM proposed only one new exception to the rule that we make Medicaid determinations only if the Medicaid requirements are the same as SSI requirements. That exception was that the Medicaid requirements could include the assignment of rights to third-party medical care payments. This final regulation broadens that exception by providing that the Medicaid requirements can differ from SSI requirements in any way mandated by Federal law.

We believe the public has had adequate notice of, and opportunity to comment on, the broader exception stated in this final rule, even though it was not explicitly stated in our NPRM. While the fact that the assignment of rights requirement was mandated by Federal law was the only point our NPRM cited explicitly as a reason for making it an exception to our same-requirements rule, an NPRM published May 28, 1986 by HCFA explicitly gave the public notice of, and opportunity to comment on, our intention to administer another Medicaid requirement currently mandated by Federal law that differs from SSI requirements, namely the requirement to provide third-party liability information.

We believe our and HCFA's NPRM's together put the public on notice that we intended to administer any Medicaid eligibility requirement that is mandated for SSI recipients by Federal law. Moreover, we can see no possibility that anyone will be disadvantaged by our final regulation. With or without it, States and Medicaid applicants are required by Federal statute to comply with whatever additional eligibility requirements that the statute imposes; the only question is whether we or the State determines whether they have been met.

General Rewriting of Subpart U

We have rewritten and reorganized all of Subpart U to make it clearer and easier to understand. We summarize below the rewritten Subpart U and the additions and main clarifications we have made:

Basic Provisions

We have added section 1106 of the Social Security Act to the authority citations of Subpart U to clarify that we disclose information to the States and charge for this information when appropriate under this section of the Act as well.

Section 416.2101 cross-refers to the basic regulations of HCFA on the Medicaid program. This section also defines terms used in Subpart U.

Section 416.2111 states the conditions for our agreeing to make Medicaid eligibility determinations for a State. Section 416.2111(b) of the NPRM referred to the assignment requirement as a non-SSI eligibility requirement for Medicaid that will not prevent our agreeing to make Medicaid determinations. We have changed that reference from the assignment requirement to any requirement mandated by Federal law. We have also, however, in § 416.2116 and one place in § 416.2111, changed "we will agree" to "we may agree" to make Medicaid determinations, because of the possibility that Federal law might, at some time in the future, mandate a Medicaid eligibility requirement that we might consider preferable for States, rather than us, to administer. In that event we would terminate our existing agreements under the provisions of § 416.2171, and would not make new agreements with States under section 1634 unless the requirement is one which Congress designates as an exception to the general rule that the Secretary make full Medicaid eligibility determinations under section 1634 agreements.

Section 416.2116 states when we make the determinations. In the final regulation we have added here that our determinations may include any non-SSI requirements that are mandated by Federal law.

Section 416.2130 gives examples of Medicaid functions we will not agree to carry out for a State.

Liability

Section 416.2140 states the limits of our liability if we tell a State erroneously that a person is eligible for Medicaid. This provision is not in the current regulations but was in existing agreements with States.

Other Services

Section 416.2145 offers services, other than eligibility determinations, which we provide under authority of 31 U.S.C. 6505 to help a State administer its Medicaid program. (We also disclose information to States pursuant to section 1106 of the Act.) The NPRM gave here, as an example of these optional additional services, collecting and giving the State information about health insurance or other medical coverage. We have deleted this example, since this service will no longer be optional for a State with a section 1634 agreement.

Charges to States

Section 416.2161 provides, more specifically than the current regulations, under what circumstances and how much a State has to pay for each service we provide under this subpart. The States pay half of our additional costs directly related to making Medicaid eligibility determinations. The States pay our full additional costs for other services.

Changing the Agreement

Section 416.2166 provides that the State and we can agree in writing to change the agreement at any time.

Duration of the Agreement

Section 416.2171 identifies the duration of a Medicaid determination agreement and the ways it can be ended. Paragraphs (b) and (c) include ways of ending it that are not in the current regulations but that are in existing agreements with States. These are: (1) Either the State or we can end the agreement by giving written notice at least 90 days before the end of a term; or (2) if the State fails to pay our costs as agreed, we can notify the State in writing, at least 30 days before the ending date we select, why we intend to end the agreement. If the State gives a good reason for keeping the agreement in force beyond the ending date we selected, the termination will be postponed or the agreement will remain in force through the end of the term.

Disagreements Between a State and Us

Section 416.2176 describes the appeals procedure for resolving disagreements that may arise under a Medicaid determination agreement. Any disagreement related to performance under the agreement may be appealed. An appeal to the HHS Grant Appeals Board is the final level of administrative appeal. Again, this procedure was not in the current regulations but reflects the existing agreements with States, with minor modifications.

State Employees Working in Our Offices

We have deleted specific mention of letting State Medicaid employees work in our offices to take applications for Medicaid (former § 416.2118(c)), because very few State employees have been assigned to our offices and specific reference in the regulations to this service no longer seems necessary. In spite of the deletion, we will still permit these assignments where appropriate.

Regulatory Procedures

Executive Order 12291

These regulations have been reviewed under Executive Order 12291 and do not meet any of the criteria for a major regulation. The only additional costs are the new actions in connection with Medicaid determinations. These costs will be about $1.4 million a year of which States will pay half the cost and HCFA, pursuant to memorandums of understanding, the other half. (HCFA is responsible for Federal administration of Medicaid.) Therefore, a regulatory impact analysis is not required.

Paperwork Reduction Act

These regulations impose no reporting/recordkeeping requirements requiring OMB clearance.

Regulatory Flexibility Act

We certify that these regulations will not have a significant economic impact on a substantial number of small entities because these rules will apply only to States and individuals. Therefore, a regulatory flexibility analysis as provided in Pub. L. 96-354, the Regulatory Flexibility Act, is not required.

(Catalog of Federal Domestic Assistance Program No. 13.807, Supplemental Security Income; 13.714, Medical Assistance Program)

List of Subjects in 20 CFR Part 416

Administrative practice and procedure, Aged, Blind, Disabled, Public assistance programs, Supplemental Security Income (SSI).

Dated: January 20, 1988.

Dorcas R. Hardy,

Commissioner of Social Security.

Approved: March 10, 1988.

Otis R. Bowen,

Secretary of Health and Human Services.

Part 416 of Chapter III of Title 20 of the Code of Federal Regulations is amended as follows:

PART 416—[AMENDED]

1. The authority citation for Subpart A is revised to read as follows:

Authority: Secs. 1102 and 1601–1634 of the Social Security Act; 42 U.S.C. 1302 and 1381–1383c; sec. 212 of Pub. L. 93-66, 87 Stat. 155 and sec. 502(a) of Pub. L. 94-241, 90 Stat. 268.

§ 416.110 [Amended]

2. Section 416.110(f)(2) is amended by inserting "(except as permitted by § 416.2111)" after the word "identical."

3. Subpart U is revised to read as follows:

Subpart U—Medicaid Eligibility Determinations

Sec.
416.2101 Introduction.
416.2111 Conditions for our agreeing to make Medicaid eligibility determinations.
416.2116 Medicaid eligibility determinations.
416.2130 Effect of the agreement and responsibilities of States.
416.2140 Liability for erroneous Medicaid eligibility determinations.
416.2145 Services other than Medicaid determinations.
416.2161 Charges to States.
416.2166 Changing the agreement.
416.2171 Duration of agreement.
416.2176 Disagreements between a State and us.

Subpart U—Medicaid Eligibility Determinations

Authority: Secs. 1102, 1106, 1631(d)(1), and 1634 of the Social Security Act; 42 U.S.C. 1302, 1306, 1383(d)(1), and 1383c.

§ 416.2101 Introduction.

(a) *What is in this subpart.* This subpart describes the agreements we make with States under which we determine the Medicaid eligibility of individuals who receive Supplemental Security Income (SSI) benefits. It includes a general description of the services we will provide under these agreements and the costs to the States for the services.

(b) *Related regulations.* The comprehensive regulations on eligibility for the Medicaid program, administered by the Health Care Financing Administration, are in Part 435 of Title 42 of the Code of Federal Regulations.

(c) *Definitions.* In this subpart——

"SSI benefits" means Federal SSI benefits, including special SSI cash benefits under section 1619(a) of the Social Security Act. In addition, we consider a person who has special SSI eligibility status under section 1619(b) of the Social Security Act to be receiving SSI benefits.

"State Medicaid Plan" means a State's medical assistance plan which the Secretary has approved under title XIX of the Act for Federal payment of a share of the State's medical assistance expenses.

"State supplementary payments" means supplementary payments we administer for a State under Subpart T of this part.

"We", "us", or "our" refers to the Social Security Administration.

§ 416.2111 Conditions for our agreeing to make Medicaid eligibility determinations.

We will agree to make Medicaid eligibility determinations for a State only if the State's Medicaid eligibility requirements for recipients of SSI benefits and for recipients of State supplementary payments are the same as the requirements for receiving SSI benefits and the requirements for receiving State supplementary payments, respectively. Exceptions: We may agree to make Medicaid eligibility determinations——

(a) For one, two, or all of the three categories of people (i.e., aged, blind, and disabled) who receive SSI benefits or State supplementary payments; or

(b) Even though the State's Medicaid eligibility requirements for recipients of SSI benefits or of State supplementary payments, or both, differ from the requirements for SSI or State supplementary payments, or both, in ways mandated by Federal law.

§ 416.2116 Medicaid eligibility determinations.

If a State requests, we may agree, under the conditions in this subpart, to make Medicaid eligibility determinations on behalf of the State. Under these agreements, we make the Medicaid determinations when determinations or redeterminations are necessary for SSI purposes. Our determinations may include non-SSI requirements that are mandated by Federal law. When we determine that a person is eligible for Medicaid in accordance with § 416.2111 or that we are not making the determination, we notify the State of that fact.

§ 416.2130 Effect of the agreement and responsibilities of States.

(a) An agreement under this subpart does not change——

(1) The provisions of a State's Medicaid plan;

(2) The conditions under which the Secretary will approve a State's Medicaid plan; or

(3) A State's responsibilities under the State Medicaid plan.

(b) Following are examples of functions we will not agree to carry out for the State:

(1) Stationing of our employees at hospitals or nursing homes to take Medicaid applications;

(2) Determining whether a person is eligible for Medicaid for any period before he or she applied for SSI benefits;

(3) Giving approval for emergency medical care under Medicaid before a determination has been made on whether a person is eligible for SSI benefits;

(4) Setting up or running a State's system for requiring a person to pay part

BEST COPY AVAILABLE

of the cost of services he or she receives under Medicaid; or

(5) Giving identification cards to people to show that they are eligible for Medicaid.

§ 416.2140 Liability for erroneous Medicaid eligibility determinations.

If the State suffers any financial loss, directly or indirectly, through using any information we provide under an agreement described in this subpart, we will not be responsible for that loss. However, if we erroneously tell a State that a person is eligible for Medicaid and the State therefore makes erroneous Medicaid payments, the State will be paid the Federal share of those payments under the Medicaid program as if they were correct.

§ 416.2145 Services other than Medicaid determinations.

We will agree under authority of section 1106 of the Act and 31 U.S.C. 6505 to provide services other than Medicaid determinations to help the State administer its Medicaid program. We will do this only if we determine it is the most efficient and economical way to accomplish the State's purpose and does not interfere with administration of the SSI program. The services can be part of a Medicaid eligibility determination agreement or a separate agreement. Under either agreement we will—

(a) Give the State basic information relevant to Medicaid eligibility from individuals' applications for SSI benefits;

(b) Give the State answers to certain purely Medicaid-related questions (in addition to any that may be necessary under § 416.2111(b)), such as whether the SSI applicant has any unpaid medical expenses for the current month or the previous 3 calendar months;

(c) Conduct statistical or other studies for the State; and

(d) Provide other services the State and we agree on.

§ 416.2161 Charges to States.

(a) *States with Medicaid eligibility determination agreement.* A State with which we have an agreement to make Medicaid eligibility determinations is charged in the following manner:

(1) If making Medicaid determinations and providing basic SSI application information for a State causes us additional cost, the State must pay half of that additional cost. "Additional cost" in this section means cost in addition to costs we would have had anyway in administering the SSI program.

(2) The State must pay half our additional cost caused by providing any information that we collect for Medicaid purposes and by any other services directly related to making Medicaid eligibility determinations.

(3) The State must pay our full additional cost for statistical or other studies and any other services that are not directly related to making Medicaid eligibility determinations.

(b) *States without Medicaid eligibility determination agreement.* A State with which we do not have an agreement to make Medicaid eligibility determinations is charged in the following manner:

(1) If providing basic SSI application information causes us additional cost, the State must pay our full additional cost.

(2) The State must pay our full additional cost caused by providing any information that we collect for Medicaid purposes and for statistical or other studies and any other services.

§ 416.2166 Changing the agreement.

The State and we can agree in writing to change the agreement at any time.

§ 416.2171 Duration of agreement.

An agreement under this subpart is automatically renewed for 1 year at the end of the term stated in the agreement and again at the end of each 1-year renewal term, unless—

(a) The State and we agree in writing to end it at any time;

(b) Either the State or we end it at any time without the other's consent by giving written notice at least 90 days before the end of a term, or 120 days before any other ending date selected by whoever wants to end the agreement; or

(c)(1) The State fails to pay our costs as agreed;

(2) We notify the State in writing, at least 30 days before the ending date we select, why we intend to end the agreement; and

(3) The State does not give a good reason for keeping the agreement in force beyond the ending date we selected. If the State does provide a good reason, the termination will be postponed or the agreement will be kept in force until the end of the term.

§ 416.2176 Disagreements between a State and us.

(a) If a State with which we have an agreement under this subpart and we are unable to agree about any question of performance under the agreement, the State may appeal the question to the Commissioner of Social Security. The Commissioner or his or her designee will, within 90 days after receiving the State's appeal, give the State either a written decision or a written explanation of why a decision cannot be made within 90 days, what is needed before a decision can be made, and when a decision is expected to be made.

(b) The Commissioner's decision will be the final decision of the Department of Health and Human Services, unless the State appeals the decision within 30 days after receiving it to the Department's Grant Appeals Board under procedures in 45 CFR Part 16.

[FR Doc. 88-8679 Filed 4-19-88; 8:45 am]

BILLING CODE 4190-11-M

ENVIRONMENTAL PROTECTION AGENCY

21 CFR Parts 193 and 561

[FAP 7H5523/R946; FRL-3366-9]

Pesticide Tolerances for Myclobutanil

AGENCY: Environmental Protection Agency (EPA).

ACTION: Final rule.

SUMMARY: This rule renews established food and feed additive regulations to permit the combined residues of the fungicide myclobutanil and its metabolites containing both the chlorophenyl and triazole rings in or on certain food and feed items. This regulation to renew maximum permissible levels for combined residues of myclobutanil was requested by the Rohm & Haas Co. to permit marketing of feed and food commodities resulting from experimental use of the fungicide on apples and grapes. These temporary tolerances expire on February 28, 1989.

EFFECTIVE DATE: Effective on March 23, 1988.

ADDRESS: Written objections may be submitted to the: Hearing Clerk (A-110), Environmental Protection Agency, 401 M St., SW., Washington, DC 20460.

FOR FURTHER INFORMATION CONTACT:

By mail: Lois A. Rossi, Product Manager (PM) 21, Registration Division (TS-767C), Office of Pesticide Programs, Environmental Protection Agency, 401 M St., SW., Washington, DC 20460.

Office location and telephone number: Rm. 227, CM#2, 1921 Jefferson Davis Highway, Arlington, VA 22202, (703)-557-1900.

SUPPLEMENTARY INFORMATION: EPA issued § 193.477 *Myclobutanil* (21 CFR 193.477) and § 561.443 *Myclobutanil* (21 CFR 561.443), published in the **Federal Register** of January 4, 1988 (53 FR 21) establishing regulations permitting the combined residues of the fungicide myclobutanil (alpha-butyl-alpha(4-chlorophenyl)-1*H*-1,2,4-triazole-1-

propanenitrile) and its metabolites in or on apple pomace at 5.0 ppm, grape pomace at 5.0 ppm, raisins at 5.0 ppm, and raisin waste at 12.5 ppm. These regulations are being renewed to February 28, 1989, to permit the continued experimental use of myclobutanil on apples and grapes while further data are collected on the active ingredient.

Also, references to myclobutanil's metabolites containing both the chlorophenyl and triazole rings, which were referenced and discussed in the preamble to the January 4, 1988 (53 FR 21) final rules but which were inadvertently dropped from the codified text of §§ 193.477 and 561.443, are being reinserted in this final rule.

The scientific data reported and other relevant material have been evaluated, and it has been determined that the fungicide may be safely used in accordance with the provisions of the experimental use permit (707-EUP-105) that was concurrently renewed under the Federal Insecticide, Fungicide, and Rodenticide Act (FIFRA), as amended. It is concluded that the fungicide can be safely used in the prescribed manner when such use is in accordance with the label and labeling accepted in connection with the experimental use permit issued pursuant to the Federal Insecticide, Fungicide, and Rodenticide Act (FIFRA) as amended (86 Stat. 973, 7 U.S.C. 136 *et seq.*), and the regulations are renewed as set forth below.

Any person adversely affected by this regulation may, within 30 days after publication of this document in the **Federal Register**, file written objections with the Hearing Clerk, at the address given above. Such objections should specify the provisions of the regulation deemed objectionable and the grounds for the objections. If a hearing is requested, the objections must state the issues for the hearing and the grounds for the objections.

The Office of Management and Budget has exempted this rule from the requirements of section 3 of Executive Order 12291.

Pursuant to the requirements of the Regulatory Flexibility Act (Pub. L. 96-354, 94 Stat. 1164, 5 U.S.C. 601-612), the Administrator has determined that regulations establishing new food and feed additive levels, or conditions for safe use of additives, or raising such food and feed additive levels do not have a significant economic impact on a substantial number of small entities. A certification statement to this effect was published in the **Federal Register** of May 4, 1981 (46 FR 24945).

List of Subjects in 21 CFR Parts 193 and 561

Food additives, Animal feeds, Pesticides and pests, Reporting and recordkeeping requirements.

Dated: March 23, 1988.

Douglas D. Campt,

Director, Office of Pesticide Programs.

Therefore, Chapter I of Title 21 of the Code of Federal Regulations is amended as follows:

PART 193—[AMENDED]

1. In Part 193:

a. The authority citation continues to read as follows:

Authority: 21 U.S.C. 348.

2. By revising § 193.477 to read as follows:

§ 193.477 Myclobutanil.

A food additive regulation is established to permit residues of the fungicide myclobutanil (alpha-butyl-alpha(4-chlorophenyl)-1*H*-1,2,4-triazole-1-propanenitrile) and its metabolites containing both the chlorophenyl and triazole rings in or on raisins at 5 parts per million when present therein as a result of application to grapes in connection with an experimental use program which expires February 28, 1989.

PART 561—[AMENDED]

2. In Part 561:

a. The authority citation continues to read as follows:

Authority: 21 U.S.C. 348.

b. By revising § 561.443 to read as follows:

§ 561.443 Myclobutanil.

A feed additive regulation is established to permit residues of the fungicide myclobutanil (alpha-butyl-alpha(4-chlorophenyl)-1H-1,2,4-triazole-1-propanenitrile) and its metabolites containing both the chlorophenyl and triazole rings in or on the following processed feeds when present therein as a result of application to grapes and apples in connection with an experimental use program which expires February 28, 1989:

Feeds	Parts per million
Apple pomace	5.0
Grape pomace	5.0
Raisin waste	12.5

[FR Doc. 88-8510 Filed 4-19-88; 8:45 am]

BILLING CODE 6560-50-M

40 CFR Part 180

[PP 5F3256/R953; FRL-3367-2]

Pesticide Tolerance for AC 222,293

AGENCY: Environmental Protection Agency (EPA).

ACTION: Final rule.

SUMMARY: This rule establishes tolerances for residues of the herbicide AC 222,293 and its metabolites in or on various raw agricultural commodities. The regulation was requested by the American Cyanamid Co. and establishes the maximum permissible level for residues of the herbicide in or on the raw agricultural commodities.

EFFECTIVE DATE: Effective on April 20, 1988.

ADDRESS: Written objections may be submitted to the: Hearing Clerk (A-110), Environmental Protection Agency, Rm. 3708, 401 M St., SW., Washington, DC 20460.

FOR FURTHER INFORMATION CONTACT:

By mail: Robert J. Taylor, Product Manager (PM) 25, Registration Division (TS-767C), Office of Pesticide Programs, Environmental Protection Agency, 401 M St., SW., Washington, DC 20460.

Office location and telephone number: Rm. 245, CM #2, 1921 Jefferson Davis Highway, Arlington, VA 22202 (703)-557-1800.

SUPPLEMENTARY INFORMATION: EPA issued a notice, published in the **Federal Register** on July 22, 1987 (52 FR 27575), which announced that the American Cyanamid Co. had submitted pesticide petition (PP) 5F3265 to EPA proposing to amend 40 CFR Part 180 by establishing tolerances for residues of the herbicide AC 222,293 [Assert, a mixture of methyl 2-(4-isopropyl-4-methyl-5-oxo-2-imidazolin-2-yl)-*m*-toluate] in or on the (4-isopropyl-4-methyl-5-oxo-2-imidazolin-2-yl).*m*-toluate] in or on the raw agricultural commodities sunflower seed at 0.05 part per million (ppm), wheat grain and barley grain at 0.10 ppm, and wheat straw and barley straw at 1.50 ppm. There were no comments received in response to the notice of filing.

The petitioner subsequently amended the petition by submitting a revised Section F proposing the establishment of tolerances for residues of AC 222,293 and its metabolites 6-(4-isopropyl-4-methyl-5-oxo-2-imidazolin-2-yl)-*m*-toluic acid and 2-(4-isopropyl-4-methyl-5-oxo-2-imidazolin-2-yl)-*p*-toluic acid in or on wheat grain and barley grain at 0.10 ppm, wheat straw and barley straw

at 2.00 ppm, and sunflower seed at 0.10 ppm.

The data submitted in the petition and other relevant material have been evaluated. The data considered in the petition include several acute studies; a 2-feeding/oncogenic study in rats fed dosages of 0, 12.5, 50, and 200 milligrams/kilogram/day (mg/kg/day) with no oncogenic effects observed under the conditions of the study at dose levels up to and including 200 mg/kg/day (HDT) and a systemic no-observed-effect level (NOEL) of 12.5 mg/kg/day; an 18-month feeding/oncogenic study with mice fed dosages of 0, 19.5, 78.75, and 315 mg/kg/day with no oncogenic effects observed under the conditions of the study at dose levels up to and including 315 mg/kg/day (HDT) and a systemic NOEL of 19.5 mg/kg/day; a 1-year feeding study in dogs fed dosage levels of 0, 6.25, 25, and 100 mg/kg/day with a NOEL of 6.25 mg/kg/day; a teratology study in rats fed dosage levels of 0, 250, 500, and 1,000 mg/kg/day with no teratogenic effects at 1,000 mg/kg/day (HDT), a maternal NOEL of less than 250 mg/kg/day, and a fetotoxic NOEL of 250 mg/kg/day (a NOEL for maternal toxicity was not established in this study); a teratology study in rabbits fed dosage levels of 0, 250, 500, and 750 mg/kg/day with no teratogenic effects at 750 mg/kg/day (HDT); a maternal NOEL of 750 mg/kg/day and a fetotoxic NOEL of 250 mg/kg/day; a 3-generation reproduction study in rats fed dosage levels of 0, 12.5, 50, and 200 mg/kg/day with a NOEL for reproductive effects of 12.5 mg/kg/day; a mutagenic test with *Salmonella typhimurium* (negative); mutagenic chromosomal aberration tests both *in vitro* and *in vivo* (no aberrations observed in Chinese hamsters ovary/cells with and without activation); an unscheduled DNA synthesis study in rat hepatocytes (negative); and a dominant lethal study in rats negative at doses up to and including 1,000 mg/kg (HDT).

The acceptable daily intake (ADI) based on the 1-year dog feeding study (NOEL of 6.25 mg/kg/day) and a hundred-fold safety factor is calculated to be 0.0625 mg/kg/day. The theoretical maximum residue contribution (TMRC) for these tolerances for a diet is calculated to be 0.00147 mg/kg/day. The current action will use 2.35 percent of the ADI. There are no published tolerances for this chemical. No desirable data are lacking. The pesticide is useful for the purposes of this tolerance rule. The nature of the residue is adequately understood, and adequate analytical methods (gas-liquid chromatography with a nitrogen-sensitive detector) are available for enforcement purposes.

There are currently no actions pending against the registration of this chemical. No secondary residues are expected to occur in meat, milk, poultry, or eggs from this use.

Because of the long lead time from establishing this tolerance to publication of the enforcement methodology in the Pesticide Analytical Manual II, an interim analytical methods package is being made available to State pesticide enforcement chemists when requested from:

By mail: Information Services Section (TS-757C), Program Management Support Division, Office of Pesticide Programs, Environmental Protection Agency, 401 M St. SW., Washington, DC 20460. Office location and telephone number: Rm. 246, CM #2, 1921 Jefferson Davis Highway, Arlington, VA 22202 (703) 557-3262.

Based on the above information considered by the Agency, it is concluded that the tolerances established by amending 40 CFR Part 180 will protect the public health, and the tolerances are therefore established as set forth below.

Any person adversely affected by this regulation may, within 30 days after the date of publication in the **Federal Register**, file written objections with the Hearing Clerk, Environmental Protection Agency, at the address given above. Such objections should be submitted in quintuplicate and specify the provisions of the regulation deemed objectionable and the grounds for the objections. If a hearing is requested, the objections must state the issues for the hearing. A hearing will be granted if the objections are legally sufficient to justify the relief sought.

The Office of Management and Budget (OMB) has exempted this regulation from section 3 of Executive Order 12291.

Pursuant to the requirements of the Regulatory Flexibility Act (Pub. L. 96-354, 94 Stat. 1164, 5 U.S.C. 601-612), the Administrator has determined that regulations establishing new tolerances or raising tolerance levels or establishing exemptions from tolerance requirements do not have significant economic impact on a substantial number of small entities. A certification statement to this effect was published in the **Federal Register** of May 4, 1981 (46 FR 24950).

(Sec. 408(d)(2), 68 Stat. 512 (21 U.S.C. 346a(d)(2)).)

List of Subjects in 40 CFR Part 180

Administrative practice and procedure, Agricultural commodities, Pesticides and pests.

Dated: April 8, 1988.

Douglas D. Campt,
Director, Office of Pesticide Programs.

Therefore, 40 CFR Part 180 is amended as follows:

PART 180—[AMENDED]

1. The authority citation for Part 180 continues to read as follows:

Authority: 21 U.S.C. 346a.

2. New § 180.437 is added, to read as follows:

§ 180.437 AC 222,293; tolerances for residues.

(a) Tolerances are established for the combined residues of the herbicide AC 222,293 [Assert, a mixture of methyl 2-(4-isopropyl-4-methyl-5-oxo-2-imidazolin-2-yl)-*p*-toluate and methyl 6-(4-isopropyl-4-methyl-5-oxo-2-imidazolin-2-yl)-*m*-toluate] in or on the following raw agricultural commodities:

Commodities	Parts per million
Barley grain	0.10
Barley straw	2.00
Sunflower seed	0.10
Wheat grain	0.10
Wheat straw	2.00

[FR Doc. 88-8509 Filed 4-19-88; 8:45 am]

BILLING CODE 6560-50-M

40 CFR Part 228

[FRL 3365-6]

Suspension of Effective Date of Final Designation of Pensacola, Florida Site as an EPA-Approved Ocean Dumping Site, Pursuant to the Marine Protection, Resources and Sanctuaries Act (MPRSA) of 1972

AGENCY: Environmental Protection Agency (EPA).

ACTION: Notice of suspension of effective date of designation of Pensacola, Florida site as an EPA-approved Ocean Dumping Site.

SUMMARY: On March 4, 1988, EPA published a final rule at 53 FR 6987, designating ocean dumping sites off shore Pensacola, Florida, Mobile, Alabama, and Gulfport, Mississippi,

pursuant to section 102(c) of the Marine Protection, Research, and Sanctuaries Act (MPRSA) of 1972. These designations were to become effective on April 4, 1988. On April 1, 1988, in response to a request by the State of Florida, the Regional Administrator of EPA-Region IV suspended the effective date of the final designation of only the Pensacola, Florida, site (§ 228.12(b)(48)). That site designation will now become effective on May 9, 1988. The other site designations—Gulfport, Mississippi, and Mobile, Alabama—became effective as scheduled.

FOR FURTHER INFORMATION CONTACT: Sally Turner, Chief, Marine Protection Section, Water Management Division, U.S. Environmental Protection Agency, 345 Courtland Street, NE., Atlanta, Georgia 30365, (404) 347-2126.

Date: April 5, 1988.

Joe R. Franzmathes,

Acting Regional Administrator.

[FR Doc. 88-8183 Filed 4-15-88; 3:42 pm]

BILLING CODE 6560-50-M

DEPARTMENT OF HEALTH AND HUMAN SERVICES

Health Care Financing Administration

42 CFR Parts 405, 406, 409, 410, 413, 416, 421, 489 and 498

[BERC-431-CN]

Medicare Program; Conditions for Medicare Payment

AGENCY: Health Care Financing Administration (HCFA), HHS.

ACTION: Final rule with comment period; Correction.

SUMMARY: Federal Register document 88-4352, beginning on page 6629 of the issue of Wednesday March 2, 1988, redesignated Subparts A and P of Part 405 of the Medicare rules as a new Part 424, and made many technical and conforming amendments to other sections of those regulations. Through oversight, three of those amendments were retained even though in two instances the affected sections had been removed, and, in another, the addition had been made by another rule published while the above cited document was in clearance. This document removes those amendments, corrects a duplicated section number, clarifies two examples, restores an omitted paragraph heading, and corrects typographical errors.

FOR FURTHER INFORMATION CONTACT: Luisa V. Iglesias, Telephone (202) 245-0383.

Corrections

1. On page 6634, column 1, under PART 410—SUPPLEMENTARY MEDICAL INSURANCE (SMI) BENEFITS, in the first line of item 2. a. "§ 410.64" is changed to "§ 410.66", and in the heading of the new section, "§ 410.64" is changed to "§ 410.66".

2. On page 6635, column 2, § 424.5(a)(3), in line 6, "on" is changed to "of".

3. On page 6635, column 2, § 424.7(a)(2)(i), in line 2, "(a)(2)" is changed to "(a)(2)(ii)".

4. On page 6635, column 3, § 424.10(b), in lines 9 and 10, "Comprehensive Outpatient Rehabilitation Facility" is changed to "comprehensive outpatient rehabilitation facility."

5. On page 6637, column 1, in § 424.16(b), the parenthetical statement in the heading is revised to read "(Hospital that is not a psychiatric hospital and is not subject to PPS)".

6. On page 6638, column 1, § 424.22(d)(4), in the heading, "or" is inserted after "officer".

7. On page 6638, column 3, § 424.24(c)(3)(ii), in line 2, "physician" is changed to "physical".

8. On page 6638, column 3, § 424.25, in the heading, "physician" is changed to "physical".

9. On page 6639, column 2, § 424.30, in line 6, "the" is changed to "a".

10. On page 6639, column 2, § 424.32(b), in the parenthetical statement after "HCFA-1500", "other" is inserted before "suppliers".

11. On page 6640, column 1, § 424.36(b)(5), in line 3, "in" is changed to "it".

12. On page 6640, column 1, § 424.37(b), in line 4, the apostrophe after "claim" is removed.

13. On page 6641, column 3, in § 424.56(d), the examples are revised to read as follows:

Example 1. An assigned bill of $300 on which partial payment of $100 has been made is submitted to the carrier. The carrier determines that $300 is the reasonable charge for the service furnished. Total payment due is 80 percent of $300 or $240. Of this amount, $200 (the difference between the $100 partial payment and the $300 reasonable charge) is paid to the supplier. The remaining $40 is paid to the beneficiary.

Example 2. An assigned bill of $325 on which partial payment of $275 has been made is submitted to the carrier. The carrier determines that $275 is the reasonable charge for the services. Total payment due is 80 percent of $275 or $220. The $220 is paid to the beneficiary, since any payment to the supplier, when added to the $275 partial payment would exceed the reasonable charge for the services furnished.

14. On page 6644, column 1, § 424.82(c)(3), in line 2, the "O" at the end of "reassignment" is removed, and in line 4, "contrary" is inserted after "payment".

15. On page 6644, column 3, in § 424.84, paragraph (c)(3) is redesignated as (d) and revised to read:

(d) *Effect of revocation when supplier or other party has a financial interest in another entity.* Revocation of the party's right to accept assignment also applies to any corporation, partnership, or other entity in which the party, directly or indirectly, has or acquires all or all but a nominal part of the financial interest.

16. On page 6646, column 3, § 424.124(a), in line 2, "physicians" is changed to "physician".

17. On page 6647, column 1, § 424.124(b), in the heading, "Physicians' " is changed to "Physician".

18. On page 6647, column 2, in § 424.352(b), the colon after "HCFA" is changed to a dash.

19. On page 6648, column 1, in conforming amendment No. 10, (§ 409.5), "Subpart H of Part 424" is changed to "Subparts G and H of Part 424".

20. On page 6648, column 1, conforming amendment No. 11 is removed.

21. On page 6648, column 2, conforming amendment No. 21 is removed.

22. On page 6648, column 2, in conforming amendment No. 23 (§ 410.175), "Part 424" is changed to "Subpart C of Part 424".

23. On page 6648, column 3, in conforming amendment No. 27a (§ 413.74), "Subpart G" is changed to "Subpart H".

24. On page 6648, column 3, in conforming amendment No. 29 (§ 416.30), "§ 425.64" is changed to "§ 424.64".

25. On page 6648, column 3, conforming amendment No. 38 is removed.

(Catalog of Federal Domestic Assistance Program No. 13.773, Medicare—Hospital Insurance, and No. 13.774, Medicare—Supplementary Medical Insurance)

Dated: April 13, 1988.

James F. Trickett,

Deputy Assistant Secretary for Administrative and Management Services.

[FR Doc. 88-8644 Filed 4-19-88; 8:45 am]

BILLING CODE 4120-01-M

VOL 53 ISS 76 AP 20 1988 UMI

FEDERAL COMMUNICATIONS COMMISSION

47 CFR Part 73

[MM Docket No. 87-435; RM-5840]

Radio Broadcasting Services; Lehigh Acres, FL

AGENCY: Federal Communications Commission.

ACTION: Final rule.

SUMMARY: This document substitutes Channel 296C2 for Channel 296A at Lehigh Acres, Florida, and modifies the license for Station WOOJ-FM at the request of Dwyer Broadcasting, Inc., to provide for a first wide coverage area station. The proposed transmitter site for Channel 296C2 is 17.9 miles south of Lehigh Acres at coordinates 26-22-08 and 81-40-29. With this action, this proceeding is terminated.

EFFECTIVE DATE: May 31, 1988.

FOR FURTHER INFORMATION CONTACT: Montrose H. Tyree, Mass Media Bureau, (202) 634-6530.

SUPPLEMENTARY INFORMATION: This is a summary of the Commission's Report and Order, MM Docket No. 87-435, adopted April 5, 1988, and released April 14, 1988. The full text of this Commission decision is available for inspection and copying during normal business hours in the FCC Dockets Branch (Room 230), 1919 M Street NW., Washington, DC. The complete text of this decision may also be purchased from the Commission's copy contractors, International Transcription Service, (202) 857-3800, 2100 M Street NW., Suite 140, Washington, DC 20037.

List of Subjects in 47 CFR Part 73

Radio broadcasting.

PART 73—[AMENDED]

1. The authority citation for Part 73 continues to read as follows:

Authority: 47 U.S.C. 154, 303.

§ 73.202 [Amended]

2. Section 73.202(b), the Table of FM Allotments is amended under Florida, by adding Channel 296C2 and removing Channel 296A at Lehigh Acres.

Federal Communications Commission.

Steve Kaminer,

Deputy Chief, Policy and Rules Division, Mass Media Bureau.

[FR Doc. 88-8633 Filed 4-19-88; 8:45 am]

BILLING CODE 6712-01-M

47 CFR Part 73

[MM Docket No. 87-285; RM-5813]

Radio Broadcasting Services; Boothbay Harbor, ME

AGENCY: Federal Communications Commission.

ACTION: Final rule.

SUMMARY: This document substitutes FM Channel 244B1 for Channel 244A at Boothbay Harbor, Maine, as that community's first wide coverage area broadcast service, in response to a petition filed by Bay Communications, Inc. We have also authorized the modification of Station WCME's license to specify Channel 244B1 in lieu of Channel 244A. With this action, this proceeding is terminated.

EFFECTIVE DATE: May 31, 1988.

FOR FURTHER INFORMATION CONTACT: Kathleen Scheuerle, Mass Media Bureau, (202) 634-6530.

SUPPLEMENTARY INFORMATION: This is a summary of the Commission's Report and Order, MM Docket No. 87-285, adopted March 28, 1988, and released April 14, 1988. The full text of this Commission decision is available for inspection and copying during normal business hours in the FCC Dockets Branch (Room 230), 1919 M Street NW., Washington, DC. The complete text of this decision may also be purchased from the Commission's copy contractors, International Transcription Service, (202) 857-3800, 2100 M Street NW., Suite 140, Washington, DC 20037.

List of Subjects in 47 CFR Part 73

Radio broadcasting.

PART 73—[AMENDED]

1. The authority citation for Part 73 continues to read as follows:

Authority: 47 U.S.C. 154, 303.

§ 73.202 [Amended]

2. In § 73.202(b), the Table of FM Allotments under Maine is amended by removing Channel 244A and adding Channel 244B1 at Boothbay Harbor.

Federal Communications Commission.

Steve Kaminer,

Deputy Chief, Policy and Rules Division, Mass Media Bureau.

[FR Doc. 88-8632 Filed 4-19-88; 8:45 am]

BILLING CODE 6712-01-M

47 CFR Part 73

[MM Docket No. 87-187; RM-5564]

Radio Broadcasting Services; Bad Axe, MI

AGENCY: Federal Communications Commission.

ACTION: Final rule.

SUMMARY: This document allocates FM Channel 271C2 to Bad Axe, Michigan, and modifies the license of Station WLEW(FM), Channel 221A, to specify operation on Channel 271C2. This action is taken in response to a petition filed by Thumb Broadcasting, Inc., licensee of Station WLEW(FM). Comments were filed by the petitioner. No other comments were received. Canadian concurrence has been obtained for the allocation of Channel 271C2 at Bad Axe, Michigan. The coordinates for Channel 271C2 are 43-53-55, 83-07-37. With this action, this proceeding is terminated.

EFFECTIVE DATE: May 31, 1988.

FOR FURTHER INFORMATION CONTACT: Kathleen Scheuerle, Mass Media Bureau, (202) 634-6530.

SUPPLEMENTARY INFORMATION: This is a summary of the Commission's Report and Order, MM Docket No. 87-187, adopted March 25, 1988, and released April 14, 1988. The full text of this Commission decision is available for inspection and copying during normal business hours in the FCC Dockets Branch (Room 230), 1919 M Street NW., Washington, DC. The complete text of this decision may also be purchased from the Commission's copy contractors, International Transcription Service, (202) 857-3800, 2100 M Street NW., Suite 140, Washington, DC 20037.

List of Subjects in 47 CFR Part 73

Radio broadcasting.

PART 73—[AMENDED]

1. The authority citation for Part 73 continues to read as follows:

Authority: 47 U.S.C. 154, 303.

§ 73.202 [Amended]

2. Section 73.202(b), the Table of FM Allotments is amended in the entry of Bad Axe, Michigan, to remove Channel 221A and add Channel 271C2.

Federal Communications Commission.

Steve Kaminer,

Deputy Chief, Policy and Rules Division, Mass Media Bureau.

[FR Doc. 88-8630 Filed 4-19-88; 8:45 am]

BILLING CODE 6712-01-M

Proposed Rules

Federal Register
Vol. 53, No. 76
Wednesday, April 20, 1988

This section of the FEDERAL REGISTER contains notices to the public of the proposed issuance of rules and regulations. The purpose of these notices is to give interested persons an opportunity to participate in the rule making prior to the adoption of the final rules.

DEPARTMENT OF TRANSPORTATION

Federal Aviation Administration

14 CFR Part 39

[Docket No. 88-CE-01-AD]

Airworthiness Directive; SIAI-Marchetti S.p.A., Models F260, F260B, F260C, and F260D Airplanes

AGENCY: Federal Aviation Administration (FAA), DOT.

ACTION: Withdrawal of Notice of Proposed Rulemaking (NPRM).

SUMMARY: This action withdraws the Notice of Proposed Rulemaking (NPRM) Docket 88-CE-01-AD, applicable to certain SIAI-Marchetti S.p.A., Models F260, F260B, F260C, and F260D airplanes, which was published in the Federal Register on February 9, 1988 (53 FR 3753). The NPRM proposed to adopt an Airworthiness Directive (AD) that would have required inspection of the aileron balance weight attachment to assure it is secured to the aileron and, if looseness is detected, modification of the securing mechanism. As a result of the subsequent evaluation of public comments to the NPRM, the lack of adverse service reports in this country, a complete technical reevaluation of the proposal, and existing maintenance procedures, the FAA is withdrawing this NPRM. In addition, the FAA will issue a General Airworthiness Alert in a forthcoming Advisory Circular (AC) 43-16 publication.

FOR FURTHER INFORMATION CONTACT: Mr. M. Dearing, Brussels Aircraft Certification Staff, AEU-100, Europe, Africa, and Middle East Office, FAA, c/o American Embassy, 1000 Brussels, Belgium; Telephone 513.38.30, extension 2710; or Mr. R. F. Yotter, FAA, ACE-109, 601 East 12th Street, Kansas City, Missouri 64106; Telephone (816) 426-6932.

SUPPLEMENTARY INFORMATION: A proposal to amend Part 39 of the Federal Aviation Regulations to include an AD requiring inspection of the aileron balance weight attachment to assure it is secured to the aileron and if looseness is detected, modification of the securing mechanism on SIAI-Marchetti S.p.A., models F260, F260B, F260C, and F260D airplanes was published in the Federal Register on February 9, 1988 (53 FR 3753). The proposal was issued because the manufacturer issued Service Bulletin (S/B) NO. 260-B52, dated July 31, 1987, and because the Registro Aeronautico Italiano (RAI), who has responsibility and authority to maintain the continuing airworthiness of these airplanes in Italy, classified this S/B as mandatory and subsequently issued RAI AD 87-150/F260-33, dated September 15, 1987, on the same subject. The FAA reviewed SIAI-Marchetti S/B No. 260-B52 and RAI AD 87-150/F260-33 and believed the condition addressed therein to be an unsafe condition.

Interested persons have been afforded an opportunity to comment on the proposal. One commenter, the sole U.S. SIAI-Marchetti agent, responded. The comments indicated opposition to the adoption of the proposal. The comments focused on the issues that follow:

1. There has never been an inflight failure of an SF260 (F260) airplane, and SB 260-B52 was issued based on only one report received in Italy on a Military aircraft. No reports of loose aileron balance weights have been reported in the U.S.

2. The aileron balance weight is attached with four to six screws readily visible on the lower skin of the aileron.

3. The manufacturer's inspection guide specifies inspection of the ailerons, the aileron skin, the fasteners and the hinges, etc., on the preflight inspection, the 50 and the 100 hour inspections and at each annual inspection.

4. Information supplied by the ISAI-Marchetti U.S. Representative indicates that not one incident of an aileron having a missing or loose balance weight attachment screw has been reported during assembly and inspection of several airplanes over an eight year period.

Based on the foregoing, the FAA has determined that the proposed action is unnecessary and the NPRM is being withdrawn. The FAA will issue a General Aviation Airworthiness Alert in a forthcoming AC 43-16 publication.

Withdrawal of Proposed Amendment

Accordingly, pursuant to the authority delegated to me by the Administrator, the Federal Aviation Administration deletes a proposal to amend § 39.13 of the FAR as follows:

PART 39—[AMENDED]

1. The authority citation for Part 39 continues to read as follows:

Authority: 49 U.S.C. 1354(a), 1421, and 1423; 49 U.S.C. 106(g) (Revised, Pub. L. 97-449, January 12, 1983); and 14 CFR 11.89.

2. NPRM Docket No. 88-CE-01-AD, published in the Federal Register on February 9, 1988 (53 FR 3753), is withdrawn.

Issued in Kansas City, Missouri, on April 4, 1988.

Paul K. Bohr,
Director, Central Region.

[FR Doc. 88-8616 Filed 4-19-88; 8:45 am]

BILLING CODE 4910-13-M

14 CFR Part 71

[Airspace Docket No. 88-ACE-05]

Proposed Alteration of Transition Area; Milford, IA

AGENCY: Federal Aviation Administration (FAA), DOT.

ACTION: Notice of Proposed Rulemaking (NPRM).

SUMMARY: This Notice proposes to alter the 700-foot transition area at Milford, Iowa, to provide additional controlled airspace for aircraft executing a new instrument approach procedure to the Fuller Municipal Airport utilizing the Spencer VOR/DME as a navigational aid.

DATES: Comments must be received on or before May 19, 1988.

ADDRESSES: Send comments on the proposal to: Federal Aviation Administration, Manager, Traffic Management and Airspace Branch, Air Traffic Division, ACE-540, 601 East 12th Street, Kansas City, Missouri 64106, Telephone (816) 426-3408.

The official docket may be examined at the Office of the Regional Counsel, Central Region, Federal Aviation Administration, Room 1558, 601 East 12th Street, Kansas City, Missouri.

An informal docket may be examined at the Office of the Manager, Traffic

Management and Airspace Branch, Air Traffic Division.

FOR FURTHER INFORMATION CONTACT: Lewis Earp, Airspace Specialist, Traffic Management and Airspace Branch, Air Traffic Division, ACE-540, FAA, Central Region, 601 East 12th Street, Kansas City, Missouri 64106, Telephone (816) 426-3408.

SUPPLEMENTARY INFORMATION:

Comments Invited

Interested persons may participate in the proposed rulemaking by submitting such written data, views or arguments as they may desire. Communications should identify the airspace docket number, and be submitted in duplicate to the Traffic Management and Airspace Branch, Air Traffic Division, Federal Aviation Administration, 601 East 12th Street, Kansas City, Missouri 64106. All communications received on or before the closing date for comments will be considered before action is taken on the proposed amendment. The proposal contained in this Notice may be changed in light of the comments received. All comments received will be available both before and after the closing date for comments in the Rules Docket for examination by interested persons.

Availability of NPRM

Any person may obtain a copy of this NPRM by submitting a request to the Federal Aviation Administration, Traffic Management and Airspace Branch, 601 East 12th Street, Kansas City, Missouri 64106, or by calling (816) 426-3408.

Communications must identify the notice number of this NPRM. Persons interested in being placed on a mailing list for further NPRMS should also request a copy of Advisory Circular No. 11-2A which describes the application procedure.

Discussion

The FAA is considering an amendment to Subpart G, § 71.181 of the Federal Aviation Regulations (14 CFR 71.181), by altering the 700-foot transition area at Milford, Iowa. To enhance airport usage, an additional instrument approach procedure is being developed for the Fuller Municipal Airport, Milford, Iowa, utilizing the Spencer VOR/DME as a navigational aid. The establishment of this new instrument approach procedure, based on this navigational aid, entails alteration of the transition area at Milford, Iowa, at and above 700 feet above ground level within which aircraft are provided air traffic control service. The intended effect of this action is to ensure segregation of aircraft using the approach procedure under Instrument Flight Rules (IFR), and other aircraft operating under Visual Flight Rules (VFR).

Section 71.181 of Part 7 of the Federal Aviation Regulations was republished in Handbook 7400.6D, dated January 4, 1988.

The FAA has determined that this proposed regulation only involves an established body of technical regulations for which frequent and routine amendments are necessary to keep them operationally current. It, therefore—(1) is not a "major rule" under Executive Order 12291; (2) is not a "significant rule" under DOT Regulatory Policies and Procedures (44 FR 11034; February 26, 1979); and (3) does not warrant preparation of a regulatory evaluation as the anticipated impact is so minimal. Since this is a routine matter that will only affect air traffic procedures and air navigation, it is certified that this rule, when promulgated, will not have a significant economic impact on a substantial number of small entities under the criteria of the Regulatory Flexibility Act.

List of Subjects in 14 CFR Part 71

Aviation safety, Transition areas.

The Proposed Amendment

Accordingly, pursuant to the authority delegated to me, the Federal Aviation Administration (FAA) proposes to amend Part 71 of the FAR (14 CFR Part 71) as follows:

PART 71—[AMENDED]

1. The authority citation for Part 71 continues to read as follows:

Authority: 49 U.S.C. 1348(a), 1354(a), 1510; Executive Order 10854; 49 U.S.C. 106(g) (Revised Pub. L. 97-449, January 12, 1983); 14 CFR 11.69.

2. By revising 71.181 as follows:

§ 71.181 [Revised]

That airspace extending upward from 700 ft. above the surface within a five (5) mile radius of the Fuller Municipal Airport (Lat. 43°19'17"N, Long. 95°09'29"W) and within 1.75 miles each side of the 190° bearing from the Fuller Municipal Airport extending from the five (5) mile radius to 5.5 miles south of the airport.

Issued in Kansas City, Missouri, on April 4, 1988.

Clarence E. Newbern,

Manager, Air Traffic Division.

[FR Doc. 88-8212 Filed 4-19-88; 8:45 am]

BILLING CODE 4910-13-M

SECURITIES AND EXCHANGE COMMISSION

17 CFR Parts 229 and 249

[Rel. Nos. 33-6767; 34-25579; IC-16359; File No. S7-6-88]

Amendments to Regulation S-K Regarding Changes in Accountants; Acceleration of the Timing for Filing Forms 8-K Relating to Changes in Accountants and Resignations of Directors

AGENCY: Securities and Exchange Commission.

ACTION: Proposed Rules.

SUMMARY: The Commission is proposing to amend its rules to reduce the time period for a registrant to file a Form 8-K announcing a change in its certifying accountants or the resignation of a director from fifteen to five calendar days. The Commission also is proposing to amend the requirements of Regulation S-K relating to a change in a registrant's certifying accountant to (1) reduce the time period from thirty to ten calendar days for the filing of the former accountant's letter as an exhibit to the report or registration statement announcing a change in accountants, (2) require the registrant to file any such letter within two calendar days after it is received by the registrant, and (3) permit the former accountant to provide an interim letter to the registrant, which must also be filed by the registrant within two days of receipt.

DATE: Comments should be received on or before May 20, 1988.

ADDRESS: Five copies of comments should be submitted to Jonathan G. Katz, Secretary, Securities and Exchange Commission, 450 Fifth Street, NW., Washington, DC 20549. Comment letters should refer to File No. S7-6-88. All comments received will be available for public inspection and copying in the Commission's Public Reference Room, 450 Fifth Street, NW., Washington, DC 20549.

FOR FURTHER INFORMATION CONTACT: Robert E. Burns or John M. Riley, (202) 272-2130, Office of the Chief Accountant, or William H. Carter, (202), 272-2573, Division of Corporation Finance, Securities and Exchange Commission, 450 Fifth Street, NW., Washington, DC 20549.

SUPPLEMENTARY INFORMATION:

I. Executive Summary

In connection with the disclosures required when a registrant changes its certifying accountant, the registrant is

required to request that the former accountant provide a letter that indicates whether the former accountant agrees with the disclosures made by the registrant regarding the circumstances surrounding the change, and if not the respects in which it does not agree.[1] In commenting on the Commission's proposals concerning disclosures of changes in certifying accountants and opinion shopping,[2] the American Institute of Certified Public Accountants ("AICPA") and other commentators suggested changes in the procedures regarding the filing of the former accountant's letter.[3] These suggestions would provide for more timely action by the former accountant in furnishing its letter to the registrant and for expeditious filing of the letter with the Commission by the registrant. The AICPA has also suggested that the Commission expressly permit the accountant to furnish the registrant with an interim letter (which must also be expeditiously filed with the Commission) indicating that a more detailed letter will be forthcoming discussing respects in which the former accountant does not agree with the registrant's disclosures. The Commission has determined that a reduction in the time period for disclosure of the change in accountants is appropriate and proposes to reduce not only the time period for the filing of the accountant's letter but also the time period for the initial filing by the registrant on Form 8-K announcing the change in its certifying accountant. The Commission is also proposing to reduce the time period, from fifteen to five calendar days, for disclosure on Form 8-K related to the resignation of a director.

II. Discussion Regarding Changes in Accountants

Under the present disclosure system, including the amendments announced today in Financial Reporting Release No. 31,[4] when a registrant changes its certifying public accountant it must provide the disclosure required by Item 304 of Regulation S-K.[5] Generally, this disclosure will first appear in a Form 8-K [6] filing. If not previously disclosed, General Instruction B1 to Form 8-K requires that a change in accountants be reported within fifteen days after the earlier of the former accountant's resignation, dismissal, or declination to stand for re-election, or the engagement of a new accountant. Regardless of whether the change in accountants disclosure occurs in a Form 8-K filing or any other report or registration statement, Item 304(a)(3) of Regulation S-K directs the registrant to request the former accountant to provide a letter to the registrant (although the letter is addressed to the Commission) indicating whether the former accountant agrees with the registrant's disclosures regarding the change in accountants and, if not, the respects in which it does not agree.[7] If such a letter is provided, it is presently required to be filed by the registrant as an exhibit to the document containing the relevant disclosure within thirty days after that document has been filed with the Commission. Assuming the disclosure is made on a Form 8-K fifteen days after the change in accountants, and the former accountant's letter is filed thirty days after the date of the filing of the Form 8-K, a total of forty-five days may elapse from the date of the change in accountants to the filing with the Commission of the former auditor's concerns regarding the registrant's disclosure of reportable events,[8] disagreements [9] or other areas. The AICPA's comment letter, referenced above, offers the following suggestions. It states:

1. The auditor needs a reasonable amount of time to prepare any letter taking issue with management's representations about whether and what disagreements might have taken place. Among other things, the disclosures cover an extended period of time and there is a need to carefully review possibly voluminous audit files; members of previous audit teams may not be readily available for consultation; and, it may also be necessary to consult with legal counsel on sensitive disclosure matters. Notwithstanding these problems, we suggest that the period within which the registrant must file the prior auditor's letter be reduced from the present 30 days to 21 days after filing Form 8-K.

2. The Commission should adopt a rule requiring registrants to file any letter received by them from an auditor pursuant to Item 4 of Form 8-K within forty-eight hours of receipt.

3. "* * * [T]he Commission should make clear that an auditor would be permitted to deliver an interim letter to his client that should be filed by the registrant with the SEC within forty-eight hours of receipt. Such a letter might indicate, for example, that the auditor was not terminated but, rather, resigned, or that a subsequent letter will be forthcoming taking serious issue with management's representations in the Form 8-K."

The Commission agrees that more prompt disclosure of the former accountant's concerns would be in the public interest and aid in the protection of investors. It also believes that a more prompt initial announcement of the change in accountants, with the related disclosure of the existence of any reportable events or disagreements between the registrant and the former accountant, may be beneficial to shareholders and investors. The Commission is therefore proposing to amend Item 304(a) to incorporate the substance of the AICPA's suggestions, except that the forty-eight hour periods would be expressed as two calendar days and the twenty-one day period suggested by the AICPA would be shortened to ten days. The Commission is also proposing to reduce the time period for the filing of an initial Form 8-K responding to Item 4 of that form, Changes in Registrant's Certifying Accountant, from fifteen to five calendar days. The Commission recognizes that a reasonable period of time is required to research, prepare and review the disclosure called for by Item 304. However, the principal areas of disclosure will be those where there have been disagreements between the former accountant and the registrant, or where the reporting and performance procedures enumerated in Statement on Auditing Standards No. 50 [10] have been followed by the newly-engaged accountant. It may be assumed that documentation regarding these events is

---

[1] If the disclosures appear in an annual report to shareholders or a proxy or information statement, however, in lieu of requesting a letter from the former accountant the registrant is to provide that accountant with the opportunity to submit a brief statement to be included directly in the registrant's document. *See* Instruction 2 to Item 304 of Regulation S-K, 17 CFR 229.304.

[2] The adoption of these amendments is discussed in a companion release, Financial Reporting Release No. 31 (April 7, 1988).

[3] The AICPA's letter is contained in File No. S7-24-87. Copies may be obtained by contacting the Commission's Public Reference Room, 450 Fifth Street, NW., Washington, DC 20549.

[4] See note 1, *supra*.

[5] 17 CFR 229.304.

[6] 17 CFR 249.308.

[7] Item 304(a)(3) of Regulation S-K states: (3) The registrant shall request the former accountant to furnish the registrant with a letter addressed to the Commission stating whether it agrees with the statements made by the registrant in response to this Item 304(a) and, if not, stating the respects in which it does not agree. The registrant shall file the former accountant's letter as an exhibit to the report or registration statement containing this disclosure. If the former accountant's letter is unavailable at the time of filing, it shall be filed by amendment within thirty days thereafter.

But see note 1, *supra*.

[8] Item 304(a)(1)(v) of Regulation S-K, 17 CFR 229.304(a)(1)(v).

[9] Item 304(a)(1)(iv) of Regulation S-K, 17 CFR 229.304(a)(1)(iv).

[10] Statement on Auditing Standards No. 50, *Reports on the Application of Accounting Principles* (July 1986). Paragraph 7 of that document requires the consulted (newly-engaged) accountant to consult the former accountant to ascertain all the available facts relevant to forming a professional judgment.

readily available to both the registrant and the former accountant, and that, therefore, some reduction in the time period for reporting a change in accountants would not result in an inappropriate burden on accountants or registrants.

The requirement for the registrant to file the accountant's letter within two days of receipt [11] will expressly prevent a registrant that receives the accountant's letter soon after the Form 8–K is filed from keeping the letter private until the expiration of the proposed maximum ten day period. The provision for the filing of an interim letter would permit the accountant to provide public notice of its general areas of concern while it continues to finalize the details of a more substantive letter. These procedures, therefore, would assure the former accountant more immediate disclosure of its concerns.

The Commission also is proposing to require that the former accountant be provided with a copy of the registrant's disclosures no later than the time those disclosures are filed with the Commission. The Commission staff believes this is a codification of existing practice.

The Commission specifically requests comment on whether registrants and accountants would be able to prepare informative disclosures within the respective five and ten day periods or within some shorter periods. If not, the Commission requests comment on the minimal periods necessary to prepare such disclosures. Since it is the Commission's understanding that the vast majority of auditor changes are based on valid business reasons (including fees and quality of service) and are thoroughly considered by management before making the change, the Commission believes a reduction in these time periods should not impose a significant burden on registrants. While the Commission has specifically proposed a reduction to the above stated five and ten day filing periods, it is also considering other periods shorter than the current fifteen and thirty day periods set forth in Instruction B1 of Form 8–K and Item 304(a)(3) of Regulation S–K.

The Commission also requests comments on other ways to improve the procedures for disclosing the circumstances regarding a change in the registrant's certifying accountant.

III. More Timely Filing of Information Regarding Resignation or Refusal To Stand for Re-Election of Directors

In addition to proposing the acceleration of the timing for filing information concerning changes in accountants, the Commission also is proposing to shorten the time for filing information for another item of Form 8–K concerning a comparable event, the resignation by a director as a result of a disagreement with the registrant. A Form 8–K must be filed in response to Item 6, Resignations of Registrant's Directors, only when a director resigns (or declines to stand for re-election) because of a disagreement with the registrant relating to its operations, policies or practices, and only after the director has furnished a letter that describes the disagreement and requests that the matter be disclosed. Such information, like that relating to a change in accountants, may indicate difficulties material to an investment decision with respect to the registrant's securities. The Commission, accordingly, has determined that more prompt disclosure of such disagreements would benefit the investing public, and proposes to reduce the filing period from fifteen to five calendar days after the event. The Commission also is considering other filing periods shorter than the current requirement, such as ten calendar days.

A Form 8–K filed in response to Item 6 must include the date of the resignation or refusal to stand for reelection, summarize the director's description of the disagreement, and attach the letter as an exhibit. The registrant also may briefly state its own view of the disagreement. While it appears that such information would readily be available to the registrant, the Commission solicits comment on whether the proposed five calendar day filing period presents any practical difficulties, and if so, on the minimal period necessary.

IV. Cost/Benefits of the Proposed Actions

The proposals announced in this release affect the timing of procedures for the registrant filing a Form 8–K disclosing a change in the registrant's certifying accountant and the filing of a letter containing the views of the registrant's former accountant regarding certain matters disclosed by the registrant. They also impact the timing for filing information concerning the resignation of a director required to be disclosed under Item 6 of Form 8–K. The proposals, however, do not affect the recordkeeping, substance of the disclosures, or contents of the registrant's disclosure or the former accountant's letter. It is anticipated therefore that the costs associated with these proposals would be small and relate solely to the more prompt preparation of the registrant's disclosure and the former accountant's letter. The principal benefit of the proposals is the presentation of significant information to the market on a more timely basis.

The Commission requests specific comment on its assessment of the costs and benefits associated with these proposals, including any specific estimates of any costs and benefits perceived by commentators.

V. Request for Comments

Any interested person wishing to submit written comments on the proposals, or the costs and benefits of the proposals, or to suggest additional changes, or to submit comments on other matters that might have an impact on the proposals, is requested to do so.

The Commission also requests comment on whether the proposed revisions, if adopted, would have an adverse effect on competition or would impose a burden on competition that is neither necessary nor appropriate in furthering the purposes of the Securities Exchange Act of 1934 (the "Exchange Act"). Comments on this inquiry will be considered by the Commission in complying with its responsibilities under section 23(a)(2) of the Exchange Act.[12]

VI. Regulatory Flexibility Act Analysis

David S. Ruder, Chairman of the Commission, has certified that the proposed amendments to Regulation S–K and form 8–K will not have a significant impact on any entity subject to its provisions and, therefore, will not have a significant economic impact on a substantial number of small entities. This certification, including the reasons therefor, is attached to this release.

List of Subjects in 17 CFR Parts 229 and 249

Reporting and recordkeeping requirements, Securities.

VII. Text of Proposed Amendments

It is proposed to amend Chapter II, Title 17 of the Code of Federal Regulations as follows:

[11] If the expiration of the two day period was to occur on a Saturday, Sunday or Holiday, the registrant would be required to file the letter on the first business day following. See Rule 0–3(a) under the Securities Exchange Act of 1934, 17 CFR 240.0–3(a).

[12] 15 U.S.C. 78w(a)(2).

VOL 53 ISS 76 AP 20 1988 UMI

PART 229—STANDARD INSTRUCTIONS FOR FILING FORMS UNDER THE SECURITIES ACT OF 1933 AND SECURITIES EXCHANGE ACT OF 1934 AND ENERGY POLICY AND CONSERVATION ACT OF 1975—REGULATION S-K.

1. The authority citation for Part 229 continues to read, in part, as follows:

Authority: Secs. 6, 7, 8, 10, 19(a), 48 Stat. 78, 79, 81, 85; secs. 12, 13, 14, 15(d), 23(a), 48 Stat. 892, 894, 901; secs. 205, 209, 48 Stat. 906, 908; sec. 203(a), 49 Stat. 704; secs. 1, 3, 8, 49 Stat. 1375, 1377, 1379; sec. 301, 54 Stat 857; secs. 8, 202, 68 Stat. 685, 686; secs. 3, 4, 5, 6, 78 Stat. 565–568, 569, 570–574; sec. 1, 79 stat. 1051; secs. 1, 2, 3, 82 Stat. 454, 455; secs. 1, 2, 3–5, 28(c), 84 Stat. 1435, 1497; sec. 105(b), 88 Stat. 1503; secs 8, 9, 10, 11, 18, 89 Stat. 117, 118, 119, 155; 15 U.S.C. 77f, 77g, 77h, 77j, 77s(a), 781, 78m, 78n, 78o(d), 78w(a).

2. By revising § 229.304(a)(3) to read as follows:

§ 229.304 (Item 304) Changes in and disagreements with accountants on accounting and financial disclosure.

(a) * * *

(3) The registrant shall provide the former accountant with a copy of the disclosures it is making in response to this Item 304(a) that the former accountant shall receive no later than the time that disclosure is filed with the Commission. The registrant shall request the former accountant to furnish the registrant with a letter addressed to the Commission stating whether it agrees with the statements made by the registrant in response to this Item 304(a) and, if not, stating the respects in which it does not agree. The registrant shall file the former accountant's letter as an exhibit to the report or registration statement containing this disclosure. If the former accountant's letter is unavailable at the time of filing such report or registration statement, then the registrant shall request the former accountant to provide the letter as promptly as possible to permit the registrant to file the letter with the Commission within ten calendar days after the filing of the report of registration statement. The registrant shall file the letter by amendment within two calendar days of receipt. The former accountant may provide the registrant with an interim letter highlighting specific areas of concern and indicating a subsequent, more detailed letter will be forthcoming within the ten day period noted above. If not filed with the report or registration statement containing the registrant's disclosure under this Item 304(a), then the interim letter, if any, shall be filed by the registrant by amendment within two calendar days of receipt.

* * * * *

PART 249—FORMS, SECURITIES EXCHANGE ACT OF 1934

3. The authority citation for Part 249 continues to read in part as follows:

Authority: The Securities Exchange Act of 1934, 15 U.S.C. 78a, *et seq.*, unless otherwise noted.

4. By amending General Instruction B1 to Form 8-K (§ 249.308 of this chapter) to read as follows:

Editorial Note.—Form 8-K does not appear in the Code of Federal Regulations.

FORM 8-K

General Instructions

* * * * *

B. Events to be Reported and Time for Filing of Reports.

1. A report on this form is required to be filed upon the occurrence of any one or more of the events specified in Items 1–4 and 6 of this form. A report of an event specified in Items 1–3 is to be filed within 15 days after the occurrence of the event. A report of an event specified in Item 4 or 6 is to be filed within 5 days after the occurrence of the event.

* * * * *

By the Commission.

Jonathan G. Katz,

Secretary.

April 12, 1988.

Regulatory Flexibility Act Certification

I, David S. Ruder, Chairman of the Securities and Exchange Commission, hereby certify, pursuant to 5 U.S.C. 605(b) that the proposed amendments to Form 8-K and Regulation S-K to increase the timeliness of the filing of information concerning a change in a registrant's certifying accountant, contained in Securities Act Release No. 33-6767, will not have a significant economic impact on a substantial number of small entities. The reason for this certification is that it is anticipated that the effects of the amendments, if adopted, will not be significant for any class of registrants because the substance of the disclosure and recordkeeping requirements are not being amended and it is anticipated that even with the proposed acceleration in timing the registrant and the former accountant should have adequate time for preparation of the information that is to be disclosed.

Dated: April 12, 1988.

David S. Ruder,

Chairman.

[FR Doc. 88-8565 Filed 4-19-88; 8:45 am]

BILLING CODE 8010-01-M

DEPARTMENT OF JUSTICE

28 CFR Part 16

[AAG/A Order No. 15-88]

Exemption of Records Systems Under the Privacy Act

AGENCY: Department of Justice.

ACTION: Proposed rule.

SUMMARY: The Department of Justice proposes to exempt a Privacy Act system of records from subsection (d) of the Privacy Act, 5 U.S.C. 552a. This system is the "Freedom of Information/Privacy Acts (FOI/PA) Request File (JUSTICE/OPA-003)." Records in this system contain copies of records requested from the "Executive Clemency Filed (JUSTICE/OPA-001)" under the Freedom of Information/Privacy Acts and therefore relate to official Federal investigations and matters of law enforcement. The exemption is needed to protect ongoing investigations and the identities of confidential sources involved in such investigations.

DATE: Submit any comments by May 20, 1988.

ADDRESS: Address all comments to J. Michael Clark, Assistant Director, Facilities and Administrative Services Staff, Justice Management Division, Department of Justice, Room 6402, 601 D Street NW., Washington, DC 20530.

FOR FURTHER INFORMATION CONTACT: J. Michael Clark (202) 272-6474.

SUPPLEMENTARY INFORMATION: In the notice section of today's **Federal Register**, the Department of Justice provides a description of the "Freedom of Information/Privacy Acts (FOI/PA) Request File (JUSTICE/OPA-003)."

This order relates to individuals other than small business entities. Nevertheless, pursuant to the requirement of the Regulatory Flexibility Act, 5 U.S.C. 601-612, it is hereby stated that the order will not have "a significant economic impact on a substantial number of small entities."

List of Subjects in 28 CFR Part 16

Administrative Practice and Procedure, Courts, Freedom of Information, Privacy, and Sunshine Acts.

Pursuant to the authority vested in the Attorney General by 5 U.S.C. 552a and delegated to me by Attorney General Order No. 793-78, it is proposed to

amend 28 CFR Part 16 by revising § 16.79 as set forth below.

Dated: April 6, 1988.

Harry H. Flickinger,

Assistant Attorney General for Administration.

1. The authority for Part 16 continues to read as follows:

Authority: 28 U.S.C. 509, 510; 5 U.S.C. 301, 552, 552a; 31 U.S.C. 483a unless otherwise noted.

2. It is proposed to amend 28 CFR Part 16 by revising § 16.79 to read as follows:

§ 16.79 Exemption of Pardon Attorney Systems.

(a) The following systems of records are exempt from 5 U.S.C. 552a(d):

(1) Executive Clemency Files (JUSTICE/OPA-001).

(2) Freedom of Information/Privacy Acts (FOI/PA) Request File (JUSTICE/OPA-003).

These exemptions apply only to the extent that information in these systems is subject to exemption pursuant to 5 U.S.C. 552a(j)(2).

(b) Exemption from subsection (d) is justified for the following reasons:

(1) Executive Clemency Files contain investigatory and evaluative reports relating to applicants for Executive clemency. The FOI/PA Request File contains copies of documents from the Executive Clemency Files which have not been released either in whole or in part pursuant to certain provisions of the FOI/PA. Release of such information to the subject would jeopardize the integrity of the investigative process, invade the right of candid and confidential communications among officials concerned with recommending clemency decisions to the President, and disclose the identity of persons who furnished information to the Government under an express or implied promise that their identities would be held in confidence.

(2) The purpose of the creation and maintenance of the Executive Clemency Files is to enable the Pardon Attorney to prepare for the President's ultimate decisions on matters which are within the President's exclusive jurisdiction by reason of Article II, Section 2, Clause 1 of the Constitution, which commits pardons to the exclusive discretion of the President.

[FR Doc. 88-8609 Filed 4-19-88; 8:45 am]

BILLING CODE 4410-01-M

FEDERAL MEDIATION AND CONCILIATION SERVICE

29 CFR Part 1404

Arbitration Policy; Roster of Arbitrators, and Procedures for Arbitration Services

AGENCY: Federal Mediation and Conciliation Service.

ACTION: Proposed rule.

SUMMARY: The following proposed revision to Subparts A, B and C of 29 CFR Part 1404 is being published in order to revise the policies and procedures used by the Federal Mediation and Conciliation Service in administering its Roster of Arbitrators.

The goals of the proposed revision are to more accurately reflect current practice, clarify the role of the Arbitrator Review Board, revise the standards for arbitrator listing on the Roster, and compel parties to follow these proposed rules. Among the changes made are:

First, requests for special experience or qualifications, or other special requirements, must be either jointly submitted by the parties, or, if unilaterally submitted, must certify that (a) the other party agrees, or (b) there is no conflict with the applicable contract. This will allow a single party, for example, to request a panel with special expertise, so long as the required assurances are made. Similarly, FMCS will make a direct appointment of an arbitrator based on the assurances of one party.

Second, the Federal Mediation and Conciliation Service Division of Arbitration Services, (DAS) will no longer receive or interpret contract language in regard to furnishing services.

Third, the regulations also provide that if the parties make separate submissions regarding desired selections from a panel, and one party fails to make its submission within 20 days of the date of the other parties' submission, FMCS will make an appointment of an arbitrator based on the one response it received so long as that party certifies that either both parties agree to such procedure, or that there is no conflict with the parties' collective bargaining agreement.

These changes, and the others that have been made, are explained in the section titled **SUPPLEMENTARY INFORMATION**, which appears below.

DATES: Comments must be received on or before June 30, 1988.

ADDRESSES: Interested organizations and individuals are invited to submit written comments to these proposed regulatory changes. Comments should be submitted in duplicate to Peter L. Regner, Director of Staff Operations and Programs, Federal Mediation and Conciliation Service, 2100 K Street NW., Washington, DC 20427. All written comments will be available for inspection during work hours at the above address.

FOR FURTHER INFORMATION CONTACT: Ms. Jewell Myers, Director, Division Arbitration Services, Federal Mediation and Conciliation Service, 2100 K Street NW., Washington, DC 20427, (202/653-5280).

SUPPLEMENTARY INFORMATION: A section by section analysis of the proposed revisions follows.

Subpart A: Arbitration Policy; Administration of Roster, Sections 1404.1-1404.3

Section 1404.1 Scope and authority

The section has not been substantially changed. The legal citations have been changed to more accurately reflect the authority under which the regulations are listed.

Section 1404.2 Policy

The chapter has only been rewritten to express more clearly that voluntary arbitration is encouraged by the labor policy of the United States.

Section 1404.3 Administrative responsibilities

Section (a) provides that the Director of FMCS has final responsibility for all aspects of the agency arbitration policy and procedure. This is not a substantive change from the current regulations.

(b) Division of Arbitration Services. This subsection outlines the role and responsibility of the office within FMCS directly responsible for managing the Roster. The only substantive change is a change in the name of that office from the Office of Arbitration Services to the Division of Arbitration Services.

(c) This section establishes the Arbitrator Review Board and outlines its powers and duties. It is essentially a rewrite of the current regulations, § 1404.3(c) except that the number of members to be appointed by the Director is not specified.

(1) Duties of the Board. Paragraphs (i), (ii) and (iii) are all unchanged from the current regulations. These paragraphs merely outline that the Board is to review qualifications and status of candidates and members listed or to be listed on the Roster. Paragraph (iv) is new. It provides that the Board may, upon request of the Director, review

FMCS arbitration policies and procedures.

Subpart B: Roster of Arbitrators; Admission and Retention, Sections 1404.4–1404.7

Section 1404.4

This provision governs the procedures and policy by which the Federal Mediation and Conciliation Service will operate the Roster. It replaces the current 1404.4.

(a) Provides that FMCS shall maintain a Roster of Arbitrators. The subsection deletes the current language relating to individuals who are removed from the Roster, although these rules retain a provision and procedures for removal at § 1404.5(d).

(b) Provides that arbitrators listed on the roster shall comply with these rules, FMCS guidelines and the relevant Code of Professional Responsibility promulgated by the National Academy of Arbitrators, Federal Mediation and Conciliation Service and the American Arbitration Association.

(c) Is unchanged and provides that the individuals listed on the roster or selected by the parties do not become Federal employees as a result of their selection or appointment.

(d) Is intended to be a restatement of current policy. It states that FMCS has no power to, and does not intend to compel the parties to either agree to arbitrate; appear in a particular case or matter, or any case or matter; enforce an agreement to arbitrate, or to arbitrate any issue; influence in any way or alter or set aside any decision by an arbitrator; or require or modify or deny payment or compensation to an arbitrator.

(e) Except for the change in the name of the Division of Arbitration Services, this subsection is unchanged. It merely provides that the DAS will provide names from the Roster without charge to parties to an agreement to arbitrate or factfinding, or where provided by statute, according to procedures outlined in Subpart C herein.

(f) Is also essentially unchanged and states that the concerns of the parties are paramount. No person listed on the Roster has the right to remain on the Roster, or a right to have his or her name sent out on any particular list unless requested as provided in § 1404.9(e). FMCS uses several methods and criteria for the preparation and computer selection of panels such as the experience and background of the person listed on the Roster, availability, and acceptability and geographical location. Obviously the preferences of the parties is also a criteria for a person's name being listed, or not listed, on any particular panel. FMCS is retaining the maximum flexibility, as in the current regulations, to accomplish these purposes.

Section 1404.5

This section outlines the criteria the Arbitrator Review Board will use in recommending to the Director whether or not an individual will be listed on the Roster. This section provides that applicants for listing on the Roster must complete and submit an application. The Division of Arbitration Services will review the application, make the necessary inquiries, and forward the application to the Arbitrator Review Board. The Board will then review the application and make a recommendation to the Director about whether or not to list an applicant on the Roster based on the criteria established in subsections (a), (b) and (c) of § 1404.5. The Director of FMCS has the authority to make all final decisions about listing on the Roster. This section is substantially unchanged from current regulations.

Subsection (a) outlines the general criteria the Arbitrator Review Board will use when considering an applicant. Individuals requesting listing on the Roster must be experienced, competent and acceptable in labor management decision-making roles. This subsection is changed from the current regulations only to the extent that a statement in the current rules that the applicant have extensive experience in collective bargaining, and that he or she be capable of conducting an orderly hearing, analyze testimony and evidence and prepare a clear and concise award, is deleted. However, subsection (b) now contains similar requirements as outlined immediately below.

Subsection (b), Proof of Qualifications, is different from the current regulations in that the proposed rule provides that the standards of acceptability, experience and competence in subsection (a) above, are demonstrated by the submission of at least 5 actual arbitration awards, issued by the applicant while serving as an arbitrator of record chosen by the parties to a labor dispute. The Board is also authorized to consider an applicant's bargaining and labor negotiations experience, or experience as a judge or hearing examiner in labor relations issues as a substitute for the awards. This provision is similar to the current regulations § 1404.5(a) (1) and (2). However, the specific requirement of 5 awards is new. It is designed to allow the Board to objectively apply a test of acceptability.

Subsection (c) Advocacy is substantially the same as the current § 1404.5(c) (1) and (2). The subsection prohibits advocates, except those who are "grandfathered" under the current rules, from being listed on the Roster. All persons who were listed on the Roster as advocates before the date of the "grandfather" clause, that is November 17, 1976, may remain listed on the Roster. However, no applicant for listing who is an advocate will be listed on the Roster. A person who was on the Roster before November 17, 1976 and did not divulge his or her advocacy status, *at the time of his or her listing,* (emphasis added) may not remain listed on the Roster. This policy, designed to insure that parties receive the names of arbitrators who are, and are seen as truly neutral, except in the case of those individuals listed on the Roster before the prohibition of advocacy as adopted.

The definition of an advocate in (1) is the same as current FMCS policy. It is designed to be as broad as necessary to insure that parties will not have any reason to question the neutrality of a potential arbitrator. The provision prohibits listing on the Roster people who earn money, or any form of compensations, by representing either side in a labor relations matter.

Subsection (d) establishes the policies and procedures for listing, retention and removal of an individual listed on the Roster. It is a clarification of the current policy in § 1404.5(d). It provides that the Director of FMCS shall make all final decisions about an applicant's listing on the Roster. Removal is by the recommendation of the Arbitrator Review Board after notice for violations of the regulations and/or the Code of Professional Responsibility for Arbitrators of Labor Management Disputes as cited in § 1404.4(b). Notice of cancellation will be given by the Board when a Roster member:

(1) No longer meets the criteria for admission. This is the same policy as in the current regulations.

(2) Has become an advocate as defined in § 1404.5(c). This is a new provision and a clarification of current FMCS practice of removing from the Roster individuals who become advocates in order to protect the integrity and neutrality of the Roster.

(3) Has been repeatedly and flagrantly delinquent in submitting awards. This is also the current FMCS rule, and allows the Board to recommend removal of individuals who fail to meet the timely needs of the parties.

(4) Has refused to make reasonable reports as required by FMCS in accordance with Subpart C *infra*. This is

also current FMCS policy and regulation. It is designed to insure that the agency can obtain the necessary information to efficiently operate the program.

(5) Has been the subject of complaints by the parties, and the Board, after inquiry, concludes that reasonable grounds for cancellation has been shown. This is also substantially the same as current FMCS policy and is designed to establish a method for parties to state their concerns and complaints. Removal under such grounds, however, must be conducted according to the procedures established in this subsection.

(6) This is the same as the current § 1404.5(d)(5) and merely provides that the Director may remove an individual who is not being selected by the parties in at least 2 percent of the cases per year in which his/her name is submitted to parties for selection. This is to insure that the Roster is composed of individuals who are acceptable to the parties.

The procedure for removal is left up to the Arbitrator Review Board, so long as as the individual proposed to be removed is given 60 days prior notice of the proposed removal and an opportunity to respond. Either the Board or a hearing officer will consider the reasons for the removal and all responses before making a recommendation to the Director. All decisions to remove must be made by the Director. This is designed to insure that individuals will be given an opportunity to present evidence and argument on their behalf before a decision is made to remove. The section is substantially the same as in the current regulations at § 1404.6.

Section 1404.6

This is a new provision which states that the Director of the Division of Arbitration Services (DAS) may suspend—that is not send out an individual's name on any panel or appoint an individual to serve as arbitrator for up to 180 days—if the Director of DAS has determined that the FMCS will be harmed.

This subsection was established to insure that in a matter where there is a dispute which is not yet resolved, FMCS can act to protect the arbitration process, the Roster and the parties. A suspension is not a determination on the merits of any dispute or controversy, and the suspension, except upon the request of the individual listed on the Roster, may not exceed 180 days. Arbitrators will be notified promptly of a suspension and will be afforded an opportunity to appeal, if they wish to do so, to the Arbitrator Review Board. The Board will make a recommendation to the Director of FMCS, whose decision shall constitute final agency action.

Section 1404.7

This is also a new section which provides that an individual listed on the Roster may request that he or she may be put on an inactive status. This means that while they are on such status, their name will not be sent to the parties. This enables a Roster member to request that his or her name not be sent to parties while, for example, they are on an extended vacation. It is designed for the convenience of the person listed on the Roster and the parties.

Subpart C: Procedures for Arbitration Services, Sections 1404.8–1404.16

Section 1404.8

This new provision applies only to Subpart C. The new text incorporates the provision which currently appears at § 1404.6, but points out that while the parties are free to choose arbitration procedures that are acceptable to them, such procedures are subordinate to the provisions of Subpart C. Thus, if either

(a) The parties designate in their agreement that FMCS furnish arbitration services, or

(b) One or more parties request FMCS arbitration services, then all parties are subject to the rules contained in Subpart C. This new language has been added to insure that FMCS has the authority to remedy any abuse of Subpart C rules and enforce compliance with them.

Section 1404.9

Subsection (a) is essentially a repeat of the provision now found at § 1404.10, with the address for requests to the DAS added.

Subsection (b) is essentially a repeat of the provision found at § 1404.10(a). In stating that the issuance of a panel—or a direct appointment—is nothing more than a response to a request, the text adds new language stating that such actions also do not signify the adoption of any position in regard to arbitrability. This additional language aligns the text with the wording that appears at the bottom of FMCS Form R–43, Request For Arbitration Services. This Form is shown in the Appendix to this proposed regulation.

Subsection (c). This new provision allows FMCS to refuse to supply arbitration services if the request creates difficult operational problems. For example, if FMCS received a request for 100 panels, it might be refused because of the workload imposed. In such a case the DAS might contact the requestor to see if some less burdensome arrangements could be made.

Subsection (d). This provision changes the text found in § 1404.10(b) and (d) and replaces those two subsections. While the current language urges parties to use FMCS Form R–43 to make requests for arbitration services, it also allows the use of letters as a substitute. The revised text mandates that only Form R–43 be used and states that a failure to do so may result in the request being returned to the sender. This change to mandatory use of Form R–43 is required because the DAS has converted its operations from a manual system to a computer system, and the receipt of requests on Form R–43 is necessary in order to obtain prompt and accurate entry of data. Although approximately 80% of all requests are now received on Form R–43, FMCS will (1) allow for a phase-in period for this new requirement (2) conduct a campaign of notification and education to make requestors aware of the requirement, and (3) make Form R–43 available in quantity to all labor organizations and employers dealing with FMCS. A reproduction of Form R–43, Request For Arbitration Services, is shown in the Appendix to this proposed regulation.

Subsection (e). This is a new provision. It is based on the experience of the DAS, that a significant increase has taken place in incidents involving procedural quarrels between the parties. These clashes concern such matters as (1) whether or not one party or the other has refused to cooperate in striking names from a panel of arbitrators (2) whether or not the grievance issues have been determined in a previous arbitration award, (3) whether arbitrators on a panel should or should not have special expertise, (4) whether arbitrators should or should not come from a particular geographic area, and (5) whether a local contract or a national contract governs the parties.

The DAS has found itself increasingly entangled in such procedural disputes and therefore has decided on the following changes:

(1) The DAS will no longer receive or review the terms contained in the parties' collective bargaining agreements, and will make no determinations as to the meaning or effect of such agreements. Accordingly, the second sentence of the text now appearing at § 1404.10(c)—calling for submissions of contract language—has been deleted. Also, since there is no longer a requirement that a brief statement describing each issue in dispute accompany the request, the first

sentence of the current § 1404.10(c) has similarly been deleted, thus negating the entire text of that section.

(2) For unilateral requests—except those asking for a standard panel of seven names—the requestor will certify that one of the following conditions applies:

(a) The other party has agreed to the request, or

(b) There is no conflict with the parties collective bargaining agreement.

FMCS Form R-43, Request For Arbitration Services, has been modified—as shown in the Appendix to these proposed regulations—to allow requestors to so certify in a simple and convenient way. The DAS will consider all statements as made in good faith and will honor all requests as submitted. A failure to supply the information required in (a) or (b) above disqualifies the request.

While the DAS realizes that a unilateral request, under the conditions set out above, may be subject to abuse by one party or the other, the following policy considerations have led to the adoption of the proposed new language.

As to the issuance of panels

If the DAS were to require that all requests—except for a standard 7 person panel—be submitted on the basis of mutual consent, the arbitration process would be frustrated by the quarrels of the parties. That is, there would be no agreement, no submission of a request, and recourse would have to be sought through the relatively lengthy procedures of the National Labor Relations Board, the Federal Labor Relations Authority or the courts.

By placing a burden of good faith on the party submitting the unilateral request, and by acting promptly to honor it, the DAS acts to further the arbitration process. Moreover, receivng the DAS panel establishes no obligation on any party to use it, or to arbitrate any issue. The panel simply permits the option of moving further on the path of arbitration.

As to direct appointments

In the case of a unilateral request for appointment of an arbitrator, the result may cause a burden to be placed on a party. That is, a party may be either obliged to appear before an appointed arbitrator to argue that arbitration is not warranted, or risk the result of an *ex parte* award. While the DAS is mindful of this possible result, it has proposed the new procedure for the following reasons.

(i) Reliance by the DAS on contract interpretation, as the basis for a direct appointment, means becoming entangled in the parties' quarrels. One side or the other may dispute the reading of the contract made by the DAS, and thus make the DAS interpretation one more obstacle to arbitration.

(ii) Reliance by the DAS, on mutual assent by the parties, as the basis for a direct appointment, again means frustrating the arbitration process. Thus, the quarreling parties will refuse to agree, and a solution will have to be sought through the relatively time consuming procedures of the National Labor Relations Board, the Federal Labor Relations Authority, or the courts.

(iii) By instead placing a burden of good faith on the party making the unilateral request, and simply honoring it, the DAS will promptly place the matter of proper jurisdiction before a neutral decision maker—the arbitrator. If the arbitrator finds that one party or the other has acted improperly in pursuing arbitration, the arbitrator may provide redress in the terms of the remedy awarded, or the arbitrator's finding may be used as the basis for redress before another tribunal.

Section 1404.10

This provision follows the language which currently appears at § 1404.11. No significant change has been made.

Section 1404.11

This section—made up of four subsections—replaces the current § 1404.12.

Subsection (a) describes the content of a standard panel. The language is similar to that now found at § 1404.12(a), but (i) deletes the reference to the parties' contract, as contracts will no longer be reviewed, (ii) deletes the reference to requests by parties for a number of arbitrators different than 7, as joint requests for services other than a standard panel are described in the last sentence of the new text, and (iii) adds the statement that requests for standard panels—made jointly or unilaterally—will be honored without the need for compliance with § 1404.9(e).

Subsection (b) describes non-standard panels, and states, in conformance with the new policy of FMCS, that unilateral requests for a non-standard panel must comply with the requirements of § 1404.9(e). This subsection serves as a replacement for the language now appearing at § 1404.12(c)(4).

Subsection (c). This provision describes the assignment of DAS case numbers and is essentially the same as that now found at § 1404.12(b).

Subsection (d) describes the factors involved in selecting names for panels and follows, for the most part, the language now found at § 1404.12(c). The current statement—that the agreed upon wishes of the parties are paramount—is deleted, as this concept is expressed in subsections (d)(2) and (d)(3) which follow immediately below. Likewise, the statement—that special qualifications and experience may be identified for purposes of placing names on panels—is deleted, as this idea is expressed in the new text of Subsection (b) described above.

Subsection (d)(1) is a new provision which explains that unless the parties jointly request otherwise, the site of the dispute serves as the geographical basis for the selection of the arbitrators.

Subsection (d)(2) is a repeat of the text of § 1404.12(c)(1), with one change. The phrase—*for valid reasons*—is omitted because the DAS will not pass judgment on the validity of the reasons given—if any—that persons be included or omitted from panels of arbitrators. This position corresponds to the FMCS policy that its arbitration services constitute a response to a request and nothing more.

Subsection (d)(3) repeats the text of § 1404.12(c)(2), except that it carries over the proviso—from § 1404.12(c)(1)—that the number of names must not be excessive. This change corrects an inadvertent omission in the text of § 1404.12(c)(2).

Subsection (d)(4). This language replaces the current text at § 1404.12(c)(3). Again, the same proviso as to excessive numbers is carried over from § 1404.12(c)(1). While the current language prohibits a single party from including or omitting names from a panel, the revised text permits one party to do so, if the conditions as to numbers, and compliance with § 1404.9(e), are met.

Section (e) replaces the language now found at § 1404.12(c)(5). The new text eliminates reference to the terms of agreement in the parties' contract—as the DAS will no longer receive or review such terms—and places a fixed ceiling—of three—on the number of panels which will be successively issued. Under the current language no fixed ceiling is established, and instead the matter is left open ended with consideration to be made on a case by case basis. As in previous sections, unilateral requests must comply with the provisions of § 1404.9(e).

Section 1404.12. This section, consisting of three subsections, replaces the current § 1404.13.

Subsection (a). The current language—in § 1404.13(a)—says that parties *should* notify the DAS of their selection of an arbitrator. The new text makes this requirements mandatory and states that the parties *must* do so. The

new text also adds a requirement—not present in the current § 1404.13(c)—that parties *must* notify the DAS if they decide instead not to proceed to arbitration. As to both of these mandatory provisions there is also new penalty language stating that a consistent failure to comply may lead to a denial of DAS services. These changes will assist FMCS in implementing these regulations.

The portion of the revised text directing the arbitrator to notify the DAS of his or her selection remains the same, except for (i) the added word stating that the arbitrator must do so *promptly*, and (ii) the added statement that the arbitrator is *expected to communicate with the parties within 14 days* of notification of appointment by DAS. This added statement replaces the current § 1404.13(d) which requires the arbitrator to communicate immediately.

Subsection (b). The current text—found at § 1404.13(b)—is unchanged except for the following:

(i) The concept of freedom of the parties to select an arbitrator from a panel by whatever method they agree to, has been transferred from its current location at § 1404.13(b)(3)—to the first sentence of this subsection.

(ii) In place of the transferred item (b)(3), a new provision has been added which states that if the parties select any method calling for each of them to make a separate submission to the DAS (an example of such a method is given at item (2) of the revised text) then a 20 day time limit applies. That is, if one party fails to make its submission to the DAS within 20 days of the date of the first submission, then the DAS will respond to the request it has received, and will make an appointment, using the name on that one submission. Again, this will be done *if* the requesting party complies with the requirements of § 1404.9(e). The second party will be notified of the 20 day time limit upon receipt of a submission from the first party.

Subsection (c) describes direct appointments. The revised text removes the phrase referring to the applicable collective bargaining agreement, as such agreements will no longer be considered by the DAS. Once more, if a unilateral request for a direct appointment is made, the unilteral request must comply with § 1404.9(e). In other respects, the revised text is basically the same as the current provisions in § 1404.13(c).

Section 1404.13. The revised text is similar to that now found at § 1404.14, except as follows:

(i) The current text says that an arbitrator is *expected* to conduct all proceedings in comformity with § 1404.4(b). The revised text states that the arbitrator *shall* do so.

(ii) The current text says that the arbitrator's decision *is to be* based upon the evidence and testimony presented. The revised text states that the decision *shall* be so based.

Section 1404.14. The revised text is similar to that now found at 1404.15, except as follows:

Subsection (a).

(i) The current text of § 1404.15(a) says that arbitrators *are encouraged* to render awards not later than 60 days from the date of the closing of the record. The revised text, at § 1404.14(a), states that arbitrators *shall* make awards no later than 60 days from the same date.

(ii) In the current text, at § 1404.15(a), the date of the closing of the record is described as *determined by the arbitrator, unless otherwise agreed upon by the parties or specified by law.* The revised text, at § 1404.14(a), adds to this description by inserting the phrase—*or specified by the collective bargaining agreement.*

(iii) The current text, as § 1404.15(a) says that the issuance of untimely awards by an arbitrator may lead to *his* removal from the FMCS roster. The revised text, at § 1404.14(a), removes the word *his*, thus deleting any reference to whether the arbitrator is male or female.

Subsection (b). The current text states that an arbitrator should inform the OAS (now DAS) concerning a delay in issuing an award, and in describing the circumstances when the arbitrator should do so, says that this should happen when the arbitrator cannot schedule, hear and *determine issues* promptly. The revised text changes the phrase *determine issues* to *render decisions*, as the new phrase is more complete and encompasses within it the inability to determine issues.

Subsection (c). While the wording in the revised text has been compressed—in comparison to § 1404.15(c)—no significant changes in meaning or requirements have been made.

Subsection (d). Again, while the wording in the revised text has been compressed—compared to § 1404.15(d)—no significant changes in meaning or requirements have been made.

Section 1404.15. The revised text is similar to that now found at § 1404.16, except as follows:

Subsection (a).

(i) The current text requires that fees charged by arbitrators be *certified* in advance to the Service. The revised text requires only that they be *provided* in advance.

(ii) The current text provides that certain arbitrator fees are shown on the biographical sketch sent to the parties by the Service, and that these fees *are controlling.* The revised text states that these fees are controlling *for a minimum of 30 days unless otherwise specified.*

(iii) The revised text adds two requirements, not contained in the current provisions at § 1404.16(a), as follows:

(A) *Arbitrators with dual business addresses shall bill the parties for expenses from the nearest business address to the hearing site.* This provision has been added in order to prevent excessive billing charges.

(B) *Arbitrators shall submit their schedule of fees to both parties when accepting arbitration appointments.* This provision has been added because biographical sketches state only the per diem fee charged by the arbitrator. Other fees involved in the arbitrator's service must therefore be made known to the parties when accepting an appointment.

Subsection (b). The revised text is identical to that now found at § 1404.16(b).

Subsection (c). Except for the change in reference—from § 1404.16(a) to 1404.15(a)—the revised text is identical to that now found at § 1404.16(c).

Subsection (d). While the current text, at § 1404.16(d), states that the Service will not *attempt* to resolve any fee dispute, the revised text states that the Service *does not* resolve such disputes. Otherwise, the texts are identical.

Section 1404.16. The revised text changes the language of § 1404.17 as follows:

Subsection (a). Except for the change in reference—from § 1404.4(c)(1) to § 1405.4(c)(1)—the new text is identical to that now found at § 1404.17(a).

Subsection (b). While the current text says that the *Service* may require arbitrators to provide and update biographical information, the revised text removes the idea that FMCS will invoke such a requirement. Instead, the new text carries over only the concept—now found at § 1404.17(b)—that the *arbitrator* may request revision of biographical information.

Executive Order 12291

This proposed rule is not a "major rule" under Executive Order 12291 because it is not likely to result in (1) an annual effect on the economy of $100 million or more; (2) a major increase in costs or prices for consumers, individual industries, Federal, State, or local government agencies, or geographic regions; or (3) a significant decline in

productivity, innovation, or on the ability of United States-based enterprises to compete with foreign-based enterprises in domestic or export markets. Accordingly, no regulatory impact analysis is required.

Regulatory Flexibility Act Certification

The FMCS finds that this proposed rule will have no significant economic impact upon a substantial number of small entities within the meaning of section 3(a) of the Regulatory Flexibility Act, Pub. L. 96-354, 94 Stat. 1164 (5 U.S.C. 605(g)), and will so certify to the Chief Counsel for Advocacy of the Small Business Administration. This conclusion has been reached because the proposed rule does not, in itself, impose any additional economic requirements upon small entities. Accordingly, no regulatory flexibility analysis is required.

Paperwork Reduction Act of 1980

Pursuant to 44 U.S.C. 3501 *et seq.*, and 5 CFR 1320.13, the revision to FMCS Form R-43, *Request For Arbitration Services*, must be submitted to the Office of Management and Budget (OMB) for approval. Accordingly, FMCS will submit the proposed revision to OMB, and organizations or individuals desiring to submit comments regarding the information collection items on the Form, are requested to direct their comments to (1) the Office of Information and Regulatory Affairs, Room 3002, New Executive Office Building, Washington, DC 20503, Attention: James Mason, (2) with a copy to Peter L. Regner, Director of Staff Operations and Programs, Federal Mediation and Conciliation Service, 2100 K Street, NW., Washington, DC 20427.

List of Subjects in 29 CFR Part 1404

Arbitration, Administrative practice and procedure, Labor management relations.

Dated: April 14, 1988.

Kay McMurray,

Director.

Accordingly, Part 1404 is proposed to be revised as follows:

PART 1404—ARBITRATION SERVICES

Subpart A—Arbitration Policy; Administration of Roster

Sec.
1404.1 Scope and Authority.
1404.2 Policy.
1404.3 Administrative Responsibilities.

Subpart B—Roster of Arbitrators; Admission and Retention

1404.4 Roster and Status of Members.
1404.5 Listing on the Roster; Criteria for Listing and Retention.
1404.6 Suspension of Listing.
1404.7 Inactive Status.

Subpart C—Procedures for Arbitration Services

1404.8 Freedom of Choice.
1404.9 Procedures for Requesting Arbitration Panels.
1404.10 Arbitrability.
1404.11 Nominations of Arbitrators—Standard and Non-Standard Panels.
1404.12 Selection by Parties and Direct Appointments.
1404.13 Conduct of Hearings.
1404.14 Decision and Awards.
1404.15 Fees and Charges of Arbitrators.
1404.16 Reports and Biographical Sketches.

Appendix

Authority: Sec. 202, 61 Stat. 153, as amended; 29 U.S.C. 172, and interpret or apply sec. 3, 80 Stat. 250, sec. 203, 61 Stat. 153; 5 U.S.C. 552, 29 U.S.C. 173.

Subpart A—Arbitration Policy Administration of Roster

§ 1404.1 Scope and Authority.

This chapter is issued by the Federal Mediation and Conciliation Service (FMCS) under Title II of the Labor Management Relations Act of 1947 (Pub. L. 80-101) as amended. It applies to all arbitrators listed on the FMCS Roster of Arbitrators, to all applicants for listing on the Roster, and to all persons or parties seeking to obtain from FMCS either names or panels of names of arbitrators listed on the Roster in connection with disputes which are to be submitted to arbitration or factfinding.

§ 1404.2 Policy.

The labor policy of the United States promotes and encourages the use of voluntary arbitration to resolve disputes over the interpretation or application of collective bargaining agreements. Voluntary arbitration and factfinding are important features of constructive employment relations as alternatives to economic strife.

§ 1404.3 Administrative Responsibilities.

(a) *Director.* The Director of FMCS has responsibility for all aspects of FMCS arbitration activities and is the final agency authority on all questions concerning the Roster and FMCS arbitration procedures.

(b) *Division of Arbitration Services.* The Division of Arbitration Services (DAS) maintains a Roster of Arbitrators (the Roster); administers Subpart C of these Regulations (Procedures for Arbitration Services); assists, promotes, and cooperates in the establishment of programs for training and developing new arbitrators; collects information and statistics concerning arbitration; and performs other tasks as assigned by the Director of FMCS.

(c) *Arbitrator Review Board.* The Arbitrator Review Board shall consist of a chairman and members appointed by the Director who shall serve at the Director's pleasure. The Board shall be composed entirely of full-time officers or employees of the Federal Government and shall establish procedures for carrying out its duties.

(1) *Duties of the Board.* The Board shall:

(i) Review the qualifications of all applicants for listing on the Roster, interpreting and applying the criteria set forth in Section 1404.5 of this part;

(ii) Review the status of all persons whose continued eligibility for listing on the Roster has been questioned under subsection 1404.5 of this part;

(iii) Recommend to the Director the acceptance or rejection of applicants for listing on the Roster, or the withdrawal of listing on the Roster for any of the reasons set forth herein.

(iv) At the request of the Director of FMCS, review arbitration policies and procedures, including all regulations and written guidance regarding the use of the FMCS arbitrators, amd make recommendations regarding such policies and procedures to the Director.

Subpart B—Roster of Arbitrators Admission and Retention

§ 1404.4 Roster and Status of Members.

(a) *The Roster.* The FMCS shall maintain a Roster of labor arbitrators consisting of persons who meet the criteria for listing contained in § 1404.5 of this part.

(b) *Adherence of Standards and Requirements.* Persons listed on the Roster shall comply with th FMCS rules and regulations pertaining to arbitration and with such guidelines and procedures as may be issued by the DAS pursuant to Subpart C. Arbitrators shall conform to the ethical standards and procedures set forth in the Code of Prefessional Responsibility for Arbitrators of Labor Management Disputes, as approved by the National Academy of Arbitrators, Federal Mediation and Conciliation Service, and the American Arbitration Association.

(c) *Status of Arbitrators.* Persons who are listed on the Roster and are selected or appointed to hear arbitration matters or to serve as factfinders do not become employees of the Federal Government by virtue of their selection or appointment. Following selection or appointment, the arbitrator's relationship is solely with the parties to

the dispute, except that arbitrators are subject to certain reporting requirements and to standards of conduct as set forth in this Part.

(d) *Role of FMCS.* FMCS has no power to:

(1) Compel parties to appear before an arbitrator;

(2) Enforce an agreement to arbitrate;

(3) Compel parties to arbitrate any issue;

(4) Influence, alter or set aside decisions of arbitrators listed on the Roster;

(5) Compel, deny or modify payment of compensation to an arbitrator.

(e) *Nominations and Panels.* On request of the parties to an agreement to arbitrate or engage in factfinding, or where arbitration or factfinding may be provided for by statute, DAS will provide names or panels of names without charge. Procedures for obtaining these services are outlined in Subpart C. Neither the submission of a nomination or panel nor the appointment of an arbitrator constitutes a determination by FMCS that an agreement to arbitrate or enter factfinding proceedings exists; nor does such action constitute a ruling that the matter in controversy is arbitrate under any agreement.

(f) *Rights of Persons Listed on the Roster.* No person shall have any right to be listed or to remain listed on the Roster. FMCS retains its authority to assure that the needs of the parties using its services are served. To accomplish this purpose FMCS may establish procedures for the preparation of panels or the appointment of arbitrators or factfinders which include consideration of such factors as background and experience, availability, acceptability, geographical location and the expressed preferences of the parties.

§ 1404.5 Listing on the Roster; Criteria for Listing and Retention.

Persons seeking to be listed on the Roster must complete and submit an application form which may be obtained from the DAS. Upon receipt of an application, DAS will review the application, assure that it is complete, make sure inquiries as are necessary, and submit the application to the Board. The Board will review the completed application under the criteria in § 1404.5 (a), (b), and (c), and will forward to the Director its recommendation as to whether the applicant meets the criteria for listing on the Roster. The Director shall make all final decisions as to whether an applicant may be listed on the Roster. Each applicant shall be notified in writing of the Director's decision and the reasons therefore.

(a) *General Criteria.* Applicants for the Roster will be listed on the Roster upon a determination that they are experienced, competent and acceptable in decision-making roles in the resolution of labor relations disputes.

(b) *Proof of Qualification.* The qualifications for recommending listing on the Roster shall be demonstrated by submission of at least 5 actual arbitration awards prepared by the applicant while serving as an impartial arbitrator of record chosen by the parties to labor disputes. The Board may consider experience in relevant positions in collective bargaining or as a judge or hearing examiner in labor relations controversies as a substitute for such awards.

(c) *Advocacy.* No person who at the time of application is an advocate as defined in paragraph (c)(1) of this section, may be recommended for listing on the Roster by the Board. Except in the case of persons listed on the Roster as advocates before November 17, 1978, any person who did not divulge his or her advocacy at the time of listing or who has become an advocate while listed on the Roster shall be recommended for removal by the Board after the fact of advocacy is revealed.

(1) *Definition of Advocacy.* An advocate is a person who represents employers, labor organizations, or individuals as an employee, attorney or consultant, in matters of labor relations, including but not limited to the subjects of union representation and recognition matters, collective bargaining, arbitration, unfair labor practices, equal employment opportunity and other areas generally recognized as constituting labor relations. The definition includes representatives of employers or employees in individual cases or controversies involving workmen's compensation, occupational health or safety, minimum wage or other labor standards matters. This definition of advocate also includes a person who is directly associated with an advocate in a business or professional relationship as, for example, partners or employees of a law firm.

(d) *Duration of Listing, Retention.* Listing on the Roster shall be by decision of the Director of FMCS. The Board may recommend, and the Director may remove, any person listed on the Roster, for violation of these regulations and/or the Code. Notice of cancellation shall be given to a person listed on the Roster whenever a Roster member:

(1) No longer meets the criteria for admission;

(2) Has become an advocate as defined in § 1404.5(c), above;

(3) Has been repeatedly and flagrantly delinquent in submitting awards;

(4) Has refused to make reasonable and periodic reports in a timely manner to FMCS, as required in Subpart C of this part, concerning activities pertaining to arbitration;

(5) Has been the subject of complaints by parties who use FMCS services, and the Board after appropriate inquiry, concludes that reasonable grounds for cancellation has been shown.

(6) Is determined by the Director to be unacceptable to the parties who use FMCS arbitration services; the Director may base a determination of unacceptability on FMCS records which show that an arbitrator is selected in less than 2 percent of cases in a year in which his/her name is submitted to the parties for selection.

The Board may, at its discretion, conduct an inquiry into the facts of any proposed removal from the Roster. An arbitrator listed on the Roster may only be removed after 60 day notice and an opportunity to submit a response or information showing why the listing should not be cancelled. The Board, or a hearing officer, shall recommend to the Director whether to remove an arbitrator from the Roster. All determinations to remove an arbitrator from the Roster shall be made by the Director.

§ 1404.6 Suspension of Listing.

The Director of the DAS may suspend for a period not to exceed 180 days any person listed on the Roster upon a determination that the FMCS or the parties will be harmed by continued listing. Such suspension, except upon the request of the member, shall not exceed 180 days. Arbitrators shall be promptly notified of a suspension. They may appeal a suspension to the Arbitrator Review Board, which shall make a recommendation to the Director of FMCS. The decision of the Director of FMCS shall constitute the final action of the agency.

§ 1404.7 Inactive Status.

A member of the Roster who continues to meet the criteria for listing on the Roster may request that he or she be put in an inactive status.

Subpart C—Procedures for Arbitration Services

§ 1404.8 Freedom of Choice.

Nothing contained herein should be construed to limit the rights of parties who use FMCS arbitration services to jointly select any arbitrator or arbitration procedure acceptable to

them. However, the parties must follow these regulations if they choose to name FMCS as the provider of arbitration services in their collective bargaining agreement. In any case, once a request is made to DAS, all parties are subject to the procedures contained herein.

§ 1404.9 Procedures for Requesting Arbitration Panels.

(a) The Division of Arbitration Services (DAS) has been delegated the responsibility for administering all requests for arbitration services. Requests should be addressed to the Federal Mediation and Conciliation Service, Division of Arbitration Services, Washington, DC 20427.

(b) The DAS will refer a panel of arbitrators to the parties upon request. The DAS prefers to act upon a joint request. In the event, however, that the request is made by only one party, the DAS will submit a panel of arbitrators. All parties are advised, however, that the issuance of a panel—pursuant to either a joint or unilateral request—is nothing more than a response to a request. It does not signify the adoption of any position by the DAS regarding the arbitrability of any dispute or the terms of the parties' contract.

(c) The DAS reserves the right to decline to submit a panel or make appointments of arbitrators, if the request submitted is overly burdensome or otherwise impracticable.

(d) The parties are required to use the Request for Arbitration Panel Form (R-43), which has been prepared by the DAS and is available in quantity upon request to the Federal Mediation and Conciliation Service, Division of Arbitration Services, Washington, DC 20427. The Form R-43 is reproduced herein for purposes of identification. Requests not made on this form may be returned to the parties.

(e) Whenever a request is made by only one party, and the request is for a service *other than* the furnishing of a standard panel of 7 randomly selected arbitrators, then the requestor must certify that one of the following conditions applies:

(1) Both parties agree to the request, or

(2) There is no conflict with the parties' collective bargaining agreement.

The DAS will consider all statements as having been made in good faith and will honor requests as submitted. Absent statements conforming to the requirements of this paragraph, the unilateral request will not be honored.

§ 1404.10 Arbitrability.

If either party claims that a dispute is not subject to arbitration, the DAS will not decide the merits of such a claim.

§ 1404.11 Nominations of Arbitrators—Standard and Non-Standard Panels.

(a) The DAS will submit a randomly selected standard panel to the parties containing the names of seven (7) arbitrators accompanied by a biographical sketch for each member of the panel. This sketch states the background, qualifications, experience, and per diem fee, as furnished to the DAS by the arbitrator. It also states that other fees may exist, such as cancellation, postponement, rescheduling, or administrative fees, as furnished by the arbitrator, but does not state the amounts of such other fees. Requests for a standard panel of 7 arbitrators, whether joint or unilateral, will be honored without the need for compliance with Section 1404.9(e). Joint requests for a non-standard panel, a direct appointment of an arbitrator, or other service will also be honored without compliance with Section 1404.9(e) so long as the request does not otherwise conflict with the regulations in this Subpart C.

(b) Unilateral requests for a non-standard panel requesting (1) a different number of arbitrators (2) arbitrators with special qualifications (3) arbitrators located in particular cities, states or other areas, or (4) otherwise requesting a panel other than a standard list of seven arbitrators, must conform to the requirements of Section 1404.9(e).

(c) All panels submitted to the parties by the DAS, and all letters issued by the DAS making a direct appointment, will have an assigned FMCS case number. All future communications between the parties and the DAS must refer to this case number.

(d) The DAS considers various factors when selecting names for inclusion on a panel. Such factors include, but are not limited to, general acceptability, geographical location, availability and the need to expose new arbitrators to the selection process. The DAS has no obligations to put an individual on any given panel, or on a minimum number of panels in any fixed period, such as a month or a year.

(1) The geographical location of arbitrators placed on panels is governed by the site of the dispute as stated on the request received by the DAS.

(2) If at any time both parties request that a name or names be omitted from a panel, such name or names will be omitted, unless the number of names is excessive.

(3) If at any time both parties request that a name or names be included on a panel, such name or names will be included, unless the number of names is excessive.

(4) If a unilateral request is made to omit or include names on a panel, the request must not be for an excessive number and must comply with the provisions of Section 1404.9(e).

(e) In most cases, an arbitrator is chosen from one panel. However, if jointly requested, the DAS will furnish a second, and third panel to the parties. If a second or third panel is requested by only one party, the request will be honored if it is made in conformance with the procedures stated at § 1404.9(e). Requests for further panels will not be honored. If parties are unable to agree on a selection after having received three panels, they may wish to consider a direct appointment pursuant to § 1404.12(c).

§ 1404.12 Selection by Parties and Direct Appointments.

(a) The parties must notify the DAS of their selection of an arbitrator *or* of the decision not to proceed with arbitration. Consistent failure to follow this procedure may lead to a denial of future DAS services. Should an arbitrator be notified directly by the parties that he or she has been selected, the arbitrator must promptly notify the DAS of the selection and his or her willingness to serve. Upon notification of the selection of an arbitrator, the DAS will make a formal appointment of the arbitrator. The arbitrator, upon notification of appointment, is expected to communicate with the parties within 14 days to arrange for preliminary matters, such as the date and place of hearing.

(b) Where the parties' collective bargaining agreement is silent on the manner of selecting arbitrators, the parties may wish to consider any jointly determined method or one of the following methods for selection of an abitrator from a panel:

(1) Each party alternately strikes a name from the submitted panel until one remains, or

(2) Each party advises the DAS of its order of preference by numbering *each name* on the panel and submitting the numbered lists in writing to the DAS. The name that has the lowest accumulated numerical number will be appointed.

(3) If the above method, or any other method calling for parties to make separate submissions to the DAS, is selected, the following time limit will apply:

(i) If one party fails to make its submission within 20 calendar days from the date of receipt by FMCS of the other party's submission, the DAS shall respond to the submission it has received by making an appointment based on that one submission.

(ii) The DAS, upon receipt of the first submission by a party, will notify the other party of the date of receipt and of the 20-calendar day time limit.

(iii) Upon expiration of the 20-calendar day time limit, and in the absence of a submission by the other party, the DAS will notify the party which made the submission that an appointment will be made, if the submitting party provides a certification in accordance with the requirements of Section 1404.9(e).

(c) The DAS will make a direct appointment of an arbitrator either on joint or unilateral request. If the request is unilateral, it must be accompanied by a statement as provided for in § 1404.9(e), that certifying either (1) the request is agreed to by both parties, or (2) the request does not conflict with the applicable contract.

(d) The issuance of a DAS panel of names, or the issuance of a DAS designated name as a direct appointment, in no way signifies a determination concerning arbitrability or an interpretation of the terms and conditions stated in the parties' collective bargaining agreement. The resolution of disputes as to such matters rests solely with the parties.

§ 1404.13 Conduct of Hearings.

(a) All proceedings conducted by the arbitrators shall be in conformity with the contractual obligations of the parties. The arbitrator shall comply with § 1404.4(b) of these regulations. The conduct of the arbitration proceeding is under the arbitrator's jurisdiction and control and the arbitrator's decision shall be based upon the evidence and testimony presented at the hearing or otherwise incorporated in the record of the proceeding. The arbitrator may, unless prohibited by law, proceed in the absence of any party who, after due notice, fails to be present or to obtain a postponement. An award rendered in the *ex parte* proceeding of this nature must be based upon evidence presented to the arbitrator.

§ 1404.14 Decision and Awards.

(a) Arbitrators shall make awards no later than 60 days from the date of the closing of the record as determined by the arbitrator, unless otherwise agreed upon by the parties or specified by the collective bargaining agreement or law. A failure to render timely awards reflects upon the performance of an arbitrator and may lead to removal from the FMCS Roster.

(b) The parties should inform the DAS whenever a decision is unduly delayed. The arbitrator shall notify the DAS if and when the arbitrator (1) cannot schedule, hear, and render decisions promptly, or (2) learns a dispute has been settled by the parties prior to the decision.

(c) Within 15 days after an award has been submitted to the parties, the arbitrator shall submit an Arbitrator's Report and Fee Statement, Form R-19, to FMCS showing a breakdown of the fee and expense charges so that the Service may review conformance with stated charges under Section 1404.12(a). The Form R-19 is not to be used for purpose of billing the parties.

(d) While the Service encourages the publication of arbitration awards, arbitrators should not give publicity to awards they issue if objected to by one of the parties.

§ 1404.15 Fees and Charges of Arbitrators.

(a) No administrative or filing fee is charged by the Service. All arbitrators listed on the Roster may charge a per diem fee and other predetermined fees for services, if the amount of such fees have been provided in advance to the Service. Each arbitrator's maximum per diem fee and the existence of other predetermined fees, if any, are set forth on a biographical sketch which is sent to the parties when panels are submitted. These are the controlling fees for a maximum of 30 days unless otherwise specified. The arbitrator shall not change any fee or add charges without giving at least 30 days advance notice to the Service. Arbitrators with dual business addresses shall bill the parties for expenses from the nearest business address to the hearing site. Arbitrators shall submit their schedule of fees to both parties when accepting arbitration appointments.

(b) In cases involving unusual amounts of time and expenses relative to pre-hearing and post-hearing administration of a particular case, an administrative charge may be made by the arbitrator.

(c) All charges other than those specified in 1404.15(a) shall be divulged to and agreement obtained by the arbitrator with the parties immediately after appointment.

(d) The Service requests that it be notified of any arbitrator's deviation from the policies expressed herein. However, the Service does not resolve fee disputes.

§ 1404.16 Reports and Biographical Sketches.

(a) Arbitrators listed on the Roster shall execute and return all documents, forms and reports required by the Service. They shall also keep the Service informed of changes of address, telephone number, availability, and of any business or other connection or relationship which involves labor-management relations or which creates or gives the appearance of advocacy as defined in Section 1404.5(c)(1).

(b) The Service will prepare biological information on each person admitted to listing on the Roster from information supplied by applicants in their applications for initial listing. Arbitrators may request revision of biographical information at later dates to reflect changes in fees, the existing of additional charges, address, experience, or other relevant data. The Service reserves the right to decide and approve the format and content of biographical sketches.

Appendix

BILLING CODE 6372-01-M

FMCS Form R-43
Sep 1975

Form Approved
OMB NO. 23-R0007
Expires 7-31-88

FEDERAL MEDIATION AND CONCILIATION SERVICE
WASHINGTON, D.C. 20427

REQUEST FOR ARBITRATION SERVICES

To: Director, Arbitration Services
Federal Mediation and Conciliation Service
Washington, D.C. 20427

Date _____

1.

Name of Company _____

Name and Address of Representative to Receive Panel _____ (NAME)
_____ (STREET)
_____ (CITY, STATE, ZIP)

Telephone (include area code) _____

2.

Name of Union and Local No. _____

Name and Address of Representative to Receive Panel _____ (NAME)
_____ (STREET)
_____ (CITY, STATE, ZIP)

Telephone (include area code) _____

3. Site of Dispute _____ (CITY, STATE, ZIP)

4. Identification of Grievance _____ (By Number, Name, Issue, Etc.)

5.a. /_/ Standard Panel. This is a request for the names of 7 arbitrators.

b. /_/ Non-Standard Panel - Direct Appointment - Or Other Service. This is a request for a different number of arbitrators and/or for special requirements as to qualifications, geographical location, etc.; or is a request for the direct appointment of an arbitrator; or is for another service. Please describe:

_____

_____

6. If this is a request by only one party and the request is for a Non-Standard Panel - Direct Appointment - Or Other Service (Item 5b above) one of the following must be checked:

a. /_/ I certify that the other party has agreed to this request, or

b. /_/ I certify that there is no conflict with the applicable contract.

7. Type of Industry

- ☐ Manufacturing
- ☐ Construction
- ☐ Mining, Agriculture and Finance
- ☐ Federal Government
- ☐ State Government
- ☐ Local Government
- ☐ Public Utilities, Communications, Transportation (including trucking)
- ☐ Retail, Wholesale and Service Industries
- ☐ Other (Specify) _____

8. Signatures

_____ (COMPANY)

_____ (UNION)

Although the FMCS prefers to act upon a joint request of the parties, a submission will be made based on the request of a single party. However, any submission of a panel should not be construed as anything more than compliance with a request and does not reflect on the substance or arbitrability of the issue in dispute.

[FR Doc. 88-8517 Filed 4-19-88; 8:45 am]

BILLING CODE 6372-01-C

BEST COPY AVAILABLE

ENVIRONMENTAL PROTECTION AGENCY

40 CFR Part 52

[FRL-3367-8]

Approval and Promulgation of Air Quality Implementation Plans; Connecticut; Extension of Public Comment Period

AGENCY: Environmental Protection Agency (EPA).

ACTION: Proposed rule; extension of public comment period.

SUMMARY: On March 3, 1988 (53 FR 6842), EPA proposed approval of a revision submitted by the State of Connecticut for the Guilford Gravure Company, Incorporated. On April 4, 1988, the National Resources Defense Council (NRDC) requested an extension of the public comment period. EPA has evaluated this request and is hereby granting a thirty (30) day extension of the public comment period.

DATES: Comments should be received on or before May 4, 1988.

FOR FURTHER INFORMATION CONTACT: David B. Conroy; (617) 565-3252; FTS 835-3252.

Authority Citation: 42 U.S.C. 7401-7642.

Date: April 8, 1988.

Michael R. Deland,

Regional Administrator, Region I.

[FR Doc. 88-8657 Filed 4-19-88; 8:45 am]

BILLING CODE 6560-50-M

40 CFR Part 60

[AD-FRL-3320-3]

Standards of Performance for New Stationary Sources; State Plans for Designated Facilities

AGENCY: Environmental Protection Agency (EPA).

ACTION: Proposed Amendments and Notice of Public Hearing.

SUMMARY: This proposal would amend the existing requirement in 40 CFR 60.22(a) that a standard of performance for control of a designated pollutant from new sources must be promulgated before the Administrator may publish a draft emission guideline document on control of that designated pollutant from existing facilities. The effect of the proposed amendment would be to allow a draft or final emission guideline document to be published pursuant to section 111(d) of the Clean Air Act at the same time as the new source performance standard for similar new sources is proposed or promulgated pursuant to section 111(b). A public hearing will be held, if requested, to provide interested parties an opportunity for oral presentations of data or views concerning the proposed amendment.

DATES: Comments. Comments must be received on or before June 24, 1988.

Public Hearing. If anyone contacts EPA requesting to speak at a public hearing by May 17, 1988, a public hearing will be held on May 24, 1988 beginning at 10:00 a.m. Persons interested in attending the hearing should call Ms. Ann Eleanor, Standards Development Branch (MD-13), U.S. Environmental Protection Agency, Research Triangle Park, North Carolina 27711 at (919) 541-5578 to verify that a hearing will be held.

Request to Speak at Hearing. Persons wishing to present oral testimony must contact EPA by May 17, 1988.

ADDRESSES: *Comments.* Comments should be submitted (in duplicate if possible) to: Central Docket Section (LE-131), Attention Docket Number A-87-21, U.S. Environmental Protection Agency, 401 M Street SW., Washington, DC 20460.

Public Hearing. If anyone contacts EPA requesting a public hearing, it will be held at the EPA's Office of Administration Auditorium, Research Triangle Park, North Carolina. Persons interested in attending the hearing or wishing to present oral testimony should notify Ms. Ann Eleanor, Standards Development Branch (MD-13), U.S. Environmental Protection Agency, Research Triangle Park, North Carolina 27711, telephone number (919) 541-5578.

Docket. Docket No. A-87-21, containing supporting information used in developing the proposed amendment, is available for public inspection and copying between 8:00 a.m. and 4:00 p.m., Monday through Friday, at the EPA's Central Docket Section, South Conference Center, Room 4, 401 M Street SW., Washington, DC 20460. A reasonable fee may be charged for copying.

FOR FURTHER INFORMATION CONTACT: Susan Thorneloe, Emission Standards Division (MD-13), U.S. Environmental Protection Agency, Research Triangle Park, North Carolina 27711, telephone number (919) 541-5393.

SUPPLEMENTARY INFORMATION: On November 17, 1975 (40 FR 53340), EPA promulgated a new Subpart B in 40 CFR Part 60 to establish procedures and requirements for submittal of State plans for control of designated pollutants from existing facilities under section 111(d) of the Clean Air Act. A designated pollutant is defined by 40 CFR 60.21(a) as,

> any air pollutant, emissions of which are subject to a standard of performance for new stationary sources but for which air quality criteria have not been issued, and which is not included on a list published under Section 108(a) or Section 112(b)(1)(A) of the Act.

The rule at 40 CFR 60.22(a) requires that the new source performance standard for a designated pollutant must be promulgated before the corresponding draft emission guideline document for existing sources is published. When originally proposed on October 3, 1974 (39 FR 36102), the rule required that draft emission guidelines for control of emissions of designated pollutants from existing facilities be published at the same time corresponding standards of performance for new sources were proposed.

After the 1974 proposal, comments were received regarding the timing of the proposal of standards for new facilities and publication of the corresponding draft emission guidelines for existing facilities. A few commenters said that more time would be needed to evaluate a standard of performance and the corresponding draft emission guidelines than would be allowed by simultaneous proposal of the standard and publication of the draft emission guidelines. Commenters also stated that by publishing draft emission guidelines after promulgation of the corresponding new source performance standard, EPA could benefit from the comments on the standard of performance in developing the emission guideline. Based on these comments, when the EPA promulgated the procedures and requirements in 1975, the timing of the rule was changed to require that draft emission guidelines be announced for public comment after promulgation of the corresponding standard of performance for new sources.

Today EPA is revising the requirements of 40 CFR 60.22(a) relating to the timing of promulgation of the new source performance standard for designated pollutants and publication of the corresponding draft emission guideline document. Specifically, today's proposal provides EPA the flexibility to publish draft emission guidelines either at the same time or after the corresponding standard of performance for new sources is proposed. Similarly, the final emission guidelines could be published at the same time or after the corresponding new source performance standard is promulgated. However, it should be noted that today's amendment does not commit EPA to propose the new source performance standard and

publish the draft emission guidelines simultaneously. Rather, it gives EPA flexibility to choose announcement of emission guidelines at the same time or after the new source performance standard is proposed or promulgated.

This flexibility is appropriate. Depending on the specific source category involved, simultaneous proposal of the new source performance standard and publication of the associated draft emission guideline document may be reasonable and necessary to efficiently achieve the goal of protecting public health and welfare. For example, when regulatory studies of new and existing sources can be completed at the same time, waiting until promulgation of the new source performance standard before publishing the draft emission guideline document would unnecessarily delay control of existing sources. In addition, for certain source categories, it would be useful to receive comments on draft emission guidelines at the same time as comments on the proposed new source performance standard. In these cases, flexibility to propose the new source performance standard and to announce the draft emission guidelines at the same time is important. In some circumstances, however, it might still be best to promulgate the new source performance standard before publishing the draft emission guideline document.

On July 7, 1987 (52 FR 25399), the Agency published an advance notice of proposed rulemaking announcing the intent to regulate new and existing municipal waste combustor emissions under the authority of Clean Air Act sections 111(b) and 111(d), respectively. Since both new and existing sources have been studied simultaneously, this source category is an example of an instance where it would be reasonable to publish the draft emission guideline document at the same time the new source performance standard is proposed.

Public Hearing

A public hearing will be held, if requested, to discuss the proposed amendment in accordance with section 307(d)(5) of the Clean Air Act. Persons wishing to make oral presentations should contact EPA at the address given in the **ADDRESSES** section of this preamble. Oral presentations will be limited to 15 minutes each. Any member of the public may file a written statement with EPA before, during, or within 30 days after the hearing. Written statements should be addressed to the Central Docket Section at the address given in the **ADDRESSES** section of this preamble.

A verbatim transcript of the hearing and written statements will be available for public inspection and copying during normal working hours at the EPA's Central Docket Section in Washington, DC (see **ADDRESSES** section of this preamble).

Docket

The docket is an organized and complete file for all the information submitted to or otherwise considered by EPA in the development of this proposed rulemaking. The principal purposes of the docket are: (1) to allow interested parties to identify and locate documents so that they can effectively participate in the rulemaking process and (2) to serve as the record in case of judicial review (except for interagency review materials [Section 307(d)(7)(A)]).

Executive Order 12291 Review

Under Executive Order 12291, EPA must judge whether a regulation is "major" and therefore subject to the requirement of a Regulatory Impact Analysis. The proposed amendment is not major because it would result in none of the adverse economic effects set forth in Section 1 of the Order as grounds for finding a regulation to be major.

This amendment was submitted to the OMB for review as required by Executive Order 12291. Any written comments from OMB to EPA and any EPA responses to those comments will be included in Docket A-87-21. This docket is available for public inspection at EPA's Central Docket Section, which is listed in the **ADDRESSES** section of this notice.

Paperwork Reduction Act

There are no information collection requirements in this proposed amendment. Therefore, review and approval of such requirements by the Office of Management and Budget do not apply.

Regulatory Flexibility Act Compliance

Pursuant to the provisions of 5 U.S.C. 605(b), I hereby certify that this amendment, if promulgated, will not have a significant economic impact on a substantial number of small business entities because the impact of the proposed amendment is not significant.

List of Subjects in 40 CFR Part 60

Air pollution control, Designated pollutants, Inter-governmental relations.

Date: April 10, 1988.

Lee M. Thomas,

Administrator.

40 CFR Part 60 is amended as follows:

PART 60—[AMENDED]

1. The authority citation for Part 60 continues to read as follows:

Authority: Sections 101, 111, 114, 301, Clean Air Act as amended (42 U.S.C. 7401, 7411, 7414, 7601).

2. Section 60.22 is amended by revising paragraph (a) to read as follows:

§ 60.22 Publication of guideline documents, emission guidelines, and final compliance times.

(a) Concurrently upon or after proposal of a standard of performance for the control of a designated pollutant from affected facilities, the Administrator will publish a draft guideline document containing information pertinent to control of the designated pollutant from designated facilities. Notice of the availability of the draft guideline document will be published in the **Federal Register** and public comments on its contents will be invited. After consideration of public comments and upon or after promulgation of a standard of performance for control of a designated pollutant from affected facilities, a final guideline document will be published and notice of its availability will be published in the **Federal Register.**

* * * * *

[FR Doc. 88-8656 Filed 4-19-88; 8:45 am]

BILLING CODE 6560-50-M

FEDERAL COMMUNICATIONS COMMISSION

47 CFR Part 73

[MM Docket No. 88-144, RM-6167]

Radio Broadcasting Services; Larned, KS

AGENCY: Federal Communications Commission.

ACTION: Proposed rule.

SUMMARY: This document requests comments on a petition filed by Thomas L. Higgins proposing the allocation of FM Channel 295A to Larned, Kansas, as that community's second FM broadcast service. The coordinates used for this proposal are 38-10-48 and 99-06-00.

DATES: Comments must be filed on or before June 6, 1988, and reply comments on or before June 21, 1988.

ADDRESS: Federal Communications Commission, Washington, DC 20554. In addition to filing comments with the FCC, interested parties should serve the petitioner, or its counsel or consultant,

as follows: Thomas L. Higgins, 9913 Lakeshore Blvd., Cleveland, Ohio 44108.

FOR FURTHER INFORMATION CONTACT: Kathleen Scheuerle, Mass Media Bureau, (202) 634-6530.

SUPPLEMENTARY INFORMATION: This is a summary of the Commission's Notice of Proposed Rule Making, MM Docket No. 88-144, adopted March 24, 1988, and released April 14, 1988. The full text of this Commission decision is available for inspection and copying during normal business hours in the FCC Dockets Branch (Room 230), 1919 M Street NW., Washington, DC. The complete text of this decision may also be purchased from the Commission's copy contractors, International Transcription Service, (202) 857-3800, 2100 M Street NW., Suite 140, Washington, DC 20037.

Provisions of the Regulatory Flexibility Act of 1980 do not apply to this proceeding.

Members of the public should note that from the time a Notice of Proposed Rule Making is issued until the matter is no longer subject to Commission consideration or court review, all *ex parte* contacts are prohibited in Commission proceedings, such as this one, which involve channel allotments. See 47 CFR 1.1231 for rules governing permissible *ex parte* contact.

For information regarding proper filing procedures for comments, See 47 CFR 1.415 and 1.420.

List of Subjects in 47 CFR Part 73

Radio broadcasting.

Federal Communications Commission.

Steve Kaminer,

Deputy Chief, Policy and Rules Division, Mass Media Bureau.

[FR Doc. 88-8628 Filed 4-19-88; 8:45 am]

BILLING CODE 6712-01-M

---

47 CFR Part 73

[MM Docket No. 88-143, RM-6159]

Radio Broadcasting Services; Cloquet and Grand Marais, MN

AGENCY: Federal Communications Commission.

ACTION: Proposed rule.

SUMMARY: This document requests comments on a petition filed by WKLK, Inc. proposing the substitution of FM Channel 263C1 for Channel 265A at Cloquet, Minnesota, and modification of its license for Station WKLK-FM, to specify operation on the higher class channel. To accommodate Channel 263C1 at Cloquet, an additional channel substitution would be necessary. Channel 263C must be substituted for Channel 237C at Grand Marais, Minnesota. An application for Channel 263C at Grand Marais has been filed by Timothy D. Martz. Canadian concurrence must be obtained for the allotment of Channel 263C1 at Cloquet and Channel 237C at Grand Marais. The coordinates used in this proposal are, for Cloquet, Minnesota, Channel 263C1, 46-45-50 and 92-22-12, and for Grand Marais, Minnesota, Channel 237C, 47-59-13 and 90-24-12.

DATES: Comments must be filed on or before June 6, 1988, and reply comments on or before June 21, 1988.

ADDRESS: Federal Communications Commission, Washington, DC 20554. In addition to filing comments with the FCC, interested parties should serve the petitioner, or its counsel or consultant, as follows: Anne Thomas Paxson, Borsari & Paxson, 2100 M Street NW., Suite 610, Washington, DC 20037, (Counsel for the petitioner).

FOR FURTHER INFORMATION CONTACT: Kathleen Scheuerle, Mass Media Bureau, (202) 634-6530.

SUPPLEMENTARY INFORMATION: This is a summary of the Commission's Notice of Proposed Rule Making, MM Docket No. 88-143, adopted March 24, 1988, and released April 14, 1988. The full text of this Commission decision is available for inspection and copying during normal business hours in the FCC Dockets Branch (Room 230), 1919 M Street NW., Washington, DC. The complete text of this decision may also be purchased from the Commission's copy contractors, International Transcription Service, (202) 857-3800, 2100 M Street NW., Suite 140, Washington, DC 20037.

Provisions of the Regulatory Flexibility Act of 1980 do not apply to this proceeding.

Members of the public should note that from the time a Notice of Proposed Rule Making is issued until the matter is no longer subject to Commission consideration or court review, all *ex parte* contacts are prohibited in Commission proceedings, such as this one, which involve channel allotments. See 47 CFR 1.1231 for rules governing permissible *ex parte* contact.

For information regarding proper filing procedures for comments, See 47 CFR 1.415 and 1.420.

List of Subjects in 47 CFR Part 73

Radio broadcasting.

Federal Communications Commission.

Steve Kaminer,

Deputy Chief, Policy and Rules Division, Mass Media Bureau.

[FR Doc. 88-8631 Filed 4-19-88; 8:45 am]

BILLING CODE 6712-01-M

---

47 CFR Part 73

[MM Docket No. 88-145, RM-6201]

Radio Broadcasting Services; Summerville, SC

AGENCY: Federal Communications Commission.

ACTION: Proposed rule.

SUMMARY: The Commission requests comments on a petition filed by Millennium Communications of Charleston, Inc. seeking the substitution of Channel 227C2 for Channel 228A at Summerville, South Carolina, and the modification of its license for Station WWWZ-FM to specify operation on the higher powered channel. In accordance with § 1.420(g) of the Commission's Rules, the license of Station WWWZ-FM can be modified to specify adjacent Channel 227C2 without requiring the petitioner to demonstrate the availability of an additional equivalent channel for use by other interested parties. Channel 227C2 can be allocated to Summerville, South Carolina, in compliance with the Commission's minimum distance separation requirements with a site restriction of 23.7 kilometers (14.7 miles) northeast to avoid a short-spacing to Station WEAS-FM, Channel 226C1, Savannah, Georgia. The restricted site coordinates are: North Latitude 33-11-17; West Longitude 80-01-27.

DATES: Comments must be filed on or before June 6, 1988 and reply comments on or before June 21, 1988.

ADDRESS: Federal Communications Commission, Washington, DC 20554. In addition to filing comments with the FCC, interested parties should serve the petitioner, or its counsel or consultant, as follows: Alan C. Campbell, Esq., Elizabeth J. Gustafson, Esq., Dow, Lohnes & Albertson, 1255-23rd Street, NW., Washington, DC 20037 (Counsel to petitioner).

FOR FURTHER INFORMATION CONTACT: Leslie K. Shapiro, Mass Media Bureau, (202) 634-6530.

SUPPLEMENTARY INFORMATION: This is a summary of the Commission's Notice of Proposed Rule Making, MM Docket No. 88-145, adopted March 21, 1988, and released April 14, 1988. The full text of this Commission decision is available

for inspection and copying during normal business hours in the FCC Dockets Branch (Room 230), 1919 M Street, NW., Washington, DC. The complete text of this decision may also be purchased from the Commission's copy contractor, International Transcription Service, (202) 857-3800, 2100 M Street, NW., Suite 140, Washington, DC 20037.

Provisions of the Regulatory Flexibility Act of 1980 do not apply to this proceeding.

Members of the public should note that from the time a Notice of Proposed Rule Making is issued until the matter is no longer subject to Commission consideration or court review, all *ex parte* contacts are prohibited in Commission proceedings, such as this one, which involve channel allotments. See 47 CFR 1.1231 for rules governing permissible *ex parte* contact.

For information regarding proper filing procedures for comments, see 47 CFR 1.415 and 1.420.

List of Subjects in 47 CFR Part 73

Radio broadcasting.

Federal Communications Commission.

Steve Kaminer,

Deputy Chief, Policy and Rules Division, Mass Media Bureau.

[FR Doc. 88-8634 Filed 4-19-88; 8:45 am]

BILLING CODE 6712-01-M

Notices

Federal Register
Vol. 53, No. 76
Wednesday, April 20, 1988

This section of the FEDERAL REGISTER contains documents other than rules or proposed rules that are applicable to the public. Notices of hearings and investigations, committee meetings, agency decisions and rulings, delegations of authority, filing of petitions and applications and agency statements of organization and functions are examples of documents appearing in this section.

DEPARTMENT OF AGRICULTURE

Forms Under Review by Office of Management and Budget

April 15, 1988.

The Department of Agriculture has submitted to OMB for review the following proposals for the collection of information under the provisions of the Paperwork Reduction Act (44 U.S.C. Chapter 35) since the last list was published. This list is grouped into new proposals, revisions, extensions, or reinstatements. Each entry contains the following information.

(1) Agency proposing the information collection; (2) Title of the information collection; (3) Form number(s), if applicable; (4) How often the information is requested; (5) Who will be required or asked to report; (6) An estimate of the number of responses; (7) An estimate of the total numbers of hours needed to provide the information; (8) An indication of whether section 3504(h) of P.L. 96–511 applies; (9) Name and telephone number of the agency contact person.

Questions about the items in the listing should be directed to the agency person named at the end of each entry. Copies of the proposed forms and supporting documents may be obtained from: Department Clearance Officer, USDA, OIRM, Room 404–W Admin. Bldg., Washington, DC 20250 (202) 447–2118.

Comments on any of the items listed should be submitted directly to: Office of Information and Regulatory Affairs, Office of Management and Budget, Washington, DC 20503, Attn: Desk Officer for USDA.

If you anticipate commenting on a submission but find that preparation time will prevent you from doing so promptly, you should advise the OMB Desk Officer of your intent as early as possible.

Reinstatement

- Food and Nutrition Service
  17 CFR Parts 253 and 254, Food Distribution Program on Indian Reservations/Oklahoma
  AD–623, SF–269 and SF–270
  Recordkeeping; Monthly; Quarterly; Semi-annually; and Annually
  Individuals or households; State or local governments; 45,292 responses; 209,596 hours; not applicable under 3504(h)
  Sandra J. Robinson (702) 756–3660

Donald E. Hulcher,
Acting Departmental Clearance Officer.
[FR Doc. 88–8687 Filed 4–19–88; 8:45 am]
BILLING CODE 3410-01-M

Soil Conservation Service

Madison Canal Flood Prevention RC&D Measure, MD

AGENCY: Soil Conservation Service, USDA.

ACTION: Notice of a Finding of No Significant Impact.

SUMMARY: Pursuant to section 102(2)(C) of the National Environmental Policy Act of 1969; the Council on Environmental Quality Guidelines (40 CFR Part 1500); and the Soil Conservation Service Guidelines (7 CFR Part 650); the Soil Conservation Service, U.S. Department of Agriculture, gives notice that an environmental impact statement is not being prepared for the Madison Canal Flood Prevention RC&D Measure, Dorchester County, Maryland.

FOR FURTHER INFORMATION CONTACT: Mr. Pearlie S. Reed, State Conservationist, Soil Conservation Service, 4321 Hartwick Road, College Park, Maryland 20740, telephone 301–344–4180.

SUPPLEMENTARY INFORMATION: The environmental assessment of this federally assisted action indicates that the project will not cause significant local, regional, or national impacts on the environment. As a result of these findings, Mr. Pearlie S. Reed, State Conservationist, has determined that the preparation and review of an environmental impact statement are not needed for this project.

The measure concerns a plan to control tidal flooding on agricultural land. The planned works of improvement include installation of two 3 feet by 5 feet cast iron, automatic tidegates. The tidegates will be mounted on a concrete headwall across Madison Canal, immediately downstream of the Route 16 bridge. A minor amount of excavating and filling will be perofrmed to re-route roadside drainage and to prevent tidal water from flowing around the structure.

The Notice of a Finding of No Significant Impact (FONSI) has been forwarded to the Environmental Protection Agency and various Federal, State, and local agencies and interested parties. Basic data developed during the environmental assessment are on file and may be reviewed by contacting Mr. Pearlie S. Reed. A limited number of copies of the FONSI are available to fill single copy requests at the above address.

No administrative action on implementation of the proposal will be taken until 30 days after the date of this publication in the **Federal Register**.

(This activity is listed in the catalog of Federal Domestic Assistance under No. 10.901—Resource Conservation and Development—and is subject to the provisions of Executive Order 12372 which requires intergovernment consultation with state and local officials.)

Pearlie S. Reed,
State Conservationist.
[FR Doc. 88–8680 Filed 4–19–88; 8:45 am]
BILLING CODE 3410-16-M

COMMISSION ON CIVIL RIGHTS

Alaska Advisory Committee; Public Meeting

Notice is hereby given, pursuant to the provisions of the Rules and Regulations of the U.S. Commission on Civil Rights, that the Alaska Advisory Committee to the Commission will convene at 1:00 p.m. and adjourn at 4:00 p.m. on May 10, 1988, at the Federal Building, 701 C Street, (Room C–121), Anchorage, Alaska 99513. The purpose of the meeting is to develop future program plans and to review prior program activities, including the November 1987 forum on minority and womens' business enterprise programs.

Persons desiring additional information, or planning a presentation to the Committee, should contact Committee Chair-person, Daniel Alex or Philip Montez, Directof the Western

Regional Divison (213) 894-3437, (TDD 213/894-0508). Hearing impaired persons who will attend the meeting and require the services of a sign language interpreter, should contact the Regional Division office at least five (5) working day before the scheduled date of the meeting.

The meeting will be conducted pursuant to the provisions of the rules and regulations of the Commission.

Dated at Washington, DC., April 12, 1988.

Susan J. Prado,

Acting Staff Director.

[FR Doc. 88-8598 Filed 4-19-88; 8:45 am]

BILLING CODE 6335-01-M

DEPARTMENT OF COMMERCE

International Trade Administration

[A-475-703]

Preliminary Determination of Sales at Less than Fair Value: Granular Polytetrafluoroethylene Resin from Italy

AGENCY: Import Administration, International Trade Administration, Commerce.

ACTION: Notice.

SUMMARY: We preliminarily determine that granular polytetrafluoroethylene (PTFE) resin from Italy is being, or is likely to be, sold in the United States at less than fair value. We have notified the U.S. International Trade Commission (ITC) of our determination and have directed the U.S. Customs Service to suspend liquidation of all entries of granular PTFE resin from Italy as described in the "Suspension of Liquidation" section of this notice. If this investigation proceeds normally, we will make a final determination by June 28, 1988.

EFFECTIVE DATE: April 20, 1988.

FOR FURTHER INFORMATION CONTACT: Brian H. Nilsson or Michael Ready, Office of Investigations, Import Administration, International Trade Administration, U.S. Department of Commerce, 14th Street and Constitution Avenue NW., Washington, DC 20230, telephone: (202) 377-5332 or 377-2613.

SUPPLEMENTARY INFORMATION:

Preliminary Determination

We preliminarily determine that granular PTFE resin from Italy is being, or is likely to be, sold in the United States at less than fair value, as provided in section 733 of the Tariff Act of 1930, as amended (19 U.S.C. 1673b) (the Act). The estimated weighted-average margins are shown in the "Suspension of Liquidation" section of this notice.

Case History

Since our notice of initiation (52 FR 45982, December 3, 1987), the following events have occurred. On December 21, 1987, the ITC determined that there is reasonable indication that a U.S. industry is materially injured by reason of imports of granular PTFE resin (52 FR 49209, December 30, 1987).

On January 20, 1988, we presented an antidumping duty questionnaire to Montefluos S.p.A., which accounts for most of the exports of granular PTFE resin from Italy during the period of investigation.

On February 17, 1988, we granted Montefluos an extension of two weeks for filing its response. The questionnaire response was received from Montefluos on March 4, 1988. Three deficiency letters were sent and supplemental responses were received on March 22, 1988, and March 30, 1988.

Scope of Investigation

The product covered by this investigation is granular polytetrafluoroethylene (PTFE) resin, filled and unfilled, provided for in item 445.54 of the *Tariff Schedules of the United States* (TSUS) and currently classifiable under Harmonized System (HS) item number 3904.61.00. PTFE dispersions in water and fine powders are not covered by this investigation.

Montefluos has argued that the Department should not include filled PTFE resins within the scope of the investigation because (1) Du Pont, the sole petitioner and the only company supporting the petition, does not produce filled resins and, therefore, does not have the requisite standing to warrant an investigation of filled PTFE; (2) Du Pont's fear of circumvention, its sole reason for including filled PTFE in the petition, is unfounded, since (a) filled PTFE cannot be reprocessed or converted into unfilled PTFE or marketed as a substitute for unfilled PTFE and (b) the U.S. producers that account for about 90 percent of the U.S. production of filled PTFE make their own unfilled PTFE which is used as an imput with the filled product; (3) filled PTFE cannot be substituted for unfilled PTFE since it is a different product in use and composition; and (4) two of the four producers of filled resins in the United States, who hold the vast majority of U.S. market share for filled resins, oppose the inclusion of filled PTFE within the scope of the investigation.

The petitioner argues that the Department should continue to investigate filled resins because (1) filled resins fall within the same class or kind of merchandise as unfilled resins, according to the criteria normally used by the Department; (2) the possibility of circumvention remains an issue; and (3) the ITC found that filled and unfilled resins are within one "like product" category.

Du Pont filed the petition on behalf of the industry that manufactures granular PTFE resin, filled and unfilled. Du Pont was deemed to be an interested party under section 771(9)(C) of the Act because it manufactures the product under investigation. No domestic producer, other than parties that are related to, and/or import from, a respondent, and who are excludable under section 771(4)(B) of the Act, has objected to the inclusion of filled PTFE in this investigation.

Furthermore, the International Trade Commission (ITC) has preliminarily found that filled and unfilled PTFE resins constitute one "like product" under section 771(10) of the Act and found that there is one industry producing the "like product" in the United States, as defined by section 771(4). USITC Pub. 2043 (December 1987). Under the circumstances, we preliminarily determine that the petitioner possesses the requisite standing to file a petition including filled resins under section 732(b) because the petitioner is an interested party with respect to the "like product", in accordance with section 771(9)(C). Thus, we have continued to include filled granular PTFE resins within the scope of this investigation.

We will, however, continue to examine the issue of whether filled PTFE is within the scope of the investigation for our final determination. We are considering the following factors, based on additional information currently being complied: (1) General physical characteristics; (2) the expectations of the ultimate purchasers; (3) the channels of trade in which the product is sold; (4) the manner in which the product is advertised and displayed; and (5) the ultimate use of the merchandise in question.

Period of Investigation

The period of investigation is June 1, 1987, through November 30, 1987.

Such or Similar Comparisons

We determined that Montefluos had sufficient home market sales of such or similar merchandise to form the basis for calculating foreign market value.

Where possible, we compared sales of identical merchandise in the two markets. Where identical merchandise was not sold in both markets, we based our comparisons on the most similar merchandise within each product category, basing our matches on basic properties, average particle size, bulk density, radial shrink, and transforming conditions. Montefluos has claimed that there is no difference in costs between each grade. Accordingly, no adjustments for differences in merchandise were made.

Fair Value Comparisons

To determine whether sales of granular PTFE resin from Italy to the United States were made at less than fair value, we compared the United States price to the foreign market value as specified below. Montefluos failed to report data on filled resins. Therefore, for purposes of our preliminary determination, the dumping margin for sales of filled resins was based on best information available, to compensate for that percentage of sales not reported, in accordance with section 776(b) of the Act. This margin, based on the petition, has been factored into Montefluos' weighted-averaged margin.

United States Price

For all sales by Montefluos, we based United States price on exporter's sales price (ESP), in accordance with section 772(c) of the Act, because sales were made after importation. We calculated exporter's sales price based on packed, c.i.f. duty paid prices to unrelated purchasers in the United States. We made deductions, where appropriate, for brokerage and handling, ocean freight, insurance charges, U.S. duty, U.S. inland frieght, credit expenses, and other U.S. selling expenses pursuant to section 772(e) (1) and (2) of the Act.

Foreign Market Value

In accordance with section 773 of the Act, we calculated foreign market value based on packed, c.i.f. delivered prices to unrelated purchasers. We made deductions, where appropriate, for inland freight and insurance, credit, rebates, and warranty expenses. We offset indirect selling expenses incurred on home market sales up to the amount of selling expenses incurred on sales in the U.S., in accordance with § 353.15(c) of our regulations.

In order to adjust for differences in packing between the two markets, we deducted home market packing costs from the foreign market value and added U.S. packing costs.

Currency Conversion

Since all U.S. sales were exporter's sales price transactions, we used the official exchange rates in effect on the date of sale, in accordance with section 773(a)(1) of the Act, as amended by section 615 of the Trade and Tariff Act of 1984. All currency conversions were made at rates certified by the Federal Reserve Bank of New York.

Verification

We will verify the information used in making our final determination in accordance with section 776(a) of the Act.

Suspension of Liquidiation

In accordance with section 733(d) of the Act, we are directing the U.S. Customs Service to suspend liquidation of all entries of granular PTFE resin from Italy, as defined in the "Scope of Investigation" section of this notice, that are entered or withdrawn from warehouse, for consumption, on or after the date of publication of this notice in the **Federal Register**. The U.S. Customs Service shall require a cash deposit or posting of a bond equal to the estimated amounts by which the foreign market value of granular PTFE resin from Italy exceeds the United States price, as shown below. This suspension of liquidation will remain in effect until further notice. The weighted-average margins are as follows:

Manufacturer/producer/exporter	Weighted-average margin percentage
Montefluous S.p.A.	45.23
All others	45.23

ITC Notification

In accordance with section 733(f) of the Act, we have notified the ITC of our determination. In addition, we are making available to the ITC all nonprivileged and nonproperietary information relating to this investigation. We will allow the ITC access to all privileged and business proprietary information in our files, provided the ITC confirms that it will not disclose such information, either publicly or under administrative protective order, without the written consent of the Acting Assistant Secretary for Import Administration.

The ITC will determine whether these imports are materially injuring, or threaten material injury to, a U.S. industry before the later of 120 days after the date of this determination or 45 days after final determination, if affirmative.

Public Comment

In accordance with 19 CFR 353.47, if requested, we will hold a public hearing to afford interested parties an opportunity to comment on this preliminary determination at 9:30 a.m. on June 6, 1988, at the U.S. Department of Commerce, Room 1414, 14th Street and Constitution Avenue NW., Washington, DC. 20230.

Individuals who wish to participate in the hearing must submit a request to the Acting Assistant Secretary for Import Administration, Room B-099, at the above address within ten days of the publication of this notice. Requests should contain: (1) The party's name, address, and telephone number; (2) the number of participants; (3) the reasons for attending; and (4) a list of the issues to be discussed.

In addition, pre-hearing briefs in at least ten copies, both public and non-public versions, must be submitted to the Acting Assistant Secretary by May 31, 1988. Oral presentations will be limited to issues raised in the briefs. All written views should be filed in accordance with 19 CFR 353.46, at the above address, in at least ten copies, not less than 30 days before the date of the final determination, or, if a hearing is held, within seven days after the hearing transcript is available.

This determination is published pursuant to section 733(f) of the Act (19 U.S.C. 1673b(f)).

Joseph Spetrini,

Acting Assistant Secretary for Import Administration.

Dated: April 14, 1988.

[FR Doc. 88-8674 Filed 4-19-88; 8:45 am]

BILLING CODE 3510-DS-M

[A-588-707]

Preliminary Determination of Sales at Less than Fair Value: Granular Polytetrafluoroethylene Resin from Japan

AGENCY: Import Administration, International Trade Administration, Commerce.

ACTION: Notice.

SUMMARY: We preliminarily determine that granular polytetrafluoroethylene (PTFE) resin from Japan is being, or is likely to be, sold in the United States at less than fair value. We have notified the U.S. International Trade Commission (ITC) of our determination and have directed the U.S. Customs Service to suspend liquidation of all

entries of granular PTFE resin from Japan as described in the "Suspension of Liquidation" section of this notice. If this investigation proceeds normally, we will make a final determination by June 28, 1988.

EFFECTIVE DATE: April 20, 1988.

FOR FURTHER INFORMATION CONTACT: Paul H. Tambakis (202) 377-4136 or Michael J. Ready (202) 377-2613, Office of Investigations, Import Administration, International Trade Administration, U.S. Department of Commerce, 14th Street and Constitution Avenue NW., Washington, DC 20230.

SUPPLEMENTARY INFORMATION:

Preliminary Determination

We preliminarily determine that granular PTFE resin from Japan is being, or is likely to be, sold in the United States at less than fair market value, as provided in section 733 of the Tariff Act of 1930, as amended (19 U.S.C. 1673b) (the Act). The estimated weighted-average margins are shown in the "Suspension of Liquidation" section of this notice.

Case History

Since our notice of initiation (52 FR 45983, December 3, 1987), the following events have occurred. On December 21, 1987, the ITC determined that there is reasonable indication that a U.S. industry is materially injured by reason of imports of granular PTFE resin from Japan (52 FR 49209, December 30, 1987).

On January 26, 1988, we presented an antidumping duty questionnaire to Daikin Industries (Daikin), which accounts for the majority of exports of granular PTFE resin from Japan during the period of investigation. Asahi Fluoropolymers, Inc. (Asahi), requested that it be allowed to participate in the investigation since it was a producer and exporter of PTFE resin. The Department sent a questionnaire to Asahi on January 26, 1988, as well.

On February 25, 1988, we were notified by Daikin that it would not be responding to the Department's questionnaire. We received questionnaire responses from Asahi between March 3 and March 30, 1988.

Scope of Investigation

The product covered by this investigation is granular polytetrafluoroethylene resin, filled and unfilled, as provided for in item 445.54 of the *Tariff Schedules of the United States* (TSUS) and currently classifiable under Harmonized System (HS) item number 3904.61.00. Polytetrafluoroethylene dispersions in water and fine powders are not covered by this investigation.

Asahi has argued that filled and unfilled granular PTFE resin should be treated as separate classes or kinds of merchandise. While the petitioner requested in the petition that filled granular PTFE resin be included in an investigation to prevent probable circumvention of a final dumping order on unfilled granular PTFE resin, the petitioner has not otherwise commented on this matter. We note that all granular PTFE resin exported to the United States by Asahi was unfilled. However, ICI Americas Inc. (ICIA), a U.S. company related to Asahi, imports a certain amount of unfilled granular PTFE resin from Asahi and fills it prior to selling it to unrelated customers in the United States.

Based on our reivew of relevant information currently on the record, we are treating all granular PTFE resin, both filled and unfilled, as one class or kind of merchandise for purposes of the preliminary determination. As a result, we will instruct U.S. Customs to suspend liquidation of all entries of both filled and unfilled granular PTFE resin from Japan. We will consider this issue further for our final determination.

Period of Investigation

The period of investigation is June 1, 1987, through November 30, 1987.

Such or Similar Comparisons

We determined that Asahi had sufficient home market sales of such or similar merchandise to form the basis for calculating foreign market value. All comparisons were based on sales of identical merchandise in the home market.

Fair Value Comparisons

To determine whether sales of granular PTFE resin from Japan to the United States were made at less than fair value, we compared the United States price to the foreign market value as specified below. Since Daikin failed to respond to our questionnaire, its margin is based on information from the petition as best information available, in accordance with section 776(b) of the act.

Asahi did not respond to the Department's request for information concerning sales of filled PTFE resins by ICIA to unrelated U.S. customers. Therefore, we based the portion of its margin attributable to filled PTFE resins on information from the petition as best information available, in accordance with section 776(b) of the Act.

United States Price

For all sales by Asahi of unfilled granular PTFE resin, we based United States Price on exporter's sales price (ESP), in accordance with section 772(c) of the Act, since the first sale to an unrelated customer was made after importation. We calculated exporter's sales price based on packed, ex-warehouse or delivered prices to unrelated purchasers in the United States. We made deductions, where appropriate, for foreign inland freight and insurance, brokerage and handling charges, ocean freight, marine insurance, U.S. duty, U.S. inland freight, credit expenses and other U.S. selling expenses pursuant to sections 772(e) (1) and (2) of the Act.

Foreign Market Value

In accordance with section 773 of the Act, we calculated foreign market value for sales of unfilled granular PTFE by Asahi based on packed, delivered prices to unrelated purchasers in Japan. We made deductions, where appropriate, for inland freight and insurance, credit and warranty expenses. We offset indirect selling expenses incurred on home market sales up to the amount of indirect selling expenses incurred on sales in the U.S. market, in accordance with § 353.15(c) of our regulations.

In order to adjust for differences in packing between the two markets, we deducted home market packing costs from foreign market value and added U.S. packing costs.

Currency Conversion

Since all U.S. sales were exporter's sales price transactions, we used the official exchange rates in effect on the date of sale, in accordance with section 773(a)(1) of the Act, as amended by section 615 of the Trade and Tariff Act of 1984. All currency conversions were made at rates certified by the Federal Reserve Bank of New York.

Verification

We will verify the information used in making our final determination in accordance with section 776(a) of the Act.

Suspension of Liquidation

In accordance with section 733(d) of the Act, we are directing the U.S. Customs Service to suspend liquidation of all entries of granular PTFE resin from Japan that are entered or withdrawn from warehouse, for consumption, on or after the date of publication of this notice in the **Federal Register**. The U.S. Customs Service shall require a cash deposit or posting of a bond equal to the estimated amounts by which the foreign market value of granular PTFE resin from Japan exceeds the United States

price, as shown below. This suspension of liquidation will remain in effect until further notice.

The weighted-average margins are as follows:

Manufacturer/producer/exporter	Weighted-average margin percentage
Daikin Industries, Inc.	103.00
Asahi Fluoropolymers, Inc.	38.94
All others	87.68

This suspension of liquidation covers imports of granular PTFE resin from Japan as defined in the "Scope of Investigation" section of this notice.

ITC Notification

In accordance with section 733(f) of the Act, we have notified the ITC of our determination. In addition, we are making available to the ITC all nonprivileged and nonproprietary information relating to this investigation. We will allow the ITC access to all privileged and business proprietary information in our files, provided the ITC confirms that it will not disclose such information, either publicly or under administrative protective order, without the written consent of the Acting Assistant Secretary for Import Administration.

The ITC will determine whether these imports are materially injuring, or threaten material injury to, a U.S. industry before the later or 120 days after the date of this determination or 45 days after the final determination, if affirmative.

Public Comment

In accordance with 19 CFR 353.47, if requested, we will hold a public hearing to afford interested parties an opportunity to comment on this preliminary determination at 10:00 a.m. on June 8, 1988, at the U.S. Department of Commerce, Room 3708, 14th Street and Constitution Avenue NW., Washington, DC 20230.

Individuals who wish to participate in the hearing must submit a request to the Acting Assistant Secretary for Import Administration, Room B-099, at the above address within ten days of the publication of this notice. Requests should contain: (1) The party's name, address, and telephone number; (2) the number of participants; (3) the reasons for attending; and (4) a list of the issues to be discussed.

In addition, prehearing briefs in at least ten copies must be submitted to the Acting Assistant Secretary by June 1, 1988. Oral presentations will be limited to issues raised in the briefs. All written views should be filed in accordance with 19 CFR 353.46, at the above address, in at least ten copies, not less than 30 days before the date of the final determination, or, if a hearing is held, within seven days after the hearing transcript is available.

This determination is published pursuant to section 733(f) of the Act (19 U.S.C. 1673b(f)).

Joseph Spetrini,

Acting Assistant Secretary for Import Administration.

April 14, 1988.

[FR Doc. 88-8875 Filed 4-19-88; 8:45 am]

BILLING CODE 3510-DS-M

International Trade Administration

Petitions by Producing Firms for Determinations of Eligibility to Apply for Trade Adjustment Assistance; Kasper Foundry Co. et al.

Petitions have been accepted for filing on the dates indicated from the following firms: (1) Kasper Foundry Company, P.O. Box 359, Elyria, Ohio 44036, producer of compressor parts, parts for printing press, vacuum pumps and light bulbs (January 11, 1988); (2) Beach-Russ Company, 544 Union Avenue, Brooklyn, New York 11211, producer of vacuum pumps (January 11, 1988); (3) Aladdin Toy Motors, Inc., 180 Commerce Drive, Hauppage, New York 11799, producer of toy motors, ice buckets, trays, glasses, coaster, napkin rings and sox (insulated sleeves for glasses) (January 12, 1988); (4) Herr Manufacturing Company, Inc., 17 Pearce Avenue, Tonawanda, New York 14150, producer of textile rings for yarn, outdoor power equipment accessories (January 12, 1988); (5) Science Typographers, Inc., 15 Industrial Boulevard, Medford, New York 11803, producer of books and journals (January 13, 1988); (6) Slager Machine Instruments, 431 North Buchanan Circle #7, Pacheco, California 94553, producer of metal enclosures (January 20, 1988); (6) Dakota Oat Processors, Inc., P.O. Box 300, Arlington, South Dakota 57212, producer of oats, barley and wheat (animal feed) (January 19, 1988); (7) Hollinee Corporation, P.O. Box 594, Hollister, California 95023, producer of asphalt saturated roofing paper (January 26, 1988); (8) Pioneer Pottery, Inc., P.O. Box 961, East Liverpool, Ohio 43920, producer of ceramic mugs and other misc. ceramic products (January 26, 1988); (9) The Osterneck Company, P.O. Box 849, Lumberton, North Carolina 28359, producer of bags, bale covers, furniture and carpet backing (January 27, 1988); (10) Accessocraft Products Corporation, 48 Lawton Street, New Rochelle, New York 10802, producer of women's belts and jewelry (February 1, 1988); (11) Achilles Construction Co., Inc., 262 Green Street, Brooklyn, New York 11222, producer of fabricated structural steel (February 9, 1988); (12) Pacific studs & Lumber Co., Highway 64, P.O. Box 488, Cimarron, New Mexico 87714, producer of planed lumber (February 4, 1988); (13) Robotics, Inc., R.D. #3, Route 9, Ballston Spa, New York 12020, producer of automated dispensing equipment for adhesives and sealants (February 8, 1988); (14) Robinson Knife Manufacturing Co., Inc., 243 W. Main Street, Springville, New York 14141, producer of cutlery and blades for appliances (February 9, 1988); (15) S. Howes Co., Inc., 8 Howard Street, Silver Creek, New York 14136, producer of grain cleaning equipment, flour milling equipment and machined parts (February 9, 1988); (16) Pacific Graphics, Inc., 15323 Proctor Avenue, City of Industry, California 91745, producer of manifold business forms (February 9, 1988); (17) Columbia Manufacturing Co., Inc., One Cycle Street, Westfield, Massachusetts 01086, producer of bicycles (February 10, 1988); (18) Vancraft Corporation, 630 Lycaste, Detroit, Michigan 48214, producer of metal tubing for the automotive industry (February 10, 1988); (19) Visual Information Institute, Inc., P.O. Box 33, Xenia, Ohio 45385, producer of video test instrumentation (February 10, 1988); (20) Wolverine Machine Products Co., 319 Cogshall Street, Holly, Michigan 48442, producer of industrial fastner (February 10, 1988); (21) Spectex Industries, Inc., 505 Carroll Street, Brooklyn, New York 11215, producer of women's sweater and skirt sets (February 12, 1988); (22) A.J. Wahl, Inc., 143 Central Avenue Brocton, New York 14716, producer of automatic jiggers, pug mills, hydraulic extruders, insulator production machinery, and material transporters (conveyers and dryers) (February 12, 1988); (23) Lumco Manufacturing Company, 2027 Mitchell Lake Road, Lum, Michigan 48452, producer of interchangeable tools for machine tools, and tool holders automobile water pump impellers (February 16, 1988); (24) Robotics, Inc., R.D. #3, Route 9, Ballston Spa, New York 12020, producer of automated dispensing equipment for adhesives and sealants (February 8, 1988); (25) SWS Industries, Inc., 142 East Prairie Street, Marengo, Illinois 60152, producer of paper punches, mouse and rat traps and coin changers (February 12, 1988); (26)

Meyers Manufacturing Company, 330 Fifth Avenue, New York, New York 10001, producer of handbags (February 9; 1988); (27) International Microtronics Corporation, 4016 E. Tennessee Street, Tucson, Arizona 85714, producer of digital panel meters and printed circuit boards (February 23, 1988); (28) Rye Industries, Inc., 125 Spencer Place, Mamaroneck, New York, producer of headphones (February 23, 1988); (29) Leo F. MacIver Co., Inc., 75 Ames Street, Brockton, Massachusetts 02403, producer of leather and rubber insoles and trimmings for men's leisure and dress shoes (February 26, 1988); (30) Rolshear, Inc., 100 Shirland Avenue, South Beloit, Illinois 61080, producer of machines for angle bending fabricated steel (February 26, 1988); (31) Clifford H. Jones, Inc., 608 Young Street, Tonawanda, New York 14150, producer of plastic molds (February 29, 1988); (32) Paula Carbone, Ltd., 180 Madison Avenue, New York, New York 10016, producer of women's nightgowns, pajamas, slips, camisoles, teddys and panties (February 29, 1988); (33) Fresh Island Fish company, Inc., RR 1 P.O. Box 373–B, Wailuku, Maui, Hawaii 96793, distributor of fish (March 1, 1988); (34) Columbine Plastics Corporation 3195 Blupp Street, Boulder, Colorado 80301, producer of plastic injection molded components for electronic and computer equipment (March 3, 1988); (35) Innovative Ventures, Inc., 3106 Century Street, Colorado Springs, Colorado 80907, producer of Tiffany lighting fixtures (March 7, 1988); (35) DeBoles Nutritional Foods, Inc., 2120 Jericho Turnpike, Garden City Park, New York 11040, producer of macaroni, spaghetti, noodles, lasagna and substitute rice pasta (March 9, 1988); (36) H.M.S. Direct Mail Service, Inc., 2299 Military Road, Tonawanda, New York 14150, producer of catalogs, brochures and educational booklets (March 10, 1988); (37) Hope's Architectural Products, Inc., 84 Hopkins Avenue, Jamestown, New York 14701, producer of security windows of steel and aluminum (March 14, 1988); (38) All Metal Stamping Corporation, 3902 Seventh Avenue, Brooklyn, New York 11232, producer of parts of brass beds, fire place tools, coffee pots, trays, planters, and sugar and cream servers of brass (March 21, 1988); (39) Armor Safe Corporations 1435 Grand Avenue, San Marcos, California 92069, producer of safes (March 21, 1988); (40) Oak Switch Systems, Inc., 100 South Main Street, P.O. Box 517, Crystal Lake, Illinois 60014, producer of switches, solenoid and keyboards (March 25, 1988); (41) Taylor and Friend Enterprises, Inc., 1101 South Emerson Avenue, Indianapolis, Indiana 46203, producer of compression and plastic, injection molds and components for the medical and automotive industry (March 28, 1988); (42) Hazel's Interurban Avenue South, Tukwila, Washington 98188, producer of candy (March 30, 1988); (43) Modulex, Inc., 15421 Assembly Lane, Huntington Beach, California 92649, producer of aluminum door frames and aluminum scrap (March 31, 1988); (44) Rocon Manufacturing Corporation, 606 Hague Street, Rochester, New York 14606, producer of machined parts for automotive components, photocopying machines and airplane navigation systems (March 31, 1988); (45) Vanguard Corporation, 10 Java Street, Brooklyn, New York 11222, producer of metal desks and file cabinets (March 31, 1988).

The petitions were submitted pursuant to Section 251 of the Trade Act of 1974 (Pub. L. 93–618), as amended. Consequently, the United States Department of Commerce has initiated separate investigations to determine whether increases imports into the United States of articles like or directly competitive with those produced by each firm contributed importantly to total or partial separation of the firm's workers, or threat thereof, and to a decrease in sales or production of each petitioning firm.

Any party having a substantial interest in the proceedings may request a public hearing on the matter. A request for a hearing must be received by Certification Division, Office of Trade Adjustment Assistance, Room 4015A, International Trade Administration, U.S. Department of Commerce, Washington, DC 20230, no later than the close of business of the tenth calendar day following the publication of this notice.

The Catalog of Federal Domestic Assistance official program number and title of the program under which these petitions are submitted is 11.309, Trade Adjustment Assistance. Inasfar as this notice involves petitions for the determination of eligibility under the Trade Act of 1974, the requirements of Office of Management and Budget Circular No. A–95 regarding review by clearinghouses do not apply.

S. Cassin Muir,

Acting Director, Certification Division, Office of Trade Adjustment Assistance.

[FR Doc. 88–8661 Filed 4–19–88; 8:45 am]

BILLING CODE 3510-DR-M

DEPARTMENT OF DEFENSE

Department of the Army

Privacy Act of 1974; Amendments to Systems of Records

AGENCY: Department of the Army, DOD.

ACTION: Notice of amendments to systems of records subject to the Privacy Act of 1974.

SUMMARY: The Department of the Army is amending one of its existing inventory of record systems subject to the Privacy Act of 1974 (5 U.S.C. 552a).

DATES: This proposed action will be effective without further notice on May 20, 1988, unless comments are received which result in a contrary determination.

ADDRESS: Send comments to Mr. Cliff Jones, AS–OPS–MR, Fort Huachuca, AZ 85613–5000, telephone: 602–538–6568, autovon: 879–6568.

SUPPLEMENTARY INFORMATION: The Department of the Army systems of records notices subject to the Privacy Act of 1974 have been published in the **Federal Register** as follows:

FR Doc. 85–10237 (50 FR 22090) May 29, 1985 (Compilation)
FR Doc. 86–14667 (51 FR 23576) June 30, 1986
FR Doc. 86–19534 (51 FR 30900) August 29, 1986
FR Doc. 86–25274 (51 FR 40479) November 7, 1986
FR Doc. 86–27580 (51 FR 44361) December 9, 1986
FR Doc. 87–8140 (52 FR 11847) April 13, 1987
FR Doc. 87–11379 (52 FR 18798) May 19, 1987
FR Doc. 87–15611 (52 FR 25905) July 9, 1987
FR Doc. 87–19686 (52 FR 32329) August 27, 1987
FR Doc. 87–26438 (52 FR 43932) November 17, 1987

The specific changes to the record system being amended are set forth below, followed by the system notice, as amended, published in its entirety.

The proposed amendment is not within the purview of the provision of 5 U.S.C. 552a(o), which require the submission of a new or altered system report.

L.M. Bynum,

Alternate OSD Federal Register Liaison Officer, Department of Defense.

April 15, 1988.

Amendment

A0305.05aDACA

SYSTEM NAME:

Travel Payment System (50 FR 22119) May 29, 1985.

CHANGES:

SYSTEM LOCATION:

Add: "All Army activities receiving an allotment of TDY funds to expend."

RETENTION AND DISPOSAL:

Add: "Copies of travel settlement vouchers are destroyed after 1 year."

RECORD SOURCE CATEGORIES:

Add: "/activities."

A0305.05aDACA

SYSTEM NAME:

Travel Payment System.

SYSTEM LOCATION:

Decentralized to Finance and Accounting Offices world-wide; addresses may be obtained from the System Manager. All Army activities receiving an allotment of TDY funds to expend.

CATEGORIES OF INDIVIDUALS COVERED BY THE SYSTEM:

Military and civilian personnel of the Department of Defense, U.S. Army, U.S. Navy, and U.S. Air Force, and other individuals who perform invitational travel for the Army.

CATEGORIES OF RECORDS IN THE SYSTEM:

Individual travel vouchers and documents used to effect travel allowance payments.

AUTHORITY FOR MAINTENANCE OF THE SYSTEM:

Department of Defense Annual Appropriations Act; 5 U.S.C., sections 5701–5742; 10 U.S.C., sections 828, 832, 946, 3012; 28 U.S.C., section 1821; 37 U.S.C., sections 404–427; E.O. 9397.

PURPOSE(S):

To provide basis for reimbursing military and civilian personnel for expenses incident to travel for official Government business purposes and to account for such payments.

ROUTINE USES OF RECORDS MAINTAINED IN THE SYSTEM, INCLUDING CATEGORIES OF USERS AND THE PURPOSE OF SUCH USES:

See "Blanket Routine Uses" set forth at the beginning of the Army's listing of record system notices. Disclosure pursuant to 5 U.S.C. 552a(b)(12) may be made from this system to "consumer reporting agencies" as defined in the Fair Credit Reporting Act (15 U.S.C. 1681a(f) or the Federal Claims Collection Act of 1966 (31 U.S.C. 3701(a)(3)).

POLICIES AND PRACTICES FOR STORING, RETRIEVING, ACCESSING, RETAINING, AND DISPOSING OF RECORDS IN THE SYSTEM:

STORAGE:

File folders, cards, magnetic tape/disks, cassettes, computer printouts.

RETRIEVABILITY:

By individual's SSN.

SAFEGUARDS:

Records are accessible only to authorized persons who are properly screened, cleared and trained. Buildings employ security guards and/or military police patrols. Access to automated files is controlled by assigned passwords.

RETENTION AND DISPOSAL:

Individual vouchers and documents used for payment are retained at the installation making payment until end of month, following which they are sent to U.S. Army Finance and Accounting Center.

Signature cards used for approval of certain vouchers are retained at installation where payments are made until 3 years after date of revocation of authority, following which they are destroyed.

Records of travel payments are retained for 3 years following settlement at installation making current payments. Military member's record of outstanding advance payments is transferred to new servicing finance office upon permanent change of station or to the U.S. Army Finance and Accounting Center upon death or separation from active duty. Civilian employee's record of outstanding advance payments is transferred to new servicing finance office upon reassignment. Military and civilian records of travel payments for settled travel claims are destroyed by the old duty station 3 years following separation or transfer. Records for individuals performing invitational travel are destroyed 1 year from date of final payment.

Copies of travel settlement vouchers are destroyed after 1 year.

SYSTEM MANAGER(S) AND ADDRESS:

Comptroller of the Army, Headquarters, Department of the Army, The Pentagon, Washington, DC 20310.

NOTIFICATION PROCEDURE:

Individuals desiring information on them from this system should inquire of the Finance and Accounting Office who currently pays them. For periods of Army service prior to current assignment, request should be addressed to the Commander, U.S. Army Finance and Accounting Center, ATTN: DACA–FAZ–S, Indianapolis, IN 46249–0526. Individual must provide full name and Social Security Number as well as current address.

RECORD ACCESS PROCEDURES:

Individuals desiring access to records pertaining to them should write either to the appropriate Finance and Accounting Officer where record is believed to exist or to the Commander, U.S. Army Finance and Accounting Center providing information required by "Notification procedure".

CONTESTING RECORD PROCEDURES:

The Army's rules for access to records and for contesting contents and appealing initial determinations are contained in Army Regulation 340–21 (32 CFR Part 505).

RECORD SOURCE CATEGORIES:

From the individual, Department of Defense staff agencies and field commands/installations/activities.

EXEMPTIONS CLAIMED FOR THE SYSTEM:

None.

[FR Doc. 88–8671 Filed 4–19–88; 8:45 am]

BILLING CODE 3810-01-M

DELAWARE RIVER BASIN COMMISSION

Commission Meeting and Public Hearing

Notice is hereby given that the Delaware River Basin Commission will hold a public hearing on Wednesday, April 27, 1988 beginning at 1:30 p.m. in the Washington Room of the George Washington Lodge, Route 202 South and Warner Road, King of Prussia, Pennsylvania. The hearing will be part of the Commission's regular business meeting which is open to the public.

An informal pre-meeting conference among the Commissioners and staff will be open for public observation at about 11:00 a.m. in the Lodge's Anthony Wayne Room and will include a presentation by the U.S. Geological Survey on climate change.

The subjects of the hearing will be as follows:

Amendment to the Comprehensive Plan Relating to Criteria and Operations Formulae for Emergency Operations During a Lower Basin Drought Warning and Drought.

In February, 1983 the Commission received Interstate Water Management Recommendations of the Parties to the U.S. Supreme Court Decree of 1954 to the Delaware River Basin Commission Pursuant to Commission Resolution 78–20. These recommendations were

unanimously agreed to by the Governors of the Commonwealth of Pennsylvania, the States of New York, New Jersey and Delaware, and the Mayor of New York City. Recommendation 4 of these "Good Faith" Recommendations called for the development of a plan for coordinated operation of existing Basin impoundments during drought periods to complement the operating formula for the New York City Delaware Basin reservoirs in order to maintain reliable supplies for essential uses, to conserve water, and to control salinity. Recommendation 4 further specified that the plan should include operating criteria for the Beltzville, Blue Marsh, Walter, Prompton and Nockamixon projects and the hydroelectric power reservoirs in the Basin of the Pennsylvania Power and Light Company and Orange and Rockland Utilities, Inc.

The Commission's Flow Management Technical Advisory Committee has conducted a study and recommended alternative lower Basin drought warning and drought operating plans.

Article 2 of the Water Code of the Delaware River Basin includes Commission policy relating to the conservation, development and utilization of Basin water resources. Specifically, it is proposed to:

1. Amend the Comprehensive Plan and Article 2 of the Water Code of the Delaware River Basin by the addition of a new Section 2.5.6 Coordinated Operation of Reservoirs During a Lower Basin Drought Warning and Drought, a summary of which follows.

As part of the assessment of the hydrologic condition of the lower basin, the Delaware River Master Advisory Committee would meet each year prior to June 15 to determine if it would be prudent to save the New York City Delaware Basin reservoirs' excess release quantity (presently 7.4 bg). If saved, the excess release quantity could be used to maintain the Trenton flow objective of 3000 cfs.

The criteria for defining the three stages of lower basin hydrologic conditions of normal, drought warning and drought would be based on the storage levels in Beltzville and Blue Marsh Reservoirs. After exhausting the excess release quantity, the releases from Blue Marsh and Beltzville would maintain the flow objective at Trenton until their combined storage of 19.5 bg decreased by more than a third or about 6.5 bg, at which time a drought warning would be declared. The flow objective at Trenton would decrease and vary depending upon the location of the 250 mg/1 chloride salt front in the Estuary. Voluntary water conservation would be called for as would cutbacks in conservation releases from the lower basin reservoirs. The New Jersey Delaware and Raritan Canal Diversion would be reduced to 70 mgd from 100 mgd.

A lower basin drought emergency would be declared when the combined storage in Beltzville and Blue Marsh falls another third, or about 6 bg, thus leaving only 6 bg in those reservoirs. Mandatory conservation would be declared on nonessential water use and storage in the other lower basin reservoirs, including the power reservoirs and Lake Hopatcong, would be marshalled. The New Jersey Delaware and Raritan Canal diversion would again be reduced, at this point from 70 mgd to 65 mgd.

Once a lower basin drought emergency is declared by the Commission, the parties to the 1954 U.S. Supreme Court Decree, in consultation with the DRBC, shall consider and select one of six suggested "lower basin drought" reservoir operation plans or any other plan designed to meet then-existing conditions. The parties may, by unanimous agreement, modify or adjust any such operations plans. The Commission would then implement the agreed upon plan.

Considerations in formulating the agreed to plan include the amount of lower basin storage, the amount of New York City storage, storage in Lake Wallenpaupack, the Mongaup facilities, Lake Hopatcong as well as time of year of drought onset.

The lower basin drought would end when the storage levels in Beltzville and Blue Marsh Reservoirs return to normal storage levels for 30 consecutive days or either one of these reservoirs spills, unless the Decree parties unanimously agree otherwise.

Information Briefings

Information briefing sessions on the lower Basin drought operation proposal are scheduled as follows:

April 29, 1988, 10:00 a.m.—Holiday Inn, Routes 512 and 22, Bethlehem, Pennsylvania

May 2, 1988, 10:00 a.m.—Radisson Wilmington Hotel, Newport Room, 700 King Street, Customs House Plaza, Wilmington, Delaware.

In addition, a presentation on the Lower Basin drought operating plan will be made at the Spring Conference of the Water Resources Association of the Delaware River Basin on April 28, 1988. Please contact WRA/DRB at (215) 783-0634 for further information.

Anyone interested in obtaining a copy of the full text of the proposed Comprehensive Plan amendment and a briefing paper on the proposal may request a copy by writing or calling Christopher Roberts, Public Information Officer, at (609) 883-9500.

The April 27, 1988 hearing continues that of March 23, 1988. Written statements postmarked by May 24, 1988 will be included in the hearing record.

* * * * *

Applicaitons for Approval of the Following Projects Pursuant to Article 10.3, Article 11 and/or Section 3.8 of the Compact

1. *Metropolitan Edison Company D-86-25.* An application to upgrade an industrial wastewater treatment plant (IWTP) located in Upper Mount Bethel Township, Northampton County, Pennsylvania. The applicant desires to improve the Portland Generating Station IWTP by constructing additional facilities and modifying several existing units. An industrial process variation will not increase the current design capacity of 0.7 million gallons per day (mgd). The treated effluent will continue to be discharged to the Delaware River. An unused outfall, located about 300 feet upstream of the currently used outfall, will service the upgraded plant.

2. *Pottstown Plating Works, Inc. D-86-68.* An existing ground water withdrawal project supplies approximately 0.131 mgd from existing Well No. 3, for cooling and industrial processing at the applicant's plant in the Borough of Pottstown, Montgomery County, Pennsylvania. The applicant is requesting approval of a withdrawal of 6.0 million gallons (mg)/30 days from Well No. 3, located about 4000 feet east of the intersection of Route 100 and U.S. Route 422. The project is in the Southeastern Pennsylvania Ground Water Protected Area.

3. *Mount Laurel Municiapl Utilities Authority D-87-68 CP.* An application to construct a new 1.0 mgd contact stabilization plant adjacent to an existing 2.95 mgd plant in Mount Laurel Township, Burlington, Country, New Jersey. The proposed facility is designed to serve an additional 10,000 residents of Mount Laurel Township through the year 1990. The proposed sewage treatment plant is designed to remove 90 percent of the BOD and SS loading. Treatment plant effluent will continue to be discharged to Rancocas Creek through the existing outfall.

4. *Philadephia Electric Company D-87-78.* Overhead cable crossing of the Schuylkill River from Barbadoes Island within West Norriton Township to Norristown Borough in Montgomery County, Pennsylvania. The aerial transmission lines will consist of two

220 kV cables from the proposed substation and an additional 33 kV wire from an existing substation. Tubular steel poles spaced 552 feet apart will be provided for the 33 kV line crossing. The four proposed towers for the 220 kV cables will be 727 feet and 775 feet apart. The proposed crossing is in a section designated for modified recreation under the Pennsylvania Scenic Rivers Act.

5. *Warrington Township Municipal Authority (WTMA) D-87-100 CP.* An application for approval of a ground water withdrawal project to pump up to 1.5 mg/30 days from WTMA Well No. 6, located about 200 feet south of the intersection of Street Road and Little Meshaminy Creek in Warrington Township. The well will be used as a recovery well for controlling the spread of ground water which has been contaminated by volitile organic compounds. After the ground water from Well No. 6 has been treated by air stripping, it will be used as an additional source of water for the WTMA system. The project is in Bucks County in the Southeastern Pennsylvania Ground Water Protected Area.

6. *Wind Gap Municipal Authority D-87-101 CP.* An application to upgrade and expand a 0.3 mgd sewage treatment plant to provide high quality secondary treatment of 1.0 mgd via the sequencing batch reactor process. The plant is located off Abel Colony road in Plainfield Township, Northampton County, Pennsylvania. The proposed plant is designed to serve Wind Gap Borough and a portion of Plainfield Township through the year 2008. The existing secondary treatment plant discharges to an unnamed tributary of Little Buchkill Creek. The applicant proposes to construct a post-aeration flume at the site of the existing outfall.

7. *Fox Hollow Associates D-88-4.* An application to expand a 0.05 mgd sewage treatment plant to provide high quality secondary treatment of 0.1 mgd. The plant is located in Birmingham Township, Delaware County, Pennsylvania. The plant is designed to serve only the residents of the applicant's development Spring Hill Farm. Treatment plant effluent will continue to be discharged to an unnamed tributary of West Branch Chester Creek through the existing outfall.

8. *Borough of Sounderton D-88-6 Cp.* An application to expand and upgrade a 0.675 mgd secondary treatment plant to provide high quality secondary treatment of 2.0 mgd. The sewage treatment plant is located in Franconia Township, Montgomery County, Pennsylvania. The proposed facility is designed to serve a portion of Hilltown Township in Bucks County through the year 2010. Treatment plant effluent will continue to be discharged to Skippack Creek through the siting outfall.

9. *Lemmon Company D-88-8.* An application for approval of a ground water withdrawal project to supply up to 5.66 mg/30 days of water to the applicant's pharmaceutical products manufacturing operation from existing Well Nos. 1, 2 and 3. The project is located approximately 1600 feet southwest of the interseciton of CAT Hill Road and Route 309 in West Rockhill Township, Bucks County, and is in the Southeastern Pennsylvania Ground Water Protected Area.

10. *Brookside Water Company D-88-11 CP.* An application for approval of a ground water withdrawal project to supply up to 6.08 mg/30 days of water to the applicant's distribution system from new Well Nos. 1 and 2, and to limit withdrawal from both wells to 6.08 mg/30 days. The project is located in Oxford Township, Warren County, New Jersey.

11. *Arco Petroleum Products Company D-88-12.* An application for approval of a ground water withdrawal project to withdraw up to 9.72 mg/30 days of water from the applicant's hydrocarbon recovery system from new Well No. RW-1, and to limit withdrawal from all wells to 9.72 mg/30 days. The project is located in the City of Philadelphia, Philadelphia County, Pennsylvania.

12. *Roamingwood Sewer and Water Association D-88-14.* An application to upgrade and expand a sewage treatment plant that serves a development in both Lake and Salem Townships, Wayne County, Pennsylvania. The existing plant has an approved design capacity of 0.205 mgd. The proposed expansion is designed to provide tertiary treatment of an average flow of 1.755 mgd through the year 2010. Treatment plant effluent will continue to be discharged to Ariel Creek, but a new outfall will be provided.

13. *Montgomeryville Industrial Sewer Company D-88-15.* An application to expand the Montgomeryville Industrial Complex Sewage Treatment Plant (STP) which is located on Hartman Road in Montgomery Township, Montgomery County, Pennsylvania. The existing STP is designed to provide tertiary treatment of 0.05 mgd. The proposed expansion is designed to treat a total average flow of 0.07 mgd through the year 2002. Treatment plant effluent will continue to be discharged to Park Creek through the existing outfall.

14. *Town of Smyrna D-88-19 CP.* An application for an increased allocation of water from Well Nos. 1 and 2 in the applicant's water supply system which have previously been included in the Comprehensive Plan. The applicant requests that the total withdrawal from all wells be increased from 30.0 mg/30 days to 33.99 mg/30 days. The project is located in the Town of Smyrna, Kent County, Delaware.

15. *Bernard W. Loeb—Carefree Village D-88-21.* An application to construct a 0.065 mgd sewage treatment plant to serve a proposed 160-home development in North Whitehall Township, Lehigh County, Pennsylvania. The proposed extended aeration treatment plant is designed to provide secondary treatment. The applicant proposes to construct a treatment plant outfall that will discharge directly to the Lehigh River.

16. *Delaware River Basin Commission (DRBC)—Upper Delaware Ice Jam Project D-88-22 CP.* An application by DRBC on behalf of the City of Port Jervis, New York; Borough of Matamoras and Westfall Township, Pennsylvania; the State of New York; and the Commonwealth of Pennsylvania to have the U.S. Army Corps of Engineers construct an ice diversion channel on Mashipacong Island and a 39-acre mitigation site on the mainland, both in Montague Township, Sussex County, New Jersey. The purpose of the mitigation site is to mitigate the effect of clearing of wetlands that are located within the diversion channel. A 13,000-foot-long, 200-foot-wide path will be cleared of all trees larger than four inches in diameter to allow the passage of ice in the Delaware River and reduce the potential for ice jams and the resulting upstream flooding in Pennsylvania and New York. No excavation is proposed. The clearing of the path, the construction of an access road for equipment and a 5-foot-high gabion dam at the mitigation site will be the only construction activities. The project has been studied, planned and designed by the U.S. Army Corps of Engineers.

Documents relating to these items may be examined at the Commission's offices. Preliminary dockets are available in single copies upon request. Please contact David B. Everett concerning docket-related questions. Persons wishing to testify at this hearing are requested to register with the Secretary prior to the hearing.

Susan M. Weisman,

Secretary.

April 12, 1988.

[FR Doc. 88-8599 Filed 4-19-88; 8:45 am]

BILLING CODE 6360-01-M

DEPARTMENT OF ENERGY

Assistant Secretary for International Affairs and Energy Emergencies

International Atomic Energy Agreements; Civil Uses; Proposed Subsequent Arrangement; Japan

Pursuant to section 131 of the Atomic Energy Act of 1954, as amended (42 U.S.C. 2150) notice is hereby given of a proposed "subsequent arrangement" under the Additional Agreement for Cooperation between the Government of the United States of America and the European Atomic Energy Community (EURATOM) Concerning Peaceful Uses of Atomic Energy, as amended, and the proposed Agreement for Cooperation between the Government of the United States of America and the Government of Japan Concerning Peaceful Uses of Nuclear Energy, and the Implementing Agreement Pursuant to Article 11 thereto ("Implementing Agreement"). (The proposed Agreement and the Implementing Agreement were transmitted to Congress by the President on November 9, 1987 by means of a letter, the text of which was published in the Congressional Record on November 9, 1987 at page H 9841 and on November 10, 1987 at page S 16092).

The subsequent arrangement to be carried out under the above-mentioned agreements will fulfill the undertaking of the United States in the Implementing Agreement to facilitate certain transfers of specified nuclear material from EURATOM to Japan. In particular, the subsequent arrangement involves approval for the return to Japan of: (a) Nuclear material recovered from irradiated nuclear material transferred from Japan to designated EURATOM facilities for reprocessing, and (b) irradiated nuclear material for testing and analysis transferred to designated EURATOM facilities from Japan as fuel samples containing plutonium in quantities not to exceed 500 grams per year per facility.

The designated facilities for reprocessing are: the Sellafield Plant, United Kingdom and the La Hague Plant, France. The designated facilities for sample fuel irradiation are the BR2 and BR3 Reactors, Belgium, the DR3 Reactor, Denmark, the Phenix Reactor, France, the GKN Dodewaard Reactor, Netherlands, and the SGHWR Reactor and Dounreay PFR Reactor, United Kingdom. Plutonium recovered from reprocessing must be transferred in accordance with detailed guidelines set forth in the Implementing Agreement, unless otherwise agreed by the United States. A complete analysis of this subsequent arrangement as well as the other approvals provided by the Implementing Agreement was provided with the President's submission of the proposed Agreement and the Implementing Agreement to Congress, and published in House Document 100-128, 100th Congress, 1st Session, (November 9, 1987).

In accordance with Section 131 of the Atomic Energy Act of 1954, as amended, it has been determined that this subsequent arrangement will not be inimical to the common defense and security.

This subsequent arrangement will take effect no sooner than fifteen days after the date of publication of this notice and after fifteen days of continuous session of the Congress, beginning the day after the date on which the reports required by section 131(b)(1) of the Atomic Energy Act of 1954, as amended (42 U.S.C. 2160) are submitted to the Committee on Foreign Affairs of the House of Representatives and the Committee on Foreign Relations of the Senate. The two time period referred to above shall run concurrently.

Date: April 15, 1988.

Edward V. Badolato,

Acting Assistant Secretary for International Affairs and Energy Emergencies.

[FR Doc. 88-8702 Filed 4-19-88; 8:45 am]

BILLING CODE 6450-01-M

International Atomic Energy Agreements; Civil Uses; Proposed Subsequent Arrangement; Japan

Pursuant to section 131 to the Atomic Energy Act of 1954, as amended (42 U.S.C. 2160) notice is hereby given of a proposed "subsequent arrangement" under the Revised Agreement for Cooperation between the Government of the United States of America and the Government of Norway concerning Peaceful Uses of Nuclear Energy and the proposed Agreement for Cooperation between the Government of the United States of America and the Government of Japan concerning Peaceful Uses of Nuclear Energy, and the Implementing Agreement pursuant to Article 11 thereto, ("Implementing Agreement"). (The proposed Agreement and the Implementing Agreement were transmitted to Congress by the President on November 9, 1987 by means of a letter, the text of which was published in the Congressional Record on November 9, 1987 at page H 9841 and on November 10, 1987 at page S 16092).

The subsequent arrangement to be carried out under the above-mentioned agreements will fulfill the undertaking of the United States in the Implementing Agreement to facilitate certain transfers of specified nuclear materials from Norway to Japan. In particular, the susequent arrangement involves approval for the return to Japan for testing and analysis of irradiated nuclear material transferred to the Halden reactor, Institute for Energy Technology, from Japan as fuel samples containing plutonium in quantities not to exceed 500 grams per year. A complete analysis of this subsequent arrangement as well as the other approvals provided by the Implementing Agreement was provided with the President's submission of the proposed Agreement and the Implementing Agreement to Congress and published in House Document 100-128, 100th Congress, 1st Session (November 9, 1987).

In accordance with section 131 of the Atomic Energy Act of 1954, as amended, it as been determined that this subsequent arrangement will not be inimical to the common defense and security.

This subsequent arrangement will take effect no sooner than fifteen days after the date of publication of this notice and after fifteen days of continuous session of the Congress, beginning the day after the date on which the reports required by section 131(b)(1) of the Atomic Energy Act of 1954, as amended (42 U.S.C. 2160) are submitted to the Committee on Foreign Affairs of the House of Representatives and the Committee on Foreign Relations of the Senate. The two time periods referred to above shall run concurrently.

Date: April 15, 1988.

Edward V. Badolato,

Acting Assistant Secretary for International Affairs and Energy Emergencies.

[FR Doc. 88-8703 Filed 4-19-88; 8:45 am]

BILLING CODE 6450-01-M

Innovative Control Technology Advisory Panel (ICTAP), Commercialization Incentives Subcommittee; Open Meeting

Name: Commercialization Incentives Subcommittee of the Innovative Control Technology Advisory Panel (ICTAP).

Date and Time: May 4, 1988—8:30 a.m.–3:00 p.m.

Place: U.S. Department of Energy, 1000 Independence Avenue SW., Washington, DC 20585.

Contact: Sandy Guill, Office of Environment, Safety and Health, Washington, DC 20585, (202) 586-4628.

Purpose of the Parent Board—To advise the Secretary of Energy and provide recommendations concerning

innovative control technologies that will broaden cost-effective and efficient options for controlling precursor emissions associated with acid deposition.

Purpose of Panel—The Commercialization Incentives Subcommittee is a subgroup of ICTAP and reports to the parent board. This study will provide advice and recommendations to the Secretary on actions States could take to provide incentives for the demonstration and deployment of advanced clean coal technologies.

Tentative Agenda

8:30 a.m.
Definition of Subpanel Activities
Discussion and Presentations Regarding Issues Associated with the State Preference Issue
2:50 p.m.—Public Comment (10 minute rule)
3:00 p.m.—Adjourn.

The meeting is open to the public. Written statements may be filed with the Panel either before or after the meeting. Members of the public who wish to make oral statements pertaining to agenda items should contact Sandy Guill at the address or telephone listed above. Requests must be received 5 days prior to the meeting and reasonable provisions will be made to include the presentation on the agenda. The Chairperson of the Panel is empowered to conduct the meeting in a fashion that will facilitate the orderly conduct of business.

Minutes of the Meeting—Available for public review and copying at the Freedom of Information Public Reading Room, 1E-190, Forrestal Building, 1000 Independence Avenue SW., Washington, DC between 9:00 a.m. and 4:00 p.m., Monday through Friday, except Federal Holidays.

J. Robert Franklin,

Deputy Advisory Committee Management Officer.

[FR Doc. 88-8699 Filed 4-19-88; 8:45 am]

BILLING CODE 6450-01-M

Innovative Control Technology Advisory Panel (ICTAP), Clean Coal Technologies Inventory Subcommittee; Open Meeting

Name: Clean Coal Technologies Inventory Subcommittee of the Innovative Control Technology Advisory Panel (ICTAP).

Date and Time: May 3, 1988—8:30 a.m.-3:00 p.m.

Place: U.S. Department of Energy, 1000 Independence Avenue SW., Washington, DC 20585.

Contact: Sandy Guill, Office of Environment, Safety and Health, Washington, DC 20585, (202) 586-4628.

Purpose of the Parent Board—To advise the Secretary of Energy and provide recommendations concerning innovative control technologies that will broaden cost-effective and efficient options for controlling precursor emissions associated with acid depositon.

Purpose of Panel—The Clean Coal Technologies Inventory Subcommittee is a subgroup of ICTAP and reports to the parent board. The panel will identify gaps in technology development and deployment. Specifically, this study will include an inventory of U.S. and foreign technologies and projects. The study will contain assessments of applicability, economic viability and environmental performance.

Tentative Agenda

8:30 a.m.
Definition of Subpanel Activities
Discussion and Presentations Regarding Inventory of U.S. and Foreign Technologies and Projects
2:50 p.m.—Public Comment (10 minute rule)
3:00 p.m.—Adjourn.

The meeting is open to the public. Written statements may be filed with the Panel either before or after the meeting. Members of the public who wish to make oral statements pertaining to agenda items should contact Sandy Guill at the address or telephone listed above. Requests must be received 5 days prior to the meeting and reasonable provisions will be made to include the presentation on the agenda. The Chairperson of the Panel is empowered to conduct the meeting in a fashion that will facilitate the orderly conduct of business.

Minutes of the Meeting—Available for public review and copying at the Freedom of Information Public Reading Room, 1E-190, Forrestal Building, 1000 Independence Avenue, SW., Washington, DC between 9:00 a.m. and 4:00 p.m., Monday through Friday, except Federal Holidays.

J. Robert Franklin,

Deputy Advisory Committee Management Officer.

[FR Doc. 88-8700 Filed 4-19-88; 8:45 am]

BILLING CODE 6450-01-M

Economic Regulatory Administration

[ERA Docket No. 87-61-NG]

Great Lakes Gas Transmission Co. and Peoples Natural Gas Co.; Order Granting Reassignment of an Import Authorization and Authorizing Importation of an Additional Interruptible Volume From Canada

AGENCY: Economic Regulatory Administration, DOE.

ACTION: Notice of order granting reassignment of an import authorization and authorizing importation of an additional interruptible volume from Canada.

SUMMARY: The Economic Regulatory Administration (ERA) of the Department of Energy (DOE) gives notice that it has issued an order granting Peoples Natural Gas Company Division of Utilicorp United Inc. (Peoples) authorization to import directly up to 4,052 Mcf per day of Canadian natural gas which the Federal Power Commission previously authorized Great Lakes Gas Transmission Company (Great Lakes) to import for resale to Peoples. The authorization was for firm sales over a term beginning on date of first delivery and ending October 31, 1990. The Order also grants Peoples authorization to import up to an additional 2,000 Mcf per day of natural gas from the Canadian supplier, TransCanada PipeLines Limited, on an interruptible basis beginning on the date of first delivery through October 31, 1990.

A copy of this order is available for inspection and copying in the Natural Gas Division Docket Room, GA-076, Forrestal Building, 1000 Independence Avenue SW., Washington, DC 20585, (202) 586-9478. The docket room is open between the hours of 8:00 a.m. and 4:30 p.m., Monday through Friday, except Federal holidays.

Issued in Washington, DC, April 15, 1988.

Constance L. Buckley,

Director, Natural Gas Division, Office of Fuels Programs, Economic Regulatory Administration.

[FR Doc. 88-8701 Filed 4-19-88; 8:45 am]

BILLING CODE 6450-01-M

Federal Energy Regulatory Commission

Application Filed With the Commission

April 15, 1988.

Take notice that the following hydroelectric application has been filed with the Federal Energy Regulatory

Commission and is available for public inspection:

a. Type of Application: Amendment of License.

b. Project No.: 1967-002.

c. Date Filed: March 25, 1988.

d. Applicant: Kimberly-Clark Corporation.

e. Name of Project: Whiting-Plover.

f. Location: Whiting Paper Mill Dam on the Wisconsin River in the Village of Whiting, Portage County, Wisconsin.

g. Filed Pursuant to: Federal Power Act, 16 U.S.C. 791(a)—825(r).

h. Applicant Contact:

Mr. Michael R. Holcomb, President, Neenah Paper, Kimberly-Clark Corporation, 1400 Holcomb Bridge Road, Roswell, GA 30076 (404) 587-8634

Mr. F. Anthony Maio, Foley & Lardner, 777 East Wisconsin Avenue, Milwaukee, WI 53202 (414) 289-3764

i. FERC Contact: Patrick K. Murphy, (202) 376-9640.

j. Comment Date: May 2, 1988.

k. Description of Amendment of License: Kimberly-Clark Corporation (licensee) proposes to close-off the intakes of units no. 5 and 6 of its 6-unit, 600-kilowatt, licensed project. The intakes would be closed through the expansion of the Whiting Paper Mill building.

1. This notice also consists of the following standard paragraphs: B and C.

B. *Comments, Protests, or Motions to Intervene*—Anyone may submit comments, a protest, or a motion to intervene in accordance with the requirements of the Rules of Practice and Procedure, 18 CFR 385.210, 385.211, 385.214. In determining the appropriate action to take, the Commission will consider all protests or other comments filed, but only those who file a motion to intervene in accordance with the Commission's Rules may become a party to the proceeding. Any comments, protests, or motions to intervene must be received on or before the specified comment date for the particular application.

C. *Filing and Service of Responsive Documents*—Any filings must bear in all capital letters the title "COMMENTS", "NOTICE OF INTENT TO FILE COMPETING APPLICATION", "COMPETING APPLICATION", "PROTEST" or "MOTION TO INTERVENE", as applicable, and the Project Number of the particular application to which the filing is in response. Any of the above named documents must be filed by providing the original and the number of copies required by the Commission's regulations to: the Secretary, Federal Energy Regulatory Commission, 825 North Capitol Street NE., Washington, DC 20426. An additional copy must be sent to: Dean Shumway Acting Director, Division of Project Review, Federal Energy Regulatory Commission, Room 203-RB, at the above address. A copy of any notice of intent, competing application or motion to intervene must also be served upon each representative of the Applicant specified in the particular application.

Lois D. Cashell,

Acting Secretary.

[FR Doc. 88-8682 Filed 4-19-88; 8:45 am]

BILLING CODE 6717-01-M

[Docket Nos. ST88-1927-000 et al.]

Tennessee Gas Pipeline Co. et al.; Self-Implementing Transactions

April 18, 1988.

Take notice that the following transactions have been reported to the Commission as being implemented pursuant to Part 284 of the Commission's Regulations, and sections 311 and 312 of the Natural Gas Policy Act of 1978 (NGPA).[1]

The "Recipient" column in the following table indicate the entity receiving or purchasing the natural gas in each transaction.

The "Part 284 Subpart" column in the following table indicates the type of transaction. A "B" indicates transportation by an interstate pipeline on behalf of an intrastate pipeline or a local distribution company pursuant to § 284.102 of the Commission's Regulations and section 311(a)(1) of the NGPA.

A "C" indicates transportation by an intrastate pipeline on behalf of an interstate pipeline or a local distribution company served by an interstate pipeline pursuant to § 284.122 of the Commission's Regulations and section 311(a)(2) of the NGPA. In those cases where Commission approval of a transportation rate is sought pursuant to § 284.123(b)(2), the table lists the proposed rate and the expiration date of the 150-day period for staff action. Any person seeking to participate in the proceeding to approve a rate listed in the table should file a motion to intervene with the Secretary of the Commission.

A "D" indicates a sale by an intrastate pipeline to an interstate pipeline or a local distribution company served by an interstate pipeline pursuant to § 284.142 of the Commission's Regulations and section 311(b) of the NGPA. Any interested person may file a complaint concerning such sales pursuant to § 284.147 of the Commission's Regulations.

An "E" indicates an assignment by an intrastate pipline to any interstate pipeline or local distribution company pursuant to § 284.163 of the Commission's Regulations and section 312 of the NGPA.

A "G" indicates transportation by an interstate pipeline on behalf of another interstate pipeline pursuant to § 284.222 and a blanket certificate issued under § 284.221 of the Commission's Regulations.

A "G(LT)" or "G(LS)" indicates transportation, sales or assignments by a local distribution company on behalf of or to an interstate pipeline or local distribution company pursuant to a blanket certificate issued under § 284.224 of the Commission's Regulations.

A "G(HT)" or "G(HS)" indicates transportation, sales or assignments by a Hinshaw Pipeline pursuant to a blanket certificate issued under § 284.224 of the Commission's Regulations.

Lois D. Cashell,

Acting Secretary.

[1] Notice of a transaction does not constitute a determination that the terms and conditions of the proposed service will be approved or that the noticed filing is in compliance with the Commission's Regulations.

Docket No.[1]	Transporter/seller	Recipient	Date filed	Subpart	Expiration date [2]	Transportation rate (¢/MMBTU)
ST88-1927	Tennessee Gas Pipeline Co	Quivira Gas Co	02-01-88	B		
ST88-1928	Tennessee Gas Pipeline Co	City of Clarksville	02-01-88	B		
ST88-1929	Tennessee Gas Pipeline Co	City of Portland	02-01-88	B		

Docket No.[1]	Transporter/seller	Recipient	Date filed	Subpart	Expiration date[2]	Transportation rate (¢/MMBTU)
ST88-1930	Tennessee Gas Pipeline Co	City of Springfield	02-01-88	B		
ST88-1931	Tennessee Gas Pipeline Co	Energy North, Inc	02-01-88	B		
ST88-1932	Transcontinental Gas Pipe Line Corp	Delhi Gas Pipeline Corp	02-01-88	B		
ST88-1933	ANR Pipeline Co	Madison Gas & Electric Co	02-01-88	B		
ST88-1934	ANR Pipeline Co	Southeastern Michigan Gas Co	02-01-88	B		
ST88-1935	ANR Pipeline Co	Michigan Consolidated Gas Co	02-01-88	B		
ST88-1936	ANR Pipeline Co	Wisconsin Natural Gas Co	02-01-88	B		
ST88-1937	ANR Pipeline Co	Wisconsin Public Service Co	02-01-88	B		
ST88-1938	Monterey Pipeline Co	Columbia Gulf Transmission Co	02-01-88	C	06-30-88	10.00
ST88-1939	United Texas Transmission Co	United Gas Pipe Line Co	02-01-88	C		
ST88-1940	Winnie Pipeline Co	Natural Gas Pipeline Co. of America	02-01-88	C		
ST88-1941	Arkla Energy Resources	City of Granite	02-01-88	B		
ST88-1942	TRANSOK, Inc	Panhandle Eastern Pipe Line Co	02-01-88	C	06-30-88	37.13
ST88-1943	TRANSOK, Inc	Panhandle Eastern Pipe Line Co	02-01-88	C	06-30-88	37.13
ST88-1944	Natural Gas Pipeline Co. of America	Northern Indiana Pub. Service Co., et al	02-01-88	B		
ST88-1945	Natural Gas Pipeline Co. of America	Wisconsin Southern Gas Co., Inc., et al	02-01-88	B		
ST88-1946	Natural Gas Pipeline Co. of America	Illinois Power Co	02-01-88	B		
ST88-1947	Natural Gas Pipeline Co. of America	Iowa Southern Utilities Co	02-01-88	B		
ST88-1948	Natural Gas Pipeline Co. of America	Central Illinois Light Co	02-01-88	B		
ST88-1949	Natural Gas Pipeline Co. of America	Michigan Gas Utilities Co	02-01-88	B		
ST88-1950	Natural Gas Pipeline Co. of America	Niagara Mohawk Power Corp	02-01-88	B		
ST88-1951	Tennessee Gas Pipeline Co	Allerton Gas Co., et al	02-01-88	B		
ST88-1952	Sea Robin Pipeline Co	Bridgeline Gas Distribution Co	02-01-88	B		
ST88-1953	Algonquin Gas Transmission Co	Commonwealth Gas Co	02-01-88	B		
ST88-1954	Algonquin Gas Transmission Co	City of Middleborough	02-01-88	B		
ST88-1955	South Georgia Natural Gas Co	City of Tallahassee	02-01-88	B		
ST88-1956	Southern Natural Gas Co	City of Pleasant Grove	02-01-88	B		
ST88-1957	Southern Natural Gas Co	Graysville Municipal Gas System	02-01-88	B		
ST88-1958	Southern Natural Gas Co	City of Sylacauga	02-01-88	B		
ST88-1959	Southern Natural Gas Co	City of Gordo	02-01-88	B		
ST88-1960	Southern Natural Gas Co	Eastex Gas Transmission Co	02-01-88	B		
ST88-1961	Southern Natural Gas Co	Channel Industries Gas Co	02-01-88	B		
ST88-1962	Southern Natural GAs Co	Alabama Gas Corp	02-01-88	B		
ST88-1963	Southern Natural Gas Co	Alabaster Water & Gas Board	02-01-88	B		
ST88-1964	Southern Natural Gas Co	Mississippi Valley Gas Co	02-01-88	B		
ST88-1965	Southern Natural Gas Co	City of Union Springs	02-01-88	B		
ST88-1966	Southern Natural Gas Co	City of Piedmont	02-01-88	B		
ST88-1967	Southern Natural Gas Co	Sabine-Desoto Pipeline Co., Inc	02-01-88	B		
ST88-1968	Southern Natural Gas Co	Sabine-Desoto Pipeline Co., Inc	02-01-88	B		
ST88-1969	Southern Natural Gas Co	Atlanta Gas Light Co	02-01-88	B		
ST88-1970	Southern Natural Gas Co	South Carolina Pipeline Corp	02-01-88	B		
ST88-1971	Southern Natural Gas Co	City of Childersburg	02-01-88	B		
ST88-1972	Southern Georgia Natural Gas Co	Sabine-Desoto Pipeline Co., Inc	02-01-88	B		
ST88-1973	Southern Natural Gas Co	Alabama Gas Corp	02-01-88	B		
ST88-1974	Southern Natural Gas Co	Alabama Gas Corp	02-01-88	B		
ST88-1975	Southern Natural Gas Co	Atlanta Gas Light Co	02-01-88	B		
ST88-1976	Southern Natural Gas Co	Atlanta Gas Light Co	02-01-88	B		
ST88-1977	Southern Natural Gas Co	City of Thomson	02-01-88	B		
ST88-1978	Southern Natural Gas Co	Atlanta Gas Light Co	02-01-88	B		
ST88-1979	Southern Natural Gas Co	Alabama Gas Corp	02-01-88	B		
ST88-1980	Southern Natural Gas Co	Atlanta Gas Light Co	02-01-88	B		
ST88-1981	Southern Natural Gas Co	Alabama Gas Corp	02-01-88	B		
ST88-1982	Southern Natural Gas Co	City of Tallahassee	02-01-88	B		
ST88-1983	Southern Natural Gas Co	Atlanta Gas Light Co	02-01-88	B		
ST88-1984	Southern Natural Gas Co	United Cities Gas Co	02-01-88	B		
ST88-1985	Southern Natural Gas Co	Atlanta Gas Light Co	02-01-88	B		
ST88-1986	Southern Natural Gas Co	Atlanta Gas Light Co	02-01-88	B		
ST88-1987	Southern Natural Gas Co	City of Wrens	02-01-88	B		
ST88-1988	Southern Natural Gas Co	Sabine-Desoto Pipeline Co., Inc	02-01-88	B		
ST88-1989	Southern Natural Gas Co	Alabama Gas Corp.	02-01-88	B		
ST88-1990	Southern Natural Gas Co	Atlanta Gas Light Co	02-01-88	B		
ST88-1991	Valero Transmission, L.P	Trunkline Gas Co	02-01-88	C		
ST88-1992	Colorado Interstate Gas Co	Southern California Gas Co	02-01-88	B		
ST88-1993	Colorado Interstate Gas Co	Llano, Inc	02-01-88	B		
ST88-1994	Northern Natural Gas Co	Michigan Power Co	02-01-88	B		
ST88-1995	Northern Natural Gas Co	San Diego Gas & Electric Co	02-01-88	B		
ST88-1996	Northern Natural Gas Co	Western Gas Utilities	02-01-88	B		
ST88-1997	Northern Natural Gas Co	Northern States Power Co	02-01-88	B		
ST88-1998	Northern Natural Gas Co	Peoples Natural Gas Co	02-01-88	B		
ST88-1999	Northern Natural Gas Co	Southern California Gas Co	02-01-88	B		
ST88-2000	Northern Natural Gas Co	Minnegasco, Inc	02-01-88	B		
ST88-2001	Northern Natural Gas Co	City of Two Harbors	02-01-88	B		
ST88-2002	Northern Natural Gas Co	NGP Pipeline Co	02-01-88	B		
ST88-2003	Northern Natural Gas Co	City of Remsen	02-01-88	B		
ST88-2004	Northern Natural Gas Co	Owatonna Public Utilities	02-01-88	B		
ST88-2005	Colorado Interstate Gas Co	Lovera Pipeline Co	02-02-88	B		
ST88-2006	Colorado Interstate Gas Co	Southern California Gas Co	02-02-88	B		
ST88-2007	Colorado Interstate Gas Co	MGTC, Inc	02-02-88	B		
ST88-2008	United Gas Pipe Line Co	Jala Pipe Line Corp	02-02-88	B		

Docket No.[1]	Transporter/seller	Recipient	Date filed	Subpart	Expiration date [2]	Transportation rate (¢/MMBTU)
ST88-2009	Tennessee Gas Pipeline Co	Louisiana State Gas Corp	02-02-88	B		
ST88-2010	Mountain Fuel Resources, Inc	Mountain Fuel Supply Co	02-02-88	B		
ST88-2011	Mountain Fuel Resources, Inc	Mountain Fuel Supply Co	02-02-88	B		
ST88-2012	Transcontinental Gas Pipe Line Corp	Delhi Gas Pipeline Corp., et al	02-02-88	B		
ST88-2014	Transcontinental Gas Pipe Line Corp	Wisconsin Gas Co., et al	02-02-88	B		
ST88-2015	United Gas Pipe Line Co	Bishop Pipeline Corp	02-02-88	B		
ST88-2016	United Gas Pipe Line Co	Providence Gas Co	02-02-88	B		
ST88-2017	United Gas Pipe Line Co	Quivira Gas Co., et al	02-02-88	B		
ST88-2018	United Gas Pipe Line Co	LGS Intrastate, Inc	02-02-88	B		
ST88-2019	United Gas Pipe Line Co	Pennsylvania Gas and Water Co	02-02-88	B		
ST88-2020	United Gas Pipe Line Co	St. James Parish Utilities	02-02-88	B		
ST88-2021	United Gas Pipe Line Co	Caddo Natural Gas Co., et al	02-02-88	B		
ST88-2022	United Gas Pipe Line Co	Quivira Gas Co	02-02-88	B		
ST88-2023	Dehli Gas Pipeline Corp	ANR Pipeline Co	02-02-88	C		
ST88-2024	Natural Gas Pipeline Co. of America	Northern Illinois Gas Co	03-88	B		
ST88-2025	Natural Gas Pipeline Co. of America	Corning Natural Gas Co., et al	02-03-88	B		
ST88-2026	Tennessee Gas Pipeline Co	Boston Gas Co	02-03-88	B		
ST88-2027	Western Gas Supply Co	Public Service Co. of Colorado	02-03-88	C		
ST88-2028	Northern Border Pipeline Co	Peoples Natural Gas Co	02-03-88	B		
ST88-2029	Northern Border Pipeline Co	Dome Petroleum Corp	02-03-88	G-S		
ST88-2030	El Paso Natural Gas Co	Southern California Gas Co	02-03-88	B		
ST88-2031	Northern Border Pipeline Co	Bonus Gas Processors, Corp	02-03-88	G-S		
ST88-2032	Northern Border Pipeline Co	Quivira Gas Co	02-03-88	B		
ST88-2033	Northern Natural Gas Co	Public Service Electric and Gas Co	02-03-88	B		
ST88-2034	Northern Border Pipeline Co	Canterra Energy, Ltd	02-03-88	G-S		
ST88-2035	Tennessee Gas Pipeline Co	Goetz Oil Corp	02-03-88	G-S		
ST88-2036	Tennessee Gas Pipeline Co	Alabama-Tennessee Natural Gas Co	02-03-88	B		
ST88-2037	Tennessee Gas Pipeline Co	Nashville Gas Co	02-03-88	B		
ST88-2038	Natural Gas Pipeline Co. of America	Niagara Mohawk Power Corp	02-03-88	B		
ST88-2039	Natural Gas Pipeline Co. of America	Northern Illinois Gas Co., et al	02-03-88	B		
ST88-2040	Natural Gas Pipeline Co. of America	Southern Gas Co	02-03-88	B		
ST88-2041	Natural Gas Pipeline Co. of America	Peoples Gas Light & Coke Co	02-03-88	B		
ST88-2042	Mountain Fuel Resources, Inc	Mountain Fuel Supply Co	02-04-88	B		
ST88-2043	Mountain Fuel Resources, Inc	Mountain Fuel Supply Co	02-04-88	B		
ST88-2044	Natural Gas Pipeline Co. of America	Peoples Gas Light & Coke Co., et al	02-04-88	B		
ST88-2045	Natural Gas Pipeline Co. of America	Iowa-Illinois Gas & Electric Co	02-04-88	B		
ST88-2046	Natural Gas Pipeline Co. of America	Iowa-Illinois Gas & Electric Co	02-04-88	B		
ST88-2047	Natural Gas Pipeline Co. of America	Northern Indiana Public Service Co	02-04-88	B		
ST88-2048	Natural Gas Pipeline Co. of America	Northern Illinois Gas Co	02-04-88	B		
ST88-2049	Natural Gas Pipeline Co. of America	Northern Indiana Public Service Co	02-04-88	B		
ST88-2050	Natural Gas Pipeline Co. of America	Peoples Gas Light & Coke Co	02-04-88	B		
ST88-2051	Northern Natural Gas Co	Guthrie Center Municipal Utilities	02-04-88	B		
ST88-2052	Northern Natural Gas Co	St. Croix Valley Natural Gas Co	02-04-88	B		
ST88-2053	Northern Natural Gas Co	Interstate Power Co	02-04-88	B		
ST88-2054	Delhi Gas Pipeline Corp	Natural Gas Pipeline Co. of America	02-04-88	C		
ST88-2055	Tennessee Gas Pipeline Co	Bishop Pipeline Corp	02-04-88	B		
ST88-2056	Louisiana Interstate Gas Corp	Freeport Interstate Pipeline Co	02-04-88	C	07-05-88	22.40
ST88-2057	Texas Gas Transmission Corp	Mississippi Valley Gas Co	02-05-88	B		
ST88-2058	Texas Gas Transmission Corp	CSX Intrastate Gas Co	02-05-88	B		
ST88-2061	Northern Natural Gas Co	Great Plains Natural Gas Co	02-05-88	B		
ST88-2062	Northern Natural Gas Co	Houston Pipe Line Co	02-05-88	B		
ST88-2063	Northern Natural Gas Co	Coastal States Gas Transmission Co	02-05-88	B		
ST88-2064	Northern Natural Gas Co	Southern California Gas Co	02-05-88	B		
ST88-2065	Northern Natural Gas Co	Spot Market Corp	02-05-88	G-S		
ST88-2066	Northern Natural Gas Co	Watertown Municipal Utility	02-05-88	B		
ST88-2067	Northern Natural Gas Co	Hibbing Public Utilities Commission	02-05-88	B		
ST88-2068	El Paso Natural Gas Co	Southern California Gas Co	02-05-88	B		
ST88-2069	El Paso Natural Gas Co	Llano, Inc	02-05-88	B		
ST88-2070	ANR Pipeline Co	Cheyenne Light, Fuel & Power Co	02-05-88	B		
ST88-2071	United Gas Pipe Line Co	Tristar Energy, Inc	02-05-88	B		
ST88-2072	United Gas Pipe Line Co	Gulf South Pipeline Co	02-05-88	B		
ST88-2073	United Gas Pipe Line Co	Western Kentucky Gas Co	02-05-88	B		
ST88-2074	Sea Robin Pipeline Co	Hydrocarbon Development Corp	02-05-88	B		
ST88-2075	Trunkline Gas Co	Tenngasco Exchange Corp	02-05-88	G-S		
ST88-2076	Trunkline Gas Co	Mississippi River Transmission Corp	02-05-88	G		
ST88-2077	Trunkline Gas Co	Consumers Power Co	02-05-88	B		
ST88-2078	Trunkline Gas Co	Exxon Co., U.S.A.	02-05-88	G-S		
ST88-2079	Trunkline Gas Co	Corpus Christi Industrial Pipeline Co	02-05-88	B		
ST88-2080	Transcontinental Gas Pipe Line Corp	United Cities Gas Co	02-05-88	B		
ST88-2081	Transcontinental Gas Pipe Line Corp	Channel Industries Gas Co	02-05-88	B		
ST88-2082	Transcontinental Gas Pipe Line Corp	Monterey Pipeline Co	02-05-88	B		
ST88-2083	Phillips Gas Pipeline Co	Phillips Natural Gas Co	02-05-88	B		
ST88-2084	Sabine Pipe Line Co	Loutex Energy, Inc	02-06-88	G-S		
ST88-2085	Channel Industries Gas Co	Tennessee Gas Pipeline Co	02-06-88	C		
ST88-2086	Channel Industries Gas Co	Northern Natural Gas Co	02-06-88	C		
ST88-2087	Channel Industries Gas Co	Northern Natural Gas Co	02-06-88	C		
ST88-2088	Channel Industries Gas Co	Neches Gas Distribution Co	02-06-88	C		
ST88-2089	ANR Pipeline Co	Michigan Consolidated Gas Co	02-06-88	B		
ST88-2090	ANR Pipeline Co	Ohio Gas Co	02-06-88	B		

Docket No.[1]	Transporter/seller	Recipient	Date filed	Subpart	Expiration date [2]	Transportation rate (¢/MMBTU)
ST88-2091	Colorado Interstate Gas Co	Coastal States Gas Transmission Co	02-08-88	B		
ST88-2092	ANR Pipeline Co	Wisconsin Power and Light Co	02-08-88	B		
ST88-2093	Northern Natural Gas Co	Harlan Municipal Utilities	02-08-88	B		
ST88-2094	Northern Natural Gas Co	City of Gilmore	02-08-88	B		
ST88-2095	ANR Pipeline Co	South Carolina Pipeline Corp	02-08-88	B		
ST88-2096	ANR Pipeline Co	Wisconsin Natural Gas Co	02-08-88	B		
ST88-2097	ANR Pipeline Co	Wisconsin Fuel and Light Co	02-08-88	B		
ST88-2098	CNG Transmission Corp	Hope Gas, Inc	02-08-88	B		
ST88-2099	CNG Transmission Corp	Cranberry Pipeline Corp	02-08-88	B		
ST88-2100	CNG Transmission Corp	Public Service Electric and Gas Co	02-08-88	B		
ST88-2101	CNG Transmission Corp	Consolidated Edison Co. of NY, Inc	02-08-88	B		
ST88-2102	Columbia Gas Transmission Corp	Piedmont Natural Gas Co	02-08-88	B		
ST88-2103	Trunkline Gas Co	Intercon Gas, Inc	02-08-88	G-S		
ST88-2104	Natural Gas Pipeline Co. of America	Wisconsin Southern Gas Co., Inc., et al	02-08-88	B		
ST88-2105	Natural Gas Pipeline Co. of America	Peoples Gas Light & Coke Co	02-08-88	B		
ST88-2106	Natural Gas Pipeline Co. of America	Northern Indiana Public Service Co	02-08-88	B		
ST88-2108	Tennessee Gas Pipeline Co	Louisiana Gas System, Inc	02-08-88	B		
ST88-2109	Tennessee Gas Pipeline Co	Brooklyn Union Gas Co., et al	02-08-88	B		
ST88-2110	Tennessee Gas Pipeline Co	Western Kentucky Gas Co	02-08-88	B		
ST88-2111	Trunkline Gas Co	Central Illinois Light Co	02-09-88	B		
ST88-2112	Trunkline Gas Co	Consumers Power Co	02-09-88	B		
ST88-2113	Trunkline Gas Co	Alabama Gas Corp., et al	02-09-88	B		
ST88-2114	Trunkline Gas Co	Consumers Power Co	02-09-88	B		
ST88-2115	Trunkline Gas Co	Consumers Power Co	02-09-88	B		
ST88-2116	Trunkline Gas Co	Northern Indiana Public Service Co	02-09-88	B		
ST88-2117	Trunkline Gas Co	Consumers Power Co	02-09-88	B		
ST88-2118	Trunkline Gas Co	Consumers Power Co	02-09-88	B		
ST88-2119	Trunkline Gas Co	Consumers Power Co	02-09-88	B		
ST88-2120	Trunkline Gas Co	Consumers Power Co	02-09-88	B		
ST88-2121	Trunkline Gas Co	Louisiana Gas System, Inc	02-09-88	B		
ST88-2122	Trunkline Gas Co	Consumers Power Co	02-09-88	B		
ST88-2123	Trunkline Gas Co	Ohio Gas Co	02-09-88	B		
ST88-2124	Trunkline Gas Co	Valero Transmission Co	02-09-88	B		
ST88-2125	Trunkline Gas Co	Consumers Power Co	02-09-88	B		
ST88-2126	Trunkline Gas Co	Tejas Power Corp	02-09-88	G-S		
ST88-2127	Trunkline Gas Co	Northern Indiana Public Service Co	02-09-88	B		
ST88-2128	Trunkline Gas Co	Consumers Power Co	02-09-88	B		
ST88-2129	Trunkline Gas Co	Consumers Power Co	02-09-88	B		
ST88-2130	Trunkline Gas Co	Consumers Power Co	02-09-88	B		
ST88-2131	Trunkline Gas Co	Consumers Power Co	02-09-88	B		
ST88-2132	United Gas Pipe Line Co	Louisiana State Gas Corp	02-09-88	B		
ST88-2133	United Gas Pipe Line Co	Excel Intrastate Pipeline Co	02-09-88	B		
ST88-2134	United Gas Pipe Line Co	United Texas Transmission Co	02-09-88	B		
ST88-2135	United Gas Pipe Line Co	NGC Intrastate Pipeline Co	02-09-88	B		
ST88-2136	United Gas Pipe Line Co	Woodward Pipeline, Inc	02-09-88	B		
ST88-2137	United Gas Pipe Line Co	Sabine-Desoto Pipeline Co., Inc	02-09-88	B		
ST88-2138	United Gas Pipe Line Co	Humble Gas System, Inc	02-09-88	B		
ST88-2139	United Gas Pipe Line Co	Hydrocarbon Development Corp	02-09-88	B		
ST88-2140	United Gas Pipe Line Co	Concorde Gas Intrastate, Inc., et al	02-09-88	B		
ST88-2141	United Gas Pipe Line Co	Louisiana State Gas Corp	02-09-88	B		
ST88-2142	United Gas Pipe Line Co	Jala Pipe Line Corp	02-09-88	B		
ST88-2143	United Gas Pipe Line Co	Entex, Inc	02-09-88	B		
ST88-2144	Natural Gas Pipeline Co. of America	Reliance Pipeline Co	02-09-88	B		
ST88-2145	Natural Gas Pipeline Co. of America	Southern California Gas Co., et al	02-09-88	B		
ST88-2146	Natural Gas Pipeline Co. of America	Iowa-Illinois Gas & Electric Co	02-09-88	B		
ST88-2147	Natural Gas Pipeline Co. of America	Peoples Gas Light & Coke Co	02-09-88	B		
ST88-2148	Natural Gas Pipeline Co. of America	Northern Indiana Public Service Co	02-09-88	B		
ST88-2149	Natural Gas Pipeline Co. of America	North Shore Gas Co	02-09-88	B		
ST88-2150	Transcontinental Gas Pipe Line Corp	Philadelphia Electric Co	02-09-88	B		
ST88-2151	ANR Pipeline Co	Wisconsin Gas Co	02-09-88	B		
ST88-2152	ANR Pipeline Co	Consumers Power Co	02-09-88	B		
ST88-2153	ANR Pipeline Co	Yankee Pipeline Co	02-09-88	B		
ST88-2154	Valero Transmission, LP	El Paso Natural Gas Co	02-09-88	C		
ST88-2155	Valero Transmission, LP	El Paso Natural Gas Co	02-09-88	C		
ST88-2156	Valero Transmission, LP	Natural Gas Pipeline Co. of America	02-09-88	C		
ST88-2157	Valero Transmission, LP	El Paso Natural Gas Co	02-09-88	C		
ST88-2158	Valero Transmission, LP	El Paso Natural Gas Co	02-09-88	C		
ST88-2159	Valero Transmission, LP	Valero Interstate Transmission Co	02-09-88	C		
ST88-2160	Valero Transmission, LP	Transwestern Pipeline Co	02-09-88	C		
ST88-2161	Natural Gas Pipeline Co. of America	Central Illinois Light Co	02-10-88	B		
ST88-2162	Natural Gas Pipeline Co. of America	Northern Indiana Public Service Co	02-10-88	B		
ST88-2163	Natural Gas Pipeline Co. of America	North Shore Gas Co	02-10-88	B		
ST88-2164	Panhandle Eastern Pipe Line Co	Consumers Power Co	02-10-88	B		
ST88-2165	Panhandle Eastern Pipe Line Co	Consumers Power Co	02-10-88	B		
ST88-2166	Panhandle Eastern Pipe Line Co	Consumers Power Co	02-10-88	B		
ST88-2167	United Gas Pipe Line Co	Jala Pipe Line Corp	02-10-88	B		
ST88-2168	United Gas Pipe Line Co	Yankee Pipeline Co	02-10-88	B		
ST88-2169	Williams Natural Gas Co	Mobil Oil Corp	02-10-88	G-S		
ST88-2170	Williams Natural Gas Co	Mobil Oil Corp	02-10-88	G-S		

VOL 53 ISS 76 AP 20 1988 UMI

Docket No.[1]	Transporter/seller	Recipient	Date filed	Subpart	Expiration date [2]	Transportation rate (¢/MMBTU)
ST88-2171	Williams Natural Gas Co	PSI, Inc	02-10-88	G-S		
ST88-2172	Northern Natural Gas Co	Cabot Gas Supply Corp	02-10-88	B		
ST88-2173	Northern Natural Gas Co	Cabot Gas Supply Corp	02-10-88	B		
ST88-2174	Northern Natural Gas Co	Wisconsin Power and Light Co	02-10-88	B		
ST88-2175	Panhandle Eastern Pipe Line Co	Northern Indiana Fuel & Light Co	02-11-88	B		
ST88-2176	Panhandle Eastern Pipe Line Co	Consumers Power Co	02-11-88	B		
ST88-2177	Panhandle Eastern Pipe Line Co	Consumers Power Co	02-11-88	B		
ST88-2178	Panhandle Eastern Pipe Line Co	Consumers Power Co	02-11-88	B		
ST88-2179	Panhandle Eastern Pipe Line Co	Louisiana Intrastate Gas Co	02-11-88	B		
ST88-2180	Panhandle Eastern Pipe Line Co	Central Illinois Public Service Co	02-11-88	B		
ST88-2181	Natural Gas Pipeline Co. of America	Northern Indiana Public Service Co	02-11-88	B		
ST88-2182	Natural Gas Pipeline Co. of America	Enogex Inc	02-11-88	B		
ST88-2183	Natural Gas Pipeline Co. of America	Illinois Power Co.	02-11-88	B		
ST88-2184	Natural Gas Pipeline Co. of America	Northern Indiana Public Service Co	02-11-88	B		
ST88-2185	Natural Gas Pipeline Co. of America	Houston Pipe Line Co	02-11-88	B		
ST88-2186	ANR Pipeline Co	Llano, Inc	02-11-88	B		
ST88-2187	ANR Pipeline Co	Wisconsin Natural Gas Co	02-11-88	B		
ST88-2188	ANR Pipeline Co	Columbia Gas of Ohio, Inc	02-11-88	B		
ST88-2189	Northern Border Pipeline Co	Petrorep (Canada) Ltd	02-11-88	G-S		
ST88-2190	Northern Border Pipeline Co	Placer Cego Petroleum	02-11-88	G-S		
ST88-2191	Northern Border Pipeline Co	Northern States Power Co	02-11-88	B		
ST88-2192	Algonquin Gas Transmission Co	City of Norwich	02-12-88	B		
ST88-2193	Algonquin Gas Transmission Co	Colonial Gas Company	02-12-88	B		
ST88-2194	Transcontinental Gas Pipe Line Corp	Longhorn Pipeline Co	02-12-88	B		
ST88-2195	Transcontinental Gas Pipe Line Corp	Eastex Gas Transmission Co	02-12-88	B		
ST88-2196	Transcontinental Gas Pipe Line Corp	Polo Energy Corp	02-12-88	B		
ST88-2197	Natural Gas Pipeline Co. of America	Midven Pipeline Co	02-16-88	B		
ST88-2198	Natural Gas Pipeline Co. of America	Neches Pipeline System	02-16-88	B		
ST88-2199	Natural Gas Pipeline Co. of America	Iowa Electric Light & Power Co	02-16-88	B		
ST88-2200	Natural Gas Pipeline Co. of America	Dayton Power and Light Co	02-16-88	B		
ST88-2201	Valero Transmission, LP	El Paso Natural Gas Co	02-16-88	C		
ST88-2202	Valero Transmission, LP	El Paso Natural Gas Co	02-16-88	C		
ST88-2203	Tennessee Gas Pipeline Co	Columbia Gas of KY, Inc., et al	02-16-88	B		
ST88-2204	Northern Natural Gas Co	Interstate Power Co	02-12-88	B		
ST88-2205	Llano, Inc		02-12-88	C	7-11-88	29.97/ 17.17/ 02.28
ST88-2206	Tennessee Gas Pipeline Co	North Penn Gas Co	02-12-88	B		
ST88-2207	Tennessee Gas Pipeline Co	Texas Eastern Transmission Corp	02-12-88	G		
ST88-2208	Panhandle Eastern Pipe Line Co	Louisiana Intrastate Gas Co	02-16-88	B		
ST88-2209	Northwest Pipeline Corp	Mobil Producing Texas and New Mexico Inc	02-16-88	G-S		
ST88-2210	Trunkline Gas Co	Central Illinois Public Service Co	02-16-88	B		
ST88-2211	Trunkline Gas Co	Transamerican Gas Transmission Corp	02-16-88	B		
ST88-2212	Trunkline Gas Co	Northern Indiana Public Service Co	02-16-88	B		
ST88-2213	Trunkline Gas Co	Consumers Power Co	02-16-88	B		
ST88-2214	Trunkline Gas Co	Union Gas Limited	02-16-88	B		
ST88-2215	Trunkline Gas Co	Eastex Gas Transmission Co	02-16-88	B		
ST88-2216	Columbia Gulf Transmission Co	Creole Gas Pipeline Corp	02-16-88	B		
ST88-2217	Tennessee Gas Pipeline Co	Amagas Resources, Inc	02-16-88	G-S		
ST88-2218	Transcontinental Gas Pipe Line Corp	Commonwealth Gas Pipeline Corp	02-16-88	B		
ST88-2219	Northern Natural Gas Co	Arco Oil & Gas Co	02-16-88	G-S		
ST88-2220	Northern Natural Gas Co	Hibbing Public Utilities Commission	02-16-88	B		
ST88-2221	South Georgia Natural Gas Co	City of Dawson	02-16-88	B		
ST88-2222	South Georgia Natural Gas Co	City of Adel	02-16-88	B		
ST88-2223	South Georgia Natural Gas Co	City of Vienna	02-16-88	B		
ST88-2224	South Georgia Natural Gas Co	Americus Utility Commission	02-16-88	B		
ST88-2225	South Georgia Natural Gas Co	City of Blakely	02-16-88	B		
ST88-2226	South Georgia Natural Gas Co	City of Moultrie	02-16-88	B		
ST88-2227	South Georgia Natural Gas Co	City of Lumpkin	02-16-88	B		
ST88-2228	South Georgia Natural Gas Co	City of Meigs	02-16-88	B		
ST88-2229	South Georgia Natural Gas Co	City of Camilla	02-16-88	B		
ST88-2230	South Georgia Natural Gas Co	City of Quitman	02-16-88	B		
ST88-2231	South Georgia Natural Gas Co	City of Sylvester	02-16-88	B		
ST88-2232	South Georgia Natural Gas Co	City of Edison	02-16-88	B		
ST88-2233	South Georgia Natural Gas Co	City of Ashburn	02-16-88	B		
ST88-2234	South Georgia Natural Gas Co	City of Bainbridge	02-16-88	B		
ST88-2235	South Georgia Natural Gas Co	City of Pelham	02-16-88	B		
ST88-2236	South Georgia Natural Gas Co	Fitzgerald Water, Light and Bond Comm	02-16-88	B		
ST88-2237	South Georgia Natural Gas Co	City of Thomasville	02-16-88	B		
ST88-2238	South Georgia Natural Gas Co	City of Doerun	02-16-88	B		
ST88-2239	Southern Natural Gas Co	City of Camilla	02-16-88	B		
ST88-2240	Southern Natural Gas Co	United Cities Gas Co	02-16-88	B		
ST88-2241	Southern Natural Gas Co	United Cities Gas Co	02-16-88	B		
ST88-2242	Southern Natural Gas Co	City of Trussville	02-16-88	B		
ST88-2243	Southern Natural Gas Co	City of Cairo	02-16-88	B		
ST88-2244	Southern Natural Gas Co	Atlanta Gas Light Co	02-16-88	B		
ST88-2245	Southern Natural Gas Co	Atlanta Gas Light Co	02-16-88	B		
ST88-2246	Southern Natural Gas Co	City of Calera	02-16-88	B		

BEST COPY AVAILABLE

Docket No.[1]	Transporter/seller	Recipient	Date filed	Subpart	Expiration date [2]	Transportation rate (¢/MMBTU)
ST88-2247	Southern Natural Gas Co	City of Lafayette	02-16-88	B		
ST88-2248	Southern Natural Gas Co	Chattanooga Gas Co	02-16-88	B		
ST88-2249	Southern Natural Gas Co	City of Fultondale	02-16-88	B		
ST88-2250	Southern Natural Gas Co	Alabama Gas Corp	02-16-88	B		
ST88-2251	Southern Natural Gas Co	Americus Utility Commission	02-16-88	B		
ST88-2252	Southern Natural Gas Co	City of Thomson	02-16-88	B		
ST88-2253	Southern Natural Gas Co	City of Jacksonville	02-16-88	B		
ST88-2254	Southern Natural Gas Co	City of Scottsboro	02-16-88	B		
ST88-2255	Southern Natural Gas Co	City of Pelham	02-16-88	B		
ST88-2256	Southern Natural Gas Co	City of Meigs	02-16-88	B		
ST88-2257	Southern Natural Gas Co	Alabama Gas Corp	02-16-88	B		
ST88-2258	Southern Natural Gas Co	City of Adel	02-16-88	B		
ST88-2259	Southern Natural Gas Co	City of Quitman	02-16-88	B		
ST88-2260	Southern Natural Gas Co	City of Thomasville	02-16-88	B		
ST88-2261	Southern Natural Gas Co	SNG Intrastate Pipeline, Inc	02-16-88	B		
ST88-2262	Southern Natural Gas Co	City of Sylvester	02-16-88	B		
ST88-2263	Southern Natural Gas Co	Atlanta Gas Light Co	02-16-88	B		
ST88-2264	Southern Natural Gas Co	City of Lumpkin	02-16-88	B		
ST88-2265	Southern Natural Gas Co	Fitzgerald Water, Light and Bond Comm	02-16-88	B		
ST88-2266	Southern Natural Gas Co	Atlanta Gas Light Co	02-16-88	B		
ST88-2267	Southern Natural Gas Co	SNG Intrastate Pipeline, Inc	02-16-88	B		
ST88-2268	Southern Natural Gas Co	City of Edison	02-16-88	B		
ST88-2269	Southern Natural Gas Co	Alabama Gas Corp	02-16-88	B		
ST88-2270	Southern Natural Gas Co	Atlanta Gas Light Co	02-16-88	B		
ST88-2271	Southern Natural Gas Co	Atlanta Gas Light Co	02-16-88	B		
ST88-2272	Southern Natural Gas Co	City of Dawson	02-16-88	B		
ST88-2273	Southern Natural Gas Co	City of Bainbridge	02-16-88	B		
ST88-2274	Southern Natural Gas Co	City of Blakely	02-16-88	B		
ST88-2275	Southern Natural Gas Co	Atlanta Gas Light Co	02-16-88	B		
ST88-2276	Southern Natural Gas Co	City of Moultrie	02-16-88	B		
ST88-2277	Southern Natural Gas Co	City of Ashville	02-16-88	B		
ST88-2278	Southern Natural Gas Co	Alabama Gas Corp.	02-16-88	B		
ST88-2279	Southern Natural Gas Co	Chilton County Gas District	02-16-88	B		
ST88-2280	Southern Natural Gas Co	City of Vienna	02-16-88	B		
ST88-2281	Southern Natural Gas Co	SNG Intrastate Pipeline, Inc	02-16-88	B		
ST88-2282	Southern Natural Gas Co	SNG Intrastate Pipeline, Inc	02-16-88	B		
ST88-2283	Southern Natural Gas Co	City of Columbiana	02-16-88	B		
ST88-2284	Southern Natural Gas Co	Atlanta Gas Light Co	02-16-88	B		
ST88-2285	Southern Natural Gas Co	City of Doerun	02-16-88	B		
ST88-2286	Southern Natural Gas Co	City of Boaz	02-16-88	B		
ST88-2287	Southern Natural Gas Co	City of Ashburn	02-16-88	B		
ST88-2288	Southern Natural Gas Co	Atlanta Gas Light Co	02-16-88	B		
ST88-2289	South Georgia Natural Gas Co	City of Cairo	02-16-88	B		
ST88-2290	Texas Eastern Transmission Corp	Hunt Petroleum Corp	03-04-88	G-S		
ST88-2291	Texas Eastern Transmission Corp	William Herbert Hunt Trust Estate	03-04-88	G-S		
ST88-2292	Natural Gas Pipeline Co. of America	Pacific Gas and Electric Co., et al	02-17-88	B		
ST88-2293	Natural Gas Pipeline Co. of America	Northern Indiana Pub. of Service Co., et al	02-17-88	B		
ST88-2294	Natural Gas Pipeline Co. of America	North Shore Gas Co., et al	02-17-88	B		
ST88-2295	Crosstex Pipeline Co	Natural Gas Pipeline Co. of Am., et al	02-17-88	C		
ST88-2296	Panhandle Eastern Pipe Line Co	Kansas Gas Supply Corp	02-17-88	B		
ST88-2297	Panhandle Eastern Pipe Line Co	Iowa-Illinois Gas & Elect. Co., et al	02-17-88	B		
ST88-2298	Trunkline Gas Co	Consumers Power Co	02-17-88	B		
ST88-2299	Trunkline Gas Co	Northern Indiana Public Service Co	02-17-88	B		
ST88-2300	Trunkline Gas Co	Consumers Power Co	02-17-88	B		
ST88-2301	Trunkline Gas Co	Michigan Consolidated Gas Co	02-17-88	B		
ST88-2302	Trunkline Gas Co	Michigan Consolidated Gas Co., et al	02-17-88	B		
ST88-2303	Trunkline Gas Co	Battle Creek Gas Co	02-17-88	B		
ST88-2304	Tennessee Gas Pipeline Co	Natural Gas Pipeline Co. of America	02-17-88	G		
ST88-2305	Tennessee Gas Pipeline Co	NRG Energy Corp	02-17-88	B		
ST88-2306	ANR Pipeline Co	Tejas Power Corp. Pipeline Inc	02-17-88	B		
ST88-2307	ANR Pipeline Co	Northern Indiana Fuel & Light Co	02-17-88	B		
ST88-2308	Freeport Interstate Pipeline Co	Freeport Pipeline Co	02-18-88	B		
ST88-2309	Northern Border Pipeline Co	Northern Natural Gas Co	02-18-88	G		
ST88-2310	Tennessee Gas Pipeline Co	City of Holly Springs	02-18-88	B		
ST88-2311	Tennessee Gas Pipeline Co	Stellar Gas Co	02-18-88	B		
ST88-2312	Transcontinental Gas Pipe Line Corp	Baltimore Gas & Elect. Co., et al	02-18-88	B		
ST88-2313	Transcontinental Gas Pipe Line Corp	City of Winder	02-18-88	B		
ST88-2314	Transcontinental Gas Pipe Line Corp	City of Toccoa	02-18-88	B		
ST88-2315	Transcontinental Gas Pipe Line Corp	City of Sugar Hill	02-18-88	B		
ST88-2316	Transcontinental Gas Pipe Line Corp	City of Royston	02-18-88	B		
ST88-2317	Transcontinental Gas Pipe Line Corp	City of Social Circle	02-18-88	B		
ST88-2318	Transcontinental Gas Pipe Line Corp	City of Lawrenceville	02-18-88	B		
ST88-2319	Transcontinental Gas Pipe Line Corp	Northern Illinois Gas Co	02-18-88	B		
ST88-2320	Transcontinental Gas Pipe Line Corp	Pontchartrain National Gas System	02-18-88	B		
ST88-2321	Transcontinental Gas Pipe Line Corp	Long Island Lighting Co	02-18-88	B		
ST88-2322	Transcontinental Gas Pipe Line Corp	City of Elberton	02-18-88	B		
ST88-2323	Transcontinental Gas Pipe Line Corp	City of Hartwell	02-18-88	B		
ST88-2324	Transcontinental Gas Pipe Line Corp	City of Covington	02-18-88	B		

VOL 53 ISS 76 AP 20 1988 UMI

Docket No.[1]	Transporter/seller	Recipient	Date filed	Subpart	Expiration date [2]	Transportation rate (¢/MMBTU)
ST88-2325	Transcontinental Gas Pipe Line Corp	City of Bowman	02-16-88	B		
ST88-2326	Transcontinental Gas Pipe Line Corp	City of Buford	02-16-88	B		
ST88-2327	Transcontinental Gas Pipe Line Corp	Tri-County Natural Gas Co	02-16-88	B		
ST88-2328	Transcontinental Gas Pipe Line Corp	City of Wadley	02-16-88	B		
ST88-2329	Transcontinental Gas Pipe Line Corp	Blacksburg Natural Gas Co	02-16-88	B		
ST88-2330	Transcontinental Gas Pipe Line Corp	City of Monroe	02-16-88	B		
ST88-2331	Transcontinental Gas Pipe Line Corp	City of Madison	02-16-88	B		
ST88-2332	Transcontinental Gas Pipe Line Corp	City of Commerce	02-16-88	B		
ST88-2333	Transcontinental Gas Pipe Line Corp	City of Danville	02-16-88	B		
ST88-2334	Transcontinental Gas Pipe Line Corp	Frederick Gas Co	02-16-88	B		
ST88-2335	Transcontinental Gas Pipe Line Corp	City of Laurens	02-16-88	B		
ST88-2336	Trunkline Gas Co	Consumers Power Co	02-16-88	B		
ST88-2337	Trunkline Gas Co	Northern Indiana Public Service Co	02-16-88	B		
ST88-2338	Panhandle Eastern Pipe Line Co	Ohio Gas Co	02-16-88	B		
ST88-2339	Transcontinental Gas Pipe Line Corp	City of Shelby	02-19-88	B		
ST88-2340	El Paso Natural Gas Co	Pacific Gas and Electric Co	02-19-88	B		
ST88-2341	El Paso Natural Gas Co	Minnegasco, Inc	02-19-88	B		
ST88-2342	El Paso Natural Gas Co	Pacific Gas and Electric Co	02-19-88	B		
ST88-2343	El Paso Natural Gas Co	Southern California Gas Co	02-19-88	B		
ST88-2344	Natural Gas Pipeline Co. of America	Peoples Gas Light & Coke Co	02-19-88	B		
ST88-2345	Natural Gas Pipeline Co. of America	Niagara Mohawk Power Co., et al	02-19-88	B		
ST88-2346	Natural Gas Pipeline Co. of America	Northern Illinois Gas Co	02-19-88	B		
ST88-2347	Natural Gas Pipeline Co. of America	Iowa-Illinois Gas & Electric Co	02-19-88	B		
ST88-2348	Natural Gas Pipeline Co. of America	Northern Illinois Gas Co	02-19-88	B		
ST88-2349	Natural Gas Pipeline Co. of America	Amalgamated Pipeline Co	02-19-88	B		
ST88-2350	Natural Gas Pipeline Co. of America	Southwest Gas Pipeline, Inc., et al	02-19-88	B		
ST88-2351	Natural Gas Pipeline Co. of America	Northern Indiana Pub. Service Co., et al	02-19-88	B		
ST88-2352	Natural Gas Pipeline Co. of America	ONG Transmission Co., et al	02-19-88	B		
ST88-2353	Natural Gas Pipeline Co. of America	Northern Illinois Gas Co., et al	02-19-88	B		
ST88-2354	Natural Gas Pipeline Co. of America	Peoples Gas Light & Coke Co	02-19-88	B		
ST88-2355	United Gas Pipe Line Co	NGC Intrastate Pipeline Co	02-19-88	B		
ST88-2356	Columbia Gulf Transmission Co	Alabama-Tennessee Natural Gas Co	02-19-88	G		
ST88-2357	ANR Pipeline Co	Northern Indiana Public Service Co	02-19-88	B		
ST88-2358	ANR Pipeline Co	Iowa Public Service Co	02-19-88	B		
ST88-2359	ANR Pipeline Co	Coastal States Gas Transmission Co	02-19-88	B		
ST88-2360	ANR Pipeline Co	Chattanooga Gas Co	02-19-88	B		
ST88-2361	Tennessee Gas Pipeline Co	Pontchartrain Natural Gas System	02-19-88	B		
ST88-2362	Northern Natural Gas Co	Enron Gas Marketing	02-19-88	G-S		
ST88-2363	Lear Gas Transmission Co	Texas Eastern Transmission Corp	02-22-88	C	07-21-88	21.50
ST88-2364	Arkla Energy Resources	Oklahoma Gas & Electric Co	02-22-88	B		
ST88-2365	Panhandle Eastern Pipe Line Co	Central Illinois Light Co	02-22-88	B		
ST88-2366	Panhandle Eastern Pipe Line Co	Consumers Power Co	02-22-88	B		
ST88-2367	Trunkline Gas Co	Northern Indiana Public Service Co	02-22-88	B		
ST88-2368	Natural Gas Pipeline Co. of America	Iowa-Illinois Gas & Electric Co	02-22-88	B		
ST88-2369	Natural Gas Pipeline Co. of America	Midwest Gas Co	02-22-88	B		
ST88-2370	Natural Gas Pipeline Co. of America	Southern California Gas Co	02-22-88	B		
ST88-2371	Natural Gas Pipeline Co. of America	Rockland Pipeline System	02-22-88	B		
ST88-2372	Natural Gas Pipeline Co. of America	Iowa-Illinois Gas & Electric Co	02-22-88	B		
ST88-2373	Natural Gas Pipeline Co. of America	Northern Illinois Gas Co	02-22-88	B		
ST88-2374	Natural Gas Pipeline Co. of America	Central Illinois Light Co	02-22-88	B		
ST88-2375	Natural Gas Pipeline Co. of America	Northern Illinois Gas Co	02-22-88	B		
ST88-2376	Natural Gas Pipeline Co. of America	Pennsylvania Gas and Water Co	02-22-88	B		
ST88-2377	Natural Gas Pipeline Co. of America	Iowa-Illinois Gas & Electric Co	02-22-88	B		
ST88-2378	Natural Gas Pipeline Co. of America	Union Electric Co	02-22-88	B		
ST88-2379	Delhi Gas Pipeline Corp	Nycotex Gas Transport	02-22-88	C		
ST88-2380	Delhi Gas Pipeline Corp	Northern Natural Gas Co	02-22-88	C		
ST88-2381	ONG Transmission Co	Panhandle Eastern Pipe Line Co	02-22-88	C	07-21-88	10.00
ST88-2382	United Gas Pipe Line Co	Pennsylvania Gas and Water Co	02-22-88	B		
ST88-2383	Channel Industries Gas Co	Northern Natural Gas Co	02-22-88	C		
ST88-2384	Tennessee Gas Pipeline Co	Columbia Gas Transmission Corp	02-22-88	G		
ST88-2385	Tennessee Gas Pipeline Co	Trunkline Gas Co., et al	02-22-88	G		
ST88-2386	Northern Natural Gas Co	Windward Energy & Marketing Co	02-23-88	G-S		
ST88-2387	ANR Pipeline Co	Washington Gas Light Co	02-23-88	B		
ST88-2388	Colorado Interstate Gas Co	Northern Illinois Gas Co	02-23-88	B		
ST88-2389	Colorado Interstate Gas Co	Minnegasco, Inc	02-23-88	B		
ST88-2390	Colorado Interstate Gas Co	Energy Pipeline Co	02-23-88	B		
ST88-2391	Colorado Interstate Gas Co	San Diego Power and Light Co	02-23-88	B		
ST88-2392	CNG Transmission Corp	Niagara Mohawk Power Corp	02-23-88	B		
ST88-2393	CNG Transmission Corp	Niagara Mohawk Power Corp	02-23-88	B		
ST88-2394	CNG Transmission Corp	East Ohio Gas Co	02-23-88	B		
ST88-2395	CNG Transmission Corp	Niagara Mohawk Power Corp	02-23-88	B		
ST88-2396	CNG Transmission Corp	New York State Electric and Gas Co	02-23-88	B		
ST88-2397	CNG Transmission Corp	East Ohio Gas Co	02-23-88	B		
ST88-2398	CNG Transmission Corp	Niagara Mohawk Power Corp	02-23-88	B		
ST88-2399	CNG Transmission Corp	Niagara Mohawk Power Corp	02-23-88	B		
ST88-2400	CNG Transmission Corp	Peoples Natural Gas Co	02-23-88	B		
ST88-2401	CNG Transmission Corp	New York State Electric and Gas Co	02-23-88	B		
ST88-2402	CNG Transmission Corp	New York State Electric and Gas Co	02-23-88	B		
ST88-2403	CNG Transmission Corp	Niagara Mohawk Power Corp	02-23-88	B		

Docket No.[1]	Transporter/seller	Recipient	Date filed	Subpart	Expiration date[2]	Transportation rate (¢/MMBTU)
ST88-2404	Northern Border Pipeline Co	Minnegasco, Inc	02-23-88	B		
ST88-2405	Northern Border Pipeline Co	Northern Natural Gas Co	02-23-88	G		
ST88-2406	Panhandle Eastern Pipe Line Co	Greeley Gas Co	02-23-88	B		
ST88-2407	Panhandle Eastern Pipe Line Co	Central Illinois Light Co	02-23-88	B		
ST88-2408	Panhandle Eastern Pipe Line Co	Central Illinois Light Co	02-23-88	B		
ST88-2409	Panhandle Eastern Pipe Line Co	Battle Creek Gas Co	02-23-88	B		
ST88-2410	Panhandle Eastern Pipe Line Co	Central Illinois Light Co	02-23-88	B		
ST88-2411	Valero Transmission, L.P	El Pasco Natural Gas Co	02-23-88	C		
ST88-2412	Valero Transmission, L.P	Natural Gas Pipeline Co. of America	02-23-88	C		
ST88-2413	Valero Transmission, L.P	El Pasco Natural Gas Co	02-23-88	C		
ST88-2414	Mountain Fuel Resources, Inc	Mountain Fuel Supply Co	02-23-88	B		
ST88-2415	Valero Interstate Transmission Co	Valero Transmission, L.P	02-24-88	B		
ST88-2416	Northern Border Pipeline Co	Encor Energy (America), Inc	02-24-88	G-S		
ST88-2417	Cabot Pipeline Corp	El Paso Natural Gas Co., et al	02-24-88	C		
ST88-2418	Delhi Gas Pipeline Corp	Mississippi River Transmission Corp	02-24-88	C		
ST88-2419	Delhi Gas Pipeline Corp	Phillips Gas Pipeline Co	02-24-88	C		
ST88-2420	Delhi Gas Pipeline Corp	Panhandle Eastern Pipe Line Co	02-24-88	C		
ST88-2421	Transcontinental Gas Pipe Line Corp	Southern Gas Pipeline Co	02-24-88	B		
ST88-2422	Transcontinental Gas Pipe Line Corp	Creole Gas Pipeline Co	02-24-88	B		
ST88-2423	Columbia Gulf Transmission Co	Central Illinois Light Co., et al	02-25-88	B		
ST88-2424	Tennessee Gas Pipeline Co	Mobile Gas Service Corp	02-23-88	B		
ST88-2425	Northern Natural Gas Co	El Paso Hydrocarbons Co	02-24-88	B		
ST88-2426	Texas Gas Transmission Corp	Bay State Gas Co., et al	02-25-88	B		
ST88-2427	Texas Gas Transmission Corp	TPC Pipeline Co	02-25-88	B		
ST88-2428	Texas Gas Transmission Corp	Winnie Pipeline Co	02-25-88	B		
ST88-2429	Texas Gas Transmission Corp	CSX Intrastate Gas Co	02-25-88	B		
ST88-2430	Columbia Gas Transmission Corp	Delmarva Power and Light Co	02-25-88	B		
ST88-2431	Columbia Gulf Transmission Co	Acadian Gas Pipeline System	02-25-88	B		
ST88-2432	Columbia Gulf Transmission Co	Texas Eastern Transmission Corp	02-25-88	G		
ST88-2433	Columbia Gulf Transmission Co	Texas Eastern Transmission Corp	02-25-88	G		
ST88-2434	Columbia Gulf Transmission Co	Public Service Elect. and Gas Co., et al	02-25-88	B		
ST88-2435	Columbia Gulf Transmission Co	Entex, Inc	02-25-88	B		
ST88-2436	Columbia Gulf Transmission Co	Rochester Gas & Electric Corp., et al	02-25-88	B		
ST88-2437	Columbia Gulf Transmission Co	Public Service Elect. and Gas Co., et al	02-25-88	B		
ST88-2438	Columbia Gulf Transmission Co	Peoples Gas Light & Coke Co., et al	02-25-88	B		
ST88-2439	Columbia Gulf Transmission Co	Atlanta Gas Light Co., et al	02-25-88	B		
ST88-2440	Columbia Gulf Transmission Co	Memphis Light Gas and Water, et al	02-25-88	B		
ST88-2441	Columbia Gulf Transmission Co	Northern Ill. Gas Co., et al	02-25-88	B		
ST88-2442	Columbia Gulf Transmission Co	United Gas Pipe Line Co	02-25-88	G		
ST88-2443	Columbia Gulf Transmission Co	Union Texas Petroleum Products Corp	02-25-88	G-S		
ST88-2444	Columbia Gulf Transmission Co	Northern Ill. Gas Co., et al	02-25-88	B		
ST88-2445	Columbia Gulf Transmission Co	Louisiana Intrastate Gas Corp	02-25-88	B		
ST88-2446	Columbia Gulf Transmission Co	Niagara Mohawk Power Corp., et al	02-25-88	B		
ST88-2447	Columbia Gulf Transmission Co	Pontchartrain Natural Gas System	02-25-88	B		
ST88-2448	Columbia Gulf Transmission Co	Pontchartrain Natural Gas System	02-25-88	B		
ST88-2449	Columbia Gulf Transmission Co	Atlanta Gas Light Co., et al	02-25-88	B		
ST88-2450	Columbia Gulf Transmission Co	Texas Gas Transmission Corp	02-25-88	G		
ST88-2451	Columbia Gulf Transmission Co	Gulf South Pipeline Co	02-25-88	B		
ST88-2452	Valero Transmission, L.P	Trunkline Gas Co	02-26-88	C		
ST88-2453	Tennessee Gas Pipeline Co	Texas Eastern Transmission Corp	02-26-88	G		
ST88-2454	Panhandle Eastern Pipe Line Co	Central Illinois Light Co	02-26-88	B		
ST88-2455	Panhandle Eastern Pipe Line Co	Central Illinois Light Co	02-26-88	B		
ST88-2456	Panhandle Eastern Pipe Line Co	Central Illinois Light Co	02-26-88	B		
ST88-2457	Panhandle Eastern Pipe Line Co	Eastex Gas Transmission Co	02-26-88	B		
ST88-2458	Panhandle Eastern Pipe Line Co	Central Illinois Light Co	02-26-88	B		
ST88-2459	Natural Gas Pipeline Co. of America	Coastal States Gas Transmission Co	02-29-88	B		
ST88-2460	Natural Gas Pipeline Co. of America	Pontchartrain Natural Gas System	02-29-88	B		
ST88-2461	Natural Gas Pipeline Co. of America	Pontchartrain Natural Gas System	02-29-88	B		
ST88-2462	Natural Gas Pipeline Co. of America	Louisiana Gas System, Inc	02-29-88	B		
ST88-2463	Natural Gas Pipeline Co. of America	LTV Steel Co	02-29-88	G-S		
ST88-2464	Natural Gas Pipeline Co. of America	ONG Transmission Co	02-29-88	B		
ST88-2465	Natural Gas Pipeline Co. of America	Tennessee Gas Pipeline Co	02-29-88	G		
ST88-2466	El Paso Natural Gas Co	Pacific Gas and Electric Co	02-29-88	B		
ST88-2467	El Paso Natural Gas Co	Pacific Gas and Electric Co	02-29-88	B		
ST88-2468	El Paso Natural Gas Co	Southern California Gas Co	02-29-88	B		
ST88-2469	El Paso Natural Gas Co	Southwest Gas Corp	02-29-88	B		
ST88-2470	El Paso Natural Gas Co	Pacific Gas and Electric Co	02-29-88	B		
ST88-2471	El Paso Natural Gas Co	Valero Transmission Co	02-29-88	B		
ST88-2472	Natural Gas Pipeline Co. of America	Southern California Gas Co	02-26-88	B		
ST88-2473	Natural Gas Pipeline Co. of America	Dow Intrastate Pipeline Co	02-26-88	B		
ST88-2474	Natural Gas Pipeline Co. of America	Michigan Gas Utilities Co., et al	02-26-88	B		
ST88-2475	Natural Gas Pipeline Co. of America	Memphis Light, Gas and Water Division	02-26-88	B		
ST88-2476	Natural Gas Pipeline Co. of America	Northern Illinois Gas Co	02-26-88	B		
ST88-2477	Natural Gas Pipeline Co. of America	Northern Illinois Gas Co	02-26-88	B		
ST88-2478	Natural Gas Pipeline Co. of America	Sunshine Energy Co	02-26-88	B		
ST88-2479	Natural Gas Pipeline Co. of America	Northern Indiana Pub. Service Co., et al	02-26-88	B		
ST88-2480	Natural Gas Pipeline Co. of America	Peoples Gas Light & Coke Co., et al	02-26-88	B		
ST88-2481	Natural Gas Pipeline Co. of America	Iowa-Illinois Gas & Electric Co	02-26-88	B		
ST88-2482	Natural Gas Pipeline Co. of America	UGI Corp	02-26-88	B		

Docket No.[1]	Transporter/seller	Recipient	Date filed	Subpart	Expiration date[2]	Transportation rate (¢/MMBTU)
ST88-2483	Natural Gas Pipeline Co. of America	Columbia Gas of Ohio, et al	02-26-88	B		
ST88-2484	Natural Gas Pipeline Co. of America	Louisiana Gas Marketing Co	02-26-88	B		
ST88-2485	Natural Gas Pipeline Co. of America	Sunshine Energy Co	02-26-88	B		
ST88-2486	Natural Gas Pipeline Co. of America	Louisiana Resources Co., et al	02-26-88	B		
ST88-2487	Natural Gas Pipeline Co. of America	Northern Illinois Gas Co	02-26-88	B		
ST88-2488	Natural Gas Pipeline Co. of America	Wintershall Pipeline Corp	02-26-88	B		
ST88-2489	Natural Gas Pipeline Co. of America	Washington Gas Light Co	02-26-88	B		
ST88-2490	Natural Gas Pipeline Co. of America	North Shore Gas Co	02-26-88	B		
ST88-2491	Natural Gas Pipeline Co. of America	Northern Illinois Gas Co., et al	02-26-88	B		
ST88-2492	Natural Gas Pipeline Co. of America	Atlanta Gas Light Co	02-26-88	B		
ST88-2493	Natural Gas Pipeline Co. of America	Northern Illinois Gas Co., et al	02-26-88	B		
ST88-2494	Natural Gas Pipeline Co. of America	Pontchartrain Natural Gas System	02-26-88	B		
ST88-2495	Northern Natural Gas Co	Superior Water, Light and Power Co	02-26-88	B		
ST88-2496	Equitable Gas Co	Equitable Gas Co	02-26-88	B		
ST88-2497	Equitable Gas Co	Equitable Gas Co	02-26-88	B		
ST88-2498	Tenngasco Gas Supply Co	Tennessee Gas Pipeline Co	02-26-88	C		
ST88-2499	Sea Robin Pipeline Co	Consolidated Edison Co. of NY, et al	02-29-88	B		
ST88-2500	United Gas Pipe Line Co	Eastex Gas Transmission Co	02-29-88	B		
ST88-2501	United Gas Pipe Line Co	Jala Pipe Line Corp	02-29-88	B		
ST88-2502	United Gas Pipe Line Co	Gulf Energy Pipeline Co	02-29-88	B		
ST88-2503	United Gas Pipe Line Co	Atlanta Gas Light Co	02-29-88	B		
ST88-2504	United Gas Pipe Line Co	Atlanta Gas Light Co., et al	02-29-88	B		
ST88-2505	Panhandle Eastern Pipe Line Co	Central Illinois Light Co	02-29-88	B		
ST88-2506	Panhandle Eastern Pipe Line Co	Central Illinois Light Co	02-29-88	B		
ST88-2507	Panhandle Eastern Pipe Line Co	Central Illinois Light Co	02-29-88	B		
ST88-2508	Panhandle Eastern Pipe Line Co	Central Illinois Light Co	02-29-88	B		
ST88-2509	Panhandle Eastern Pipe Line Co	Central Illinois Light Co	02-29-88	B		
ST88-2510	Panhandle Eastern Pipe Line Co	Central Illinois Light Co	02-29-88	B		
ST88-2511	Panhandle Eastern Pipe Line Co	Northern States Power Co	02-29-88	B		
ST88-2512	Panhandle Eastern Pipe Line Co	Central Illinois Light Co	02-29-88	B		
ST88-2513	Panhandle Eastern Pipe Line Co	Central Illinois Light Co	02-29-88	B		
ST88-2514	Panhandle Eastern Pipe Line Co	Central Illinois Light Co	02-29-88	B		
ST88-2515	Panhandle Eastern Pipe Line Co	Central Illinois Light Co	02-29-88	B		
ST88-2516	Panhandle Eastern Pipe Line Co	Central Illinois Light Co	02-29-88	B		
ST88-2517	Panhandle Eastern Pipe Line Co	Central Illinois Light Co	02-29-88	B		
ST88-2518	Panhandle Eastern Pipe Line Co	Central Illinois Light Co	02-29-88	B		
ST88-2519	Panhandle Eastern Pipe Line Co	Central Illinois Light Co	02-29-88	B		
ST88-2520	Panhandle Eastern Pipe Line Co	Central Illinois Light Co	02-29-88	B		
ST88-2521	Panhandle Eastern Pipe Line Co	Central Illinois Light Co	02-29-88	B		
ST88-2522	Panhandle Eastern Pipe Line Co	Central Illinois Light Co	02-29-88	B		
ST88-2523	Panhandle Eastern Pipe Line Co	Central Illinois Light Co	02-29-88	B		
ST88-2524	Panhandle Eastern Pipe Line Co	Central Illinois Light Co	02-29-88	B		
ST88-2525	Panhandle Eastern Pipe Line Co	Central Illinois Light Co	02-29-88	B		
ST88-2526	Panhandle Eastern Pipe Line Co	Central Illinois Light Co	02-29-88	B		
ST88-2527	Panhandle Eastern Pipe Line Co	Central Illinois Light Co	02-29-88	B		
ST88-2528	Panhandle Eastern Pipe Line Co	Central Illinois Light Co	02-29-88	B		
ST88-2529	Panhandle Eastern Pipe Line Co	Central Illinois Light Co	02-29-88	B		
ST88-2530	Panhandle Eastern Pipe Line Co	Central Illinois Light Co	02-29-88	B		
ST88-2531	Panhandle Eastern Pipe Line Co	Central Illinois Light Co	02-29-88	B		
ST88-2532	Panhandle Eastern Pipe Line Co	Central Illinois Light Co	02-29-88	B		
ST88-2533	Panhandle Eastern Pipe Line Co	Central Illinois Light Co	02-29-88	B		
ST88-2534	Panhandle Eastern Pipe Line Co	Yankee Pipeline Co	02-29-88	B		
ST88-2535	Panhandle Eastern Pipe Line Co	Central Illinois Public Service Co	02-29-88	B		
ST88-2536	Panhandle Eastern Pipe Line Co	Central Illinois Light Co	02-29-88	B		
ST88-2537	Tennessee Gas Pipeline Co	Peoples Gas Light & Coke, et al	02-29-88	B		
ST88-2538	Channel Industries Gas Co	Tennessee Gas Pipeline Co	02-29-88	C		
ST88-2539	Northern Border Pipeline Co	Canadianoxy Marketing Inc	02-29-88	G-S		
ST88-2540	Transcontinental Gas Pipe Line Corp	Valero Transmission, L.P	02-29-88	B		
ST88-2541	Transcontinental Gas Pipe Line Corp	Bishop Pipeline Corp	02-29-88	B		
ST88-2542	ANR Pipeline Co	Wisconsin Natural Gas Co	02-29-88	B		
ST88-2543	ANR Pipeline Co	Michigan Consolidated Gas Co	02-29-88	B		
ST88-2544	ANR Pipeline Co	Washington Gas Light Co	02-29-88	B		
ST88-2545	Transwestern Pipeline Co	Texas Utilities Fuel Co	02-29-88	B		
ST88-2546	Transwestern Pipeline Co	Michigan Consolidated Gas Co	02-29-88	B		
ST88-2547	Red River Pipeline	El Paso Natural Gas Co	02-29-88	C		
ST88-2548	Blue Dolphin Pipe Line Co	Dow Pipeline Co	02-29-88	B		
ST88-3010	Katy Interchange Service		12-09-87	C	06-08-88	03.16

The following petition for rate approval was filed by Katy Interchange Service (Katy) on December 9, 1987, and is noticed out of sequence. When Katy filed the petition they included it in a formal request for other Commission actions. Because of the nature of the filing, the Commission has determined to assign a separate docket number to the petition. Please note, the 150-day period ends on May 8, 1988.

The companies which comprise Katy are Transcontinental Pipe Line Corp., Coronado Transmission Co., Trunkline Gas Co., and Yankee Pipeline Co.

[1] Notice of transactions does not constitute a determination that filings comply with Commission Regulations in accordance with Order No. 436 (Final Rule and Notice Requesting Supplemental Comments, 50 FR 42,372, 10/16/85).

[2] The Intrastate Pipeline has sought Commission approval of its transportation rate pursuant to Section 284.123(b)(2) of the Commission's Regulations (18 CFR 284.123(b)(2)). Such rates are deemed fair and equitable if the Commission does not take action by the date indicated.

[FR Doc. 88-8684 Filed 4-19-88; 8:45 am]

BILLING CODE 6717-01-M

[Docket No. RP86-85-004]

Texas Gas Transmission Corp.; Proposed Changes in FERC Gas Tariff

April 15, 1988.

Take notice that on April 11, 1988, Texas Gas Transmission Corporation (Texas Gas) tendered for filing the following revised tariff sheets to its FERC Gas Tariff, Original Volume No. 1, and FERC Gas Tariff, Original Volume No. 3:

FERC Gas Tariff, Original Volume No. 1

Seventh Revised Sheet No. 12
Second Revised Sheet No. 13
Second Revised Sheet No. 51

FERC Gas Tariff, Original Volume No. 3

First Revised Sheet No. 22

Texas Gas states that the revised tariff sheets are being filed in compliance with the letter order issued by the Federal Energy Regulatory Commission on April 6, 1988, in Docket No. RP86-85.

Pursuant to the waiver of § 154.22 granted in the letter order, Texas Gas requests that all of the revisd tariff sheets be permitted to become effective April 1, 1988.

Copies of this filing were served on all parties in Docket No. RP86-85, as well as nonintervenor customers and interested state commissions.

Any person desiring to be heard or to protest said filing should file a motion to intervene or a protest with the Federal Energy Regulatory Commission, 825 North Capitol Street, NE., Washington, DC 20426, in accordance with Rules 214 and 211 of the Commission's Rules of Practice and Procedure (18 CFR 385.214, 385.211). All such motions or protests should be filed on or before April 22, 1988. Protests will be considered by the Commission in determining the appropriate action to be taken, but will not serve to make protestants parties to to the proceeding. Any person wishing to become a party must file a motion to intervene. Copies of this filing are on file with the Commission and are available for public inspection.

Lois D. Cashell,

Acting Secretary.

[FR Doc. 88-8685 Filed 4-19-88; 8:45 am]

BILLING CODE 6717-01-M

[Docket No. RP88-101-000]

Southern Natural Gas Co.; Petition for Waiver of Regulations Under Order No. 483

April 15, 1988.

Take notice that on April 11, 1988, Southern Natural Gas Company (Southern) tendered for filing a petition for waiver of certain of the filing requirements under Order No. 483. Specifically, Southern seeks a waiver of the transition filing required under § 154.310 of the Commission's Regulations to be effective on June 1, 1988, as well as the quarterly filing required under Section 154.308 of the Commission's Regulations to be effective July 1, 1988. Southern states that it has just been authorized to revise its Current and Surcharge Adjustments and that no useful purpose would be served by making the June 1 and July 1 filings since it would not change either its Current or its Surcharge Adjustments in such filings.

Any person desiring to be heard or to protest said filing should file a motion to intervene or a protest with the Federal Energy Regulatory Commission, 825 North Capitol Street, NE., Washington, DC 20426, in accordance with Rules 214 and 211 of the Commission's Rules of Practice and Procedure (18 CFR 385.214, 385.211 (1987)). All such motions or protests should be filed on or before April 22, 1988. Protests will be considered by the Commission in determining the appropriate action to be taken, but will not serve to make protestants parties to the proceeding. Any person wishing to become a party must file a motion to intervene. Copies of this filing are on file with the Commission and are available for public inspection.

Lois D. Cashell,

Acting Secretary.

[FR Doc. 88-8688 Filed 4-19-88; 8:45 am]

BILLING CODE 6717-01-M

ENVIRONMENTAL PROTECTION AGENCY

[FRL-3367-7]

Chesapeake Bay Program 1988 Grant Guidance; Availability

The 1988 Chesapeake Bay Program has issued grant guidance for State Nonpoint Source Implementation and Mainstem Monitoring Grants. These funds are authorized under the Clean Water Act, section 117(b). This notice fulfills requirements of the Administrative Procedures Act, 5 U.S.C. section 551 et seq.

Under the guidance, funds will be made available to Maryland, Virginia, Pennsylvania, and the District of Columbia for Chesapeake Bay Program implementation activities, including planning, education, technical assistance, resource restoration, financial assistance, and program evaluation.

Funds will also be made available to Maryland and Virginia for mainstem water quality and sediment monitoring. This monitoring is necesary for program evaluation on a continuing basis and will include information necessary for modeling analyses.

The guidance for implementation and monitoring describes funding criteria, guidelines, general procedures, and an administrative schedule.

Requests for information may be submitted to the Environmental Protection Agency, Chesapeake Bay Liaison Office, 410 Severn Avenue, Annapolis, Maryland 21403. Requests may also be made by phone to Mr. George Walker at the same office (301) 266-5873.

Charles S. Spooner,

Director.

[FR Doc. 88-8658 Filed 4-19-88; 8:45 am]

BILLING CODE 6560-50-M

[OPP-42024F; FRL-3367-1]

Approval of Amendement to Texas Pesticide Applicator Certification Plan

AGENCY: Environmental Protection Agency (EPA).

ACTION: Notice of Approval to Amend Texas Plan for Certification of Pesticide Applicators.

SUMMARY: EPA issued a Notice of Intent to Approve an amendment to the Texas Department of Agriculture Plan for the certification of restricted use pesticide applicators in the **Federal Register** of February 19, 1988. This amendment provides for the certification of Compound 1080 Livestock Protection Collar applicators. This notice announces approval by EPA of this amendment.

EFFECTIVE DATE: This document is effective April 20, 1988.

FOR FURTHER INFORMATION CONTACT: Dale Ratliff (214-655-7240).

SUPPLEMENTARY INFORMATION: Two typographical errors were identified in

the summary of the Notice of Intent to Approve. The 1080 Livestock Protection Collar Certification amendment requires recertification every 3 years not every 2 years as specified in the summary. Further, the summary stated that recertification will be based on the passing of an examination or participation in approved training. The Texas 1080 Livestock Protection Collar Certification amendment exceeds EPA standards and requires both the passing of an examination and participation in approved training for recertification. These two typographical errors have no effect on the public's overall understanding of the program or on the availability of the amendment for review and comment. Therefore, EPA proceeded with the review of the amendment based on the comments received.

The Defenders of Wildlife stated their continuing oposition to the registration and use of Compound 1080 Livestock Protection Collars. However, the Defenders of Wildlife commended the proposed Texas Compound 1080 Livestock Protection Collar program with particular reference to training in alternative predator control methods and vigorous monitoring provisions.

The remaining 26 comments all supported approval of the Texas Compound 1080 Livestock Protection Collar Certification amendment. Among those commenting in support of the amendment were United States Congressman Lamar Smith of the 21st Texas District; Texas Senator Bill Sims of the 25th District; Texas Congressman Dudley Harrison, Chairman of the Committee on Agriculture and Livestock; Pleas L. Childress, III, President of the Texas Sheep and Goat Raisers Association, and W. Bert Dennis, President of the Texas Animal Damage Control Association, Inc. Many of the remaining individuals commenting in favor of the amendment identified themselves as ranchers.

Copies of the plan amendment and comments on the amendment are available for inspection at the following locations during normal business hours:

1. Texas Department of Agriculture, Room 1034E, Tenth Floor, Stephen F. Austin Building, 17th and Congress Streets, Austin, TX 78711, Telephone: 512-463-0013.
2. Environmental Protection Agency, Region VI, 1445 Ross Avenue, 12th Floor, Suite 1200, Dallas, TX 75202, Telephone: 214-655-7240.
3. Environmental Protection Agency, Information Services Section, Program Management and Support Division (TS-757C), Office of Pesticide Programs, Room 246, CM#2, 1921 Jefferson Davis Highway, Arlington, VA 22202, Telephone: 202-557-3263.

The amendment of the Texas Department of Agriculture Certification Plan providing for the certification of Compound 1080 Livestock Protection Collar Applicators is approved.

Dated: April 8, 1988.

John S. Floeter,

Acting Deputy Regional Administrator, Region VI.

[FR Doc. 88-8513 Filed 4-19-88; 8:45 am]

BILLING CODE 6560-50-M

[OPP-180776; FRL-3367-4]

Receipt of Application for Specific Exemption To use Oxyfluorfen; Solicitation of Public Comment

AGENCY: Environmental Protection Agency (EPA).

ACTION: Notice.

SUMMARY: EPA has received a specific exemption request from the Wisconsin Department of Agriculture, Trade and Consumer Protection (hereafter referred to as "Applicant") for use of the herbicide oxyfluorfen (goal) to control broadleaf weeds in horseradish in Wisconsin. EPA is soliciting comment before making the decision whether or not to grant this specific exemption request.

DATE: Comments must be received on or before May 5, 1988.

ADDRESS: Three copies of written comments, bearing the identification notation "OPP-180776," should be submitted by mail to:

Information Services Section, Program Management and Support Division (TS-757C), Office of Pesticide Programs, Environmental Protection Agency, 401 M St., SW., Washington, DC 20460.

In person, bring comments to: Rm 236, Crystal Mall 2 1921 Jefferson Davis Highway, Arlington VA.

Information submitted in any comment concerning this notice may be claimed confidential by marking any part or all of that information as "Confidential Business Information." Information so marked will not be disclosed except in accordance with procedures set forth in 40 CFR Part 2. A copy of the comment that does not contain CBI must be submitted for inclusion in the public record. Information not marked confidential may be disclosed publicly by EPA without prior notice to the submitter. All written comments will be available for inspection in Rm. 236 at the address given above from 8 a.m. to 4 p.m., Monday through Friday excluding legal holidays.

FOR FURTHER INFORMATION CONTACT: By mail:

Jim Tompkins, Registration Division (TS-767C), Office of Pesticide Programs, Environmental Protection Agency, 401 M St., SW., Washington, DC 20460.

Office location and telepone number: Rm. 716C, Crystal Mall 2 1921 Jefferson Davis Highway, Arlington, VA, (703-557-1806).

SUPPLEMENTARY INFORMATION: Pursuant ot section 18 of the Federal Insecticide, Fungicide, and Rodenticide Act (FIFRA) (7 U.S.C 136p), the Administrator may, at his discretion, exempt a State agency from any registration provision of FIFRA if he determines that emergency conditions exist which require such exemptions.

The Applicant has requested the Administrator to issue a specific exemption to permit the use of the herbicide oxyfluorfen (CAS 42874 03 3) available as Goal 1.6, EPA Reg. No. 707-174, to control broadleaf weeds in horseradish. Information in accordance with 40 CFR Part 166 was submitted as part of this request.

Wisconsin has requested authorization to apply 2.5 pints of Goal 1.6E herbicide (0.5 pounds active ingredient) per acre as a ground spray application on 700 acres of horseradish. Goal 1.6E is a selective herbicide recommended for preemergence control of certain broadleaf weeds. Goal 1.6E will be applied in a minimum of 40 gallons of water per acre.

According to the Applicant, weed control in horseradish fields in Wisconsin is mainly limited to mechanical means. The rising costs of fuel and labor in the past years has made the use of cultivation increasingly impractical. Cultivation at $4.50/acre/operation costs the grower $49.50/season for the normal eleven cultivations for between row weeds and $18.64/acre for the one hand-weeding for weed control within the row. In test plots, yields ranged from 1,500 lbs./acre with no weed control to 10,000 lbs./acre with proper weed control.

Oxyfluorfen was referred to Special Review in January 1980 because pesticide products containing oxyfluorfen as an active ingredient were shown to be contaminated with perchloroethylene (PCE), a liver carcinogen in B6C3F1 mice. The Special Review process was completed on June 23, 1982, and the decision was made to continue registration of the herbicide subject to certain restrictions (on PCE) pertaining to formulation of the product (47 FR 27118).

This notice does not constitute a decision by EPA on the application

itself. The regulations governing section 18 require publication of a notice in the **Federal Register** of receipt of an application for a specified exemption proposing use of a pesticide which contains an active ingredient which has been the subject of a Special Review and is intended for a use that could pose a risk similar to the risk posed by any use of a pesticide which is or has been the subject of a Special Review (40 CFR 166.24(a)(5)).

Accordingly, interested persons may submit written views on this subject to the Program Management and Support Division at the address given above. The Agency will review and consider all comments received during the comment period in determining whether to issue the emergency exemption requested by the Wisconsin Department of Agriculture, Trade and Consumer Protection.

Dated: April 7, 1988.

Edwin F. Tinsworth,

Director, Registration Division, Office of Pesticide Programs.

[FR Doc. 88-8511 Filed 4-19-88; 8:45 am]

BILLING CODE 6560-50-M

[OPP-180775; FRL-3367-3]

Receipt of Application for an Emergency Exemption From Wisconsin To Use Pyridate; Solicitation of Public Comment

AGENCY: Environmental Protection Agency (EPA).

ACTION: Notice.

SUMMARY: EPA has received a specific exemption request from the Wisconsin Department of Agriculture, Trade and Consumer Protection (hereafter referred to as "Applicant") to use the herbicide pyridate (CAS 35512 33 9) to treat 7,000 acres of cabbage, a majority of which is grown for processing into sauerkraut, for post-emergent control of annual broadleaf weeds. EPA, in accordance with 40 CFR 166.24, is required to issue a notice of receipt and solicit public comment before making the decision whether to grant the exemption.

DATE: Comments should be received on or before April 25, 1988.

ADDRESS: Three copies of written comments, bearing the identification notation "OPP-180775" should be submitted by mail to:

Information Services Section, Program Management and Support Division (TS-757C), Office of Pesticide Programs, Environmental Protection Agency, 401 M St., SW., Washington, DC 20460.

In person, bring comments to: Rm. 236, CM#2, 1921 Jefferson Davis Highway, Arlington, VA.

Information submitted in any comment concerning this notice may be claimed confidential by marking any part or all of that information as "Confidential Business Information." Information so marked will not be disclosed except in accordance with procedures set forth in 40 CFR Part 2. A copy of the comment that does not contain Confidential Business Information must be provided by the submitter for inclusion in the public record. Information not marked confidential may be disclosed publicly by EPA without prior notice. All written comments filed pursuant to this notice will be available for public inspection in Rm. 236, Crystal Mall No. 2, 1921 Jefferson Davis Highway, Arlington, VA. from 8 a.m. to 4 p.m., Monday through Friday, except legal holidays.

FOR FURTHER INFORMATION CONTACT: By mail:

Robert Forrest, Registration Division (TS-767C), Office of Pesticide Programs, Environmental Protection Agency, 401 M. St., SW., Washington, DC 20460.

Office location and telephone number: Rm. 716D, Crystal Mall 2, 1921 Jefferson Davis Highway, Arlington, VA. (703-557-1806).

SUPPLEMENTARY INFORMATION: Pursuant to section 18 of the Federal Insecticide, Fungicide, and Rodenticide Act (FIFRA) (7 U.S.C. 136p), the Administrator may, at his discretion, exempt a State agency from any registration provision of FIFRA if he determines that emergency conditions exist which requires such exemption.

The Applicant has requested the Administrator to issue a specific exemption for the use of pyridate, 0-(6-chloro-3-phenyl-4-pyridazinyl)-S-octyl-carbononthioate, for post emergent control of broadleaf weeds in cabbage.

Information in accordance with 40 CFR Part 166 was submitted as part of this request. Pyridate is not currently registered in the United States. Pyridate is applied commercially in Europe for selective post-emergence broadleaf weed control in maize, cereals, peanuts, lucerne, brassicas and other crops.

The Applicant states that since the withdrawal of TOK herbicide from the market, hand-hoeing and cultivation has been the only means of post-emergent broadleaf weed control in direct seeded cabbage. This labor-intensive weeding operation has proven to be extremely costly, and has limited the acreage which can be effectively managed. Thinning and hand-hoeing of cabbage is primarily done by high school age students because the work is concentrated in one month. It is uneconomical for growers to provide housing and benefits for migrant workers. Employment of high school workers, necessitates close supervision and is limited by their reliability and availability.

Most Wisconsin commercial growers plant cabbage transplants because the cost of hand-weeding direct seeded cabbage is considered too expensive and difficult to manage. Direct seeding is not possible without some means of post-emergent broadleaf weed control. However, the cost of transplanting cabbage is more expensive than direct seeding ($180/acre vs. $85/acre for direct seeding).

An emergency situation exists, according to the Applicant, because the increased cost of production due primarily to increased labor costs makes production of direct seeded cabbage uneconomical without use of a post-emergent herbicide to control broadleaf weeds. However, no effective herbicides are registered for post-emergent broadleaf weed control in cabbage.

The Applicant proposes to make a single application of the product Lentagran (45% pyridate) in a minimum of 20 gallons of water per acre by ground application equipment at a maximum rate of 4 pounds formulation (1.8 lbs. active ingredient) per acre for post-emergent broadleaf weed control prior to the 2 true leaf stage or the 4 true leaf stage depending on weeds present.

This notice does not constitute a decision by EPA on this application. The regulations governing section 18 require publication of a notice in the **Federal Register** of receipt of an application for a specific exemption proposing use of a new chemical (i.e. an active ingredient not contained in any currently registered pesticide). The regulations also provide for the opportunity for public comment.

Accordingly, interested persons may submit written views on this subject to the Program Management and Support Division at the address given above.

The Agency will review and consider all comments received during the comment period in determining whether to issue this emergency exemption request.

Dated: April 5, 1988.

Edwin T. Tinsworth,

Director, Registration Division, Office of Pesticide Programs.

[FR Doc. 88-8512 Filed 4-19-88; 8:45 am]

BILLING CODE 6560-50-M

[OW-FRL 3367-5]

Water Quality Act of 1987; Interim Final Guidance Availability

AGENCY: Environmental Protection Agency (EPA).

ACTION: Notice of availability.

SUMMARY: This notice announces the availability of the document "Interim Final Guidance on the Contents of a Governor's Nomination" for public comment. The document describes how EPA proposes to implement sections 317 and 320 of the Water Quality Act of 1987. Nominations of estuaries given priority consideration by Congress must be submitted to EPA by June 1, 1988, and must be consistent with this guidance.

DATES: Public comments on this interim final guidance must be received by the EPA Office of Marine and Estuarine Protection on or before May 20, 1988.

ADDRESSES: Copies of the interim final guidance can be obtained by writing Steve Glomb; c/o Office of Marine and Estuarine Protection, WH-556F; U.S. Environmental Protection Agency; 401 M Street, SW.; Washington, DC 20460; or by telephoning him at (202) 475-7102. All comments on the guidance should be sent to Mr. Glomb at the same address.

FOR FURTHER INFORMATION CONTACT: U.S. Environmental Protection Agency, Office of Marine and Estuarine Protection, at the above address and telephone number.

SUPPLEMENTARY INFORMATION:

Water Quality Act Requirements

In 1987, the Clean Water Act was amended by Congress under the Water Quality Act (WQA), establishing the National Estuary Program (NEP). Under section 320 of the WQA, the governor of any state can nominate an estuary located wholly or partly within the state and request that a management conference be convened to develop a comprehensive conservation and management plan (CCMP) for the estuary. Such nominations should document the national significance of the estuary, the need for the conference, and the likelihood of success, based on a showing of public interest and the ability of the state to meet state cost-sharing requirements.

In response to a governor's nomination or on his own initiative, the EPA Administrator must determine if the attainment or maintenance of a desired level of water quality requires additional pollution abatement and control programs to supplement existing controls. The Administrator is authorized under section 320(a)(2)(A) to select such estuaries and to convene management conferences to develop comprehensive plans for managing such estuaries of national significance. The conferees are charged with balancing the conflicting uses in the estuary while restoring or maintaining its natural character.

Section 320(a)(2)(B) requires the EPA Administrator to give priority consideration to Long Island Sound, New York and Connecticut; Narragansett Bay, Rhode Island; Buzzards Bay, Massachusetts; Puget Sound, Washington; New York-New Jersey Harbor, New York and New Jersey; Delaware Bay, Delaware and New Jersey; Delaware Inland Bays, Delaware; Albemarle Sound, North Carolina; Sarasota Bay, Florida; San Francisco Bay, California; and Galveston Bay, Texas. Santa Monica Bay, California, was added to this list in the Fiscal Year 1986 Appropriations Act.

The seven purposes of a management conference, are stated in section 320(b) fo the WQA and summarized below.

1. Assess trends in water quality, natural resources, and uses of the estuary.
2. Identify the causes of environmental problems.
3. Evaluate the relationships between the pollutant loads and environmental effects.
4. Develop a comprehensive conservation and management plan.
5. Develop plans with States and other agencies to coordinate the implementation of the CCMP.
6. Monitor the effectiveness of actions taken pursuant to the plan.
7. Review all federal financial assistance programs and development projects for consistency with the CCMP.

The WQA requires a management conference to include a broad variety of interested parties. These parties include EPA, other federal agencies, State, interstate, and local governments, affected industries, public and private educational institutions, and the general public. Through a collaborative process, the management conference establishes program goals and objectives, determining desirable and allowable uses for the estuary and its various segments. Specific pollution control and resource management strategies, designed to meet each objective, are the core of the CCMP that will be developed. Strong public support and subsequent political commitments will be needed to carry out the actions agreed to in the CCMP.

Priority Considerations

There are three categories of estuaries that can be nominated for inclusion in the NEP—(1) estuaries currently in the program, (2) estuaries named in the WQA or the Fiscal Year 1988 Appropriations Act but not currently in the program, and (3) estuaries not named in the WQA. These categories will be evaluated one at a time, giving priority consideration, as EPA was instruced, to estuaries in the first two categories.

All six of the existing estuary programs from group one have already been convened as management conferences. The six estuaries in group two will be given an opportunity to participate in the NEP before EPA evaluates nominations from other estuaries not given priority status by Congress. Nominations for these estuaries in group two should be consistent with the guidance being made available today for the estuary to be added to the NEP. June 1, 1988, is the deadline for submission of these nominations.

Nominations for other estuaries and those that are not ready by the June 1 deadline should also be consistent with the guidance. In addition, this set of estuaries will be evaluated and ranked against criteria determining national significance. Expanded guidance discussing national significance criteria will be available in May 1988.

Contents of the Nomination

This notice announces the availability of interim final guidance that will assist states interested in nominating estuaries to the NEP. Following statutory requirements, the interim final guidance addresses "national significance," generally describing the need for a national demonstration program to provide technical assistance and outreach to other coastal areas. As such, the program will include a spectrum of geographic locations (to address biogeographic variety and to develop expertise nationwide), a wide range of environmental problems, and examples of restoration and maintenance of water quality that have national applicability. The interim final guidance also addresses demonstrating the need for a management conference and the likelihood of success of the potential estuary program.

To make these required demonstrations, a nomination must answer the following key questions:

- National Significance:

—What is the geographic scope of the estuary?
—Why is the estuary important to the nation?
—How can the lessons learned from this estuary be applied to other coastal

areas within the state or to other states?

• The Need for a Conference:

—What is the importance of the estuary on a local or regional scale?

—What are the major environmental problems facing the estuary?

—What is known about the cause and effect relationships and how do you propose to better identify the causes of environmental problems?

—What are the institutional arrangements for the estuary and how are they working?

• Likelihood of Success:

—What are state and local governments, and public and private institutions already doing for the estuary?

—What goals and objectives do you propose to set for the estuary and how do you propose to meet them?

—Who will participate in the management conference and how will it be organized?

—Is there public and political will, as well as financial capability, to support implementation of a Comprehensive Conservation and Management Plan?

Nominations will be evaluated by EPA based on how well they address these concerns. In addition, other programmatic and policy issues will be evaluated. For example, where a State is developing a State Clean Water Strategy (SCWS), the nomination should describe how the proposed an estuary program is integrated into its SCWS. A checklist is provided with the guidance to serve as an organizing framework for developing the nomination.

Paperwork Reduction Act

The Agency will submit an Information Collection Request (ICR) document describing the information requirements in the expanded guidance to the Office of Management and Budget (OMB) under the Paperwork Reduction Act, 44 U.S.C. 3501 et seq. This ICR will be available for public comment and will document EPA's need for information and the cost to State respondents and the public in following the guidance and in meeting the requirements of Section 320 of the Water Quality Act of 1987.

A copy of the ICR, when available, may be obtained from: EPA; Information Policy Branch, Attn. Carla Levesque, PM-223; 401 M St., SW.; Washington, DC 20460; or by calling (202) 382-2740. The public may submit comments on the reporting requirements in the Interim Final Guidance announced today, as well as those in the forthcoming expanded guidance, to: EPA Information Policy Branch (address above); and Timothy Hunt, Office of Information and Regulatory Affairs; Office of Management and Budget; 726 Jackson Place, NW.; Washington, DC 20503.

Date: April 11, 1988.

Rebecca W. Hanmer,

Acting Assistant Administrator for Water.

[FR Doc. 88-8659 Filed 4-19-88; 8:45 am]

BILLING CODE 6560-50-M

FEDERAL COMMUNICATIONS COMMISSION

[CC Docket No. 85-124; FCC 88-79]

Federal-State Joint Board Proceedings; Commission Appointed

AGENCY: Federal Communications Commission.

ACTION: Order appointing Commissioner Donald Vial of the California Public Utilities Commission to the Federal-State Joint Board in CC Docket 85-124.

SUMMARY: On February 25, 1988, the Commission adopted an Order appointing Commissioner Donald Vial of the California Public Utilities Commission to the Federal-State Joint Board in CC Docket 85-124. Commissioner Vial was nominated by the National Association of Regulatory Utility Commissioners to fill the vacancy created by the departure of Commissioner Louise V. McCarren of the Vermont Public Service Board. The CC Docket 85-124 Joint Board was convened to resolve certain issues relating to the measurement and verification of interstate and intrastate usage of Feature Group A and Feature Group B access services by interexchange carriers for access charge billing and cost separations purposes.

ADDRESS: Federal Communications Commission, 1919 M Street NW., Washington, DC 20554.

FOR FURTHER INFORMATION CONTACT: Peggy Reitzel, Policy and Program Planning Division, Common Carrier Bureau (202) 632-4047.

SUPPLEMENTARY INFORMATION: This is a summary of the Commission's decision (FCC 88-79), adopted February 25, 1988, and released March 16, 1988. The full text of this Commission decision is available for inspection and copying during normal business hours in the FCC Dockets Office (Room 230), 1919 M Street NW., Washington, DC. The complex text of this decision may also be purchased from the Commission's copy contractor, International Transcription Service, (202) 857-3800, 2100 M Street, NW., Suite 140, Washington, DC 20037.

Federal Communications Commission.

H. Walker Feaster III,

Acting Secretary.

[FR Doc. 88-8531 Filed 4-19-88; 8:45 am]

BILLING CODE 6712-01-M

[CC Docket 85-124 FCC 88-80]

Federal-State Joint Board Proceedings; Commissioner Appointed

AGENCY: Federal Communications Commission.

ACTION: Order appointing Commissioner James M. Fischer of the Missouri Public Service Commission to the Federal-State Joint Board in CC Docket 85-124.

SUMMARY: On February 25, 1988, the Commission adopted an Order appointing Commissioner James M. Fischer of the Missouri Public Service Commission to the Federal-State Joint Board in CC Docket 85-124. Commissioner Fischer was nominated by the National Association of Regulatory Utility Commissioners to fill the vacancy created by the departure of Commissioner Marvin R. Weatherly of the Alaska Public Utilities Commission. The CC Docket 85-124 Joint Board was convened to resolve certain issues relating to the measurement and verification of interstate and intrastate usage of Feature Group A and Feature Group B access services by interexchange carriers for access charge billing and cost separations purposes.

ADDRESS: Federal Communications Commission, 1919 M Street, NW., Washington, DC 20554.

FOR FURTHER INFORMATION CONTACT: Peggy Reitzel, Policy and Program Planning Division, Common Carrier Bureau (202) 632-4047.

SUPPLEMENTARY INFORMATION: This is a summary of the Commission's decision (FCC 88-80), adopted February 25, 1988, and released March 16, 1988. The full text of this Commission decision is available for inspection and copying during normal business hours in the FCC Dockets Office (Room 230), 1919 M Street, NW., Washington, DC. The complete text of this decision may also be purchased from the Commission's copy contractor, International Transcription Service, (202) 857-3800, 2100 M Street, NW., Suite 140, Washington, DC 20037.

Federal Communications Commission.

H. Walker Feaster III,

Acting Secretary.

[FR Doc. 88-8532 Filed 4-19-88; 8:45 am]

BILLING CODE 6712-01-M

Bayboro Broadcasting et al.; Applications for Consolidated Hearing

1. The Commission has before it the following mutually exclusive applications for a new FM station:

Applicant, city, and State	File No.	MM Docket No.
A. Bayboro Broadcasting, Bayboro, NC.	BPH-860916MA	88-151
B. Theresa Schreiber, Bayboro, NC.	BPH-860918MU	.....
C. Thomas H. Campbell, Bayboro, NC.	BPH-860918MX	.....
D. Terry Freitag, Bayboro, NC.	BPH-8609180K	.....
E. James E. Hodges & Lewis Y. Parrish d.b.a. the Bayboro Co., Bayboro, NC.	BPH-860918MG (Dismissed)	.....

2. Pursuant to section 309(e) of the Communications Act of 1934, as amended, the above applications have been designated for hearing in a consolidated proceeding upon the issues whose headings are set forth below. The text of each of these issues has been standardized and is set forth in its entirety under the corresponding headings at 51 FR 19347 (May 29, 1986). The letter shown before each applicant's name, above, is used below to signify whether the issue in question applies to that particular applicant.

Issue Heading and Applicants

1. Air Hazard, D
2. Comparative, A–D
3. Ultimate, A–D

3. If there is any non-standardized issue in this proceeding, the full text of the issue and the applicants to which it applies are set forth in an Appendix to this Notice. A copy of the complete HDO in this proceeding is available for inspection and copying during normal business hours in the FCC Dockets Branch (Room 230), 1919 M Street, NW., Washington DC. The complete text may also be purchased from the Commission's duplicating contractor, International Transcription Services, Inc., 2100 M Street, NW., Washington, DC 20037. (Telephone (202) 857–3800).

W. Jan Gay,

Assistant Chief, Audio Services Division, Mass Media Bureau.

[FR Doc. 88-8628 Filed 4-19-88; 8:45 am]

BILLING CODE 6712-01-M

Media Investment Corp. et al.; Applications for Consolidated Hearing

1. The Commission has before it the following mutually exclusive applications for a new TV station:

Applicant, city, and State	File No.	MM Docket No.
A. Media Investment Corp., Merced, CA.	BPCT-870326KL	88-162
B. Wade Axell, Merced, CA.	BPCT-870327KK	

2. Pursuant to section 309(e) of the Communications Act of 1934, as amended, the above applications have been designated for hearing in a consolidated proceeding upon the issues whose headings are set forth below. The text of each of these issues has been standardized and is set forth in its entirety under the corresponding headings at 51 FR 19347, May 29, 1986. The letter shown before each applicant's name, above, is used below to signify whether the issue in question applies to that particular applicant.

Issue Heading and Applicant(s)

Air Hazard, A,B
Comparative, A,B
Ultimate, A,B
Environmental, A

3. If there is any non-standardized issue(s) in this proceeding, the full text of the issue and the applicant(s) to which it applies are set forth in an Appendix to this Notice. A copy of the complete HDO in this proceeding is available for inspection and copying during normal business hours in the FCC Dockets Branch (Room 230), 1919 M Street, NW., Washington, DC. The complete text may also be purchased from the Commission's duplicating contractor, International Transcription Services, Inc., 2100 M Street, NW., Washington, DC 20037 (Telephone No. (202) 857–3800).

Roy J. Stewart,

Chief, Video Services Division, Mass Media Bureau.

[FR Doc. 88-8629 Filed 4-19-88; 8:45 am]

BILLING CODE 6712-01-M

Ying Hua Benns et al.; Applications for Consolidated Hearing

1. The Commission has before it the following mutually exclusive applications for a new FM station:

Applicant, city, and State	File No.	MM Docket No.
A. Ying Hua Benns, Greenfield, CA.	BPH-850711QP	88-142
B. Q Prime Inc., Greenfield, CA.	BPH-850712TI	.....
C. Trans-California Broadcasting Co., Greenfield, CA.	BPH-850712TJ	.....
D. Star Signal Corp., Greenfield, CA.	BPH-850712TK	.....
E. San Vincente Communications Corp., Greenfield, CA.	BPH-850712TM	.....
F. Buena Vista Broadcasting, Ltd., a California limited partnership, Greenfield, CA.	BPH-850712TN	.....
G. Doubledee Broadcast Group, Greenfield, CA.	BPH-850712TP	.....
H. BG Communications, a limited partnership, Greenfield, CA.	BPH-850712TQ	.....
I. Armida Medina Cabello, Greenfield, CA.	BPH-850712TR	.....
J. Richard S. & Susan B. Bushell, joint venturers, Greenfield, CA.	BPH-850715MV	.....
K. Wayne R. Stakey, Greenfield, CA.	BPH-850201MC (Previously dismissed)	.....
L. Greenfield Community Broadcasting, Inc., Greenfield, CA.	BPH-850712TL (Previously dismissed)	.....

2. Pursuant to section 309(e) of the Communications Act of 1934, as amended, the above applications have been designated for hearing in a consolidated proceeding upon the issues whose headings are set forth below. The text of each of these issues has been standardized and is set forth in its entirety under the corresponding headings at 51 FR 19347, May 29, 1986. The letter shown before each applicant's name, above, is used below to signify whether the issue in question applies to that particular applicant.

Issue Heading and Applicants

1. Environmental, F
2. Comparative, A–J
3. Ultimate, A–J

3. A copy of the complete HDO in this proceeding is available for inspection and copying during normal business hours in the FCC Dockets Branch (Room 230), 1919 M Street, NW., Washington, DC. The complete text may also be purchased from the Commission's duplicating contractor, International Transcription Services, Inc., 2100 M

Street, NW., Washington, DC 20037. (Telephone (202) 857-3800).

W. Jan Gay,

Assistant Chief, Audio Services Division, Mass Media Bureau.

[FR Doc. 88-8627 Filed 4-19-88; 8:45 am]

BILLING CODE 6712-01-M

FEDERAL EMERGENCY MANAGEMENT AGENCY

[Docket No. FEMA-REP-5-IL-7]

The Illinois Radiological Emergency Response Plan Site-Specific for the Braidwood Nuclear Power Station

ACTION: Certification of FEMA findings and determination.

In accordance with the Federal Emergency Management Agency (FEMA) rule 44 CFR Part 350, the State of Illinois formally submitted its plans relating to the Braidwood Nuclear Power Station to the Director of FEMA Region V on January 9, 1987, for FEMA review and approval. On August 21, 1987, the Regional Director forwarded his evaluation to the Associate Director for State and Local Programs and Support in accordance with § 350.11 of the FEMA rule. Included in the Regional Director's evaluation was a review of the State and local plans around the Braidwood Nuclear Power Station; evaluations of joint exercises conducted on November 6, 1985 and March 18, 1987, in accordance with section 350.9 of the FEMA rule; and a report of the public meeting held on May 20, 1987, to discuss the site-specific aspects of the State and local plans in accordance with § 350.10 of the FEMA rule.

Based on the evaluation by the Regional Director and the review by the FEMA Headquarters staff, I find and determine that the State and local plans and preparedness for the Braidwood Nuclear Power Station, are adequate to protect the health and safety of the public living in the vicinity of the plant. The offsite plans and preparedness are assessed as adequate in that they provide reasonable assurance that appropriate protective actions can be taken offsite in the event of a radiological emergency and are capable of being implemented. The public alert and notification system was approved by FEMA on August 5, 1987.

FEMA will continue to review the status of offsite plans and preparedness associated with the Braidwood Nuclear Power Station in accordance with the FEMA rule.

For further details with respect to this action, please refer to Docket File FEMA-REP-5-IL-7.

Dated: April 13, 1988.

For the Federal Emergency Management Agency.

Grant C. Peterson,

Associate Director, State and Local Programs and Support.

[FR Doc. 88-8646 Filed 4-19-88; 8:45 am]

BILLING CODE 6718-01-M

FEDERAL MARITIME COMMISSION

Agreement(s) Filed

The Federal Maritime Commission hereby gives notice of the filing of the following agreement(s) pursuant to section 5 of the Shipping Act of 1984.

Interested parties may inspect and obtain a copy of each agreement at the Washington, DC Office of the Federal Maritime Commission, 1100 L Street, NW., Room 10325. Interested parties may submit comments on each agreement to the Secretary, Federal Maritime Commission, Washington, DC 20573, within 10 days after the date of the **Federal Register** in which this notice appears. The requirements for comments are found in § 572.603 of Title 46 of the Code of Federal Regulations. Interested persons should consult this section before communicating with the Commission regarding a pending agreement.

Agreement No.: 224-200106.

Title: Puerto Nuevo Terminal Use Agreement.

Parties:

City Marine Terminal, Inc. (City Marine)

Sea-Land Service, Inc. (Sea-Land)

Synopsis: The proposed agreement provides Sea-Land with exclusive use of four acres of improved land at City Marine's terminal located in the Puerto Nuevo port area of Puerto Rico.

Agreement No.: 224-200107.

Title: Georgia Ports Authority Terminal Agreement.

Parties:

Georgia Ports Authority

C.C.C. of Georgia, Inc. (CCC)

Synopsis: The proposed agreement provides CCC the use of Port land in addition to a consolidated rate based upon an agreed through-put rate per container. The consolidated rate includes wharfage, dockage and land use. All other charges are to be assessed pursuant to the Port's tariff.

By Order of the Federal Maritime Commission.

Joseph C. Polking,

Secretary.

Dated: April 15, 1988.

[FR Doc. 88-8649 Filed 4-19-88; 8:45 am]

BILLING CODE 6730-01-M

DEPARTMENT OF HEALTH AND HUMAN SERVICES

Public Health Service; Agency for Toxic Substances and Disease Registry Superfund Amendments and Reauthorization Act of 1986; Delegation of Authority

Notice is hereby given that in furtherance of the authority delegated to me by the President by Executive Order 12580, dated January 23, 1987, I have delegated to the Assistant Secretary for Health, with the authority to redelegate, the following authorities under the Comprehensive Environmental Response, Compensation, and Liabiity Act of 1980 (42 U.S.C. 9601 *et seq.*), as amended by the Superfund Amendments and Reauthorization Act of 1986, and as amended hereafter:

Sections 104(b)(1) [first sentence], 104(d), 104(e) [with the exception of 104(e)(7)(C), 104(f), 104(g), 104(h), 104(i)(11), 104(j), nad 113(k) [with the exception of 113(k)(2)]. The exercise of authority under section 104(h) shall be subject to the approval of the Administrator of the Office of Federal Procurement Policy.

This delegation excludes the authority to promulgate regulations and to submit reports to Congress.

In addition, this delegation includes authority to ratify actions taken on behalf of the Public Health Service under the Superfund Amendments and Reauthorization Act of 1986, as amended hereafter, to the extent those actions are otherwise in accordance with applicable law.

Dated: April 7, 1988.

Otis R. Bowen,

Secretary.

[FR Doc. 88-8643 Filed 4-19-88; 8:45 am]

BILLING CODE 4160-01-M

Public Health Service

Health Resources and Services Administration and Indian Health Service; Part D, Subparts II and III of Title III of the Public Health Service Act; Delegation of Authority

Notice is hereby given that in furtherance of the delegation of authority to the Assistant Secretary for Health on January 14, 1981 (46 FR 10016) by the Secretary of Health and Human Services, the Assistant Secretary for Health has delegated all of the authorities under Title III, Part D, Subparts II and III of the Pubic Health Service (PHS) Act, as amended, as indicated below: (1) To the Administrator, Health Resources and Services Administration, with authority to redelegate, all of the authorities under Title III, Part D, Subparts II and III of the PHS Act, as amended, excluding the authorities delegated to the Director, Indian Health Service; (2) to the Director, Indian Health Service, the authorities under section 3381 (42 U.S.C. 254r) of the PHS Act, as amended.

This delegation supersedes the April 12, 1982, delegation vested in HRSA by the Reorganization Order of September 1, 1982, as it pertains to sections 331, 332, 333, 334, 335, 336, 336A, 337, 338, 338A, 338B, 338C, 338D, 338E, 338F, 338G; and the May 12, 1983, delegation for section 339.

Provision was made for all previous delegations and redelegations under Title III within PHS to continue.

The above delegation was effective on April 11, 1988.

Date: April 11, 1988.

Robert E. Windom,

Assistant Secretary for Health.

[FR Doc. 88-8625 Filed 4-19-88; 8:45 am]

BILLING CODE 4150-15-M

Office of the Secretary

Delegation of Authority to the Inspector General

By the authority vested in me as Secretary, I hereby delegate to the Inspector General, with authority to redelegate, and to authorize further redelegation, the following authorities:

- The authority under section 1128A as amended, including but not limited to my authority to make determinations concerning false or improper claims in the Medicare, Medicaid or Maternal and Child Health Services Block Grant programs, to propose civil money penalties, assessments and exclusions, and to authorize actions to enjoin activities described in section 1128A(k.).
- The authorities for controlling fraud and abuse in the health care financing programs under sections 1128, 156(b) and 1866(b)(2)(C) and 1866(c)(1) for actions taken under 1866(b)(2)(C).
- The authority under section 192(a)(2) to obtain access to documents.

Excluded from this delegation is the authority to conduct hearings and to issue regulations.

This delegation supersedes the earlier delegations of authority dated April 18, 1983 and July 27, 1983. However, this delegation does not affect any action taken pursuant to those earlier delegations.

This delegation is effective immediate.

Date: April 7, 1988.

Otis R. Bowen,

Secretary.

[FR Doc. 88-8642 Filed 4-19-88; 8:45 am]

BILLING CODE 4160-17-M

Food and Drug Administration

[Docket No. 88M-0093]

Armstrong Laboratories, Inc.; Premarket Approval of Armstrong Sterile Saline Solution

AGENCY: Food and Drug Administration.

ACTION: Notice.

SUMMARY: The Food and Drug Administration (FDA) is announcing its approval of the application by Armstrong Laboratories, Inc., West Roxbury, MA, for premarket approval, under the Medical Device Amendments of 1976, of Armstrong Sterile Saline Solution for use in the rinsing, heat disinfection, and storage of soft (hydrophilic) contact lenses. After reviewing the recommendation of the Ophthalmic Devices Panel, FDA's Center for Devices and Radiological Health (CDRH) notified the applicant of the approval of the application.

DATE: Petitions for administrative review by May 20, 1988.

ADDRESS: Written requests for copies of the summary of safety and effectiveness data and petitions for administrative review to the Dockets Management Branch (HFA-305), Food and Drug Administration, Rm. 4-62, 5600 Fisher Lane, Rockville, MD 20857.

FOR FURTHER INFORMATION CONTACT: David M. Whipple, Center for Devices and Radiological Health (HFZ-460), Food and Drug Administration, 8757 Georgia Ave., Silver Spring, MD 20910, 301-427-7940.

SUPPLEMENTARY INFORMATION: On October 2, 1987, Armstrong Laboratories, Inc., West Roxbury, MA 02132, submitted to CDRH an application for premarket approval of Armstrong Sterile Saline Solution. The device is indicated for use in the rinsing, heat disinfection, and storage of soft (hydrophilic) contact lenses.

On January 22, 1988, the Ophthalmic Devices Panel, an FDA advisory committee, reviewed and recommended approval of the application. On February 26, 1988, CDRH approved the application by a letter to the applicant from the Director of the Office of Device Evaluation, CDRH.

A summary of the safety and effectiveness data on which CDRH based its approval is on file in the Dockets Management Branch (address above) and is available from that office upon written request. Requests should be identified with the name of the device and the docket number found in brackets in the heading of this document.

A copy of all approved labeling is available for public inspection at CDRH—contact David M. Whipple (HFZ-460), address above.

The labeling of Armstrong Sterile Saline Solution states that the solution is indicated for use in the rinsing, heat disinfection, and storage of soft (hydrophilic) contact lenses. Manufacturers of soft (hydrophilic contact lenses that have been approved for marketing are advised that whenever CDRH publishes a notice in the **Federal Register** of the approval of a new solution for use with an approved soft contact lens, the manufacturer of each lens shall correct its labeling to refer to the new solution at the next printing or at such other time as CDRH prescribes by letter to the applicant.

Opportunity for Administrative Review

Section 515(d)(3) of the Federal Food, Drug, and Cosmetic Act (the act) (21 U.S.C. 360e(d)(3)) authorizes any interested person to petition, under section 515(g) of the act (21 U.S.C. 360e(g)), for administrative review of CDRH's decision to approve this application. A petitioner may request either a formal hearing under Part 12 (21 CFR Part 12) of FDA's administrative practices and procedures regulations or a review of the application and CDRH's action by an independent advisory committee of experts. A petition is to be in the form of a petition for reconsideration under § 10.33(b) (21 CFR 10.33(b)). A petitioner shall identify the form of review requested (hearing or independent advisory committee) and shall submit with the petition supporting data and information showing that there is a genuine and substantial issue of

material fact for resolution through administrative review. After reviewing the petition, FDA will decide whether to grant or deny the petition and will publish a notice of its decision in the Federal Register. If FDA grants the petition, the notice will state the issue to be reviewed, the form of review to be used, the person who may participate in the review, the time and place where the review will occur, and other details.

Petitioners may, at any time on or before May 30, 1988, file with the Dockets Management Branch (address above) two copies of each petition and supporting data and information, identified with the name of the device and the docket number found in brackets in the heading of this document. Received petitions may be seen in the office above between 9 a.m. and 4 p.m., Monday through Friday.

This notice is issued under the Federal Food, Drug, and Cosmetic Act (secs. 515(d), 520(h), 90 Stat. 554–555, 571 (21 U.S.C. 360e(d), 360j(h))) and under authority delegated to the Commissioner of Food and Drugs (21 CFR 5.10) and redelegated to the Director, Center for Devices and Radiological Health (21 CFR 5.53).

Dated: April 11, 1988.

James S. Benson,

Deputy Director, Center for Devices and Radiological Health.

[FR Doc. 88-8862 Filed 4-19-88; 8:45 am]

BILLING CODE 4160-01-M

Health Resources and Services Adminstration

National Disaster Medical System; Medical Manpower Component Establishment

AGENCY: Health Resources and Services Administration, HHS.

ACTION: Notice: Establishing the medical manpower component of the National Disaster Medical System.

SUMMARY: This notice announces the creation of the medical manpower component within the Health Resources and Services Administration (HRSA), Department of Health and Human Services/Public Health Service (HHS/PHS) as a part of the National Disaster Medical System (NDMS).

The NDMS is an organized resource that may be activated to serve national needs in the event of disasters or other major emergencies requiring extraordinary medical services. The manpower component will contain volunteer medical response personnel and technical staff that will be made available in situations requiring substantial medical services from outside the area affected by the disaster or emergency. The manpower component of NDMS is being established by HRSA/HHS/PHS in cooperation with the Department of Defense (DoD), Federal Emergency Management Agency (FEMA), and the Veterans Administration (VA).

FOR FURTHER INFORMATION CONTACT: Mr. John D. Reardon, Director, Office of Emergency Preparedness, HRSA, Parklawn Building, Room 13A-22, 5600 Fishers Lane, Rockville, Maryland, 20857, or call 301/443-6580 (This is not a toll free number.)

SUPPLEMENTARY INFORMATION: HHS/PHS, DoD, FEMA, and VA signed an agreement in September 1987 to assure that the Nation will have an effective capability to meet essential civilian disaster needs and assist during national security emergencies with the establishment of the NDMS.

The NDMS is designed to fulfill three objectives:

- Provide a medical response to a disaster area in the form of medical response units or teams and medical supplies and equipment.
- Evacuate patients that cannot be cared for in the affected area to designated locations elsewhere in the Nation; and
- Provide hospitalization in a national voluntary network of non-Federal acute care hospitals that have agreed to accept patients in the event of a national emergency.

The system is designed to care for the victims of any incident that exceeds the medical care capability of the appropriate Federal, State, or regional medical care system. It may be used in a variety of emergency catastrophic events such as earthquakes, tidal waves, volcano eruptions, industrial accidents, or casualties returning to the U.S. from an overseas conventional military conflict.

The NDMS components are:

1. Medical Manpower Component

This component will be administered by HRSA, HHS/PHS and will consist of volunteer medical response units or teams.

Personnel for these medical response units or teams will be recruited from non-Federal sources as volunteers and trained by local sponsoring institutions. A non-Federal organization sponsoring a medical response unit or team may be a licensed hospital, a State-approved non-hospital health agency, a disaster service agency, or a non-profit corporation capable of providing disaster health services.

2. Evacuation Component

This component will be administered by the DoD. It is founded on the aeromedical evaluation system of the Military Airlift Command, and will be augmented by civilian passenger aircraft, passenger rail services, and other means of patient transport.

3. Hospital Beds Component

This component will be administered by DoD and the VA. DoD is the lead agency for this component. The hospital bed component of NDMS will comprise approximately 100,000 precommitted non-Federal hospital beds in about 72 metropolitan areas of the country.

Authorities

The medical manpower component of NDMS is established pursuant to the combined authorities of section 311(c) of the Public Health Service Act (42 U.S.C. 243(c)), Executive Order 11490, and the Disaster Relief Act of 1974 (Pub. L. 93-288). HHS/PHS, DoD, or FEMA, under their emergency authorities, may request activation of the NDMS and deployment of the medical response units or teams to meet essential civilian or defense health care needs. Each Federal department or agency will direct and control its own program resources while participating in the NDMS, in accordance with the stated mission of the agency and its legislative authorities.

Activation

In the event of a major disaster, the Governor of an affected State may request Federal assistance under the authority of the Disaster Relief Act of 1974. The President may make a declaration of a major disaster or an emergency. This Presidential declaration may include the activation of NDMS when appropriate.

The NDMS may also be activated by HHS/PHS upon request of the appropriate State or local authority in situations warranting Federal assistance, under authority provided by the Public Health Service Act.

Lastly, in a national security emergency, the Secretary of Defense would have authority to activate the system.

When so activated, the medical response units or teams will supplement medical services provided by Federal, State, regional, and local medical resources; and allocate skilled and trained professionals to the highest priority needs.

Establishment and Operation of the Manpower Component

The medical manpower component of NDMS will be developed by non-Federal sponsoring organizations that agree to make the volunteer medical response units or teams available for local or State service in the event of a local disaster, and for Federal service in national emergencies. Each sponsor will recruit, train, and maintain its medical response units or teams in accordance with the following guidance:

—Under non-emergency conditions, each volunteer medical response unit or team will function under the control and supervision of its non-Federal sponsoring organization.

—In the event of a local or State emergency, the volunteer medical response units or teams should be made available by its sponsor to the State or local agency responsible for disaster medical services, under the terms and conditions of applicable State law and of agreements negotiated between the sponsor and the appropriate State and local governments.

—In the event of a disaster or a national security emergency and the determination of the HHS/PHS that it is in the interest of the United States, the volunteer medical response units or teams will be disengaged from their sponsors and those volunteer unit or team members will become PHS employees under the emergency powers granted to the PHS to provide appropriate medical services at the disaster sites.

When activated for Federal service, the volunteer medical response units or teams as PHS employees will function under the management and supervisory control of Federal officials. While in Federal service, they will have the same protection against personal liability as other PHS employees for actions taken within the scope of their Federal employment. They may be provided representations by the Department of Justice if they are sued in their individual capacities, request Department of Justice representation, and their request is determined by the Department of Justice to meet the requirements of its regulations concerning the representation of Federal employees. See section 224 of the Public Health Service Act, 42 U.S.C. 233. In addition, individual medical response unit or team members working as PHS employees and deployed to a State in which they are not licensed or certified to practice their profession will not be subject to the licensure/certification requirements of that particular State.

Date: March 15, 1988.

David N. Sundwall,

Administrator, Assistant Surgeon General.

[FR Doc. 88-8663 Filed 4-19-88; 8:45 am]

BILLING CODE 4160-15-M

DEPARTMENT OF THE INTERIOR

Bureau of Land Management

Alaska State Office; Proposed Reinstatement of a Terminated Oil and Gas Lease

In accordance with Title IV of the Federal Oil and Gas Royalty Management Act (Pub. L. 97-451), a petition for reinstatement of oil and gas lease AA-48140-R has been received covering the following lands:

Copper River Meridian, Alaska

T. 11 N., R. 4 W.,
Sec. 30 N½SE¼.
(80 acres.)

The proposed reinstatement of the lease would be under the same terms and conditions of the original lease, except the rental will be increased to $5 per acre per year, and royalty increased to 16⅔ percent. The $500 administrative fee and the cost of publishing this Notice have been paid. The required rentals and royalties accruing from December 1, 1987, the date of termination, have been paid.

Having met all the requirements for reinstatement of lease AA-48140-R as set out in section 31(d) and (e) of the Mineral Leasing Act of 1920 (30 U.S.C. 188), the Bureau of Land Management is proposing to reinstate the lease, effective December 1, 1987, subject to the terms and conditions cited above.

Kay F. Kletka,

Chief, Branch of Mineral Adjudication.

Dated: April 11, 1988.

[FR Doc. 88-8600 Filed 4-19-88; 8:45 am]

BILLING CODE 4310-JA-M

Minerals Management Service

Information Collection Submitted to the Office of Management and Budget for Review Under the Paperwork Reduction Act

The proposal for the collection of information listed below has been submitted to the Office of Management and Budget for approval under the provisions of the Paperwork Reduction Act (44 U.S.C. Chapter 35). Copies of the proposed collections of information and related forms and explanatory material may be obtained by contacting the Bureau's Clearance Officer at the telephone number listed below. Comments and suggestions on the requirements should be made within 30 days directly to the Bureau Clearance Officer and to the Office of Management and Budget Interior Department Desk Officer, Washington, DC 20503, telephone (202) 395-7340, with copies to Gerald D. Rhodes, Chief, Branch of Rules, Orders, and Standards; Offshore Rules and Operations Division; Mail Stop 646, Room 6A110; Minerals Management Service; 12203 Sunrise Valley Drive; Reston, Virginia 22091.

Title: Oil and Gas and Sulphur Operations in the Outer Continental Shelf (OCS), 30 CFR Part 250 (4 submissions—see individual titles below)

Abstract: Respondents submit the following forms to the Minerals Management Service's (MMS) District Supervisors to be evaluated and approved or disapproved for the adequacy of the equipment, materials, and/or procedures which the lessee plans to use to safely perform drilling, well-completion, well-workover, and well-abandonment operations:

1. Form MMS-331C, Application for Permit to Drill, is used to obtain permission to initiate the drilling of a well and is the first significant information placed in a well file.

2. Form MMS-331, Sundry Notices and Reports on Wells, is used to obtain prior approval for all intervening actions between the initial drilling and the subsequent abandonment of a well, including deepening and plugging back. It is used as a subsequent report of all operations other than completion, recompletion, or abandonment.

3. Form MMS-330, Well (Re)Completion Report, is used to report when a well is completed or recompleted in a given interval stating the condition of the wellbore until such time that the well is recompleted or abandoned.

4. Form MMS-332, Notice of Intent/Report of Well Abandonment, is used to obtain prior approval for, and subsequently to report, the abandonment of a well. It will be the last significant information placed in a well file since it results in the file being closed.

These forms are necessary to enable MMS to ensure safety of operations, protection of the human, marine, and coastal environments, conservation of the natural resources in the OCS, prevention of waste, and protection of correlative rights with respect to oil and gas operations in the OCS.

Bureau Form Number:

1. Form MMS-331C, Application for Permit to Drill

Annual Responses: 1,130
Annual Burden Hours: 565

2. Form MMS-331, Sundry Notices and Reports on Wells

Annual Responses: 5,566
Annual Burden Hours: 2,783

3. Form MMS-330, Well (Re)Completion Report

Annual Responses: 2,500
Annual Burden Hours: 2,500

4. Form MMS-332, Notice of Intent/Report of Well Abandonment

Annual Responses: 1,650
Annual Burden Hours: 825
Frequency: On occasion
Description of Respondents: OCS oil and gas lessees
Bureau Clearance Officer: Dorothy Christopher, (703) 435-6213.

Date: November 17, 1987.

John B. Rigg,

Associate Director for Offshore Minerals Management.

[FR Doc. 88-8001 Filed 4-19-88; 8:45 am]

BILLING CODE 4310-MR-M

Outer Continental Shelf (OCS) Advisory Board Scientific Committee (SC) Notice of Vacancies and Requests for Nominations

The Minerals Management Service (MMS) is seeking interested and qualified individuals to serve on its OCS Advisory Board SC. The SC is chartered, under the Federal Advisory Committee Act, to advise the Director of the MMS on the appropriateness, feasibility, and scientific value of the OCS Environmental Studies Programs (ESP) and environmental aspects of the offshore oil and gas program. The ESP, which was authorized by the OCS Lands Act as amended (section 20), is administered by the MMS and covers a wide range of field and laboratory studies in biology, chemistry, and physical oceanography, as well as studies of the social and economic impacts of OCS oil and gas development. The work is conducted through award of competitive contracts and interagency and cooperative agreements. The SC reviews the relevance of the information being produced by the ESP and may recommend changes in its scope, direction, and emphasis.

The SC consists of distinguished scientists in appropriate disciplines of the biological, physical, chemical, and socioeconomic sciences. The selection is based on an attempt to achieve a representative distribution of all subjects, as well as geographic balance with respect to areas of research experience. Demonstrated knowledge of the issues related to OCS oil and gas development is essential. Selection is made by the Department of the Interior on the basis of these factors.

Interested individuals should send a letter of interest and resume, within 30 days, to: Dr. Don V. Aurand, Chief, Branch of Environmental Studies, Offshore Environmental Assessment Division, Room 4230 (MS-644), Minerals Management Service, U.S. Department of the Interior, 18th and C Streets NW., Washington, DC 20240 (telephone (202) 343-7744).

John B. Rigg,

Associate Director for Offshore Minerals Management.

Date: April 15, 1988.

[FR Doc. 88-8040 Filed 4-19-88; 8:45 am]

BILLING CODE 4310-MR-M

National Park Service

Availability of Draft Environmental Impact Statement for Lake Clark National Park and Preserve Alaska

ACTION: Wilderness Recommendation Lake Clark National Park and Preserve.

In the Federal Register of Friday April 1, 1988, Vol. 53, No. 63, page 10571, it was indicated that comments must be received by July 8, 1988 to be included in the development of the final EIS. The correct date is July 18, 1988.

In addition, there is scheduled an additional public meeting in Kenai at the NPS office, 405 Overland Avenue at 4 p.m. and 7 p.m. on June 14, 1988. The public is invited to review and comment on the Section 810 analysis separately at the public meeting. The Section 810 analysis is included in the Draft EIS.

FOR FURTHER INFORMATION CONTACT: Division of Planning, Alaska Region, National Park Service, 2525 Gambell Street, Anchorage, Alaska, 99503; (907) 257-2654.

Date: April 15, 1988.

James W. Stewart,

Acting Associate Director, Planning and Development.

[FR Doc. 88-8047 Filed 4-19-88; 8:45 am]

BILLING CODE 4310-70-M

[DES 88-20]

Availability of Draft Environmental Impact Statement for Wrangell-St. Elias National Park and Preserve, Alaska

ACTION: Notice of Availability of the Draft Environmental Impact Statement (DEIS) for the Wilderness Recommendation Wrangell-St. Elias National Park and Preserve, Alaska and the holding of public hearings and public meetings.

For Wrangell-St. Elias National Park and Preserve, four alternatives were examined ranging from no action, which means no additional wilderness designation, to designating all suitable lands within the study area as wilderness. Alternative 2, the proposed action, recommends about 273,000 acres, or just under 9 percent of the study area lands, for wilderness designation. In addition, about 109,000 acres of existing wilderness would be deleted from wilderness.

DATES AND ADDRESSES: The public is invited to comment on the DEIS. The public comment period will end July 18, 1988. Written comments should be mailed to Mr. Q. Boyd Evison, Regional Director, Alaska Regional Office, National Park Service, 2525 Gambell, Anchorage, AK 99503. Comments must be received by July 18, 1988, to be considered in the development of the final EIS.

Two formal hearings have been scheduled to receive oral and written comments on this wilderness DEIS. A section 810 review will be conducted as part of the hearings. The public hearings will also provide the opportunity to receive oral and written comments on Wilderness Recommendations for Lake Clark National Park and Preserve and Gates of the Arctic National Park and Preserve draft EISs, which are also on public review. One hearing will be held in Anchorage, Alaska, on Monday, June 6, 1988, 7:00 p.m., Third Floor Conference Room, Alaska Regional Office, National Park Service, 2525 Gambell Street. Another hearing has been tentatively scheduled for Tuesday, June 7 at 7:00 p.m. in Arlington, Virginia, at the Professional Center, Third Floor, Metropolitan Campus of George Mason University, 3401 North Fairfax Drive. The actual date and time will be verified in the local newspapers.

In addition, 8 public meetings will be held on Wrangell-St. Elias National Park and Preserve Wilderness DEIS. A section 810 review will be conducted as part of the meetings. They will be in Fairbanks on Tuesday, June 7, Juneau on

Wednesday, June 8, Yakutat on Thursday, June 9, Glennallen on Monday, June 13, Tok on Tuesday, June 14, McCarthy on Wednesday, June 15, Slana on Thursday, June 16 and Chitina on Friday, June 17. The exact time and locations will be announced in local news media.

FOR FURTHER INFORMATION CONTACT: Division of Planning, Alaska Regional Office, National Park Service, 2525 Gambell Street, Anchorage, Alaska 99503; (907) 257-2654. The headquarters at Glennallen, Alaska, phone (907) 882-5235 will have reading copies available to the public as will the NPS Alaska Regional Office (address above); the Alaska Resources Library in Anchorage, Alaska, 701 C Street; the Alaska Public Lands Information Office in Fairbanks, Alaska, Third and Cushman Streets; and the Office of Public Affairs, National Park Service, Department of the Interior in Washington, DC, 18th and C Streets, NW.

Gerald D. Patten,

Associate Director, Planning and Development.

Date: April 13, 1988.

Bruce Blanchard,

Director, Office of Environmental Project Review, United States Department of the Interior.

[FR Doc. 88-8648 Filed 4-19-88; 8:45 am]

BILLING CODE 4310-70-M

Availability of Environmental Impact Statement; Yellowstone National Park

ACTION: Notice of Availability of the Final Environmental Impact Statement and Development Concept Plan, Fishing Bridge Developed Area, Yellowstone National Park, Wyoming-Montana-Idaho.

SUMMARY: This notice announces the availability of a final environmental impact statement (FEIS) and Development Concept Plan (DCP) for the Fishing Bridge Developed Area, Yellowstone National Park.

DATES: The 30-day no-action period following the Environmental Protection Agency's notice of availability of the FEIS will end May 25, 1988.

ADDRESSES: Public reading copies of the FEIS will be available for review at the following locations:

Office of the Superintendent, Yellowstone National Park, Wyoming, Telephone: (307) 344-7381

Branch of Compliance, Rocky Mountain Regional Office, National Park Service, 12795 West Alameda Parkway, Lakewood, Colorado 80215, Mailing Address: P.O. Box 25287, Telephone (303) 969-2828

Office of Public Affairs, National Park Service, Department of the Interior, 18th and C Streets NW., Washington, DC 20240, Telephone: (202) 343-6843

SUPPLEMENTARY INFORMATION: The FEIS/DCP analyzes seven alternatives to reduce conflicts between the threatened grizzly bears and humans at the Fishing Bridge developed area in Yellowstone National Park. The alternatives attempt to contribute to the grizzly bear recovery effort while still providing appropriate visitor services. The FEIS/DCP evaluates the impacts of removing some or all of the camping and commercial support facilities at Fishing Bridge. The alternatives are: Alternative A to remove and replace elsewhere only the NPS campground, keeping the RV park and most support facilities: Alternative B to remove and replace all camping facilities and some support facilities: Alternative C to remove all camping and support facilities, and replace part of them: Alternative D to remove and replace 160 NPS campsites, fence the remaining campsites, and retain all support facilities: Alternative E to remove all camping and support facilities without replacement elsewhere: the No Action Alternative: and lastly, the Proposed Action. The proposed action is similar to Alternative A, but replacement of the NPS campground would be deferred until visitor demand warrants. The FEIS/DCP in particular evaluates the environmental consequences of the proposed action and the other alternatives on threatened and endangererd species, other natural resources and values, visitor use, concessioners, and communities near Yellowstone National Park.

FOR FURTHER INFORMATION CONTACT: Mr. Steve Iobst at Yellowstone National Park at the above address, telephone (307) 344-7381: or Ms. Christine Turk, Denver Service Center, Central Team, National Park Service, at the above address, telephone (303) 969-2310.

L. Lorraine Mintzmyer,

Regional Director, Rocky Mountain Region, National Park Service.

[FR Doc. 88-8669 Filed 4-19-88; 8:45 am]

BILLING CODE 4310-70-M

INTERNATIONAL TRADE COMMISSION

[Investigations No. 731-TA-378 (Final) and No. 701-TA-287 (Final)]

Certain Electrical Conductor Aluminum Redraw Rod From Venezuela

AGENCY: United States International Trade Commission.

ACTION: Institution of a final antidumping investigation and scheduling of a hearing to be held in connection with the final antidumping investigation and in connection with the final countervailing duty investigation.

SUMMARY: The Commission hereby gives notice of the institution of final antidumping investigation No. 731-TA-378 (Final) under section 735(b) of the Tariff Act of 1930 (19 U.S.C. 1673d(b)) to determine whether an industry in the United States is materially injured, or is threatened with material injury, or the establishment of an industry in the United States is materially retarded, by reason of imports from Venezuela of wrought rods of aluminum, the foregoing which are electically conductive and contain not less than 99 percent of aluminum by weight, provided for in item 618.15 of the Tariff Schedules of the United States, that have been found by the Department of Commerce, in a preliminary determination, to be sold in the United States at less than fair value (LTFV). The Commission has already instituted a final countervailing duty investigation of the same product. Further, the Commission hereby gives notice of the public hearing that will be held in connection with these investigations. Commerce will make its final LTFV and subsidy determinations in these investigations on June 22, 1988, and the Commission will make its final injury determinations by August 5, 1988 (see sections 735(a) and 735(b) of the act (19 U.S.C. 1673d(a) and 1673d(b))).

For further information concerning the conduct of this investigation, hearing procedures, and rules of general application, consult the Commission's Rules of Practice and Procedure, Part 207, subparts A and C (19 CFR Part 207), and Part 201, Subparts A through E (19 CFR Part 201).

EFFECTIVE DATE: March 28, 1988.

FOR FURTHER INFORMATION CONTACT: Stephen Vastagh (202-252-1180), Office of Investigations, U.S. International Trade Commission, 500 E Street SW., Washington, DC 20436. Hearing-impaired individuals are advised that information on this matter can be obtained by contacting the Commission's TDD terminal on 202-252-1810. Persons with mobility impairments who will need special assistance in gaining access to the Commission should contact the Office of the Secretary at 202-252-1000.

SUPPLEMENTARY INFORMATION:

Background.—This final antidumping investigation is being instituted as a result of an affirmative preliminary

determination by the Department of Commerce that imports of certain electrical conductor aluminum redraw rod from Venezuela are being sold in the United States at less than fair value within the meaning of section 731 of the act (19 U.S.C. 1673) (53 FR 3614, February 8, 1988). The investigation was requested in a petition filed on July 14, 1987, by counsel for Southwire Co., Carrollton, GA. In response to that petition the Commission conducted a preliminary antidumping investigation and, on the basis of information developed during the course of that investigation, determined that there was a reasonable indication that an industry in the United States was materially injured by reason of imports of the subject merchandise (52 FR 33300, September 2, 1987).

The Department of Commerce has also found, in a preliminary determination, that imports of certain electrical conductor aluminum redraw rod from Venezuela are subsidized by the government of Venezuela (52 FR 38113, October 14, 1987). Based upon the request of the petitioner, the Department of Commerce extended the deadline date for the final subsidy determination to correspond to the date of the final antidumping duty determination of the same product (52 FR 42703, November 6, 1987). The Commission has instituted a final countervailing duty investigation but has not scheduled a public hearing in connection therewith (52 FR 43404, November 12, 1987). Based upon the request of SURAL, a respondent-exporter accounting for a significant proportion of exports of the merchandise under investigation, the Department of Commerce postponed the final antidumping and subsidy determinations until not later than June 22, 1988 (53 FR 9675, March 24, 1988). The Commission thus schedules herewith a public hearing in connection with the final antidumping investigation to coincide with the hearing to be held in connection with the final countervailing duty investigation of the same product.

Participation in the investigation. Persons wishing to participate in this investigation as parties must file an entry of appearance with the Secretary to the Commission, as provided in § 201.11 of the Commission's rules (19 CFR 201.11), not later than twenty-one (21) days after the publication of this notice in the **Federal Register**. Any entry of appearance filed after this date will be referred to the Chairman, who will determine whether to accept the late entry for good cause shown by the person desiring to file the entry.

Service list. Pursuant to § 201.11(d) of the Commission's rules (19 CFR 201.11(d)), the Secretary will prepare a service list containing the names and addresses of all persons, or their representatives, who are parties to this investigation upon the expiration of the period for filing entries of appearance. In accordance with §§ 201.16(c) and 207.3 of the rules (19 CFR 201.16(c) and 207.3), each document filed by a party to the investigation must be served on all other parties to the investigation (as identified by the service list), and a certificate of service must accompany the document. The Secretry will not accept a document for filing without a certificate of service.

Staff report. A public version of the prehearing staff report in these investigations will be placed in the public record on June 10, 1988, pursuant to § 207.21 of the Commission's rules (19 CFR 207.21).

Hearing. The Commission will hold a hearing in connection with these investigations beginning at 9:30 a.m. on June 23, 1988, at the U.S. International Trade Commission Building, 500 E Street SW., Washington, DC. Requests to appear at the hearing should be filed in writing with the Secretary to the Commission not later than the close of business (5:15 p.m.) on June 14, 1988. All persons desiring to appear at the hearing and make oral presentations should file prehearing briefs and attend a prehearing conference to be held at 9:30 a.m. on June 17, 1988, at the U.S. International Trade Commission Building. The deadline for filing prehearing briefs is June 20, 1988.

Testimony at the public hearing is governed by § 207.23 of the Commission's rules (19 CFR 207.23). This rule requires that testimony be limited to a nonconfidential summary and analysis of material contained in prehearing briefs and to information not available at the time the prehearing brief was submitted. Any written materials submitted at the hearing must be filed in accordance with the procedures described below and any confidential materials must be submitted at least three (3) working days prior to the hearing (see § 201.6(b)(2) of the Commission's rules (19 CFR 201.6(b)(2))).

Written submissions. All legal arguments, economic analyses, and factual materials relevant to the public hearing should be included in prehearing briefs in accordance with § 207.22 of the Commission's rules (19 CFR 207.22). Posthearing briefs must conform with the provisions of § 207.24 (19 CFR 207.24) and must be submitted not later than the close of business on June 30, 1988. In addition, any person who has not entered an appearance as a party to the investigations may submit a written statement of information pertinent to the subject of the investigations on or before June 30, 1988. A signed original and fourteen (14) copies of each submission must be filed with the Secretary to the Commission in accordance with § 201.8 of the Commission's rules (19 CFR 201.8). All written submissions except for confidential business data will be available for public inspection during regular business hours (8:45 a.m. to 5:15 p.m.) in the Office of the Secretary to the Commission.

Any business information for which confidential treatment is desired must be submitted separately. The envelope and all pages of such submissions must be clearly labeled "Confidential Business Information." Confidential submissions and requests for confidential treatment must conform with the requirements of § 201.6 of the Commission's rules (19 CFR 201.6).

Authority: These investigations are being conducted under authority of the Tariff Act of 1930, title VII. This notice is published pursuant to § 207.20 of the Commission's rules (19 CFR 207.20).

By order of the Commission.

Kenneth R. Mason,

Secretary.

Issued: April 12, 1988.

[FR Doc. 88-8694 Filed 4-19-88; 8:45 am]

BILLING CODE 7020-02-M

[Investigation No. 337-TA-278]

Certain Programmable Digital Clock Thermostats; Receipt of Initial Determination Terminating Respondent on the Basis of Consent Order Agreement

AGENCY: U.S. International Trade Commission.

ACTION: Notice is hereby given that the Commission has received an initial determination from the presiding officer in the above-captioned investigation terminating the following respondent on the basis of a consent order agreement: Computime Limited.

SUPPLEMENTARY INFORMATION: This investigation is being conducted pursuant to section 337 of the Tariff Act of 1930 (19 U.S.C. 1337). Under the Commission's rules, the presiding officer's initial determination will become the determination of the Commission thirty (30) days after the date of its service upon the parties, unless the Commission orders reviev of the initial determination. The initial

determination in this matter was served upon the parties on April 12, 1988.

Copies of the initial determination, the consent order agreement, and all other nonconfidential documents filed in connection with this investigation are available for inspection during official business hours (8:45 a.m. to 5:15 p.m.) in the Office of the Secretary, U.S. International Trade Commission, 500 E Street SW., Washington, DC 20436, telephone 202-252-1000. Hearing impaired individuals are advised that information on this matter can be obtained by contacting the Commission's TDD terminal on 202-252-1810.

Written comments: Interested persons may file written comments with the Commission concerning termination of the aforementioned respondent. The original and 14 copies of all such comments must be filed with the Secretary to the Commission, 500 E Street SW., Washington, DC 20436, no later than 10 days after publication of this notice in the **Federal Register**. Any person desiring to submit a document (or portion thereof) to the Commission in confidence must request confidential treatment. Such requests should be directed to the Secretary to the Commission and must include a full statement of the reasons why confidential treatment should be granted. The Commission will either accept the submission in confidence or return it.

FOR FURTHER INFORMATION CONTACT: Ruby J. Dionne, Office of the Secretary, U.S. International Trade Commission, Telephone 202-252-1805.

By order of the Commission.
Issued: April 12, 1988.

Kenneth R. Mason,
Secretary.

[FR Doc. 88-8695 Filed 4-19-88; 8:45 am]

BILLING CODE 7020-02-M

[Investigation No. 731-TA-389 (Preliminary)]

3.5" Microdisks and Media Therefor From Japan

Determination

On the basis of the record [1] developed in the subject investigation, the Commission determines,[2] pursuant to section 733(a) of the Tariff Act of 1930 (19 U.S.C. 1673b(a)), that there is a reasonable indication that an industry in the United States is materially injured by reason of imports from Japan of 3.5" microdisks and media therefor, provided for in item 724.45 of the Tariff Schedules of the United States,[3] that are alleged to be sold in the United States at less than fair value (LTFV).[4]

Background

On February 26, 1988, a petition was filed with the Commission and the Department of Commerce by Verbatim Corp., Charlotte, NC, alleging that an industry in the United States is materially injured or threatened with material injury by reason of LTFV imports of 3.5" microdisks and media therefor from Japan. Accordingly, effective February 26, 1988, the Commission instituted preliminary antidumping investigation No. 731-TA-389 (Preliminary).

Notice of the institution of the Commission's investigation and of a public conference to be held in connection therewith was given by posting copies of the notice in the Office of the Secretary, U.S. International Trade Commission, Washington, DC, and by publishing the notice in the **Federal Register** of March 9, 1988 (53 FR 7581). The conference was held in Washington, DC, on March 21, 1988 and all persons who requested the opportunity were permitted to appear in person or by counsel.

The Commission transmitted its determination in this investigation to the Secretary of Commerce on April 11, 1988. The views of the Commission are contained in USITC Publication 2076 (April 1988), entitled "3.5" Microdisks and Media Therefor from Japan: Determination of the Commission in Investigation No. 389 (Preliminary) Under the Tariff Act of 1930, Together With the Information Obtained in the Investigation."

By order of the Commission

Kenneth R. Mason,
Secretary.

Issued: April 13, 1988.

[FR Doc. 88-8696 Filed 4-19-88; 8:45 am]

BILLING CODE 7020-02-M

---

[1] The record is defined in § 207.2(i) of the Commission's Rules of Practice and Procedure (19 CFR 207.2(i)).

[2] Chairman Liebeler and Vice Chairman Brunsdale did not participate.

[3] 3.5" microdisks and media therefor are defined in the Commission's **Federal Register** notice as "unrecorded flexible magnetic disk recording media, with or without protective covering, for ultimate use in recording and storing data with a 3.5" floppy disk drive."

[4] Commissioner Cass determines that there is a reasonable indication that industries in the United States are materially injured by reason of allegedly LTFV imports of, respectively, double-density 3.5" microdisks and media therefor, and high-density 3.5" microdisks and media therefor.

DEPARTMENT OF JUSTICE

Lodging of Consent Decree Pursuant to Clean Water Act; City of Geneva, OH, et al.

In accordance with Department policy, 28 CFR 50.7, notice is hereby given that a proposed Consent Decree in *United States v. City of Geneva, Ohio, et al.*, Civil Action No. C87-973Y, was lodged with the United States District Court for the Northern District of Ohio on April 4, 1988. The complaint filed by the United States alleged that Defendant City of Geneva violated section 301(a) of the Clean Water Act, 33 U.S.C. 1311(a) and Defendant City of Geneva's National Pollutant Discharge Elimination System ("NPDES") permit by failing to comply with effluent limits for certain parameters as required by the NPDES permit.

The proposed Consent Decree establishes a compliance schedule under which Defendant City of Geneva will construct dechlorination equipment and nitrification facilities. The proposed Consent Decree also requires Defendant City of Geneva to meet, at a minimum, interim effluent limits until August 15, 1988 at which time Defendant City of Geneva must meet final effluent limits contained in its NPDES permit.

In adition, the proposed Consent Decree requires Defendant City of Geneva to pay a civil penalty of $30,000.

The Department of Justice will receive comments relating to the proposed Consent Decree for a period of thirty (30) days from the date of this publication. Comments should be addressed to the Assistant Attorney General of the Land and Natural Resources Division, Department of Justice, Washington, DC 20530, and should refer to *United States v. City of Geneva, Ohio, et al.*, D.J. Reference No. 90-5-1-1-2785.

The proposed Consent Decree may be examined at the office of the United States Attorney, 1404 East Ninth Street, Suite 500, Cleveland, Ohio 44114 and at the Office of Regional Counsel, United States Environmental Protection Agency, Region V, 230 South Dearborn Street, Chicago, Illinois 60604. Copies of the consent Decree may be examined at the Environmental Enforcement Section, Land and Natural Resources Division of the Department of Justice, Room 1515, Ninth Street and Pennsylvania Avenue, NW., Washington, DC 20530. A copy of the proposed Consent Decree may be obtained in person or by mail from the Environmental Enforcement Section, Land and Natural Resources Division of the Department of Justice. In requesting

a copy, please enclose a check in the amount of $2.00 (ten cents per page reproduction cost) payable to the Treasurer of the United States.

Roger J. Marzulla,

Acting Assistant Attorney General, Land and Natural Resources Division.

[FR Doc. 88-8603 Filed 4-19-88; 8:45 am]

BILLING CODE 4410-01-M

Notice of Lodging of Consent Decree Pursuant to the Clean Air Act; Signal Energy Systems, Inc.

In accordance with Departmental policy, 28 CFR 50.7, 38 FR 19029, notice is herby given that a consent decree in *United States v. Signal Energy Systems, Inc.*, Civil Action No. 88-0333 LKK—EM, was lodged in the United States District Court, Eastern District of California. The Complaint in this action sought injunctive relief and civil penalties for violation of the Clean Air Act 42 U.S.C. 7401, *et seq.* Specifically Signal Energy Systems, Inc. was charged with commencing construction of biomass-fired boiler for an electricity generating plant in Shasta County, California, without an effective Prevention of Significant Deterioration permit. The proposed Consent Decree requires Signal to install an ammonia injection system for reduction of NO_x emissions and to pay a civil penalty of $100,000.

After the requisite Federal Register Notice is published, the time period for comments has run, and the comments, if any, have been evaluated, the Court will be further advised as to any action which may be required by the Court at that time. During the pendency of the Register Notice comment period under 28 CFR 50.7, no action is required of the Court.

The Department of Justice will receive for thirty (30) days from the date of publication of this notice, written comments relating to the consent decree. Comments should be addressed to the Assistant Attorney General, Land and Natural Resources Division, U.S. Department of Justice, Washington, D.C. 20530, and should refer to *United States v. Signal Energy Systems, Inc.*, D.J. Ref. No. 90-5-2-1-1107.

The proposed Consent Decree may be examined at the Office of the United States Attorney, Eastern District of California, 3305 Federal Bldg., 650 Capitol Mall, Sacramento, California, and at the Federal Enforcement Section, Land and Natural Resources Division of the Department of Justice, Room 1736(R), Ninth Street and Pennsylvania Avenue NW., Washington, DC 20004. A copy of the proposed Consent Decree may be obtained in person or by mail from the Environmental Enforcement Section, Land and Natural Resources Division of the Department of Justice.

In requesting a copy, please enclose a check in the amount of $2.10 (10 cents per page reproduction cost) payable to the "Treasurer of the United States."

Roger J. Marzulla,

Acting Assistant Attorney General, Land and Natural Resources Division.

[FR Doc. 88-8604 Filed 4-19-88; 8:45 am]

BILLING CODE 4410-01-M

Lodging of Consent Decree Pursuant to the Clean Air Act

In accordance with Departmental policy, 28 CFR 50.7, notice is hereby given that on April 12, 1988 a proposed Consent Decree in U.S. v. Mid-Iowa Insulation Corporation and Des Moines Independent Community School District, Civil Action No. 86-335-B, was lodged with the United States District Court for the Southern District of Iowa. The proposed Consent Decree concerns violations of the asbestos National Emission Standards for Hazardous Air Pollutants ("asbestos NESHAP"), 40 CFR Part 61.140, *et seq.*, and the Clean Air Act, 42 U.S.C. 7401, *et seq.* The proposed Consent Decree requires defendants, Mid-Iowa Insulation Corporation and the Des Moines Independent Community School District, to comply with the requirements of NESHAP for asbestos in 40 CFR 61.140, *et seq.* The Consent Decree provides for a civil penalty of $5000 ($2500 from the School District; $2500 from Mid-Iowa Insulation), a special compliance program to prevent future violations, a contractor debarment/suspension provision, and a general prohibitory injunction against future violations of the asbestos NESHAP. The Consent Decree will terminate in two years provided that the defendants have paid the civil penalty.

The Department of Justice will receive comments relating to the proposed Consent Decree for a period of thirty (30) days from the date of this publication. Comments should be addressed to the Assistant Attorney General of the Land and Natural Resources Division, Department of Justice, Washington, DC 20530, and should refer to *U.S. v. Mid-Iowa Insulation Corporation and Des Moines Independent Community School District*, D.J. Ref. No. 90-5-2-1-927.

The proposed Consent Decree may be examined at the office of the United States Attorney for the Southern District of Iowa, 115 U.S. Courthouse, Des Moines, Iowa 50309 and at the Region VII, office of the United States Environmental Protection Agency, 726 Minnesota Avenue, Kansas City, Kansas 66101.

The Decree may be examined at the Environmental Enforcement Section, Land and Natural Resources Division of the Department of Justice, Room 1515, Ninth Street and Pennsylvania Avenue NW., Washington, DC 20530. A copy of the proposed Consent Decree may be obtained in person or by mail from the Environmental Enforcement Section, Land and Natural Resources Division of the Department of Justice. In requesting a copy, please enclose a check in the amount of $1.40 (10 cents per page reproduction cost) payable to the Treasurer of the United States.

Roger J. Marzulla,

Assistant Attorney General, Land and Natural Resources Division.

[FR Doc. 88-8602 Filed 4-19-88; 8:45 am]

BILLING CODE 4410-01-M

[AAG/A Order No. 11-88]

Privacy Act of 1974; New System of Records

Pursuant to the provisions of the Privacy Act of 1974 (5 U.S.C. 552a), the Office of the Procurement Executive (OPE), Justice Management Division, is establishing a system of records entitled "Delegations of Procurement Authority," Justice/JMD-018.

The OPE is establishing a new system of records to support its Contracting Officer Standards Program which will provide Department-wide training and experience standards for appointing contracting officers.

5 U.S.C. 552a (e) (4) and (11) provide that the public be given a 30-day period in which to comment on new routine uses. The Office of Management and Budget (OMB), which has oversight responsibility under the Act, requires a 60-day period in which to review the proposed system. Therefore, please submit any comments by May 20, 1988. The public, OMB, and the Congress are invited to submit comments to J. Michael Clark, Assistant Director, Facilities and Administrative Services Staff, Justice Management Division, Department of Justice, Room 6402, Patrick Henry Building, 601 D Street, NW, Washington, DC 20530.

In accordance with 5 U.S.C. 552a(o), the Department has provided a report on this system to OMB and the Congress.

The system description is reprinted below.

Dated: April 4, 1988.

Harry H. Flickinger,

Assistant Attorney General for Administration.

JUSTICE/JMD-018

SYSTEM NAME:

Delegations of Procurement Authority, Justice/JMD-018.

SYSTEM LOCATION:

Office of the Procurement Executive, Department of Justice, Patrick Henry Building, Room 6406, 601 D Street, NW, Washington, DC 20530.

CATEGORIES OF INDIVIDUALS COVERED:

All Department of Justice procurement personnel in the GS/GM 1102 and other series who are actively engaged in the acquisition process and who are or will be designated as contracting officers, or are authorized to obligate the Government contractually.

CATEGORIES OF RECORDS IN THE SYSTEM:

Individual delegations of procurement authority files will contain information on the employees grade/series, job title, employing bureau location, education, procurement experience and procurement training, type of delegation, level of signatory authority, effective date of entry into the program and experience code.

AUTHORITY FOR MAINTENANCE OF THE SYSTEM:

28 U.S.C. 507, 509 and 510; 41 U.S.C. 257; 5 U.S.C. 301; 28 CFR 0.75(d) and 0.75(j); and Executive Order 12352.

PURPOSE OF THE SYSTEM:

Individual delegations of procurement authority files will be used to support a newly established Contracting Officer Standards Program which will serve as a basis to establish Department-wide training and experience standards for issuing contracting officer delegations and to ensure the standards are met. In addition, the files will be used by the Procurement Executive to manage and enhance career development of the Department's procurement work force.

ROUTINE USES OF RECORDS MAINTAINED IN THE SYSTEM, INCLUDING CATEGORIES OF USERS AND THE PURPOSE OF SUCH USES:

(1) Records or information may be disclosed as a routine use in a proceeding before a court or adjudicative body before which the Department is authorized to appear when any of the following is a party to litigation or has an interest in litigation and such records are determined by the Department to be arguably relevant to the litigation: The Department, or any of the Department's components or its subdivisions; any Department employee in his or her official capacity, or in his or her individual capacity where the Department of Justice agrees to represent the employee; or the United States where the Department determines that the litigation is likely to affect it or any of the Department's components or its subdivisions.

(2) Records or information permitted to be released to the news media and the public pursuant to 28 CFR 50.2 may be made available unless it is determined that release of the spcific information in the context of a particular case would constitute an unwarranted invasion of personal privacy.

(3) Records or information may be disclosed as is necessary to respond to congressional inquiries on behalf of constituents.

(4) Records may be disclosed to the National Archives and Records Administration and to the General Services Administration in records management inspections conducted under the authority of Title 44 U.S.C. 2904 and 2906.

POLICIES AND PROCEDURES FOR STORING, RETRIEVING, ACCESSING, RETAINING, AND DISPOSING OF RECORDS IN THE SYSTEM:

STORAGE:

Originals of paper records are kept in standard file cabinets. Duplicates of original paper records will be stored electronically in the Department's main frame computer.

RETRIEVABILITY:

Records are retrieved by name of employee.

SAFEGUARDS:

Paper records are stored in metal filing cabinets and electronic records are stored on the Department's main frame computer. Access to the Patrick Henry Building is protected by 24-hour guard service and is restricted to employees with official identification. Access to records is restricted to authorized personnel with official and electronic identification.

RETENTION AND DISPOSAL:

Files are maintained until the employee leaves the Department at which time paper records are destroyed and electronic records erased.

SYSTEM MANAGERS AND ADDRESS:

The system manager is the Procurement Executive, Justice Management Division, Department of Justice, Patrick Henry Building, Room 6406, 601 D Street, NW., Washington, D.C. 20530.

NOTIFICATION PROCEDURES:

Direct inquiries to the system manager identified above, Attention: FOI/PA Officer. Clearly mark the letter and envelope "Freedom of Information/Privacy Act Request."

RECORD ACCESS PROCEDURES:

Make all requests for access in writing and clearly mark the letter and envelope "Freedom of Information/Privacy Act Request." Clearly indicate the name of the requester, nature of the record sought, approximate date(s) of the record(s); and, provide the required verification of identity (28 CFR 16.41(d)). Direct all requests to the system manager identified above, attention FOI/PA Officer; and, provide a return address for transmitting the information.

CONTESTING RECORDS PROCEDURES

Direct all requests to contest or amend information to the system manager listed above. State clearly and concisely the information being contested, the reasons for contesting it, and the proposed amendment to the information sought. Clearly mark the letter and envelope "Freedom of Information/Privacy Act Request."

RECORD SOURCE CATEGORIES:

Information contained in the system is collected from the individual, training personnel, and general personnel records.

SYSTEMS EXEMPTED FROM CERTAIN PROVISIONS OF THE ACT:

None.

[FR Doc. 88-8605 Filed 4-19-88; 8:45 am]

BILLING CODE 4410-01-M

[AAG/A Order No. 12-88]

Privacy Act of 1974; Amended System of Records

Pursuant to the provisions of the Privacy Act of 1974, 5 U.S.C. 552a, notice is given that the Office of the Pardon Attorney (OPA), Department of Justice, is amending a system of records entitled "Executive Clemency Files (JUSTICE/OPA-001)."

The OPA is amending the system primarily to include two new routine uses, identified below as "g" and "h," and to modify routine use "f." The disclosure of records as described by these routine uses will permit (1) the formulation of informed comments and recommendations by present and former judicial and law enforcement authorities regarding specific clemency applications (2) the execution of appropriate actions by sentencing authorities subsequent to

BEST COPY AVAILABLE

Presidential clemency decisions, and (3) a sharing by Federal, State, local and foreign agencies of information which is necessary and relevant to Executive clemency review or other matters of law enforcement. Other factual and editorial changes also have been made to more accurately describe the system. Significant changes have been italicized for public convenience.

Title 5 U.S.C. 552a(e) (4) and (11) provide that the public be given a 30-day period in which to comment on new routine uses. Accordingly, please submit any comments by May 20, 1988, to J. Michael Clark, Assistant Director, Facilities and Administrative Services Staff, Justice Management Division, Department of Justice, Room 6402, Patrick Henry Building, 601 D Street, NW., Washington, DC 20530.

The system description, as amended, is reprinted below.

Dated: April 5, 1988.

Harry H. Flickinger,

Assistant Attorney General for Administration.

JUSTICE/OPA-001

SYSTEM NAME:

Executive Clemency Files.

SYSTEM LOCATION:

Office of the Pardon Attorney (OPA), U.S. Department of Justice, *Suite 490, Park Place Building, 5550 Friendship Boulevard, Chevy Chase, Maryland 20815.*

CATEGORIES OF INDIVIDUALS COVERED BY THE SYSTEM:

Individuals who have applied for or been granted Executive clemency.

CATEGORIES OF RECORDS IN THE SYSTEM:

The system contains the individual petitions for Executive clemency (Forms OPA–8 or OPA–13) and accompanying oath and character affidavits (Form OPA–11), investigatory material, evaluative reports, official and other correspondence, both solicited and unsolicited, and inter-agency and intra-agency correspondence and memoranda relating to individual petitions for clemency. The system includes Presidential Clemency Board files transferred to the OPA upon termination of the Board on September 15, 1975.

AUTHORITY FOR MAINTENANCE OF THE SYSTEM:

The system is established and maintained in accordance with the United States Constitution, Article II, Section 2; Executive Order of the President dated June 16, 1893; *Order of the Attorney General No. 1011–83, 48 FR 22290 (1983), as codified in 28 CFR 1.1 et seq.; Order of the Attorney General No. 1012–83, 48 FR 22290 (1983), as codified in 28 CFR 0.35 and 0.36;* E.O. 11878 dated September 10, 1975; *and 44 U.S.C. 3101.*

PURPOSE OF THE SYSTEM:

Executive clemency files are maintained by the Attorney General or his designee to investigate each petition for Executive clemency, to review each petition and the information developed by the investigation and to determine whether, in his judgment, the request for clemency is of sufficient merit to warranty a recommendation for favorable action by the President. The information also is used by Federal parole authorities and other Department of Justice employees to assist them in the performance of their official duties.

ROUTINE USES OF RECORDS MAINTAINED IN THE SYSTEM, INCLUDING CATEGORIES OF USERS AND THE PURPOSES OF SUCH USES:

Records in the system may be used as follows: (a) To provide information to the President and memeber of his staff to facilitate the consideration of the Attorney General's reommendation regarding each petition for Executive clemency; (b) to prepare notices to the public of the name of each grantee of clemency, date of Presidential action, nature of clemency granted, nature of grantee's offense, date and place of sentencing, description of sentence imposed, and names of character affiants and interested parties; to disclose similar information to that specified above with respect to clemency denials of general public interest if the disclosure does not constitute an unwarranted invasion of privacy; (c) to prepare bound and indexed volumes containing photocopies of the official warrant of clemency granted each recipient of clemency as a public and official record of Presidential action; (d) upon specific request, to advise the requester whether a named person has applied for, been granted or denied clemency, the date thereof, and the nature of the clemency granted or denied; (e) upon specific request, to make closed files available for historical research purposes when in the public interest and in conformity with Department of Justice policy; (f) to provide information which indicates a violation or apparent violation of law, whether civil, criminal or regulatory in nature, to the appropriate agency, whether Federal, State, local or foreign; *or to provide information either in connection with the solicitation of information necessary and relevant to Executive clemency review or to assist these agencies, where appropriate, in performing their law enforcement responsibilities in situations other than those involving a violation or apparent violation of law, e.g., state parole or clemency review; (g) to provide information to present and former law enforcement and judicial authorities to permit the formulation of comments and recommendations regarding individual clemency matters arising from cases with which they may be familiar; (h) to provide information to assist sentencing authorities in executing appropriate actions subsequent to Presidential clemency decisions;* (i) to release information in a proceeding before a court or adjudicative body before which the OPA is authorized to appear when (1) one of the following is a party to or has an interest in the litigation: i. the OPA; ii. any employee of the OPA in his or her official capacity; iii. any employee of the OPA in his or her individual capacity where the Department of Justice has agreed to represent the employee; or, iv. the United States where the OPA determines that it is likely to be affected by the litigation; and (2) the records, or information derived therefrom, are determined by the OPA to be arguably relevant to the litigation; (j) to disseminate information to the news media and the public pursuant to 28 CFR 50.2 unless it is determined that release of the specific information in the context of a particular case would constitute an unwarranted invasion of personal privacy; (k) to make information available to a Member of Congress or staff acting upon the Member's behalf when the Member or staff requests the information on behalf of and at the request of the individual who is the subject of the record; and (1) to make records available to the National Archives and Record Administration and to the General Services Administration in records management inspections conducted under the authority of 44 U.S.C. 2904 and 2906.

POLICIES AND PRACTICES FOR STORING, RETRIEVING, ACCESSING, RETAINING, AND DISPOSING OF RECORDS IN THE SYSTEM:

STORAGE:

Information in the system is maintained in its original form (i.e., paper letters, notes and memoranda) and stored in locked file cabinets in the OPA and in the Federal Records Center in Suitland, Maryland.

RETRIEVABILITY:

Information is retrieved by using a name index to obtain the case file number assigned to each applicant for Executive clemency.

SAFEGUARDS:

Information contained in the system is protected in accordance *with Department of Justice security regulations for Privacy Act systems of records.* Files are maintained in the OPA or in the Federal Records Center, are not commingled with other Department of Justice records, *and are made available only in accordance with the aforementioned routine uses. When not in the custody of an appropriate official, records are stored in a central file room protected by an intrusion alarm.*

RETENTION AND DISPOSAL:

Records are stored in the OPA and closed cases generally are transferred to the Federal Records Center in Suitland, Maryland when five years old. Except for clemency reports which are furnished to the President in connection with clemency application, Presidential responses, warrants or other documents signifying the President's action in a clemency case, and cases which may be designated by the Pardon Attorney as having significant public interest, records are destroyed after 25 years.

SYSTEM MANAGER(S) AND ADDRESS:

Pardon Attorney, Office of the Pardon Attorney, Department of Justice, *Suite 490, Park Place Building, 5550 Friendship Boulevard, Chevy Chase, Maryland 20815.*

NOTIFICATION PROCEDURE:

Address inquiries to the Pardon Attorney, Department of Justice, *Suite 490, Park Place Building, 5550 Friendship Boulevard, Chevy Chase, Maryand 20815.*

RECORD ACCESS PROCEDURES:

While the Attorney General has exempted Executive Clemency files from the access provisions of the Privacy Act, requests for discretionary releases of records shall be made in writing to the system manager listed above with the envelope and letter clearly marked "Privacy Access Request." Include in the request the general subject mater of the document. Provide full name, current address, date and place of birth, signature (which must be notarized) and a return address for transmitting the information.

CONTESTING RECORD PROCEDURES:

While the Attorney General has exempted Executive Clemency files from the correction (contest and amendment) provisions of the Privacy Act, requests for the discretionary correction (contest and amendment) of records should be directed to the system manager listed above, stating clearly and concisely what information is being contested, the reasons for contesting it and the proposed amendment to the information sought.

RECORD SOURCE CATEGORIES:

Sources of information are the OPA staff, individual applicants for clemency *and their representatives,* Federal Bureau of Investigation or other official investigatory reports, Bureau of Prisons records, Armed Forces reports, probation of parole reports, and reports from individuals or non-Federal organizations, both solicited and unsolicited.

SYSTEMS EXEMPTED FROM CERTAIN PROVISIONS OF THE ACT:

The Attorney General has exempted this system from subsection (d) of the Privacy Act pursuant to 5 U.S.C. 552a(j)(2). Rules have been promulgated in accordance with the requirements of 5 U.S.C. 553 (b), (c) and (e) and have been published in the **Federal Register.**

[FR Doc. 88-8606 Filed 4-19-88; 8:45 am]
BILLING CODE 4410-01-M

[AAG/A Order No. 13-88]

Privacy Act of 1974; System of Records

Pursuant to the provisions of the Privacy Act of 1974, 5 U.S.C. 552a, the Office of the Pardon Attorney (OPA), Department of Justice, is publishing a system of records entitled "Miscellaneous Correspondence File (JUSTICE/OPA-002)."

The purpose of the system of records is to maintain, locate and track for a reasonable period of time all miscellaneous incoming and outgoing correspondence, permit the preparation of necessary responses, and to have available any information which may assist in formulating policy and/or considering potential candidates for Executive clemency.

Title 5 U.S.C. 552a(e)(4) and (11) provide that the public be given a 30-day period in which to comment; and the Office of Management and Budget (OMB), which has oversight responsibility under the Act, requires a 60-day period in which to review the system. However, the Department has requested a waiver of the 60-day requirement. Therefore, please submit any comments by May 20, 1988. The public, OMB, and Congress are invited to submit written comments to J. Michael Clark, Assistant Director, Facilities and Administrative Services Staff, Justice Management Division, Department of Justice, Room 6402, Patrick Henry Building, 601 D Street NW., Washington, DC 20530.

In accordance with 5 U.S.C. 552a(o), the Department has provided a report on this system to OMB and the Congress.

The system description is printed below.

Dated: April 6, 1988.

Harry H. Flickinger

Assistant Attorney General for Administration.

JUSTICE/OPA-022

SYSTEM NAME:

Miscellaneous Correspondence File.

SYSTEM LOCATION:

Office of the Pardon Attorney (OPA), U.S. Department of Justice, suite 490, Park Place Building, 5550 Friendship Boulevard, Chevy Chase, Maryland 20815.

CATEGORIES OF INDIVIDUALS COVERED BY THE SYSTEM:

Individuals who are the named subjects of OPA incoming nad outgoing correspondence, but who have not formally applied for or received Executive clemency. Also, individuals who have corresponded with the OPA, either directly or by referral, but whose correspondence either may or may not pertain to a particular named individual, including the correspondent, or whose correspondence does not contain a request for information under the Freedom of Information/Privacy Acts.

CATEGORIES OF RECORDS IN THE SYSTEM:

the system contains miscellaneous correspondence originated by OPA and received by OPA, either directly or by referral, excluding corresondence pertaining to (1) individuals who have formally applied for or received Executive clemency and (2) individuals who have made formal requests for records under the Freedom of Information/Privacy Acts.

AUTHORITY FOR MAINTENANCE OF THE SYSTEM:

The system is established and maintained in accordance with the United States Constitution, Article II, Section 2; Executive Order of the President dated June 16, 1893; Order of the Attorney General No. 1011-83, 48 FR 22290 (1983), as codified in 28 CFR 1.1 *et seq.;* Order of the Attorney General No. 1012-83, 48 FR 22290 (1983), as codified in 28 CFR 0.35 and 0.36; E.O. 11878 dated September 10, 1975; and 44 U.S.C. 3101.

PURPOSE OF THE SYSTEM:

Records in the system are used by employees in the performance of their duties for reference and informational purposes to facilitate efficient, accurate

and consistent responses to oral and written inquiries, particularly successive inquiries, and to provide access for a reasonable period of time to any relevant and necessary information which may assist in formulating policy and/or in considering potential candidates for Executive clemency.

ROUTINE USES OF RECORDS MAINTAINED IN THE SYSTEM, INCLUDING CATEGORIES OF USERS AND THE PURPOSES OF SUCH USES:

Records in the system may be used as follows: (a) To provide information to the President and members of his staff which may be of political, policy or official interest and/or which may assist them in formulating policy decisions regarding the exercise of Executive clemency; (b) to release information in a proceeding before a court or adjudicative body before which the OPA is authorized to appear when (1) one of the following is a party to or has an interest in the litigation: i. The OPA; ii. any employee of the OPA in his or her official capacity; iii. any employee of the OPA in his or her individual capacity where the Department of Justice has agreed to represent the employee; or, iv. the United States where the OPA determines that it is likely to be affected by the litigation; and (2) the records, or information derived therefrom, are determined by the OPA to be arguably relevant to the litigation; (c) to disseminate information to the news media and the public pursuant to 28 CFR 50.2 unless it is determined that release of the specific information in the context of a particular case would constitute an unwarranted invasion of personal privacy; (d) to make information available to a Member of Congress or staff acting upon the Member's behalf when the Member or staff requests the information on behalf of and at the request of the individual who is the subject of the record; (e) to make records available to the National Archives and Records Administration and the General Services Administration in records management inspections conducted under the authority of 44 U.S.C. 2904 and 2906.

POLICIES AND PRACTICES FOR STORING, RETRIEVING, ACCESSING, RETAINING, AND DISPOSING OF RECORDS IN THE SYSTEM:

STORAGE:

Information in the system is maintained in its original form (i.e., paper letters, notes and memoranda) and stored in locked file cabinets in the OPA.

RETRIEVABILITY:

Information is retrieved by the name of the individuals covered by the system.

SAFEGUARDS:

Information in the system is protected in accordance with Department of Justice security regulations for Privacy Act systems of records. Records are maintained in the OPA and are not commingled with other Department of Justice records. When not in the custody of an appropriate official, records are stored in a central file room protected by key locks and an intrusion alarm.

RETENTION AND DISPOSAL:

Records are destroyed at the end of the calendar year following the calendar year in which they were received (incoming correspondence). If an individual covered by the system formally applies for or receives Executive clemency, all records pertaining to that individual will be transferred immediately to the Executive Clemency Files (JUSTICE/OPA-001).

SYSTEM MANAGER(S) AND ADDRESSES:

Pardon Attorney, Office of the Pardon Attorney, Department of Justice, Suite 490, Park Place Building, 5550 Friendship Boulevard, Chevy Chase, Maryland 20815.

NOTIFICATION PROCEDURE:

Address inquiries to the Pardon Attorney, Department of Justice, Suite 490, Park Place Building, 5550 Friendship Boulevard, Chevy Chase, Maryland 20815.

RECORD ACCESS PROCEDURES:

Requests for records in the system shall be made in writing with the envelope and letter clearly marked "Privacy Access Request" and shall be addressed to the system manager listed above. Include in the request the general subject matter and date of correspondence. Provide full name, current address, date and place of birth, signature (which must be notarized) and a return address for transmitting the information.

CONTESTING RECORD PROCEDURES:

Requests to contest or amend records shall be addressed in writing to the system manager and shall state clearly and concisely what information is being contested, the reasons for contesting it, and the proposed amendment to the information.

RECORD SOURCE CATEGORIES:

Sources of information are the individuals covered and the OPA staff.

SYSTEMS EXEMPTED FROM CERTAIN PROVISIONS OF THE ACT:

None.

[FR Doc. 88-8807 Filed 4-19-88; 8:45 am]

BILLING CODE 4410-01-M

[AAG/A Order No. 14-88]

Privacy Act of 1974; Proposed System of Records

Pursuant to the provisions of the Privacy Act of 1974, 5 U.S.C 552a, notice is given that the Office of the Pardon Attorney (OPA), Department of Justice, proposes to establish a new system of records entitled "Freedom of Information/Privacy Acts (FOI/PA) Request File (JUSTICE/OPA-003)."

The purpose of the proposed system of records is to maintain all FOI/PA requests received for OPA records and the responses to those requests. The system also will assist the OPA in compiling its contribution to the Department of Justice annual FOI/PA statistical reports.

Title 5 U.S.C. 552(e) (4) and (11) provide that the public be given a 30-day period in which to comment; and the Office of Management and Budget (OMB), which has oversight responsibility under the Act, requires a 60-day period in which to review the system before it is implemented. Therefore, please submit any comments by May 20, 1988. The public, OMB, and the Congress are invited to submit written comments to J. Michael Clark, Assistant Director, Facilities and Administrative Services Staff, Justice Management Division, Department of Justice, Room 6402, Patrick Henry Building, 601 D Street NW., Washington, DC 20530.

In accordance with 5 U.S.C. 552a(o), the Department has provided a report on this system to the OMB and the Congress.

The system description is printed below.

Dated: April 6, 1988.

Harry H. Flickinger,

Assistant Attorney General for Administration.

JUSTICE/OPA-003

SYSTEM NAME:

Freedom of Information/Privacy Acts (FOI/PA) Request File

SYSTEM LOCATION:

Office of the Pardon Attorney (OPA), U.S. Department of Justice, Suite 490, Park Place Building, 5550 Friendship Boulevard, Chevy Chase, Maryland 20815.

CATEGORIES OF INDIVIDUALS COVERED BY THE SYSTEM:

Individuals who have submitted requests pursuant to the FOI/PA (5 U.S.C. 552 and 552a) for copies of records in the custody of the OPA.

CATEGORIES OF RECORDS IN THE SYSTEM:

The system contains the FOI/PA requests and a copy of the outgoing response advising the requester of the disposition of the request. The system includes copies of the requested records which have not been released either in whole or in part. In addition, it also contains copies of memoranda addressed to the Office of Information and Privacy prepared in connection with any administrative appeals of the Pardon Attorney's determination, and copies of the pleadings filed in connection with any judicial appeals.

AUTHORITY FOR MAINTENANCE OF THE SYSTEM:

The system is established and maintained in accordance with the United States Constitution, Article II, Section 2; Executive Order of the President dated June 16, 1893; Order of the Attorney General No. 1011–83, 48 FR 22290 (1983), as codified in 28 CFR 1.1 *et seq.;* Order of the Attorney General No. 1012–83, 48 FR 22290 (1983), as codified in 28 CFR 0.35 and 0.36; E.O. 1187 dated September 10, 1975; and 44 U.S.C. 3101.

PURPOSE OF THE SYSTEM:

The FOI/PA Request File is maintained to facilitate complete, accurate and consistent responses to written FOI/PA requests and to expedite response time. The system also assists the OPA in compiling its contribution to the Department of Justice annual FOI/PA statistical reports and enables it to readily determine that portion of its resources devoted to FOI/PA processing. The FOI/PA Request File also aids in processing administrative and judicial appeals of access and amendment denials.

ROUTINE USES OF RECORDS MAINTAINED IN THE SYSTEM, INCLUDING CATEGORIES OF USERS AND THE PURPOSES OF SUCH USES:

Records in the system may be used as follows: (a) To release information in a proceeding before a court or adjudicative body before which the OPA is authorized to appear when (1) one of the following is a party to or has an interest in the litigation: i. The OPA; ii. any employee of the OPA in his or her official capacity; iii. any employee of the OPA in his or her individual capacity where the Department of Justice has agreed to represent the employee; or iv. the United States where the OPA determines that it is likely to be affected by the litigation; and (2) the records, or information derived therefrom, are determined by the OPA to be arguably relevant to the litigation; (b) to make available information to the news media and the public pursuant to 28 CFR 50.2 unless it is determined that release of the specific information in the context of a particular case would constitute an unwarranted invasion of personal privacy; (c) to provide information to a Member of Congress or staff acting upon the Member's behalf when the Member or staff requests the information on behalf of and at the request of the individual who is the subject of the record; (d) to release records to the National Archives and Records Administration and the General Services Administration in records management inspections conducted under the authority of 44 U.S.C. 2904 and 2906.

POLICIES AND PRACTICES FOR STORING, RETRIEVING, ACCESSING, RETAINING, AND DISPOSING OF RECORDS IN THE SYSTEM: STORAGE:

Information in the system is maintained in its original form (i.e., paper letters, notes and memoranda) and stored in locked file cabinets in the OPA.

RETRIEVABILITY:

Records are retrieved by the name of the individual submitting the FOI/PA request.

SAFEGUARDS:

Records in the system are protected in accordance with Department of Justice security regulations for Privacy Act systems of records. Records are maintained in the OPA and are not commingled with other Department of Justice records. When not in the custody of an appropriate official, records are stored in a central file room protected by key locks and an intrusion alarm.

RETENTION AND DISPOSAL:

Records in the system are retained according to General Records Schedule (GRS) No. 14, Informational Services Records, which contains the mandatory records disposition standards for FOI/PA requests as promulgated by the National Archives and Records Administration. GRS 14, item 16a(3)(a) requires that denied requests not appealed be retained for six years and item 17a requires that appealed requests be retained for six years after final agency determination or three years after final adjudication by the courts, whichever is later.

SYSTEM MANAGER(S) AND ADDRESS:

Pardon Attorney, Office of the Pardon Attorney, Department of Justice, Suite 490, Park Place Building, 5550 Friendship Boulevard, Chevy Chase, Maryland 20815.

NOTIFICATION PROCEDURE:

Address inquires to the Pardon Attorney, Department of Justice, Suite 490, Park Place Building, 5550 Friendship Boulevard, Chevy Chase, Maryland 20815.

RECORD ACCESS PROCEDUREE:

While the Attorney General has exempted the FOI/PA Request File from the access provisions of the Privacy Act, requests for discretionary releases of records shall be made in writing to the system manager listed above with the envelope and letter clearly marked "Privacy Access Request." Include in the request the general subject matter of the document. Provide full name, current address, date and place of birth, signature (which must be notarized) and return address for transmitting the information.

CONTESTING RECORD PROCEDURES:

While the Attorney General has exempted the FOI/PA Request File from the correction (contest and amendment) provisions of the Privacy Act, requests for the discretionary correction (contest and amendment) of records should be directed to the system manager listed above, stating clearly and concisely what information is being contested, the reasons for contesting it, and the propsoed amendment to the information sought.

RECORD SOURCE CATEGORIES:

Sources of information are the FOI/PA requester and the OPA staff.

SYSTEMS EXEMPTED FROM CERTAIN PROVISIONS OF THE ACT:

The Attorney General has exempted this system from subsection (d) of the Privacy Act pursuant to 5 U.S.C. 552a(j)(2). Rules have been promulgated in accordance with the requirements of 5 U.S.C. 553(b), (c) and (e) and have been published in the **Federal Register.**

[FR Doc. 88–8608 Filed 4–19–88; 8:45 am]

BILLING CODE 4410-01-M

[AAG/A Order No. 16–88]

Privacy Act of 1974; Modified System of Records

Under the provisions of the Privacy Act of 1974 (5 U.S.C. 552a), the Justice Management Division (JMD), Department of Justice, proposes to modify a system of records last published in the **Federal Register** on December 11, 1987 (52 FR 47264), and entitled "Department of Justice Payroll

System (JUSTICE/JMD-003)." JMD will modify the system to (1) add new routine uses pursuant to subsection (b)(3) of the Privacy Act, (2) reflect a relatively new Privacy Act disclosure authority, subsection (b)(12), provided for by the Debt Collection Act (DCA) of 1982, and (3) set forth other disclosure provisions which are authorized by subsection (b)(1) of the Privacy Act.

Specifically, pursuant to subsection (b)(3), JMD adds a routine use to permit disclosure of records to a court or other adjudicative body before which the Department of Justice is authorized to appear. In addition, as provided for by the DCA, JMD sets forth other routine uses to permit disclosures that will assist in its debt collection efforts, and outlines the general disclosure authority of subsection (b)(12) which permits the release of information to consumer reporting agencies. Finally, JMD includes in its notice another Privacy Act disclosure authority, subsection (b)(1). Subsection (b)(1) permits disclosure to the United States Attorneys and the Department's Civil Division for advice, litigation and enforcement purposes. Editorial changes have also been made. All changes to the system notice have been italized for public convenience.

Title 5, United States Code, Sections 552(e)(4) and (11), require that the public be given 30 days in which to comment on new routine uses of information in the system. Accordingly, please submit any comments by May 20, 1988, to J. Michael Clark, Assistant Director, Facilities and Administrative Services Staff, Justice Management Division, Department of Justice, Room 6402 D Street NW., Washington, DC 20530.

The system description, as amended, is reprinted below.

Dated: April 11, 1988.

Harry H. Flickinger,

Assistant Attorney General for Administration.

JUSTICE/JMD-003

SYSTEM NAME:

Department of Justice Payroll System.

SYSTEM LOCATION:

Categories of records within the Payroll System of Records are kept at the following locations: (1) Justice *Employee Data Service: 601 D Street NW., Washington, DC 20530;* (2) Justice Computer Service; 425 I Street, NW.; Washington, DC 20530; (3) at various time and attendance recording and processing stations around the world; (4) at computerized record off-site backup facilities; and (5) at various Federal Records Centers.

CATEGORIES OF INDIVIDUALS COVERED BY THE SYSTEM:

(1) Current DOJ employees with the exception of those employed within the FBI and; (2) Many past DOJ employees with the exception of those that served within the FBI.

CATEGORIES OF RECORDS IN THE SYSTEM:

A. Payroll Master Employee Records: These are machine-readable and microfiche records containing information on current pay and leave status for individuals serviced by the automated payroll accounting system.

B. Bond, Allotment and Check Mailing Records: These are machine-readable and microfiche records containing information on Savings Bond deductions, savings account allotments, and net check mailing requested by the employee.

C. History of Earning Records: These are machine-readable and microfiche records containing information on earnings, leave and other pay related activities.

D. Automated Retirement Records: These are machine-readable records containing information relevant to the Civil Service Retirement System *and the Federal Employees Retirement System.* These records will be used to automatically generate "Individual Retirement Records" (SF-2806) *or "Individual Retirement Records (Federal Employees Retirement)" (SF-3100)* upon an employee's separation.

E. Revised Social Security Numbers Records: These are machine-readable records containing the new and old social security number for employees whose current social security number is different from that previously entered into the automated system.

F. Employee Pay Records: These are manila folders containing source documents, correspondence and other papers in support of an active employee's pay, leave and allowances.

G. Active Retirement Records: These are manual records maintained on active employees to facilitate timely compliance with the requirements of the Civil Service Retirement System *or Federal Employees Retirement Service.* Upon separation, the original SF-2806 *or SF-3100* is forwarded to the *Office of Personnel Management* and a copy is filed in the Employee Pay Record (F above). This category of records will eventually be replaced by the automated retirement records (D above).

H. Former Employee Pay Records: These records are the Employee Pay Records (F above) for employees that have been separated, transferred or retired. In addition to information contained in the Employee Pay Records, these records include information related to the retirement, separation or transfer. These records are destroyed two years after separation of employee.

I. Employee Death Records: These records are the Employee Pay Records (F above) for employees that died while on active duty with Department of Justice. In addition to information contained in the Employee Pay Records, these records include information related to the employee's death and the settlement of pending pay and allowances.

J. Returned Check Records: These records are a manual log for recording and controlling checks issued to employees that were returned to the Justice Employee Data Service because they were undelivered, erroneous or cancelled prior to conversion to cash.

K. Time and Attendance Report: These microfilm records of Form DOJ-296 contain information on an employee's attendance and use of leave in a particular pay period. They are also used to indicate leave adjustments and balances.

L. Indebtedness Records: These records include source documents, correspondence and other papers containing information regarding the Government's claims of debt against individuals covered by the system. These records are supplemented by hard copy, machine-readable or microfiche records necessary to establish the identity and address of the individuals, including in certain cases the taxpayer's mailing address provided by the Internal Revenue Service.

AUTHORITY FOR MAINTENANCE OF THE SYSTEM:

The head of each executive agency is responsible for establishing and maintaining an adequate payroll system, covering pay, leave, and allowances, as a part of the system of accounting and internal control of the Budget and Accounting Procedures Act of 1950, as amended, 31 U.S.C. 66, 66a, and 200(a).

ROUTINE USES OF RECORDS MAINTAINED IN THE SYSTEM, INCLUDING CATEGORIES OF USERS AND THE PURPOSES OF SUCH USES:

Purpose(s): The purpose of each use of categories of records within the DOJ Payroll System of Records is to enable the administration of the payroll function and related financial matters in accordance with applicable laws and regulations and to comply with the requirements of the Comptroller General.

SYSTEM USES:

A. Authorize, prepare and document payment to all Department employees

covered by the DOJ Payroll System entitled to be paid, with consideration given to all authorized deductions from gross pay.

B. Specify and document proper disposition of all authorized deductions from gross pay.

C. Prepare adequate and reliable payroll reports needed for (1) management, (2) budget, (3) support of payments, (4) the conduct and accounting of payroll related employee services, (5) control and documentation of payroll system operation, and (6) to meet external reporting requirements.

D. Support effective communications and payroll matters between the Department of Justice and its present and former employees.

E. Support proper coordination of pay, leave and allowance operations with personnel functions and other related activities.

F. Support adequate control over all phases and segments of the payroll system including leave accounting.

G. Support appropriate integration of the payroll system with the Departmental accounting systems.

H. *Provide to* the State, City, or other local jurisdiction which is authorized to tax the employee's compensation *a copy of an employee's record, including the employee's Department of the Treasury Form W-2 and Tax Statement.* The record will be provided in accordance with a withholding agreement between the State, City, or other local jurisdiction and the Department of the Treasury pursuant to 5 U.S.C. 516, 5517, and 5520 or in the absence thereof, in response to a written request from an appropriate official of the taxing jurisdiction to the System Manager listed below. The request must include a copy of the applicable statute authorizing the taxation of compensation and should indicate whether the authority of the jurisdiction to tax the employee is based on place of residence, place of employment, or both. However, the social security numbers will only be provided to state or local taxing authorities which meet the criteria of the Privacy Act.

I. Provide permanent record of actions taken pertinent to the administration of pay leave and allowances.

J. Support legal investigations of suspected fraud.

K. Disseminate a record, or any facts derived therefrom, in a proceeding before a court or adjudicative body before which the Department of Justice is authorized to appear when i. the Department, or any subdivision thereof, or ii. any employee of the Department in his or her official capacity, or iii. any employee of the Department in his or her individual capacity where the Department of Justice has agreed to represent the employee, or iv. the United States where the Department determines that the litigation is likely to affect it or any of its subdivisions, is a party to litigation or has any interest in litigation and such reports are determined by the Department to be arguably relevant to the litigation.

L. Release of information to the Internal Revenue Service (IRS). Information contained in the system may be disclosed to the IRS to obtain taxpayer mailing addresses for the purpose of locating such taxpayer to collect or compromise a Federal claim against the taxpayer.

M. Release of information to consumer reporting agencies. Information directly related to the identify of debtors and the history of claims contained in the system or records may be disclosed to consumer reporting agencies for the purpose of encouraging repayment of overdue debts. Such disclosures will be made only when a claim is overdue and only after due process steps have been taken to notify the debtor and give him or her a chance to meet the terms of the debt. Addresses of taxpayers obtained from the IRS will be disclosed to consumer reporting agencies only for the purpose of allowing such agencies to prepare a commercial credit report on the taxpayer for use by the Department.

N. Release of information about debtors to the U.S. Treasury or other Federal employers in order to effect salary or administrative offsets. Information contained in the system of records may be disclosed to an employer in order to effect salary or administrative offsets to satisfy a debt owed the United States by that person. Such disclosures will be made only when all procedural steps established by the Debt Collection Act have been taken.

O. Release of information to debt collection agencies. Information contained in the system of records may be disclosed to a person or organization with whom the head of the agency has contracted for collection services to recover indebtedness owed to the United States. Addresses of taxpayers obtained from the IRS will also be disclosed, but only where necessary to locate such taxpayer to collect or compromise a Federal claim.

P. Release of information to United States Attorneys or the Civil Division. Information contained in the system of records may be disclosed to United States Attorneys or the Civil Division for advice, litigation or enforced collection.

CATEGORIES OF USERS:

Records are accessed by users on a need or right to know basis. A category of users may have potential access under more than one use above.

A. Present or former employees serviced by the DOJ Payroll System.

B. Justice Employees data Service Staff.

C. Department of the Treasury disbursing offices.

D. Department of Justice budget and accounting offices.

E. Department of Justice personnel offices.

F. Employee supervisors.

G. Employee administrative offices.

H. Federal, state and local taxing authorities.

I. Federal Employees Health Benefits carriers.

J. Employee organization offices participating in dues allotment program.

K. Financial organizations participating in savings account allotment program.

L. Financial organizations participating in net pay to checking account program.

M. State human resource offices administering unemployment compensation programs.

N. General Accounting Office and internal audit staffs.

O. Federal, state or local law enforcement agencies (in support of legal investigations of suspected fraud).

P. Other Federal agencies requiring information as specified in applicable laws or regulations, e.g., *Office of Personnel Management.*

Q. Heirs, executors and legal representatives of beneficiaries.

R. State and local courts of competent jurisdiction for the enforcement of child support and/or alimony pursuant to 42 U.S.C. 659.

S. Consumer reporting agencies as defined by 15 U.S.C. subsection 1681a(f) or 31 U.S.C. subsection 3701(a)(3)(B).

T. Debt collection agents, for purposes of collecting Federal claims against taxpayers.

U. Department of Justice law enforcement or litigative organizations for advice or for purposes of litigation or enforced collection pertaining to Federal debt claims.

Release of Information to the News Media. Information permitted to be released to the news media and the public pursuant to 28 CFR 50.2 may be made available from systems of records maintained by the Department of Justice unless it is determined that release of the specific information in the context of a particular case would constitute an

unwarranted invasion of personal privacy.

Release of Information to Members of Congress. Information contained in systems of records maintained by the Department of Justice, not otherwise required to be released pursuant to 5 U.S.C. 552, may be made available to a Member of Congress or staff acting upon the Member's behalf when the Member or staff requests the information on behalf of and at the request of the individual who is the subject of the record.

Release of Information to the National Archives and Records. Administration (NARA) and the General Services Administration (GSA). A record from a system of records may be disclosed as a routine use to NARA and GSA in records management inspections conducted under the authority of 44 U.S.C. 2904 and 2906.

POLICIES AND PRACTICES FOR STORING, RETRIEVING, ACCESSING, RETAINING, AND DISPOSING OF RECORDS IN THE SYSTEM:

STORAGE:

Various categories of records are stored on different mediums. Categories A, B, and E are on magnetic discs. Category C is on magnetic tape and microfiche. Category D is on magnetic tape. All other records are maintained in paper form.

RETRIEVABILITY:

Categories of records on magnetic media are retrievable by employee social security number which is maintained to comply with Internal Revenue requirements. Records in paper form and microfiche are retrievable by employee name and social security number.

SAFEGUARDS:

The principal current safeguard for payroll records is guard force screening of individuals entering buildings within which records are kept. More stringent security practices and procedures are under development.

RETENTION AND DISPOSAL:

Payroll records retention and disposal are in accordance with General Records Schedule 2 promulgated by the General Services Administration.

SYSTEM MANAGER(S) AND ADDRESS:

Director, Finance Staff, Justice Management Division; U.S. Department of Justice, 601 D Street, NW., Washington, DC 20530.

NOTIFICATION PROCEDURE:

Address inquiries to the System Manager.

A request for notification of the existence of records upon an individual shall be made in writing with the envelope and the letter clearly marked 'Privacy Notification Request'. Include in the request the name of the system of records, the individual's full name and social security number while employed with the Department of Justice, the name of the organization within which the individual is either a current or former employee. The requestor shall include a return address for the notification response.

RECORD ACCESS PROCEDURES:

Address access requests to the System Manager.

A request for access to records from this system shall be made in writing with the envelope and the letter clearly marked 'Privacy Access Request'. Include in the request the name of the system of records, the legal name and social security number of the subject individual and the name of the organization within which the individual is either a current or former employee. The requestor shall also provide a return address for transmitting the information.

CONTESTING RECORD PROCEDURES:

Individual desiring to contest or amend information should direct their request to the System Manager listed above, stating clearly and concisely what information is being contested, the reason for contesting it, and the proposed amendment to the information sought.

RECORD SOURCE CATEGORIES:

Information contained within the DOJ Payroll System of Records is obtained from the following sources:

A. Subject Individual: Information collected from the subject individual generally consists of that necessary to administer allotments, deductions or other services requested by the individual.

B. Personnel Office: Information collected from the personnel office generally consists of employment status information which provides the legal basis upon which valid payments are computed.

C. Time and Attendance Clerk: Information collected from this clerk generally consists of an accounting of the individual's presence or absence from the duty station and the usage of leave.

D. Supervisor or Administrative Officer: Information collected from these officers generally consists of leave authorizations and information concerning the individual's duty station.

E. Financial Institutions or Employee Organizations: Information collected from institutions or organizations generally consists of that necessary to insure the timely and accurate forwarding to the institution or organization of monies allotted to an account at the institution or organization by the subject individual.

F. Previous Federal Employer: Information collected from the previous employer within the Federal government generally consists of leave status information at the time of separation.

G. Other Federal Agencies: Information collected from other Federal agencies generally consists of program information necessary to properly administer pay, leave, and allowance. *Information collected from IRS may include taxpayer mailing addresses which are necessary to locate debtors.*

H. Other Officials: Information collected from other officials consists of that necessary to administer the payroll function. This may include authorization for special payments, death certificate or other documents as necessary.

I. Consumer Reporting Agencies and Debt Collection Agencies: Information provided to assist in collecting debts.

SYSTEMS EXEMPTED FROM CERTAIN PROVISIONS OF THE ACT:

None.

[FR Doc. 88-8610 Filed 4-19-88; 8:45 am]

BILLING CODE 4410-01-M

DEPARTMENT OF LABOR

Mine Safety and Health Administration

[Docket No. M-88-52-C]

Four "L" Coal Co.; Petition for Modification of Application of Mandatory Safety Standard

Four "L" Coal Company, Route 2, Box 390, Rockhold, Kentucky 40759 has filed a petition to modify the application of 30 CFR 75.313 (methane monitor) to its Mine No. 1 (I.D. No. 15-15197) located in Knox County, Kentucky. The petition is filed under section 101(c) of the Federal Mine Safety and Health Act of 1977.

A summary of the petitioner's statements follows:

1. The petition concerns the requirement that a methane monitor be installed on any electric face cutting equipment, continuous miner, longwall face equipment and loading machine and is required to be kept operative and properly maintained and frequently tested.

2. Petitioner states that no methane has been detected in the mine. The three wheel tractors are permissible DC powered machines, with no hydraulics. The bucket is a drag type, where approximately 30–40% of the coal is hand loaded. Approximately 20% of the time that the tractor is in use, it is used as a man trip and supply vehicle.

3. As an alternate method, petitioner proposes to use hand held continuous oxygen and methane monitors in lieu of methane monitors on three wheel tractors. In further support of this request, petitioner states that:

(a) Each three wheel tractor will be equipped with a hand held continuous monitoring methane and oxygen detector and all persons will be trained in the use of the detector;

(b) A gas test will be performed, prior to allowing the coal loading tractor in the face area, to determine the methane concentration in the atmosphere. The air quality will be monitored continuously after each trip, provided the elapse time beween trips does not exceed 20 minutes. This will provide continuous monitoring of the mine atmosphere for methane to assure any undetected methane buildup between trips;

(c) If one percent of methane is detected, the operator will manually deenergize the battery tractor immediately. Production will cease and will not resume until the methane level is lower than one percent;

(d) A spare continuous monitor will be available to assure that all coal hauling tractors will be equipped with a continuous monitor;

(e) Each monitor will be removed from the mine at the end of the shift, and will be inspected and charged by a qualified person. The monitor will also be calibrated monthly; and

(f) No alterations or modifications will be made in addition to the manufacturer's specifications.

4. Petitioner states that the proposed alternate method will provide the same degree of safety for the miners affected as that afforded by the standard.

Request for Comments

Persons interested in this petition may furnish written comments. These comments must be filed with the Office of Standards, Regulations and Variances, Mine Safety and Health Administration, Room 627, 4015 Wilson Boulevard, Arlington, Virginia 22203. All comments must be postmarked or received in that office on or before May 20, 1988. Copies of the petition are available for inspection at that address.

Patricia W. Silvey,

Director, Office of Standards, Regulations and Variances.

Date: April 11, 1988.

[FR Doc. 88–8591 Filed 4–19–88; 8:45 am]

BILLING CODE 4510–43–M

[Docket No. M–88–51–C]

Raven Mining Co.; Petition for Modification of Application of Mandatory Safety Standard

Raven Mining Company, Route 2, Box 340–B, Rockholds, Kentucky 40759 has filed a petition to modify the application of 30 CFR 75.313 (methane monitor) to its Mine No. 2 (I.D. No. 15–16301) located in Whitley County, Kentucky. The petition is filed under section 101(c) of the Federal Mine Safety and Health Act of 1977.

A summary of the petitioner's statements follows:

1. The petition concerns the requirement that a methane monitor be installed on any electric face cutting equipment, continuous miner, longwall face equipment and loading machine and is required to be kept operative and properly maintained and frequently tested.

2. Petitioner states that no methane has been detected in the mine. The three wheel tractors are permissible DC powered machines, with no hydraulics. The bucket is a drag type, where approximately 30–40% of the coal is hand loaded. Approximately 20% of the time that the tractor is in use, it is used as a man trip and supply vehicle.

3. As an alternate method, petitioner proposes to use hand held continuous oxygen and methane monitors in lieu of methane monitors on three wheel tractors. In further support of this request, petitioner states that:

(a) Each three wheel tractor will be equipped with a hand held continuous monitoring methane and oxygen detector and all persons will be trained in the use of the detector;

(b) A gas test will be performed, prior to allowing the coal loading tractor in the face area, to determine the methane concentration in the atmosphere. The air quality will be monitored continuously after each trip, provided the elapse time between trips does not exceed 20 minutes. This will provide continuous monitoring of the mine atmosphere for methane to assure any undetected methane buildup between trips;

(c) If one percent of methane is detected, the operator will manually deenergize the battery tractor immediately. Production will cease and will not resume until the methane level is lower than one percent;

(d) A spare continuous monitor will be available to assure that all coal hauling tractors will be equipped with a continuous monitor;

(e) Each monitor will be removed from the mine at the end of the shift, and will be inspected and charged by a qualified person. The monitor will also be calibrated monthly; and

(f) No alterations or modifications will be made in addition to the manufacturer's specifications.

4. Petitioner states that the proposed alternate method will provide the same degree of safety for the miners affected as that afforded by the standard.

Request for Comments

Persons interested in this petition may furnish written comments. These comments must be filed with the Office of Standards, Regulations and Variances, Mine Safety and Health Administration, Room 627, 4015 Wilson Boulevard, Arlington, Virginia 22203. All comments must be postmarked or received in that office on or before May 20, 199. Copies of the petition are available for inspection at that address.

Patricia W. Silvey,

Director, Office of Standards, Regulations and Variances.

Date: April 11, 1988.

[FR Doc. 88–8592 Filed 4–19–88; 8:45 am]

BILLING CODE 4510–43–M

National Foundation on the Arts and the Humanities

National Council on the Arts; Meeting

Pursuant to section 10(a)(2) of the Federal Advisory Committee Act (Pub. L. 92–463), as amended, notice is hereby given that a meeting of the National Council on the Arts will be held on May 6, 1988 from 9:00 a.m. to 5:15 p.m., and on May 7, 1988 from 9:00 a.m.-5:00 p.m. and on May 8, 1988, from 9:00 a.m.-1:00 p.m. in the King Louis IX Ballroom of the Omni International Hotel, One St. Louis Union Station, St. Louis, MO 63103.

A portion of this meeting will be open to the public on Friday, May 6, from 9:00 a.m.-5:15 p.m. and on Saturday, May 7, from 9:00 a.m.-5:00 p.m. The topics for discussion will include Program Review and Guidelines for the Dance Program, State Programs, Literature Program, Folk Arts Program, Expansion Arts Rural Initiative, and Music Recording/Training/Services and Centers; a presentation by the Congressional Arts Caucus; State of the Arts Report; A

study of the American Jazz Recording Industry; and FY 1990 Budget Planning and Priorities.

The remaining sessions on May 8, from 9:00 a.m.-1:00 p.m. are for the purpose of Council review, discussion, evaluation and recommendation on applications for financial assistance under the National Foundation on the Arts and the Humanities Act of 1965, as amended, including discussion of information given in confidence to the agency by grant applicants. In accordance with the determination of the Chairman published in the **Federal Register** of February 13, 1980, these sessions will be closed to the public pursuant to subsections (c) (4), (6) and 9(B) of Title 5, United States Code.

If you need special accommodations due to a disability, please contact the Office for Special Constituencies, National Endowment for the Arts, 1100 Pennsylvania Avenue NW., Washington, DC 20506, 202/682-5532, TTY 202/682-5496 at least seven (7) days prior to the meeting.

Further information with reference to this meeting can be obtained from Ms. Yvonne M. Sabine, Advisory Committee Management Officer, National Endowment for the Arts, Washington, DC 20506, or call (202) 682-5433.

Yvonne M. Sabine,

Acting Director, Council and Panel Operations, National Endowment for the Arts.

April 13, 1988.

[FR Doc. 88-8611 Filed 4-19-88; 8:45 am]

BILLING CODE 7537-01-M

NATIONAL SCIENCE FOUNDATION

Advisory Committee for Physics; Meeting

The National Science Foundation announces the following meetings:

Name: Advisory Committee for Physics.

Date and Time: May 2, 1988; 8:30 a.m. to 10:15 a.m. (Open); 10:15 a.m. to 12:15 p.m. (Closed); 2:00 p.m. to 6:00 p.m. (Open).

May 3, 1988; 8:30 a.m. to 10:30 a.m. (Closed); 10:45 a.m. to 5:00 p.m. (Open).

Place: Room 540, National Science Foundation, 1800 G Street, NW., Washington, DC 20550.

Type of Meeting: Part Open.

Contact Person: Dr. Gerard M. Crawley, Director, Division of Physics, Room 341, National Science Foundation, Washington, DC 20050, (202) 357-7985.

Purpose of Committee: To provide advice and recommendations concerning support for research in physics.

Agenda: May 2, 1988, 8:30 a.m.-6:00 p.m.—Discussion of FY88 and FY89 Budgets, Long Range Plans, and the Oversight Review of all Physics programs viz. Elementary Particle Physics, Nuclear Physics, Intermediate Energy Nuclear Physics, Atomic, Molecular and Plasma Physics, Theoretical Physics, and Gravitational Physics.

May 3, 1988, 8:30 a.m.-5:00 p.m.—Discussion of the Report from the Cosmology Subcommittee, discussion of the Physics Education Workship, and to continue discussions of previous day.

Reason for Closing: The meeting will consist of a review of grants and declinations in which the Subcommittees will review materials containing the names of applicant institutions and principal investigators and privileged information from the files pertaining to the proposals. The meeting will also include a review of the peer documentation pertaining to applicants. These matters are within exemptions 4 and 6 of the Government in the Sunshine Act.

M. Rebecca Winkler,

Committee Management Officer.

April 13, 1988.

[FR Doc. 88-8660 Filed 4-19-88; 8:45 am]

BILLING CODE 7555-01-M

NUCLEAR REGULATORY COMMISSION

Biweekly Notice Applications and Amendments to Operating Licenses Involving No Significant Hazards Considerations

I. Background

Pursuant to Public Law (P.L.) 97-415, the Nuclear Regulatory Commission (the Commission) is publishing this regular biweekly notice. P.L. 97-415 revised section 189 of the Atomic Energy Act of 1954, as amended (the Act), to require the Commission to publish notice of any amendments issued, or proposed to be issued, under a new provision of section 189 of the Act. This provision grants the Commission the authority to issue and make immediately effective any amendment to an operating license upon a determination by the Commission that such amendment involves no significant hazards consideration, notwithstanding the pendency before the Commission of a request for a hearing from any person.

This biweekly notice includes all notices of amendments issued, or proposed to be issued from March 28, 1988 through April 8, 1988. The last biweekly notice was published on April 6, 1988 (53 FR 11361).

NOTICE OF CONSIDERATION OF ISSUANCE OF AMENDMENT TO FACILITY OPERATING LICENSE AND PROPOSED NO SIGNIFICANT HAZARDS CONSIDERATION DETERMINATION AND OPPORTUNITY FOR HEARING

The Commission has made a proposed determination that the following amendment requests involve no significant hazards consideration. Under the Commission's regulations in 10 CFR 50.92, this means that operation of the facility in accordance with the proposed amendments would not (1) involve a significant increase in the probability or consequences of an accident previously evaluated; or (2) create the possibility of a new or different kind of accident from any accident previously evaluated; or (3) involve a significant reduction in a margin of safety. The basis for this proposed determination for each amendment request is shown below.

The Commission is seeking public comments on this proposed determination. Any comments received within 30 days after the date of publication of this notice will be considered in making any final determination. The Commission will not normally make a final determination unless it receives a request for a hearing.

Written comments may be submitted by mail to the Rules and Procedures Branch, Division of Rules and Records, Office of Administration and Resource Management, U.S. Nuclear Regulatory Commission, Washington, DC 20555, and should cite the publication date and page number of this Federal Register notice. Written comments may also be delivered to Room 4000, Maryland National Bank Building, 7735 Old Georgetown Road, Bethesda, Maryland from 8:15 a.m. to 5:00 p.m. Copies of written comments received may be examined at the NRC Public Document Room, 1717 H Street, NW., Washington, DC. The filing of requests for hearing and petitions for leave to intervene is discussed below.

By May 20, 1988 the licensee may file a request for a hearing with respect to issuance of the amendment to the subject facility operating license and any person whose interest may be affected by this proceeding and who wishes to participate as a party in the proceeding must file a written petition for leave to intervene. Requests for a hearing and petitions for leave to intervene shall be filed in accordance with the Commission's "Rules of Practice for Domestic Licensing Proceedings" in 10 CFR Part 2. If a request for a hearing or petition for leave to intervene is filed by the above date, the Commission or an Atomic Safety and Licensing Board, designated by the Commission or by the Chairman of the Atomic Safety and Licensing Board Panel, will rule on the request and/or petition and the Secretary or the designated Atomic Safety and Licensing Board will issue a notice of hearing or an appropriate order.

As required by 10 CFR 2.714, a petition for leave to intervene shall set forth with particularity the interest of the petitioner in the proceeding, and how that interest may be affected by the results of the proceeding. The petition should specifically explain the reasons why intervention should be permitted with particular reference to the following factors: (1) the nature of the petitioner's right under the Act to be made a party to the proceeding; (2) the nature and extent of the petitioner's property, financial, or other interest in the proceeding; and (3) the possible effect of any order which may be entered in the proceeding on the petitioner's interest. The petition should also identify the specific aspect(s) of the subject matter of the proceeding as to which petitioner wishes to intervene. Any person who has filed a petition for leave to intervene or who has been admitted as a party may amend the petition without requesting leave of the Board up to fifteen (15) days prior to the first prehearing conference scheduled in the proceeding, but such an amended petition must satisfy the specificity requirements described above.

Not later than fifteen (15) days prior to the first prehearing conference scheduled in the proceeding, a petitioner shall file a supplement to the petition to intervene which must include a list of the contentions which are sought to be litigated in the matter, and the bases for each contention set forth with reasonable specificity. Contentions shall be limited to matters within the scope of the amendment under consideration. A petitioner who fails to file such a supplement which satisfies these requirements with respect to at least one contention will not be permitted to participate as a party.

Those permitted to intervene become parties to the proceeding, subject to any limitations in the order granting leave to intervene, and have the opportunity to participate fully in the conduct of the hearing, including the opportunity to present evidence and cross-examine witnesses.

If a hearing is requested, the Commission will make a final determination on the issue of no significant hazards consideration. The final determination will serve to decide when the hearing is held.

If the final determination is that the amendment request involves no significant hazards consideration, the Commission may issue the amendment and make it immediately effective, notwithstanding the request for a hearing. Any hearing held would take place after issuance of the amendment.

If the final determination is that the amendment involves a significant hazards consideration, any hearing held would take place before the issuance of any amendment.

Normally, the Commission will not issue the amendment until the expiration of the 30-day notice period. However, should circumstances change during the notice period such that failure to act in a timely way would result, for example, in derating or shutdown of the facility, the Commission may issue the license amendment before the expiration of the 30-day notice period, provided that its final determination is that the amendment involves no significant hazards consideration. The final determination will consider all public and State comments received before action is taken. Should the Commission take this action, it will publish a notice of issuance and provide for opportunity for a hearing after issuance. The Commission expects that the need to take this action will occur very infrequently.

A request for a hearing or a petition for leave to intervene must be filed with the Secretary of the Commission, U.S. Nuclear Regulatory Commission, Washington, DC 20555, Attention: Docketing and Service Branch, or may be delivered to the Commission's Public Document Room, 1717 H Street, NW., Washington, DC, by the above date. Where petitions are filed during the last ten (10) days of the notice period, it is requested that the petitioner promptly so inform the Commission by a toll-free telephone call to Western Union at (800) 325-6000 (in Missouri (800) 342-6700). The Western Union operator should be given Datagram Identification Number 3737 and the following message addressed to (*Project Director*): petitioner's name and telephone number; date petition was mailed; plant name; and publication date and page number of this **Federal Register** notice. A copy of the petition should also be sent to the Office of the General Counsel-White Flint, U.S. Nuclear Regulatory Commission, Washington, DC 20555, and to the attorney for the licensee.

Nontimely filings of petitions for leave to intervene, amended petitions, supplemental petitions and/or requests for hearing will not be entertained absent a determination by the Commission, the presiding officer or the presiding Atomic Safety and Licensing Board, that the petition and/or request should be granted based upon a balancing of factors specified in 10 CFR 2.714(a)(1)(i)-(v) and 2.714(d).

For further details with respect to this action, see the application for amendment which is available for public inspection at the Commission's Public Document Room, 1717 H Street, NW., Washington, DC, and at the local public document room for the particular facility involved.

Arkansas Power & Light Company, Docket Nos. 50-313 and 50-368, Arkansas Nuclear One, Units 1 and 2, Pope County, Arkansas

Date of amendment request: December 2, 1986 as supplemented Febuary 24, 1988.

Brief description of amendment: In accordance with the requirements of 10 CFR 73.55, the licensee submitted an amendment to the Physical Security Plan for Arkansas Nuclear One, Units 1 and 2 to reflect recent changes to that regulation. The proposed amendment would modify paragraphs 2.c.(4) and 2.D of Facility Operating License Nos. DPR-51 and NPF-6 to require compliance with the revised Plan.

Basis for proposed no significant hazards consideration determination: On August 4, 1986 (51 FR 27817 and 27822), the Nuclear Regulatory Commission amended Part 73 of its regulations, "Physical Protection of Plants and Materials," to clarify plant security requirements to afford an increased assurance of plant safety. The amended regulations required that each nuclear power reactor licensee submit proposed amendments to its security plan to implement the revised provisions of 10 CFR 73.55. The licensee submitted its revised plan on December 2, 1986, with additional information on Febuary 24, 1988, to satisfy the requirements of the amended regulations. The Commission proposes to amend the license to reference the revised plan.

In the Supplementary Materials accompanying the amended regulations, the Commission indicated that it was amending its regulations "to provide a more safety conscious safeguards system while maintaining the current levels of protection" and that the "Commission believes that the clarification and refinement of requirements as reflected in these amendment is appropriate because they afford an increased assurance of plant safety."

The Commission has provided guidance concerning the application of the criteria for determining whether a significant hazards consideration exists by providing certain examples of actions involving no significant hazards considerations and examples of actions involving significant hazards

considerations (51 FR 7750). One of these examples of actions involving no significant hazards considerations is example (vii) "a change to conform a license to changes in the regulations, where the license change results in very minor changes to facility operations clearly in keeping with the regulations." For the foregoing reasons, the Commission proposes to determine that the proposed amendment involves no significant hazards consideration.

Local Public Document Room location: Tomlinson Library, Arkansas Technical University, Russelville, Arkansas 72801

Attorney for licensee: Nicholas S. Reynolds, Esq., Bishop, Liberman, Cook, Percell and Reynolds, 1200 Seventeenth Street, NW., Washington, DC 20036

NRC Project Director: Jose A. Calvo

Boston Edison Company, Docket No. 50-293, Pilgrim, Nuclear Power Station, Plymouth, Massachusetts

Date of amendment request: January 25, 1988

Description of amendment request: The amendment would revise the Technical Specifications (TS) to remove misleading references to an average power range monitor (APRM) down scale scram function.

Basis for proposed no significant hazards consideration determination: The Commission has provided standards for determining whether a significant hazards determination exists as stated in 10 CFR 50.92(c). A proposed amendment to an operating license involves no significant hazards considerations if operation of the facility in accordance with the proposed amendment would not: (1) involve a significant increase in the probability or consequences of an accident previously evaluated, or (2) create the possibility of a new or different kind of accident from any accident previously evaluated, or (3) involve a significant reduction in a margin of safety.

The licensee has evaluated the proposed amendment against the standards in 10 CFR 50.92 and has determined the following:

(1) Operation of the Pilgrim Nuclear Power Station (PNPS) in accordance with the proposed amendment would not involve a significant increase in the probability or consequences of an accident previously evaluated.

The proposed changes would clarify the intent of the original Technical Specifications by clearly defining the scram functions needed to be operable in each mode of operation. The allowable bypasses assure that the single failure criteria are satisfied for the required scram functions of the intermediate range monitor (IRMs) and APRMs. The proposed changes do not involve modifications to the reactor protection system (RPS) wiring or circuitry thus, by design, overlap between the (IRMs) and APRMs is assured. The removal of the Technical Specification requirement for weekly testing of the APRM downscale contact to a half-scram is justified because this contact provides no RPS safety function considered in the PNPS safety analysis. Therefore, the proposed changes will not involve a significant increase in the probability or consequences of any accident previously evaluated.

(2) Operation of PNPS in accordance with the proposed amendment would not create the possibility of a new or different kind of accident from any accident previously evaluated.

For the reasons stated in Item 1, above, the proposed change will not create the possibility of a new or different kind of accident.

(3) Operation of PNPS in accordance with the proposed amendment would not involve a significant reduction in a margin of safety.

Because the proposed change does not involve changes to the plant or associated analyses, this change will not involve a significant reduction in the margin of safety.

The NRC staff has reviewed the licensee's no significant hazards consideration determination and agrees with the licensee's analysis. Therefore, based on this review, the staff proposes to determine that the requested amendment does not involve a significant hazards consideration.

Local Public Document Room location: Plymouth Public Library, 11 North Street, Plymouth, Massachusetts 02360.

Attorney for licensee: W. S. Stowe, Esq., Boston Edison Company, 800 Boylston Street, 36th Floor, Boston, Massachusetts 02199.

NRC Project Director: Richard Wessman, Director

Commonwealth Edison Company, Docket Nos. 50-373, and 50-374, LaSalle County Station Unit Nos. 1 and 2, LaSalle County, Illinois

Date of amendment request: March 9, 1988

Description of amendments request: The proposed amendments to Operating License No. NPF-11 and Operating License No. NPF-18 would revise the LaSalle Units 1 and 2 Technical Specifications surveillance requirements of Section 4.0.2.b that would occur during Cycle 3 for Unit 1 and during Cycle 2 for Unit 2. These amendments will defer specified surveillance until refueling and thus allow continued operation of Unit 2 until the scheduled refuel date of October 17, 1988. They will also allow restart and operation of Unit 1 until the Unit 2 surveillances can be performed during the Unit 2 outage that affect Unit 1. These amendments are a one-time request as a result of significant change in the scheduled refuel outages.

Basis for proposed no significant hazards consideration determination: The Commission has provided standards for determining whether no significant hazards consideration exists as stated in 10 CFR 50.92(c). A proposed amendment to an operating license for a facility involves no significant hazards consideration if operation of the facility in accordance with the proposed amendment would not: (1) involve a significant increase in the probability or consequences of an accident previously evaluated; or (2) create the possibility of a new or different kind of accident from an accident previously evaluated; or (3) involve a significant reduction in a margin of safety.

The licensee has determined, and the NRC staff agrees, that the proposed amendment will not:

1. Involve a significant increase in the probability or consequences of an accident previously evaluated because the 3.25 surveillance interval extension criteria of Technical Specification 4.0.2 was not considered in the evaluation of the probability or severity of events analyzed in the Accident Analysis (UFSAR Chapter 15). The 18-month interval was originally chosen to correspond to expected operating cycle length such that these surveillances would be performed during the shutdown period. Since no technical basis is specified for the 18-month interval other than conformance with expected operating cycle length, deleting the 3.25 requirement on a one-time basis does not involve a significant decrease in the effectiveness of the monitoring provision. Generic Letter 83-27 indicates that this is acceptable to the staff "...for plant specific conditions where adequate justification is given."

2. Create the possibility of a new or different kind of accident from any accident previously evaluated because the refuel surveillance interval will still be constrained by the maximum 1.25 interval extension criteria of Technical Specification 4.0.2.

3. Involve a significant reduction in the margin of safety because deletion of the requirement "any three consecutive intervals must not exceed 3.25 times the interval" from the refueling interval will not significantly effect equipment

reliability. The current criteria allows a 22.5-month interval for as many as two intervals during a three interval period. Deletion of the 3.25 criteria will allow all three intervals to be 22.5 months long and provide consistency of operating cycles.

Local Public Document Room location: Public Library of Illinois Valley Community College, Rural Route No. 1, Oglesby, Illinois 61348.

Attorney to licensee: Joseph Gallo, Esq., Hopkins and Sutter, 1050 Connecticut Avenue, NW., Washington, DC 20036.

NRC Project Director: Daniel R. Muller

Dairyland Power Cooperative, Docket No. 50-409, LaCrosse Boiling Water Reactor, LaCrosse, Wisconsin

Date of amendment request: September 30, 1987 as revised February 22, 1988

Description of amendment request: The licensee proposes that License No. DPR-45 for the LaCrosse Boiling Water Reactor (LACBWR) be amended to revise the Technical Specifications (TS).

License No. DPR-45 has been changed to possession-only status by a previous amendment. The proposed TS changes would remove most of the requirements for operational or refueling conditions, since the reactor is permanently shutdown and defueled. In some cases specifications with nonapplicable operational conditions are modified or left unchanged since they interact with requirements which are still applicable in the shutdown or defueled condition.

The possession-only license does not permit operational conditions of power operation, startup, hot shutdown, or refueling. Therefore, the license proposes to delete specifications for these conditions.

The licensee proposes to delete TS definitions and requirements related to core alteration, critical power ratio, cooling system leakage, limiting control rod pattern, linear heat generation rate, partial scram, physics tests, pressure boundary leakage, shutdown margin and thermal power. These definitions and requirements are all related to reactor operation and are no longer applicable with no fuel in the reactor and reactor operations not permitted.

The licensee proposes to remove Safety Limits and Limiting Safety System Settings, and associated bases. These limits and trip setpoints were included to maintain the integrity of the fuel cladding, pressure vessel, and primary piping during abnormal reactor operating conditions and are not applicable since the reactor is no longer operable or fueled.

The proposed TS would delete requirements for control room operator direction of operations with fuel in the reactor and reactor operational instructions in the event of a tornado or high river water level. These operator requirements are not applicable with the reactor permanently shutdown.

The proposed TS would delete limiting conditions for operation (LCOs) that are applicable to reactor operations such as surveillance requirements for the reactor cooling system and associated valves, the electrical supply system for reactor safety systems, and the post reactor accident instrumentation. These TS requirements are not applicable when reactor operation is not permitted.

A new TS is proposed to specify additional requirements for the backup water supply for the Fuel Element Storage Well. This is an additional and more conservative requirement for this water supply. The licensee also proposes added TS requirements for Shift Supervisor authorization to perform any maintenance and for leak testing of the containment freight door after each opening. These requirements are also more conservative than the existing TS.

Basis for proposed no significant hazards consideration determination: The Commission has provided standards for determining whether a significant hazards consideration exists (10 CFR 50.92(c)). A proposed amendment to an operating license for a facility involves no significant hazards consideration if operation and/or maintenance of the facility in accordance with the proposed amendment would not: (1) involve a significant increase in the probability or consequences of an accident previously evaluated; (2) create the possibility of a new or different kind of accident from any accident previously evaluated; or (3) involve a significant reduction in a margin of safety.

The licensee evaluated the proposed changes in accordance with the standards of 10 CFR 50.92(c) and determined that the proposed amendment would not:

(1) involve a significant increase in the probability or consequences of an accident previously evaluated. The majority of changes and deletions are items that are related to reactor operations and are no longer applicable. These changes and deletions cannot affect the probability or consequences of any type of accident with the reactor permanently shutdown. Other changes which add additional requirements are more conservative and cannot increase the probability or consequence of any type of accident.

(2) create the possibility of a new or different kind of accident from any accident previously evaluated. Since this proposed amendment consists of deletion of requirements that do not apply with the reactor permanently shutdown or involves the addition of new requirements it does not affect the probability of any kind of accident. No new mode of operation is created by any of the changes in this package, and so the proposed amendment will not create the possibility of a new or different kind of accident from any previously evaluated.

(3) involve a significant reduction in a margin of safety. Since the revisions proposed by this amendment consist of deleting requirements that do not apply or are not necessary with the reactor permanently shutdown and defueled, or consist of additional more conservative TS requirements the margin of safety will not be reduced.

Based on the above, the licensee has determined that the proposed amendment does not involve a significant hazards consideration. The NRC staff has reviewed the licensee's no significant hazards consideration determination and agrees with the licensee's analysis. Accordingly, the Commission proposes to determine that the requested amendment does not involve a significant hazards consideration.

Local Public Document Room location: LaCrosse Public Library, 800 Main Street, LaCrosse, Wisconsin 54601.

Attorney for licensee: Kevin Gallen, Esquire, Newman and Holtzinger, 1615 L Street, NW., Washington, DC 20036.

NRC Project Director: Lester S. Rubenstein

Duke Power Company, et al., Docket Nos. 50-413 and 50-414, Catawba Nuclear Station, Units 1 and 2, York County, South Carolina

Date of amendment request: January 11, 1988

Description of amendment request: The proposed amendment would revise Sections 3.0 and 4.0 of the Catawba Nuclear Station Units 1 and 2 Technical Specifications (TS) to incorporate the changes recommended in NRC's Generic Letter 87-09, "Section 3.0 and 4.0 of Standard Technical Specifications (STS) on the Applicability of Limiting Conditions for Operations and Surveillance Requirements." In this letter the NRC has concluded that certain recommended modifications to TSs 3.0.4, 4.0.3 and 4.0.4 would clarify their intent and resolve three problems

associated with the existing requirements, as follows: (1) TS 3.0.4 would be revised to remove unnecessary restrictions on operational mode changes in those cases where conformance with Action Statement requirements provides an acceptable level of safety for continued operation for an unlimited period of time; (2) TS 4.0.3 would be revised to include a 24-hour delay before implementing TS Action Statement requirements due to a missed surveillance, in those cases where the required restoration time is less than 24 hours; and (3) TS 4.0.4 would be revised to assure that its Surveillance Requirements do not prevent the plant's passage through or to Operational Modes as required to comply with TS Action Statement requirements.

The proposed amendment would also add the following TS 4.0.6 to the Catawba TSs:

Surveillance Requirements shall apply to each unit individually unless otherwise indicated as stated in Specification 3.0.5 for individual specifications or whenever certain portions of a specification contain surveillance parameters different for each unit, which will be identified in parentheses or footnotes.

Basis for proposed no significant hazards consideration determination: The Commission has provided standards for determining whether a significant hazards consideration exists as stated in 10 CFR 50.92(c). A proposed amendment to an operating license for a facility involves no significant hazards considerations if operation of the facility in accordance with the proposed amendment would not: (1) involve a significant increase in the probability or consequences of an accident previously evaluated; or (2) create the possibility of a new or different kind of accident from any accident previously evaluated; or (3) involve a significant reduction in a margin of safety.

The licensee addressed the above three standards in the amendment application as follows:

(1) The proposed amendment does not involve an increase in the probability or consequences of any previously evaluated accident. The change to Specification 3.0.4 will allow mode changes while the Unit is in an ACTION Statement which does not prohibit power operation. Exception to 3.0.4 has already been taken in many of the individual ACTION statements. Incorporating the proposed change into 3.0.4 will ensure that exceptions will be consistently applied when justified. Deletion of the individual exceptions will have no impact upon the requirements in the Specifications since the exception to 3.0.4 will not be contained within 3.0.4.

The change to Specification 4.0.3 will allow delay of compliance with ACTION requirements for up to 24 hours when a surveillance has been missed. This is not significant in that surveillances normally verify system or component operability as opposed to discovering inoperability.

Without the 24 hour delay it is very likely that a missed surveillance would force the Unit to be placed in a shutdown condition. Avoidance of this thermal cycling is beneficial and far outweighs any disadvantages associated with the additional 24 hours in which to perform a missed surveillance.

The change to Specification 4.0.4 will not result in a change to the design or operation of the facility and is administrative in nature. This change will not result in an increase in the probability or consequences of an accident.

The addition of Specification 4.0.6 to the Catawba Technical Specifications provides clarification to the requirements outlined in the Specifications and will not increase the probability or consequences of an accident.

(2) The proposed changes will not create the possibility of a new or different kind of accident from any accident previously evaluated.

The change to 3.0.4 will allow the plant to continue operation in an ACTION statement which already allows continued operation. As such, no new modes of operation are being introduced by this change.

The change to 4.0.3 would allow the plant to continue operation for an additional 24 hours after discovery of a missed surveillance. Missing a surveillance does not mean that a component or system is inoperable. In most cases surveillances demonstrate the continued operability of the components and systems. All systems and components currently required to be verified operable by Technical Specification requirements will continue to be maintained operable. This change will not affect the design of the plant and will not allow the plant to be operated outside the currently allowed modes of operation.

The change to 4.0.4 will alleviate a contradiction with the specifications. This change is administrative in nature and does not affect any of the accident analyses.

The addition of 4.0.6 to the Catawba Specifications is also administrative in nature and does not affect any of the accident analyses.

(3) The proposed amendments will not involve a significant reduction in a margin of safety.

The change to Specification 3.0.4 will allow mode changes in ACTION statements that do not require plant shutdowns. Exceptions to 3.0.4 are already contained within many of the applicable ACTION statements. Incorporating the exception to 3.0.4 will ensure consistent application of the exception.

The change to 4.0.3 will allow up to 24 hours to perform a missed surveillance. In most cases this will eliminate the need for a plant shutdown. The overall effect is a net gain in plant safety due to avoidance of unnecessary shutdowns due to missed surveillances. The change to 4.0.4 is administrative in nature and therefore does not affect any margin of safety.

The addition of 4.0.6 to Catawba's Specifications is also administrative and does not affect any margin of safety.

The NRC in issuing Generic Letter 87-09 recommended these changes and concluded that they would result in improved Technical Specifications.

The staff has reviewed the licensee's no significant hazards analysis given above. Based on this review and the consistency of the proposed changes with those recommended in Generic Letter 87-09, the staff proposes to determine that the proposed amendments meet the three 10 CFR 50.92(c) standards and do not involve a significant hazards consideration.

Local Public Document Room location: York County Library, 138 East Black Street, Rock Hill, South Carolina 29730

Attorney for licensee: Mr. Albert Carr, Duke Power Company, 422 South Church Street, Charlotte, North Carolina 28242

NRC Project Director: Lawrence Crocker, Acting

Duke Power Company, Docket Nos. 50-369 and 50-370, McGuire Nuclear Station, Units 1 and 2, Mecklenburg County, North Carolina

Date of amendment request: January 11, 1988

Description of amendment request: The proposed amendments would revise Sections 3.0 and 4.0 of the McGuire Nuclear Station Units 1 and 2 Technical Specifications (TS) to incorporate the changes recommended in NRC's Generic Letter 87-09, "Sections 3.0 and 4.0 of the Standard Technical Specifications (STS) on the Applicability of Limiting Conditions for Operation and Surveillance Requirements." In this letter the NRC has concluded that certain recommended modifications to TSs 3.0.4, 4.0.3 and 4.0.4 would clarify the intent of these TSs and would resolve three problems associated with the existing requirements, as follows: (1) TS 3.0.4 would be revised to remove unnecessary restrictions on operational mode changes in those cases where conformance with Action Statement requirements provides an acceptable level of safety for continued operation for an unlimited period of time; (2) TS 4.0.3 would be revised to provide a 24-hour delay before implementing TS Action Statement requirements due to a missed surveillance, in those cases where the required restoration time is less than 24 hours; and (3) TS 4.0.4 would be revised to assure that its Surveillance Requirements do not prevent the plant's passage through or to Operational Modes as required to

comply with TS Action Statement requirements.

Basis for proposed no significant hazards consideration determination: The Commission has provided standards for determining whether a significant hazards consideration exists as stated in 10 CFR 50.92(c). A proposed amendment to an operating license for a facility involves no significant hazards considerations if operation of the facility in accordance with the proposed amendment would not: (1) involve a significant increase in the probability or consequences of an accident previously evaluated; or (2) create the possibility of a new or different kind of accident from any accident previously evaluated; or (3) involve a significant reduction in a margin of safety.

The licensee addressed the above three standards in the amendment application as follows:

(1) The proposed amendment does not involve an increase in the probability or consequences of any previously evaluated accident.

The change to Specification 3.0.4 will allow mode changes while the Unit is in an ACTION Statement which does not prohibit power operation. Exception to 3.0.4 has already been taken in many of the individual ACTION statements. Incorporating the proposed change into 3.0.4 will ensure that exceptions will be consistently applied when justified. Deletion of the individual exceptions will have no impact upon the requirements in the Specifications since the exception to 3.0.4 will not be contained within 3.0.4.

The change to Specification 4.0.3 will allow delay of compliance with ACTION requirements for up to 24 hours when a surveillance has been missed. This is not significant in that surveillances normally verify system or component operability as opposed to discovering inoperability. Without the 24 hour delay it is very likely that a missed surveillance would force the Unit to be placed in a shutdown condition. Avoidance of this thermal cycling is beneficial and far outweighs any disadvantages associated with the additional 24 hours in which to perform a missed surveillance.

The change to Specification 4.0.4 will not result in a change to the design or operation of the facility and is administrative in nature. This change will not result in an increase in the probability or consequences of an accident.

(2) The proposed changes will not create the possibility of a new or different kind of accident from any accident previously evaluated.

The change to 3.0.4 will allow the plant to continue operation in an ACTION statement which already allows continued operation. As such, no new modes of operation are being introduced by this change.

The change to 4.0.3 would allow the plant to continue operation for an additional 24 hours after discovery of a missed surveillance. Missing a surveillance does not mean that a component or system is inoperable. In most cases surveillances demonstrate the continued operability of the components and systems. All systems and components currently required to be verified operable by Technical Specification requirements will continue to be maintained operable. This change will not affect the design of the plant and will not allow the plant to be operated outside the currently allowed modes of operation.

The change to 4.0.4 will alleviate a contradiction with the specifications. This change is administrative in nature and does not affect any of the accident analyses.

(3) The proposed amendments will not involve a significant reduction in a margin of safety.

The change to Specification 3.0.4 will allow mode changes in ACTION statements that do not require plant shutdowns. Exceptions to 3.0.4 are already contained within many of the applicable ACTION statements. Incorporating the exception to 3.0.4 will ensure consistent application of the exception.

The change to 4.0.3 will allow up to 24 hours to perform a missed surveillance. In most cases this will eliminate the need for a plant shutdown. The overall effect is a net gain in plant safety due to avoidance of unnecessary shutdowns due to missed surveillances. The change to 4.0.4 is administrative in nature and therefore does not affect any margin of safety.

The NRC in issuing Generic Letter 87-09 recommended these changes and concluded that they would result in improved Technical Specifications.

The staff has reviewed the licensee's no significant hazards analysis given above. Based on this review and the consistency of the proposed changes with those recommended in Generic Letter 87-09, the staff proposes to determine that the proposed amendments meet the three 10 CFR 50.92(c) standards and do not involve a significant hazards consideration.

Local Public Document Room location: Atkins Library, University of North Carolina, Charlotte (UNCC Station), North Carolina 28233

Attorney for licensee: Mr. Albert Carr, Duke Power Company, 422 South Church Street, Charlotte, North Carolina 28242

NRC Project Director: Lawrence P. Crocker, Acting

Florida Power Corporation, et al., Docket No. 50-302, Crystal River Unit No. 3 Nuclear Generating Plant, Citrus County, Florida

Date of amendment request: April 15, 1987

Description of amendment request: This change would revise surveillance requirement 4.5.2.f to permit testing of high and low pressure injection pumps and valves in Modes 3, 4, and 5, in addition to Mode 6 as presently required. The licensee's original commitments to provide low temperature overpressurization (LTOP) protection included testing the high pressure injection (HPI) pumps only in Mode 6. Subsequently, the commitments were revised to allow testing of HPI pumps and valves in other shutdown modes provided LTOP protection is maintained. The change request describes the administrative controls incorporated to assure maintenance of LTOP protection. Tests have been performed in the past in conformance with these controls, but not counted as satisfying the TS requirement.

Basis for proposed no significant hazards consideration determination: The Commission has provided standards for determining whether a significant hazards consideration exists (10 CFR 50.92(c)). A proposed amendment to an operating license for a facility involves no significant hazards considerations if operation of the facility in accordance with the proposed amendment would not: (1) involve a significant increase in the probability or consequences of an accident previously evaluated; or (2) create the possibility of a new or different kind of accident from any accident previously evaluated; or (3) involve a significant reduction in a margin of safety.

The licensee proposes that this amendment does not involve a significant hazards consideration. The actuation test will be performed per other established requirements, such as Technical Specification 4.0.4 and FPC commitment providing LTOP protection, and is consistent with the Standard Technical Specifications (NUREG-0103), which specify this test during shutdown (i.e., Modes 3, 4, 5, and 6).

Based on the above, FPC finds the amendment will not:

1. Involve a significant increase in the probability or consequence[s] of an accident previously evaluated because the test will continue to be performed and thus assure equipment operability. This change does not increase the probability or consequence[s] of [an LTOP] event because preventative measures will be taken per our commitments described [in the change request] and in LER 84-23.

2. Create the possibility of a new or different kind of accident from and accident previously evaluated because it does not require a physical modification to the plant. Test configuration should be similar to that used currently with some additional restrictions.

3. Involve a significant reduction in the margin of safety because setpoints and response times will not be affected.

We agree with the licensee's proposed finding, and would add to criterion 3 the comment that there would not be a significant reduction in the margin of safety since the tests permitted by the proposed change would not differ significantly from others previously performed in the past.

Therefore, the staff proposes to determine that the proposed amendment does not involve significant hazards considerations.

Local Public Document Room location: Crystal River Public Library, 668 N.W. First Avenue, Crystal River, Florida 32629

Attorney for licensee: R. W. Neiser, Senior Vice President and General Counsel, Florida Power Corporation, P.O. Box 14042, St. Petersburg, Florida 33733

NRC Project Director: Herbert N. Berkow

Georgia Power Company, Oglethorpe Power Corporation, Municipal Electric Authority of Georgia, City of Dalton, Georgia, Docket No. 50-424, Vogtle Electric Generating Plant, Unit 1, Burke County, Georgia

Date of amendment request: February 4, 1988

Description of amendment request: The proposed amendment would revise Technical specification (TS) 3/4.3.3.9, "Radioactive Liquid Effluent Monitoring Instrumentation," by deleting the control building sump effluent line monitor, RE-17646, from TS Table 3.3-9, "Radioactive Liquid Effluent Monitoring Instrumentation," and TS Table 4.3-5, "Radioactive Liquid Effluent Monitoring Instrumentation Surveillance Requirements."

Basis for proposed no significant hazards consideration determination: The Commission has provided standards for determining whether a significant hazards consideration exists as stated in 10 CFR 50.92. A proposed amendment to an operating license for a facility involves no significant hazards consideration if operation of the facility in accordance with a proposed amendment would not: (1) involve a significant increase in the probability or consequences of an accident previously evaluated; or (2) create the possibility of a new or different kind of accident from any accident previously evaluated; or (3) involve a significant reduction in a margin of safety.

The licensee has reviewed the proposed amendment and has determined that it does not involve significant hazards considerations. The licensee has provided the following analysis in support of their conclusion.

1. The proposed change does not significantly by increase the probability or consequences of an accident previously evaluated. Neither the piping modification nor the deletion of RE-17646 have any effect on the failure modes which lead to analyzed accidents. Furthermore, monitor RE-17646 is not required to mitigate the consequences of any analyzed accidents. The probability or consequences of previously evaluated accidents are therefore not increased.

2. The proposed change does not create the possibility of a new or different kind of accident than any accident previously evaluated. The change does not alter operation of the drain system or the Process and Effluent Radiation Monitoring System in a manner which could cause an unanalyzed accident. Since no new failure mode is created, a new or different kind of accident could not occur.

3. The proposed change does not significantly reduce a margin of safety. Liquid discharged from the control building sump has low potential for contamination. Nonetheless, this effluent will be monitored by RE-0848 which is required by Technical Specifications to be operable at all times. Monitor RE-0848 has range and sensitivity similar to those of RE-17646 and will cause automatic diversion of effluent flow on sensing high radiation. The setpoint of RE-0848 will be determined in accordance with the Off-Site Dose Calculation Manual and will be as low as possible without being subject to spurious actuations. Control building sump effluent is discharged to the waste water retention basin. Discharge from the waste water retention basin is sampled and analyzed as required by the Technical Specifications to ensure that releases to unrestricted areas do not exceed prescribed limits. It is, therefore, extremely unlikely that radioactive effluent from the control building sump would be released in an uncontrolled manner, and ample safety margin is maintained.

The NRC staff has reviewed the licensee's analysis and concurs with the analysis.

Accordingly, the Commission proposes to determine that the proposed change involves no significant hazards consideration.

Local Public Document Room location: Burke County Public Library, 412 Fourth Street, Waynesboro, Georgia 30830.

Attorney for licensee: Mr. Arthur H. Domby, Troutman, Sanders, Lockerman and Ashmore, Chandler Building, Suite 1400, 127 Peachtree Street, N.E., Altanta, Georgia 30043.

NRC Project Director: Lawrence P. Crocker, Acting

Louisiana Power and Light Company, Docket No. 50-382, Waterford Steam Electric Station, Unit 3, St. Charles Parish, Louisiana

Date of amendment request: December 1, 1986 as supplemented December 30, 1987 and March 21, 1988

Brief description of amendment: In accordance with the requirements of 10 CFR 73.55, the licensee submitted an amendment to the Physical Security Plan for the Waterford Steam Electric Station, Unit 3 to reflect recent changes to that regulation. The proposed amendment would modify paragraph 2.E of Facility Operating License No. NPF-38 to require compliance with the revised Plan.

Basis for proposed no significant hazards consideration determination: On August 4, 1986 (51 FR 27817 and 27822), the Nuclear Regulatory Commission amended Part 73 of its regulations, "Physical Protection of Plants and Materials," to clarify plant security requirements to afford an increased assurance of plant safety. The amended regulations required that each nuclear power reactor licensee submit proposed amendments to its security plan to implement the revised provisions of 10 CFR 73.55. The licensee submitted its revised plan on December 1, 1986, with additional information on December 30, 1987 and March 21, 1988, to satisfy the requirements of the amended regulations. The Commission proposes to amend the license to reference the revised plan.

In the Supplementary Materials accompanying the amended regulations, the Commission indicated that it was amending its regulations "to provide a more safety conscious safeguards system while maintaining the current levels of protection" and that the "Commission believes that the clarification and refinement of requirements as reflected in these amendment is appropriate because they afford an increased assurance of plant safety."

The Commission has provided guidance concerning the application of the criteria for determining whether a significant hazards consideration exists by providing certain examples of actions involving no significant hazards considerations and examples of actions involving significant hazards considerations (51 FR 7750). One of these examples of actions involving no significant hazards considerations is example (vii) "a change to conform a license to changes in the regulations, where the license change results in very minor changes to facility operations clearly in keeping with the regulations." For the foregoing reasons, the Commission proposes to determine that the proposed amendment involves no significant hazards consideration.

Local Public Document Room location: University of New Orleans

Library, Louisiana Collection, Lakefront, New Orleans, Louisiana 70122

Attorney for licensee: Bruce W. Churchill, Esq., Shaw, Pittman, Potts and Trowbridge, 2300 N St., NW., Washington, DC 20037

NRC Project Director: Jose A. Calvo

Louisiana Power and Light Company, Docket No. 50-382, Waterford Steam Electric Station, Unit 3, St. Charles Parish, Louisiana

Date of amendment request: March 22, 1988

Description of amendment request: The proposed amendment would revise the Technical Specifications to correct the number of fire detectors installed in Fire Zone RAB2. A construction drawing was used as a basis for determining the number of detectors for the initial Technical Specifications submittal and the drawing had not been updated to the fire protection analysis for Fire Zone RAB2. The number of detectors is changed from 36 to the actual installed number of 35.

Basis for proposed no significant hazards consideration determination: The Commission had provided guidance for the application of criteria for no significant hazards consideration determination by providing examples of amendments that are considered not likely to involve significant hazards considerations (51 FR 7751). One of these examples (i) is a purely administrative change to Technical Specifications; for example, a change to achieve consistency throughout the technical specifications, correction of an error, or a change in nomenclature. The proposed amendment is directly related to this example in that it corrects an error in identifying the number of fire detectors installed in Fire Zone RAB2 in conformance with the approval fire protection program for Waterford. The licensee's submittal of the initial Technical Specifications was derived from construction drawings that had not been correctly updated to the approved fire protection program. The drawings are being updated and the proposed amendment would correct the error. On the basis of the above, the staff has made a proposed determination that the application involves no significant hazards consideration.

Local Public Document Room Location: University of New Orleans Library, Louisiana Collection, Lakefront, New Orleans, Louisiana 70122

Attorney for licensee: Bruce W. Churchill, Esq., Shaw, Pittman, Potts and Trowbridge, 2300 N St., NW., Washington, DC 20037

NRC Project Director: Jose A. Calvo

Niagara Mohawk Power Corporation, Docket Nos. 50-220 and 50-410, Nine Mile Point Nuclear Station, Units 1 and 2

Dates of amendment request: December 2, 1986, November 25, 1987, and December 29, 1987.

Description of amendment request: In accordance with the requirements of 10 CFR 73.55, the licensee submitted an amendment to the Physical Security Plan for the Nine Mile Point Nuclear Station, Units 1 and 2, to reflect recent changes to that regulation. The proposed amendment would modify paragraphs 2.D(4) of Facility Operating License DPR-63 and 2.E of Facility Operating License No. NPF-69 to require compliance with the revised Plan.

Basis for proposed no significant hazards consideration determination: On August 4, 1986 (51 FR 27617 and 27622), the Nuclear Regulatory Commission amended Part 73 of its regulations, "Physical Protection of Plants and Materials," to clarify plant security requirements to afford an increased assurance of plant safety. The amended regulations required that each nuclear power reactor licensee submit proposed amendments to its security plan to implement the revised provisions of 10 CFR 73.55. The licensee submitted its revised plan on December 2, 1986, November 25, 1987 and December 29, 1987, to satisfy the requirements of the amended regulations. The Commission proposes to amend the license to reference the revised plan.

In the Supplementary Materials accompanying the amended regulations, the Commission indicated that it was amending its regulations "to provide a more safety conscious safeguards system while maintaining the current levels of protection" and that the "Commission believes that the clarification and refinement of requirements as reflected in these amendments is appropriate because they afford an increased assurance of plant safety."

The Commission has provided guidance, concerning the application of the criteria for determining whether a significant hazards consideration exists, by providing certain examples of actions involving no significant hazards considerations and examples of actions involving significant hazards considerations (51 FR 7750). One of these examples of actions involving no significant hazards considerations is example (vii) "a change to conform a license to changes in the regulations, where the license change results in very minor changes to facility operations clearly in keeping with the regulations." The changes in this case fall within the scope of the example. For the foregoing reasons, the Commission proposes to determine that the proposed amendment involves no significant hazards consideration.

Local Public Document Room location: Reference and Documents Department, Penfield Library, State University of New York, Oswego, New York 13126.

Attorney for licensee: Mark Wetterhahn, Esq., Conner & Wetterhahn, Suite 1050, 1747 Pennsylvania Avenue, NW., Washington, DC 20006.

NRC Project Director: Robert A. Capra, Director

Power Authority of the State of New York, Docket No. 50-333, James A. FitzPatrick Nuclear Power Plant, Oswego, New York

Date of amendment request: February 8, 1988

Description of amendment request: The licensee has provided the following description of the changes to the Technical Specifications:

A. Proposed Changes to Figure 6.1-1:

As a result of a recent licensee reorganization, staff engineering and construction management functions will be merged into existing operations departments, and the number of management levels will be reduced. The proposed changes to Figure 6.1-1 of the FitzPatrick Technical Specifications illustrate the following changes in responsibility and management reorganization.

1. The Engineering and Design Department has been eliminated and its personnel reassigned to the Nuclear Generation and System Operations Departments. Accordingly, the position of Executive Vice President and Chief Engineer - Engineering and Design has been eliminated.

2. The position of First Executive Vice President Operations has been eliminated.

B. Proposed Changes to Section 6.5.2.2:

As a result of the elimination of the Engineering and Design Department, the position of Vice President - Design and Analysis has been eliminated. Consequently, the Vice President - Design and Analysis will no longer be a member of the Safety Review Committee (SRC).

Basis for proposed no significant hazards consideration determination: The Commission has provided standards for determining whether a significant hazards consideration exists as stated in 10 CFR 50.92. A proposed amendment to an operating license for

facility involves no significant hazards consideration if operation of the facility in accordance with a proposed amendment would not: (1) Involve a significant increase in the probability or consequences of an accident previously evaluated; or (2) Create the possibility of a new or different kind of accident from any accident previously evaluated; or (3) Involve a significant reduction in a margin of safety.

The proposed amendment would streamline the chain of command within the licensee's organization, enhancing its effectiveness and efficiency without compromising functions required for the continued operation of the plant. The proposed TS changes reflect the licensee's reorganization and are administrative changes which do not involve hardware or procedural changes to the facility. Therefore, the proposed change will not produce a significant increase in the probability or consequences of previously evaluated accidents. Similarly, because the proposed changes are intended to improve the efficiency of the licensee's organization and do not entail hardware or procedural changes to the facility, these changes cannot create the possibility of a new or different kind of accident.

Under the proposed reorganization, the responsibilities formerly associated with the positions eliminated have been assumed by others within the management hierarchy. The individuals who have assumed these responsibilities satisfy the educational and experience levels described in the FSAR for the positions previously having these responsibilities. Hence, the proposed changes do not involve a reduction in a margin of safety.

Based on the above, the staff proposes to determine that the proposed changes do not involve a significant hazards consideration.

Local Public Document Room location: State University of New York, Penfield Library, Reference and Documents Department, Oswego, New York 13126.

Attorney for licensee: Mr. Charles M. Pratt, 10 Columbus Circle, New York, New York 10019.

NRC Project Director: Robert A. Capra, Director

Tennessee Valley Authority, Docket Nos. 50-259, 50-260 and 50-296, Browns Ferry Nuclear Plant, Units 1, 2 and 3, Limestone County, Alabama

Date of amendment requests: February 24, 1988 (TS 238)

Description of amendment requests: The proposed amendments would change the Browns Ferry Nuclear Plant (BFN) Technical Specifications (TS) for Units 1, 2, and 3 to eliminate the use of absolute surveillance intervals for TS surveillance requirements (SR) 4.7.E.1, 4.7.E.3, 4.7.F.1, 4.9.A.2.c, and 4.11.A.5. Specifically, the words "not to exceed" are being replaced with "at least once every" for the five SR.

Basis for proposed no significant hazards consideration determination: The Commission has provided Standards for determining whether a significant hazards determination exists as stated in 10 CFR 50.92(c). 10 CFR 50.91 requires that at the time a licensee requests an amendment, it must provide to the Commission its analyses, using the standards in Section 50.92, on the issue of no significant hazards consideration. Therefore, in accordance with 10 CFR 50.91 and 10 CFR 50.92, the licensee has performed and provided the following analysis:

NRC has provided standards for determining whether a change to the facility operating license or the technical specifications involves a significant hazards consideration, as stated in 10 CFR 50.92(c). A proposed amendment to an operating license for a facility involves no significant hazards consideration if operation of the facility in accordance with the proposed amendment would not (1) involve a significant increase in the probability or consequences of an accident previously evaluated, or (2) create the possibility of a new or different kind of accident from any accident previously evaluated, or (3) involve a significant reduction in the margin of safety.

A discussion of these standards, as they relate to this amendment, is as follows.

1. The probability or consequences of an accident previously evaluated in the BFN Final Safety Analysis Report (FSAR) would not be affected by these TS changes. The BFN systems affected by these proposed amendments are not typically considered in determining accident probabilities. The consequences of an accident are not affected since the limiting conditions for operation and the types of surveillance testing used to confirm operability are not changed. In addition, the SR interval extension which would be allowed under the application of TS Definition 1.0.LL is consistent with the original intent of the TS surveillances for these BFN systems (as evidenced by other BFN TS surveillance intervals, other BWR custom TS, and the General Electric Standard TS [GE-STS] for similar system applications). As such, the criteria set forth in 10 CFR 50.92(c)(1) is satisfied.

2. The possibility of a new or different kind of accident than previously evaluated in the BFN FSAR would not be created by the proposed TS changes. These changes will not eliminate or modify any protective functions and will not permit any new plant operational conditions. In addition, these changes do not eliminate or modify the type of surveillance testing done on these systems. Application of TS Definition 1.0.LL in these cases cannot create a new type of accident since flexibility in the SR time intervals is the only change proposed. Based on this, the criteria set forth in 10 CFR 50.92(c)(2) is satisified.

3. The margin of nuclear safety is not reduced by the proposed changes. These changes do not modify the intent of BFN TS. Application of TS Definition 1.0.LL to these BFN SRs is consistent with similar system applications in other BFN TS surveillances, other BWR custom TS surveillances, and the GE-STS. Based on this, the criteria set forth in 10 CFR 50.92(c)(3) is satisfied.

Since the application for amendment involves a proposed change that is encompassed by the criteria for which no significant hazards consideration exists, TVA proposes to determine that the proposed amendment does not involve a significant hazards consideration.

The staff has reviewed the licensee's no significant hazards consideration determination and agrees with the licensee's analysis. Therefore, the staff proposes to determine that the application for amendments involves no significant hazards consideration.

Local Public Document Room location: Athens Public Library, South Street, Athens, Alabama 35611.

Attorney for licensee: General Counsel, Tennessee Valley Authority, 400 West Summit Hill Drive, E11 B33, Knoxville, Tennessee 37902.

NRC Assistant Director: *Gary G. Zech*

Tennessee Valley Authority, Docket No. 50-327, Sequoyah Nuclear Plant, Unit 1, Hamilton County, Tennessee

Date of amendment request: May 29, 1987 (TS 87-06)

Description of amendment request: The Tennessee Valley Authority (TVA) has proposed to delete Table 4.4-5, "Reactor Vessel Material Surveillance Program - Withdrawal Schedule," from the Sequoyah Unit 1 Technical Specifications (TS). In addition, the proposed change would delete the reference to Table 4.4-5 in TS Surveillance Requirement (SR) 4.4.9.1.2.

Basis for proposed no significant hazards consideration determination: The TS SR 4.4.9.1.2 states that the reactor vessel material irradiation surveillance specimens shall be removed for examination at intervals in accordance with Appendix H to 10 CFR Part 50 and with Table 4.4-5. TVA states that the TS would be simplified by referring only to Appendix H because the requirements for this surveillance and the definition of a withdrawal schedule that is approved by NRC are stated in the Appendix.

The Commission has provided standards for determining whether a significant hazards determination exists as stated in 10 CFR 50.92(c). 10 CFR 50.91 requires that at the time a licensee

requests an amendment, it must provide to the Commission its analyses, using the standards in Section 50.92, on the issue of no significant hazards consideration. Therefore, in accordance with 10 CFR 50.91 and 10 CFR 50.92, the licensee has performed and provided the following analysis:

1. Does the proposed amendment involve a significant increase in the probability or consequences of an accident previously evaluated?

No. The proposed technical specification would amend surveillance requirement (SR) 4.4.9.1.2 in Section 3/4 4.9, "Pressure/Temperature Limits, Reactor Coolant System," of the Sequoyah unit 1 technical specifications by deleting Table 4.4-5, "Reactor Vessel Material Surveillance Program - Withdrawal Schedule." Deletion of the subject table from the technical specifications will not affect the reactor vessel surveillance program requirements as specified in 10 CFR Part 50, Appendix H, "Reactor Vessel Material Surveillance Program Requirements"; rather, the deletion will eliminate a license requirement that is redundant to regulation requirements. The proposed amendment is therefore administrative in nature and does not change plant operating setpoints or limits, or plant operating procedures. The potential for reactor vessel embrittlement affecting a postulated transient or accident conditions that have been previously evaluated is not increased as TVA is required to comply with 10 CFR Part 50, Appendix H. Thus, the proposed amendment involves no increase in the probability or consequences of an accident previously evaluated.

2. Does the proposed amendment create the possibility of a new or different kind of accident from any accident previously evaluated?

No. As previously stated, the proposed amendment is administrative in nature and does not change plant hardware, plant operating setpoints or limits, or plant operating procedures. Also, the evaluation of reactor vessel embrittlement is not affected as TVA is required to comply with 10 CFR Part 50, Appendix H. Thus, the proposed amendment does not create the possibility of a new or different kind of accident from any previously evaluated.

3. Does the proposed amendment involve a significant reduction in the margin of safety?

No. Again, as previously stated, the proposed amendment is administrative in nature and does not involve a change in plant hardware, plant operating setpoints or limits, or plant operating procedures. The evaluation of reactor vessel embrittlement is not affected as TVA is required to comply with 10 CFR Part 50, Appendix H. Thus, the proposed amendment involves no reduction in the margin of safety of the plant.

The staff has reviewed the licensee's no significant hazards consideration determination and agrees with the licensee's analysis. Therefore, the staff proposes to determine that the application for amendments involves no significant hazards considerations.

Local Public Document Room location: Chattanooga-Hamilton County Library, 1001 Broad Street, Chattanooga, Tennessee 37402.

Attorney for licensee: General Counsel, Tennessee Valley Authority, 400 West Summit Hill Drive, E11 B33, Knoxville, Tennessee 37902.

NRC Assistant Director: Gary G. Zech

Tennessee Valley Authority, Docket No. 50-328, Sequoyah Nuclear Plant, Unit 2, Hamilton County, Tennessee

Date of amendment request: March 1, 1988 (TS 87-46)

Description of amendment request: The Tennessee Valley Authority (TVA) has proposed to modify the Sequoyah Nuclear Plant (SQN) Unit 2 Technical Specifications (TS) to revise Table 3.6-1, "Secondary Containment Bypass Leakage Paths," to add four potential bypass leakage paths associated with the hydrogen analyzer system. In addition, two penetration number entries in the table would be revised for clarification.

Basis for proposed no significant hazards consideration determination: In its submittal dated March 1, 1988, TVA provided the basis for the proposed change to the TS. The basis provided is the following:

During the review of a design change notice (DCN) issued to enhance the hydrogen analyzer calibration process, it was discovered that the current system design contained a potential pathway for the release of radionuclides to the environment following a postulated loss of coolant accident (LOCA). Previously, the hydrogen analyzer system was considered a closed system outside containment with respect to containment isolation. This classification was identified to NRC in a January 2, 1987 submittal on SQN containment isolation design and in proposed technical specification change 87-33, which was submitted September 17, 1987. An earlier enhancement engineering change notice (ECN), however, had initiated a modification that moved the system calibration panels from the annulus to the Auxiliary Building. This was done for radiological and access considerations during the calibration of the analyzers, and because of the environmental qualifications of the equipment located in the annulus. This established an indirect release path to the Auxiliary Building and the environment through the system interface with the essential control air system. A direct release path to the Auxiliary Building and the environment was established on the train B analyzer because its calibration panel was moved outside the Auxiliary Building Secondary Containment Enclosure (ABSCE).

This design inadequacy is documented in Condition Adverse to Quality Reports SQP871611 and SQP871650. The deficiency was also reported to NRC in Licensee Event Report (LER) 327/87077. As was stated in the LER, preliminary evaluations of the radiological consequences of the potential bypass leakage to the environment have been performed. These evaluations indicated that the potential increases in both onsite and offsite doses would not have had significant safety consequences during power operation.

Modifications to the Unit 2 hydrogen analyzer system are being performed to eliminate the potential bypass leakage paths to the environment. In order to comply with specification 3.6.4.1 for operable hydrogen analyzers, the modifications for the hydrogen analyzer will be completed prior to entering Mode 2.... After the modifications are completed, the potential for bypass leakage to the Auxiliary Building inside the ABSCE will still exist. It is these potential bypass leakage paths that are added to the technical specification table.

In addition to the change described above, the table entries for penetrations X-94 and X-95 are revised to clarify that each penetration has three lines passing through it.

The Commission has provided standards for determining whether a significant hazards determination exists as stated in 10 CFR 50.92(c). 10 CFR 50.91 requires that at the time a licensee requests an amendment, it must provide to the Commission its analyses, using the standards in Section 50.92, on the issue of no significant hazards consideration. Therefore, in accordance with 10 CFR 50.91 and 10 CFR 50.92, TVA has performed and provided the following analysis for Sequoyah Unit 2 (SQN) in its submittal.

TVA has evaluated the proposed technical specification change and determined that it does not represent a significant hazards consideration based on criteria established in 10 CFR 50.92(c). Operation of SQN in accordance with the proposed amendment will not:

1. Involve a significant increase in the probability or consequences of an accident previously evaluated. The addition of the hydrogen analyzer system bypass penetrations to Table 3.6-1 ensures that the penetrations are properly tested in accordance with surveillance requirement 4.6.1.2.e. This testing does not affect the probability or consequences of previously evaluated accidents. The hydrogen analyzer system is not required to mitigate design basis events, but is used to provide post-LOCA information to the operator in compliance with NUREG-0737. The hydrogen analyzer system does not contribute to the probability of an accident. The modifications made to the system eliminate potential leakage paths from containment to the environment. The remaining potential bypass leakage paths are into the ABSCE and are included in Table 3.6-1 as such. Eliminating the leakage paths to the environment will decrease the consequences of an accident. The offsite dose analysis of record (Final Safety Analysis Report, section 15.5.3) is not affected by moving the potential release point of the hydrogen analyzer system from the annulus to the ABSCE. This is because the total primary containment leakage remains unchanged, as do the assumptions that 75 percent of the leakage is to the annulus and 25 percent of the leakage is to the Auxiliary

Building. The change in potential release points only changes the allowable leakage for each individual penetration. The change does not impact systems or components used to mitigate postulated accidents. The addition of commas to two of the table entries is for clarification only, and does not alter the probability or consequences of previously evaluated accidents.

2. Create the possibility of a new or different kind of accident from any previously analyzed. The inclusion of the hydrogen analyzer system bypass penetrations in Table 3.6-1 identifies the penetrations as being within the scope of surveillance requirement 4.6.1.2.e. The leak rate testing required by this surveillance does not create the possibility of a new type of accident. The changes made to the hydrogen analyzer system do not affect the function or operation of the system. The changes are made to eliminate potential leakage paths from containment to the environment. The change does not adversely affect other systems. The addition of commas to two of the table entries is for clarification. Therefore, no new accident scenarios are created.

3. Involve a significant reduction in a margin of safety. The proposed change ensures that the hydrogen analyzer system bypass penetrations are routinely tested under the requirements of surveillance requirement 4.6.1.2.e. This testing ensures that the plant is bounded by the offsite dose analysis of record. As described above, the offsite dose analysis of record is not affected by the proposed change; and the margin of safety as defined by the technical specification bases is not changed. The modifications to the hydrogen analyzer system eliminate a potential bypass leakage path to the environment and bring the system into compliance with containment isolation requirements. Any leakage will be into the ABSCE where it is processed by [the] ABGTS. The technical specification change is made to reflect the potential bypass leakage paths to the Auxiliary Building. Because the potential for unprocessed bypass leakage is eliminated, the actual margin of safety is increased. The addition of commas to the two tables is for clarification. This clarification will not reduce the margin of safety.

The staff has reviewed the licensee's no significant hazards consideration determination and agrees with the licensee's analysis. Therefore, the staff proposes to determine that the application for amendment involves no significant hazards considerations.

Local Public Document Room location: Chattanooga-Hamilton County Library, 1001 Broad Street, Chattanooga, Tennessee 37402.

Attorney for licensee: General Counsel, Tennessee Valley Authority, 400 West Summit Hill Drive, E11 B33, Knoxville, Tennessee 37902.

NRC Assistant Director: Gary G. Zech

Tennessee Valley Authority, Docket Nos. 50-327 and 50-328, Sequoyah Nuclear Plant, Units 1 and 2, Hamilton County, Tennessee

Date of amendment requests: April 17, 1987 (TS 87-05)

Description of amendment requests: The Tennessee Valley Authority (TVA) proposes to amend the Sequoyah Nuclear Plant Units 1 and 2 Technical Specifications (TS) to revise parts of Section 5.0, Administrative Controls, of the Appendix B Environmental Technical Specifications. The proposed changes would (1) reflect the new title for the station superintendent and assign the responsibility for review and audit to the "licensee", instead of a specific TVA organization, (2) extend the audit time interval on the environmental monitoring program from annual to once per 18 months, (3) add additional requirements on the conduct of the audit and maintaining the results of the audit, and (4) delete the reference to a defunct section of the Code of Federal Regulations (CFR).

Basis for proposed no significant hazards consideration determination: The Commission has provided standards for determining whether a significant hazards determination exists as stated in 10 CFR 50.92(c). 10 CFR 50.91 requires that at the time a licensee requests an amendment, it must provide to the Commission its analyses, using the standards in Section 50.92, on the issue of no significant hazards consideration. Therefore, in accordance with 10 CFR 50.91 and 10 CFR 50.92, TVA has provided the following analysis:

(1) Is the probability of an occurrence or the consequences of an accident previously evaluated in the safety analysis report significantly increased?

No, the changes in responsibilities for review and audits in the environmental technical specifications will not prevent these jobs from being performed. This job function will still be performed by the licensee in a satisfactory manner in order to meet the requirements. Extending the audit time interval to 18 months will still provide the necessary information relative to the status of environmental compliance.

(2) Is the possibility for an accident of a new or different type than evaluated previously in the safety analysis report created?

No, the proposed changes to the environmental technical specifications do not present new or different safety concerns. These changes will ensure that the licensee is responsible for compliance of these specifications.

(3) Is the margin of safety significantly reduced?

No, safety is not affected by the changes to the environmental technical specifications. These changes affect responsibility for review and audits and thus the margin of safety is unchanged.

The staff has reviewed the licensee's no significant hazards consideration determination and agrees with the licensee's analysis. In addition, the Commission has provided certain examples (51 FR 7751) of amendments not likely to involve significant hazards considerations. The remaining changes to change the title of the Station Superintendent to Plant Manager, and the deletion of a reference to a defunct section of the CFR (Section 51.5(b)(2) of 10 CFR Part 51 has been deleted due to a turnover of responsibilities to the Environmental Protection Agency), are encompassed by example (1) e.g., a purely administrative change to the TS: for example, a change to achieve consistency throughout the TS, correction of an error, or a change in nomenclature. Therefore, the staff proposes to determine that the application for amendments involves no significant hazards considerations.

Local Public Document Room location: Chattanooga-Hamilton County Library, 1001 Broad Street, Chattanooga, Tennessee 37402.

Attorney for licensee: General Counsel, Tennessee Valley Authority, 400 West Summit Hill Drive, E11 B33, Knoxville, Tennessee 37902.

NRC Assistant Director: Gary G. Zech

Tennessee Valley Authority, Docket Nos. 50-327 and 50-328, Sequoyah Nuclear Plant, Units 1 and 2, Hamilton County, Tennessee

Date of amendment requests: June 19, 1987 (TS 87-25)

Description of amendment requests: The Tennessee Valley Authority (TVA) has proposed a change to the Action statements for the Limiting Conditions for Operation (LCO) of the radioactive liquid and gaseous effluent monitoring instrumentation in the Sequoyah Units 1 and 2 Technical Specifications (TS). The applicable LCO for this change are TS 3.3.3.9 and TS 3.3.3.10. The proposed change is to delete the reference to TS 6.9.1.13.b from the Action statement in these LCO.

Basis for proposed no significant hazards consideration determination: In its submittal dated June 19, 1987, TVA provided the basis for the proposed change. The basis is the following:

On January 1, 1984, NRC made effective 10 CFR 50.72, governing requirements for immediate notification of NRC, and 10 CFR 50.73, governing requirements for [Licensee Event Reports or] LERs. The requirements of the two sections superseded and made obsolete any possible conflicting requirements between the Code of Federal Regulations (CFR) and the technical

specifications. To provide for both incorporation and implementation of the subject CFR sections into the license, TVA submitted a proposed amendment to the technical specification to NRC by letter dated April 20, 1984. NRC reviewed the proposed amendment and on November 23, 1984, notified TVA of their approval of the proposed amendments.

Amendments 36 and 28 of Units 1 and 2, respectively, deleted requirements for issuing LERs from the technical specifications as given in Section 6.9.1.13.b and all references to those requirements. References to Section 6.9.1.13.b were overlooked, however, in Action "c" of LCO 3.3.3.9 and Action "c" of LCO 3.3.3.10. The subject action statements granted relief from writing extraneous LERs when manual radioactive effluent sampling was used as an alternative to automatic sampling.

Because Section 6.9.1.13.b no longer exists in the technical specifications, references to this section are meaningless and could cause unnecessary confusion on the part of the plant operators. The proposed amendment would delete the references to Section 6.9.1.13.b in LCO 3.3.3.9 and LCO 3.3.3.10.

Also, the requirements of 10 CFR 50.73 do not require an LER to be written for those instances when manual radioactive effluent sampling is used as an alternative to automatic sampling. Thus, the relief granted by reference to Section 6.9.1.13.b is no longer required. Therefore, the proposed amendment causes no conflict with the requirements of either the technical specifications nor the CFR.

The Commission has provided standards for determining whether a significant hazards determination exists as stated in 10 CFR 50.92(c). 10 CFR 50.91 requires that at the time a licensee requests an amendment, it must provide to the Commission its analyses, using the standards in Section 50.92, on the issue of no significant hazards consideration. Therefore, in accordance with 10 CFR 50.91 and 10 CFR 50.92, TVA has provided the following analysis for Sequoyah (SQN) in its submittal:

1. Does the proposed amendment involve a significant increase in the probability or consequences of an accident previously evaluated?

No. The proposed amendment is editorial in nature and does not effect changes to plant equipment, operating setpoints or limits, or operating procedures. Therefore, the proposed amendment involves no significant increase in either the probability or consequences of an accident previously evaluated.

2. Does the proposed amendment create the possibility of a new or different kind of accident from any accident previously evaluated?

No. As related above, the change advanced by the proposed amendment deletes a reference to a now nonexistent section of the technical specifications. The proposed amendment is editorial in nature and does not effect changes to plant equipment, operating setpoints or limits, or operating procedures. Therefore, the proposed amendment would not create the probability of a new or different kind of accident [from any] previously evaluated.

3. Does the proposed amendment involve a significant reduction in a margin of safety?

No. Again, the proposed amendment is editorial in nature and does not effect changes to plant equipment, operating setpoints or limits, or operating procedures. The proposed amendment deletes a reference to a now nonexistent section of the technical specifications that has previously been superseded by the regulations of 10 CFR 50.73. This deletion would eliminate a potential source of confusion to the operators. Thus, the proposed amendment would provide for an improvement in the margin of safety in operating the plant.

The staff has reviewed the licensee's no significant hazards consideration determination and agrees with the licensee's analysis. Therefore, the staff proposes to determine that the application for amendments involves no significant hazards considerations.

Local Public Document Room location: Chattanooga-Hamilton County Library, 1001 Broad Street, Chattanooga, Tennessee 37402.

Attorney for licensee: General Counsel, Tennessee Valley Authority, 400 West Summit Hill Drive, E11 B33, Knoxville, Tennessee 37902.

NRC Assistant Director: Gary G. Zech

Tennessee Valley Authority, Docket Nos. 50-327 and 50-328, Sequoyah Nuclear Plant, Units 1 and 2, Hamilton County, Tennessee

Date of amendment requests: June 24, 1987 (TS 87-17)

Description of amendment requests: The Tennessee Valley Authority (TVA) has proposed changes to the Sequoyah Units 1 and 2 Technical Specifications (TS). These changes are throughout the TS to correct inconsistencies, discrepancies and typographical errors within the TS and to remove an error from a previous TS amendment.

Basis for proposed no significant hazards consideration determination: In its submittal dated June 24, 1987, TVA listed the 31 different proposed changes to the TS. TVA stated the following in its submittal as justification for the proposed changes:

Twelve changes correct typographical errors. One change corrects the alphabetical listing of an index section. Five changes correct references to figures or the figure itself. Six changes correct inconsistencies between the technical specification for one unit and the other. In each case, the proposed changes conform with the NRC [Standard Technical Specifications or] STS. Correction of these inconsistencies will eliminate confusion over applicable requirements and eliminate the potential for error.

Four changes correct inconsistencies between action statements and other requirements in the technical specifications. Correction of these inconsistencies will eliminate confusion over applicable requirements and eliminate the potential for error.

Two changes correct discrepancies between the technical specifications and the design of the plant. Correction of these discrepancies will eliminate confusion over applicable requirements and eliminate the potential for error.

One change corrects an error from a previous amendment. Correction of the error will properly identify the correct surveillance intervals for a surveillance requirement.

Examples of the proposed changes are listed below:

1. *3/4 1-14* Delete references to nonexistent figure.

2. *3/4 1-21* Delete references to nonexistent figure.

3. *3/4 3-13* Correct typographical errors in Table 4.3-1 notation.

4. *3/4 3-56 (U1), 3/4 3-57 (U2)* Correctly identify the required number of channels and minimum number of channels operable for auxiliary feedwater flow in the list of accident monitoring instrumentation to be consistent with plant design.

5. *3/4 7-1* Correct an inconsistency between action b. and technical specification 3.4.1.1 for operation with less than four reactor coolant pumps running.

6. *3/4 7-6* Correct an error from a previous amendment that inadvertently omitted the surveillance frequency for verification of control valve operability.

7. *3/4 7-10* Correct an inconsistency within the action statement for modes 1 and 3.

The Commission has provided standards for determining whether a significant hazards determination exists as stated in 10 CFR 50.92(c). 10 CFR 50.91 requires that at the time a licensee requests an amendment, it must provide to the Commission its analyses, using the standards in Section 50.92, on the issue of no significant hazards consideration. Therefore, in accordance with 10 CFR 50.91 and 10 CFR 50.92, TVA has provided the following analysis:

1. Is the probability of an occurrence or the consequences of an accident previously evaluated in the safety analysis report significantly increased?

No. These changes are to correct typographical errors, inconsistencies between requirements, discrepancies between plant design and requirements, and to remedy an error from a previous amendment. Correcting these problems will eliminate confusion over applicable requirements and eliminate the potential for error. Eliminating the potential for error will reduce the probability of an occurrence. These changes have no effect on the consequences of an accident previously evaluated.

2. Is the possibility for an accident of a new or different type than evaluated previously in the safety analysis report created?

No. These changes are to correct typographical errors, inconsistencies between requirements, discrepancies between plant

BEST COPY AVAILABLE

design and requirements, and to remedy an error from a previous amendment. No hardware changes were made to the plant. Correcting the inconsistencies between certain action statements and other requirements in the technical specifications will eliminate confusion over applicable requirements and eliminate the potential for error. In this case, the error would be to operate in a plant configuration not previously analyzed. Correcting these inconsistencies should eliminate the potential for this type of error.

3. Is the margin of safety significantly reduced?

No. These changes are to correct typographical errors, inconsistencies between requirements, discrepancies between plant design and requirements, and to remedy an error from a previous amendment. Correcting these problems will eliminate confusion over applicable requirements and eliminate the potential for error. The margin of safety will be increased with the elimination of the potential for error.

The staff has reviewed the licensee's no significant hazards consideration determination and agrees with the licensee's analysis. Therefore, the staff proposes to determine that the application for amendments involves no significant hazards considerations.

Local Public Document Room location: Chattanooga-Hamilton County Library, 1001 Broad Street, Chattanooga, Tennessee 37402.

Attorney for licensee: General Counsel, Tennessee Valley Authority, 400 West Summit Hill Drive, E11 B33, Knoxville, Tennessee 37902.

NRC Assistant Director: Gary G. Zech

Tennessee Valley Authority, Docket Nos. 50-327 and 50-328, Sequoyah Nuclear Plant, Units 1 and 2, Hamilton County, Tennessee

Date of amendment requests: September 16, 1987 (TS 87-41)

Description of amendment requests: The Tennessee Valley Authority (TVA) has proposed to revise Section 3/4.9.7, Crane Travel-Spent Fuel Pit Area, of the Sequoyah Units 1 and 2 Technical Specifications (TS). The changes are to (1) revise the maximum load transported over the fuel assemblies in the storage pool from 2,000 pounds to 2,100 pounds and (2) allow for the fuel pool divider gate and the fuel transfer canal gate to be transported over the storage pool when following safe load paths.

Basis for proposed no significant hazards consideration determination: In its submittal, TVA provided the basis for the proposed change. The basis is the following:

Limiting Condition for Operation 3.9.7 prohibits loads in excess of 2,000 pounds from travel over fuel assemblies in the [spent fuel] storage pool. The basis for [the] weight limit is listed in the bases for the technical specification as the weight of a single spent fuel assembly, control rod assembly, and associated handling tool. A review of the Westinghouse drawings of a Sequoyah Nuclear Plant (SQN) fuel assembly, rod cluster control assembly (RCCA), and spent fuel handling tool identified the total nominal weight to be 2,024 pounds. The proposed change will allow a 2,100-pound limit, which is rounded off to the next higher hundred to allow for this extra weight and any minor equipment or fuel weight changes in future assemblies.

Approximately once a year, SQN performs a refueling operation. During refueling, the full pool divider gate and the fuel transfer canal gate are lifted with the main Auxiliary Building crane within the storage pool and must travel over the spent fuel storage racks in order to be placed in the gate storage racks. The proposed change will allow these gates to be transported within the spent fuel pool with the safe load path.

Together, the above changes to the control of loads across fuel assemblies in the storage pool will resolve the weight limit discrepancy and the movement of the pool gates in excess of the present weight limit.

The fuel handling accident analysis presented in Section 15.4.5 of the Final Safety Analysis Report (FSAR) was examined to determine whether changing the load limit from 2,000 pounds to 2,100 pounds would invalidate the analysis. The accident is defined as dropping a spent fuel assembly onto the spent fuel pit floor and the environmental consequences of that accident. Changing the maximum weight limit from 2,000 to 2,100 pounds transported over the assemblies will not affect or invalidate the FSAR fuel handling accident.

The Commission has provided standards for determining whether a significant hazards determination exists as stated in 10 CFR 50.92(c). 10 CFR 50.91 requires that at the time a licensee requests an amendment, it must provide to the Commission its analyses, using the standards in Section 50.92, on the issue of no significant hazards consideration. Therefore, in accordance with 10 CFR 50.91 and 10 CFR 50.92, TVA has performed and provided the following analysis on Sequoyah (SQN) in its submittal:

TVA has evaluated the proposed technical specification change and determined that it does not represent a significant hazards consideration based on criteria established in 10 CFR 50.92(c). Operation of SQN in accordance with the proposed amendment will not:

(1) involve a significant increase in the probability or consequences of an accident previously evaluated.

The FSAR fuel handling accident analysis is not based on the weight of the fuel assembly and handling tool but on the radioactive release to the surroundings. Thus, the proposed change for the increased weight limit will not increase resultant offsite dose effects and consequences. The probability of an accident occurring that involves the spent fuel pool gates is very low. The gates are moved infrequently and many safety precautions are used, such as approved slings, procedures, and crane, to significantly lower the possibility of an accident. Movement of the spent fuel pit gates in accordance with identified safety precautions provides reasonable assurance that the gates will not be dropped. Therefore, the proposed change does not significantly increase the probability or consequences of an accident previously evaluated.

(2) create the possibility of a new or different kind of accident from any previously analyzed.

The proposed changes do not affect the methodology and analysis previously used in the FSAR. Future refueling activities that involve moving fuel assemblies will be conducted as in the past. Movement of the spent fuel pool gates in accordance with the guidelines of NUREG-0612, "Control of Heavy Loads at Nuclear Power Plants," provides reasonable assurance that the gates will not be dropped. Plant instructions will be revised to incorporate these guidelines, and a new plant procedure will specifically address detailed instructions for removal and installation of these gates. Thus, the proposed changes does not create the possibility for a new or different accident.

(3) involve a significant reduction in a margin of safety.

The SER for NUREG-0612, concludes that the guidelines have been followed and remain within the safety limits. The proposed change is in accordance with these guidelines, and thus the margin of safety is not reduced.

The staff has reviewed the licensee's no significant hazards consideration determination and agrees with the licensee's analysis. Therefore, the staff proposes to determine that the application for amendments involves no significant hazards considerations.

Local Public Document Room location: Chattanooga-Hamilton County Library, 1001 Broad Street, Chattanooga, Tennessee 37402.

Attorney for licensee: General Counsel, Tennessee Valley Authority, 400 West Summit Hill Drive, E11 B33, Knoxville, Tennessee 37902.

NRC Assistant Director: Gary G. Zech

Tennessee Valley Authority, Docket Nos. 50-327 and 50-328, Sequoyah Nuclear Plant, Units 1 and 2, Hamilton County, Tennessee

Date of amendment requests: December 28, 1987 (TS 87-43)

Description of amendment requests: Tennessee Valley Authority (TVA) has proposed a change to the surveillance requirement (SR) 4.6.2.1.b of the Sequoyah Units 1 and 2 Technical Specifications (TS). This SR is for the pumps in the containment spray system (CSS). The change would require each CSS pump to have a differential pressure of greater than or equal to 143 psid at a flow rate greater than or equal to 4750 gpm for the pump to be

considered operable. The current SR requires each CSS pump to develop a discharge pressure of greater than or equal to 140 psig to demonstrate it is operable.

Basis for proposed no significant hazards consideration determination: In its submittal, TVA stated the basis for the proposed change. The basis is the following:

Calculations were not found that support the current 140-psig containment spray pump discharge value in the technical specifications (TS). New engineering calculations were performed to determine the minimum pump head required in order to ensure the capability of delivering the required flow rate. The proposed change establishes new testing acceptance criteria to prove pump operability based on the engineering calculations.

The Commission has provided standards for determining whether a significant hazards determination exists as stated in 10 CFR 50.92(c). 10 CFR 50.91 requires that at the time a licensee requests an amendment, it must provide to the Commission its analyses, using the standards in Section 50.92, on the issue of no significant hazards consideration. Therefore, in accordance with 10 CFR 50.91 and 10 CFR 50.92, the licensee has provided the following analysis on Sequoyah (SQN) in its submittal:

TVA has evaluated the proposed TS change and determined that it does not represent a significant hazards consideration based on criteria established in 10 CFR 50.92(c). Operation of SQN in accordance with the proposed amendment will not:

1. Involve a significant increase in the probability or consequences of an accident previously evaluated. The containment spray system is an engineered safety features system that functions to reduce containment pressure and airborne fission products in the containment atmosphere following a LOCA. The accident analysis requires a containment spray flow rate of 4,750 gal/min to ensure adequate accident mitigation. The proposed change establishes new testing requirements for the containment spray pumps based on an engineering calculation that determines the required minimum total developed head at a flow rate of 4,750 gal/min. Thus, the new acceptance criteria for the containment spray pumps will more accurately reflect pump design capability.

2. Create the possibility of a new or different kind of accident from any previously analyzed. The change in testing requirements for the containment spray pumps will ensure proper operation of this engineered safety features system. No changes in system operation have been made. Thus, no new or different types of accidents have been introduced by this change.

3. Involve a significant reduction in a margin of safety. The change in testing requirements for the containment spray pumps is conservative. Establishing the test value based on the calculation assumption that only one of the containment spray pumps [is] running is conservative, because this results in the smallest margin between developed and required flow. If both pumps are running, each individual pump may not be capable of developing 4,750 gal/min, but the combined flow from both pumps will be significantly greater than the FSAR requirement of 4,750 gal/min. System operation has not changed. The proposed differential pressure value and corresponding flow rate will more accurately test system operation, therefore, increasing the margin of safety.

The staff has reviewed the licensee's no significant hazards consideration determination and agrees with the licensee's analysis. The licensee is proposing a more accurate SR to determine CSS pump operability based on the requirements for these pumps during a LOCA in Section 15 of the Sequoyah Final Safety Analysis Report. Therefore, the staff proposes to determine that the application for amendments involves no significant hazards considerations.

Local Public Document Room Location: Chattanooga-Hamilton County Library, 1001 Broad Street, Chattanooga, Tennessee 37402.

Attorney for licensee: General Counsel, Tennessee Valley Authority, 400 West Summit Hill Drive, E11 B33, Knoxville, Tennessee 37902.

NRC Assistant Director: Gary G. Zech

Tennessee Valley Authority, Docket Nos. 50-327 and 50-328, Sequoyah Nuclear Plant, Units 1 and 2, Hamilton County, Tennessee

Date of amendment requests: February 1, 1988 (TS 87-45)

Description of amendment requests: The Tennessee Valley Authority (TVA) has proposed to revise Table 3.3-11, Fire Detection Instruments, of the Sequoyah Units 1 and 2 Technical Specifications (TS). The proposed revisions are to (1) correct typographical errors and discrepancies between the table and the plant and (2) have the table reflect instrumentation that has been added or removed as a result of plant modifications. The table is also rearranged to have the fire zones listed in numerical order. This proposed change supersedes TVA's TS change request number 87-04 that was submitted by letter dated May 12, 1987.

Basis for proposed no significant hazards consideration determination: The Commission has provided standards for determining whether a significant hazards determination exists as stated in 10 CFR 50.92(c). 10 CFR 50.91 requires that at the time a licensee requests an amendment, it must provide to the Commission its analyses, using the standards in Section 50.92, on the issue of no significant hazards consideration. Therefore, in accordance with 10 CFR 50.91 and 10 CFR 50.92, the licensee has provided the following analysis:

TVA has evaluated the proposed TS change and determined that it does not represent a significant hazards consideration based on criteria established in 10 CFR 50.92(c). Operation of SQN in accordance with the proposed amendment will not:

1. Involve a significant increase in the probability or consequences of an accident previously evaluated.

The fire detection instruments are elements of the early warning fire detection system whose mission is to notify personnel of a fire, actuate automatic suppression systems, and control auxiliary equipment. The correction of typographical errors associated with fire detection instrument locations will provide for the correct location identification of a fire in the unlikely event one should occur in the plant. The addition of fire protection instrumentation will provide increased coverage of the areas monitored by the fire detection warning system, enabling a potential fire to be located and appropriate responses to be initiated in a more timely fashion than without the instrumentation. The addition of inadvertently omitted fire zones will ensure that appropriate fire detection instrumentation is operable at those locations determined to be important for the safety of the plant and plant personnel. The proposed TS change amends table 3.3-11 to correct typographical errors and add fire detection instruments installed as a result of plant modifications. Additionally, the reordering of the table will lessen the possibility of errors when using the table. Thus, the proposed change improves overall plant safety and does not increase either the probability or consequences of an accident previously evaluated.

(2) create the possibility of a new or different kind of accident from any previously analyzed.

The proposed TS change amends table 3.3-11 to correct typographical errors, to add fire zones that have previously been inadvertently omitted, and to add fire detection instrumentation installed as a result of plant modifications. Correction of typographical errors and inadvertent omissions will provide the correct identification of the location of a fire, in the unlikely event that one should occur, as well as ensure that appropriate fire detection instrumentation is operable. The additional fire detection instrumentation increases the ability of plant personnel to identify and take appropriate corrective action in the unlikely event that a fire should occur. Thus, the proposed TS change improves the plant's ability to respond to previously evaluated accidents and events and does not create the possibility of a new or different kind of accident from any accident previously evaluated.

(3) involve a significant reduction in a margin of safety.

Again, the proposed TS change amends table 3.3-11 to correct typographical errors, to add fire zones that have previously been inadvertently omitted, and to add

instrumentation installed as a result of plant modifications. Correcting typographical errors and adding fire zones that had previously been inadvertently omitted will allow for the correct identification of instrument location, as well as providing for appropriate fire detection instrumentation to be operable, thereby improving plant safety. [The] Addition of recently installed instrumentation provides for increased surveillance capabilities within the plant, thereby again improving plant safety. Rearrangement of the table reduces the chance of errors in utilizing the table. Thus, the proposed TS change improves overall plant safety and results in no reduction in margin of safety.

The staff has reviewed the licensee's no significant hazards consideration determination and agrees with the licensee's analysis. Therefore, the staff proposes to determine that the application for amendments involves no significant hazards consideration.

Local Public Document Room location: Chattanooga-Hamilton County Library, 1001 Broad Street, Chattanooga, Tennessee 37402.

Attorney for licensee: General Counsel, Tennessee Valley Authority, 400 West Summit Hill Drive, E11 B33, Knoxville, Tennessee 37902.

NRC Assistant Director: Gary G. Zech

Tennessee Valley Authority, Docket Nos. 50-327 and 50-328, Sequoyah Nuclear Plant, Units 1 and 2, Hamilton County, Tennessee

Date of amendment requests: March 1, 1988 (TS 87-44)

Description of amendment requests: The Tennessee Valley Authority (TVA) has proposed changes to Section 6, Administrative Controls, of the Sequoyah Nuclear Plant, Units 1 and 2, Technical Specifications (TS). These changes are to reflect TVA corporate and Sequoyah Site organizational changes and to properly identify the desired organizational structure for both corporate and site staffs. The proposed changes are identified below.

1. The name of Nuclear Safety and Licensing has been changed to Nuclear Licensing and Regulatory Affairs for clarification of responsibilities.

2. The site quality control (QC) and quality engineering (QE) functions have been divided into separate lines of authority and responsibility to enhance the functions. The Plant Operations Review Committee (PORC) composition is revised to reflect this change in authorities and responsibilities.

3. The corporate and site security organizations were reorganized to provide corporate level programmatic guidance while elevating site security reporting to the Site Director.

4. Responsibility for the Fire Protection Program and fire brigade staffing is being removed from the industrial safety group and operations group, respectively, and placed in an independent Fire Protection Section to provide enhanced, dedicated fire protection management and coverage.

5. An Assistant to the Plant Manager position has been added to the plant management structure.

6. A water and waste processing section is being established to separate this function from other shift operation duties, and establish direct accountability to the Operations Superintendent.

7. A maintenance engineering group is being established to provide a measure of separation between the maintenance craft and engineering disciplines.

8. The technical support function under the Plant Manager is to be elevated to a superintendent level. This provides enhanced authority and responsibility for the function, and makes the function directly reportable to the Plant Manager. The PORC composition is revised to reflect this change in authorities and responsibilities.

9. The Technical Review and Control Section (TS 6.5.1A) is revised to reflect that all activities which affect nuclear safety are ultimately the responsibility of the Plant Manager and the plant superintendents.

10. The Deputy Manager of Nuclear Power position is deleted from TS Figure 6.2-1 because it is not in the direct line of management for plant operations.

11. The planning and scheduling and the radiological control functions are revised on TS Figure 6.2-2 to reflect them as management positions.

12. The references to unit staff and organization in TS Section 6 are changed to facility staff and organization for consistency with other information in Section 6.

Basis for proposed no significant hazards consideration determination: In its submittal dated March 1, 1988, TVA provided the basis for the proposed changes to TS Section 6. This basis is the following:

The first change is a title change only. The licensing staff title was changed from Nuclear Safety and Licensing to Nuclear Licensing and Regulatory Affairs. This was done to clarify the independence of the Nuclear Safety Review Board from the licensing staff. There are no changes in lines of authority or responsibility related to this technical specification change.

The second change is the result of a change in the lines of responsibility and authority in the Division of Nuclear Quality Assurance (DNQA). The original organization had both QE and QC under the supervision of the Quality Engineering and Control Manager, who reported to the Site QA Manager. The DNQA reorganization separated the QE and QC functions, and established both a QE Manager and a QC Manager. The QE Manager is retained as a member of PORC.

The next change [3.] is the result of the restructuring of the corporate and site security staffs. Under the new organization, the Site Security Manager receives functional direction from the Nuclear Security Branch of the Division of Nuclear Services. The Site Security Manager receives daily direction and management from the Site Director. This organization provides a centralized programmatic support group, in addition to the routine management provided by the Site Director. The Site Security Manager now reports to the Site Director instead of the Plant Manager because security is a function supporting the site.

Another change [4.] will be the result of separating fire protection responsibilities from the industrial safety section. A Fire Protection Section is being developed that will provide the fire brigade personnel and maintain the site fire protection program. This change will enhance the management of the fire protection program, and provide dedicated fire protection coverage.

Another change [5.] is made to reflect an additional management position at the Plant Manager level. The Assistant to the Plant Manager position was formed to increase management availability and attention at this level. The Fire Protection Section and the Plant Operations Review Staff will report to the Assistant to the Plant Manager.

Two other changes [6. and 7.] are made to clarify the separation of responsibilities for two plant sections. The Water and Waste Processing Group Supervisor position is added to Figure 6.2-2 to clarify that the water and waste processing function is performed by a section separate from the shift operations personnel. Simarily, the maintenance engineering supervisor position is added to clarify the separate maintenance engineering and craft groups.

The remaining organizational changes [8.] are the result of elevating the technical support functions to a superintendent level. This was done to enhance the responsibilities and authorities of the function. It also makes the function report directly to the Plant Manager. Chemistry, reactor engineering, mechanical test, and systems engineering are all technical support groups that will report to the Technical Support Superintendent. As part of this realignment, the Nuclear Power Plant Superintendent position is changed to Operations Superintendent. This position is now responsible for the operations and the water and waste processing functions. Also, as part of this realignment, the Assistant Operations Supervisor position was removed. This removes one layer of management, and establishes direct reporting of the Shift Supervisor to the Operations Manager.

As part of the technical support reorganization, the PORC composition will be revised to reflect the superintendent positions as members. The Operations Manager and QE Manager are also retained as members. A Division of Nuclear Engineering representative is added as a PORC member to provide engineering expertise. This PORC

composition is consistent with the PORC responsibility to provide a diverse, upper management oversight review of activities affecting nuclear safety.

The revisions to Section 6.5.1A [9.] are made because the Plant Manager and the plant superintendents are ultimately responsible for the safe operation of the plant. As such, the activities that affect nuclear safety are under their supervision and control. Also, a wording change is made in Section 6.5.1A.1.c for consistency with other wording in the section.

The Deputy Manager of Nuclear Power position is deleted from Figure 6.2-1 because it is not in the direct line of management for plant operations [10.]. The position was created as part of TVA's management reorganization and development effort as described in the Nuclear Performance Plan Volume 1. It is not appropriate to represent it as part of the direct management chain because the Site Director reports directly to the Manager of Nuclear Power in matters concerning safe operation of the plant.

The planning function and radiological control functions are revised on Figure 6.2-2 to present them as management positions [11.]. This is done for consistency with the other positions presented on the figure. Planning and scheduling is under the responsibility of the Planning, Scheduling, Estimating, and Financial Service Staff Manager. Similarly, radiological control functions are under the supervision of the Site Radiological Control Superintendent.

The references in Section 6 to unit staff and organization are changed to facility staff and organization [12.]. This is consistent with the title of, and the organization shown, on Figure 6.2-2.

The changes described above represent corporate and site organizational changes that affect the technical specifications in Section 6. The changes range from title changes only, to revised lines of responsibility and authority. The changes are made to maintain a proper representation of the corporate and site organizations in the technical specifications.

The Commission has provided standards for determining whether a significant hazards determination exists as stated in 10 CFR 50.92(c). 10 CFR 50.91 requires that at the time a licensee requests an amendment, it must provide to the Commission its analyses, using the standards in Section 50.92, on the issue of no significant hazards consideration. Therefore, in accordance with 10 CFR 50.91 and 10 CFR 50.92, TVA has performed and provided the following analysis for Sequoyah (SQN) in its submittal.

TVA has evaluated the proposed technical specification change and determined that it does not represent a significant hazards consideration based on criteria established in 10 CFR 50.92(c). Operation of SQN in accordance with the proposed amendment will not:

(1) Involve a significant increase in the probability or consequences of an accident previously evaluated. This change is intended to accurately reflect the changes to the Administrative Controls section (Section 6) of the technical specifications resulting from recent and planned organization changes. The functions specified in Section 6 [which are] important to the safe operation of SQN have not been altered or deleted. The changes to this section merely reflect title changes, new positions, and the realignment of positions that hold the expertise to perform these functions. The title changes are made for clarification. The roles of the individuals charged with the responsibility of safe operation of this facility are enhanced by the new positions and realignments. This change better identifies those positions occupied by individuals qualified to provide this technical assistance. There are no hardware, procedure, personnel, or analysis changes represented by this amendment proposal that adversely affect the probability of occurrence or the consequences of an accident previously evaluated in the [final] safety analysis report.

(2) Create the possibility of a new or different kind of accident from any previously analyzed. This change represents title changes and changes in the administrative process in that new positions and responsibilities are identified. The functions important to safety will continue to be performed by those individuals who are technically competent to perform these functions; therefore, the potential for the increase of a possibility of an accident or a new or different type of accident is reduced rather than increased because of having the appropriate personnel designated for these functions.

(3) Involve a significant reduction in a margin of safety. The changes in this amendment proposal serve only to clarify or enhance those positions responsible for key safety functions specified in Section 6 of technical specifications. No function has been impaired or deleted by this change. On the contrary, these functions are improved by the additional clarity and elevated levels of authority and responsibility afforded by the proposed changes.

The staff has reviewed the licensee's no significant hazards consideration determination and agrees with the licensee's analysis. For the item (2) above, it is not that the proposed change reduces the potential for a new or different kind of accident, but that the proposed change does not affect any component or system in the plant, the operation of the plant, or the kind of safety reviews conducted at the plant and, therefore, does not create the possibility of a new or different kind of accident from any previously analyzed. Therefore, the staff proposes to determine that the application for amendments involves no significant hazards considerations.

Local Public Document Room location: Chattanooga-Hamilton County Library, 1001 Broad Street, Chattanooga, Tennessee 37402.

Attorney for licensee: General Counsel, Tennessee Valley Authority, 400 West Summit Hill Drive, E11 B33, Knoxville, Tennessee 37902.

NRC Assistant Director: Gary G. Zech

Virginia Electric and Power Company, Docket Nos. 50-338 and 50-339, North Anna Power Station, Units No. 1 and No. 2, Louisa County, Virginia

Date of amendment request: March 18, 1988

Description of amendment request: The proposed changes would revise the NA-1&2 Technical Specifications (TS) and the NA-2 Facility Operating License No. NPF-7. The proposed changes are itemized as follows. Item 1 would revise the NA-1&2 TS Table 6.2.1, Minimum Shift Crew Composition. Item 2 would delete the NA-1 TS 6.13 and the NA-2 Facility Operating License Conditions 4.a, 4.b, 4.d, and 4.e, regarding the schedule for identification of environmental qualification of equipment important to safety. Item 3 would revise the NA-1&2 TS 6.9.2, Special Reports. Specifically, the Item 1 change would simplify the Shift Composition requirements of the NA-1&2 TS Table 6.2-1 by eliminating the reduced staffing allowances for operations with one unit in Modes 5 and 6 and by combining the requirements of the currently independent but interrelated NA-1&2 TS into a single comprehensive table. This change would not reduce the requirements from those presently specified in the NA-1&2 TS and would increase the staffing requirements when one unit is in Mode 1, 2, 3, or 4 and the other unit is in Mode 5 or 6. In addition, the change would add the requirement for an additional Auxiliary Operator (AO), which is in accordance with the licensee's commitment in the NA-1&2 10 CFR 50 Appendix R Report.

The Item 2 change would delete NA-1 TS 6.13 and NA-2 Facility Operating License Conditions 4.a, 4.b, 4.d, and 4.e in accordance with 10 CFR 50.49(g), which provides the schedule for identification of qualified equipment important to safety and the replacement of equipment important to safety that is not qualified and 10 CFR 50.49(j), which requires the maintenance of an auditable record of the equipment qualification. In addition, 10 CFR 50.49(g) also states, "The schedule in this paragraph supersedes the June 30, 1982, deadline, or any other previously imposed date, for environmental qualification of electrical equipment contained in certain nuclear power operating licenses."

The Item 3 change would provide a more complete list of Special Reports required by the NA-1&2 TS. The purpose

of this change would achieve consistency between TS 6.9.2 and the various Limiting Conditions for Operations (LCOs) that require the submission of Special Reports.

Basis for proposed no significant hazards consideration determination: The Commission has provided guidance concerning the application of these standards by providing certain examples (51 FR 7741). Example (ii) states that a change that constitutes an additional limitation, restriction, or control not presently included in the Technical Specifications: for example, a more stringent surveillance requirement, is explicitly considered not likely to involve significant hazards. As noted above, the Item 1 change will increase the Minimum Shift Crew Composition in accordance with the licensee's commitments for 10 CFR 50 Appendix R compliance. Therefore, the changes noted in Item 1 above are enveloped by example (ii). In addition, example (vii) states that a change to make a license conform to changes in regulations, where the license change results in very minor changes to facility operations in keeping with the regulations, is considered not likely to involve a significant hazards. For the changes noted in Item 2 above, 10 CFR 50.49 provides the requirements of, or supersedes, TS 6.13 for NA-1 and NA-2 Facility Operating License Conditions 4.a, 4.b, 4.d, and 4.e. Thus, the Item 2 changes noted above are enveloped by example (vii). Finally, example (i) states "a purely administrative change to the TS: for example, a change to achieve consistency throughout the TS, correction of an error, or a change in nomenclature is considered not likely to involve a significant hazards." The proposed changes regarding Item 3 would achieve consistency between the NA-1&2 TS 6.9.2 and the various LCOs that require the submission of Special Reports. Also, TS 6.9.2 has been updated to provide a more complete list of Special Reports required by the NA-1&2 TS. Therefore, the proposed changes for Item 3 are enveloped by example (i). Accordingly, the Commission proposes to determine that the changes described in Items 1, 2, 3 above involve no significant hazards considerations.

Local Public Document Room location: Board of Supervisors Office, Louisa County Courthouse, Louisa, Virginia 23093 and the Alderman Library, Manuscripts Department, University of Virginia, Charlottesville, Virginia 22901.

Attorney for licensee: Michael W. Maupin, Esq., Hunton and Williams, P.O. Box 1535, Richmond, Virginia 23212.

NRC Project Director: Herbert N. Berkow

Washington Public Power Supply System, Docket No. 50-397, WNP-2, Richland, Washington

Date of amendment request: November 12, 1986 and November 18, 1987

Description of amendment request: In accordance with the requirements of 10 CFR 73.55 and accompanying 10 CFR 73.70 record reporting requirements, the licensee submitted amendments to the Physical Security Plan for Washington Nuclear Project Number 2 to reflect recent changes to that regulation. The proposed license amendment would modify paragraph 2.E of Facility Operating License No. NPF-21 to require compliance with the revised Plan.

Basis for proposed no significant hazards consideration determination: On August 4, 1986 (51 FR 27817 and 27822), the Nuclear Regulatory Commission amended Part 73 of its regulations, "Physical Protection of Plants and Materials," to clarify plant security requirements to afford an increased assurance of plant safety. The amended regulations required that each nuclear power reactor licensee submit proposed amendments to its security plan to implement the revised provisions of 10 CFR 73.55. The licensee submitted revisions to the previously approved plan on November 12, 1986 and November 18, 1987, to satisfy the requirements of the amended regulations. The Commission proposes to amend the license to reference the plan as revised.

In the Supplementary Material accompanying the amended regulations, the Commission indicated that it is amending its regulations "to provide a more safety conscious safeguards systems while maining the current levels of protection" and that the "Commission believes that the clarification and refinement of requirements as reflected in these amendments is appropriate because they afford an increased assurance of plant safety."

The Commission has provided guidance concerning the application of the criteria for determining whether a significant hazards consideration exists by providing certain examples of actions involving no significant hazards considerations (51 FR 7751). Example (vii) is "a change to conform a license to changes in the regulations, where the license change results in very minor changes to facility operations clearly in keeping with the regulations." The changes fall within the scope of example (vii). For the foregoing reason, the Commission proposes to determine the proposed amendment involves no significant hazards consideration.

Local Public Document Room: Richland Public Library, Swift and Northgate Streets, Richland, Washington 99352.

Attorney for the licensee: Nicholas S. Reynolds, Esq., Bishop, Cook, Purcell and Reynolds, 1400 L Street, NW., Washington, DC 20005-3502.

NRC Project Director: George W. Knighton

Wolf Creek Nuclear Operating Corporation, Kansas Gas and Electric Company, Kansas City Power & Light Company, Kansas Electric Power Cooperative, Inc., Docket No. 50-482, Wolf Creek Generating Station, Coffey County, Kansas

Date of amendment request: February 26, 1988

Description of amendment request: This license amendment request proposes revising Technical Specification (T.S.) Figures 6.2-1, 6.2-2, and Section 6.5.1.2 which addresses the Wolf Creek Nuclear Operating Corporation Organization. The proposed changes involve:

1. Changes to titles in T.S. Figure 6.2-1,
2. Changes in reporting relationships shown on T.S. Figure 6.2-2,
3. Removal of positions and organizations from T.S. Figures 6.2-1 and 6.2-2.,
4. Changes to the reporting relationships of the Maintenance Services Supervisor and the Maintenance Support Supervisor,
5. Changes to the Plant Safety Review Committee composition.

Basis for proposed no significant hazards consideration determination: In accordance with the requirements of 10 CFR 50.92, the licensee has submitted the following no significant hazards determination:

This amendment revises Wolf Creek Generating Station (WCGS), Unit No. 1, Technical Specifications Section 6.5.1.2, which addresses the composition of the Plant Safety Review Committee, Figure 6.2-1, which addresses the Operating Corporation Organization, and Figure 6.2-2, which addresses the Operations Division Organization.

The first set of requested revisions involve changes to titles in Figure 6.2-2. The titles of Superintendent of Maintenance; Superintendent of Operations; Superintendent of Technical Support; and Superintendent of Plant Support are being changed to the Manager of Maintenance and Modifications; Manager of Operations; Manager of Technical Support; and the Manager of Plant Support respectively.

The title of Operations Coordinator - Operations is being changed to the Operations Supervisor, and the title of

Operations Coordinator - Projects and Planning is being changed to the Operations Support Supervisor. The title of the Engineering/Specialist currently under the Operations Coordinator - Projects and Planning is being changed to the Projects group.

Additional title changes are being made to T.S. Figure 6.2-1 and T.S. Section 6.5.1.2. The title Superintendent Quality Control is being changed to the Manager Quality Control in Figure 6.2.1. The title of Instrument and Control Supervisor is being changed to the Manager Instrumentation and Controls.

These title changes are only administrative in nature and do not represent any change in reporting relationships or reduction in job responsibilities, relationships or overall organizational commitments.

The second set of requested revisions involve changes in reporting relationships shown on T.S. 6.2-2. The Outage Manager, previously reporting to the Vice-President Nuclear Operations, will be reporting directly to the Plant Manager and be included in T.S. Figure 6.2-2. This change increases organizational effectiveness by providing the Plant Manager direct supervision of outage activities.

Fire Protection, previously reporting to the Superintendent of Plant Support, will be reporting to the Operations Support Supervisor under the Manager of Operations. This change will provide better control and better response to the concerns of Fire Protection, and does not effect overall organizational commitments.

Health Physics, previously reporting to the Superintendent of Plant Support, will be reporting to the Manager of Technical Support. This is only a change in reporting relationship and has no effect on job responsibilities.

Compliance, previously reporting to the Superintendent of Regulatory, Quality, and Administrative Services, will be reporting to the Manager of Plant Support. This is only a revision of reporting relationships and does not effect job responsibilities.

Administration, previously reporting to the Superintendent of Regulatory, Quality, and Administrative Services, will be reporting to the Manager of Plant Support. This is only a revision of reporting relationships and does not effect job responsibilities.

Emergency Planning will be removed from T.S. Figure 6.2-2. Emergency Planning will be reporting through Health Physics. This relationship should prove to be a more efficient structure.

These reporting relationship changes represent organizational enhancements and do not constitute changes in overall organizational commitments.

The third set of requested revisions involve positions and organizations that have been removed from T.S. Figures 6.2-1 or 6.2-2. The position of Superintendent Regulatory, Quality, and Administrative Services, currently shown on Figure 6.2-2, is being deleted. The responsibilities of this position will be assigned to the Manager of Plant Support. This change represents an organizational restructuring and does not effect overall organizational commitments.

Document Control, currently reporting to the Superintendent of Regulatory, Quality, and Administrative Services as shown on Figure 6.2.-2, is being consolidated with the Document Control group reporting to the Manager Management Systems. The Manager Management Systems reports to the Vice-President Engineering and Technical Services as shown on Figure 6.2-1. This will increase organizational effectiveness by consolidating two departments with similar responsibilities.

Engineering and Technical Services Support, currently shown on Figure 6.2-1, is being deleted. The responsibilities of Engineering and Technical Services Support are being divided between the remaining departments under the Vice-President Engineering and Technical Services. This change is an organizational restructuring and will not change overall organizational commitments.

The Manager Facilities and Modifications, currently shown on Figure 6.2-1 reporting to the Vice-President Engineering and Technical Services, is being deleted. Facilities and Modifications is being consolidated with the Maintenance organization shown on Figure 6.2-2 reporting to the Manager of Maintenance and Modifications. This change will increase organizational effectiveness by consolidating two departments with similar responsibilities.

The fourth set of requested revisions to the Technical Specifications involve changes in responsibilities. The Maintenance Services Supervisor, currently reporting to the Superintendent of Maintenance in T.S. Figure 6.2-2, is being replaced by Maintenance Engineering and Maintenance Planning. This revision will enhance organizational effectiveness by allowing both the Maintenance Planning and Maintenance Engineering, previously reporting to the Maintenance Services Supervisor, to report directly to the Manager of Maintenance and Modifications.

The Maintenance Support Supervisor, currently reporting to the Superintendent of Maintenance in T.S. Figure 6.2-2, is being replaced by Electrical Maintenance and Mechanical Maintenance. This revision will enhance organizational effectiveness by allowing both Electrical Maintenance and Mechanical Maintenance, previously reporting to the Maintenance Support Supervisor, to report directly to the Manager of Maintenance and Modifications.

The fifth set of requested revisions involve changes to the Plant Safety Review Committee (PSRC) composition as shown in T.S. Section 6.5.1.2. T.S. Section 6.5.1.2 is being revised to reflect the assignment of the Manager of Plant Support as the PSRC Chairman and the removal of the Plant Manager from the PSRC. This change is intended to provide effective oversight of all PSRC activities. T.S. 6.5.1.2 is also being revised to reflect the deletion of the Superintendent of Regulatory, Quality and Administrative Services and the title changes for the other Superintendent positions and the Supervisor Instrumant and Control shown in Section 6.5.1.2. This revision does not change overall organizational commitments.

The Commission has provided guidance concerning the application of the standards in 10 CFR 50.92 by providing examples of amendments that are not likely to involve Significant Hazards Consideration (51 FR 7751). Among those examples are, "A purely administrative change to technical specifications: for example, a change to achieve consistency throughout the Technical Specifications, corrections of an error, or a change in nomenclature" and "A change that constitutes an additional limitation, restriction, or control not presently included in the Technical Specifications..."

The proposed revisions do not involve a significant increase in the probability or consequences of an accident previously evaluated. These changes involve organizational modifications and enhancements and as such, have no effect of plant equipment or the technical qualifications of plant personnel.

The proposed revisions do not create the possibility of a new or different kind of accident from any accident previously evaluated. These changes do not affect the qualifications of personnel who operate Wolf Creek Generation Station, nor do they involve any change to the installed plant systems or the overall operating philosophy of Wolf Creek Generating Station.

The proposed revisions do not involve a significant reduction in a margin of safety. These changes do not involve any changes in overall organizational commitments. Organizational enhancements alone do not reduce any margin of safety.

Based on the above discussions it has been determined that the requested Technical Specification revisions do not involve a significant increase in the probability or consequences of an accident or other adverse condition over previous evaluations; or create the possibility of a new or different kind of accident over previous evaluations; or involve a significant reduction in a margin of safety. Therefore, the requested license amendment does not involve a significant hazards consideration.

Based on the previous discussion, the licensee concluded that the proposed amendment request does not involve a significant increase in the probability of a new or different kind of accident from any accident previously evaluated; nor involve a significant reduction in the required margin of safety. The NRC staff has reviewed the licensee's no significant hazards considerations determination and agrees with the licensee's analysis. The staff has, therefore, made a proposed determination that the licensee's request does not involve a significant hazards consideration.

Local Public Document Room Location: Emporia State University, William Allen White Library, 1200 Commercial Street, Emporia, Kansas 66801 and Washburn University School of Law Library, Topeka, Kansas

Attorney for licensee: Jay Silberg, Esq., Shaw, Pittman, Potts and Trowbridge, 2300 N Street, NW., Washington, DC 20037

NRC Project Director: Jose A. Calvo

Yankee Atomic Electric Company Docket No. 50-029 Yankee Nuclear Power Station, Franklin County, Massachusetts

Date of application for amendment: March 25, 1988

Description of amendment request: The proposed amendment would delete references to mode 5 (cold shutdown) in certain Technical Specification tables in order to gain consistency between mode requirements for the containment systems and containment isolation systems instrumentation.

Basis for proposed no significant hazards consideration determination: The Commission has provided standards for determining whether a significant hazards determination exists as stated in 10 CFR 50.92(c). A proposed amendment to an operating license involves no significant hazards considerations if operation of the facility in accordance with the proposed amendment would not: (1) involve a significant increase in the probability or consequences of an accident previously evaluated; or (2) create the possibility of a new or different kind of accident from any accident previously evaluated; or (3) involve a significant reduction in a margin of safety.

The licensee's analyses related to this proposal states the following:

This change has been evaluated and determined to involve no significant hazards consideration. As such, this proposed change would not:

1. Involve a significant increase in the probability or consequences of an accident previously evaluated. This change merely provides consistency between existing specifications. The applicable mode deleted by this change applies to containment isolation actuation instrumentation during a mode when containtment integrity is not required. Therefore, there is no significant increase in the probability or consequences of an accident previously evaluated.

2. Create the possibility of a new or different kind of accident from any previously analyzed. This change is consistent with Standard Technical Specifications and does not introduce a new operation, configuration or analytical assumption. Therefore, there is no possibility of a new or different kind of accident from any previously analyzed.

3. Involve a significant reduction in a margin of safety. This change merely provides for consistency between existing specifications. The applicable mode deleted by this change applies to containment isolation actuation instrumentation during a mode when containment integrity is not required. Therefore, there is no significant reduction in the margins of safety associated with containment integrity.

Based on the considerations contained herein, it is concluded that there is reasonable assurance that operation of the Yankee plant, consistent with the proposed Technical Specifications, will not endanger the health and safety of the public. This proposed change has been reviewed by the Nuclear Safety Audit and Review Committee.

The staff has reviewed the licensee's analysis and agrees with it. Therefore, we conclude that the amendment satisfies the three criteria listed in 10 CFR 50.92. Based on that conclusion the staff proposes to make no significant hazards consideration determination.

Local Public Document Room location: Greenfield Community College, 1 College Drive, Greenfield, Massachusetts 01301.

Attorney for licensee: Thomas Dignan, Esquire, Ropes and Gray, 225 Franklin Street, Boston, Massachusetts 02110.

NRC Project Director: Richard H. Wessman

PREVIOUSLY PUBLISHED NOTICES OF CONSIDERATION OF ISSUANCE OF AMENDMENTS TO OPERATING LICENSES AND PROPOSED NO SIGNIFICANT HAZARDS CONSIDERATION DETERMINATION AND OPPORTUNITY FOR HEARING

The following notices were previously published as separate individual notices. The notice content was the same as above. They were published as individual notices either because time did not allow the Commission to wait for this biweekly notice or because the action involved exigent circumstances. They are repeated here because the biweekly notice lists all amendments issued or proposed to be issued involving no significant hazards consideration.

For details, see the individual notice in the **Federal Register** on the day and page cited. This notice does not extend the notice period of the original notice.

Omaha Public Power District, Docket No. 50-285, Fort Calhoun Station, Unit No. 1, Washington County, Nebraska

Date of amendment request: March 9, 1988

Brief description of amendment request: The proposed amendment would revise the Technical Specification (TS) to allow a one-time extension in the 18 month surveillance interval for the inspection of Diesel Generator No. 1 during the refueling outage scheduled to begin September 1988. The 18 month inspection of Diesel Generator No. 1 is currently due by April 30, 1988.

Date of publication of individual notice in **Federal Register:** March 18, 1988 (53 FR 9015)

Expiration date of individual notice: April 18, 1988

Local Public Document Room location: W. Dale Clark Library, 215 South 15th Street, Omaha, Nebraska 68102.

NOTICE OF ISSUANCE OF AMENDMENT TO FACILITY OPERATING LICENSE

During the period since publication of the last biweekly notice, the Commission has issued the following amendments. The Commission has determined for each of these amendments that the application complies with the standards and requirements of the Atomic Energy Act of 1954, as amended (the Act), and the Commission's rules and regulations. The Commission has made appropriate findings as required by the Act and the Commission's rules and regulations in 10 CFR Chapter I, which are set forth in the license amendment.

Notice of Consideration of Issuance of Amendment to Facility Operating License and Proposed No Significant Hazards Consideration Determination and Opportunity for Hearing in connection with these actions was published in the **Federal Register** as indicated. No request for a hearing or petition for leave to intervene was filed following this notice.

Unless otherwise indicated, the Commission has determined that these amendments satisfy the criteria for categorical exclusion in accordance with 10 CFR 51.22. Therefore, pursuant to 10 CFR 51.22(b), no environmental impact statement or environmental assessment need be prepared for these amendments. If the Commission has prepared an environmental assessment under the special circumstances provision in 10 CFR 51.12(b) and has made a determination based on that assessment, it is so indicated.

For further details with respect to the action see (1) the applications for amendments, (2) the amendments, and (3) the Commission's related letters, Safety Evaluations and/or Environmental Assessments as indicated. All of these items are available for public inspection at the Commission's Public Document Room, 1717 H Street, NW., Washington, DC, and at the local public document rooms for the particular facilities involved. A copy of items (2) and (3) may be obtained upon request addressed to the U.S. Nuclear Regulatory Commission, Washington, DC 20555, Attention: Director, Division of Reactor Projects.

Arkansas Power & Light Company, Docket No. 50-368, Arkansas Nuclear One, Unit 2, Pope County, Arkansas

Date of applications for amendment: November 30, 1987 as supplemented on March 7, 1988.

Brief description of amendment: The amendment modified the Technical Specification to permit Arkansas Power and Light to render eight of the ten main steam safety valves inoperable and reset the remaining two valves while in Mode 3 in order to carry out the 10 year hydrostatic test on the main steam system.

Date of issuance: April 6, 1988

Effective date: April 6, 1988

Amendment No.: 83

Facility Operating License No. NPF-6. Amendment revised the Technical Specifications/license.

Date of initial notice in **Federal Register:** January 14, 1988 (53 FR 968) The Commission's related evaluation of the amendment is contained in a Safety Evaluation dated April 6, 1988.

No significant hazards consideration comments received: No.

Local Public Document Room location: Tomlinson Library, Arkansas Technical University, Russelville, Arkansas 72801

Boston Edison Company, Docket No. 50-293, Pilgrim Nuclear Power Station, Plymouth County, Massachusetts

Date of application for amendment: December 1, 1986 as supplemented on September 18, 1987

Brief Description of amendment: The amendment modified paragraph 3.G of the license to require compliance with the amended Physical Security Plan. The Plan was amended to conform to the requirements of 10 CFR 73.55 consistent with the provisions of 10 CFR 73.55, search requirements must be implemented within 60 days and miscellaneous amendments within 180 days from the effective date of this amendment.

Date of issuance: March 28, 1988

Effective date: Immediately

Amendment No.: 115

Facility Operating License No. DPR-35: Amendment revised the license.

Date of initial notice in **Federal Register:** February 24, 1988 (53 FR 5486) The Commission's related evaluation on the amendment is contained in a Safety Evaluation Report dated March 28, 1988.

No significant hazards consideration comments received: No.

Local Public Document Room location: Plymouth Public Library, 11 North Street, Plymouth, Massachusetts 02360.

Carolina Power & Light Company, et al., Docket No. 50-324, Brunswick Steam Electric Plant, Unit 2, Brunswick County, North Carolina

Dates of application for amendment: September 29, 1987, as supplemented November 24, 1987

Brief description of amendment: The amendment changes the Technical Specifications to lower the reactor water level setpoints for the isolation of the Group 1 primary containment isolation valves from low level 2 to low level 3 and to correct the existing master trip unit numbers to make them agree with current plant convention.

Date of issuance: April 1, 1988

Effective date: April 1, 1988

Amendment No.: 146

Facility Operating License No. DPR-62: Amendment revises the Technical Specifications.

Date of initial notice in **Federal Register:** December 16, 1987 (52 FR 4778) The Commission's related evaluation of the amendment is contained in a Safety Evaluation dated April 1, 1988.

No significant hazards consideration comments received: No.

Local Public Document Room location: University of North Carolina at Wilmington, William Madison Randall Library, 601 S. College Road, Wilmington, North Carolina 28403-3297.

Carolina Power & Light Company, et al., Docket Nos. 50-325 and 50-324, Brunswick Steam Electric Plant, Units 1 and 2, Brunswick County, North Carolina

Dates of application for amendments: March 5, 1986 and December 17, 1987

Brief description of amendments: Revision to Table 4.4.6.1.3-1 to allow staggered and varied schedule for removing Reactor Vessel Surveillance Capsules and addition to Technical Specification 4.4.6.1.3 to calculate cumulative effective full power years at least once every 18 months to support the reactor vessel material surveillance test.

Date of issuance: April 4, 1988

Effective date: April 4, 1988

Amendment Nos.: 117 and 147

Facility Operating Licenses Nos. DPR-71 and DPR-62. Amendments revise the Technical Specifications.

Date of initial notice in **Federal Register:** May 21, 1986 (51 FR 18677) and February 24, 1988 (53 FR 5487) The Commission's related evaluation of the amendments is contained in a Safety Evaluation dated April 4, 1988.

No significant hazards consideration comments received: No

Local Public Document Room location: University of North Carolina at Wilmington, William Madison Randall Library, 601 S. College Road, Wilmington, North Carolina 28403-3297.

Carolina Power & Light Company, et al., Docket No. 50-324, Brunswick Steam Electric Plant, Unit 2, Brunswick County, North Carolina

Date of application for amendment: December 10, 1987

Brief description of amendment: The amendment revises Technical Specification (TS) Tables 3.3.5.2-1 and 4.3.5.2-1 to reflect changed equipment numbers to comply with 10 CFR Part 50, Appendix R, Alternative Shutdown Capabilities.

Date of issuance: April 7, 1988

Effective date: April 7, 1988

Amendment No.: 148

Facility Operating License No. DPR-62: Amendment revises the Technical Specifications.

Date of initial notice in **Federal Register:** February 10, 1988 (53 FR 3952) The Commission's related evaluation of the amendment is contained in a Safety Evaluation dated April 7, 1988.

No significant hazards consideration comments received: No.

Local Public Document Room location: University of North Carolina at Wilmington, William Madison Randall Library, 601 S. College Road, Wilmington, North Carolina 28403-3297.

Carolina Power & Light Company, et al., Docket No. 50-324, Brunswick Steam Electric Plant, Unit 2, Brunswick County, North Carolina

Date of application for amendment: September 4, 1987

Brief description of amendment: Amendment incorporates operating limits for all fuel types for Cycle 8 operation.

Date of issuance: April 8, 1988

Effective date: April 8, 1988

Amendment No.: 149

Facility Operating License No. DPR-62: Amendment revises the Technical Specifications.

Date of initial notice in **Federal Register:** January 27, 1988 (53 FR 2310) This amendment grants a portion of the licensee's request. The Commission's related evaluation of the amendment is contained in a Safety Evaluation dated April 8, 1988.

No significant hazards consideration comments received: No.

Local Public Document Room location: University of North Carolina at Wilmington, William Madison Randall Library, 601 S. College Road, Wilmington, North Carolina 28403-3297.

Carolina Power & Light Company, et al., Docket No. 50-400, Shearon Harris Nuclear Power Plant, Unit 1, Wake and Chatham Counties, North Carolina

Dates of application for amendment: May 26, 1987 as supplemented November 2, 1987

Description of amendment: The amendment modifies Specification 5.3 of the Technical Specifications to allow only storage and handling of fuel elements having a maximum fuel enrichment of 4.2 weight percent uranium-235

Date of issuance: April 7, 1988

Effective date: April 7, 1988

Amendment No. 5

Facility Operating License No. NPF-63. Amendment revised the Technical Specifications.

Date of initial notice in **Federal Register:** December 16, 1987 (52 FR 47779) The Commission's related evaluation of the amendment is contained in a Safety Evaluation dated April 7, 1988.

No significant hazards consideration comments received: No

Attorney for the Licensee: R. E. Jones, General Counsel, Carolina Power & Light Company, Post Office Box 1551, Raleigh, North Carolina 27602

Local Public Document Room location: Richard B. Harrison Library, 1313 New Bern Avenue, Raleigh, North Carolina 27610

Commonwealth Edison Company, Docket Nos. STN 50-454 and STN 50-455, Byron Station Unit Nos. 1 and 2, Ogle County, Illinois; Docket Nos. STN 50-456 and STN 457, Braidwood Station, Unit Nos. 1 and 2, Will County, Illinois

Date of application for amendments: May 20, 1987

Brief description of amendments: These amendments revise the Technical Specifications to eliminate the setpoint verification in the monthly or quarterly Trip Actuating Device Operational Test for the undervoltage and underfrequency relays.

Date of issuance: April 8, 1988

Effective Date: April 8, 1988

Amendment Nos.: 16 for Byron, 7 for Braidwood

Facility Operating Licenses Nos. NPF-37, NPF-66, NPF-72, and NPF-75. Amendments revised the Technical Specifications.

Date of initial notice in **Federal Register:** July 1, 1987 (52 FR 24544). The Commission's related evaluation of the amendments is contained in a Safety Evaluation dated April 8, 1988.

No significant hazards consideration comments received: No

Local Public Document Room location: For Byron Station the Rockford Public Library, 215 N. Wyman Street, Rockford, Illinois 61101; for Braidwood Station the Wilmington Township Public Library, 201 S. Kankakee Street, Wilmington, Illinois 60481.

Commonwealth Edison Company, Docket No. 50-254, Quad Cities Nuclear Power Station, Unit 1, Rock Island County, Illinois

Date of application for amendment: November 17, 1987

Brief description of amendment: Amendment has incorporated changes to the Limiting Conditions for Operation, Surveillance Requirements and Basis of Technical Specification 3.4/4.4 for the Standby Liquid Control System to comply with 10 CFR 50.62 related modifications.

Date of issuance: March 28, 1988

Effective date: March 28, 1988

Amendment No.: 106

Facility Operating License Nos. DPR-29. Amendment revised the Technical Specifications.

Date of initial notice in **Federal Register:** December 30, 1987 (52 FR 49221). The Commission's related evaluation of the amendment is contained in a Safety Evaluation dated March 28, 1988.

No significant hazards consideration comments received: No.

Local Public Document Room location: Dixon Public Library, 221 Hennepin Avenue, Dixon, Illinois 61021.

Commonwealth Edison Company, Docket Nos. 50-295 and 50-304, Zion Nuclear Power Station, Units 1 and 2, Lake County, Illinois

Date of application for amendments: December 9, 1987, amended by letter dated February 11, 1988.

Brief description of amendments: These amendments upgrade plant program for verifying existence of adequate battery capacity.

Date of issuance: March 28, 1988

Effective date: March 28, 1988

Amendment Nos.: 109 and 98

Facility Operating License Nos. DPR-39 and DPR-48: Amendments revise the Technical Specifications.

Date of initial notice in **Federal Register:** February 10, 1988 (53 FR 3953). The Commission's related evaluation of the amendments is contained in a Safety Evaluation dated March 28, 1988.

No significant hazards consideration comments received: No.

Local Public Document Room location: Waukegan Public Library, 128 N. County Street, Waukegan, Illinois 60085.

Commonwealth Edison Company, Docket Nos. 50-295, and 50-304, Zion Nuclear Power Station, Unit Nos. 1 and 2, Lake County, Illinois

Date of application for amendments: May 29, 1987

Brief description of amendment: These amendments change Technical Specifications for the Low Temperature Overpressure Protection.

Date of issuance: April 4, 1988

Effective date: April 4, 1988

Amendment Nos: 110 and 99

Facility Operating License Nos. DPR-39 and DPR-48. Amendments revise the Technical Specifications.

Date of initial notice in **Federal Register:** August 26, 1987 (52 FR 32197) The Commission's related evaluation of the amendment is contained in a Safety Evaluation dated April 4, 1988.

No significant hazards consideration comments received: No

Local Public Document Room location: Waukegan Public Library, 128 N. County Street, Waukegan, Illinois 60085.

Connecticut Yankee Atomic Power Company, Docket No. 50-213, Haddam Neck Plant, Middlesex County, Connecticut

Date of application for amendment: November 19, 1988

Brief description of amendment: This amendment revises Table 4.2-1, "Minimum Frequencies for Testing, Calibrating and/or Checking Instrument Channels," such that daily heat balance calibration of the nuclear instrument is not required when the power range channels have been adjusted to maintain a 9 percent margin to the overpower trip setpoint steady-state reduced power operation.

Date of Issuance: March 28, 1988

Effective date: March 28, 1988

Amendment No.: 101

Facility Operating License No. DPR-61. Amendment revised the Technical Specifications.

Date of initial notice in **Federal Register:** February 24, 1988 (53 FR 5489). The Commission's related evaluation of this amendment is contained in a Safety Evaluation dated March 28, 1988.

No significant hazards consideration comments received: No.

Local Public Document Room location: Russell Library, 123 Broad Street, Middletown, Connecticut 06457.

Consumers Power Company, Docket No. 50-255, Palisades Plant, Van Buren County, Michigan

Date of application for amendment: September 11, 1987.

Brief description of amendment: This amendment involves the correction of a Technical Specification by deleting a footnote from Table 4.2.1 involving sampling frequency of a safety injection tank that pertained to Cycle 5 operation which ended a few years ago.

Date of issuance: March 25, 1988

Effective date: March 25, 1988

Amendment No.: 113

Provisional Operating License No. DPR-20. The amendment revised the Technical Specifications.

Date of initial notice in **Federal Register:** October 7, 1987 (52 FR 37545). The Commission's related evaluation of the amendment is contained in a letter to the licensee dated March 25, 1988.

No significant hazards consideration comments received: No.

Local Public Document Room location: Van Zoeren Library, Hope College, Holland, Michigan 49423.

Detroit Edison Company, Docket No. 50-341, Fermi-2, Monroe County, Michigan

Date of application for amendment: January 29, 1988

Brief description of amendment: The proposed amendment revises the Fermi-2 Technical Specification to add isolation valves for the primary containment radiation monitor.

Date of issuance: March 29, 1988

Effective date: March 29, 1988

Amendment No.: 17

Facility Operating License No. NPF-43. The amendment revises the Technical Specifications.

Date of initial notice in **Federal Register:** February 24, 1988 (53 FR 5489) The Commission's related evaluation of the amendment is contained in a Safety Evaluation dated March 29, 1988.

No significant hazards consideration comments received: No.

Local Public Document Room location: Monroe County Library System, 3700 South Custer Road, Monroe, Michigan 48161.

Duke Power Company, Docket Nos. 50-369 and 50-370, McGuire Nuclear Station, Units 1 and 2, Mecklenburg County, North Carolina

Date of application for amendments: December 2, 1986, and September 25, 1987

Brief description of amendments: The amendments modified paragraphs 2.E. of the licenses to require compliance with the amended Physical Security Plan. This Plan was amended to conform to the requirements of 10 CFR 73.55. Consistent with the provisions of 10 CFR 73.55, search requirements must be implemented within 60 days and miscellaneous amendments within 180 days from the effective date of these amendments.

Date of issuance: March 28, 1988

Effective date: March 28, 1988

Amendment Nos.: 79 and 60

Facility Operating License Nos. NPF-9 and NPF-17. Amendments revised the operating licenses.

Date of initial notice in **Federal Register:** February 24, 1988 (53 FR 5490) The Commission's related evaluation of the amendments is contained in a Safeguards Evaluation dated March 28, 1988.

No significant hazards consideration comments received: No

Local Public Document Room location: Atkins Library, University of North Carolina, Charlotte (UNCC Station), North Carolina 28223

Florida Power and Light Company, Docket No. 50-335, St. Lucie Plant, Unit No. 1, St. Lucie County, Florida

Date of application of amendment: January 20, 1988.

Brief description of amendment: The amendment increased the maximum U-235 enrichment contained in unirradiated fuel stored in the new fuel storage racks from 4.0 to 4.5 weight percent.

Date of Issuance: April 5, 1988

Effective Date: April 5, 1988

Amendment No.: 92

Facility Operating License No. DPR-67: Amendment revised the Technical Specifications.

Date of initial notice in **Federal Register:** February 24, 1988 (53 FR 5490). The Commission's related evaluation of the amendment is contained in a Safety Evaluation dated April 5, 1988.

No significant hazards consideration comments received: No.

Local Public Document Room location: Indian River Junior College Library, 3209 Virgina Avenue, Ft. Pierce, Florida.

Gulf States Utilities Company, Docket No. 50-458, River Bend Station, Unit 1 West Feliciana Parish, Louisiana

Date of amendment request: June 18, 1987 as supplemented March 11, 1988

Brief description of amendment: The amendment revises the Technical Specifications (TSs) to increase the leak detection setpoints and allowable values for the reactor water cleanup (RWCU) system heat exchanger room ambient and differential temperatures and decrease the reactor core isolation cooling (RCIC) system isolation trip setpoint and allowable value for the residual heat removal (RHR)/RCIC steam line flow-high.

Date of issuance: April 5, 1988

Effective date: April 5, 1988

Amendment No.: 19

Facility Operating License No. NPF-47. The amendment revised the Technical Specifications.

Date of initial notice in **Federal Register:** August 12, 1987 (52 FR 29919) The March 11, 1988 submittal provided additional clarifying information and did not change the finding of the initial notice. The Commission's related evaluation of the amendment is contained in a Safety Evaluation dated April 5, 1988.

No significant hazards consideration comments received: No.

Local Public Document Room location: Government Documents Department, Louisiana State University, Baton Rouge, Louisiana 70803

Louisiana Power and Light Company, Docket No. 50-382, Waterford Steam Electric Station, Unit 3, St. Charles Parish, Louisiana

Date of amendment request: December 10, 1987.

Brief description of amendment: The amendment revised the Technical Specifications by adding the requirement of having two emergency core cooling system subsystems operable when the reactor coolant system average temperature is greater than or equal to 500° F.

Date of issuance: March 30, 1988

Effective date: March 30, 1988

Amendment No.: 34

Facility Operating License No. NPF-38. Amendment revised the Technical Specifications.

Date of initial notice in **Federal Register:** January 13, 1988 (53 FR 829) The Commission's related evaluation of the amendment is contained in a Safety Evaluation dated March 30, 1988.

No significant hazards consideration comments received: No.

Local Public Document Room location: University of New Orleans Library, Louisiana Collection, Lakefront, New Orleans, Louisiana 70122

Louisiana Power and Light Company, Docket No. 50-382, Waterford Steam Electric Station, Unit 3, St. Charles Parish, Louisiana

Date of amendment request: January 29, 1988

Brief description of amendment: The amendment revised the Technical Specifications by allowing a further reduction in shutdown cooling flow during Mode 6 (refueling) to 2000 gpm, 375 hours after reactor shutdown.

Date of issuance: April 1, 1988

Effective date: April 1, 1988

Amendment No.: 35

Facility Operating License No. NPF-38. Amendment revised the Technical Specifications.

Date of initial notice in **Federal Register:** February 24, 1988 (53 FR 5491) The Commission's related evaluation of the amendment is contained in a Safety Evaluation dated April 1, 1988.

No significant hazards consideration comments received: No.

Local Public Document Room location: University of New Orleans Library, Louisiana Collection, Lakefront, New Orleans, Louisiana 70122.

Nebraska Public Power District, Docket No. 50-298, Cooper Nuclear Station, Nemaha County, Nebraska

Date of amendment request: December 14, 1987 and January 21, 1988.

Brief description of amendment: The amendment changed the Technical Specifications to permit installation of Lead Test Assembly fuel assemblies and control blades under the provisions of 10 CFR 50.59.

Date of issuance: April 1, 1988

Effective date: April 1, 1988

Amendment No.: 118

Facility Operating License No. DPR-46. Amendment revised the Technical Specifications.

Date of initial notice in **Federal Register:** March 1, 1988 (53 FR 6212) The Commission's related evaluation of the amendment is contained in a Safety Evaluation dated April 1, 1988.

No significant hazards consideration comments received: No.

Local Public Document Room location: Auburn Public Library, 118 15th Street, Auburn, Nebraska 68305.

Niagara Mohawk Power Corporation, Docket No. 50-220, Nine Mile Point Nuclear Station, Unit No. 1, Oswego County, New York

Date of application for amendment: January 21, 1988

Brief description of amendment: This amendment revises the Technical Specification Table 3.2.7 to delete Main Steam Warmup Valves. These valves are being removed from the plant because they are not required.

Date of issuance: March 25, 1988

Effective date: March 25, 1988

Amendment No.: 96

Facility Operating License No. DPR-63: Amendment revised the Technical Specifications.

Date of initial notice in **Federal Register:** February 24, 1988 (53 FR 5492) The Commission's related evaluation of the amendment is contained in a Safety Evaluation dated March 25, 1988

No significant hazards consideration comments received: No

Local Public Document Room location: Reference and Documents Department, Penfield Library, State University of New York, Oswego, New York 13126.

Northeast Nuclear Energy Company, et al., Docket No. 50-245, Millstone Nuclear Power Station, Unit No. 1, New London County, Connecticut

Date of application for amendment: May 26, 1987

Brief description of amendment: The Technical Specification change will correct the point of reference for measuring the nearest site boundary from the reactor building to the elevated stack. The change is consistent with the Unit 2 and 3 Technical Specifications and the design basis pathway calculations.

Date of issuance: March 28, 1988

Effective date: March 28, 1988

Amendment No.: 16

Facility Operating License No. DPR-21. Amendment revised the Technical Specifications.

Date of initial notice in **Federal Register:** August 12, 1987 (52 FR 29923). The Commission's related evaluation of the amendment is contained in a Safety Evaluation dated March 28, 1988.

No significant hazards consideration comments received: No.

Local Public Document Room location: Waterford Public Library, 49 Rope Ferry Road, Waterford, Connecticut 06385.

Northeast Nuclear Energy Company, et al., Docket No. 50-336, Millstone Nuclear Power Station, Unit No. 2, New London County, Connecticut Date of applications for amendments: December 23, 1987 and February 3, 1988

Brief description of amendment: The amendment revises the Technical Specifications (TS) to delete the chlorine detection system from TS 3/4.3.3.6. In addition, the amendment revises TS Table 3.9-1, "Access Doors to Spent Fuel Pool Area," to reflect the installation of a new access door to the spent fuel pool area.

Date of issuance: March 28, 1988

Effective date: March 28, 1988

Amendment No.: 127

Facility Operating License No. DPR-65. Amendment revised the Technical Specifications.

Date of initial notice in **Federal Register:** February 24, 1988 (53 FR 5493) The Commission's related evaluation of the amendment is contained in a Safety Evaluation dated March 28, 1988.

No significant hazards consideration comments received: No.

Local Public Document Room location: Waterford Public Library, Rope Ferry Road, Waterford, Connecticut 06385.

Pennsylvania Power and Light Company, Docket Nos. 50-387 and 50-388 Susquehanna Steam Electric Station, Units 1 and 2, Luzerne County, Pennsylvania

Date of application for amendments: April 13, 1987

Brief description of amendments: The amendments revised the Standby Gas Treatment System Action Statement.

Date of issuance: March 28, 1988

Effective date: March 28, 1988

Amendment Nos. 76 and 41

Facility Operating License Nos. NPF-14 and NPF-22. These amendments revised the Technical Specifications.

Date of initial notice in **Federal Register:** July 15, 1987 (52 FR 26595) The Commission's related evaluation of the amendments is contained in a Safety Evaluation dated March 28, 1988.

No significant hazards consideration comments received: No

Local Public Document Room location: Osterhout Free Library, Reference Department, 71 South Franklin Street, Wilkes-Barre, Pennsylvania 18701.

Pennsylvania Power and Light Company, Docket Nos. 50-387 and 50-388 Susquehanna Steam Electric Station, Units 1 and 2, Luzerne County, Pennsylvania

Date of application for amendments: October 7, 1987

Brief description of amendments: These amendments revised the Susquehanna Steam Electric Station, Units 1 and 2, Technical Specifications Sections 3.0.4, 4.0.3, and 4.0.4 regarding operational conditions in response to Generic Letter 87-09.

Date of issuance: April 4, 1988

Effective date: April 4, 1988

Amendment Nos.: 78 and 43

Facility Operating License Nos. NPF-14 and NPF-22. These amendments revised the Technical Specifications.

Date of initial notice in **Federal Register:** December 30, 1987 (52 FR 49230) The Commission's related evaluation of the amendments is contained in a Safety Evaluation dated April 4, 1988.

No significant hazards consideration comments received: No

Local Public Document Room location: Osterhout Free Library, Reference Department, 71 South Franklin Street, Wilkes-Barre, Pennsylvania 18701.

Portland General Electric Company, Docket No. 50-344, Trojan Nuclear Plant, Columbia County, Oregon

Date of application for amendment: November 13, 1987

Brief description of amendment: The amendment revises Technical Specification Section 3/4.10, "Special Test Exceptions" by extending the surveillance time period for verifying control rod insertability during control rod worth and shutdown margin tests from 24 hours to 7 days.

Date of issuance: March 31, 1988

Effective date: March 31, 1988

Amendment No.: 139

Facilities Operating License No. NPF-1: Amendment revised the Technical Specifications.

Date of initial notice in **Federal Register:** February 24, 1988 (53 FR 5494). The Commission's related evaluation of the amendment is contained in a Safety Evaluation dated March 31, 1988.

No significant hazards consideration comments received: No.

Local Public Document Room location: Portland State University Library, 731 S. W. Harrison St., Portland Oregon 97207

Public Service Company of Colorado, Docket no. 50-267, Fort St. Vrain Nuclear Generating Station, Platteville, Colorado

Date of amendment request: December 23, 1986 as supplemented December 17, 1987

Brief description of amendment: The amendment deletes the tabular listing of safety-related snubbers from the Technical Specifications.

Date of issuance: April 7, 1988

Effective date: April 7, 1988

Amendment No.: 59

Facility Operating License No. DPR-34. Amendment revised the Technical Specifications.

Date of initial notice in **Federal Register:** April 22, 1987 (52 FR 13348) The December 17, 1987 submittal provided additional clarifying information and did not change the finding of the initial notice. The Commission's related evaluation of the amendment is contained in a Safety Evaluation dated April 7, 1988.

No significant hazards consideration comments received: No.

Local Public Document Room location: Greeley Public Library, City Complex Building, Greeley, Colorado

Public Service Electric & Gas Company, Docket No. 50-354, Hope Creek Generating Station, Salem County, New Jersey

Date of application for amendment: June 4, 1986 as superseded and supplemented by letters dated November 21 and December 18, 1988 and February 20, 1987. The supplemental letters of March 19, May 15, and July 13, 1987 provided additional information in support of the proposed changes and were not of a substantive nature.

Brief description of amendment: The amendment revised Section 3/4.6.1.8 to permit the operation of the valves in one containment purge supply line and one containment purge exhaust line and a six-inch nitrogen supply valve for up to 120 hours in a 365 day period, for pre-purge cleanup, inerting, deinerting or pressure control of the primary containment during plant Operational Conditions 1, 2, and 3. Additionally, it revises Table 3.6.3-1 to reflect a decrease in the maximum isolation time for the purge and supply valves.

Date of issuance: March 30, 1988

Effective date: March 30, 1988

Amendment No. 16

Facility Operating License No. NPF-57. This amendment revised the Technical Specifications.

Date of initial notice in **Federal Register:** March 25, 1987 (52 FR 9582) The Commission's related evaluation of the amendment is contained in a Safety Evaluation dated March 30, 1988.

No significant hazards consideration comments received: No

Local Public Document Room location: Pennsville Public Library, 190 S. Broadway, Pennsville, New Jersey 08070

Rochester Gas & Electric Corporation, Docket No. 50-244, R. E. Ginna Nuclear Plant, Wayne County, New York

Date of application for amendment: November 21, 1986 and August 18, 1987

Brief description of amendment: The amendment modified paragraph 2.E of the license to require compliance with the amended Physical Security Plan. This Plan was amended to conform to the requirements of 10 CFR 73.55. Consistent with the provisions of 10 CFR 73.55, search requirements must be implemented within 60 days and miscellaneous amendments within 180 days from the effective date of this amendment.

Date of issuance: March 28, 1988

Effective date: March 28, 1988

Amendment No.: 26

Facility Operating License No. DPR-18: This amendment revised the license.

Date of initial notice in **Federal Register:** February 24, 1988 (53 FR 5496) The Commission's related evaluation of the amendment is contained in a letter to Rochester Gas & Electric Company dated March 28, 1988 and a Safeguards Evaluation Report dated March 28, 1988.

No significant hazards consideration comments received: No

Local Public Document Room location: Rochester Public Library, 115 South Avenue, Rochester, New York 14610.

Sacramento Municipal Utility District, Docket No. 50-312, Rancho Seco Nuclear Generating Station, Sacramento County, California

Date of application for amendment: June 30, 1987, as supplemented October 3, December 23, 1987, January 11, 1988 and February 11, 1988.

Brief description of amendment: The amendment revised the Technical Specifications by (1) reducing the lower limits of detection for liquid radioactive effluents, (2) changing requirements to match changes in the effluent systems, (3) clarifying certain existing requirements and (4) improving consistency with the Standard Technical Specifications.

Date of issuance: March 17, 1988

Effective date: Within 30 days of issuance or prior to reactor criticality following the 1986/87 outage, whichever occurs first.

Amendment No.: 98

Facility Operating License No. DPR-54: Amendment revised the Technical Specifications.

Date of initial notice in **Federal Register:** December 28, 1987 (52 FR 48889). Supplemental information, which was not referenced in the December 28, 1987 **Federal Register** notice, was submitted on December 23, 1987, January 11, 1988 and February 11, 1988. These three submittals were made to incorporate NRC staff comments following evaluation of the licensee's initial submittals. The changes included: (1) more restrictive release criteria based on the staff's more conservative evaluation. (2) terminology changes, and (3) administrative changes and clarifications. The changes submitted on December 23, 1987, January 11, 1988 and February 11, 1988 did not alter the description of the proposed amendment as published in the Decemeber 28, 1987 **Federal Register** notice.

The Commission's related evaluation of the amendment is contained in a Safety Evaluation dated March 17, 1988

No significant hazards consideratior comments received: No

Local Public Document Room location: Sacramento City-County Library, 828 I Street, Sacramento, California 95814

Tennessee Valley Authority, Docket Nos. 50-327 and 50-328, Sequoyah Nuclear Plant, Units 1 and 2, Hamilton County, Tennessee

Date of application for amendments: April 8, 1987 (TS 87-03)

Brief description of amendments: The amendments revise the Technical Specifications to define the operability and surveillance requirements for the residual heat removal spray trains.

Date of issuance: April 4, 1988

Effective date: April 4, 1988

Amendment Nos.: 69 and 61

Facility Operating Licenses Nos. DPR-77 and DPR-79. Amendments revised the Technical Specifications.

Date of initial notice in **Federal Register:** August 12, 1987 (52 FR 29929) The Commission's related evaluation of the amendment is contained in a Safety Evaluation dated April 4, 1988.

No significant hazards consideration comments received: No

Local Public Document Room location: Chattanooga-Hamilton County Library, 1001 Broad Street, Chattanooga, Tennessee 37402.

Virginia Electric and Power Company, et al., Docket Nos. 50-338 and 50-339, North Anna Power Station, Units No. 1 and No. 2, Louisa County, Virginia

Date of application for amendments: September 22, 1987

Brief description of amendments: The amendments modify North Anna Technical Specifications 4.8.1.1.3 and 4.8.2.3.2, which address the surveillance requirements for the emergency diesel generator (EDG) and station batteries. The changes result in technical specification requirements that are consistent with IEEE 450-1980, "Recommended Practice for Maintenance, Testing, and Replacement of Large Lead Storage Batteries for Generating Stations and Substations," Regulatory Guide 1.129, "Maintenance, Testing, and Replacement of Large Lead Storage Batteries for Nuclear Power Plants," and NRC-approved Westinghouse Standard Technical Specifications, Rev. 4. Additionally, these changes are consistent with the manufacturer's recommendations for operating station batteries.

Date of issuance: March 25, 1988

Effective date: March 25, 1988

Amendment Nos.: 97 and 84

Facility Operating License Nos. NPF-4 and NPF-7. Amendments revised the Technical Specifications.

Date of initial notice in **Federal Register:** December 16, 1987 (52 FR 47796) The Commission's related evaluation of the amendments is contained in a Safety Evaluation dated March 25, 1988.

No significant hazards consideration comments received: No.

Local Public Document Room locations: Board of Supervisors Office, Louisa County Courthouse, Louisa, Virginia 23093, and the Alderman Library, Manuscripts Department, University of Virginia, Charlottesville, Virginia 22901.

Virginia Electric and Power Company, et al., Docket Nos. 50-338 and 50-339, North Anna Power Station, Units No. 1 and No. 2, Louisa County, Virginia

Date of application for amendments: May 27, 1987

Brief description of amendments: The amendments revised the NA-1&2 TS by placing the hydrogen recombiner containment isolation valves under administrative control in order to permit functional testing of the hydrogen recombiner in Modes 1 through 4.

Date of issuance: March 29, 1988

Effective date: Within 14 days from the date of issuance.

Amendment Nos.: 98 and 85

Facility Operating License Nos. NPF-4 and NPF-7. Amendments revised the Technical Specifications.

Date of initial notice in **Federal Register:** July 15, 1987 (52 FR 26599). The Commission's related evaluation of the amendments is contained in a Safety Evaluation dated March 29, 1988.

No significant hazards consideration comments received: No.

Local Public Document Room locations: Board of Supervisors Office, Louisa County Courthouse, Louisa, Virginia 23093, and the Alderman Library, Manuscripts Department, University of Virginia, Charlottesville, Virginia 22901.

NOTICE OF ISSUANCE OF AMENDMENT TO FACILITY OPERATING LICENSE AND FINAL DETERMINATION OF NO SIGNIFICANT HAZARDS CONSIDERATION AND OPPORTUNITY FOR HEARING (EXIGENT OR EMERGENCY CIRCUMSTANCES)

During the period since publication of the last biweekly notice, the Commission has issued the following amendments. The Commission has determined for each of these amendments that the application for the amendment complies with the standards and requirements of the Atomic Energy Act of 1954, as amended (the Act), and the Commission's rules and regulations. The Commission has made appropriate findings as required by the Act and the Commission's rules and regulations in 10 CFR Chapter I, which are set forth in the license amendment.

Because of exigent or emergency circumstances associated with the date the amendment was needed, there was not time for the Commission to publish, for public comment before issuance, its usual 30-day Notice of Consideration of Issuance of Amendment and Proposed No Significant Hazards Consideration Determination and Opportunity for a Hearing. For exigent circumstances, the Commission has either issued a **Federal Register** notice providing opportunity for public comment or has used local media to provide notice to the public in the area surrounding a licensee's facility of the licensee's application and of the Commission's proposed determination of no significant hazards consideration. The Commission has provided a reasonable opportunity for the public to comment, using its best efforts to make available to the public means of communication for the public to respond quickly, and in the case of telephone comments, the comments have been recorded or transcribed as appropriate and the licensee has been informed of the public comments.

In circumstances where failure to act in a timely way would have resulted, for example, in derating or shutdown of a nuclear power plant or in prevention of either resumption of operation or of increase in power output up to the plant's licensed power level, the Commission may not have had an opportunity to provide for public comment on its no significant hazards determination. In such case, the license amendment has been issued without opportunity for comment. If there has been some time for public comment but less than 30 days, the Commission may provide an opportunity for public comment. If comments have been requested, it is so stated. In either event, the State has been consulted by telephone whenever possible.

Under its regulations, the Commission may issue and make an amendment immediately effective, notwithstanding the pendency before it of a request for a hearing from any person, in advance of the holding and completion of any required hearing, where it has determined that no significant hazards consideration is involved.

The Commission has applied the standards of 10 CFR 50.92 and has made a final determination that the amendment involves no significant hazards consideration. The basis for this determination is contained in the documents related to this action. Accordingly, the amendments have been issued and made effective as indicated.

Unless otherwise indicated, the Commission has determined that these

amendments satisfy the criteria for categorical exclusion in accordance with 10 CFR 51.22. Therefore, pursuant to 10 CFR 51.22(b), no environmental impact statement or environmental assessment need be prepared for these amendments. If the Commission has prepared an environmental assessment under the special circumstances provision in 10 CFR 51.12(b) and has made a determination based on that assessment, it is so indicated.

For further details with respect to the action see (1) the application for amendment, (2) the amendment to Facility Operating License, and (3) the Commission's related letter, Safety Evaluation and/or Environmental Assessment, as indicated. All of these items are available for public inspection at the Commission's Public Document Room, 1717 H Street, NW., Washington, DC, and at the local public document room for the particular facility involved.

A copy of items (2) and (3) may be obtained upon request addressed to the U.S. Nuclear Regulatory Commission, Washington, DC 20555, Attention: Director, Division of Reactor Projects.

The Commission is also offering an opportunity for a hearing with respect to the issuance of the amendments. By May 20, 1988, the licensee may file a request for a hearing with respect to issuance of the amendment to the subject facility operating license and any person whose interest may be affected by this proceeding and who wishes to participate as a party in the proceeding must file a written petition for leave to intervene. Requests for a hearing and petitions for leave to intervene shall be filed in accordance with the Commission's "Rules of Practice for Domestic Licensing Proceedings" in 10 CFR Part 2. If a request for a hearing or petition for leave to intervene is filed by the above date, the Commission or an Atomic Safety and Licensing Board, designated by the Commission or by the Chairman of the Atomic Safety and Licensing Board Panel, will rule on the request and/or petition and the Secretary or the designated Atomic Safety and Licensing Board will issue a notice of hearing or an appropriate order.

As required by 10 CFR 2.714, a petition for leave to intervene shall set forth with particularity the interest of the petitioner in the proceeding and how that interest may be affected by the results of the proceeding. The petition should specifically explain the reasons why intervention should be permitted with particular reference to the following factors: (1) the nature of the petitioner's right under the Act to be made a party to the proceeding; (2) the nature and extent of the petitioner's property, financial, or other interest in the proceeding; and (3) the possible effect of any order which may be entered in the proceeding on the petitioner's interest. The petition should also identify the specific aspect(s) of the subject matter of the proceeding as to which petitioner wishes to intervene. Any person who has filed a petition for leave to intervene or who has been admitted as a party may amend the petition without requesting leave of the Board up to fifteen (15) days prior to the first prehearing conference scheduled in the proceeding, but such an amended petition must satisfy the specificity requirements described above.

Not later than fifteen (15) days prior to the first prehearing conference scheduled in the proceeding, a petitioner shall file a supplement to the petition to intervene which must include a list of the contentions which are sought to be litigated in the matter, and the bases for each contention set forth with reasonable specificity. Contentions shall be limited to matters within the scope of the amendment under consideration. A petitioner who fails to file such a supplement which satisfies these requirements with respect to at least one contention will not be permitted to participate as a party.

Those permitted to intervene become parties to the proceeding, subject to any limitations in the order granting leave to intervene, and have the opportunity to participate fully in the conduct of the hearing, including the opportunity to present evidence and cross-examine witnesses.

Since the Commission has made a final determination that the amendment involves no significant hazards consideration, if a hearing is requested, it will not stay the effectiveness of the amendment. Any hearing held would take place while the amendment is in effect.

A request for a hearing or a petition for leave to intervene must be filed with the Secretary of the Commission, U.S. Nuclear Regulatory Commission, Washington, DC 20555, Attention: Docketing and Service Branch, or may be delivered to the Commission's Public Document Room, 1717 H Street, NW., Washington, DC, by the above date. Where petitions are filed during the last ten (10) days of the notice period, it is requested that the petitioner promptly so inform the Commission by a toll-free telephone call to Western Union at (800) 325-6000 (in Missouri (800) 342-6700). The Western Union operator should be given Datagram Identification Number 3737 and the following message addressed to (*Project Director*): petitioner's name and telephone number; date petition was mailed; plant name; and publication date and page number of this **Federal Register** notice. A copy of the petition should also be sent to the Office of the General Counsel-White Flint, U.S. Nuclear Regulatory Commission, Washington, DC 20555, and to the attorney for the licensee.

Nontimely filings of petitions for leave to intervene, amended petitions, supplemental petitions and/or requests for hearing will not be entertained absent a determination by the Commission, the presiding officer or the Atomic Safety and Licensing Board, that the petition and/or request should be granted based upon a balancing of the factors specified in 10 CFR 2.714(a)(1)(i)-(v) and 2.714(d).

Connecticut Yankee Atomic Power Company, Docket No. 50-213, Haddam Neck Plant, Middlesex County, Connecticut

Date of application for amendment: April 5, 1988

Brief description of amendment: This amendment revised Technical Specification Figures 3.17-1A and 3.17-1B, "Axial Offset," and Section 3.17.2, "Linear Heat Generation Rate". The change reduced the Linear Heat Generation Rate by approximately 1kW/ft with a corresponding reduction in the axial offset limits for four-loop operation.

Date of Issuance: April 8, 1988

Effective date: April 8, 1988

Amendment No.: 102

Facility Operating License No. DPR-61. Amendment revised the Technical Specifications.

Public comments requested as to proposed no significant hazards consideration: No. The Commission's related evaluation of the amendment, finding of emergency circumstances, and final determination of no significant hazards consideration are contained in a Safety Evaluation dated April 8, 1988.

Attorney for licensee: Gerald Garfield, Esquire, Day, Berry & Howard, Counselors at Law, City Place, Hartford, Connecticut 06103-3499.

Local Public Document Room location: Russell Library, 123 Broad Street, Middletown, Connecticut 06457.

NRC Project Director: John F. Stolz

Dated at Rockville, Maryland, this 14th day of April, 1988.

For the Nuclear Regulatory Commission

Bruce A. Boger,

Acting Director, Division of Reactor Projects-I/II, Office of Nuclear Reactor Regulation

[Doc. 88-8500 Filed 4-19-88; 8:45 am]

BILLING CODE 7590-01-D

VOL 53 ISS 76 AP 20 1988 UMI

Advisory Committee on Reactor Safeguards; Meeting Agenda

In accordance with the purposes of sections 29 and 182b. of the Atomic Energy Act (42 U.S.C. 2039, 2232b), the Advisory Committee on Reactor Safeguards will hold a meeting on May 5–7, 1988, in Room 1046, 1717 H Street, NW., Washington, DC. Notice of this meeting was published in the **Federal Register** on March 22, 1988.

Thursday, May 5, 1988

8:30 A.M.–8:45 A.M.: Comments by ACRS Chairman (Open)—The ACRS Chairman will report briefly regarding items of current interest.

8:45 A.M.–12:00 Noon: Fire Risk Scoping Study (Open)—Discuss report by Sandia National Laboratory regarding the fire risk scoping study of nuclear power plants.

1:00 P.M.–4:00 P.M.: Babcock & Wilcox Nuclear Power Plants (Open)—Review B&W Owners' Group safety reassessment of B&W water-cooled nuclear power plants.

4:15 P.M.–5:15 P.M.: Integrated Safety Assessment (Open)—Review NRC Staff proposed requirements for continuation of the ISAP program.

5:15 P.M.–6:30 P.M.: Thermal-Hydraulic Phenomena (Open)—Discuss proposed ACRS comments regarding NRC thermal-hydraulic research program.

Friday, May 6, 1988

8:30 A.M.–10:15 A.M.: Generic Issues (Open)—Discuss proposed prioritization of new generic issues.

10:30 A.M.–11:30 A.M.: World Association of Nuclear Operators (Open)—Briefing regarding the objectives, etc. of the World Association of Nuclear Operators.

11:30 A.M.–12:30 P.M.: Individual Plant Examination (Open)—Review proposed NRC generic letter regarding IPEs for nuclear power plants.

1:30 P.M.–3:00 P.M.: Revised ECCS Rule (Open)—Review proposed revision of 10 CFR 50.46, Acceptance Criteria for Emergency Core Cooling Systems for Light-Water Nuclear Power Plants.

3:15 P.M.–4:45 P.M.: Human Factors (Open)—Review proposed NRC Policy Statement regarding Professional Conduct of Nuclear Power Plant Operators.

4:45 P.M.–5:30 P.M.: Containment of Nuclear Plants (Open)—Briefing regarding the status of the NRC program to evaluate the integrity of Mark–1 containment systems to withstand severe accidents.

5:30 P.M.–6:00 P.M.: Future ACRS Activities (Open)—Discuss anticipated ACRS subcommittee activities and items proposed for consideration by the full Committee.

6:00 P.M.–6:30 P.M.: Appointment of New Members (Closed)—Discuss qualifications of candidates proposed for appointment to the Committee.

This session will be closed as required to discuss information the release of which would represent a clearly unwarranted invasion of personal privacy.

Saturday, May 7, 1988

8:30 A.M.–12:30 P.M.: Preparation of ACRS Reports (Open)—Discuss proposed reports to NRC regarding items considered during this meeting and a report on key design features related to advanced reactors considered during the 336th ACRS meeting.

1:30 P.M.–2:30 P.M.: Miscellaneous (Open)—Reports on and discussion of topics related to ACRS subcommittee assignments and ACRS activities including proposed revision of ACRS subcommittee assignments and membership, participation by members in meetings which are not sponsored by the ACRS, ACRS subcommittee review of the Westinghouse Advanced PWR, and the proposed revision of an NRC Regulatory Guide on Seismic Qualification of Electrical and Mechanical Components.

Procedures for the conduct of and participation in ACRS meetings were published in the **Federal Register** on October 2, 1987 (51 FR 37241). In accordance with these procedures, oral or written statements may be presented by members of the public, recordings will be permitted only during those portions of the meeting when a transcript is being kept, and questions may be asked only by members of the Committee, its consultants, and Staff. Persons desiring to make oral statements should notify the ACRS Executive Director as far in advance as practicable so that appropriate arrangements can be made to allow the necessary time during the meeting for such statements. Use of still, motion picture and television cameras during this meeting may be limited to selected portions of the meeting as determined by the Chairman. Information regarding the time to be set aside for this purpose may be obtained by a prepaid telephone call to the ACRS Executive Director, Mr. Raymond F. Fraley, prior to the meeting. In view of the possibility that the schedule for ACRS meetings may be adjusted by the Chairman as necessary to facilitate the conduct of the meeting, persons planning to attend should check with the ACRS Executive Director if such rescheduling would result in major inconvenience.

I have determined in accordance with Subsection 10(d) Pub. L. 92–463 that it is necessary to close portions of this meeting as noted above to discuss information the release of which would represent a clearly unwarranted invasion of personal privacy [5 U.S.C. 552b(c)(6)].

Further information regarding topics to be discussed, whether the meeting has been cancelled or rescheduled, the Chairman's ruling on requests for the opportunity to present oral statements and the time allotted can be obtained by a prepaid telephone call to the ACRS Executive Director, Mr. Raymond F. Fraley (telephone 202/634–3265), between 8:15 A.M. and 5:00 P.M.

Date: April 15, 1988.

John C. Hoyle,

Advisory Committee Management Officer.

[FR Doc. 88–8665 Filed 4–19–88; 8:45 am]

BILLING CODE 7590-01-M

Relocation of NRC Commission-Level Offices

Effective April 11, 1988, the following components of the NRC have been relocated at the agency's new office building located at One White Flint North, 11555 Rockville Pike, Rockville, Maryland: The five NRC Commissioners, the Office of the Secretary of the Commission, Congressional Affairs staff (of the Office of Governmental and Public Affairs), and the staff of the Office of the General Counsel who were formerly located at 1717 H Street NW., Washington, DC. The mailing address for the NRC remains unchanged: U.S. Nuclear Regulatory Commission, Washington, DC 20555.

The new telephone numbers for the Commissioners are as follows: Chairman Lando W. Zech, Jr., 301–492–1759; Commissioner Frederick M. Bernthal, 301–492–1875; Commissioner Kenneth M. Carr, 301–492–1820; Commissioner Thomas M. Roberts, 301–492–1800; and Commissioner Kenneth C. Rogers, 301–492–1855. Telephone numbers for other relocated personnel may be obtained from the NRC Operator on 301–492–7000. The newly revised NRC Telephone Directory (NUREG/BR–0046, Rev. 7) is available for purchase from the Superintendent of Documents, U.S. Government Printing Office, P.O. Box 37082, Washington, DC 20013–7082.

Dated at Bethesda, Maryland, this 15th day of April 1988.

For the Nuclear Regulatory Commission.

Donnie H. Grimsley,

Director, Division of Rules and Records, Office of Administration and Resources Management.

[FR Doc. 88-8666 Filed 4-19-88; 8:45 am]

BILLING CODE 7590-01-M

Commonwealth Edison Co.; Issuance of Amendment to Facility Operating License

[Docket Nos. 50-454, 50-455, 40-456, and 50-457]

The U.S. Nuclear Regulatory Commission (Commission) has issued Amendment No. 15 to Facility Operating License Nos. NPF-37 and NPF-66 issued to Commonwealth Edison Company, which revised the Technical Specifications for operation of the Byron Station, Units 1 and 2, located in Ogle County, Illinois and Amendment No. 6 to Facility Operating License Nos. NPF-72 and NPF-75 which revised the Technical Specifications for Braidwood Station, Units 1 and 2, located in Will County, Illinois. The amendments were effective as of the date of its issuance.

The amendments add two radiation monitors for each station and add a requirement that a composite sample of sump effluent be taken prior to discharge into the circulating water system.

The application for the amendment complies with the standards and requirements of the Atomic Energy Act of 1954, as amended (the Act), and the Commission's rules and regulations. The Commission has made appropriate findings as required by the Act and the Commission's rules and regulations in 10 CFR Chapter I, which are set forth in the license amendment.

Notice of Consideration of Issuance of Amendment and Opportunity for Hearing in connection with this was published in the **Federal Register** on February 3, 1988 (53 FR 3091). No request for a hearing or petition for leave to intervene was filed following this notice.

The Commission has performed an Environmental Assessment of the amendment and determined that the issuance of the amendment will not result in any significant environmental impact and that pursuant to 10 CFR 51.32(d)(4) an environmental impact statement need not be prepared in connection with issuance of the amendment.

For further details with respect to the actions see (1) the application for amendment dated February 18, 1987, supplemented November 17, 1987 and clarified January 8, 1988, (2) Amendment No. 15 to License Nos. NPF-37 and NPF-66, (3) Amendment No. 6 to License Nos. NPF-72 and NPF-75, (4) the Commission's related Safety Evaluation and (5) Environmental Assessment and Finding of No Significant Impact. All of these items are available for public inspection at the Commission's Public Document Room, 1717 H Street, NW., the Rockford Public Library, 215 N. Wyman Street, Rockford, Illinois 61101, and at the Wilmington Township Public Library, 201 S. Kankakee Street, Wilmington, Illinois 60481. A copy of items (2), (3) and (4) may be obtained upon request addressed to the U.S. Nuclear Regulatory Commission, Washington, DC 20555, Attention: Director, Division of Reactor Projects.

Dated at Rockville, Maryland this 25th day of March 1988.

For the Nuclear Regulatory Commission.

Daniel R. Muller,

Director, Project Directorate III-2, Division of Reactor Projects—III, IV, V and Special Projects.

[FR Doc. 88-8667 Filed 4-19-88; 8:45 am]

BILLING CODE 7590-01-M

[Docket Nos. 50-269, 50-270, and 50-287]

Duke Power Co.; Consideration of Issuance of Amendments to Facility Operating Licenses and Opportunity for Hearing

The United States Nuclear Regulatory Commission (the Commission) is considering issuance of amendments to Facility Operating Licenses Nos. DRP-38, DPR-47, and DPR-55 issued to Duke Power Company (the licensee), for operation of the Oconee Nuclear Station, Units 1, 2, and 3, located in Oconee County, South Carolina.

Changes to Technical Specifications (TSs) proposed within this amendment request include: administrative changes to the Table of Contents, Limiting Conditions for Operation (LCO) of the control room pressurization and filtering system and administrative changes to Specification 3.15, and additional testing requirements for the control room pressurization and filtering system and clarifications to Specification 4.12. The proposed amendments are in response to the NRC's request for TSs on control room habitability. In NUREG-0737, "Clarification of TMI Action Plan Requirements," one of the issues, III.D.3.4, dealt with control room habitability requirements. One of the items that needed to be addressed was revisions to the Technical Specifications.

Oconee 1 and 2 have a shared control room while Oconee 3 has a separate control room. The control rooms are located in the Auxiliary Building. The Control Room Area Ventilation and Air Conditioning Systems (HVAC) are designed to maintain the environment in the Control Room, Control Room Zone, Cable Room, and Electrical Equipment Rooms with acceptable limits for the operation of unit controls as necessary for equipment and operating personnel. The Control Room Area Ventilation and Air Conditioning System consists of HVAC units which are separated and isolated from the HVAC systems of other adjacent areas. Each control room is primarily served by two large air handling units (AHU). The AHUs are 100 percent capacity and only one AHU is required to operate at a time. An AHU consists of a roughing filter, chilled water coils, and a centrifugal fan. As opposed to the Control Room Area Ventilation and Air Conditioning System, the control room pressurization and filtering system is not normally operated and would only be activated by manual operator action in the event of a radioactive or toxic gas release in the Turbine Building or Auxiliary Building only.

The licensee states that the control room pressurization and filtering system has been upgraded to meet the intent of NUREG-0737, Item III.D.3.4 (Control Room Habitability) by providing additional protection for the control room operators from the effects of accidental release of radioactive effluents and toxic gases in the Turbine Building and Auxiliary Building only. These upgrades will serve to help maintain operator doses ALARA. The main objective of the system modifications has been to pressurize the control rooms to a slightly positive differential pressure as compared to areas surrounding the control room envelope.

By May 20, 1988, the licensees may file a request for a hearing with respect to issuance of the amendments to the subject facility operating licenses and any person whose interest may be affected by this proceeding and who wishes to participate as a party in the proceeding must file a written request for hearing and a petition for leave to intervene. Requests for a hearing and petitions for leave to intervene shall be filed in accordance with the Commission's "Rules of Practice for Domestic Licensing Proceedings" in 10 CFR Part 2. If a request for a hearing or petition for leave to intervene is filed by

the above date, the Commission or an Atomic Safety and Licensing Board, designated by the Commission or by the Chairman of the Atomic Safety and Licensing Board Panel, will rule on the request and/or petition, and the Secretary or the designated Atomic Safety and Licensing Board will issue a notice of hearing or an appropriate order.

As required by 10 CFR 2.714, a petition for leave to intervene shall set forth with particularity the interest of the petitioner in the proceeding, and how that interest may be affected by the results of the proceeding. The petition should specifically explain the reasons why intervention should be permitted with particular reference to the following factors: (1) The nature of the petitioner's right under the Act to be made a party to the proceeding; (2) the nature and extent of the petitioner's property, financial, or other interest in the proceeding; and (3) the possible effect of any order which may be entered in the proceeding on the petitioner's interest. The petition should also identify the specific aspect(s) of the subject matter of the proceeding as to which petitioner wishes to intervene. Any person who has filed a petition for leave to intervene or who has been admitted as a party may amend the petition without requesting leave of the Board up to fifteen (15) days prior to the first prehearing conference scheduled in the proceeding, but such an amended petition must satisfy the specificity requirements described above.

Not later than fifteen (15) days prior to the first prehearing conference scheduled in the proceeding, a petitioner shall file a supplement to the petition to intervene which must include a list of the contentions which are sought to be litigated in the matter, and the bases for each contention set forth with reasonable specificity. Contentions shall be limited to matters within the scope of the amendments under consideration. A petitioner who fails to file such a supplement which satisfies these requirements with respect to at least one contention will not be permitted to participate as a party.

Those permitted to intervene become parties to the proceeding, subject to any limitations in the order granting leave to intervene, and have the opportunity to participate fully in the conduct of the hearing, including the opportunity to present evidence and cross-examine witnesses.

A request for a hearing or a petition for leave to intervene shall be filed with the Secretary of the Commission, United States Nuclear Regulatory Commission, Washington, DC 20555, Attention: Docketing and Service Branch, or may be delivered to the Commission's Public Document Room, 1717 H Street, NW., Washington, DC, by the above date. Where petitions are filed during the last ten (10) days of the notice period, it is required that the petitioner or representative for the petitioner promptly so inform the Commission by a toll-free telephone call to Western Unit at 1-800-325-6000 (in Missouri 1-800-342-6700). The Western Union operator should be given Datagram Identification Number 3737 and the following message addressed to Darl Hood, Acting Director, project Directorate II-3; (petitioner's name and telephone number); (date Petition was mailed); (plant name); and (publication date and page number of this **Federal Register** notice). A copy of the petition should also be sent to the Office of the General Counsel, U.S. Nuclear Regulatory Commission, Washington, DC 20555, and to J. Michael McGarry, III, Bishop, Liberman, Cook, Purcell and Reynolds, 1200 17th Street, NW., Washington, DC 20036.

Nontimely filings of petitions for leave to intervene, amended petitions, supplemental petitions and/or requests for hearing will not be entertained absent a determination by the Commission, the presiding officer or the presiding Atomic Safety and Licensing Board, that the petition and/or request should be granted based upon a balancing of the factors specific in 10 CFR 2.714(a)(1)(i)-(v) and 2.714(d).

If a request for hearing is received, the Commission's staff may issue the amendments after it completes its technical review and prior to the completion of any required hearing if it publishes a further notice for public comment of its proposed finding of no significant hazards consideration in accordance with 10 CFR 50.91 and 50.92.

For further details with respect to this action, see the application for amendments dated January 6, 1988, which is available for public inspection at the Commission's Public Document Room, 1717 H Street, NW., Washington, DC, and at the Oconee County Library, 501 West South Broad Street, Walhalla, South Carolina 29691.

Dated at Rockville, Maryland, this 13th day of April 1988.

For the Nuclear Regulatory Commission.

Lawrence P. Crocker,

Acting Project Director, Project Directorate II-3, Division of Reactor Projects—I/II.

[FR Doc. 88-8666 Filed 4-19-88; 8:45 am]

BILLING CODE 7590-01-M

SECURITIES AND EXCHANGE COMMISSION

[Rel. No. IC-16367; 812-6794]

Dreyfus Foreign Investors GNMA Fund, L.P., et al.; Application

April 14, 1988.

AGENCY: Securities and Exchange Commission ("SEC").

ACTION: Notice of application for an order under the Investment Company Act of 1940 ("1940 Act").

Applicants: Dreyfus Foreign Investors GNMA Fund, L.P., Dreyfus Foreign Investors U.S. Government Bond Fund, L.P., Dreyfus New Jersey Tax Exempt Bond Fund, L.P., Dreyfus Strategic Aggressive Investing, L.P., Dreyfus Strategic World Investing, L.P., Dreyfus Strategic World Revenues, L.P., Dreyfus U.S. Government Bond Fund, L.P., Dreyfus U.S. Government Intermediate Securities, L.P., Dreyfus U.S. Guaranteed Money Market Account, L.P. (the "Partnerships"), Dreyfus Partnership Management, Inc. ("DPM"), and The Dreyfus Corporation (the "Adviser").

Relevant 1940 Act Sections: Order requested pursuant to section 6(c) for determinations under the provisions of sections 2(a)(19) and 2(a)(3)(D).

Summary of Application: Applicants seek an order determining that the Independent Managing General Partners of the Partnerships and/or any person who may become a successor or additional Independent Managing General Partner would not be deemed "interested persons" of a Partnership, the Advisor of each Partnership's principal underwriter pursuant to the provisions of section 2(a)(19) of the 1940 Act solely because of such Independent Managing General Partners' status as General Partners. In addition, Applicants seek an order determining that Limited Partners who own less than a 5% equity interest in a Partnership will not be deemed "affiliated persons" (as defined in section 2(a)(3)(D) of the 1940 Act) of the Partnership or its other Partners solely by reason of their status as Limited Partners of a Partnership.

Filing date: The application was filed on July 17, 1987, and amended on December 21, 1987, March 2, 1988, and March 29, 1988.

Hearing or Notification of Hearing: If no hearing is ordered, the application will be granted. Any interested person may request a hearing on the application, or ask to be notified if a hearing is ordered. Any requests must be received by the SEC by 5:30 p.m. on May 5, 1988. Request a hearing in writing, giving the nature of your

interest, the reason for the request, and the issues you contest. Serve the Applicants with the request, either personally or by mail, and also send it to the Secretary of the SEC, along with proof of service by affidavit, or, for lawyers, by certificate. Request information of the date of a hearing by writing to the Secretary of the SEC.

ADDRESSES: Secretary, SEC, 450 Fifth Street NW., Washington, DC 20549; the Partnerships, 666 Old Country Road, Garden City, New York 11530; DPM, 767 Fifth Avenue, New York, New York 10153; the Adviser, 767 Fifth Avenue, New York, New York 10153.

FOR FURTHER INFORMATION CONTACT: Special Counsel Richard Pfordte at (202) 272-2811 or Karen L. Skidmore, Special Counsel, (202) 272-3023 (Office of Invesment Company Regulation).

SUPPLEMENTARY INFORMATION: Following is a summary of the application; the complete application is available for a fee from either the SEC's Public Reference Branch in person or the SEC's commercial copier, (800) 231-3282 (in Maryland (301) 258-4300).

Applicants' Representations

1. Each Partnership is an open-end, registered management investment company organized as a limited partnership pursuant to Delaware law. All of the Partnerships have commenced operations and have public shareholders.

2. The Adviser, registered under the Investment Advisers Act of 1940, serves as each Partnership's investment adviser; DPM, a wholly-owned subsidiary of the Adviser, takes no part in the advisory function and is not registered as an investment adviser. Dreyfus Service Corporation, a wholly-owned subsidiary of the Adviser, acts as the principal underwriter of shares representing each Partnership's limited partnership interests.

3. The Partnerships were structured as limited partnerships, rather than as corporations or business trusts, to afford each Partnership certain operational advantages in furtherance of its investment objective, while enabling each Partnership and its partners (the "Partners") to receive, in effect, the "pass through" tax treatment typically available to mutual funds and their shareholders.

4. Each Partnership consists of two Partners: general partners ("General Partners") and limited partners ("Limited Partners"). The General Partners include a number of individuals (the "Managing General Partners") and one corporate General Partner, DPM (the "Non-Managing General Partner"). Only individuals may serve as Managing General Partners. Certain of the Managing General Partners (the "Independent Managing General Partners") are unaffiliated with DPM, the Adviser and each Partnership's principal underwriter. Each Partnership currently has five Managing General Partners of which three, constituting a majority, serve as Independent Managing General Partners. The Managing General Partners perform the same functions for the Partnerships as directors of a corporate mutual fund. The Managing General Partners have complete and exclusive control over the management, conduct and operation of each Partnership's business. The Independent Managing General Partners act as the equivalent of directors who are not "interested persons" as defined in section 2(a)(19) of the 1940 Act with respect to each Partnership.

5. A General Partner is entitled to indemnification from the Partnership against liabilities and expenses to which he may be subject in his capacity as a General Partner, so long as such liabilities and expenses were not the result of willful misfeasance, bad faith, gross negligence or reckless disregard of the duties involved in the conduct of such General Partner's office. In addition, each Partnership will be bound by the SEC's policy on indemnification. Each Partnership Agreement permits the Partnerships to obtain liability insurance to cover the General Partners, including the Independent Managing General Partners, against liabilities and expenses to which they may be subject in their capacity as General Partners. Limited Partners are not liable for the debts or obligations of the Partnership except that Limited Partners may be liable to the Partnership to the extent provided by the Delaware Revised Uniform Limited Partnership Act, which provides that Limited Partners may be liable to the extent of distributions to them constituting a return of all or a part of their capital contributions, potentially with interest. Each Partnership may carry insurance in such amounts as the Managing General Partners consider reasonable to cover potential liabilities of the Partnership and the Managing General Partners will periodically consider the question of the appropriateness of obtaining errors and omissions insurance for each Partnership.

6. Under the terms of the Partnership Agreement, the Limited Partners do not have the right to take part in the control of the Partnership's business, but they may exercise the right to vote on matters requiring approval under the 1940 Act and on certain other matters.

Applicants' Legal Conclusions

1. Applicants have operated the Partnerships under the assumption and opinion that the Independent Managing General Partners are not partners of the Adviser or the principal underwriter and thus should not be deemed to be "interested persons" by reason of their service as Managing General Partners. Applicants have relied upon this interpretation to date, recognize that the relief requested will have exemptive effect only from the date of grant and will not constitute retroactive authority for actions previously taken, including compliance with section 10 of the 1940 Act. Applicants acknowledge that such interpretation is based upon their analysis of the law. Under section 2(a)(3), each Partner might be deemed an affiliated person of the Partnership, the Adviser and the principal underwriter. If the Independent Managing General Partners are deemed to be affiliated persons of the Partnership, the Adviser and the principal underwriter, then each would be an interested person of the Partnership, the Adviser and the principal underwriter under subparagraphs 2(a)(19)(A) and 2(a)(19)(B) of the 1940 Act.

2. To obtain assurance that the Partnership can comply with the requirements of the Act relating to an investment company's non-interested directors, Applicants seek an order under section 2(a)(19) of the 1940 Act determining that Independent Managing General Partners and/or any person who may become a successor or additional Independent Managing General Partner will not be considered interested persons of a Partnership, the Adviser or the principal underwriter solely because of their status as General Partner. DPM agrees, as a condition to the order, to fulfill its obligation under each Partnership Agreement to contribute to each Partnership through the purchase of shares of limited partnership interests from time to time an aggregate amount sufficient to enable the General Partners to own, as a group, not less than 1% of the shares outstanding. Each Limited Partner, as a Partner or Co-partner of the Partnership and each other Partner of the Partnership, could be deemed to be an affiliated person of the Partnership as well as of each of the Limited Partner and General Partners merely by virtue of having purchased shares of a Partnership and having been admitted as a Limited Partner.

3. Applicants further request that the Commission, pursuant to section 6(c),

determine that any Limited Partner not be deemed to be an "affiliated person," under section 2(a)(3)(D) of the 1940 Act, of a Partnership, any other Limited Partners of the Partnership and any of the General Partners of the Partnership solely because such Limited Partner is a Partner of a Partnership holding less than a 5% equity interest.

Applicants' Condition

Applicants agree that if the order is granted, such order will be expressly conditioned on the Applicants' compliance with the representations included in the Application.

For the Commission, by the Division of Investment Management, pursuant to delegated authority.

Shirley E. Hollis,

Assistant Secretary.

[FR Doc. 88-8652 Filed 4-19-88; 8:45 am]

BILLING CODE 8010-01-M

[Release No. IC-16364/File No. 812-6972]

The Mutual Life Insurance Company of New York, et al.; Application for Exemption

Date: April 14, 1988.

AGENCY: Securities and Exchange Commission ("SEC").

ACTION: Notice of application for exemption under the Investment Company Act of 1940 (the "1940 Act").

Applicants: The Mutual Life Insurance Company of New York ("MONY") and The MONY Variable Account-C (the foregoing hereinafter collectively referred to as "Applicants").

Relevant 1940 Act Sections and Rules: Exemptions requested under section 6(c) from sections 26(a)(2)(C) and 27(c)(2) of the Act.

Summary of Application: Applicants seek an order to permit the Insurer to deduct mortality and expense risk charges from the assets of the Account in connection with a variable annuity contract ("Contract").

Filing Date: The application was filed on January 27, 1988 and amended on April 4, 1988.

Hearing or Notification of Hearing: If no hearing is ordered, the application will be granted. Any interested person may request a hearing on this application, or ask to be notified if a hearing is ordered. Any requests must be received by the SEC by 5:30 p.m. on May 9, 1988. Request a hearing in writing, giving the nature of your interest, the reason for the request, and the issues you contest. Serve the Applicant with the request, either personally or by mail, and also send it to the Secretary of the SEC, along with proof of service by affidavit, or, for lawyers, by certificate. Request notification of the date of a hearing by writing to the Secretary of the SEC.

ADDRESSES: SEC, 450 5th Street, NW., Washington, DC 20549. Applicants, 1740 Broadway, New York, New York 10019.

FOR FURTHER INFORMATION CONTACT: Nancy M. Rappa, Staff Attorney (202) 272-2622 or Lewis B. Reich, Special Counsel (202) 272-2061 (Office of Insurance Products & Legal Compliance).

SUPPLEMENTARY INFORMATION: Following is a summary of the application; the complete application is available for a fee from either the SEC's Public Reference Branch in person or the SEC's commercial copier at (800) 231-3282 (in Maryland (301) 253-4300).

Applicants' Representations

1. MONY is a mutual life insurance company organized under the laws of New York. On December 6, 1987, the company established the MONY Variable Account-C under New York insurance law as a separate investment account ("Account"). A registration statement on Form N-4 was filed on behalf of MONY and the Account on January 27, 1988. MONY, a registered broker-dealer and a member of the National Association of Securities Dealers, is the principal underwriter for the Contracts.

2. There are currently three Sub-Accounts within the Account, each of which will invest only in a corresponding portfolio of MONY Series Fund, Inc. (the "Fund"), an open-end, management investment company registered under the Investment Company Act of 1940.

3. On each contract anniversary prior to the annuity purchase date, MONY will deduct an annual contract charge from the participant's accumulation account to reimburse MONY for administrative expenses relating to the maintenance of the Contract. The charge is currently $30, but MONY may in the future change the amount of the charge, not to exceed $50.

4. Applicants request exemption from sections 26(a)(2)(C) and 27(c)(2) to the extent necessary to deduct from the Account a daily mortality and expense risk charge equal to an effective annual rate of up to 1.25% of the net assets attributable to the Contract. Of the 1.25% charge, .80% is for assuming mortality risks and .45% is for assuming expense risks.

5. Applicants state that the mortality risk assumed is that annuitants may live for a longer time than projected, and that an aggregate amount of annuity benefits greater than that projected will accordingly be payable. In making this projection, MONY has used the mortality rates from the 1983 GAM (Group Annuity Mortality Table). The expense risk assumed is that expenses incurred in issuing and administering the Contract will exceed the administrative charges provided in the Contract.

6. Applicants represent that the mortality and expense risk charge of 1.25% is reasonable in amount and within the range of industry practice for comparable annuity contracts issued by other insurance companies. This representation is based on MONY's analysis of publicly available information about such other contracts, taking into consideration the particular annuity features of the comparable contracts, including such factors as current charge levels, annuity rate guarantees, the manner in which the charges are imposed, and the markets in which the Contract will be offered.

7. MONY has incorporated the identity of the products analyzed and their analyses, including their methodology and results, into a memorandum which they will maintain as long as there is a Contract outstanding. The memorandum will be available to the Commission or its staff upon request.

8. Applicants represent that if the mortality assumptions used should prove to be insufficient to cover the actual cost of the mortality risk undertaken, MONY will absorb the resulting loss by transferring funds from its general corporate surplus to the appropriate Subaccounts of the Account. Conversely, if the mortality assumptions used should prove to be more than sufficient, the resulting excess will be retained by MONY.

9. If administrative expenses exceed the administrative component of the risk charge, MONY will pay the excess out of its general corporate surplus.

10. Conversely, while the expense component of the risk charge is not designed to increase MONY's surplus, if the risk charge is more than sufficient to meet administrative expenses, an increase in surplus will result.

11. Applicants represent that there is a reasonable likelihood that the distribution financing arrangement of the Account will benefit the Account and the contractholders, and undertake to maintain and make available to the Commission upon request a memorandum setting forth the basis for this conclusion.

12. MONY also represents that the assets of the Account will be invested

only in a management investment company which undertakes, in the event it should adopt a plan for financing distribution expenses pursuant to Rule 12b-1 of the Act, to have such plan formulated and approved by a board of directors or trustees, the majority of whom are not "interested persons" of the management company within the meaning of Section 2(a)(19) of the Act.

For the Commission, by the Division of Investment Management, pursuant to delegated authority.

Shirley E. Hollis,

Assistant Secretary.

[FR Doc. 88-8653 Filed 4-19-88; 8:45 am]

BILLING CODE 8010-01-M

[Release No. 35-24623]

Filings Under the Public Utility Holding Company Act of 1935 ("Act")

April 14, 1988.

Notice is hereby given that the following filing(s) has/have been made with the Commission pursuant to provisions of the Act and rules promulgated thereunder. All interested persons are referred to the application(s) and/or declaration(s) for complete statements of the proposed transaction(s) summarized below. The application(s) and/or declaration(s) and any amendment(s) thereto is/are available for public inspection through the Commission's Office of Public Reference.

Interested persons wishing to comment or request a hearing on the application(s) and/or declaration(s) should submit their views in writing by May 9, 1988 to the Secretary, Securities and Exchange Commission, Washington, DC 20549, and serve a copy on the relevant applicant(s) and/or declarant(s) at the address(es) specified below. Proof of service (by affidavit or, in case of an attorney at law, by certificate) should be filed with the request. Any request for hearing shall identify specifically the issues of fact or law that are disputed. A person who so requests will be notified on any hearing, if ordered, and will receive a copy of any notice or order issued in the matter. After said date, the application(s) and/or declaration(s), as filed or as amended, may be granted and/or permitted to become effective.

National Fuel Gas Company, et al. (70-7509)

National Fuel Gas Company ("National"), 30 Rockefeller Plaza, New York, New York 10112, a registered holding company, and its subsidiaries, Seneca Resources Corporation ("Seneca") and Empire Exploration, Inc. ("Empire"), 10 Lafayette Square, Buffalo, New York 14203, have filed an application-declaration pursuant to sections 6(a), 7, 9(a), 10 and 12 of the Act and Rules 45 and 50(a)(5) thereunder.

National proposes to issue and sell prior to April 30, 1990, in one or more transactions pursuant to Rule 415 under the Securities Act of 1933, as amended, an aggregate of not to exceed two million authorized but unissued shares of its common stock, no par value ("Common Stock"). The proceeds from the issuance and sale of Common Stock will be contributed to the capital of Seneca and Empire for the purpose of reducing borrowings under Seneca's and/or Empire's credit lines.

National states that in light of current market conditions, the fact that the market for National's common stock is believed to consist of a limited number of small institutional investors, the need for a large retail effort to attract many buyers and the inherent time delays associated with competitive bidding, the interest of National's investors, consumers and the public require National to utilize the marketing capability of a single comprehensive underwriting group. National has requested an exception from the Act's competitive bidding requirements pursuant to Rule 50(a)(5), and authority to undertake negotiations with respect to the issuance and sale of the Common Stock. It may do so.

For the Commission, by the Division of Investment Management, pursuant to delegated authority.

Shirley E. Hollis,

Assistant Secretary.

[FR Doc. 88-8654 Filed 4-19-88; 8:45 am]

BILLING CODE 8010-01-M

[Release No. 34-25590; File No. SR-NYSE-88-10]

Self-Regulatory Organizations; Filing of Proposed Rule Change by New York Stock Exchange, Inc.

Pursuant to section 19(b)(1) of the Securities Exchange Act of 1934, 15 U.S.C. 78s(b)(1), notice is hereby given that on April 5, 1988, the New York Stock Exchange, Inc. filed with the Securities and Exchange Commission the proposed rule change as described in Items I, II, and III below, which Items have been prepared by the self-regulatory organization. The Commission is publishing this notice to solicit comments on the proposed rule change from interested persons.

I. Self-Regulatory Organization's Statement of the Terms of Substance of the Proposed Rule Change

The Exchange proposes to extend for seven months its pilot program allowing "monthly expirations" for stock options (the listing of series in stock options to assure that contracts covering four expiration months (including the two nearest-term expiration months) are always open for trading). Accordingly, the new termination date for the pilot program in Rule 703, Supplementary Material .20(b) is December 16, 1988.

II. Self-Regulatory Organization's Statement of the Purpose of, and Statutory Basis for, the Proposed Rule Change

In its filing with the Commission, the self-regulatory organization included statements concerning the purpose of and basis for the proposed rule change and discussed any comments it received on the proposed rule change. The text of these statements may be examined at the places specified in Item IV below and is set forth in Sections A, B, and C below.

A. Self-Regulatory Organization's Statement of the Purpose of, and Statutory Basis for, the Proposed Rule Change

In March 1987, the Commission approved a four-month extension of the Exchange's pilot program allowing monthly expirations in stock options retroctive from January 16, 1987. (*See* Rel. No. 34-24193 (March 9, 1987); File No. SR-NYSE-87-1.) The Commission subsequently approved a one-year extension of the Exchange's pilot program, allowing the listing through May 21, 1988, of short-term series enabling monthly expirations in stock options. (*See* Rel. No. 34-24650 (June 26, 1987); File No. SR-NYSE-87-15.) in 1987, the other options exchanges also received one-year extensions of their pilot programs to allow monthly expirations of stock options and to add February and March cycle series to their programs.

The proposed rule change extends the pilot program for an additional seven months at the request of the Commission staff. This further extension is designed to give the Commission additional time to study the effect on the market of the program in light of the October market break before it considers permanent approval.

The statutory basis of the proposed rule change is section 6(b) of the Securities Exchange Act of 1934 (the "Act") in general and, in particular, paragraph (5) of section 6(b), which

BEST COPY AVAILABLE

requires that the rules of a national securities exchange remove impediments to and perfect the mechanism of a free and open market, and protect investors and the public interest.

B. Self-Regulatory Organization's Statement on Burden on Competition

The Exchange believes he proposed rule change imposes no burden on competition.

C. Self-Regulatory Organization's Statement on Comments on the Proposed Rule Change Received from Members, Participants or Others

The proposed rule change was approved by the Options Market Performance Subcommittee, comprised of members and representatives of member organizations of the Exchange. Written comments were neither solicited nor received.

III. Date of Effectiveness of the Proposed Rule Change and Timing for Commission Action

Within 35 days of the date of publication of this notice in the **Federal Register** or within such longer period (a) as the Commission may designate up to 90 days of such date if it finds such longer period to be appropriate and publishes its reasons for so finding (b) as to which the self-regulatory organization consents, the Commission will:

(i) By order approve the proposed rule change, or

(ii) Institute proceedings to determine whether the proposed rule change should be disapproved.

IV. Solicitation of Comments

Interested persons are invited to submit written data, views and arguments concerning the foregoing. Persons making written submissions should file six copies thereof with the Secretary, Securities and Exchange Commission, 450 Fifth Street, NW., Washington, DC 20549. Copies of the submission, all subsequent amendments, all written statements with respect to the proposed rule change that are filed with the Commission, and all written communications relating to the proposed rule change between the Commission and any person, other than those that may be withheld from the public in accordance with the provisions of 5 U.S.C. 552, will be available for inspection and copying in the Commission's Public Reference Section, 450 Fifth Street, NW., Washington, DC 20549. Copies for such filing will also be available for inspection and copying at the principa office of the above-mentioned self-regulatory organization. All submissions should refer to the file number in the caption above and should be submitted by May 11, 1988.

For the Commission, by the Division of Market Regulation, pursuant to delegated authority.

Dated: April 14, 1988.

Shirledy E. Hollis,

Assistant Secretary.

[FR Doc. 88-8651 Filed 4-19-88; 8:45 am]

BILLING CODE 8010-01-M

DEPARTMENT OF TRANSPORTATION

Office of the Secretary

Reports, Forms, and Recordkeeping Requirements; Submittals to OMB on April 13, 1988

AGENCY: Office of the Secretary, Department of Transportation.

ACTION: Notice.

SUMMARY: This notice lists those forms, reports, and recordkeeping requirements imposed upon the public which were transmitted by the Department of Transportation on April 13, 1988, to the Office of Management and Budget (OMB) for its approval in accordance with the requirements of the Paperwork Reduction Act of 1980 (44 U.S.C. Chapter 35).

FOR FURTHER INFORMATION CONTACT: John Chandler, Annette Wilson, or Cordelia Shepherd, Information Requirements Division, M-34, Office of the Secretary of Transportation, 400 Seventh Street, SW., Washington, DC 20590, telephone, (202) 366-4735, or Gary Waxman or Sam Fairchild, Office of Management and Budget, New Executive Office Building, Room 3228, Washington, DC 20503, (202) 395-7340.

SUPPLEMENTARY INFORMATION:

Background

Section 3507 of Title 44 of the United States Code, as adopted by the Paperwork Reduction Act of 1980, requires that agencies prepare a notice for publication in the **Federal Register**, listing those information collection requests submitted to the Office of Management and Budget (OMB) for initial, approval, or for renewal under that Act. OMB reviews and approves agency submittals in accordance with criteria set forth in that Act. In carrying out its responsibilities, OMB also considers public comments on the proposed forms, reporting and recordkeeping requirements. OMB approval of an information collection requirement must be renewed at least once every three years.

Information Availability and Comments

Copies of the DOT information collection requests submitted to OMB may be obtained from the DOT officials listed in the "For Further Information Contact" paragraph set forth above. Comments on the requests should be forwarded, as quickly as possible, directly to the OMB officials listed in the "For Further Information Contact" paragraph set forth above. If you anticipate submitting substantive comments, but find that more than 10 days from the date of publication are needed to prepare them, please notify the OMB officials of your intent immediately.

Items Submitted for Review by OMB

The following information collection requests were submitted to OMB on April 13, 1988.

DOT No: 3039.

OMB No: 2127-0547.

Administration: National Highway Traffic Safety Administration.

Title: 49 CFR Part 544, Insurer Reporting Requirements—Motor Vehicle Enforcement Act of 1984.

Need for Information: To aid in implementing and evaluating the provisions of the Motor Vehicle Theft Law Enforcement Act.

Proposed Use of Information: Insurance companies and rental/leasing companies are required to provide information to NHTSA on comprehensive insurance premiums charged by insurers of motor vehicles due to vehicle thefts and distribution of stolen vehicle parts.

Frequency: Annually.

Burden Estimate: 412,535 hours.

Respondents: 4,031.

Form(s): None.

DOT No: 3040.

OMB No: 2133-0027.

Administration: Maritime Administration:

Title: Capital Construction Fund and Exhibits.

Need for Information: To document eligibility for and compliance with Capital Construction Fund program requirements.

Proposed Use of Information: To determine fitness for and compliance with the provisions of the Capital Construction Fund program.

Frequency: Semi Annual, Annual.

Burden Estimate: 5,763 hours.

Respondents: Fundholders (actual and/or potential).

Form(s): N/A.

DOT No: 3041.
OMB No: 2115–0548.
Administration: U.S. Coast Guard.
Title: Vital System Automation.
Need for Information: This information is needed to ensure safety of life at sea; to ensure that U.S. Flag vessels conform to the automation requirement of the 1981 Amendments to the International Convention for the Safety of Life at Sea, 1974) (SOLAS '74); and to facilitate delegation of automation evaluation to the American Bureau of Shipping (ABS).
Proposed Use of Information: The Coast Guard uses the information to determine compliance with the proposed safety regulations and to evaluate the necessary minimum manning consistent with the safe operation of the vessel.
Frequency: On occasion.
Burden Estimate: 630.
Respondents: Vessel Designers, shipyards, manufacturers, owners and crewmembers.
Form(s): N/A.

DOT No: 3042.
OMB No: 2115–0504.
Administration: U.S. Coast Guard.
Title: Tank Vessel Examination Letter, Certificate of Compliance, Boiler/Pressure Vessel Repairs, Cargo Gear Records and Shipping Papers.
Need for Information: This information collection requirement is needed to enable the Coast Guard to fulfill its responsibilities of ensuring maritime safety.
Proposed Use of Information: Coast Guard uses this information as a means to indicate compliance with safety standards and regulations.
Frequency: On occasion.
Burden Estimate: 22202.
Respondents: Some owners/operators of large merchant vessels and all foreign flag tankers calling at U.S. ports.
Form(s): CG–840S–1 and CG–840S–2.
DOT No: 3043.
OMB No: 2115–0037.
Administration: U.S. Coast Guard.
Title: Importation of Noncomplying Recreational Boats and Products.
Need for Information: This information collection requirement is needed by both the Coast Guard and the U.S. Customs to determine who is importing products which do not comply with federal safety standards.
Proposed Use of Information: The information is used to monitor the importation of products which do not comply. Also, the Coast Guard uses the information to determine what company or individual in the U.S. would be responsible for notifying purchasers and correcting defects which create a substantial risk of personal injury to the public.
Frequency: On occasion.
Burden Estimate: 500.
Respondents: Importers of recreational boats and associated equipment.
Form(s): CG–5098.

DOT No: 3044.
OMB NO: 2115–0528.
Administration: U.S. Coast Guard.
Title: Financial Responsibility for Water Pollution.
Need for Information: This information collection requirement is needed to ensure that the statutory requirements of 33 U.S.C. 1321(p) are complied with.
Proposed Use of Information: Coast Guard will use the information to ensure that owners and operators of vessels over 300 gross registered tons, using U.S. waters, have established evidence of financial responsibility as contained in the statue.
Frequency: On occasion.
Burden Estimate: 1884.
Respondents: Owners/operators of vessels over 300 tons.
Forms: CG–5358–8, GC–5358–10.

DOT No: 3045.
OMB No: 2106–0003.
Administration: Department of Transportation/OST.
Title: Part 291—Domestic Cargo Transportation.
Need for Information: To establish the fitness of carriers seeking to provide domestic all-cargo air service.
Proposed Use of Information: To determine whether carriers should be authorized to engage in domestic all-cargo service.
Frequency: On occasion when seeking authority to operate under section 418 of the Federal Aviation Act.
Burden Estimate: 400.
Respondents: U.S. Air Carriers.
Form(s): None.

DOT No: 3046.
OMB No: 2125–0529.
Administration: Federal Highway Administration.
Title: Preparation and Execution of the Project Agreement and Modifications.
Need for Information: To meet the requirements of section 110 of Title 23, United States Code.
Proposed Use of Information: To formally document for Federal-aid highway projects mutual responsibilities of Federal and State officials who are responsible for project approval and management.
Frequency: On Occasion.
Burden Estimate: 14,000.
Respondents: State highway agencies.
Form(s): PR–2, PR–2A, PR–2.1.
DOT No: 3047.
OMB No: 2125–0038.
Administration: Federal Highway Administration.
Title: Description of Motor Carrier Operations.
Need for Information: For FHWA to administer and enforce the Federal Motor Carrier Safety and Hazardous Materials Regulations.
Proposed Use of Information: To determine national and individual motor carrier accident statistics and rates.
Frequency: Other: If accident is reported.
Burden Estimate: 5,000.
Respondents: Motor Carriers.
Form(s): MCS–137.

DOT No: 3048.
OMB No: 2115–0025.
Administration: U.S. Coast Guard.
Title: Oil Record Book for Ships.
Need for Information: This information collection requirement is needed to enable the Coast Guard to meet its statutory requirements for preventing oil pollution of the sea.
Proposed Use of Information: Coast Guard uses this information to identify potential or actual violations of MARPOL 73/78 and the Act to Prevent Pollution from Ships.
Frequency: On occasion.
Burden Estimate: 17,033.
Respondents: Operators/owners of tankers and nontankers.
Form(s): CG–4601.

DOT No: 3049.
OMB No: 2115–0017.
Administration: U.S. Coast Guard.
Title: Application for Approval of Marine Event.
Need for Information: This information collection requirement is needed to provide effective control over regattas and marine parades performed on navigable waters of the U.S..
Proposed Use of Information: The Coast Guard uses the information to evaluate the impact of the event on the environment and to determine the type and degree of supervision or assistance needed to protect other life and property in the area.
Frequency: On Occasion.
Burden Estimate: 4,000.
Respondents: Applicant for marine parades or regattas.
Form(s): CG–4423.

DOT No: 3050.
OMB No: New.
Administration: Maritime Administration.
Title: Approval of Underwriters for Marine Hull Insurance.
Need for Information: To document compliance with 46 CFR 249.

Proposed Use of Information: To evaluate nature and extent of compliance with these new regulations.
Frequency: On occasion, Annually.
Burden Estimate: 66 hours.
Respondents: Foreign and Domestic Marine Hull Insurance Underwriters.
Form(s): N/A.

DOT No: 3051.
OMB No: 2120-0043.
Administration: Federal Aviation Administration.
Title: Recordkeeping of Aircraft Conveyances and Security Documents.
Need/Use of Information: Approval is needed for security conveyances, such as mortgages, submitted by the public for recording against aircraft engines, propellers, and spare parts locations. The form is used for that approval.
Frequency: On occasion.
Burden Estimate: 62,467.
Respondents: State & local governments, individuals, businesses.
Form(s): AC Form 8050-41.

DOT No: 3052.
OMB No: 2115-0518.
Administration: U.S. Coast Guard.
Title: Requirements for the Installation and Use of Oil Discharge Monitoring Equipment on Tank Vessels and the Retention of Discharge Data—33 CFR 157.
Need for Information: This information collection requirement is needed to (1) determine if a vessel's construction, arrangement and equipment meet the applicable standards; and (2) verify the vessel's compliance with international treaty requirements.
Proposed Use of Information: Coast Guard uses the information to ensure that system installation complies with safety standards and that proper machinery and appliances are used in the handling and stowage of oil cargoes.
Frequency: On occasion.
Burden Estimate: 963.
Respondents: Tank vessel owners and operators.
Form(s):

DOT No: 3053.
OMB No: New.
Administration: Federal Aviation Administration.
Title: Pre-Employment Inquiries Data.
Need for Information: The FAA is under a Congressional mandate to increase the number of full-time Air Traffic Control Specialists. We need to collect the information to begin an accelerated hiring.
Proposed Use of Information: The information will be used to collect information quickly for preliminary investigation of applicants for Air Traffic Controller Positions.
Frequency: One time.
Burden Estimate: 300.
Respondents: Individuals.
Form(s): FAA Form 1600-58.

DOT No: 3054.
OMB No: 2130-0017.
Administration: Federal Railroad Administration.
Title: U.S. DOT-AAR Crossing Inventory Form.
Need for Information: This is the only National Inventory of Grade Crossing Information.
Proposed Use of Information: This voluntary information is used to evaluate causes of grade crossing accidents and to evaluate grade crossing improvements.
Frequency: On Occasion.
Burden Estimate: 2,638 hours.
Respondents: Railroads and States.
Form(s): FRA-F-6180.71.

DOT No.: 3055.
OMB No.: 2130-0010.
Administration: Federal Railroad Administration.
Title: Designation of Qualified Persons (Track) and Record of Results of Track Inspections.
Need for Information: To assure safe passage of trains and compliance with Track Safety Standards.
Proposed Use of Information: Records are required to assure that inspections are made by qualified persons and that railroads are in compliance with prescribed safety standards.
Frequency: Recordkeeping.
Burden Estimate: 1,764,800 hours.
Respondents: Railroads.
Form(s): None.

DOT No.: 3056.
OMB No.: 2130-0524.
Administration: Federal Railroad Administration.
Title: Transmission of Train Orders by Radio.
Need for Information: To assure safe operating practices in the use of radio communications in railroad operations.
Proposed Use of Information: FRA uses this information to assure safe uniform procedures covering the use of radio phone technology in railroad operations.
Frequency: Recordkeeping.
Burden Estimate: 240,000 hours.
Respondents: Railroads.
Form(s): None.

DOT No.: 3057.
OMB No.: 2125-0010.
Administration: Federal Highway Administration.
Title: Bid Price Data.
Need for Information: For FHWA to monitor the changes in purchasing power of the Federal-aid dollar and for FHWA to justify funding levels of recommendations to Congress.
Proposed Use of Information: To produce the national FHWA bid price index and related statistics used as an indicator of price trends.
Frequency: On Occasion.
Burden Estimate: 576.
Respondents: State highway agencies.
Form(s): FHWA-45.

DOT No.: 3058.
OMB No.: 2127-0043.
Administration: National Highway Traffic Safety Administration.
Title: 49 CFR Part 566, Manufacturer identification.
Need for Information: To identify manufacturers in the event of a recall.
Proposed Use of Information: Manufacturers of motor vehicle and/or motor vehicle equipment are required to submit their names, addressed, and a brief summary of the type of vehicle or equipment they manufacture to NHTSA. NHTSA uses the information to locate manufacturers in the event of a recall.
Frequency: On Occasion.
Burden Estimate: 25 hours.
Respondents: 100.
Form(s): None.

DOT No.: 3059.
OMB No.: 2106-0033.
Administration: Department of Transportation/OST.
Title: Charter Trips by Foreign Air Carriers (14 CFR Part 212).
Need for Information: To establish the terms, conditions and limitations applicable to foreign air carriers.
Proposed Use of Information: Monitor foreign air carrier commercial charter operations to and from the United States, and its territories.
Frequency: On Onccasion.
Burden Estimate: $1,813.
Respondents: Foreign air carriers.
Form(s): OST Form 4540.

DOT No.: 3060.
OMB No.: 2106-0030.
Administration: Department of Transportation.
Title: Certificate of Insurance, Air Taxi Operator Policies of Insurance for Aircraft Bodily Injury and Property Damage Liability.
Need for Information: To protect the public's right to recover losses incurred in accidents involving air taxi operators.
Proposed Use of Information: To assure that air taxi operators maintain the prescribed minimum liability insurance coverage.
Frequency: As necesary, when policies are renewed or modified.
Burden Estimate: $55,500.
Respondents: Aviation insuranc underwriters, brokers and agents.

Form(s): OST Form 4521.

DOT No.: 3061.

OMB No.: 2106-0023.

Administration: Department of Transportation/OST/P/Ofc of Air Carrier Fitness Division.

Title: Part 201 Applications for Certificates of Public Convenience and Necessity.

Need for Information: Required to issue a certificate of public convenience and necessity for carrier to engage in air transportation operations.

Proposed Use of Information: Required to determine the nature and scope of requested authority.

Frequency: As needed.

Burden Estimate: $1,240.

Respondents: 100.

Form(s): None

Issued in Washington, DC on April 13, 1988.

Robert J. Woods,

Director of Information, Resource Management.

[FR Doc. 88-8693 Filed 4-19-88; 8:45 am]

BILLING CODE 4910-62-M

Federal Aviation Administration

Airport Traffic Control Tower at Bellingham, WA; Notice of Opening

Notice is hereby given that on or about May 1, 1988, an Airport Traffic Control Tower at Bellingham, Washington, will be opened. Hours of operation will be 7 a.m. to 9 p.m. local time daily, 7 days per week. This information will be reflected in the FAA Organization Statement the next time it is issued.

(Sec. 313(a), 72 Stat. 752; 49 U.S.C. 1354)

Issued in Seattle, Washington, on April 1, 1988.

Frederick M. Isaac,

Acting Director, Northwest Mountain Region.

[FR Doc. 88-8620 Filed 4-19-88; 8:45 am]

BILLING CODE 4910-13-M

Flight Service Station at Tri-City Airport; Freeland, Mi; Closing

Notice is hereby given that on or about April 19, 1988, the present Flight Service Station at Tri-City Airport, Freeland, Michigan will be closed. Services to the general of Minneapolis, Minnesota Flight Plan Area, formerly provided by this office, will be provided by the New Automated Flight Service Station in Lansing, Michigan. This information will be reflected in the FAA organization statement the next time it is reissued.

(Sec. 313(a), 72 Stat. 752; 49 U.S.C. 1354)

Issued in Des Plaines, Illinois on April 8, 1988.

William H. Pollard,

Director, Great Lakes Region.

[FR Doc. 88-8621 Filed 4-19-88; 8:45 am]

BILLING CODE 4910-13-M

Flight Service Station at Jamestown Municipal Airport, Jamestown, ND; Closing

Notice is hereby given that on or about March 29, 1988, the Flight Service Station at Jamestown Municipal Airport, Jamestown, North Dakota was closed. Services to the general public, formerly provided by this office, are being provided by the Automated Flight Service Station in Grand Forks, North Dakota. This information will be reflected in the FAA organization statement the next time it is reissued.

(Sec. 313(a), 72 Stat. 752; 49 U.S.C. 1354)

Issued in Des Plaines, Illinois on April 8, 1988.

William H. Pollard,

Director, Great Lakes Region.

[FR Doc. 88-8619 Filed 4-19-88; 8:45 am]

BILLING CODE 4910-13-M

Maritime Administration

[Docket S-827]

Lykes Bros. Steamship Co., Inc.; Application To Provide Fully Subsidized Calls at Ports South of Jacksonville, FL, and Discharge at Ports on the North Coast of Colombia, Venezuela

Lykes Bros. Steamship Co., Inc. (Lykes) by application dated April 4, 1988, has requested an amendment to Appendix A of Operating-Differential Subsidy Agreement (ODSA), Contract MA/MSB-451, so as to permit fully subsidized calls at ports south of Jacksonville and discharge at ports on the north coast of Colombia on its Trade Route (TR) 2 (U.S. Atlantic/West Coast South America) service.

Lykes points out that Crowley Caribbean Transport has recently stopped serving the north coast of Colombia with U.S.-flag vessels from south Florida ports and consequently, there is no regular U.S.-flag liner service to the north coast of Colombia from south Florida.

Lykes proposes to fill that void with its regular U.S.-flag container/breakbulk service from the U.S. Atlantic coast to Central and South America, including the north coast of Colombia. Lykes advises that the proposed fully subsidized service would ensure the continuation of regular U.S.-flag service to that area.

In support of its request, Lykes notes that there is no subsidy impact since it would use existing vessels and it is in keeping with the purposes and policies of the Merchant Marine Act, 1936, as amended (Act), since the proposed port calls will ensure that more cargo will move on U.S.-flag vessels. Additionally, Lykes certifies that the vessel operations to be subsidized will be conducted in a manner which will not preclude Lykes from earning at least 50 percent of its inbound gross freight revenue and at least 50 percent of its outbound gross freight revenue for the service covered by the application from carriage of competitive cargo.

This application may be inspected in the Office of the Secretary, Maritime Administration. Any person, firm, or corporation having any interest in such request and desiring to submit comments concerning the application must file written comments in triplicate with the Secretary, Maritime Administration, Room 7300, Nassif Building, 400 Seventh Street SW., Washington, DC 20590. Comments must be received no later than 5:00 P.M. on May 13, 1988.

(Catalog of Federal Domestic Assistance Program No. 20.804 Operating-Differential Subsidies))

By Order of the Maritime Administrator.

Date: April 15, 1988.

James E. Saari,

Secretary.

[FR Doc. 88-8678 Filed 4-19-88; 8:45 am]

BILLING CODE 4910-81-M

DEPARTMENT OF THE TREASURY

Office of the Secretary

[Supplement to Department Circular—Public Debt Series—No. 9-88]

Treasury Notes, Series F-1995

Washington, April 13, 1988.

The Secretary announced on April 12, 1988, that the interest rate on the notes designated Series F-1995, described in Department Circular—Public Debt Series—No. 9-88 dated April 6, 1988, will be 8⅝ percent. Interest on the notes will be payable at the rate of 8⅝ percent per annum.

Gerald Murphy,

Fiscal Assistant Secretary.

[FR Doc. 88-8624 Filed 4-19-88; 8:45 am]

BILLING CODE 4810-40-M

Sunshine Act Meetings

Federal Register
Vol. 53, No. 76
Wednesday, April 20, 1988

This section of the FEDERAL REGISTER contains notices of meetings published under the "Government in the Sunshine Act" (Pub. L. 94-409) 5 U.S.C. 552b(e)(3).

FEDERAL DEPOSIT INSURANCE CORPORATION

Pursuant to the provisions of the "Government in the Sunshine Act" (5 U.S.C. 552b), notice is hereby given that at 7:32 a.m. on Friday, April 15, 1988, the Board of Directors of the Federal Deposit Insurance Corporation met in closed session, by telephone conference call, to consider matters relating to an assistance agreement pursuant to section 13(c) of the Federal Deposit Insurance Act.

In calling the meeting, the Board determined, on motion of Director C. C. Hope, Jr. (Appointive), seconded by Director Robert L. Clarke (Comptroller of the Currency), concurred in by Chairman L. William Seidman, that Corporation business required its consideration of the matters on less than seven days' notice to the public; that no earlier notice of the meeting was practicable; that the public interest did not require consideration of the matters in a meeting open to public observation; and that the matters could be considered in a closed meeting by authority of subsections (c)(8), (c)(9)(A)(ii), and (c)(9)(B) of the "Government in the Sunshine Act" (5 U.S.C. 552b(c)(8), (c)(9)(A)(ii), and (c)(9)(B)).

Dated: April 15, 1988.

Federal Deposit Insurance Corporation.

Robert E. Feldman,

Assistant Executive Secretary (Operations).

FR Doc. 88-8742 Filed 4-18-88; 11:29 am]

BILLING CODE 6714-01-M

FEDERAL MINE SAFETY AND HEALTH REVIEW COMMISSION

April 14, 1988.

TIME AND DATE: 10:00 a.m., Thursday, April 21, 1988.

PLACE: Room 600, 1730 K Street NW., Washington, DC.

STATUS: Open.

MATTERS TO BE CONSIDERED: The Commission will consider and act upon the following:

1. Youghiogheny & Ohio Coal Company, Docket No. LAKE 86-121-R, etc. (Issues include whether the judge erred in modifying a section 104(d)(1) withdrawal order to a section 104(a)(1) citation.)

Any person intending to attend this meeting who requires special accessibility features and/or auxiliary aids, such as sign language interpreters, must inform the Commission in advance of those needs. Subject to 20 CFR 2706.150 (a)(3) and 2706.160(e).

CONTACT PERSON FOR MORE INFORMATION: Jean Ellen (202) 653-5629/(202) 566-2673 for TDD Relay.

Jean H. Ellen,

Agenda Clerk.

[FR Doc. 88-8719 Filed 4-18-88; 11:10 am]

BILLING CODE 6735-01-M

UNITED STATES INTERNATIONAL TRADE COMMISSION

TIME AND DATE: Thursday, April 28, 1988 at 10:00 a.m.

PLACE: Room 101, 500 E Street SW., Washington, DC. 20436.

STATUS: Open to the public.

MATTERS TO BE CONSIDERED:

1. Agenda.
2. Minutes.
3. Ratifications.
4. Petitions and Complaints:
   Certain Electric Power Tools, Battery Cartridges, and Battery Chargers (Document Number 1438).
5. Any items left over previous agenda.

CONTACT PERSON FOR MORE INFORMATION: Kenneth R. Mason, Secretary, (202) 252-1000.

Dated: April 12, 1988.

Kenneth R. Mason,

Secretary.

[FR Doc. 88-8697 Filed 4-15-88; 4:47 pm]

BILLING CODE 7020-02-M

NATIONAL MEDIATION BOARD

TIME AND DATE: 2:00 p.m., Wednesday, May 4, 1988.

PLACE: Board Hearing Room, 8th Floor, 1425 K Street NW., Washington, DC.

STATUS: Open.

MATTERS TO BE CONSIDERED:

1. Ratification of the Board actions taken by notation voting during the month of April, 1988.
2. Other priority matters which may come before the Board for which notice will be given at the earliest practicable time.

SUPPLEMENTARY INFORMATION: Copies of the monthly report of the Board's notation voting actions will be available from the Executive Director's office following the meeting.

CONTACT PERSON FOR MORE INFORMATION: Mr. Charles R. Barnes, Executive Director, Tel: (202) 523-5920.

Date of Notice: April 12, 1988.

Charles R. Barnes,

Executive Director, National Mediation Board.

[FR Doc. 88-8720 Filed 4-18-88; 11:10 am]

BILLING CODE 7550-01-M

NATIONAL TRANSPORATION SAFETY BOARD

TIME AND DATE: 9:00 a.m. Tuesday, April 26, 1988.

PLACE: Board Room (812A), Eighth Floor, 800 Independence Avenue, SW., Washington, DC 20594.

STATUS: Open.

MATTERS TO BE CONSIDERED:

1. Highway Accident Report: Collapse of New York Thruway Bridge over the Schoharie Creek, Amsterdam, New York on April 5, 1987.
2. Aircraft Accident Report: Foster Excavating, Inc., Bell 206B Helicopter, In-Flight Collision with Trees, Alamo, California, August 3, 1986.

FOR MORE INFORMATION CONTACT: Bea Hardesty, (202) 382-6525.

Dated: April 15, 1988.

Bea Hardesty,

Federal Register Liaison Officer.

[FR Doc. 88-8696 Filed 4-15-88; 5:08 p.m.]

BILLING CODE 7533-01-M

VOL 53 ISS 76 APR 20 1988 UMI

federal register

Wednesday
April 20, 1988

Part II

Department of Agriculture

Cooperative State Research Service

7 CFR Part 3403

Small Business Innovation Research Program; Administrative Provisions; Proposed Rule

DEPARTMENT OF AGRICULTURE

Cooperative State Research Service

7 CFR Part 3403

Small Business Innovation Research Program; Administrative Provisions

AGENCY: Cooperative State Research Service, USDA.

ACTION: Proposed rule.

SUMMARY: This document proposes to establish Part 3403 of Title 7, Subtitle B, Chapter XXXIV of the Code of Federal Regulations, for the purpose of administering the U.S. Department of Agriculture's Small Business Innovation Research (SBIR) program conducted under the authority of the Small Business Innovation Development Act of 1982, as amended (15 U.S.C. 638) and Section 630 of the Act making appropriations for Agriculture, Rural Development, and Related Agencies' programs for fiscal year ending September 30, 1987, and for other purposes, as made applicable by section 101(a) of Pub. L. Number 99-591, 100 Stat. 3341.

The issuance of this rule will establish the procedures to be followed annually in the solicitation of research grant proposals, the evaluation of such proposals, and the award of competitive research grants under this program.

DATE: Written comments concerning this proposed regulation are invited from interested individuals and organizations. To be considered, all relevant materials must be received on or before May 20, 1988.

ADDRESS: Written comments must be submitted to: Grants Administrative Management, Office of Grants and Program Systems, Cooperative State Research Service, U.S. Department of Agriculture, Room 112, Justin Smith Morrill Building, 15th and Independence Avenue, SW., Washington, DC 20251-2200. All comments received will be available for public inspection at said office on weekdays between the hours of 8:00 a.m. and 4:30 p.m.

FOR FURTHER INFORMATION CONTACT: Terry J. Pacovsky, (202) 475-5024.

SUPPLEMENTARY INFORMATION:

Paperwork Reduction

Under the provisions of the Paperwork Reduction Act of 1980 (44 U.S.C. 3504(h)), the collection of information requirements contained in this rule have been approved under OMB Document Nos. 0524-0022, 0524-0025, and 0524-0026.

Classification

This rule has been received under Executive Order 12291, and it has been determined that it is not a major rule because it does not involve a substantial or major impact on the Nation's economy or on large numbers of individuals or businesses. There will be no major increase in cost or prices for consumers, individual industries, Federal, State, or local governmental agencies, or geographic regions. It will not have a significant economic impact on competitive employment, investment, productivity, innovation, or on the ability of U.S. enterprises to compete with foreign-based enterprises in domestic or export markets. In addition, it will not have a significant impact on a substantial number of small entities as defined in the Regulatory Flexibility Act, Pub. L. 96-534 (5 U.S.C. 601).

Regulatory Analysis

Not required for this rulemaking.

Environmental Impact Statement

This regulation does not significantly affect the environment. Therefore, an environmental impact statement is not required under the National Environmental Policy Act of 1969.

Catalog of Federal Domestic Assistance

This program is listed in the Catalog of Federal Domestic Assistance under No. 10.212, Small Business Innovation Research (SBIR Program). For the reasons set forth in the Final Rule-related Notice to 7 CFR Part 3015, Subpart V, 48 FR 29115, June 24, 1983, and pursuant to the Notice found at 52 FR 22831, June 16, 1987, this program is excluded from the scope of Executive Order 12372 which requires intergovernmental consultation with State and local officials.

Background and Purpose

This document proposes to establish Part 3403 of Title 7, Subtitle B, Chapter XXXIV of the Code of Federal Regulations, for the purpose of administering the U.S. Department of Agriculture's Small Business Innovation Research (SBIR) program conducted under the authority of Section 630 of the Act making appropriations for Agriculture, Rural Development, and Related Agencies' programs for fiscal year ending September 30, 1987, and for other purposes as made applicable by section 101(a) of Pub. L. Number 99-591, 100 Stat. 3341, and the Small Business Innovation Development Act of 1982, as amended (15 U.S.C. 638). This rule will establish and codify the procedures to be followed in the solicitation of competitive small business innovation research proposals, the evaluation of such proposals, and the award of grants under this program.

List of Subjects in 7 CFR Part 3403

Grants programs—agriculture, Grant administration.

It is therefore proposed to add Part 3403 to Title 7, Subtitle B, Chapter XXXIV of the Code of Federal Regulations as follows:

PART 3403—SMALL BUSINESS INNOVATION RESEARCH GRANTS PROGRAM

Subpart A—General Information

Sec.
3403.1 Applicability of regulations.
3403.2 Definitions.
3403.3 Eligibility requirements.

Subpart B—Program Description

3403.4 Three-phase program.

Subpart C—Preparation and Submission of Proposals

3403.5 Requests for proposals.
3403.6 General content of proposals.
3403.7 Proposal format for phase I applications.
3403.8 Proposal format for phase II applications.
3403.9 Submission of proposals.

Subpart D—Proposal Review and Evaluation

3403.10 Proposal review.
3403.11 Phase I evaluation criteria.
3403.12 Phase II evaluation criteria.
3403.13 Availability of information.

Subpart E—Supplementary Information

3403.14 Terms and conditions of grant awards.
3403.15 Notice of grant awards.
3403.16 Use of funds; changes.
3403.17 Other Federal statutes and regulations that apply.
3403.18 Other conditions.

Authority: 5 U.S.C. 301.

Subpart A—General Information

§ 3403.1 Applicability of regulations.

(a) The regulations of this part apply to small business innovation research grants awarded under the general authority of section 630 of the Act making appropriations for Agriculture, Rural Development, and Related Agencies' programs for fiscal year ending September 30, 1987, and for other purposes, as made applicable by section 101(a) of Pub. L. Number 99-591, 100 Stat. 3341, and the provisions of the Small Business Innovation Development Act of 1982, as amended (15 U.S.C. 638). The Small Business Innovation Development Act of 1982, as amended, mandates that each Federal agency with an annual extramural budget for

research or research and development in excess of $100 million participate in a Small Business Innovation Research (SBIR) program by reserving a statutory percentage of its annual extramural budget for award to small business concerns for research or research and development in order to stimulate technological innovation, use small business to meet Federal research and development needs, increase private sector commercialization of innovations derived from Federal research and development, and foster and encourage minority and disadvantaged participation in technological innovation. The U.S. Department of Agriculture (USDA) will participate in this program through the issuance of competitive research grants which will be administered by the Office of Grants and Program Systems, Cooperative State Research Service (CSRS).

(b) The regulations of this part do not apply to research grants awarded by the Department of Agriculture under any other authority.

§ 3403.2 Definitions.

As used in this part:

(a) "Department" means the Department of Agriculture.

(b) "Principal investigator" means a single individual designated by the grantee in the grant application and approved by the Department who is responsible for the scientific and technical direction of the project.

(c) "Grantee" means the small business concern designated in the grant award document as the responsible legal entity to whom a grant is awarded under this part.

(d) "Research project grant" means the award by the Department of funds to a grantee to assist in meeting the costs of conducting for the benefit of the public an identified project which is intended and designed to establish, discover, elucidate, or confirm information or the underlying mechanisms relating to a research topic area identified in the annual solicitation of applications.

(e) "Project" means the particular activity within the scope of one of the research topic areas identified in the annual solicitation of applications, which is supported by a grant award under this part.

(f) "Project period" means the total length of time that is approved by the Department for conducting the research project as outlined in an approved grant application.

(g) "Budget period" means the interval of time into which the project period is divided for budgetary and reporting purposes.

(h) "Awarding official" means any officer or employee of the Department who has the authority to issue or modify research project grant instruments in behalf of the Department.

(i) "Peer review group" means experts or consultants, qualified by training and experience in particular scientific or technical fields to give expert advice on the scientific and technical merit of grant applications in those fields, who assemble as a group to discuss and evaluate all of the eligible proposals submitted to this program in their area of expertise.

(j) "*Ad hoc* reviewers" means experts or consultants, qualified by training and experience in particular scientific or technical fields to render expert advice on the scientific or technical merit of grant applications in those fields, who review on an individual basis one or several of the eligible proposals submitted to this program in their area of expertise and who submit to the Department written evaluations of such proposals.

(k) "Program solicitation" is a formal request for proposals whereby an agency notifies the small business community of its research or research and development needs and interests in selected areas and invites proposals from small business concerns in response to those needs.

(l) "Funding agreement" is any contract, grant, or cooperative agreement entered into between any Federal agency and any small business for the performance of experimental, developmental, or research work funded in whole or in part by the Federal Government.

(m) "Subcontract" is any agreement, other than one involving an employer-employee relationship, entered into by a Federal Government funding agreement awardee calling for supplies or services required solely for the performance of the original funding agreement.

(n) "Research or research and development (R&D)" means any activity which is:

(1) A systematic, intensive study directed toward greater knowledge or understanding of the subject studied;

(2) A systematic study directed specifically toward applying new knowledge to meet a recognized need; or

(3) A systematic application of knowledge toward the production of useful materials, devices, and systems or methods, including design, development, and improvement of prototypes and new processes to meet specific requirements.

(o) "Small business" means a concern which at the time of award of phase I and phase II funding agreements meets the following criteria:

(1) Is organized for profit, independently owned or operated, is not dominant in the field in which it is proposing, has its principal place of business located in the United States, has a number of employees not exceeding 500 (full-time, part-time, temporary, or other) in all affiliated concerns owned or controlled by a single parent concern, and meets the other regulatory requirements outlined in 13 CFR Part 121. Business concerns, other than licensed investment companies, or State development companies qualifying under the Small Business Investment Act of 1958, 15 U.S.C. 661, et seq., are affiliates of one another when directly or indirectly one concern controls or has the power to control the other or third parties (or party) control or have the power to control both. Control can be exercised through common ownership, common management, and contractual relationships. The term "affiliates" is defined in greater detail in 13 CFR 121.3(a). The term "number of employees" is defined in 13 CFR 121.2(b). Business concerns include, but are not limited to, any individual, partnership, corporation, joint venture, association, or cooperative.

(2) Is at least 51 percent owned, or in the case of a publicly owned business at least 51 percent of its voting stock is owned, by United States citizens or lawfully admitted permanent resident aliens.

(3) Is the primary source of employment of the principal investigator of the proposed effort at the time of award and during the conduct of the proposed research. Primary employment means that more than one-half of the principal investigator's time is spent in the employ of the small business. Primary employment with the small business applicant precludes full-time employment with another organization.

(4) Is the primary performer of the proposed research effort. Because the program is intended to increase the use of small business firms in Federal research or R&D, the term "primary performer" means that a minimum of two-thirds of the research or analytical work must be performed by the proposing organization under phase I grants. For phase II awards, a minimum of one-half of the research or analytical effort must be conducted by the proposing firm.

(p) "Minority and disadvantaged small business" is a concern:

(1) Which is at least 51 percent owned by one or more minority and

disadvantaged individuals or, in the case of any publicly owned business, one in which at least 51 percent of the voting stock is owned by one or more minority and disadvantaged individuals; and

(2) Whose management and daily business operations are controlled by one or more such individuals.

For purposes of this program, a minority and disadvantaged individual is defined as a member of any of the following groups: Black Americans, Hispanic Americans, Native Americans, Asian-Pacific Americans, or Asian-Indian Americans.

(q) "Women-owned small business" means a concern that is at least 51 percent owned by a woman or women who also control and operate it. "Control" as used in this context means exercising the power to make policy decisions. "Operate" as used in this context means being actively involved in the day-to-day management of the concern.

(r) "United States" means the several States, the territories and possessions of the United States, the Commonwealth of Puerto Rico, the Commonwealth of the Northern Mariana Islands, the Trust Territory of the Pacific Islands, and the District of Columbia.

§ 3403.3 Eligibility requirements.

(a) Each organization submitting a proposal must qualify as a small business for research purposes, must be the primary employer of the principal investigator at the time of award and during the conduct of the actual research, and must be the primary performer of the research and development effort. In addition, the work must be performed by the small business concern in the United States.

(b) Joint ventures and limited partnerships are eligible to apply for and to receive research grants under this program provided that the entity created qualifies as a small business in accordance with section 2[3] of the Small Business Act (15 U.S.C. 632) and as defined in § 3403.2(o) of this part.

Subpart B—Program Description

§ 3403.4 Three-phase program.

The Small Business Innovation Research program will be carried out in three separate phases described below. The first two phases are designed to assist USDA in meeting its research and development objectives and will be supported with Federal funds. The purpose of the third phase is to pursue the commercial applications or objectives of the research carried out in phases I and II through the use of private, non-Federal funds.

(a) Phase I is the initial stage in which the scientific and technical merit and feasibility of an idea related to one of the research areas described in the program solicitation is evaluated, normally for a period not to exceed 6 months.

(b) Phase II is the principal research or research and development effort in which the results from Phase I are expanded upon and further pursued, normally for a period not to exceed 24 months. Only those small businesses previously receiving phase I awards are eligible to submit phase II proposals. For each phase I project funded the awardee may apply for a phase II award only once. Phase I awardees who for valid reasons cannot apply for phase II support in the next fiscal year funding cycle may apply for support no later than the second fiscal year funding cycle.

(c) Phase III is the pursuit of commercial objectives resulting from the Federally supported work carried out in phases I and II. This portion of the project is performed by the small business firm and privately funded by a non-Federal source through the use of a follow-on funding commitment. A follow-on funding commitment is an agreement between the small business firm and a provider of follow-on capital for a specified amount of funds to be made available to the small business for further development of their effort upon achieving certain mutually agreed upon technical objectives during phase II.

Subpart C—Preparation and Submission of Proposals

§ 3403.5 Requests for proposals.

(c) *Phase I.* A program solicitation requesting phase I proposals will be prepared each fiscal year in which funds are made available for this purpose. The solicitation will contain information sufficient to enable eligible applicants to prepare grant proposals and will include descriptions of specific research topic areas which the Department will support during the fiscal year involved, forms to be completed and submitted with proposals, and special requirements. A notice will be published in the **Federal Register** informing the public of the availability of the program solicitation.

(b) *Phase II.* For each fiscal year in which funds are made available for this purpose, the Department will send a letter requesting phase II proposals from the phase I grantees eligible to apply for phase II funding in that fiscal year. The letter will contain information sufficient to enable eligible applicants to prepare grant proposals and will include forms to be submitted with proposals as well as special requirements.

§ 3403.6 General content of proposals.

(a) The proposed research must be responsive to one of the USDA program interests stated in the research topic descriptions of the program solicitation.

(b) Proposals must cover only scientific research activities. A firm must not propose product development, technical assistance, demonstration projects, classified research, or patent applications. Literature surveys should be conducted prior to preparing proposals for submission and must not be proposed as a part of the SBIR phase I or phase II effort. Proposals principally for the development of proven concepts toward commercialization or for market research should not be submitted since such efforts are considered the responsibility of the private sector and therefore are not supported by USDA.

(c) A proposal must be limited to only one topic. The same proposal may not be submitted under more than one topic. However, an organization may submit separate proposals on different topics or different proposals on the same topic. Where similar research is discussed under more than one topic, the proposer should choose that topic whose description appears most relevant to the proposer's research concept. Duplicate proposals will be returned to the applicant without review.

(d) Phase I applicants should submit a research proposal of no more than 25 pages, including cover page, budget, and all proposal-related enclosures or attachments. The text must be prepared on only one side of the page using standard 8½" x 11" white paper, with no type smaller than elite regardless of whether it is single or double spaced. In the interest of equity to all proposers, no additional attachments, appendixes, or references beyond the 25-page limitation will be considered in the proposal evaluation process, and proposals in excess of the 25-page limitation will not be considered for review or award. In addition, supplementary materials, revisions, and/or substitutions will not be accepted after the due date for proposals. For phase II applicants, this page limitation does not apply.

§ 3403.7 Proposal format for phase I applications.

(a) *Cover sheet.* Photocopy and complete Form CSRS-667 in the program solicitation. The original of the cover sheet must at a minimum contain the pen-and-ink signatures of the proposed

principal investigator(s) and the authorized organizational official. A proposal which does not contain the signature of the authorized organizational official will not be considered a legal document and will be returned to the proposing small business firm without review. All other copies of the proposal must also contain a cover sheet, but facsimile or photocopied signatures will be accepted. The title should be a brief (80-character maximum), clear, specific designation of the research proposed. It will be used to provide information to Congress and also will be used in issuing press releases. Therefore, it should not contain highly technical words. In addition, phrases such as "investigation of" or "research on" should not be used.

(b) *Project summary.* Photocopy and complete Form CSRS–668 in the program solicitation. The technical abstract should include a brief description of the problem or opportunity, project objectives, and a description of the effort. Anticipated results and potential commercial applications of the proposed research also should be summarized in the space provided. Keywords, to be provided in the last block on the page, should characterize the most important aspects of the project. The project summary of successful proposers may be published by USDA and, therefore, should not contain proprietary information.

(c) *Technical content.* The main body of the proposal should include:

(1) *Identification and significance of the problem or opportunity.* Clearly state the specific technical problem or opportunity addressed and its importance.

(2) *Background and rationale.* Indicate the overall background and technical approach to the problem or opportunity and the part that the proposed research plays in providing needed results.

(3) *Relationship with future research or research and development.* Discuss the significance of the phase I effort in providing a foundation for the phase II R&D effort. State the anticipated results of the approach if the project is successful (phase I and II). This should address: the technical, economic, social, and other benefits to the Nation and to users of the results such as the commercial sector, the Federal Government, or other researchers; the estimated total cost of the approach relative to benefits; and, if appropriate, any specific policy issues or decisions which might be affected by the results.

(4) *Phase I technical objectives.* State the specific objectives of the phase I research or research and development effort, including the technical questions it will try to answer to determine the feasibility of the proposed approach.

(5) *Phase I work plan.* This work plan must provide an explicit, detailed description of the phase I research or research and development approach. The plan should indicate the tasks to be performed as well as how and where the work will be carried out. The phase I effort should attempt to determine the technical feasibility of the proposed concept. The work plan should be linked with the technical objectives of the research and the questions the effort is designed to answer. Therefore, it should flow logically from 3403.7(c)(4) of this part. This section should constitute a substantial portion of the total proposal.

(6) *Related research or research and development.* Describe the significant research or research and development activities from relevant literature that are directly related to the proposed effort, including any conducted by the principal investigator or by the proposing firm, how it relates to the proposed effort, and any planned coordination with outside sources. The proposer must persuade reviewers that he or she is aware of related research in the selected subject.

(d) *Key personnel and bibliography.* Identify key personnel involved in the effort, including information on their directly related education and experience. For each key person, provide a chronological list of the most recent representative publications in the topic area during the preceding 5 years, including those in press. List the authors (in the same order as they appear on the paper), the full title, and the complete reference as these usually appear in journals. Where vitae are extensive, summaries that focus on most relevant experience or publications may be necessary to meet the proposal size limitation in phase I.

(e) *Facilities and equipment.* Describe the types, location, and availability of instrumentation and physical facilities necessary to carry out the work proposed. Items of equipment to be purchase must be fully justified under this section.

(f) *Consultants.* Involvement of university or other consultants in the planning and research stages of the project is permitted and may be particularly helpful to small firms which have not previously received Federal research awards. If such involvement is intended, it should be described in detail. Proposals should include letters from proposed consultants indicating willingness to serve.

(g) *Potential post application.* Briefly describe:

(1) Whether and by what means the proposed research appears to have potential commercial application; and

(2) Whether and by what means the proposed research appears to have potential use by the Federal Government.

(h) *Current and pending support.* If a proposal, substantially the same as the one being submitted, has been previously funded or is currently funded, pending, or about to be submitted to another Federal agency or to USDA in a separate action, the proposer must provide the following information:

(1) Name and address of the agency(s) to which a proposal was submitted, or will be submitted, or from which an award is expected or has been received.

(2) Date of actual or anticipated proposal submission or date of award, as appropriate.

(3) Title of proposal or award, identifying number assigned by the agency involved, and the date of program solicitation under which the proposal was submitted or the award was received.

(4) Applicable research topic area for each proposal submitted or award received.

(5) Title of research project.

(6) Name and title of principal investigator for each proposal submitted or award received.

USDA will not make awards that duplicate research funded (or to be funded) by other Federal agencies.

(i) *Cost breakdown on proposal budget.* Photocopy and complete Form CSRS–55 in the program solicitation only for the phase under which you are currently applying. (An applicant for phase I funding should not submit both phase I and II budgets.) Please note the following in completing the budget:

(1) *Salaries and wages.* Indicate the number and kind of personnel for whom salary support is sought. For key personnel, also indicate the number of work months of involvement to be supported with USDA funds (see blocks labeled "CSRS Funded Work Months").

(2) *Equipment.* Performing organizations are expected to have appropriate facilities, suitably furnished and equipped. However, items of equipment may be requested provided that they are specifically identified and adequately justified. Equipment is defined as an article of nonexpendable, tangible personal property having a useful life of more than 2 years and an acquisition cost of $500 or more per unit. Vesting of title to equipment purchased with funds provided under an SBIR funding agreement will be determined

by USDA. Awardees should plan to lease expensive equipment.

(3) *Travel.* The inclusion of travel will be carefully reviewed with respect to need and appropriateness for the research proposed. Foreign travel may not be included in the phase I budget.

(4) *Subcontracting limits.* Subcontracting may not exceed one-third of the research or analytical effort during phase I. In addition, subcontractors must perform their portion of the work in the United States. If subcontracting costs are anticipated, they should be indicated in block I, "All Other Direct Costs," on the budget sheet. A breakdown of subcontractual cost is required. For proposals involving subcontractual or consulting arrangements, USDA encourages the applicant to submit an agreement or letter of intent signed by the subcontractor or consulting firm's authorized organizational official.

(5) *Fee.* A reasonable fee is permitted under this program. All fees are subject to negotiation with USDA. If a fee is requested, the amount should be indicated in block I, "All Other Direct Costs," on the budget sheet.

(6) *Indirect costs.* If available, the current rate negotiated with the cognizant Federal negotiating agency should be used. If no rate has been negotiated, a reasonable dollar amount in lieu of indirect costs may be requested, which will be subject to approval by USDA. A proposer may elect not to charge indirect costs and, instead, use all grant funds for direct costs. If a negotiated rate is used, the percentage and base should be indicated in the space allotted under item K on the budget sheet. If indirect costs are not charged, the phrase "None requested" should be written in this space.

(7) *Cost-sharing.* Cost-sharing is permitted for proposals under this program; however, cost-sharing is not required nor will it be an evaluation factor in considering the competitive merit of proposals submitted.

(j) *Research involving special considerations.* (1) If the proposed research will involve either recombinant DNA molecules or human subjects at risk, the proposal must so indicate. In the event that the project is funded, the proposer may be required to have the research plan reviewed and approved by an appropriate "Institutional Review Board" prior to commencing actual substantive work. It is suggested that proposers contact local universities, colleges, or nonprofit research organizations which have established such reviewing mechanisms to have this service performed.

(2) Guidelines to be applied and observed when conducting such research are:

(i) *Recombinant DNA Molecules.* "Guidelines for Research Involving Recombinant DNA Molecules" issued by the National Institutes of Health. (See 51 FR 16958–16985 and any subsequent revisions.)

(ii) *Human Subjects at Risk.* Guidelines issued by the Department of Health and Human Services. (See 45 CFR Part 46.)

(k) *Proprietary information.* (1) If a proposal contains proprietary information that constitutes a trade secret, proprietary commercial or financial information, confidential personal information, or data affecting the national security, it will be treated in confidence to the extent permitted by law, provided the information is clearly marked by the proposer with the term "confidential proprietary information" and provided the following legend also appears in the designated area at the bottom of the proposal's cover sheet (Form CSRS–667).

For any purpose other than to evaluate the proposal, this data shall not be disclosed outside the Government and shall not be duplicated, used, or disclosed in whole or in part, provided that if a funding agreement is awarded to this proposer as a result of, or in connection with, the submission of this data, the Government shall have the right to duplicate, use, or disclose the data to the extent provided in the funding agreement. This restriction does not limit the Government's right to use information contained in the data if it is obtained from another source without restriction. The data subject to this restriction is contained in pages _____ of this proposal.

(2) USDA by law is required to make the final decision as to whether the information is required to be kept in confidence.

(3) The inclusion of proprietary information is discouraged unless it is necessary for the proper evaluation of the proposal. The proprietary information included should be limited, set off on a separate page, and keyed to the text by numbers. It should be confined to a few critical technical items which, if disclosed, could jeopardize the obtaining of foreign or domestic patents. Also, trade secrets, salaries, or other information which could jeopardize commercial competitiveness should be keyed and set off on separate page. Proposals or reports which set off any large amount of information may be found unacceptable by USDA.

(l) *Organizational management information.* Before the award of an SBIR funding agreement, USDA requires the submission of certain organizational management and financial information to assure the responsibility of the proposer. Form CSRS–666 ("Organizational Information") and Form CSRS–665 ("Assurance of Compliance with the Department of Agriculture Regulations Under Title VI of the Civil Rights Act of 1964, as amended") are used for this purpose and are contained in the program solicitation. This information is not required unless a project is recommended for funding, and then it is submitted on a one-time basis only.

§ 3403.8 Proposal format for phase II applications.

(a) *Cover sheet.* Follow instructions found in § 3403.7(a) of this part.

(b) *Project summary.* Follow instructions found in § 3403.7(b) of this part.

(c) *Phase I results.* A synopsis of the phase I research results should be included in the phase II application. This synopsis should contain a discussion of the overall background, phase I technical approach, and feasibility conclusions.

(d) *Proposal.* Since phase II is the principal research and development effort, proposals should be more comprehensive than those submitted under phase I. However, the outline contained in § 3403.7(c) of this part should be followed, tailoring the information requested to the phase II project.

(e) *Cost breakdown on proposal budget.* (1) For phase II, a detailed budget is required for each year of requested support. In addition, a summary budget is required detailing the requested support for the overall project period. Form CSRS–55, "Proposed Budget", is to be used for this purpose and may be photocopied as necessary.

(2) *Travel.* Foreign travel may be included as necessary in the phase II budget. Such a request will be reviewed with respect to need and appropriateness for the research proposed and therefore should be adequately justified in the proposal.

(3) *Subcontracting limits.* The instructions found in § 3403.7(i)(4) of this part apply to phase II proposals except that the subcontracting limit is changed from one-third to one-half of the research or analytical effort.

(f) *Organizational management information.* Each phase II awardee will be asked to submit an updated statement of financial condition.

(g) *Follow-on funding commitment.* If the proposer has obtained a contingent commitment for phase III follow-on

funding, it should be forwarded with the phase II application.

§ 3403.9 Submission of proposals.

The program solicitation for phase I proposals and the letter requesting phase II proposals will provide the deadline date for submitting proposals, the number of copies to be submitted, and the address where proposals should be mailed or delivered.

Subpart D—Proposal Review and Evaluation

§ 3403.10 Proposal review.

(a) All research grant applications will be acknowledged.

(b) Phase I and phase II proposals will be judged competitively in a two-stage process, based primarily upon scientific or technical merit. First, each proposal will be screened by USDA scientists to ensure that it is responsive to stated requirements contained in the program solicitation. Proposals found to be responsive will be technically evaluated by peer scientists knowledgeable in the appropriate scientific field using the criteria listed in §§ 3403.11 or 3403.12 of this part, as appropriate. Proposals found to be nonresponsive will be returned to the proposing firm without review.

(c) Both internal and external peer reviewers may be used during the technical evaluation stage of this process. Selections will be made from among recognized specialists who are uniquely qualified by training and experience in their respective fields to render expert advice on the merit of proposals received. It is anticipated that such experts will include those located in universities, Government, and non-profit research organizations. If possible, USDA intends that peer review groups shall be balanced with minority and female representation and with an equitable age distribution.

(d) Technical reviewers will base their conclusions and recommendations on information contained in the phase I or phase II proposal. It cannot be assumed that reviewers are acquainted with any experiments referred to within a proposal, with key individuals, or with the firm itself. Therefore, the proposal should be self-contained and written with the care and thoroughness accorded papers for publication.

(e) Final decisions will be made by USDA based upon the ratings assigned by reviewers and consideration of other factors, including the potential commercial application, possible duplication of other research, and critical USDA requirements, program balance, and budget limitations. In addition, the follow-on funding commitment will be a consideration for phase II proposals.

§ 3403.11. Phase I evaluation criteria.

USDA plans to select for award those proposals offering the best value to the Nation, with approximately equal consideration given to each of the following criteria except for item (1) which will receive twice the value of any of the other items:

(a) The scientific/technical quality of the phase I research plan and its relevance to the stated objectives, with special emphasis on innovativeness and originality.

(b) Importance of the problem or opportunity and anticipated benefits of the proposed research, if successful.

(c) Adequacy of the phase I objectives to show incremental progress toward proving the feasibility of approach.

(d) Qualifications of the principal investigator(s), other key staff and consultants, and the probable adequacy of available or obtainable instrumentation and facilities.

§ 3403.12 Phase II evaluation criteria.

(a) A phase II proposal may be submitted only by a phase I awardee. The phase II proposal will be reviewed for overall merit based on the following criteria with each item receiving approximately equal weight except for item (1), which will receive twice the value of any of the other items:

(1) The scientific/technical quality of the proposed research, with special emphasis on innovativeness and originality.

(2) Degree to which phase I objectives were met (as indicated in phase I final report.)

(3) The technical, economic, and/or social importance of the problem or opportunity and anticipated benefits if phase II research is successful.

(4) The adequacy of the phase II objectives to meet the problem of opportunity.

(5) The qualifications of the principal investigator(s) and other key personnel to carry out the proposed work.

(6) Reasonableness of the budget requested for the work proposed.

(b) In the event that two or more phase II proposals are of approximately equal technical merit, the follow-on funding commitment for continued development will be an important consideration. The value of the commitment will depend upon the degree of commitment made by non-Federal investors, with the maximum value resulting from a signed agreement with reasonable terms for an amount at least equal to the funding requested from USDA in phase II.

§ 3403.13 Availability of information.

Information regarding the peer review process will be made available to the extent permitted under the Freedom of Information Act (5 U.S.C. 552), the Privacy Act (5 U.S.C. 552a), and implementing Departmental and other Federal regulations. Implementing Departmental regulations are found at 7 CFR Part 1.

Subpart E—Supplementary Information

§ 3403.14 Terms and conditions of grant awards.

Within the limit of funds available for such purpose, the awarding official shall make research project grants to those responsible, eligible applicants whose proposals are judged most meritorious in the announced program areas under the evaluation criteria and procedures set forth in this part. The beginning of the project period shall be no later than September 30 of the Federal fiscal year in which the project is approved for support. All funds granted under this part shall be expended solely for the purpose for which the funds are granted in accordance with the approved application and budget, the regulations of this part, the terms and conditions of the award, the Federal Acquisition Regulation (48 CFR Part 31), and the Department's Uniform Federal Assistance Regulations (7 CFR Part 3015).

§ 3403.15 Notice of grant awards.

(a) The grant award document shall include, at a minimum, the following:

(1) Legal name and address of performing organization.

(2) Title of project.

(3) Name(s) and address(es) of Principal Investigator(s).

(4) Identifying grant number assigned by the Department.

(5) Project period, which specifies how long the Department intends to support the effort.

(6) Total amount of Federal financial assistance approved during the project period.

(7) Legal authorities under which the grant is awarded.

(8) Approved budget plan for categorizing allocable project funds to accomplish the stated purpose of the grant award.

(9) Other information or provisions deemed necessary by the Department to carry out its granting activities or to accomplish the purpose of a particular research project grant.

(b) The notice of grant award, in the form of a letter, will provide pertinent instructions and information to the grantee which are not included in the grant award document described above.

§ 3403.16 Use of funds; changes.

(a) *Delegation of fiscal responsibility.* The grantee may not in whole or in part delegate or transfer to another person, institution, or organization the responsibility for use or expenditure of grant funds.

(b) *Change in project plans.* (1) The permissible changes by the grantee, principal investigator(s), or other key project personnel in the approved research project grant shall be limited to changes in methodology, techniques, or other aspects of the project to expedite achievement of the project's approved goals. If the grantee and/or the principal investigator(s) are uncertain as to whether a change complies with this provision, the question must be referred to the Department for a final determination.

(2) Changes in approved goals, or objectives, shall be requested by the grantee and approved in writing by the Department prior to effecting such changes. In no event shall requests for such changes be approved which are outside the scope of the original approved project.

(3) Changes in approved project leadership or the replacement or reassignment of other key project personnel shall be requested by the grantee and approved in writing by the Department prior to effecting such changes.

(4) Transfers of actual performance of the substantive programmatic work in whole or in part and provisions for payment of funds, whether or not Federal funds are involved, shall be requested by the grantee and approved in writing by the Department prior to effecting such transfers.

(c) *Changes in project period.* The project period may be extended by the Department without additional financial support for such additional period(s) as the Department determines may be necessary to complete or fulfill the purposes of an approved project. Such extension shall be conditioned upon prior request by the grantee and approval in writing by the Department.

(d) *Changes in approved budget.* Changes in an approved budget shall be requested by the grantee and approved in writing by the Department prior to instituting such changes if the revision will:

(1) Involve transfers of amounts budgeted for indirect costs to absorb increases in direct costs;

(2) Involve transfers of amounts budgeted for direct costs to accommodate changes in indirect cost rates negotiated during a budget period and not approved when a grant was awarded;

(3) Result in a need or claim for the award of additional funds; or

(4) Involve transfers or expenditures of amounts requiring prior approval as set forth in the Departmental regulations or in the grant award.

§ 3403.17 Other Federal statutes and regulations that apply.

Several other Federal statutes and/or regulations apply to grant proposals considered for review or to research project grants awarded under this part. These include but are not limited to:

7 CFR Part 1.1—USDA implementation of Freedom of Information Act.

7 CFR Part 15, Subpart A—USDA implementation of Title VI of the Civil Rights Act of 1964, as amended.

7 CFR Part 3015—USDA Uniform Federal Assistance Regulations, implementing OMB directives (i.e., Circular Nos. A-102, A-110, A-87, A-21, and A-122) and incorporating provisions of 31 U.S.C. 6301-6308 (formerly the Federal Grant and Cooperative Agreement Act of 1977, Pub. L. 95-224), as well as general policy requirements applicable to recipients of Departmental financial assistance.

48 CFR Part 31—Contract Cost Principles and Procedures of the Federal Acquisition Regulation.

29 U.S.C. 794, section 504—Rehabilitation Act of 1973, and CFR Part 15B (USDA implementation of statute), prohibiting discrimination based upon physical or mental handicap in Federally assisted programs.

35 U.S.C. 200 *et seq.*—Bayh-Dole Act, controlling allocation of rights to inventions made by employees of small business firms and domestic nonprofit organizations, including universities, in Federally assisted programs (implementing regulations are contained in 37 CFR Part 401).

§ 3403.18 Other conditions.

The Department may, with respect to any research project grant, impose additional conditions prior to or at the time of any award when, in the Department's judgment, such conditions are necessary to assure or protect advancement of the approved project, the interests of the public, or the conservation of grant funds.

Done at Washington, DC, this 12th day of April, 1988.

Clare I. Harris,

Acting Administrator, Cooperative State Research Service.

[FR Doc. 88-8387 Filed 4-19-88; 8:45 am]

BILLING CODE 3410-22-M

VOL 53 ISS 76 AP 20 1988 UMI

federal register

Wednesday
April 20, 1988

Part III

National Aeronautics and Space Administration

48 CFR Part 1801 et al.
Acquisition Regulation; Miscellaneous Amendments to NASA FAR Supplement

NATIONAL AERONAUTICS AND SPACE ADMINISTRATION

48 CFR Parts 1801, 1807, 1815, 1819, 1822, 1825, 1827, 1829, 1832, 1836, 1837, 1842, 1849, 1851, 1852, 1853, and 1870

[NASA FAR Supplement Directive 85-10]

Acquisition Regulation; Miscellaneous Amendments to NASA FAR Supplement

AGENCY: Office of Procurement, Procurement Policy Division, NASA.

ACTION: Final rule.

SUMMARY: This document amends the NASA Federal Acquisition Regulation Supplement (NFS) to reflect a number of miscellaneous changes implementing higher level issuances and other changes dealing with NASA internal or administrative matters.

EFFECTIVE DATE: April 20, 1988.

FOR FURTHER INFORMATION CONTACT: W.A. Greene, Procurement Policy Division (Code HP), Office of Procurement, NASA Headquarters, Washington, DC 20546, Telephone: (202) 453-8923.

SUPPLEMENTARY INFORMATION:

Background

The major changes involve: (1) Unsolicited proposals, (2) labor standards for construction contracts, (3) trade agreements act threshold, (4) prompt payment, (5) contracting officers' technical representative delegations, and (6) contractor employee air transportation. Typographical and editorial changes to improve readability and conformance with FAR drafting conventions have been made. Substantive meanings have not been altered; however, entire textual segments have been reprinted when such changes are both numerous and scattered throughout the rule.

Impact

The Director, Office of Management and Budget (OMB), by memorandum dated December 14, 1984, exempted certain agency procurement regulations from Executive Order 12291. The regulations herein are in the exempted category. NASA certifies that this regulation will not have a significant economic effect on a substantial number of small entities under the Regulatory Flexibility Act (5 U.S.C. 601 et seq.). The regulation imposes no burdens on the public within the ambit of the Paper Work Reduction Work Act, as implemented at 5 CFR Part 1320.

List of Subjects in 48 CFR Parts 1801, 1807, 1815, 1819, 1822, 1825, 1827, 1829, 1832, 1836, 1837, 1842, 1849, 1851, 1852, 1853, and 1870

Government procurement.

L.E. Hopkins,

Deputy Assistant Administrator for Procurement.

1. The authority citation for 48 CFR Parts 1801, 1807, 1815, 1819, 1822, 1825, 1827, 1829, 1832, 1836, 1837, 1842, 1849, 1851, 1852, 1853, and 1870 continues to read as follows:

Authority: 42 U.S.C. 2473(c)(1).

PART 1801—FEDERAL ACQUISITION REGULATIONS SYSTEM

2. Subpart 1801.6 is amended by adding 1801.602-3 to read as follows:

1801.-602-3 Ratification of unauthorized commitments.

The ratifying official shall provide a copy of each ratification, including documentation that the limitations in FAR 1.602-3(c) have been satisfied, to the Assistant Administrator for Procurement (Attn.: Code HP).

PART 1807—ACQUISITION PLANNING

3. Subpart 1807.71 is amended as set forth below:

a. In 1807.7102, paragraph (c) is revised to read as follows:

1807.7102 Applicability.

* * * * *

(c) The following are monetary limitations under the Master Buy Plan procedures.

(1) $10,000,000:

(i) National Space Technology Laboratories.

(ii) Headquarters Contracts and Grants Division.

(iii) NASA Resident Office-JPL.

For the purpose of the initial Master Buy Plan submission only, the above installations not having procurements at or above the $10 million limitation will submit the three largest procurements over $5 million.

(2) $25,000,000:

(i) Ames Research Center.

(ii) Goddard Space Flight Center.

(iii) Johnson Space Center.

(iv) Kennedy Space Center.

(v) Langley Research Center.

(vi) Lewis Research Center.

(vii) Marshall Space Flight Center.

* * * * *

1807.7105 [Amended]

b. In 1807.7105, paragraph (a), the amounts "$5,000,000," "$10,000,000," and "$5,000,000," are revised to read "$10,000,000," "$25,000,000," and "$10,000,000," respectively.

c. In section 1807.7106 the introductory text and the heading to the Master Buy Plan Procedure are revised to read as follows:

1807.7106 Format of Master Buy Plan.

In accordance with the requirements of 1807.7103-1 and 1807.7103-2, Master Buy Plans and amendments to Master Buy Plans will be prepared in the format illustrated in Table 7-1.

Table 7-1 Format Master Buy Plan Procedures.

PART 1815—CONTRACTING BY NEGOTIATION

4. Part 1815 is amended as set forth below:

a. In Subpart 1815.4, paragraph (a) of 1815.407-70 is revised to read as follows:

1815.407-70 NASA solicitation provisions.

(a) The contracting officer shall insert in requests for proposals and requests for quotations other than for information or planning purposes the provision at 1852.215-72, Restriction on Use and Disclosure of Proposal/Quotation Information (Data). (See also 1815.509-70(a)).

* * * * *

b. Subpart 1815.5 is revised to read as follows:

Subpart 1815.5—Unsolicited Proposals

1815.502 Policy.
1815.503 General.
1815.504 Advance guidance.
1815.504-70 Unsolicited proposal brochure.
1815.505 Content of unsolicited proposals.
1815.505-70 Unsolicited renewal proposals.
1815.506 Agency procedures.
1815.507 Contracting methods.
1815.508 Prohibitions.
1815.508-70 NASA prohibitions.
1815.509 Limited use of data.
1815.509-70 Limited use of proposals.
1815.570 Foreign proposals.

Subpart 1815.5—Unsolicited Proposals

1815.502 Policy.

NASA will foster and encourage the submission of unsolicited proposals relevant to agency mission requirements by expeditious and equitable handling of all unsolicited proposals.

1815.503 General.

(a) *Submission to other agencies or JPL.* NASA will not accept for formal evaluation unsolicited proposals initially submitted to another agency or to the Jet Propulsion Laboratory (JPL) without the express consent of the offeror. Proposals submitted to NASA shall not be transferred to JPL for

procurement without the offeror's written permission.

(b) *Transferring proposals.* When a reviewing official determines that an unsolicited proposal is not related to the mission of NASA or may be of interest to agencies in addition to NASA, the proposal control officer may identify for the offeror other agencies whose missions may bear a relationship to the subject matter of the unsolicited proposal. NASA shall not respond to an unsolicited proposal by transferring it to another agency for action without the written consent of the offeror.

(c) *Relationship to award.* All unsolicited proposals may be prepared in a similar fashion as NASA does not have separate "contract proposal" or "grant proposal" categories. An unsolicited proposal may result in the award of a contract, a grant, a cooperative agreement, or other agreement. If a grant or cooperative agreement is used, the NASA Grant and Cooperative Agreement Handbook (NHB 5800.1) applies.

1815.504 Advance guidance.

1815.504-70 Unsolicited proposal brochure.

The Office of Procurement (Code HP) is responsible for preparing for public use a brochure titled "Guidance for the Preparation and Submission of Unsolicited Proposals," which shall be provided without charge by procurement and other NASA officials in response to requests for proposal submission information. The brochure, issued pursuant to FAR 15.504, constitutes NASA's single, official, general-purpose guidance document for public use. A deviation is required for use of any modified or summarized version of the brochure or for alternate means of general dissemination of unsolicited proposal information. The Headquarters Office of Small and Disadvantaged Business Utilization (Code K) is responsible for internal distribution of the brochure. Installations and individuals should request bulk supplies from that office.

1815.505 Content of unsolicited proposals.

1815.505-70 Unsolicited renewal proposals.

Renewal proposals, i.e., those for the extension or augmentation of current contracts are subject to the same FAR and NFS regulations, including the requirements of the Competition in Contracting Act, as are proposals for new contracts.

1815.506 Agency procedures.

(a) *NASA unsolicited proposal coordinating offices.* Each NASA field installation and NASA Headquarters shall designate an organizational entity as its unsolicited proposal coordinating office for receiving and coordinating the handling and evaluation of unsolicited proposals in accordance with the policies and procedures of FAR Subpart 15.5, this Subpart 1815.5, and NHB 5800.1. Each installation shall establish procedures for handling proposals initially received by other offices within the installation. Misdirected proposals shall be forwarded by the coordinating office to the proper installation. Field installation unsolicited proposal coordinating offices are also responsible for providing guidance to potential offerors regarding the appropriate NASA officials to contact for general mission-related inquiries or other preproposal discussions. At Headquarters, responding to general inquiries from academic researchers is the responsibility of the Headquarters unsolicited proposal coordinating office while handling inquiries from all other proposers is the responsibility of the Contracts and Grants Division (Code HW).

(b) [Reserved.]

(c) *Reconsideration.* An appropriately revised submission that is responsive to comments contained in an initial determination of inadequacy under FAR 15.506-1 shall be reconsidered by NASA officials.

(d) *Information requirements.* Unsolicited proposal coordinating offices shall keep records of unsolicited proposals received and shall provide prompt status information to requestors. The records shall include, at a minimum, the number of unsolicited proposals received, funded, and rejected during the fiscal year, the identity of the proposers and the office to which each was referred. These numbers shall be broken out by source (large business, small business, university, or nonprofit institutions).

1815.507 Contracting methods.

A "Justification for Other Than Full and Open Competition (JOFOC)" is required in accordance with FAR 6.302. See NFS 1805.202 for guidance in complying with the preaward synopsis requirement at FAR 15.507(b)(4).

1815.508 Prohibitions.

FAR 15.508(b) shall not apply to NASA; see instead 1815.508-70.

1815.508-70 NASA prohibitions.

Information (data) in unsolicited proposals furnished to the Government is to be used for evaluation purposes only. Disclosure outside the Government for evaluation is permitted only to the extent authorized by, and in accordance with procedures in, FAR 15.413-2 and 1815.413.

1815.509 Limited use of data.

FAR 15.509 shall not apply to NASA. See instead 1815.509-70.

1815.509-70 Limited use of proposals.

(a) The provision, Restriction on Use and Disclosure of Proposal/Quotation Information (Data) at 1852.215-72, is applicable to unsolicited proposals.

(b) If an unsolicited proposal is received with a more restrictive legend than made applicable by 1815.509-70(a), the procedures of FAR 15.413-2(c) apply.

(c) Upon receipt in the coordinating office, the Government notice in FAR 15.413-2(e) shall be placed on the cover sheet of all unsolicited proposals.

(d) Unsolicited proposals shall be evaluated outside the Government only to the extent authorized by, and in accordance with the procedures prescribed in, FAR 15.413-2(f) and 1815.413.

(e) If a request is made under the Freedom of Information Act for any information contained in an unsolicited proposal, the procedures of FAR 15.413-2(g) apply.

1815.570 Foreign proposals.

Unsolicited proposals from foreign sources are subject to NMI 1362.1, Initiation and Development of International Participation and Cooperation in Aeronautical and Space Programs.

c. In 1815.613-71, the introductory material to paragraph (a)(1) introductory text is revised to read as follows:

1815.613-71 Evaluation and negotiation of procurements conducted in accordance with the Source Evaluation Board Manual (NHB 5103.6).

(a) *Applicability.* (1) These procedures shall be used in all competitive negotiated procurements of $25,000,000 or more including those where the initial contract is less than $25,000,000 but where it is likely that the source selected will receive contracts for follow-on or later phases of the same project which when combined would total $25,000,000 or more. (Examples would be: options; agreements-to-agree, and later phases as in A-109 procurements.) Exceptions to the above include procurements where:

* * * * *

PART 1819—SMALL BUSINESS AND SMALL DISADVANTAGED BUSINESS CONCERNS

5. Part 1819 is amended as set forth below:

a. Section 1819.001 is revised to read as follows:

1819.001 Definitions.

"Small Business Specialist" means the person who—

(1) Is appointed by the Head of each NASA installation having procurement responsibilities; and

(2) Is the central point of contact for all small business and labor surplus area matters. See 1819.201(b) and (c) for a detailed description of this position. This person is synonymous with the Small and Disadvantaged Business Utilization Specialist (see FAR 19.201(d)).

b. In Subpart 1819.2, 1819.202-4 is added to read as follows:

1819.202-4 Solicitation.

The contracting officer shall include in the solicitation mailing list the names of firms submitted by SBA, unless there is a valid reason for not so doing.

1819.202-5, 1819.402, 1819.470, 1819.502-2, 1819.810 [Removed]

c. Sections 1819.202-5, 1819.402, 1819.470, 1819.502-2, and 1819.810 are removed.

d. Sections 1819.602-70 and 1819.809-1 are revised to read as follows:

1819.602-70 Reports on certificates of competency.

Small Business Specialists shall inform the Director of Small and Disadvantaged Business Utilization, NASA Headquarters (Code K), quarterly in writing, of all certificate of competency cases initiated during the quarter and of the final disposition made on cases during the quarter, including the number and dollar value of certificates of competency issued during the period. The Small Business Specialist shall include the company name, item being procured, solicitation number, dollar value of the procurement, and date the case was submitted to SBA. In addition, the Small Business Specialist shall provide advice and data for all cases where (a) the small business concern elects not to file an application for a certificate of competency, (b) SBA declines to issue a certificate of competency, or (c) the contracting activity reverses the preaward survey activity's negative finding on responsibility, withdraws the referral to SBA and makes the award.

1819.809-1 General.

(a) *Supplies and services (including research and development).* (1) As required by FAR 19.809-1(a), the contracting officer shall prepare a Standard Form 26 for execution with the SBA. The prime contract between NASA and SBA shall include the clause at 1852.219-70, "NASA-Requested Actions (Supplies and Services)."

(2) The contracting officer shall accomplish internal NASA distribution of both the prime contract and the subcontract and provide SBA a duplicate original copy of the executed prime contract and any additional authenticated, conformed, or reproduced copies SBA requests. The SBA shall provide the contracting officer two duplicate original copies of the executed subcontract and any additional authenticated, conformed, or reproduced copies the contracting officer requests for internal NASA distribution.

(b) *Construction.* (1) Provisions of the Miller Act regarding performance and payment bonds do not apply to the prime contract between NASA and SBA but do apply to the subcontract between SBA and its subcontrctor.

(2) The prime contract between NASA and SBA shall include the clause at 1852.219-71, "NASA-Requested Actions (Construction)."

PART 1822—APPLICATION OF LABOR LAWS TO GOVERNMENT ACQUISITION

6. Part 1822 is amended by adding Subparts 1822.3 and 1822.4 to read as follows:

Subpart 1822.3—Contract Work Hours and Safety Standards Act

1822.302 Liquidated damages and overtime pay.

Subpart 1822.4—Labor Standards for Contracts Involving Construction

1822.403-4 Department of Labor regulations.
1822.404-3 Procedures for requesting wage determinations.
1822.406-2 Wages, fringe benefits, and overtime.
1822.406-8 Investigations.
1822.406-9 Withholding from or suspension of contract payments.
1822.406-11 Contract terminations.
1822.406-13 Semiannual enforcement reports.

Subpart 1822.3—Contract Work Hours and Safety Standards Act

§ 1822.302 Liquidated damages and overtime pay.

Disposal of funds withheld or collected for liquidated damages shall be in accordance with direction of the Director, Industrial Relations Office (Code NR), who is the agency head's designee relative to liquidated damages under the Contract Work Hours and Safety Standards Act.

Subpart 1822.4—Labor Standards for Contracts Involving Construction

1822.403-4 Department of Labor regulations.

For industrial relations actions requiring communication with the Department of Labor, National Headquarters, Washington, DC (including the Administrator, Wage and Hour Division), contracting officers shall provide the appropriate information and supporting documentation to the Industrial Relations Office (Code NR), which shall make all contacts with the Department of Labor on these matters.

1822.404-3 Procedures for requesting wage determinations.

Contracting officers shall submit requests for project wage determinations to Code NR at least 55 days (70 days if possible) before issuing the solicitation.

1822.406-2 Wages, fringe benefits, and overtime.

In implementing FAR 22.406-2(b)(2), the contracting officer shall provide information to the Director, Industrial Relations Office (Code NR), who shall submit the question of cash equivalents to the Department of Labor for final determination.

1822.406-8 Investigations.

The contracting officer is responsible for conducting investigations, as provided by FAR 22.406-8(a), of labor violations relative to contracts under his/her cognizance. The agency head's designee for receiving and processing contracting officer reports of violations is the Director, Industrial Relations Office (Code NR), who, with the concurrence of the Associate General Counsel for Contracts, shall forward reports of violations to the Attorney General in accordance with FAR 22.406-8(d)(2)(iv).

1822.406-9 Withholding from or suspension of contract payments.

Disposal of funds withheld or collected for liquidated damages under the Davis-Bacon Act shall be in accordance with direction of the Director, Industrial Relations Office (Code NR).

1822.406-11 Contract terminations.

Contracting officers shall forward reports of contract or subcontract terminations for violation of labor standards clauses to the Director, Industrial Relations Office (Code NR),

VOL 53 ISS 76 APR 20 1988 UMI

who shall submit the reports in accordance with FAR 22.406–11.

1822.406–13 Semiannual enforcement reports.

Procurement Officers shall submit semiannual enforcement data within 20 days after the end of the reporting period specified in FAR 22.406–13 to the Office of Procurement (Attn: Code HP) for consolidation and submission to the Department of Labor. Negative statements are required. The Procurement Policy Division (Code HP) is the point of contract regarding data to be included in the submissions.

PART 1825—FOREIGN ACQUISITION

7. In Subpart 1825.4, 1825.402 is revised to read as follows:

1825.402 Policy.

The threshold for procurements subject to the Trade Agreements Act of 1979 is $156,000.

PART 1827—PATENTS, DATA, AND COPYRIGHTS

8. Subpart 1827.3 is amended as set forth below:

a. Section 1827.371 is revised to read as follows:

1827.371 Definitions.

"Administrator," as used in this subpart, means the Administrator of NASA or a duly authorized representative.

"Contract," as used in this subpart, means any actual or proposed contract, agreement, understanding, or other arrangement, and includes any assignment, substitution of parties, or subcontract executed or entered into thereunder.

"Made," as used in this subpart, means conceived or first actually reduced to practice; provided, that in the case of a variety of plant, the date of determination (as defined in section 41(d) of the Plant Variety Protection Act, 7 U.S.C. 2401(d)) must also occur during the period of contract performance.

"Nonprofit organization," as used in this subpart, means a university or other institution of higher education or an organization of the type described in section 501(c)(3) of the Internal Revenue Code of 1954 (26 U.S.C. 501(c)) and exempt from taxation under section 501(a) of the Internal Revenue Code (26 U.S.C. 501(a)), or any nonprofit scientific or educational organization qualified under a State nonprofit-organization statute.

"Practical application," as used in this subpart, means manufacturing, in the case of a composition or product; practice, in the case of a process or method; or operation, in the case of a machine or system; and, in each case, under such conditions as to establish that the invention is being utilized and that its benefits are, to the extent permitted by law and Government regulations, available to the public on reasonable terms.

"Reportable item," as used in this subpart, means any invention, discovery, improvement, or innovation of the contractor, whether or not patentable or otherwise protectable under Title 35 of the United States Code, conceived or first actually reduced to practice in the performance of any work under any NASA contract or in the performance of any work that is reimbursable under any clause in any NASA contract providing for reimbursement of costs incurred before the effective date of the contract.

"Small business firm," as used in this subpart, means a domestic small business concern as defined at 15 U.S.C. 632 and implementing regulations of the Administrator of the Small Business Administration. (For the purpose of this definition, the size standard contained in 13 CFR 121.3–8 for small business contractors and in 13 CFR 121.3–12 for small business contractors shall be used. See FAR Part 19.)

"Subject invention," as used in this subpart, means any reportable item that is or may be patentable or otherwise protectible under Title 35 of the United States Code, or any novel variety of plant that is or may be protectible under the Plant Variety Protection Act (7 U.S.C. 2321 *et seq.*).

1827.374–1 [Amended]

b. In 1827.374–1, paragraph (f) is removed, paragraphs (g) and (h) are redesignated (f) and (g), respectively, and newly redesignated paragraph (g) is revised to read as follows:

1827.374–1 General.

* * * * *

(g) *Licenses and assignments under contracts with nonprofit organizations.* FAR 27.304–1(h) shall apply. NASA's approving official for any assignment requested under FAR 27.304–1(h) is the Associate General Counsel (Intellectual Property). Contractors' requests should be made to the Patent Representative designated in accordance with 1827.373(e) and forwarded, with recommendation, to the Associate General Counsel (Intellectual Property) for decision.

PART 1829—TAXES

9. Part 1829 is amended as set forth below:

1829.170 [Removed]

a. In Subpart 1829.1, 1829.170 is removed.

b. Subpart 1829.2 is added to read as follows:

Subpart 1829.2—Federal Excise Taxes

1829.203 Other federal tax exemptions.

(a) Distilled spirits, and specially denatured spirits of 190 degrees proof or more, may be purchased tax-free by any United States Government agency or its contractors. To obtain alcohol tax free, the Administrator or Assistant Administrator for Procurement is responsible for filing and updating Form ATF 1444/1486, Tax-Free Spirits or Specially Denatured Spirits for Use of United States, with the Treasury Department, Bureau of Alcohol, Tobacco and Firearms, Special Operations Branch. One application shall be submitted for all of NASA's requirements. Copies of the Treasury Department certificates issued shall be furnished to all installation procurement officers.

(b) When purchasing spirits for use by Center personnel, the contracting officer shall attach a copy of the certificate to the purchase order/contract. Upon receipt of the spirits, the certificate shall be returned to the contracting officer unless future orders are anticipated.

(c) When a NASA contractor requires spirits to perform a NASA contract, the contracting officer shall give the contractor a copy of the certificate to provide its vendor. Upon receipt of the spirits, the contractor shall return the certificate to the contracting officer unless future orders are anticipated. In any event, the certificate shall be returned upon completion of the contract.

PART 1832—CONTRACT FINANCING

10. Part 1832 is amended as set forth below:

a. In Subpart 1832.1, 1832.111–70 is revised to read as follows:

1832.111–70 NASA contract clause.

The contracting office shall insert the clause at 1852.232–79, Payment for On-site Preparatory Costs, in solicitations and contracts for construction on a fixed-price basis where progress payments are contemplated and pro rata payment of these costs to the contractor is appropriate.

b. Subpart 1832.9 is added to read as follows:

Subpart 1832.9—Prompt Payment

1832.908 Contract clause.

Alternate II, as authorized at FAR 32.908(c), and NASA modifications thereto shall be used in all solicitations and contracts containing the clause at FAR 52.232–25.

PART 1836—CONSTRUCTION AND ARCHITECT-ENGINEER CONTRACTS

1836.370 [Amended]

11. In 1836.370(b), the last sentence is removed.

PART 1837—SERVICE CONTRACTING

1837.205–73 [Amended]

12. In 1837.205–73, the phrase "Associate Administrator for Management (Code N)." is revised to read "Director, General Management Division (Code NP)."

PART 1842—CONTRACT ADMINISTRATION

13. Subpart 1842.2 is amended by adding 1842.270 to read as follows:

1842.270 Contracting Officer Technical Representative (COTR) Delegations.

(a) A contracting officer may designate an appropriate Government employee to act as his or her authorized representative in administering a particular contract. If it is considered necessary, the contracting officer may designate an alternate COTR to act during short absences of the COTR; the policies and procedures for COTRs also shall apply to alternate COTRs. Technical organizations are responsible for ensuring that the individual they recommend to the contracting officer possesses qualifications and experience commensurate with the authorities to be delegated and the nature of the contract. The contracting officer shall ensure that the duties and responsibilities delegated do not exceed the limitations at 1801.670(b).

(b) COTRs shall be designated by name and position title (but see 1801.670(b) prohibition against delegating COTR duties to a position rather than a named individual). Each COTR designation shall be in writing and shall clearly define the scope and limitations of the COTR's authority. NASA Form 1634, Contracting Officer Technical Representative (COTR) Delegation, shall be used to designate COTRs. The COTR delegation shall be signed by an appropriate contracting officer (see 1801.670(b)) and shall state that these duties are not redelegable and that the COTR may be personally liable for unauthorized direction. (However, this does not prohibit the COTR from having assistants for the purpose of monitoring contractor progress and gathering information.) When one individual is to act for a contracting officer on more than one contract, separate delegations shall be issued for each contract.

(c) The contracting officer shall make changes in the scope and limitations of the COTR's authority only by issuance of A new delegation. a COTR delegation shall remain in effect throughout the life of the contract unless—

(1) Cancelled in writing by an appropriate contracting officer; or

(2) Superseded by a subsequent COTR designation.

(d) A COTR shall be authorized to initiate procurement actions by use of purchase orders, to place calls or delivery orders under indefinite quantity-type contracts, indefinite delivery-type contracts, or basic ordering agreements. A COTR shall not be authorized toward, agree to, or sign any contract or modification or in any way obligate the payment of money by the Government. However, delegations may be made to construction contract COTRs to sign emergency change orders, if sufficient funds have been certified to cover the emergency change, with an estimated value not to exceed $2,500 onsite at construction sites.

(e) The contracting officer shall send the original and one copy of the COTR delegation letter to the COTR, who shall be required to acknowledge receipt by signing the original and returning it to the contracting officer. The original of the COTR delegation letter shall be filed and retained in the applicable contract file. Copies of the COTR delegation letter shall be distributed to the contractor and to each cognizant contract administration office. Acknowledgement and distribution for terminations of COTR delegations and COTR delegations that are revising duties shall follow the same rules.

PART 1849—TERMINATION OF CONTRACTS

14. In 1849.101–70, the introductory material to paragraph (a) is revised to read as follows:

1849.101–70 Appointment/Delegation.

(a) Heads of installations shall appoint a termination contracting officer (TCO) (see FAR 2.101) to perform specific duties relating to contract termination as one of that individual's primary functions. Such duties should include—

* * * * *

PART 1851—USE OF GOVERNMENT SOURCES BY CONTRACTORS

Subpart 1851.70—[Removed]

15. Subpart 1851.70 is removed.

PART 1852—SOLICITATION PROVISIONS AND CONTRACT CLAUSES

16. Part 1852 is amended as set forth below:

a. In 1852.103–70, paragraph (a) is revised to read as follows:

1852.103–70 Identification of Modified Provisions and Clauses.

(a) When a FAR clause or provision is included in a solicitation or contract and the NFS sets forth the exact wording of a modification, the title line shall identify the modification as shown below. This format shall be used for both incorporation by reference and when using full text.

52.232–1 Payments (APR 1984)—as modified by 1852.232–1 NASA FAR Supplement (APR 1984)

* * * * *

1852.216–7 [Amended]

b. In 1852.216–7, the sentence which reads "Paragraph (a) of the clause at FAR 52.216–7 shall be modified as specified in 1852.216–770." is removed.

1852.216–26, 1852.216–770 [Removed]

c. Sections 1852.216–26 and 1852.216–770 are removed.

d. Sections 1852.219–70 and 1852.219–71 are added, and 1852.222–70, 1852.222–71, and 1852.227–70 are revised to read as follows:

1852.219–70 NASA-requested actions (supplies and services)

As prescribed in 1819.809–1(a), insert the following clause:

NASA-Requested Actions (Supplies and Services) (April 1988)

It is agreed that the provisions of the Termination for Convenience of the Government, Changes, Disputes, and Default clauses that are included in the contract between the SBA and the subcontractor shall be invoked in appropriate cases when requested by the NASA Contracting Officer. If the SBA does not agree with the NASA Contracting Officer's request, the case shall be referred to the Assistant Administrator for Procurement, NASA Headquarters (Code H), for decision.

(End of Clause)

Alternate I (April 1988) In cost-reimbursement contracts, substitute "Termination (Cost-Reimbursement)" for "Termination for Convenience of the Government," and "Excusable Delays" for "Default" in the basic clause.

1852.219-71 NASA-requested actions (construction)

As specified in 1819.809-1(b), insert the following clause:

NASA-Requested Actions (Construction) (April 1988)

It is agreed that the provisions of the Termination for Convenience, Changes, Differing Site Conditions, Default-Damages for Delay-Time Extension, Suspension of Work, Disputes, Price Reduction, and Payments to Contractor clauses which are included in the contract between the SBA and its Contractor shall be invoked in appropriate cases when requested by the NASA Contracting Officer. If the SBA does not agree with the NASA Contracting Officer's request, the case shall be referred to the Assistant Administrator for Procurement, NASA Headquarters (Code H), for decision.

(End of Clause)

1852.222-70 Facilities nondiscrimination notice.

As prescribed in 1822.7002(a), insert the following clause:

Facilities Nondiscrimination Notice (April 1988)

If the annual rental under this lease, combined with the annual rental under all other NASA leases of space in the building in which the space covered by this lease is located, exceeds $10,000, the lessor agrees to comply with the requirements of the Facilities Nondiscrimination clause of this contract.

(End of clause)

1852.222-71 Facilities nondiscrimination.

As prescribed at 1822.7002(b), insert the following clause:

Facilities Nondiscrimination (April 1988)

(a) As used in this clause, "facility" means store, shop, restaurant, cafeteria, restroom, or any other public facility in the building in which space covered by this lease is located.

(b) The lessor agrees not to discriminate against any person because of race, color, religion, or national origin in furnishing, or by refusing to furnish, the use of any facility, including any and all services, privileges, accommodations, and activities provided by that facility. Nothing in this clause requires the furnishing to the general public of the use of any facility customarily furnished by the lessor solely to tenants and their employees, customers patients, clients, guests, and invitees.

(c) The lessor's noncompliance with this clause shall constitute a material breach of this lease. In the event of such noncompliance, the Government may take appropriate action to enforce compliance, may terminate this lease, or may pursue such other remedies as may be provided by law. In the event of termination, the lessor shall be liable for all excess costs of the Government in acquiring substitute space, including the cost of moving to such space. Substitute space shall be obtained in as close proximity to the lessor's building as is feasible, and moving costs will be limited to the actual expenses incurred.

(d) Whenever an agreement is to be entered into or a concession is to be permitted to operate, the lessor shall include or require the inclusion of paragraphs (a), (b), and (c) of this clause in every such agreement or concession under which any person other than the lessor operates or has the right to operate any facility. Nothing in this clause, however, requries the lessor to include or require the inclusion of those paragraphs in any existing agreement or concession arrangement, or in one under which a party other than the lessor has the unilateral right to renew or extend the agreement or arrangement, until the expiration of the existing agreement or arrangement and the unilateral right to renew or extend.

(e) The lessor also agrees to take, as expeditiously as possible, such lawful actions as NASA may direct to enforce the intent of this clause, including termination of the agreement or concession and institution of court action.

(End of Clause)

1852.227-70 New technology.

As prescribed in 1827.373(b), insert the following clause:

New Technology (April 1988)

(a) *Definitions.*

"Administrator," as used in this clause, means the Administrator of the National Aeronautics and Space Administration (NASA) or duly authorized representative.

"Contract," as used in this clause, means any actual or proposed contract, agreement, understanding, or other arrangement, and includes any assignment, substitution of parties, or subcontract executed or entered into thereunder.

"Made," as used in this clause, means conception or first actual reduction to practice; provided, that in the case of a variety of plant, the date of determination (as defined in Section 41(d) of the Plant Variety Protection Act, 7 U.S.C. 2401(d) must also occur during the period of contract performance.

"Nonprofit organization," as used in this clause, means a domestic university or other institution of higher education or an organization of the type described in section 501(c)(3) of the Internal Revenue Code of 1954 (26 U.S.C. 501(c)) and exempt from taxation under section 501(a) of the Internal Revenue Code (26 U.S.C. 501(a)), or any domestic nonprofit scientific or educational organization qualified under a State nonprofit organization statute.

"Practical application," as used in this clause, means to manufacture, in the case of a composition or product; to practice, in the case of a process or method; or to operate, in case of a machine or system; and, in each case, under such conditions as to establish that the invention is being utilized and that its benefits are, to the extent permitted by law or Government regulations, available to the public on reasonable terms.

"Reportable item," as used in this clause, means any invention, discovery, improvement, or innovation of the Contractor, whether or not the same is or may be patentable or otherwise protectable under Title 35 of the United States Code, conceived or first actually reduced to practice in the performance of any work under this contract or in the performance of any work that is reimbursable under any clause in this contract providing for reimbursement of costs incurred prior to the effective date of this contract.

"Small business firm," as used in this clause, means a domestic small business concern as defined at 15 U.S.C. 632 and implementing regulations of the Administrator of the Small Business Administration. (For the purpose of this definition, the size standard contained in 13 CFR 121.3-8 for small business contractors and in 13 CFR 121.3-12 for small business subcontractors will be used.)

"Subject invention," as used in this clause, means any reportable item which is or may be patentable or otherwise protectable under Title 35 of the United States Code, or any novel variety of plant that is or may be protectable under the Plant Variety Protection Act (7 U.S.C. 2321 et seq.).

(b) *Allocation of principal rights.*—(1) *Presumption of title.* (i) Any reportable item that the Administrator considers to be a subject invention shall be presumed to have been made in the manner specified in paragraph (1) or (2) of Section 305(a) of the National Aeronautics and Space Act of 1958 (43 U.S.C. 2457(a)) (hereinafter called "the Act"), and the above presumption shall be conclusive unless at the time of reporting the reportable item the Contractor submits to the Contracting Officer a written statement, containing supporting details, demonstrating that the reportable item was not made in the manner specified in paragraph (1) or (2) of Section 305(a) of the Act.

(ii) Regardless of whether title to a given subject invention would otherwise be subject to an advance waiver or is the subject of a petition for waiver, the Contractor may nevertheless file the statement described in subdivision (i) above. The Administrator will review the information furnished by the Contractor in any such statement and any other available information relating to the circumstances surrounding the making of the subject invention and will notify the Contractor whether the Administrator has determined that the subject invention was made in the manner specified in paragraph (1) or (2) of Section 305(a) of the Act.

(2) *Property rights in subject inventions.* Each subject invention for which the presumption of subdivision (1)(i) above is conclusive or for which there has been a determination that it was made in the manner specified in paragraph (1) or (2) of Section 305(a) of the Act shall be the exclusive property of the United States as represented by NASA unless the Administrator waives all or any part of the rights of the United States, as provided in subparagraph (3) below.

(3) *Waiver of rights.* (i) Section 305(f) of the Act provides for the promulgation of regulations by which the Administrator may waive the rights of the United States with respect to any invention or class of inventions made or that may be made under conditions specified in paragraph (1) or (2) of Section 305(a) of the Act. The promulgated NASA Patent Waiver Regulations, 14 CFR

BEST COPY AVAILABLE

Section 1245, Subpart 1, have adopted the Presidential Memorandum on Government Patent Policy of February 18, 1983, as a guide in acting on petitions (requests) for such waiver of rights.

(ii) As provided in 14 CFR 1245, Subpart 1, Contractors may petition, either prior to execution of the contract or within 30 days after execution of the contract, for advance waiver of rights to any or all of the inventions that may be made under a contract. If such a petition is not submitted, or if after submission it is denied, the Contractor (or an employee inventor of the Contractor) may petition for waiver of rights to an identified subject invention within eight months of first disclosure of invention in accordance with subparagraph (e)(2) below, or within such longer period as may be authorized in accordance with 14 CFR 1245.105.

(c) *Minimum rights reserved by the Government.* (1) With respect to each subject invention for which a waiver of rights is applicable in accordance with 14 CFR Section 1245, Subpart 1, the Government reserves—

(i) An irrevocable, nonexclusive, nontransferable, royalty-free license for the practice of such invention throughout the world by or on behalf of the United States or any foreign government in accordance with any treaty or agreement with the United States; and

(ii) Such other rights as stated in 14 CFR 1245.107.

(2) Nothing contained in this paragraph (c) shall be considered to grant to the Government any rights with respect to any invention other than a subject invention.

(d) *Minimum rights to the Contractor.* (1) The Contractor is hereby granted a revocable, nonexclusive, royalty-free license in each patent application filed in any country on a subject invention and any resulting patent in which the Government acquires title, unless the Contractor fails to disclose the subject invention within the times specified in subparagraph (e)(2) below. The Contractor's license extends to its domestic subsidiaries and affiliates, if any, within the corporate structure of which the Contractor is a party and includes the right to grant sublicenses of the same scope to the extent the Contractor was legally obligated to do so at the time the contract was awarded. The license is transferable only with the approval of the Administrator except when transferred to the successor of that part of the Contractor's business to which the invention pertains.

(2) The Contractor's domestic license may be revoked or modified by the Administrator to the extent necessary to achieve expeditious practical application of the subject invention pursuant to an application for an exclusive license submitted in accordance with 14 CFR 1245, Subpart 2, Licensing of NASA Inventions. This license will not be revoked in that field of use or the geographical areas in which the Contractor has achieved practical application and continues to make the benefits of the invention reasonably accessible to the public. The license in any foreign country may be revoked or modified at the discretion of the Administrator to the extent the Contractor, its licensees, or its domestic subsidiaries or affiliates have failed to achieve practical application in that foreign country.

(3) Before revocation or modification of the license, the Contractor will be provided a written notice of the Administrator's intention to revoke or modify the license, and the Contractor will be allowed 30 days (or such other time as may be authorized by the Administrator for good cause shown by the Contractor) after the notice to show cause why the license should not be revoked or modified. The Contractor has the right to appeal, in accordance with 14 CFR 1245.211, any decision concerning the revocation or modification of its license.

(e) *Invention identification, disclosures, and reports.* (1) The Contractor shall establish and maintain active and effective procedures to assure that reportable items are promptly identified and disclosed to Contractor personnel responsible for the administration of this New Technology clause within 6 monhts of conception and/or first actual reduction to practice, whichever occurs first in the performance of work under this contract. These procedures shall include the maintenance of laboratory notebooks or equivalent records and other records as are reasonably necessary to document the conception and/or the first actual reduction to practice of the reportable items, and records that show that the procedures for identifying and disclosing reportable items are followed. Upon request, the Contractor shall furnish the Contracting Officer a description of such procedures for evaluation and for determination as to their effectiveness.

(2) The Contractor will disclose each reportable item to the Contracting Officer within two months after the inventor discloses it in writing to Contractor personnel responsible for the administration of this New Technology clause or, if earlier, within six months after the Contractor becomes aware that a reportable item has been made, but in any event for subject inventions before any on sale, public use, or publication of such invention known to the Contractor. The disclosure to the agency shall be in the form of a written report and shall identify the contract under which the reportable item was made and the inventor(s) or innovator(s). It shall be sufficiently complete in technical detail to convey a clear understanding, to the extent known at the time of the disclosure, of the nature, purpose, operation, and physical, chemical, biological, or electrical characteristics of the reportable item. The disclosure shall also identify any publication, on sale, or public use of any subject invention and whether a manuscript describing such invention has been submitted for publication and, if so, whether it has been accepted for publication at the time of disclosure. In addition, after disclosure to the agency, the Contractor will promptly notify the agency of the acceptance of any manuscript describing a subject invention for publication or of any on sale or public use planned by the Contractor for such invention.

(3) The Contractor shall furnish the Contracting Officer the following:

(i) Interim reports every 12 months (or such longer period as may be specified by the Contracting Officer) from the date of the contract, listing reportable items during that period, and certifying that all reportable items have been disclosed (or that there are no such inventions) and that the procedures required by subparagraph (e)(1) above have been followed.

(ii) A final report, within 3 months after completion of the contracted work, listing all reportable items or certifying that there were no such reportable items, and listing all subcontracts at any tier containing a patent rights clause or certifying that there were no such subcontracts.

(4) The Contractor agrees, upon written request of the Contracting Officer, to furnish additional technical and other information available to the Contractor as is necessary for the preparation of a patent application on a subject invention and for the prosecution of the patent application, and to execute all papers necessary to file patent applications on subject inventions and to establish the Government's rights in the subject inventions.

(5) The Contractor agrees, subject to paragraph 27.302(i), of the Federal Acquisition Regulations (FAR), that the Government may duplicate and disclose subject invention disclosures and all other reports and papers furnished or required to be furnished pursuant to this clause.

(f) *Examination of records relating to inventions.* (1) The Contracting Officer or any authorized representative shall, until 3 years after final payment under this contract, have the right to examine any books (including laboratory notebooks), records, and documents of the Contractor relating to the conception or first actual reduction to practice of inventions in the same field of technology as the work under this contract to determine whether—

(i) Any such inventions are subject inventions;

(ii) The Contractor has established and maintained the procedures required by subparagraph (e)(1) of this clause; and

(iii) The Contractor and its inventors have complied with the procedures.

(2) If the Contracting Officer learns of an unreported Contractor invention that the Contracting Officer believes may be a subject invention, the Contractor may be required to disclose the invention to the agency for a determination of ownership rights.

(3) Any examination of records under this paragraph will be subject to appropriate conditions to protect the confidentiality of the information involved.

(g) *Withholding of payment (this paragraph does not apply to subcontracts).* (1) Any time before final payment under this contract, the Contracting Officer may, in the Government's interest, withhold payment until a reserve not exceeding $50,000 or 5 percent of the amount of this contract, whichever is less, shall have been set aside if, in the Contracting Officer's opinion, the Contractor fails to—

(1) Establish, maintain, and follow effective procedures for identifying and disclosing reportable items pursuant to subparagraph (e)(1) above;

(ii) Disclose any reportable items pursuant to subparagraph (e)(2) above;

(iii) Deliver acceptable interim reports pursuant to subdivision (e)(3)(i) above; or

(iv) Provide the information regarding subcontracts pursuant to subparagraph (b)(4) below.

(2) Such reserve or balance shall be withheld until the Contracting Officer has determined that the Contractor has rectified whatever deficiencies exist and has delivered all reports, disclosures, and other information required by this clause.

(3) Final payment under this contract shall not be made before the Contractor delivers to the Contracting Officer all disclosures of reportable items required by subparagraph (e)(2) above, and an acceptable final report pursuant to subdivision (e)(3)(ii) above.

(4) The Contracting Officer may decrease or increase the sums withheld up to the maximum authorized above. No amount shall be withheld under this paragraph while the amount specified by this paragraph is being withheld under other provisions of the contract. The withholding of any amount or the subsequent payment thereof shall not be construed as a waiver of any Government rights.

(h) *Subcontracts.* (1) Unless otherwise authorized or directed by the Contracting Officer, the Contractor shall—

(i) Include this clause (suitably modified to identify the parties) in any subcontract hereunder (regardless of tier) with other than a small business firm or nonprofit organization for the performance of experimental, developmental, or research work; and

(ii) Include the clause at FAR 52.227-11 (suitably modified to identify the parties) in any subcontract hereunder (regardless of tier) with a small business firm or nonprofit organization for the performance of experimental, developmental, or research work.

(2) In the event of a refusal by a prospective subcontractor to accept such a clause the Contractor—

(i) Shall promptly submit a written notice to the Contracting Officer setting forth the subcontractor's reasons for such refusal and other pertinent information that may expedite disposition of the matter; and

(ii) Shall not proceed with such subcontract without the written authorization of the Contracting Officer.

(3) In the case of subcontracts at any tier, the agency, subcontractor, and Contractor agree that the mutual obligations of the parties created by this clause constitute a contract between the subcontractor and NASA with respect to those matters covered by this clause.

(4) The Contractor shall promptly notify the Contracting Officer in writing upon the award of any subcontract at any tier containing a patent rights clause by identifying the subcontractor, the applicable patent rights clause, the work to be performed under the subcontract, and the dates of award and estimated completion. Upon request of the Contracting Officer, the Contractor shall furnish a copy of such subcontract, and, no more frequently than annually, a listing of the subcontracts that have been awarded.

(5) The subcontractor will retain all rights provided for the Contractor in the clause of subdivision (1)(i) or (1)(ii) above, whichever is included in the subcontract, and the Contractor will not, as part of the consideration for awarding the subcontract, obtain rights in the subcontractor's subject inventions. (1) Preference for United States industry. Unless provided otherwise, no Contractor that receives title to any subject invention and no assignee of any such Contractor shall grant to any person the exclusive right to use or sell any subject invention in the United States unless such person agrees that any products embodying the subject invention will be manufactured substantially in the United States. However, in individual cases, the requirement may be waived by the Administrator upon a showing by the Contractor or assignee that reasonable but unsuccessful efforts have been made to grant licenses on similar terms to potential licensees that would be likely to manufacture substantially in the United States or that under the circumstances domestic manufacture is not commercially feasible.

(End of clause)

1852.232-1, 1852.232-2, 1852.232-4, 1852.232-7, 1852.232-10, 1852.232-16, 1852.232-1670, 1852.232-71, 1852.232-73, and 1852.232-74 [Removed]

e. Sections 1852.232-1, 1852.232-2, 1852.232-4, 1852.232-7, 1852.232-10, 1852.232-18, 1852.232-1670, 1852.232-71, 1852.232-73, and 1852.232-74 are removed.

f. Section 1852.232-25 is added, and 1852.232-77 introductory text is revised as follows:

1852.232-25 Prompt payment.

As prescribed at 1832.908, insert Alternate II in solicitations and provisions which include the clause at FAR 52.232-25, Prompt Payment. Alternate II shall be modified by deleting the words "contract number" in paragraph (c)(4). The following paragraph shall be inserted in Alternate II as (c)(2)(iv) in lieu of the FAR paragraph at that location:

(v) A TFS Form 3881 shall be submitted by the contractor to the installation awarding this contract. If a TFS Form 3881 previously submitted to the installation awarding this contract is still valid, resubmittal is not necessary, unless requested by NASA.

1852.232-77 Limitation of funds (fixed-price-contract).

As prescribed in 1832.705-270, insert the following clause. Contracting officers are authorized, in appropriate cases, to revise paragraphs (a), (b), and (g) of the clause to specify the work required under the contract in lieu of contract item numbers. The 60-day period may be varied from 30 to 90 days, and the 75 percent from 75 to 85 percent:

* * * * *

1852.232-78 [Removed]

g. Section 1852.232-78 is removed.

h. Sections 1852.232-79 introductory text, 1852.235-72 introductory text, 1852.236-72 introductory text, 1852.245-70, 1852.245-71 introductory text, and 1852.245-72 introductory text are revised to read as follows:

1852.232-79 Payment for on-site preparatory costs.

As prescribed in 1832.111-70, insert the following clause:

* * * * *

1852.235-72 Plan for new technology reporting.

As prescribed in 1835.070(c), insert the following clause:

* * * * *

1852.236-72 Bids with unit prices.

As prescribed in 1836.370(b), insert the following provision:

* * * * *

1852.245-70 Acquisition of existing government equipment.

As prescribed in 1845.106-70(a), insert the following clause:

Acquisition of Existing Government Equipment (April 1988)

(a) "Centrally reportable equipment," as used in this clause means that plant equipment, special test equipment (including components), special tooling and nonflight space property (including ground support equipment) which is (1) generally commercially available and used as a separate item or component of a system, (2) is valued at $1,000 or more, and (3) is identifiable by a manufacturer and model number.

(b) Before the acquisition of any item of centrally reportable equipment under this contract (unless for incorporation into flight qualified or flight monitoring deliverable end items), the Contractor shall provide the Contracting Officer, at the earliest possible date, a detailed listing of requirements for screening of existing Government inventories. DD Form 1419, DOD Industrial Plant Equipment Requisition, will be prepared for each item of centrally reportable equipment to be acquired and forwarded through the Contracting Officer to the NASA Equipment Management System Coordinator at the cognizant NASA installation at least (30) days in advance of his intention to acquire or fabricate such equipment. In the event a certificate of nonavailability is not received within such period, the contractor may proceed to acquire the equipment or components, subject to any other applicable provisions of this contract. Instructions for preparing the DD Form 1419 are contained in the NASA FAR Supplement 1845.7103. Upon receipt of the equipment described on the DD Form 1419 (regardless of whether it is Contractor-Acquired or Government-Furnished), the contractor shall prepare and submit a DD Form 1342 in accordance with NASA FAR Supplement 1845.505-070.

(End of clause)

1852.245-71 Installation-provided government property.

As prescribed in 1845.106-70(b), insert the following clause:

* * * * *

1852.245-72 Liability for Government property furnished for repair or other services.

As prescribed in 1845.106-70(c), insert the following clause:

* * * * *

1852.251-70 [Removed]

i. Section 1852.251-70 is removed.

PART 1853—FORMS

17. Subpart 1853.2 is amended as set forth below:

a. Paragraph (f) of 1853.242-70 is added to read as follows:

1853.242-70 Delegation (NASA Forms 1430, 1430A, 1431, 1432, 1433).

* * * * *

(f) *NASA Form 1634, Contracting Officer Technical Representative (COTR) Delegation Letter.* NASA Form 1634, prescribed at 1842.270(b), shall be used to designate a COTR for a particular contract.

1853.251 [Removed]

b. Section 1853.251 is removed.

PART 1870—NASA SUPPLEMENTARY REGULATIONS

18. In Appendix I to 1870.103, Appendix C, III. Identifying Information, section II, paragraphs A.3, a., d., f., and h. introductory text, are revised to read as follows:

1870.103 NASA acquisition of investigations.

* * * * *

Appendix C: Guidelines for Proposal Preparation

* * * * *

III. Identifying Information

* * * * *

Section II—Management Plan and Cost Plan

A. * * *

3. Additional guidelines applicable to non-U.S. proposers only. * * *

a. Where a "Notice of Intent" to propose is requested, prospective foreign proposers should write directly to the NASA official designated in the Announcement of Opportunity and send a copy of this letter to the International Relations Division, Office of External Relations, Code XID, NASA, Washington, DC 20546, U.S.A.

* * * * *

d. Proposals along with the requested number of copies and letters of endorsement from the foreign governmental agency must be forwarded to NASA in time to arrive before the deadline established for each Announcement of Opportunity. These documents should be sent to: National Aeronautics and Space Administration, International Relations Division, Code XID, Office of External Relations, Washington, DC 20546, U.S.A.

* * * * *

f. Shortly after the deadline for each Announcement of Opportunity, NASA's International Relations Division will advise the appropriate sponsoring agency which proposals have been received and when the selection process should be completed. A copy of this acknowledgment will be provided to each proposer.

* * * * *

h. NASA's International Relations Division will then begin making the necessary arrangements to provide for the selectee's participation in the appropriate NASA program. Depending on the nature and extent of the proposed cooperation, these arrangements may entail:

* * * * *

[FR Doc. 88-8673 Filed 4-19-88; 8:45 am]

BILLING CODE 7510-01-M

VOL 53 ISS 76 AP 20 1988 UMI

federal register

Wednesday
April 20, 1988

Part IV

Federal Maritime Commission

Report on Tariff Automation Inquiry; Notice

FEDERAL MARITIME COMMISSION

Report on Tariff Automation Inquiry

In a Notice of Inquiry on Tariff Automation ("Notice"), published in the **Federal Register** on December 22, 1987 (52 FR 48504), the Federal Maritime Commission (the Commission or FMC) requested public views on the functionality of its proposed Automated Tariff Filing and Information System (ATFI).

The Notice indicated that the impact of the proposed system's functionality on the public and the shipping industry had been only recently developed in detail sufficient for meaningful review, i.e., by the following types of firms;

- The shipping industry, e.g., shippers, carriers, freight forwarders, and terminal operators;
- The information industry, e.g., the commercial firms who perform requested tariff filing, retrieval and watching services for the shipping industry; and
- Associations, small businesses, and other interested persons, such as the public and government agencies.

In response to the Notice, written comments were received as further described below. This Report:

A. Sets forth by major topic the proposed functionality of the system as described in the Notice;

B. Describes the comments received in response to the Notice;

C. Discusses the issues and questions raised; and

D. Contains the Commission's conclusions.

A. Proposed Functionality of ATFI

1. *Basic System.* The electronic ATFI system, for which the Commission is seeking a prime contractor, will be run on the contractor's central computer with appropriate terminals at the Commission for tariff review, processing, and retrieval. The format of tariff data to be electronically filed is being developed in conjunction with the industry Transportation Data Coordinating Committee and will emphasize "tariff line items," *vis-a-vis,* tariff pages, as under the present system. "Tariff line items" are basically equivalent to commodity rate items in current paper tariffs and can be amended directly, without having to issue an entire revised page.

2. *Standardized Coding.* As recommended by the Commission's Advisory Committee, standardized commodity or geographic coding will not be mandated at the beginning, but the system must have the capability to provide for these functions at the appropriate time. The system will also include the essential terms of service contracts.

3. *Implementation—Exemptions.* The Commission will operate the ATFI system as a prototype for a period of at least six months to test it and improve its functionality and performance. Volunteers will be sought for this prototype operation, during which there will be public-comment rulemakings on the final format of electronic tariff data and for establishment of user fees. Full implementation of the system will be in phases to allow commercial firms time to adapt their operations. Exemptions, at least temporary, will be granted to some types of tariff filers who are not economically able to use the electronic system.

4. *Compatibility—Security.* The system will be as compatible as possible with existing computer equipment through the use of software for full connectibility. The ATFI system will have appropriate security mechanisms to protect the integrity of the data base.

5. *Filing—Edit Checks.* Filing of tariffs will be done primarily by using asynchronous terminals or microcomputers, dialing in with a modem to the Commission's data base. The filing software will provide on-line edit checks to ensure that the tariff information is correct and that basic statutory provisions are complied with before the tariff can be officially on file. Such edit checks, for example, will be able to electronically identify improper effective dates, such as a rate increase on less than 30-days notice. Other problems for which rejection is warranted, such as unclear or conflicting tariff provisions, will still have to be handled by FMC staff and, if necessary, resolved at the Commission level. The system's computer capabilities, however, will facilitate this process also.

Tariff filers will be able to file and amend their tariff materials by remote access directly to the ATFI system by carriers or conferences almost any time of day. The carrier or conference will be able to screen-scan its tariff so that the appropriate item can be amended. Commercial tariff services can also continue to be used by carriers and conferences for filing, e.g., by direct input into the data base, after creating tariffs on instruction from their clients, or transforming their paper tariffs into electronic form. The Commission will encourage commercial tariff services to assist small firms who may find it difficult to file electronically.

6. *Availability of Unprocessed Data Base.* Once the tariff data is officially on file, the Commission will download the entire data base in "flat files", formatted onto computer tapes which will be sold to any person at the relatively inexpensive, marginal cost of dissemination. This will satisfy the Commission's statutory duty of providing copies of tariffs at a reasonable charge. In order to keep up with a substantial number of rapidly changing freight rates in the shipping industry, however, interested persons must obtain these updated data base tapes frequently. The Commission will offer a subscription service to provide this capability.

7. *Value-Added Services.* The Commission will not perform any value-added processing of the tariff data for sale to the shipping public in competition with commercial tariff services. It is expected that those services will subscribe to the data base tapes to facilitate their value-added services. The Commission must, however, use the system to process tariff data internally for investigative and other regulatory purposes and will continue to utilize appropriate and available, value-added services of commercial tariff firms for this purpose.

8. *Retrieval—Public Reference Room.* In order to carry out its statutory function of making tariffs and essential terms of service contracts available for public inspection, the Commission will continue to have a public reference room at its headquarters in Washington, DC. Here, interested persons can access a terminal on which information on a particular tariff will be brought up on the screen and scanned to find the necessary rates and rules. Paper copies of tariff data will still be available upon written request, especially for certification to courts and other tribunals for proceedings involving disputes over historical tariff rates.

9. *Remote Retrieval by Modem.* Another retrieval feature currently contained in the draft RFP is remote access to the Commission data base by modem, almost any time of day, for retrieval of tariff information by any interested person. This is described in the October 28, 1986 Feasibility Study Final Report as follows:

> b. Retrieval and Analysis by the Public.
>
> * * * * *
>
> FMC would also allow remote access whereby a member of the general public could access the automated tariff system from remote locations. For example, the system would enable a shipper on the West Coast to retrieve data from the automated tariff system using a terminal or microcomputer equipped with a device (i.e., a modem) to enable data communications over public telephone lines.

However, members of the general public would only be able to perform relatively rudimentary retrievals, and essentially no analysis of the data. Specifically, members of the public would only be able to retrieve one tariff at a time, in its full format. To retrieve a tariff, the public user would have to specify the specific tariff of a particular carrier that is desired; the public user would not be able to search by keys (e.g., by route or commodity).

FMC has imposed these restrictions based on a careful analysis of applicable federal policies and precedents. FMC does not want to compete with third-party services for the provision of sophisticated retrieval and analysis of tariff data for shippers, carriers, and others in the private market. . . . In the absence of tariff automation—i.e., the status quo—FMC will make available copies of tariffs to members of the public only if they can specify the particular tariff desired. A user fee is assessed for this service. FMC would not expand these services after tariff automation is implemented. However, . . . FMC would help ensure that third-party services can provide such services. [Pages IV-8 and 9.]

However, due to concerns that the system would compete with commercial tariff information firms, the Commission announced in the Notice that it was considering not including this general electronic retrieval feature in its final RFP, thereby leaving this function to be performed solely by existing tariff services for their clients, as they do now in a paper environment. The change would not prevent carrier and conference filers from remotely accessing their own tariffs on the Commission's data base for retrieval, as well as for filing. Moreover, carriers would not be precluded from remotely accessing ATFI for conference tariffs to which they belong in order to check the official freight rates that should be charged to their shippers; and any person can use the terminals in the FMC public reading room for tariff retrieval. However, under this potential change, carriers would have remote access to their competitors' tariff data only through the value-added vendors that will provide this service.

B. Responses to the Notice of Inquiry

The Commission received 19 separate responses to the Notice from Government agencies and departments, Congress, associations, steamship conferences, carriers, freight forwarders, a shipper, and firms in the information service industry. The following describes these comments.

1. Government Departments and Agencies

(a) The Department of Agriculture (Agriculture) through its Office of Transportation, notes the increasing dependence of Agriculture upon liner shipping and enthusiastically supports the ATFI project. Moreover, according to Agriculture, the provisions of the Shipping Act of 1984 which gave more rate negotiating freedoms to carriers and shippers also increased the need for shipping rate and other tariff information. The Department encourages the Commission to provide the remote retrieval feature, if possible, because it is beneficial to shippers. Since the public is provided only with relatively rudimentary capabilities, Agriculture states that "* * * it is hard to see that third-party services would be adversely affected. The FMC would simply be offering electronically what it now offers in paper form * * *."

(b) The Department of the Navy, through the Military Sealift Command (MSC), indicates that, for Department of Defense cargoes, it now subscribes to "RATES," a commercial tariff service and states that ATFI appears limited and unable to provide the retrieval of information in the manner provided by "RATES," i.e., retrieval of rate information by route, commodity, carrier or conference; and by individual pages and/or commodity items, without retrieving the tariff in its full format.

(c) The Department of Transportation (DOT) comments that many of the issues raised in the Notice are similar to those now being considered by DOT in developing the best approach to the automation of international airline tariffs, e.g., security, public access, and non-interference with existing commercial tariff information services. DOT requests that it be kept informed of developments.

(d) The Department of the Treasury, through the U.S. Customs Service (Customs), would hope to see a broad use of the Harmonized System of coding as a "core for a variety of applications in international transactions."

(e) The General Services Administration, through its Federal Supply Service (GSA-FSS), believes the proposed ATFI system would simplify the receipt, storage and retrieval of tariff information, and indicates that it operates, through a private contractor, an automated rate and routing system for domestic transportation. GSA-FSS offers to share its experience in the design and implementation of its system.

2. The Congress

(a) The Government Information, Justice, and Agriculture Subcommittee of the House Committee on Government Operations, through its Staff Director, acknowledges receipt of the Notice and indicates that the matter would be discussed with Chairman English.

Later, Congressman Glenn English responded, noting that "[I]n general, the ATFI system as described in the December notice is consistent with the policy standards for government electronic information systems set out by the Government Operations Committee in House Report 99-560."

Congressman English continued:

However, I find one aspect of the proposed system to be questionable. The notice indicates that the FMC contemplates providing a limited on-line retrieval service to tariff filers.

This raises some concern. Allowing any outside users to have direct, on-line access to the data base will make the entire system more complex. The system will require a larger capacity, additional security, and expensive equipment for support.

Tariff filers who might use this service would, in its absence, be served by the private companies that are likely to make tariff filings available to the public. In fact, the availability of on-line access from the FMC might inhibit the offering of tariff services by private sector data companies. The net result could be unnecessary interference with the development of a private market in tariff data.

I am not convinced by the notice that the offering of any type of on-line retrieval service by the FMC is necessary. It is not clear why tariff filers need to obtain from the FMC copies of tariffs that they have filed with the FMC. In contrast, the Securities and Exchange Commission's EDGAR system includes no similar capability. If the FMC determines that such a service is important, it will have to do a better job of documenting the need.

Congressman English closes by indicating that he will continue to monitor the progress of ATFI and requests that the Subcommittee be kept informed of any future developments.

3. The Transportation Data Coordinating Committee

The Transportation Data Coordinating Committee (TDCC) Ocean Standards Maintenance Committee, on behalf of the Electronic Data Interchange Association (EDI) standards, comments that the functional specifications published in the Notice are "* * * fully in tune with the needs of the Ocean Transportation Industry," for which TDCC has the responsibility of maintaining the EDI standards.

The TDCC's Ocean Standards Maintenance Committee includes in its membership technical and commercial representatives of ocean carriers, freight forwarders, terminal operators, port authorities, steamship conferences, customs brokers, ocean tariff publishing companies, Government agencies, and vendors of electronic interchange services.

TDCC "agrees" that the FMC must be the custodian of the single legal data base that will govern all ocean freight rates that are used in the ocean transportation industry in the United States.

TDCC further supports the idea that public access to the ATFI system should be available only for relatively rudimentary retrievals, but that the system must have a provision for on-line retrieval of, and remote access to, ocean freight tariff information by the general public. There is, according to TDCC, a "real need" in the ocean transportation industry for this on-line and remote access feature. TDCC would like to see full implementation of the system as soon as possible.

4. Steamship Conferences and Carriers

(a) The Inter-American Freight Conference (IAFC) has 4 sections whose 14 member lines serve the trades between Argentina, Brazil, Paraguay, Uruguay and U.S. Atlantic and Gulf ports. According to IAFC, the ATFI system should provide for retrieval based on international communications standards, such as the EDI standards of TDCC (See # 3, above), but indicates that replacement of IAFC's expensive computer hardware and software solely to meet FMC tariff requirements would be prohibitive.

Since two of its Northbound Tariffs are not computer produced and are transmitted by page through a facsimile device or by courier, IAFC is opposed to doing away with page filings. Due to the fact that it uses an alphabetical-based tariff, IAFC is also against requiring tariffs to be indexed using unique tariff item numbers.

IAFC states that "The FMC should not create a new unique structure and system for tariffs, when a variety of methods already exist with current third party vendors." Further, IAFC argues that the Commission should maintain retrieval potential for the filers of their own tariffs, not for competitive tariffs, which should be left to third party vendors. However, charges for receipt of updated FMC data by such third party vendors should cover more of the system costs than just the incremental charges for extraction of the data.

Finally, IAFC is concerned about filing charges and indicates that other users, not just filers, must pay a "fair share."

(b) The Transpacific Westbound Rate Agreement (TWRA) is comprised of 13 carriers in the trades from the United States and Canada to the Far East and filed 65,000 tariff pages with the Commission in 1987.

The Managing Director of TWRA, speaking for himself, states that "Many of these entities [existing commercial services] have a vested interest in retaining the existing tariff page structure, and converting it to a data base, which will ultimately prove costly to the carriers, and the FMC." Logically, according to the Managing Director of TWRA, "* * * a data base should be used to create a tariff, not vice-versa." He believes that the data base approach is the logical system and could be used to produce tariffs for countries with limited computer capabilities.

On the subject of the distribution of the unprocessed data base on tapes, the Managing Director of TWRA suggests that a frequency of something between daily and monthly could be worked out.

The Managing Director of TWRA agrees that the Commission should not compete with value-added vendors. Further, he is opposed to the remote retrieval of tariff information by modem directly from the ATFI system because it would interfere with the sale of rates services by commercial entities. Without a commensurate hourly charge to offset the usage, it might also result in a substantial expense to the Commission which could not be retrieved by revenues. It is his belief that "* * * the only public reference room that the Commission should utilize is at [FMC] headquarters in Washington, D.C."

(c) The United States-European Carrier Associations (USECA) includes conferences operating on major trade routes in the foreign commerce of the United States, i.e, the North Europe-U.S. Gulf Freight Association (NEGFA); the Gulf-European Freight Association (GEFA); the North Europe-U.S. Atlantic Conference (NEAC); the U.S. Atlantic-North Europe Conference (ANEC); and the Trans-Atlantic American Flag Liner Operators Agreement (TAAFLO).

Tariff filing is a major function of USECA parties. In noting that the format of tariff data to be electronically filed on the ATFI system is being developed in conjunction with TDCC (above), USECA "* * * unequivocably supports the path FMC proposes to take * * * and asserts that it is functionally heading in the right direction." The entire Commission proposed system, as noted in the **Federal Register**, has USECA's complete backing.

Since current tariff systems employed by USECA groups are geared to the electronic page format, they will be totally incompatible with the FMC's proposed standards. Thus, the USECA parties, as well as individual common carriers, must be prepared for the eventual switch to the data element system. USECA further states that all tariff filers will have to adopt the same EDI standards in order to transmit or retrieve tariff data. The new system, however, must also have the ability to compile the elements into a page format.

Two USECA members, ANEC and NEAC, are currently developing tariff systems based on data element entry and are "eager" to be among the tariff filers selected to test the prototype operation.

(d) Sea-Land Service Inc. (Sea-Land) is a common carrier by water in the foreign and domestic offshore commerce of the United States and files 59 tariffs with the Commission, all of which are prepared and transmitted electronically. Additionally, Sea-Land is a member of 21 tariff-filing conferences or agreements.

Sea-Land indicates that the basic functionality of the proposed system as described in the Notice is "* * * without reservation, consistent with Sea-Land's operational needs" and supports Sea-Land's current and future development efforts.

Sea-Land also volunteers for the prototype operation and states:

> The specifics of the ATFI system, such as standard tariff data format, tariff line item control, dial-up capability for filing, and general inquiries, provide the required functionality and enforce the necessary standardization. The phased implementation of the proposed system also takes into consideration the time required for users to modify their internal operations.

5. Freight Forwarders and Customs Brokers

(a) The Pacific Coast Council of Customs Brokers and Freight Forwarders Assn., Inc. (PCC), which represents approximately 450 freight forwarders/customs broker firms, indicates that it is pleased to see the Commission proceeding with the RFP.

PCC is opposed to deleting the remote-retrieval function which would eliminate direct access to the tariff data base. It feels very strongly that its members and the shipping public should have such access which is essential to the service which PPC members wish to provide.

PCC notes that, without mandated standardization (e.g., commodity classifications, etc.), the task to present raw data in electronically intelligible form is unmanageable but would be feasible if ocean carriers were directed to provide the Commission with a standard format to be used by all carriers.

(b) Leading Forwarders, Inc. (Leading), a freight forwarder and customs broker, is of the opinion that the proposed ATFI system, along with the Customs' Automated Commercial

System, will too easily provide information to foreign competitors, to the competitive disadvantage of American forwarders. Since the information is "* * * our information and not theirs, as long as the rules of the trade game are different for foreigners and Americans, it is my humble opinion that it can hurt us and will hurt us."

6. Shippers

Warner Lambert Company (Warner Lambert) is a user of maritime transportation services to and from the United States and, as such, makes use of published tariff information. Warner Lambert notes that the Commission seems to seek public support for the inaccessibility of such data by the general public on the grounds that it does not want to compete with private third party services of tariff data retrieval systems. Warner Lambert continues:

We believe this is ill advised. In our opinion efforts should be made not to frustrate but to facilitate direct remote access to the data base by the general public. This should be accomplished through a rudimentary capacity to search for individual commodity rates and rules through a menu driven index system and basic facility to dow[n] load selected files.

In our view, such a capacity is neither particularly sophisticated nor does it represent the kind of commercial value-added service which should be properly left to the private sector for development and marketing.

Moreover, it seems entirely reasonable that the Commission should make this capability available to the general public on a fee basis through a "900" telephone number charge system. Reasonable because the ATFI system will be funded by the federal government, i.e., the taxpayer. Reasonable because the system, in this sense, belongs to the general public. Reasonable because to do otherwise would almost be more difficult and certainly less than optimal given the state of modern computing technology.

We do not believe that the Commission should compete with commercial tariff services. However, we are more strongly of the opinion that the Commission should not deliberately suboptimize the ATFI system in order to avoid such competition.

Indeed, facilitating the recommended data access capability will not eliminate the market for value added services and products. What will be eliminated will be the wasteful, costly and technologically archaic means of manually collecting data. The primary beneficiaries of this development will be the value added services themselves.

7. The Information Industry Association and Firms

The Commission sent copies of the Notice to 16 tariff service firms and the Information Industry Association with a letter of transmittal which stated in pertinent part:

The Federal Maritime Commission is especially interested in how the proposed functionality may affect the information industry, including existing commercial tariff services. In particular, we would appreciate comment on the extent to which commercial firms would provide the general electronic retrieval feature if the Commission, itself, does not provide for it in the technical specifications.

The Association and three firms responded.

(a) The Information Industry Association (IIA) is a trade association serving over 600 companies pursuing business opportunities associated with the generation, distribution and use of information.

IIA observes that the Commission has greatly reduced the value of this proceeding by withholding relevant and vital information from its cost-benefit study requested by IIA in a Freedom of Information Act request. IIA indicates that while it is confident it could prevail on the merits, it is "most loath to litigate," in light of the attempt by all parties to engage in productive discourse in the Advisory Committee (of which IIA was a member), and the desirability of moving forward with the electronic filing endeavor. IIA further states that "* * * the FMC cannot have it both ways: it cannot withhold crucial information *and* simultaneously expect the private sector to believe that which is dubious or implausible." [Emphasis in the original.]

On the proposed functionality, IIA indicates that there remain unanswered questions whose resolution could depend, at least in part, upon the results of the withheld analysis:

First, what is the basis for the distinction between remote access by a filer to its own tariffs and any other usage? Without dispute, there is a *functional* need for verification by a filing party of its own filing, but that need does not itself compel the conclusion being suggested. We are now [sic] told how many more computer ports would be needed to support such access, how much more CPU capacity—in short, what it would cost. Nor are we told what marginal benefits would accrue, in terms of gains in consumers' surplus, or in any other measure. Against all this uncertainty, there are the considerations that no such system feature is absolutely necessary and that such filer access would hobble private incentive. The OMB Circular [A–130] represents a sound judgment that the value-added remote access part of the information chain or life-cycle is one which ought to be supported by voluntary risk capital rather than by involuntary taxes. The FMC cannot err by respecting this judgment and is quite likely to err if it does not.

Second, the whole subject of database file structure, possible transition over time from the current page format to a relational database structure, and FMC mandatory input format cries out for informed structure by affected parties in the private sector. Even without the numbers to address these interrelated matters, the following can be said with confidence:

(1) The existing page format is not an end-all and be-all. However, it has worked well for all intents and purposes to date.

(2) The FMC does have some legitimately different functions than any private users, so that a file structure that has arisen for private-sector users is not necessarily optimized for government use as well. However, the FMC has failed to explain publicly just how an expensive change to a new file structure would improve its mission accomplishment, such as by enforcing common carrier obligations.

(3) These are exactly the sort of questions that should be resolved rationally on a cost-benefit basis.

(4) Particularly on this point, for the FMC to withhold the analysis is ultimately futile. Any FMC rule making on mandatory input format will be reviewed by OMB under the Paperwork Reduction Act. In accordance with the objectives of that Act, any proposed rule will have to pass muster under a cost-benefit test or some variation thereof. In any event, the least-cost alternative for society—the sum of costs to the government and the private sector—is that which should be selected. [Emphasis in the original.]

In response to the question presented to electronic service firms, IIA indicated that "* * * it is clear as it can be that private companies will continue to offer such services."

Asking for a level playing field, IIA urges that the incumbent contractor have no unearned or special advantage in value-added retail products and that all comers should be able to get tapes in raw output form rapidly, on the same terms and conditions, at true marginal or reproduction cost.

IIA also reserves the right to submit additional comments if and when the cost-benefit analysis is released.

(b) Studley Associates, Inc., (Studley) provides computerized tariff services and is a licensed FMC practitioner.

Studley expresses concern about the timeliness of the availability of the raw data tapes and whether or not there will be a device to make such tapes usable on some electronic systems of the commercial tariff services and carriers. On the remote retrieval feature, Studley comments:

While the proposed "Remote Access Retrieval of Tariff Information" from the Commission's data base by modem almost any time of day seems to be a positive feature, there is concern that the ATFI System be compatible with present computer equipment not only for the retrieval of information but also for filing purposes.

Studley would also want an opportunity to test the functionality and performance of the prototype operation.

(c) Transportation Tariff Publishers, Inc. (TTP) files tariffs (and changes) at the Commission on behalf of approximately 25 different common carriers per month.

TTP's concerns about the ATFI system include: types of equipment needed; its cost for purchase and maintenance of equipment and software; access to the FMC's data base; length of time and procedures for preparing and transmitting tariffs, including the possibility of hand delivery of a disk or tape; delegations of authority; availability of raw data tapes; the number of public terminals in the public reference room; ability to access tariffs that it does not file; potential distinction in treatment between a "watching service" and a "tariff publishing company;" and possible temporary exemptions for third party vendors.

TTP adds that it will still have the need to provide its clients with paper (hard) copies of their own tariff pages and asks the Commission not "* * * to overlook the needs of the small tariff users, as well as, the thousands of people that must deal with 'paper' tariff pages every day of their lives."

(d) Transax/RATES (Transax) is a division of Journal of Commerce, Inc., which is a wholly owned subsidiary of Knight Ridder. Transax is one of the "leading" maritime tariff publishing companies and maintains an on-line electronic data base of currently in effect tariffs filed with the FMC, as well as off-line historical tariffs for at least five years. Transax also has developed "Compiler II" and "Shiprate," which is a service providing on-line access by a steamship company to its own tariffs, including unregulated tariffs which are not on file with the FMC.

Over the last five years, Transax has invested over ten million dollars in hardware and software development and operational costs and is "* * * now just beginning to break even in the data base retrieval segment" of its business. While Transax may make a submission in response to the FMC's Request for Proposals for the ATFI system, it is commenting here on how the proposed functionality of the system described in the Notice may impact its future operations.

Transax asks for a level playing field, such as provided in H.R. 2600 authorizing the SEC's EDGAR program, so that the contractor does not obtain undue advantage in the provision of retail services.

With respect to standardization, Transax indicates that the EDGAR program is a more appropriate response to the issue of transmission of electronic filings. EDGAR would also allow the filing of data on other media like floppy disks which would provide greater flexibility. Transax asks for clarification of whether the FMC will allow batch filing using the EDI standards, an approach which would be less expensive than the on-line system. Transax states that "* * * a tariff filer would prefer to modify their own copy of a tariff and then transmit the changes to the FMC rather than recreating the modifications at the FMC in an on-line environment."

At the same time, Transax indicates that the EDI approach is not required for effecting tariff filing and may create major difficulties for many filers. The tariff page approach as a transition strategy, "* * * while possibly not as technically elegant, is far more cost justified * * *."

Transax commends the FMC for its concern of not competing with the private sector and states that the FMC has appropriately approached the issue of tape dissemination to those in the private sector who will provide value-added services.

Transax strongly supports the elimination of the general electronic retrieval feature and indicates that it, and probably other firms, will continue to supply retrieval services to the public. On this issue, Transax further states:

> We, however, strongly object to a filer's on-line general retrieval of its own tariffs and to those of the conferences to which it is a member. Present private sector electronic filing technology not only gives "proof" of receipt of transmissions but the filer can retrieve the tariff page from the current data base that resides in the filer's computer. Given our previously stated position that on-line interactive access is not necessary, we do not accept the premise that the system has to be developed in such a way as to mandate on-line interactive access. Clearly, the SEC has gone in a different direction and the dissemination of the EDGAR data base is left up to the private sector with the contractor providing wholesale electronic products (both tape and electronic batch access) under a regulated pricing scheme. Clearly, a similar approach could be adopted by the FMC.
>
> Allowing a carrier unlimited on-line interactive access to their own tariffs and to the tariffs of conferences to which they are members could prove quite expensive to the FMC. Should a carrier use this access for rate quotation or other marketing functions, the number of transactions from our experience may increase by a factor of twenty to fifty. This would require significantly greater resources for communication and for computing power than that required to meet the FMC's internal automation requirements. This additional "capital" expense cannot, of course, be offset by user fees which has been clearly stated by the GAO in the context of the EDGAR program. Such fees can be used for marginal dissemination costs only, such as the cost of magnetic tapes.

However, accepting the functional approach set forth by the FMC, a filer should be able to obtain access only to the FMC ATFI system for the purpose of filing or amending tariffs. The suggestion of the FMC that a filer should have unlimited access to the AFTI system is providing a service far beyond the needs of the AFTI system. There needs to be a line drawn separating legitimate FMC activities and the provision of commercial services. Unlimited filer access to its tariffs as such is a commercial service in competition with our Shiprate service and will require a far larger taxpayer investment than otherwise would reasonably be required to operate this system. Enforcement of a restriction limiting the use of the AFTI system could easily be maintained by activity monitoring and limiting which carrier employees may have access on its behalf to the AFTI system.

Under OMB Circular A-130, Federal agencies are admonished not to disseminate new information products and services unless they are:

(a) Specifically required by law; or

(b) Necessary for the proper performance of agency functions, provided that the latter do not duplicate similar products or services that are or would otherwise be provided by other government or private sector organizations.

OMB Circular A-130 § 8.a.(9).

The FMC has no authority to disseminate tariff information products and services. Under the FMC's existing regulations, tariffs are not distributed or disseminated by the FMC. Tariffs are merely "available for inspection and copying upon request in writing addressed to the Office of the Secretary." 46 CFR § 503.32(c). In contrast, in Section 8 of the Shipping Act of 1984, Congress provided that carriers and conferences must "keep open for public inspection tariffs" and that "copies of tariffs shall be made available to any person, and a reasonable charge may be assessed for them." (46 U.S.C. § 1707). Therefore, Congress did not look to the FMC as the source of tariff information, rather it accepted the concept of tariff publishing which is the primary means of disseminating tariffs.

The proposed AFTI system would directly compete with existing private sector tariff filing, publishing and disseminating services. In 1984, when Congress reflected on whether to continue tariff filing with the FMC, it was noted that an FMC survey of shippers revealed that of the 25 surveyed not one relied on FMC files as their source of tariff information. See H.R. Rep. No. 98-53, Part I pp. 79-80 (additional views of Hon. Gene Snyder), reprinted in, 1984 U.S. Code Cong. & Admin. News 219-220.

Rather, then as today, most carriers, shippers and others rely on commercial tariff filing, publishing and retrieval services. Private industry and not the FMC has been relied upon as a source of tariff information.

It is disturbing that the FMC is using its legitimate needs for improved automation as a justification for providing services to the carriers which have traditionally been provided by the private sector.

If the FMC insists on providing data base retrieval to the maritime industry, it is putting that industry at great risk. Future budget restrictions may require a scaling back of services and activities of the FMC after private sector innovation has been driven from the scene. We and others will continue to provide value added services based upon the government's tapes. However, if due to budgetary constraints, quality control is lessened and those tapes degrade in quality or are discontinued, private sector vendors will not be in the position to provide such services. The primary concern of OMB Circular A-130 is to create a variety of services and to reduce costs to the Government. The FMC should foster private sector dissemination by limiting its own role in dissemination.

No other comments were filed in response to the Notice.

C. Discussion

1. Background and General Considerations

Some of the commenters in this proceeding have raised questions about matters which are much more fundamental than the issues on functionality presented in the Notice. To ensure complete understanding of the Commission's statutory responsibilities, the nature of steamship tariffs, the ATFI system concept, and historical development to date, the following topics are analyzed before addressing the specifics of functionality.

(a) Tariffs and Statutory Responsibilities

The Commission administers, *inter alia*, the Shipping Act, 1916, and the Shipping Act of 1984, which apply to domestic offshore commerce (e.g., between the mainland and Hawaii or Puerto Rico), and to foreign commerce, respectively, for both inbound and outbound waterborne transportation. The statutes require that common carriers by water in these trades file and keep open to public inspection their "tariffs." Additionally, the Shipping Act of 1984 requires that service contracts be filed and that their essential terms be made available to the public in tariff format. See 46 U.S.C. app. 817, 844 and 1707.

A "tariff" is a list of rates, charges and rules applicable to the transportation of cargo. A service contract is a special agreement between shipper(s) and carriers(s) governing transportation of a certain minimum quantity of the shipper's cargo over a period of time in consideration for a commitment by the carrier of a certain rate and service level. When a service contract is filed, the filer is also required to submit a Statement of Essential Terms, which contains the rates, charges and rules for a specific service contract.

The statutes and implementing regulations require the Commission to ensure that certain essentials are complied with before tariff material is accepted for filing. For example, a tariff, or amendment thereto, must not be unclear or indefinite and must not duplicate or conflict with other tariff provisions already in effect. Moreover, tariffs must contain effective-date provisions in compliance with the statutes, e.g., a minimum of 30 days for a rate increase. If a tariff filing is defective in any of these respects, it is rejected and must be refiled in the proper form and manner before the tariff is considered officially filed. See 46 CFR Parts 515, 550, 580 and 581.

Once the tariff is officially filed and the rate becomes effective, it determines the exact amount of freight to be paid by the shipper and collected by the carrier under the bill of lading or other type of transportation contract.

In addition to being a schedule of rates, the tariff of a carrier or conference is used as a marketing brochure, and a copy of a tariff on file with the Commission is made available by the filer to anyone at a reasonable charge. 46 CFR 550.3 and 580.3. This is often done by subscription.

Tariffs are used by shippers to shop for the best rate and service. They also are used extensively by carriers and conferences to see what their competition is doing.

Some of the practical consequences of a tariff-filing requirement are:

- The tariff provision must be in writing (or, in the case of ATFI, the electronic equivalent) and not a verbal quote. Moreover, there can be only one "writing" used for a particular period of time.

This prevents one shipper from being charged a rate different from that "quoted." It also prevents one shipper being charged a rate different from that charged to another shipper for the same cargo at the same time.

- Tariffs are filed and maintained in a central place.

This permits the interested person to access any tariff from one location, without having to obtain copies from every carrier in a relevant trade. The third-party vendors assist in this function by using tariff date filed at the Commission.

- If there is a dispute over a tariff provision, the official evidence needed to resolve the dispute is retrieved from the central repository.

With the tariffs filed with and maintained by the Government, there can be no argument that a tariff page, maintained by a commercial firm in the normal course of business, was not the same tariff page used in booking the shipment. The shipment in question could have occurred over three years before final adjudication of the dispute. During fiscal year 1987, FMC cases involving problems between shipper and carrier and which required evidentiary tariff materials from the FMC's official files, included 125 Special Dockets and 42 Informal Dockets.

In order to prevent discrimination among shippers and unfair competition among carriers, there are substantial penalties for not filing, or if properly filed, for not adhering to the provisions of a tariff or service contract, See, e.g., 46 U.S.C. app. 812, 815, 818, 1708 and 1709.

In addition to enforcing these penalties, the Commission uses the filed tariff data for surveillance and other regulatory purposes and, in its proceedings, adjudicates tariff issues raised by private parties. For Commission proceedings, as well as in any court case throughout the country, the tariff provision, on file at the FMC and in effect, is official evidence of the applicable tariff rate, charge or rule, when so "certified" by the Commission.

Accordingly, as relevant to ATFI and as set forth in the Notice, the Commission has the responsibility under the shipping statutes to:

1. Accept the filing of common carrier tariffs and service contracts containing rates and charges governing transportation of cargo in U.S. waterborne domestic offshore and foreign commerce. (Marine terminal operators also file tariffs of their rates and charges.)

2. Ensure that tariffs and service contract data comply with basic statutory requirements before they are accepted for filing.

3. Maintain the official file of tariffs and service contracts and certify authentic and accurate tariff data to courts and other tribunals.

4. Ensure that tariffs and the essential terms of service contracts are available for public inspection.

In addition to its basic duties under the shipping statutes, the Commission is required to comply with the terms and policies of other statutes and regulations, such as the Freedom of Information Act. 5 U.S.C. 552. Therefore, because filed tariffs are public records, the Commission is under a legal

obligation to make these records promptly available to any person. Making these records "available" includes making copies upon written request at reasonable fees. *See* 46 CFR 503.31, 503.32(c), and 503.41–503.43. This type of activity is a routine matter when a member of the public requests tariff materials from the Commission's public reference room. Also, tariffs are required to be filed at the FMC in duplicate or triplicate (*see* 46 CFR 515.3, 550.3(g), and 580.3(f)), and as an accommodation, the Commission provides one copy of all tariff materials to be shared by commercial tariff services.

(b) ATFI and EDGAR

Other than the fact that the FMC and the Securities and Exchange Commission (SEC) are both attempting to resolve their paper filing, processing and retrieval problems by means of ADP technology, there is little similarity between the FMC's ATFI system and the SEC's EDGAR system. ("EDGAR" stands for "Electronic Data Gathering and Retrieval System.")

While both agencies need to examine and process data obtained from regulated industries, the purposes and products of the two systems are quite dissimilar and control all system functions.

EDGAR handles financial reports which are designed to disclose to the public as much accurate information as possible concerning potential investments. The 9,000,000 pages of materials which EDGAR must handle annually remain pages when distributed in the form of complete copies in sufficient number to meet demand. A filed report does not change and may be amended only by the filing of another, complete report.

On the other hand, the tariffs to be handled by ATFI contain the legal purchase cost or contract-of-carriage price from which neither shipper nor carrier can legally deviate. The 800 new tariffs filed each year start to become obsolete almost immediately as rates are changed by the filing carrier. Shippers and carriers, therefore, want to know the most recent amendment of a particular rate within the tariff. The 700,000 pages of tariff amendments which are filed each year will be restructured by ATFI into a data base format. The shipping public will be able to retrieve only the item(s) they request.

If the information handled by ATFI is analogous to anything in which SEC is involved, it would be the stock market, itself, where a computer must try to keep up with frequent and rapid price changes for voluminous items. The carrier's rate is like a "sell order," which the buyer, the shipper, can utilize for the transportation of its cargo.

Unlike the stock market, however, the carrier's "sell order" or rate must be filed and effective at the FMC before it can be legally used in a sales or booking transaction. Until that rate is effective, the previous effective rate, whether higher or lower than the proposed rate, must be used if the shipper wants to utilize that carrier.

(c) Federal Policies Considered in ATFI

Throughout the development of the plans for an automated tariff system, the Commission has considered and will continue to consider all applicable Federal policies. In addition to the procurement regulations, the major policy sources for the project are contained in the following (and statutes cited therein):

- OMB Circular No. A–76 (Revised), *Performance of Commercial Activities* ("A–76");
- The April 29, 1986 English Subcommittee's Report, *Electronic Collection and Dissemination of Information by Federal Agencies: A Policy Overview* (28th Report by the Committee on Government Operations, House Report 99–560, 99th Cong., 2d Session) ("English Report"); and
- OMB Circular No. A–130, *Management of Federal Information Resources*, December 24, 1985 (50 FR 52730); and subsequent proposed *Notice of Policy Guidance on Electronic Collection of Information*, August 7, 1987 (52 FR 29454) ("A–130").

The Commission, in its Feasibility Study, determined that conditions favor the electronic collection of tariff information for public access. A substantial proportion of the firms involved already possess the necessary information technology. Otherwise, the computer equipment needed to be acquired will be relatively inexpensive. Both filing and retrieval of tariff data should eventually be more convenient for interested firms, including small businesses. There is a large volume of tariff data, filed by a large number of firms, and accessed by a large number of people. The filings are very frequent, especially by the larger carriers and conferences and, while the rates will change, the format of the information sought will not vary substantially over several years.

The draft RFP calls for use of existing software to the extent available. It appears that no other agency with the responsibility of maintaining public tariffs has developed software with the edit checks required by the shipping statutes. The extent to which Government- or private-sector-developed software can be readily adapted to meet the Commission's needs should be reflected in the proposals received through the procurement phase. The draft RFP requires the proposals to use Federal Information Processing and Telecommunications Standards.

The ATFI system is designed to integrate filing and retrieval of tariff data insofar as possible. It will allow the Commission to upgrade its own ability to access, copy, and manipulate data and to perform its information management activities in an efficient, effective and economical manner. Moreover, the system will promote the free flow of information between the Government and its citizens.

The Commission is, therefore, actively pursuing the design of this electronic collection system through technical assistance from several private-sector firms and is acquiring the technology for the development of the system by competitive procurement.

Other efforts by the Commission to further comply with Federal policies are briefly described as follows:

(1) A–76. Appendix IV to A–130 indicates that the circular in no way intends to abrogate any "inherent governmental function" policy. The FMC, therefore must ensure that such functions are properly carried out.

Under the guidelines in A–76, the Commission has considered the idea of "franchising" its tariff functions to private sector firms. The purely ministerial functions of retention and distribution of tariff data could be delegated under the Circular. Accordingly, the FMC intends to contract with a private firm to maintain the ADP facility and allow third-party vendors to continue selling value-added data to the public. The Commission's discretionary decisionmaking authority, however, is an inherent governmental function which cannot be delegated to private parties, and includes the following statutory functions:

- Rejection by the Commission of tariffs not filed in accordance with Commission-prescribed form and manner (governed by statutory provisions). 46 U.S.C. app. 844 and 1707(f).
- Special permission to depart from statutory notice of 30 days for tariff rate increases. 46 U.S.C. app. 844 and 1707(d).
- Suspension and disapproval of controlled carrier rates below a just

and reasonable level. 46 U.S.C. app. 1708(d).

- Enforcement of adherence to filed rates and charges. 46 U.S.C. app. 812, 815, 817, and 1709.
- Furnishing data requested under the FOIA.

If the private contractor is limited to maintaining the ADP facility and FMC personnel remain responsible for the review of all input/output operations and any other tariff functions requiring the exercise of judgment or discretion, the ATFI system will comply with the legal and policy requirements of A-76.

(2) Public access to agency records. Because the electronic data will be made available to the public at the marginal cost of reproduction, which is anticipated to be relatively inexpensive, the public user will share in the benefits of automation. Tariff data in paper form will be made available upon request under the Freedom of Information Act, usually for certification to a court as evidence of a rate in effect at a particular time. Also, for tariff filers who cannot economically file in an electronic format, the Commission will consider granting exemptions and will facilitate the utilization of tariff services, but will ensure that the electronic data base is complete.

(3) Copyright policy. The Commission's public data base of tariff material required to be filed by statute cannot be copyrighted. The copyrights to any other materials associated with the ATFI system will be controlled by the Government.

(4) Consulting with public users. The Commission took positive steps at very early stages of this project to identify the needs of users of its proposed automated tariff filing and information system.

In 1983, the Commission conducted a survey of industry views on tariff automation. This was followed with the publication of a notice in *Commerce Business Daily* seeking sources for an electronic filing, storage, and retrieval system for tariffs. This notice attracted a response from 31 parties.

Following establishment of an internal FMC task force under the chairmanship of James J. Carey, Vice Chairman of the Commission, another survey was conducted among those entities expressing an interest in tariff automation and a sampling of carriers, conferences, freight forwarders, and shippers.

Subsequently, the Commission established an industry advisory committee "to make continuing recommendations on the implementation of an automated tariff filing and information system." The advisory committee included representatives of all parts of the industry.

The Commission is continuing to consult with all parties affected by or interested in ATFI, e.g., communications with the Transportation Data Coordinating Committee; a presolicitation conference with 130 potential offerors, for comment and questions on a draft RFP for the ATFI system procurement; and soliciting comments from the shipping and information industry in this Notice of Inquiry proceeding.

The Commission is considering the need to provide for the transition from paper tariffs to an ADP data base system. A prototype operation and gradual phase-in stage are planned for this purpose. Many tariff filers already have some type of ADP capability. The ATFI system will be designed to minimize the cost of ADP equipment needed to access the data base and for the conversion of existing data.

(5) Open, competitive procurements. The Commission has provided substantial advance notice of the nature and functions of its intended system and is planning a competitive procurement in compliance with all Government laws, regulations and guidelines.

(6) User fees. In order that the Commission can supervise the integrity of its tariff files, a single automated data base is planned for both filing and retrieval of the tariffs. User fees will be considered in a public rulemaking proceeding pursuant to 31 U.S.C. 9701, to be initiated during the prototype operation. Retrieval fees will be based on the marginal cost of reproduction. Filing fees will be based primarily on the benefit to the recipient but may be minimal because of the depressed economic situation in the shipping industry. Several carriers and conferences have volunteered to participate in the prototype operation and would not be charged filing fees during this phase.

It is intended that private sector contractors will not pay for the costs of governmental functions involved in ATFI.

(7) Competition with the private sector. The Commission has examined private sources for both filing and retrieval functions. In this connection, it is noted that a substantial portion of the Commission's tariff files are created by firms which, as the legal agents of regulated parties, specialize in the business of filing tariffs. It is not the Commission's intention to jeopardize the economic bases of these firms, but to replace the manual method or manner in which tariffs are filed and retrieved with more modern technology. The Commission believes that the functions of tariff filing services will be enhanced by automation and that the communications features of ATFI will encourage the development of additional products and services.

The Commission is aware of the substantial investments to facilitate automated retrieval made by a number of the 15–20 commercial firms which have offered various types and levels of rate retrieval based upon the Commission's tariff records. Accordingly, the ATFI proposal has been designed to avoid competition with private sector automated value-added vendors.

Rather, the ATFI system will provide current and future commercial firms with access to the Commission's data base through computer tape. This should facilitate a continuing role for such firms in the providing of value-added services.

Under this arrangement, as further described elsewhere in this report, neither the Commission nor the agency contractor would exercise monopoly power over agency data.

(8) Oversight. The Commission's activities in planning and developing the ATFI project have received coordinating direction from, *inter alia*, the Congress, General Services Administration (GSA), Office of management and Budget (OMB), the Office of Information and Regulatory Affairs (OIRA) within OMB, and the General Accounting Office (GAO).

(9) Cost Benefit analysis. The ATFI electronic tariff filing system will reduce the paperwork burden on filing parties (carriers and conferences) and the cost burdens on both regulated entities and the Government.

In order to obtain procurement authority from GSA, the FMC certified that a cost benefit analysis was performed and considered by the Commission. For budgetary requirements, the "Benefit Cost Analysis" was developed by a private-sector contractor and submitted to OMB. OMB advised the Commission that the study was "procurement sensitive" because its release to the public at this stage of the procurement could artifically peg the proposed prices submitted in response to the RFP. This means that the study will not be public until at least the best-and-final-offer procurement stage, when a supplemental cost benefit analysis will be conducted.

The disclosure of just the benefit data could also indirectly reveal cost estimates because the study calculated

the extent to which the public and private benefits derived from the system will exceed the public and private costs.

The Benefit Cost Analysis was made before development of the draft RFP. More meaningful cost estimates must depend on the content of proposals, the contract price, and the resolution of the issues which are subject to this Notice of Inquiry proceeding.

(10) Security features. The ATFI system will properly safeguard sensitive material. It is not contemplated that the system will contain any identifiable information on individuals. Access to sensitive service contract data and pre-effective tariff filings will be appropriately limited by security coding.

(11) Compatibility. The new system is designed to be readily compatible with existing computer systems through connectibility.

(12) *Records management.* The FMC is incorporating records management and archival considerations in the design, development, and implementation of the system, in accordance with the Federal Records Act (44 U.S.C., Chapters 29, 31, and 33).

(13) *Strategy and controls.* With ATFI, the Commission has established a multiyear strategy for meeting program and mission needs. The draft RFP reflects budget constraints and the phasing of the system will form the bases for future budget requests. The draft RFP also documents the requirements of the system and provides for its periodic review over the full term of the contract.

(d) Dissemination and Access to Information

The proposed ATFI function which most closely resembles "dissemination" is the availability upon request of the unprocessed, full data base tapes to potentially numerous members of the public. This feature was originally intended primarily for third party vendors but, because the raw tariff data contained in the data base is public, the Commission must also make these tapes available to all persons on equal terms and conditions.

Rather than dissemination, however, *all* electronic retrieval features of the proposed system provide public access to government information, consistent with the Freedom of Information Act. A-130, § 8.a.(6).

Comments in this proceeding which cite A-130 do not make reference to the essential distinction between "dissemination" and allowing access, nor do they challenge the function of furnishing the data base tapes.

The term "dissemination of information" refers to the function of distributing government information to the public, whether through printed documents or electronic or other media. The term does not include responding to requests for "access to information." A-130, § 6.g. Appendix IV to A-130 further refines this term:

> "Dissemination," in the Circular's usage, refers to the function of distributing government information; dissemination connotes an active outreach by a government agency. Dissemination refers to those situations in which the government provides the public with information without the public having to come and ask for it.

One example of a legally-required dissemination would be where a statute provides that "* * * the President or head of an agency shall make reports to the Congress on given subjects." Appendix IV to A-130.

On the other hand, the term "access to information" refers to the function of providing to members of the public, upon their request, the government information to which they are entitled under law. A-130. § 6.f. Appendix IV states:

> Access refers to those situations in which the government agency's role is passive; access is what the government's responsibilities are when the public comes to the government and asks for information the government has and the public is entitled to.

Appendix IV to A-130 continues:

> The distinction between access and dissemination is posed in order to elaborate the responsibilities of Federal agencies for providing information to the public. Two fundamentally different situations exist: one in which the public goes to the agency to ask for information the agency holds and may or may not have disseminated; and one in which the agency chooses to take the information it holds to the public. In the first instance—access—Congress has provided specific statutory policy in the Freedom of Information Act (FOIA) and in the Privacy Act. These laws and policies concerning access to government information are explicit, well known, and now so widely accepted in practice by Federal agencies as not to require policy elaboration in this Circular. Agencies should know that, if members of the public ask for information subject to FOIA or the Privacy Act, the agencies should normally provide the information forthwith, because the public has a formal legal process for forcing the agencies to yield the information.

Appendix IV to A-130 indicates that tariffs are subject to access upon request under provisions of agency statutes or the Freedom of Information Act:

> Similarly, the fact that an agency has created or collected information is not itself a valid reason for creating a program, products, or service to disseminate the information to the public. Agencies create and collect much information, often for purely internal governmental purposes, that is not intended for dissemination, for which there is no public demand, and the dissemination of which would serve no public purpose and would not be cost-justified: e.g., compilations of routine time and attendance records for Federal employees, or publication of the thousands of pages of common carrier tariff filings by regulatory agencies. While such information may be subject to access upon request under provisions of agency statute, the Freedom of Information Act, or the Privacy Act, the agency must demonstrate in each case the need actively to disseminate such information.

How A-130 can group tariffs with time and attendance records is a mystery. The nature of tariffs, and the entire ATFI project, especially the comments in this proceeding, demonstrate conclusively that the tariff information is not created by the agency for purely internal purposes.

However, the Commission is not disseminating, but rather making tariff materials available upon request.

Thus, it is difficult to see how the Commission under A-130 has no legal right to make public information available to the public. If, for some unknown reason, requested information is not disclosed, both the FOIA and the Shipping Acts provide an ample legal basis for lawsuits against the Commission, not commercial firms, to compel access to the information.

To enable it to better carry out its statutory responsibilities of providing access to public tariff data, the Commission has followed the proposed *Notice of Policy Guidance on Electronic Collection of Information*, August 7, 1987 (52 FR 29434), which provides:

> [3.g] Where electronically collected records are subject to disclosure under the Freedom of Information Act or are to be made publicly accessible for any other reason, agencies should provide for such access in the design and development of the collection system.

(e) The Feasibility Study

The *Comprehensive Study of the Feasibility of an Automated Tariff System*, the Final Report to the Commission by a GSA feasibility-study contractor, was delivered on October 28, 1988, after almost a year of work.

In addition to finding that ATFI is technologically and economically feasible, the Study established the basic approach to the system that is being followed in the RFP. This includes the "functionality" as described in the Notice and in Chapter A of this report.

In October 1988, the cost estimates for ATFI were described as follows:

> Development costs are estimated to be $3.5 million. Operating costs are estimated to be

$82 thousand per month. Total costs, expressed in present value, over a 5-year timeframe, are estimated to be $7.3 million. This cost estimate is relatively conservative. In addition, the actual cost may be lower as a result of the competitive procurement process and as some of the advanced system features may be excluded (e.g., download capability to microcomputers). Page V-17.

The feasibility-study contractor warned, however, that "[i]t is difficult to estimate costs for large, complex systems at such an early stage of the development process, so naturally these cost estimates should not be interpreted as being precise."

(f) The ATFI Advisory Committee

The membership of the Commission's ATFI Industry Advisory Committee included carriers, conferences, shippers, freight forwarders, port authorities and tariff service firms, including a representative from the Information Industry Association. In order to serve on the Committee, members signed waivers of compensation and the right to bid on the project.

Firms and associations commenting in this proceeding, who were also on the Advisory Committee, are: USECA, Sea-Land, the spokesman for PCC, and IIA.

The ATFI Advisory Committee met three times in 1986 to discuss the Feasibility Study. On February 9, 1987, the Interim Report of the ATFI Advisory Committee was submitted to the Commission. The Interim Report indicated a draft of it had previously been sent to the Committee members for review, comment and approval and that the report included their actions and comments, where applicable. The Interim Report also noted that "* * * the Chairman and Members of the ATFI Advisory Committee have reviewed and approved the content" of the report. The positions of the Interim Report follow:

(1) Tariff automation is feasible and the Commission should proceed with, at least, the next phase of the project.

(2) The Commission should consider certain models and/or alternative approaches.

(3) The system should provide for some sort of standardization in formatting.

(4) Cost-benefit analyses should be prepared for both the Commission and the industry.

(5) Filers of tariff data should be required to pay only minimal user fees, if any at all, for filing and for retrieving their own data. The data should be made readily available to all users at reasonable user fees.

(6) The Commission should retain a system of hard copy filing for only those entities that require it for economical reasons. The Commission should consider a system whereby the Commission, itself, or its contractor, transfers hard copy tariff material to the electronic data base.

Most of the functionality of the system was developed in the feasibility study, considered by the Advisory Committee, and incorporated in the draft RFP. This draft RFP for a competitive procurement was sent to members of the Advisory Committee and potential bidders for their comments and questions, which will be considered at the presolicitation conference. Based on the advice of the General Accounting Office, the Commission chose this approach, rather than have the Advisory Committee, alone, meet and comment on the draft RFP. A contract for the system can be awarded in the Summer of 1988, if offers are received which are cost-competitive and can satisfy Commission requirements.

Alternative approaches were considered in the Feasiblity Study and in the Benefit Cost Analysis. Further alternatives, including the option to relinquish remote retrieval to commercial firms, will be considered herein, during the procurement process, and in the prototype phase.

While the Advisory Committee recommended that no standardized formatting be required in the early implementation of the system, it indicated that the system be adaptable to incorporate this feature later, when feasible. This is being planned.

The Benefit Cost Analysis submitted to OMB in October 1987, analyzes the costs to both the government and the industry of the proposed system, to the extent possible and without knowing a final contract price.

Other Advisory Committee recommendations are discussed elsewhere in this report.

2. Functionality

The specifics of the proposed functionality of the ATFI system, as reflected in the Notice and comments, are discussed in the following sections. The topics correspond to the sections in Chapter A of this report.

(a) Basic System

The TDCC has now developed EDI standards for the transmission of tariff data for the ocean transportation industry. These are included in the RFP for the programming of the ATFI software and should facilitate the contractor's design and implementation of the system. The data-element concept is the best approach for ATFI because it will not only allow amendment and retrieval on an item basis, but also improve the speed and accuracy of filing.

While primarily a data base system, the Commission also intends to address the problem of page formatting of the Tariff Line Items when it is necessary to print a tariff in paper format for countries which do not have adequate computer capability. Page formatting will also be necessary for the official certification of tariff materials to courts. This will be done during the prototype phase.

(b) Standardized Coding

The TDCC EDI standards provide for individualized coding by filer of such items as commodities and geographic locations. When standardized coding becomes feasible, the system will be able to incorporate this function.

(c) Implementation—Exemptions

The Commission is pleased that carriers and conferences are volunteering to participate in the prototype phase where many of the system's working details will be resolved.

As mentioned in the Notice, implementation will be in phases, depending on the difficulties encountered. Exemptions will be addressed on both an individual and category basis.

At the same time, however, it is desirable to have as much of the industry's tariffs in the electronic system as soon as possible. The Commission encourages filers not having ADP capability to utilize commercial firms for that purpose. Then, as now, the Commission will provide the names of all tariff services to each filer with a specialized problem.

The electronic system will naturally require electronic equipment which will be relatively inexpensive, e.g., an off-the-shelf microcomputer, modem and printer. Training, developed by the Contractor in accordance with Commission specifications, will be available to assist firms on equipment and procedural questions.

(d) Compatibility—Security

The ATFI RFP and eventual contract will require the contractor to ensure compatibility with existing equipment and systems, to the extent possible. This will be done primarily through "connectibility," as mentioned in the Notice.

Security features are also a major design subject of the RFP to be implemented and tested during the prototype phase.

(e) Filing—Edit Checks

As mentioned in the comments, the Notice is not clear about "batch filing." This was unintentional and this feature will be included in the new system.

"Interactive filing" will also be provided for. Both types of filing will be by modem directly from the filer to the system, for which ten modem ports are specified in the draft RFP. The filer can be a carrier or conference, or a tariff service acting as tariff-filing agent for the carrier or conference.

Batch filing will be ideal for the user with frequent and voluminous tariff changes. The software provided will allow the filer to process its tariff material before transmitting it to the ATFI system.

With interactive filing, special software is not needed. The filer needs only a terminal and modem with which to access its own tariff on the ATFI system for occasional changes. This type of filing is also intended for the small operator who might be inexperienced in computer operations or tariff regulations. The interactive prompts will lead the filer's computer operator through all the necessary steps.

Automatic edit checks will be applied to both types of filing. During interactive filing, for example, a rate increase on less than 30-days notice would not be accepted and the filer could change the date on-screen. For batch filing, such an edit check would be built into the software that is made available by the Commission to the filer, and the 30-day-effective-date problem would be resolved before transmission of the tariff begins.

Other types of "edit checks" will continue to be made by tariff analysts to check such things as ambiguities and conflicts with other tariff items.

Edit checks are not solely for the internal benefit of the Commission. If shippers and carriers did not use rates in their daily business activities, it might be feasible to allow the tariff filer to assume the risk of being assessed the statutory civil penalty for tariff form and content violations. To enforce its regulations, the Commission could theoretically rely upon reports of violations long after they occurred.

The fact is, however, that both carriers and shippers need accurate rate information as soon as possible in order to effectively do business. The current paper system invites tariff discrepancies that cause confusion in the industry and often result in cases that have to be adjudicated.

In fiscal year 1987, there were about 9,000 rejections of tariff materials filed. Although approximately 750,000 pages were filed during the fiscal year, a few entire tariffs were rejected. Commercial firms filing on behalf of carrier clients also have some rejections, even in cases where they receive the tariff electronically and convert it into paper for filing at the Commission.

Many rejections are due to date discrepancies, such as a retroactive effective date, or an increase on less than 30-days notice. While some of these rejections may have been due to administrative error, many of these mistakes are due to delay in filing caused by the current paper system.

Because rate reductions may be effective upon filing, the carrier will usually use these rates immediately. Frequently, the rate is filed to accommodate the urgent needs of a particular shipper. When the tariff page is filed, the filer will often submit an extra copy of the page to be stamped with a receipt date to provide the carrier with evidence of filing and when it can use the rate. Moreover, an extra copy is made available to commercial tariff services.

Then, perhaps the same day, a rate might be rejected because it does not comply with statutory requirements and the filer is immediately notified. In the meantime, the same page, revised again to show a different decreased rate, has been filed. This may, in turn, result in other reasons for rejection of this page as well, all because of the original mistake. Such derivative causes for rejection include "carrying forward rejected material" and improper revised-page numbers.

ATFI's edit checks will reduce original errors and, because the item, not the page, will be amended, will almost entirely eliminate "derivative" errors. The data-element approach is indispensable for the electronic edit checks and will substantially facilitate the search by tariff specialists for other rejectable materials.

(f) Availability of Unprocessed Data Base

As indicated in the Notice, once rejection problems have been resolved and the tariff is officially on file, a more accurate data base of all tariffs and amendments on file will be made available to third-party vendors and the public. Under FOIA principles, copies of the data may be sold at the marginal cost of reproduction.

The tariff data, downloaded onto tapes, will be in raw and unprocessed form so as not to compete with value-added vendors that should be able to commercially use this feature. As suggested in the comments, the Commission would consider updating the tapes on a weekly basis.

(g) Value-Added Services

The Commission will leave to third-party vendors such value-added services as the capability of searching across different tariffs, a function that the ATFI system will not allow by public access. The Commission now subscribes to RATES®, which is formatted or tagged from FMC official tariff pages for this and other services. RATES®, and similar market services should be improved by access to the ATFI system, when operational.

The Commission, however, will continue to need processing capability for internal, enforcement purposes and may continue to use value-added services to the extent the new system does not provide such advanced features.

Because there is little, if any, commercial need for certain other features, however, the ATFI system will have to provide them. This includes, for example, maintaining historical tariff information for five years for statutory-penalty purposes, and for up to three years for adjudications of disputes between shipper and carrier. Of course, the Commission can certify the legal and effective tariff rates for these proceedings only from its official files.

Finally on this topic, the Commission may have to ensure that value-added vendors under the new system make provision for certain legal and regulatory features for which there may be little or no commercial need. One such feature would be an electronic "anti-rebate" provision now required in paper tariffs under 46 CFR 580.5(c)(2)(ii).

(h) Retrieval—Public Reference Room

The Commission's Tariff Control Center public reference room now makes available tariff binders to the public and third-party vendors for inspection and copying.

The draft RFP will require the contractor to provide four terminals and two printers for this purpose under the electronic system. The data base accessed by the terminals will be unprocessed and will allow users to "search" only one tariff at a time as is the case under the present paper system.

(i) Remote Retrieval by Modem

Since the electronically collected tariffs are subject to disclosure under the Freedom of Information Act and are to be made publicly accessible under the shipping statutes, the Commission has provided for the required access in the design and development of the system. The terminals in the public reference room electronically provide such access, and the availability of the full data base tapes is an additional means by which the Commission can perform its statutory duties. The major question presented in the Notice is whether the Commission should reconsider

providing further access, i.e., through the function which provides remote access to tariffs by modem.

The basic question, however, is whether, under the Freedom of Information Act and the shipping statutes, the Commission can decline to make public tariff information available to certain segments of the public. Can the Commission legally allow the public doing business in the Washington, D.C. area to have online access, while everyone else has to submit an FOIA request in writing? If the remote retrieval feature would compete with commercial firms, then why not the public reference room?

The remote retrieval feature merely extends the public reference room concept by allowing remote electronic access to one tariff at a time by any member of the public, wherever situated. Once a user obtains access to the system, the configuration and security controls are the same, both for the public reference room and for remote retrieval. There is no "dissemination;" the service is provided only upon request.

True value-added services should be and will be left to commercial firms. A real value-added feature is the ability to search for commodity rates across several tariffs or up-to-date tracking of all rates of a particular carrier in a certain trade. It is not intended that ATFI will do such things for the public. Providing access to one tariff at a time, however, as the Commission does now, can hardly be said to be a value-added feature, whether performed in the public reference room or over the phone. Because a commercial firm provides a similar service now or wants to do it in the future does not make this basic, statutory duty any less of a governmental function.

Even where, as a general policy, services which the Government should not provide in competition with commercial firms happen to be non-value-added, the Commission cannot completely abdicate this statutory duty under FOIA or the shipping statutes. Absent legislation, commercial firms could not be "certified" or "franchised" to perform such a governmental function.

Electronically, the remote access feature is relatively basic and inexpensive. The draft REP calls for 25 ports for this purpose and the user will pay for his or her own call. The difference between providing and not providing the remote retrieval function is basically the size of communications equipment and connect-time and storage charges. The difference in training costs to the Government would be negligible because so little training is required.

In the Notice, the Commission indicated that, even if it decided not to provide the remote retrieval feature for the public, filing carries would still need to access their own tariffs and those for conferences to which they belong. Some comments also challenge these functions.

While tariffs "belong to" the public, once officially filed, they also contain the rates of the filing carrier or conference. The comments suggest that carriers can find out what their own filed rates are without remotely accessing ATFI. True, a filer should know what it filed. Without access to its own tariff, however, it does not immediately know what tariff matter may have been suspended or rejected by the Commission after review by Commission staff. To the extent possible, the ATFI system is designed to resolve such problems before the filed tariff matter goes into the data base. The carrier does not want its competitive tariff information to become public until it is cleared to go into the date base. Thus, only by immediate access to its own tariff data will the carrier know that there is a problem with a particular rate,—in sufficient time, perhaps, for the rate not to be charged to a shipper.

If the Commission decided to not provide the remote retrieval function and to not allow carriers access to their own tariffs, electronic password features can be developed to allow a carrier to batch file by modem, but not be able to access its own tariff. Not so, however, with interactive filing, which requires access to the item desired to be changed by the casual filer. While some comments suggest that interactive filing could be dispensed with, the Commission believes that this feature will be extremely helpful to the small operators, expecially NVOCC's.

The comments do not mention a very important fact. Conference tariffs are filed by conferences, not the carrier members; yet the carrier member is required by law to charge the conference tariff rate. Even though the carrier may have voted for the rate change at a conference meeting, it would not immediately know when the rate was actually filed or became legally effective, unless it had access to the conference tariff.

The arguments against allowing carriers remote access to their own or their conference tariffs lead to the same dilemma as the argument against remote retrieval itself. The carrier on the West Coast could not access its tariffs; but the public and competing carriers in the Washington, D.C., public reference room could.

Commercial firms now provide and will continue to provide services which provide tariff information to the shipping industry and the public. Some of the commenting, shipping-industry firms indicate that such services will satisfy their needs when ATFI becomes operative. Again, the Commission encourages commercial firms to provide tariff services for the carriers, conferences, freight forwarders, terminal operators, and shippers who want them.

On the other hand, some commenters urge the Commission to retain ATFI's remote retrieval feature. The few commercial shippers, represented in the comments, were all in favor of the Commission retaining the function. The Commission has to be and is most concerned about the shipper who is the real customer of tariffs. If shippers want the remote retrieval function, then the Commission should provide it for them.

D. Conclusion

The Notice of Inquiry on Tarriff Automation was published in the **Federal Register** on December 22, 1987 (52 FR 48504). In this outreach effort, the Commission provided opportunity for comment by anyone whose business operation may be affected by the basic functionality of the FMC's Automated Tariff Filing and Information System (ATFI), as described in the Notice, so that the final Request for Proposals can set forth the necessary specifications for the best possible system. Nineteen comments were submitted by representatives from Government, the Congress, carriers, conferences, shippers, freight forwarders, the information industry and associations.

Based on the comments submitted, the Commission has reconsidered how ATFI may affect industry and the public. As further explained in this report, the Commission has decided to continue with the basic functionality of ATFI as described in the Notice. This includes all originally planned methods of providing access to tariff data, such as the availability of the full data base tapes, and on-line access to the data base, both remotely by modem, as well as in the public reference room. The specifications for the system are contained in a draft Request for Proposals which were submitted to potential offerors beginning on March 18, 1988.

The Commission has decided to provide remote retrieval of tariffs by modem, given the policies underlying the Freedom of Information Act and the shipping statutes, and the estimated,

relatively low cost of providing that service. As described in the Notice, members of the general public using this feature would be able to perform only relatively rudimentary retrievals, and essentially no analysis of the data. This means retrieval of only one tariff at a time, in its full format. To retrieve a tariff, the public user would have to specify the specific tariff of a particular carrier that is desired; the public user would not be able to search by keys, e.g., by route or commodity.

In making this decision, the Commission was also impressed by the fact that the few commercial shippers represented in the comments all urged the Commission to retain this function. Shippers are the primary users of tariff data and are the major beneficiaries of the tariff laws.

Otherwise, some commenters indicated that commercial tariff services would meet their needs. The Commission encourages the continuation of such "third-party vendors" and the use of their services by those that desire them.

Throughout its development and eventual operation, the Commission continues to invite comments on ATFI.

By the Commission.

Joseph C. Polking,

Secretary.

[FR Doc. 88-8650 Filed 4-19-88; 8:45 am]

BILLING CODE 6730-01-M

VOL 53 ISS 76 AP 20 1988 UMI

federal register

Wednesday
April 20, 1988

Part V

Department of the Interior

Minerals Management Service

Outer Continental Shelf; Chukchi Sea Oil and Gas Lease Sale 109; Notices

4210-MR

UNITED STATES
DEPARTMENT OF THE INTERIOR
MINERALS MANAGEMENT SERVICE

Outer Continental Shelf
Chukchi Sea
Oil and Gas Lease Sale 109

1. Authority. This Notice is published pursuant to the Outer Continental Shelf (OCS) Lands Act (43 U.S.C. 1331-1356 (1982)), as amended by the OCS Lands Act Amendments of 1985 (100 Stat. 147), and the regulations issued thereunder (30 CFR Part 256).

2. Filing of Bids. Sealed bids will be received by the Regional Director (RD), Alaska OCS Region, Minerals Management Service (MMS), Room 544, 949 East 36th Avenue, Anchorage, Alaska 99508-4302. Bids may be delivered in person to that address between 8 a.m. and 4 p.m., Alaska Standard Time (a.s.t.), until the Bid Submission Deadline at 10 a.m., a.s.t., May 24, 1988. Bids will not be accepted the day of Bid Opening, May 25, 1988. Delivery by mail should be addressed to the above address and must be received by the Bid Submission Deadline. Bids received by the RD later than the time and date specified above will be returned unopened to the bidders. Bids may not be modified unless written modification is received by the RD prior to 10 a.m., a.s.t., May 24, 1988. Bids may not be withdrawn unless written withdrawal is received by the RD prior to 8:30 a.m., a.s.t., May 25, 1988. Bid Opening Time will be 9 a.m., a.s.t., May 25, 1988, at the Anchorage Hilton Hotel, Alaska Ballroom, 500 3rd Avenue, Anchorage, Alaska. All bids must be submitted and will be considered in accordance with applicable regulations including 30 CFR 256. The list of restricted joint bidders which applies to this sale appeared in the Federal Register at 53 FR 10570, on April 1, 1988.

3. Method of Bidding. A separate bid in a sealed envelope, labeled "Sealed Bid for Oil and Gas Lease Sale 109, Chukchi Sea (insert Official Protraction Diagram number(s) and name(s), if applicable, and block number(s)) not to be opened until 9 a.m., a.s.t., on May 25, 1988," must be submitted for each block or prescribed bidding unit bid on. For those blocks which must be bid on as a bidding unit, it is recommended that all numbers of blocks comprising the bidding unit appear on the sealed envelope. A suggested bid form appears in 30 CFR Part 256, Appendix A. In addition, the total amount bid must be in whole dollar amounts (no cents). Bidders must submit with each bid one-fifth of the cash bonus, in cash or by cashier's check, bank draft, or certified check, payable to the order of the U.S. Department of the Interior—Minerals Management Service. No bid for less than all of a block or bidding unit as described in paragraph 12 will be considered.

All documents must be executed in conformance with signatory authorizations on file. Partnerships also need to submit or have on file in the Alaska Regional Office a list of signatories authorized to bind the partnership. Bidders submitting joint bids must state on the bid form the proportionate interest of each participating bidder in percent to a maximum of five decimal places after the decimal point, e.g., 50.12345 percent. Other documents may be required of bidders under 30 CFR 256.46. Bidders are warned against violation of 18 U.S.C. 1860, prohibiting unlawful combination or intimidation of bidders.

4. Bidding Systems. All bids submitted at this sale must provide for a cash bonus in the amount of $62 or more per hectare or fraction thereof. All leases awarded will provide for a yearly rental payment of $8 per hectare or fraction thereof. All leases will provide for a minimum royalty of $8 per hectare or fraction thereof. Bids on all blocks and bidding units offered in this sale must be submitted on a cash bonus basis with a fixed royalty of 12 1/2 percent.

5. Equal Opportunity. Each bidder must have submitted by the Bid Submission Deadline, stated in paragraph 2, the certification required by 41 CFR 60-1.7(b) and Executive Order No. 11246 of September 24, 1965, as amended by Executive Order No. 11375 of October 13, 1967, on the Compliance Report Certification Form, Form MMS-2033 (June 1985), and the Affirmative Action Program Representation Form, Form MMS-2032 (June 1985). See the Affirmative Action paragraph under "Information to Lessees."

6. Bid Opening. Bid opening will begin at the Bid Opening Time stated in paragraph 2. The opening of the bids is for the sole purpose of publicly announcing bids received, and no bids will be accepted or rejected at that time. If the Department is prohibited for any reason from opening any bid before midnight on the day of Bid Opening, that bid will be returned unopened to the bidder as soon thereafter as possible.

7. Deposit of Payment. Any cash, cashier's checks, certified checks, or bank drafts submitted with a bid may be deposited by the Government in an interest-bearing account in the U.S. Treasury during the period the bids are being considered. Such a deposit does not constitute and shall not be construed as acceptance of any bid on behalf of the United States.

8. Withdrawal of Blocks. The United States reserves the right to withdraw any block from this sale prior to issuance of a written acceptance of a bid for the block.

9. Acceptance, Rejection, or Return of Bids. The United States reserves the right to reject any and all bids. In any case, no bid will be accepted, and no lease for any block or bidding unit will be awarded to any bidder, unless:

(a) the bidder has complied with all requirements of this Notice and applicable regulations;

(b) the bid is the highest valid bid; and

(c) the amount of the bid has been determined to be adequate by the authorized officer.

No bonus bid will be considered for acceptance unless it provides for a cash bonus of $62 or more per hectare or fraction thereof. Any bid submitted which does not conform to the requirements of this Notice, the OCS Lands Act, as amended, and other applicable regulations may be returned to the person submitting that bid by the RD and not considered for acceptance.

10. Successful Bidders. Each person who has submitted a bid accepted by the authorized officer will be required to execute copies of the lease, pay the balance of the cash bonus bid together with the first year's annual rental as specified below, and satisfy the bonding requirements of 30 CFR 256, Subpart I. Successful bidders are required to submit the balance of the bonus and the first year's annual rental payment, for each lease issued, by electronic funds transfer in accordance with the requirements of 30 CFR 218.155.

11. Official Protraction Diagrams (OPD). Blocks or portions of blocks offered for lease may be located on the following OPD's which may be purchased for $2 each from the Records Manager, Alaska OCS Region, Room 502, at the address stated in paragraph 2 of this Notice.

Outer Continental Shelf Official Protraction Diagrams:

NS 2-8	—	(Approved February 25, 1981)
NS 3-7	—	(Approved July 14, 1981)
NS 3-8	—	(Approved January 21, 1981)
NR 2-2	Tison	(Revised August 22, 1986)
NR 3-1	Karo	(Revised August 22, 1986)
NR 3-2	—	(Approved October 12, 1977)
NR 2-4	Studds	(Revised August 22, 1986)
NR 3-3	—	(Revised December 16, 1985)
NR 3-4	Solivik Island	(Revised December 16, 1985)
NR 4-3	Wainwright	(Revised December 16, 1985)
NR 2-6	Chukchi Sea	(Revised October 26, 1987)
NR 3-5	Point Lay West	(Revised September 14, 1987)
NR 3-6	Point Lay	(Revised December 16, 1985)
NR 2-8	Point Hope West	(Revised September 14, 1987)
NR 3-7	Point Hope	(Revised December 16, 1985)

12. Description of the Areas Offered for Bids.

(a) Categories of blocks listed under OPD's:

The lease sale area offered for bids is listed by OPD. Two categories of blocks appear under each OPD listed: (1) whole or partial blocks and (2) blocks which comprise bidding units.

Whole or partial blocks fall entirely under the jurisdiction of the Federal Government. Each block must be bid on separately. Hectares for whole or partial blocks listed in this paragraph may be found on the appropriate OPD.

Blocks which comprise bidding units are a combination of portions of adjacent blocks. The entire bidding unit is listed under the OPD where the first partial block is located. When part of the bidding unit is located on an adjacent OPD, the appropriate OPD number will be listed (e.g., 485 (NS 3-7)). All parts of a bidding unit must be bid on together.

(b) The following blocks or portions of blocks are offered for bids:

Official Protraction Diagram NS 2-8 (approved February 25, 1981)

(1) WHOLE and PARTIAL BLOCKS:

15-20	235-241	455-461	675-681	895-901
59-65	279-285	499-505	719-725	940-946
103-109	323-329	543-549	763-769	984-990
147-153	367-373	587-593	807-813	
191-197	411-417	631-637	851-857	

(2) BIDDING UNITS:

Blocks	Hectares	Total Hectares
14	406.55	
58	328.60	
102	250.67	
146	172.76	
190	94.86	
234	20.08	1273.52
21	1078.85	
2 (NS 3-7)	1078.85	2157.70
506	43.88	
485 (NS 3-7)	43.88	
550	158.07	
529 (NS 3-7)	158.07	
594	273.17	
573 (NS 3-7)	273.17	
638	388.23	
617 (NS 3-7)	388.23	1726.70
682	503.27	
661 (NS 3-7)	503.27	
726	618.28	
705 (NS 3-7)	618.28	2243.10

BEST COPY AVAILABLE

Blocks	Hectares	Total Hectares
770	733.26	
749 (NS 3-7)	733.26	1466.52
814	848.21	
793 (NS 3-7)	848.21	1696.42
858	963.13	
837 (NS 3-7)	963.13	1926.26
902	1078.03	
881 (NS 3-7)	1078.03	2156.06
939	1077.42	
983	999.86	2077.28

Official Protraction Diagram NS 3-7 (approved July 14, 1981)

(1) WHOLE and PARTIAL BLOCKS:

3-22	222-242	442-462	662-682	882-902
46-66	266-286	486-506	706-726	925-946
90-110	310-330	530-550	750-770	969-990
134-154	354-374	574-594	794-814	
178-198	398-418	618-638	838-858	

(2) BIDDING UNITS: None

Official Protraction Diagram NS 3-8 (approved January 21, 1981)

(1) WHOLE and PARTIAL BLOCKS:

1-21	221-241	441-461	661-681	881-901
45-65	265-285	485-505	705-725	925-946
89-109	308-329	529-549	749-769	969-990
133-153	353-373	573-593	793-813	
177-197	397-417	617-637	837-857	

(2) BIDDING UNITS:

Blocks	Hectares	Total Hectares
504	43.88	
550	158.07	
594	273.17	
638	388.23	
682	503.27	
726	618.29	1984.90

Blocks	Hectares	Total Hectares
770	733.26	
814	848.21	1581.47
858	963.13	
902	1078.03	2041.16

Official Protraction Diagram NR 2-2, Tison (revised August 22, 1986)

(1) WHOLE and PARTIAL BLOCKS:

16-22	236-242	456-462	676-682	896-903
60-66	280-286	500-506	720-726	940-947
104-110	324-330	545-550	764-770	984-991
148-154	368-374	588-594	808-815	
192-198	412-418	632-638	852-859	

(2) BIDDING UNITS:

Blocks	Hectares	Total Hectares
15	922.31	
59	844.79	1767.10
103	764.28	
147	689.79	
191	612.32	2066.39
235	534.87	
279	457.44	
323	380.03	
367	302.64	
411	225.27	
455	147.91	
499	70.58	2118.74
543	6.59	
544	2290.68	2297.27
375	38.10	
353 (NR 3-1)	38.10	
419	150.60	
397 (NR 3-1)	150.60	
463	265.13	
441 (NR 3-1)	265.13	
507	379.63	
485 (NR 3-1)	379.63	1666.92

Blocks	Hectares	Total Hectares
551	494.10	
529 (NR 3-1)	494.10	
595	608.55	
573 (NR 3-1)	608.55	2205.30
639	722.96	
617 (NR 3-1)	722.96	1445.92
683	837.34	
661 (NR 3-1)	837.34	1674.68
727	951.70	
705 (NR 3-1)	951.70	1903.40
771	1066.03	
749 (NR 3-1)	1066.03	2132.06

Official Protraction Diagram NR 3-1, Karo (revised August 22, 1986)

(1) WHOLE and PARTIAL BLOCKS:

2-23	222-243	442-463	662-683	881-903
46-67	266-287	486-507	706-727	925-947
90-111	310-331	530-551	750-771	969-991
134-155	354-375	574-595	793-815	
178-199	398-419	618-639	837-859	

(2) BIDDING UNITS: None

Official Protraction Diagram NR 3-2 (approved October 12, 1977)

(1) WHOLE and PARTIAL BLOCKS:

1-22	221-242	441-462	661-682	881-903
45-66	265-286	485-506	705-726	925-947
89-110	309-330	529-550	749-770	969-991
133-154	353-374	573-594	793-815	
177-198	397-418	617-638	837-859	

(2) BIDDING UNITS:

Blocks	Hectares	Total Hectares
375	38.01	
419	150.60	
463	265.13	
507	379.63	
551	494.10	
595	608.55	1936.02
639	722.96	
683	837.34	1560.30

Blocks	Hectares	Total Hectares
727	951.70	
771	1066.03	2017.73

Official Protraction Diagram NR 2-4, Studds (revised August 22, 1986)

(1) WHOLE and PARTIAL BLOCKS:

8-15	229-234	449-455	669-675	889-896
52-59	273-279	493-499	713-720	933-940
96-103	317-323	537-543	757-764	977-984
140-147	361-367	581-587	801-808	
185-191	405-411	625-631	846-852	

(2) BIDDING UNITS:

Blocks	Hectares	Total Hectares
184	1139.92	
228	1062.92	2202.84
235	2297.22	
236	24.45	2321.67
280	131.64	
265 (NR 3-3)	131.64	
324	245.58	
309 (NR 3-3)	245.58	
368	359.49	
353 (NR 3-3)	359.49	1473.42
412	473.37	
397 (NR 3-3)	473.37	
456	587.22	
441 (NR 3-3)	587.22	2121.18
500	701.04	
485 (NR 3-3)	701.04	1402.08
544	814.83	
529 (NR 3-3)	814.83	1629.66
588	928.59	
573 (NR 3-3)	928.59	1857.18
632	1042.32	
617 (NR 3-3)	1042.32	2084.64

Blocks	Hectares	Total Hectares
676	1156.02	
661 (NR 3-3)	1156.02	2312.04
272	985.95	
316	909.99	1894.94
360	832.05	
404	755.14	
448	678.24	2265.43
492	601.37	
536	524.51	
580	447.68	
624	370.87	
668	294.07	2238.50
712	217.30	
756	140.55	
800	63.82	421.67
844	4.23	
845	2286.88	2291.11

Official Protraction Diagram NR 3-3 (revised December 16, 1985)

(1) WHOLE and PARTIAL BLOCKS:

2-24	223-244	442-464	662-684	881-904
46-68	266-288	486-508	705-728	925-948
90-112	310-332	530-552	749-772	969-992
134-156	354-376	574-596	793-816	
178-200	398-420	618-640	837-860	

(2) BIDDING UNITS:

Blocks	Hectares	Total Hectares
221	24.45	
222	2297.22	2321.67

Official Protraction Diagram NR 3-4, Solivik Island (revised December 16, 1985)

(1) WHOLE and PARTIAL BLOCKS:

1-23	221-242	441-455	661-675	881-895
45-67	265-284	485-499	705-719	925-939
89-111	309-328	529-543	749-763	969-982
133-155	353-372	573-587	793-807	
177-199	397-416	617-631	837-851	

(2) BIDDING UNITS:

Blocks	Hectares	Total Hectares
243	2297.22	
244	24.45	2321.67

Official Protraction Diagram NR 4-1, Wainwright (revised December 16, 1985)

(1) WHOLE and PARTIAL BLOCKS:

2-11	134-140
46-55	178-184
90-99	223-228

(2) BIDDING UNITS:

Blocks	Hectares	Total Hectares
221	24.45	
222	2297.22	2321.67

Official Protraction Diagram NR 2-6, Chukchi Sea (revised October 26, 1987)

(1) WHOLE and PARTIAL BLOCKS:

17-24	237-244	457-464	678-685	898-905
61-68	281-288	502-508	722-729	942-949
105-111	325-332	546-552	766-773	986-992
149-156	369-376	590-597	810-817	1030-1037
193-200	413-420	634-641	854-861	

(2) BIDDING UNITS:

Blocks	Hectares	Total Hectares
112	2282.78	
113	8.54	2291.32
157	100.67	
134 (NR 3-5)	100.67	
201	214.00	
178 (NR 3-5)	214.00	
245	327.29	
222 (NR 3-5)	327.29	
289	440.56	
266 (NR 3-5)	440.56	2165.04
333	553.79	
310 (NR 3-5)	553.79	1107.58

Blocks	Hectares	Total Hectares
377	666.99	
354 (NR 3-5)	666.99	1333.98
421	780.16	
398 (NR 3-5)	780.16	1560.32
465	893.30	
442 (NR 3-5)	893.30	1786.60
501	1142.98	
545	1066.61	2209.59
509	1006.41	
486 (NR 3-5)	1006.41	2012.82
553	1119.48	
530 (NR 3-5)	1119.48	2238.96
589	990.26	
633	913.93	1904.19
677	837.62	
721	761.34	
765	685.07	2284.03
809	608.83	
853	532.61	1141.44
897	456.41	
941	380.23	
985	304.08	
1029	227.95	1368.67
993	2248.45	
994	.003	2248.453
1038	57.18	
1013 (NR 3-5)	57.18	
26 (NR 2-8)	169.87	
2 (NR 3-7)	169.87	
70 (NR 2-8)	282.52	
46 (NR 3-7)	282.52	
114 (NR 2-8)	395.14	
90 (NR 3-7)	395.14	1809.42

Official Protraction Diagram NR 3-5, Point Lay West (revised September 14, 1987)

(1) WHOLE and PARTIAL BLOCKS:

3-26	223-246	443-466	662-686	838-844
47-70	267-290	487-510	706-730	860-862
92-114	311-334	531-554	750-756	882-888
135-158	355-378	574-598	766-774	926-932
179-202	399-422	618-642	794-800	971-976
			816-818	1014-1017

(2) BIDDING UNITS:

Blocks	Hectares	Total Hectares
90	8.54	
91	2282.78	2291.32
969	.003	
970	2248.45	2248.453

Official Protraction Diagram NR 3-6, Point Lay (revised December 16, 1985)

(1) WHOLE and PARTIAL BLOCKS:

1-14	221-232	441-449	661-665
45-58	265-275	485-493	705-709
89-101	309-319	529-537	749-752
133-145	353-362	573-581	793-795
177-188	397-406	617-625	837-838

(2) BIDDING UNITS: None

Official Protraction Diagram NR 2-8, Point Hope West (revised September 14, 1987)

(1) WHOLE and PARTIAL BLOCKS:

18-25	238-245	458-466
62-69	282-289	502-510
107-113	326-333	546-554
150-157	370-377	590-598
194-201	414-422	634-642

(2) BIDDING UNITS:

Blocks	Hectares	Total Hectares
17	151.84	
61	75.75	227.59
105	9.35	
106	2294.33	2303.68

Blocks	Hectares	Total Hectares
158	507.73	
134 (NR 3-7)	507.73	
202	620.29	
178 (NR 3-7)	620.29	2256.04
246	732.81	
222 (NR 3-7)	732.81	1465.62
290	845.30	
266 (NR 3-7)	845.30	1690.60
334	957.76	
310 (NR 3-7)	957.76	1915.52
378	1070.18	
354 (NR 3-7)	1070.18	2140.36

Official Protraction Diagram NR 3-7, Point Hope (revised December 16, 1985)

(1) WHOLE and PARTIAL BLOCKS:

3-6	179-182	355-356	530-532
47-50	223-226	398-400	574-576
91-94	267-270	442-444	618-620
135-138	311-312	486-488	

(2) BIDDING UNITS: None

13. Lease Terms and Stipulations.

(a) Leases resulting from this sale will have initial terms of 10 years. Leases will be issued on Form MMS-2005 (March 1986). Copies of the lease form are available from the Regional Supervisor, Leasing and Environment, Alaska OCS Region, at the first address stated in paragraph 2.

(b) The following stipulations will be included in each lease resulting from this sale.

Stipulation No. 1—Protection of Archaeological Resources

(a) "Archaeological resource" means any prehistoric or historic district, site, building, structure, or object (including shipwrecks); such term includes artifacts, records, and remains which are related to such a district, site, building, structure, or object (16 U.S.C. 470w(5)). "Operations" means any drilling, mining, or construction, or placement of any structure for exploration, development, or production of the lease.

(b) If the Regional Supervisor, Field Operations (RSFO), believes an archaeological resource may exist in the lease area, the RSFO will notify the lessee in writing. The lessee shall then comply with subparagraphs (1) through (3).

(1) Prior to commencing any operations, the lessee shall prepare a report, as specified by the RSFO, to determine the potential existence of any archaeological resource that may be affected by operations. The report, prepared by an archaeologist and a geophysicist shall be based on an assessment of data from remote-sensing surveys and of other pertinent archaeological and environmental information. The lessee shall submit this report to the RSFO for review.

(2) If the evidence suggests that an archaeological resource may be present, the lessee shall either:

(i) Locate the site of any operation so as not to adversely affect the area where the archaeological resource may be; or

(ii) Establish to the satisfaction of the RSFO that an archaeological resource does not exist or will not be adversely affected by operations. This shall be done by further archaeological investigation, conducted by an archaeologist and a geophysicist, using survey equipment and techniques deemed necessary by the RSFO. A report on the investigation shall be submitted to the RSFO for review.

(3) If the RSFO determines that an archaeological resource is likely to be present in the lease area and may be adversely affected by operations, the RSFO will notify the lessee immediately. The lessee shall take no action that may adversely affect the archaeological resource until the RSFO has told the lessee how to protect it.

(c) If the lessee discovers any archaeological resource while conducting operations in the lease area, the lessee shall report the discovery immediately to the RSFO. The lessee shall make every reasonable effort to preserve the archaeological resource until the RSFO has told the lessee how to protect it.

Stipulation No. 2—Orientation Program

The lessee shall include in any exploration or development and production plans submitted under 30 CFR 250.33 and 250.34 a proposed orientation program for all personnel involved in exploration or development and production activities (including personnel of the lessee's agents, contractors, and subcontractors) for review and approval by the Regional Supervisor, Field Operations. The program shall be designed in sufficient detail to inform individuals working on the project of specific types of environmental, social, and cultural concerns which relate to the sale and adjacent areas. The program shall be formulated by qualified instructors experienced in each pertinent field of study and shall employ effective methods to ensure that personnel are informed of archaeological and biological resources and habitats, including endangered species, fisheries, bird colonies, and marine mammals, and to ensure that personnel understand the importance of not disturbing archaeological resources and of avoidance and nonharassment of wildlife resources. The program shall be designed to increase the sensitivity and understanding of personnel to community values, customs, and lifestyles in areas in which such personnel will be operating. The orientation program shall include information concerning

avoidance of conflicts with subsistence activities. The program shall include presentations and information about all pertinent lease sale stipulations and information to lessees provisions.

The program shall be attended at least once a year by all personnel involved in onsite exploration or development and production activities (including personnel of the lessee's agents, contractors, and subcontractors) and all supervisory and managerial personnel involved in lease activities of the lessee and its agents, contractors, and subcontractors.

Stipulation No. 3—Transportation of Hydrocarbons

Pipelines will be required: (a) if pipeline rights-of-way can be determined and obtained; (b) if laying such pipelines is technologically feasible and environmentally preferable; and (c) if, in the opinion of the lessor, pipelines can be laid without net social loss, taking into account any incremental costs of pipelines over alternative methods of transportation and any incremental benefits in the form of increased environmental protection or reduced multiple-use conflicts. The lessor specifically reserves the right to require that any pipeline used for transporting production to shore be placed in certain designated management areas. In selecting the means of transportation, consideration will be given to any recommendation of the Regional Technical Working Group or other similar advisory groups with participation of Federal, State, and local governments and industry.

Following the development of sufficient pipeline capacity, no crude oil production will be transported by surface vessel from offshore production sites, except in the case of emergency. Determinations as to emergency conditions and appropriate responses to these conditions will be made by the Regional Supervisor, Field Operations.

Stipulation No. 4—Oil-Spill Response Preparedness

Lessees must be prepared to respond to oil spills, which includes training of personnel for familiarization with response equipment and strategies, and conducting drills to demonstrate readiness. Prior to approval of exploration or development and production plans, lessees shall submit for review and approval oil-spill-contingency plans (OSCP's) in accordance with 30 CFR 250.42. The OSCP must address all aspects of oil-spill response readiness, including an analysis of potential spills and spill-response strategies, type, location and availability of appropriate oil-spill equipment, and response times and equipment capability for the proposed activities. The plan must also address response drills and training requirements. The lessee shall conduct drills under realistic conditions to the extent necessary to demonstrate continued readiness and response capability for appropriate environmental conditions: e.g., solid ice, open water, and broken ice conditions. For production operations, drills shall be conducted at least semiannually. Drills shall include deployment of on-site response equipment, and additional equipment, available from a cooperative or other sources identified in the OSCP, to the extent necessary to demonstrate adequate response preparedness for the type, location, and scope of proposed activities and anticipated environmental conditions.

Stipulation No. 5—Protection of Biological Resources

If biological populations or habitats that may require additional protection are identified in the lease area by the Regional Supervisor, Field Operations (RSFO), the RSFO may require the lessee to conduct biological surveys to determine the extent and composition of such biological populations or habitats. The RSFO shall give written notification to the lessee of the RSFO's decision to require such surveys.

Based on any surveys that the RSFO may require of the lessee or on other information available to the RSFO on special biological resources, the RSFO may require the lessee to: (1) relocate the site of operations; (2) establish to the satisfaction of the RSFO, on the basis of a site-specific survey, either that such operation will not have a significant adverse effect upon the resource identified or that a special biological resource does not exist; (3) operate during those periods of time, as established by the RSFO, that do not adversely affect the biological resources; and/or (4) modify operations to ensure that significant biological populations or habitats deserving protection are not adversely affected.

If any area of biological significance should be discovered during the conduct of any operations on the lease, the lessee shall immediately report such findings to the RSFO and make every reasonable effort to preserve and protect the biological resource from damage until the RSFO has given the lessee direction with respect to its protection.

The lessee shall submit all data obtained in the course of biological surveys to the RSFO with the locational information for drilling or other activity. The lessee may take no action that might affect the biological populations or habitats surveyed until the RSFO provides written directions to the lessee with regard to permissible actions.

Stipulation No. 6—Industry Site-Specific Bowhead Whale Monitoring Program

Lessees shall conduct a site-specific monitoring program during exploratory drilling activities to determine when bowhead whales are present in the vicinity of lease operations and the extent of behavioral effects on bowhead whales due to these activities. The lessee shall provide its proposed monitoring plan to the Regional Supervisor, Field Operations (RSFO), for review and approval no later than 60 days prior to commencement of drilling activities.

Information obtained from this site-specific monitoring program shall be provided to the RSFO in accordance with the approved monitoring plan. This stipulation will remain in effect until termination or modification by the Department of the Interior after consultation with the National Marine Fisheries Service.

This stipulation applies to the following blocks for the following time period:

Spring Migration Area
April 1 to May 31

Official Protraction Diagram	Blocks
NR 2-6	728, 729, 771-773, 814-817, 856-861, 899-905, 941-949, 985-994, 1029-1038
NR 2-8	17-26, 61-70, 105-114, 150-158, 194-202, 238-246, 282-290, 326-334, 370-378, 414-422, 458-466, 502-510, 546-554, 590-598, 634-642
NR 3-4	243, 244, 284, 327, 328, 370-372, 412-416, 454, 455, 497-499, 539-543, 581-587, 624-631, 667-675, 710-719, 753-763, 796-807, 839-851, 882-895, 925-939, 969-982
NR 3-5	25, 26, 68-70, 111-114, 154-158, 197-202, 240-246, 282-290, 324-334, 367-378, 409-422, 451-466, 493-510, 535-554, 578-598, 620-642, 662-686, 706-730, 750-756, 766-774, 794-800, 816-818, 838-844, 860-862, 882-888, 926-932, 969-976, 1013-1017
NR 3-6	1-14, 45-58, 89-101, 133-145, 177-188, 221-232, 265-275, 309-319, 353-362, 397-406, 441-449, 485-493, 529-537, 573-581, 617-625, 661-665, 705-709, 749-752, 793-795, 837, 838
NR 3-7	2-6, 46-50, 90-94, 134-138, 178-182, 222-226, 266-270, 310-312, 354-356, 398-400, 442-444, 486-488, 530-532, 574-576, 618-620
NR 4-3	54, 55, 96-99, 137-140, 179-184, 221-228

Stipulation No. 7—Density Restriction for Protection of Bowhead Whales from Potential Effects of Noise

The Regional Supervisor, Field Operations (RSFO) will review proposed exploration plans for activities occurring in the Chukchi polynyas in the period April 15 through May 15 in the blocks specified below. Exploratory drilling, testing, and other downhole exploratory activities will be prohibited during this period if it is determined by the RSFO that the density of drilling activity is such that the whale migration could be significantly impeded.

The RSFO may determine that continued operations are necessary to prevent a loss of well control or to ensure human safety. This stipulation will remain in effect until termination or modification by the Department of the Interior, after conferring with the State of Alaska and the North Slope Borough, and in consultation with the National Marine Fisheries Service. This stipulation applies to the following blocks:

Official Protraction Diagram	Blocks
NR 3-4	243-244, 284, 327-328, 370-372, 412-416, 454-455, 497-499, 539-543, 581-587, 624,631, 667-675, 710-719, 753-763, 796-807, 839-851, 882-895, 925-939, 969-982
NR 3-5	25-26, 68-70, 111-114, 154-158, 197-202, 240-246, 283-290, 327-334, 370-378, 413-422, 456-466, 499-510, 542-554, 585-598, 629-642, 672-686, 716-730, 766-774, 816-818, 860-862
NR 3-6	1-14, 45-58, 89-101, 133-145, 177-188, 221-232, 265-275, 309-319, 353-362, 397-406, 441-449, 485-493, 529-537, 573-581, 617-625, 661-665, 705-709, 749-752, 793-795, 837-838
NR 4-3	54-55, 96-99, 137-140, 179-184, 221-228

Stipulation No. 8—Subsistence Whaling and Other Subsistence Activities

Federal and State laws recognize subsistence as a priority use of wildlife resources. Therefore, all exploration, and development and production operations shall be conducted in a manner that minimizes any potential for conflict between the oil and gas industry and the subsistence bowhead whale hunt.

Prior to submitting an exploration plan or development and production plan to the lessor for activities proposed during the bowhead whale migration period, the lessee shall contact potentially affected subsistence whaling communities such as Wainwright, Barrow, Point Hope, Point Lay and the Alaska Eskimo Whaling Commission to discuss potential conflicts with the siting, timing, and methods of proposed operations. Through this consultation, the lessee shall make reasonable efforts to assure that exploration, development, and production activities are compatible with whaling activities and will not result in undue interference with the subsistence whale hunt.

A discussion of resolutions reached during this consultation process and any unresolved conflicts shall be included in the exploration plan or the development and production plan. In particular, the lessee shall show in the plan how mobilization of the drilling unit and crew and supply boat routes will be scheduled and located to minimize conflicts with subsistence activities. Communities, individuals, and other entities who were involved in the consultation shall be identified in the plan.

The lessee shall send a copy of the exploration plan or development and production plan to potentially affected whaling communities and the Alaska Eskimo Whaling Commission at the same time they are submitted to the lessor to allow concurrent review and comment as part of the lessor's plan approval process.

Subsistence whaling activities occur generally during the following period:

April to June: Barrow whalers use lead systems off Point Barrow and west of Barrow in the Chukchi Sea. Wainwright whalers use lead systems between Wainwright and Peard Bay. Point Hope and Point Lay whalers use the lead systems south of Point Hope.

14. Information to Lessees

(a) Affirmative Action Requirements. Revision of Department of Labor regulations on affirmative action requirements for Government contractors (including lessees) has been deferred, pending review of those regulations (see Federal Register of August 25, 1981, at 46 FR 42865 and 42968). Should changes become effective at any time before the issuance of leases resulting from this sale, section 18 of the lease form (Form MMS-2005, March 1986) would be deleted from leases resulting from this sale. In addition, existing stocks of the affirmative action forms contain language that would be superseded by revised regulations at 41 CFR 60-1.5(a)(1) and 60-1.7(a)(1). Submission of Form MMS-2032 (June 1985) and Form MMS-2033 (June 1985) will not invalidate an otherwise acceptable bid, and the revised regulations' requirements will be deemed to be part of the existing affirmative action forms.

(b) Navigation Safety. Operations on some of the blocks offered for lease may be restricted by designation of fairways, precautionary zones, anchorages, safety zones, or traffic separation schemes established by the U.S. Coast Guard pursuant to the Ports and Waterways Safety Act (33 U.S.C. 1221 et seq.), as amended. U.S. Army Corps of Engineers permits are required for construction of any artificial islands, installations, and other devices permanently or temporarily attached to the seabed located on the OCS in accordance with section 4(e) of the OCS Lands Act, as amended.

(c) Oil Spill Cleanup Capability. Exploratory drilling, testing, and other downhole activities may be prohibited in broken ice conditions unless the lessee demonstrates to the RSFO the capability to detect, contain, clean up, and dispose of spilled oil in broken ice. The adequacy of such oil spill response capability will be determined within the Best Available and Safest Technologies requirements and will be considered at the time that oil spill contingency plans are reviewed. The adequacy of these plans will be determined by the RSFO prior to approval of exploration or development and production plans.

(d) Offshore Pipelines. Lessees are advised that the Department of the Interior and the Department of Transportation have entered into a Memorandum of Understanding, dated May 6, 1976, concerning the design, installation, operation, and maintenance of offshore pipelines. Bidders

should consult both Departments for regulations applicable to offshore pipelines.

(e) Bird and Marine Mammal Protection. Lessees are advised that during the conduct of all activities related to leases issued as a result of this sale, the lessee and its agents, contractors, and subcontractors will be subject to, among other laws, the provisions of the Marine Mammal Protection Act (MMPA) of 1972, as amended; the Endangered Species Act (ESA) of 1973, as amended; and International Treaties.

Lessees and their contractors should be aware that disturbance of wildlife could be determined to constitute harm or harassment and thereby be in violation of existing laws. With respect to endangered species, disturbance could be determined to constitute a "taking" situation in violation of the ESA. Under the ESA the term "take" has been defined to mean "harass, harm, pursue, hunt, shoot, wound, kill, trap, capture, or collect, or to attempt to engage in any such conduct." Incidental takings of depleted marine mammals are only allowed when the statutory requirements of the MMPA and the ESA are met and Letters of Authorization (as contained in Section 101(a)(5) of the MMPA and Section 7(b)(4)(c) of the ESA) are obtained from the National Marine Fisheries Service (NMFS). Activities that are likely to "take" depleted marine mammals will be subject to these regulatory requirements. Violations under these acts and treaties may be reported to the NMFS or the U.S. Fish and Wildlife Service (FWS) as appropriate.

Of particular concern is disturbance at major wildlife concentration areas including bird colonies, marine mammal haulout and breeding areas, and wildlife refuges and parks. Maps locating and identifying major wildlife concentration areas in the lease area are available from the Regional Supervisor, Field Operations (RSFO). Lessees are also encouraged to confer with the FWS and NMFS in planning transportation routes between support bases and leaseholdings.

Behavioral disturbance of most birds and mammals found in or near the lease area would be unlikely if aircraft and vessels maintained at least a 1-mile horizontal distance from and aircraft maintained at least a 1,500-foot vertical distance above known or observed wildlife concentration areas, such as bird colonies and marine mammal haulout and breeding areas.

For the protection of endangered whales and marine mammals throughout the lease area, it is recommended that all aircraft operators maintain a minimum 1,500-foot altitude when in transit between support bases and exploration sites. Lessees and their contractors are encouraged to minimize or reroute trips to and from the leasehold by aircraft and vessels when endangered whales are likely to be in the area. Human safety should take precedence at all times over these recommendations.

(f) Areas of Special Biological Sensitivity. Lessees are advised that certain areas are especially valuable for their concentrations of marine birds, marine mammals, fishes, or other biological resources. Identified areas of special biological sensitivity include the spring lead system from April through July, the area from Icy Cape to the northern boundary of the sale area east of 162° W. longitude, Peard Bay, Ledyard Bay, Kasegaluk Lagoon, and the open water within 12 miles of the major bird colonies at

Cape Lisburne and Cape Thompson. These areas are among areas of special biological sensitivity to be considered in the oil spill contingency plan as required by the regulations under 30 CFR 250.42(a). Lessees are advised that they have the primary responsibility for identifying these areas in their oil spill contingency plans and for providing specific protective measures. Additional areas of special biological sensitivity may be identified during review of exploration plans and development and production plans.

Consideration should be given in oil spill contingency plans as to whether use of dispersant is an appropriate defense in the vicinity of an area of special biological sensitivity. Lessees are advised that prior approval must be obtained before dispersants are used.

(g) Arctic Peregrine Falcon. Lessees are advised that the arctic peregrine falcon (Falco peregrinus tundrius) is listed as threatened by the U.S. Department of the Interior and is protected by the Endangered Species Act of 1973, as amended (16 U.S.C. 1531 et seq.). Peregrines are generally present in Alaska from mid-April to mid-September and are most disturbed by human activities in the vicinity of nest sites. The conduct of OCS exploration or development and production activities will not conflict with arctic peregrine falcons if onshore facilities are located away from known nest sites. The lessee should contact the U.S. Fish and Wildlife Service (FWS) for information on locations of known nest sites of peregrine falcons. Aircraft should maintain at least a 1-mile horizontal and 1,500-foot vertical distance from known or potential peregrine nest sites to avoid conflict.

Lessees are advised that the FWS will review exploration plans and development and production plans submitted by lessees to the MMS. The FWS review may determine that certain restrictions could apply to further protect arctic peregrine falcon habitats. Lessees and affected operators should establish regular communication with the MMS and the FWS. Human safety should take precedence at all times over these recommendations.

(h) Chukchi Sea Biological Task Force. Lessees are advised that in the enforcement of the Protection of Biological Resources stipulation, the Regional Supervisor, Field Operations (RSFO), will consider recommendations from the Chukchi Sea Biological Task Force (BTF) composed of designated representatives of the Minerals Management Service, the U.S. Fish and Wildlife Service, the National Marine Fisheries Service, and the Environmental Protection Agency. Personnel from the State of Alaska and local communities are invited and encouraged to participate in the proceedings of the BTF. The RSFO will consult with the Chukchi Sea BTF on the conduct of biological surveys by lessees and the appropriate course of action after surveys have been conducted.

(i) Coastal Zone Management. Lessees are advised that the Alaska Coastal Management Program (ACMP) may contain policies and standards that are relevant to exploration and development and production activities associated with leases resulting from this sale. Relevant policies are applicable to ACMP consistency reviews of postlease activities. Lessees are encouraged to consult and coordinate early with those involved in coastal management review.

In addition, the Northwest Arctic Borough (previously the Northwest Alaska Native Association [NANA] Coastal Resource Service Area) and the North Slope Borough (NSB) have developed local coastal management programs. The Northwest Arctic Borough Coastal Management Program (CMP) and the NSB CMP have been adopted by the Alaska Coastal Policy Council and will become part of the ACMP if approved by the U.S. Department of Commerce. The NSB and Northwest Arctic Borough CMP's contain more specific policies related to transportation corridors; energy-facility siting; geologic hazards; and protection of subsistence areas and resources, habitats, and historic and prehistoric resources.

(j) Endangered Whales and MMS Monitoring Program. Lessees are advised that the MMS intends to continue its endangered whale monitoring program in the Chukchi Sea during exploration activities. The program will gather information on whale distribution and abundance patterns and will provide the Regional Supervisor, Field Operations (RSFO), with additional assistance in determining the extent, if any, of adverse effects to the species.

Lessees are further advised that the RSFO has the authority and intends to limit or suspend any operations, including preliminary activities, as defined under 30 CFR 250.31, on a lease whenever bowhead whales are subject to a threat of serious, irreparable, or immediate harm to the species. Should the information obtained from MMS' or lessees' monitoring programs indicate that there is a threat of serious, irreparable, or immediate harm to the species, the RSFO will require the lessee to suspend operations causing such effects, in accordance with 30 CFR 250.10(b). Any suspensions may be terminated at any time when the RSFO determines that circumstances which justified the ordering of suspension no longer exist. A Notice to Lessees, No. 87-1, which specifies performance standards for preliminary activities in the Chukchi Sea, was issued on November 30, 1987.

Information regarding endangered whales will be reviewed annually by the MMS in consultation with the NMFS and the State of Alaska until it is determined that annual reviews are no longer necessary. The sources of information include: the MMS monitoring program; the industry site-specific monitoring required by stipulation No. 6 (including data obtained within 90 days of completion of a drilling season); pertinent results of the MMS environmental studies and other applicable information. The purpose of the review will be to determine whether existing mitigating measures adequately protect the endangered whales. Should the review indicate the threat of serious, irreparable, or immediate harm to the species, the MMS will take action to protect the species, including the possible imposition of a seasonal drilling restriction, or other restrictions if appropriate.

(k) Development and Production Phase Consultation with NMFS to Avoid Jeopardy to Bowhead Whales. The MMS has been advised by the NMFS that, based on currently available information and technology, NMFS believes that development and production activities in the spring lead system used by bowhead whales along the Chukchi Sea coast would likely jeopardize the continued existence of the bowhead whale population. The NMFS has advised that they will reconsider this conclusion when new information, technology, and/or measures become available or are proposed that would effectively eliminate or otherwise mitigate this potential jeopardy situation. Lessees are advised that specific options, alternatives, and/or mitigating measures may be developed for production and development activities during the MMS

consultation with the NMFS as new information or technology is developed for specific development plans but that the possibility exists that development and production on leases in this area may be constrained or precluded.

(1) Information on State Review of Proposed Exploration Plans.

The State of Alaska, in stating its commitment to minimizing potential impacts to the bowhead whale and subsistence harvest activities, has advised MMS that State resource agencies will review Federal lessees' exploration plans for consistency with State policies pursuant to existing State and Federal statutes.

15. New Regulatory Provisions. The regulatory reference to provisions in 30 CFR Part 250 cited in this document refer to the new MMS "Oil and Gas and Sulphur Operations in the Outer Continental Shelf". They were published in the Federal Register at 53 FR 10595 on April 1, 1988. This notice is provided to bidders since any leases issued as a result of this sale will be subject to the April 1, 1988, regulations (not those existing in 30 CFR Part 250, revised as of July 1, 1987, which may be in conflict with the new regulations).

Director, Minerals Management Service

Wm. D. Bettenberg

Approved:

Assistant Secretary for Land and Minerals Management

J. Steven Griles

APR 14 1988

Date

23

[FR Doc. 88-8638 Filed 4-19-88; 8:45 am]

BILLING CODE 4310-MR-C

Billing Code: 4310-MR

DEPARTMENT OF THE INTERIOR

Minerals Management Service

Outer Continental Shelf
Chukchi Sea

Notice of Leasing Systems, Sale 109

Section 8(a)(8) (43 U.S.C. 1337(a)(8)) of the Outer Continental Shelf Lands Act (OCSLA) requires that, at least 30 days before any lease sale, a Notice be submitted to the Congress and published in the Federal Register:

1. identifying the bidding systems to be used and the reasons for such use; and

2. designating the tracts to be offered under each bidding system and the reasons for such designation.

This Notice is published pursuant to these requirements.

1. Bidding system to be used. In the Outer Continental Shelf (OCS) Sale 109, blocks will be offered under the following bidding system as authorized by section 8(a)(1) (43 U.S.C. 1337(a)(1)): bonus bidding with a fixed 12 1/2-percent royalty.

a. Bonus Bidding with a 12 1/2-Percent Royalty. This system is authorized by section (8)(a)(1)(A) of the OCSLA. It has been chosen for all blocks proposed for the Chukchi Sea (Sale 109) because these blocks are expected to have high exploration, development, and production costs.

The Department of the Interior analyses indicate that the minimum economically developable discovery on a block in such high-cost areas under a 12 1/2-percent royalty system would be less than for the same blocks under a 16 2/3-percent royalty system. In addition, the lower royalty rate system is expected to encourage more rapid production and higher economic profits. It is not anticipated, however, that the larger cash bonus bid associated with a lower royalty rate will significantly reduce competition, since the higher costs for exploration and development are the primary constraints to competition.

[FR Doc. 88-8639 Filed 4-19-88; 8:45 am]

BILLING CODE 4310-MR-C

2. Designation of Blocks. All blocks in this lease sale will be offered under a 12 1/2-percent royalty system because that system is most appropriate to the resource levels and costs expected in this sale area.

Director, Minerals Management Service
Wm. D. Bettenberg

Approved:

APR 14 1988

Assistant Secretary - Land and Minerals Management
J. Steven Griles

federal register

Wednesday
April 20, 1988

Part VI

The President

Proclamation 5797—Crime Victims Week, 1988

Federal Register
Vol. 53, No. 76
Wednesday, April 20, 1988

Presidential Documents

Title 3—

The President

Proclamation 5797 of April 18, 1988

Crime Victims Week, 1988

By the President of the United States of America

A Proclamation

The principle of liberty and justice for all is one of our Nation's most fundamental goals and responsibilities. The vicious conduct of criminals against innocent, law-abiding citizens, however, continues to victimize millions of Americans each year. Our heritage of liberty and justice for all is threatened by this toll, so all of us—government officials, the criminal justice system, opinion-makers, and members of the public—must heed and help crime victims. Crime Victims Week is a fitting time for reflection on ways to assist fully those of us whose unalienable rights have been violated by criminals.

Victims of crime carry a burden inconceivable to others, and America is turning its attention to their plight. We must always remember that the responsibility for crimes lies with those who commit them, not with the innocent victims. Seven years ago, my Administration took some first steps toward meeting crime victims' needs. Since then, we have made great progress, with the President's Task Force on Victims of Crime, the Attorney General's Task Force on Family Violence, and the President's Child Safety Partnership. The Victims of Crime Act of 1984 established a Crime Victims Fund in the U.S. Treasury that is financed by penalty assessments on all convicted Federal defendants. The same Act also authorized U.S. Attorneys to recover the proceeds of literary endeavors of certain violent criminals.

Across our Nation, private citizens and groups, criminal justice personnel, service providers, and victims of crime themselves are helping—working for legislative reforms, monitoring court procedures, accompanying law officers to crime scenes, offering emotional support to crime victims and their families, and sparing countless people from the unjust burdens imposed by lack of concern or understanding. Those who so successfully attend to the needs and rights of innocent victims of crime deserve our gratitude and our assistance as they seek "liberty and justice for all."

The Congress, by Senate Joint Resolution 234, has designated the week beginning April 17, 1988, as "Crime Victims Week" and authorized and requested the President to issue a proclamation in observance of this event.

NOW, THEREFORE, I, RONALD REAGAN, President of the United States of America, do hereby proclaim the week beginning April 17, 1988, as Crime Victims Week. I urge government officials and all citizens to continue to help crime victims and to treat them with respect, consideration, compassion, and fairness, for the sake of justice and human dignity.

VOL 53 ISS 76 AP 20 1988 UMI

IN WITNESS WHEREOF, I have hereunto set my hand this eighteenth day of April, in the year of our Lord nineteen hundred and eighty-eight, and of the Independence of the United States of America the two hundred and twelfth.

Ronald Reagan

[FR Doc. 88-8838
Filed 4-19-88; 10:53 am]
Billing code 3195-01-M

VOL
53

ISS
76

AP
20

1988

UMI

Reac

INFORMA

Federal

Index, fi
Public in
Correctio
Documen
Machine

Code of

Index, fi
Printing

Laws

Public La
Addition

Presiden

Executive
Public Pa
Weekly

The Unit

General

Other Se

Data bas
Guide to
Legal sta
Library
Privacy
Public La
TDD for

FEDERA

10519–108
10869–110
11031–112
11239–114
11487–116
11633–118
11815–119
11991–121
12137–123
12371–125
12509–126
12671–127
12759–129
12909–130

Reader Aids

Federal Register

Vol. 53, No. 76

Wednesday, April 20, 1988

INFORMATION AND ASSISTANCE

Federal Register

Index, finding aids & general information	523-5227
Public inspection desk	523-5215
Corrections to published documents	523-5237
Document drafting information	523-5237
Machine readable documents	523-5237

Code of Federal Regulations

Index, finding aids & general information	523-5227
Printing schedules	523-3419

Laws

Public Laws Update Service (numbers, dates, etc.)	523-6641
Additional information	523-5230

Presidential Documents

Executive orders and proclamations	523-5230
Public Papers of the Presidents	523-5230
Weekly Compilation of Presidential Documents	523-5230

The United States Government Manual

General information	523-5230

Other Services

Data base and machine readable specifications	523-3408
Guide to Record Retention Requirements	523-3187
Legal staff	523-4534
Library	523-5240
Privacy Act Compilation	523-3187
Public Laws Update Service (PLUS)	523-6641
TDD for the deaf	523-5229

FEDERAL REGISTER PAGES AND DATES, APRIL

10519-10868.....1
10869-11030.....4
11031-11238.....5
11239-11486.....6
11487-11632.....7
11633-11814.....8
11815-11990.....11
11991-12136.....12
12137-12370.....13
12371-12508.....14
12509-12670.....15
12671-12758.....18
12759-12908.....19
12909-13096.....20

CFR PARTS AFFECTED DURING APRIL

At the end of each month, the Office of the Federal Register publishes separately a List of CFR Sections Affected (LSA), which lists parts and sections affected by documents published since the revision date of each title.

3 CFR

Proclamations:
5784.....10519
5785.....10521
5786.....10523
5787.....11031
5788.....11489
5789.....11809
5790.....11811
5791.....11813
5792.....12365
5793.....12367
5794.....12369
5795.....12671
5796.....12673
5797.....13094

Executive Orders:
12634.....11041
12635.....12134

Administrative Orders:

Memorandums:
Mar. 31, 1988.....11039

Presidential Determinations:
No. 88-10 of February 29, 1988.....11487

5 CFR

831.....11633
842.....11633
1633.....11815

Proposed Rules:
1632.....11864
2431.....10885

7 CFR

2.....11636
300.....10525
301.....11825
318.....12909
340.....12910
400.....10526
426.....12759
724.....12675
725.....12675
726.....12675
907.....12371
908.....12371
910.....10527, 11636, 12509
911.....11830
917.....11832
929.....12373
946.....11043
981.....12374
1032.....11637
1064.....11590
1126.....11638
1421.....11239
3600.....11639
3601.....11639

Proposed Rules:
6.....11091
53.....10545
54.....10545
401.....12774
449.....11299
916.....12687
917.....11669, 12691
918.....11867
946.....12423
949.....10887
1030.....10894
1065.....12424
1106.....11092
1497.....11474
1498.....11474
1530.....11098
1700.....11511
1701.....10545
1900.....12695
1980.....12695
3403.....13048

8 CFR

Proposed Rules:
3.....11300
208.....11300
236.....11300
242.....11300
253.....11300

9 CFR

77.....11491, 12913
92.....11043, 12640

Proposed Rules:
78.....12019

10 CFR

430.....10869
600.....12137
1010.....11240, 12497

Proposed Rules:
2.....11310
50.....11311, 12425

12 CFR

202.....11044
205.....11046
226.....11047, 11055
229.....11832
265.....11640, 12509
563.....11242, 11243
611.....12140
615.....12140

13 CFR

308.....12510

14 CFR

Ch. III.....11004
39.....11246, 11641-11643, 11837, 11838, 12141, 12376, 12511, 12914, 12915

71 ... 10528, 11020, 11060, 11061, 11839–11841, 12916–12918
97 ... 11062, 12377
121 ... 12358
135 ... 12358

Proposed Rules:
Ch. I ... 11868
21 ... 11869
23 ... 11869
27 ... 10826, 11162
29 ... 10826, 11162
39 ... 11674–11676, 11678, 11871, 12427, 12947
71 ... 10546, 11100, 11101, 12866, 12947
73 ... 11102
298 ... 12774

15 CFR

370 ... 12668
371 ... 12668
373 ... 12668
378 ... 12668
379 ... 12668
385 ... 12668
399 ... 12668

Proposed Rules:
7 ... 12880

16 CFR

13 ... 11247, 12379

Proposed Rules:
13 ... 12534

17 CFR

30 ... 11491
200 ... 12412, 12918
229 ... 12924
230 ... 11841, 12918
239 ... 12918
240 ... 11841, 12924
249 ... 12924

Proposed Rules:
Ch. IV ... 12428
200 ... 12429
229 ... 12948
249 ... 12948

18 CFR

37 ... 11191, 12931
154 ... 11191
157 ... 11644, 11845
389 ... 12676, 12677

Proposed Rules:
272 ... 12704
274 ... 12704

19 CFR

7 ... 12143
103 ... 12937

20 CFR

10 ... 11594
416 ... 12938

Proposed Rules:
10 ... 11596

21 CFR

179 ... 12756
184 ... 11247
193 ... 12942
340 ... 11731
444 ... 12644, 12658
452 ... 12414
510 ... 11492
520 ... 11063
522 ... 11064, 11493
524 ... 11064, 12512
540 ... 11492
558 ... 11065, 11251
561 ... 11938, 12640, 12942
610 ... 12760
640 ... 12760
660 ... 12760
800 ... 11251
803 ... 11251
807 ... 11251
808 ... 11251
809 ... 11251
812 ... 11251
813 ... 11251
820 ... 11251
860 ... 11251
861 ... 11251
862 ... 11645
864 ... 11251
866 ... 11251
876 ... 11251
895 ... 11251
1002 ... 11251
1005 ... 11251
1010 ... 11251
1020 ... 11251
1030 ... 11251
1040 ... 11251
1050 ... 11251
1308 ... 10834, 10861, 10869

Proposed Rules:
133 ... 11312
175 ... 11402
176 ... 11402
177 ... 11402
178 ... 11402
193 ... 11938
332 ... 12778
357 ... 12779
561 ... 11313

22 CFR

120 ... 11494, 12099
121 ... 11494, 12099
122 ... 11494, 12099
123 ... 11494, 12099
124 ... 11494, 12099
125 ... 11494, 12099
126 ... 11494, 12099
127 ... 11494, 12099
128 ... 11494, 12099
514 ... 10528
602 ... 10529
706 ... 11992

Proposed Rules:
204 ... 11872
602 ... 12430

23 CFR

650 ... 11065
657 ... 12766
658 ... 12145
771 ... 11065
1204 ... 11255
1205 ... 11255

Proposed Rules:
625 ... 11875
626 ... 11875
1309 ... 11679

24 CFR

50 ... 11224
200 ... 11270
201 ... 11997
203 ... 10529, 11997
221 ... 11224
234 ... 11997
236 ... 11224
241 ... 11224
248 ... 11224

Proposed Rules:
35 ... 11164
200 ... 11164, 12431
510 ... 11164
511 ... 11164
570 ... 11164
882 ... 11164
886 ... 11164
888 ... 12278
941 ... 11164
965 ... 11164
968 ... 11164

25 CFR

61 ... 11271

26 CFR

1 ... 11002, 11066, 11162, 11731, 12000, 12149, 12513, 12677, 12678
602 ... 11066, 11162, 11731, 12000

Proposed Rules:
1 ... 11103, 11876, 12433, 12534, 12705

27 CFR

Proposed Rules:
4 ... 12024
12 ... 12024

28 CFR

0 ... 10870, 10871, 11645
66 ... 12099
71 ... 11645

Proposed Rules:
16 ... 12151

29 CFR

102 ... 10872
1907 ... 12102
1910 ... 11414, 12102
2610 ... 10530
2622 ... 10530
2644 ... 10531
2676 ... 12514

Proposed Rules:
516 ... 11590, 12497
530 ... 11590, 12497
1404 ... 12952
1910 ... 11511
1915 ... 11511
1917 ... 11511
1918 ... 11511
2550 ... 11886
2580 ... 11886

30 CFR

48 ... 12415
75 ... 11395
250 ... 10596, 12227
256 ... 10596, 12227
773 ... 11606
934 ... 11500

Proposed Rules:
20 ... 12250
75 ... 12250
77 ... 12250, 12253
785 ... 11685
823 ... 11685
935 ... 11887, 12705
948 ... 11888

31 CFR

Proposed Rules:
103 ... 11513

32 CFR

388 ... 10876
706 ... 12515

Proposed Rules:
45 ... 12034

33 CFR

84 ... 10532
100 ... 11502, 12415
117 ... 10533, 10534, 12416, 12417
165 ... 12417, 12679

Proposed Rules:
100 ... 11515, 12434, 12706
110 ... 11395, 11515
117 ... 11516, 11517, 12434, 12535, 12707, 12708

34 CFR

99 ... 11942
600 ... 11208
657 ... 10820
668 ... 11208

Proposed Rules:
105 ... 10808

35 CFR

103 ... 12516

36 CFR

1202 ... 12150
1258 ... 12150

38 CFR

36 ... 11502

39 CFR

Proposed Rules:
111 ... 11685

40 CFR

22 ... 12256
24 ... 12256
52 ... 11068, 11273, 11655, 11847, 12417, 12896
60 ... 11590, 12008, 12009, 12498, 12517
61 ... 12517
180 ... 11071, 11274, 11938, 12151, 12418, 12640, 12943
228 ... 12944
300 ... 12680
372 ... 12748
704 ... 12522
707 ... 12522
710 ... 12522
712 ... 12522
716 ... 12522
717 ... 12522
720 ... 12522
721 ... 12522
723 ... 12522
750 ... 12522
761 ... 12522
763 ... 12522
790 ... 12522
796 ... 12522

797 12522
799 12522

Proposed Rules:

52 ..... 11314, 11686, 11688, 12161, 12435, 12906, 12962
60 12962
116 11889
117 11889
180 10895
261 12162
264 11742
265 11742
268 11742
271 11742
302 ..... 11889, 11890, 12868
355 12868
372 12035
761 11104
763 10546
795 12748
796 11104
799 12748

41 CFR

101-25 11847
101-40 11849
101-49 12766

Proposed Rules:

201-33 11518

42 CFR

405 ..... 11504, 12010, 12945
406 12945
409 12945
410 12945
413 ..... 12016, 12641, 12945
416 ..... 11504, 12945
418 11504
421 12945
434 12010
435 12681
436 12681
442 11504
482 11504
489 12945
498 12945

Proposed Rules:

405 ..... 12037, 12641
412 12641
413 12641
489 12641

43 CFR

Proposed Rules:

3160 11318

Public Land Orders:

6670 10535
6671 12419
6672 12420
6673 12420

44 CFR

67 ..... 11510, 12152
80 11275
82 11275
83 11275
205 12681

Proposed Rules:

61 10547
67 12536

45 CFR

36 11279
79 11656
96 11656
1611 12017

Proposed Rules:

303 12041
606 10896
1356 12436

46 CFR

572 11072

Proposed Rules:

Ch. I 11440
502 12440

47 CFR

0 11849
1 11851
2 ..... 10878, 11855
15 11861
22 11855
43 12526
63 12526
73 ..... 11668, 11863, 12152-12154, 12528, 12768-12770, 12946
90 ..... 11849, 12154
94 11855

Proposed Rules:

Ch. I 10549, 10550
43 12546
63 12546
68 12546
73 ..... 10905, 11690, 12167-12169, 12547-12549, 12779, 12963, 12964
97 12780

48 CFR

15 10828
25 12128
31 ..... 10828, 12128
52 ..... 10828, 12128
215 11073
227 10780
242 11073
252 ..... 10780, 11073
439 12748
452 12748
1033 12770
1801 13056
1807 13056
1815 13056
1819 13056
1822 13056
1825 13056
1827 13056
1829 13056
1832 13056
1836 13056
1837 13056
1842 13056
1849 13056
1851 13056
1852 13056
1853 13056
1870 13056
2804 ..... 12421, 12866
2832 12421
2852 12421

Proposed Rules:

43 11795
47 11795
52 ..... 11795, 12501
916 11318
931 11318
952 11318
1505 11519
1506 11519

49 CFR

387 12158
533 11074
571 ..... 11280, 12528
1160 10536

Proposed Rules:

171 ..... 11320, 12442
172 12442
173 ..... 11320, 12442
174 12442
175 12442
176 12442
177 ..... 11618, 12442
178 12442
179 12442
192 10906
383 12504
391 12504
571 11105
840 11520
1185 12443

50 CFR

17 ..... 10879, 11609, 11612
23 12497
285 11510
301 10536
672 11297
675 12772

Proposed Rules:

17 12787
18 12043
228 12169
644 11321
650 12709
653 12790
658 12046
683 12712

LIST OF PUBLIC LAWS

Note: No public bills which have become law were received by the Office of the Federal Register for inclusion in today's **List of Public Laws.**

Last List April 15, 1988

Public Laws

are now available for the 100th Congress, 2nd Session, 1988

Pamphlet prints of public laws, often referred to as slip laws, are the initial publication of Federal laws upon enactment and are printed as soon as possible after approval by the President. Legislative history references appear on each law. Subscription service includes all public laws, issued irregularly upon enactment, for the 100th Congress, 2nd Session, 1988.

(Individual laws also may be purchased from the Superintendent of Documents, Washington, DC 20402-9328. Prices vary. See Reader Aids Section of the Federal Register for announcements of newly enacted laws and prices).

Superintendent of Documents Subscriptions Order Form

Order Processing Code:
***6216**

Charge your order. It's easy!

☐ **YES,** please send me _____ subscriptions to **PUBLIC LAWS** for the 100th Congress, 2nd Session, 1988 for $104 per subscription.

1. The total cost of my order is $_____ . All prices include regular domestic postage and handling and are subject to change. International customers please add 25%.

Please Type or Print

2. _____
(Company or personal name)

_____
(Additional address/attention line)

_____
(Street address)

_____
(City, State, ZIP Code)

(_____) _____
(Daytime phone including area code)

3. Please choose method of payment:

☐ Check payable to the Superintendent of Documents

☐ GPO Deposit Account ☐☐☐☐☐☐☐ – ☐

☐ VISA, CHOICE or MasterCard Account

☐☐☐☐☐☐☐☐☐☐☐☐☐☐☐☐☐☐☐☐

_____
(Credit card expiration date)

Thank you for your order!

_____
(Signature)

1/88

4. Mail To: Superintendent of Documents, Government Printing Office, Washington, D.C. 20402-9371

VOL
53

ISS
76

AP
20

1988

UMI

VOL
53
ISS
77
AP
21
1988
UMI

4-2
Vol
Unit
Gov
Print
SUPER
OF DO
Washin
OFFICI
Penalty

4-21-88
Vol. 53 No. 77

federal register

Thursday
April 21, 1988

United States
Government
Printing Office
SUPERINTENDENT
OF DOCUMENTS
Washington, DC 20402

OFFICIAL BUSINESS
Penalty for private use, $300

**********5-DIGIT 48106

A FR SERIA300S NOV 88 R
SERIALS PROCESSING
UNIV MICROFILMS INTL
300 N ZEEB RD
ANN ARBOR MI 48106

SECOND CLASS NEWSPAPER
Postage and Fees Paid
U.S. Government Printing Office
(ISSN 0097-6326)

VOL
53
ISS
77
AP
21
1988
UMI

4-21-
Vol. 5
Page

4-21-88
Vol. 53 No. 77
Pages 13097-13234

federal register

Thursday
April 21, 1988

BEST COPY AVAILABLE

FEDERAL REGISTER Published daily, Monday through Friday, (not published on Saturdays, Sundays, or on official holidays), by the Office of the Federal Register, National Archives and Records Administration, Washington, DC 20408, under the Federal Register Act (49 Stat. 500, as amended; 44 U.S.C. Ch. 15) and the regulations of the Administrative Committee of the Federal Register (1 CFR Ch. I). Distribution is made only by the Superintendent of Documents, U.S. Government Printing Office, Washington, DC 20402.

The **Federal Register** provides a uniform system for making available to the public regulations and legal notices issued by Federal agencies. These include Presidential proclamations and Executive Orders and Federal agency documents having general applicability and legal effect, documents required to be published by act of Congress and other Federal agency documents of public interest. Documents are on file for public inspection in the Office of the Federal Register the day before they are published, unless earlier filing is requested by the issuing agency.

The **Federal Register** will be furnished by mail to subscribers for $340.00 per year, or $170.00 for 6 months in paper form, or $188.00 per year, or $94.00 for six months in microfiche form, payable in advance. The charge for individual copies is $1.50 for each issue, or $1.50 for each group of pages as actually bound. Remit check or money order, made payable to the Superintendent of Documents, U.S. Government Printing Office, Washington, DC 20402, or charge to your GPO Deposit Account or VISA or Mastercard.

There are no restrictions on the republication of material appearing in the **Federal Register**.

How To Cite This Publication: Use the volume number and the page number. Example: 52 FR 12345.

SUBSCRIPTIONS AND COPIES

PUBLIC

Subscriptions:

Paper or fiche	202-783-3238
Magnetic tapes	275-3328
Problems with public subscriptions	275-3054

Single copies/back copies:

Paper or fiche	783-3238
Magnetic tapes	275-3328
Problems with public single copies	275-3050

FEDERAL AGENCIES

Subscriptions:

Paper or fiche	523-5240
Magnetic tapes	275-3328
Problems with Federal agency subscriptions	523-5240

For other telephone numbers, see the Reader Aids section at the end of this issue.

VOL 53 ISS 77 AP 21 1988 UMI

Contents

Federal Register
Vol. 53, No. 77
Thursday, April 21, 1988

Agricultural Marketing Service
RULES
Limes grown in Florida
Correction, 13217

Agriculture Department
See Agricultural Marketing Service; Animal and Plant Health Inspection Service; Farmers Home Administration; Food Safety and Inspection Service; Foreign Agricultural Service

Animal and Plant Health Inspection Service
NOTICES
Meetings:
Scrapie eradication program, 13136

Army Department
NOTICES
Meetings:
Science Board, 13145

Centers for Disease Control
NOTICES
Grants and cooperative agreements; availability, etc.:
Black colleges and universities, 13160
Health programs for refugees, 13164
Health promotion, and disease prevention information/education projects, 13162

Coast Guard
RULES
Ports and waterways safety:
Chesapeake Bay, Brewerton Channel Eastern Extension, MD; safety zone, 13119
Safety and security zones, etc.; list of temporary rules, 13118
Vessels, commercial and recreational; operation while intoxicated; correction, 13117
NOTICES
Meetings:
Chemical Transportation Advisory Committee, 13212
Houston/Galveston Navigation Safety Advisory Committee, 13212
(2 documents)

Commerce Department
See also International Trade Administration; National Oceanic and Atmospheric Administration; Patent and Trademark Office
NOTICES
Foreign research facilities; U.S. scientists access, 13138

Copyright Royalty Tribunal
NOTICES
Cable royalty fees:
Distribution proceedings, 13144

Defense Department
See Army Department; Navy Department

Drug Enforcement Administration
NOTICES
Applications, hearings, determinations, etc.:
Holme Drug Store, 13202
Jefferson Pharmacy, Inc., 13200
Medical Center Pharmacy, 13202

Drug Free America, White House Conference
See White House Conference for a Drug Free America

Economic Regulatory Administration
NOTICES
Natural gas exportation and importation:
Northeast Gas, Inc., 13150

Education Department
NOTICES
Meetings:
International Education Programs National Advisory Board; correction, 13217

Energy Department
See also Economic Regulatory Administration; Federal Energy Regulatory Commission
NOTICES
Meetings:
National Coal Council, 13156
Research and development for comminution equipment, 13145

Environmental Protection Agency
RULES
Air quality implementation plans; approval and promulgation; various States:
Pennsylvania, 13121
PROPOSED RULES
Air quality implementation plans; approval and promulgation; various States:
Illinois, 13135

Executive Office of the President
See Presidential Commission on the Human Immunodeficiency Virus Epidemic; Trade Representative, Office of United States

Export Administration
See International Trade Administration

Farmers Home Administration
RULES
Program regulations:
Debt settlement—
Community and business programs, 13098

Federal Aviation Administration
RULES
Aircraft products and parts, certification:
Special conditions—
Cessna Model 172 Series airplanes, 13113
Airworthiness directives:
Cessna, 13114
Transition areas, 13115, 13116
(3 documents)

NOTICES
Advisory circulars; availability, etc.:
Aircraft—
Part 23 airplanes certification; flight test guide, 13213

Federal Communications Commission
NOTICES
Meetings; Sunshine Act, 13215

Federal Election Commission
NOTICES
Meetings; Sunshine Act, 13215

Federal Energy Regulatory Commission
NOTICES
Electric rate, small power production, and interlocking directorate filings, etc.:
Maine Public Service Co. et al., 13146
Natural gas certificate filings:
Natural Gas Pipeline Co. of America et al., 13152
Natural gas companies:
Certificates of public convenience and necessity: applications, abandonment of service and petitions to amend, 13151
Applications, hearings, determinations, etc.:
Algonquin Gas Transmission Co., 13154
Cascade Natural Gas Co. et al., 13154
El Paso Natural Gas Co., 13155
Lehnertz, G.M., 13155
South Georgia Natural Gas Co., 13156

Federal Home Loan Bank Board
RULES
Federal savings and loan system, etc.:
Conservators and receivers; interim procedures availability, 13105
PROPOSED RULES
Federal Savings and Loan Insurance Corporation:
Premiums, additional; assessment and adjustment, 13131
Proposed rules; withdrawal, 13133
NOTICES
Regulatory review procedures, 13156

Federal Maritime Commission
NOTICES
Agreements filed, etc., 13157

Federal Reserve System
NOTICES
Applications, hearings, determinations, etc.
Cardinal Bancshares, Inc., et al., 13157
Long-Term Credit Bank of Japan, 13158
Yale, William, 13158

Federal Trade Commission
NOTICES
Agency information collection activities under OMB review, 13159

Fish and Wildlife Service
PROPOSED RULES
Endangered and threatened species:
Alabama canebrake pitcher-plant, 13230
Cooley's meadowrue, 13220
Dwarf-flowered heartleaf, 13223
Little-wing pearlymussel, 13226
NOTICES
Environmental statements; availability, etc.:
Alaska Peninsula National Wildlife Refuge Wilderness Review; correction, 13200
Becharof National Wildlife Refuge Wilderness Review, correction, 13200

Food and Drug Administration
RULES
Animal drugs, feeds, and related products:
Levamisole
Correction, 13217
Human drugs:
Ophthalmic products (OTC); tentative final monograph
Correction, 13217
PROPOSED RULES
Food for human consumption:
Aspartame; food chemical codex, 13134
NOTICES
Committees; establishment, renewal, termination, etc.:
Arthritis Advisory Committee, 13165
Compliance policy guides manual; index availability, 13165
Medical devices:
Radiologic devices—
Magnetic resonance diagnostic device; reclassification petitions, recommendation and report; correction, 13218
Medical devices; premarket approval:
Model 304-01 Ultra C-Loop Posterior Chamber Intraocular Lens; correction, 13166
Meetings:
Advisory committees, panels, etc., 13166

Food Safety and Inspection Service
NOTICES
Meat and poultry inspection:
Sulfamethazine residues in swine; testing procedures, 13137
Sulfa-on-site test for sulfamethazine in swine; implementation, 13136

Foreign Agricultural Service
PROPOSED RULES
Foreign market development programs, 13125

Health and Human Services Department
See Centers for Disease Control; Food and Drug Administration; Human Development Services Office

Human Development Services Office
NOTICES
Grants; availability, etc.:
Developmental disabilities program; projects of national significance, 13167, 13169
(2 documents)

Human Immunodeficiency Virus Epidemic Presidential Commission
See Presidential Commission on the Human Immunodeficiency Virus Epidemic

Interior Department
See also Fish and Wildlife Service; Land Management Bureau
NOTICES
Privacy Act; systems of records, 13194

International Trade Administration
NOTICES
Antidumping:
Barium chloride from China, 13140
Internal-combustion, industrial forklift trucks from Japan; correction, 13217
Large power transformers from Italy, 13141
Sorbitol from France, 13142
Television receivers, monochrome and color, from Japan, 13143

Justice Department
See Drug Enforcement Administration

Land Management Bureau
NOTICES
Coal leases, exploration licenses, etc.:
Montana, 13195
Wyoming, 13197
Coal management program:
Fort Union Federal Coal Production Region decertified and opening counties in North Dakota and Montana to leasing by application process, 13195
Green River-Hams Fork Coal Production Region decertified and opening counties in Colorado and Wyoming to leasing by application process, 13196
Management framework plans, etc.:
Idaho, 13196
Meetings:
Ely District Advisory Council; correction, 13197
Northern and Southern Alaska Advisory Councils, 13197
Rock Springs District Advisory Council, 13197
Roseburg District Advisory Council, 13197
Worland District Advisory Council, 13198
Worland District Grazing Advisory Board, 13198
Realty actions; sales, leases, etc.:
Alaska, 13198, 13199
(2 documents)
Colorado, 13199
Withdrawal and reservation of lands:
Montana, 13199

National Aeronautics and Space Administration
NOTICES
Meetings:
Space Systems and Techology Advisory Committee, 13202

National Institute for Occupational Safety and Health
See Centers for Disease Control

National Oceanic and Atmospheric Administration
NOTICES
Meetings:
North Pacific Fishery Management Council, 13144

National Science Foundation
NOTICES
Meetings:
Cell Biology Advisory Panel, 13203
Critical Engineering Systems Division Advisory Committee, 13203
Developmental Biology Advisory Panel, 13203
DOE/NSF Nuclear Science Advisory Committee, 13203
Electrical, Communications, and Systems Engineering Advisory Committee, 13204
Prokaryotic Genetics Program Advisory Panel, 13204
United States Antarctic Program Safety Review Panel, 13204

Navy Department
NOTICES
Meetings:
Chief of Naval Operations Executive Panel Advisory Committee, 13145
Naval Research Advisory Committee, 13145

Nuclear Regulatory Commission
PROPOSED RULES
Rulemaking petitions:
Union Carbide Corp., 13128
NOTICES
Environmental statements; availability, etc.:
Florida Power & Light Co., 13204
Applications, hearings, determinations, etc.:
Boston Edison Co., 13205
Duke Power Co., 13206
Public Service Co. of New Hampshire et al., 13207

Office of United States Trade Representative
See Trade Representative, Office of United States

Patent and Trademark Office
RULES
Practice rules; correction, 13120

Personnel Management Office
RULES
Conflict of interests, 13097
PROPOSED RULES
Employment and pay under General Schedule:
Agency authority to approve various personnel actions; delegation agreements, 13124

Postal Service
NOTICES
Meetings; Sunshine Act, 13215

Presidential Commission on the Human Immunodeficiency Virus Epidemic
NOTICES
Meetings, 13208

Public Health Service
See Centers for Disease Control; Food and Drug Administration

Securities and Exchange Commission
NOTICES
Self-regulatory organizations:
Clearing agency registration applications—International Securities Clearing Corp., 13210
Self-regulatory organizations; proposed rule changes:
National Association of Securities Dealers, Inc., 13210
Applications, hearings, determinations, etc.:
Bank of New England, 13208

Small Business Administration
NOTICES
Disaster loan areas:
Texas, 13211
Applications, hearings, determinations, etc.:
Bridger Capital Corp., 13211
Republic SBI Corp., 13211

Trade Representative, Office of United States
NOTICES
China; Tariff Schedule adjustment for imports of tungsten, 13207

Transportation Department
See Coast Guard; Federal Aviation Administration

United States Information Agency
NOTICES
Agency information collection activities under OMB review, 13213

United States Institute of Peace
NOTICES
Meetings; Sunshine Act, 13215

Veterans Administration
RULES
Medical benefits:
Community nursing home care facilities use, 13120
NOTICES
Reports, program evaluation; availability, etc.:
Library Service Program, 13213

White House Conference for a Drug Free America
NOTICES
Meetings, 13214

Separate Parts In This Issue

Part II
Department of the Interior, Fish and Wildlife Service, 13220

Reader Aids
Additional information, including a list of public laws, telephone numbers, and finding aids, appears in the Reader Aids section at the end of this issue.

VOL 53 ISS 77 APR 21 1988 UMI

CFR PARTS AFFECTED IN THIS ISSUE

A cumulative list of the parts affected this month can be found in the Reader Aids section at the end of this issue.

5 CFR
1001 13097
Proposed Rules:
300 13124
531 13124

7 CFR
911 13217
1864 13098
1927 13098
1951 13098
1955 13098
1956 13098
Proposed Rules:
11 13125
1550 13125

10 CFR
Proposed Rules:
40 13128

12 CFR
547 13105
548 13105
549 13105
563 13105
569a 13105
569b 13105
569c 13105
Proposed Rules:
563 (2 documents) 13131, 13133
571 13133
588 13133

14 CFR
21 13113
23 13113
39 13114
71 (3 documents) 13115, 13116

21 CFR
349 13217
369 13217
524 13217
Proposed Rules:
172 13134

33 CFR
95 13117
100 13118
165 (2 documents) 13118, 13119
173 13117
177 13117

37 CFR
10 13120

38 CFR
17 13120

40 CFR
52 13121
Proposed Rules:
52 13135

46 CFR
26 13117
35 13117
78 13117
97 13117
109 13117
185 13117
197 13117

50 CFR
Proposed Rules:
17 (4 documents) 13220–13230

VOL
53
ISS
77
AP
21
1988
UMI

Ru

This s
contai
genera
of wh
the C
publish
U.S.C.
The C
by the
Prices
first F
week.

OFFIC
MANA
5 CFR
Empl
Cond
AGEN
Mana
ACTIO

SUMM
Mana
intern
regula
and sp
attend
where
refres
prohib
incorp
EFFEC
FOR F
Stuart
SUPPL
Execu
735 au
their i
neces
the ru
specia
accep
source
in OP
or spe
attend
attend
food a
prohib
being
accep
certai

The
552a(e
"estab
emplo
covere
includ
regula
Privac
being

Rules and Regulations

Federal Register
Vol. 53, No. 77
Thursday, April 21, 1988

This section of the FEDERAL REGISTER contains regulatory documents having general applicability and legal effect, most of which are keyed to and codified in the Code of Federal Regulations, which is published under 50 titles pursuant to 44 U.S.C. 1510.
The Code of Federal Regulations is sold by the Superintendent of Documents. Prices of new books are listed in the first FEDERAL REGISTER issue of each week.

OFFICE OF PERSONNEL MANAGEMENT

5 CFR Part 1001

Employee Responsibilities and Conduct

AGENCY: Office of Personnel Management.

ACTION: Final rule.

SUMMARY: The Office of Personnel Management (OPM) is amending its internal standards of conduct regulations to permit OPM employees and special Government employees to attend certain widely-attended events where complimentary food and refreshments are provided by otherwise prohibited sources of gifts, and to incorporate provisions on privacy.

EFFECTIVE DATE: May 23, 1988.

FOR FURTHER INFORMATION CONTACT: Stuart D. Rick (202 or FTS), 632-5030.

SUPPLEMENTARY INFORMATION: Executive Order 11,222 and 5 CFR Part 735 authorize agencies to provide in their internal standards of conduct necessary and appropriate exceptions to the rules that prohibit employees and special Government employees from accepting anything of value from certain sources. There are occasions when it is in OPM's interest for an OPM employee or special Government employee to attend a reception or another widely-attended event where complimentary food and refreshments are provided by a prohibited source of gifts. The exception being promulgated will permit acceptance of gifts of this nature under certain circumstances.

The Privacy Act of 1974, at 5 U.S.C. 552a(e)(9), requires agencies to "establish rules of conduct" for employees who deal with records covered by the Act. Formerly, OPM included such rules in its Privacy Act regulations, at 5 CFR Part 297. These Privacy Act rules of conduct are now being consolidated and placed in the internal standards of conduct regulations.

Implementation of OPM regulations is subject to 5 U.S.C. 1193(b) and 1105; specifically excluded from this process are regulations that apply solely to OPM or its employees. Likewise, the regulations of an agency that are solely internal in applicability are not subject to Executive Order 12291, Federal Regulation; or the Regulatory Flexibility Act.

List of Subjects in 5 CFR Part 1001

Conflict of interests, Government employees, Privacy, Records.

U.S. Office of Personnel Management.

Constance Horner,

Director.

Accordingly, 5 CFR Part 1001 is amended as follows:

PART 1001—EMPLOYEE RESPONSIBILITIES AND CONDUCT

1. The authority citation for Part 1001 is revised to read as follows:

Authority: E.O. 11222, 30 FR 6469, 3 CFR 1964-65 Comp. p. 306; 5 CFR 735.101 et seq.; Reorganization Plan No. 2 of 1978; Section 1001.735-203 also issued under Pub. L. 95-454; Section 1001.735-206a also issued under 5 U.S.C. 552a.

2. In § 1001.735-202, a new paragraph (b)(5) is added, to read as follows:

§ 1001.735-202 Gifts, entertainment, and favors.

* * * * *

(b) * * *

(5) The acceptance of food and refreshments at widely-attended gatherings of mutual interest to the government and the private sector such as receptions, seminars, conferences, and training sessions, so long as:

(i) The food and refreshments offered in conjunction with the event are not excessive;

(ii) The timing or the reason for the event would not create an appearance of impropriety; and

(iii) The employee's supervisor and the designated agency ethics official are informed of the invitation to the event and determine in advance that it is in the interest of OPM for the employee to attend the event.

* * * * *

3. Section 1001.735-206a is added, to read as follows:

§ 1001.735-206a Conduct and responsibilities mandated by the Privacy Act of 1974.

(a) An employee should avoid any action which results in the appearance of using public office to collect or gain access to personal data about individuals beyond that required by or authorized for the performance of assigned duties.

(b) An employee should not use any personal data about individuals for any purpose other than required and authorized in the performance of assigned duties; or disclose any such information to other agencies or persons not expressly authorized to receive or have access to such information, and should make any such authorized disclosures in acordance with established regulations and procedures.

(c) Each employee, and especially an employee who has access to or is engaged in any way in the handling of information subject to the Privacy Act of 1974, shall acquaint himself or herself with the regulations of this subsection as well as the pertinent provisions of the Privacy Act relating to the treatment of such information. Particular attention is directed to the following provisions of the Privacy Act:

(1) 5 U.S.C. 552a(e)(7)—The prohibition against maintaining any information regarding how any individual exercises First Amendment rights (including political or religious beliefs, and the freedom of speech, press, and assembly) unless expressly authorized by statute or the individual.

(2) 5 U.S.C. 552a(b)—The prohibition against disclosure of certain personal data without the prior written consent of the individual, except under certain limited conditions.

(3) 5 U.S.C. 552a(e)(1)—The prohibition against collecting or maintaining any personal data about individuals, except as necessary and relevant to perform a function of the Office which is authorized by statute or Executive order.

(4) 5 U.S.C. 552a(e)(2)—The requirement to collect information which may result in an adverse determination about an individual from that individual whenever practicable.

(5) 5 U.S.C. 552a(e)(3)—The requirement to inform individuals from whom information about themselves is solicited of the authority under which the solicitation is made and whether the

disclosure of the information is mandatory, the purposes for which the information will be used, the routine uses which may be made of the information, and the consequences of failure to provide such information.

(6) 5 U.S.C. 552a(b) and (e)(10)—The obligation of employees to comply with established safeguards and procedures to protect personal data from anticipated threats or hazards to the security or integrity of the data which could result in substantial harm, embarrassment, inconvenience, or unfairness to an individual about whom information is maintained.

(7) 5 U.S.C. 552a(c) (1), (2), and (3)—The obligation of employees to maintain an accounting of all disclosures of personal information from systems of records, except for those disclosures made within the Office to persons having an official need to know or to the public under the Freedom of Information Act (5 U.S.C. 552).

(8) 5 U.S.C. 552a(e) (5) and (6)—The obligation of employees to assure that any personal information about individuals is as accurate, relevant, timely and complete as is reasonably necessary to assure fairness to the individual at such time as any such information is utilized by the Office in making a determination about the individual or when the information is disclosed.

(9) 5 U.S.C. 552a(d) (1), (2), and (3)—The obligation of employees to permit individuals to have access to records pertaining to themselves in accordance with established Office procedures and to have an opportunity to request that such records be amended.

(10) 5 U.S.C. 552a(c)(4) and (d)(4)—The obligation to inform prior recipients of personal data when a record is amended pursuant to the request of an individual or a statement of disagreement has been filed, and to advise any subsequent recipients of the disputed information.

(11) 5 U.S.C. 552a(n)—The prohibition against renting or selling lists of names and addresses unless specifically authorized by law.

(12) 5 U.S.C. 552a(i) (1), (2), and (3)—The criminal penalties to which an employee may be subject for failing to comply with certain provisions of the Privacy Act of 1974.

4. In § 1001.735–303, a new paragraph (b)(5) is added, to read as follows:

§ 1001.735–303 Gifts, entertainment, and favors.

* * * * *

(b) * * *

(5) The acceptance of food and refreshments at widely-attended gatherings of mutual interest to the government and the private sector such as receptions, seminars, conferences, and training sessions, so long as:

(i) The food and refreshments offered in conjunction with the event are not excessive;

(ii) The timing or the reason for the event would not create an appearance of impropriety; and

(iii) The special Government employee's supervisor and the designated agency ethics official are informed of the invitation to the event and determine in advance that it is in the interest of OPM for the special Government employee to attend the event.

[FR Doc. 88–8790 Filed 4–20–88; 8:45 am]
BILLING CODE 6325–01–M

DEPARTMENT OF AGRICULTURE

Farmers Home Administration

7 CFR Parts 1864, 1927, 1951, 1955, and 1956

Debt Settlement; Community and Business Programs

AGENCY: Farmers Home Administration, USDA.

ACTION: Final rule.

SUMMARY: The Farmers Home Administration (FmHA) amends the Agency's policies and procedures governing the debt settlement of Community Program loans and insured Business and Industry loans. This rule is necessary to comply with section 1309 of the Food Security Act of 1985, Public Law (Pub. L.) 99–198. The effect of this action is to remove debt settlement actions appropriate to Community and Business Programs from the present regulation to a new regulation. The new Community and Business Programs regulation eliminates the numerous restrictions and time intervals for debt settlement contained in the present regulation.

EFFECTIVE DATE: April 21, 1988.

FOR FURTHER INFORMATION CONTACT: Susan G. Wieferich, Senior Loan Officer, Program Management Branch, Community Facilities Division, Farmers Home Administration, U.S. Department of Agriculture, Room 6320, South Agriculture Building, Washington, DC 20250; telephone (202) 382–1490.

SUPPLEMENTARY INFORMATION:

Classification

This action has been reviewed under USDA procedures established in Departmental Regulation 1512–1, which implements Executive Order 12291, and has been determined to be nonmajor. The action is not likely to result in any of the following: (a) An annual effect on the economy of $100 million or more, (b) a major increase in costs or prices for consumers, individual industries, Federal, State or local government agencies, or geographic regions, or (c) significant adverse effects on competition, employment, investment, productivity, innovation, or on the ability of United States-based enterprises to compete with foreign-based enterprises in domestic or export markets.

Environmental Impact

This document has been reviewed in accordance with 7 CFR Part 1940, Subpart G, "Environmental Program." FmHA has determined that this action does not constitute a major Federal action significantly affecting the quality of the human environment and in accordance with the National Environmental Policy Act of 1969, Pub. L. 91–190, an Environmental Impact Statement is not required.

Intergovernmental Review

This action affects the following FmHA programs as listed in the catalog of Federal Domestic Assistance:

Sec.
10.414 Resource, Conservation and Development Loans.
10.418 Water and Waste Disposal Systems for Rural Communities.
10.419 Watershed and Flood Prevention Loans.
10.422 Business and Industry Loans.
10.423 Community Facility Loans.

These programs are subject to the provisions of Executive Order 12372 which requires intergovernmental consultation with State and local officials. (Cite 7 CFR Part 3015, Subpart V, 48 FR 29112, June 24, 1983; 49 FR 22675, May 31, 1984; 50 FR 14088, April 10, 1985, as appropriate and any subsequent notices that may apply.)

Regulatory Flexibility Act

FmHA has determined that this action will not have a significant economic impact on a substantial number of small entities, because the action will not affect a significant number of small entities as defined by the Regulatory Flexibility Act (5 U.S.C. 601).

Background

Debt settlement for Community and Business Programs is governed by the Consolidated Farm and Rural Development Act (CONACT) (7 U.S.C. 1921–1996). The major reason for

removing debt settlement actions appropriate to Community and Business Programs from the present regulation to a new regulation is to comply with section 1309 of the Food Security Act of 1985 (Pub. L. 99–198). Public Law 99–198 provides the Secretary with greater flexibility in administering the debt settlement claims for Community and Business Programs, including compromise, adjustment, cancellation, and chargeoff actions. In addition, the action will correct inconsistencies, delete obsolete material, clarify wording and, where applicable, update references in other program regulations. Form FmHA 456–1, "Application for Settlement of Indebtedness," will be renumbered to Form FmHA 1956–1 and revised to make the form more appropriate for use by Community and Business Programs. The changes will result in more efficient service to the public, while continuing protection of the Government's interest.

Comments

A proposed rule was published in the **Federal Register** (52 FR 44600) on November 20, 1987, and invited comments for 30 days ending December 21, 1987. No responses were received. As a result, FmHA is adopting that proposed rule as a final rule without change.

List of Subjects

7 CFR Part 1864

Accounting, Loan programs—Agriculture, Rural areas.

7 CFR Part 1927

Accounting, Administrative practice and procedure, Credit, Loan programs—Agriculture, Rural areas.

7 CFR Part 1951

Account Servicing, Credit, Loan programs—Housing and community development, Mortgages.

7 CFR Part 1955

Foreclosure, Government acquired property.

7 CFR Part 1956

Accounting, Loan programs—Agriculture, Rural areas.

Accordingly, Chapter XVIII, Title 7, Code of Federal Regulations is amended as follows:

PART 1864—DEBT SETTLEMENT

1. The authority citation for Part 1864 continues to read as follows:

Authority: 7 U.S.C. 1989; 42 U.S.C. 1480; 5 U.S.C. 301; 31 U.S.C. 3711; 7 CFR 2.23; 7 CFR 2.70.

2. Section 1864.1 is revised to read as follows:

§ 1864.1 Purpose and scope.

This part sets forth the policies and procedures for settlement of debts owed the United States and administered by the Farmers Home Administration (FmHA) under any of its programs, except Farmer Program loans, Housing loans, Community Program loans, insured Business and Industry loans, nonprogram (NP) loans, Economic Opportunity (EO) loans, and claims against third party converters. This regulation does not cover releases from personal liability in transfer or voluntary conveyance cases. Debts owed under Farmer Programs or Single Family Housing programs will be settled in accordance with Subpart B of Part 1956 of this chapter. Debts owed under Community Programs and the insured Business and Industry Program will be settled in accordance with Subpart C of Part 1956 of this chapter. Settlement of claims against third party converters and settlement of nonprogram (NP) loans, Economic Opportunity (EO) loans, and Housing loans other than Single Family Housing is not authorized under this part and proposed settlements of these types of claims should be submitted to the National Office for settlement pursuant to the Federal Claims Collection Standards, 4 CFR Parts 101–105.

§§ 1864.2, 1864.7, 1864.8, 1864.9, 1864.10, 1864.12, 1864.15, 1864.17, and 1864.19 [Amended]

3. The reference, "Form FmHA 456–1," is changed to read "Form FmHA 1956–1" in the following sections:

Section 1864.2 (d), (f), (h)(2), (j), (l),

Section 1864.7 (a), (a)(1)(ii), (a)(3) (two places),

Section 1864.8 title and introductory text, (two places),

Section 1864.9, 1864.9(a),

Section 1864.10(d)(1),

Section 1864.12(a),

Section 1864.15 title and introductory text, (three places),

Section 1864.15 (a), (a)(1), (b)(1), (c) and (c)(1), (five places),

Section 1864.17(a)(1),

Section 1864.19(b) (two places).

4. Section 1864.3 is amended by revising paragraph (b)(1)(ii) to read as follows:

§ 1864.3 Compromise and adjustments.

* * * * *

(b) * * *

(1) * * *

(ii) For this type of settlement an asterisk (*) will be inserted in Part VI of Form FmHA 1956–1 after "(D)" and before the word "I". In the blank space below Part VI(D) of Form FmHA 1956–1 the following will be inserted:

* With knowledge of the penalties for false statements provided by 18 United States Code 1001 ($10,000 fine and/or five years imprisonment) and with knowledge that this financial statement is submitted by me (us) to affect action by the Department of Agriculture.

* * * * *

§ 1864.9 [Amended]

5. Section 1864.9(b) is amended in the last sentence by changing the words "Part VII in lieu of completing Part IV of Form FmHA 456–1" to read "Part VIII in lieu of completing Part IV of Form FmHA 1956–1."

§ 1864.10 [Amended]

6. Section 1864.10(a) is amended in the last sentence by changing the reference "Part V of Form FmHA 456–1" to read "Part VI of Form FmHA 1956–1."

7. Section 1864.10 is amended by revising the introductory text of paragraph (d)(1) to read as follows:

§ 1864.10 Joint debtors.

* * * * *

(d) * * *

(1) Form FmHA 1956–1 will be prepared by showing at the top of the form the name of the debtor requesting settlement, followed by the name of the other debtor, for example, "John Doe, joint debtor with Mary Doe, deceased," "John Doe, joint debtor with Mary Doe, bankrupt," "John Doe, joint debtor with Mary Doe, whereabouts unknown," or "John Doe, joint debtor with Mary Doe, impossible or impracticable to obtain signature," as appropriate. In addition to the information concerning settlement of the debt as to the debtor making application, information also will be shown in Part VIII of Form FmHA 1956–1 which justifies settlement of the debt as to the debtor(s) not joining in the application as required under appropriate paragraphs of this Instruction.

* * * * *

§ 1864.15 [Amended]

8. Section 1864.15(a)(3) is amended in the first sentence by changing the reference "Part VII of the form" to "Part VIII of the form."

PART 1927—FEDERAL STATUTE OF LIMITATIONS

9. The authority citation for Part 1927 continues to read as follows:

Authority: 7 U.S.C. 1989; 42 U.S.C. 1480; 5 U.S.C. 301, 7 CFR 2.70.

Subpart A—Federal Statute of Limitations

10. Section 1927.7 is amended by revising paragraph (c)(3) to read as follows:

§ 1927.7 Servicing contract claims.

* * * * *

(c) * * *

(3) Settling the debt according to Part 1864 of this chapter (FmHA Instruction 456.1) or Subpart C of Part 1956 of this chapter when the borrower is eligible; or

* * * * *

PART 1951—SERVICING AND COLLECTIONS

11. The authority citation for Part 1951 continues to read as follows:

Authority: 7 U.S.C. 1989; 42 U.S.C. 1480; 5 U.S.C. 301; 7 CFR 2.23; 7 CFR 2.70.

Subpart A—Account Servicing Policies

12. Section 1951.15 is amended by revising paragraph (e) to read as follows:

§ 1951.15 Return of paid-in-full or satisfied notes to borrower.

* * * * *

(e) *Debt settlement case.* See Part 1864 of this chapter (FmHA Instruction 456.1) or Subparts B or C of Part 1956 of this chapter for the handling of notes in debt settlement cases.

* * * * *

Subpart B—Collections

13. Section 1951.51 is amended by revising paragraph (a) to read as follows:

§ 1951.51 Purpose.

(a) Checks, money orders, and similar items to be remitted as payments on accounts of Farmers Home Administration (FmHA) should be made payable to the FmHA, except that offers in compromise of judgment accounts authorized in Part 1864 of this chapter (FmHA Instruction 456.1), or Subparts B and C of Part 1956 of this chapter, will be made payable to the Treasurer of the United States and transmitted to the State Director for referral to the appropriate United States Attorney through the representative of the Office of the General Counsel (OGC). All collection items in any form other than coin and currency will be accepted subject to collection, that is, subject to the items being paid. Any remittance items which currently are not payable, including postdated checks, will not be accepted for payment on indebtedness due FmHA. When such items are received, they will be returned immediately to the remitter.

* * * * *

PART 1955—PROPERTY MANAGEMENT

14. The authority citation for Part 1955 continues to read as follows:

Authority: 7 U.S.C. 1989; 42 U.S.C. 1480; 5 U.S.C. 301; 7 CFR 2.23; 7 CFR 2.70.

Subpart A—Liquidation of Loans Secured by Real Estate and Acquisition of Real and Chattel Property

15. Section 1955.18 is amended by revising paragraph (f) to read as follows:

§ 1955.18 Actions required after acquisition of property.

* * * * *

(f) *Unsatisfied account.* Farmer Program loan borrowers will be sent a letter similar to exhibit F of this subpart (available in any FmHA office). If unsatisfied account balances cannot be settled in accordance with Part 1864 of this chapter (FmHA Instruction 456.1) or Subpart C of Part 1956 of this chapter, the account will be reclassified to collection-only by submitting Form FmHA 404–1, "Case Reclassification," to the Finance Office. After reclassification to collection-only, Form FmHA 450–10, "Advice of Borrower's Change of Address or Name," or for Multiple Family Housing, Form FmHA 1944–54, "Multiple Family Housing Change/Borrower Name/Address/Case Number/Project Number/Loan Number," will be submitted to the Finance Office to furnish the borrower's new address, if known. Collection-only accounts will be serviced in accordance with § 1951.7 of Subpart A of Part 1951 of this chapter.

* * * * *

PART 1956—DEBT SETTLEMENT

16. The authority citation for Part 1956 reads as follows:

Authority: 7 U.S.C. 1989; 5 U.S.C 301; 31 U.S.C. 3711; 7 CFR 2.23; 7 CFR 2.70.

Subpart B—Debt Settlement—Farmer Programs and Single Family Housing

§§ 1956.57, 1956.58, 1956.66, 1956.70, 1956.75, 1956.85, 1956.96, 1956.99 [Amended]

17. The reference, "Form FmHA 456–1," is changed to read "Form FmHA 1956–1" in the following sections:

Section 1956.57 (b), (j)(2), (j)(3) (two places),

Section 1956.58 (b)(1), (b)(2)(i)(B),

Section 1956.66 introductory text, § 1956.66 (b), (c),

Section 1956.70 (b)(2), (b)(3), (c),

Section 1956.75(a),

Section 1956.85(a)(3), § 1956.85(b)(2) (two places),

Section 1956.96(b)(3),

Section 1956.99.

18. Subpart C of Part 1956 consisting of §§ 1956.101–1956.150 is added to read as follows:

Subpart C—Debt Settlement—Community and Business Programs

Sec.
1956.101 Purpose.
1956.102 Application of policies.
1956.103–1956.104 [Reserved]
1956.105 Definitions.
1956.106–1956.108 [Reserved]
1956.109 General requirements for debt settlement.
1956.110 Joint debtors.
1956.111 Debtors in bankruptcy.
1956.112 Debts ineligible for settlement.
1956.113–1956.117 [Reserved]
1956.118 Approval authority.
1956.119–1956.123 [Reserved]
1956.124 Compromise and adjustment.
1956.125–1956.129 [Reserved]
1956.130 Cancellation.
1956.131–1956.135 [Reserved]
1956.136 Chargeoff.
1956.137 [Reserved]
1956.138 Processing.
1956.139 Collections.
1956.140–1956.141 [Reserved]
1956.142 Delinquent adjustment agreements.
1956.143–1956.144 [Reserved]
1956.145 Disposition of essential FmHA records.
1956.146–1956.147 [Reserved]
1956.148 Exception authority.
1956.149 [Reserved]
1956.150 OMB control number.

Subpart C—Debt Settlement—Community and Business Programs

§ 1956.101 Purpose.

This subpart delegates authority and prescribes policies and procedures for debt settlement of Water and Waste Disposal System loans; Community Facility loans; Association Recreation loans; Watershed loans and advances; Resource, Conservation and Development loans; Rural Renewal loans; and insured Business and Industry loans.

§ 1956.102 Application of policies.

If a debt is eligible for settlement, the debt settlement authorities of the Farmers Home Administration (FmHA) should be explained and the privileges thereof extended to the debtor. All debtors are entitled to impartial treatment and uniform consideration under this subpart. Accordingly, FmHA personnel charged with any responsibility in connection with debt settlement will adhere strictly to the

authorizations, requirements, and limitations in this subpart.

§ 1956.103–1956.104 [Reserved]

§ 1956.105 Definitions.

(a) *Settlement.* The compromise, adjustment, cancellation, or chargeoff of a debt owed to FmHA. The term "settlement" is used for convenience in referring to compromise, adjustment, cancellation, or chargeoff actions, individually or collectively.

(b) *Compromise.* The satisfaction of a debt, including a release of liability, by the acceptance of a lump-sum payment of less than the total amount owed on the debt.

(c) *Adjustment.* The satisfaction of a debt, including a release of liability, when acceptance is conditioned upon completion of payment of the adjusted amount at a specific future time or times, with or without the payment of any consideration when the adjustment offer is approved. An adjustment is not a final settlement until all payments under the adjustment agreement have bee made.

(d) *Cancellation.* The final discharge of a debt with a release of liability.

(e) *Chargeoff.* To write off a debt and terminate all servicing activity *without* a release of liability. This is not a final discharge of the debt, but rather a decision upon the part of the agency to remove the debt from agency receivables.

(f) *Debtor.* The borrower of loan funds under any of the FmHA programs specified in § 1956.101 of this subpart.

(g) *Security.* All that serves as collateral for the FmHA loan(s), including, but not limited to, revenues, tax levies, municipal bonds, and real and chattel property.

(h) *Servicing official.* The FmHA official who is primarily responsible for servicing the account.

(i) *United States Attorney.* An attorney for the United States Department of Justice.

§1956.106–1956.108 [Reserved]

§ 1956.109 General requirements for debt settlement.

(a) *Debt due and payable.* The debt or any extension thereof on which settlement is requested must be due and payable under the terms of the note or other instrument, or because of acceleration by written notice prior to the date of application for settlement, unless the debt is to be cancelled without application under § 1956.130(b) or charged off under § 1956.136 of this subpart.

(b) *Disposition of security.* Ordinarily, all security will be disposed of prior to the date of application for settlement. There are exceptions:

(1) It may be necessary to abandon security through the debt settlement process. For example, a community may be rendered uninhabitable by a toxic or hazardous substance. In such cases, debt settlement may proceed provided the servicing official determines:

(i) That further collection efforts with respect to the security in question would be ineffective or uneconomical,

(ii) That it is in the best interests of the Government to proceed with debt settlement,

(iii) That the proposal otherwise meets the requirements appropriate to the type of settlement under consideration, and

(iv) The approval of the Administrator is obtained.

(2) A servicing action may have been carried out which resulted in a less than complete disposition of security. For example, the Government may have consented to a voluntary sale of a debtor's real and chattel property without reference to other security, which might include, but is not limited to: an additional lien on revenue, a third party pledge of security, or a pledge of personal liability. In such cases, debt settlement may proceed provided the requirements of § 1956.109(b)(1) of this subpart are met.

(3) Security can be retained under the compromise and adjustment offers as specified in § 1956.124 of this subpart.

(4) Settlement of a claim against an estate will be based on the recovery that may reasonably be expected, taking into consideration such items as the security, costs of administration, allowances of minor children and surviving spouse, allowable funeral expenses, dower and curtesy rights, and specific encumbrances on the property having priority over claims of the Government.

(c) *Proceeds from the sale of security.* Proceeds from the sale of security must be applied on the debtor's account, taking into consideration the disposition requirements of any grant agreement, prior to the date of application for settlement, except when security is retained as provided for in § 1956.109(b) of this subpart. Debtors will not be allowed to sell security and use the proceeds as part or all of the debt settlement offer.

(d) *County Committee review.* Proposed settlement actions will be reviewed by the County Committee except for the cancellation of debts discharged in bankruptcy under § 1956.130(b)(1) of this subpart or when a claim has been referred to a United States Attorney under § 1956.112(d) of this subpart. No settlement shall be approved if it is more favorable to the debtor than recommended by the County Committee.

(e) *Assistance from Office of General Counsel (OGC).* When necessary, State Directors will obtain advice from OGC in handling proposed debt settlement actions.

(f) *Format.* Form FmHA 1956–1, "Application for Settlement of Indebtedness," will be utilized for all settlement actions under this subpart.

§ 1956.110 Joint debtors.

Settlements may not be approved for one joint debtor unless approved for all debtors. Joint debtors includes all parties, individuals, and organizations, who are legally liable for payment of the debt.

(a) Individual settlement offers from joint debtors can be accepted and processed only as a joint offer. A separate Form FmHA 1956–1 will be completed by each debtor unless the debtors are members of the same family and all necessary financial information on each debtor can be shown clearly on a single application.

(b) If one of the joint debtors is deceased or has received a discharge of the debt in bankruptcy, or if the whereabouts of one of the debtors is unknown, or it is otherwise impossible or impractical to obtain the signature of the debtor, the application for settlement may be accepted without that debtor's signature if it contains adequate information on each of the debtors to justify settlement of the debt as to each of the debtors. The name of the debtor requesting settlement will be shown at the top of Form FmHA 1956–1 followed by name and status of the other debtor. For example, "John Doe, joint debtor with Jane Doe, deceased."

(c) Joint debtors must be advised in writing that all debtors will remain liable for the balance of the debt until any payment(s) due under the joint offer have been made.

§ 1956.111 Debtors in bankruptcy.

FmHA personnel will process reorganization plans of debtors filing under Chapter 9, Chapter 11, or Chapter 13 as follows:

(a) Plans submitted by debtors under Chapters 9, 11, and 13 must be sent by the servicing official to the State Director who will recommend either acceptance or rejection of the plans and refer them to the United States Attorney through OGC. When the plan calls for the adjustment of a debt to FmHA, the State Director will obtain the advice of the Administrator before providing OGC

with a recommendation on acceptance or rejection of this plan.

(b) The United States Attorney will advise the State Director, through OGC, as to approval or rejection of the debtor's reorganization plan. The State Director will then notify the Finance Office by memorandum of the terms and conditions of the bankruptcy reorganization plan, including any adjustment of the debt.

§ 1956.112 Debts ineligible for settlement.

Debts will not be settled:

(a) If referral to the Office of Inspector General (OIG) and/or to the OGC is contemplated or pending because of suspected criminal violation, or

(b) If civil action to protect the interests of the Government is contemplated or pending, or

(c) If an investigation for suspected fiscal irregularity is contemplated or pending, or

(d) When a claim has been referred to or a judgment has been obtained by the United States Attorney and the debtor requests settlement, the servicing official will explain to the debtor that the United States Attorney has exclusive jurisdiction over the claim or judgment, and therefore, FmHA has no authority to agree to a settlement offer. If the debtor wishes to make a settlement offer, it must be submitted with any related payment directly to the United States Attorney for consideration.

§§ 1956.113–1956.117 [Reserved]

§ 956.118 Approval authority.

District Directors cannot approve debt settlement actions. Therefore, they will make no statements to a debtor concerning the action that may be taken upon a debtor's application. Subject to this subpart, the compromise, adjustment, cancellation, or chargeoff of debts will be approved or rejected:

(a) By the State Director when the outstanding balance of the indebtedness involved in the settlement is less then $50,000, including principal, interest, and other charges.

(b) By the Administrator or his designee when the outstanding balance of the indebtedness involved in the settlement is $50,000 or more, including principal, interest, and other charges.

§§ 1956.119–1956.123 [Reserved]

§ 1956.124 Compromise and adjustment.

Nonjudgment debts may be compromised or adjusted upon application of the debtor(s), or if the debtor is an individual and unable to act, upon application of the guardian, executor, or administrator of the debtor's estate.

(a) *General provisions.* Debts, regardless of the amount, may be compromised or adjusted subject to the following:

(1) The debt or any extension thereof on which compromise or adjustment is requested is due and payable under the terms of the note or other instrument, or because of acceleration by written notice, prior to the date of application for settlement.

(2) The period of time during which payments on adjustment offers are to be made cannot exceed five years without the approval of the Administrator.

(3) Efforts will be made to avoid applications for settlement in which debtors offer a specified amount payable upon notice of approval of the proposed settlement.

(b) *Debtor's ability to pay.* In evaluating the debtor's settlement application, it is essential that reliable information be obtained in sufficient detail to assure that the offer accurately reflects the debtor's ability to pay. The debtor's income, expenses, and nonsecurity assets are critical factors in determining the type of settlement and the amount which the debtor can reasonably be expected to offer. Critical information should include the following:

(1) The debtor's total present income from all sources will be determined. In addition, careful consideration will be given to the probable sources, amount, and stability of income to be received over a reasonable period of years. For individuals, public welfare assistance and pensions, including old age pensions and pensions received by veterans for pensionable disabilities will not be considered as sources of funds with which to make compromise and adjustment offers.

(2) The debtor's operation and maintenance expenses, and, in the case of individuals, probable living expenses.

(3) The priority of payments on debts to third parties.

(4) When the debtor is largely dependent on income from an occupation in which manual labor is required, age and health of the individual are vital factors in determining the ability to pay. The number in the debtor's family, their ages and condition of health, will also be weighed in determining the ability to pay. However, when the debtor's income is from investments, business enterprises, or management efforts, age and health of both individual and family are of less importance.

(5) The value of the debtor's assets in relation to debts and liens of third parties is important in determining the debtor's ability to pay. It is recognized that debtors must retain a reasonable equity in essential nonsecurity property in order to continue normal operations and, in the case of an individual, to meet family living expenses over a period of years. Under this policy a reasonable equity in a modest nonsecurity homestead occupied by the debtor, whether or not exempt from levy and execution will not be considered as available for offer in settlement. Nonsecurity property which is in excess of minimum business and/or family living needs and which is not exempt from levy and execution should be considered when determining the debtor's ability to pay.

(c) *Debtor unable to pay in full.* Debts may be compromised or adjusted and security property retained by the debtor, provided:

(1) The debtor is unable to pay the indebtedness in full, and

(2) The debtor has offered an amount equal to the present fair market value of all security or facility financed, and

(3) The debtor has offered any additional amount which the debtor is able to pay, and

(4) The total amount offered represents a reasonable determination of the debtor's ability to pay.

(d) *Debtor able to pay in full but refuses to do so.* If the debtor has the ability to pay in full but refuses to do so, debts may be compromised or adjusted and security property retained by the debtor under certain conditions:

(1) The OGC advises that the Government is unable to enforce collection in full within a reasonable time by enforced collection proceedings, and the amount offered represents a reasonable settlement considering:

(i) Availability of assets or income which may be realized by enforced collection proceedings, considering the applicable exemptions available to the debtor under State and Federal law, and

(ii) Inheritance prospects within 5 years, and

(iii) Likelihood of debtor obtaining nonexempt property or income within 5 years out of which there could be collected a substantially larger sum than the amount of the present offer, and

(iv) Uncertainty as to the price that the security or other property will bring at forced sale, *or*

(2) The OGC advises that there is a real doubt concerning the Government's ability to prove its case in court for the full amount of the debt, and the amount offered represents a reasonable settlement considering:

(i) The probability of prevailing on the legal issues involved, and

(ii) The probability of proving facts to establish full or partial recovery, with due regard to the availability of witnesses and other pertinent factors, and

(iii) The probable amount of court costs and attorney's fees which may be assessed against the Government if it is unsuccessful in litigation, *or*

(3) When the cost of collecting the debt does not justify enforced collection of the full amount. In such cases, the amount accepted in compromise or adjustment may reflect an appropriate discount for administrative and litigious costs of collection. Such discount will not exceed $600 unless the OGC advises that in the particular case a larger discount is appropriate. The cost of collecting may be a substantial factor in settling small debts but normally will not carry great weight in settling large debts.

§ 1956.125–1956.129 [Reserved]

§ 1956.130 Cancellation.

Nonjudgment debts, regardless of the amount, may be cancelled with or without application by the debtor.

(a) *With application by debtor.* Debts may be cancelled upon application of the debtor(s), or if the debtor is an individual and unable to act, upon application of the guardian, executor, or administrator of the debtor's estate. The following conditions apply:

(1) The servicing official furnishes a favorable recommendation concerning the cancellation, and

(2) There is no known security for the debt and the debtor has no other assets from which the debt could be collected, and

(3) The debtor is unable to pay any part of the debt and has no reasonable prospect of being able to do so, and

(4) The debt or any extension thereof is due and payable under the terms of the note or other instrument, or because of acceleration by written notice prior to the date of application.

(b) *Without application by debtor.* Debts may be cancelled upon a favorable recommendation of the servicing official in the following instances:

(1) *Debtors discharged in bankruptcy.* If there is no security for the debt, debts discharged in bankruptcy shall be cancelled by the use of Form FmHA 1956–1 with a copy of the Bankruptcy Court's Discharge Order attached. No attempt will be made to obtain the debtor's signature and County Committee review is unnecessary. If the debtor has executed a new promise to pay prior to discharge and has otherwise accomplished a valid reaffirmation of the debt in accordance with advice from OGC, the debt is not discharged.

(2) *Impossible or impractical to obtain a debtor's signature.* Debts may be cancelled if it is impossible or impractical to obtain a signed application and the requirements of § 1956.130(a) (1), (2), and (3) *only* of this subpart are met. Form FmHA 1956–1 will document:

(i) The sources of information obtained.

(ii) That a current effort was made to obtain the debtor's application and the date of such effort.

(iii) The specific reasons why it was impossible or impracticable to obtain the signature of the debtor and, if the debtor refused to sign, the reason(s) given.

(3) *Deceased debtors (individuals only).* The following conditions must exist:

(i) There is no known security,

(ii) An administrator or executor has not been appointed to settle the debtor's estate but the financial condition of the estate has been investigated and it has been established that there is no reasonable prospect of recovery, *or*

(iii) An administrator or executor has been appointed to settle the estate of the debtor, and

(A) A final settlement has been made and confirmed by the probate court and the Government's claim was recognized properly and the Government has received all funds it was entitled to, or

(B) A final settlement has not been made and confirmed by the probate court, but there are no assets in the estate from which there is any reasonable prospect of recovery, or

(C) Regardless of whether a final settlement has been made, there were assets in the estate from which recovery might have been effected but such assets have been disposed of or lost in a manner which the OGC advises will preclude an reasonable prospect of recovery by the Government.

(4) *Disappeared debtor (individuals only).* The following conditions must exist:

(i) The debtor has disappeared and cannot be found without undue expense. Reasonable efforts either in person or in writing will be made to locate the debtor. These efforts, including the names and dates of contacts, and the information furnished by each person, will be fully documented on Form FmHA 1956–1,

(ii) There is no known security for the debt and the debtor has no other assets from which the debt could be collected, and

(iii) The debtor is unable to pay any part of the debt and has no reasonable prospect of being able to do so.

§§ 1956.131–1956.135 [Reserved]

§ 1956.136 Chargeoff.

(a) *Judgment debts.* Subject to the provisions of § 1956.112(d) of this subpart, judgment debts, regardless of the amount, may be charged off without the debtor's signature upon a favorable recommendation of the servicing official provided:

(1) The United States Attorney's file is closed, and

(2) The requirements of § 1956.130(b)(1), (2), (3), or (4) of this subpart have been met, as appropriate, or two years have elapsed since any collections were made on the judgment and the debtor(s) has no equity in property on which the judgment is a lien or on which it can presently be made a lien.

(b) *Nonjudgment debts.* Debts which cannot be settled under other sections of this subpart may be charged off without the debtor's signature upon a favorable recommendation of the servicing official in the following instances:

(1) When the OGC advises in writing that the claim is legally without merit, or that evidence necessary to prove the claim in court cannout be produced.

(2) When there is no known security for the debt, the debtor has no other assets from which the debt could be collected, and the debtor:

(i) Is unable to pay any party of the debt and has no reasonable prospect of being able to do so, or

(ii) Is able to pay part or all of the debt but refuses to do so, and an opinion is received from OGC to the effect that the Government cannot enforce collection of a significant amount from assets or income.

(3) When the debtor is deceased (individuals only), disappeared (individuals only), or when it is impossible or impractical to obtain the debtor's signature, and the conditions of § 1956.136(b)(2) of this subpart are met.

§ 1956.137 [Reserved]

§ 1956.138 Processing.

(a) *Approval.* When a debt settlement application is approved, the State Director will:

(1) Send the original approved Form FmHA 1956–1 to the Finance Office.

(2) Notify debtors in writing of settlement approval, including the specific amount and terms of the offer that were accepted, for compromise and

adjustment offers under § 1956.124 and cancellations with application under § 1956.130(a) of this subpart.

(3) Not be required to notify debtors of settlement approval when debts are cancelled without application under § 1956.130(b) or charged off under § 1956.136 of this subpart.

(b) *Requesting additional information.* When rejection appears to be necessary either because of lack of information or because the amount of a compromise or adjustment offer is inadequate, the State Director may request the servicing official to obtain the additional information or make an effort to obtain a more acceptable offer, as the circumstances justify. Notice of rejection of an offer will be withheld in such cases until sufficient time has elapsed to enable the debtor to present further information or a new offer.

(c) *Rejection.* When a debt settlement application is rejected, the State Director will:

(1) Insert the reasons for rejection on the Form FmHA 1956–1.

(2) Retain the original Form FmHA 1956–1 in the State Office and return case files and copies of Form FmHA 1956–1 to the servicing official.

(3) Request the Finance Office to return any adjustment or compromise payment held by the Finance Office to the borrower, in care of the servicing official.

(4) Return any adjustment or compromise payment held by the State Office to the borrower, in care of the servicing official.

(5) Notify the debtor in writing of the reasons for the rejection for compromise and adjustment offers under § 1956.124 and cancellations with application under § 1956.130(a) of this subpart.

(d) *Appeal rights.* In accordance with Subpart B of Part 1900 of this chapter, the debtor will be given the right to appeal the rejection of any debt settlement offer made by the debtor under this subpart.

§ 1956.139 Collections.

(a) When the debtor offers a lump-sum payment in compromise or an intitial payment on an adjustment offer, that payment will accompany the settlement application at the time the application is filed with the servicing official.

(b) Except as provided in paragraph (c) of this section, debt settlement payments will be deposited and transmitted as required in Subpart B of Part 1951 of this chapter.

(c) Checks or check transmittal letters containing restrictive notations such as "Settlement in full" or "Payment in full," will be forwarded to the State Office where they will be retained until approval or rejection of the offer. The use of restrictive notations will be discouraged to the fullest extent possible.

(d) All payments evidenced by Form FmHA 451–2, "Schedule of Remittances," bearing the legend "Compromise Offer—FmHA" or "Adjustment Offer—FmHA," will be held in the Deposits Fund Account by the Finance Office until notification is received from the State Office of the approval or rejection of the offer.

(i) Upon receipt of an approved Form FmHA 1956–1, remittances will be applied in accordance with established policies, beginning with the oldest loan included in the settlement, except that when the request for settlement includes loans made from different revolving funds, the Finance Office will prorate the amount received on the basis of the total principal balance due the respective revolving funds.

(ii) Upon notification of a rejection of a debtor's offer and receipt of a request from the State Director for a refund, the Finance Office will refund to the debtor, in care of the servicing official, the amount held in the Deposits Fund Account.

(e) When a debtor's adjustment offer is approved, the accounts involved will not be adjusted in the records of the Finance Office until all payments have been made. Form FmHA 1956–1 will be held in a suspense file pending payment of the full amount of the approved offer.

(f) If an approved debt settlement agreement is later voided by the State Director in accordance with § 1956.142(e) of this subpart, any payments which have been received shall be retained as payments on the debt owed at the time the compromise or adjustment offer was approved.

§ 1956.140–1956.141 [Reserved]

§ 1956.142 Delinquent adjustment agreements.

(a) The servicing official is responsible for notifying debtors in advance of the due dates of payments on debt settlement agreements and for monitoring compliance with the terms of settlement agreements. If a payment is delinquent, the servicing official should contact the debtor promptly to determine the reason for the delinquency and the debtor's plan for completing the agreement.

(b) Delinquencies of 30 days or more will be reported to the State Director along with other pertinent information and the recommendation of the servicing official regarding further handling of the case.

(c) The State Director may extend, for ninety days, the time for making the payments when the circumstances of the case justify an extension. Extensions for a greater period of time may be made by the State Director upon the recommendation of the County Committee and the servicing official.

(d) When the debtor is financially unable to met the terms of the debt settlement agreement, the State Director may void the existing agreement and process a new settlement more consistent with the debtor's repayment ability, provided the facts in the case justify such action.

(e) If the State Director determines that the debtor cannot or will not meet the terms of the settlement agreement and if the facts do not justify approval of a new settlement agreement, the State Director will void the existing agreement and direct the servicing official to take other servicing actions appropriate to the circumstances of the case.

(f) When an adjustment agreement is voided, the State Director will notify the debtor giving the reasons in writing, with a copy to the Finance Office and to the servicing official. Upon receipt, the Finance Office will return the original Form FmHA 1956–1 to the State Office.

§ 1956.143–1956.144 [Reserved]

§ 1956.145 Disposition of essential FmHA records.

Subpart A of Part 2033, available in any FmHA office, identifies an "essential FmHA record" as the original of any document or record which provides evidence of indebtedness or obligation to FmHA and includes, but is not limited to: promissory notes, assumption agreements and valuable documents, such as bonds fully registered as to principal and interest.

(a) Essential FmHA records evidencing debts settled by compromise, completed adjustment or cancelled with application will be returned to the debtor or to the debtors' legal representative. The appropriate legend, such as "Satisfied by Approved Compromise," and the date of the final action will be stamped or typed on the original document. This same information plus the date the original document is returned to the debtor will be shown on a copy to be placed in the debtor's case folder.

(b) Essential FmHA records evidencing debts cancelled without application will be placed in the debtor's case folder and disposed of pursuant to Subpart A of Part 2033. However, if the debtor requests the document(s), they must be stamped

"Satisfied by Approved Cancellation" and returned.

(c) Essential FmHA records evidencing charged off debts will be retained in the servicing office and will not be stamped or returned to the debtor. They will be destroyed six years after chargeoff pursuant to Subpart A of Part 2033.

§ 1956.146–1956.147 [Reserved]

§ 1956.148 Exception authority.

The Administrator may make an exception to any requirement or provision of this subpart which is not inconsistent with the authorizing statute or other applicable law if the Administrator determines that application of the requirement or provision would adversely affect the Government's interest. Requests for exceptions must be made in writing by the State Director and supported with documentation to explain the adverse effect on the Government's interest, propose alternative courses of action, and show how the adverse effect will be eliminated or minimized if the exception is granted. Any settlement actions approved by the Administrator under this section will be documented on Form FmHA 1956–1 and returned to the State Office for submission to the Finance Office.

§ 1956.149 [Reserved]

§ 1956.150 OMB control number.

The collection of information requirements in this regulation have been approved by the Office of Management and Budget and assigned OMB control number 0575–0124.

Dated: March 4, 1988.

Vance L. Clark,

Administrator, Farmers Home Administration.

[FR Doc. 88–8692 Filed 4–20–88; 8:45 am]

BILLING CODE 3410–07–M

FEDERAL HOME LOAN BANK BOARD

12 CFR Parts 547, 548, 549, 563, 569a, 569b, 569c

[No. 88–229]

Conservators and Receivers; Interim Procedures

April 4, 1988.

AGENCY: Federal Home Loan Bank Board.

ACTION: Notice of availability of interim procedures pending adoption of final regulations.

SUMMARY: The Federal Home Loan Bank Board ("Board" or "Bank Board"), in its own right and as operating head of the Federal Savings and Loan Insurance Corporation ("FSLIC"), hereby gives notice that the interim procedures appended hereto have been in effect since July 1, 1986, and will continue to be in effect pending adoption of final regulations governing the matters addressed herein. The interim procedures are entitled as follows: (1) "Procedures for the Administration and Determination of Requests for Expedited Relief From Decisions or Threatened Actions of the FSLIC as Receiver"; (2) "Procedures for the Processing and Determination on Review of Determinations of the FSLIC as Receiver"; and (3) "Procedures for the Administration and Determination of Claims Filed With the FSLIC as Receiver." These interim procedures were adopted pursuant to 12 U.S.C. 1437 (1982).

EFFECTIVE DATE: April 21, 1988.

FOR FURTHER INFORMATION CONTACT: Christopher Bellotto, Assistant General Counsel, (202) 377–7401; or Judith L. Friedman, Associate General Counsel, (202) 377–7399; Adjudication Division, Office of General Counsel, Federal Home Loan Bank Board, 1700 C Street, NW., Washington, DC 20552. Copies of the interim procedures may also be obtained from this address.

SUPPLEMENTARY INFORMATION: On November 8, 1985, the Board proposed amendments and revisions to its regulations governing the conservatorship and receivership of associations chartered by the Board or the accounts of which are insured by the FSLIC. Board Res. No. 85–1007, 50 FR 48970 (November 27,1985). Pending final adoption of the proposed amendments and revisions, the Board hereby provides public notice of the interim procedures in order to assist petitioners and/or claimants in the filing of Requests for Expedited Relief, claims against the FSLIC as Receiver, and appeals from decisions of the FSLIC as Receiver.

The Board, in its proposed regulations, and its Office of General Counsel, have made it clear that the FSLIC as Receiver of an institution, the accounts of which are insured by the FSLIC, recognizes the validity of certain secured obligations of insured institutions, entered into pursuant to legal authority, and the right of a secured creditor in certain circumstances to cause the liquidation of collateral. Further, the FSLIC as Receiver may recognize the holder of a participating interest in a loan in which the Receiver also holds a participating interest, or which the Receiver services, as one having an ownership interest and not a creditor of the insured institution in receivership.

The Board, in providing this notice of procedures, is not directing the FSLIC as Receiver to require such secured creditors to observe all such noticed procedures as a precondition of exercising valid liquidation rights pursuant to valid security contracts entered into by an insured institution as authorized under its governing law prior to the appointment of the Receiver. Nor is the Board directing the FSLIC as Receiver to subject such holders of participating interests that are not creditors of the insured institution in receivership generally to such procedures. In the event, however, that a Receiver disputes a creditor's claim to a security interest in an asset of the institution or a participant's characterization of its status, the Receiver may require such creditor or other entity to establish its claimed status pursuant to these procedures; and the Receiver in such cases may take such action as is deemed necessary to protect the Receiver's interest in any asset.

By the Federal Home Loan Bank Board.

John F. Ghizzoni,

Assistant Secretary.

Appendix—Procedures For The Administration and Determination of Claims Filed With The FSLIC As Receiver

I. Introduction.
A. Statement of Purpose.
B. Definitions.
II. Notice to Potential Claimants.
III. Procedure for Initial Review of Claims.
IV. Procedure for Review of Claims Retained for Further Review.
A. The Role of the Special Representative and Claims Counsel.
B. Elements of Review.
C. Claims On An Expedited Basis.
V. Standards for Determination of Claims.
A. Burden of Proof.
B. Exclusion from Claims Procedure.
C. Application of Claims Procedure.
D. Criteria for the Determination of Claims.
E. Claims to Security, Priority or Preference.

I. Introduction

A. Statement of Purpose

The purpose of these procedures is to provide for the uniform administration and determination of claims filed with the FSLIC as Receiver in all receiverships in the Federal Home Loan Bank/FSLIC system. These procedures are to be followed by Special Representatives and managing officers of the receiverships to assure compliance with the Federal Regulations governing the processing and

determination of claims, and to insure uniformity of notices to claimants, documentation of claims, determination of the merits of claims by allowance or disallowance in whole or in part, payment of claims, and the review process. These procedures are authorized by 12 U.S.C. 1464(a) and 1729(d), and regulations promulgated thereunder, including 12 CFR Parts 549 and 569a, existing standard resolutions, and orders of the Federal Home Loan Bank Board. Full compliance with and exhaustion of these procedures is a prerequisite to review by the Federal Home Loan Bank Board (Bank Board). Judicial review of the disallowance in whole or in part of a claim against the assets of the FSLIC as Receiver is available only after exhaustion of these procedures and review and final agency action by the Bank Board.

The Bank Board, in its proposed regulations, and its Office of General Counsel, have made it clear that the FSLIC as Receiver of an institution, the accounts of which are insured by the FSLIC, recognizes the validity of certain secured obligations of insured institutions, entered into pursuant to legal authority, and the right of a secured creditor in certain circumstances to cause the liquidation of collateral. Further, the FSLIC as Receiver may recognize the holder of a participating interest in a loan in which the Receiver also holds a participating interest, or which the Receiver services, as one having an ownership interest and not a creditor of the insured institution in receivership.

The Bank Board, in providing this notice of procedures, is not directing the FSLIC as Receiver to require such secured creditors to observe all such noticed procedures as a precondition of exercising valid liquidation rights pursuant to valid security contracts entered into by an insured institution as authorized under its governing law prior to the appointment of the Receiver. Nor is the Board directing the FSLIC as Receiver to subject such holders of participating interests that are not creditors of the insured institution in receivership generally to such procedures. In the event, however, that a Receiver disputes a creditor's claim to a security interest in an asset of the institution or a participant's characterization of its status, the Receiver may require such creditor or other entity to establish its claimed status pursuant to these procedures; and the Receiver in such cases may take such action as is deemed necessary to protect the Receiver's interest in any asset.

B. Definitions

For the purpose of these procedures, the procedures for Requests for Review, and the procedures for Requests for Expedited Relief, the following definitions shall apply.

1. "Administrative expenses of the association" means those reasonable expenses for services actually provided for the association by nonemployee professionals, such as accountants, attorneys, appraisers or examiners, that in the opinion of the Special Representative actually benefitted the association or the receivership estate.

2. "Receiver's record" means all notices to claimants, Proof(s) of Claim, anything required by the procedures and any documentation and other writings compiled by the Special Representative that form the basis and rationale for the Receiver's determination as to the allowance or disallowance in whole or in part of a claim.

3. "Affected Person" means a person, corporation, partnership or other legal entity that owns or has an interest in real or personal property, or is otherwise obligated on a debt which is secured by real or personal property, against which the Receiver threatens to take action that may affect, impair, diminish or terminate such interest. By way of example only, if the Receiver posts for the foreclosure of a deed of trust, the legal owner or owners of the real estate encumbered with the lien sought to be foreclosed would be an "Affected Person."

4. "Agent of the Special Representative" means those employees of the Receiver designated by the Special Representative to perform certain functions, which include but are not limited to maintaining a tracking system of the claims filed with the Receiver and performing an initial review of the Proofs of Claim submitted to the Receiver.

5. "Applicant" means any person or entity that asserted a claim against the Association or the Receiver and seeks review by the Bank Board.

6. "Association" means a savings and loan association or savings bank for which the Board has appointed the FSLIC as Receiver.

7. "Board" means the Federal Home Loan Bank Board, as defined in 12 CFR 500.10 (1986).

8. "Certificate of Mailing" means a written statement certifying that the referenced document has been placed in the United States mail, first class, postage prepaid, on the date specified.

9. "Claim" means the assertion of a right to payment or other relief against an association or the Receiver; provided, however, that it shall not include the right to deposit insurance which, if appropriate, is paid by FSLIC Corporate or a Request for Expedited Relief which is filed with the Bank Board. All claims shall be submitted in writing in a Proof of Claim.

a. "Claim" includes but is not limited to:

(i.) demand for recoupment, set-off, security, priority, or preference;

(ii.) request to foreclose or to oppose foreclosure by the Receiver on security property or assets of the association;

(iii.) demand for interest, penalties, fees or the recognition or nonrecognition of liens securing equitable subordinated claims;

(iv.) administrative expenses of the association, provided, however, that a proof of claim need not be filed for services that were actually rendered, within 30 days prior to the Receiver's taking possession, by accountants, attorneys, appraisers or examiners; such services will be considered for priority payment by the Receiver as explained in Part V, if in the opinion of the Receiver such services are of benefit to the receivership;

(v.) demand by employees of the association for wages and salaries, including vacation, severence, sick leave pay and contributions to employee benefits plan; provided that a proof of claim need not be filed for wages, salaries, and benefits earned within 30 days prior to the appointment of the Receiver that do not exceed $2,000, which wages, salaries, and benefits will be considered for priority payment by the Receiver as explained in Part V.

b. "Reconcilable claim(s)" means a claim that may be allowed in whole based upon the Receiver's review of the books and records of the association or the Receiver in the absence of additional fact finding or additional consideration of related legal issues.

c. "Claim(s) retained for further review" means those claims that are not Reconcilable Claims.

10. "Claimant" means any person or entity asserting a claim against the association or the Receiver.

a. A Claimant may include but is not limited to:

(i.) holder(s) of claim(s) that appear on the face of the books or records of the association, or are otherwise known to the Receiver, on the date of the appointment of the Receiver;

(ii.) holder(s) of claim(s) that appear on the face of the books or records of the association or the Receiver, or are otherwise known to the Receiver subsequent to the date of the appointment of the Receiver;

(iii.) holder(s) of claim(s) that arise from acts or omissions of the Receiver;

(iv.) owner(s) of a participation interest in a loan originated by the association or in which the association is participating;

(v.) borrower(s);

(vi.) guarantor(s);

(vii.) secured creditor(s) or unsecured creditor(s);

(viii.) mechanic's or materialmen's lien holder(s) or person(s) or entities that seek to obtain a mechanic's or materialmen's lien against assets of the association or assets in which the Receiver has or seeks to assert an interest; or

(ix.) any person(s) or entities seeking to recover civil money damages or equitable relief against the association or the Receiver.

b. Claimants, at their election, may be represented by an agent, who shall be designated and identified to the Receiver in writing by name and address. Upon such designation, all correspondence and communication shall be between the Special Representative and the agent for the Claimant. For purposes of these procedures the term claimant shall be deemed to include any properly designated agents of the Claimant.

11. "Claims Counsel" means legal counsel retained to represent the Receiver, as designated by the Special Representative with the consent of the General Counsel, to perform specified tasks, hereinafter described.

12. "Claims procedures" means the Procedures for the Administration and Determination of Claims Filed with the FSLIC as Receiver.

13. "Current bills" means those administrative expenses of the Receiver incurred on or subsequent to the date of the appointment of the Receiver, and includes costs, expenses and debt of the Receiver.

14. "Depositor" or "Accountholder" means the holder of a withdrawable account or accounts in an association.

15. "Director, OFSLIC" means the Director of the Office of the Federal Savings and Loan Insurance Corporation, as defined in 12 CFR 500.20 (1986).

16. "Filed with" or "served upon" means actually received.

17. "FSLIC" means the Federal Savings and Loan Insurance Corporation, as defined in 12 CFR 500.4 (1986).

18. "General Counsel" means the General Counsel to the Board, as defined in 12 CFR 500.17 (1986), or an attorney(s) in the Office of General Counsel ("OGC") designated by the General Counsel.

19. "Insurance Division, OFSLIC" means the Insurance Division, as defined in 12 CFR 500.20(a) (1986).

20. "Legal holiday" means those days designated as a legal holiday by the President or the Congress of the United States of America.

21. "Petitioner" means an Affected Person filing a Request for Expedited Relief.

22. "Proof of Claim" means the form specified by the Director, OFSLIC, with the concurrence of the General Counsel, upon which a claim shall be submitted in writing. The Claimant shall have a continuing duty to supplement and update information contained therein, including but not limited to advising the Receiver in writing of the Claimant's current address.

23. "Publish" is defined at 12 CFR 549.1(a).

24. "Receiver" means the FSLIC or the Federal Deposit Insurance Corporation as Receiver as appointed by the Board pursuant to applicable federal law.

25. "Request for Expedited Relief" means a written request submitted by an Affected Person to the Bank Board in accordance with applicable procedures. A Request for Expedited Relief is not a "claim" as defined herein.

26. "Special Representative" means individual(s) designated as Special Representative(s) for the FSLIC as Receiver for an association as stated in the Board Resolution appointing the FSLIC as Receiver. The Director, OFSLIC, with the concurrence of the General Counsel, shall designate the Special Representative(s) for each receivership who will have primary responsibility for the administration of claims procedure. The Special Representative(s) shall conduct the claims procedure, including the determination of the merits of claims.

II. Notice to Potential Claimants

A. In accordance with the existing regulations and orders of the Board, promptly after the date of appointment, the Receiver shall publish notice to all potential claimants of the association as shown on the books and records of the association, or as otherwise may be known to the Receiver, of their right to present claims to the Receiver and simultaneously shall mail to such claimants at their last known address: (1) a notice of their right to present claims to the Receiver, (2) a Proof of Claim form, and (3) a copy of the "Procedures and Instructions for Filing Claims with the FSLIC as Receiver." Demands by Accountholders for deposit insurance will be determined by the Insurance Division, OFSLIC, in a separate proceeding and not pursuant to this Claims Procedure.

B. The notice shall provide that a Proof of Claim shall be filed with the Receiver on or before a specified date, which is not less than 90 days from the date of the first publication of such notice.

C. Such notice shall be republished 30 days and 60 days after the date of the first publication. The Special Representative shall retain copies of the published notices in the files of the Receiver.

D. Uninsured depositors. These Claims Procedures do not apply to claims by depositors, which will be determined by the Insurance Division, OFSLIC, under applicable procedures. Uninsured depositors will receive a Certificate of Claim in Liquidation for any uninsured amount on deposit. A copy of that Certificate will be provided to the Receiver by the Insurance Division.

The Receiver will retain the Certificate for the period of the receivership. When there is a distribution to general creditors, such claims will be paid pro rata with others of the same priority out of the assets of the receivership.

A depositor also may be a claimant under this Claims Procedure for other claims not based upon insurance of accounts.

III. Procedure for Initial Review of Claims.

A. The Special Representative shall designate as many agents, as, in the opinion of the Special Representative, are necessary and appropriate to review and process claims filed with the Receiver and to perform functions as assigned by the Special Representative ("agent of the Special Representative"). The Special Representative, in consultation with the General Counsel, shall designate from the law firm(s) retained to advise the Receiver as many Claims Counsel as are necessary to assist in the claims process. Such law firm(s) shall act under the supervision of and be advised by the General Counsel.

B. All Proofs of Claim filed with the Receiver shall be recorded by entry into a control log in the chronological order by the date on which such Proof of Claim was filed with the Receiver. The control log shall include the name of each claimant and an assigned serial number.

C. After each Proof of Claim is entered into the control log, an agent of the Special Representative shall review the Proof of Claim to determine whether it has been properly filed in accordance

with the directions contained in the Notice to Claimants and the Proof of Claim form ("properly filed").

1. If a Proof of Claim is found not to be properly filed, a copy of the Proof of Claim shall be returned to the claimant promptly with a written explanation of the deficiencies in the Proof of Claim ("deficiency notice"). The deficiency notice shall advise the claimant that a corrected Proof of Claim must be filed with the Receiver within the later of 30 days from the date of the mailing of the deficiency notice or 90 days from the date the first notice was published to all potential claimants, and that failure to correct the deficiencies before the expiration of the later time period may result in disallowance of the claim.

2. In the discretion of the Special Representative, if material deficiencies in the Proof of Claim are not timely corrected, the claim may be disallowed in whole or in part. The determination of disallowance for failure to correct deficiencies in the Proof of Claim shall be in writing and explain the deficiencies that remain and shall be mailed promptly to the Claimant by certified mail, return receipt requested, and regular mail with a certificate of mailing. A copy of the determination, the certificate of mailing and the receipt card, if any, shall be maintained in the files of the Receiver for the duration of the receivership, and shall become part of the administrative record.

3. The originals of a Proof of Claim, deficiency notice, and any corrected Proof of Claim shall be retained in the files of the Receiver and shall become part of the record with respect to such claim.

4. When a Proof of Claim or any corrected Proof of Claim is determined to be properly filed, the claim shall be promptly assigned to an agent of the Special Representative for initial review on the merits. A properly filed corrected Proof of Claim shall supersede a previously filed deficient Proof of Claim for purposes of review on the merits.

D. The review on the merits shall determine whether each claim:

1. Is a Reconcilable Claim that the Special Representative may allow in whole based upon the books and records of the association or the Receiver, which books and records appear to be reliable and to provide no basis for disallowance; or

2. Is a claim that should be retained for further review, which claim the Special Representative cannot allow in whole or disallow in whole or in part in the absence of further review or investigation.

E. The Special Representative shall notify each Claimant within 180 days after the end of the 90 day notice period, as set forth in the regulations, or after receipt of the properly filed Proof of Claim, whichever is later, whether the claim is allowed in whole or retained for further review. The notice shall be in writing and shall be mailed to the Claimant by certified mail, return receipt requested, and by regular mail with a certificate of mailing.

IV. Procedure for Review of Claims Retained for Further Review.

A. The Role of the Special Representative and Claims Counsel

1. The Special Representative shall be the decisionmaker, and the Claims Counsel shall provide legal advice to the Special Representative. The Special Representative, in his discretion, may assign the tasks of review of claims to Claims Counsel or to other agents of the Special Representative, subject to the oversight and direction of the Director, Operations and Liquidation Division, OFSLIC, with the advice and consent of the General Counsel.

2. In exercising this discretion, the Special Representative shall consider:

a. the nature of the task;

b. the issues involved in the claim; and

c. where no significant legal issue is presented, the cost-savings involved in assigning to a non-attorney agent of the Special Representative those tasks, such as preparing and forwarding notices to the Claimant, that do not require an attorney or that can be performed by a non-attorney at the direction and under the supervision of Claims Counsel.

3. Preferences to the Special Representative in the provisions of subpart P, "Elements of Review," therefore, should be read to mean that the Special Representative, in the exercise of his discretion, may designate an agent of the Special Representative to perform those tasks, which properly may be performed by a non-attorney agent of the Special Representative under the direction of Claims Counsel, or by Claims Counsel.

B. Elements of Review

1. Upon assignment, an agent of the Special Representative shall review promptly the Proof of Claim and documentation submitted by the Claimant in support of the claim and determine whether additional documentation or other writings or materials are necessary to reach a determination with respect to the claims.

2. In connection with the compiling of such documentation, the Special Representative may require the claimant to provide additional information or documentation in support of the claim. Specifically, the Special Representative may:

a. notify the Claimant in writing to file with the Receiver, within 30 days, additional documentation or written information if, in the opinion of the Special Representative, it appears that such additional documentation or other written information would assist in the determination of the claim;

b. notify the claimant to make available for inspection and copying any relevant, non-privileged documents or written information in the custody of or subject to the control of the claimant or his agent at a reasonable time, upon reasonable notice, and at the Receiver's expense;

c. notify the claimant to file with the Receiver within 30 days a sworn writtten response to written questions posed on behalf of the Receiver ("response to written questions").

3. The Special Representative may, at a reasonable time after reasonable notice, review documents or other written information relevant to the claim in the custody of or subject to the control of any person or entity, including the writing from any persons including the claimant or his employees, and may obtain sworn statements in which statements, documents or other writings shall be made part of the Receiver's record. In connection with the gathering of this documentation or information, the Special Representative may require the Claimant to make such documentation or information available to the Special Representative or to assist or cooperate with the Special Representative in obtaining it.

4. The Special Representative shall, upon the request of a Claimant provide an opportunity, at a reasonable time after reasonable notice to the Special Representative, to inspect and copy at the Claimant's expense any non-privileged documents or other written information relevant to the claim that are in the custody of or subject to the control of the Receiver.

a. All requests to inspect or to copy such documents shall be in writing, shall be specific, shall not request materials already in the possession of or otherwise available to the Claimant, and shall be framed so as to avoid undue burden or expense to the Receiver.

b. A written request that fails to comply with such requirements shall be subject to denial by the Special Representative.

c. The Special Representative may defer response to document requests until it has decided whether to retain the

claim for further review. The Special Representative may decide to deny a document request from a Claimant if it determines to allow the claim in whole.

5. The Special Representative may grant requests by a Claimant to appear before an agent of the Special Representative, or may require Claimants to appear before an agent of the Special Representative, to give statements, or to discuss the claim or documentation.

6. The Special Representative or his agent, subject to the approval of the Special Representative, may negotiate compromises or settlements of claims. Claimants' oral statements shall be reduced to writing, sworn to, and made a part of the Receiver's record. Statements by Claimants and Receiver's Representatives and their agents made during settlement discussions and in written communications for purposes of settlement shall not be part of the Receiver's Record and shall be treated in accordance with Federal Rule of Evidence 408.

7. The Special Representative may require the Claimant in writing to submit a memorandum addressing legal issues the resolution of which would assist in the determination of the claim ("request for memorandum"). The request for memorandum shall be mailed to the Claimant by certified mail, return receipt requested, and regular mail with a certificate of mailing, and shall advise the Claimant that the memorandum shall be filed with the Receiver no later than 30 days after the date of mailing of the request for memorandum. The request for memorandum, return receipt, certificate of mailing, and any memorandum filed by the Claimant shall be made a part of the Receiver's record.

8. The Special Representative shall inform the Claimant in writing that the Special Representative, in his sole discretion, may disallow in whole or in part any claim in the event the Claimant fails:

a. to provide to the Special Representative, as requested and within the time period specified, the additional documentation or written information, responses to written questions, or memorandum;

b. to make available for inspection and copying any non-privileged documents in the Claimant's custody or subject to the Claimant's control; or

c. to appear and give a sworn statement upon notice by the Special Representative.

9. The Special Representative shall compile a Receiver's record consisting of: the Proof(s) of Claim, all documents or other writings and sworn written statements submitted by or obtained from the Claimant or his agent; all sworn statements and documents or other writings obtained from persons or entities other than the Claimant, and all documents or other writings in the custody or subject to the control of the Special Representative which, in the opinion of the Special Representative, are relevant to the claim; and all notices from the Special Representative to the Claimant.

10. After compiling the Receiver's record, the Special Representative shall notify the Claimant in writing of the compilation of the record ("notice of record"). The notice of record shall itemize, in the form of an index, those documents, statements, and other writings that are to be made a part of the record and shall advise the Claimant to provide the Receiver with any additional documents, statements, written information or other writings for inclusion in the record within 30 days of the date of the mailing of the notice of record. The Special Representative shall mail the notice of record by certified mail, return receipt requested, and by regular first class mail and execute a certificate of mailing. Thereafter, the Special Representative shall prepare the Receiver's record, which shall include the documents as described in the index, the notice of record, and any additional documents provided by the Claimant in response to the notice of record. The Receiver's record will be made available to the Claimant, at a reasonable time and upon reasonable notice, for inspection and copying at the Claimant's expense.

11. Claims Counsel shall consult with the Special Representative and provide such confidential, privileged legal advice as may be necessary to assist the Special Representative to reach a proposed determination with respect to the claim.

12. After evaluating the information contained in the Receiver's record, the Special Representative shall promptly prepare a memorandum presenting and analyzing the legal and factual issues raised by the claim, and recommending a proposed determination ("proposed determination memorandum"). The Special Representative also shall prepare a proposed determination of claim in the form of proposed findings of fact and conclusions of law ("proposed determination").

It is anticipated that the Special Representative may assign to Claims Counsel the task of providing legal advice regarding the elements of the claim including assistance in drafting the proposed determination and proposed determination memorandum. In that event, Claims Counsel shall prepare and submit the proposed determination and proposed determination memorandum to the Special Representative for review, comments, changes or adoption. In that event the Special Representative requires changes to be made in the proposed determination or proposed determination memorandum, Claims Counsel shall make such changes and the revised notice of proposed determination and proposed determination memorandum once adopted shall supersede the prior proposed determination and memorandum. Upon adoption by the Special Representative, the proposed determination memorandum and the proposed determinaton shall be made a part of the Receiver's record. The superseded proposed determination and memorandum shall not be made a part of the Receiver's record.

13. The Special Representative shall promptly mail the proposed determination to the Claimant by certified mail, return receipt requested, and regular first class mail, and execute a certificate of mailing.

14. If the Claimant does not file a request for reconsideration as specified in 13 above, the proposed determination shall constitute the Receiver's Determination, and the Special Representative shall notify the Claimant in writing of his right to obtain review of the Receiver's Determination by the Bank Board, in accordance with the applicable regulations and procedures. The notice shall state that such review by the Bank Board is a prerequisite to obtaining judicial review.

15. The proposed determination shall advise the Claimant of his right to file with the Receiver, within 30 days from the date of mailing of the notice, a written request for reconsideration ("request for reconsideration").

a. The request for reconsideration shall state the specific grounds for any objection to proposed findings of fact or conclusions of law and may present proposed alternative findings of fact and conclusions of law. The request for reconsideration should present more than mere conclusory objections to proposed findings of fact or conclusions of law.

b. If the Claimant does not object to a proposed finding of fact or conclusion of law in the request for reconsideration, such fact or conclusion shall be conclusively established against the Claimant.

c. If the request for reconsideration is not timely filed with the Receiver, any objections to the proposed findings of fact and conclusions of law, in the

BEST COPY AVAILABLE

absence of an extension of time by the Special Representative or a showing of good cause, may be deemed to be waived by the Claimant.

d. The Special Representative shall promptly reply in writing to the request for reconsideration ("Special Representative's reply"). The Special Representative's reply will state whether the Special Representative agrees or disagrees with the contentions contained in the request for reconsideration and explain modifications, if any, recommended by the Special Representative to the proposed determination. The Special Representative's reply will be mailed to the Claimant by the Special Representative by certified mail, return receipt requested, and regular mail with a certificate of mailing.

e. The request for reconsideration and the Special Representative's reply shall become part of the Receiver's record.

f. After considering the Receiver's record, the Receiver will issue a determination on the claim ("Receiver's Determination"), signed on behalf of the Receiver by the Special Representative, in the form of findings of fact and conclusions of law.

16. The Special Representative will promptly mail to the Claimant by certified mail, return receipt requested, and by regular mail, the Receiver's Determination and a statement of the Claimant's right to obtain review of the Receiver's Determination by the Bank Board. The statement shall inform the Claimant that requesting such review by the Bank Board is a prerequisite to obtaining judicial review, and shall enclose a copy of the procedures for obtaining review. The Receiver's Determination and the executed return receipt, if any, will be made a part of the Receiver's record, whereupon the Receiver's Record, which is the basis for any Request for Review to the Bank Board will be deemed closed.

17. The Special Representative shall maintain the Receiver's record in the office of the Receiver for the duration of the receivership and for a period of six (6) months following termination of the receivership by the Bank Board upon the conclusion of the final audit.

18. The Receiver shall issue to the Claimant a "Record of Claim" stating the amount of any claim recognized, in whole or in part, and shall maintain a copy of the Record of Claim for processing with other valid claims according to its respective priority.

C. Claims on an Expedited Basis

A Claimant may make a written request to the Receiver that a claim be processed on an expedited basis. The burden shall rest upon the Claimant to establish good cause for expedited processing of a claim. The standard for good cause shown shall be substantial harm to the Claimant in the absence of expedited processing. It shall be in the sole discretion of the Receiver whether to direct that a claim be accorded expedited processing. The Receiver shall notify the Claimant in writing, by certified mail, return receipt requested, and regular mail, of his decision on the request, and in the event the request is granted, the schedule for such expedited processing.

V. Standards for Determination of Claims

A. Burden of Proof

The burden of proof shall rest upon the Claimant to establish the claim by a preponderance of the evidence. Preponderance of the evidence means evidence that when fairly considered produces the stronger impression, has the greater weight, and is more convincing as to its truth when weighed against the evidence in opposition thereto.

B. Exclusion from Claims Procedure

A proof of claim need not be filed for certain administrative expenses of the association, and for employee wage claims of $3,000.00 or less.

C. Application of Claims Procedure

1. Administrative expenses of the association and employee wage/benefit claims are claims and thus are subject to the requirements of the claims procedure except as provided in sections I.B.7(a)(iv) and (v).

2. Service or materials providers and association employees shall be provided with Proof of Claim forms to submit to the Receiver to obtain payment of administrative expenses of the association and appropriate employee wage/benefit claims.

3. Federal law preempts any state law that directs prompt payment of employee wages/benefits upon employment termination. The Special Representatives are urged to assure affected employees that their claims for wages/benefits will receive expeditious consideration. It is hoped that such assurances will forestall the institution of improper and costly legal proceedings under state schemes to force payment.

D. Criteria for the Determination of Claims

No claim shall be allowed in full in the absence of:

1. Evidence that the services, supplies or materials were provided in good condition or at an acceptable market or professional level.

2. Evidence that the services, supplies or materials were provided on the dates and in the quantities as claimed.

3. Evidence that the charges or fees are based upon actual services rendered or materials provided and are commensurate with the appropriate geographical market, professional, or trade standards for the services or materials provided on the applicable dates.

4. Proof that any payments already made on a claim by the Association or the Receiver have been deducted from the claim set out in the Proof of Claim filed with the Receiver.

5. A determination by the Special Representative that there is pending no judicial or other proceeding involving the claim and that there exists no judgment or other final determination in a proceeding on the claim.

6. A determination made by the Special Representative that the Receiver does not have any set-off rights or counterclaims against the Claimant.

7. A determination by the Special Representative that the claim does not appear to be fraudulent or otherwise reasonably suspect and thus should not be allowed.

E. Claims to Security, Priority or Preference

With the exception of certain payments established and set out in the implementing Board Resolution or other orders or resolutions of the Board, which payments are to be made promptly and are excluded from requirements of the claims procedure, all claims to security, priority, or preference shall be claims retained for further review within the claims procedure. This will afford the Special Representative the opportunity, in consultation with Claims Counsel, to determine whether the Receiver has a basis or grounds upon which to challenge the granting of a security interest in receivership estate assets. Secured Claimants who require a decision upon their claims more rapidly than the 180 days provided for initial review should file a request as specified in Section IV.C. of these procedures, explaining how a delay in decision could cause them harm.

Procedures for the Processing and Determination on Review of Determinations of the FSLIC as Receiver (Review Procedures)

A. Introduction

1. The following procedures will be used for the processing and

determination on review of determinations of the Federal Savings and Loan Insurance Corporation [FSLIC] as Receiver. Authority for these procedures is section 17 of the Federal Home Loan Bank Act, 12 U.S.C. 1437, 1464, 1729 (1982); 12 CFR 549.4, 549.5, 549.5–1, 569a.8.

B. Notice of Right to File a Request for Review

1. Claims denied in whole or in part by the FSLIC as Receiver are subject to review by the Federal Home Loan Bank Board [Bank Board] upon timely filing of a Request for Review. Should the FSLIC as Receiver deny the claim in whole or in part, the parties will be so notified in writing and this notice will explain the right to review before the Bank Board and include a copy of the review procedures. All Requests for Review must comply strictly with the following procedures. Failure to comply with these procedures may result in dismissal of the Request for Review.

C. Filing of an Application for Review

1. A Request for Review of a Receiver's Determination must be filed within 60 calendar days from the date indicated on the notice of determination that the claim has been disallowed in whole or in part.

2. All Requests for Review are deemed to be filed when received and date/time stamped by the Bank Board.

3. A Request for Review (original and 1 copy) must be filed with the Bank Board at the following address:

Federal Home Loan Bank Board, Office of General Counsel, Adjudication Division, Docket Clerk, 1700 C Street NW., Washington, DC 20552.

The Request must include a signed statement certifying that a copy has been mailed or hand delivered to the Receiver.

4. All submissions (*i.e.*, the Request, Response, and all other related filings) must include an original and 1 copy as well as a signed statement certifying that a copy has been sent to the opposing party(ies) and any other interested party. Failure to comply with this requirement may result in the return of the filing as incomplete and could adversely affect the party's rights to proceed.

5. The Receiver shall provide the Bank Board, within 10 days of receipt of the Request for Review, with a copy of the Receiver's record of the proceeding, which has been deemed by the Receiver to be complete, true, and correct. The Receiver may, within the same time period, file a Response to the Request for Review, which shall be served upon the Requestor.

6. The Receiver shall make available to the Requestor, or any interested party, during normal business hours (9 a.m. to 5 p.m. Monday through Friday, excluding Federal holidays), at the offices of the Receiver's representative, the opportunity to review the Receiver's record of the proceeding. At the request of any Requestor or interested party, the Receiver shall provide copies of the Receiver's record. The costs of duplication shall be borne by the party requesting the copies.

7. A Request for Review must be filed within the time provided under this section. Failure to file a Request for Review within the time period provided under this section will result in waiver of any objection to the Receiver's determination. A timely Request filed with the Bank Board in accordance with these procedures is mandatory to obtain judicial review of the Receiver's Determination. Any part of the Receiver's Determination that the Request for Review does not contest shall not later be the subject of judicial review.

D. Content of Request for Review

1. To be deemed complete a Request for Review must include:

(i) A clear and concise statement of the facts and arguments on which the Request is based;

(ii) A clear and concise statement of the alleged factual and legal errors in the Receiver's Determination, including citations to applicable statutes, regulations, and legal authority, and to the Receiver's record;

(iii) If the Request is based on facts not available to the Receiver at the time of issuance of the Receiver's Determination, a separate identification and statement of all such facts upon which the Request is based.

2. The Bank Board anticipates that in most cases a preliminary review of the Request and the Receiver's record will be made within 60 days of the date that the Receiver's record was received. At that time, the parties will be notified in writing that: (1) the Administrative Record is complete and is closed; or (2) more information is needed (in which case further instructions will be included); or (3) the Bank Board anticipates that an additional 30, 60 or 90 days may be necessary before preliminary review can be completed.

E. Basis for the Bank Board's Decision

1. The Administrative Record that forms the basis of the Bank Board's Decision generally consists of the Request for Review, the Receiver's Record and any Response to the Request for Review submitted by the Receiver or other interested party(ies).

2. Any materials in addition to those in E.1. above may be admitted to the Administrative Record only upon an Order of the Bank Board to allow supplementation of the Administrative Record. Any party may, by motion, request leave to supplement the record; however, such motions will be granted only upon a showing of good cause. A finding of good cause by the Bank Board generally requires that the moving party demonstrate that the argument, documentation, information, or evidence sought to be admitted or considered was not readily available when the claim was before the Receiver's Representative; or that the submission was made to, but improperly excluded by, the Receiver's Representative; or some similar compelling reason why the submission was not included in the Receiver's Record.

3. A motion for leave to supplement the record made after the party's initial submission of a Request for Review or Response, must be supported by good cause demonstrating why the supplemental matter could not have been included with the initial submission.

4. Upon a finding by the Bank Board that the record provides a sufficient basis for rendering a Decision, the record will be closed. The parties will be notified by the Bank Board of the closing of the record.

F. Burden of Proof

1. The burden of proof rests at all times with the Applicant.

G. Issuance of Decision

1. Within 180 days from the date the record is closed, the Bank Board will issue a Decision on the merits of the Request, determining the extent of entitlement to the claim or any portion thereof. Alternatively, within 30 days from the date that the record is closed, the Bank Board, in its sole discretion or based upon the advice or request of the General Counsel, may entertain oral argument, or other supplementary proceedings, in which case a Decision will issue within 180 days of the completion of such supplementary proceedings.

H. Decision in Writing

1. The Bank Board's Decision will be issued in writing. It will set forth the reasons for the Decision and will constitute final agency action for the purpose of seeking judicial review.

I. Denial of Claim

1. If no Decision is issued by the Bank Board within the time from specified in G.1 above, and the Bank Board has not given notice to the parties requesting review that the Bank Board has in its discretion extended the time limit on its own motion, the Receiver's Determination will become the Decision of the Bank Board. This Decision will be final agency action for the purpose of seeking judicial review.

J. Requests for Extensions of Time or Waiver of Other Procedural Requirements

1. Failure to comply with any procedural requirements set forth herein may result in dismissal of the Application for Review. However, reasonable requests for extensions of time or waiver of other procedural requirements may be granted upon a showing of good cause.

K. Satisfaction of Claim Certificate

1. If the Bank Board determines that the claim, or any portion of the claim, is to be allowed, Claimants must, to secure payment, promptly execute and deliver to the Bank Board a "Satisfaction of Claim" certificate, which will be provided to the Claimant with the Decision.

2. If the Bank Board determines that only a portion of a claim is allowable, the "Satisfaction of Claim" certificate will specify the portion found allowable. A claim or any portion of a claim not specifically allowed by the Bank Board is deemed denied and constitutes a final agency action for purposes of seeking judicial review.

L. Questions About These Procedures

1. Any questions concerning these Procedures may be addressed, in writing, to:

Adjudication Division, Office of General Counsel, Federal Home Loan Bank Board, 1700 G Street NW., Washington, DC 20552.

Procedures for the Administration and Determination of Requests for Expedited Relief From Decisions or Threatened Actions of the FSLIC as Receiver (Requests for Expedited Relief)

Requests for Expedited Relief seek extraordinary intervention by the Federal Home Loan Bank Board [Bank Board] with respect to the Federal Savings and Loan Insurance Corporation [FSLIC] as Receiver. All Requests will be scrutinized for strict compliance with the procedural requirements set forth below. Failure to comply with these requirements may result in denial of the expedited relief requested.

A. How To File a Request for Expedited Relief

1. These procedures must be complied with fully and within the prescribed time periods. Any noncompliance or lateness may result in denial of the Request unless a waiver of procedure or an extension of time has been granted for good cause shown. These procedures are fully applicable to the FSLIC as Receiver.

2. Any decision or threatened action by the FSLIC as Receiver may be the subject of a Request for Expedited Relief seeking extraordinary intervention by the Bank Board outside of the routine claims process. Requests for Expedited Relief must be filed within five work days from the date of the notice of FSLIC as Receiver's decision or threatened action. All Requests for Expedited Relief are deemed to be filed when received and date/time stamped by the Bank Board at the office specified in A.4, below. When notice of such a decision or threatened action is delivered by mail, three additional work days will be allowed for the filing of the Request.

Example: A Notice of Foreclosure is a "threatened action" by the FSLIC as Receiver. If the FSLIC as Receiver issues a Notice of Foreclosure letter dated January 1, of a foreclosure sale scheduled for February 1, the Request for Expedited Relief must reach the Bank Board and be date/time stamped within five work days of January 1. If the FSLIC as Receiver's notice was delivered by U.S. mail, the Request for Expedited Relief must reach the Bank Board and be date/time stamped within eight work days of January 1. Work days are Monday through Friday, excluding weekends and Federal holidays.

3. All submissions are deemed to be filed when received, and date/time stamped by the Federal Home Loan Bank Board at the office specified in A.4, below.

4. The original and one copy of the Request for Expedited Relief, and any supporting documents, must be filed with:

Federal Home Loan Bank Board, Office of General Counsel, Adjudication Division, Docket Clerk, 1700 G Street NW., Washington, DC 20552.

5. A copy of the Request for Expedited Relief, and any supporting documents, must be mailed or hand delivered to the Receiver at the following address(es):

_____

_____

_____

6. All submissions to the Bank Board must include a signed statement certifying that an additional copy has been sent or hand delivered to the FSLIC as Receiver on the date the submission was filed with the Bank Board at the address(es) listed in A.5, above.

B. Content of Request for Expedited Relief

1. A Request for Expedited Relief does not involve a determination on the merits of a claim. It is solely a request to the Bank Board to intercede by instructing the FSLIC as Receiver to do or to refrain from doing some act. Accordingly, to obtain the relief requested, the Request for Expedited Relief must contain the following:

(i) a clear and concise statement of the facts and issues on which the Request is based;

(ii) a clear and concise statement of any alleged factual and/or legal errors or omissions made by the FSLIC as Receiver;

(iii) citations to appalicable statutes, regulations or other legal authority;

(iv) all relevant documentation that supports the Request;

(v) an assessment of the likelihood of success on the merits of the underlying claim;

(vi) a clear and concise statement of the probable imminent and irreparable harm likely to occur if expedited relief is not granted; and

(vii) a signed statement certifying that the FSLIC as Receiver has been mailed or hand delivered a copy of the Request on the same day that the Request was filed with the Bank Board.

2. The FSLIC as Receiver shall file its Response and all supporting documentation within five (5) work days from the date a Request for Expedited Relief is filed with the Bank Board. The time limitations discussed above with regard to delivery by U.S. mail are also applicable to the FSLIC as Receiver. The Receiver's Response shall contain legal and factual arguments in opposition to the Request for Expedited Relief. A copy of that Response and all supporting documentation must be sent or hand delivered to the party requesting expedited relief and the Receiver must certify that it has done so.

3. The Request for Expedited Relief, the supporting documentation, as well as the Receiver's Response and supporting documentation, will form the basis for the administrative record on which the Bank Board will make its determination.

C. Decision

1. The party requesting expedited relief shall be known as the Petitioner.

2. The burden of proving entitlement to expedited relief rests at all times with the Petitioner.

3. Upon receipt, the Request for Expedited Relief will be reviewed to assure compliance with all procedural requirements. If the Request is procedurally deficient it may be dismissed and the parties will be so notified.

4. If the Request is properly filed and is a matter capable of resolution and no additional information is needed, a Decision on the Request will be issued by the Bank Board as soon as practicable. It will state the reasons for the determination and will constitute final agency action for purposes of securing judicial review.

5. If additional information is required for resolution of the Request, notification in writing will be made by the Bank Board of the need for such information. The Bank Board will order that the information be submitted by a date certain. If no further information is needed for resolution of the Request, a Decision will be issued by the Bank Board as soon as practicable.

6. Unauthorized supplemental pleadings will not be considerd by the Bank Board in the absence of good cause shown. To show good cause for an otherwise unauthorized supplemental pleading, a party must demonstrate the existence of new and material evidence that was not readily available at the time of the initial filing despite the party's due diligence.

7. If appropriate, the Bank Board may, upon motion of a party or its own motion, issue an Order instructing the FSLIC as Receiver to stay temporarily its threatened action or decision pending resolution of the request for Expedited Relief. Such Order will be granted where necessary to maintain the status quo for the time required for the Bank Board to consider the Request for Expedited Relief. The issuance of such an Order does not, however, prohibit the FSLIC as Receiver from making any preparations legally required in advance of its threatened action (*e.g.*, reposting foreclosure). Any such stay will remain in full force and effect for a period of time sufficient to enable the party requesting relief to be provided with the Bank Board's Decision and an opportunity to seek judicial review of that Decision. Such time will be at least five (5) work days from the date of the Decision where delivery of the Bank Board's Decision is by express (overnight) delivery service and eight (8) work days if by certificate of regular U.S. mail.

D. Requests for Extension of Time or Waiver of Other Procedural Requirements

1. Failure to comply with any of the procedural requirements set forth herein may result in denial of the Request for Expedited Relief. However, reasonable requests for extensions of time or waiver of other procedural requirements may be granted upon a showing of good cause.

[FR Doc. 88-8442 Filed 4-20-88; 8:45 am]
BILLING CODE 6720-01-M

DEPARTMENT OF TRANSPORTATION

Federal Aviation Administration

14 CFR Parts 21 and 23

[Docket No. 044CE, Special Conditions No. 23-ACE-37]

Special Conditions; Modified Cessna Model 172 Series Airplanes With Porsche PFM3200 Engines Installed

AGENCY: Federal Aviation Administration (FAA), DOT.

ACTION: Final Special Conditions.

SUMMARY: These special conditions are issued to become part of the certification basis for modified Cessna Model 172 Series Airplanes with Porsche PFM3200 Engines installed. The airplane will have novel and unusual design features when compared to the state of technology envisaged in the applicable airworthiness standards. The novel and unusual design features include the installation of the Porsche PFM3200No3 Engine, which incorporates an electronic ignition system and a unique single-lever power control, for which the applicable regulations do not contain adequate or appropriate airworthiness standards. These special conditions contain the additional airworthiness standards which the Administrator considers necessary to establish a level of safety equivalent to the airworthiness standards applicable to these airplanes.

EFFECTIVE DATE: April 21, 1988.

FOR FURTHER INFORMATION CONTACT: Oscar Ball, Aerospace Engineer, Standards Office (ACE-110), Aircraft Certification Division, Central Region, Federal Aviation Administration, Room 1656, 601 East 12th Street, Kansas City, Missouri 64106; telephone (816) 426-5688.

SUPPLEMENTARY INFORMATION:

Background

On February 19, 1987, Porsche Aviation Products, Inc., Rural Route 2, Box 118A, Galesburg Municipal Airport, Galesburg, Illinois 61401, made application to the FAA for supplemental type certificate (STC) approval of the design changes necessary to incorporate the Porsche PFM3200No3 Engine in the Cessna Model 172M, N, P, and Q airplanes. The Porsche engine installation incorporates an electronic ignition system and a single-lever power control.

Electronic ignition systems and single-level power controls were not envisaged by the applicable CAR 3/Part 23 airworthiness standards. These features are considered novel and unusual design features and, as such, will require special conditions to provide adequate airworthiness standards.

Special conditions are issued and amended, as necessary, as part of the type certification basis if the Administrator finds that the airworthiness standards designated in accordance with § 21.101 do not contain adequate or appropriate safety standards because of novel or unusual design features of an airplane. Special conditions, as appropriate, are issued in accordance with § 11.49, after public notice as required by §§ 11.28 and 11.29(b), effective October 14, 1980, and will become part of the type certification basis, as provided by § 21.101(b)(2).

Type Certification Basis

Part 23 through Amendment 23-7 for engine, fuel system and electrical system installation related items. For Noise Regulations, Part 36, Appendix F, through Amendment 36-12. Also, §§ 21.50 and 23.1529 with Appendix G for Instructions for Continued Airworthiness. For all other aspects of the airplane, the following:

For Models 172 through 172Q, Part 3 of the Civil Air Regulations, effective November 1, 1949, as amended by Amendment 3-12. In addition, for S/N 17271035 and on, § 23.1559, effective March 1, 1978; for S/N 17276280 and on, and all Model 172Q, § 23.1545(a), Amendment 23-23 effective December 1, 1978.

Equivalent Safety Findings for airspeed indicator and operating limitations as set forth in CAR 3.757 and 3.778(a) for serial numbers 17261445, 1721578, 17265685 and on.

Exemption No. 4838; and these special conditions.

Discussion of Comments

No comments were received in response to Notice 23-ACE-37.

published in the **Federal Register** on January 26, 1988 (53 FR 2037). The closing date for comments was February 24, 1988.

Conclusion

In view of the design features discussed above, the following special conditions are issued for the propulsion system of the Model 172 Series Airplanes, with Porsche PFM3200 Engines installed, under the provisions of § 21.16 to provide a level of safety equivalent to that intended by the regulations incorporated by reference. This action is not a rule of general applicability and affects only the model/series of airplane identified in these special conditions.

List of Subjects in 14 CFR Parts 21 and 23

Aviation safety, Aircraft, Air transportation, Safety.

The authority citation for these special conditions is as follows:

Authority: Secs. 313(a), 601, and 603 of the Federal Aviation Act of 1958; as amended (49 U.S.C. 1354(a), 1421, and 1423); 49 U.S.C. 106(g) (Revised Pub. L. 97-449, January 12, 1983); 14 CFR 21.16 and 21.101; and 14 CFR 11.28 and 11.49.

The Special Conditions

Accordingly, the Federal Aviation Administration adopts the following special conditions as a part of the type certification basis for the Cessna Model 172 Series Airplanes with Porsche PFM3200 Engines installed:

1. *Lightning Protection.* In addition to compliance with other applicable requirements relative to lightning protection, each electronic propulsion control system component, whose failure to function properly would prevent the continued safe flight and landing of the airplane, must be designed and installed to ensure that its operation and operational capabilities are not affected when the airplane is exposed to lightning.

2. *Protection from Unwanted Effects of Radio Frequency (RF) Energy.* In the absence of specific requirements for protection from the unwanted effects of RF energy, each electronic propulsion control system component, whose failure to function properly would prevent the continued safe flight and landing of the airplane, must be designed and installed to ensure that its operation and operational capabilities are not adversely affected when the airplane is exposed to externally radiated radio frequency.

3. *Propulsion Control System.* In addition to the requirements applicable to throttle, mixture and propeller controls, components of the propulsion control system, both airframe and engine manufacturer furnished, that affect thrust and that are required for continued safe operation, must be shown to have the level of integrity and reliability of the typical Cessna Model 172 Series propulsion control system with independent throttle, mixture, and propeller controls.

Issued in Kansas City, Missouri on March 29, 1988.

Paul K. Bohr,

Director, Central Region.

[FR Doc. 88-8705 Filed 4-20-88; 8:45 am]

BILLING CODE 4910-13-M

---

14 CFR Part 39

[Docket No. 88-NM-26-AD; Amdt. 39-5900]

Airworthiness Directives; Cessna Models 550 and S550 Series Airplanes

AGENCY: Federal Aviation Administration (FAA), DOT.

ACTION: Final rule.

SUMMARY: This action publishes in the **Federal Register** and makes effective as to all persons an amendment adopting a new airworthiness directive (AD) which was previously made effective as to all known U.S. owners and operators of certain Cessna Model 550 and S550 series airplanes by individual letters. This AD requires disconnection of electrical power to the overhead fluorescent lighting system. This amendment revises the Priority Letter AD by providing for an optional modification which, if installed, permits reconnection of the electrical power. This action is prompted by reports of unsafe wiring used for the overhead high voltage fluorescent lighting on certain airplanes. This condition, if not corrected, could result in cabin smoke and/or fire.

DATES: Effective May 10, 1988.

This AD was effective earlier to all recipients of Priority Letter AD 88-06-02, dated March 16, 1988.

ADDRESSES: The applicable service information may be obtained from Cessna Aircraft Company, P.O. Box 7706, Wichita, Kansas 67277. This information may be examined at the FAA, Northwest Mountain Region, 17900 Pacific Highway South, Seattle, Washington, or at the FAA, Central Region, Wichita Aircraft Certification Office, 1801 Airport Road, Room 100, Mid-Continent Airport, Wichita, Kansas.

FOR FURTHER INFORMATION CONTACT: Mr. Ralph W. Rissmiller, Jr., Aerospace Engineer, Systems and Equipment Branch, ACE-130W, FAA, Wichita Aircraft Certification Office, 1801 Airport Road, Room 100, Mid-Continent Airport, Wichita, Kansas 67209; telephone (316) 946-4419.

SUPPLEMENTARY INFORMATION: On March 16, 1988, the FAA issued Priority Letter AD 88-06-02, applicable to certain Cessna Model 550 and S550 series airplanes, which requires disconnection of electrical power to the overhead fluorescent lighting system. That action was prompted by three reports of unsafe wiring used for the overhead high voltage flourescent lighting on certain airplanes. The subject wiring is rated at 600 volts instead of the required 900 volts in the overhead fluorescent lighting system high voltage power distribution. The open circuit voltage on the affected wires is significantly in excess of the 600 volt rating, and could result in failure of the wire insulation and subsequent smoke and/or fire in the cabin.

Cessna issued Alert Service Letters SLA550-33-02 (for the Model 550) and SLA550-33-01 (for the Model S550), both dated March 14, 1988, which contain procedures for disconnection of the electrical power to the overhead fluorescent lighting system.

Subsequent to the issuance of Priority Letter AD 88-06-02, the FAA reviewed and approved Cessna Service Bulletins SB550-33-9 (for the Model 550) and SBS550-33-5 (for the Model S550), both dated March 17, 1988, which describe procedures for replacing the affected wiring harness with an new assembly that will eliminate the fire hazard addressed by this AD action. The FAA has determined that replacement of the existing wiring harness with the assembly described in these service bulletins constitutes terminating action for the requirements of Priority Letter AD 88-06-02, and electrical power may be reconnected to the indirect lighting system. The final rule has been revised to provide operators with this optional terminating action.

Since a situation existed, and still exists, that requires immediate adoption of this regulation, it is found that notice and public procedure hereon are impracticable, and good cause exists for making this amendment effective in less than 30 days.

The Federal Aviation Administration has determined that this regulation is an emergency regulation that is not considered to be major under Executive Order 12291. It is impracticable for the agency to follow the procedures of Order 12291 with respect to this rule since the rule must be issued immediately to correct an unsafe condition in aircraft. It has been further

determined that this document involves an emergency regulation under DOT Regulatory Policies and Procedures (44 FR 11034; February 26, 1979). If this action is subsequently determined to involve a significant/major regulation, a final regulatory evaluation or analysis, as appropriate, will be prepared and placed in the regulatory docket (otherwise, an evaluation or analysis is not required).

List of Subjects in 14 CFR Part 39

Aviation safety, Aircraft.

Adoption of the Amendment

Accordingly, pursuant to the authority delegated to me by the Administrator, the Federal Aviation Administration amends § 39.13 of Part 39 of the Federal Aviation Regulations as follows:

PART 39—[AMENDED]

1. The authority citation for Part 39 continues to read as follows:

Authority: 49 U.S.C. 1354(a), 1421 and 1423; 49 U.S.C. 106(g) (Revised Pub. L. 97-449, January 12, 1983); and 14 CFR 11.89.

§ 39.13 [Amended]

2. By adding the following new airworthiness directive:

Cessna: Applicable to Model 550 series airplanes, serial numbers (S/N) 550-0561, -0562, -0564, -0565, -0566, -0568, and -0569; and Model S550 series airplanes, S/N S550-0140 through -0146, -0148, and -0149; certificated in any category. Compliance is required as indicated, unless previously accomplished.

To preclude wiring failure, which could result in smoke and/or fire in the cabin, accomplish the following:

A. For Cessna Model 550 series airplanes: Prior to next activation of the airplane's electrical power, disconnect the electrical power to the indirect lighting system, in accordance with Cessna Alert Service Letter SLA550-33-02, dated March 14, 1988. Electrical power may be reconnected to the indirect lighting system following replacement of the affected wiring harness described in, and in accordance with, Cessna Service Bulletin SB550-33-9, dated March 17, 1988, or later FAA-approved revisions.

B. For Cessna Model S550 series airplanes: Prior to next activation of the airplane's electrical power, disconnect the electrical power to the indirect lighting system, in accordance with Cessna Alert Service Letter SLAS550-33-01, dated March 14, 1988. Electrical power may be reconnected to the indirect lighting system following replacement of the affected wiring harness described in, and in accordance with, Cessna Service Bulletin, SBS550-33-5, dated March 17, 1988, or later FAA-approved revisions.

C. An alternate means of compliance which provides an acceptable level of safety may be used when approved by the Manager, Wichita Aircraft Certification Office, FAA, Central Region.

All persons affected by this directive who have not already received the appropriate service documents from the manufacturer, may obtain copies upon request to Cessna Aircraft Company, P.O. Box 7706, Wichita, Kansas 67277.

These documents may be examined at the FAA, Northwest Mountain Region, 17900 Pacific Highway South, Seattle, Washington, or the FAA, Central Region, Wichita Aircraft Certification Office, 1801 Airport Road, Room 100, Mid-Continent Airport, Wichita, Kansas.

This amendment becomes effective May 10, 1988. It was effective earlier to all recipients of Priority Letter AD 88-06-02, issued March 16, 1988.

Issued in Seattle, Washington, on April 12, 1988.

Frederick M. Isaac,

Acting Director, Northwest Mountain Region.

[FR Doc. 88-8709 Filed 4-20-88; 8:45 am]

BILLING CODE 4910-13-M

---

14 CFR Part 71

[Airspace Docket No. 87-AWP-4]

Establishment of Brawley, CA; Transition Area

AGENCY: Federal Aviation Administration (FAA), DOT.

ACTION: Final rule.

SUMMARY: This action establishes a transition area at Brawley, CA. This transition area provides controlled airspace for aircraft executing a new instrument approach procedure to the Brawley Airpor.

EFFECTIVE DATE: 0901 U.T.C., June 30, 1988.

FOR FURTHER INFORMATION CONTACT: Frank T. Torikai, Airspace and Procedures Specialist, Airspace and Procedures Branch, AWP-530, Air Traffic Division, Western-Pacific Region, Federal Aviation Administration, 15000 Aviation Boulevard, Lawndale, California 90261, telephone (213) 297-1648.

SUPPLEMENTARY INFORMATION:

History

On January 14, 1988, FAA proposed to amend Part 71 of the Federal Aviation Regulations (14 CFR Part 71) to establish a new transition area at Brawley, California (53 FR 910). Interested parties were invited to participate in this rulemaking proceeding by submitting written comments on the proposal to the FAA. No comments objecting to the proposal were received. Except for editorial changes, this amendment is the same as that proposed in the notice. Section 71.181 of Part 71 of the Federal Aviation Regulations was republished in Handbook 7400.6D dated January 4, 1988.

The Rule

This amendment to Part 71 of the Federal Aviation Regulations establishes a transition area at Brawley, CA, and provides controlled airspace for aircraft executing a new instrument approach procedure to the Brawley Airport.

The FAA has determined that this regulation only involves an established body of technical regulations for which frequent and routine amendments are necessary to keep them operationally current. It, therefore—(1) is not a "major rule" under Executive Order 12291; (2) is not a "significant rule" under DOT Regulatory Policies and Procedures (44 FR 11034; February 25, 1979); and (3) does not warrant preparation of a regulatory evaluation as the anticipated impact is so minimal. Since this is a routine matter that will only affect air traffic procedures and air navigation, it is certified that this rule will not have a significant economic impact on a substantial number of small entities under the criteria of the Regulatory Flexibility Act.

List of Subjects in 14 CFR Part 71

Aviation safety, Transition areas.

Adoption of the Amendment

Accordingly, pursuant to the authority delegated to me, Part 71 of the Federal Aviation Regulations (14 CFR Part 71) is amended, as follows:

PART 71—[AMENDED]

1. The authority citation for Part 71 continues to read as follows:

Authority: 49 U.S.C. 1348(a), 1354(a), 1510; Executive Order 10854; 49 U.S.C. 106(g) (Revised Pub. L. 97-449, January 12, 1983); 14 CFR 11.69.

§ 71.181 [Amended]

2. Section 71.181 is amended as follows:

Brawley, CA [NEW]

That airspace extending upward from 700 feet above the surface within a 6-mile radius of the Brawley Airport (lat. 32°59'23"N., long. 115°30'58"W.); within 3 miles either side of the Imperial VORTAC 358° radial extending from the 6-mile radius area to 9.5 miles south of the airport; and that airspace extending upward from 1,200 feet above the surface within an 8-mile radius of the Brawley Airport.

Issued in Los Angeles, California, on April 11, 1988.

Jacqueline L. Smith,

Manager, Air Traffic Division, Western-Pacific Region.

[FR Doc. 88-8707 Filed 4-20-88; 8:45 am]

BILLING CODE 4910-13-M

---

14 CFR Part 71

[Airspace Docket No. 87-AWP-31]

Revision to Camp Pendleton, CA; Transition Area

AGENCY: Federal Aviation Administration (FAA), DOT.

ACTION: Final rule.

SUMMARY: This action revises the Camp Pendleton, CA, transition area and expands the 700 foot transition area to the southwest and southeast of the Camp Pendleton tactical air navigation aid (TACAN). This expanded transition area will provide additional controlled airspace for aircraft operating under instrument flight rules (IFR) in the vicinity of Camp Pendleton Marine Corps Air Station (MCAS).

EFFECTIVE DATE: 0901 U.T.C., June 30, 1988.

FOR FURTHER INFORMATION CONTACT: Frank T. Torikai, Airspace and Procedures Specialist, Airspace and Procedures Branch, AWP-530, Air Traffic Division, Western-Pacific Region, Federal Aviation Administration, 15000 Aviation Boulevard, Lawndale, California 90261, telephone (213) 297-1648.

SUPPLEMENTARY INFORMATION:

History

On January 14, 1988, FAA proposed to amend Part 71 of the Federal Aviation Regulations (14 CFR Part 71) to revise the Camp Pendleton, CA, transition area (53 FR 910). Interested parties were invited to participate in this rulemaking proceeding by submitting written comments on the proposal to the FAA. No comments objecting to the proposal were received. Except for editorial changes, this amendment is the same as that proposed in the notice. Section 71.181 of Part 71 of the Federal Aviation Regulations was republished in Handbook 7400.6D dated January 4, 1988.

The Rule

This amendment to Part 71 of the Federal Aviation Regulations revises the Camp Pendleton, CA, transition area. This action provides additional controlled airspace southwest and southeast of the Camp Pendleton TACAN for IFR flights at Camp Pendleton MCAS.

The FAA has determined that this regulation only involves an established body of technical regulations for which frequent and routine amendments are necessary to keep them operationally current. It, therefore—(1) Is not a "major rule" under Executive Order 12291; (2) is not a "significant rule" under DOT Regulatory Policies and Procedures (44 FR 11034; February 25, 1979); and (3) does not warrant preparation of a regulatory evaluation as the anticipated impact is so minimal. Since this is a routine matter that will only affect air traffic procedures and air navigation, it is certified that this rule will not have a significant economic impact on a substantial number of small entities under the criteria of the Regulatory Flexibility Act.

List of Subjects in 14 CFR Part 71

Aviation safety, Transition areas.

Adoption of the Amendment

Accordingly, pursuant to the authority delegated to me, Part 71 of the Federal Aviation Regulations (14 CFR Part 71) is amended, as follows:

PART 71—[AMENDED]

1. The authority citation for Part 71 continues to read as follows:

Authority: 49 U.S.C. 1348(a), 1354(a), 1510; Executive Order 10854; 49 U.S.C. 106(g) (Revised Pub. L. 97-449, January 12, 1983); 14 CFR 11.69.

§ 71.181 [Amended]

2. Section 71.181 is amended as follows:

Camp Pendleton, CA [Revised]

That airspace extending upward from 700 feet above the surface within 4.5 miles southeast and 3 miles northwest of the Camp Pendleton TACAN (lat. 33°18'04"N., long. 117°21'06"W.) 041° and 221° radials, extending from 1 mile southwest to 18 miles northeast of the TACAN; and that airspace bounded by a line beginning at lat. 33°18'00"N., long. 117°15'00"W; to lat. 33°15'00"N., long. 117°15'00"W; to lat. 33°15'00"N., long. 117°18'18"W.; to the point of beginning.

Issued in Los Angeles, California, on April 11, 1988.

Jacqueline L. Smith,

Manager, Air Traffic Division, Western-Pacific Region.

[FR Doc. 88-8706 Filed 4-20-88; 8:45 am]

BILLING CODE 4910-13-M

---

14 CFR Part 71

[Airspace Docket No. 87-ASW-52]

Amendment of Transition Area; Rockport, TX

AGENCY: Federal Aviation Administration (FAA), DOT.

ACTION: Final rule.

SUMMARY: This amendment will revise the transition area located at Rockport, TX. The development of a new special instrument approach procedure (SIAP) to the San Jose Island Airport, Rockport, TX, utilizing the Corpus Christi Very High Frequency Omnidirectional Radio Range/Tactical Air Navigation (VORTAC), has made this revision necessary. The intended effect of this revision is to provide adequate controlled airspace for aircraft executing this new SIAP. Coincident with this revision would be the changing of the status of the San Jose Island Airport from visual flight rules (VFR) to instrument flight rules (IFR).

EFFECTIVE DATE: 0901 u.t.c., June 30, 1988.

FOR FURTHER INFORMATION CONTACT: Bruce C. Beard, Airspace and Procedures Branch, Air Traffic Division, Southwest Region, Department of Transportation, Federal Aviation Administration, Fort Worth, TX 76193-0530, telephone (817) 624-5561.

SUPPLEMENTARY INFORMATION:

History

On January 20, 1988, the FAA proposed to amend Part 71 of the Federal Aviation Regulations (14 CFR Part 71) by revising the transition area located at Rockport, TX (53 FR 3049).

Interested persons were invited to participate in this rulemaking proceeding by submitting written comments on the proposal to the FAA. No comments objecting to the proposal were received. Except for editorial changes, this amendment is that proposed in the notice. Section 71.181 of Part 71 of the Federal Aviation Regulations was republished in Handbook 7400.6D, dated January 1, 1988.

The Rule

This amendment to Part 71 of the Federal Aviation Regulations will revise the transition area located at Rockport, TX. The development of a new SIAP to the San Jose Island Airport, utilizing the Corpus Christi VORTAC, has necessitated this revision. This revision will expand the existing 700-foot transition area at Rockport, TX, to

include the San Jose Island Airport. It will *exclude* that portion of the transition area that lies more than 3 miles from the parallel to the shoreline. The intended effect of this revision is to provide adequate controlled airspace for aircraft executing this new SIAP. Coincident with this revision is the changing of the airport status from VFR to IFR.

The FAA has determined that this regulation only involves an established body of technical regulations for which frequent and routine amendments are necessary to keep them operationally current. It, therefore—(1) Is not a "major rule" under Executive Order 12291; (2) is not a "significant rule" under DOT Regulatory Policies and Procedures (44 FR 11034; February 26, 1979); and (3) does not warrant preparation of a regulatory evaluation as the anticipated impact is so minimal. Since this is a routine matter that will only affect air traffic procedures and air navigation, it is certified that this rule will not have a significant economic impact on a substantial number of small entities under the criteria of the Regulatory Flexibility Act.

List of Subjects in 14 CFR Part 71

Aviation safety, Transition areas.

Adoption of the Amendment

Accordingly, pursuant to the authority delegated to me, Part 71 of the Federal Aviation Regulations (14 CFR Part 71) is amended as follows:

PART 71—[AMENDED]

1. The authority citation for Part 71 continues to read as follows:

Authority: 49 U.S.C. 1348(a), 1354(a), 1510; Executive Order 10854; 49 U.S.C. 106(g) (Revised Pub. L. 97-449, January 12, 1983); 14 CFR 11.69.

§ 71.181 [Amended]

2. Section 71.181 is amended as follows:

Rockport, TX [Amended]

By adding to the end of the legal description: and within a 7-mile radius of the San Jose Island Airport (latitude 27°56'38.6"N., longitude 96°59'04.6"W.), excluding that portion more than 3 nautical miles from and parallel to the shoreline.

Issued in Fort Worth, TX, on April 6, 1988.

Larry L. Craig,

Manager, Air Traffic Division, Southwest Region.

[FR Doc. 88-8708 Filed 4-20-88; 8:45 am]

BILLING CODE 4910-13-M

Coast Guard

33 CFR Parts 95, 173, and 177

46 CFR Parts 26, 35, 78, 97, 109, 185, and 197

[CGD 84-099]

Operation Of A Vessel While Intoxicated

ACTION: Final rule; correction.

SUMMARY: The Coast Guard is correcting errors to the final rules on Operating A Vessel While Intoxicated, which appeared in the **Federal Register** on December 14, 1987 (52 FR 47526).

FOR FURTHER INFORMATION CONTACT: Mr. Sean T. Connaughton, Office of Marine Safety, Security and Environmental Protection (G-MVP), Phone (202) 267-0229.

SUPPLEMENTARY INFORMATION: The Coast Guard published the final rules on Operating A Vessel While Intoxicated, which appeared in the **Federal Register** on December 14, 1987 (52 FR 47526). That **Federal Register** notice contained several minor and non-substantive errors which are corrected by this document.

Corrections

In FR Doc. 87-28634 beginning on page 47526 in the issue of Monday, December 14, 1987, make the following corrections:

Title 33

§ 95.005 [Amended]

1. On page 47532, second column, in § 95.005(a), eighth line, insert "the" before "jurisdiction".

§ 95.010 [Amended]

2. On page 47532, third column, in § 95.010, second line under "Drug", "tha" should have read "than".

3. On page 47532, third column, in § 95.010, second line under "Vessel", "of" should have read "or".

§ 95.020 [Amended]

4. On page 47533, first column, in § 95.020(b), third line, "concentration" is misspelled.

§ 95.030 [Amended]

5. On page 47533, first column, in § 95.030(a), fourth line, "and" should have read "or".

§ 95.035 [Amended]

6. On page 47533, second column, in § 95.035(a)(2), first line, "Individual" should have read "individual".

PART 176—[AMENDED]

7. On page 47533, third column, the authority citation under Amendment 6, Part 173, is correctly revised to read:

Authority: 46 U.S.C. 6101, 12121; 49 CFR 1.46.

PART 177—[AMENDED]

8. On page 47534, first column, the authority citation under Amendment 9, Part 177, is correctly revised to read:

Authority: 46 U.S.C. 4302; 49 CFR 1.46.

§ 177.01 [Amended]

9. On page 47534, first column, in § 177.01, fourth line, "corrections" should have read "correction".

Title 46

10. On page 47535, third column, the authority citation under Amendment 20, Subpart 26.08, is correctly revised to read:

Authority: 46 U.S.C. 6101; 49 CFR 1.46.

§ 26.08-1 [Amended]

11. On page 47535, third column, in § 26.08-1, fourth line, "Chapter" should have read "chapter".

PART 35—[AMENDED]

§ 35.15-1 [Amended]

12. On page 47535, third column, in § 35.15-1, heading, insert "-TB/ALL" after "* * * and voyage records".

13. On page 47535, third column, in § 35.15-1, fourth line, "Chapter" should have read "chapter".

PART 78—[AMENDED]

14. On page 47535, third column, the authority citation under Amendment 24, Subpart 78.07, is correctly revised to read:

Authority: 46 U.S.C. 3306, 6101; 49 CFR 1.46.

PART 97—[AMENDED]

15. On page 47536, first column, the authority citation under Amendment 26, Part 97, is correctly revised to read:

Authority: 46 U.S.C. 3306, 6101, 8105; 50 U.S.C. 198; 49 CFR 1.46(b).

PART 109—[AMENDED]

16. On page 47536, first column, the authority citation under Amendment 28, Part 109, is correctly revised to read:

Authority: 43 U.S.C. 1333; 46 U.S.C. 3306, 6101, 10104; 46 App. U.S.C. 86; 49 CFR 1.46.

PART 185—[AMENDED]

17. On page 47536, second column, the authority citation under Amendment 32, Part 185, is correctly revised to read:

Authority: 46 U.S.C. 3306, 6101; 49 CFR 1.46.

PART 197—[AMENDED]

18. On page 47536, third column, the authority citation under Amendment 36, Part 197, is correctly revised to read:

Authority: 33 U.S.C. 1509(b); 43 U.S.C. 1333; 46 U.S.C. 3306, 6101; 49 CFR 1.46.

April 12, 1988.

P. C. Lauridsen,

Captain, U.S. Coast Guard, Acting Chief, Office of Marine Safety, Security and Environmental Protection.

[FR Doc. 88-8792 Filed 4-20-88; 8:45 am]

BILLING CODE 4910-14-M

---

33 CFR Parts 100 and 165

[CGD 88-022]

Safety and Security Zones; List of Temporary Rules

AGENCY: Coast Guard, DOT.

ACTION: Notice of temporary rules issued.

SUMMARY: This document gives notice of temporary safety zones, security zones, and local regulations. Periodically the Coast Guard must issue safety zones, security zones, and special local regulations for limited periods of time in limited areas. Safety zones are established around areas where there has been a marine casualty or when a vessel carrying a particularly hazardous cargo is transiting a restricted or congested area. Special local regulations are issued to assure the safety of participants and spectators of regattas and other marine events.

DATES: The following list includes safety zones, security zones, and special local regulations that were established between January 1, 1988 and March 31, 1988 and have since been terminated. Also included are several zones established earlier but inadvertently omitted from the last published list.

ADDRESS: The complete text of any temporary regulations may be examined at, and is available on request from, Executive Secretary, Marine Safety Council (G-CMC), U.S. Coast Guard Headquarters, 2100 Second Street, SW., Washington, DC 20593-0001.

FOR FURTHER INFORMATION CONTACT: Mr. Bruce Novak, Deputy Executive Secretary, Marine Safety Council at (202) 267-1477.

SUPPLEMENTARY INFORMATION: The local Captain of the Port must be immediately responsible to the safety needs of the waters within his jurisdiction; therefore, he has been delegated the authority to issue these regulations. Since events and emergencies usually take place without advance notice or warning, timely publication of notice in the **Federal Register** is often precluded. However, the affected public is informed through Local Notices to Mariners, press releases, and other means. Moreover, actual notification is frequently provided by Coast Guard patrol vessels enforcing the restrictions imposed in the zone to keep the public informed of the regulatory activity. Because mariners are notified by Coast Guard officials on scene prior to enforcement action **Federal Register** notice is not required to place the special local regulations, security zone, or safety zone in effect. However, the Coast Guard, by law, must publish in the **Federal Register** notice of substantive rules adopted. To discharge this legal obligation without imposing undue expense on the public, the Coast Guard publishes a periodic list of these temporary special local regulations, security zones, and safety zones. Permanent safety zones are not included in this list. Permanent zones are published in their entirety in the **Federal Register** just as any other rulemaking. Temporary zones are also published in their entirety if sufficient time is available to do so before they are placed in effect or terminated.

Non-major safety zones, special local regulations, and security zones have been exempted from review under E.O. 12291 because of their emergency nature and temporary effectiveness.

The following regulations were placed in effect temporarily during the period January 1, 1988 through March 31, 1988 unless otherwise indicated:

Docket No.	Location	Type	Date
COTP Pittsburgh, PA, Reg. 88-01	Monongahela River, from Mile 0.0	Safety Zone	Jan. 3, 1988.
COTP Providence, RI, Reg. 88-002	Rhode Island Sound, Narragansett Bay	do	Jan. 25, 1988.
COTP Providence, RI, Reg. 88-008	Rhode Island Sound, Narragansett Bay	do	Feb. 25, 1988.
COTP Hampton Roads, VA, Reg. 88-02	Chesapeake Bay, Hampton Roads, Elizabeth River, Southern Branch of Elizabeth River.	do	Feb. 7, 1988.
COTP Hampton Roads, VA, Reg. 88-03	Chesapeake Bay, Hampton Roads, Elizabeth River, Southern Branch of Elizabeth River.	do	Feb. 8, 1988.
COTP Miami, FL, Reg. 88-01	Main Ship Channel, Government Cut, Miami, FL	do	Jan. 3, 1988.
7-88-05	Florida St. Championships, St. Cloud, FL	Special Local Regulation	Mar. 20, 1988.
COTP Corpus Christi, TX, Reg. 87-11	Brownsville Ship, Channel, TX	Safety Zone	Dec. 9, 1987.
COTP Galveston, TX, Reg. 88-01	Galveston Channel, Galveston, TX	do	Jan. 9, 1988.
COTP Galveston, TX, Reg. 88-02	Galveston Channel, Bolivar Channel and the Inner Bar Channel, Galveston Bay.	do	Feb. 21, 1988.
COTP Houston, TX, Reg. 87-008	Houston Ship Channel, from City Dock 21 to turning Basin	do	Dec. 1, 1987.
8-88-01	Houston Ship Channel from Gulf of Mexico to Port of Houston Wharf 32.	do	Jan. 18, 1988.
COTP Houston, TX, Reg. 88-01	Houston Ship Channel, C.G. Port Safety Station, Houston to the I-610 Bridge.	Security Zone	Jan. 23, 1988.
COTP Houston, TX, Reg. 88-002	Houston Ship Channel, from I-610 Bridge to City Dock 30	Safety Zone	Jan. 23, 1988.
COTP Houston, TX, Reg. 88-003	Cedar Bayou, ½ mile in each direction from the old Cedar Bayou Highway Bridge.	do	Feb. 3, 1988.
COTP Mobile, AL, Reg. 88-01	Mobile Harbor, Mobile, AL	Security Zone	Feb. 8, 1988.
COTP San Francisco, CA, Reg. 88-1	San Francisco Bay	Safety Zone	Jan. 10, 1988.
COTP San Francisco, CA, Reg. 88-02	San Francisco Bay, CA	do	Mar. 26, 1988.
COTP LA/LB, CA, Reg. 88-03	Ports of Los Angeles/Long Beach, CA	do	Jan. 21, 1988.
COTP LA/LB, CA, Reg. 88-06	Captain of the Port Los Angeles/Long Beach, CA	do	Mar. 30, 1988.
COTP LA/LB, CA, Reg. 88-07	Ports of Los Angeles/Long Beach, CA	do	Feb. 25, 1988.
COTP LA/LB, CA, Reg. 88-08	Port of Long Beach, CA	Security Zone	Mar. 9, 1988.
COTP San Diego, CA, Reg. 88-01	San Diego Bay, CA, Pacific Ocean	Safety Zone	Jan. 7, 1988.
COTP San Diego, CA, Reg. 88-02	San Diego Bay, CA, Pacific Ocean	do	Jan. 27, 1988.
COTP San Diego, CA, Reg. 88-03	San Diego Bay, CA, Pacific Ocean	do	Feb. 16, 1988.
COTP San Diego, CA, Reg. 88-04	San Diego Bay, CA, Pacific Ocean	do	Mar. 2, 1988.
COTP San Diego, CA, Reg. 88-05	San Diego Bay, CA, Pacific Ocean	do	Mar. 15, 1988.
COTP San Diego, CA, Reg. 88-07	San Diego Bay, CA, Pacific Ocean	do	Mar. 23, 1988.
COTP San Diego, CA, Reg. 88-08	Coronado Roads, San Diego, CA, Pacific Ocean	Safety Zone	Mar. 29, 1988.
11-88-01	International Waterski Race; Lake Moovalya on the Colorado River.	Special Local Regulation	Mar. 19, 1988.
COTP Honolulu, HI, Reg. 88-02	Outer Apra Harbor, Guam, Marianas Islands	Security Zone	Feb. 4, 1988.
COTP Honolulu, HI, Reg. 88-03	Outer Apra Harbor, Guam, Marianas Islands	do	Feb. 9, 1988.

Date: April 14, 1988.

J.J. Smith,

Captain, U.S. Coast Guard, Executive Secretary, Marine Safety Council.

[FR Doc. 88-8793 Filed 4-20-88; 8:45 am]

BILLING CODE 4910-14-M

33 CFR Part 165

[COTP Baltimore, MD Regulation 88-03]

Safety Zone Regulation; Brewerton Channel Eastern Extension, Upper Chesapeake Bay

AGENCY: Coast Guard, DOT.

ACTION: Emergency rule.

SUMMARY: The Coast Guard Marine Safety Office Baltimore is establishing a safety zone in the Brewerton Channel Eastern Extension, Upper Chesapeake Bay. This zone is needed to protect vessels from a hazard associated with the dredging of the Brewerton Channel Eastern Extension. Entry into this zone by vessels in excess of 300 feet length overall and vessels with tows of a

combined tug and tow length overall in excess of 300 feet is prohibited unless authorized by the Captain of the Port Baltimore, Maryland.

EFFECTIVE DATE: This regulation is effective at 6:00 am local on 11 April 1988, and terminates at 8:00 am local on 30 April 1988 unless terminated sooner by Captain of the Port Baltimore, Maryland.

FOR FURTHER INFORMATION CONTACT: Commander L. I. McClelland, Chief, Port Operations Department, USCG Marine Safety Office, Custom House, 40 South Gay Street, Baltimore, Maryland 21202-4022, (301) 962-5105.

SUPPLEMENTARY INFORMATION: A notice of proposed rulemaking was not published for this regulation and it is being made effective in less than 30 days from the date of this publication. Publishing a NPRM and delaying the effective date of this safety zone would be contrary to the public interest since immediate action is needed to safeguard watercraft and their occupants and the surrounding waters on the scheduled date.

Drafting Information

The drafters of this regulation are Lieutenant F. L. Propst, project officer for the Captain of the Port Baltimore, Maryland and Commander R. J. Reining, project attorney, Fifth Coast Guard District Legal Office.

Discussion of Regulation

The operation requiring this regulation will involve the dredging of the eastern end of the Brewerton Channel Eastern Extension by Great Lakes Dredge & Dock Company. This dredging operation will constrict the channel and present a hazard to large transiting vessels. The dredges will be deepening and widening the present channel. The dredges will be accompanied by spoil barges and tugs. This dredging operation will substantially reduce the safe navigation of the channel by vessels.

This regulation is issued pursuant to 33 U.S.C. 1225 and 1231 as set out in the authority citation for all of Part 165.

List of Subjects in 33 CFR Part 165

Harbors, Marine safety, Navigation (water), Security measures, Vessels, Waterways.

Regulation

In consideration of the foregoing, Subpart C of Part 165 of Title 33, Code of Federal Regulations, is amended as follows:

PART 165—[AMENDED]

1. The authority citation for Part 165 continues to read as follows:

Authority: 33 U.S.C. 1225 and 1231; 50 U.S.C. 191; 49 CFR 1.46 and 33 CFR 1.05-1(g), 6.04-1, 6.04-6, and 160.5.

2. A new § 165.T0520 is added to read as follows:

§ 165.T0520 Safety Zone: The Brewerton Channel Eastern Extension, Upper Chesapeake Bay, Baltimore, Maryland.

(a) *Location.* The following area is a safety zone: The Brewerton Channel Eastern Extension, bounded on the eastern end by the Upper Chesapeake Channel lighted buoy "7" light list number 3625, approximate position 39°08'52"N 076°19'20"W, thence southwest on a bearing of 225T to approximate position 39°08'40"N 076°19'35"W. On the western end by the Craighill Channel lighted buoy "20C" light list number 3360, approximate position 39°10'42"N 076°25'57"W, thence southeast on a bearing of 148T to approximate position 39°10'35"N 076°25'52"W.

(b) *Effective date.* This regulation becomes effective on 6:00 am local 11 April 1988. It terminates at 8:00 am local 30 April 1988, unless sooner terminated by the Captain of the Port, Baltimore, Maryland.

(c) *Regulations.* (1) A vessel in excess of 300 feet length overall or a vessel with tow of a combined tug and tow length overall in excess of 300 feet may not enter the safety zone without the permission of the Captain of the Port Baltimore, Maryland, or his designated representative.

(2) Any vessel operating within the zone shall comply with the directions of the Captain of the Port Baltimore, Maryland or his designated representative.

(3) The Captain of the Port Baltimore, Maryland has designated the Officer of the Day, Marine Safety Office, Baltimore, Maryland as his representative. He may also from time to time designate a Coast Guard commissioned, warrant, or petty officer as his representative.

Dated: April 8, 1988.

J. H. Parent,

Captain, U.S. Coast Guard, Captain of the Port Baltimore, Maryland.

[FR Doc. 88-8794 Filed 4-20-88; 8:45 am]

BILLING CODE 4910-14-M

DEPARTMENT OF COMMERCE

Patent and Trademark Office

37 CFR Part 10

[Docket No. 40788-8069]

Practice Before the Patent and Trademark Office, Correction

AGENCY: Patent and Trademark Office, Commerce.

ACTION: Final rule; correction

SUMMARY: On February 6, 1985, final rules regarding the representation of others before the Patent and Trademark Office were issued. (50 FR 5172, February 6, 1985.) This notice makes a technical correction to the second sentence in § 10.157(a) to reflect the Local Rule designation currently used by the U.S. District Court for the District of Columbia.

EFFECTIVE DATE: March 1, 1988.

FOR FURTHER INFORMATION CONTACT: Nancy C. Slutter by telephone at (703) 557-4035 or by mail marked to her attention and addressed to Box 8, Commissioner of Patents and Trademarks, Washington, DC 20231.

SUPPLEMENTARY INFORMATION:

PART 10—REPRESENTATION OF OTHERS BEFORE THE PATENT AND TRADEMARK OFFICE

1. The authority citation for 37 CFR Part 10 continues to read as follows:

Authority: 5 U.S.C. 500; 15 U.S.C. 1123; 35 U.S.C. 6, 31, 32, 41.

§ 10.157(a) [Corrected]

2. The reference in § 10.157, paragraph (a), the second sentence, to "1-26" is corrected to read "213".

Date: April 13, 1988.

Donald W. Peterson,

Deputy Assistant Secretary and Deputy Commissioner of Patents and Trademarks.

[FR Doc. 88-8743 Filed 4-20-88; 8:45 am]

BILLING CODE 3510-16-M

VETERANS ADMINISTRATION

38 CFR Part 17

Use of Community Nursing Home Care Facilities

AGENCY: Veterans Administration.

ACTION: Final regulation.

SUMMARY: The Veterans Administration (VA) is amending its medical regulations (38 CFR Part 17) to clarify those provisions under which an extension of

nursing home care may be granted. This amendment will further explain a benefit already available to eligible veterans.

EFFECTIVE DATE: May 23, 1988.

FOR FURTHER INFORMATION CONTACT: James R. Kelly, Office of Geriatrics and Extended Care, Department of Medicine and Surgery, Veterans Administration, 810 Vermont Avenue NW., Washington, DC 20420, (202) 233-3692.

SUPPLEMENTARY INFORMATION: Four comments were received concerning the proposed regulatory amendment published on pages 22351 and 22352 in the **Federal Register** of June 11, 1987. None of the comments support the regulation.

Two commenters emphasized the need for a longer extension period in order to (1) make veteran placement more attractive to the nursing home and (2) cover some instances in which applications for public assistance are delayed longer than 45 days.

The position of the VA in regard to these comments respectively is that (1) the extension should not be used to make veteran placement attractive to a nursing home; rather, a contract per diem rate should be negotiated which adequately compensates the nursing home for care provided, and (2) the instances in which the application for public assistance are delayed longer than 45 days beyond the first 180 days of VA payment are so rare that they should not be addressed in the regulation.

The third commenter pointed out that in the Commonwealth of Puerto Rico, there are very limited public resources for the support of nursing home care and that longer extensions are necessary to cover the cost of care for veterans with low incomes. This very specific concern will not be addressed in this regulation, but will be studied by the VA and a subsequent regulation may be issued, if necessary.

The fourth commenter expressed the concern that the proposed regulation eliminates flexibility in the application of extensions, and that it will make competition to obtain nursing home beds more difficult for a growing nonservice-connected veteran population in need of such care. It is the intention of this regulation to clarify the circumstances of extension, and to reduce possibilities of inequitable application of current imprecise guidance. We believe the proposed regulation accomplishes this objective. We do not believe that the 45-day rule will reduce access of nonservice-connected veterans to community nursing homes. As noted earlier, the instances in which applications for public assistance are delayed longer than 45 days beyond the first 180 days of VA payment are very rare.

In summary, we find that no compelling reasons were presented by the commenters to warrant modification of the proposed regulations. Therefore, this regulatory amendment is made final without change. The VA appreciates the interest of the commenters.

This amendment to 38 CFR is considered nonmajor under the criteria of Executive Order 12291, Federal Regulation. It will not have annual effect on the economy of $100 million or more; result in major increases in costs for consumers, individual industries, Federal, State or local government agencies, or geographic regions; have significant adverse effects on competition, employment, investment, productivity, innovation, or on the ability of United States-based enterprises to compete with foreign-based enterprises in domestic or export markets.

The Administrator has certified that this amendment will not have a significant economic impact on a substantial number of small entities as they are defined in the Regulatory Flexibility Act, 5 U.S.C., 601-612. This amendment concerns the criteria by which the placement of a veteran in a public or private nursing home care facility at VA expense may be extended beyond six months. Such extensions are the exceptions, not the norm, and concern only the eligibility of individual veterans. This proposed amendment imposes no economic, regulatory, or administrative burdens on small entities. One effect of this amendment will be to expedite arrangements for alternative third-party reimbursement for continued placement, generally through Medicare or Medicaid.

Catalog of Federal Domestic Assistance Numbers: 64.009 and 64.011.

List of Subjects in 38 CFR Part 17

Alcoholism, Claims, Dental health, Drug abuse, Foreign relations, Government contracts, Grants programs—health, Health care, Health facilities, Health professions, Incorporation by reference, Medical devices, Medical research, Mental health programs, Nursing homes, Veterans.

Approved: March 28, 1988.

Thomas K. Turnage,

Administrator.

PART 17—[AMENDED]

38 CFR Part 17, *Medical*, is amended by revising § 17.51a to read as follows:

§ 17.51a Extensions of community nursing home care beyond six months.

Directors of health care facilities may authorize, for any veteran whose hospitalization was not primarily for a service-connected disability, an extension of nursing care in a public or private nursing home care facility at VA expense beyond six months when the need for nursing home care continues to exist and

(a) Arrangements for payment of such care through a public assistance program (such as Medicaid) for which the veteran has applied, have been delayed due to unforeseen eligibility problems which can reasonably be expected to be resolved within the extension period, or

(b) The veteran has made specific arrangements for private payment for such care, and

(1) Such arrangements cannot be effectuated as planned because of unforseen, unavoidable difficulties, such as a temporary obstacle to liquidation of property, and

(2) Such difficulties can reasonably be expected to be resolved within the extension period; or

(c) The veteran is terminally ill and life expectancy has been medically determined to be less than six months.

(d) In no case may an extension under paragraph (a) or (b) of this section exceed 45 days.

(Authority: 38 U.S.C. 210 (c)(1); 620(a))

[FR Doc. 88-8800 Filed 4-20-88; 8:45 am]

BILLING CODE 8320-01-M

ENVIRONMENTAL PROTECTION AGENCY

40 CFR Part 52

[EPA Docket No. AMO44PA; FRL-3350-1]

Approval and Promulgation of Implementation Plans for the Commonwealth of Pennsylvania

AGENCY: U.S. Environmental Protection Agency.

ACTION: Final rule.

SUMMARY: EPA is approving a request from the Commonwealth of Pennsylvania to revise the Pennsylvania State Implementation Plan (SIP) with respect to volatile organic compound (VOC) emissions offset transactions in Bucks County, PA. The revision implements two offset transactions between Paramount Packaging Corporation (Chalfont Borough, Bucks County) and National Can Corporation (Falls Township, Bucks County) and

between Fres-co Systems USA, Inc. (Telford Borough, Bucks County) and National Can Corporation. These offset transactions are being implemented through External Orders issued by the Pennsylvania Department of Environmental Resources to the National Can Corporation to maintain the offsets.

EFFECTIVE DATE: May 23, 1988.

ADDRESSES: Copies of the revision and accompanying documents are available during normal business hours at the following offices:

U.S. Environmental Protection Agency, Region III, Air Management Division, 841 Chestnut Building, Eighth Floor, Philadelphia, Pennsylvania 19107, Attn: Esther Steinberg (3AM11)

Commonwealth of Pennsylvania, Department of Environmental Resources, Bureau of Air Quality Control, 700 North 3rd Street, Harrisburg, Pennsylvania 17120 Attn: Gary Triplett

Public Information Reference Unit, Library Systems Branch, Environmental Protection Agency, 401 M Street SW., Washington, DC 20460.

FOR FURTHER INFORMATION CONTACT: Donna Abrams (3AM11) at the EPA, Region III address above or call (215) 597-9134.

SUPPLEMENTARY INFORMATION: The Department of Environmental Resources (the Department) adopted Subchapter C of Chapter 127 of the Pennsylvania Air Resource Regulations in 1979 in response to requirements of the Clean Air Act. Subchapter C establishes special permit requirements for sources locating in or significantly impacting nonattainment areas. In part, Subchapter C requires new sources to obtain emission reductions (offsets) to alleviate the ambient impact of the new source. These offsets may be created internally (within the same facility as the new source) or externally (at a different facility).

National Can Corporation discontinued their coater and litho operations on December 1, 1981, leaving an emission credit of 215 tons per year (TPY) of VOC. In accordance with previously approved regulations, these emissions were applied to new source(s) application at a ratio of 1.3 to 1. Also, on September 2, 1983, National Can Corporation discontinued their end seam compound liner operations leaving an emission credit of 162 TPY of VOC. These emissions were also applied to a new source(s) application at a ratio of 1.3 to 1. Therefore, for these discontinued operations the VOC credits are:

(a) Coater and Litho— $\frac{215}{1.3} = 165$ TPY of VOC

(b) End Seam Compound Liner—

$\frac{162}{1.3} = 125$ TPY of VOC

The Company had a total of 290 TPY of VOC emission credit that was available to bank or sell.

On October 18, 1983, National Can Corporation submitted an application to the Department to bank the VOC emissions generated by the shutdown of their end seam compound liner operations at its Morrisville Plant (Falls Township, Bucks County). On January 25, 1984, the Department approved National Can Corporation's banking application for 125 tons VOC per year. National Can Corporation could use these emission credits themselves or sell them to someone else.

On April 13, 1984, National Can Corporation advised the Department that it sold 46 tons per year of emission credit to Paramount Packaging Corporation. On June 12, 1984, National Can Corporation notified the Department that it had transferred 85 tons per year of emission credit to Fres-co Systems USA, Inc. The total emission credit transferred by National Can Corporation was 131 tons per year. The quantity available was 125 tons per year. Therefore, the sales of emission credit were 6 tons per year greater than that available for sale. EPA has required that National Can Corporation account for the above oversale.

In a letter dated August 21, 1985, the Department has agreed to account for the 6 TPY oversale by permanently reducing National Can's banked VOC emissions, generated by the shutdown of the coater and litho operations, from 165 TPY to 159 TPY.

On September 13, 1982, National Can petitioned the Department to bank the VOC credit from the shutdown of the coater and litho operations for future use at their Lehigh Valley facility. On October 29, 1982, the Department informed National Can that the banked VOC emission credit could only be used at their Fairless Hills plant or at a location within forty (40) miles door to door of the Fairless Hills plant. Therefore, the emissions from their Fairless Hills plant could not be used to offset emissions at their Lehigh Valley facility.

Subsequently, in September 1983, National Can again petitioned the Department to approve the banking of the credit from the shutdown of the Coater and litho operations for future sale to another company in the area. According to the Pennsylvania SIP, a company has only one year from shutdown to let the Department know if they are going to use the banked emission credit for resale. Therefore, approval of the banking of this credit would deviate from the Pennsylvania regulations. The application for the banking of this credit also did not include a construction schedule for the modification of the Fairless Hills facility or the construction of a new source as required by the regulations. Despite the lack of a construction schedule, Pennsylvania approved the banking of this emission credit (162 TPY) for internal use only. EPA believes this is a minor deviation and does not consider it to be sufficient to warrant disapproval of this SIP action. As stated earlier, DER reduced this banked credit to account for the 6 TPY oversale. Again, EPA does not think this deviation is sufficient enough to warrant EPA non concurrence on this offset transaction.

The Pennsylvania Federally approved SIP requires that emissions resulting from the new source not cause or contribute to emission levels which exceed the levels allowed for that pollutant in that area. The EPA has interpreted this to require that (1) emission offsets are greater than the emissions from the new source, and (2) the emission offsets be permanent. The Department has required the offsets to be used at a ratio of 1.3 to 1 which satisfies the first requirement. The Department must also establish that the emission offsets are permanent.

The National Can Corporation generated the offset credit through the closing of the end seam compound liner operations. For the emission reduction used as offset to be permanent, National Can Corporation may not restart the source. The Department has ensured the permanence of these emission reductions by issuing External Orders that require the National Can

Corporation to maintain the shutdown status of this source. Two Orders were issued on March 1, 1985, because of the two separate transactions.

It is important to note that according to the currently approved Pennsylvania SIP, National Can Corporation may restart the source used to generate the emission credits if National Can secured emission offset credits equal to what it sold to Paramount and Fres-co. Section 127.73 of the Pennsylvania Air Resource Regulations establishes the requirements for this reactivation. In accordance with these requirements, National Can Corp. would be required to obtain offsets for its reactivated source at a ratio of 1.3 to 1. This will guarantee that the overall emission levels do not increase in the nonattainment area.

On February 13, 1985, the Commonwealth of Pennsylvania submitted the above offset transactions as a SIP revision to EPA for review and approval. The SIP revision is comprised of a narrative portion, two External Orders for each offset transaction dated March 1, 1985, and a supplemental letter submitted by the Department dated August 21, 1985, specifying that National Can's banked VOC emissions will permanently be reduced by 6 TPY to account for the oversale. In a letter dated April 9, 1986, EPA notified the Department that we would process this package, but, in the future, we would not process any offset transaction which varies from the Pennsylvania SIP approved regulations, no matter how minor the variation may be. As a result of this revision in the **Federal Register** on October 22, 1985 (51 FR 37418). No comments were received as a result of this rulemaking action.

EPA's decision to approve this revision is based on a determination that, even though this transaction varies slightly from the State offset requirements, the variation is insignificant. Therefore, the revision adequately meets the requirements of the Federally approved State regulations. The Department, under previously approved regulations that require banking at a 1.3 to 1 ratio, is able to ensure that the offsets are greater than the emissions from the new source. Additionally, EPA is approving this revision based on a determination that the revision meets the requirements of section 110(a)(2) of the Clean Air Act. Specifically, EPA is approving the following three SIP revisions submitted by the State:

(i) The Order issued March 1, 1985, requiring that the coater and litho operations remain permanently closed.

(ii) The Order issued March 1, 1985, requiring that the end seam compound liner remain permanently closed.

(iii) The letter dated August 21, 1985, from the Department, permanently reducing National Can's banked emissions by 6 TPY.

The State did not request approval of, and EPA is not approving, any use of the National Can credits, including the amount of credits available for use. Approval of such use would depend on whether the applicable EPA policies are met. For example, if an existing source seeks to use any of the credits for relaxation of emission limits, the baseline requirements and other requirements of the Emissions Trading Policy Statement, 51 FR 43814 (December 4, 1986) must be met.

The Office of Management and Budget has exempted this rule from the requirements of section 3 of Executive Order 12291.

Under section 307(b)(1) of the Act, petitions for judicial review of this action must be filed in the United States Court of Appeals for the appropriate circuit on or before June 20, 1988. This action may not be challenged later in proceedings to enforce its requirements (see 307(b)(2)).

List of Subjects in 40 CFR Part 52

Air pollution control, Ozone, Hydrocarbons, Incorporation by Reference, Intergovernmental relations, Reporting and Recording requirements.

Note.—Incorporation by reference of the State Implementation Plan for the State of Pennsylvania was approved by the Director of the **Federal Register** on July 1, 1982.

Date: March 6, 1988.

Lee M. Thomas,

Administrator.

For the reasons set out in the preamble, Title 40 of the Code of Federal Regulations, is amended as set forth below.

PART 52—[AMENDED]

Subpart NN—Pennsylvania

1. The authority Citation for Part 52 continues to read as follows:

Authority: 42 U.S.C. 7401–7462.

2. Section 52.2020 is amended by adding paragraph (c) (68) to read as follows:

§ 52.2020 Identification of plan.

* * * * *

(c) * * *

(68) Revision to the Pennsylvania State Implementation Plan dated February 13, 1985, which implements two VOC offset transactions between Paramount Packaging Corporation and National Can Corporation and between Fres-co Systems USA, and National Can Corporation.

(i) *Incorporation by reference.* (A) Pennsylvania Department of Environmental Resources, Order for the External Transfer of Banked Emissions #85–524, signed on March 1, 1985.

(B) Pennsylvania Department of Environmental Resources, Order for the External Transfer of Banked Emissions #85–525, signed on March 1, 1985.

(C) Letter dated August 21, 1985, from the Department of Environmental Resources to the National Can Corporation.

(ii) *Additional material.* (A) Narrative submittal dated February 13, 1985, from the Department of Environmental Resources to EPA.

(B) Letter dated April 25, 1986, from the Department of Environmental Resources to EPA.

[FR Doc. 88–6189 Filed 4–20–88; 8:45 am]

BILLING CODE 6560-50-M

Proposed Rules

Federal Register
Vol. 53, No. 77
Thursday, April 21, 1988

This section of the FEDERAL REGISTER contains notices to the public of the proposed issuance of rules and regulations. The purpose of these notices is to give interested persons an opportunity to participate in the rule making prior to the adoption of the final rules.

OFFICE OF PERSONNEL MANAGEMENT

5 CFR Parts 300 and 531

Delegation of Authority to Agencies

AGENCY: Office of Personnel Management.

ACTION: Proposed rules.

SUMMARY: The Office of Personnel Management (OPM) proposes to remove the requirement for agencies to have delegation agreements in order to approve certain personnel actions. All agencies will now be able to approve superior qualifications appointments, waivers of time in grade requirements based on hardship or inequity, and training agreements within the limits formerly specified in delegation agreements.

DATE: Comments must be received on or before June 20, 1988.

ADDRESS: Send or deliver written comments to Curtis J. Smith Associate Director for Career Entry, Office of Personnel Management, Room 6F08, 1900 E Street NW., Washington, DC 20415.

FOR FURTHER INFORMATION CONTACT: Tracy E. Spencer, (202) 632-6817.

SUPPLEMENTARY INFORMATION: In 1979, OPM used the authority granted by the Civil Service Reform Act to delegate to agencies authority to approve various personnel actions that previously had to be approved by OPM. Some of these authorities were delegated directly, but others required agencies to negotiate delegation agreements. The requirement for agreements had two main purposes. First, the agreements served as a safeguard against misuse of the authorities by setting out specific criteria for approval, by requiring annual reports, and by providing for withdrawal of delegated authority from any agency that seriously misused it. Second, the authorities covered by agreements could be tailored to each agency so an agency would not have to establish policies or evaluation procedures for authorities it did not use.

The agreements are still useful to permit selective delegation of authorities that are used by only a few agencies. However, agreements are not needed to ensure proper use of the more common authorities. Most agencies have had agreements covering those authorities for several years and have used the authorities properly. The reporting requirements contained in the agreements merely create an unnecessary paperwork burden.

Therefore, we propose to eliminate the requirement for agreements in connection with the commonly used authorities. The applicable regulations and instructions will, however, include limits on agencies' delegated authority previously contained in delegation agreements to ensure that extreme or atypical cases are reviewed and approved by OPM. Specifically, the changes proposed are as follows:

Waiver of time in grade requirements based on undue hardship or inequity (5 CFR 300.603). The proposed regulations would removed the requirement for a delegation agreement for approval of a promotion of no more than three grades and would set out the definitions of hardship or inequity to be used in making the determination. All waivers involving promotions of more than three grades would have to be approved by OPM.

Appointments above the minimum rate in grades GS-11 and above based on the appointees' superior qualifications (5 CFR 531.203(b)). The proposed regulations would remove the requirement for a delegation agreement when salaries set under the regulation do not exceed the candidates' existing pay by more than 20 percent.

Training agreements. Agencies would be delegated authority to develop and implement plans under when intensive training is to be used as a substitute for time in grade requirements, as long as the plans did not permit consecutive accelerated promotions of any trainees. Plans providing for consecutive accelerated promotions will continue to require OPM approval. Agreements approved under this delegated authority would have to be consistent with instructions set out in the FPM, with merit promotion policy, and other applicable laws and requirements.

OPM also plans to revise the FPM to delegate to agencies authority to approve training agreements under which intensive training may be substituted for normal qualifications requirements, and authority to approve payment of candidates' travel expenses for interviews when a position at grade GS-10 or above is so unique in terms of its duties, responsibilities, and/or performance requirements that a preemployment interview is necessary for a final determination of applicants' qualifications. Instructions for use of these additional delegations will be published in an appropriate FPM issuance.

E.O. 12291, Federal Regulation

I have determined that this is not a major rule as defined under section 1(b) of E.O. 12291, Federal Regulation.

Regulatory Flexibility Act

I certify that this regulation will not have a significant economic impact on a substantial number of small entities because the regulations affect only the procedures used to appoint and assign certain Federal employees.

List of Subjects

5 CFR Part 300

Administrative practice and procedure, Government employees.

5 CFR Part 531

Administrative practice and procedure, Government employees, Wages.

Office of Personnel Management.

Constance Horner,

Director.

Accordingly, OPM proposes to amend 5 CFR Parts 300 and 531 as follows:

PART 300—EMPLOYMENT (GENERAL)

1. The authority citation for Part 300 is revised as set forth below, and the authorities following individual sections and subparts are removed:

Authority: 5 U.S.C. 552, 3301, 3302; E.O. 10577, 3 CFR 1954-1958 Comp., p. 218. Secs. 300.101 through 300.104 also issued under 5 U.S.C. 7151, 7154; E.O. 11478, 3 CFR 1966-1970 Comp., p. 803. Sec. 300.104 also issued under 5 U.S.C. 7701 et seq. Sec. 300.301 also issued under 5 U.S.C. 3324. Sec. 300.603 also issued under 5 U.S.C. 1104.

2. In § 300.603, paragraph (a)(1) is revised, paragraph (a)(4) is removed, and new paragraphs (d) and (e) are added to read as follows:

§ 300.603 Exceptions to restrictions.

(a) Section 300.602 of this part does not prevent the advancement of an employee when:

(1) The advancement is made under the provisions of a training agreement established in accordance with instructions in Chapter 338 of the Federal Personnel Manual. However, an agency may not make promotions of more than two grades in 1 year solely on the basis of a training agreement or a series of training agreements, and may not approve training agreements that provide for consecutive promotions of any employee at rates exceeding those prescribed in § 300.602 of this part. Training agreements that provide for consecutive accelerated promotions must be approved by OPM.

* * * * *

(d) Section 300.602 (a) and (b) of this part does not prevent the advancement of an employee to a position no more than three grades above the employee's current grade when:

(1) The employee meets all other qualification requirements for the position; and

(2) The agency head or his or her designee determines that waiver of the time in grade requirements is needed to avoid undue hardship to the agency or inequity to the employee resulting from an unavoidable situation that cannot be corrected through valid actions other than promotion of the particular employee. Each promotion authorized under this paragraph must be approved individually by the agency head or his or her designee.

(e) Section 300.602 (a) and (b) does not prevent the advancement of an employee in a situation not covered by paragraphs (a) through (d) when OPM authorizes the advancement to avoid undue hardship or inequity, in an individual case of a meritorious nature.

PART 531—PAY UNDER THE GENERAL SCHEDULE

3. The authority citation for Part 531 is revised to read as follows, and the authority citations following any subparts or sections are removed.

Authority: 5 U.S.C. 5115, 5338, and chapter 54; Section 531.203 issued under 5 U.S.C. 5333 and 5334; Section 531.204 issued under 5 U.S.C. 5334 and 5402; Section 531.205 issued under 5 U.S.C. 5305 and 5402, E.O. 11721, as amended; Section 531.305 issued under 5 U.S.C. 5333, E.O. 11721, as amended; Subpart D issued under 5 U.S.C. 5301, 5335, and 5338, E.O. 11721, as amended; Subpart E issued under 5 U.S.C. 5336 and 5338, E.O. 11721, as amended.

4. In § 531.203, paragraph (b)(1) is revised to read as follows:

§ 531.203 General provisions.

* * * * *

(b) *Superior qualifications appointments.* (1) A "superior qualifications appointment" means an appointment to a position in Grade 11 or above of the General Schedule made at a rate above the minimum rate of the appropriate grade under authority of section 5333 of title 5, United States Code, because of the superior qualifications of the candidate. Prior approval of OPM is required if the proposed rate exceeds the candidate's existing pay by more than 20 percent (unless the position is in the Library of Congress).

* * * * *

FR Doc. 88-8791 Filed 4-20-88; 8:45 am]
BILLING CODE 6325-01-M

DEPARTMENT OF AGRICULTURE

Foreign Agriculture Service

7 CFR Parts 11 and 1550

Foreign Market Development Program

AGENCY: Foreign Agricultural Service, USDA.

ACTION: Proposed rule.

SUMMARY: This proposed rule would update existing regulations with respect to the conduct of foreign market development programs utilizing public or private U.S. entities. The proposal also includes new provisions designed to ensure that the benefits generated by the programs are as broadly distributed throughout the relevant agricultural sector(s) as feasible and, particularly, that no U.S. firm or individual derive an unfair advantage or benefit from program activities.

DATE: Comments on this proposed rule must be received by June 20, 1988.

ADDRESSES: Interested persons are invited to submit written comments to: Chief, Marketing Programs Staff, Commodity and Market Programs, Foreign Service, USDA, Room 4932-S, Washington, DC 20250-1000.

All comments received will be available for public inspection during regular business hours at the U.S. Department of Agriculture, Room 4932—South Building, 14th and Independence Avenue SW., Washington, DC 20250-1000.

FOR FURTHER INFORMATION CONTACT: Elizabeth H. Callahan, Chief, Marketing Programs Staff, Foreign Agricultural Service, USDA. Telephone: (202) 447-5521.

SUPPLEMENTARY INFORMATION: This action has been reviewed under USDA procedures established in accordance with Executive Order 12291 and Departmental Regulation 1512-1 and has been classified as "non-major." It has been determined that this rule will not result in an annual effect on the economy of $100 million or more; will not cause a major increase in costs to consumers, individual industries, Federal, State or local government agencies or geographic regions; and will not have an adverse effect on competition, employment, investment, productivity, innovation, or the ability of U.S. based enterprises to compete with foreign based enterprises in domestic or export markets.

It has been determined that the Regulatory Flexibility Act is not applicable to this proposed rule since the Foreign Agricultural Service is not required by 5 U.S.C. 553 or any other provision of law to publish a notice of proposed rule making with respect to the subject matter of this rule.

The collection of information requirements of this proposed rule have been submitted to the Office of Management and Budget for review under section 3504(h) of the Paperwork Reduction Act.

This action will not have a significant impact specifically upon area and community development. Therefore, review as established by Executive Order 12372 was not used to assure that units of local government are informed of this action.

General Background

This proposed rule updates the regulations appearing at 7 CFR Part 11, Subpart B (7 CFR 11.51-11.61). The rule also includes new provisions governing participation in foreign market development activities conducted by FAS.

FAS conducts foreign market development activities to promote exports of U.S. agricultural commodities under section 601 of the Agricultural Act of 1954 (7 U.S.C. 1761). One of these activities is a program generally conducted with U.S. nonprofit agricultural trade associations, referred to as "Cooperators", for the development of foreign markets for specific commodities. FAS enters into a cooperative agreement with the respective Cooperator and provides funds for export promotion activities. These agreements, commonly referred to as "Market Development Project

Agreements", delineate the responsibilities and obligations of the Cooperator. The Cooperator contributes resources to the program, usually in an amount equivalent to one-half the cost of the program. Eligible resources include cash or goods and services contributed by the U.S. Cooperator, its members, and/or foreign third parties. The Cooperator is reimbursed by FAS for authorized expenses incurred pursuant to "annual marketing plans" approved in advance by FAS. FAS approval of programs is based on the following criteria: Probable success in maintaining or increasing foreign consumption and U.S. exports of the subject U.S. agricultural commodities; the potential long range contribution of the program to U.S. agricultural exports and relative importance of exports to the subject commodities and to U.S. agricultural and U.S. balance of payments; compatibility with U.S. foreign policy; the ability of the applicant to provide competent U.S. based staff and other resources to assure adequate development, supervision and execution of program activities; the extent to which the Cooperator represents U.S. commodity interests; the willingness and ability of private organizations to back up the Cooperator's promotional activities with aggressive selling and adequate supplies of commodities of the quality desired by foreign buyers; competition in the market and cultural, political and economic obstacles which might restrict exports of U.S. agricultural commodities into world markets.

Another foreign market development activity administrated by FAS is the Export Incentive Plan (EIP) in which FAS enters into cooperative agreements with private U.S. companies for promotion of brand named agricultural products. The types of activities authorized in the EIP program are more limited than the Cooperator program and are specifically identified in each agreement.

Market development activities may also be carried out by FAS under the authority of section 5(f) of the Commodity Credit Corporation (CCC) Charter Act when such activities have been authorized by the CCC Board of Directors or the Secretary.

FAS also administers the Targeted Export Assistance (TEA) program established pursuant to section 1124 of the Food Security Act of 1985, as amended (7 U.S.C. 1736s), which provides export promotion assistance for U.S. agricultural commodities, the exports of which have been adversely affected by unfair foreign trade practices. Section 1124 requires that priority assistance be provided for U.S. agricultural commodities which have received a favorable decision under section 301 of the Trade Act of 1974 and for those the exports of which have suffered retaliatory action as a consequence of a favorable section 301 decision. Administrative procedures in the TEA program parallel those of the foreign market development Cooperator and EIP program. The Administrator of FAS, in his capacity as Vice President of CCC, enters into TEA agreements with U.S. nonprofit agricultural trade associations or with private U.S. companies ("TEA Participants") which obligate a specified amount of CCC resources for the purpose of reimbursing the TEA Participant for eligible costs incurred in conducting export promotion activities approved in advance by FAS. A **Federal Register** Notice announcing the TEA program for fiscal year 1988 was published June 3, 1987, at 52 FR 20764. That notice further describes the TEA program.

Title I of Pub. L. 480, as amended by section 1111 of the Food Security Act of 1985, authorizes the use of foreign currencies received from the concessional financing of sales of agricultural commodities to fund market development activities overseas. Accordingly, FAS may enter into agreements specifying funding in foreign currency received pursuant to Title I, Pub. L. 480.

This proposed rule updates regulations applicable to FAS' foreign market development programs presently in 7 CFR Part 11, Subpart B, by revising legal citations and terminology and updating references to FAS programs. As revised, the regulations would now appear in 7 CFR Part 1550.

The proposed rule sets forth requirements applicable to participation in FAS market development programs. It is the policy of FAS that the benefits of the market development programs be as broadly distributed as feasible throughout the relevant U.S. agricultural sector and that no U.S. firm or entity derive an unfair advantage from program activities. The new provisions which would be uniformly applicable to all participants, are intended to eliminate any real or potential conflicts of interest in the foreign market development programs. It has been determined that more specific guidance was needed regarding what constituted conflict of interest in the market development programs and specific provisions were required to preserve the integrity and reputation of the market development programs. Written comments received from cooperators pursuant to an earlier survey requesting views on this subject will be available for public inspection.

This proposed rule sets forth requirements applicable to all cooperative market development agreements with U.S. trade organizations, except those with private U.S. entities for the promotion of brand identified products. The rule would require that entities entering into the market development agreements, their parent organizations affiliates and subsidiaries (1) not engage in the export of commodities promoted under the agreements; (2) not assess fees for services provided to individual exporters in facilitating an export sale, if market development program resources were used for any activities intended to result in that specific sale; (3) not promote their private self-interests or conduct private business, except as part of an approved sales team; (4) submit to FAS for its approval, criteria for the selection of industry representatives to participate in activities including the selection of U.S. firms to participate in U.S. brand-identified promotions and; (5) distribute on a timely basis, upon request of any U.S. trade entity, all data developed with project funds or participants' resources if the expense was claimed as a contribution to the program.

The proposed rule would help to ensure that market promotion activities are carried out to increase U.S. exports in general rather than to generate revenues for the participants' organizations. No Cooperator or TEA Participant, for example, or their respective parent organizations, subsidiaries or affiliates will be able to export the commodity it promotes through either program. There is no prohibition, however, against those entities participating in the domestic trading of the commodity. If a Cooperator or TEA Participant sponsors a sales team abroad or organizes U.S. entities' participation in a trade fair, it could not charge the participants a fee or commission on sales resulting from those activities. On the other hand, Cooperator and TEA Participants could provide and charge a fee for technical assistance related to export sales that were in no way generated by project funded promotions. Likewise, private business representatives traveling as part of a project funded activity, other than a sales team, would do so as representatives of the Cooperator and must represent the interests of all producers and may not pursue strictly private business topics with trade

contacts abroad, or otherwise use the activity as an opportunity to promote personal or private business interests. They may, of course, contact those foreign trade individuals on subsequent trips, not paid for with project funds, and transact business as private entities, without stating or implying that the transaction has the approval of the Cooperator or TEA Participant.

List of Subjects in 7 CFR Part 1550

Agricultural commodities, Exports.

Accordingly, it is proposed to amend Title 7 of the Code of Federal Regulations as follows:

Part 11—[Removed]

1. 7 CFR Part 11 is removed.
2. Part 1550 is added to read as follows:

PART 1550—PROGRAMS TO HELP DEVELOP FOREIGN MARKETS FOR AGRICULTURAL COMMODITIES

Sec.
1550.1 Purpose and scope.
1550.2 Delegations of authority.
1550.3 Market Development Project Agreements.
1550.4 Export Incentive Program Agreements.
1550.5 Other Market Development Activities.
1550.6 Program participation and benefits.
1550.7 Failure to comply with program requirements.
1550.8 Further information.

Authority: Sec. 601 of the Agricultural Act of 1954, as amended (7 U.S.C. 1761); Secs. 108(d)(2)(B) and 108(f) the Agricultural Trade Development and Assistance Act of 1954, as amended (7 U.S.C. 108); Sec. 5(f) of the Commodity Credit Corporation Charter Act (15 U.S.C. 714c(f)); E.O. 12220, 45 FR 44245.

§ 1550.1 Purpose and scope.

This part sets forth policies and requirements with respect to the conduct by the Foreign Agricultural Service (FAS) of programs utilizing public or private entities in the United States to help develop foreign markets for United States agricultural commodities on a mutually benefiting basis. As far as practicable, FAS relies upon representatives of the private U.S. agricultural sector to carry out market development activities through cooperative agreements.

§ 1550.2 Delegations of authority.

(a) Authority to conduct market development activities, generally, has been delegated to the Administrator, FAS.

(b) Authority to execute agreements and all other market development activities has been redelegated by the Administrator, FAS, to the Assistant Administrator for Commodity and Marketing Programs, except that the Administrator, FAS, has retained authority to execute agreements as Vice President, Commodity Credit Corporation, utilizing the funds of, or commodities owned by, Commodity Credit Corporation.

§ 1550.3 Market development project agreements.

(a) *General.* "Market Development Project Agreements" are cooperative agreements between FAS and United States agricultural trade associations or associations of State Departments of Agriculture, which entities are hereinafter referred to as the "Cooperators", for the purpose of maintaining, expanding, or creating foreign markets for U.S. agricultural commodities. Activities to be undertaken are generally intended to promote specific commodities on a generic basis; however, FAS may authorize promotion of an agricultural commodity on a brand identified basis when it is determined that such promotion is in accord with the purpose of the market development programs.

(b) *Use of third parties.* A Cooperator that enters into a Market Development Project Agreement may undertake market development activities directly or through a third party provided that such Cooperator remains responsible for the activities of the third party.

(c) *Contributions.* Cooperators are expected to contribute funds or make in-kind contributions towards completion of approved market development activities equivalent to what they expend in project funds. Such contributions will be stated as a percentage of the total cost of the activities in the market development project agreement. Contributions by third parties will be accepted as satisfying the contribution obligation of the Cooperator.

(d) *Project funds.* FAS will make funds available, up to the amount stated in the Market Development Project Agreement, to reimburse Cooperators for expenditures incurred in conducting activities authorized by the agreement and budgeted in a marketing plan approved in advance by FAS. Funds will be paid in United States dollars unless the Cooperator and FAS specifically agree that payment shall be made in foreign currencies.

(e) *Consideration of projects.* Market Development Project Agreements will be entered into by FAS only if it is determined that such agreements could contribute to the effective creation, expansion, or maintenance of markets for U.S. agricultural commodities abroad based upon the following criteria:

(1) Probable success in maintaining or increasing foreign consumption and U.S. exports of U.S. agricultural commodities;

(2) Potential long range contribution of the project to U.S. agricultural exports and relative importance of exports to the subject commodities, U.S. agriculture generally, and the U.S. balance of payments;

(3) Compatibility with foreign policy;

(4) Ability of the Cooperator to provide competent U.S. based staff and other resources to assure adequate development, supervision and execution of program activities;

(5) Extent to which the Cooperator represents commodity interests;

(6) Willingness and ability of private entities to back up promotional activities with aggressive selling of the U.S. agricultural commodities;

(7) Adequate supplies of the U.S. commodities of the quality desired by foreign buyers;

(8) Competition for sales of subject commodities in foreign markets; and

(9) Political and economic obstacles which might restrict imports of U.S. agricultural commodities into foreign countries.

§ 1550.4 Export Incentive Program Agreements.

(a) *General.* "Export Incentive Program Agreements" are cooperative agreements between FAS and a private United States entity for the purpose of maintaining, expanding or creating foreign markets for United States agricultural commodities. Activities to be undertaken are intended to promote U.S. agricultural exports through the promotion of brand identified commodities or products.

(b) *Use of third parties.* An entity that enters into an Export Incentive Program Agreement may undertake market development activities directly or through a third party provided such entity remains responsible for the activity.

(c) *Contributions.* Participating entities are generally required to contribute at least fifty percent of the eligible promotion costs incurred pursuant to the Export Incentive Program Agreement.

(d) *Project funds.* Upon submission of a claim for an incentive payment, FAS will make funds available to the participating entity, up to the amount stated in the Export Incentive Program Agreement, to carry out the purposes of the project. Such a claim will be submitted on a marketing year basis or at such other time as may be agreed by

FAS. The amount of funds to be paid by FAS on each claim will be specified in the agreement and will be based upon either a stated percentage of the promotional expenditures claimed, volume of exports over a stated period, or a combination of both. Funds will be paid in U.S. dollars only.

(e) *Consideration of projects.* Export Incentive Program Agreements will be entered into by FAS based upon the same criteria set-forth in § 1550.3(e) (1)–(4), (8) and (9) and on the basis of whether the agricultural commodity or product to be promoted is of the type that would benefit from brand identified promotion.

(f) *Initiation of agreements.* FAS will periodically announce that entities may submit proposals for an Export Incentive Program Agreement when FAS determines that a specific commodity or product may benefit from brand promotion. Once a commodity or product is selected by FAS, participation is open to all U.S. entities exporting, or desirous of exporting, the commodities on a brand-identified basis.

§ 1550.5 Other market development activities.

(a) *FAS Contracts.* FAS may, from time to time, enter into contracts pursuant to which FAS procures, for a stated consideration, property and services needed in developing markets for U.S. agricultural commodities.

(b) *Commodity Credit Corporation Programs.* The Administrator, FAS, who is also the Vice President of the Commodity Credit Corporation (CCC), may be authorized to conduct market development activities which are carried out under the authority of the Commodity Credit Corporation Charter Act, 15 U.S.C. 714 *et seq.* The terms and conditions of any such market development activities will be determined by the Board of Directors of CCC, or by the Secretary of Agriculture and may provide for the use of either funds of, or commodities owned by, CCC to support market development activities.

§ 1550.6 Program participation and benefits.

(a) *Scope.* This section establishes requirements applicable only to participation in Market Development Project Agreements and any other cooperative agreements with U.S. organizations to develop foreign markets for U.S. agricultural commodities, except that this section does not apply to agreements between FAS and private U.S. entities for brand identified promotion.

(b) *General.* It is the policy of FAS to insure that the benefits generated by agreements are as broadly distributed throughout the relevant agricultural sector as feasible and, particularly, that no U.S. entity or organization derives an unfair advantage or benefit from project activities, whether funded with project funds or contributions.

(c) *Industry participation.* When required by the Administrator, FAS, U.S. entities entering into market development agreements with FAS shall furnish to FAS for approval the criteria established by the entities for the selection of U.S. agricultural industry representatives to participate in program activities such as trade teams, sales teams and trade fairs. Such criteria must ensure participation on an equitable basis by a representative cross section of the relevant U.S. agricultural industry.

(d) *Distribution of information.* All entities entering into market development agreements shall provide, on a timely basis, upon request of any U.S. trade entity, any and all data developed and produced with project funds or contributions and, in connection therewith, may charge a fee, not to exceed the costs incurred in assembling, duplicating and distributing the requested material.

(e) *Export activities and related services.* (1) Neither the entities entering into agreements nor their parent organization, subsidiaries or affiliates shall (i) make export sales during the term of the agreement of agricultural commodities of the kind which are promoted by use of project funds, or (ii) assess fees for services provided to exporters in facilitating export sales if project funds have been used for any promotional activities intended to result in that specific export sale. Checkoffs or membership dues may be assessed by the Cooperator based on commodity sales when such assessments are a condition of membership in the cooperator association.

(2) All entities participating in approved program activities, except as part of a sales team, shall not use the activities to promote private self-interests or conduct private business if the use of sales teams is provided for by FAS in the Cooperator's annual marketing plan.

§ 1550.7 Failure to comply with program requirements.

(a) Within 60 days after the effective date of these regulations, entities participating in agreements within the scope of section 1550.6 shall certify in writing to the Administrator, FAS, that they, their parent organization, subsidiaries, or affiliates are not engaged in the business of making export sales of agricultural commodities promoted by the use of projects funds.

(b) In the event of noncompliance with any provisions of these regulations, FAS may terminate the agreement or disallow a claim for the payment of project funds.

§ 1550.8 Further information.

Further information regarding agreements to develop new markets for United States agricultural commodities and as to operations under such agreements can be obtained by contacting Marketing Programs Staff, Commodity and Marketing Programs, Room 4932–S, USDA (202–447–5521).

Signed at Washington, DC on April 1, 1988.

Thomas O. Kay,

Administrator, Foreign Agricultural Service.

[FR Doc. 88–8688 Filed 4–20–88; 8:45 am]

BILLING CODE 3410-10-M

NUCLEAR REGULATORY COMMISSION

10 CFR Part 40

[Docket No. PRM–40–24]

Union Carbide Corp.; Denial of Petition for Rulemaking

AGENCY: Nuclear Regulatory Commission.

ACTION: Petition for rulemaking: Denial.

SUMMARY: The Nuclear Regulatory Commission (NRC) is denying a petition for rulemaking (PRM–40–24) submitted by the Union Carbide Corporation. The petitioner requested that the NRC amend its regulations in four areas pertaining to uranium milling operations and closure requirements. Three of the amendments requested by the petitioner are being denied due to changes made in NRC's regulations as a result of standards issued by the Environmental Protection Agency (EPA). The NRC regulatory changes that were necessary to conform to EPA's standards are required by law. The petitioner's requests, which were received prior to promulgation of EPA's standards, are inconsistent with existing EPA requirements. The fourth area deals with a requested change to the assumed real interest rate used to cover the cost of long-term surveillance. This request is denied on the basis that the proposed change is inconsistent with the Government's historical real rate of return.

ADDRESSES: Copies of the petition for rulemaking, the public comments received, and the NRC's letter to the petitioner are available for public inspection or copying in the NRC Public Docment Room, 1717 H Street NW., Washington, DC.

FOR FURTHER INFORMATION CONTACT: Mark Haisfield, Office of Nuclear Regulatory Research, U.S. Nuclear Regulatory Commission, Washington, DC 20555, telephone (301) 492-3877.

SUPPLEMENTARY INFORMATION:

The Petition

On November 30, 1982 (47 FR 53899), the Nuclear Regulatory Commission (NRC) published a notice of receipt of a petition for rulemaking filed by the Union Carbide Corporation. The petition requested that the NRC amend portions of its regulations concerning criteria for the operation of uranium mills and the disposition of tailings or wastes resulting from these activities.

The petitioner suggested specific amendments to Criteria 1, 5, 6, and 10 of Appendix A to Part 40. This appendix sets out the technical, financial, ownership, and long-term site surveillance criteria relating to the siting, operation, decontamination, decommissioning, and reclamation of uranium mills and associated tailing. Appendix A was issued as part of the NRC's regulations implementing the Uranium Mill Tailings Radiation Control Act of 1978 (Pub. L. 95-604, 42 U.S.C. 7901, et seq.). These regulations were published in the **Federal Register** on October 3, 1980 (45 FR 65531).

The petitioner believes that the suggested amendment will continue to adequately protect the public health, safety, and the environment from radiation hazards associated with uranium milling. In addition, the petitioner asserts that its suggested amendments are more cost effective in that they would significantly reduce the costs of compliance at the facilities covered by the regulations.

The Suggested Amendments: Criterion 1

Criterion 1 covers the selection of new tailings disposal sites or the adequacy of existing tailings diposal sites. The petitioner suggests that the long term isolation of tailings and associated contaminants be defined as a 100-200 year period rather than the "thousands of years" period.

The petitioner bases this suggestion on testimony before the NRC, the states of Colorado and New Mexico, the Enviornmental Protection Agency, and the Military Nuclear Systems Subcommittee of the Committee on the Armed Services. The petitioner contends that this testimony indicates that:

1. The thousands of years period is unreasonable.
2. Technology does not exist to assure the isolation of tailings for thousands of years.
3. The present requirement is costly and speculative.
4. It is difficult, if not impossible, to design a reclamation plan for a tailings pile that will withstand erosion over a period of thousands of years.
5. Tailings disposal should be based on a realistic period of time, such as 100-200 years.
6. The thousands of years requirement tends to relieve the goverment of any responsibility for ultimate control (Criterion 11).
7. The funds for long-term surveillance and control will be available to pay for any repair necessitated by damages resulting from any unexpected event (Criterion 10).

The Suggested Amendments: Criterion 5

Criterion 5 covers restoration of groundwater contaminated by seepage of toxic materials from mill tailings sites. The petition contends that Criterion 5 attempted to distinguish existing from new sites. For new sites, the petitioner states that seepage would not result in deterioration of groundwater supplies, and technical alternatives are provided to assure that deterioration does not occur. The petitioner states, however, that for existing sites no guidance was given concerning the standards to be used in developing the required site-specific seepage control and groundwater protection methods. The petitioner's proposed amendment is intended to provide guidance it believes is missing for existing sites by specifically including consideration of the current use of the groundwater, naturally-occurring characteristics of the groundwater, potential use of the groundwater based on needs of the community, size of the aquifer, availability of other drinking water sources, and the practicability of restoration.

The Suggested Amendments: Criterion 6

Petitioner proposes amendments to Criterion 6 which would delete requirements for (1) a three meter cover over tailings or wastes and (2) a surface exhalation of radon emanating from the tailings or wastes to less than two picocuries per square meter per second. Instead, suggested revisions would include cover designs that are based on site specific analyses and concentrations of radon and other radioactive material beyond a small buffer zone of approximately 500 feet established around the covered areas. These concentrations would not exceed limits specified in Appendix B, Table II of 10 CFR Part 20, excluding background. The petitioner requests that remedial actions be cost-effective and based on a realistic assessment of the health hazard to the public that uranium mill tailings may pose. The petitioner believes that health risks to the public from exposure to radium and radon from uranium mill tailings should be compared with risks from exposure to other natural sources of radium, radon, and their daughters as well as to other risks commonly accepted by the public. The petitioner contends that, if such comparisons are made, it is clear that the health risks to the public associated with uranium mill tailings have been greatly overestimated. The petitioner believes that its proposal will ensure that mill tailings are controlled in a safe manner and that people and the environment will be protected from radiation hazards associated with tailings disposal.

The Suggested Amendments: Criterion 10

This criterion imposes a charge on each mill operator to cover the cost of long-term surveillance. The total charge must be such that, "with an assumed 1 percent annual real interest rate, the collected funds will yield interest in an amount sufficient to cover the annual costs of site surveillance." The petitioner proposes the use of a 2 percent interest rate rather than the current 1 percent interest rate. The petitioner requests that this rate, which it considers to be a more accurate percentage spread between inflation and interest rates, be used.

Basis for Request

As a basis for the requested action, the petitioner stated it has facilities that are affected by the NRC regulations in both Agreement and Non-agreement States. The requirements of Appendix A of 10 CFR Part 40 also apply to Agreement States. As a result of Agreement States conforming their regulations to be compatible with NRC's, hearings and public comments were solicited. The petitioner claims that, "* * * additional testimony and evidence have been elicited which were not available to the NRC in the consideration of its own regulations." In light of this new information, the petitioner requests that the NRC reconsider its regulatory program. It is the petitioner's contention that

BEST COPY AVAILABLE

compliance with the amendments it proposes will protect public health and safety and the environment from radiation hazards associated with uranium milling byproduct material while significantly reducing the costs of compliance at its uranium mills.

Public Comments on the Petition

A notice of filing of petition for rulemaking was published in the **Federal Register** on November 30, 1982 (47 FR 53889). Interested persons were invited to submit written comments or suggestions concerning the petition by January 31, 1983. At the request of serveral commenters, the comment period was extended until May 2, 1983. The NRC received 11 comments in response to the notice; five from environmental groups; three from State agencies; and one each from the industry, an industrial representative, and a private citizen.

All the commenters, with the exception of the two from the industry and the industrial representative, were opposed to the petition. The main reasons cited by these commenters were:

1. Based upon Pub. L. 97–415 (issued January 4, 1983), which amended UMTRCA, the Environmental Protection Agency is to develop general environmental standards by October 1, 1983. The NRC will then review and revise its regulations to conform to the EPA standards. Therefore, any changes now would be premature.

2. The additional information provided by the petitioner is of limited value.

3. Changes proposed by the petitioner are not adequate to protect public health, safety, and the environment. The existing regulations will provide for this and are reasonable considering the hazards involved.

The comments from the industry and industrial representative are in total support of the petition. These commenters also identified other parts of the regulations which they felt should be changed.

Staff Action on the Petition

The response to the petition for rulemaking was delayed because Pub. L. 97–415 (NRC Authorization Act of 1983, issued January 4, 1983) required EPA to develop general environmental standards by October 1, 1983 and for the NRC to then conform its regulations to those issued by the EPA. Most of the issues raised by the petitioner were addressed in the final EPA environmental standards (48 FR 45926; October 7, 1983).

NRC's conformance to the EPA standards was completed in a two-step process. The first step resulted in a final rule published on October 16, 1985 (50 FR 41852). This rule revised Appendix A to 10 CFR Part 40 in order to conform to the EPA requirements except for those relating to ground-water protection. The second step also amended Appendix A and completed conformance to the EPA ground-water protection requirements. The NRC began this step with advance notice of proposed rulemaking on November 26, 1984 (49 FR 46425) prior to developing amendments for the ground-water protection conforming changes.

As stated in the proposed rule to conform to ground-water protection requirements (51 FR 24697; July 8, 1986), "When the NRC publishes its final rule on ground-water protection, the rulemaking proceedings necessary to conform its regulations to EPA standards will be completed. At that time, the NRC will make a final determination on the issues raised by the petitioner and publish its findings in the **Federal Register**." The final rule conforming ground-water protection requirements, which completed the actions necessary to conform NRC regulations to EPA standards, was published on November 13, 1987 (52 FR 43553).

Reasons for Denial

The first three amendments to Appendix A to 10 CFR Part 40 suggested by the petitioner relate to Criteria 1, 5, and 6. These criteria were changed based on requirements in Pub. L. 97–415 that the NRC conform its regulations to the EPA standards. Accordingly, the petitioner's proposals are assessed against the revised NRC regulations, rather than the regulations to which the petition was originally addressed. The reasons for denial follow:

Criterion 1: The petitioner's proposal of a long-term isolation period of 100–200 years would be inconsistent with EPA's longevity standard, now part of NRC's rules. EPA requires reasonable assurance that control of radiological hazards to be effective for 1,000 years, to the extent reasonably achievable, and in any case for at least 200 years.

Criterion 5: The requirements for ground-water protection contained in criterion 5 have been totally revised as a result of conformance to EPA standards. The current requirements are more stringent than those that the petitioner requested to be changed. The petitioner's proposed changes would be inconsistent with current EPA requirements, now part of NRC's rules. However, the concerns of the petitioner as far as contamination and use of an aquifer at existing sites have been incorporated into the current regulations. At any site, new or existing, an applicant can apply for an alternate concentration limit (ACL) for ground-water constituents. Use of the aquifer is one of the factors upon which an ACL could be based.

Criterion 6: The NRC requirements for radon control have been significantly changed as a result of EPA requirements. The minimum three meter cover is no longer required. The radon release rate has been changed to not exceed the EPA established average release rate of 20 picocuries per square meter per second to the extent practicable throughout the effective design life. The requirements in this criterion have been reduced from those that the petitioner requested be amended. However, further changes would be inconsistent with EPA requirements.

The fourth change suggested by the petitioner is that dealing with Criterion 10. This criterion was not effected by the EPA standards. The petitioner indicates that a 2% annual real interest rate is a more accurate reflection of the historic earning power of investments versus the 1% rate used in NRC's regulations.

The petitioner's request is based on comments provided to the Colorado Department of Health by the Colorado Mining Association on June 5 and 17, 1981 and June 5, 1982. The basis for the 2% rate is "* * * that a 2% annual real interest rate is a more accurate reflection of the historic earning power of investments. Research performed by Union Carbide Corporation's corporate finance group has shown that the average domestic bond yield over the last 30-year period (1950–1980) exceeds the GNP deflator by 2%." The domestic bond yield is derived from Moody's Investor Services average corporate yield from the four rating classifications (Aaa, Aa, A, Baa) and is also the average of three groups (railroad, public utility, and industrial).

The real rate of return used in criterion 10 is based on the difference between the long-term government bond rates and the consumer price index. Long-term government bond rates are less than corporate rates.

The Government's real rate of return should be based on government yields because the funds are paid to the Treasury. The Treasury will not be investing these funds in corporate bonds or for that matter in any other investment vehicle. Conceptually, these funds can be viewed as displacing the need for government borrowings. Therefore, their true investment value

can be measured by the government's ability to forego the payment of interest on government bonds at the margin. Because these instruments have historically averaged approximately a 1 percent real rate of return, this is its appropriate value.

Furthermore, even if one assumed the government could invest these funds in corporate bonds, and earn a higher rate of return, such a practice would be counter to the intended purpose for these funds. The higher corporate real rate of return reflects a risk premium whereas government bonds are essentially risk free investments. Given the need to ensure funds in perpetuity, it would be imprudent to invest in corporate bonds and be exposed to potential losses. Because the petitioner's request is based on an industrial yield, it would not be appropriate to use these figures. Therefore, the proposed change is denied.

Dated at Rockville, MD this 11th day of April, 1988.

For the Nuclear Regulatory Commission.

Victor Stello, Jr.,

Executive Director for Operations.

[FR Doc. 88-8766 Filed 4-20-88; 8:45 am]

BILLING CODE 7590-01-M

FEDERAL HOME LOAN BANK BOARD

12 CFR Part 563

[No. 88-276]

Assessment and Adjustment of Additional Premiums

Date: April 12, 1988.

AGENCY: Federal Home Loan Bank Board.

ACTION: Proposed rule.

SUMMARY: The Federal Home Loan Bank Board ("Board"), as operating head of the Federal Savings and Loan Insurance Corporation ("FSLIC" or "Corporation"), is proposing to amend its Insurance Regulations by adding a new regulation regarding the assessment of additional insurance premiums against institutions the accounts of which are insured by the FSLIC ("insured institutions"). The proposal would implement by regulation the FSLIC's authority to assess additional insurance premiums and would provide for an adjustment of such premiums based on insured institutions' capital levels.

DATE: Comments must be received by June 6, 1988.

ADDRESS: Director, Information Services Section, Office of the Secretariat, Federal Home Loan Bank Board, 1700 G Street NW., Washington, DC 20552. Comments received on this proposal will be available for public inspection at this address.

FOR FURTHER INFORMATION CONTACT: Jerilyn Rogin, Attorney, (202) 377-7018, Christina M. Gattuso, Regulatory Counsel, (202) 377-6649, Regulations and Legislation Division; or Terrill A. Rupp, Attorney, (202) 377-7051, FSLIC-Green Division; Office of General Counsel, Federal Home Loan Bank Board, 1700 G Street NW., Washington, DC 20552.

SUPPLEMENTARY INFORMATION:

I. Background

The Board has the authority to prescribe the FSLIC insurance premium structure in accordance with the terms and limitations included in section 404 of the National Housing Act ("NHA"), 12 U.S.C. 1727. That section addresses the amount of premiums and the circumstances under which they may be assessed.

Section 404(b) of the NHA provides express authority to the FSLIC to prescribe the manner in which insurance premiums are to be paid to the FSLIC by insured institutions. Section 404(b)(1) prescribes the amount of this regular, or base, insurance premium: Each insured institution "shall pay * * * a premium * * * equal to one-twelfth of 1 per centum of the total amount of all accounts of the insured members of such institution." 12 U.S.C. 1727(b).

Section 404(c) of the NHA provides that, in addition to the base premium of one-twelfth of one percent, the FSLIC may assess an additional premium of up to one-eighth of one percent.[1] With respect to the additional premium, section 404(c) does not prescribe a specific amount. Rather, section 404(c)(1) authorizes the FSLIC to assess the additional premium "until the amount of such premiums equals the amount of all losses and expenses of the Corporation." The amount set forth in section 404(c)(1)—one-eighth of one percent—is a cap ("the absolute cap") on the amount of additional premium that the FSLIC may assess.

On August 10, 1987, Congress enacted into law the Competitive Equality Banking Act of 1987, Pub. L. No. 100-86, 101 Stat. 552 ("CEBA"). Section 306(c) amended section 404(c) of the NHA by adding paragraph 404(c)(2), entitled "Limitations on Amount of Assessment." That section provides for a five-year phase-down of the amount of additional premium that the FSLIC may charge. The statute implements this phase-down by imposing a cap ("the yearly cap") on the amount of additional premium the FSLIC may charge over a five-year period.

The amount of additional premium may exceed the yearly cap if the Board determines that "severe pressures on the Corporation exist which necessitate an infusion of additional funds."

In the early 1980's, the Board had proposed to implement by rule its authority under section 404(c) of the NHA to assess additional insurance premiums.[2] The proposal was never adopted as a final rule, however. Now, upon reconsideration of this issue, the Board proposes to implement the authority granted by section 404(c) by regulation in such a way as to adjust the amount of the additional premium to reflect the risk that an insured institution poses to the FSLIC.

In addition to this risk-based adjustment, today's proposal would reiterate, in new § 563.15-1, the authority granted to the FSLIC under section 404(c) of the NHA.[3] Proposed § 563.15-1 would also provide that any additional premiums assessed by the FSLIC be assessed and paid on a quarterly basis and that the FSLIC publish in the **Federal Register** as notice to insured institutions of the amount of assessment due each quarter.

II. Statutory Authority to Adjust the Additional Premium

In addition to the Board's express authority to assess base insurance premiums and additional insurance

---

[1] As originally enacted, section 404 provided for an annual premium of one-quarter of one percent of an institution's deposits and permitted a discretionary additional premium of one-quarter of one percentum to cover losses and expenses. Both references to one-quarter of one percent were changed to one-eighth of one percent in 1935. *See* Act of May 28, 1935, ch. 150, section 25(a), 49 Stat. 298 (1935). The base annual premium was lowered further to one twelfth of one percent in 1950. *See* Act of June 27, 1950, ch. 369, section 7, 64 Stat. 250 (1950), yielding the one twelfth percent plus one-eighth percent structure in the statute today.

The legislative history of section 404(c) of the NHA indicates that additional insurance premiums may be assessed to cover all prior losses and expenses of the FSLIC, not just those incurred in the immediately preceding year. The statute also gives the FSLIC the discretion not to assess additional insurance premiums in any given year.

[2] *See* "Federal Savings and Loan Insurance Corporation; Insurance Premiums," 47 FR 51583 (Nov. 4, 1982) (advance notice of proposed rulemaking); "FSLIC Insurance Premiums," 48 FR 13191 (Mar. 17, 1983) (proposed rule).

[3] In the Board's view the language of section 404(c) authorizing the FSLIC to assess additional premiums is self-executing; that is, no implementing regulations are necessary in order for the FSLIC to collect the additional premium. The point of today's proposed implementing regulations is to establish a risk-based method for assessing the additional premium, which does require explication by implementing regulation. *Cf.* 12 CFR 563.15 (regular, or base, insurance premiums).

premiums as outlined in the preceding section, the Board is also authorized to make adjustments, refunds, and deferrals of premium payments. A statutory provision enacted in 1969, section 6 of Pub. L. No. 91–151, 83 Stat. 396–97, provides, in pertinent part, as follows:

(b) The Federal Savings and Loan Insurance Corporation is authorized by regulation or otherwise

* * * * *

(2) *to take such action,* including without limitation *such adjustments and refunds* and such deferral of premium payments and other payments, *as it may determine to be necessary or appropriate* for or in connection with the implementation of this section (i.e., section 6 of Pub. L. No. 91–151) or other legislation amending or supplementing said section 404 (of the National Housing Act). (Emphasis added).

On its face, this provision authorizes such "adjustments and refunds" as the FSLIC may deem appropriate in connection with the implementation of any amendment to section 404 of the NHA. The Board is unaware of any legislative history suggesting a Congressional intent to limit the broad discretion delegated to the FSLIC by this statutory language.

Given this broad grant of discretionary authority, the Board believes that it may be authorized to adjust its additional insurance premiums by refunding (or reducing) certain portions thereof as it deems appropriate in connection with the implementation of section 404 of the NHA. The Board, however, specifically solicits comment on the extent of its statutory authority to assess additional premiums on the basis of risk to the FSLIC. Assuming such statutory authority exists, the Board also solicits comment on whether the capital-based premium scheme set forth in this proposal is an appropriate exercise of that authority.

III. Description of the Proposal

A primary purpose of today's proposal is to offer insured institutions an incentive to raise capital. The proposed rule sets forth a variable-rate program for additional premiums that is tied to an insured institution's capital level. In the Board's view, it is important to base the amount of additional insurance premiums assessed on the amount of capital held by an insured institution because, as it has explained elsewhere in some detail, capital provides the most effective buffer against loss and risk to the FSLIC fund. *See* Board Res. No. 86–857, 51 FR 33565 (Sept. 22, 1986). The proposal provides a direct incentive for an insured institution with capital that is below the threshold (see explanation below) to raise additional capital so as to qualify for a reduction in the additional premiums.

An understanding of the proposal requires reference back to the statutory provision, described above, that authorizes the FSLIC to charge an additional premium in excess of the amount prescribed in the table contained in section 404(c) of the NHA (but in no event to exceed one-eighth of one percent of the accounts of insured members) if the Board makes the requisite statutory findings.[4]

Under the proposal, for any period for which the Board made the requisite statutory determination, any insured institution whose capital, as determined in accordance with the Board's rules governing minimum regulatory capital requirements, equals or exceeds 6 percent for the quarter of assessment would not have to pay the difference ("the differential") between the yearly cap on the additional premium set forth in section 404(c)(2) of the NHA and the absolute cap on the additional premium set forth in section 404(c)(1) (*i.e.*, one eighth of one percent). The Board specifically solicits comment on whether, instead of a 6 percent threshold, another threshold should be used or whether capital-based premiums should be based on a scale-down schedule. For example, under one possible scale-down schedule, thrifts with 6 percent or greater regulatory capital would pay only the amount applicable for the quarter in question as set forth in section 404(c)(2) of the NHA; between the minimum regulatory capital requirement and 6 percent regulatory capital, an institution would be required to pay 50 percent of the differential; and institutions with less than the minimum regulatory capital requirement would be required to pay the full additional premium. The Board also solicits comment on whether alternative measures of capital (*e.g.*, capital as measured by generally accepted accounting principles) should be used and whether alternative refund amounts (*e.g.*, the full amount of the additional premium) should be used.

Today's proposal also would amend § 563.16–2 to address offset against insurance premiums. Pursuant to section 404(a) of the NHA, the Corporation is authorized to accomplish the purposes of section 404 by rules, regulations, orders, or otherwise as it may consider necessary or apporpriate. Accordingly, the Board today proposes to amend § 563.16–2 to incorporate by regulation insured institutions' authority to offset, before 1993, up to 20 percent of their pro rata share of the statutorily prescribed amount against their yearly additional insurance premiums, and their authority after 1992 to offset their pro rata share of the statutorily prescribed amount against their yearly insurance premiums.

Additionally, however, the proposal would limit the amount of any such offset to a maximum of one-fourth of the total amount allowable in any one premium year for any one quarter. In the Board's view, such a quarterly limitation is appropriate due to the fact that the Board has, since 1985, been assessing premiums on a quarterly basis. The Board wishes to note that, in the event an insured institution ceases to be insured by a Corporation during any premium year, as that term is defined in section 404(3)(2)(F) of the NHA, such institution would be entitled to the entire offset upon exiting the FSLIC.

By initiating this rulemaking, the Board intends to present for public consideration the general concept of a risk-based deposit insurance program and, in conjunction with the proposal established today, to study the effects of such a program. Accordingly, the Board specifically requests comment on whether the approach outlined in this proposal is the most effective way of implementing a risk-based premium structure, and it invites commenters to submit alternative ways of doing so.

The Board notes that this rule would be prospective from the date of adoption of the final rule. Moreover, the Board notes that this regulation applies solely to adjustment of additional premiums and in no way affects the assessment and payment by insured institutions of regular insurance premiums.

Pursuant to the rulemaking policies and procedures of 12 CFR 508.13, as supplemented by Board Res. No. 80–584, 45 FR 63135 (Sept. 23, 1980), the Board is providing for a 45–day rather than a 60–day public comment period, because the public interest requires prompt Board action.

Initial Regulatory Flexibility Analysis

Pursuant to section 3 of the Regulatory Flexibility Act, 5 U.S.C. 603, the Board is providing the following regulatory flexbility analysis.

1. *Reasons, objectives and legal basis underlying the proposed rule.* These elements are incorporated above in the **SUPPLEMENTARY INFORMATION** regarding the proposal.

2. *Small entities to which the proposed rule would apply.* The proposed rule would apply to all

[4] The required determination is that "severe pressures on the Corporation exist which necessitate an infusion of additional funds." 12 U.S.C. 1727(c)(2).

institutions whose accounts are insured by the FSLIC.

3. *Impact of the proposed rule on small institutions.* The proposed rule would not have as substantial impact on small insured institutions.

4. *Overlapping or conflicting federal rules.* There are no known federal rules that duplicate, overlap, or conflict with this proposal.

5. *Alternatives to the proposed rule.* There are no alternatives that would be less burdensome than the proposal in addressing the concerns expressed in the **SUPPLEMENTARY INFORMATION** set forth above.

List of Subjects in 12 CFR Part 563

Bank deposit insurance, Investments, Reporting and recordkeeping requirements, Savings and loan associations.

Accordingly, the Federal Home Loan Bank Board hereby proposes to amend Part 563, Subchapter D, Chapter V, Title 12, Code of Federal Regulations, as set forth below.

SUBCHAPTER D—FEDERAL SAVINGS AND LOAN INSURANCE CORPORATION

PART 563—OPERATIONS

1. The authority citation for Part 563 continues to read as follows:

Authority: Sec. 1, 47 Stat. 725, as amended (12 U.S.C. 1421 *et seq.*); sec. 5A, 47 Stat. 727, as added by sec. 1, 64 Stat. 256, as amended (12 U.S.C. 1425a); sec. 5B, 47 Stat. 727, as added by sec. 4, 80 Stat. 824, as amended (12 U.S.C. 1425b); sec. 17, 47 Stat. 736, as amended (12 U.S.C. 1437); sec. 2, 48 Stat. 128, as amended (12 U.S.C. 1462); sec. 5, 48 Stat. 132, as amended (12 U.S.C. 1464); secs. 401–407, 48 Stat. 1255–1260, as amended (12 U.S.C. 1724–1730); sec. 408, 82 Stat. 5, as amended (12 U.S.C. 1730a); Reorg. Plan No. 3 of 1947, 12 FR 4981, 3 CFR, 1943–1948 Comp., p. 1071.

2. Add new § 563.15–1 to read as follows:

§ 563.15–1 Adjustment of additional premiums.

(a) *General.* Pursuant to section 404(c) of the National Housing Act, as amended, and subject to paragraph (b) of this section, the Corporation is authorized to assess against each insured institution additional premiums for insurance until the amount of such premiums equals the amount of all losses and expenses of the Corporation, except that the total amount so assessed in any one year against any such institution shall not exceed one-eighth of one percernt of the total amount of the accounts of its insured members. Such additional premiums, if assessed by the Corporation, shall be assessed and paid on a quarterly basis. The Corporation will publish in the **Federal Register** a notice to insured institutions of the amount of assessment due each quarter.

(b) *Limitations on amount of assessment.* (1) The amount of any additional premium assessed by the Corporation against any insured institution under paragraph (a) of this section shall not exceed the percentage set forth in section 404(c)(2) of the National Housing Act, *as amended,* unless the Board determines that severe pressures on the Corporation exist that necessitate an infusion of additional funds.

(2) The amount of any additional premiums assessed by the Corporation or any insured institution pursuant to paragraph (a) of this section shall be reduced by the amount of any supplemental assessments paid for such period by such insured institution to the Financing Corporation pursuant to § 592.12 of this chapter.

(c) *Adjustments of additional premiums.* Notwithstanding a determination by the Board pursuant to section 404(c)(2) of the National Housing Act that severe pressures on the Corporation exist that necessitate an infusion of additional funds, the Corporation shall not assess against any insured institution an additional premium in excess of the amount determined by applying the percentage set forth in section 404(c)(2) of the National Act, *Provided, that* such insured instituition's regulatory capital, as determined in accordance with its rules governing minimum regulatory capital requirements, is equal to or greater than 6 percent as of the quarter for which such additional premium is being assessed. If the Board makes such a determination, however, any insured institution whose regulatory capital is less than 6 percent shall be assessed an additional premium in the full amount permitted under section 404(c)(1) of the National Housing Act.

3. Amend § 563.16–2 by adding new paragraphs (c) and (d) to read as follows:

§ 563.16–2 Secondary reserve.

* * * * *

(c) *Offset Against Insurance Premiums.* Pursuant to section 404(e) of the National Housing Act, as amended, and subject to paragraph (d) of this section, an insured institution may offset against additional insurance premiums assessed under section 404(c) of the National Housing Act in premium years before 1993 an amount not to exceed 20 percent of such institution's pro rata share of the statutorily prescribed amount for the calendar year in which each premium year begins; for any premium year beginning after 1992, an insured institution may offset its pro rata share of the statutorily prescribed amount against any insurance premium assessed against it.

(d) *Quarterly Offset of Insurance Premiums.* Unless the Board determines otherwise, the amount of the offset permitted for any insurance premiums assessed against an insured institution under section 404 of the National Housing Act shall not exceed for any quarter of any premium year an amount equal to one-fourth of the total applicable offset allowed for any insured institution under paragraph (c) of this section.

By the Federal Home Loan Bank Board.

John F. Ghizzoni,

Assistant Secretary.

[FR Doc. 88–8788 Filed 4–20–88; 8:45 am]

BILLING CODE 6720–01–M

---

12 CFR Parts 563, 571 and 588

[No. 88–270]

Loans to One Borrower; Bank Secrecy Act Compliance Procedures; Repurchase Agreements and Reverse Repurchase Agreements; Accepting Things of Value; Withdrawal of Proposed Rules

Date: April 11, 1988.

AGENCY: Federal Home Loan Bank Board.

ACTION: Proposed rules; withdrawals.

SUMMARY: Pursuant to its recently adopted regulatory review procedures, *see* Board Res. No. 88–269, (published elsewhere in today's issue of the **Federal Register**, the Federal Home Loan Bank Board ("Board") hereby gives notice that it is withdrawing the following items: the Reverse Repurchase Agreements proposed regulation adopted by the Board on November 22, 1985, 50 FR 49940 (Dec. 6, 1985); the Loans to One Borrower proposed regulation adopted by the Board on August 15, 1986, 51 FR 30225 (Aug. 25, 1986); and the proposed rule on Bank Secrecy Act Compliance Procedures adopted by the Board on April 30, 1987, 52 FR 17406 (May 8, 1987). The Board notes that this action carries no implications with respect to its substantive views on the merits of these regulatory proposals.

In addition, the Board also notes its withdrawal of its proposed policy statement on Accepting Things of Value, 52 FR 12425 (June 18, 1987). It was the Board's intention to codify these guidelines in the *Code of Federal Regulations* ("CFR"). However, the Board has adopted these guidelines as a

notice document to provide guidance, as required by Congress, to assist employees, officers, directors, agents, and attorneys of financial institutions within its jurisdiction for purposes of complying with the Bank Bribery Amendments Act of 1985. This notice was published in the **Federal Register** on Friday, April 1, 1988, 53 FR 10561, and will not be codified in the CFR.

DATE: These withdrawals are effective April 21, 1988.

FOR FURTHER INFORMATION CONTACT: Deborah Dakin, Regulatory Counsel, (202) 377-6445; or Carol J. Rosa, Paralegal Specialist, (202) 377-7037, Regulations and Legislation Division, Office of General Counsel, Federal Home Loan Bank Board, 1700 G Street NW., Washington, DC 20552.

By the Federal Home Loan Bank Board.

John F. Ghizzoni,

Assistant Secretary.

[FR Doc. 88-8617 Filed 4-21-88; 8:45 am]

BILLING CODE 6720-01-M

DEPARTMENT OF HEALTH AND HUMAN SERVICES

Food and Drug Administration

21 CFR Part 172

[Docket No. 88N-0085]

Aspartame; Food Chemical Codex

AGENCY: Food and Drug Administration.

ACTION: Notice of proposed rulemaking.

SUMMARY: The Food and Drug Administration (FDA) is proposing to adopt the Food Chemicals Codex (FCC) specifications for aspartame. This action is based on the agency's practice of adopting FCC specifications for food ingredients if FCC has developed acceptable specifications. The proposal would amend 21 CFR 172.804(b) by removing the current specifications and by adding a requirement that the additive meet FCC specifications for aspartame.

DATE: Comments by June 20, 1988.

ADDRESS: Written comments may be sent to the Dockets Management Branch (HFA-305), Food and Drug Administration, Rm. 4-62, 5600 Fishers Lane, Rockville, MD 20857.

FOR FURTHER INFORMATION CONTACT: Carl L. Giannetta, Center for Food Safety and Applied Nutrition (HFF-334), Food and Drug Administration, 200 C St. SW., Washington, DC 20204, 202-426-5487.

SUPPLEMENTARY INFORMATION: In the **Federal Register** of July 26, 1974 (39 FR 27317), the agency in § 172.804 established the food-grade specifications for aspartame and described the methods of analysis. Specifications included the assay (§ 172.804(b)(1)); specific rotation (§ 172.804(b)(2)); and a limit on the 5-benzyl-3,6-dioxo-2-piperazineacetic acid content (§ 172.804(b)(3)). These specifications were established because they were necessary to assure the safe use of the food additive. No food-grade specifications existed in the open literature at that time. However, the agency was working with the Committee on Food Chemicals Codex of the National Academy of Sciences to develop specifications for aspartame. Upon development of acceptable specifications, the agency intended to incorporate them into the aspartame regulation in accordance with its usual practice of using FCC specifications when they are appropriate.

In 1981, FCC published its third edition which contains food-grade specifications for aspartame. These specifications contain identical provisions for the assay and specific rotation of aspartame as those contained in § 172.804(b). The FCC specifications also contain a limit of 1.5 percent on the 5-benzyl-3,6-dioxo-2-piperazineacetic acid content of aspartame. This limit is more stringent than the limit (2 percent) in § 172.804(b)(3). The FCC specifications also contain an identification assay and limits on losses on drying, residue on ignition, arsenic, heavy metals, and transmittance.

In 1983, FCC published its first supplement to the third edition. In this supplement, FCC changed its specifications for aspartame by (1) adding a requirement for identification of aspartame by its infrared spectrum and (2) modifying the description of aspartame, and the limits for specific rotation (from between +12.5° and +17.50° to between +14.5° and +16.5°).

The agency has evaluated the FCC specifications and has found them acceptable. Furthermore, the agency notes that the FCC specifications for aspartame are more stringent than current specifications in § 172.804. However, FCC specifications are developed in consultation with the food industry and represent "food grade" to that industry. Therefore, FDA believes that aspartame currently used in food meets FCC specifications and the agency is proposing to incorporate these specifications into § 172.804(b).

The agency has determined under 21 CFR 25.24(a)(9) that this action is of a type that does not individually or cumulatively have a significant effect on the human environment. Therefore, neither an environmental assessment nor an environmental impact statement is required.

The agency, in accordance with the Regulatory Flexibility Act, has considered the effects that this regulation would have on small entities including small businesses and has determined that the effect of this regulation is to maintain the current known use of aspartame. Therefore, FDA certifies, in accordance with section 605(b) of the Regulatory Flexibility Act, that no significant economic impact on a substantial number of small entities will derive from this action.

In accordance with Executive Order 12291, FDA has analyzed the economic effects of this proposal and has determined that the final rule, if promulgated, will not be a major rule as defined by the Order.

The agency's finding of no major economic impact and no significant impact on a substantial number of small entities, and the evidence supporting these findings, are contained in a threshold assessment which may be seen in the Dockets Management Branch (address above).

Interested persons may, on or before June 20, 1988, submit to the Dockets Management Branch (address above) written comments regarding this proposal. Two copies of any comments are to be submitted, except that individuals may submit one copy. Comments are to be identified with the docket number found in brackets in the heading of this document. Received comments may be seen in the office above between 9 a.m. and 4 p.m., Monday through Friday.

List of Subjects in 21 CFR Part 172

Food additives.

Therefore, under the Federal Food, Drug, and Cosmetic Act and under authority delegated to the Commissioner of Food and Drugs and redelegated to the Director of the Center for Food Safety and Applied Nutrition, it is proposed that Part 172 be amended as follows:

PART 172—FOOD ADDITIVES PERMITTED FOR DIRECT ADDITION TO FOOD FOR HUMAN CONSUMPTION

1. The authority citation for 21 CFR Part 172 continues to read as follows:

Authority: Secs. 201(s), 409, 72 Stat. 1784-1788 as amended (21 U.S.C. 321(s), 348); 21 CFR 5.10 and 5.61.

2. Section 172.804 is amended by revising paragraph (b) to read as follows:

§ 172.804 Aspartame.

* * * * *

(b) The additive meets the specifications of the "Food Chemicals Codex," 3d Ed. (1981), pp. 28–29, and First Supplement p. 5, which is incorporated by reference. Copies are available from the National Academy Press, 2101 Constitution Ave. NW., Washington, DC 20418, or available for inspection at the office of the Federal Register, 1100 L St. NW., Washington, DC 20408.

* * * * *

Dated: April 8, 1988.

Fred R. Shank,

Acting Director, Center for Food Safety and Applied Nutrition.

[FR Doc. 88–8778 Filed 4–20–88; 8:45 am]

BILLING CODE 4160-01-M

ENVIRONMENTAL PROTECTION AGENCY

40 CFR Part 52

Approval and Promulgation of Implementation Plans; Illinois

AGENCY: U.S. Environmental Protection Agency (USEPA).

ACTION: Proposed rulemaking.

SUMMARY: USEPA announces proposed disapproval of a revision to the Illinois State Implementation Plan (SIP) for Ozone. The proposed SIP revision would, if approved, provide for a relaxation of the baseline transfer efficiency from 40 percent to 30 percent at the Ford Motor Company (Ford Motor) prime surfacer and topcoat painting operations, which are located in Cook County, Illinois. This County is a part of the Chicago Ozone Demonstration Area. USEPA's action is based upon a June 13, 1985, submittal from the State of Illinois.

USEPA is proposing to disapprove this SIP revision because the Illinois Ozone SIP lacks an approvable attainment demonstration for the Chicago Nonattainment Area.

DATE: Comments on this revision and on the proposed USEPA action must be received by May 23, 1988.

ADDRESSES: Copies of the SIP revision are available at the following addresses for review (It is recommended that you telephone Uylaine E. McMahan, at (312) 886–6031, before visiting the Region V office):

U.S. Environmental Protection Agency, Region V, Air and Radiation Branch, 230 South Dearborn Street, Chicago, Illinois 60604.

Illinois Environmental Protection Agency, Division of Air Pollution Control, 2200 Churchill Road, Springfield, Illinois 62706.

Comments on this proposed rule should be addressed to (Please submit an original and three copies, if possible): Gary Gulezian, Chief, Regulatory Analysis Section, Air and Radiation Branch (5AR–26), U.S. Environmental Protection Agency, Region V, 230 South Dearborn Street, Chicago, Illinois 60604.

FOR FURTHER INFORMATION CONTACT: Uylaine E. McMahan, Air and Radiation Branch (5AR–26), Environmental Protection Agency, Region V, Chicago, Illinois 60604, (312) 886–6031.

SUPPLEMENTARY INFORMATION: On June 13, 1985, the Illinois Environmental Protection Agency (IEPA) submitted a proposed revision to Illinois' ozone SIP for Ford Motor. This SIP revision is in the form of an Illinois Pollution Control Board (IPCB) March 22, 1985, Opinion and Order (R83–36). This facility is located in Cook County, Illinois.

The IEPA is requesting a relaxation for Ford Motor from IPCB Rule 205(n)(1) of Chapter 2: Air Pollution. This proposed SIP revision would allow Ford Motor to relax its baseline transfer efficiency from 40 percent to 30 percent for its prime surfacer and topcoat painting operations.

USEPA has evaluated this proposed revision in relation to a July 29, 1983, memorandum from Sheldon Meyers, Director, Office of Air Quality Planning and Standards, which discusses source specific SIP revisions. This memorandum requires that, for a State to secure USEPA approval of a relaxation, the State would need to show that the SIP, as a whole despite the relaxation, would provide for attainment as expeditiously as practicable, but not later than December 31, 1987, in extension areas.

However, elsewhere in today's **Federal Register**, USEPA is proposing to disapprove Illinois' ozone attainment demonstration for Chicago because the presently effective ozone control measures are not sufficient to attain the ozone national ambient air quality standards (NAAQS) by December 31, 1987. Therefore, USEPA is proposing to disapprove this SIP revision for Ford Motor, because the Illinois Ozone SIP lacks an approvable attainment demonstration for the Chicago nonattainment area and, thus, any source specific relaxation to the ozone SIP is not approvable.

Additionally, to evaluate the approvability of a source specific SIP revision, USEPA must determine whether or not a proposed revision will interfere with reasonable further progress (RFP) toward the attainment and maintenance of the NAAQS in the Chicago ozone attainment demonstration area. As mentioned above, Illinois' currently adopted control program is being proposed as being inadequate to achieve attainment by the end of 1987. Consequently, the current control program must also be judged inadequate to achieve reasonable further progress toward attainment of the NAAQS. This means, in turn, that a compliance extension or relaxation further exacerbates a situation in which inadequate progress toward attainment is being made. On this basis also, USEPA proposes to disapprove this proposed relaxation. The reader is referred to USEPA's October 10, 1985, technical support document, available at USEPA's Region V office, for a further discussion of USEPA's analysis of this proposed SIP revision.

USEPA is providing a 30-day comment period on this notice of proposed rulemaking. Public comments received on or before May 23, 1988 will be considered in USEPA's final rulemaking. All comments will be available for inspection during normal business hours at the Region V office listed at the front of this notice.

Under 5 U.S.C. 605(b), I certified that this proposed disapproval will not have a significant economic impact on a substantial number of small entities because it applies to only one Ford Motor facility in the Chicago Area.

Under Executive Order 12291, today's action is not "Major". It has been submitted to the Office of Management and Budget (OMB) for review.

List of Subjects in 40 CFR Part 52

Air pollution control, Hydrocarbons, Intergovernmental relations, Ozone.

Authority: 42 U.S.C. 7401–7642.

Dated: February 9, 1987.

Valdas V. Adamkus,

Regional Administrator.

[FR Doc. 88–8740 Filed 4–20–88; 8:45 am]

BILLING CODE 6560-50-M

Notices

Federal Register
Vol. 53, No. 77
Thursday, April 21, 1988

This section of the FEDERAL REGISTER contains documents other than rules or proposed rules that are applicable to the public. Notices of hearings and investigations, committee meetings, agency decisions and rulings, delegations of authority, filing of petitions and applications and agency statements of organization and functions are examples of documents appearing in this section.

DEPARTMENT OF AGRICULTURE

Animal and Plant Health Inspection Service

[Docket No. 88-039]

Scrapie Eradication Program; Meeting

AGENCY: Animal and Plant Health Inspection Service, USDA.

ACTION: Notice of meeting.

SUMMARY: We are giving notice of a meeting between members of the Animal and Plant Health Inspection Service, United States Department of Agriculture, and members of the public, to discuss the Scrapie Eradication Program.

PLACE, DATES, AND TIME OF MEETING: The meeting will be held in Room 107-A of the Administration Building, 14th Street and Independence Avenue, Washington, DC 20250, May 10-11, from 8:30 a.m. to 4:00 p.m. on both days. Those attending the meeting must obtain a pass from building security personnel before proceeding to the meeting.

FOR FURTHER INFORMATION CONTACT: Dr. Chester A. Gipson, Senior Staff Veterinarian, Program Planning Staff, VS, APHIS, USDA, Room 845, Federal Building, 6505 Belcrest Road, Hyattsville, MD 20782, (301) 436-8321.

SUPPLEMENTARY INFORMATION: The purpose of the meeting is to bring together members of the Animal and Plant Health Inspection Service (APHIS), the sheep industry, and other members of the public to discuss the current Scrappie Eradication Program. We anticipate that these persons will provide valuable information, recommendations, and opinions concerning the policies and procedures of the Scrapie Eradication Program.

The Department of Agriculture is reviewing and evaluating the current Scrapie Eradication Program to plan its future direction. Information resulting from an economic analysis and program review by APHIS staff will be presented during the meeting.

The meeting will be open to the public. Anyone interested in the Scrapie Eradication Program should send their written statements concerning the program to Dr. Chester A. Gipson at the above address, or present them at the time of the meeting.

Dated: April 15, 1988.

James W. Glosser,

Acting Administrator, Animal and Plant Health Inspection Service.

[FR Doc. 88-8745 Filed 4-20-88; 8:45 am]

BILLING CODE 3410-34-M

Food Safety and Inspection Service

[Docket No. 88-007N]

Implementation of the Sulfa-on-Site Test for Sulfamethazine in Swine

AGENCY: Food Safety and Inspection Service, USDA.

ACTION: Notice of intent to implement the Sulfa-on-Site test for sulfamethazine in selected establishments.

SUMMARY: The Food Safety and Inspection Service (FSIS) recently approved for use, by its personnel, a rapid, implant screening test, known as the Sulfa-On-Site test, that can be used to estimate the level of sulfamethazine residues in swine tissues. FSIS intends to commence Sulfa-On-Site testing in 20 swine slaughtering establishments on April 4, 1988.

FOR FURTHER INFORMATION CONTACT: Dr Mark T. Mina, Acting Assistant Deputy Administrator, Regional Operations, Meat and Poultry Inspection Program, Food Safety and Inspection Service, U.S. Department of Agriculture, Washington, DC 20250, (202) 447-3697. Dr. Wertice J. Smith, Acting Director, Chemistry Division, Science Program, Food Safety and Inspection Service, U.S. Department of Agriculture, Washington, DC 20250 (202) 447-7623.

SUPPLEMENTARY INFORMATION: The presence of violative levels of sulfamethazine residues in swine tissues has long been a concern of FSIS. The Food and Drug Administration has determined the tolerance for sulfamethazine, a sulfonamide drug product, to be 0.1 parts per million (ppm) in the edible tissue of swine.[1] Data from FSIS's National Residue Program (NRP), which is a statistically based random sampling program designed to provide information on the occurrence of residue violations in specified animal populations, indicate that the average national incidence of violative levels of sulfonamide residues in swine carcasses has been more than 4 percent for all swine slaughtered during the past 10 years. Over the past 3 years, sulfamethazine residues accounted for about 94 percent of sulfonamide residues.

Currently, testing of swine tissues samples for sulfamethazine residues, collected under the NRP, is performed using the Sulfa Thin Layer Chromatography Fluorscence (STLC-F) analysis (an AOAC approved for method of analysis for the presence of sulfamethazine residues.[2] As part of its efforts to reduce the incidence of sulfamethazine residues in swine tissues, FSIS has developed and recently approved for use by inspectors in establishments a rapid screening test known as the Sulfa-On-Site (SOS) test, which enables the inspector to estimate the level of sulfamethazine residues in swine tissues in a matter of a few hours. The STLC-F analysis method is inappropriate for on-site use because it must be done in FSIS laboratories or FSIS accredited laboratories, and test results generally are not available for many days after the sample was taken.

The "SOS Test" involves the uses of thin layer chromatography coupled with fluorescent detection under long-wave ultraviolet light. Samples of urine are spotted on chromatography plates along with two standards containing known amounts of sulfamethazine. The plates are developed using two, sequentially applied solvents and a reagent spray that combines with sulfonamides on the plate to produce fluorescent substances that can be viewed under ultraviolet light. The plates are evaluated in an ultraviolet light box by comparing the degree of fluorescence of samples with that of the standard solutions on the sample plate. The test is calibrated so that test readings predict liver or muscle tolerance violations corresponding to

[1] 21 CFR 556.670; 9 CFR 318.20.

[2] Official Methods of Analysis of the Association of Official Analytical Chemists, 14th Edition, Section 41.052-41.058.

the 0.1 ppm tolerance for sulfamethazine.

SOS testing is intended to provide inspectors in official establishments which slaughter swine a reliable method for screening animals that may have violative levels of sulfamethazine residues in their tissues. If animals test positive, the inspector will hold and, upon confirmation by laboratory testing, dispose of the specific animal carcasses that contain violative residues. The STLC-F test used for monitoring is both too slow and too expensive to provide the inspector an effective means to enforce tolerance level limits on specific animals. That is, the STLC-F test is suitable for the NRP monitoring and can be a test for confirming SOS results, but it is not suitable for use by inspectors as a routine part of their in-plant, carcass by carcass inspection procedures.

FSIS intends to phase in the use of the SOS test, starting in 20 of the 100 largest establishments slaughtering swine. FSIS is unable to commence SOS testing in all swine slaughter establishments, because the Agency does not have sufficient personnel trained to perform the SOS test at each official establishment or adequate numbers of SOS test kits or the resources to train personnel or to purchase the SOS test kits. With costs approaching $1,000 for each kit to perform 600 tests, it would cost about $1.2 million to provide the kits necessary to initiate testing in all establishments. The costs of providing trained personnel to perform the test and the cost of performing confirmatory tests in FSIS laboratories would also have to be met. Furthermore, even at relatively low violation rates, FSIS laboratory assets available to conduct confirmation testing of positive SOS results would be severely strained and would impact on the ability of FSIS laboratories to respond to routine analyses as provided under NRP monitoring.

Although FSIS does not have the resources to conduct SOS screening tests in all establishments, the Agency believes it can significantly reduce the risks associated with sulfamethazine residues if it uses its available resources to begin SOS testing in 20 of the 100 swine slaughter establishments that slaughtered the most swine during FY 1987. SOS testing in these 20 establishments will begin on April 4, 1988. Additional establishments will be added as personnel are trained, SOS test kits become available and laboratory capabilities are expanded (additional laboratory technicians are trained and additional contract laboratories for FSIS analyses become available).

FSIS plans initially to test six swine each day in each of these 20 establishments. Carcasses of swine selected for testing will be held pending results of the SOS screening tests. Where results of the screening test indicate that carcass muscle tissue may contain levels of sulfamethazine residues above the tolerance, the carcass will be retained until the results of quantitative analysis are received. Quantitative analysis of positive SOS screening test results will be performed by STLC–F analysis. The STLC–F analysis provides a high degree of accuracy as demonstrated by using even more sensitive analytical procedures employing Gas Chromatography/Mass Spectrometry. Where quantitative analysis indicates that the carcass contains violative levels of sulfamethazine residues, the inspector will be notified and the carcass will be condemned and disposed of in accordance with the requirements of 9 CFR Part 314 of the Federal meat inspection regulations.

Where results of the screening test indicate that only the liver (and other organs) of the test-sample animal contain violative levels of sulfamethazine residues, the liver (and other organs) will be condemned without STLC–F testing. FSIS believes that use of its limited laboratory resources for quantitative analysis of violative levels in livers (and other organs) in unwarranted given the still unacceptable level of muscle tissue violations estimated to exist which will require laboratory quantitative analysis. Official establishments may, at their own expense, send sampled liver tissue to an FSIS accredited laboratory for STLC–F testing.

Done at Washington, DC, April 8, 1988.

Lester M. Crawford,

Administrator, Food Safety and Inspection Service.

[FR Doc. 88–8812 Filed 4–20–88; 8:45 am]

BILLING CODE 3410-DM-M

[Docket No. 88-008N]

Changes in Testing Procedures for Sulfamethazine

AGENCY: Food Safety and Inspection Service, USDA.

ACTION: Notice of changes in laboratory testing procedures.

SUMMARY: The Food Safety and Inspection Service (FSIS) is announcing two changes to its laboratory testing procedures for sulfamethazine (SMZ) residues in swine. The first change applies only to those samples collected under FSIS's recent intensified monitoring for sulfamethazine. Effective immediately and for the duration of the intensified monitoring program for sulfamethazine, FSIS will test only muscle tissue to determine whether violative levels of SMZ are present in the carcass. However, this change does not apply to routine analyses for sulfamethazine conducted under FSIS's National Monitoring Program. The second change applies to all future laboratory analyses for sulfamethazine. Effective immediately, FSIS will no longer perform a confirmation test on each positive sample of muscle tissue that falls between the range of 0.11 and 0.15 parts per million (ppm). Confirmation testing will be periodically conducted to measure the continuing effectiveness of current laboratory quality assurance analyses of sulfamethazine. These adjustments in testing methodology are to increase the effectiveness and efficiency of the Agency's sulfamethazine testing program.

FOR FURTHER INFORMATION CONTACT: Dr. Wertice Smith, Acting Director, Chemistry Division, Science Program, Food Safety and Inspection Service, U.S. Department of Agriculture, Washington, DC, (202) 447–7623.

SUPPLEMENTARY INFORMATION: Until recently, laboratory testing of swine tissue (liver and muscle) has been performed only under FSIS's National Residue Program (NRP). Inspectors collect samples of the liver and muscle tissue of animals as directed and submit these samples to an FSIS laboratory or an FSIS accredited laboratory. The samples are then analyzed using the Sulfa Thin Layer Chromatography Fluorescence (STLC–F) analysis (an AOAC approved method [1] of analysis for the presence of sulfamethazine residues). The liver sample is tested first, and if the results indicate violative levels of SMZ (above the tolerance of 0.1 ppm [2]), the muscle tissue is analyzed to determine whether the muscle tissue also contains residues above the tolerance. The residue level in the liver is approximately 3 times the residue level in muscle tissue. Therefore, even though the liver is above the tolerance, the muscle tissue may not be. If the level of residue in the muscle tissue falls between 0.11 and 0.15 ppm, slightly above the tolerance of 0.1 ppm, FSIS policy has been to further confirm the test result through the use of Gas

[1] Official Methods of Analysis of the Association of Official Analytic Chemists, 14th Edition, Sections 41.052–41.058.

[2] 21 CFR 556.670; 9 CFR 318.20.

Chromatography/Mass Spectrometry (GC/MS) analysis (an AOAC approved method of confirmation analysis for sulfonamide residues).

Recently, because of continuing, unacceptable levels of sulfamethazine residue violations, the Agency has increased the number of tissue samples taken from swine for testing. This has increased the numbers of analyses to be conducted at FSIS's laboratories (or by accredited laboratories under contract to FSIS), and has led to a reexamination of FSIS's laboratory procedures for laboratory testing for sulfamethazine residues, and to the conclusion that changes should be made regarding routine use of GC/MS confirmation where the violative level was close to the tolerance, and regarding the routine analysis of more than one tissue from an animal.

FSIS has compared the results of STLC–F analyses which were positive for sulfamethazine with concentrations between 0.11 and 0.15 ppm with the results of the GC/MS confirmation analyses. This comparison revealed that all positive STLC–F analyses were confirmed as such under subsequent GC/MS analyses. Because of the accuracy of STLC–F analyses and because use of GC/MS to confirm STLC–F analyses is costly and time consuming, FSIS will no longer do confirmation testing on each positive STLC–F test of muscle tissue falling between 0.11 and 0.15 ppm. Confirmation testing using GC/MS will be performed only periodically as a quality control measure.

As stated, FSIS currently analyzes the liver sample for the presence of SMZ residues and, if violative SMZ residues are found, then the muscle sample is analyzed. However, because the known ratio for SMZ presence in liver to muscle is 3:1, the level in one can be calculated based upon the level found in the other. For example, if the residue concentration in the liver is 0.12 ppm, the residue concentration in the muscle tissue is estimated to be 0.04 ppm; the liver would contain violative residues, but the muscle tissue would not. Therefore, to better utilize its laboratory resources during this intensified monitoring period, FSIS will analyze muscle tissue samples only, and, if violative, the inspector will be notified and the liver will be condemned and disposed of in accordance with the requirements of 9 CFR Part 314 of the Federal meat inspection regulations.

In instances where an establishment seeks a faster laboratory report, FSIS will permit such establishment to send the liver tissue of the animal to an accredited laboratory at its own expense for sulfonamide analysis and will accept the results of that analysis.

Done at Washington, DC, on April 8, 1988.

Lester M. Crawford,

Administrator, Food Safety and Inspection Service.

[FR Doc. 88–8813 Filed 4–20–88; 8:45 am]

BILLING CODE 3410-DM-M

DEPARTMENT OF COMMERCE

[Docket No. 80222-8022]

Access of U.S. Scientists to Foreign Research Facilities

AGENCY: Federal Technology Management Division, Office of the Under Secretary for Economic Affairs.

ACTION: Request for information.

SUMMARY: The Federal Technology Transfer Act of 1986 (Pub. L. 99–502) requires directors of federal laboratories, when evaluating offers for cooperative research agreements involving participants subject to control of a foreign government or company, to consider whether such government grants U.S. entities access to its own facilities and opportunities to enter into similar cooperative arrangements.

The President, through Executive Order No. 12591 of April 10, 1987, ordered agencies to consult with the United States Trade Representative (USTR) in making this evaluation. USTR has requested the assistance of the Department of Commerce in collecting relevant information concerning foreign practices.

This information will assist the Department in working with federal agencies in implementing the Act and in preparing its own required reports to Congress. It should also assist Executive branch officials responsible for developing, evaluating and/or negotiating bilateral science and technology agreements with foreign governments, as well as related implementing agreements.

The Department is particularly interested in obtaining from the private sector specific information concerning (a) the denial by foreign governments of opportunities to do research in foreign facilities or to enter into formal cooperative relationships, and (b) the effect of current policies governing foreign access to federal laboratories on private sector willingness to enter into cooperative agreements with such laboratories. The Department is not soliciting any confidential or proprietary information.

DATE: Comments should be received on or before June 1, 1988, but certain information, as indicated under Supplementary Information below, will be welcome at any time.

ADDRESS: Comments should be mailed or delivered by hand to Mr. Joseph P. Allen, Acting Director, Federal Technology Management Division, Office of the Under Secretary for Economic Affairs, United States Department of Commerce, Room 4839 Herbert C. Hoover Building, Washington, DC 20230.

FOR FURTHER INFORMATION CONTACT: Mr. Joseph P. Allen at the above address or by telephone at (202) 377–8101.

SUPPLEMENTARY INFORMATION: In 1986 Congress passed, and the President signed, the Federal Technology Transfer Act of 1986 (Pub. L. 99–502). This statute seeks to promote the transfer of commercially useful technologies from federal laboratories to the private sector by encouraging the laboratories to enter into cooperative research and development arrangements with private industry, universitites, state and local governments, and others. The laboratories are authorized to agree in advance to convey exclusive rights to any inventions made by a federal employee resulting from the arrangement.

On April 10, 1987, President Reagan issued Executive Order No. 12591 which has as its principal themes (a) incentives for inventors in federal laboratories; (b) decentralized management of technology at those laboratories; and (c) effective and balanced international scientific and technological cooperation.

As such, the President and Congress recognized that adequate incentives are needed to encourage the private sector to take the time, trouble, and risk inherent in developing an invention, determining its commercial potential, and bringing it to the marketplace.

The President and the Congress recognized that technology complexes such as Silicon Valley, Route 128, Research Triangle and Forrestal Center had evolved around major universities which could transfer the results of research on an exclusive basis, thus providing business with a powerful incentive to enter into arrangements with them and to take the risks inherent in bringing a new technology to the marketplace (see S. Rep. No. 283, 99th Congress, Second Session).

President Reagan believed that federal laboratories could overcome the barriers which in the past had precluded effective collaboration with the private sector and, as such, had served to retard the commercialization of federal laboratory research. Congress believed

that by eliminating these restraints, the 300+ federal laboratories—which spend about $18 billion annually on R&D and employ one-sixth of the nation's scientists and engineers—could also serve as nuclei for successful research and development arrangements.

The Federal Technology Transfer Act of 1986 aims at creating a climate for improved scientific collaboration between the public and private sectors by removing the unnecessary legal and organizational barriers that had previously existed. To this end, the new law—

—Permitted agencies to allow their laboratories to enter into cooperative research agreements and to negotiate exclusive patent licensing arrangements;

—Required that agencies give at least 15% of royalties received from licensing an invention to the federally employed inventor with the remainder going to the laboratory; and

—Created a preference for domestic development of resulting technologies.

The latter aspect is particularly significant. Because of the size of the taxpayers' investment in the federal research establishment, Congress wanted to make sure that U.S. citizens would be the principal beneficiaries of the new efforts to adapt technology developed at federal laboratories to commercial use—efforts which, if successful, were expected to lead to new efficiencies, products, markets, industries and jobs, and, more generally, to improved international competitiveness.

To achieve its purpose, Congress took several specific actions. For example, it required laboratory directors, when evaluating possible research agreements, to give preferences to small businesses (see 15 U.S.C. 3710a(c)(4)(A)) and to businesses located in the United States which agree to substantially manufacture domestically products that incorporate inventions made under an agreement or products made through the use of processes developed under an agreement (see 15 U.S.C. 3710(c)(4)(B)).

Congress wanted to make sure that laboratory directors considered projects which are most likely to benefit employment in the United States or the technical development of U.S. companies.

In addition, concerns have been raised about the policies adopted by federal laboratories toward allowing foreign scientists access to state-of-the-art research facilities funded by the taxpayers without obtaining an appropriate quid pro quo. Laboratories have pursued such policies for a variety of reasons. In many cases, it reflects a commendable commitment to furthering international scientific cooperation and training foreign scientific personnel. In others, the motive is a practical one: it ensures a supply of trained personnel for far less money than a laboratory would have to pay U.S. nationals for the same work.

However, for a variety of reasons, members of Congress have frequently questioned Federal practices in this area and indeed continue to do so.

The Department is aware of concerns that foreign governments may have refused to allow American firms access to foreign research facilities or opportunities to enter into foreign-sponsored cooperative agreements and licensing arrangements, or that they are willing to do so only under onerous conditions—that is, that such governments have sought access to our most valuable technology while denying us comparable access to theirs. On the other hand, there is also speculation that some American firms may have failed to pursue efforts by foreign governments to include them in important research projects, including those relating to superconductivity.

The Federal Technology Transfer Act requires federal laboratory directors to take into consideration, when evaluating cooperative proposals involving industrial organizations or other persons subject to the control of a foreign government, whether such foreign government permits U.S. agencies, organizations or other persons to enter into cooperative research and development agreements and licensing arrangements (15 U.S.C. 3710a(c)(4)(B)). As the conferees explained this, "(w)hen evaluating whether to grant access by (sic) a foreign company, the Federal laboratories may examine the willingness of the foreign government to open its own laboratories to U.S. firms" (see House Conference Report No. 953, 99th Congress, Second Session at 16).

The President, in Executive Order No. 12591, also directs heads of agencies, when negotiating cooperative agreements and licensing arrangements with foreign persons or industrial organizations, to consider (a) whether those governments have policies to protect U.S. intellectual property rights, and (b) whether such governments have adequate national security export controls.

Agency heads are required to consult with the USTR in evaluating these various factors.

The policies adopted by laboratory directors and their parent agencies toward access by foreign scientists may have particular relevance under the Federal Technology Transfer Act. The Department is seeking information as to whether current U.S. policies regarding access to laboratories by foreign scientists are deterring American firms from pursuing opportunities for cooperative research with the Government laboratories.

If so, this would deny the firms and the public as a whole the benefits of developing technologies. It would deny the laboratories the chance to obtain from the private partner funds, personnel, services, facilities, equipment and other resources that could be used in the conduct of specified research as well as royalties from resulting inventions.

The USTR has requested the Department of Commerce, through the Office of the Under Secretary for Economic Affairs, to obtain relevant information which can be used in implementing the President's instruction. The information should also be helpful to appropriate federal agencies in drafting, analyzing, and negotiating bilateral science and technology agreements with foreign governments or related implementing arrangements.

Because of the importance of the issue, and because of the clear relationship of the request to its own responsibilities to report periodically to Congress on the implementation of the Federal Technology Management Act, the Department has agreed to provide this assistance. Accordingly, the Office of the Under Secretary is requesting public comment on any or all of the following matters:

(1) Has your organization even sought and been denied an opportunity to participate in a foreign research and development venture, whether purely private or sponsored/funded by a foreign government or quasi-government institution? If private, do you have any evidence or reason to believe that the denial was instigated by the foreign government involved? Was your organization permitted to participate, but only on terms which made participation impossible or impractical? Which country is involved? Do you have reason to believe its policies are improving?

(2) To what extent, if any, has your institution's willingness to participate in cooperative arrangements with federal laboratories been favorably or unfavorably affected by current U.S. practices governing access by foreign scientists to such laboratories? What policies or procedures would you recommend be changed or adopted?

(3) If your institution is a college, university or other nonprofit

organization which has entered into cooperative agreements with the private sector, have you encountered any corporate concern regarding foreign access to your facilities and, if so, how have you attempted to address these?

(4) What criteria would you recommend for determining whether an industrial organization is subject to "the control of a foreign company or government" as required by Section 3710a(c)(4)(B) of Title 15 of the United States Code?

(5) What recommendations can you make for improving the Federal Technology Transfer Act or the way it is administered?

Comments, particularly those relating to Question 1, are requested by June 1, 1988 but information requested will be welcome on a continuing basis. All comments will be considered. Examples of situations described in Question 1 that arose prior to this notice should be submitted as soon as possible to assist us in evaluating any pending international science and technology agreements. The Department specifically requests that replies not include information of a confidential or proprietary nature.

The information collection requested by this notice has been approved by the Office of Management and Budget under Control No. 0608-0059.

Dated: April 11, 1988.

Barry Beringer,

Associate Under Secretary for Economic Affairs.

[FR Doc. 88-8718 Filed 4-20-88; 8:45 am]

BILLING CODE 3510-18-M

International Trade Administration

[A-570-007]

Barium Chloride From the People's Republic of China; Preliminary Results of Antidumping Duty Administrative Review

AGENCY: International Trade Administration, Import Administration, Commerce.

ACTION: Notice of preliminary results of antidumping duty administrative review.

SUMMARY: In response to a request by the petitioner, the Department of Commerce has conducted an administrative review of the antidumping duty order on barium chloride from the People's Republic of China. The review covers China National Chemicals Import and Export Corporation (Sinochem) and the periods April 6, 1984 through September 30, 1984 and October 1, 1985 through September 30, 1986. The review indicates the existence of dumping margins during both periods.

As a result of the review, the Department has preliminarily determined to assess antidumping duties equal to the calculated differences between United States price and foreign market value.

Interested parties are invited to comment on these preliminary results.

EFFECTIVE DATE: April 21, 1988.

FOR FURTHER INFORMATION CONTACT: Michael Rill or Maureen Flannery, Office of Compliance, International Trade Administration, U.S. Department of Commerce, Washington, DC 20230; telephone: (202) 377-3601/2923.

SUPPLEMENTARY INFORMATION:

Background

On January 5, 1987 the Department of Commerce ("the Department") published in the **Federal Register** (52 FR 313) the final results of its last administrative review of the antidumping duty order on barium chloride from the People's Republic of China (49 FR 40635, October 17, 1984). The petitioner requested in accordance with § 353.53a(a) of the Commerce Regulations that we conduct an administrative review. We published the notice of initiation on November 18, 1986 (51 FR 41649). The Department has now conducted that administrative review in accordance with section 751 of the Tariff Act of 1930 ("the Tariff Act").

Scope of the Review

The United States has developed a system of tariff classification based on the international harmonized system of Customs nomenclature. Congress is considering legislation to convert the United States to this Harmonized System ("HS").

In view of this, we will be providing both the appropriate *Tariff Schedules of the United States Annotated* ("TSUSA") item numbers and the appropriate HS item numbers with our product descriptions on a test basis, pending Congressional approval. As with the TSUSA, the HS item numbers are provided for convenience and Customs purposes. The written description remains dispositive.

We are requesting petitioners to include the appropriate HS item numbers as well as the TSUSA item numbers in all new petitions filed with the Department. A reference copy of the proposed Harmonized System schedule is available for consultation in the Central Records Unit, Room B-099, U.S. Department of Commerce, 14th Street and Constitution Avenue NW, Washington, DC 20230. Additionally, all Customs offices have reference copies, and petitioners may contact the Import Specialist at their local Customs office to consult the schedule.

Imports covered by the review are shipments of barium chloride, a chemical compound having the formula BaCl2 or BaC12-2H20, currently classifiable under TSUSA item 417.7000 and HS item 2827.38.00.

The review covers Sinochem and the periods April 6, 1984 through September 30, 1984 and October 1, 1985 through September 30, 1986.

United States Price

In calculating United States price the Department used purchase price, as defined in section 772 of the Tariff Act. Purchase price was based on the delivered, packed price to unrelated purchasers in the United States. We made adjustments for foreign inland freight, ocean freight and insurance. No other adjustments were claimed or allowed.

Foreign Market Value

We have concluded that the economy of the PRC is state-controlled for purposes of this administrative review. As a result, section 773(c) of the Tariff Act requires us to use either the prices or the constructed value of such or similar merchandise sold by a country or countries whose economy is not state-controlled. Section 353.8 of the Commerce Regulations establishes a preference for determining foreign market value based upon sales prices in a non-state-controlled-economy country at a stage of economic development comparable to that of the state-controlled-economy country.

After an analysis of countries which produce barium chloride, we determined that India and Peru were the countries most comparable to the PRC in their stages of economic development. However, the Indian Embassy declined to permit us to contact Indian firms, and the firm contacted in Peru did not respond.

Lacking information on sales of barium chloride from a country at a stage of economic development comparable to that of the PRC, in accordance with § 353.8(c) of the Commerce Regulations we calculated foreign market value based on the Chinese factors of production as valued in a non-state-controlled-economy country at a stage of economic development reasonably comparable to that of the PRC.

We valued PRC materials, labor, and energy on the basis of publicly available price and cost information from

Thailand, except that a value for feedstock (raw material) coal from Indonesia was used because a value from Thailand was not available. Valuation of factory overhead was based on experience in Thailand. We added amounts for general expenses and profit as required by section 773(e)(1)(B) of the Tariff Act and packing costs based on Thai costs. Because the respondent did not provide factor information for all factories requested, we determined foreign market value on the basis of the highest-cost producer among those for which factor information was provided.

Preliminary Results of the Review

As a result of our comparison of United States price to foreign market value, we preliminarily determine that the following margins exist:

Manufacturer/exporter	Time period	Margin (percent)
Sinochem	04/06/84–09/30/84	27.21
	10/01/85–09/30/86	59.99

Interested parties may request disclosure and/or an administrative protective order within 5 days of the date of publication of this notice and may request a hearing within 8 days of publication. Any hearing, if requested, will be held 35 days after the date of publication, or the first workday thereafter. Prehearing briefs and/or written comments from interested parties may be submitted not later than 25 days after the date of publication. Rebuttal briefs and rebuttals to written comments, limited to issues raised in those comments, may be filed not later than 32 days after the date of publication. The Department will publish the final results of the administrative review, including the results of its analysis of any such comments or hearing.

The Department shall determine, and the Customs Service shall assess, antidumping duties on all appropriate entries. Individual differences between United States price and foreign market value may vary from the percentages stated above. The Department will issue appraisement instructions directly to the Customs Service.

Further, as provided in section 751(a)(1) of the Tariff Act, a cash deposit of estimated antidumping duties of 59.99 percent based on the above margin for the most recent period shall be required. For any future entries of this merchandise from a new exporter not covered in this or prior administrative reviews, whose first shipments occurred after September 30, 1986 and who is unrelated to the reviewed firm, a cash deposit of 59.99 percent shall be required. These deposit requirements are effective for all shipments of Chinese barium chloride entered, or withdrawn from warehouse, for consumption on or after the date of publication of the final results of this administrative review.

This administrative review and notice are in accordance with section 751(a)(1) of the Tariff Act (19 U.S.C. 1675(a)(1)) and § 353.53a of the Commerce Regulations (19 CFR 353.53a).

Date: April 13, 1988.

Joseph A. Spetrini,

Acting Assistant Secretary for Import Administration.

[FR Doc. 88-8802 Filed 4-20-88; 8:45 am]

BILLING CODE 3510-DS-M

[A-475-031]

Large Power Transformers From Italy; Preliminary Results of Antidumping Duty Administrative Review

AGENCY: International Trade Administration, Import Administration, Commerce.

ACTION: Notice of preliminary results of antidumping duty administrative review.

SUMMARY: The Department of Commerce has conducted an administrative review of the antidumping finding on large power transformers from Italy. The review indicates the existence of dumping margins for the one firm with shipments. The other two Italian manufacturers had no shipments.

EFFECTIVE DATE: April 21, 1988.

FOR FURTHER INFORMATION CONTACT: Laurie A. Lucksinger or David P. Mueller, Office of Compliance, International Trade Administration, U.S. Department of Commerce, Washington, DC 20230; telephone: (202) 377-5255/2923.

SUPPLEMENTARY INFORMATION:

Background

On December 10, 1987, the Department of Commerce ("the Department") published in the **Federal Register** (52 FR 46806) the final results of its last administrative review of the antidumping finding on large power transformers from Italy (37 FR 11772, June 14, 1972). The petitioner, Westinghouse Electric Corporation, and two manufacturers, Ansaldo Componenti ("Ansaldo") and Officine Elettromeccaniche Lombarde ("O.E.L."), requested in accordance with 353.53a(a) of the Commerce Regulations that we conduct an administrative review. We published a notice of initiation of antidumping duty administrative review on July 17, 1987 (52 FR 27036). The Department has now conducted the administrative review in accordance with section 751 of the Tariff Act of 1930 ("the Tariff Act").

Scope of Review

Imports covered by the review are shipments of large power transformers ("transformers"); that is, all types of transformers rated 10,000 kVA (kilovolt-amperes) or above, by whatever name designated, used in the generation, transmission, distribution, and utilization of electric power. The term "transformers" includes, but is not limited to, shunt reactors, autotransformers, rectifier transformers, and power rectifier transformers. Not included are combination rectifier-transformer units, commonly known as rectiformers, if the entire integrated assembly is imported in the same shipment and entered on the same entry and the assembly has been ordered and invoiced as a unit, without a separate price for the transformer portion of the assembly. Transformers covered by this finding are currently classifiable in TSUSA items 682.0755, 682.0765, and 682.0775. These products are currently classifiable under HS item numbers HS 8504.22.00, 8504.23.00, 8504.34.00, 8504.40.00, 8504.50.00 and 8505.50.00.

The review covers three exporters of Italian large power transformers to the United States, Nuova Industrie Elettriche di Legnano ("N.I.E.L."), Ansaldo, and O.E.L., and the period June 1, 1986 through May 31, 1987.

United States Price

In calculating United States price the Department used purchase price as defined in section 772 of the Tariff Act. Purchase price was based on the duty-paid, delivered, packed price paid by unrelated purchasers in the United States. We made adjustments, where applicable, for U.S. and foreign inland freight, ocean freight, insurance, handling charges, brokerage charges, and U.S. duties. No other adjustments were claimed or allowed.

Foreign Market Value

In calculating foreign market value the Department used home market price, as defined in section 773 of the Tariff Act since sufficient quantities of such or similar merchandise were sold in the home market to provide a basis for

comparison. Home market price was based on the ex-factory price.

Due to the technical complexity of these products we used the procedure developed in previous reviews to make our determination. We determined the theoretical price of the U.S. and home market units according to the 1968 Westinghouse Electric Corporation price rules ("WPR") and found the U.S./home market ratio. We then adjusted each actual sales price to account for differences between the actual home market unit price and the theoretical price of that unit, including commissions to unrelated parties, credit, cost of treating insulation oil, and payments to O.E.L. accourding to its home market contracts for storing the home market units. Further, we made an adjustment for differences in efficiency; that is, differences in internal transformer power losses. We then applied the theoretical ratio to the net home market transformer price. Finally, we converted the adjusted home market price to U.S. dollars and made circumstance of sale adjustments and added the cost of packing the U.S. units. O.E.L. claimed a warehousing expense on its home market units. As we noted in the previous review, we do not consider "warehousing" to be an additional cost to the manufacturers of this product and we have not allowed the claim in these preliminary results. No other adjustments to foreign market value were claimed or allowed.

Preliminary Results of the Review

As a result of our comparison of United States price to foreign market value, we preliminarily determine that the following margins exist for the period:

Manufacturer/exporter	Margin (percent)
N.I.E.L	*71.40
Ansaldo	*0.00
O.E.L	6.75

*No shipments during the period; margin from last review in which there were shipments.

Ansaldo has requested revocation from the finding based on the Department's determination in the last administrative review that this Italian manufacturer had made no sales at less than fair value for the period June 1, 1983 through May 31, 1984. In addition, Ansaldo has made no shipments of transformers to the U.S. for the period June 1, 1984 through May 31, 1987. This request for revocation is pursuant to the Commerce regulations (19 CFR 353.54(b)).

The Department notes that it determined in the last administrative review that the decision to revoke an antidumping finding with respect to one company does not rely solely on the absence of sales at less than fair value or lack of shipments. The Department must also be satisfied that there is no likelihood of resumption of sales at less than fair value within the meaning of 19 CFR 353.54(a). In making such a determination we must consider the merchandise and its market. There is a limited market in the U.S. for transformers and there may be several years between sales of the units. The last review for Ansaldo covered only one sale to the United States. Due to the nature of this case, revocation with respect to Ansaldo would be premature without the review of additional sales to the United States.

Interested parties may request disclosure and/or an administrative protective order within 5 days after the date of publication of this notice and may request a hearing within 8 days of publication. Any hearing, if requested, will be held 35 days after the date of publication or the first workday thereafter. Prehearing briefs and/or written comments from interested parties may be submitted not later than 25 days after the date of publication. Rebuttal briefs and rebuttals to written comments, limited to issues raised in those comments, may be filed not later than 32 days after the date of publication. The Department will publish the final results of the administrative review including the results of its analysis of any such comments or hearing.

The Department shall determine, and the Customs Service shall assess, antidumping duties on all appropriate entries. Individual differences between United States price and foreign market value may vary from the percentages stated above. The Department will issue appraisement instruments directly to the Customs Service.

Further, as provided by section 751(a)(1) of the Tariff Act a cash deposit rate of estimated antidumping duties based on the above margins shall be required for all shipments by the companies reviewed of large power transformers from Italy.

For any future entries of this merchandise from a new exporter or manufacturer not covered in this or prior administrative reviews, whose first shipments occurred after May 31, 1987 and who is unrelated to any previously reviewed firm, a cash deposit of 6.75 percent shall be required on large power transformers. These deposit requirements are effective for all shipments of Italian large power transformers entered, or withdrawn from warehouse, for consumption on or after the date of publication of the final results of this administrative review.

This administrative review and notice are in accordance with section 751(a)(1) of the Tariff Act (19 U.S.C. 1675(a)(1)) and § 353.53a of the Commerce Regulations (19 CFR 353.53a).

Joseph A. Spetrini,

Acting Assistant Secretary Import Administration.

Date: April 13, 1988.

[FR Doc. 88-8803 Filed 4-20-88; 8:45 am]

BILLING CODE 3510-DS-M

[A-427-001]

Sorbitol From France; Preliminary Results of Antidumping Administrative Review

AGENCY: International Trade Administration, Import Administration, Commerce.

ACTION: Notice of preliminary results of antidumping duty administrative review.

SUMMARY: In response to a request by Roquette Freres, the Department of Commerce has conducted an administrative review of the antidumping duty order on sorbitol from France. The review covers the one known manufacturer/exporter of this merchandise to the United States and the period April 1, 1986 through March 31, 1987. The review indicates the existence of *de minimis* dumping margins during the period.

As a result of the review, the Department has preliminarily determined to assess dumping duties equal to the calculated differences between United States price and foreign market value. Interested parties are invited to comment on these preliminary results.

EFFECTIVE DATE: April 21, 1988.

FOR FURTHER INFORMATION CONTACT: Robin Gray or Phyllis Derrick, Office of Compliance, International Trade Administration, U.S. Department of Commerce, Washington, DC 20230; Telephone (202) 377-1130/2923.

SUPPLEMENTARY INFORMATION:

Background

On June 1, 1987, the Department of Commerce ("the Department") published in the **Federal Register** (52 FR 20444) the final results of its last administrative review of the antidumping duty order on sorbitol from France (47 FR 15391, April 9, 1982).

Roquette Freres requested in accordance with § 353.53a(a) of the Commerce Regulations that we conduct an administrative review. We published a notice of initiation on May 20, 1987 (52 FR 18937). The Department has now conducted that administrative review in accordance with section 751 of the Tariff Act of 1930 ("the Tariff Act").

Scope of the Review

The United States has developed a system of tariff classification based on the international harmonized system of Customs nomenclature. Congress is considering legislation to convert the United States to this Harmonized System ("HS"). In view of this, we will be providing both the appropriate *Tariff Schedules of the United States Annotated ("TSUSA")* item numbers and the appropriate HS item numbers with our product descriptions on a test basis, pending Congressional approval. As with the TSUSA, the HS item numbers are provided for convenience and Customs purposes. The written description remains dispositive.

We are requesting petitioners to include the appropriate HS item number(s) as well as the TSUSA number(s) in all new petitions filed with the Department. A reference copy of the proposed Harmonized System schedule is available for consultation at the Central Records Unit, Room B-099, U.S. Department of Commerce, 14th and Constitution Avenue NW., Washington, DC 20230. Additionally, all Customs offices have reference copies, and petitioners may contact the Import Specialist at their local Customs offices to consult the schedule.

Imports covered by the review are shipments of French crystalline sorbitol. Crystalline sorbitol is a polyol produced by the catalytic hydrogenation of sugars (glucose). It is used in the production of sugarless gum, candy, groceries and pharmaceuticals. Such merchandise is currently classifiable under TSUSA item number 493.6820 and HS item number 29.05.4400 of the Harmonized System. The review covers the one known French exporter of crystalline sorbitol to the United States, Roquette Freres, and the period April 1, 1986 through March 31, 1987.

United States Price

In calculating United States price the Department used purchase price, as defined in section 772 of the Tariff Act. Purchase price was based on the packed, duty-paid, delivered price to unrelated purchasers in the United States. We made deductions, where applicable, for foreign inland freight, ocean freight, marine insurance, freight forwarding, U.S. Customs duties and brokerage fees. We made an addition for an import levy imposed by the EC on corn which was not collected by reason of exportation of the sorbitol to the United States. No other adjustments were claimed or allowed.

Foreign Market Value

In calculating foreign market value the Department used home market price, as defined in section 773 of the Tariff Act, since sufficient quantities of such or similar merchandise were sold in the home market to provide a basis for comparision. Home market price was based on the packed delivered price to unrelated purchasers in the home market. We made adjustments, where applicable, for inland freight, rebates, post-sale warehousing, and differences in credit costs and packing. No other adjustments were claimed or allowed.

Preliminary Results of the Review

As a result of our comparison of United States price to foreign market value, we preliminarily determine that a margin of .46 percent exists for the period April 1, 1986 through March 31, 1987.

Interested parties may request disclosure and/or an administrative protective order within 5 days of the date of publication of this notice and may request a hearing within 8 days of publication. Any hearing, if requested, will be held 35 days after the date of publication, or the first workday thereafter. Pre-hearing briefs and/or written comments from interested parties may be submitted not later than 25 days after the date of publication. Rebuttal briefs and rebuttals to written comments, limited to issues raised in those comments, may be filed not later than 32 days after the date of publication.

The Department shall determine, and the Customs Service shall assess, antidumping duties on all appropriate entries. Individual differences between United States price and foreign market value may vary from the percentage stated above. The Department will issue appraisement instructions directly to the Customs Service.

Further, since the margin for Roquette Freres for the review period is less than 0.50 percent and therefore *de minimis* for cash deposit purposes, the Department shall not require a cash deposit of estimated antidumping duties, as require, as required by section 751(a)(1) of the Tariff Act, on shipments of French sorbitol entered, or withdrawn from warehouse, for consumption on or after the date of publication of the final results of this administrative review. For any future entries of this merchandise from a new exporter not covered in this or prior administrative reviews, whose first shipments occurred after March 31, 1987 and who is unrelated to any reviewed firm, or any previously review firm, no cash deposit shall be required. These deposit requirements are effective for all shipments of French sorbitol entered, or withdrawn from warehouse, for consumption on or after the date of publication of the final results of this administrative review.

This administrative review and notice are in accordance with section 751(a)(1) of the Tariff Act (19 U.S.C. 1675(a)(1)) and § 353.53a of the Commerce Regulations (19 CFR 353.53a).

Joseph A. Spetrini,

Acting Assistant Secretary for Import Administration.

Date: April 13, 1988.

[FR Doc. 88-8804 Filed 4-20-88; 8:45 am]

BILLING CODE 3510-DS-M

[A-588-015]

Television Receivers, Monochrome and Color, From Japan; Final Results of Antidumping Duty Administrative Review and Revocation in Part

AGENCY: International Trade Administration, Import Administration, Commerce.

ACTION: Notice of final results of antidumping duty administrative review and revocation in part.

SUMMARY: On November 23, 1987, the Department of Commerce published the preliminary results of its administrative review and intent to revoke in part the antidumping finding on television receivers, monochorme and color, from Japan. The review covers one manufacturer and one exporter of this merchandise to the United States and the period April 1, 1983 through September 12, 1984.

We gave interested parties an opportunity to comment on the preliminary results and intent to revoke in part. We received no comments.

Based on our analysis, the final results of our review remain unchanged from the preliminary results.

EFFECTIVE DATE: April 21, 1988.

FOR FURTHER INFORMATION CONTACT: J.E. Downey or John Kugelman, Office of Compliance, International Trade Administration, U.S. Department of Commerce, Washington, DC 20230; telephone: (202) 377-5255/3601.

SUPPLEMENTARY INFORMATION:

Background

On September 12, 1984, the Department of Commerce ("the Department") published in the **Federal Register** (49 FR 35821) the tentative determination to revoke in part the antidumping finding on television receivers, monochrome and color, from Japan (36 FR 4597, March 10, 1971). On November 23, 1987, the Department published in the **Federal Register** (52 FR 44927) preliminary results of its administrative review of and intent to revoke in part the antidumping finding. We have now completed that administrative review in accordance with section 751 of the Tariff Act of 1930 (the "Tariff Act").

Scope of the Review

Imports covered by the review are shipments of television receiving sets, monochrome and color, from Japan. Television receiving sets include, but are not limited to, units known as projection televisions, receiver monitors, and kits (containing all the parts necessary to receive a broadcast television signal and produce a video image). Not included are certain monitors not capable of receiving a broadcast signal, certain combination units (combinations of television receivers with other electrical entertainment components such as tape recorders, radio receivers, etc.), and certain subassemblies not containing the components essential for receiving a broadcast television signal and producing a video image.

This review covers television receiving sets manufactured by Orion Electric Co., Ltd. and exported to the United States by Otake Trading Co., Ltd. and the period April 1, 1983 through September 12, 1984.

Final Results of the Review and Revocation in Part

We invited interested parties to comment on the preliminary results of the review and intent to revoke in part. We received no comments. Based on our analysis, the final results of the review remain unchanged from the preliminary results and we determine that no margins exist for Orion/Otake for the period April 1, 1983 through September 12, 1984.

For the reasons set forth in the preliminary results of review and intent to revoke in part, we are satisfied that there is no likelihood of resumption of sales at less than fair value of Japanese television receivers, monochrome and color, manufactured by Orion Electric Co. and exported by Otake Trading Co. Accordingly, we revoke in part the antidumping finding on televisions, monochrome and color, from Japan. This partial revocation applies to all unliquidated entries of this merchandise manufactured by Orion Electric Co., Ltd. and exported to the U.S. by Otake Trading Co., Ltd. and entered, or withdrawn from warehouse, for consumption on or after September 12, 1984.

The Department shall instruct the Customs Service not to assess antidumpting duties on all appropriate entries.

This administrative review, revocation in part, and notice are in accordance with sections 751(a)(1) and (c) of Tariff Act (19 U.S.C. 1675(a)(1), (c)), and § 353.53a and 19 CFR 353.53a and 353.54.

Date April 13, 1988.

Joseph A. Spetrini,

Acting Deputy Assistant Secretary for Import Administration.

[FR Doc. 88-8805 Filed 4-20-88; 8:45 am]

BILLING CODE 3510-DS-M

National Oceanic and Atmospheric Administration

North Pacific Fishery Management Council; Public Meeting

AGENCY: National Marine Fisheries Service, NOAA, Commerce.

The North Pacific Fishery Management Council's Bycatch Committee will convene a public meeting, May 4, 1988, in Kodiak, AK, to prepare a fishery management plan amendment outline to replace the time/area closure plan that expires at the end of 1989. The public meeting will adjourn on May 7. During the first two days of the meeting the Committee will meet jointly with the Kodiak Advisory Committee's Bycatch Subgroup to discuss the proposed amendment. Other agenda topics include reports on the status king and Tanner crab stocks, salmon bycatch and halibut distribution.

For more information contact the North Pacific Fishery Management Council, P.O. Box 103136, Anchorage, AK 99510; telephone (907) 271-2809.

Dated: April 15, 1988.

Richard H. Schaefer,

Director, Office of Fisheries Conservation and Management, National Marine Fisheries Service.

[FR Doc. 88-8783 Filed 4-20-88; 8:45 am]

BILLING CODE 3510-22-M

COPYRIGHT ROYALTY TRIBUNAL

[Docket No. 88-2-86CD]

Commencing 1986 Cable Distribution Proceeding; Partial Distribution of Royalty Fund

AGENCY: Copyright Royalty Tribunal.

ACTION: Notice Commencing 1986 Cable Distribution Proceeding; Notice of Partial Distribution of 1986 Cable Royalty Fund.

SUMMARY: The Copyright Royalty Tribunal announces that a controversy exists regarding the distribution of the royalties paid by cable operators in Phase I and In Phase II for the calendar year 1986. The Tribunal also announces it will make a partial distribution of the 1986 cable royalty fund.

EFFECTIVE DATE: The 1986 cable distribution controversy is declared effective April 21, 1988. The partial distrubiton of the 1986 cable royalty fund shall take place on April 21, 1988.

FOR FURTHER INFORMATION CONTACT: Robert Cassler, General Counsel, Copyright Royalty Tribunal, 1111 20th Street, NW., Suite 450, Washington, DC 20036, (202) 653-5175.

SUPPLEMENTARY INFORMATION: Based upon the comments filed in response to the Copyright Royalty Tribunal's notice, 52 FR 47626 (December 15, 1987), asking the claimants to the 1986 cable copyright royalty fund whether a controversy existed as to the distribution of the fund, the Tribunal has determined that controversies exist in both Phase I and Phase II of the distribution proceeding, effective April 21, 1988.

Prior to the receipt of the claimants' comments, the Tribunal received a joint motion from the Phase I claimants asking for a distribution of all the monies coming available for distribution on April 21, 1988. The movants moted that the Court of Appeals decision in *Cablevision v. MPAA et. al.* will result in additional royalty payments being made into the 1986 fund sufficient to satisfy all claims that may be made with respect to the 1986 fund. Accordingly, the full amount of royalties maturing on April 21, 1988 can be distributed. None of the Phase II parties opposed the motion. The Tribunal granted the movants' motion by Order dated March 8, 1988, and hereby announces that the Tribunal will make a partial distribution of the 1986 cable royalty fund on April 21, 1988, being those funds which shall become available on that date.

The procedural dates in this docket will be set by the Tribunal in an order to

be issued to the parties in the proceeding at a later date.

Mario F. Aquero,

Chairman.

Dated: April 18, 1988.

[FR Doc. 88-8744 Filed 4-20-88; 8:45 am]

BILLING CODE 1410-09-M

DEPARTMENT OF DEFENSE

Department of the Army

Army Science Board; Closed Meeting

In accordance with section 10(a)(2) of the Federal Advisory Committee Act (Pub. L. 92-463), announcement is made of the following Committee Meeting:

Name of the Committee: Army Science Board (ASB).

Dates of Meeting: 11-12 May 1988.

Times of Meeting: 0800-1700 hours each day.

Place: Pentagon, Washington, DC.

Agenda: The Army Science Board's Ad Hoc Subgroup on Ballistic Missile Defense (Follow-on) will meet for classified briefings and discussions reviewing matters that are an integral part of or are related to the issue of the study effort; i.e. terminal defense, midcourse discrimination, and BM/C3. The Subgroup is tasked with a comprehensive review of BMD requirements, technology, and specific critical issues impacting on program development. This meeting will be closed to the public in accordance with section 552b(c) of Title 5, U.S.C., specifically subparagraph (1) thereof, and Title 5, U.S.C., Appendix 2, subsection 10(d). The classified and unclassified matters to be discussed are so inextricably intertwined so as to preclude opening any portion of the meeting. The ASB Administrative Officer, Sally Warner, may be contacted for further information at (202) 695-3039 or 695-7046.

Sally A. Warner,

Administrative Officer, Army Science Board.

[FR Doc. 88-8721 Filed 4-20-88; 8:45 am]

BILLING CODE 3710-08-M

Department of the Navy

Chief of Naval Operations Executive Panel Advisory Committee; Closed Meeting

Pursuant to the provisions of the Federal Advisory Committee Act (5 U.S.C. app.), notice is hereby given that the Chief of Naval Operations (CNO) Executive Panel Advisory Committee Strategic Planning and Technology Base Task Force will meet June 1-2, 1988 from 9 a.m. to 5 p.m. each day, at 4401 Ford Avenue, Alexandria, Virginia. All sessions will be closed to the public.

The purpose of this meeting is to explore the relationship between Navy strategic planning process and the Technology Base. The entire agenda for the meeting will consist of discussion of key issues issues regarding the integration of technology management with strategic planning and requirements definition, and related intelligence. These matters constitute classified information that is specifically authorized by Executive order to be kept secret in the interest of national defense and is, in fact, properly classified pursuant to such Executive order. Accordingly, the Secretary of the Navy has determined in writing that the public interest requires that all sessions of the meeting be closed to the public because they will be concerned with matters listed in section 552b(c)(1) of title 5, United States Code.

For further information concerning this meeting, contact Ann Lynn Cline, Special Assistant to the CNO Executive Panel Advisory Committee, 4401 Ford Avenue, Room 601, Alexandria, Virginia 22302-0268. Phone (703) 756-1205.

Date: April 18, 1988.

W. R. Babington, Jr.,

Commander, JAGC, U.S. Naval Federal Register Liaison Officer.

[FR Doc. 88-8785 Filed 4-20-88; 8:45 a.m.]

BILLING CODE 3810-AE-M

Naval Research Advisory Committee; Closed Meeting

Pursuant to the provisions of the Federal Advisory Committee Act (5 U.S.C. App.), notice is hereby given that the Naval Research Advisory Committee Panel on Importance of Environmental Data will meet on May 11-12, 1988. The meeting will be held at the Center for Naval Analyses 4401 Ford Avenue, Alexandria, VA. The meeting will commence at 8:30 a.m. and terminate at 4:30 p.m. on May 11; and commence at 8:30 a.m. and terminate at 4:00 p.m. on May 12, 1988. All sessions of the meeting will be closed to the public.

The purpose of the meeting is to provide briefings for the panel members on the significance of quantitative knowledge of environmental parameters to naval weapons and warfare. The agenda will include technical briefings, and discussions addressing tactical environmental support systems, surface/anti-air warfare systems, oceanography research and development and the warfare payoff, integrated undersea surveillance, environmental support to the fleet, role of electro-optics and RF propagation in naval warfare and magnetics and naval warfare. These briefings, and discussions will contain classified information that is specifically authorized under criteria established by Executive Order to be kept secret in the interest of national defense and is in fact properly classified pursuant to such Executive Order. The classified and nonclassified matters to be discussed are so inextricably intertwined as to preclude opening any portion of the meeting. Accordingly, the Secretary of the Navy has determined in writing that the public interest requires that all sessions of the meeting be closed to the public because they will be concerned with matters listed in section 552b(c)(1) of title 5, United States Code.

For further information concerning this meeting contact: Commander L.W. Snyder, U.S. Navy, Office of Naval Research, 800 North Quincy Street, Arlington, VA 22217-5000.

Date: April 18, 1988.

W.R. Babington, Jr.,

Commander, JAGC, U.S. Navy Federal Register Liaison Officer.

[FR Doc. 88-8784 Filed 4-20-88; 8:45 am]

BILLING CODE 3810-AE-M

DEPARTMENT OF ENERGY

Idaho Operations Office; Research and Development for Comminution Equipment

AGENCY: Department of Energy.

ACTION: Notice of Program Interest for Research and Development for Comminution Equipment.

SUMMARY: The Idaho Operations Office of the U.S. Department of Energy, Office of Industrial Programs (OIP), is interested in unsolicited proposals for the research and development of major pieces of equipment and/or advanced control systems, including sensors, for comminution. The proposed research and development may take any form from analytical design and bench scale testing through industrial installation and evaluation. The initial phase of the work must include a techno-economic assessment of the project indicating sufficient economic viability to assure implementation by private industry.

As used herein, the term "comminution" refers to the grinding circuit starting with the crushing step and ending with the classifier. It includes all major and ancillary equipment affecting the energy requirements of the process, by this

definition, such general mining operations as drilling, hauling, and blasting are excluded. Also excluded by this definition are the extraction steps normally found in the finish cycle, e.g., flotation, melting, solvent extracting, and smelting.

All unsolicited proposals must contain the following information: 1) An economic evaluation of the proposed concept comparing its cost with the average cost currently experienced in the environment wherein it is expected to be applied; 2) an energy savings evaluation of the proposed concept indicating that its industry-wide application would yield an energy savings of at least 0.01 Quad/year (based on 10,500 BTU/kWh); 3) a description of the proposed research and development, including a statement of work, project schedule, budget, milestones, and decision points; 4) a description of the major participants, their most recent financial statements, and the amount of cost sharing by each; and 5) a description of the facilities wherein the research and development will be performed and the resumes of the key individuals who will direct and perform the research.

DOE will make a general evaluation of the unsolicited proposals based on the following types of factors: (1) The overall merit of the proposed project; (2) the anticipated objectives to be achieved and the probability of achieving the stated objectives; (3) the facilities or techniques which the applicant proposes to make available to achieve the proposed project's objectives; and (4) the qualifications of the proposer, project director, and key personnel. Based on the general evaluation above, DOE will select proposals which represent a unique or innovative idea, method, or approach for the development of major items of equipment and/or advanced control systems. The factor "overall merit of the proposed project" will be determined primarily by (a) the degree of energy and cost savings which the industry can expect through implementation of the research and development results; and (b) the adequacy of the project description, statement of work, schedule, and milestones. Industry's commitment to the project, as demonstrated by the amount of its cost sharing, will be strongly considered in the selection.

DOE has funding available in FY 1988 for initiating this comminution research and development project. Additional DOE support in subsequent fiscal years is dependent on the availability of funds, the success of the projects initiated in FY 1988, and the quality of unsolicited proposals that are eligible for consideration in FY 1989.

Industrial concerns active in the mineral processing industry, all technically qualified individuals, educational institutions, private research institutions, nonprofit organizations, or other commercial entities are invited to respond to this announcement. However, proposers who are not active in the manufacture and/or use of comminution equipment are encouraged to secure significant participation in the project by an industrial partner with an interest in the application of the proposed technology.

DOE reserves the right to support or not support any or all proposals. DOE will accept no responsibility for any costs associated with the preparation of proposals.

DATES: Unsolicited proposals will be evaluated individually as they are received. Due to the availability of fiscal year 1988 funds, proposers are encouraged to submit as soon as possible to be eligible for consideration in FY 1988. This NOPI is effective until April 15, 1989.

CONTACTS: Each proposal submitted must be physically separate from any other proposal submitted. Six (6) copies of each proposal, including the signed original, should be submitted to:

U.S. Department of Energy, Idaho Operations Office, 785 DOE Place, Idaho Falls, ID 83402
Attn: W.A. Obenchain, Conservation Technologies Division, Unsolicited Proposal NOPI

Questions relating to this NOPI should be directed to the above address or W. A. Obenchain, telephone (208) 526-1807.

Issued at Idaho Falls, ID, on April 11, 1988.

H. Brent Clark,

Director, Contracts Management Division.

[FR Doc. 88-8716 Filed 4-20-88; 8:45 am]

BILLING CODE 6450-01-M

Federal Energy Regulatory Commission

[Docket Nos. ER88-336-000 et al.]

Maine Public Service Co. et al.; Electric Rate, Small Power Production, and Interlocking Directorate Filings

Take notice that the following filings have been made with the Commission:

1. Maine Public Service Company

[Docket No. ER88-336-000]

April 18, 1988.

Take notice that on April 11, 1988, Maine Public Service Company (Maine Public) tendered for filing a proposed initial rate schedule pertaining to a Purchase Agreement (Agreement) between Maine Public and Boston Edison Company (Boston Edison) for the sale of capacity and energy to Boston Edison. Under this Agreement, Maine Public will sell its full entitlement to capacity and energy from Wyman Unit No. 4 to Boston Edison for the six month period beginning May 1, 1988 and ending October 31, 1988. Maine Public has requested that the rate schedule become effective May 1, 1988 and that it be cancelled on October 31, 1988, in accord with the terms of the Agreement.

Comment date: May 2, 1988, in accordance with Standard Paragraph E at the end of this notice.

2. Florida Power & Light Company

[Docket No. ER88-334-000]

April 18, 1988.

Take notice that on April 11, 1988, Florida Power & Light Company (FPL) tendered for filing a document entitled Amendment Number Nine to Revised Agreement to Provide Specified Transmission Service Between Florida Power & Light Company and City of St. Cloud (Rate Schedule FERC No. 63) and a document entitled Schedule TX Operating Agreement Between Florida Power & Light Company and City of St. Cloud which document supplements Amendment Number Nine.

FPL states that under Amendment Number Nine, FPL will transmit power and energy for City of St. Cloud as is required in the implementation of its interchange agreement with the Utility Board of the City of Key West.

FPL further states that the Schedule TX Operating Agreement defines the methodology used to determine the additional incremental cost under Section 1.4 of Amendment Number Nine.

FPL requests that waiver of Section 35.3 of the Commission's Regulations be granted and that the proposed Amendment and the proposed Operating Agreement be made effective immediately. FPL states that copies of the filing were served on City of St. Cloud.

Comment date: May 2, 1988, in accordance with Standard Paragraph E at the end of this notice.

3. Tenaska III, Inc.

[Docket No. QF88-295-000]

April 14, 1988.

On March 11, 1988, Tenaska III, Inc. (Applicant), of 407 North 117th Street, Omaha, Nebraska, 68154 submitted for filing an application for certification of a facility as a qualifying cogeneration facility pursuant to § 292.207 of the Commission's regulations. No

determination has been made that the submittal constitutes a complete filing.

The topping cycle cogeneration facility will be located in Paris, Texas. The major equipment will include two combustion turbine-generators, two waste heat recovery boilers, and an extracting steam condensing turbine-generator. The facility will provide useful thermal energy to an industrial process. The combined maximum net electric power production capacity will be 250 megawatts. The primary energy source will be natural gas.

Comment date: Thirty days from publication in the **Federal Register** in accordance with Standard Paragraph E at the end of this notice.

4. Elmore, Ltd.

[Docket No. QF86-647-001]

April 19, 1988.

On April 1, 1988, Elmore, Ltd. (Applicant), of 480 West Sinclair Road, Calipatria, California 92233 submitted for filing an application for certification of a facility as a qualifying small power production facility pursuant to § 292.207 of the Commission's regulations. No determination has been made that the submittal constitutes a complete filing.

The small power production facility will be located in the Niland Area of Imperial County, California. The estimated net electric capacity will be 34 MW. The facility will consist of geothermal well field facilities, power plant facilities and electric interconnection facilities. The geothermal well field facilities shall initially consist of approximately eight production wells, five injection wells and a geothermal fluid-gathering system. No electric utility, electric utility holding company or any combination thereof has any ownership interest greater than fifty percent in the facility.

Comment date: Thirty days from publication in the **Federal Register** in accordance with Standard Paragraph E at the end of this notice.

Del Ranch, Ltd.

[Docket No. QF86-727-001]

April 19, 1988.

On April 1, 1988, Del Ranch, Ltd. (Applicant), of 480 West Sinclair Road, Calipatria, California 92233 submitted for filing an application for certification of a facility as a qualifying small power production facility pursuant to § 292.207 of the Commission's regulations. No determination has been made that the submittal constitutes a complete filing.

The small power production facility will be located in the Niland Area of Imperial County, California. The estimated net electric capacity will be 34 MW. The facility will consist of geothermal well field facilities, power plant facilities and electric interconnection facilities. The geothermal well field facilities shall initially consist of approximately eight production wells, five injection wells and a geothermal fluid-gathering system. No electric utility, electric utility holding company or any combination thereof has any ownership interest greater than fifty percent in the facility.

Comment date: Thirty days from publication in the **Federal Register** in accordance with Standard Paragraph E at the end of this notice.

6. Ultrasystems Development Corporation and FCS Development Corporation

[Docket No. QF88-307-000]

April 19, 1988.

On March 18, 1988, Ultrasystems Development Corporation and FCS Development Corporation (Applicant), of 12500 Fair Lakes Circle, Suite 260, Fairfax, Virginia 22033 submitted for filing an application for certification of a facility as a qualifying cogeneration facility pursuant to § 292.207 of the Commission's regulations. No determination has been made that the submittal constitutes a complete filing.

The topping-cycle cogeneration facility will be located in Ocean County, New Jersey. The facility will consist of two (2) circulating fluidized bed steam generators and a single extraction/condensing steam turbine-generator. The thermal energy recovered from the facility will be used for domestic hot water production and housekeeping requirements. The net electric power production capacity will be 96,800 kilowatts. The primary energy source will be coal. Installation of the facility is scheduled to begin in mid-1992.

Comment date: Thirty days from publication in the **Federal Register** in accordance with Standard Paragraph E at the end of this notice.

7. Pacific Gas and Electric Company

[Docket No. ER85-780-000]

April 18, 1988.

Take notice that on April 12, 1988, Pacific Gas and Electric Company tendered for filing, pursuant to Ordering Paragraphs (E) and (F) of the November 14, 1988 Commission Order, a compliance report.

Comment date: May 2, 1988, in accordance with Standard Paragraph E at the end of this notice.

8. New England Power Company

[Docket No. ER88-333-000]

Take notice that on April 8, 1988, New England Power Company (NEP) tendered for filing a System Energy Sales and Exchange Tariff, designated as Tariff No. 5, that provides for the sale and/or exchange of surplus energy from time to time. NEP also tendered for filing executed Service Agreements with several New England utilities who have already entered into such transactions with NEP. NEP seeks waiver of the Commission's notice requirements so that these transactions may become effective as specified in the Service Agreements.

NEP states that under the proposed tariff, sales of system power would be priced at an energy reservation charge rate not to exceed $13.30 per megawatthour plus an energy charge rate which reflects NEP's forecast of the incremental cost of providing the system energy for the transaction.

Comment date: May 2, 1988, in accordance with Standard Paragraph E at the end of this notice.

9. Florida Power & Light Company

[Docket No. ER8-340-000]

April 18, 1988.

Take notice that on April 11, 1988, Florida Power & Light Company (FPL) tendered for filing a document entitled Amendment Number Nineteen to Revised Agreement to Provide Specified Transmission Service Between Florida Power & Light Company and City of Homestead, Florida (Homestead) (Rate Schedule FERC No. 55).

FPL states that under Amendment Number Nineteen, FPL will transmit power and energy for Homestead as is required in the implementation of its interchange agreement with the Utility Board of the City of Key West, Florida.

FPL requests that waiver of Section 35.2 of the Commission's Regulations be granted and that the proposed Amendment be made effective immediately. FPL state that copies of the filing were served upon Homestead.

Comment date: May 2, 1988, in accordance with Standard Paragraph E at the end of this notice.

10. Arkansas Power & Light Company

[Docket No. ER88-339-000]

April 18, 1988.

Take notice that on April 13, 1988, Arkansas Power & Light Company (AP&L) tendered for filing the redetermined rate pursuant to a Letter Agreement dated July 9, 1987, between AP&L and the City of Ruston, Louisiana (Ruston) for transmission service. AP&L

requests an effective date of March 1, 1988 for the redetermined rate.

Comment date: May 2, 1988, in accordance with Standard Paragraph E at the end of this notice.

11. Nantahala Power and Light Company

[Docket No. EL82-20-004]

April 18, 1988.

Take notice that on March 2, 1988, Nantahala Power and Light Company tendered for filing, pursuant to Commission Order dated November 13, 1987, a refund report with refunds totaling $545,733.96, with the appropriate interest.

A copy of this filing has been served upon all parties of this proceeding.

Comment date: May 2, 1988, in accordance with Standard Paragraph E at the end of this document.

12. Florida Power & Light Company

[Docket No. ER88-335-000]

April 18, 1988.

Take notice that on April 11, 1988, Florida Power & Light Company (FPL) tendered for filing a document entitled Amendment Number Seven to Revised Agreement to Provide Specified Transmission Service Between Florida Power & Light Company and Sebring Utilities Commission (Rate Schedule FERC No. 64) and a document entitled Schedule TX Operating Agreement Between Florida Power & Light Company and Sebring Utilities Commission which document supplements Amendment Number Seven.

FPL states that under Amendment Number Seven FPL will transmit power and energy for Sebring Utilities Commission as is required in the implementation of its interchange agreement with the Utility Board of the City of Key West.

FPL further states that the Schedule TX Operating Agreement defines the methodology used to determine the additional incremental cost under Section I.4 of Amendment Number Seven.

FPL requests that waiver of § 35.3 of the Commission's Regulations be granted and that the proposed Amendment and the proposed Operating Agreement be made effective immediately. FPL states that copies of the filing were served on Sebring Utilities Commission.

Comment date: May 2, 1988, in accordance with Standard Paragraph E at the end of this notice.

13. The Connecticut Light and Power Company, et al.

[Docket No. ER88-332-000]

April 18, 1988.

Take notice that on April 11, 1988, The Connecticut Light and Power Company (CL&P) tendered for filing a proposed rate schedule and, effective April 22, 1987, a proposed termination in accordance with the terms of said rate schedule, with respect to a Transmission Agreement dated April 23, 1986 between (1) CL&P and Western Massachusetts Electric Company (WMECO) and (2) Westfield Gas and Electric Light Department (Westfield).

CL&P states that the Transmission Agreement provides for service to Westfield for the transmission of New England Power Company (NEPCO) electric capacity and associated energy.

The transmission change rate is equal to the annual average cost of transmission service on the transmission systems of CL&P and its affiliated Northeast Utilities companies (NU system) at the time that the transmission service commenced, and is determined in accordance with Appendix A and Exhibits I, II and III thereto of the Transmission Agreement. The weekly Transmission Charge is determined by the product of (i) the appropriate transmission charge rate divided by 52 ($/kW-week), and (ii) the maximum number of kilowatts of capacity and energy purchased by Westfield during an hourly period of each such week during the Term.

CL&P requests that the Commission waiver its standard notice periods and permit the Transmission Agreement to become effective as of April 23, 1986, and to terminate, in accordance with its own terms; effective April 22, 1987.

WMECO has filed a Certificate of Concurrence in this docket.

CL&P states that copies of this rate schedule have been mailed or delivered to CL&P, WMECO, and Westfield (Westfield, MA).

CL&P further states that the filing is in accordance with Section 35 of the Commission's Regulations.

Comment date: May 2, 1988, in accordance with Standard Paragraph E at the end of this notice.

14. Pacific Gas and Electric Company

[Docket No. ER88-337-000]

April 18, 1988.

Take notice that on April 13, 1988, Pacific Gas and Electric Company (PG&E) tendered for filing a change in rate schedule for Rate Schedule FERC No. 108, a contract with the City of Santa Clara, California (City) entitled "System Bulk Power Sale and Purchase Agreement Between City of Santa Clara and Pacific Gas and Electric Company" (Agreement). The Agreement and its appendices were accepted by the Commission on September 23, 1987 in Docket No. ER87-498-000 and contain capacity and energy rates for firm, baseload power sold to City by PG&E.

PG&E proposes to change the energy rate pursuant to Appendix A of the Agreement. Since the increase is under $200,000, PG&E is filing in accordance with § 35.13(a)(2) of the Commission's regulations (18 CFR 35.13(a)(2)). In addition, PG&E is requesting a waiver of the Commission's notice requirements in accordance with § 35.11 of the Commission's regulations (18 CFR 35.11) so that the energy rate change may become effective on April 1, 1988 as agreed to in the Agreement.

Copies of this filing were served upon City and the California Public Utilities Commission.

Comment date: May 2, 1988, in accordance with Standard Paragraph E at the end of this notice.

15. Florida Power & Light Company

[Docket No. ER88-342-000]

April 18, 1988.

Take notice that on April 11, 1988, Florida Power & Light Company (FPL) tendered for filing a document entitled Amendment Number Nine to Agreement to Provide Specified Transmission Service Between Florida Power & Light Company and City of Starke, Florida (Rate Schedule FERC No. 79) and documents entitled Schedule TF Operating Agreement Between FPL and City of Starke, Florida and Schedule TX Operating Agreement Between Florida Power & Light Company and City of Starke, Florida which documents supplement Amendment Number Nine.

FPL states that under Amendment Number Nine, FPL will transmit power and energy for City of Starke, Florida as is required in the implementation of its interchange agreements with City of Lakeland, Florida Power Corporation, the Florida Municipal Power Agency, the Utility Board of the City of Key West, City of Gainesville, Jacksonville Electric Authority, City of Lake Worth, Seminole Electric Cooperative, Inc. and Tampa Electric Company.

FPL further states that the Schedule TF Operating Agreement and Schedule TX Operating Agreement define the methodology used to determine the additional incremental cost under Section I.4 and II.4 of Amendment Number Nine.

FPL requests that waiver of § 35.3 of the Commission's Regulations be granted and that the proposed

Amendment and the proposed Operating Agreement be made effective immediately. FPL states that copies of the filing were served on City of Starke, Florida.

Comment date: May 2, 1988, in accordance with Standard Paragraph E at the end of this notice.

16. Western Area Power Administration

[Docket No. EF88-5101-000]

April 18, 1988.

Take notice that on April 6, 1988, the Under Secretary of the Department of Energy, by Rate Order No. WAPA-37, did confirm and approve, on an interim basis, to be effective beginning on June 8, 1988, on extension of the rate contained in Contract No. 7-07-50-P0890 for Amistad and Falcon Projects' power marketed by the Western Area Power Administration (Western).

The rate extension will be in effect on an interim basis pending the Commission's approval of it or a substitute rate on a final basis.

Article 9(a) of Contract No. 7-07-50-P0890 requires Western to calculate the annual installment to be paid by the South Texas Electric Cooperative, Inc., and the Medina Electric Cooperative, Inc. (STEC/MEC), for the power generated at the Amistad and Falcon Powerplants, by consultation with the U.S. Section of the International Boundary and Water Commission (U.S. Section), and to submit it to STEC/MEC in the form of a contract exhibit on or before August 31 of the year preceding the fiscal year to which it pertains.

The amount of each annual installment shall be the sum of:

1. An annual installment, including interest, to amortize within the remaining period the unpaid United States investment in the Falcon hydroelectric facilities and in the penstocks at Amistad Dam;

2. An annual installment to amortize over a 50-year period that United States actual total investment costs, with interest, for hydroelectric power facilities, not including penstocks, at Amistad Dam to be under the jurisdiction of the U.S. Section, including the costs of engineering plans, supervision, administration of construction, and interest during construction; and

3. The annual operation, maintenance, replacement, and administration costs of the U.S. Section and the administration costs of Western related directly or indirectly to the United States power facilities at Amistad Dam and at Falcon Dam, provided that such costs shall be based on prudent and businesslike management practices and in accordance with established electric industry operation and maintenance practices.

This repayment schedule is not dependent upon the power and energy made available for sale or the rate of generation each year. Western will continue to provide STEC/MEC with a revised exhibit A by August 31 of each year using the same methodology.

The Under Secretary states that the rate extension is submitted for confirmation and approval on a final basis for a 5-year period beginning June 8, 1988, and ending June 7, 1993, pursuant to the authority vested in the Commission by Delegation Order No. 0204-108.

Comment date: May 2, 1988, in accordance with Standard Paragraph E at the end of this notice.

17. Connecticut Light and Power Company, et al.

[Docket No. ER88-341-000]

April 18, 1988.

Take notice that on April 11, 1988, Connecticut Light and Power Company (CL&P) tendered for filing proposed rate schedule and, effective October 31, 1986, a proposed termination in accordance with the terms of said rate schedule, with respect to a Transmission Agreement dated May 1, 1986 between (1) CL&P and Western Massachusetts Electric Company (WMECO) and (2) Peabody Municipal Light Plant (Peabody).

CL&P states that the Transmission Agreement provides for service to Peabody for the transmission of 5,000 kilowatts of CMEEC electric capacity and associated energy.

The transmission charge rate is an annual rate equal to the annual average cost of transmission service on the transmission systems of CL&P and its affiliated Northeast Utilities companies (NU System) at the time that the transmission service commenced, and is determined in accordance with Appendix A and Exhibits I, II and III thereto of the Transmission Agreement. The monthly transmission charge is determined by the product of (i) the appropriate transmission charge rate divided by twelve ($/kW-month) and (ii) the number of kilowatts Peabody purchases from CMEEC during each such month of the Term. The transmission change is reduced to give due recognition for payments made by Peabody to other systems also providing transmission service.

CL&P requests that the Commission waive its standard notice periods and permit the Transmission Agreement to become effective as of May 1, 1986, and to terminate, in accordance with its own terms, effective October 31, 1986.

WMECO has filed a Certificate of Concurrence in this docket.

CL&P states that copies of this rate schedule have been mailed or delivered to CL&P, WMECO, and Peabody (Peabody, MA).

CL&P further states that the filing is in accordance with Section 35 of the Commission's Regulations.

Comment date: May 2, 1988, in accordance with Standard Paragraph E at the end of this notice.

18. Tucson Electric Power Company

[Docket No. ER88-328-000

April 18, 1988.

Take notice that on April 12, 1988, Tucson Electric Power Company (Tucson) tendered for filing an Amendment (Amendment) to the Interconnection Agreement (Agreement) between Tucson and the City of Anaheim, California. The purpose of the Amendment is to correct the original filing by including page 9 of the Agreement which was inadvertently omitted from the original filing. The Agreement remains the same, i.e., to establish the terms and conditions for the interconnection of the electrical systems of Tucson and the City of Anaheim and the exchange of economy energy, emergency assistance energy, and banked energy between the two systems. Tucson states that services may be provided under Service Schedule A to the Agreement entitled "Economy Energy Interchange," Service Schedule B entitled "Emergency Assistance," or Service Schedule C entitled "Banked Energy."

Tucson renew its original request for an effective date of February 16, 1988, and therefore requests waiver of the Commission's notice requirements.

Tucson states that copies of the filing were served upon the City of Anaheim.

Comment date: May 2, 1988, in accordance with Standard Paragraph E at the end of this notice.

Standard Paragraphs:

E. Any person desiring to be heard or to protest said filing should file a motion to intervene or protest with the Federal Energy Regulatory Commission, 825 North Capitol Street NE., Washington, DC 20426, in accordance with Rules 211 and 214 of the Commission's Rules of Practice and Procedure (18 CFR 385.211 and 385.214). All such motions or protests should be filed on or before the comment date. Protests will be considered by the Commission in determining the appropriate action to be taken, but will not serve to make

BEST COPY AVAILABLE

protestants parties to the proceeding. Any person wishing to become a party must file a motion to intervene. Copies of this filing are on file with the Commission and are available for public inspection.

Lois D. Cashell

Acting Secretary.

[FR Doc. 88-8811 Filed 4-20-88; 8:45 am]

BILLING CODE 6717-01-M

Economic Regulatory Administration

[ERA Docket No. 88-11-NG]

Northeast Gas, Inc.; Application To Extend Blanket Authorization To Import Natural Gas From Canada

AGENCY: Department of Energy, Economic Regulatory Administration.

ACTION: Notice of Application for Extension of Blanket Authorization to Import Natural Gas.

SUMMARY: The Economic Regulatory Administration (ERA) of the Department of Energy (DOE) gives notice of receipt on March 16, 1988, of an application filed by Northeast Gas, Inc. (NGI), requesting that the blanket authorization previously granted in DOE/ERA Opinion and Order No. 95 issued on December 20, 1985 (ERA Docket No. 85-23-NG), be amended to extend its term for two years. NGI's existing authorization to import up to 100 Bcf of Canadian natural gas over a two-year period expired March 31, 1988. Under the extension requested, NGI would be authorized to import 100 Bcf of Canadian natural gas over a two-year period beginning on the date of first delivery following expiration of its existing blanket authorization.

The application is filed with the ERA pursuant to Section 3 of the Natural Gas Act and DOE Delegation Order No. 0204-111. Protests, motions to intervene, notices of intervention and written comments are invited.

DATE: Protests, motions to intervene, or notices of intervention, as applicable, requests for additional procedures and written comments are to be filed no later than May 23, 1988.

FOR FURTHER INFORMATION CONTACT:

Stanley C. Vass, Natural Gas Division, Economic Regulatory Administration, Forrestal Building, Room GA-076, 1000 Independence Avenue SW., Washington, DC 20585 (202) 586-9482

Diane J. Stubbs, Natural Gas and Mineral Leasing, Office of General Counsel, U.S. Department of Energy, Forrestal Building, Room 6E-042, 1000 Independence Avenue, SW., Washington, DC 20585, (202) 586-6667.

SUPPLEMENTARY INFORMATION:

NGI requests continued authority to import the gas from various Canadian suppliers for sale on a spot-market basis to certain gas distribution companies in the northeastern states. NGI would continue to import the gas for its own account or as an agent for its U.S. purchaser clients and the Canadian suppliers. NGI intends to use existing pipeline facilities to transport the gas. NGI would advise the ERA of the date of first delivery under the extended authorization and submit quarterly reports giving details of individual transactions.

Under the proposed import, NGI would import and resell the gas to the following 20 local distribution companies (purchaser clients) located in the U.S. Northeast on a spot market basis: Bay State Gas Company; Berkshire Gas Company; The Brooklyn Union Gas Company; Colonial Gas Company; The Connecticut Light & Power Company of New York, Inc.; Elizabethtown Gas Company; EnergyNorth, Inc.; Essex County Gas Company; Fitchburg Gas and Electric Light Comapany; National Fuel Gas Supply Corporation; New Jersey Natural Gas Company; New York State Electric & Gas Corporation; Niagara Mohawk Power Corporation; Norwich Utilities; Public Service Electric & Gas Company; South Jersey Gas Company; Southern Connecticut Gas Company; and Valley Gas Company. NGI states that the agreements to purchase gas would not exceed two years in duration with most expected to last less than one year. Such agreements may be subject to extension at the option of the parties. Transportation arrangements are expected to be on a best-efforts basis with the specific terms to be negotiated between NGI or its clients and the Canadian suppliers.

In support of its application, NGI asserts that the proposed extension of its existing blanket import authorization is not inconsistent with the public interest since the extension requested would continue to provide U.S. Northeast gas consumers expanded access to competitively-priced Canadian gas.

The decision on this application will be made consistent with the DOE's gas import policy guidelines, under which the competitiveness of an import arrangement in the markets served is the primary consideration in determining whether it is in the public interest (49 FR 8884, February 22, 1984). Parties that may oppose this application should comment in their responses on the issue of competitiveness as set forth in the policy guidelines. The applicant asserts that this import arrangement is competitive. Parties opposing the arrangement bear the burden of overcoming this assertion.

Public Comment Procedures

In response to this notice, any person may file a protest, motion to intervene or notice of intervention, as applicable, and written comments. Any person wishing to become a party to the proceeding and to have the written comments considered as the basis for any decision on the application must, however, file a motion to intervene or notice of intervention, as applicable. The filing of a protest with respect to this application will not serve to make the protestant a party to the proceeding, although protests and comments received from persons who are not parties will be considered in determining the appropriate procedural action to be taken on the application. All protests, motions to intevene, notices of intervention, requests for additional procedures and written comments must meet the requirements that are specified by the regulations in 10 CFR Part 590. They should be filed with the Natural Gas Division, Office of Fuels Programs, Economic Regulatory Administration, Room GA-076, RG-23, Forrestal Building, 1000 Independence Avenue SW., Washington, DC 20585, (202) 586-9478. They must be filed no later than 4:30 p.m. e.d.t., May 23, 1988.

The Administrator intends to develop a decisional record on the application through responses to this notice by parties, including the parties' written comments and replies thereto. Additional procedures will be used as necessary to achieve a complete understanding of the facts and issues. A party seeking intervention may request that additional procedures be provided, such as additional written comments, an oral presentation, a conference, or a trial-type hearing. A request to file additional written comments should explain why they are necessary. Any request for an oral presentation should identify the substantial question of fact, law, or policy at issue, show that it is material and relevant to a decision in the proceeding, and demonstrate why an oral presentation is needed. Any request for a conference should demonstrate why the conference would materially advance the proceeding. Any request for a trial-type hearing must show that there are factual issues genuinely in dispute that are relevant and material to a decison and that a trial-type hearing is necessary for a full and true disclosure of the facts.

If an additional procedure is scheduled, the ERA will provide notice to all parties. If no party requests additional procedures, a final opinion and order may be issued based on the official record, including the application and responses filed by parties pursuant to this notice, in accordance with 10 CFR § 590.316.

A copy of NGI's application is available for inspection and copying in the Natural Gas Division Docket Room, GA-076-A, at the above address. The docket room is open between the hours of 8:00 a.m. and 4:30 p.m., Monday through Friday, except Federal holidays.

Issued in Washington, DC, April 12, 1988.

Constance L. Buckley,

Director, Natural Gas Division, Office of Fuels Programs, Economic Regulatory Administration.

[FR Doc. 88-8717 Filed 4-20-88; 8:45 am]

BILLING CODE 6450-01-M

Federal Energy Regulatory Commission

[Docket No. G-4579-050, et al.]

Cities Service Oil and Gas Corporation, et al.; Applications for Certificates, Abandonment of Service and To Amend Certificates [1]

April 18, 1988.

Take notice that each of the Applicants listed herein has filed an application pursuant to section 7 of the Natural Gas Act for authorization to sell natural gas in interstate commerce, to abandon service or to amend certificates as described herein, all as more fully described in the respective applications which are on file with the Commission and open to public inspection.

Any person desiring to be heard or to make any protest with reference to said applications should on or before May 2, 1988, file with the Federal Energy Regulatory Commission, Washington, DC 20426, a petition to intervene or a protest in accordance with the requirements of the Commission's Rules of Practice and Procedure (18 CFR 385.211, 385.214). All protests filed with the Commission will be considered by it in determining the appropriate action to be taken but will not serve to make the protestants parties to the proceeding. Any person wishing to become a party in any proceeding herein must file a petition to intervene in accordance with the Commission's rules.

Under the procedure herein provided for, unless otherwise advised, it will be unnecessary for Applicants to appear or to be represented at the hearing.

Lois D. Cashell

Acting Secretary.

[1] This notice does not provide for consolidation for hearing of the several matters covered herein.

Docket No. and date filed	Applicant	Purchaser and location	Description
G-4579-050, F, Apr. 4, 1988	Cities Service Oil and Gas Corporation, P.O. Box 300, Tulsa, OK 74102.	Colorado Interstate Gas Company, Stenis A Unit, Hugoton Field, Kearny County, Kansas.	(1)
G-12235-006, D, Mar. 31, 1988.	Kerr-McGee Corporation, P.O. Box 25861, Oklahoma City, OK 73125.	Southern Natural Gas Company, Breton Sound Area, Offshore Lousiana.	(2)
G-12864-000, D, Apr. 4, 1988.	Chevron U.S.A. Inc., P.O. Box 7309, San Francisco, CA, 94120-7309.	K N Energy, Inc., Twin Field, Hansford County, Texas	(3)
CI63-213-000, D, Mar. 30, 1988.	Sun Exploration and Production Company, P.O. Box 2880, Dallas, TX 75221-2880.	Northwest Pipeline Corporation, Basin Dakota Field, San Juan County, New Mexico.	(4)
CI64-11-001, D, Mar. 30, 1988.	ARCO Oil and Gas Company, Division of Atlantic Richfield Company, P.O. Box 2819, Dallas, TX 75221.	Lone Star Gas Company, a Division of ENSERCH Corporation, Healdton Field, Carter County, Oklahoma.	(5)
CI75-241-000, D, Mar. 30, 1988.	Perry R. Bass, First City Bank Tower, 201 Main Street, Ft. Worth, TX 76102.	Natural Gas Pipeline Company of America, Pecos Federal #1 Area, Eddy County, New Mexico.	(6)
CI76-240-002, D, Apr. 4, 1988.	Chevron U.S.A. Inc.	Twin Field, Hansford County, Texas	(3)
CI78-154-001, D, Apr. 4, 1988.	BHP Petroleum Company Inc., 5847 San Felipe, Suite 3600, Houston, TX 77057.	Texas Eastern Transmission Corporation, Hico Knowles Field, Lincoln Parish, Louisiana.	(7)
CI79-377-001, D, Mar. 31, 1988.	Multistate Oil Properties, N.V., P.O. Box 2511, Houston, TX 77001.	Northern Natural Gas Company, Division of Enron Corp., Hansford North Field, Hansford County, Texas.	(8)
CI83-336-001, D, Mar. 31, 1988.	do	Phllips Petroleum Company, Panhandle West Field, Hutchinson County, Texas.	(9)
CI88-389-000 (G-2905), B, Mar. 31, 1988.	ARCO Oil and Gas Company, Division of Atlantic Richfield Company.	Arkla Energy Resources, a Division of Arkla, Inc., Chickasha Field, Grady County, Oklahoma.	(10)
CI88-390-000 (CI72-737), B, Mar. 30, 1988.	do	Caprock Pipeline Company, Bobbit Field, Carson County, Texas.	(10)
CI88-391-000, F, Mar. 31, 1988.	Mobil Producing Texas & New Mexico Inc., Nine Greenway Plaza, Suite 2700, Houston, TX 77046.	El Paso Natural Gas Company, Langlie-Mattix Field, Lea County, New Mexico.	(11)
CI88-392-000, F, Apr. 1, 1988.	Maxus Exploration Company, 717 N. Harwood Street, Dallas, TX 75201.	Arkla Energy Resources, a division of Arkla, Inc., Witcherville Field, Sebastian County, Arkansas.	(12)
CI88-393-000 (CI60-657), B, Apr. 1, 1988.	Mobil Oil Exploration & Producing Southeast Inc	Texas Gas Transmission Corporation, Calhoun Field, Ouachita and Lincoln Parishes, Louisiana.	(13)
CI88-394-000 (G-19544), B, Apr. 1, 1988.	Graham-Michaelis Drilling Co., Inc., D/B/A Graham-Michaelis Corp., P.O. Box 247, Wichita, KS 67201.	Phillips Petroleum Company, Camrick Field, Texas County, Oklahoma.	(14)
CI88-395-000 (CI81-367-000), B, Apr. 4, 1988.	Phillips Petroleum Company, 990-G Plaza Office Building, Bartlesville, OK 74004.	Texas Eastern Transmission Corporation, West Cameron Block 522, Offshore Louisiana.	(15)
CI88-396-000 (CI62-1287), B, Apr. 4, 1988.	ARCO Oil and Gas Company, Division of Atlantic Richfield Company.	West Texas Gathering Company, Kermit and South Kermit Field, Winkler County, Texas.	(10)
CI88-397-000 (G-13807), B, Apr. 4, 1988.	do	Panhandle Eastern Pipe Line Company, Greenough (Light Gas Area), Beaver County, Oklahoma.	(10)
CI88-399-000 (CI67-322), B, Apr. 4, 1988.	do	McQuiddy Ranch Area, Hemphill County, Texas	(10)
CI88-401-000, B, Apr. 6, 1988.	Phillips Petroleum Company	Skelly Oil Company, No. 90 ac of the so. 135 AC Surv. 6, Jane Gammel Survey, Hutchinson County, Texas.	(16)

[1] Effective 11-1-84, Cities acquired from Sun Exploration and Production Company 12.5% interest in the Stennis A Unit, Hugoton Field, Kearny County, Kansas.
[2] The wells have been permanently plugged and abandoned.
[3] Effective 3-1-88, Chevron assigned certain acreage to Vernon E. Faulconer Inc.
[4] Effective 12-1-83, Sun assigned its interest in Property No. 520770, Huerfano Unit, to William J. Green.
[5] Effective 4-15-87, ARCO assigned its interest in certain acreage to E. Dunlap, Jr. 1978 Revocable Trust.
[6] Effective 5-27-87, Perry R. Bass assigned certain acreage to C. Wendell Schoenberger.
[7] Effective 6-1-87, BHP Petroleum Company Inc. assigned certain acreage to Maple Gulf Coast Properties Corporation.
[8] Effective 9-1-88, Multistate Properties, N.V. assigned its interest in the E.G. Garrett #1 well to Vita Oil Company.
[9] Effective 9-1-88, Multistate Oil Properties, N.V. assigned its interest in the Johnson #1 well to Vita Oil Company.
[10] Effective 1-1-87, ARCO assigned all its interest in certain acreage to Hondo Oil and Gas Company.
[11] Effective 12-1-86, Amoco Production Company assigned its working interest in Langlie-Mattix Queen Unit, Lea County, New Mexico to MPTM.
[12] Effective 11-1-87, Sun Operating Limited Partnership assigned certain acreage to Maxus Exploration Company.
[13] Effective 8-1-87, MOEPSI assigned certain acreage to Rockbridge Oil & Gas, Inc.
[14] Effective Producing gas reservoir depleted and well was plugged on 2-21-86.
[15] Effective 8-31-87, Phillips Petroleum Company assigned all its interest in certain acreage to Huffco Petroleum Corporation.
[16] The oil and gas lease was sold to David Irvin Well Service effective 12-1-87.

Filing Code: A—Initial Service; B—Abandonment; C—Amendment to add acreage; D—Amendment to delete acreage; E—Total Succession; F—Partial Succession.

[FR Doc. 88-8734 Filed 4-20-88; 8:45 am]
BILLING CODE 6717-01-M

[Docket Nos. CP88-314-000, et al.]

Natural Gas Pipeline Company of America et al., Natural gas certificate filings

Take notice that the following filings have been made with the Commission:

1. Natural Gas Pipeline Company of America

[Docket No. CP88-314-000]

April 15, 1988.

Take notice that on March 25, 1988, Natural Gas Pipeline Company of America (Applicant), 701 East 22nd Street, Lombard, Illinois 60148, filed in Docket No. CP88-314-000 an application pursuant to section 7 of the Natural Gas Act and the Commission's Regulations thereunder for a blanket certificate of public convenience and necessity authorizing Applicant, subject to the terms and conditions set out therein, to implement new firm storage services under Rate Schedule FSS. The storage services proposed under Rate Schedule FSS are (1) a 30-day peaking service, (2) a 50-day peaking service, and (3) a 120-day annual service. Services under Rate Schedule FSS would be available on a first-come, first-serve basis, to any shipper submitting a valid request, as defined in Rate Schedule FSS, to the extent that capacity is available. Shippers under Rate Schedule FSS would be required to recycle gas on an annual basis. Service would be subject to the other terms and conditions of Rate Schedule FSS and any transportation to effectuate the storage services would be arranged separately. The proposal is more fuly set forth in the application which is on file with the Commission and open to public inspection.

A description of the types of firm storage services available under the proposed Rate Schedule FSS are as follows:

30-Day Peaking Service

Applicant will receive natural gas from a shipper during the winter and summer periods. Applicant will deliver gas to the shipper for a period of up to 30 days during the winter period; provided, however, that Applicant shall not be obligated to deliver gas more than 15 days during any 30 day period. During the months of September and October, Applicant shall only be obligated to receive from a shipper each day up to 50% of the shipper's maximum daily quantity (MDQ). For purposes of the 30-day peaking service provision of Rate Schedule FSS the summer period shall be the period March through October and the winter period shall be the period November through February.

50-Day Peaking Service

Applicant will receive natural gas from a shipper during the winter and summer periods. Applicant will deliver gas to the shipper for a period of up to 50 days during the winter period; provided, however, that Applicant shall not be obligated to deliver gas more than 30 days during any 50 day period. During the months of September and October, Applicant shall only be obligated to receive from a shipper each day up to 50% of the shipper's MDQ. For purposes of the 50-day peaking service provision of Rate Schedule FSS the summer period shall be the period March through October and the winter Period shall be the period November through February.

120-Day Annual Service

Applicant will receive natural gas from a shipper any time during the year; provided, however, that during the months of September and October, Applicant shall only be obligated to receive from the shipper each day up to 50% of the shipper's MDQ. Applicant will deliver gas to the shipper for a period of up to 120 days at any time during the year; provided, however, that for the period December through February, Applicant shall only be obligated to deliver to the shipper each day up to 90% of the Shipper's MDQ.

Applicant further requests permission and approval to abandon any such service at the termination of the applicable FSS agreement and Commission approval of tariff provisions implementing the terms and conditions governing the firm storage servcies.

Applicant is performing "open access" transportation and has accepted an Order 436/500 blanket certificate in Docket No. CP86-582. Therefore, Applicant's sales customers have rights, as set out at 18 CFR § 284.10, to substitute firm transportation services by Applicant for a portion of their firm sales service, thereby enabling them to transport gas purchased directly from producers, marketers, etc. in lieu of sales by Applicant. As part of such change, converting customers may wish to contract to utilize storage services along with transportation services. Thus, the Applicant states the availability of the proposed storage services would facilitate the conversion rights available to Applicant's customers. In addition, the firm storage services offered here would be available to entities other than converting sales customers within capacity constraints, to augment the flexibility of their operation.

For the above reasons, Applicant is seeking authority to initiate new firm storage services of general availability. It is asserted that such services would be available to any party, including but not limited to Applicant's existing sales and transportation customers, on a first-come, first-serve basis.

Comment date: May 6, 1988, in accordance with Standard Paragraph F at the end of this notice.

2. Arkla Energy Resources, A division of Arkla, Inc.

[Docket Nos. CP60-79-004, CP70-242-002]

April 19, 1988.

Take notice that on March 31, 1988, Arkla Energy Resources, a division of Arkla, Inc., (Arkla), P.O. Box 21734, Shreveport, Louisiana 71151, filed in Docket Nos. CP60-79-004 and CP70-242-002, a petition pursuant to Sections 7(b) and 7(c) of the Natural Gas Act to amend and for partial abandonment of the certificate issued in Docket No. CP-60-79, and for abandonment of the certificate issued in Docket No. CP70-242, so as to authorize Arkla to provide gas service to the City of Winfield, Kansas (Winfield) and surrounding areas pursuant to an Amended Service Agreement dated December 15, 1986, and amended by letter agreement dated February 15, 1988 (Amended Agreement), all as more fully set forth in the petition which is on file with the Commission and open to public inspection.

Arkla states that it has entered into an Amended Agreement with Winfield, for a primary term extending through July 31, 1996, to provide such volumes of natural gas as Winfield may require to meet the natural gas requirements of Winfield's municipal gas distribution system including the customers in the South Winfield area currently served from Arkansas Louisiana Gas Company's Rural Extension No. 671 (R E 671) and the natural gas requirements of Winfield's two power plants. Arkla indicates that the sale of natural gas to Winfield would be made available, under Rate Schedule No. G-2, through five existing delivery points. Arkla further states the Amended Agreement provides that Winfield would be considered a customer receiving service under an "eligible firm sales agreement" within the meaning of §284.10(b) of the Commission's regulations and shall continue to have any such conversion and reduction rights attendant thereto. Also, Arkla indicates that the Amended Agreement permits Winfield to purchase up to 50 percent of its requirements from other suppliers and to substitute transportation through Arkla's interstate pipeline system for such gas purchased form other suppliers.

Comment date: May 10, 1988, in accordance with the first subparagraph of Standard Paragraph F at the end of this notice.

3. Tennessee Gas Pipeline Company, United Gas Pipe Line Company

[Docket No. CP-75-265-009]

April 19, 1988.

Take notice that on March 30, 1988, Tennessee Gas Pipeline Company (Tennessee), P.O. Box 2511, Houston, Texas 77252, and United Gas Pipe Line Company (United), P.O. Box 1478, Houston, Texas 77251-1478, jointly filed to amend their application filed in Docket No. CP75-265-000 pursuant to section 7(c) of the Natural Gas Act so as to add two exisitng interconnections between their facilities as exchange points, all as more fully set forth in the amendment which is on file with the Commission and open to public inspection.

From time to time in the past, Tennessee and United have filed joint applications to amend the original request by establishing additional delivery points which were supporterd by exchange agreements. Specifically, Tennessee and United requests authorization to amend their certificate by adding an exchange point at:

(1) An interconnection between facilities of Tennessee and United rear Cocodrice, Terrebonne Parish, Louisiana;

(2) An interconnection between the 24-inch Project Lirette Pipeline, and United's facilities in Terrebonne Parish, Louisiana near Lirette, Louisiana.

Tennessee and United state that these two delivery points will enhance the operational flexibility and reliability of both pipelines.

Comment date: May 10, 1988, in accordance with the first subparagraph of Standard Paragraph F at the end of this notice.

4. United Gas Pipe Line Company

[Docket No. CP88-297-000]

April 19, 1988.

Take notice that on March 15, 1988, United Gas Pipe Line Company (United), Post Office Box 1478, Houston, Texas 77251-1478, filed in Docket No. CP88-297-000 an application pursuant to section 7(b) of the Natural Gas Act for permission and approval to abandon measuring facilities, located in Bienville Parish, Louisiana, all as more fully set forth in the application which is on file with the Commission and open for public inspection.

United states that the measuring facilities were installed under United's budget-type authorization issued in Docket No. CP69-111 to enable United to receive natural gas from the H.W. Walker No. 1 Well in Danville Field, Bienville Parish, Louisiana. United asserts that subsequently the H. W. Walker No. 1 Well has been plugged and abandoned by Franks.

United submits that the proposed abandonment will be implemented without detriment or termination of gas service to any of United's customers.

Comment date: May 10, 1988, in accordance with Standard Paragraph F at the end of this notice.

5. Trunkline Gas Company

[Docket No. CP88-326-000]

April 19, 1988.

Take notice that on April 5, 1988, Trunkline Gas Company (Applicant), P.O. Box 1642, Houston, Texas, 77251-1642, filed in Docket No. CP88-326-000 a prior notice request pursuant to Sections 157.205 and 284.223 of the Commission's Regulations for authorization to transport natural gas for Exxon Corporation (Exxon), a producer, under the certificate issued in Docket No. CP86-586-000, all as more fully set forth in the request on file with the Commission and open to public inspection.

Applicant states that it proposes to transport up to 25,000 Mcf per day on behalf of Exxon pursuant to a transportation agreement dated January 29, 1988 (Agreement). The Agreement provides for Applicant to receive gas at existing points of interconnection between Applicant and Exxon located in South Timbalier blocks 171, 165 and 170, it is stated.

Applicant states that it would make ultimate delivery to Illinois Power Company in Douglas County, Illinois for their system supply.

Applicant further states that the maximum daily and annual quantities would be 25,000 Mcf and 1,825,000 Mcf, respectively. Applicant asserted that service under Section 284.223(a) commenced on February 1, 1988, as reported in Docket No. ST88-2767.

Comment date: June 3, 1988, in accordance with Standard Paragraph G at the end of this notice.

6. Tennessee Gas Pipeline Company

[Docket No. CP88-327-000]

April 19, 1988.

Take notice that on April 1, 1988, Tennessee Gas Pipeline Company (Tennessee), P.O. Box 2511 Houston, Texas 77252 filed in Docket No. CP88-327-000 a request pursuant to Section 284.223 of the Regulations under the Natural Gas Act for authorization to transport natural gas under the blanket certificate issued in Docket No. CP87-115-000 pursuant to Section 7(c) of the Natural Gas Act, all as more fully set

forth in the request on file with the Commission and open to public inspection.

Tennessee proposes to transport natural gas for Intercon Gas, Inc. (Intercon). Tennessee explains that service commenced March 8, 1988 under Section 284.223(a) of the Commission's Regulations, as reported in Docket No. ST88-2983. Tennessee further explains that the peak day quantity would be 579,500 dekatherms, the average daily quantity would be 9,472 dekatherms, and that the annual quantity would be 3,457,280 dekatherm. Tennessee explains that it would receive natural gas for Intercon's account in the states of Louisiana, Kentucky, Texas, Mississippi, West Virginia, Alabama, Tennessee and Offshore Louisiana. Tennessee further explains that, it would redeliver natural gas to Intercon in the states of Indiana, Iowa, Ohio, Virginia, Illinois, Kentucky, Michigan, Wisconsin, Tennessee, Pennsylvania, Massachusetts, Maryland, West Virginia, New Hampshire, Texas, Arkansas, Louisiana, South Carolina, Georgia, Delaware, Connecticut, Rhode Island, New York and New Jersey.

Comment date: June 3, 1988, in accordance with Standard Paragraph G at the end of this notice.

Standard Paragraphs

F. Any person desiring to be heard or make any protest with reference to said filing should on or before the comment date file with the Federal Energy Regulatory Commission, 825 North Capitol Street NE., Washington, DC 20426, a motion to intervene or a protest in accordance with the requirements of the Commission's Rules of Practice and Procedure (18 CFR 385.211 and 385.214) and the Regulations under the Natural Gas Act (18 CFR 157.10). All protests filed with the Commission will be considered by it in determining the appropriate action to be taken but will not serve to make the protestants parties to the proceeding. Any person wishing to become a party to a proceeding or to participate as a party in any hearing therein must file a motion to intervene in accordance with the Commission's Rules.

Take further notice that, pursuant to the authority contained in and subject to jurisdiction conferred upon the Federal Energy Regulatory Commission by Sections 7 and 15 of the Natural Gas Act and the Commission's Rules of Practice and Procedure, a hearing will be held without further notice before the Commission or its designee on this filing if no motion to intervene is filed within the time required herein, if the Commission on its own review of the matter finds that a grant of the certificate is required by the public convenience and necessity. If a motion for leave to intervene is timely filed, or if the Commission on its own motion believes that a formal hearing is required, further notice of such hearing will be duly given.

Under the procedure herein provided for, unless otherwise advised, it will be unnecessary for the applicant to appear or be represented at the hearing.

G. Any person or the Commission's staff may, within 45 days after the issuance of the instant notice by the Commission, file pursuant to Rule 214 of the Commission's Procedural Rules (18 CFR 385.214) a motion to intervene or notice of intervention and pursuant to § 157.205 of the Regulations under the Natural Gas Act (18 CFR 157.205) a protest to the request. If no protest is filed within the time allowed therefor, the proposed activity shall be deemed to be authorized effective the day after the time allowed for filing a protest. If a protest is filed and not withdrawn within 30 days after the time allowed for filing a protest, the instant request shall be treated as an application for authorization pursuant to section 7 of the Natural Gas Act.

Lois D. Cashell,

Acting Secretary.

[FR Doc. 88-8806 Filed 4-20-88; 8:45 am]

BILLING CODE 6717-01-M

[Docket No. TA88-7-20-000]

Algonquin Gas Transmission Co.; Proposed Changes in FERC Gas Tariff

April 18, 1988.

Take notice that Algonquin Gas Transmission Company ("Algonquin") on April 12, 1988, tendered for filing to its FERC Gas Tariff, Second Revised Volume No. 1 the following tariff sheets:

Twenty-fifth Revised Sheet No. 201
Eighteenth Revised Sheet No. 205
Sixteenth Revised Sheet No. 211
Ninth Revised Sheet No. 214

Algonquin states that such tariff sheets are being filed pursuant to Section 7 of Rate Schedule F-4, Section 10 of Rate Schedule STB, Section 9 of Rate Schedule SS-III and Section 17 of the General Terms and Conditions of its FERC Gas Tariff to track rate changes by its pipeline supplier, Texas Eastern Transmission Corporation ("Texas Eastern") and that Algonquin is filing Twenty-fifth Revised Sheet No. 201, Eighteenth Revised Sheet No. 205, Sixteenth Revised Sheet No. 211 and Ninth Revised Sheet No. 214 to reflect those rate changes made by Texas Eastern in the underlying services.

The proposed effective date for Twenty-fifth Revised Sheet No. 201, Eighteenth Revised Sheet No. 205, Sixteenth Revised Sheet No. 211 and Ninth Revised Sheet No. 214 is March 30, 1988.

Algonquin notes that a copy of this filing is being served upon each affected party and interested state commission.

Any person desiring to be heard or to protest said filing should file a motion to intervene or protest with the Federal Energy Regulatory Commission, 825 North Capitol Street NE., Washington, DC 20426, in accordance with Rules 211 and 214 of the Commission's Rules of Practice and Procedure (18 CFR 385.211, 385.214). All such motions or protests should be filed on or before April 25, 1988. Protests will be considered by the Commission in determining the appropriate action to be taken but will not serve to make protestants parties to the proceeding. Any person wishing to become a party must file a motion to intervene. Copies of this filing are on file with the Commission and are available for public inspection.

Lois Cashell,

Acting Secretary.

[FR Doc. 88-8808 Filed 4-20-88; 8:45 am]

BILLING CODE 6717-01-M

[Docket No. CP88-286-000]

Cascade Natural Gas Co.; April 15, 1988.

Cascade Natural Gas Co., *Complainant* Northwest Pipeline Company, Chevron Chemical Company, Intermountain Gas Company, Hadson Gas Systems, Inc., and Llano, Inc.; *Respondents.*

Take notice that on April 8, 1988, Cascade Natural Gas Corporation (Cascade), Post Office Box 24464, Seattle, Washington 98124, filed a motion to substitute Llano, Inc. and Hadson Gas Systems, Inc., as respondents in this proceeding in place of Intermountain Gas Company (Intermountain). Cascade contends that Intermountain is not longer participating in the transaction at issue in this proceeding, and moves that the Commission dismiss Intermountain. Cascade contends that Llano and its affiliate, Hadson, are not participating in the transaction at issue in Intermountain's stead, and are the appropriate respondents to the complaint.

Any person desiring to be heard with respect to this motion should file an answer, protest, or motion to intervene, as appropriate, within 21 days after the date of this notice. The substitute

respondents are directed to answer within the same time period. Such pleading should be directed to the Secretary, Federal Energy Regulatory Commission, 825 North Capitol Street, NE., Washington, DC 20426, in accordance the Commission's Rules 211, 213, or 214 (18 CFR 385.211, 213 or 214), as appropriate. Protests will be considered by the Commission in determining the appropriate action to be taken, but will not serve to make protestants parties to the proceeding. Any persons wishing to become a party must file a motion to intervene. Persons who have heretofore filed a motion to intervene need not file again. Copies of the motion are on file with the Commission and available for public inspection.

Lois D. Cashell,

Acting Secretary.

[FR Doc. 88-8807 Filed 4-20-88; 8:45 am]

BILLING CODE 6717-01-M

[Docket No. TA88-3-001]

El Paso Natural Gas Co.; Revised Change in Rates Pursuant to Purchased Gas Cost Adjustment

April 18, 1988.

Take notice that on April 7, 1988, El Paso Natural Gas Company ("El Paso"), as allowed by and in compliance with ordering paragraph (C) of the Federal Energy Regulatory Commission's ("Commission") order issued March 31, 1988 at Docket Nos. TA88-3-33-000, *et al.*, filed a revised notice of change in rates for jurisdictional gas service rendered under rate schedules affected by and subject to Section 19, Purchased Gas Cost Adjustment Provision ("PGA"), of the General Terms and Conditions in El Paso's FERC Gas Tariff, First Revised Volume No. 1.

El Paso states that the Commission's March 31, 1988 order, among other things, conditionally accepted, effective April 1, 1988 subject to refund, the alternate tariff sheets included in El Paso's notice of rate change filed March 1, 1988 at Docket No. TA88-3-33-000. However, El Paso states, in ordering paragraph (C), the Commission provided that El Paso could, within 30 days of the issuance of the order, file lower alternative rates, to be effective April 1, 1988, reflecting a 12-month amortization of the 6-month actual deferred account balance as of December 31, 1987. Accordingly, El Paso states, as permitted by and in compliance with ordering paragraph (C), El Paso tendered for filing the following sheets to its FERC Gas Tariff which El Paso proposes to be made effective in lieu of their counterparts included in its original March 1, 1988 PGA rate change filing and accepted by the Commission's March 31, 1988 order:

Tariff volume	Tariff sheet
First Revised Volume No. 1.	First Substitute Sixteenth Revised Sheet No. 100 First Substitute Fourth Revised Sheet No. 100-A.
Third Revised Volume No. 2.	First Substitute Fortieth Revised Sheet No. 1-D
Original Volume No. 2A...	First Substitute Forty-second Revised Sheet No. 1-C.

El Paso states that the tendered tariff sheets reflect the $0.5918 per dth increase in the base purchased gas cost rate included in its original March 1, 1988 PGA filing, and an increase of $0.1024 per dth in the surcharge rate, for a net increase of $0.6942 per dth in El Paso's currently effective rates.

El Paso requested that the Commission grant such waiver of the applicable provisions of El Paso's FERC Gas Tariff, the Commission's PGA Regulations, and any other applicable Commission rules and regulations as may be necessary to allow the tendered tariff sheets to be accepted and permitted to become effective April 1, 1988 in substitution for their counterparts filed March 1, 1988 at Docket No. TA88-3-33-000, as provided for in the Commission's March 31, 1988 order.

El Paso states that copies of the filing have been served upon all parties of record in Docket No. TA88-3-33-000.

Any person desiring to be heard or to protest said filing should file a motion to intervene or protest with the Federal Energy Regulatory Commission, 825 North Capitol Street, NE., Washington, DC., 20426, in accordance with Rules 214 and 211 of the Commission's Rules of Practice and Procedure. All such motions or protests should be filed on or before April 25, 1988. Protests will be considered by the Commission in determining the appropriate action to be taken, but will not serve to make protestants parties to the proceeding. Any person wishing to become a party must file a motion to intervene. Copies of this filing are on file with the Commission and are available for public inspection.

Lois D. Cashell,

Acting Secretary.

[FR Doc. 88-8809 Filed 4-20-88; 8:45 am]

BILLING CODE 6717-01-M

[Docket No. SA88-10-000]

G.M. Lehnertz; Petition for Adjustment

April 19, 1988.

On March 25, 1988, G.M. Lehnertz (Petitioner) filed a petition for an adjustment pursuant to section 502(c) of the Natural Gas Policy Act of 1978 (NGPA). Petitioner states that in June, 1981 the Texas Railroad Commission (TRC) determined that the A.J. Reed No. 1 well, located in the Carthage field of Panola County, Texas, qualified as a stripper gas well under section 108 of the NGPA (TRC Docket No. F-06-032799). On March 1, 1988, Petitioner filed a petition for an enhanced recovery determination with the TRC under § 271.805 of the Commission's regulations for the Reed No. 1 well. Petitioner's March 25, 1988 adjustment request seeks waiver of the time-of-filing requirements governing such enhanced recovery petitions.

Under § 271.805 of the Commission's regulations, if a stripper well's production averages more than 60 Mcf per production day during any 90-day production period, then both the purchaser and the operator are required to file a written notice of disqualification with the Commission and each other. The right to collect a maximum lawful price under NGPA section 108 terminates on the last day of the disqualifying 90-day production period unless within 150 days of the last day of such period the operator files a motion contesting a notice of disqualification or a petition for determination that the increase in production was the result of the application of an enhanced recovery technique, seasonal fluctuation or temporary pressure build-up. If the motion or petition is filed more than 150 days after the last day of the disqualifying production period, then sales from the well are not eligible for the section 108 price from the last day of the disqualifying period until the day on which the motion or petition is actually filed.

Petitioner states that the gas purchaser, United Gas Pipeline Company (United), notified Petitioner by letter dated January 6, 1988, that the subject well produced natural gas at a rate exceeding 60 Mcf per production day for the 90-day production period comprising February, March and April, 1981, and that the well was therefore disqualified from NGPA section 108 pricing eligibility. According to United, Petitioner will be subject to a refund obligation of $385,529.18 plus interest of

$241,097.15 for the period February, 1981 through December, 1987.

Petitioner requests a waiver of the time-of-filing requirements of § 271.805(f)(1) on the grounds that it was unaware of the requirement to file for an enhanced recovery petition. Petitioner asserts that although it failed to meet the regulatory obligation of notice pursuant to § 271.805(d) of the regulations, had United timely met its regulatory responsibility pursuant to the same regulation instead of delaying its notice for six years, Petitioner would have timely filed an enhanced recovery petition. Petitioner states that upon being advised by United that there was a filing deficiency, it promptly filed the March 1, 1988 petition for enhanced recovery technique determination with the TRC. Petitioner assets that a special hardship exists because it will suffer an "out of pocket" loss of $142,610.17 for the period in question, which will jeopardize Petitioner's ability to continue in business.

The procedures applicable to the conduct of this adjustment proceeding are found in Subpart K of the Commission's rules of practice and procedure. Any person desiring to participate in this adjustment proceeding must file a motion to intervene in accordance with the provisions of such Subpart K. All motions to intervene must be filed within 15 days after publication of this notice in the **Federal Register**.

Lois D. Cashell,

Acting Secretary.

[FR Doc. 88-8733 Filed 4-20-88; 8:45 am]

BILLING CODE 6717-01-M

[Docket No. TM88-1-8-000]

South Georgia Natural Gas Co.; Proposed Changes in FERC Gas Tariff

April 18, 1988.

Take notice that South Georgia Natural Gas Company (South Georgia) on April 8, 1988, tendered for filing Eleventh Revised Sheet Nos. 76 and 106 to the First Revised Volume No. 2 of its FERC Gas Tariff. The proposed revised tariff sheets would flow through to South Georgia's two gas storage customers reduced storage transportation charges billed to South Georgia by Southern Natural Gas Company (Southern).

South Georgia states that the Commission's August 22, 1980 order in the captioned proceeding permits South Georgia to flow through to its two storage customers any changes in the amounts which the Commission authorizes Southern to charge South Georgia for storage transportation services. South Georgia further states that the Commission recently accepted for filing to be effective April 1, 1988, subject to refund revised tariff sheets filed by Southern which reduced Southern's storage transportation charges to South Georgia.

South Georgia requests waivers of § 154.51 of the Commission's Regulations and any other waivers necessary to make the revised tariff sheets effective as of April 1, 1988, the date of the decrease in Southern's charges to South Georgia.

Copies of this filing were served on the two jurisdictional customers affected by the filing, interested state commissions and all parties in the captioned proceeding.

Any person desiring to be heard or to protest said filing should file motion to intervene or protest with the Federal Energy Regulatory Commission, 825 North Capital Street NE., Washington, DC 20426, in accordance with the Commission's Rules of Practice and Procedure (18 CFR 385.211 and 385.214). All such motions or protests should be filed on or before April 25, 1988. Protests will be considered by the Commission in determining the appropriate action to be taken, but will not serve to make protestants parties to the proceeding. Any person wishing to become a party must file a motion to intervene. Copies of this filing are on file with the Commission and are available for public inspection.

Lois D. Cashell,

Acting Secretary.

[FR Doc. 88-8810 Filed 4-20-88; 8:45 am]

BILLING CODE 6717-01-M

Office of Fossil Energy

Coal Policy Committee of the National Coal Council; Open Meeting

Pursuant to the provisions of the Federal Advisory Committee Act (Pub. L. 92-463, 86 Stat. 770), notice is hereby given of the following meeting:

Name: Coal Policy Committee of the National Coal Council.

Date and Time: Thursday, May 19, 1988, 9:30 AM.

Place: Hyatt Regency Hotel, 2799 Jefferson Davis Hwy., Arlington, VA 22202.

Contact: Margie D. Biggerstaff, U.S. Department of Energy, Office of Fossil Energy (FE-1), Washington, DC 20585, Telephone: 202/586-4695.

Purpose of the Parent Council

To provide advice, information, and recommendations to the Secretary of Energy on matters relating to coal and coal industry issues.

Purpose of the Meeting

For the Committee to review a draft report of the study on "The Economic Impact of Substituting U.S. Coal for Imported Energy."

Tentative Agenda

—Call to order by Irving Leibson, Chairman.
—Discuss draft report on "Economic Impact of Substituting U.S. Coal for Imported Energy.
—Discuss any other business properly brought before the Committee.
—Public Comment—10-Minute Rule.
—Adjournment.

Public Participation

The meeting is open to the public. The Chairman of the Committee is empowered to conduct the meeting in a fashion that will facilitate the orderly conduct of business. Any member of the public who wishes to file a written statement with the Committee will be permitted to do so, either before or after the meeting. Members of the public who wish to make oral statements pertaining to agenda items should contact Ms. Margie D. Biggerstaff at the address or telephone number listed above. Requests must be received at least 5 days prior to the meeting and reasonable provisions will be made to include the presentation on the agenda.

Transcripts

Available for public review and copying at the Public Reading Room, Room 1E-190, Forrestal Building, 1000 Independence Avenue SW., Washington, DC, between 9:00 a.m. and 4:00 p.m., Monday through Friday, except Federal holidays.

J. Robert Franklin,

Deputy Advisory Committee Management Officer.

[FR Doc. 88-8715 Filed 4-20-88; 8:45 am]

BILLING CODE 6450-01-M

FEDERAL HOME LOAN BANK BOARD

[No. 88-269]

Regulatory Review Procedures

Date: April 11, 1988.

AGENCY: Federal Home Loan Bank Board.

ACTION: Notice.

SUMMARY: The Federal Home Loan Bank Board ("Board" or "Bank Board") has adopted procedures for withdrawal under certain circumstances of

outstanding proposed regulations previously promulgated by the Board.

EFFECTIVE DATE: April 21, 1988.

FOR FURTHER INFORMATION CONTACT: Carol J. Rosa, Paralegal Specialist, (202) 377-7037, Regulations and Legislation Division, Office of General Counsel, Federal Home Loan Bank Board, 1700 G Street NW., Washington, DC 20552.

SUPPLEMENTARY INFORMATION: From time to time, the Board issues, and solicits comment on, proposed regulations on which it does not subsequently take any final action. It has come to the Board's attention that the existence of regulatory proposals that do not proceed to final rulemaking may create uncertainty among institutions subject to the Board's rules about the standards that govern them. This uncertainty may hamper institutions in their efforts to engage in orderly planning and to devise business strategies that comport with regulatory requirements.

In addition, the Board finds that it is an inefficient operating practice to allow rules to remain pending when no final action is contemplated. The Board has therefore adopted a Resolution, set forth in full below, providing that proposed rules are automatically withdrawn if: (1) The comment period has been closed for six months and (2) the Board has taken no action with respect to the proposal during that same six-month period. The Resolution permits the Board to extend the time for taking action on a proposal to a period longer than six months after the close of the comment period. When the Board extends the time for acting on a proposal, it intends to publish a notice to that effect in the **Federal Register**. The Board also intends to publish a confirming notice in the **Federal Register** when a proposal lapses by operation of the Board's policy and is therefore withdrawn. This policy applies to all proposals promulgated including those promulgated by the Board in its capacity as operating head of the Federal Savings and Loan Insurance Corporation. Finally, today's action represents a policy governing agency procedures and is therefore exempt from the Administrative Procedure Act. *See* 5 U.S.C. 553(b).

Accordingly, the Board hereby adopts the following Resolution:

Whereas, the Federal Home Loan Bank Board from time to time promulgates proposed rules pertaining to the regulation and operation of institutions chartered by the Bank Board and/or insured by the Federal Savings and Loan Insurance Corporation; and

Whereas, it is occasionally the case that the Bank Board has proposed a rule with a comment period extending for a time certain, that the comment period expires, but that the Bank Board takes no final action with respect to the proposal;

Whereas, the Bank Board finds that it contributes to uncertainty in the regulatory environment of the thrift industry, hampers orderly planning by the members of the industry, and constitutes an inefficient agency operating procedure for proposals to linger in the public arena for long periods of time when the Bank Board does not intend to take final action with respect to them;

Now, therefore, be it resolved that, effective immediately, all proposed regulations promulgated by the Bank Board for which the comment period has been closed for six months and on which the Bank Board has taken no action will be deemed automatically withdrawn unless the Bank Board extends the time for taking action; and

Resolved further, that the Bank Board will publish in the **Federal Register** a notice of withdrawal of such proposed regulations; and

Resolved further, that the Bank Board will publish in the **Federal Register** a notice extending the time for taking action on any proposed regulations on which it determines to make such an extension; and

Resolved further, that this action will become effective upon publication in the **Federal Register**.

By the Federal Home Loan Bank Board.

John F. Ghizzoni,

Assistant Secretary.

[FR Doc. 88-8786 Filed 4-20-88; 8:45 am]

BILLING CODE 6720-01-M

FEDERAL MARITIME COMMISSION

Agreement(s) Filed

The Federal Maritime Commission hereby gives notice of the filing of the following agreement(s) pursuant to section 5 of the Shipping Act of 1984.

Interested parties may inspect and obtain a copy of each agreement at the Washington, DC Office of the Federal Maritime Commission, 1100 L Street, NW., Room 10325. Interested parties may submit comments on each agreement to the Secretary, Federal Maritime Commission, Washington, DC 20573, within 10 days after the date of the **Federal Register** in which this notice appears. The requirements for comments are found in § 572.603 of Title 46 of the Code of Federal Regulations. Interested persons should consult this section before communicating with the Commission regarding a pending agreement.

Agreement No.: 224-002869-004.

Title: San Francisco Terminal Agreement.

Parties:

San Francisco Port Commission

Fred F. Noonan Company, Inc. (Noonan)

Synopsis: The proposed agreement extends the term of the basic Agreement by five years and provides that Noonan will be reimbursed no more than $303,000 for certain relocation and capitol improvement expenses. Noonan will continue to pay Port tariff charges relating to the importing and exporting of automobiles and other cargoes.

By Order of the Federal Maritime Commission.

Joseph C. Polking,

Secretary.

Dated: April 18, 1988.

[FR Doc. 88-8799 Filed 4-20-88; 8:45 am]

BILLING CODE 6730-01-M

FEDERAL RESERVE SYSTEM

Cardinal Bancshares, Inc., et al.; Formations of, Acquisitions by, and Mergers of Bank Holding Companies

The companies listed in this notice have applied for the Board's approval under section 3 of the Bank Holding Company Act (12 U.S.C. 1842) and § 225.14 of the Board's Regulation Y (12 CFR 225.14) to become a bank holding company or to acquire a bank or bank holding company. The factors that are considered in acting on the applications are set forth in section 3(c) of the Act (12 U.S.C. 1842(c)).

Each application is available for immediate inspection at the Federal Reserve Bank indicated. Once the application has been accepted for processing, it will also be available for inspection at the offices of the Board of Governors. Interested persons may express their views in writing to the Reserve Bank or to the offices of the Board of Governors. Any comment on an application that requests a hearing must include a statement of why a written presentation would not suffice in lieu of a hearing, identifying specifically any questions of fact that are in dispute and summarizing the evidence that would be presented at a hearing.

Unless otherwise noted, comments regarding each of these applications must be received not later than May 13, 1988.

A. Federal Reserve Bank of Cleveland (John J. Wixted, Jr., Vice President) 1455 East Sixth Street, Cleveland, Ohio 44101:

1. *Cardinal Bancshares, Inc.*, Lexington, Kentucky, and Cardinal Subsidiary Corporation, Lexington, Kentucky; to acquire 100 percent of the voting shares of Harco Bankshares, Harlan, Kentucky, and thereby indirectly acquire Harlan National Bank, Harlan, Kentucky, and Guaranty Deposit Bank, Cumberland, Kentucky. In connection with this application, Cardinal Subsidiary Corporation also proposes to become a bank holding company.

2. *Farmers National Bancorp of Cynthiana, Inc.*, Cynthiana, Kentucky; to acquire 100 percent of the voting shares of Deposit Bank of Carlisle, Carlisle, Kentucky.

B. Federal Reserve Bank of Atlanta (Robert E. Heck, Vice President) 104 Marietta Street NW., Atlanta, Georgia 30303:

1. *Commercial Bancorp of Georgia, Inc.*, Atlanta, Georgia; to become a bank holding company by acquiring 100 percent of the voting shares of Commercial Bank of Georgia, Atlanta, Georgia, a *de novo* bank. Comments on this application must be received by May 12, 1988.

2. *FNB Financial Corporation*, Knoxville, Tennessee; to become a bank holding company by acquiring 100 percent of the voting shares of First National Bank of Knoxville, Knoxville, Tennessee.

3. *South Alabama Hoding Co., Inc.*, McIntosh, Alabama; to become a bank holding company by acquiring 100 percent of the voting shares of Washington County State Bank, McIntosh, Alabama. Comments on this application must be received by May 12, 1988.

C. Federal Reserve Bank of Chicago (David S. Epstein, Vice President) 230 South LaSalle Street, Chicago, Illinois 60690:

1. *Britt Bancshares, Inc.*, and Tripoli Bancshares, Inc., both of Saint Paul, Minnesota; to acquire 99 percent of the voting shares of First State Bank, Britt, Iowa. Comments on this application must be received by May 11, 1988.

2. *First Financial Corporation*, Terre Haute, Indiana; to acquire at least 24.9 percent of the voting shares of The Citizens of Paris, Inc., Paris, Illinois, and thereby indirectly acquire First Citizens National Bank of Paris, Paris, Illinois.

3. *Seaway Financial Corporation*,. St. Clair, Michigan; to become a bank holding company by acquiring 100 percent of the voting shares of The Commercial and Savings Bank of St. Clair County, St. Clair, Michigan, and the Algonac Savings Bank, Algonac, Michigan.

4. *Union Financial Corporation*, Lake Odessa, Michigan; to become a bank holding company by acquiring 100 percent of the voting shares of Union Bank, Lake Odessa, Michigan.

D. Federal Reserve Bank of St. Louis (Randall C. Sumner, Vice President) 411 Locust Street, St. Louis, Missouri 63166:

1. *Centennial Bancshares Corporation*, Elsberry, Missouri; to become a bank holding company by acquiring at least 97.3 of the voting shares of Bank of Lincoln County, Elsberry, Missouri.

2. *Delta Bancshares Company*, St. Louis, Missouri; to acquire at least 80 percent of the voting shares of Glasgow Savings Bank, Glasgow, Missouri. Comments on this application must be received by May 12, 1988.

E. Burkburnett Bancshares, Inc., Burkburnett, Texas; to become a bank holding company by acquiring 80 percent of the voting shares of The Burkburnett Bank, Burkburnett, Texas.

Board of Governors of the Federal Reserve System, April 15, 1988.

William W. Wiles,

Secretary of the Board.

[FR Doc. 88-8712 Filed 4-20-88; 8:45 am]

BILLING CODE 6210-01-M

William Yale; Acquisition of Shares of Banks or Bank Holding Companies

The notificant listed below has applied under the Change in Bank Control Act (12 U.S.C. 1817(j)) and § 225.41 of the Board's Regulation Y (12 CFR 225.41) to acquire a bank or bank holding company. The factors that are considered in acting on notices are set forth in paragraph 7 of the Act (12 U.S.C. 1817(j)(7)).

The notices are available for immediate inspection at the Federal Reserve Bank indicated. Once the notices have been accepted for processing, they will also be available for inspection at the offices of the Board of Governors. Interested persons may express their views in writing to the Reserve Bank indicated for that notice or to the offices of the Board of Governors. Comments must be received not later than May 6, 1988.

A. Federal Reserve Bank of Dallas (W. Arthur Tribble, Vice President) 400 South Akard Street, Dallas, Texas 75222:

1. *William Yale* Fair, Rockport Texas, to acquire 11.06; Wayne T. Nance, San Antonio, Texas, to acquire 9.05 percent; Jack Henry, Monett, Missouri, to acquire 9.05; Benjamin Franklin Pitman III, San Antonio, Texas, to acquire 5.03 percent; John S. Hicklin, Rockport, Texas, to acquire 2.01 percent; and Phillip Yeager, San Antonio, Texas, to acquire 2.01 percent of the voting shares of Kirby Bancshares, Inc., San Antonio, Texas, and thereby indirectly acquire Kirby State Bank.

Board of Governors of the Federal Reserve System, April 15, 1988.

William W. Wiles,

Secretary of the Board.

[FR Doc. 88-8714 Filed 4-20-88; 8:45 a.m.]

BILLING CODE 6210-01-M

The Long-Term Credit Bank of Japan, Tokyo, Japan; Application To Engage in Various Securities and Financial Advisory Activities

The Long-Term Credit Bank of Japan, Tokyo, Japan, has applied, pursuant to section 4(c)(8) of the Bank Holding Company Act (12 U.S.C. 1843(c)(8)) ("BHC Act") and § 225.23(a)(2) and (3) of the Board's Regulation Y (12 CFR 225.23(a)(2) and (3)), to acquire Greenwich Capital Markets, Inc., Greenwich, Connecticut ("Company"), a primary dealer in U.S. government securities, and thereby engage in a number of activities, some of which have not been previously approved by the Board.

Previously Approved Activities

Applicant proposes to engage through Company in the following activities which *have* been previously approved:

(1) Underwriting and dealing in obligations of the United States, general obligations of states and their political subdivisions, and other obligations that state member banks are authorized to underwrite and deal in under 12 U.S.C. 24 and 335 ("bank-eligible securities") pursuant to 12 CFR 225.25(b)(16) and engaging in activities incidental thereto, including repurchase and reverse repurchase transactions on such securities, collateralized borrowing and lending of such securities, clearing and settling bank-eligible securities transactions and providing custodial, accounting, record keeping and ancillary services, pursuant to 12 CFR 225.21(a)(2), 225.22(a)(1), 225.25(b)(3) and 225.25(b)(15);

(2) Engaging in futures, forward and options contracts on bank-eligible securities for hedging purposes in accordance with 12 CFR 225.142;

(3) Providing portfolio investment advice and research and furnishing general economic information and advice, general economic statistical forecasting services and industry studies on a nonfee basis in connection with and as an incident to the proposed

bank-eligible securities activities, pursuant to 12 CFR 225.25(b)(4)(iii) and (iv);

(4) Acting as a futures commission merchant ("FCM") for nonaffiliated persons in the execution and clearance on major commodity exchanges of futures contracts and options on futures contracts for bullion, foreign exchange, government securities, certificates of deposit, and other money market instruments that a bank may buy or sell in the cash market for its own account in accordance with 12 CFR 225.25(b)(18), except that Applicant has also proposed to provide such services to its affiliates as well (Applicant argues that providing FCM services to affiliates is permissible under § 225.25(b)(18) or, alternatively, permissible under sections 4(c)(1)(C) and 4(c)(8) of the BHC Act, 12 U.S.C. 1843(c)(1)(C));

(5) Providing investment advice as an FCM with respect to the purchase and sale of futures contracts and options on futures contracts, pursuant to 12 CFR 225.25(b)(19);

(6) Engaging through Company's subsidiary, Greenwich Capital Mortgage, Inc., Irving, Texas, in mortgage banking activities, consisting of acquiring residential mortgage assets and pooling such assets for the issuance, through such subsidiary or third party servicers, and sale of mortgage-related securities backed by the guarantees of GNMA, pursuant to 12 CFR 225.25(b)(1) and 225.25(b)(16);

(7) Providing through Company's subsidiary, Greenwich Asset Management, Incorporated, Greenwich, Connecticut, investment advice as a commodity trading adviser registered with the Commodity Futures Trading Commission with respect to the purchase and sale of futures contracts and options on futures contracts, pursuant to 12 CFR 225.25(b)(19);

(8) Providing through Greenwich Asset Management, Incorporated, portfolio investment advice and research and furnishing general economic information and advice, general economic statistical forecasting services and industry studies to affiliates and nonaffiliates, serving as investment adviser as defined in section 2(a)(20) of the Investment Company Act of 1940 to investment companies registered under that act and organizing, sponsoring and managing closed-end investment companies, pursuant to 12 CFR 225.25(b)(4);

(9) Trading for the account of Company in foreign exchange in accordance with *Standard and Chartered Banking Corporation*, 38 FR 27552 (1973);

(10) Trading for the account of Company in forward, futures, options and options on futures contracts for foreign exchanges for hedging purposes (Applicant contends that the permissibility of such trading is supported by 12 CFR 225.25(b)(18) and 225.142 as well as by section 4(c)(1)(C) of the BHC Act);

(11) Acting as an FCM and providing investment advice in connection with future contracts and options on futures contracts for broad-based stock indexes and municipal bond indexes (Applicant states that such activities are consistent with *J.P. Morgan & Co., Incorporated*, 71 Federal Reserve Bulletin 251 (1985); *Citicorp*, 73 Federal Reserve Bulletin 220 (1987); and *Bankers Trust New York Corporation*, 71 Federal Reserve Bulletin 111 (1985)).

Activities Not Previously Approved

Applicant has also applied to purchase and sell for Company's own account municipal bond index futures contracts and options on such contracts for The Long-Term Municipal Bond Index, based on the Bond Buyer Municipal Bond Index. Applicant submits that since national and state member banks are permitted to trade in municipal bond index futures contracts, such contracts would also appear to fall within the range of securities that bank holding companies are authorized to underwrite and deal in under 12 CFR 225.25(b)(16).

In addition, Applicant has proposed that Company act as an FCM and provide investment advice with respect to corporate bond index futures contracts, specifically the Moody's Investment-Grade Corporate Bond Index futures contracts and The Long-Term Corporate Bond Index. Applicant contends that the execution and clearance as an FCM of corporate bond index futures contracts are functionally and operationally similar to securities brokerage and FCM activities with respect to municipal bond and stock index futures contracts previously approved by the Board.

Applicant has also applied for approval to acquire indirectly through Company 1.01 percent of the voting shares of Liberty Brokerage, Inc., New York, New York, an inter-dealer blind broker of government securities.

Applicant contends that its proposed acquisition of Company will provide Company with access to a substantial source of capital and a worldwide customer base, resulting in gains in efficiency and convenience and in increased competition in the government securities market and will not result in adverse effects.

In publishing the proposal for comment, the Board does not take any position on issues raised by the proposal under the BHC Act. Notice of the proposal is published solely in order to seek the views of interested persons on the issues presented by the application and does not represent a determination by the Board that the proposal meets or is likely to meet the standards of the BHC Act.

Any views or requests for hearing should be submitted in writing and received by William W. Wiles, Secretary, Board of Governors of the Federal Reserve System, Washington, DC 20551, not later than May 13, 1988. Any request for a hearing must, as required by § 262.3(e) of the Board's Rules of Procedure (12 CFR 262.3(e)), be accompanied by a statement in lieu of a hearing, identifying specifically any questions of fact that are in dispute, summarizing the evidence that would be presented at a hearing, and indicating how the party commenting would be aggrieved by approval of the proposal.

This application may be inspected at the offices of the Board of Governors or the Federal Reserve Bank of New York.

Board of Governors of the Federal Reserve System, April 15, 1988.

William W. Wiles,

Secretary of the Board.

[FR Doc. 88-8713 Filed 4-20-88; 8:45 am]

BILLING CODE 6210-01-M

FEDERAL TRADE COMMISSION

Trade Regulation; Packaging and Labeling; Information Collection Requirement

AGENCY: Federal Trade Commission.

ACTION: Application to OMB under the Paperwork Reduction Act, 44 U.S.C. 3501–3518, for renewal of an existing clearance (OMB No. 3084–0063) for the rules implementing the Fair Packaging and Labeling Act, 15 U.S.C. 1453–1455 (1982) (FPLA). These rules are 16 CFR Part 500.

SUMMARY: The FTC issues rules implementing the FPLA in 1968. The rules establish requirements for the manner and form of the labeling of consumer commodities (as defined in the FPLA) with: (1) The identity of the commodity; (2) the name and place of business of the manufacturer, packer, or distributor; (3) the net quantity of contents; and (4) the net quantity of servings represented to be present. The rules also require sellers that make "cents off", "introductory offer", or "economy size" claims to keep records

for one year showing compliance with the FPLA.

The FPLA rules closely parallel the requirements of the statute and provide detailed guidance on how to comply with those requirements. The FTC has enforcement and responsibility over package disclosures on "consumer commodities" as defined in the FPLA. The Food and Drug Administration and the U.S. Department of Agriculture have analogous responsibilities covering foods, drugs, devices, and cosmetics and meat and poultry products, respectively. This application pertains only to matters within the Commission's jurisdiction.

This Request is that the existing clearance for these rules be extended. The rules have not been modified since the original clearance was granted. Nor has the marketplace changed in a way that would affect the burden estimate. As in the original application, the burden estimate is premised on the assumption that about 1.2 million entities are affected by the rules and that their disclosure and recordkeeping requirements require, on average, less than 10 hours effort beyond what would be devoted to labeling matters in the ordinary course of business.

DATE: Comments on this application must be submitted on or before May 23, 1988.

ADDRESS: Send comments to Don Arbuckle, Office of Information and Regulatory Affairs, Office of Management and Budget, New Executive Office Building, Room 3228, Washington, DC 20503. Copies of this application may be obtained from: Public Reference Branch, Room 130, Federal Trade Commission, Washington, DC 20580.

FOR FURTHER INFORMATION CONTACT: Christian S. White, Assistant General Counsel Federal Trade Commission, Washington, DC 20580, (202) 326-2476.

James E. McCarty,

Acting General Coungel.

[FR Doc. 88-8771 Filed 4-20-88; 8:45 am]

BILLING CODE 6750-01-M

DEPARTMENT OF HEALTH AND HUMAN SERVICES

Centers for Disease Control

Cooperative Agreement With Predominantly Black Colleges and Universities; Availability of Funds for Fiscal Year 1988

Introduction

The Centers for Disease Control (CDC), announces that competitive applications are being accepted to assist predominently black colleges and universities in enhancing the quantitative and qualitative skills of black undergraduate students in public health-related fields. The Catalog of Federal Domestic Assistance number is 13.283.

Authority

This cooperative agreement is authorized under section 301(a) [42 U.S.C. 241(a)] of the Public Health Service Act, as amended.

Background

The Centers for Disease Control is responsible for the Nation's efforts to "prevent unnecessary illness and death and to enhance the health of the American people." Its programs include a number of research laboratories, disease surveillance systems, disease prevention programs, and training programs. The report of the Secretary's Task Force on Black and Minority Health documents significant progress in the health status of Americans but suggests a continuing disparity in the morbidity and mortality experienced by blacks as compared with our Nation's population as a whole. This report states that in 1983, life expectancy reached 75.2 years for whites and 69.6 years for blacks. The life expectancy of blacks today was reached by whites in the early 1950s, a lag of about 30 years. The report also suggests the infant mortality rate of blacks is twice that of whites.

Biostatistics and epidemiology are essential elements in the process of solving the health problems of Americans. These disciplines are the basis for understanding, managing, and preventing disease and establishing health policies in a modern society. The need for quantitative health sciences has increased tremendously in the past decade. Yet, less than 3 percent of Americans trained in these fields are black.

Programs are needed to expand opportunities and experiences for black students and to encourage them to enter fields of public health, especially in biostatistics and epidemiology.

Predominently black colleges and universities offer a variety of degree programs and encourage students to explore numerous career options. Among these programs are interdisciplinary science curricula that incorporate a variety of health and research programs, including teaching programs in biostatistics, epidemiology, and other biomedical programs.

Those colleges and universities provide the best qualified applicant pool of black undergraduate students. They are sensitive to the needs of these students and provide avenues for these students to excel in a variety of fields. They have played a major role in increasing the representation of blacks in health fields. Through health science programs, students matriculate in broad-based, interdisciplinary curricula that will prepare them for entry into graduate health profession schools.

A unique set of resources exists in these institutions and at CDC for teaching and research in community health, particularly as it relates to blacks. Increasing the number of health researchers and their skills is an important goal of the predominently black colleges and universities and is consistent with the mission of CDC. This cooperative agreement aims to increase the number of black students interested in public health careers, especially in biostatistics and epidemiology, and to increase the quality of their skills and knowledge in these fields. Participation in this cooperative agreement increases the potential of these students as health research professionals and as candidates for graduate programs in public health and professional training programs such as the Epidemic Intelligence Service.

Availability or Funds

Approximately $150,000 will be available in Fiscal Year 1988 to award *one* cooperative agreement. It is expected that the agreement will begin on or about May 30, 1988, and depending upon the availability of funds, will be funded in 12-month budget periods within a 5-year project period. Funding in the second and subsequent years is subject to the availability of funds and satisfactory progress of the applicant in meeting the objectives of the cooperative agreement.

Eligible Applicants

Eligible applicants are predominantly black colleges and universities with a black enrollment of at least 51 percent, which offer undergraduate courses in Biostatistics, Epidemiology, and Computer Science in their curriculum.

Type of Assistance

The award resulting from this announcement will be a cooperative agreement.

Objectives and Collaborative Activities

A. Objectives

1. Provide participation of students in an 11-week summer program of intensive reserach and data analysis.

2. Provide opportunities for students to participate in research experiences covering data processing, epidemiologic

methodologies, and biostatistical techniques through lectures, homestudy courses, and computer-based self-study.

3. Provide practical work experience in the processing, analysis, and presentation of data through the study of existing data sets from the components of CDC under the direction of a CDC preceptor.

4. Increase the skills and knowledge of students in quantitative and qualitative science through research techniques and practical work experiences.

B. Cooperative Activities

1. Recipient Activities

a. Select a Project Director from the recipient institution to be responsible for administrative oversight of the cooperative agreement.

b. Select a Coordinator to provide management and planning of activities necessary for successful operation of the summer program. This includes recruitment, program operations, and program and course scheduling.

c. Select a Computer/Statistical Consultant to provide assistance to summer participants in programming and statistical concepts relevant to their research. This Consultant will also assist the Coordinator during the summer program. The consultant is responsible for overseeing the computer experiences (including the Roscoe and SAS Computer-Based Self-Study, and SAS programming). The consultant will also assist in the statistical analyses of the research projects.

d. Ensure an appropriate pool of applicants by identifying candidate students who have successfully completed (receiving a grade of at least a "B") one semester of Biostatistics or Epidemiology and who express interest in pursuing careers in Biostatistics or Epidemiology.

e. Establish criteria for competitive selection of students, including academic performance, likelihood of pursuing a career in the health field, reserach experience, and personal interviews.

f. Select students to participate in the summer program on the basis of established criteria.

g. Select representatives from the recipient institution to serve on an advisory committee for the summer program. The purpose of the advisory committee members is to:

—Be the liaison between their institution and the summer program.
—Review applications and/or interview students for the summer program to provide input that may be used by recipient in the selection process.
—Review data sets submitted by CDC to be analyzed by students during the summer.
—Evaluate the summer program and make suggestions for improvement.

h. Offer health-related courses in the curriculum to expose students to a variety of public health areas. These courses must include at least one semester (or equivalent) of Biostatistics, Epidemiology, and Computer Science.

i. Incorporate a practicum into the science curriculum to give students hands-on experience in various public health fields.

j. Select and provide mechanism for supporting students participating in the summer program. Students will be expected to reside in the Atlanta area during the 11-week summer program period. Travel and living expenses necessary for summer participants should be determined by the recipient institution. No student will be paid a salary. Students should be available to participate in program activities by June 6, 1988. Starting dates for future years will be negotiated with CDC.

2. CDC Activities

a. Provide consultation and advice to the Program Director, Program Coordinator, and Computer/Statistical Consultant regarding administrative planning and program evaluation for program development in future years.

b. Provide computer access to the Computer/Statistical Consultant, as necessary.

c. Provide representatives from CDC to serve on the advisory committee of the summer program in collaboration with representatives from the recipient institution.

d. Provide access to data sets, CDC mainframe computer, word processor, research activities and other facilities that would be beneficial to program participants in enhancing their research skills. Provide preceptors to guide and instruct participants in the analysis of data sets.

e. Provide meeting space and office space to the summer participants, the Coordinator, and the Statistical/Computer Consultant for activities to be carried out at CDC.

f. Provide staff to give seminars to students who are potential program participants.

g. Provide CDC staff to give technical support to implementation of public health-related courses including Epidemiology, Human Ecology, Health Services Administration, and Environmental Health.

h. Collaborate in program planning and provide consultation to participants' research in the summer program.

Reporting Requirements

Annual progress reports and an annual financial status report shall be submitted in accordance with 45 CFR Part 74, Subparts I and J, respectively. The progress reports should show project planning and progress, and highlight problem areas.

All reports shall be submitted to: Grants Management Office, Procurement and Grants Office, Centers for Disease Control, 255 East Paces Ferry Road, NE, Room 321, Atlanta, GA 30305, Telephone: (404) 842-6575.

Application

A. Copies—Place of Submission

The original and two copies of the application must be submitted on Form PHS 5161-1 by May 2, 1988 to: Grants Management Branch, Procurement and Grants Office, Centers for Disease Control, 255 East Paces Ferry Road, NE, Room 321, Atlanta, GA 30305.

Application forms may be obtained from the above address.

B. Deadlines

The applications shall be considered as meeting the deadline if they are either:

1. Received on or before the deadline date, or

2. Sent on or before the deadline date and received in time for submission to the review group. Applicants should request a legibly dated U.S. Postal Service postmark or obtain a legibly dated receipt from a commercial carrier or U.S. Postal Service. Private metered postmarks shall not be acceptable as proof of timely mailing.)

C. Late applications

Applications which do not meet the criteria in either paragraph 1 or 2 immediately above are considered late applications and will not be considered in the current competition and will be returned to the applicant.

D. Reviews

Applications are not subject to review as governed by Executive Order 12372, Intergovernmental Review of Federal Programs.

Application Review and Evaluation Criteria

A. Initial Applications

The application will be reviewed and evaluated based upon the following factors:

1. Evidence of the applicant's understanding of the problem and the purpose of the cooperative agreement.

2. The consistency of the measurable objectives with the stated purpose and timetable.

3. The adequacy of the applicant's plan to carry out the activities proposed.

4. The adequacy of the applicant's plan to monitor progress toward meeting the objectives of the project.

5. The extent to which the budget is reasonable, adequately justified, and consistent with the intended use of the cooperative agreement funds.

6. The applicant's capability to provide staff and resources necessary to perform the project.

B. Continuation Applications

1. A continuation application within the project period will be made on the basis of the following criteria:

a. The accomplishment of the current budget period should show that the applicant is meeting its objectives.

b. The objectives for the new budget period are realistic, specific, and measurable.

c. The methods described will clearly lead to the achievement of these objectives.

d. The evaluation plan will allow management to monitor whether the methods are effective in achieving objectives.

e. The budget request is clearly explained, adequately justified, reasonable, and consistent with the intended use of the cooperative agreement funds.

Application Content

The application for cooperative agreement must include:

A. A narrative that:

1. Describes the background and need for the cooperative agreement.

2. Provides a summary of current activities and projects related to this agreement.

3. Specifies both long-term and short-term objectives that are measurable, realistic, and attainable.

4. Describes a method of operation for achieving the stated long-term and short-term objectives that includes:

a. The specific activities that will be undertaken and a timetable for their completion including how students will be selected for the summer program, i.e., plan for identifying and evaluating potential participants.

b. How the information obtained will be analyzed and summarized.

c. How the applicant plans to collaborate with CDC.

5. Describes a plan for evaluating progress made toward meeting the objectives of the cooperative agreement.

B. A budget with accompanying justification.

C. Any other information which will support the request for assistance.

Information

Information on application procedures, copies of application forms, and other material may be obtained from: Terry Maricle, Grants Management Specialist, Grants Management Branch, Procurement and Grants Office, Centers for Disease Control, 255 East Paces Ferry Road, NE, Room 321, Atlanta, GA 30305 (404) 842-6511 or FTS 236-6511.

Technical assistance may be obtained from: Laurie Elam, Project Officer, Office of the Director, Training and Laboratory Program Office, 1600 Clifton Road, NE, Room 173 (24 Executive Park), Atlanta, GA 30333 (404) 639-1939 or FTS 236-1939.

Dated: April 15, 1988.

Robert L. Foster,

Acting Director, Office of Program Support, Centers for Disease Control.

[FR Doc. 88-8735 Filed 4-20-88; 8:45 am]

BILLING CODE 4160-18-M

Centers for Disease Control and Agency for Toxic Substances and Disease Registry; Public Health Conference Support Grant Program Announcement and Availability of Funds for Fiscal Year 1988

Introduction

The Centers for Disease Control (CDC) and the Agency for Toxic Substances and Disease Registry (ATSDR), announce the availability of funds for Fiscal Year 1988 for competitive grant applications for the partial support of non-Federal conferences in the areas of health promotion, and disease prevention information/education projects.

Authority

This program is authorized under section 301 of the Public Health Service Act, and Section 104 of the Comprehensive Environmental Response, Compensation, and Liability Act of 1980 (CERCLA), as amended by Section 110 of the Superfund Amendments and Reauthorization Act of 1986 (SARA). Applicable regulations are set forth in 42 CFR 52, Grants for Research Projects. The Catalog of Federal Domestic Assistance number is 13.283.

Eligible Applicants

Eligible applicants include non-profit and for-profit organizations. Thus, universities, colleges, research institutions and public and private organizations, including State and local governments, and small, minority and/or woman-owned businesses are eligible for these conference support grants.

Program Background

CDC and ATSDR Support local, State, academic, national and international health efforts to prevent unnecessary disease, disability and premature death and to improve the quality of life. This includes educational efforts to transfer research findings and public health methods. Conferences and meetings between individuals involved in public health research, education, and application are critical to the overall goal of implementing new, cost-effective intervention strategies.

Objectives

This program will provide partial support for non-Federal conferences in health promotion and disease prevention information/education projects. Applications are being solicited for ATSDR for conferences on: (1) Health effects of toxic substances; (2) disease and exposure registries; (3) hazardous substance removal and remediation; (4) emergency response to toxic and environment disasters; (5), risk communication; (6) disease surveillance; and (7) investigation and research. The CDC special emphasis areas are: (1) disease preventioni; (2) chronic disease: (3) infectious diseases; (4) environmental health; (5) occupational safety and health: (6) health education and promotion; (7) laboratory practices; and, (8) injury control.

Availability of Funds

Approximately $500,000 will be available in Fiscal Year 1988 to fund approximately one to 30 awards. The awards will range from approximately $10,000 to $150,000 with the average award being approximately $60,000. The award will be funded with a 12-month annual budget period and a 1 to 2 year project period. The funding estimate outlined above may vary and is subject to change.

Use of Funds

Funds may *not* be used for the purchase of equipment, payments for honoraria, alterations or renovations, indirect costs, organizational dues, entertainment/personal expenses, cost of travel and payment of a full-time Federal employee, or to pay per diem or expenses other than local mileage for local participants.

Applications

A. Pre-Applications

Submission of pre-applications by potential applicants is strongly encouraged but not required as a prelude to receipt of funding of any application submitted under this announcement. Pre-applicants should be submitted to the Grants Management Officer at least three months prior to the submission due date. Pre-applications should include:

1. Title: Should include the term "conference," "symposium," "workshop," or similar designation to assist in the identification of the request;
2. Location of conference;
3. Expected registration;
4. Inclusive date of conference;
5. Conference objectives, format and projected agenda, including list of principal areas of topics to be addressed;
6. Physical facilities required for the conduct of the meeting such as simultaneous translation facilities;
7. Justification of the conference, including the problems it intends to clarify and the developments it may stimulate;
8. Brief biographical sketches of individuals responsible for planning the conference;
9. Information about all related conferences held on this subject during the last 3 years (if known); and
10. Preliminary total conference budget, with amount to be requested from CDC, and proposed sources of non-Federal funds.

CDC and ATSDR will review the pre-application and provide comments to the potential applicant within 30 days of receipt. This review is only to advise the potential applicant as to the potential interest in the proposed application. It is no guarantee that the application will be funded. The acceptance or rejection of a pre-application will not affect the review to be performed by the official objective review committee of the formal application.

B. Formal Applications

When completing the formal application, items 1 through 10 listed under Pre-Applications, above, should be specifically mentioned within the appropriate format.

Formal applications must also include a narrative which details the following:

1. Demonstration of need and purpose for the conference.
2. The conference objectives, target population, proposed agenda, other sponsors, and location.
3. Objectives for planning, conducting, and evaluating the conference.
4. An operational plan for planning, coordinating, and conducting the conference.
5. A total conference budget setting forth the CDC and applicant share, and justification which is consistent with the purpose, objectives, and operational plan of the conference, and the source(s) of non-Federal share. Use the Form PHS–5161–1 for budget submission.
6. Any other information that will support the request for assistance in co-sponsoring this conference.

C. Application Review and Evaluation Criteria

Applications will be reviewed and evaluated based on the following criteria:

1. Public health importance and significance of the conference.
2. Likelihood of accomplishing conference objectives as they relate to disease prevention and health promotion goals.
3. Capability of the proposed staff in relationship to the type conference.
4. Feasibility of the project in terms of operational plan.
5. Method of evaluating the results of the conference.
6. Adequacy of applicant's resources available for the project.
7. The appropriateness of the budget request.

D. Review and Award Schedule—Place of Submission

The original and two copies of the final application shall be submitted on Form PHS–5161–1 in accordance with the following schedule. The schedule also sets forth dates for objective review and anticipated award dates:

Deadline date	Objective review	Award date	Start date
Feb. 1	Mar. 1	Apr. 1	May 1
June 1	July 1	Aug. 1	Sept. 1
Oct. 1	Nov. 1	Dec. 1	Jan. 1

Final applications must be submitted on or before the deadline date to: Mr. Henry S. Cassell III, Grants Management Officer, Centers for Disease Control, 255 East Paces Ferry Road, NE., Room 300, Atlanta, Georgia 30305.

Application forms should be available in the institution business office or from the above address.

E. Deadlines

Applications shall be considered as meeting the deadline if they are either:

1. Received on or before the deadline date, or
2. Sent on or before the deadline date and received in time for submission to the independent review group. (Applicants should request a legibly-dated U.S. Postal Service postmark or obtain a legibly-dated receipt from a commercial carrier or U.S. Postal Service. Private metered postmarks shall not be acceptable as proof of timely mailing.)

F. Late Applications

Applications which do not meet the criteria in paragraph E, immediately above, are considered late applications and will not be considered in the current competition but will be held for consideration in the next review cycle.

G. Other Reviews

Applications are not subject to review as governed by Executive Order 12372, Intergovernmental Review of Federal Programs.

Reporting Requirements

An original and 2 copies of final financial status and performance reports are due 90 days after the end of the budget/project period. The performance report should include (1) grant number; (2) title of the conference; (3) name of principal investigator, program director, or coordinator, (4) name of organization that conducted the conference, and (5) a list of individuals who participated in the formally planned sessions of the meeting. With the approval of CDC/ATSDR, copies of proceedings or publications resulting from the conference may be substituted for the final performance report, provided that they contain the information requested in items (1) through (5), above, of this paragraph.

Where To Obtain Additional Information

Information on application procedures, copies of application forms, and other material may be obtained from Ms. Nealean K. Austin, Grants Management Specialist, Procurement and Grants Office, Centers for Disease Control, 255 East Paces Road, NE., Room 300, Atlanta, Georgia 30305, or by calling (404) 842–6575 or FTS 236–6575.

Technical assistance may be obtained from:

Centers for Disease Control

Ms. Joan W. Edmondson,
Training and Laboratory Program Office,
Centers for Disease Control,
1600 Clifton Road, NE., Mail Stop F02,
Atlanta, Georgia 30333,
Telephone: (404) 639–3631 or FTS 236–3631

Agency for Toxic Substances and Disease Registry

Ms. Georgi A. Jones,
Agency for Toxic Substances and Disease Registry,
1600 Clifton Road, NE., Mail Stop F29,
Atlanta, Georgia 30333,
Telephone: (404) 488-4620 or FTS 236-4620

Dated: April 15, 1988.

Robert L. Foster,

Acting Director, Office of Program Support, Centers for Disease Control.

[FR Doc. 88-8736 Filed 4-20-88; 8:45 am]

BILLING CODE 4160-18-M

Project Grants—Health Programs for Refugees; Program Announcement and Availability of Funds for Fiscal Year 1988

Introduction

The Centers for Disease Control (CDC) announces the availability of funds for Fiscal Year 1988 for Project Grants for Health Programs for Refugees (HPR).

Authority

This grant program is authorized by section 412(b)(5) of the Immigration and Nationality Act (8 U.S.C. 1522(b)(5)), as amended by the Refugee Assistance Amendments of 1982, Pub. L. 97-363; and the Refugee Asistance Extension Act of 1986, Pub. L. 99-605. The Catalog of Federal Domestic Assistance Number is 13.987.

Eligible Applicants

Eligible applicants are the official State health agencies, and, in certain situations, health agencies of political subdivisions of a State. Direct grants to health agencies of political subdivisions will be considered for funding only in special situations which are clearly justified and after consultation with appropriate staff of the official State health agency, the Health Program for Regugees of the CDC, and the Regional Health Administrator, Public Health Service, of the appropriate Department of Health and Human Services (HHS) Regional Office.

Purpose

The purpose of this project grant program is to augment State and local resources in providing public health and general health assessments and follow-up activities to refugees.

The National Program Goals are: (1) As a high priority, to prevent and control health problems of public health significance among refugees, and (2) as a lesser priority incidental to the provision of services under (1), to improve the general health status of the refugee population through health assessment and referral, emphasizing those health problems which may impede effective resettlement and prevent economic self-sufficiency.

Availability of Funds

Approximately $3,602,000 is available to fund up to 46 continuation grants. Although new applications will be considered, priority for funding will be given to continuation of existing programs. The average award is expected to be $78,000, with individual awards ranging from $2,200 to $1,000,000. Depending on the availability of funds, grants are funded in 12 month budget periods within a 1 to 2 year project period. Funding estimates outlined above may vary and are subject to change. There is no statutory cost participation formula.

Application Content

Application for grants must be made on the standard application form PHS-5161-1, "Application For Federal Assistance (Nonconstruction Programs)", which may be obtained from the appropriate HHS Regional Office. A complete program description is included in the application packet.

1. *Competing Applications:* The program narrative for competing applications, including the initial application for a new project period, must include: (1) The need for project grant support; (2) a description of the public health problems peculiar to the health of refugees, and how the funding will be targeted to that problem, and expected results; (3) descriptions of alternative funding available from State, local, and private sources; (4) provisions for quarterly reports on progress in improving refugee health services; (5) how refugees will be integrated into existing health services; (6) the prospective grantee match rate, if any; (7) long- and short-term objectives which are specific, measurable, time-phased, and consistent with the National Program Goals; (8) an extensive description of the activities that will be undertaken to accomplish the objectives (including the timing of such actions; (9) the methods which will be employed to evaluate program activities; (10) a budget request and accompanying justification; and, (11) any other information which will support the request for grant assistance.

2. *Noncompeting Continuation Applications:* Noncompeting continuation applications must include: (1) A progress report on activities performed during the prior budget period; (2) short-term objectives for the new budget period; (3) a description of any changes in the method of operation, long-term objectives, need for grant support, and/or evaluation procedures compared to information provided in previous applications; (4) a plan to address those national goals not currently being addressed by the project; (5) a description of alternative funding available from State, local, and private sources; (6) summaries of the previous quarterly reports; (7) progress made on integrating refugees into existing health services; (8) the prospective grantee match rate, if any; and, (9) a budget justification.

Evaluation Criteria

1. *Competing Applications:* The application for a new grant or project period will be reviewed and evaluated according to the following criteria:

A. (30 points) Need for support, including:

(1) The size of the refugee population, including secondary migrants.

(2) The extent and distribution of unique refugee health problems and the extent and distribution of general refugee health problems.

(3) The relationship of the project to existing services.

(4) The extent of unmet public health problems among refugees, and the need for general health assessments for refugees.

B. (20 points) The magnitude of the applicant's match rate in FY 1988, if any, and any projected match rate increase over the two-year project period.

C. (5 points) The extent to which project objectives are specific, measurable, time-phased, and related to the National Program Goals.

D. (5 points) The quality of the applicant's plan for conducting project activities described in the program description, including the extent to which the planned program is consistent with the State Refugee Resettlement Plan

E. (5 points) The extent to which methods for evaluating the project's effectiveness are reasonable and appropriate.

F. (5 points) The extent to which budget request and proposed use of project funds are appropriate and reasonable.

G. (10 points) The extent to which refugees will be integrated into existing health services.

2. *Noncompeting Continuation Applications:* These applications will be evaluated on the basis of the following criteria:

A. (35 points) Satisfactory documentation of progress toward previously established objectives or a satisfactory explanation when objectives were not met.

B. (25 points) The magnitude of the grantee's match rate, if any, and the extent to which the match rate increased during the preceding grant period and will increase during the prospective grant period.

C. (10 points) The extent to which new or revised objectives are specific, measurable, realistic, and related to the National Program Goals.

D. (10 points) The extent to which new or revised methods of operation will lead to achievement of the objectives.

E. (5 points) the quality of the evaluation plan proposed to be used in monitoring whether the methods are effective.

F. (5 points) The extent to which the budget request and proposed use of project funds are appropriate and reasonable.

G. (10 points) The extent to which refugees were and will continue to be integrated into existing health services.

Other reviews

Applications are subject to review as governed by Executive Order 12372, Intergovernmental Review of Federal Programs (60-day review for new and competing applications and 30-day review for non-competing applications). The State Refugee Resettlement Coordinator should have an opportunity to review and comment on the application prior to its submission to the HHS Regional Office

Where to obtain additional information

Application forms and other application information may be obtained from the appropriate HHS Regional Office as set forth below. Consultation and assistance in developing applications and program plans are available through the appropriate Regional Health Administrator or the Health Program for Refugees, Division of Quarantine, Center for Prevention Services, Centers for Disease Control, Atlanta, Georgia 30333.

Dated: April 14, 1988.

Robert L. Foster,

Acting Director, Office of Program Support, Centers for Disease Control.

Department of Health and Human Services (HHS), Regional Offices

Regional Health Administrator, PHS, HHS Region I, John Fitzgerald Kennedy Building, Boston, Massachusetts 02203, (617) 223-6827

Regional Health Administrator, PHS, HHS Region II, Federal Building, 26 Federal Plaza, Room 3337, New York, New York 10278, (212) 264-2561

Regional Health Administrator, PHS, HHS Region III, Gateway Building #1, 3521-35 Market Street, Mailing Address: P.O. Box 13716, Philadelphia, Pennsylvania 19101, (215) 596-6637

Regional Health Administrator, PHS, HHS Region IV, 101 Marietta Tower, Suite 1007, Atlanta, Georgia 30323, (404) 221-2316

Regional Health Administrator, PHS, HHS Region V, 300 South Wacker Drive, 33rd Floor, Chicago, Illinois 60606, (312) 353-1385

Regional Health Administrator, PHS, HHS Region VI, 1200 Main Tower Building, Room 1835, Dallas, Texas 75202, (214) 767-3879

Regional Health Administrator, PHS, HHS Region VII, 601 East 12th Street, Kansas City, Missouri 64106, (816) 374-3291

Regional Health Administrator, PHS, HHS Region VIII, 1185 Federal Building, 1961 Stout Street, Denver, Colorado 80294, (303) 844-6163

Regional Health Administrator, PHS, HHS Region IX, 50 United Nations Plaza, San Francisco, California 94102, (415) 556-5810

Regional Health Administrator, PHS, HHS Region X, 2901 Third Avenue, M.S. 402, Seattle, Washington 98121, (206) 442-0430

[FR Doc. 88-8737 Filed 4-20-88; 8:45 am]

BILLING CODE 4160-18-M

Food and Drug Administration

[Docket No. 87D-0407]

Index to Compliance Policy Guides Manual; Availability

AGENCY: Food and Drug Administration.

ACTION: Notice.

SUMMARY: The Food and Drug Administration (FDA) is announcing the availability of a current Index to the agency's Compliance Policy Guides (CPG) Manual. The two-page Index lists all of the chapter titles in the manual. A table of contents for each chapter title is also available at the Freedom of Information Staff office.

ADDRESS: Written requests for copies of the Index and/or the table of contents for a chapter of the CPG Manual to the Freedom of Information Staff (HFI-35), Food and Drug Administration, 5600 Fishers Lane, Rockville, MD 20857. Persons requesting copies will be charged 10 cents per page, the current cost for duplication of materials in response to freedom of information requests. At this time, the cost of duplicating the complete Index and table of contents is $8.00. This cost is subject to change, if new pages are added or the duplication rate is changed.

FOR FURTHER INFORMATION CONTACT: Anne Smith, Division of Compliance Policy (HFC-230), Food and Drug Administration, 5600 Fishers Lane, Rockville, MD 20857, 301-443-1500.

SUPPLEMENTARY INFORMATION: FDA's CPG Manual contains regulatory action guidance information and memoranda of understanding and interagency agreements.

The Index identifies chapter titles in the CPG Manual. The table of contents for a chapter title identifies specific CPG's within the chapters and their dates of issuance. Chapter titles are, for the most part, based on broad commodity categories, e.g., "Chapter 1—Beverage," "Chapter 2—Baked Goods," "Chapter 32—Drugs: General," etc.

At the end of each quarter, the Office of the Federal Register publishes a Guide to Freedom of Information Indexes in the **Federal Register** Index. This guide lists all available FDA manuals, a brief description of their contents, and purchasing information. Current indexes to all of these manuals, including the CPG Manual, are available from the Freedom of Information Staff (address above).

The complete CPG Manual may be ordered from the National Technical Information Service, U.S. Department of Commerce, Springfield, VA 22161. To order, the current accession numbers for the CPG Manual are: Manual PB88-915499, Price $104.95; an annual subscription (for CPG Manual updates), PB88-915400, Price $135.00.

Dated: April 13, 1988.

Ronald G. Chesemore,

Acting Associate Commissioner for Regulatory Affairs.

[FR Doc. 88-8779 Filed 4-20-88; 8:45 am]

BILLING CODE 4160-01-M

Arthritis Advisory Committee; Renewal

AGENCY: Food and Drug Administration.

ACTION: Notice.

SUMMARY: The Food and Drug Administration announces the renewal of the Arthritis Advisory Committee by the Secretary of Health and Human Services. This notice is issued under the Federal Advisory Committee Act of October 6, 1972 (Pub. L. 92.463, 86 Stat. 770-776 (5 U.S.C. App. I)).

DATE: Authority for this committee will expire on April 5, 1990, unless the Secretary formally determines that renewal is in the public interest.

FOR FURTHER INFORMATION CONTACT: Richard L. Schmidt, Committee Management Office (HFA-306), Food and Drug Administration, 5600 Fishers Lane, Rockville, MD 20857, 301-443-2765.

Dated: April 15, 1988.

John M. Taylor,

Associate Commissioner for Regulatory Affairs.

[FR Doc. 88-8780 Filed 4-20-88; 8:45 am]

BILLING CODE 4160-01-M

[Docket No. 88M-0066]

IOPTEX, Inc.; Premarket Approval of the Model 304-01 Ultra C-Loop Posterior Chamber Intraocular Lens; Correction

AGENCY: Food and Drug Administration.

ACTION: Notice; correction.

SUMMARY: The Food and Drug Administration (FDA) is correcting the notice that announced the agency's approval of the application by IOPTEX, Inc., Azusa, CA, for premarket approval, under the Medical Device Amendments of 1976, of the Model 304-01 Ultra C-Loop Posterior Chamber Intraocular Lens (53 FR 9984; March 28, 1988). The docket number in the heading of the notice inadvertently read "88N-0066". This document corrects the docket number to read "88M-0066", as set forth in the heading of this notice.

FOR FURTHER INFORMATION CONTACT: T. Rada Proehl, Regulations Editorial Staff (HFC-222), Food and Drug Administration, 5600 Fishers Lane, Rockville, MD 20857, 301-443-2994.

SUPPLEMENTARY INFORMATION: In FR Doc. 88-6639, appearing on page 9984 in the **Federal Register** of Monday, March 28, 1988, in the first column, the docket number is corrected to read "88M-0066", as set forth in the heading of this document.

Dated: April 15, 1988.

John M. Taylor,

Associate Commissioner for Regulatory Affairs.

[FR Doc. 88-8781 Filed 4-20-88; 8:45 am]

BILLING CODE 4160-01-M

Advisory Committees; Meetings

AGENCY: Food and Drug Administration.

ACTION: Notice.

SUMMARY: This notice announces forthcoming meetings of public advisory committees of the Food and Drug Administration (FDA). This notice also summarizes the procedures for the meetings and methods by which interested persons may participate in open public hearings before FDA's advisory committees.

MEETINGS: The following advisory committee meetings are announced:

Arthritis Advisory Committee

Date, time, and place. May 16 and 17, 1988, 8:30 a.m., Conference Rms. D and E, Parklawn Bldg, 5600 Fishers Lane, Rockville, MD.

Type of meeting and contact person. Open public hearing, May 16, 1988, 8:30 a.m. to 9:30 a.m., unless public participation does not last that long; open committee discussion, May 16, 1988, 9:30 a.m. to 4:30 p.m.; open committee discussion, May 17, 1988, 8:30 a.m. to 3:30 p.m.; David F. Hersey, Center for Drug Evaluation and Research (Rm. 8B-45), Food and Drug Administration, 5600 Fishers Lane, Rockville, MD 20857, 301-443-4695.

General function of the committee. The committee reviews and evaluates available data on the safety and effectiveness of marketed and investigational human drugs for use in arthritis and related diseases.

Agenda—Open public hearing. Interested persons requesting to present data, information, or views, orally or in writing, on issues pending before the committee should communicate with the committee contact person.

Open committee discussion. The Committee will discuss: (1) The status of revised Guidelines for the Clinical Evaluation of Anti-Inflammatory Drugs, (2) Suprol (suprofen), NcNeil Laboratories followup program, (3) the gastrointestinal paragraph in nonsteroidal anti-inflammatory drug (NSAID) labeling, (4) gastrointestinal adverse drug reaction followup, (5) Clinoril (sulindac), Merck Sharp and Dohme, urinary and biliary stone formation, (6) sulindac hepatic adverse drug reactions, (7) Voltaren (diclofenac), Ciba-Geigy liver paragraph, and (8) recent NSAID approvals and discussion of "not for initial use" status for NSAID's.

Peripheral and Central Nervous System Drugs Advisory Committee

Date, time, and place. May 19, 1988, 9 a.m., Conference Rms. D and E, Parklawn Bldg., 5600 Fishers Lane, Rockville, MD.

Type of meeting and contact person. Open public hearing, May 19, 1988, 9 a.m. to 10 a.m.; open committee discussion, 10 a.m. to conclusion; Frederick J. Abramek, Center for Drug Evaluation and Research (HFN-120), Food and Drug Administration, 5600 Fishers Lane, Rockville, MD 20857, 301-443-4020.

General function of the committee. The committee reviews and evaluates available data concerning the safety and effectiveness of marketed and investigational human drugs for use in the treatment of neurological disease.

Agenda—Open public hearing. Interested persons may present data, information, or views, orally or in writing, on issues pending before the committee.

Open committee discussion. The committee will discuss the safety and efficacy of pergolide, NDA 19-385, Permax®, Eli Lilly & Co., for the treatment of Parkinson's disease.

Board of Tea Experts

Date, time, and place. May 23 and 24, 1988, 10 a.m., Rm. 700, 850 Third Ave., Brooklyn, NY.

Type of meeting and contact person. Open public hearing, May 23, 1988, 10 a.m. to 11 a.m.; open committee discussion, 11 a.m. to 4:30 p.m.; open committee discussion, May 24, 1988, 10 a.m., to 4:30 p.m., Robert H. Dick, New York Regional Laboratory, Food and Drug Administration, 850 Third Ave., Brooklyn, NY 11232, 212-965-5739.

General function of the committee. The committee advises on establishment of uniform standards of purity, quality, and fitness for consumption of all teas imported into the United States under 21 U.S.C. 42.

Agenda—Open public hearing. Interested persons may present data, information, or views, orally or in writing, on issues pending before the committee.

Open committee discussion. The committee will discuss and select tea standards.

Obstetrics-Gynecology Devices Panel

Date, time, and place. May 25 and 26, 1988, 9 a.m., Rm. 703A-727A, Health and Human Services Bldg., 200 Independence Ave. SW., Washington, DC.

Type of meeting and contact person. Open public hearing, May 25, 1988, 9 a.m. to 10 a.m.; open committee discussion, 10 a.m. to 5 p.m.; open public hearing, May 26, 1988, 9 a.m. to 10 a.m.; open committee discussion 10 a.m. to 5 p.m.; Colin M. Pollard, Center for Devices and Radiological Health (HFZ-470), Food and Drug Administration, 8757 Georgia Ave., Silver Spring, MD 20910, 301-427-7555.

General function of the committee. The committee reviews and evaluates

available data on the safety and effectiveness of devices and makes recommendations for their regulation.

Agenda—Open public hearing. Interested persons may present data, information, or views, orally or in writing, on issues pending before the committee. Persons desiring to make formal presentations should notify the committee contact person before May 13, 1988, and submit a brief statement of the general nature of the evidence or arguments they wish to present, the names and addresses of proposed participants, and an indication of the approximate time required to make their comments.

Open committee discussion. The panel will discuss premarket approval applications for a fetal acoustic stimulator, a contraceptive tubal occlusion device, and an at-home tocodynamomometer for detection of preterm labor.

FDA public advisory committee meetings may have as many as four separable portions: (1) An open public hearing, (2) an open committee discussion, (3) a closed presentation of data, and (4) a closed committee deliberation. Every advisory committee meeting shall have an open public hearing portion. Whether or not it also includes any of the other three portions will depend upon the specific meeting involved. There are no closed portions for the meetings announced in this notice. The dates and times reserved for the open portions of each committee meeting are listed above.

The open public hearing portion of each meeting shall be at least 1 hour long unless public participation does not last that long. It is emphasized, however, that the 1 hour time limit for an open public hearing represents a minimum rather than a maximum time for public participation, and an open public hearing may last for whatever longer period the committee chairperson determines will facilitate the committee's work.

Public hearings are subject to FDA's guideline (Subpart C of 21 CFR Part 10) concerning the policy and procedures for electronic media coverage of FDA's public administrative proceedings, including hearings before public advisory committees under 21 CFR Part 14. Under 21 CFR 10.205, representatives of the electronic media may be permitted, subject to certain limitations, to videotape, film, or otherwise record FDA's public administrative proceedings, including presentations by participants.

Meetings of advisory committees shall be conducted, insofar as is practical, in accordance with the agenda published in this **Federal Register** notice. Changes in the agenda will be announced at the beginning of the open portion of a meeting.

Any interested person who wishes to be assured of the right to make an oral presentation at the open public hearing portion of a meeting shall inform the contact person listed above, either orally or in writing, prior to the meeting. Any person attending the hearing who does not in advance of the meeting request an opportunity to speak will be allowed to make an oral presentation at the hearing's conclusion, if time permits, at the chairperson's discretion.

Persons interested in specific agenda items to be discussed in open session may ascertain from the contact person the approximate time of discussion.

Details on the agenda, questions to be addressed by the committee, and a current list of committee members are available from the contact person before and after the meeting. Transcripts of the open portion of the meeting will be available from the Freedom of Information Office (HFI-35), Food and Drug Administration, Rm. 12A-16, 5600 Fishers Lane, Rockville, MD 20857, approximately 15 working days after the meeting, at a cost of 10 cents per page. The transcript may be viewed at the Dockets Management Branch (HFA-305), Food and Drug Administration, Rm. 4-62, 5600 Fishers Lane, Rockville, MD 20857, approximately 15 working days after the meeting, between the hours of 9 a.m. and 4 p.m., Monday through Friday. Summary minutes of the open portion of the meeting will be available from the Freedom of Information Office (address above) beginning approximately 90 days after the meeting.

This notice is issued under section 10(a)(1) and (2) of the Federal Advisory Committee Act (Pub. L. 92-463, 86 Stat. 770-776 (5 U.S.C. App. I)), and FDA's regulations (21 CFR Part 14) on advisory committees.

Dated: April 15, 1988.

John M. Taylor,

Associate Commissioner for Regulatory Affairs.

[FR Doc. 88-8782 Filed 4-20-88; 8:45 am]

BILLING CODE 4160-01-M

Office of Human Development Services

Developmental Disabilities; Request for Public Comment on Proposed Developmental Disabilities Priorities for Projects of National Significance for Fiscal Year 1989

AGENCY: Administration on Developmental Disabilities (ADD), Office of Human Development Services (HDS).

ACTION: Notice of request for public comment on proposed developmental disabilities priorities for projects of national significance for Fiscal Year 1989.

SUMMARY: The Administration on Developmental Disabilities, Office of Human Development Services, announces that public comments are being requested on proposed priorities for Fiscal Year 1989 projects of national significance.

In addition to public comments on these proposed priorities, comments and suggestions on other grant projects are invited. *No applications should be submitted at this time based on these priorities.*

DATE: Closing date for receipt of public comments is: June 20, 1988. Comments received after this date may not be considered.

ADDRESSES: Comments should be sent to: Commissioner, Administration on Developmental Disabilities, Department of Health and Human Services, 200 Independence Avenue SW., HHH Building, Room 351-D, Washington, DC 20201.

FOR FURTHER INFORMATION CONTACT: Raymond Sanchez, Director, Program Development Division, ADD (202) 245-1961.

SUPPLEMENTARY INFORMATION:

Part I. Background

A. Goals of the Administration on Developmental Disabilities

The Administration on Developmental Disabilities, within the Office of Human Development Services, although different from the other HDS program administrations in the specific populations it serves, shares a common mission: to reduce dependency and increase self-sufficiency among our most vulnerable citizens. Emphasis on this mission, and progress toward it, will help more persons with developmental disabilities live productive and independent lives, integrated into communities.

Public resources are no longer being expended at a rapid pace without considerable forethought. We have left an era when the trend was to assign to the Federal government an ever-increasing responsibility for identifying the needs for social services and for designing programs to meet those needs. Public policy now articulates that public decisions are best made at the level of government closest to the target populations served—by elected State

and local officials, and by those who manage at the State and local levels, including government officials, private organizations, voluntary organizations, schools or religious organizations.

Therefore, specific ADD goals have been adopted which reflect the policy that social service needs are more effectively and efficiently defined and addressed at the State and local community level—to the end that individuals with a developmental disability and their families are helped to achieve self-sufficiency and independence. These goals are:

- To increase family and individual self-sufficiency and independence through social and economic development strategies;
- To target Federal assistance to the most severely disabled; and
- To improve the effectiveness and efficiency of State and locally administered human services.

B. Purpose of the Administration on Developmental Disabilities

The overall purpose of the Administration on Developmental Disabilities, as specified by the Developmental Disabilities Assistance and Bill of Rights Act (the Act), is to provide assistance to States and public and private nonprofit agencies and organizations to ensure that all persons with developmental disabilities can receive the services and other assistance and opportunities necessary to enable such persons to achieve their maximum potential through increased independence, productivity and integration in the community. The statute emphasizes that persons with developmental disabilities include those with severe functional limitations attributable to physical impairments, mental impairments, and combinations of physical and mental impairments. In addition, ADD seeks to enhance the role of the family in assisting persons with developmental disabilities to achieve their maximum potential as well as ensuring the protection of the legal and human rights of persons with developmental disabilities. Programs funded under the Act are:

- Basic State formula grants;
- System for protection and advocacy of individual rights;
- Grants to University Affiliated Programs for interdisciplinary training, exemplary services/technical assistance and information dissemination; and
- Grants for Projects of National Significance.

C. Description of Projects of National Significance

Under Part E of the Act, grants and contracts are awarded for projects of national significance to increase and support the independence, productivity, and integration into the community of persons with developmental disabilities. These include projects to:

- Educate policymakers;
- Develop an ongoing data collection system;
- Determine the feasibility and desirability of developing a nationwide information and referral system; and
- Pursue Federal interagency initiatives and other projects of sufficient size and scope, and which hold promise of expanding or otherwise improving opportunities for persons with developmental disabilities (especially those who are multi-handicapped or disadvantaged, or minority groups, including Native Americans, Native Hawaiians, and other underserved groups).

In addition, funds are awarded for technical assistance and demonstration projects (including research, training, and evaluation in connection with such projects) which hold promise of expanding or otherwise improving the advocacy functions of the State Developmental Disabilities Planning Councils, the functions performed by University Affiliated Programs and Satellite Centers, and the Protection and Advocacy System relating to the State projects for the evaluation and assessment of the quality of services provided persons with developmental disabilities.

Section 162(c) of the Act requires that ADD publish in the **Federal Register**, not later than January 1 of each year, proposed priorities for grants and contracts to carry out Projects of National Significance in the upcoming fiscal year. The Act also requires a period of 60 days for public comment and suggestions. After analyzing and considering such comments, ADD must publish in the **Federal Register** the final priorities for such grants and contracts.

The following section presents the proposed priority areas for Fiscal Year 1989 Projects of National Significance. We welcome specific comments and suggestions. We would also like to receive suggestions on topics which are timely and relate to specific needs in the field of developmental disabilities.

Part II. Fiscal Year 1989 Proposed Priority Areas for Projects of National Significance

ADD is interested in comments and recommendations concerning research, demonstration, evaluation, training or technical assistance projects which address areas of existing or evolving national significance.

Recommendations are also solicited for project activities which will assist in bringing about systemic change to increase and support the independence, productivity, and integration into the community of persons with developmental disabilities (especially those who are multi-handicapped or disadvantaged, or minority groups, including Native Americans, Native Hawaiians and other underserved groups).

The actual solicitation of FY 1989 applications will be published in the **Federal Register** as part of the HDS Fiscal Year 1989 Coordinated Discretionary Program announcement anticipated for publication later in 1988. *No proposals, concept papers or other forms of application should be submitted at this time.* Any such submission will be discarded.

No acknowledgments will be made of the comments in response to this notice, but all comments will be considered in preparing the priorities for developmental disabilities activities to be included in the Fiscal Year 1989 HDS Coordinated Discretionary Grants Program Announcement. A copy of this announcement will be sent to all persons who comment on the proposed priority areas for Fiscal Year 1989.

Comments should be addressed to: Commissioner, Administration on Developmental Disabilities, Department of Health and Human Services, HHH Building, Room 351–D, 200 Independence Avenue SW., Washington, DC 20201.

Proposed FY 1989 Priority Areas for Projects of National Significance

Proposed Fiscal Year 1989 Priority Area 1: Projects To Assist and Educate Policymakers

There is a need to provide information to policymakers on critical issues pertaining to developmental disabilities. We propose the following:

1.A. Prevention and Early Intervention

To develop tools and procedures to enable the analysis and assessment of the adequacy of existing State policies and practices on prevention of developmental disabilities; to develop models of interdisciplinary training and multi-organizational involvement (Head Start, University Affiliated Programs, and Maternal and Child Health centers) needed to effect measureable progress in ameliorating the effects of developmental disabilities.

1.B. Family Support Practices

To assist policymakers to resolve specific barriers to home-based care in insurance practices and home-health care standards, without disrupting the important involvement of informal, natural sources of family support; and to promote cost effectiveness and quality in the provision of family support service and activities.

Proposed Fiscal Year 1989 Priority Area 2: Technical Assistance Projects To Assist State Planning Councils, University Affiliated Programs, and the State Protection and Advocacy System

Section 162(a)(2) of the Act provides that the Secretary may make grants and enter into contracts with public or non-profit private agencies for technical assistance and demonstration projects which hold the promise of expanding or otherwise improving:

- The advocacy functions of the State Planning Council;
- The functions performed by University Affiliated Programs and Satellite Centers; and
- The protection and advocacy services relating to the State protection and advocacy system.

We propose the following:

2.A. Community Integration

Identify or develop community based models of successful social integration which have effected the acceptance of persons with developmental disabilities as neighbors and friends.

2.B. Personnel Shortages

Develop training material and/or curricula which addresses existing personnel shortages in community based programs. ADD is seeking projects which will promote entrance and retention of persons in careers and vocations working with persons who are developmentally disabled.

Proposed Fiscal Year 1989 Priority Area 3: Other Projects of National Significance

For the past seven years, the HDS Coordinated Discretionary Funds Program (CDP) has brought the major portion of the HDS research and demonstration funding efforts under one solicitation announcement.

Through the CDP, two or more Program Administrations within HDS have addressed an important issue or need in which each has program and discretionary interest. For example: several social service needs or issues relating to children with developmental disabilities may be of program/discretionary interest not only to ADD, but also to ACYF (special needs adoption and foster care) and ANA (Indian child welfare).

In FY 1989, ADD proposes to support projects in cooperation with other HDS Program Administrations in the following:

3.A. Integrated Child Development and Educational Environment

To identify causes of social isolation of children with developmental disabilities in preschool and school settings and to develop strategies for eliminating those identified barriers.

3.B. Children with HIV and Its Related Conditions

To investigate the emerging health and social service needs of infants and children with Acquired Immune Deficiency Syndrome (AIDS) or who test positive for Human Immunodeficiency Virus (HIV), including children to age 22, and to identify the emerging trends in integrated medical and social services to meet their needs and those of their families.

3.C. Early Intervention

In conjunction with the Department of Education, to identify those policies, best practices in interdisciplinary training, and cooperative efforts at the State and local levels that result in the early identification of and provision of services to handicapped children (Education of the Handicapped Act).

3.D. Substance Abuse

To identify policies, best practices, and cooperative efforts developed by University Affiliated Programs, Developmental Disabilities Councils and Protection and Advocacy agencies, and by States and local communities that result in training service providers for the early identification, prevention and treatment of substance abuse, including fetal alcohol syndrome.

(Federal Catalog of Domestic Assistance Number 13631 Developmental Disabilities-Special Projects)

Date: April 15, 1988.

Carolyn Doppelt Gray,

Commissioner, Administration on Developmental Disabilities.

Approved: April 15, 1988.

Sydney Olson,

Assistant Secretary for Human Development Services.

[FR Doc. 88-8749 Filed 4-20-88; 8:45 am]

BILLING CODE 4130-01-M

[Program Announcement No. 13631-88-3]

Developmental Disabilities; Availability of Financial Assistance for Projects of National Significance for Fiscal Year 1988

AGENCY: Administration on Developmental Disabilities (ADD), Office of Human Development Services (HDS).

ACTION: Annoucement of availability of financial assistance for projects of national significance in Fiscal Year 1988.

SUMMARY: The Administration on Developmental Disabilities, Office of Human Development Services, announces that applications are being accepted for funding of Fiscal Year 1988 projects of national significance.

This program annoucement consists of five parts. Part I, the Introduction, discusses the goals and objectives of HDS and ADD. Part II provides the necessary background information on ADD for applicants. Part III describes the priorities under which ADD solicits applications for Fiscal Year 1988 funding of projects. Part IV describes the application process and Part V describes in detail how to prepare and submit an application. All of the forms and instructions necessary to submit an appalication are published as part of this announcement following Part V.

No separate application kit is either necessary or available for submitting an application. If you have a copy of this announcement, you have all the information and forms required to submit an application.

Grants will be made under this program announcement subject to the availability of funds for support of these activities.

DATE: Closing date for receipt of applications is: June 20, 1988.

ADDRESSES: Applications should be sent to: Office of Human Development Services, Division of Grants and Contracts Management, 200 Independence Avenue SW., HHH Building, Room 349-F, Washington, DC 20201, Attention: HDS-88-3, Priority Area:_____.

FOR FURTHER INFORMATION CONTACT: Raymond Sanchez, Director, Program Development Division, ADD (202) 245-1961.

SUPPLEMENTARY INFORMATION:

Part I. Introduction

Goals of the Administration on Developmental Disabilities

The Administration on Developmental Disabilities, within HDS, although different from the other HDS program

BEST COPY AVAILABLE

administrations in the specific populations it serves, shares a common mission: to reduce dependency and increase self-sufficiency among our most vulnerable citizens. Emphasis on this mission, and progress toward it, will help more persons with developmental disabilities live productive and independent lives, integrated into communities.

Public resources are no longer being expended at a rapid pace without considerable forethought. We have left an era when the trend was to assign to the Federal government an ever-increasing responsibility for identifying the needs for social services and for designing programs to meet those needs. Public policy now articulates that public decisions are best made at the level of government closest to the target populations served—by elected State and local officials, and by those who manage at the State and local levels, including government officials, private organizations, voluntary organizations, schools or religious organizations.

Therefore, specific ADD goals have been adopted which reflect the policy that social service needs are more effectively and efficiently defined and addressed at the State and local community level—to the end that individuals with a developmental disability and their families are helped to achieve self-sufficiency and independence. These goals are:

- To increase family and individual self-sufficiency and independence through social and economic development strategies;
- To target Federal assistance to the most severely disabled; and
- to improve the effectiveness and efficiency of State and locally administered human services.

Part II. Background Information

A. Purpose of the Administration on Developmental Disabilities

The overall purpose of the Administration on Developmental Disabilities, as specified by the Developmental Disabilities Assistance and Bill of Rights Act (the Act), is to provide assistance to States and public and private nonprofit agencies and organizations to ensure that all persons with developmental disabilities can receive the services and other assistance and opportunities necessary to enable such persons to achieve their maximum potential through increased independence, productivity and integration in the community. The statute emphasizes that persons with developmental disabilities include those with severe functional limitations attributable to physical impairments, mental impairments, and combinations of physical and mental impairments. In addition, ADD seeks to enhance the role of the family in assisting persons with developmental disabilities to achieve their maximum potential as well as ensuring the protection of the legal and human rights of persons with developmental disabilities. Programs funded under the Act are:

- Basic State formula grants;
- System for protection and advocacy of individual rights;
- Grants to University Affiliated Programs (UAPs) for interdisciplinary training, exemplary services/technical assistance and information dissemination; and
- Grants for Projects of National Significance.

B. Description of Projects of national Significance

Under Part E of the Act, grants and contracts are awarded for projects of national significance to increase and support the independence, productivity, and integration into the community of persons with developmental disabilities. These include projects to:

- Educate policymakers;
- Develop an ongoing data collection system;
- Determine the feasibility and desirability of developing a nationwide information and referral system; and
- Pursue Federal interagency initiatives and other projects of sufficient size and scope, and which hold promise of expanding or othewise improving opportunities for persons with developmental disabilities (especially those who are multihandicapped or disadvantaged, or minority groups, including Native Americans, Native Hawaiians, and other underserved groups).

In addition, funds are awarded for technical assistance and demonstration projects (including research, training, and evaluation in connection with such projects) which hold promise of expanding or otherwise improving the advocacy functions of the State Developmental Disabilities Planning Councils, the functions performed by University Affiliated Programs and Satellite Centers, and Protection and Advocacy Agencies relating to the State projects for the evaluation and assessment of the quality of services provided persons with developmental disabilities.

On December 30, 1987 (as mandated by the Act), a notice soliciting comments on ADD's proposed priority areas for Fiscal Year 1988 Projects of national Signifcance was published in the **Federal Register.** A 60 day period was required to allow the public to comment on the proposed areas. After review and analysis of these comments, ADD was required to publish its final priorities.

ADD received 53 letters and a total of 129 comments from national organizations, advocacy groups, educators, representatives from State, county and local government offices, and private citizens. The comments we received were helpful in highlighting the concerns of the developmental disabilities field and have been extensively used in formulating these final priorities.

The following section presents the final priority areas for Fiscal Year 1988 Projects of National Significance and solicits the appropriate applications.

Part III. Fiscal Year 1988 Priority Areas for Projects of National Significance

Priority Area 1: Projects to Educate Policymakers

There is a need to provide information to policymakers on critical issues pertaining to developmental disabilities.

1.A. Family Support

Both the Education of the Handicapped Act and the Developmental Disabilities Assistance and Bill of Rights Act place emphasis on the role of the family in the lives of persons with developmental disabilities. Typically, the family has been perceived as meaning the parents or relatives of persons with developmental disabilities. However, as more and more persons with developmental disabilities take their place in communities and acquire greater independence, the family must also mean households headed by persons with developmental disabilities. Families in either context are likely to require supportive services in order to remain intact and functional, often coordinated among a variety of agencies.

Under this priority area, ADD is interested in a synthesis of evaluation projects and policies which have proven successful in making available to families essential services and other types of supportive mechanisms at the State, county or local level.

ADD expects to fund projects in this priority area for a maximum of $200,000 each year in Federal funds for a period of up to 24 months.

1.B. Integrated Employment of Persons with Developmental Disabilities

There has been a significant amount of time, personnel, and financial resources devoted to expanding employment opportunities for adults

with developmental disabilities. Innovative utilization of existing technologies and the development of new technologies have yielded a number of new approaches toward expanding transitional, supported and/or competitive employment to serve persons with severe disabilities. These approaches have opened new options to persons who previously were considered to be unemployable.

There is a need at this time to determine where we have been in order to guide the progress of future efforts. Therefore, ADD is interested in a survey of the best practices in the current movement toward integrated employment for persons with developmental disabilities.

ADD has funded a number of projects in the past that relate to employment transition, direct placement and training, information dissemination, intra-state collaboration, marketing techniques, training potential employees, and employee assistance programs. More information on specific projects may be obtained by contacting Raymond Sanchez at (202) 245-1961.

The purpose of the project will be to identify administrative designs, program activities, staffing patterns and economic factors characteristic of programs providing supported, transitional and competitive employment opportunities for adults with severe disabilities, both those operated directly by governmental units and those operated by non-governmental organizations.

The outcomes to be realized through this project will include the identification of current and exemplary practices in the area of supported, transitional and competitive employment. Specific results to be expected will include: an understanding of the impact of certain economic factors upon the best practices, and recommendation of strategies which will help Federal, State and local policymakers to assist facilities, agencies, and organizations serving persons with developmental disabilities to adopt elements of the best practices in the field toward even more widespread integrated employment efforts.

ADD expects to fund projects in this priority area for a maximum of $150,000 each year in Federal funds for a period of up to 24 months.

Priority Area 2: Projects to Develop an Ongoing Data Collection System

There is a need for an ongoing data collection system that will support the State Developmental Disabilities Planning Councils, Protection and Advocacy Agencies, and University Affiliated Programs (UAPs), in providing data to meet State and UAP reporting requirements as well as document progress made to improve the independence, productivity and integration into the community of persons with developmental disabilities.

While it is difficult to fully anticipate the range of demands that may be made of the ongoing data base, there are three primary questions which should be addressed by the applicants under this priority area:

(1) What data bases of national scope currently exist and would be available for building a national data base?

(2) What additional data bases must be developed to augment available national data bases?

(3) What collateral data, currently available but not in the form of organized data bases, would complement the national data base?

The development of an ongoing data collection system should build on the several existing national data sets currently maintained on residential services, expenditures, vocational services, and program impact. In addition, consideration should be given to the collection of data on the types of services being provided, demographics of persons receiving and not receiving services, and the impact of services on clients, especially underserved populations. The data generated by the system will be used to assist States to develop reports on the nation's ability to coordinate service delivery systems which meet the needs of persons with developmental disabilities.

ADD expects to fund projects in this priority area for a maximum of $200,000 each year in Federal funds for a period of up to 24 months.

Priority Area 3: Other Projects of National Significance

3.A. HIV/Human Immunodeficiency Virus and AIDS/Acquired Immune Deficiency Syndrome

Our educational, social services, health care and legal systems must be prepared to face a serious challenge during the coming decade. By the end of 1991, the Centers for Disease Control (CDC) have estimated 270,000 cases of the human immunodeficiency virus (HIV) and its related conditions (AIDS) will have occurred since the disease was first recognized. 145,000 persons with AIDS will need health and supportive services, and are very likely to rapidly inflate demand on the human services delivery system.

Current research has not specifically focused on the 25 million adolescents aged 13 to 19, relatively few have been identified as having AIDS or related conditions. However, many aspects of the lifestyles of young people place them directly in the path of the AIDS epidemic.

Infants and children who are HIV-positive are at extremely high risk of being or becoming developmentally disabled. CDC estimates that by 1991, there will be 10,000–20,000 HIV-infected infants and children. An estimated 78 to 93 percent of infants and children with HIV or related conditions will incur some degree of central nervous system dysfunction.

ADD is interested in projecs that address the impact of HIV/AIDS on the lives of children, adolescents, and adults with developmental disabilities. Of particular interest are projects which focus on the non-medical service needs of:

(a) Infants and children infected with HIV and/or AIDS.

(b) Adolescents and adults with developmental disabilities who are at risk of acquiring HIV and/or AIDS.

Projects should address the educational, social services, and legal rights concerns surfaced by AIDS. Such efforts should include the development of a DD network information exchange that will coordinate current efforts in the field; a study of the impact of HIV and related conditions on the service systems that serve persons with developmental disabilities; and the development of model guidelines and procedures to protect confidentiality covered by Section 504 and the Civil Rights Restoration Act.

ADD expects to fund projects in this priority area for a maximum of $200,000 each year in Federal funds for a period of up to 24 months.

3.B. Meeting the needs of persons with mental retardation and mental illness

Epidemiological data indicate that persons with mental retardation are more at risk for developing mental health problems due to the complex nature of their disability. The data indicate that approximately 20–35 percent of persons with mental retardation will develop significant mental health problems which meet the diagnostic and statistical manual criteria for mental illness. Although estimates vary, this compares with a rate in the non-mentally retarded population of 16–20 percent with mental illness.

National survey data indicate that each State has approximately 1,000–2,000 persons with mental retardation who have significant mental health

needs for which current services are incomplete or inadequate. In efforts to improve services, additional knowledge is greatly needed in addressing this population's unique needs. There is currently no organized national system specifically mandated to serve these individuals with concomitant needs and oftentimes neither the mental health system nor the mental retardation system are able to fully address these person's needs.

The purpose of this priority area is twofold. The first part of the priority area will focus on the need to provide information and referral services to families and consumers, training to professionals in both the mental health and mental retardation fields, and dissemination of state-of-the-art information to DD network agencies and other mental health and mental retardation agencies.

Examples of activities which can be undertaken by the applicant under the first part of this priority area include:

• Establish a national hotline whereby consumers, parents, agency personnel, and local, State or Federal programs could call to ask questions on how to best provide services to this special population. This includes establishing a psychopharmacological consultation service for physicians and medical staff who could call for the latest information regarding individual consumer needs vis-a-vis their pharmacological issues and management.

• Establish a nationwide training program which would provide regional training seminars for individual States in setting up an ongoing continuing education program which can best meet the needs of consumers. In addition, develop additional training materials (identified after surveying the field) which would result in "publications of significance" including books, monographs, videotapes, etc.

• Coordinate with model research programs in which research data collected can be pooled for comprehensive investigation of this population.

ADD expects to fund projects in this part of the priority area for a maximum of $200,000 each year in Federal funds for a period of up to 24 months.

The second part of this priority area will focus on the development of advocacy models to improve the provisions of services to persons with mental retardation and mental illness (MR/MI). Priority should be given to the development of advocacy methodologies to bring about enhanced collaboration of the mental health and mental retardation agencies in meeting the needs of persons with MR/MI.

Grants awarded under this part of the priority area may be jointly funded by the Administration on Developmental Disabilities and the National Institute on Mental Health. Agencies which provide protection and advocacy services for persons with mental retardation and mental illness are encouraged to apply.

ADD expects to fund projects in this part of the priority area for a maximum of $100,000 each year in Federal funds for a period of up to 24 months.

3.C. Best Practices for Minority Populations

Despite the phenomenal growth and development of the social services network and its capacity to diagnose, treat, and provide care, Blacks, Hispanics, Native Americans, and those of Asian/Pacific Islander heritage appear to have not benefited fully or equitably from these systems and services. Although tremendous strides have been made in improving the health and longevity of the American people, statistical trends show a persistent and distressing difference among underserved minorities who have a developmental disability in the utilization of the social services network.

Evidence suggests that underserved minority persons with a developmental disability cannot be treated as part of a single homogeneous group. While there are many programs that have the potential for significant impact on improving the status of minorities with disabilities, ADD is interested in projects that will respond to a collaborative and coordinated effort to address the longstanding disparity between the minority and nonminority population in their effort to fully utilize the social services and health systems.

This priority area has two parts. The first part should address strategies that are amenable to:

• Immediate improvement within the health and social services system,

• Identifying areas where greater public and private involvement in a common effort will eliminate areas of disparity

• Demonstrating best practices in outreach activities, and

• Identifying new strategies to ameliorate inequities in accessing services between disabled minorities and nonminorities.

ADD expects to fund projects in this part of the priority area for a maximum of $150,000 each year in Federal funds for a period of up to 24 months.

In addition, while there have been many programs designed specifically for minority students, recruitment and retainment were not the primary focuses. The second part of this priority area will, therefore, focus on the identification of exemplary methods and programs that have been successful in recruiting, retaining, and increasing the number of minority students in educational programs leading to careers involved with persons who are developmentally disabled. ADD will consider projects that:

• Examine best practices in the recruitment and retention of minority students in educational programs leading to careers involved with persons who are developmentally disabled; and

• Have shown successful working relationships between Historically Black Colleges and other institutions of higher education in developing curricula pertinent to the field of developmental disabilities.

• ADD expects to fund projects in this part of the priority area for a maximum of $150,000 each year in Federal funds for a period of up to 24 months.

3.D. Service Needs of Criminal Offenders Who Are Developmentally Disabled

There is a need to expand and share knowledge in the field with regard to the service needs and legal rights of criminal offenders with developmental disabilities. ADD is specifically interested in evaluating and synthesizing information from the many programs across the country which have attempted to address the issues and to provide corrective programming to criminal offenders with developmental disabilities.

ADD has funded two projects in this area during the past five years:

• "Dissemination of Nebraska's Model Response to Developmentally Disabled Offenders", a project implemented by the State Department of Health, Division of Developmental Disabilities, in 1984—1986; and

• "Monroe County Comprehensive Demonstration and Training Project for the Alleged DD Offender", supported in 1983—1985 at the University of Rochester School of Medicine, Department of Pediatrics.

Additional information about these two projects may be obtained by contacting Ray Sanchez, ADD, at (202) 245-1961.

The two projects above are among numerous other efforts at the local, State and national levels which have focused on this area of need. To address continuing concerns in this area, ADD proposes to fund an evaluation of programs which address both service

needs and legal issues, including a synthesis of the evaluation information which may be used to select model programs most appropriate for replication in a specific setting. The outcome of any project funded under this priority area should be a guide which can be used by policy makers and program developers to select successful models or components of models which would be appropriate for replication within their jurisdictions.

Agencies which provide protection and advocacy services for persons with developmental disabilities are encouraged to apply under this priority area.

ADD expects to fund projects for a maximum of $100,000 in Federal funds for a maximum period of 24 months.

3.E. Elderly Persons with Developmental Disabilities

The current number of older persons with developmental disabilities will dramatically increase by the year 2000. This change has stimulated a growing awareness for a better understanding of the needs of elderly persons with developmental disabilities. Only during the past decade has the attention of gerontology been significantly focused on elderly persons with developmental disabilities.

Special efforts will be required to stimulate the development and expansion of services that meet the specific needs of elderly persons with developmental disabilities and integrate elderly persons into existing service systems. Current data suggests that the service systems have not fully focused on the special needs of the older persons with developmental disabilities. There continues to exist a difference in the quantity and quality of services that address the needs of elderly persons with developmental disabilities.

ADD is interested in projects that will respond to a collaborative and coordinated effort of Area Agencies and State Agencies on Aging, and other public and private institutions in cooperation with Aging agencies in the development of:

- Educational materials and training programs that address health care, day programming, residential options/arrangements, and retirement options to redirect the pace and focus of activities for elderly persons with developmental disabilities consistent with individual interests and in community integrated settings;
- Replication of community-based health care delivery models for elderly persons with developmental disabilities which build upon, enhance and involve the generic care system for aging persons; and
- Collaborative technical assistance with State and local agencies/organizations in planning and public policy development to integrate or otherwise assist the older persons with developmental disabilities to obtain services.

ADD expects to fund projects in this priority area for a maximum of $125,000 each year in Federal funds for a period of up to 24 months.

Priority Area 4: Technical Assistance to State Developmental Disabilities Planning Councils, Protection and Advocacy Agencies, and University Affiliated Programs

Section 162(a)(2) of the Act requires that ADD conduct technical assistance and demonstration projects (including research, training, and evaluation in connection with such projects) which hold promise of expanding or otherwise improving the advocacy functions of the State Developmental Disabilities Planning Councils, protection and advocacy system of Protection and Advocacy Agencies, and functions performed by University Affiliated Programs and Satellite Centers.

Applications may include but not be limited to:

(1) Identification, dissemination and training on indicators for use by the developmental disabilities network to measure the quality of life of persons with developmental disabilities.

(2) Management training, continuing peer reviews, skill building, and legal training for Protection and Advocacy Agencies.

(3) Arrange for and coordinate the provision of technical assistance to State Developmental Disabilities Councils in the development of the policy analyses to be prepared by 1990:

(a) Develop methodologies to determine the policy implications of the results of consumer surveys and how to relate that data to analyses of national statistical data bases;

(b) Develop approaches to identifying State-determined eligibility criteria (versus federally established criteria) which affect access to services by persons with developmental disabilities.

(4) Assistance to University Affiliated Programs and Satellite Centers on planning and policy analysis across the DD network agencies and programs.

ADD expects to fund projects in this part of the priority area for a maximum of $100,000 each year in Federal funds for a period of up to 12 months.

Part IV. The Application Process

This part provides necessary background information for potential applicants. The specific information to be used is developing an application is contained in Part V.

A. Eligible Applications

In general, any State, public or private nonprofit organization, institution or agency may submit an application under this announcement. Individuals are not eligible to apply.

We encourage applications that are developed jointly by State, local and community-based social services agencies, or universities, since this helps to coordinate local resources. For these applications, a lead organization must be identified, and that organization must be an eligible applicant.

B. Available Funds

Depending on the availability of funds, ADD expects to award grant projects in FY 1988 for projects of national significance. Project period length is expected to range from 12 to 24 months for each grant award. ADD may also award a number of grants under this announcement in the first and second quarters of FY 1989.

C. Grantee Share of the Project

Under the Projects of National Significance Program, ADD does not make grant awards for the entire project cost (with the exceptions described below). The grantee share amounts to 25 percent of the entire project cost. That is, successful applicants must contribute $1 from non-Federal sources for every $3 received in Federal funding up to the limits specified in the priority area description in this announcement.

The first exception relates to applications originating from American Samoa, Guam, the Virgin Islands or the Northern Mariana Islands. Applicants from these territories are covered by Section 510(d) of Public Law 95–134, which requires the Department to waive "any requirement for local matching funds under $200,000" for these territories.

The second exception relates to research projects where the non-Federal share must comprise at least 5 percent of the total project cost.

The non-Federal share of total project costs for each budget period may be in the form of grantee-incurred costs and/or third party in-kind contributions. HDS strongly encourages applicants to propose a grantee share which is more than 25 percent of the project costs. HDS also encourages applications where the matching requirement will be met in

cash (as opposed to in-kind contributions) from non-Federal funding sources.

If the required non-Federal share is not met by a grantee for each budget period during the project period, HDS will disallow any unmatched Federal dollars. The amount of the non-Federal share required will be the amount proposed by the applicant. If the proposed share exceeds 25 percent, the applicant will be required to provide the additional cost-sharing or matching. Therefore, applicants should be sure of any amount proposed as match before including these funds in their budgets.

D. Application Consideration

Applications that conform to the requirements of this program announcement will be reviewed and scored competitively against the valuation criteria specified in Part IV.H.2 of this announcement by non-Federal experts in the field of developmental disabilities. In addition, applications will be evaluated by Federal officials and qualified persons from outside the Federal government. The results of this review are a primary factor used for making funding decisions about an application. Applications which do not meet the screening criteria listed in Part IV.H.1 will not be reviewed and will receive no further consideration for funding.

ADD also solicits comments from other Federal Departments, from Federal and Regional Office staff, from interested foundations, national organizations, specialists, experts, States and the general public. These comments, along with such other factors as the geographic distribution of funding and the compatibility of applications with HDS priorities, will be considered by the Commissioner in consultation with the Assistant Secretary for Human Development Services in making funding decisions.

E. Consideration for Funding

Within the limits of available Federal funds, ADD makes financial assistance awards consistent with the purposes of the statutory authority governing the Projects of National Significance Program. In making these decisions, preference will be given to applications which focus on or feature: minority populations; a substantial innovation that has the potential to improve theory or practice in the field of human services; a model practice or set of procedures that hold the potential for dissemination to, and utilization by, organizations involved in the administration or delivery of human services; substantial involvement of volunteers; substantial involvement (either financial or programmatic) of the private sector; a favorable balance between Federal and non-Federal funds available for the proposed project; the possibility of a large degree of benefit for a small Federal investment; and a programmatic focus on those most in need.

To the extent possible, final decisions will reflect the equitable distribution of assistance among the States, geographical areas of the nation, rural and urban areas, and ethnic populations. ADD also takes into account the need to avoid wasteful duplication of effort in making funding decisions.

ADD reserves the option of discussing applications with, or referring them to, other Federal or non-Federal funding sources when this is determined to be in the best interest of the Federal government or the applicant.

F. Funding Limitations on Indirect Costs

Applicants should be aware that for training projects to institutions of higher education, hospitals, and other nonprofit institutions, there is a limitation on Federal reimbursement of indirect costs to eight percent of the total allowable direct costs or, where a current agreement exists, the organization's negotiated indirect cost rate, whichever is lower. For all other applicants, indirect costs may be requested only if the applicant has a negotiated indirect cost rate with the Department's Division of Cost Allocation or with another Federal agency. Local government agencies (other than local education agencies) are not required to submit their indirect cost proposals unless requested by HDS. If an organization does not have a negotiated indirect cost rate, it may charge the indirect type costs as direct costs in the budget.

G. Budget Expressed in Total Project Costs (Federal Plus Non-Federal)

We will continue the practice begun last year of expressing the project budget as total costs (Federal plus non-Federal). Last year, applicants had trouble distinguishing between cash match where a cost to the grantee for the project is paid from non-Federal sources (either the grantee or a third party) and in-kind, by which is meant strictly a valuation with no cost to the grantee, e.g., volunteers, donated services, donated space.

Cash match is included in the direct and indirect cost budget included in Section III.B of the SF 424. In-kind contributions are listed separately but are part of the total budget. Total direct costs (Federal plus non-Federal) plus indirect costs (Federal plus non-Federal) plus in-kind contributions equal the total approved budget.

H. Criteria for Screening and Review

All applications that meet the deadline will be screened to determine completeness and conformity to the requirements of this announcement. Complete, conforming applications will then be reviewed and scored competitively. Nonconforming applications will *not* be reviewed, and the applicants will be so informed.

1. Screening Requirements

In order for an application to be complete and in conformance, it must meet the following requirements:

(a) Preparation of copies: An original signed application, with the original signature appearing on SF 424, Item #23, and two copies must be submitted. The application includes the required sections of the SF 424 and the narrative description of the proposed project. A copy of SF 424 may be found at the end of this announcement.

(b) Length: The narrative portion of the application must meet minimum and maximum length requirements. It must be at least six double-spaced pages (or three single-spaced pages) but *must not exceed twenty double-spaced pages* (or ten single-spaced pages) typewritten on one side of the paper. The capability statement must not exceed two double-spaced or one single-spaced typewritten page.

(c) Deadline: Applications must be postmarked by 12:00 midnight on (June 20, 1988) or if hand-delivered must be delivered to Room 349–F, HHH Building, 200 Independence Avenue SW by 5:30 p.m. See Part III.I for additional guidance on the application deadline.

(d) Priority Area: The priority area(s) under which the application is being submitted must be indicated at the top of the first page of the SF 424.

(e) Eligibility requirements: Applications must meet any eligibility requirements specific to the priority areas under which they are being submitted (e.g., eligible organization, funding limit, duration of project).

Applications which do not meet these screening requirements will not be referred to reviewers.

2. Evaluation Criteria

Applications which pass the screening will be reviewed by a panel of at least three individuals. These reviewers will be primarily experts from outside the Federal government. Reviewers will comment on and score the applications,

basing their comments and scoring decisions on the criteria below.

(a) *Need for the Project (Objectives) 20 points.* State the specific objectives and needs addressed by the project in terms of its national or regional significance, its theoretical importance and its applicability to practices and subordinate objectives of the project. Provide a detailed discussion of the "state-of-the-art" relative to the problem or area addressed by the proposal and indicate how the proposed effort will impact on it. For research projects, state the hypothesis(es) to be tested or the specific questions to be answered. For demonstration, training, technical assistance, and evaluation projects, state the goals or service objectives of the proposal. Provide supporting documentation or other testimonies from concerned interests other than the applicant. Summarize, evaluate and relate relevant data, based on planning or demonstration studies, to the proposed project.

Give a precise location of the project or area to be served by the proposed project.

(b) *Project Methodology (Project Implementation Plan): 30 points.*

Tasks to be performed. Describe in detail the tasks to be performed including the events, activities and expected products. Identify the key staff member that will be the lead person. Relate each task to each of the objectives. Provide a chart indicating the timetable for completing each task, the lead person and the time committed.

Approach. Explain, in detail, the approach to be used for accomplishing each task and how this approach will accomplish the project objectives as well as how these objectives will solve the problem(s). Also, fully describe the research methodology, demonstration plan, design of training program or other appropriate techniques to be used.

(c) *Expected Outcomes: 15 points.* Identify, in specific terms, the results and benefits—for target groups and human service programs—to be derived from implementing the proposed project. Describe how the expected results and benefits will relate to previous research and/or demonstration efforts. Also describe in specific terms the anticipated contribution that this project will make to policy, practice, theory and/or future research.

Describe in detail evaluation plans and procedures which are capable of measuring the degree to which the project objectives have been accomplished. Provide an explanation on why these evaluation techniques will be used.

(d) *Dissemination and Utilization: 15 points.* Describe in detail the product(s) resulting from the proposed project that will be disseminated. Also describe the steps to be taken to disseminate and promote the utilization of these products and findings. State what resources will be used to disseminate these products and findings. Finally, explain why these steps are expected to be successful in disseminating the products and findings. The specific audiences to whom the products and findings will be disseminated must be specific as well as the reason why these audiences will benefit from these results. State in detail the steps to be taken to have the products and findings adopted by these audiences.

(e) *Level of Effort: 20 points.*

Staffing Pattern. Describe the staffing pattern for the proposed project, clearly linking responsibilities to project tasks and specifying the contributions to be made by key staff.

Competence of Staff. List the qualifications of the project team including any experiences working on similar projects. Also list the variety of skills to be used, relevant research experience, educational background and the demonstrated ability to produce final results that are readily comprehensible and usable.

Adequacy of Resources. Specify the adequacy of the available facilities, resources and organizational experience with regard to the tasks of the proposed project.

List the financial, physical and other resources to be provided by other profit and nonprofit organizations. Explain how these organizations will participate in the day to day operations of the project. Also explain the available resources or commitments for the continuation of the project after the federal funding period terminates or the demonstration is concluded.

Budget. Relate the proposed budget to the level of effort required to attain project objectives and provide a cost/benefit analysis. Demonstrate that the project's costs are reasonable in view of the anticipated results.

Collaborative Efforts. Discuss in detail and provide documentation for any collaborative and coordinated efforts with other agencies or organizations. Identify these agencies or organizations and explain how these will enhance the project. Letters of commitment must be included with the application. Also explain in detail the coordination efforts to bring community agencies to work together in support of the proposed project.

Authorship. The authors of the application must be clearly identified together with their current relationship to the applicant organization and any future project role they may have if the application is funded.

These evaluation criteria correspond to the outline for the narrative section of the application and the descriptions of the five criteria above should be used as headings in developing the program narrative.

I. Closing Date for Receipt of Applications

The closing date for submittal of applications under this program announcement is June 20, 1988. Applications must be mailed or hand-delivered to:

HDS/Division of Grants and Contracts Management, 200 Independence Avenue SW., HHH Building, Room 349-F, Washington, DC 20201, Attention HDS-88-3

Priority Area: _____

Hand-delivered applications are accepted during the normal working hours of 9:00 a.m. to 5:30 p.m., Monday through Friday.

An application will be considered as meeting the deadline if it is either:

1. Received on or before the deadline date at the above address; or

2. Sent on or before the deadline date and received in time to be considered during the competitive review and evaluation process. Applicants are encouraged to obtain a legibly dated receipt from a commercial carrier or from the U.S. Postal Service. Applicants will be asked to provide proof of mailing by the deadline date, if there is a question as to receipt of the application. Private metered postmarks are not acceptable as proof of timely mailing.

Applications which do not meet the above criteria are considered late applications. HDS will notify each late applicant that its application will not be considered in the current competition.

HDS may extend the deadline for all applicants because of acts of God, such as floods, hurricanes or earthquakes, when there is widespread disruption of the mail or when HDS determines an extension to be in the best interest of the government. However, if HDS does not extend the deadline for all applicants, it may not waive or extend the deadline for any applicant(s).

Part V. Instructions for Completing Applications

This part provides guidance on how to prepare and submit an application in response to this announcement.

A. Application Process.

1. Availability of Forms

All instructions and forms required for submittal of applications are provided at the end of this announcement. No additional forms are available or necessary. A copy of this announcement may be obtained by writing or telephoning:

HDS/Administration on Developmental Disabilities, 200 Independence Avenue SW., HHH Building, Room 351–D, Washington, DC 20201, Attention: HDS–88–3, Telephone: (202) 245–1961.

In order to assure 24-hour coverage, this number may be answered by an answering machine during some time periods.

2. Application Submission

One signed original and two copies of the application must be submitted to:

Department of Health and Human Services, HDS/Division of Grants and Contracts Management, 200 Independence Avenue SW., HHH Building, Room 349-F, Washington, DC 20201, Attention HDS–88–3
Priority Area: _____

3. Notification Under Executive Order 12372

This program is covered under Executive Order 12372 "Intergovernmental Review of Federal Programs" and 45 CFR Part 100 "Intergovernmental Review of Department of Health and Human Services Programs and Activities." Under the Order, States may design their own processes for reviewing and commenting on proposed Federal assistance under covered programs. All States and territories except Alaska, Idaho, Nebraska, American Samoa and Palau have elected to participate in the Executive Order process and have established Single Points of Contact (SPOCs).

Applicants from these five areas need take no action regarding E.O. 12372. Applications for projects to be administered by Federally-recognized Indian Tribes are also exempt from the requirements of E.O. 12372. Applicants should contact their SPOCs as soon as possible to alert them to the prospective application and to receive any necessary instructions.

Applicants must submit any required material as early as possible so the program office can obtain and review SPOC comments as part of the award process. It is imperative that the applicant submit all required materials, if any, to the SPOC and indicate the date of this submittal (or date of contact if no submittal is required) on the SF 424, item 22a. SPOCs will be notified of any applicant not indicating SPOC contact on the application, when SPOC contact is required. SPOCs have sixty (60) days starting from the application deadline to comment on applications for financial assistance under this program. Comments are, therefore, due no later than August 19, 1988.

SPOCs are encouraged to eliminate the submission of routine endorsement as official recommendations. Additionally, SPOCs are requested clearly to differentiate between mere advisory comments and those official State process recommendations which they intend to trigger the "accommodate or explain" rule. It is helpful in tracking SPOC comments if the SPOC will clearly indicate the applicant organization as it appears on the application SF 424.

When comments are submitted directly to HDS, they should be addressed to:

Department of Health and Human Services, HDS/Administration on Developmental Disabilities, 200 Independence Avenue SW., HHH Building, Room 351-D, Washington, DC 20201, Attention: HDS–88–3
Priority Area: _____

A list of the State Single Points of Contact is included at the end of this announcement.

4. Notification of State Developmental Disabilities Councils

A copy of the application must also be submitted to the State Developmental Disabilities Council for its review and comment when individuals with developmental disabilities who reside in that State are included as a target population of the proposed project. A list of the State Developmental Disabilities Councils is also included at the end of this announcement.

B. Application Package

In order to expedite the processing of applications, we request that you *adhere to the following instructions exactly.* Each application package must include:

1. A copy of the *Checklist of Application Requirements* (found in Part IV.E) with all the completed items checked.

2. An original and two copies of the application (see Part IV.D below). Each copy should be stapled securely (front and back if necessary) in the upper left corner. Pages of the narrative should be sequentially numbered beginning with "Need for Project" as page one. The original copy of the application must have an original signature in item 23 on page 1 of the SF 424. In order to facilitate handling, please do not use covers, binders or tabs. Do *not* include extraneous materials as attachments, such as: vitae, agency promotion brochures, slides, tapes, film clips, minutes of meetings, survey instruments or articles of incorporation. It is not feasible to use such items in the review process, and they will be discarded if included.

Do not include a self-addressed, stamped acknowledgment card. All applicants will be automatically notified of receipt and of the three digit identification number assigned to their application. This number and the priority area must be referred to in *ALL* subsequent communication with HDS concerning the application. If acknowledgment is not received within eight weeks after the deadline date, please notify HDS by telephone at (202) 245–1961. After an identification number is assigned and the applicant has been notified of the number, applications are filed numerically by identification number to aid in quick retrieval. It will not be possible for HDS staff to provide a timely response to inquiries about a specific application unless the identification number and the priority area are given. Applicants should be advised that HDS staff cannot release pre-decisional information relative to an application other than that it has been received and that it is going through the review process. Unnecessary inquiries delay the award process. Once a decision is reached, the applicant will be notified as soon as possible of the acceptance or rejection of the application.

C. Content of Application

Each copy of the application must contain an SF 424, completed and assembled in accordance with the following instructions:

1. Page 1, the cover page of the application;

2. Part II, Project Approval Information;

3. Part III, Budget Information: Section A (Budget Summary); Section B (Budget Categories); and Section E (Budget Estimates of Federal Funds Needed for Balance of the Project);

4. Summary description with listing of key words;

5. Part IV, Program Narrative, which should be at least six double-spaced (or three single-spaced) pages but must not exceed twenty double-spaced (or ten single-spaced) pages, typewritten on one side of the paper. The narrative should be organized with sections addressing the following five areas: (a) need for the

project, (b) project methodology, (c) expected outcomes, (d) dissemination and utilization and (e) level of effort;

6. An organizational capability statement, no more than two double-spaced (or one single-spaced) typewritten pages;

7. Part IV, Assurances; and,

8. Letters which show collaboration or substantive commitment to the project by organizations other than the applicant organization are not part of the narrative and, therefore, are not counted against the twenty page limit for the narrative. However, they may not exceed a total of ten (10) additional pages. Include letters when other organizations are crucial to the project and will provide tangible resources such as staff, equipment, space or funds.

D. Preparing the Application

The SF 424 has been reprinted for your convenience. We suggest that you reproduce it and type your application on the copy. Prepare your application in accordance with the following instructions:

1. *SF 424, Page 1:* Complete only the items specified. Specific instructions are as follows:

Top of Page. Priority area numbers must be indicated for all applications. If the priority area(s) is not indicated, the application will not be reviewed.

Item 1. Preprinted on the form.

Item 2a. Applicant's own control number, if desired.

Item 2b. Date application is signed.

Item 3a. Enter the number assigned, if available, by the State Single Point of Contact (SPOC). Applications submitted to HDS must contain this identifier, if provided by the SPOC prior to application submittal. (Item 22 must also be completed).

Item 3b. Date identifier is assigned by SPOC.

Item 4a. Enter the name of applicant organization. Do not incude the name of an individual. Use abbreviations to limit the name to 30 characters, including spaces and punctuation.

Item 4b. Enter the unit within the organization that will actually carry out the project. If 4a and 4b are the same, leave 4b blank. Use abbreviations to limit this line to 30 characters, including spaces and punctuation.

Items 4c–4g. Enter the address that the organization actually uses to receive mail, as this is where all correspondence will be sent. Do not include both street address and P.O. box number unless both must be used in mailing.

Item 4h. Enter the name and telephone number of a person who can respond to questions about the application. This person should be accessible at the address given in 4c–4g.

Item 5. Enter the employer identification number of the applicant organization as assigned by the IRS. If the applicant organization has been assigned a DHHS Entity Number consisting of the IRS employer identification number prefixed by "1" and suffixed by a two-digit number, enter the full Entity Number. If applicant has other grants with DHHS and has been assigned a Payee Identification Number (PIN), enter the PIN in parenthesis () beside employer identification number.

Item 6a. Leave blank.

Item 6b. Leave blank

Item 7. The title should be no more than 200 characters long, including spaces and punctuation. It should be typed in not more than four lines of 50 characters each.

Summary Description. Item 7 also asks for a summary description of the project using Section IV. In place of Section IV, use a separate sheet of 8½ × 11 plain paper to provide this summary description of the project. Clearly mark this separate page with the applicant name as shown in item 4a and the priority area number as shown at the top of the page. The summary description should not exceed 1,200 characters, including spaces and punctuation.

Care should be taken to produce a summary description which accurately and concisely reflects the proposal. It should describe the objectives of the project, the approaches to be used and the outcomes expected. The description should also include a list of major products that will result from the proposed project (such as software packages, materials, management procedures, data collection instruments, training packages or videos). This information in conjunction with the information on the SF 424, becomes the project's "abstract" and will be the major source of information about the proposed project; it is the first information that the reviewers read in evaluating the application. Applicant's which do not submit this summery description may jeopardize their chances of being funded.

Item 8. Self-explanatory with the exception of 8e, "City," which includes a town, township, or other municipality.

Item 9. Leave blank.

Item 10. Enter specific number of persons to be directly benefited or served during the life of the project. This number should be substantiated in the application's Program Narrative, Part IV.

Item 11. Preprinted on the form.

Items 12a–12f. Enter the budget for the total project period, if that period is 17 months or less; if the proposed project period exceeds 17 months, enter budget for the first 12 months.

Item 12a. Enter the amount of Federal funds requested. This amount should be no greater than the maximum amount specified in the priority area description.

Items 12b–12e. Enter the amount(s) of funds from non-Federal sources (including in-kind contribution) that will be contributed to the proposed project. These items (b-e) are considered cost-sharing or "matching funds." It is important that the dollar amounts entered here (the non-Federal share) total at least 25 percent of the total project cost (the requested Federal funds plus funds from non-Federal sources) for the project period if that period is 17 months or less or for the first 12 months if the project period exceeds 17 months.

The 25 percent "matching funds" are required for each budget period whether that period is less than 17 months or exceeds 17 months. The following are exceptions to the required 25 percent "matching funds": (1) non-Federal cost sharing is not required on applications originating from American Samoa, Guam or the Northern Mariana Islands; and (2) in the case of research projects where the non-Federal share must be at least 5 percent of the total project cost.

Item 12f. Enter the sum of items 12a–12e.

Item 13a. Enter the number of the Congressional district where the principal office is located.

Item 13b. Enter the number of the Congressional district(s) where the project will be located. If State-wide, a several state effort, or nationwide, enter "00."

Item 14. Preprinted on the form.

Item 15. Enter the desirable start date for the project, beginning on or after September 1, 1988. Most awards made from this program announcement will have start dates between September 1–30, 1988.

Item 16. Enter the estimated number of months to complete the project after Federal funds are available. Projects are generally for 12 months, 24 months or 36 months or for the duration specified in the priority area description. Ensure that this number does not exceed the limitation indicated in the priority area description.

Item 17. Leave blank.

Items 18 & 19. Preprinted on the form.

Item 20. Leave blank.

Item 21. Preprinted on the form.

Item 22a. Enter the date the applicant contacted the SPOC regarding this application. Select the appropriate

SPOC from the attached listing. All applicants, except those in Alaska, Idaho, Nebraska, American Samoa and Palau must contact their SPOC. Review of the application is at the discretion of the SPOC. The SPOC will verify the date noted on the application.

Item 22b. Check the appropriate box if not covered by E.O. 12372.

Item 23a. Enter the name and title of the Certifying Representative of legal applicant.

Item 23b. Signature of Certifying Representative entered in Item 23a.

Items 24–33. Leave blank.

2. SF 424, Part II, Project Approval Information:

Negative answers will not require an explanation unless HDS requests more information at a later date. All "yes" answers must be explained on a separate page in accordance with these instructions.

Item 1. Provide the name of the governing body establishing the priority system and the priority rating assigned to this project. If the priority rating is not available, give the approximate date that it will be obtained.

Item 2. Provide the name of the agency or board which issued the clearance and attach the documentation of status or approval. If the clearance is not available, give the approximate date that it will be obtained.

Item 3. Furnish the name of the approving agency and the approval date. If the approval has not been received, state approximately when it will be obtained.

Item 4. Show whether the approved comprehensive plan is State, local or regional; or, if none of these, explain the scope of the plan. Give the location where the approved plan is available for examination, and state whether this project is in conformance with the plan. If the plan is not available, explain why.

Item 5. Show the population residing or working on the Federal installation who will benefit from this project. Federally recognized Indian reservations are not "Federal installations."

Item 6. Show the percentage of the project work that will be conducted on Federally-owned land or leased land. Give the name of the Federal installation and its location.

Item 7. Briefly describe the possible beneficial and/or harmful effect on the environment because of the proposed project. If an adverse environmental effect is anticipated, explain what action will be taken to minimize it.

Item 8. State the number of individuals, families, businesses or farms this project will displace.

Item 9. Show the Catalog of Federal Domestic Assistance number, the program number, the type of assistance, the status, the amount of each project where there is related previous, pending or anticipated assistance from another funding source.

3. SF 424; Part III—Budget Information:

Section A—Budget Summary

This section includes a summary of the budget. On line 5, enter total Federal costs in column (e) and total non-Federal costs in column (f). Enter total of (e) and (f) in column (g).

Section B—Budget Categories

This budget which includes the Federal as well as non-Federal funding for the proposed project covers (1) the total project period of 17 months or less or (2) the first year if the proposed project exceeds 17 months. It should relate to item 12f, total funding, on page one of the SF 424.

Under column (5), enter the total (Federal and non-Federal) funds, by object class category, for the total project period, if the project will be completed in 17 months or less; or for the first year, if the proposed project exceeds 17 months.

A budget justification should be included to explain fully and justify major items, as indicated below. The budget justification should not exceed three typed pages and should follow Part III—Budget Information.

Personnel—Line 6a. Enter the total costs of salaries and wages of applicant/grantee staff. Identify the principal investigator or project director, if known. Specify the percentage of time and titles of the organization's staff who will be working on the project as part of the budget justification. Do not include the costs of consultants, which should be included on line h, Other.

Fringe Benefits—Line 6b. Enter the total costs of fringe benefits unless treated as part of an approved indirect cost rate. Provide a break-down of amounts and percentages that comprise fringe benefit costs, such as health insurance, FICA, retirement insurance, etc.

Travel—6c. Enter total costs of out-of-town travel (travel requiring per diem) for staff of the project. Do not enter costs for consultant's travel or local transportation. Provide justification for requested travel costs. Include the name(s) of traveler(s), total number of trips, destinations, length of stay, transportation costs and subsistence allowances.

Equipment—Line 6d. Enter the total costs of all equipment to be acquired by the project. "Equipment" is nonexpendable tangible personal property having a useful life of more than two years and an acquisition cost of $500 or more per unit. An applicant may use its own definition, provided that it would at least include all non-expendable tangible personal property as defined in the preceding sentence.

Supplies—Line 6e. Enter the total costs of all tangible expendable personal property (supplies) other than those included on line 6d.

Contractual—Line 6f. Enter the total costs of all contracts, including (1) procurement contracts (except those which belong on other lines such as equipment, supplies, etc.) and, (2) contracts with secondary recipient organizations. Also include any contracts with organizations for the provision of technical assistance. Do not include payments to individuals on this line. Attach a list of contractors indicating the name of the organization, the purpose of the contract and the estimated dollar amount of the award. Whenever the applicant/grantee intends to delegate part or all of the program to another agency, the applicant/grantee must complete this section (Section B, Budget Categories) for each delegate agency by agency title, along with the supporting information. The total cost of all such agencies will be part of the amount shown on Line 6f. Provide back-up documentation identifying the name of contractor, purpose of contract and major cost elements.

Construction—Line 6g. Leave blank since new construction is not allowable and ADD funds are rarely used for either renovation or repair.

Other—Line 6h. Enter the total of all other costs. Such costs, where applicable, may include, but are not limited to, insurance, medical and dental costs, noncontractual fees and travel paid directly to individual consultants, local transportation (all travel which does not require per diem is considered local travel), space and equipment rentals, printing and publication, computer use, training costs including tuition and stipends, training service costs including wage payments to individuals and supportive service payments, and staff development costs.

Total Direct Charges—Line 6i. Show the totals of Lines 6a through 6h.

Indirect Charges—Line 6j. Enter the total amount of indirect costs. If no indirect costs are requested enter "none." This line should be used only when the applicant (except local governments) has a current indirect cost rate agreement approved by the Department of Health and Human

Services or another Federal agency. Enclose a copy of this agreement. Local governments shall enter the amount of indirect costs determined in accordance with HHS requirements.

In the case of training grants to other than State or local governments (as defined in 45 CFR Part 74), the reimbursement of indirect costs will be limited to the lesser of the negotiated or actual indirect cost rate or 8 percent of the amount allowed for direct costs exclusive of any equipment charges, rental of space, tuition and fees, post-doctoral training allowances, contractual items, and alterations and renovations. It should be noted that when indirect charges are included, these charges should not also be charged as direct charges to the grant.

Total—Line 6k. Enter the total amounts of Lines 6i and 6j.

Program Income—Line 7. Enter the estimated amount of income, if any, expected to be generated from this project. Do not add or subtract this amount from the total project amount. Describe the nature, source, and anticipated use of income in the Program Narrative.

In-Kind Contributions—Line 8. After program income, enter the value of in-kind contributions. In-kind contributions are defined in Title 45 of the Code of Federal Regulations, Part 74.51 as, "property or services which benefit a grant-supported project or program and which are contributed by non-Federal third parties without charge to the grantee, the subgrantee, or a cost-type contractor under the grant or subgrant." Include identification and valuation in the three-page budget justification.

Section E—Budget Estimate of Federal Funds Needed for Balance of the Project

This section should only be completed if the total project exceeds 17 months.

Totals—Line 20. For projects that will have more than one budget period, enter the estimated required *Federal* funds for the second budget period (months 13 through 24) under column (b) First. If a third budget period will be necessary, enter the Federal funds needed for months 25 through 36 under (c) Second. Columns (d) and (e) will be blank since HDS limits funding under this announcement to a three year maximum.

4. *SF 424, Part IV, Program Narrative:* Describe the project proposed in response to this announcement addressing the specific concerns mentioned under the priority area description in Part II. The narrative should provide information on how that application meets the evaluation criteria in Part III, which are the same as the format below. This narrative should be no less than 6 double-spaced or 3 single-spaced pages and not more than 20 double-spaced or ten single-spaced pages. It should be typed on 8½" × 11" plain white bond with 1" margins on both sides and the pages numbered, with the first page of the narrative as page number 1.

Applicants are required to follow the format described below in preparing their applications, using the five headings for sections of the application. However, the number of pages for each section is given as a suggestion only.

(a) *Need for the Project—Objectives:* (four pages double-spaced). State the specific objectives and needs addressed by the project in terms of its national or regional significance, its theoretical importance and its applicability to practices and subordinate objectives of the project. Provide a detailed discussion of the "state-of-the-art" relative to the problem or area addressed by the proposal and indicate how the proposed effort will impact on it. For research projects, state the hypothesis(es) to be tested or the specific questions to be answered. For demonstration, training, technical assistance, and evaluation projects, state the goals or service objectives of the proposal. Provide supporting documentation or other testimonies from concerned interests other than the applicant. Summarize, evaluate and relate relevant data, based on planning or demonstration studies, to the proposed project.

Give a precise location of the project or area to be served by the proposed project.

(b) *Project Methodology—Project Implementation Plan:* (six pages double-spaced).

Tasks to be performed

Describe in detail the tasks to be performed including the events, activities and expected products. Identify the key staff member that will be the lead person. Relate each task to each of the objectives. Provide a chart indicating the timetable for completing each task, the lead person and the time committed.

Approach

Explain, in detail, the approach to be used for accomplishing each task and how this approach will accomplish the project objectives as well as how these objectives will solve the problem(s). Also, fully describe the research methodology, demonstration plan, design of training program or other appropriate techniques to be used.

(c) *Expected Outcomes:* (three pages double-spaced). Identify, in specific terms, the results and benefits—for target groups and human service programs—to be derived from implementing the proposed project. Describe how the expected results and benefits will relate to previous research and/or demonstration efforts. Also describe in specific terms the anticipated contribution that this project will make to policy, practice, theory and/or future research.

Describe in detail evaluation plans and procedures which are capable of measuring the degree to which the project objectives have been acomplished. Provide an explanation on why these evaluation techniques will be used.

d. *Dissemination and Utilization:* (three pages double-spaced) Describe in detail the product(s) resulting from the proposed project that will be disseminated. Also describe the steps to be taken to disseminate and promote the utilization of these products and findings. State what resources will be used to disseminate these products and findings. Finally, explain why these steps are expected to be successful in disseminating the products and findings. The specific audiences to whom the products and findings will be disseminated must be specified as well as the reason why these audiences will benefit from these results. State in detail the steps to be taken to have the products and findings adopted by these audiences.

(e) *Level of Effort:* (four pages double-spaced).

Staffing Pattern

Describe the staffing pattern for the proposed project, clearly linking responsibilities to project tasks and specifying the contributions to be made by key staff.

Competence of Staff

List the qualifications of the project team including any experiences working on similar projects. Also list the variety of skills to be used, relevant research experience, educational background and the demonstrated ability to produce final results that are readily comprehensible and usable.

Adequacy of Resources

Specify the adequacy of the available facilities, resources and organizational experience with regard to the tasks of the proposed project.

List the financial, physical and other resources to be provided by other profit and nonprofit organizations. Explain

how these organizations will participate in the day to day operations of the project. Also explain the available resources or commitments for the continuation of the project after the federal funding period terminates or the demonstration is concluded.

Budget

Relate the proposed budget to the level of effort required to attain project objectives and provide a cost/benefit analysis. Demonstrate that the peoject's costs are reasonable in view of the anticipated results.

Collaborative Efforts

Discuss in detail and provide documentation for any collaborative and coordinated efforts with other agencies or organizations. Identify these agencies or organizations and explain how these will enhance the project. Letters of commitment must be included with the application. Also explain in detail the coordination efforts to bring community agencies to work together in support of the proposed project.

Authorship

The authors of the application must be clearly identified together with their current relationship to the applicant organization and any future project role they may have if the application is funded.

Organizational Capability Statement

A brief (maximum 2 pages double-spaced or one page single-spaced) background description of how the applicant agency (or the particular division of a larger agency which will have responsibility for this project) is organized and the types and quantity of services it provides or research capabilities it possesses. This description should cover capabilities not included in the program narrative under level of effort. It may include descriptions of any current or previous relevant experience or describe the competence of the project team and its demonstrated ability to produce a final product that is readily comprehensible and usable.

Part V, Assurances

Applicants are required to file Part V, Assurances, and the Assurance of Compliance with the DHHS Regulations under Title VI of the Civil Rights Act of 1964 and the Assurance of Compliance with Section 504 of the Rehabilitation Act of 1973, as amended. Copies of these assurances are reprinted at the end of this announcement.

For research projects in which human subjects may be at risk, an assurance may also be needed. If there is a question regarding the applicability of this assurance (located at the end of this announcement) contact the Office of Research Risks of the National Institutes of Health at (301) 496-7041.

Checklist of Application Requirements

The checklist below is to be typed on 8½" × 11" plain bond paper, completed and included in your application package.

Included in your application package are:

- ☐ Checklist;
- ☐ One original application plus two copies. The original and both copies of the application should include the following:
- ☐ SF 424, page 1 and Parts II and III;
- ☐ Summary description;
- ☐ SF 424, Part IV, Program Narrative (not less than 6 pages nor more than 20 pages, double-spaced) including Need for the Project, Project Methodology, Expected Outcomes, Dissemination and Utilization, and Level of Effort;
- ☐ Organizational Capability Statement (2 pages, double-spaced maximum);
- ☐ Part V, Assurances; and,
- ☐ Letters of Commitment (not more than 10 pages).
- ☐ SF 424 has been completed according to the instructions, signed in ink and dated by an authorized official (item 23), and the original has been included in the package to be mailed along with two copies.
- ☐ The original and two copies of the application have been stapled securely (no folders or binders) with the first page of the SF 424 as the first page of each copy of the application.

The Checklist, original application and two copies of the application should be packaged together so that they can be processed together. However, if more than one application set is to be submitted, each application set should be packaged separately and submitted under separate cover.

Remember, applications must be postmarked by midnight or hand delivered by 5:30 p.m. no later than June 20, 1988; HDS/Division of Grants and Contracts Management, 200 Independence Avenue SW., HHH Building, Room 348-F, Washington, DC 20201, Attention HDS-88-3, Priority Area _____

(Federal Catalog of Domestic Assistance Number 13631 Development Disabilities-Special Projects)

Date: April 15, 1988.

Carolyn Doppelt Gray,

Commissioner, Administration on Developmental Disabilities.

Approved: April 15, 1988.

Sydney Olson,

Assistant Secretary for Human Development Services.

BILLING CODE 4130-01-M

OMB Approval No. 0348-0006

FEDERAL ASSISTANCE

1. TYPE OF SUBMISSION (Mark appropriate box)
- ☐ NOTICE OF INTENT (OPTIONAL)
- ☐ PREAPPLICATION
- ☐ APPLICATION

2. APPLICANT'S APPLICATION IDENTIFIER — a. NUMBER — b. DATE (Year month day) 19

3. STATE APPLICATION IDENTIFIER (NOTE: TO BE ASSIGNED BY STATE) — a. NUMBER — b. DATE ASSIGNED (Year month day) 19

Leave Blank

SECTION I—APPLICANT/RECIPIENT DATA

4. LEGAL APPLICANT/RECIPIENT
a. Applicant Name
b. Organization Unit
c. Street/P.O. Box
d. City — e. County
f. State — g. ZIP Code
h. Contact Person (Name & Telephone No.)

5. EMPLOYER IDENTIFICATION NUMBER (EIN)

6. PROGRAM (From CFDA) — a. NUMBER ___ . ___ — MULTIPLE ☐ — b. TITLE

7. TITLE OF APPLICANT'S PROJECT (Use section IV of this form to provide a summary description of the project.)

8. TYPE OF APPLICANT/RECIPIENT
A—State; B—Interstate; C—Substate Organization; D—County; E—City; F—School District; G—Special Purpose District; H—Community Action Agency; I—Higher Educational Institution; J—Indian Tribe; K—Other (Specify):
Enter appropriate letter ☐

9. AREA OF PROJECT IMPACT (Names of cities, counties, states, etc.)

10. ESTIMATED NUMBER OF PERSONS BENEFITING

11. TYPE OF ASSISTANCE
A—Basic Grant; B—Supplemental Grant; C—Loan; D—Insurance; E—Other
Enter appropriate letter(s) ☐☐

12. PROPOSED FUNDING

a. FEDERAL	$ .00
b. APPLICANT	.00
c. STATE	.00
d. LOCAL	.00
e. OTHER	.00
f. Total	$ .00

13. CONGRESSIONAL DISTRICTS OF: a. APPLICANT — b. PROJECT

14. TYPE OF APPLICATION
A—New; B—Renewal; C—Revision; D—Continuation; E—Augmentation
Enter appropriate letter ☐

15. PROJECT START DATE (Year month day) 19

16. PROJECT DURATION Months

17. TYPE OF CHANGE (For 14c or 14e)
A—Increase Dollars; B—Decrease Dollars; C—Increase Duration; D—Decrease Duration; E—Cancellation; F—Other (Specify):
Enter appropriate letter(s) ☐☐☐

18. DATE DUE TO FEDERAL AGENCY ► (Year month day) 19

19. FEDERAL AGENCY TO RECEIVE REQUEST
a. ORGANIZATIONAL UNIT (IF APPROPRIATE)
b. ADMINISTRATIVE CONTACT (IF KNOWN)
c. ADDRESS

20. EXISTING FEDERAL GRANT IDENTIFICATION NUMBER

21. REMARKS ADDED ☐ Yes ☐ No

SECTION II—CERTIFICATION

22. THE APPLICANT CERTIFIES THAT► To the best of my knowledge and belief, data in this preapplication/application are true and correct, the document has been duly authorized by the governing body of the applicant and the applicant will comply with the attached assurances if the assistance is approved.
a. YES, THIS NOTICE OF INTENT/PREAPPLICATION/APPLICATION WAS MADE AVAILABLE TO THE STATE EXECUTIVE ORDER 12372 PROCESS FOR REVIEW ON:
DATE _____
b. NO, PROGRAM IS NOT COVERED BY E.O. 12372 ☐
OR PROGRAM HAS NOT BEEN SELECTED BY STATE FOR REVIEW ☐

23. CERTIFYING REPRESENTATIVE — a. TYPED NAME AND TITLE — b. SIGNATURE

SECTION III—FEDERAL AGENCY ACTION

24. APPLICATION RECEIVED (Year month day) 19

25. FEDERAL APPLICATION IDENTIFICATION NUMBER

26. FEDERAL GRANT IDENTIFICATION

27. ACTION TAKEN
- ☐ a. AWARDED
- ☐ b. REJECTED
- ☐ c. RETURNED FOR AMENDMENT
- ☐ d. RETURNED FOR E.O. 12372 SUBMISSION BY APPLICANT TO STATE
- ☐ e. DEFERRED
- ☐ f. WITHDRAWN

28. FUNDING

a. FEDERAL	$ .00
b. APPLICANT	.00
c. STATE	.00
d. LOCAL	.00
e. OTHER	.00
f. TOTAL	$ .00

29. ACTION DATE► (Year month day) 19

30. STARTING DATE (Year month date) 19

31. CONTACT FOR ADDITIONAL INFORMATION (Name and telephone number)

32. ENDING DATE (Year month date) 19

33. REMARKS ADDED ☐ Yes ☐ No

NSN 7540-01-008-8162
PREVIOUS EDITION IS NOT USABLE

424-103

STANDARD FORM 424 PAGE 1 (Rev. 4-84)
Prescribed by OMB Circular A-102

OMB NO 0348 0006

PART II
PROJECT APPROVAL INFORMATION

Item 1
Does this assistance request require State, local regional, or other priority rating?
_____ Yes _____ No

Name of Governing Body _____
Priority Rating _____

Item 2.
Does this assistance request require State, or local advisory, educational or health clearances?
_____ Yes _____ No

Name of Agency or Board _____
(Attach Documentation)

Item 3
Does this assistance request require State, local, regional or other planning approval?
_____ Yes _____ No

Name of Approving Agency _____
Date _____

Item 4.
Is the proposed project covered by an approved comprehensive plan?
_____ Yes _____ No

Check one: State ☐ Local ☐ Regional ☐
Location of Plan _____

Item 5
Will the assistance requested serve a Federal installation?
_____ Yes _____ No

Name of Federal Installation _____
Federal Population benefiting from Project _____

Item 6.
Will the assistance requested be on Federal land or installation?
_____ Yes _____ No

Name of Federal Installation _____
Location of Federal Land _____
Percent of Project _____

Item 7.
Will the assistance requested have an impact or effect on the environment
_____ Yes _____ No

See instructions for additional information to be provided.

Item 8.
Will the assistance requested cause the displacement of individuals, families, businesses, or farms?
_____ Yes _____ No

Number of:
Individuals _____
Families _____
Businesses _____
Farms _____

Item 9.
Is there other related assistance on this project previous, pending, or anticipated
_____ Yes _____ No

See instructions for additional information to be provided.

VOL 53 ISS 77 AP 21 1988 UMI

OMB NO. 0348-0006

PART III - BUDGET INFORMATION

SECTION A - BUDGET SUMMARY

Grant Program, Function or Activity (a)	Federal Catalog No. (b)	Estimated Unobligated Funds		New or Revised Budget		
		Federal (c)	Non-Federal (d)	Federal (e)	Non-Federal (f)	Total (g)
1.		$	$	$	$	$
2.						
3.						
4.						
5. TOTALS		$	$	$	$	$

SECTION B - BUDGET CATEGORIES

6. Object Class Categories	- Grant Program, Function or Activity				Total
	(1)	(2)	(3)	(4)	(5)
a. Personnel	$	$	$	$	$
b. Fringe Benefits					
c. Travel					
d. Equipment					
e. Supplies					
f. Contractual					
g. Construction					
h. Other					
i. Total Direct Charges					
j. Indirect Charges					
k. TOTALS	$	$	$	$	$
7. Program Income	$	$	$	$	$

OMB NO 0348-0006

SECTION C - NON-FEDERAL RESOURCES

(a) Grant Program	(b) APPLICANT	(c) STATE	(d) OTHER SOURCES	(e) TOTALS
8.	$	$	$	$
9.				
10.				
11.				
12. TOTALS	$	$	$	$

SECTION D - FORECASTED CASH NEEDS

	Total for 1st Year	1st Quarter	2nd Quarter	3rd Quarter	4th Quarter
13. Federal	$	$	$	$	$
14. Non-Federal					
15. TOTAL	$	$	$	$	$

SECTION E - BUDGET ESTIMATES OF FEDERAL FUNDS NEEDED FOR BALANCE OF THE PROJECT

(a) Grant Program	FUTURE FUNDING PERIODS (YEARS)			
	(b) FIRST	(c) SECOND	(d) THIRD	(e) FOURTH
16.	$	$	$	$
17.				
18.				
19.				
20. TOTALS	$	$	$	$

SECTION F - OTHER BUDGET INFORMATION
(Attach Additional Sheets if Necessary)

21. Direct Charges:

22. Indirect Charges:

23. Remarks:

PART IV PROGRAM NARRATIVE (Attach per instruction)

PART V

ASSURANCES

The Applicant hereby assures and certifies that it will comply with the regulations, policies, guidelines and requirements, including 45 CFR Part 74 and OMB Circulars No. A-102, A-110 and applicable cost principles, (Circulars: A-21, "Educational Institutions"; A-87, "Cost Principles for State and Local Governments"; and A-122, "Nonprofit Organizations"), as they relate to the application, acceptance and use of Federal funds for this Federally assisted project. Also the applicant assures and certifies with respect to the grant that:

1. It possesses legal authority to apply for the grant; that a resolution, motion or similar action has been duly adopted or passed as an official act of the applicant's governing body, authorizing the filing of the application, including all understandings and assurances contained therein, and directing and authorizing the person identified as the official representative of the applicant to act in connection with the application and to provide such additional information as may be required.

2. It will comply with Title VI of the Civil Rights Act of 1964 (P.L. 88-352) and in accordance with Title VI of that Act, no person in the United States shall, on the ground of race, color, or national origin, be excluded from participation in, be denied the benefits of, or be otherwise subjected to discrimination under any program or activity for which the applicant receives Federal financial assistance and will immediately take any measures necessary to effectuate this agreement.

3. It will comply with Title VI of the Civil Rights Act of 1964 (42 USC 2000d) prohibiting employment discrimination where (1) the primary purpose of a grant is to provide employment or (2) discriminatory employment practices will result in unequal treatment of persons who are or should be benefiting from the grant-aided activity.

4. It will comply with requirements of the provisions of the Uniform Relocation Assistance and Real Property Acquisition Act of 1970 (P.L. 91-646) which provides for fair and equitable treatment of persons displaced as a result of Federal and federally-assisted programs.

5. It will comply with the provisions of the Hatch Act which limit the political activity of State and local government employees.

6. It will comply with the minimum wage and maximum hours provisions of the Federal Fair Labor Standards Act (29 U.S.C. 201) as they apply to employees of institutions of higher education, hospitals, other nonprofit organizations, and to employees of State and local governments who are not employed in integral operations in areas of traditional governmental functions.

   Head Start, Certification of Minimum Wage: It certifies that it has reviewed the salary structures and wages for all positions and certifies that persons employed in carrying out this program shall not receive compensation at a rate which is (a) in excess of the average rate of compensation paid in the area to persons providing substantially comparable services; or (b) less than the minimum wage rate prescribed in section 6(a) of the Fair Labor Standards Act of 1938. Documentation of the methods by which it established wage scales is available in their files for review by audit and HDS personnel.

7. It will establish safeguards to prohibit employees from using their positions for a purpose that is or gives the appearance of being motivated by a desire for private gain for themselves or others, particularly those with whom they have family, business, or other ties.

8. It will give the sponsoring agency or the Comptroller General through any authorized representative the access to and the right to examine all records, books, papers, or documents related to the grant, including the records of contractors and subcontractors performing under the grant.

9. It will comply with all requirements imposed by the Federal sponsoring agency concerning special requirements of law, program requirements, and other administrative requirements.

10. It will insure that the facilities under its ownership, lease or supervision which shall be utilized in the accomplishment of the project are not listed on the Environmental Protection Agency's (EPA) list of Violating Facilities and that it will notify the Federal grantor agency of the receipt of any communication from the Director of the EPA Office of Federal Activities indicating that a facility to be used in the project is under consideration for listing by the EPA.

The phrase "Federal financial assistance" includes any form of loan, grant, guaranty, insurance payment, rebate, subsidy, disaster assistance loan or grant, or any other form of direct or indirect Federal assistance.

11. It will comply with the flood insurance purchase requirements of Section 102(a) of the Flood Disaster Protection Act of 1973, Public Law 93-234, 87 Stat. 975, approved December 31, 1976. Section 102(a) requires, on and after March 2, 1975, the purchase of flood insurance in communities where such insurance is available as a condition for the receipt of any Federal financial assistance for construction or acquisition purposes for use in any area that has been identified by the Secretary of the Department of Housing and Urban Development as an area having special flood hazards.

12 It will assist the Federal grantor agency in its compliance with Section 106 of the National Historic Preservation Act of 1966 as amended (16 U.S.C. 470), Executive Order 11593, and the Archeological and Historic Preservation Act of 1966 (16 U.S.C. 469a-1 et seq.) by (a) consulting with the State Historic Preservation Officer on the conduct of investigations, as necessary, to identify properties listed in or eligible for inclusion in the National Register of Historic Places that are subject to adverse effects (see 36 CFR Part 800.8) by the grantee's activity and notifying the Federal grantor agency of the existence of any such properties, and by (b) complying with all requirements established by the Federal grantor agency to avoid or mitigate adverse effects upon such properties.

13 Applicants for the Administration for Native Americans Programs, hereby certify in accordance with 45 CFR 1336.53, that the financial assistance provided by the Office of Human Development Services for the specified activities to be performed under this program, will be in addition to, and not in substitution for, comparable activities provided without Federal assistance.

14. It will comply with the Age Discrimination Act of 1975 enacted as an amendment to the Older Americans Act (Pub. L. 94-135), which provides that: No person in the United States shall, on the basis of age be excluded from participation in, be denied the benefits of, or be subjected to discrimination under, any program or activity for which the applicant receives Federal financial assistance.

15. It will comply with Section 504 of the Rehabilitation Act of 1973, as amended (29 U.S.C. 794), all requirements imposed by the applicable HHS regulation (45 C.F.R. Part 84), and all guidelines and interpretations issued pursuant thereto, which prohibits discrimination on the basis of handicap in programs and activities receiving Federal financial assistance.

16. It will comply with Title IX of the Education Amendments of 1972 (20 U.S.C. 1681, et seq.) which prohibits discrimination on the basis of sex in education programs and activities receiving Federal financial assistance (whether or not the programs or activities are offered or sponsored by an educational institution).

17. It will comply with Pub. L. 93-348 as implemented by Part 46 of Title 45 (45 CFR 46, 42 U.S.C. 2891) regarding the protection of human subjects involved in research, development, and related activities supported by the grant.

18. It will comply with the equal opportunity clause prescribed by Executive Order 11246, as amended, and will require that its subrecipients include the clause in all construction contracts and subcontracts which have or are expected to have an aggregate value within a 12-month period exceeding $10,000, in accordance with Department of Labor regulations at 41 CFR Part 60.

19. It will include, and will require that its subrecipients include, the provision set forth in 29 CFR 5.5(c) pertaining to overtime and unpaid wages in any nonexempt nonconstruction contract which involves the employment of mechanics and laborers (including watchmen, guards, apprentices, and trainees) if the contract exceeds $2,500.

VOL 53 ISS 77 APR 21 1988 UMI

ASSURANCE OF COMPLIANCE WITH THE DEPARTMENT OF HEALTH AND HUMAN SERVICES REGULATION UNDER TITLE VI OF THE CIVIL RIGHTS ACT OF 1964

_____ (hereinafter called the "Applicant")
(Name of Applicant)

HEREBY AGREES THAT it will comply with title VI of the Civil Rights Act of 1964 (P.L. 88-352) and all requirements imposed by or pursuant to the Regulation of the Department of Health and Human Services (45 CFR Part 80) issued pursuant to that title, to the end that, in accordance with title VI of that Act and the Regulation, no person in the United States shall, on the ground of race, color, or national origin, be excluded from participation in, be denied the benefits of, or be otherwise subjected to discrimination under any program or activity for which the Applicant receives Federal financial assistance from the Department; and HEREBY GIVES ASSURANCE THAT it will immediately take any measures necessary to effectuate this agreement.

If any real property or structure thereon is provided or improved with the aid of Federal financial assistance extended to the Applicant by the Department, this assurance shall obligate the Applicant, or in the case of any transfer of such property, any transferee, for the period during which the real property or structure is used for a purpose for which the Federal financial assistance is extended or for another purpose involving the provision of similar services or benefits. If any personal property is so provided, this assurance shall obligate the Applicant for the period during which it retains ownership or possession of the property. In all other cases, this assurance shall obligate the Applicant for the period during which the Federal financial assistance is extended to it by the Department.

THIS ASSURANCE is given in consideration of and for the purpose of obtaining any and all Federal grants, loans, contracts, property, discounts or other Federal financial assistance extended after the date hereof to the Applicant by the Department, including installment payments after such date on account of applications for Federal financial assistance which were approved before such date. The Applicant recognizes and agrees that such Federal financial assistance will be extended in reliance on the representations and agreements made in this assurance, and that the United States shall have the right to seek judicial enforcement of this assurance. This assurance is binding on the Applicant, its successors, transferees, and assignees, and the person or persons whose signatures appear below are authorized to sign this assurance on behalf of the Applicant.

Dated_____ _____ _____
(Applicant)

By _____
(President, Chairman of Board, or comparable authorized official)

_____

_____
(Applicant's mailing address)

PLEASE RETURN ORIGINAL TO: Office of Civil Rights
Room 5627/B North Building
330 Independence Ave., N.W.
Washington, D.C. 20201

RETURN COPY TO: GRANTS MANAGEMENT OFFICE

HDS GRANTS MANAGEMENT

HHS-441 (10/82) Rev.

GPO 894-600

DEPARTMENT OF HEALTH AND HUMAN SERVICES

ASSURANCE OF COMPLIANCE WITH SECTION 504 OF THE REHABILITATION ACT OF 1973, AS AMENDED

The undersigned (hereinafter called the "recipient") HEREBY AGREES THAT it will comply with section 504 of the Rehabilitation Act of 1973, as amended (29 U.S.C. 794), all requirements imposed by the applicable HHS regulation (45 C.F.R. Part 84), and all guidelines and interpretations issued pursuant thereto.

Pursuant to § 84.5(a) of the regulation [45 C.F.R. 84.5(a)], the recipient gives this Assurance in consideration of and for the purpose of obtaining any and all federal grants, loans, contracts (except procurement contracts and contracts of insurance or guaranty), property, discounts, or other federal financial assistance extended by the Department of Health and Human Services after the date of this Assurance, including payments or other assistance made after such date on applications for federal financial assistance that were approved before such date. The recipient recognizes and agrees that such federal financial assistance will be extended in reliance on the representations and agreements made in this Assurance and that the United States will have the right to enforce this Assurance through lawful means. This Assurance is binding on the recipient, its successors, transferees, and assignees, and the person or persons whose signatures appear below are authorized to sign this Assurance on behalf of the recipient.

This Assurance obligates the recipient for the period during which federal financial assistance is extended to it by the Department of Health and Human Services or, where the assistance is in the form of real or personal property, for the period provided for in § 84.5(b) of the regulation [45 C.F.R. 84.5(b)].

The recipient: [Check (a) or (b)]

a. ( ) employs fewer than fifteen persons;

b. ( ) employs fifteen or more persons and, pursuant to § 84.7(a) of the regulation [45 C.F.R. 84.7(a)], has designated the following person(s) to coordinate its efforts to comply with the HHS regulation:

_____
Name of Designee(s) — Type or Print

Name of Recipient — Type or Print	Street Address
(IRS) Employer Identification Number	City
Area Code — Telephone Number	State Zip

I certify that the above information is complete and correct to the best of my knowledge.

Date	Signature and Title of Authorized Official

If there has been a change in name or ownership within the last year, please PRINT the former name below:

PLEASE RETURN ORIGINAL TO: Office for Civil Rights, Room 5627/B North Building, 330 Independence Avenue, N.W., Washington, D.C. 20201.

RETURN COPY TO: Grants Management Office

HHS-641 (7/84) REV.)
GPO 906-714

HDS GRANTS MANAGEMENT

VOL 53 ISS 77 AP 21 1988 UMI

DEPARTMENT OF HEALTH AND HUMAN SERVICES

PROTECTION OF HUMAN SUBJECTS ASSURANCE/CERTIFICATION/DECLARATION

☐ ORIGINAL ☐ FOLLOWUP ☐ REVISION

☐ GRANT ☐ CONTRACT ☐ FELLOW ☐ OTHER

☐ NEW ☐ RENEWAL ☐ CONTINUATION

APPLICATION IDENTIFICATION NUMBER *(If known)*

STATEMENT OF POLICY: Safeguarding the rights and welfare of subjects at risk in activities supported under grants and contracts from DHHS is primarily the responsibility of the institution which receives or is accountable to DHHS for the funds awarded for the support of the activity. In order to provide for the adequate discharge of this institutional responsibility, it is the policy of DHHS that no activity involving human subjects to be supported by DHHS grants or contracts shall be undertaken unless the Institutional Review Board has reviewed and approved such activity, and the institution has submitted to DHHS a certification of such review and approval, in accordance with the requirements of Public Law 93-348, as implemented by Part 46 of Title 45 of the Code of Federal Regulations, as amended, (45 CFR 46). Administration of the DHHS policy and regulation is the responsibility of the Office for Protection from Research Risks, National Institutes of Health, Bethesda, MD 20205.

1. TITLE OF PROPOSAL OR ACTIVITY

2. PRINCIPAL INVESTIGATOR/ACTIVITY DIRECTOR/FELLOW

3. DECLARATION THAT HUMAN SUBJECTS EITHER WOULD OR WOULD NOT BE INVOLVED

☐ A. NO INDIVIDUALS WHO MIGHT BE CONSIDERED HUMAN SUBJECTS, INCLUDING THOSE FROM WHOM ORGANS, TISSUES, FLUIDS, OR OTHER MATERIALS WOULD BE DERIVED, OR WHO COULD BE IDENTIFIED BY PERSONAL DATA, WOULD BE INVOLVED IN THE PROPOSED ACTIVITY. (IF NO HUMAN SUBJECTS WOULD BE INVOLVED, CHECK THIS BOX AND PROCEED TO ITEM 7. PROPOSALS DETERMINED BY THE AGENCY TO INVOLVE HUMAN SUBJECTS WILL BE RETURNED.)

☐ B. HUMAN SUBJECTS WOULD BE INVOLVED IN THE PROPOSED ACTIVITY AS EITHER: ☐ NONE OF THE FOLLOWING, OR INCLUDING: ☐ MINORS, ☐ FETUSES, ☐ ABORTUSES, ☐ PREGNANT WOMEN, ☐ PRISONERS, ☐ MENTALLY RETARDED, ☐ MENTALLY DISABLED. UNDER SECTION 6. COOPERATING INSTITUTIONS, ON REVERSE OF THIS FORM, GIVE NAME OF INSTITUTION AND NAME AND ADDRESS OF OFFICIAL(S) AUTHORIZING ACCESS TO ANY SUBJECTS IN FACILITIES NOT UNDER DIRECT CONTROL OF THE APPLICANT OR OFFERING INSTITUTION.

4. DECLARATION OF ASSURANCE STATUS/CERTIFICATION OF REVIEW

☐ A. THIS INSTITUTION HAS NOT PREVIOUSLY FILED AN ASSURANCE AND ASSURANCE IMPLEMENTING PROCEDURES FOR THE PROTECTION OF HUMAN SUBJECTS WITH THE DHHS THAT APPLIES TO THIS APPLICATION OR ACTIVITY. ASSURANCE IS HEREBY GIVEN THAT THIS INSTITUTION WILL COMPLY WITH REQUIREMENTS OF *DHHS Regulation 45 CFR 46*, THAT IT HAS ESTABLISHED AN INSTITUTIONAL REVIEW BOARD FOR THE PROTECTION OF HUMAN SUBJECTS AND, WHEN REQUESTED, WILL SUBMIT TO DHHS DOCUMENTATION AND CERTIFICATION OF SUCH REVIEWS AND PROCEDURES AS MAY BE REQUIRED FOR IMPLEMENTATION OF THIS ASSURANCE FOR THE PROPOSED PROJECT OR ACTIVITY.

☐ B. THIS INSTITUTION HAS AN APPROVED GENERAL ASSURANCE (DHHS ASSURANCE NUMBER _____) OR AN ACTIVE SPECIAL ASSURANCE FOR THIS ONGOING ACTIVITY, ON FILE WITH DHHS. THE SIGNER CERTIFIES THAT ALL ACTIVITIES IN THIS APPLICATION PROPOSING TO INVOLVE HUMAN SUBJECTS HAVE BEEN REVIEWED AND APPROVED BY THIS INSTITUTION'S INSTITUTIONAL REVIEW BOARD IN A CONVENED MEETING ON THE DATE OF_____ IN ACCORDANCE WITH THE REQUIREMENTS OF THE *Code of Federal Regulations on Protection of Human Subjects (45 CFR 46)*. THIS CERTIFICATION INCLUDES, WHEN APPLICABLE, REQUIREMENTS FOR CERTIFYING FDA STATUS FOR EACH INVESTIGATIONAL NEW DRUG TO BE USED (SEE REVERSE SIDE OF THIS FORM).

THE INSTITUTIONAL REVIEW BOARD HAS DETERMINED, AND THE INSTITUTIONAL OFFICIAL SIGNING BELOW CONCURS THAT:

EITHER ☐ HUMAN SUBJECTS WILL NOT BE AT RISK; OR ☐ HUMAN SUBJECTS WILL BE AT RISK.

5. AND 6. SEE REVERSE SIDE

7. NAME AND ADDRESS OF INSTITUTION

8. TITLE OF INSTITUTIONAL OFFICIAL	TELEPHONE NUMBER
SIGNATURE OF INSTITUTIONAL OFFICIAL	DATE

HHS-596 (Rev. 5-80)

ENCLOSE THIS FORM WITH THE PROPOSAL OR RETURN IT TO REQUESTING AGENCY.

BEST COPY AVAILABLE

5. INVESTIGATIONAL NEW DRUGS - ADDITIONAL CERTIFICATION REQUIREMENT

SECTION 46.17 OF TITLE 45 OF THE Code of Federal Regulations states: "Where an organization is required to prepare or to submit a certification . . . and the proposal involves an investigational new drug within the meaning of The Food, Drug, and Cosmetic Act, the drug shall be identified in the certification together with a statement that the 30-day delay required by 21 CFR 130.3(a)(2) has elapsed and the Food and Drug Administration has not, prior to expiration of such 30-day interval, requested that the sponsor continue to withhold or to restrict use of the drug in human subjects; or that the Food and Drug Administration has waived the 30-day delay requirement; provided, however, that in those cases in which the 30-day delay interval has neither expired nor been waived, a statement shall be forwarded to DHHS upon such expiration or upon receipt of a waiver. No certification shall be considered acceptable until such statement has been received."

INVESTIGATIONAL NEW DRUG CERTIFICATION

TO CERTIFY COMPLIANCE WITH FDA REQUIREMENTS FOR PROPOSED USE OF INVESTIGATIONAL NEW DRUGS IN ADDITION TO CERTIFICATION OF INSTITUTIONAL REVIEW BOARD APPROVAL, THE FOLLOWING REPORT FORMAT SHOULD BE USED FOR EACH IND: (ATTACH ADDITIONAL IND CERTIFICATIONS AS NECESSARY).

— IND FORMS FILED: ☐ FDA 1571, ☐ FDA 1572, ☐ FDA 1573

— NAME OF IND AND SPONSOR _____

— DATE OF 30-DAY EXPIRATION OR FDA WAIVER
(FUTURE DATE REQUIRES FOLLOWUP REPORT TO AGENCY) _____

— FDA RESTRICTION _____

— SIGNATURE OF INVESTIGATOR _____ DATE _____

6. COOPERATING INSTITUTIONS - ADDITIONAL REPORTING REQUIREMENT

SECTION 46.16 OF TITLE 45 OF THE *Code of Federal Regulations* IMPOSES SPECIAL REQUIREMENTS ON THE CONDUCT OF STUDIES OR ACTIVITIES IN WHICH THE GRANTEE OR PRIME CONTRACTOR OBTAINS ACCESS TO ALL OR SOME OF THE SUBJECTS THROUGH COOPERATING INSTITUTIONS NOT UNDER ITS CONTROL. IN ORDER THAT THE DHHS BE FULLY INFORMED, THE FOLLOWING REPORT IS REQUESTED WHEN APPLICABLE.

USE FOLLOWING REPORT FORMAT FOR EACH INSTITUTION OTHER THAN GRANTEE OR CONTRACTING INSTITUTION WITH RESPONSIBILITY FOR HUMAN SUBJECTS PARTICIPATING IN THIS ACTIVITY: (ATTACH ADDITIONAL REPORT SHEETS AS NECESSARY).

INSTITUTIONAL AUTHORIZATION FOR ACCESS TO SUBJECTS

— SUBJECTS: STATUS (WARDS, RESIDENTS, EMPLOYEES, PATIENTS, ETC.) _____

NUMBER _____ AGE RANGE _____

NAME OF OFFICIAL (PLEASE PRINT) _____

TITLE _____ TELEPHONE _____

NAME AND ADDRESS OF COOPERATING INSTITUTION _____

— OFFICIAL SIGNATURE _____

NOTES: *(e.g., report of modification in proposal as submitted to agency affecting human subjects involvement)*

HHS-596 (Rev. 5-80) (Back)

BILLING CODE 4130-01-C

VOL 53 ISS 77 APR 21 1988 UMI

Executive Order 12372—State Single Points of Contact

ALABAMA

Mrs. Donna J. Snowden, SPOC, Alabama State Clearinghouse, Alabama Department of Economic and Community Affairs, 3465 Norman Bridge Road, Post Office Box 2939, Montgomery, Alabama 36105-0939. Tel. (205) 284-8905.

ALASKA

None.

ARIZONA

Department of Commerce, State of Arizona.

Note: Correspondence & questions concerning this State's E.O. 12372 process should be directed to:

Janice Dunn, ATTN: Arizona State Clearinghouse, 1700 West Washington, Fourth Floor, Phoenix, Arizona 85007. Tel. (602) 255-5004.

ARKANSAS

Joe Gillesbie, Manager, State Clearinghouse, Office of Intergovernmental Services, Department of Finance and Administration, P.O. Box 3278, Little Rock, Arkansas 72203. Tel. (501) 371-1074.

CALIFORNIA

, Office of Planning and Research, 1400 Tenth Street, Sacramento, California 95814. Tel. (916) 323-7480.

COLORADO

State Clearinghouse, Division of Local Government, 1313 Sherman Street, Rm. 520, Denver, Colorado 80203. Tel. (303) 866-2156.

CONNECTICUT

Gary E. King, Under Secretary, Comprehensive Planning Division, Office of Policy and Management, Hartford, Connecticut 06106-4459.

Note: Correspondence & questions concerning this State's E.O. 12372 process should be directed to:

Intergovernmental Review Coordinator, Comprehensive Planning Division, Office of Policy and Management, 80 Washington Street, Hartford, Connecticut 06106-4459. Tel. (203) 566-3410.

DELAWARE

Executive Department, Thomas Collins Building, Dover, Delaware 19903, Attn: Francine Booth. Tel. (302) 736-4204.

FLORIDA

Ron Fahs, Executive Office of the Governor, Office of Planning and Budgeting, The Capitol, Tallahassee, Florida 32301.

GEORGIA

Charles H. Badger, Administrator, Georgia State Clearinghouse, 270 Washington Street, SW—Rm. 608, Atlanta, Georgia 30334. Tel. (404) 656-3855.

HAWAII

Roger A. Ulveling, Director, Department of Planning and Economic Development, P.O. Box 2359, Honolulu, Hawaii 96804, For Information Contact: Hawaii State Clearinghouse. Tel. (808) 548-3016 or 548-3085.

IDAHO

None.

ILLINOIS

Tom Berkshire, Office of the Governor, State of Illinois, Springfield, Illinois 62706. Tel. (217) 782-8639.

INDIANA

Ms. Peggy Boehm, Deputy Director, State Budget Agency, 212 State House, Indianapolis, Indiana 46204. Tel. (317) 233-5604.

IOWA

A. Thomas Wallace, Iowa Dept. of Economic Development, Division of Community Progress, 200 East Grand Avenue, Des Moines, Iowa 50309. Tel. (515) 281-3864.

KANSAS

Martin Kennedy, Intergovernmental Liaison, Department of Administration, Division of Budget, Rm. 152-E, State Capitol Bldg., Topeka, Kansas 66612. Tel. (913) 296-3436.

KENTUCKY

Bob Leonard, Kentucky State Clearinghouse, 2nd Floor, Capital Plaza Tower, Frankfort, Kentucky 40601. Tel. (502) 564-2382.

LOUISIANA

Colby S. La Place, Assistant Secretary, Dept. of Urban & Community Affairs, Office of State Clearinghouse, P.O. Box 94455, Capitol Station, Baton Rouge, Louisiana 70804. Tel. (504) 342-0790.

MAINE

State Planning Office, Attn: Intergovernmental Review Process/Hal Kimbal, State House Station #38, Augusta, Maine 04333. Tel. (207) 289-3154.

MARYLAND

Guy W. Hager, Director, Maryland State Clearinghouse for Intergovernmental Assistance, Department of State Planning, 301 West Preston Street, Baltimore, Maryland 21201-2365. Tel. (301) 225-4490.

MASSACHUSETTS

Executive Office of Communities and Development, Attn: Beverly Boyle, 100 Cambridge Street, Rm. 904, Boston, Massachusetts 02202. Tel. (617) 727-3253.

MICHIGAN

Michelyn Pasteur, Director, Local Development Services, Department of Commerce, P.O. Box 30225, Lansing, Michigan 48909, Tel. (517) 373-3530, Staff Contact: Don Bailey. Tel. (517) 334-6190.

MINNESOTA

Maurice D. Chandler, Intergovernmental Review, Minnesota State Planning Agency, Room 101, Capitol Square Building, St. Paul, Minnesota 55101. Tel. (612) 296-2571.

MISSISSIPPI

Office of Federal State Programs, Department of Planning and Policy, 2000 Walter Sillers Bldg., 500 High Street, Jackson, Mississippi 39202.

For Information Contact:

Mr. Marian Baucum, Department of Planning and Policy. Tel. (601) 359-3150.

MISSOURI

Lois Pohl, Coordinator, Missouri Federal Assistance Clearinghouse, Office of Administration, Division of General Services, P.O. Box 809, Room 760 Truman Building, Jefferson City, Missouri 65102. Tel. (314) 751-4834.

MONTANA

Sue Heath, Intergovernmental Review Clearinghouse, c/o Office of the Lieutenant Governor, Capitol Station, Helena, Montana 59620. Tel. (406) 444-5522.

NEBRASKA

None.

NEVADA

Ms. Jean Ford, Director, Nevada Office of Community Services, Capitol Complex, Carson City, Nevada 89710. Tel. (702) 885-4420.

Note: Correspondence & questions concerning this State's E.O. 12372 process should be directed to:

John Walker, Clearinghouse Coordinator, Tel. (702) 885-4420.

NEW HAMPSHIRE

David G. Scott, Acting Director, New Hampshire Office of State Planning, 2½ Beacon Street, Concord, New Hampshire 03301. Tel. (603) 271-2155.

NEW JERSEY

Mr. Barry Skokowski, Director, Division of Local Government Services, Department of Community Affairs, CN 803, 363 West State Street, Trenton, New Jersey 08625-0803. Tel. (609) 292-6613.

Note: Correspondence & questions concerning this State's E.O. 12372 process should be directed to:

Nelson S. Silver, State Review Process, Division of Local Government Services—CN 803, Trenton, New Jersey 08625-0803. Tel. (609) 292-9025.

NEW MEXICO

Dean Olson, Director, Management and Program Analysis Div., Department of Finance and Administration, Management and Contracts Review Div., Clearinghouse Bureau, Room 424, State Capitol, Santa Fe, New Mexico 87503. Tel. (505) 827-3885.

NEW YORK

Director of the Budget, New York State.

Note: Correspondence & questions concerning this State's E.O. 12372 process should be directed to:

Harold W. Juhre, Jr., New York State Clearinghouse, Division of the Budget, State Capitol, Albany, New York 12224. Tel. (518) 474-1605.

NORTH CAROLINA

Mrs. Chrys Baggett, Director, State Clearinghouse, Department of Administration, 116 West Jones Street, Raleigh, North Carolina 27611. Tel. (919) 733-4131.

NORTH DAKOTA

Bill Robinson, Office of Intergovernmental Assistance, Office of Management and

Budget, 14th Floor, State Capitol, Bismarck, North Dakota 58505. Tel. (701) 224-2094.

OHIO

State Clearinghouse, Office of Budget and Management, 30 East Broad Street, Columbus, Ohio 43215.

For Information Contact:

Mr. Leonard E. Roberts, Deputy Director. Tel. (614) 466-0699.

OKLAHOMA

Don Strain, Oklahoma Dept. of Commerce, Office of Federal Assistance Management, 6601 Broadway Extension, Oklahoma City, Oklahoma 73116. Tel. (405) 843-9770.

OREGON

Intergovernmental Relations Division, State Clearinghouse, Attn: Delores Streeter, Executive Building, 155 Cottage Street NE., Salem, Oregon 97310. Tel. (503) 373-1998.

PENNSYLVANIA

Laine A. Heltebridle, Special Assistant, Pennsylvania Intergovernmental Council, P.O. Box 11880, Harrisburg, Pennsylvania 17108. Tel. (717) 783-3700.

RHODE ISLAND

Daniel W. Varin, Chief, Rhode Island Statewide Planning Program, 265 Melrose Street, Providence, Rhode Island 02907. Tel. (401) 277-2656.

Note: Questions & correspondence concerning this State's review process should be directed to:

Mr. Michael T. Marfeo, Review Coordinator.

SOUTH CAROLINA

Danny L. Cromer, Grant Services, Office of the Governor, 1205 Pendleton Street, Rm. 477, Columbia, South Carolina 29201. Tel. (803) 734-0435.

SOUTH DAKOTA

Sue Korte, State Clearinghouse Coordinator, State Government Operations, Second Floor, Capitol Building, Pierre, South Dakota 57501. Tel. (605) 773-3661.

TENNESSEE

Charles Brown, Tennessee State Planning Office, 1800 James K. Polk Building, 505 Deaderick Street, Nashville, Tennessee 37219. Tel. (615) 741-1676.

TEXAS

Leon Willhite, State Planning Director, Office of the Governor, P.O. Box 13561, Capitol Station, Austin, Texas 78711.

Note: Questions concerning this State's review process should be directed to: Intergovernmental Relations Division. Tel. (512) 463-1814.

UTAH

Dale Hatch, Director, Office of Planning and Budget, State of Utah, 116 State Capitol Building, Salt Lake City, Utah 84114. Tel. (801) 533-5245.

VERMONT

State Planning Office, Attn: Bernie Johnson, Pavilion Office Building, 109 State Street, Montpelier, Vermont 05602. Tel. (802) 828-3326.

VIRGINIA

Nancy Miller, Intergovernmental Affairs Review Officer, Department of Housing and Community Development, 205 North 4th Street, Richmond, Virginia 23219. Tel. (804) 786-4474.

WASHINGTON

Washington Department of Community Development, ATTN: Washington Intergovernmental Review process, Dori Goodrich, Coordinator, Ninth and Columbia Building, Olympia, Washington 98504-4151. Tel. (206) 586-1240.

WEST VIRGINIA

Mr. Fred Cutlip, Director, Community Development Division, Governor's Office of Community and Industrial Development, Building #6, Rm. 553, Charleston, West Virginia 25305. Tel. (304) 348-4010.

WISCONSIN

Secretary James R. Krauser, Wisconsin Department of Administration, 101 South Webster—GEF 2, P.O. Box 7864, Madison, Wisconsin 53707-7864. Tel. (608) 266-1741.

Note: Correspondence and questions concerning this State's E.O. 12372 process should be directed to: Thomas Krauskopf, Federal-State Relations Coordinator, Wisconsin Department of Administration, P.O. Box 7864, Madison, Wisconsin 53707-7864. Tel. (608) 266-8349.

WYOMING

Ann Redman, Wyoming State Clearinghouse, State Planning Coordinator's Office, Capitol Building, Cheyenne, Wyoming 82002. Tel. (307) 777-7574.

DISTRICT OF COLUMBIA

Lovetta Davis, DC State Single Point of Contact for E.O. 12372, Executive Office of the Mayor, Office of Intergovernmental Relations, Rm. 416, District Building, 1350 Pennsylvania Avenue, NW., Washington, DC 20004. Tel. (202) 727-9111.

VIRGIN ISLANDS

Toya Andrew, Federal Program Coordinator, Office of the Governor, The Virgin Islands of the United States, Charlotte Amalie, St. Thomas 00801. Tel. (809) 774-6517.

PUERTO RICO

Ms. Patricia G. Custodio, P.E., Chairman and Isael Soto Marrero, Director, Federal Proposal Review Office, Puerto Rico Planning Board, Minillas Government Center, P.O. Box 41119, San Juan, Puerto Rico 00940-9985. Tel. (809) 727-4444.

NORTHERN MARIANA ISLANDS

Planning and Budget Office, Office of the Governor, Saipan, CM 96950.

AMERICAN SAMOA

None.

GUAM

Guam State Clearinghouse, Office of the Lieutenant Governor, P.O. Box 2950, Agana, Guam 96910.

State Developmental Disabilities Councils

ALABAMA

Joan B. Hannah, Ed.D., Staff Director, Alabama DD Planning Council, 200 InterState Park Dr., P.O. Box 3710, Montgomery, AL 36193-5001. Tel. (205) 271-9278.

ALASKA

Dorothy J. Truran, Executive Director, Developmental Disabilities Planning Council, 600 University Avenue, Suite C, Fairbanks, AK 99701. Tel. (907) 479-6507.

AMERICAN SAMOA

Penei Sewell, Executive Director, Office of Vocational Rehabilitation, American Samoa Government, P.O. Box 3492, Pago Pago, American Samoa 96799. Tel. (684) 633-1805.

ARIZONA

Jon C. Hinz, Executive Director, Governor's Council on DD, 1717 West Jefferson Street, MS 074Z, Phoenix, AZ 85007. Tel. (602) 255-4040.

ARKANSAS

Cindy Hartsfield, Executive Director, Governor's DD Planning Council, Arkansas Health Planning and Development Agency, 4815 West Markham Street, Little Rock, AR 72201. Tel. (501) 661-2589.

CALIFORNIA

James F. Bellotti, Acting Director, State Council on Developmental Disabilities, 1507 21st Street, Room 320, Sacramento, CA 95814. Tel. (916) 322-8481.

COLORADO

William Gorman, Executive Director, Colorado DD Council, 777 Grant, Sutie 410, Denver, CO 80203. Tel. (303) 894-2345.

COMMONWEALTH OF NORTHERN MARIANA

Margaret de la Cruz, Director, Developmental Disabilities Council, c/o Dept. of Education, Office of the Superintendent, Commonwealth of Northern Mariana Islands, Saipan, CNMI 95950.

CONNECTICUT

Edward T. Preneta, Director, Planning Council on DD, Department Mental Retardation, 90 Pitkin Street, East Hartford, CT 06108. Tel. (203) 725-3829.

DELAWARE

James F. Linehan, Administrator, DD Planning Council, Dept. of Community Affairs, Box 1401, Priscilla Building, 156 South State Street, Dover, DE 19901. Tel. (302) 736-4456.

DISTRICT OF COLUMBIA

Phyllis A. Bolden, Executive Director, DD State Planning Council, 605 G Street NW., Rm. 1108, Washington, DC 20001. Tel. (202) 727-0904.

FLORIDA

K. Joseph Krieger, Executive Director, Florida DD Planning Council, 1317 Winewood Blvd., Bldg. 1, Rm. 309, Tallahassee, FL 32301. Tel. (904) 488-4180.

GEORGIA

Zebe Schmitt, Executive Director, Georgia Council on DD, 878 Peachtree St. NE., Room 620, Atlanta, GA 30308. Tel. (404) 894-5790.

GUAM

Mrs. Rosanne S. Ada, Administrator, The State Planning Council for DD, c/o Life Skills

Center, 284 East Hospital Loop, Tamuning, Guam 96911, Tel. (671) 646-8691.

HAWAII

Diana Tizard, Executive Secretary, State Planning Council for DD, P.O. Box 3378, Honolulu, HI 96801, Tel. (808) 548-5994.

IDAHO

John D. Watts, Executive Director, Idaho State Planning Council on DD, 450 West State Street, Boise, ID 83720, Tel. (208) 334-5509, FTS 8-554-4408.

ILLINOIS

Carl Suter, Director, Illinois DD Planning Council, 840 South Spring Street, Springfield, IL 62706, Tel. (217) 782-9696.

INDIANA

Suellen Jackson-Boner, Director, Governor's Planning Council on DD, 117 E. Washington Street, Indianapolis, IN 46204, Tel. (317) 232-7820.

IOWA

Ms. Karon Perlowski, Council Coordinator, Governor's Planning Council for DD, Dept. of Human Services, Hoover State Office Bldg., 5th Floor, Des Moines, IA 50319, Tel. (515) 281-5646.

KANSAS

John Kelly, Executive Director, Kansas Planning Council on DD Services, Dept. of Social and Rehabilitation Services, State Office Bldg., 5th Fl North, Topeka, KS 66612. Tel. (913) 296-2608.

KENTUCKY

Richard Eversman, Executive Director, Kentucky DD Planning Council, Dept. for Mental Health/Mental Retardation Services, 275 East Main Street, Frankfort, KY 40621. Tel. (502) 564-7841.

LOUISIANA

Anne E. Farber, Ph.D., Executive Officer, Louisiana State Planning Council on DD, 721 Government Street, Room 202, Baton Rouge, LA 70802. Tel. (504) 342-6804.

MAINE

Peter Stowell, Exec. Director, Maine Developmental Disabilities Council Nash Building, Capitol and State Streets, Station #139, Augusta, ME 04333. Tel. (207) 289-4213.

MARYLAND

Catherine Raggio, Executive Director, Maryland State Planning Council on DD, One Market Center, Box 10, 300 Lexington Street, Baltimore, MD 21201. Tel. (301) 333-3688.

MASSACHUSETTS

Jody Shaw, Executive Director, Massachusetts DD Council, 600 Washington Street, Rm. 670, Boston, MA 02111. Tel. (617) 727-6374.

MICHIGAN

Elizabeth J. Ferguson, Exec. Director, Michigan Developmental Disabilities Council, Lewis-Cass Bldg., 6th Floor, Lansing, MI 48926. Tel. (517) 373-0341, 373-0342.

MINNESOTA

Colleen Wieck, Ph. D., Executive Director, Minnesota Developmental Disabilities Planning Council, Room 300, 658 Cedar Street, St. Paul, MN 55101. Tel. (612) 296-4018.

MISSISSIPPI

Ed C. Bell, DD Staff Director, Mississippi DD Planning Council, 1307 Woolfolk Building, Jackson, MS 39201. Tel. (601) 359-1290.

MISSOURI

Kay Conklin, Coordinator, Missouri Planning Council for DD, Division of Mental Health & MR/DD, Dept. of Mental Health, P.O. Box 687, 1915 Southridge Drive, Jefferson City, MO 65102. Tel. (314) 751-4054.

MONTANA

Clyde Muirheid, Staff Director, DD Planning Council, P.O. Box 4210, Helena, MT 59601, Tel. (406) 449-8325. FTS 8 585-5011.

NEBRASKA

Mary Gordon, Director, Governor's Planning Council on DD, P.O. Box 95007, Lincoln, NE 685980-5007. Tel (402) 471-2337.

NEVADA

Michael A. Becker, Planning Specialist, Nevada Planning Council for DD, Rehabilitation Division, Dept. of Human Resources, 505 E. King St., Room 502, Carson City, NV 89710. Tel (702) 885-4440, FTS 598-6011.

NEW HAMPSHIRE

Stephen Knapp, Acting Director, New Hampshire Council for DD, 9 South Spring Street, Suite 204, Concord, NH 03301. Tel. (603) 271-3236.

NEW JERSEY

Catherine Rowan, Executive Director, DD Council, State of New Jersey, 108-110 North Broad Street, CN 700, Trenton, NJ 08625. Tel. (609) 292-3745.

NEW MEXICO

Eloisa Lobato, Acting Director, New Mexico DD Planning Council, P.O. Box 968, Santa Fe, New Mexico 87504. Tel. (505) 827-2606.

NEW YORK

Mr. Andrew D. Virgilio, Executive Director, New York State DD Planning Council, One Empire State Plaza, 10th Floor, Albany, NY 12223. Tel. (518) 474-3655.

NORTH CAROLINA

James W. Keene, Exec. Director, North Carolina Council on DD, 325 North Salisbury Street, Albermarle Bldg., Room 615, Raleigh, NC 27611. Tel. (919) 733-6566.

NORTH DAKOTA

Tom Wallner, Director, DD Council, Dept. of Human Services, State Capitol, Bismarck, ND 58505. Tel. (701) 224-2970.

NORTHERN MARIANA ISLANDS

Vacant, Office of the Superintendent, Department of Education, Sapoan, CMNI 96956. Tel. (9) 011-670-9956.

OHIO

Ken Campbell, Developmental Disabilities Program, Ohio DD Planning Council/Dept. of MR/DD, State Office Building, 30 East Broad Street, Room 1280, Columbus, OH 43215. Tel. (614) 466-7203.

OKLAHOMA

William Hilton, DDPC Director, Attention Ray Ashworth, Council Coordinator, Department of Human Resources, P.O. Box 25325, Oklahoma City, OK 73125. Tel. (405) 521-2989.

OREGON

Russ Gurley, Executive Director, Oregon DD Planning Council, MR/DD Program Office, Mental Health Division, 2575 Bittern Street NE., Salem, OR 97310. Tel. (503) 378-2429.

PENNSYLVANIA

David Schwartz, Executive Director, DD Planning Council, Room 569 Forum Building, Commonwealth Ave., Harrisburg, PA 17120. Tel. (717) 787-6057.

PUERTO RICO

Maria Louisa Mendia, Staff Director, Puerto Rico DD Council, P.O. Box 9543, Santurece, PR 00908. Tel. (809) 722-0595.

RHODE ISLAND

Dr. Michael Slachek, Executive Director, Rhode Island DD Council, 600 New London Avenue, Cranston, RI 02920. Tel. (401) 464-3191.

SOUTH CAROLINA

LaNelle C. DuRant, Executive Director, S.C. DD Planning Council, Edgar Brown Building, Room 372, 1205 Pendleton Street, Columbia, SC 29201. Tel. (803) 758-8016.

SOUTH DAKOTA

Thomas E. Scheinost, Program Administrator, Department of Social Services, Office of Program Management, Developmental Disabilities & Mental Health, Richard F. Kneip Bldg., 700 North Illinois Street, Perre, SD 57501. Tel. (605) 773-3438.

TENNESSEE

Wanda Willis, Director, DD Planning Council, Dept. of MH & MR, 706 Church Street, 3rd Floor, Doctor's Building, Nashville, TN 37219. Tel. (615) 741-3807.

TEXAS

Roger A. Webb, Executive Director, Texas Planning Council for DD, 118 East Riverside Drive, Austin, TX 78704. Tel. (512) 445-8867.

UTAH

Frances Morse, Ph.D., Executive Director, Utah Council for Hanidcapped and DD Persons, P.O. Box 11356, Salt Lake City, UT 84147. Tel. (801) 533-6770.

VERMONT

Thomas Pombar, Executive Secretary, Vermont DD Council, Waterbury Office Complex, 103 South Main Street, Waterbury VT 05676. Tel. (802) 241-2612.

VIRGINIA

James Rothrock, Executive Director, Board of Rights of the Disabled, James Madison Building, 101 N. 14th Street, 17th Floor, Richmond, VA 23219. Tel. (804) 225-2042.

VIRGIN ISLANDS

Mark Vinzant, Director, VI DD Council, P.O. Box 2671 Kingshill, St. Croix, U.S. Virgin Islands 00850. Tel. (809) 772-2133.

WASHINGTON

Developmental Disabilities Planning Council, Sharon Hansen, Executive Director,

Ninth & Columbia Bldg. MS-GH-52, Olympia, WA 98504-4151. Tel. (206) 753-3908.

WEST VIRGINIA

Richard Kelly, Director, DD Planning Council, c/o Dept. of Health, 1800 Washington Street, E., Charleston, WV 25305. Tel. (304) 348-2270.

WISCONSIN

Jayn Wittenmyer, Executive Director, Council on DD, State of Wisconsin, P.O. Box 7851, Room 344, Madison, WI 53707-7851. Tel. (608) 266-7826.

WYOMING

Sharron C. Kelsey, Executive Director, Council on DD, Barrett Building, Room 408, Cheyenne, WY 82002. Tel. (307) 777-7230.

[FR Doc. 88- 8748 Filed 4-20-88; 8:45 am]

BILLING CODE 4150-01-M

DEPARTMENT OF THE INTERIOR

Office of the Secretary

Privacy Act of 1974—Revision of Notice of System of Records

Pursuant to the provisions of the Privacy Act of 1974, as amended (5 U.S.C. 552a), notice is hereby given that the Department of the Interior proposes to revise a notice describing a system of records maintained by the Minerals Management Service (MMS). The title of the system notice, which describes records on individuals who have contracts with MMS, is being changed from "Procurement Management Information System" to "Procurement Network System—Interior, MMS-10." No other changes are being made to the notice which is published in its entirety below. The notice was previously published in the **Federal Register** on December 9, 1985 (50 FR 50236).

Since this change does not involve any new or intended use of the information in the system of records, the notice shall be effective on April 21, 1988. Additional information regarding this revision may be obtained from the Department Privacy Act Officer, Office of the Secretary (PMA), Room 2242, Main Interior Building, U.S. Department of the Interior, Washington, DC 20240.

Dated: April 13, 1988.

Oscar W. Mueller, Jr.,

Director, Office of Management Analysis.

INTERIOR/MMS-10

SYSTEM NAME:

Procurement Network System—Interior, MMS-10

SYSTEM LOCATION:

Department of the Interior, Minerals Management Service, Office of Administration, Procurement and General Services Division, Mail Stop 635, 12203 Sunrise Valley Drive, Reston, Virginia 22091.

CATEGORIES OF INDIVIDUALS COVERED BY THE SYSTEM:

Individuals who have contracts with the Minerals Management Service. The records contained in this system which pertain to individuals contain principally proprietary information concerning sole proprietorship. The system also contains records concerning corporations and other business entities that are not subject to the Privacy Act.

CATEGORIES OF RECORDS IN THE SYSTEM:

Records of contract information, from inception of requirement, through contract award, contract administration, and completion of the contract. Also included are copies of contractor and technical and cost proposals, documentation pertaining to the award, contract, miscellaneous correspondence, and information on debts owed by a contractor as a result of overpayment, default, disallowed costs, or other contractual obligation.

AUTHORITY FOR MAINTENANCE OF THE SYSTEM:

40 U.S.C. 481.

ROUTINE USES OF RECORDS MAINTAINED IN THE SYSTEM, INCLUDING CATEGORIES OF USERS AND THE PURPOSES OF SUCH USES:

The primary use of the records is in awarding and administering contracts through their completion. Disclosures outside the Department of the Interior may be made: (1) To the U.S. Department of Justice or in a proceeding before a court or adjudicative body when (a) the United States, the Department of the Interior, a component of the Department, or, when represented by the government, an employee of the Department is a party to litigation or anticipated litigation or has an interest in such litigation, and (b) the Department of the Interior determines that the disclosure is relevant or necessary to the litigation and is compatible with the purpose for which the records were complied; (2) of information indicating a violation or potential violation of a statute, regulation, rule, order, or license, to appropriate Federal, State, local, or foreign agencies responsible for investigating or prosecuting the violation or for enforcing or implementing the statute, rule, regulation, order, or license; (3) to a congressional office from the record of an individual in response to an inquiry the individual has made to the congressional office; (4) to a Federal Agency which has requested information relevant or necessary to its hiring or retention of an employee or issuance of a security clearance, license, contract, grant, or other benefit; (5) to Federal, State, or local Agencies where necessary to obtain information relevant or necessary to the hiring or retention of an employee or issuance of a security clearance, license, contract, grant, or other benefit; (6) to the Department of Commerce for publication in the Commerce Business Daily; (7) to the General Services Administration for entry into the Federal Procurement Data System.

DISCLOSURES TO CONSUMER REPORTING AGENCIES:

Pursuant to 5 U.S.C. 552a(b)(12), disclosures may be made from this system to consumer reporting agencies as defined in the Fair Credit Reporting Act (15 U.S.C. 1681a(f)) or the Federal Claims Collection Act of 1966 (31 U.S.C. 3701(a)(3)).

POLICIES AND PRACTICES FOR STORING, RETRIEVING, ACCESSING, RETAINING, AND DISPOSING OF RECORDS IN THE SYSTEM:

STORAGE:

Maintained in manual and computerized form.

RETRIEVABILITY:

By name of individual contractor and by contract number.

SAFEGUARDS:

Maintained with safeguards meeting the requirements of 43 CFR 2.51 for computer and manual records.

RETENTION AND DISPOSAL:

Retained and disposed of according to General Records Schedule No. 3, Item No. 4.

SYSTEM MANAGER AND ADDRESS:

Chief, Procurement and General Services Division, Mail Stop 635, Minerals Management Service, 12203 Sunrise Valley Drive, Reston, Virginia 22091.

NOTIFICATION PROCEDURE:

Inquiries regarding the existence of a record should be addressed to the System Manager. A written signed request stating that the individual seeks information concerning his/her records is required. (43 CFR 2.60)

RECORD ACCESS PROCEDURES:

Requests for access shall be addressed to the System Manager, signed by the requester and meet the content requirements of 43 CFR 2.63.

CONTESTING RECORD PROCEDURES:

A petition for amendment shall be addressed to the System Manager and meet the requirements of 43 CFR 2.71.

RECORD SOURCE CATEGORIES:

Information comes from the individual contractors.

[FR Doc. 88-8722 Filed 4-20-88; 8:45 am]

BILLING CODE 4310-MR-M

Bureau of Land Management

[MT-921-08-4121-11; M 76694]

Invitation to Participate; Exploration of Coal; Montana

AGENCY: Bureau of Land Management, Montana State Office, Interior.

ACTION: Notice of invitation; Coal Exploration License Application M 76694.

Members of the public are hereby invited to participate with Meridian Minerals Company in a program for the exploration of coal deposits owned by the United States of America in the following described lands located in Yellowstone and Musselshell Counties, Montana:

Principal Meridian, Montana

T. 6 N., R. 27 E.,
Sec. 20, all.
Sec. 28, all.
Sec. 34, all.

640.00 acres Musselshell County, 1280.00 acres Yellowstone County. Total acres: 1920.00.

Any party electing to participate in this exploration program shall notify, in writing, both the State Director, Bureau of Land Management, P.O. Box 36800, Billings, Montana 59107; and Meridian Minerals Company, 5613 DTC Parkway, Englewood, Colorado 80111. Such written notice must refer to serial number M 76694 and be received no later than 30 calendar days after publication of this Notice in the **Federal Register** or 10 calendar days after the last publication of the Notice in the Roundup Record-Tribune, whichever is later. This Notice will be published once a week for 2 consecutive weeks.

The proposed exploration program is fully described and will be conducted pursuant to an exploration plan to be approved by the Bureau of Land Management. Copies of the exploration plan as submitted by Meridian Minerals Company may be examined during normal business hours at the Bureau of Land Management, Montana State Office, Granite Tower Building, 222 North 32nd Street, Billings, Montana.

John A. Kwiatkowski,
Acting State Director.
April 14, 1988.

[FR Doc. 88-8755 Filed 4-20-88; 8:45 am]

BILLING CODE 4310-DN-M

[MT-921-08-4121-10]

Cancellation; Fort Union Federal Coal Production Region and Opening of Regions to Lease Coal in North Dakota and Montana

AGENCY: Bureau of Land Management (BLM), Interior.

ACTION: Notice cancelling the Fort Union Federal Coal Production Region, and opening 36 counties in North Dakota and Montana to lease-by-application.

SUMMARY: On November 9, 1979, in a **Federal Register** notice, the Bureau of Land Management (BLM) established the Fort Union Federal Coal Production Region for management of federally owned coal (44 FR 65196-65197). Recent assessments by the Fort Union Regional Coal Team (RCT) indicate that existing market conditions do not justify the federally initiated coal lease sale program procedures of 43 CFR Subpart 3420. In accordance with 43 CFR 3400.5, this notice decertifies the Fort Union Federal Coal Production Region, allowing the region to lease coal under the lease by application process described at 43 CFR Subpart 3425 (Leasing on Application).

EFFECTIVE DATE: May 23, 1988.

FOR FURTHER INFORMATION CONTACT: William J. Frey, Telephone (406) 657-6841 or FTS 585-6841, Montana State Office, Bureau of Land Management, P.O. Box 36800, Billings, Montana 59107.

SUPPLEMENTARY INFORMATION: The Fort Union Federal Coal Production Region was established by the BLM on November 9, 1979, together with a number of other regions, to implement competitive coal leasing under regulations contained in 43 CFR Subpart 3420. The Fort Union Coal Region includes the following counties:

Montana

Carter, Custer, Daniels, Dawson, Fallon, Garfield, McCone, Prairie, Richland, Roosevelt, Sheridan, Valley, and Wibaux.

North Dakota

Adams, Billings, Bowman, Burke, Burleigh, Divide, Dunn, Golden Valley, Grant, Hettinger, McHenry, McKenzie, McLean, Mercer, Morton, Mountrail, Oliver, Renville, Sheridan, Slope, Stark, Ward, and Williams.

At the November 5, 1987, Fort Union Regional Coal Team meeting, the RCT considered current and projected market conditions, potential for emergency leasing, level of industry interest, and administrative efficiencies. The RCT concluded that regional activity planning, as described under 43 CFR Subpart 3420, is no longer warranted under current market conditions. Accordingly, the RCT recommended that lease by application procedures should be used in lieu of the regional activity planning process.

A **Federal Register** notice of December 24, 1987, and a public mailing solicited comments on the RCT's recommendation to operate in a lease by application mode. Six letters of comment were received from the solicitation. None of the comments were in opposition to the RCT's recommendation to operate using the lease by application procedures.

The expected benefits of operating in the lease-by-application mode are a substantial savings in administrative costs to both the Federal Government and the States of Montana and North Dakota, while retaining a responsive leasing process for the coal industry. No additional social, economic, or environmental impacts are anticipated as a result of this change in the method of leasing. The Fort Union Regional Coal Team will participate in coal lease consideration in the lease-by-application mode. If the demand for Federal coal increases significantly, regional coal activity planning procedures can be reactivated through recertification of the Fort Union Federal Coal Production Region.

In accordance with 43 CFR 3400.5, this notice is to advise the public that the Fort Union Federal Coal Production Region is decertified, thereby declaring that the Federal coal reserves in those counties of Montana and North Dakota listed above will be leased under 43 CFR Subpart 3425 (Lease-by-Application), rather than under 43 CFR 3420.3-3420.6 (Activity planning—The leasing process).

Coal lease applications under 43 CFR Subpart 3425 will be accepted by the BLM for the 36 counties named above. Three copies of an application for a Federal coal lease must be filed in the Montana State Office, Bureau of Land Management, P.O.B. 36800, Billings, Montana 59107.

Robert F. Burford,
Director, Bureau of Land Management.
Date: April 15, 1988.

[FR Doc. 88-8777 Filed 4-20-88; 8:45 am]

BILLING CODE 4314-DN-M

[CO-920-08-4121-10]

Cancellation; Green River-Hams Fork Federal Coal Production Region and Opening of Leasing in Colorado and Wyoming

AGENCY: Bureau of Land Management (BLM), Interior.

ACTION: Notice cancelling the Green River-Hams Fork Federal Coal Production Region and opening the 11 counties in Colorado and Wyoming to lease-by-application.

SUMMARY: On November 29, 1979, the Bureau of Land Management (BLM) established the Green River-Hams Fork Coal Production Region for the Management of federally owned coal (44 FR 65197). Subsequent assessments indicate that industry interest, based on market conditions and existing potential production capacities, does not justify the federally initiated coal lease sale program procedures of 43 CFR 3420.3 through 3420.6. In accordance with 43 CFR 3400.5, this notice decertifies the Green River-Hams Fork Federal Coal Production Region. Further, this notice designates Federal coal reserves in the 11 county area of Colorado and Wyoming as open to lease-by-application in accordance with 43 CFR Subpart 3425.

EFFECTIVE DATE: May 23, 1988.

FOR FURTHER INFORMATION CONTACT: Betsy Daniel, (303) 236-1778, Colorado State Office, Bureau of Land Management, 2850 Youngfield Street, Lakewood, Colorado 80215.

SUPPLEMENTARY INFORMATION: The Green River-Hams Fork Federal Coal Production Region was established by the Bureau of Land Management (BLM) on November 9, 1979, together with a number of other regions to implement competitive coal leasing under regulations contained in 43 CFR Subpart 3420. The Green River-Hams Fork Region includes the following counties: In Colorado-Jackson, Grand, Routt, Moffatt, and Rio Blanco; in Wyoming-Lincoln, Sweetwater, Uinta, Sublette, Albany, and Carbon. The coal production region was estimated to contain sufficient Federal coal deposits to justify offering coal leases through the competitive leasing process set out in 43 CFR 3420.3 through 3420.6.

During its October 9, 1987 meeting in Denver, Colorado, the regional coal team discussed the proposal to operate in a lease-by-application mode. As a result of that meeting, the regional coal team decided to offer an additional opportunity for public comment and the comments received be considered and responded to before a final decision on the subject was made by the Director of BLM.

On December 28, 1987, a decision document on lease-by-application along with a request for public comments was published in the **Federal Register** (Volume 52, No. 248, page 48881). As a result of that notice, two comments were received. Both comments supported leasing-by-application in the Green River-Hams Fork Region.

Therefore, a a result of limited industry interest in additional tracts of Federal coal in this region, coal leasing in the counties listed above will be handled on a lease-by-application basis under 43 CFR 3425.

Although the region is being decertified, the regional coal team will continue to be involved in the lease-by-application process as described in section 6c of its charter.

The Governors of the States of Colorado and Wyoming concur in the recommendation.

The expected benefits are a substantial savings in administrative costs to both the Federal Government and the States of Colorado and Wyoming, while retaining a responsive leasing process for the coal industry. No additional social, economic, or environmental impacts are anticipated as a result of this change in the method of leasing.

In accordance with 43 CFR 3400.5, this notice is to advise the public that the Green River-Hams Fork Federal Coal Production Region is decertified, thereby declaring that the Federal coal reserves in those counties in Colorado and Wyoming listed above will be leased under 43 CFR Subpart 3425 (lease-by-application) rather than under 43 CFR 3420.3 through 3420.6.

Applications under 43 CFR 3425.1-5 shall be accepted by the BLM to lease Federal coal in the 11 counties named above. Three copies of the application shall be filed in the Colorado State Office, Bureau of Land Management, 2850 Youngfield Street, Lakewood, Colorado 80215; or the Wyoming State Office, Bureau of Land Management, 2515 Warren Avenue, P.O. Box 1828, Cheyenne, Wyoming 82003.

Date: April 15, 1988.

Robert F. Burford,

Director, Bureau of Land Management.

[FR Doc. 88-8776 Filed 4-20-88; 8:45 am]

BILLING CODE 4310-JB-M

[ID-020-08-4212-13]

Proposed Amendment to the Malad Management Framework Plan To Allow the Exchange of Public and Private Lands

AGENCY: Bureau of Land Management, Interior.

ACTION: Amend the Malad Management Framework Plan to allow the exchange of public and private lands.

SUMMARY: Notice is hereby given in accordance with 43 U.S.C. 1711-1712 and 43 CFR 1610.2(c) that the Burley District is proposing to amend the Malad Management Framework Plan to allow the exchange of the following described public and private lands:

Offered Lands (Private Land) 39.92 Acres

T.15S., R.30E., Boise Meridian,
Sec. 34: Lot 6 (SE¼NW¼).

Selected Lands (Public Land) 40 Acres

T.16S., R.32E., Boise Meridian,
Sec. 20: NW¼NW¼.

The general location of the selected land is three miles northwest of Stone, Idaho. The location of the offered land is six miles south of the Juniper Exit on I-84.

A land use plan amendment document and a land report will be prepared for the subject lands. The land report and the amendment will be reviewed by BLM interdisciplinary resource specialists. Public participation will involve the publication of this notice in the **Federal Register** and local newspapers. The adjoining landowners, grazing permittees, county commissioners, the Burley District Grazing Advisory Board and Advisory Council, and the Idaho Fish and Game Department will be asked for comments. As public controversy is expected to be low for the proposed exchange, no public meetings, hearings, or conferences are planned.

The main issue that is anticipated for the exchange proposal is whether it is in the public interest to exchange 40 acres of public land to Oneida County to be used for a community landfill in return for 39.92 acres of private land that will be acquired by BLM and managed for livestock grazing and wildlife habitat.

The existing Malad Management Framework Plan and maps are available for review at the Deep Creek Resource Area Office, 138 South Main Street, Malad, Idaho, 83252.

The public may obtain additional information about this exchange proposal by contacting the Bureau of Land Management, ATTN: John R. Christensen, 138 South Main Street,

Malad, Idaho, 83252, telephone (208) 766-4766.

Date: April 15, 1988.

Marvin R. Bagley,

Associate District Manager.

[FR Doc. 88-8756 Filed 4-20-88; 8:45 am]

BILLING CODE 4310-GG-M

[(WY-920-08-4121-11); W-109154]

Invitation for Coal Exploration License; Wyoming

ACTION: Invitation for Coal Exploration License Antelope Coal Company.

SUMMARY: Antelope Coal Company hereby invites all interested parties to participate on a pro rata cost sharing basis in its coal exploration program concerning federally owned coal underlying the following described land in Converse County, Wyoming:

T. 40 N., R. 71 W., 6th P. M., WY
Sec. 13: Lot 8;
T. 41 N., R. 71 W., 6th P. M., WY
Sec. 26: Lots 14, 15;
Sec. 34: Lots 1, 8, 9, 16;
Sec. 35: Lots 8, 9, 10.
Containing 401.91 acres.

All of the coal in the above land consists of unleased Federal coal, within the Power River Basin known coal leasing area. The purpose of the exploration is to define outcropping of coal seams within the area.

ADDRESSES: A detailed description of the proposed drilling program is available for review during normal business hours in the following offices (under serial number W-109154): Bureau of Land Management, 2515 Warren Avenue, Cheyenne, Wyoming 82003; and Bureau of Land Management, 1701 East 'E' Street, Casper, Wyoming 82601.

SUPPLEMENTARY INFORMATION: This notice of invitation will be published in this newspaper once each week for two consecutive weeks beginning the week of April 25, 1987, and in the **Federal Register**. Any party electing to participate in this exploration program must send written notice to both the Bureau of Land Management and Antelope Coal Company no later than 30 days after publication of this invitation in the **Federal Register**. The written notice should be sent to the following addresses: Antelope Coal Company, Attn: Christopher Casson, P.O. Box 66989, St. Louis, Missouri 63166, and the Bureau of Land Management, Wyoming State Office, Branch of Mining Law and Solid Minerals, P.O. Box 1828, Cheyenne, Wyoming 82003.

The foregoing is published in the **Federal Register** pursuant to Title 43 Code of Federal Regulations, § 3410.2-1(c)(1).

Gilbert J. Lucero,

Acting State Director.

[FR Doc. 88-8738 Filed 4-20-88; 8:45 am]

BILLING CODE 4310-22-M

[NV-040-08-4322-12]

Ely District Advisory Council Meeting; Correction

AGENCY: Bureau of Land Management, Interior.

ACTION: Correction.

SUMMARY: In the **Federal Register** Vol. 53, No. 52 published on Thursday, March 17, 1988, on page 8807 after the first line of the third paragraph, the following sentences should be inserted: "A public comment period is scheduled between 6:15 and 6:45 p.m. for anyone wishing to submit oral or written comments. Depending on the number of individuals wishing to make comments, a time limit for each person may have to be set to stay within the established schedule."

Date: April 11, 1988.

Kenneth G. Walker,

District Manager.

[FR Doc. 88-8752 Filed 4-20-88; 8:45 am]

BILLING CODE 4310-HC-M

[AK-919-08-4213-02]

Joint Meeting of the Northern and Southern Alaska Advisory Councils

A joint meeting of the Northern and Southern Alaska Advisory Councils, open to the public, will be held from 9:30 a.m. to 5 p.m. on Tuesday, May 10 and from 9 a.m. to 12 p.m. on Wednesday, May 11, 1988, at BLM's Fairbanks Support Center, 1541 Gaffney Road, Fairbanks (on Fort Wainwright), Alaska.

Briefings will be given to the Council on: surface management issues related to placer mining in Alaska, state selection of lands in the Utility Corridor and other areas of Alaska, progress of BLM-Alaska reorganization, review of Advisory Council structure and relationships, the mineral-potential assessment inventory of the Steese National Conservation Area and the White Mountains National Recreation Area, BLM-Alaska activity priorities, and updates of on-going BLM projects.

Public comments on agenda items will be received by the Council from 9 to 10 a.m. on Wednesday, May 11. Oral comments may be limited by time and it is recommended that public comments be submitted in writing at the meeting.

For further information contact the Public Affairs Office, Bureau of Land Management, 1541 Gaffney Road, Fairbanks, Alaska 88703, telephone (907) 356-2345.

Donald E. Runberg,

Designated District Manager, Northern Alaska/Steese-White Mountains District.

April 15, 1988.

[FR Doc. 88-8739 Filed 4-20-88; 8:45 am]

BILLING CODE 4310-84-JA-M

[WY-040-08-4322-02]

Rock Springs District Advisory Council; Meeting

AGENCY: Bureau of Land Management, Interior.

ACTION: Notice of meeting of the Rock Springs District Advisory Council.

DATE: The meeting is scheduled for Thursday, May 26, 1988, at 9:30 a.m.

ADDRESS: Rock Springs District Office, Bureau of Land Management, Highway 191 North, Rock Springs, Wyoming 82901.

FOR FURTHER INFORMATION CONTACT: Donald Sweep, District Manager, Rock Springs District Office, Bureau of Land Management, P.O. Box 1869, Rock Springs, Wyoming 82902-1869, (307) 382-5350.

SUPPLEMENTARY INFORMATION: The Rock Springs District Advisory Council will meet on Thursday, May 26, 1988, at 9:30 a.m. in the Rock Springs District Office building. The agenda will include general briefings and the realty and access program.

The meeting is open to the public.

Donald H. Sweep,

District Manager.

[FR Doc. 88-8723 Filed 4-20-88; 8:45 am]

BILLING CODE 4310-22-M

[OR-100-84-6310-02; GP8-046]

Roseburg District Advisory Council; Meeting

AGENCY: Bureau of Land Management, Interior.

ACTION: Notice of meeting.

SUMMARY: The District Advisory Council for the Bureau of Land Management, Roseburg District will meet May 27, 1988, beginning at 9:00 a.m. in the Roseburg District Office Auditorium. The agenda will include discussion of State Director Guidance on resource management plans for the 1990s; update on the timber management program, North Umpqua Trail Project, and other district activities; and recognition of volunteer achievements.

ADDRESS: Bureau of Land Management, Roseburg District Office, 777 NW Garden Valley Blvd., Roseburg, OR 97470.

FOR FURTHER INFORMATION CONTACT: Mel Ingeroi, Public Affairs Specialist, Roseburg District, (503) 672-4491. Ext. 245.

SUPPLEMENTARY INFORMATION: An opportunity for interested persons to make oral statements before the Council will be provided at 11:00 a.m. Written statements for the Council can be mailed to the District Manager prior to the meeting or presented to the Council during the meeting. Within 30 days after the meeting, summary minutes will be prepared for distribution and be available for public inspection at the District Office.

M.D. Berg,
District Manager.

Date: April 15, 1988.

[FR Doc. 88-8746 Filed 4-20-88; 8:45 am]

BILLING CODE 4310-22-M

[WY-010-08-4410-08]

Worland District Advisory Council, Wyoming; Meeting

AGENCY: Bureau of Land Management, Interior.

ACTION: Meeting of the Worland District (Wyoming) Advisory Council.

SUMMARY: This notice lists the schedule and agenda of a meeting of the Worland District Advisory Council.

DATES: May 11, 1988, 8:00 a.m. until 6:00 p.m. and May 12, 1988, 8:30 a.m. until 4:00 p.m.

ADDRESS: The first day of the meeting (May 11) will be a tour of portions of the Cody Resource Area. The business meeting to be held May 12, will be at the Holiday Inn, 1701 Sheridan Avenue, Cody, Wyoming.

FOR FURTHER INFORMATION CONTACT: David Stout, Bureau of Land Management, P.O. Box 119, Worland, Wyoming 82401, telephone (307) 347-9871.

SUPPLEMENTARY INFORMATION: The agenda for the meeting will include:

May 11: Tour portions of the Cody Resource Area.

The tour will meet at 8:00 a.m. in Meeteetse, Wyoming, at the U.S. Forest Service Greybull Ranger District Office, 2044 State Street. Members of the public who plan to accompany the tour must provide their own transportation and should bring a sack lunch for the noon meal. The tour will end at the BLM office in Cody at approximately 6:00 p.m.

May 12: Business meeting.

a. Opening remarks, introductions.

b. Review of minutes from the March 10, 1987 meeting.

c. Update on the Washakie Resource Management Plan.

d. Update on the Grass Creek Management Framework Plan.

e. Briefing on the Washakie Forest Management Plan.

f. Briefing on the Grass Creek ORV designations.

g. Update on Grass Creek Resource Area grazing management.

h. Briefing on the Cody Resource Management Plan.

i. Statements from the public, if any.

Darrell C. Barner,
District Manager.

Date: April 14, 1988

[FR Doc. 88-8747 Filed 4-20-88; 8:45 am]

BILLING CODE 4310-22-M

[WY-010-08-4322-10]

Worland District Grazing Advisory Board, Wyoming; Meeting

AGENCY: Bureau of Land Management, Interior.

ACTION: Notice of meeting of the Worland District Grazing Advisory Board.

SUMMARY: Pursuant to the Taylor Grazing Act of 1934, the Public Rangelands Improvement Act of 1978, the Federal Land Policy and Management Act of 1976, and the Executive Order 12548 of February 14, 1986, notice is hereby given of a meeting of the Worland District Grazing Advisory Board to be held at 10:00 a.m., May 25, 1988, in the conference room at the BLM District Office, 101 South 23rd Street, Worland, Wyoming.

DATE: May 25, 1988, 10:00 a.m.

ADDRESSES: Bureau of Land Management, 101 South 23rd Street, Worland, Wyoming.

FOR FURTHER INFORMATION CONTACT: Darrell C. Barnes, District Manager, Worland District Bureau of Land Management, P.O. Box 119, Worland, Wyoming 82401, (307) 347-9871.

SUPPLEMENTARY INFORMATION: The agenda for the meeting will include:

1. Update on range project planning.

2. Review of FY 1988 range improvement projects.

3. Discussion and Recommendations for proposed FY 1989 range improvement projects.

4. Review of current Allotment Management Plan Development.

5. Range Program Update: Grazing Agreements, Grazing Decisions, and Rangeland Monitoring.

6. Opportunity for the public to present information or make comments.

The meeting will be open to the public, interested persons may make oral statements to the Board during the public comment period, or file written statements for the Board's consideration. Anyone wishing to make an oral statement must notify the District Manager in writing by May 18, 1988.

Summary minutes of this meeting will be on file in the District Office and available for a public inspection (during regular business hours) within 30 days of the meeting.

Darrell C. Barnes,
District Manager.

[FR Doc. 88-8757 Filed 4-20-88; 8:45 am]

BILLING CODE 4310-22-M

[AK-070-08-4213-23; F-85976]

Realty Action; Anderson, AK

AGENCY: Bureau of Land Management, Interior.

ACTION: Notice of realty action.

SUMMARY: This notice of realty action proposes twenty-year leases on public lands along the Parks Highway near Anderson, Alaska. The leases are to authorize nine unauthorized occupancies, some since 1962, resulting from an unsuccessful Trade and Manufacturing Site by Sheldon Klinke.

DATE: Comments and applications must be received by June 6, 1988.

ADDRESS: Comments and applications must be submitted to the Kobuk District Manager, 1541 Gaffney Road, Fairbanks, Alaska 99703.

FOR FURTHER INFORMATION CONTACT: Boyce Bush, (907) 356-5380.

SUPPLEMENTARY INFORMATION: Lands are suitable for leasing under the provisions of section 302 of the Federal Land Policy and Management Act of 1976, 43 U.S.C. 1732, 1740, and 43 CFR Part 2920. Lands are selected by the State of Alaska, who desires the unauthorized occupants be granted leases prior to the lands being patented to the State.

Subject lands are approximately 48 acres located in Lots 1 and 2, W½ NE¼, Sec. 36, T. 6 S., R. 8 W., Kateel River Meridian.

Descriptions of each of the nine lots will be provided separately to each occupant.

Applications will be accepted only from persons owning improvements on

the subject land. Evidence of ownership of improvements must be submitted with each application. Pursuant to 43 CFR 2808.3-1(a), a Category 1 processing fee of $125 must be submitted with each application. Specific terms and conditions of the leases shall be consistent with residential use. Annual rental shall be fair market value, to be determined by appraisal.

Roger Bolstad,

Kobuk District Manager.

[FR Doc. 88-8753 Filed 4-20-88; 8:45 am]

BILLING CODE 4310-84-JA-M

[AK-070-08-4213-23; F-578]

Realty Action; Fairbanks, AK

AGENCY: Bureau of Land Management, Interior.

ACTION: Notice of realty action.

SUMMARY: This notice of realty action proposes a twenty year lease for Tolovana Hot Springs located on public lands 45 miles northwest of Fairbanks, Alaska. The proposed lease is a renewal of a lease recently assigned to Tom Delong.

DATE: Comments and application must be received by June 6, 1988.

ADDRESS: Comments and application must be submitted to the Kobuk District Manager, 1541 Gaffney Road, Fairbanks, Alaska, 99703.

FOR FURTHER INFORMATION CONTACT: Boyce Bush, (907) 356-5380.

SUPPLEMENTARY INFORMATION: Lands are suitable for leasing under the provisions of section 302 of the Federal Land Policy and Management Act of 1976, 43 U.S.C. 1732, 1740, and 43 CFR Part 2920.

Subject lands are approximately 160 acres located in Lots 1 and 2, U.S. Survey No. 5610 A, located in T. 5 N., R. 6 W., Fairbanks Meridian. The exact acreage to be leased will be determined during evaluation of the proposal submitted.

Tom Delong managed the hot springs for the prior lessee the last year of the lease. He made substantial improvements to the facility, and greatly increased public use of the hot springs. Prior lessees assigned their interest to Mr. Delong, and the assignment was approved with a preference right of renewal.

Tom Delong is designated bidder for a renewal and only his application will be accepted. Pursuant to 43 CFR 2808.3-1(a), a Category 2 processing fee of $300 must be submitted with the application. Specific terms and conditions of the lease shall be consistent with promoting public use of a hot springs. Annual rental shall be fair market value, to be determined by appraisal.

Roger Bolstad,

Kobuk District Manager.

[FR Doc. 88-8754 Filed 4-20-88; 8:45 am]

BILLING CODE 4310-84-JA-M

[CO-050-4212-21; COC-47716]

Realty Action; Proposed Leasing of Public Land; Colorado

AGENCY: Bureau of Land Management, Interior.

ACTION: Proposed leasing of public land in Chaffee County, Colorado.

SUMMARY: A parcel of land is being considered for lease under section 302 of the Federal Land Policy and Management Act of 1976 (90 Stat. 2762; 43 U.S.C. 1732). Leasing of the land will authorize construction and operation of a commercial go-cart track, and will allow the government to collect fair market rental. The land and prospective lessee are as follows:

Sixth Principal Meridian, CO

T. 14S., R. 78W.,
Sec. 23, SW¼ SW¼.

The proposed go-cart track would cover a parcel of land containing about 10 acres located in an abandoned gravel pit along Chaffee County Road No. 302. Prospective lessees: Thomas Drake and Rick Rucker. The parcel would be offered noncompetitively to the applicants under a 10 year renewable lease at no less than fair market rental. The general terms and conditions for leases are found in 43 CFR 2920.7.

The lessee would be required to reimburse the United States for reasonable costs incurred in processing and monitoring the lease, in accordance with 43 CFR 2920.6.

DATE: For a period up to and including May 23, 1988, interested parties may submit comments to the District Manager, Bureau of Land Management, 3170 East Main Street, Canon City, Colorado 81212.

FOR FURTHER INFORMATION CONTACT: Mark Pyle, Royal Gorge Area Realty Specialist, at 719-275-0631.

Donnie Sparks,

District Manager.

[FR Doc. 88-8724 Filed 4-20-88; 8:45 am]

BILLING CODE 4310-JB-M

[MT-930-08-4220-10; MTM-067221]

Partial Termination of Proposed Withdrawal and Reservation of Lands; Opening Order for Montana

AGENCY: Bureau of Land Management, Interior.

ACTION: Notice.

SUMMARY: Publication of this notice terminates the segregative effect of a proposed withdrawal application requested by the Department of Agriculture on 183.61 acres of national forest lands. This action will open the described lands to location and entry under the mining laws. It has been and will remain open to mineral leasing.

EFFECTIVE DATE: May 23, 1988.

FOR FURTHER INFORMATION CONTACT: Edward H. Croteau, BLM Montana State Office, P.O. Box 36800, Billings, Montana 59107, 406-657-6082.

SUPPLEMENTARY INFORMATION: Segregation of these lands took effect on September 10, 1964, when withdrawal application MTM-067221 was noted to the public land records. On September 29, 1964, a notice of proposed withdrawal of these and other national forest system lands was published in the **Federal Register** at 29 FR 13434, and republished on June 9, 1977, at 42 FR 29567. The purpose of the proposed withdrawal was to protect developed and proposed campgrounds and picnic areas. The protection is no longer needed.

1. The segregative effect is hereby terminated as to the following described lands:

Principal Meridian Kootenai National Forest

Rock Lake Recreation Area

T. 35 N., R. 26 W.,
Sec. 6, lot 6, E½SE¼NW¼, W½SW¼ NE¼ lying west and north of Rock Lake.
Containing 78.61 acres.

Camp 32 Recreation Area

T. 36 N., R. 28 W.,
Sec. 35, S½NW¼SW¼, N½NE¼SW¼ SW¼.
Containing 25.00 acres.

Paul Bunyan Recreation Area

T. 29 N., R. 30 W.,
Sec. 30, W½W½SW¼SE¼, E½SE¼ SW¼, E½SW¼SE¼SW¼, SE¼NE¼ SW¼.
Containing 45.00 acres.

Timberlane Recreation Area

T. 32 N., R. 31 W.,
Sec. 35, W½SW¼NW¼SE¼, SE¼NE¼ SW¼, NE¼SE¼SW¼, E½NW¼ SE¼SW¼, E½SW¼NE¼SW¼.
Containing 35.00 acres.

The areas described aggregate 183.61 acres in Lincoln County.

2. At 9 a.m. on May 23, 1988, the lands will be opened to location and entry under the United States mining laws. Appropriation of any of the lands described in this order under the general mining laws prior to the date and time of restoration is unauthorized. Any such attempted appropriation, including attempted adverse possession under 30 U.S.C. section 38, shall vest no rights against the United States. Acts required to establish a location and to initiate a right of possession are governed by State law where not in conflict with Federal law. The Bureau of Land Management will not intervene in disputes between rival locators over possessory rights since Congress has provided for such determinations in local courts.

John A. Kwiatkowski,

Deputy State Director, Divison of Lands and Renewable Resources.

April 12, 1988.

[FR Doc. 88-8758 Filed 4-20-88; 8:45 am]

BILLING CODE 4310-DN-M

Fish and Wildlife Service

Intent To Prepare an Amendment to the Environmental Impact Statement for the Wilderness Review of the Alaska Peninsula National Wildlife Refuge; Correction

AGENCY: Fish and Wildlife Service, Department of the Interior.

ACTION: Notice of availability: Correction.

SUMMARY: This document corrects a notice of availability that appeared on page 10298 in the **Federal Register** of Wednesday, March 30, 1988. This action is necessary to correct the date when a public hearing on the Wilderness Review Amendment will be held.

FOR FURTHER INFORMATION CONTACT: William Knauer, Resource Support, U.S. Fish and Wildlife Service, 1011 E. Tudor Road, Anchorage, Alaska 99503; telephone (907) 786-3399.

Text

The following correction is made in **Federal Register** Doc. 88-6896 appearing on page 10298:

On page 10298, column two, the second paragraph, under "Date," is corrected to read "A public hearing regarding the amendment to the Environmental Impact Statement on Wilderness Review will be held in the large conference room, U.S. Fish and Wildlife Service Regional Office, 1011 E. Tudor Road, Anchorage, Alaska, 7:00 p.m., May 3, 1988."

Walter O. Stieglitz,

Regional Director.

[FR Doc. 88-8750 Filed 4-20-88; 8:45 am]

BILLING CODE 4310-55-M

Intent To Prepare an Amendment to the Environmental Impact Statement for the Wilderness Review of the Becharof National Wildlife Refuge; Correction

AGENCY: Fish and Wildlife Service, Department of the Interior.

ACTION: Notice of availability: Correction.

SUMMARY: This document corrects a notice of availability that appeared on page 10298 in the **Federal Register** of Wednesday, March 30, 1988. This action is necessary to correct the date when a public hearing on the Wilderness Review Amendment will be held.

FOR FURTHER INFORMATION CONTACT: William Knauer, Resource Support, U.S. Fish and Wildlife Service, 1011 E. Tudor Road, Anchorage, Alaska 99503; telephone (907) 786-3399.

The following correction is made in **Federal Register** Doc. 88-6896 appearing on page 10298:

On page 10298, column three, the second paragraph under "Dates," is corrected to read "A public hearing regarding the amendment to the Environmental Impact Statement on Wilderness Review will be held in the large conference room, U.S. Fish and Wildlife Service Regional Office, 1011 E. Tudor Road, Anchorage, Alaska, 7:00 p.m., May 2, 1988."

Walter O. Stieglitz,

Regional Director.

[FR Doc. 88-8751 Filed 4-20-88; 8:45 am]

BILLING CODE 4310-55-M

DEPARTMENT OF JUSTICE

Drug Enforcement Administration

[Docket No. 86-96]

Jefferson Pharmacy, Inc.; Revocation of Registration

On November 28, 1986, the Deputy Assistant Administrator, Office of Diversion Control, Drug Enforcement Administration (DEA), issued an Order to Show Cause to Jefferson Pharmacy, Inc. (Respondent), of 12620 East Jefferson, Detroit, Michigan, seeking to revoke DEA Certificate of Registration AJ7865465, and to deny any pending applications for renewal of said registration. The statutory basis for the issuance of the Order to Show Cause was that Respondent's continued registration is inconsistent with the public interest, as the term is used in 21 U.S.C. 823(f) and 21 U.S.C. 824(a)(4).

On December 18, 1986, Respondent, through counsel, requested a hearing on the issues raised in the Order to Show Cause. Pursuant to Respondent's request for a hearing, on December 29, 1986, Administrative Law Judge Francis L. Young issued an order for prehearing statements. The order directed counsel for Respondent and the Government to file prehearing statements on or before February 9, 1987, identifying issues to be addressed, witnesses to be called, and documents to be offered at a hearing. The order also contained the following precautionary statement:

> Respondent is cautioned that failure timely to file a prehearing statement as directed [in the order for prehearing statements] * * * may be considered a waiver of hearing and an implied revocation of a request for a hearing.

On February 4, 1987, after concluding that Respondent's continued registration during the pendency of proceedings on the Order to Show Cause would constitute an imminent danger to the public health and safety, the Administrator of the Drug Enforcement Administration issued a subsequent Order to Show Cause and Immediate Suspension of Registration to Respondent. The second Order to Show Cause and Immediate Suspension of Registration were personally served on Mildres R. Hall, R.Ph., the owner and registered pharmacist of Respondent pharmacy, on February 6, 1987.

With respect to the initial Order to Show Cause, Respondent failed to file a prehearing statement, as ordered by the Administrative Law Judge. Based upon Respondent's failure to file a prehearing statement with respect to the initial Order to Show Cause, on March 27, 1987, the Administrative Law Judge determined that Respondent waived its opportunity for a hearing, and subsequently terminated the proceedings before him. In addition, Respondent did not file a request for a hearing on the issues raised in the second Order to Show Cause and Immediate Suspension of Registration.

Since Respondent failed to file a prehearing statement pursuant to its request for a hearing on the issues raised in the initial Order to Show Cause, which caused the Administrative Law Judge to terminate the proceedings in that matter, and Respondent failed to file a request for a hearing on the issues raised in the subsequent Order to Show Cause and Immediate Suspension of

Registration, the Administrator concludes that Respondent has waived its opportunity for a hearing in both matters, and enters this final order based upon the information contained in the investigative file and record of this proceeding as it now appears, pursuant to 21 CFR 1301.54(c), 1301.54(d), and 1301.54(e).

The Administrator finds that on March 13, 1985, in the Recorder's Court for the City of Detroit, Mildres R. Hall, the registered pharmacist and owner of Respondent pharmacy, was indicted on one count of possession with intent to unlawfully deliver a controlled substance, to wit: Methaqualone, a Schedule I controlled substance; one count of possession with intent to unlawfully deliver a controlled substance, to wit: Phenmetrazine, a Schedule II controlled substance; two counts of possession with intent to unlawfully deliver a controlled substance, to wit: codeine, a Schedule II controlled substance; and one count of possession with intent to unlawfully deliver a controlled substance, to wit: Pentazocine, a Schedule IV controlled substance. All offenses are in violation of M.C.L.A. section 333.7401(2)(b), and constitute felony offenses relating to controlled substances, as the term is used in 21 U.S.C. 824(a)(2).

This indictment resulted from an investigation initiated by the DEA Detroit Field Division and local police into the controlled substance handling activities of Mr. Hall. The investigation was initiated based upon information received from a reliable source who claimed that Mr. Hall was selling large quantities of cocaine and other controlled substances out of his residence. Based upon this information, the Wayne County Federal Task Force and the Drug Enforcement Administration conducted surveillance of Mr. Hall's residence. During this surveillance, the officers observed several persons entering Mr. Hall's residence and remaining only for very short periods of time. In addition, the officers searched trash from Mr. Hall's residence which was found to contain used syringes and two containers of a white powder residue which tested positive for the presence of cocaine. Shortly thereafter, officers obtained a warrant to search Mr. Hall's residence. During the search which took place on March 13, 1985, officers and Special Agents seized more than 35,000 dosage units of controlled substances which were strewn about the residence, including methaqualone, cocaine, hydrocodone, methylprylon, diethylproprion, flurazepam and phenmetrazine. Also found in the search were a .44 magnum handgun, a .357 magnum handgun, and three video cameras, all of which were determined to be stolen property.

Following the search of Mr. Hall's residence, the DEA Detroit Field Division obtained an administrative inspection warrant to inspect Respondent pharmacy. The administrative inspection warrant was executed at Respondent pharmacy on March 16, 1985. Controlled substance receiving and dispensing records were obtained pursuant to the warrant, and a controlled substance accountability audit was performed for the period from May 31, 1983, through March 16, 1985. A second accountability audit was simultaneously performed using the additional records and controlled substances obtained from Mr. Hall's residence. The combined results of the audits revealed significant shortages of all controlled substances audited, including shortages of 22,423 dosage units of A.P.C. #3; 31,448 dosage units of APC #4; 337,750 dosage units of Talwin; 473,914 dosage units of Ambenyl; 29,660 dosage units of Bromanyl; 26,431 dosage units of Tylenol #3; 25,585 dosage units of Tylenol #4; 606 dosage units of Empirin #3; 774 dosage units of Empirin #4; and 100 dosage units of Dolophine. The audit also revealed an unexplained overage of 4,024 dosage units of Talacen.

On January 22, 1987, subsequent to Mr. Hall's arrest and the issuance of the initial Order to Show Cause, DEA Detroit Field Division Diversion Investigators conducted a follow-up controlled substance audit of Respondent Pharmacy for the period from March 17, 1985, to January 22, 1987. The audit revealed that: (a) Following his arrest, Mr. Hall continued to order excessive quantities of various controlled substances, several Schedule III codeine-based controlled substances and Schedule V codeine-based cough preparations; (b) the pharmacy did not maintain invoices or receiving records for all controlled substances received; and (c) there was a shortage of 206,500 dosage units of the pharmacy's stock of Talwin, totalling a 100% shortage during the audit period. In fact, the pharmacy had no prescriptions to account for any of the Talwin dispensed during the audit period.

On September 1, 1987, Mildres Hall was convicted of possession of 50 grams of methaqualone, in violation of M.C.L.A. section 333.7401(2)(b), a felony conviction relating to controlled substances. As a result of this conviction, Mr. Hall was fined and placed on probation for a period of two years.

A registrant's felony conviction relating to controlled substances constitutes a sufficient ground to revoke the registrant's DEA Certificate of Registration. See 21 U.S.C. 824(a)(2). In addition, the Administrator has consistently held that the registration of a corporate registrant may be revoked upon a finding that a natural person who is an owner, officer, or key employee, who has some responsibility for the operation of the registrant's business, has been convicted of a felony offense relating to controlled substances. See *Ozie T. Faison d/b/a Smith Discount Drugs*, Docket No. 85–37, 51 FR 16403 (1986); *Diodo Leduc d/b/a Farmacia Leduc*, Docket No. 85–5, 51 FR 12751 (1986); *Spoon's Pharmacy*, Docket No. 84–41, 50 FR 46529 (1985); *Daniel Levine, t/a Gladstone Pharmacy*, Docket No. 84–20, 50 FR 32651 (1985); *Coolidge Drugs, Inc., d/b/a The Apothecary*, 50 FR 31785 (1985); *Medicine Shoppe*, 50 FR 30533 (1985); *B. Ruppe Drugstore, Inc.*, Docket No. 84–16, 50 FR 23203 (1985); and *K & B Successors, Inc.*, Docket No. 82–15, 49 FR 34588 (1984).

In addition to Mr. Hall's felony conviction relating to controlled substances, which in itself is sufficient to support the revocation of Respondent's registration, the Administrator finds that the additional violations by Mr. Hall, both individually and as the owner of Respondent pharmacy, constitute more than sufficient evidence to conclude that Respondent's continued registration would be inconsistent with the public interest. In fact, based upon evidence which revealed that Mr. Hall was illegally distributing large quantities of controlled substances, could not explain huge shortages of controlled substances in the pharmacy, and failed to maintain proper controlled substance records, the Administrator finds that Mr. Hall repeatedly has displayed a total disregard for controlled substances laws and regulations. Thus, the Administrator finds that he can no longer be entrusted with a DEA Certificate of Registration. Therefore, the Administrator concludes that Respondent pharmacy's registration must be revoked, and any pending applications for renewal must be denied.

Accordingly, the Administrator of the Drug Enforcement Administration, pursuant to the authority vested in him by 21 U.S.C. 823 and 824, and 28 CFR 0.100(b), hereby orders that DEA Certificate of Registration AJ7865465, be and it hereby is, revoked; it is further ordered that any pending applications

for renewal of said registration be, and they hereby are, denied.

This order is effective April 21, 1988.

Date: April 15, 1988.

John C. Lawn,

Administrator.

[FR Doc. 88-8726 Filed 4-20-88; 8:45 am]

BILLING CODE 4410-09-M

[Docket No. 87-66]

Medical Center Pharmacy; Revocation of Registration

On August 12, 1987, the Deputy Assistant Administrator, Office of Diversion Control, Drug Enforcement Administration (DEA) issued an Order to Show Cause to Medical Center Pharmacy (Respondent) of 7421 Michigan Avenue, Detroit, Michigan 40210, proposing to revoke the pharmacy's DEA Certificate of Registration AB3045146 and to deny any pending applications for the renewal of such registration as a retail pharmacy under 21 U.S.C. 823(f). The statutory predicate for the proposed action was the controlled substance-related felony conviction of John A. Brzozowski, the co-owner of the pharmacy.

John A. Brzozowski requested a hearing on behalf of Respondent on the issues raised by the Order to Show Cause and the matter was docketed before Administrative Law Judge Francis L. Young. On September 23, 1987, Judge Young issued an order directing both sides to file a prehearing statement on or before October 23, 1987. In the Order for Prehearing Statements, Judge Young specifically stated that, "Respondent is cautioned that failure timely to file a prehearing statement as directed above may be considered a waiver of hearing and an implied revocation of a request for hearing." Government counsel timely filed its prehearing statement, however Respondent never submitted such a filing. The Administrative Law Judge issued a Memorandum and Order Terminating Proceedings on December 7, 1987, which stated that due to Respondent's failure to file a prehearing statement, Respondent is deemed to have waived its opportunity for a hearing. Accordingly, Judge Young terminated the proceedings before him. The Administrator now enters his final order in this matter without a hearing and based on the investigative file. 21 CFR 1301.57.

The Administrator finds that on January 26, 1984, an agent of the Federal Bureau of Investigation had occasion to interview an individual who was being held at the Detroit Police Department. The individual stated that on January 26, 1984, he presented six prescriptions for various Schedule II controlled substances to John A. Brzozowski, the co-owner and then pharmacist of Respondent. Mr. Brzozowski then filled all of these prescriptions for the individual. The individual further stated that Mr. Brzozowski routinely filled multiple prescriptions for Schedule II controlled substances for the individual.

The agent then interviewed Mr. Brzozowski on or about August 24, 1984. During the course of the interview, Mr. Brzozowski admitted that he filled the six prescriptions for controlled substances for the individual on January 26, 1984, in exchange for $450.00. He further stated that he had similar dealings with the individual on approximately six different occasions. In addition, Mr. Brzozowski admitted that he dispensed Dilaudid, Percodan and other Schedule II controlled substances knowing that the drugs would be resold on the street.

On or about January 2, 1986, a one count information was filed in the United States District Court for the Eastern District of Michigan charging John A. Brzozowski with the unlawful distribution of a Schedule II narcotic controlled substance in violation of 21 U.S.C. 841(a)(1). On or about January 24, 1986, Mr. Brzozowski was convicted, following his guilty plea, of the charge alleged in the information. This is a felony offense relating to controlled substances.

The Administrator of DEA has consistently held that the registration of a pharmacy may be revoked, suspended or denied as a result of the controlled substance handling practices of the pharmacy's owner, majority shareholder, officers, managing pharmacist or other key employee. See, *White's Best Buy Drugs*, Docket No. 87-41, 53 Fed. Reg. 7251 (1988); *Unarex of Plymouth Road, d.b.a. Motor City Prescription and Unarex of Dearborn, d.b.a. Motor City Prescription Center*, Docket Nos. 84-1 and 84-2, 50 Fed. Reg. 6077 (1985); *Bourne Pharmacy, Inc.*, Docket No. 83-32, 49 FR 32816 (1984); and cases cited therein. In the instant case, Respondent's co-owner was convicted of a controlled substance-related felony. Therefore, lawful grounds exist for the revocation of Respondent's DEA registration. 21 U.S.C. 824(a)(2). No evidence of explanation or mitigating circumstances has been offered on behalf of the registrant. Therefore, the Administrator concludes that the registration must be revoked.

Accordingly, the Administrator of the Drug Enforcement Administration, pursuant to the authority vested in him by 21 U.S.C. 823 and 824 and 28 CFR 0.100(b), hereby orders that DEA Certificate of Registration AB3045146, previously issued to Medical Center Pharmacy, be, and it hereby is, revoked, and any pending applications for the renewal of such registration, be, and they hereby are, denied. This order is effective May 23, 1988.

Date: April 15, 1988.

John C. Lawn,

Administrator.

[FR Doc. 88-8727 Filed 4-20-88; 8:45 am]

BILLING CODE 4410-09-M

[Docket No. 87-75]

Holme Drug Store, Philadelphia, PA; Hearing

Notice is hereby given that on October 28, 1987, the Drug Enforcement Administration, Department of Justice, issued to Daniel H. Stein, d/b/a/ Holme Drug Store, an Order to Show Cause as to why the Drug Enforcement Administration should not revoke your DEA Certificate of Registration AH2343438 and deny any pending applications for registration.

Thirty days having elapsed since the said Order to Show Cause was received by Respondent, and written request for a hearing having been filed with the Drug Enforcement Administration, notice is hereby given that a hearing in this matter will be held on Wednesday, April 27, 1988, commencing at 10:00 a.m., at the U.S. Claims Court, Courtroom 10, Room 309, 717 Madison Place, NW., Washington, DC.

Dated: April 15, 1988.

John C. Lawn,

Administrator, Drug Enforcement Administration.

[FR Doc. 88-8728 Filed 4-20-88; 8:45 am]

BILLING CODE 4410-09-M

NATIONAL AERONAUTICS AND SPACE ADMINISTRATION

[Notice 88-38]

NASA Advisory Council (NAC), Space Systems and Technology Advisory Committee (SSTAC); Meeting

AGENCY: National Aeronautics and Space Administration.

ACTION: Notice of meeting.

SUMMARY: In accordance with the Federal Advisory Committee Act, Pub. L. 92-463, as amended, National Aeronautics and Space Administration

announces a forthcoming meeting of the NASA Advisory Council, Space Systems and Technology Advisory Committee, Ad Hoc Review Team on Lunar and Planetary Mission Propulsion.

DATE AND TIME: May 12, 1988, 8:30 a.m. to 4 p.m.

ADDRESS: Princeton University, Eisenhart Conference Room, Energy Research Lab, Engineering Quadrangle, Princeton, NJ 08544.

FOR FURTHER INFORMATION CONTACT: Mr. John F. Stocky, Jet Propulsion Laboratory, 4800 Oak Grove Drive, Pasadena, CA 91109.

SUPPLEMENTARY INFORMATION: The NAC Space Systems and Technology Advisory Committee (SSTAC) was established to provide overall guidance to the Office of Aeronautics and Space Technology (OAST) on space systems and technology programs. Special ad hoc review teams are formed to address specific topics. The Ad Hoc Review Team on Lunar and Planetary Mission Propulsion, chaired by Dr. Robert Jahn, is comprised of 9 members. The meeting will be open to the public up to the seating capacity of the room (approximately 30 persons including the team members and other participants).

Type of Meeting: Open.

Agenda:

May 12, 1988

8:30 a.m.—Presentations on Team Final Report.

1 p.m.—General Discussion and Recommendations for Final Report.

4 p.m.—Adjourn.

April 13, 1988.

Ann Bradley,

Advisory Committee Management Officer, National Aeronautics and Space Administration.

[FR Doc. 88-8704 Filed 4-20-88; 8:45 am]

BILLING CODE 7510-01-M

NATIONAL SCIENCE FOUNDATION

Advisory Panel for Cell Biology; Meeting

Name: Advisory Panel for Cell Biology.

Date and Time: Monday, Tuesday, and Wednesday, May 16, 17, and 18, 1988, from 9:00 am to 5:00 pm.

Place: Room 1242, 1800 G Street, NW., Washington, DC 20550.

Type of Meeting: Closed.

Contact Person: Dr. M.V. Parthasarathy, Program Director, Cell Biology Program, Room 321. Telephone: 202-357-7474.

Agenda: To review and evaluate research proposals as part of the selection process for awards.

Reason for Closing: The proposals being reviewed include information of a proprietary or confidential nature, including technical information; financial data, such as salaries and personal information concerning individuals associated with the proposals. These matters are within exemptions (4) and (6) of 5 U.S.C. 552b(c), Government in the Sunshine Act.

M. Rebecca Winkler,

Committee Management Officer.

April 12, 1988.

[FR Doc. 88-8759 Filed 4-20-88; 8:45 am]

BILLING CODE 7555-01-M

Advisory Committee for Critical Engineering Systems Division; Meeting

Name: Advisory Committee for Critical Engineering Systems Division.

Date and Time:

May 12

9:00 a.m.-5:00 p.m.

May 13

9:00 a.m.-4:00 p.m.

Place: State Plaza Hotel, 2117 E Street NW., Washington, DC 20037.

Type: Open.

Contact: Dr. Michael P. Gaus, Acting Division Director, Critical Engineering Systems, National Science Foundation, 1800 G Street NW.—Room 1132, Washington, DC 20550, Phone: 202-357-9545.

Minutes: "May be obtained from contact person listed above."

Purpose of Meeting: To provide advice and recommendations concerning fundamental research for critical engineering systems.

Agenda: Review of research content of the following research programs: Earthquake Hazard Mitigation, Environmental Engineering, Systems Engineering for Large Structures along with plans for the future.

April 18, 1988.

M. Rebecca Winkler,

Committee Management Officer.

[FR Doc. 88-8760 Filed 4-20-88; 8:45 am]

BILLING CODE 7555-01-M

Advisory Panel for Development Biology; Meeting

The National Science Foundation announces the following meeting.

Name: Advisory Panel for Developmental Biology.

Date and Time: May 11, 12, 13, 1988, starting at 9:00 a.m. to 5:00 p.m.

Place: National Science Foundation, 1800 G Street NW., Conference Room, 543.

Type of Meeting: Closed.

Contact Persons: Dr. Ralph Hecht, Program Director or Dr. Judith Plesset, Assistant Program Director for Developmental Biology, Room 321, Telephone number: 202/357-7989.

Purpose of Advisory Panel: To provide advice and recommendations concerning support of research in developmental biology.

Agenda: To review and evaluate research proposals as part of the selection process for awards.

Reason for Closing: The proposals being reviewed include information of a proprietary or confidential nature including technical information; financial data, such as salaries, and the personal information concerning individuals associated with the proposal. These matters are within exemptions (4) and (6) of 5 U.S.C. 552(c), Government in the Sunshine Act.

M. Rebecca Winkler,

Committee Management Officer.

April 18, 1988.

[FR Doc. 88-8761 Filed 4-20-88; 8:45 am]

BILLING CODE 7555-01-M

DOE/NSF Nuclear Science Advisory Committee; Meeting

The National Science Foundation announces the following meeting:

Name: DOE/NSF Nuclear Science Advisory Committee.

Date and Time: May 11, 1988; 9:00 am-12:00 noon; 1:30 pm-5:00 pm.

Place: Kolker Room 26-414, Massachusetts Institute of Technology, 77 Massachusetts Avenue, Cambridge, MA 02139.

Type of Meeting: Open.

Contact Person: Karl A. Erb, Program Director for Nuclear Physics, National Science Foundation, Washington, DC 20550, (202) 357-7993.

Minutes: May be obtained from contact person listed above.

Purpose of Meeting: To advise the National Science Foundation and the Department of Energy on scientific priorities within the field of basic nuclear science research.

Agenda:

9:00 am-12:00 noon

—Report on NSF Budgets and Programs

—Report on DOE Budgets and Programs

—Discussion of Theory Subcommittee Report

1:30 pm-5:00 pm

—Report on Activities of 1988 NSAC Instrumentation Subcommittee

—Discussion of NSAC Activities Concerning KAON

—Discussion of Conference Coordination

—General Discussion and Comment.

M. Rebecca Winkler,

Committee Management Officer.

April 18, 1988.

[FR Doc. 88-8762 Filed 4-20-88; 8:45 am]

BILLING CODE 7555-01-M

Advisory Committee for Electrical, Communications, and Systems Engineering; Meeting

National Science Foundation announces the following meeting:

Name: Advisory Committee for Electrical, Communications, and Systems Engineering.

Date: May 16 and 17, 1988.

Time: May 16—10:00 am to 5:30 pm; May 17—9:00 am to 12:30 pm.

Place: National Science Foundation, Conference Room 643, Washington, DC.

Type of Meeting: Open.

Contact Person: Dr. Allen R. Stubberud, Division Director, Division of Electrical, Communications and Systems Engineering, Room 1151, National Science Foundation, Washington, DC., Telephone: 202-357-9618.

Purpose of Committee: To discuss research trends and opportunities and to advise on priorities in resource management.

Agenda:

—Presentations by individual ECSE Program Directors

—Management of resources

—Issues and priorities

—Trends and opportunities in electrical engineering research

—Relation to other NSF activities and new initiatives.

April 18, 1988.

M. Rebecca Winkler,

Committee Management Officer.

[FR Doc. 88-8763 Filed 4-20-88; 8:45 am]

BILLING CODE 7555-01-M

Advisory Panel for the Prokaryotic Genetics Program; Meeting

The National Science Foundation announces the following meeting:

Name: Advisory Panel for the Prokaryotic Genetics Program.

Date and Time: May 16, 17, and 18, 1988 from 9:00 a.m. to 5:00 p.m. each day and completed by noon on Wednesday.

Place: National Science Foundation, 1800 G Street NW., Room 540, Washington, DC 20550

Type of Meeting: Closed.

Contact Person: Dr. Marcus Rhoades, Director Prokaryotic Genetics, Room 325, Phone: (202) 357-9687.

Summary Minutes: May be obtained from the Contact Person at the above address.

Purpose of Meeting: To provide advice and recommendations concerning support for research.

Agenda: To review and evaluate research proposals as part of the selection process for awards.

Reason for Closing: The proposals being reviewed include information of a proprietary or confidential nature, including technical information; financial data, such as salaries and personal information concerning individuals associated with the proposals. These matters are within exemptions (4) and (6) of 5 U.S.C. 552 b (c), Government in the Sunshine Act.

Rebecca Winkler,

Committee Management Officer.

April 18, 1988.

[FR Doc. 88-8764 Filed 4-20-88; 8:45 am]

BILLING CODE 7555-01-M

United States Antarctic Program Safety Review Panel; Meeting

The National Science Foundation announces the following meeting:

Name: United States Antarctic Program (USAP) Safety Review Panel.

Date: May 16 and 17, 1988.

Time: 8:30 a.m. to 5:00 p.m., both days.

Place: Omni Georgetown Hotel (Smithsonian Room) 2121 P Street NW.; Washington, DC.

Type of Meeting: Open.

Contact Person: Mr. Russell L. Schweickart, Chairman, USAP Safety Review Panel, Room H-217, National Science Foundation, Washington, DC 20550, Telephone (202) 634-4892.

Minutes: May be obtained from contact person listed above.

Purpose of Meeting: Review safety issues as they relate to the U.S. presence in Antarctica.

Agenda: Continue Panel's work on its report.

M. Rebecca Winkler,

Committee Management Officer.

April 18, 1988.

[FR Doc. 88-8765 Filed 4-20-88; 8:45 am]

BILLING CODE 7555-01-M

NUCLEAR REGULATORY COMMISSION

[Docket Nos. 50-250 and 50-251]

Florida Power and Light Co.; Environmental Assessment and Finding of No Significant Impact

The U.S. Nuclear Regulatory Commission (the Commission) is considering issuance of amendments to the Florida Power and Light Company (the licensee) for the Turkey Point Plant, Unit Nos. 3 and 4, located in Dade County, Florida.

Environmental Assessment

Identification of Proposed Action

The proposed amendments would delete the remaining Turkey Point Plant Environmental Technical Specifications (ETS) Sections 1.0 and 5.0 and replace the ETS with an Environmental Protection Plan, which would be incorporated by reference in the licenses. The requirements of Sections 1.0 and 5.0 of the ETS which are still applicable would be included in the Environmental Protection Plan.

The Need for the Proposed Action

The staff has previously issued amendments which deleted the nonradiological and radiological environmental monitoring programs and requirements from the ETS, Appendix B to Operating License Nos. DPR-31 and DPR-41. Amendments 93/87, issued March 11, 1983, deleted the nonradiological water quality-related requirements. Amendments 100/94, issued January 4, 1984, deleted the nonradiological monitoring programs related to terrestrial, biological, and physical monitoring. Amendments 105/99, issued August 24, 1984, deleted the groundwater monitoring requirements and other environmental protection limits. These nonradiological monitoring requirements are now regulated by the Environmental Protection Agency (EPA) and other Federal, State and Local Ervironmental Agencies. Amendments 103/97, issued April 23, 1984, transferred the radiological monitoring requirements from Appendix B to Appendix A of the Technical Specifications. Hence, the radiological monitoring requirements continue to be regulated by the NRC.

Due to the above-mentioned changes, what remains of the ETS, Sections 1.0 and 5.0, are definitions and administrative procedures. For this reason, the licensee has proposed deleting the ETS and replacing it with an Environmental Protection Plan which incorporates these administrative procedures.

Environmental Impacts of the Proposed Action

The proposed amendments would only replace administrative requirements currently contained in Appendix B with similar requirements in the Environmental Protection Plan. The proposed amendments do not relate to radiological monitoring requirements and accordingly, the Commission concludes that this proposed action would not result in any radiological environmental impact.

With regard to potential nonradiological impacts, the proposed change to the TS does not affect nonradiological plant effluents and has no other environmental impact. Therefore, the Commission concludes that there are no significant nonradiological environmental impacts associated with the proposed amendments.

Alternatives to the Proposed Action

Since the Commission concluded that there are no significant environmental effects that would result from the proposed action, any alternatives with

equal or greater environmental impacts need not be evaluated.

The principal alternative would be to deny the requested amendments. This would not reduce environmental impacts of plant operation and would result in reduced operational flexibility.

Alternative Use of Resources

This action does not involve the use of any resources not previously considered in the Final Environmental Statements for Turkey Point Units 3 and 4.

Agencies and Persons Consulted

The NRC staff reviewed the licensee's request and did not consult other agencies or persons.

Finding of No Significant Impact

The Commission has determined not to prepare an environmental impact statement for the proposed license amendments.

Based upon the foregoing environmental assessment, we conclude that the proposed action will not have a significant effect on the quality of the human environment.

For further details with respect to this action, see the request for amendments dated April 16, 1987, which is available for public inspection at the Commission's Public Document Room, 1717 H Street, NW., Washington, DC and at the Environmental and Urban Affairs Library, Florida International University, Miami, Florida 33199.

Dated at Rockville, Maryland, this 14th day of April 1988.

For the Nuclear Regulatory Commission.

Herbert N. Berkow,

Director, Project Directorate II-2, Division of Reactor Projects I/II, Office of Nuclear Reactor Regulation.

[FR Doc. 88-8767 Filed 4-20-88; 8:45 am]

BILLING CODE 7590-01-M

[Docket No. 50-293]

Boston Edison Co.; Pilgrim Nuclear Power Station

Exemption

I.

The Boston Edison Company (BECo), the licensee, is the holder of Operating License No. DPR-35 which authorizes operation of Pilgrim Nuclear Power Station. The license provides, among other things, that the Pilgrim Nuclear Power Station is subject to all rules, regulations, and Orders of the Commission now or hereafter in effect.

The plant is a boiling water reactor at the licensee's site located in Plymouth County, Massachusetts.

II.

On November 19, 1980, the Commission published a revised Section 50.48 and a new Appendix R to 10 CFR Part 50 regarding fire protection features of nuclear power plants (45 FR 76602). The revised Section 50.48 and Appendix R became effective on February 17, 1981. Section III of Appendix R contains 15 subsections, lettered A through O, each of which specifies requirements for a particular aspect of the fire protection features at a nuclear power plant. One of these subsections, III.G.1.(a), is the subject of the licensee's exemption request.

Section III.G.1.(a) of Appendix R to 10 CFR Part 50, requires that fire protection features be provided for structures, systems, and components important to safe shutdown. The features are required by regulation to be capable of limiting fire damage such that at least one train of each system necessary to achieve and maintain hot shutdown from either the Control Room or emergency control station(s) is free of fire damage without the need for operator actions classified as repairs.

III.

By letter dated October 2, 1987, BECo, requested exemptions from 10 CFR Part 50, Appendix R, Item III.G.1.(a) requirement, for performing repairs for maintaining plant hot shutdown following a fire in any one of certain plant areas. Specifically, the licensee proposes replacing fuses in the control circuits for RHR valves in the torus cooling mode of RHR operation which may get blown due to a fire in Fire Area (FA) 3.1 (Control Room), 3.2 (Cable Spreading Room) or 1.9 (Reactor Building, Elevation 23', East side). Additionally, the licensee proposes installing a jumper wire in the control circuit for a required cooling fan that may get disabled due to a fire in FA 1.9.

The licensee indicated that for a fire in FA 3.1 or 3.2, the Reactor Core Isolation Cooling (RCIC) and Residual Heat Removal (RHR) in the torus cooling mode will be used to achieve and maintain safe shutdown. The licensee also indicated that for a fire in FA 1.9, the RHR in the torus cooling mode can be used with other applicable systems to achieve and maintain safe shutdown. The licensee, however, identified an electrical isolation deficiency associated with the torus cooling mode of RHR operation which could compromise the capability to maintain hot shutdown following certain fire events. Specifically, the licensee's analysis of postulated fires in plant areas indicated that a fire in any one of 3 fire areas (FA 3.1, 3.2 or 1.9) can cause damage to the remote control circuits for the 5 valves required for torus cooling. This damage could result in blowing the associated control power fuses that are common to both the remote and local control circuits for these valves and consequently compromise the local control capability for these valves. Since this event could blow fuses in both divisions, this would not conform to Appendix R, III.G.1.

The transferring of the control of the needed valves from the control room to a local control station (i.e., alternate shutdown panel) will not be sufficient to ensure local control of these valves. Control would be lost if their common fuses are blown prior to such transfer. To ensure local control of the 5 valves, the licensee proposes to replace the blown control power fuses for the affected valves in a timely manner after effecting the transfer of the 5 valves to local control. Specifically, for a fire in any one of the above 3 areas, the licensee proposes to transfer control of the needed valves from the control room to an alternate shutdown panel (ASP) located in a fire area different from the affected fire area using the respective transfer switches for the valves on the panel and replace the blown fuses at the MCC located adjacent to the ASP. One of two sets (i.e., each set containing one ASP and one adjacent MCC) associated with the valves of the corresponding train of two RHR trains will be utilized depending upon the fire location. One of these sets is located in FA 1.9 and the other is located in FA 1.10 (Reactor Building Elevation 23', West side). For a fire in FA 3.1 or 3.2, the licensee will use either of these sets; for a fire in FA 1.9, the set located in FA 1.10 will be used. At any one time, no more than 5 fuses will need to be replaced and the need for replacement will be identified by the absence of indicating lights above the respective control switches for the valves.

The licensee has indicated that sufficient time will be available for replacing the blown fuses since they have confirmed that a single operator can replace 5 fuses within 20 minutes. General Electric Company (GE) has determined that at least 2 hours are available to perform these replacements before torus cooling will be required. The fuses are correctly sized and clearly marked for use and all necessary tools and additional spare fuses will be maintained nearby. Adequate lighting has been provided for the MCC cubicles containing the fuses to facilitate fuse replacement. In this context, the staff notes that the fuse replacement will not

result in undue operator hazard since it involves only control power fuses.

The licensee indicated that a fire in FA 1.9 can additionally disable control of a fan which, in turn, will disrupt the cooling of the area in the Reactor Building housing various needed hot shutdown components. The licensee has calculated that 8 hours after loss of area cooling, the area temperature can rise to 209 °F, the value established for environmental qualification for the equipment in the area. The licensee proposes to install a jumper wire (hot shutdown repair) in the fan control circuit at the applicable MCC (located in FA 1.10) which is outside the affected fire area. Sufficient time will be available for the jumper wire installation since the task can be completed in less than one hour. The licensee further indicated that the properly sized jumper will be kept in one of the alternate shutdown tool boxes (located in switch gear rooms).

The licensee has committed to implement the above procedures prior to plant startup from the current refueling outage (RFO) No. 7. The procedures for plant shutdown outside the control room (at the ASP) include all actions to be taken for fuse replacement, when they are to be taken, and identify the MCC and the breaker number for each component whose fuse may require replacement. Supplemental procedures on post-fire shutdown in specific areas including the Reactor Building are being developed (to be completed and implemented prior to plant startup from RFO No. 71). These will give instructions to the operators as to when and how to install the jumper wire. The licensee committed to train the operators in the above procedures prior to startup.

The manual actions including the hot shutdown fuse replacement, meet the intent and purpose of IE Information Notice No. 85-09, "Isolation Transfer Switches and Post-Fire Shutdown Capability," dated January 31, 1985. The staff has further determined that the other proposed hot shutdown repair requiring jumper wire installation to facilitate performance of a support function (cooling an area to maintain hot shutdown) can be completed in a timely manner so as not to compromise maintaining hot shutdown.

Based on the above evaluation, the staff concludes that application of the regulation in these particular circumstances is not necessary to achieve the underlying purpose of Appendix R to 10 CFR Part 50. The licensee's existing fire protection configuration, including the proposed manual actions, provides an equivalent level of protection to that achieved by compliance with Section III.G.1(2) of Appendix R.

Therefore, the licensee's request for an exemption to the requirements of Section III.G.1.(a) of Appendix R in relation to the need of manual actions including the above hot shutdown repairs should be granted.

IV.

Accordingly, the Commission has determined, pursuant to 10 CFR 50.12(a), that (1) the exemption as described in Section III is authorized by law, will not present an undue risk to the public health and safety, and is consistent with the common defense and security and (2) in this case, special circumstances are present in that application of the regulation is not necessary to achieve the underlying purpose of Appendix R to 10 CFR Part 50. Therefore, the Commission hereby grants the exemption from the requirements of Section III.G.1.(a) of Appendix R to 10 CFR Part 50 regarding the ability to achieve and maintain hot shutdown from either the Control Room or emergency control station(s) without the need of operator actions classified as repairs.

Pursuant to 10 CFR 51.32, the Commission has determined that the granting of this exemption will not result in any significant environmental impact (53 FR 12484). A copy of the licensee's request for exemption dated October 2, 1987 is available for public inspection at the Commission's Public Document Room, 1717 H Street, NW., Washington, DC and at the Plymouth Public Library, 11 North Street, Plymouth, Massachusetts 02360. Copies may be obtained upon written request addressed to the U.S. Nuclear Regulatory Commission, Washington, DC 20555, Attention: Director, Division of Reactor Projects I/II.

This Exemption is effective upon issuance.

Dated at Rockville, Maryland, this 14th day of April 1988.

For the Nuclear Regulatory Commission.

Bruce A. Boger,

Acting Director, Division of Reactor Projects I/II, Office of Nuclear Reactor Regulation.

[FR Doc. 88-8768 Filed 4-20-88; 8:45 am]

BILLING CODE 7590-01-M

[Docket Nos. 50-369 and 50-370]

Duke Power Co.; Consideration of Issuance of Amendments to Facility Operating Licenses and Opportunity for Hearing

The United States Nuclear Regulatory Commission (the Commission) is considering issuance of amendments to Facility Operating Licenses Nos. NPF-9 and NPF-17 issued to Duke Power Company (the licensee), for operation of the McGuire Nuclear Station, Units 1 and 2, located in Mecklenburg County, North Carolina.

The amendments would revise Technical Specification (TS) 3/4.7.13 "Groundwater Level" and referenced Table 3.7-7 "Groundwater Level Monitors." TS 3.7.13 presently requires that groundwater level be maintained at specified levels as determined from eleven interior and exterior groundwater level monitors situated in or near the Reactor Buildings, the Auxiliary Building and the Diesel Generator Buildings. The proposed change would delete the groundwater monitors for the Reactor Buildings and the Diesel Generator Buildings, leaving only the five monitors for the Auxiliary Building. The change would introduce a revised groundwater level control strategy based upon a single alarm level (731 feet MSL) for the Auxiliary Building monitors, and would change the unit shutdown requirement from one alarmed monitor to three alarmed monitors out of a total of five for the Auxiliary Building. The license states that Duke Design Engineering has performed analyses which show that the Reactor Buildings and Diesel Generator Buildings can withstand a groundwater elevation corresponding to plant grade, 760 feet MSL (which is also the full pond level for Lake Norman) and that, therefore, it is not necessary to continue monitoring the groundwater levels at lower elevations for these buildings. Elevation 737 feet MSL was calculated to be the maximum level that groundwater could rise before overturning due to buoyancy would begin for the Auxiliary Building. To avoid reaching this level, the proposed TS would require that if groundwater level exceeds elevation 731 feet MSL as indicated by 3 of 5 monitor alarms, and cannot be reduced in one hour, the McGuire Station (both units) must be in at least hot standby within 6 hours, and hot shutdown within the next 6 hours, and cold shutdown within the following 30 hours. The associated surveillance requirements would be changed to require that (1) the groundwater level be demonstrated each shift to be below elevation 731 feet MSL and (2) the groundwater level monitor instrument/loop for the specified locations be demonstrated operable annually by loop calibration or operational test.

This notice supersedes the related previous notice in 50 FR 38914 dated September 25, 1985.

By May 23, 1988, the licensee may file a request for a hearing with respect to issuance of the amendments to the subject facility operating licenses and any person whose interest may be affected by this proceeding and who wishes to participate as a party in the proceeding must file a written request for hearing and a petition for leave to intervene. Requests for a hearing and petitions for leave to intervene shall be filed in accordance with the Commission's "Rules of Practice for Domestic Licensing Proceedings" in 10 CFR Part 2. If a request for a hearing or petition for leave to intervene is filed by the above date, the Commission or an Atomic Safety and Licensing Board, designated by Commission or by the Chairman of the Atomic Safety and Licensing Board Panel, will rule on the request and/or petition, and the Secretary or the designated Atomic Safety and Licensing Board will issue a notice of hearing or an appropriate order.

As required by 10 CFR 2.714, a petition for leave to intervene shall set forth with particularity the interest of the petitioner in the proceeding, and how that interest may be affected by the results of the proceeding. The petition should specifically explain the reasons why intervention should be permitted with particular reference to the following factors: (1) The nature of the petitioner's right under the Act to be made a party to the proceeding; (2) the nature and extent of the petitioner's property, financial, or other interest in the proceeding; and (3) the possible effect of any order which may be entered in the proceeding on the petitioner's interest. The petition should also identify the specific aspect(s) of the subject matter of the proceeding as to which petitioner wishes to intervene. Any person who has filed a petition for leave to intervene or who has been admitted as a party may amend the petition without requesting leave of the Board up to fifteen (15) days prior to the first prehearing conference scheduled in the proceeding, but such an amended petition must satisfy the specificity requirements described above.

Not later than fifteen (15) days prior to the first prehearing conference scheduled in the proceeding, a petitioner shall file a supplement to the petition to intervene which must include a list of the contentions which are sought to be litigated in the matter, and the bases for each contention set forth with reasonable specificity. Contentions shall be limited to matters within the scope of the amendment under consideration. A petitioner who fails to file such a supplement which satisfies these requirements with respect to at least one contention will not be permitted to participate as a party.

Those permitted to intervene become parties to the proceeding, subject to any limitations in the order granting leave to intervene, and have the opportunity to participate fully in the conduct of the hearing, including the opportunity to present evidence and cross-examine witnesses.

A request for a hearing or a petition for leave to intervene shall be filed with the Secretary of the Commission, United States Nuclear Regulatory Commission, Washington, DC 20555, Attention: Docketing and Service Branch, or may be delivered to the Commission's Public Document Room, 1717 H Street, NW., Washington, DC, by the above date. Where petitions are filed during the last ten (10) days of the notice period, it is required that the petitioner or representative for the petitioner promptly so inform the Commission by a toll-free telephone call to Western Union at 1-800-325-6000 (in Missouri 1-800-342-6700). The Western Union operator should be given Datagram Identification Number 3737 and the following message addressed to Lawrence P. Crocker, Acting Director, Project Directorate II-3; (petitioner's name and telephone number); (date Petition was mailed); (plant name); and (publication date and page number of this **Federal Register** notice). A copy of the petition should also be sent to the Office of the General Counsel, U.S. Nuclear Regulatory Commission, Washington, DC 20555, and to Mr. Albert Carr, Duke Power Company, 422 South Church Street, Charlotte, North Carolina 28242.

Nontimely filings of petitions for leave to intervene, amended petitions, supplemental petitions and/or requests for hearing will not be entertained absent a determination by the Commission, the presiding officer or the presiding Atomic Safety and Licensing Board, that the petition and/or request should be granted based upon a balancing of the factors specified in 10 CFR 2.714(a)(1)(i)-(v) and 2.714(d).

If a request for hearing is received, the Commission's staff may issue the amendments after it completes its technical review and prior to the completion of any required hearing if it publishes a further notice for public comment of its proposed finding of no significant hazards consideration in accordance with 10 CFR 50.91 and 50.92.

For further details with respect to this action, see the application for amendment dated January 27, 1988, which is available for public inspection at the Commission's Public Document Room, 1717 H Street NW., Washington, DC, and at the Atkins Library, University of North Carolina, Charlotte (UNCC Station), North Carolina 28223.

Dated at Rockville, Maryland, this 15th day of April, 1988.

For the Nuclear Regulatory Commission.

Lawrence P. Crocker,

Acting Project Director, Project Directorate II-3, Division of Reactor Projects—I/II.

[FR Doc. 88-8769 Filed 4-20-88; 8:45 am]

BILLING CODE 7590-01-M

[Docket Nos. 50-443-OL and 50-444-OL (ASLBP No. 82-471-02-OL; (Offsite Emergency Planning))]

Public Service Co. of New Hampshire (Seabrook Station, Units 1 and 2); Hearing

April 15, 1988.

Atomic Safety and Licensing Board, Before Administrative Judges: Ivan W. Smith, Chairman, Gustave A. Linenberger, Jr., Dr. Jerry Harbour.

The evidentiary hearing on the offsite emergency planning aspects of this proceeding will resume at 1:00 p.m., on May 2, 1988 in Room 310, Legislative Office Building, Concord, New Hampshire. The hearing will relate to the issue of sheltering the beach population during a radiological emergency at the Seabrook Station.

For the Atomic Safety and Licensing Board.

Ivan W. Smith,

Chairman, Administrative Law Judge.

Bethesda, Maryland, April 15, 1988.

[FR Doc. 88-8798 Filed 4-20-88; 8:45 am]

BILLING CODE 7590-01-M

OFFICE OF THE UNITED STATES TRADE REPRESENTATIVE

Adjustment of Quotas; Tungsten From China

SUMMARY: Pursuant to authority delegated by the President in Proclamation No. 5718 of October 2, 1987, the United States Trade Representative (the USTR) hereby adjusts the quotas specified in the Annex to Proclamation 5718 in accordance with subparagraph (d) of Headnote 11 of Subpart A, Part 2 of the Appendix to the Tariff Schedules of the United States (19 U.S.C. 1202).

EFFECTIVE DATE: April 21, 1988.

FOR FURTHER INFORMATION CONTACT: Bernard Ascher, (202) 395-4510; John Kingery, (202) 395-6800.

SUPPLEMENTARY INFORMATION: On October 2, 1987, the President proclaimed under sections 203, 406 and 604 of the Trade Act of 1974, certain measures to implement an Agreement for Orderly Trade in Ammonium Paratungstate and Tungstic Acid Between the Governments of the United States and the People's Republic of China. The Proclamation also states that "the USTR is authorized to make any changes to part 2 of the appendix to the TSUS that may be necessary to carry out the agreement * * *."

Subparagraph (d) of new Headnote 11 to Subpart A, Part 2 of the Appendix to the Tariff Schedules of the United States, as provided by the Annex to Proclamation 5718, states: "To the extent that imports of the tungsten articles provided for herein exceed 1.7 million pounds tungsten content for calendar year 1987, the specified limits for subsequent periods will be reduced according to the following schedule: the 1988 calendar year specified limit shall be reduced by 50 percent of the excess; the specified limit for the 1989 calendar year period shall be reduced by 30 percent of the excess; and the specified limit of 1990 shall be reduced by 20 percent of the excess."

Pursuant to a **Federal Register** notice of December 29, 1987 (52 FR 49127), the U.S. Trade Representative adjusted the quota limits in accordance with Proclamation 5718. It was noted that a subsequent notice would be published reflecting new quota limits adjusted for statistical variations present in the first notice. After correcting for such statistical variations as well as a quota overfill amount, it was determined that imports of the tungsten articles subject to the Agreement and Proclamation consisted of 3,596,634 pounds tungsten content. Thus the amount in excess of 1.7 million pounds tungsten content is 1,896,634 pounds. Accordingly, the Tariff Schedules of the United States are modified to reflect the necessary adjustments as set forth in the Annex hereto.

This determination shall be published in the **Federal Register.**

Clayton Yeutter,

United States Trade Representative.

Annex

Subpart A of Part 2 of the Appendix to the Tariff Schedules of the United States (TSUS) is modified by deleting the quantities from the column entitled "Specified Limit (in pounds tungsten content)", and by inserting in lieu thereof the quantities set forth below opposite the enumerated TSUS item numbers:

926.30	425,000
926.31	861,682
926.32	1,371,010
926.33	1,670,673
926.34	1,500,000

[FR Doc. 88-8732 Filed 4-20-88; 8:45 am]

BILLING CODE 3190-01-M

PRESIDENTIAL COMMISSION THE HUMAN IMMUNODEFICIENCY VIRUS EPIDEMIC

Notice of Change To a Meeting

Notice is hereby given pursuant to Pub. L. 92-463 that the Presidential Commission on the Human Immunodeficiency Virus Epidemic will not hold a meeting on Thursday, April 28, 1988. The witnesses scheduled to appear on Thursday, April 28, 1988 will now testify on Wednesday, April 27, 1988. The meeting on Wednesday, April 27, 1988 will be from 8:00 A.M. to 7:00 P.M. There are no other changes.

Polly L. Gault,

Executive Director

[FR Doc. 88-8913 Filed 4-20-88; 9:53 am]

BILLING CODE 4160-15-M

SECURITIES AND EXCHANGE COMMISSION

[Rel. No. IC-16368; 812-6871]

Bank of New England; Application

April 15, 1988

AGENCY: Securities and Exchange Commission ("SEC").

ACTION: Notice of application for exemption under the Investment Company Act of 1940 ("1940 Act").

Applicant: Bank of England ("BNE" or "Applicant") and any presently issued or subsequently issued unit investment trusts registered pursuant to the Act for which BNE serves as trustee, and any sub-custodian thereof.

Relevant 1940 Act Sections: Exemption requested under section 6(c) from the provisions of section 26(a)(2)(D) of the 1940 Act.

Summary of Application: Applicant seeks an order under section 6(c) of the 1940 Act to permit it to deposit, or to cause or permit the deposit of, securities and other assets of any current and future trusts for which Applicant serves as trustee with the Euro-Clear System ("Euro-clear") or Central de Livraison Valeurs Mobilieres, S.A. ("CEDEL", collectively with Euro-clear, the "Transnational Agencies").

Filing date: The application was filed on September 15, 1987 and amended on March 28, 1988.

Hearing or Notification of Hearing: If no hearing is ordered, the application will be granted. Any interested person may request a hearing on this application, or ask to be notified if a hearing is ordered. Any requests must be received by the SEC by 5:30 p.m., on May 9, 1988. Request a hearing in writing, giving the nature of your interest, the reason for the request, and the issues you contest. Serve the Applicant with the request, either personally or by mail, and also send it to the Secretary of the SEC, along with proof of service by affidavit or, for lawyers, by certificate. Request notification of the date of a hearing by writing to the Secretary of the SEC.

Addresses: Secretary, SEC, 450 5th Street, NW., Washington, DC 20549. Applicant, c/o Mari Wilson, Esq., Goodwin, Procter & Hoar, Exchange Place, Boston, MA 02109.

FOR FURTHER INFORMATION CONTACT: Cecilia C. Kalish, Staff Attorney (202) 272-3037, or Curtis R. Hilliard, Special Counsel (202) 272-3030 (Division of Investment Management, Office of Investment Company Regulation).

SUPPLEMENTARY INFORMATION: Following is a summary of the application; the complete application is available for a fee from either the SEC's Public Reference Branch in person or the SEC's commercial copier who can be contacted at (800) 231-3282 (in Maryland (301) 258-4300).

Applicant's Representations

1. BNE is a national banking association which meets the qualifications of section 26(a)(1) of the 1940 Act for the trustee or custodian of a unit investment trust. BNE serves as trustee of unit investment trusts sponsored or cosponsored by Merrill Lynch, Pierce, Fenner & smith Incorporated, Shearson Lehman Hutton Inc., PaineWebber Incorporated, Kidder, Peabody & Co. Incorporated, Prudential-Bache Securities Inc., Dean Witter Reynolds Inc., Dain, Bosworth Incorporated, Smith Barney, Harris Upham & Co., Incorporated, and Moseley Securities Corporation, and may in the future act as trustee of unit investment trusts sponsored or co-sponsored by these and additional sponsors. BNE serves as trustee pursuant to a trust indenture (the "Indenture") among the sponsor of the trust and BNE as trustee ("Trustee"), including trusts which invest in a fixed portfolio of securities denominated in

foreign currencies and non-United States securities.

2. Euro-clear and CEDEL are two of the largest clearance and custody systems of internationally traded securities. They were organized principally to provide a simple, economic and automated means of settling secondary market transactions in internationally traded securities regardless of the geographical location of the parties to the transaction. The branch of Morgan Guaranty in Brussels, Belgium operates Euro-clear, and is subject to regulation by the New York and federal banking authorities and the Belgian Banking Commission. Belgian law also governs Morgan Guaranty's liability as custodian and operator of Euro-clear under the Terms and Conditions Governing the Euro-clear System, which constitutes the contract between Euro-clear and each participating entity that has an account with Morgan Guaranty Brussels. CEDEL was founded as a limited company under the laws of the Grand Duchy of Luxembourg. CEDEL is headquartered in Luxembourg and has representative offices in London and New York. CEDEL operates under the supervision of the Institute Monetaire Luxembourgeois, the Luxembourg Monetary Authority, which is also the banking control authority.

3. Pursuant to the proposed custody arrangements described in the Application, permission is sought to use the Transnational Agencies to hold certain non-United States securities of current or future unit investment trusts for which Applicant serves as trustee.

4. Under the proposed arrangement, BNE as Trustee would provide to a trust custody services which would permit the foreign securities of the trust to be held abroad in the custody of a Transnational Agency. Such services would be offered by BNE pursuant to arrangements which would be the same as with those applicable to registered management investment companies as contemplated by Rule 17f-5 under the 1940 Act, except: (i) Certain duties and responsibilities of the board of directors of such companies would, in the case of a trust, be performed by BNE; (ii) BNE would provide indemnification as summarized below; and, (iii) pending further action by the Securities and Exchange Commission, only the Transnational Agencies would qualify as eligible foreign custodians for the trusts.

5. BNE as Trustee will undertake itself, with respect to foreign custody services offered to the trusts, to fulfill substantially all of the supervisory and monitoring roles currently assigned by Rule 17f-5 to the board of directors of a management investment company. In particular, prior to the holding of foreign securities of any trust in a Transnational Agency, BNE as Trustee for such trust will be required to:

(i) Make a determination that maintaining the trust's assets in the particular country or countries is consistent with the best interests of the trust and its unitholders;

(ii) Make a determination that maintaining the trust's assets with the particular Transnational Agency is consistent with the best interests of the trust and its unitholders;

(iii) Enter into a written contract which is consistent with the best interests of the trusts and its unitholders and which will govern the manner in which such Transnational Agency will maintain the trust's assets and which provides that:

(A) The trust will be adequately indemnified and its assets adequately insured in the event of loss (without regard to the indemnity provided by the Trustee under its trust agreement);

(B) The trust's assets will not be subject to any right, charge, security interest, lien or claim of any kind in favor of the Transnational Agency or its creditors except a claim of payment for their safe custody or administration;

(C) Beneficial ownership for the trust's assets will be freely transferable without the payment of money or value other than for the safe custody or administration;

(D) Adequate records will be maintained identifying the assets as belonging to the trust;

(E) The trust's independent public accountants will be given access to records identifying assets of the Fund or confirmation of the content of those records; and

(F) The Trustee will receive periodic reports with respect to safekeeping of the trust's assets including, but not necessarily limited to, notification of any transfer to or from the Trustee's account;

(iv) Establish a system to monitor the foreign custody arrangements in order to ensure compliance with the proposed trust provisions and the representations and conditions of this application; and

(v) Review and approve, at least annually, the continuing maintenance of trust assets in a particular country or countries with a particular Transnational Agency as being consistent with the best interests of the trust and unitholders.

BNE as Trustee, in making such determinations, will consider various factors, such as the comparative operational efficiencies of custody, clearance and settlement and the costs thereof and the political and other risks, attendant to the holding of foreign securities in the particular Transnational Agency, all as more specificially set forth in the Application. BNE shall consider the extent of the trust's exposure to loss because of the use of a particular Transnational Agency. The potential effect of such exposure upon unitholders shall be disclosed, if material, by the Sponsors in the prospectus relating to the the trust. In addition, before entering into any custodial contract with the Transnational Agency, BNE as Trustee shall specifically consider whether, under the terms of the contract and without regard to the indemnity provided by the Trustee, the trust will be adequately indemnified and its assets adequately insured in the event of loss. BNE as Trustee shall select with the exercise of reasonable care the particular Transnational Agency which may have custody of the foreign securities.

BNE will undertake to assure that any sponsor of a unit investment trust to which the proposed exemption from section 26(a)(2)(D) would apply, agrees to specific disclosure requirements relating to the trust's exposure to loss because of the use of a Transnational Agency. In particular, the sponsor will agree that the potential affect of such exposure upon unitholders shall be disclosed, if material, by the sponsor in the prospectus relating to the trust.

6. BNE as Trustee shall maintain, and keep current, written records regarding the basis for the choice or continued use of a particular Transnational Agency, and such records shall be available for inspection by unitholders and the Securities and Exchange Commission at the Trustee's offices at all reasonable times during its usual business hours. In addition, where the Trustee has determined that a Transnational Agency may no longer be considered eligible under the terms of the trust agreement or that continuance of the arrangement would not be consistent with the best interests of the trust and the unitholders, the trust must withdraw its assets from the care of such Transnational Agency as soon as reasonably practicable, and in any event within 180 days of the date when the Trustee made the determination.

7. Apart from the written contract governing the manner in which the Transnational Agencies will maintain trust assets, under the proposed trust provisions BNE as Trustee will indemnify and hold the trust whose foreign securities are held harmless from and against any loss which shall occur

BEST COPY AVAILABLE

as the result of the failure of the Transnational Agency holding such foreign securities to exercise reasonable care with respect to the safekeeping of such foreign securities to the same extent the Trustee would be required to indemnify and hold the trust harmless if the Trustee itself were holding such foreign securities in the United States' jurisdiction whose laws govern the indenture. Such provisions would provide, however, that the Trustee will not have liability for loss except by reason of the gross negligence, bad faith or willful misconduct of the Trustee or the Transnational Agency.

Applicant's Legal Conclusions

1. Applicant believes that securities deposited in Euro-clear or CEDEL are at least as effectively protected as the same securities would be if directly deposited with a foreign branch of a U.S. bank, or shipped to the U.S. for custody, for several reasons, including:

(i) The insurance coverage for Euro-clear and CEDEL depositaries and their outstanding loss record;

(ii) The expertise and experience of the banks holding securities for Euro-clear or CEDEL;

(iii) The efficiencies resulting from handling large quantities of the same issue;

(iv) The excellent track records of Euro-clear and CEDEL;

(v) The close scrutiny of Euro-clear and CEDEL services resulting from the market's dependence upon (and hence concern for) these services and the oversight of the depositaries; and

(vi) The depositary agreements pursuant to which securities are held by Euro-clear and CEDEL depositaries, which impose high standards of care on the depositaries.

2. Applicant further believes that the exposure to certain custodial risks is reduced when securities are held through Euro-clear or CEDEL rather than directly by a U.S. bank branch since securities held in Euro-clear or CEDEL do not have to be transported for deposit outside these systems or to effect sale. Furthermore, holding foreign securities outside of Euro-clear and CEDEL would give rise to substantially higher costs for holding and transferring securities and for settling transactions.

Applicant's Conditions

Applicant agrees that any order of the Commission pursuant to this application will be conditioned upon the representations in paragraphs 5, 6 and 7 above.

For the Commission, by the Division of Investment Management, under delegated authority.

Shirley E. Hollis,

Assistant Secretary.

[FR Doc. 88-8770 Filed 4-20-88; 8:45 am]

BILLING CODE 8010-01-M

[Release No. 34-25594; File No. 600-20]

Self-Regulatory Organizations; Amendments to Application for Registration as a Clearing Agency

On August 1, 1986, the International Securities Clearing Corporation ("ISCC") [1] filed with the Commission an application for registration as a clearing agency under section 17A of the Securities Exchange Act of 1934, 15 U.S.C. 78q-1, (the "Act") and Rule 17Ab2-1(c)(1) thereunder. On August 14, 1986, the Commission published notice of the application in the **Federal Register** to solicit comments from interested persons.[2] ISCC filed amendments to its application on October 8, 1987, February 22, 1988, and February 26, 1988. Those amendments include: revised rules, proposed fees, and ISCC's custodial service member's agreement and agency services agreement.

Pursuant to Rule 17Ab2-1(c)(1), the Commission may grant ISCC registration as a clearing agency and exempt it from one or more of the requirements of section 17A(b)(3)(A)-(I) of the Act. Generally, registration pursuant to Rule 17Ab2-1(c)(1) is not effective for more than eighteen months from the date on which registration is made effective by the Commission.[3] Before the expiration of that 18 month period, the Commission will either: (i) Grant registration without exempting the registrant from one or more of the requirements as to which the Commission is directed to make a determination under section 17A(b)(3)(A)-(I) of the Act; or (ii) institute proceedings to determine whether registration should be denied at the expiration of eighteen months.

You are invited to submit written data, views, and arguments concerning the foregoing application within thirty days of the date of publication of this notice in the **Federal Register**. Such written data, views an arguments will be considered by the Commission in granting registration or instituting proceedings to determine whether registration should be denied in accordance with Rule 17Ab-2-1(c)(2). Persons desiring to make written submissions should file six copies thereof with the Secretary of the Commission, Securities and Exchange Commission, 450 Fifth Street, NW., Washington, DC 20549. Copies of the application, the amendments, and all written comments will be available for inspection at the Securities and Exchange Commission's Public Reference Room, 450 Fifth Street NW., Washington, DC.

For the Commission, by the Division of Market Regulation, pursuant to delegated authority.

Dated: April 15, 1988

Shirley E. Hollis,

Assistant Secretary.

[FR Doc. 88-8816 Filed 4-20-88; 8:45 am]

BILLING CODE 8010-01-M

[Release No. 34-25593; File No. SR-NASD-87-42]

Self-Regulatory Organizations; National Association of Securities Dealers, Inc.; Order Approving Proposed Rule Change

The National Association of Securities Dealers, Inc. ("NASD") submitted on October 14, 1987, copies of a proposed rule change pursuant to section 19(b) of the Securities Exchange Act of 1934 ("Act") and Rule 19b-4 thereunder, to amend Article V, Part A of the NASD's Code of Procedure, which sets forth the procedures the NASD must follow in order to impose remedial limitations, pursuant to Article III, section 38 of the NASD's Rules of Fair Practice, on the operations of members who are in or are approaching, financial or operational difficulty.

The proposed rule change:

(1) Provides that the committees empowered to impose business limitations—the District Surveillance Committees ("DSCs")—shall be composed of at least five members. (The former rule provided for DSCs of exactly five members.);

(2) Changes the composition of the DSCs, to draw upon an expanded pool of qualified industry personnel, and provides that each member of a DSC be appointed for a term not to exceed three years;

(3) Grants members a right to notice and an opportunity for a hearing, on the record, to determine whether the DSC may properly impose sanctions on members for the members' failure to adhere to business limitations previously imposed by the DSC;

---

[1] ISCC is a wholly owned subsidiary of the National Securities Clearing Corporation ("NSCC"), incorporated under the laws of the State of New York.

[2] Securites Exchange Act Release No. 23514 (August 8, 1986), 51 FR 29184.

[3] The Commission, by order, may provide a longer period.

(4) Empowers the DSCs to empanel subcommittees composed of at least two DSC members, to hear proceedings: (1) To determine the appropriateness of proposed business limitations, and (2) to determine whether to sanction members for failing to adhere to limitations previously imposed by the DSC or by a subcommittee of the DSC;

(5) Expands the time frame within which the DSC must hold a hearing on the appropriateness of imposing business limitations on a member; and

(6) Provides that the NASD's Board of Governors hearing panels, which hear business limitation proceedings on appeal, be composed of *at least* two members of the Board of Governors Surveillance Committee ("BGSC"). (The former rule provided for exactly two BGSC members.)

Notice of the proposed rule change together with the terms of substance of the proposed rule change was given by the issuance of a Commission release (Securities Exchange Act Release No. 25378, February 22, 1988), and by publication in the Federal Register (53 FR 5847, February 26, 1988). No comments were received with respect to the proposed rule change. On February 25, 1988, at the staff's request, the NASD filed a revised version of the proposed rule change. That revision stipulates that any hearing conducted pursuant to section 5(c) of Article V, Part A, to determine whether to impose sanctions for a member's failure to adhere to specified business limitations, must be: (1) Requested by the member in a timely manner in accordance with the terms specified by the NASD; (2) held on the record; and (3) conducted within 2 business days before the proposed effective date of the sanctions. On April 11, 1988, the NASD filed a formal amendment to its proposal. The amendment revised the language of Sections 5 and 6 to conform those sections to the remaining provisions of the Code of Procedure.[1]

The Commission finds that the proposed rule change is consistent with the requirements of the Act and rules and regulations thereunder applicable to the NASD and, in particular, the requirements of section 15A, and the rules and regulations thereunder.

It is therefore ordered, pursuant to section 19(b)(2) of the Act, that the above-mentioned proposed rule change be, and hereby is, approved.

[1] Because the amendment is conforming in nature, the Commission has determined to approve the amended proposed rule change without separate publication of the amendment in the Federal Register; however, the amendment is available for inspection and copying in the Commission's Public Reference Room.

For the Commission, by the Division of Market Regulation, pursuant to delegated authority, 17 CFR 200.30-3(a)(12).

Dated: April 15, 1988.

Shirley E. Hollis,

Assistant Secretary.

[FR Doc. 88-8815 Filed 4-20-88; 8:45 am]

BILLING CODE 8010-01-M

SMALL BUSINESS ADMINISTRATION

[Declaration of Disaster Loan Area #2312]

Texas; Declaration of Disaster Loan Area

Upshur County in the State of Texas constitutes a disaster loan area because of damages from a tornado which occurred on April 1, 1988. Applications for loans for physical damage may be filed until the close of business on June 13, 1988, and for economic injury until the close of business on January 17, 1989, at the address listed below: Disaster Area 3 Office, Small Business Administration, 2306 Oak Lane, Suite 110, Grand Prairie, Texas 75051 or other locally announced locations.

The interest rates are:

Homeowners With Credit Available Elsewhere	8.000%
Homeowners Without Credit Available Elsewhere	4.000%
Businesses With Credit Available Elsewhere	8.000%
Businesses Without Credit Available Elsewhere	4.000%
Businesses (EIDL) Without Credit Available Elsewhere	4.000%
Other (Non-Profit Organizations Including Charitable and Religious Organizations)	8.000%

The number assigned to this disaster is 231212 for physical damage and for economic injury the number is 661800.

(Catalog of Federal Domestic Assistance Programs Nos. 59002 and 59008).

Date: April 14, 1988.

James Abdnor,

Administrator.

[FR Doc. 88-8729 Filed 4-20-88; 8:45 am]

BILLING CODE 8025-01-M

[License No. 02/02-0511]

Bridger Capital Corp.; Issuance of a Small Business Investment Company License

On November 24, 1987, a notice was published in the Federal Register (52 FR45 038) stating that an application has been filed by Bridger Capital Corporation, with the Small Business Administration (SBA) pursuant to Section 107.102 of the Regulations governing small business investment companies (13 CFR 107.102 (1985)) for a license as a small business investment company. Interested parties were given close of business December 29, 1987, to submit their comments to SBA. No comments were received.

Notice is hereby given that, pursuant to section 301(c) of the Small Business Investment Act of 1958, as amended, after having considered the application and all other pertinent information, SBA issued License No. 02/02-0511 on April 5, 1988, to Bridger Capital Corporation to operate as a small business investment company.

(Catalog of Federal Domestic Assistance Program No. 59.011, Small Business Investment Companies)

Robert G. Lineberry,

Deputy Associate Administrator for Investment.

Dated: April 13, 1988.

[FR Doc. 88-8730 Filed 4-20-88; 8:45 am]

BILLING CODE 8025-01-M

[License No. 02/02-0506]

Republic SBI Corp.; Issuance of a Small Business Investment Company License

On December 4, 1987, a notice was published in the Federal Register (52 FR 46143) stating that an application has been filed by Republic SBI Corporation, New York, New York with the Small Business Administration (SBA) pursuant to § 107.102 of the Regulations governing small business investment companies (13 CFR 107.102 (1987)) for a license as a small business investment company.

Interested parties were given until close of business January 4, 1988, to submit their comments to SBA. No comments were received.

Notice is hereby given that, pursuant to Section 301(c) of the Small Business Investment Act of 1958, as amended, after having considered the application and all other pertinent information, SBA issued License No. 02/02-0506 on April 4, 1988, to Republic SBI Corporation to operate as a small business investment company.

(Catalog of Federal Domestic Assistance Program No. 59.011, Small Business Investment Companies)

Robert G. Lineberry,

Deputy Associate Administrator for Investment.

Dated: April 14, 1988.

[FR Doc. 88-8731 Filed 4-20-88; 8:45 am]

BILLING CODE 8025-01-M

DEPARTMENT OF TRANSPORTATION

Coast Guard

[CGD 88-029]

Meeting of the Chemical Transportation Advisory Committee Subcommittee on Vapor Control

AGENCY: Coast Guard, DOT.

ACTION: Notice of meeting.

SUMMARY: Pursuant to section 10(a)(2) of the Federal Advisory Committee Act (Pub. L. 92-463; 5 U.S.C. App. I), notice is hereby given of meeting of the Chemical Transportation Advisory Committee (CTAC) Subcommittee on Vapor Control. The Subcommittee is considering requirements for tank vessels and waterfront facilities which use vapor control systems. The meeting will be held on Wednesday, May 4, 1988 and Thursday, May 5, 1988, in Room 2230, Department of Transportation, Nassif Building, 400 Seventh Street SW, Washington, DC. The meeting is scheduled to begin at 9:00 a.m. and end at 5:00 p.m. on Wednesday, and begin at 8:00 a.m. and end at 12:00 noon on Thursday. At this meeting, the recommendations of the Fire Protection Working Group, Waterfront Facilities Working Group, Tankship Working Group, and Tank Barge Working Group are to be presented and discussed.

The agenda is as follows:

1. Call to order.
2. Opening remarks.
3. Consideration of the working groups' recommendations on safety standards and uniform design criteria.
4. Assignment of Subcommittee work.
5. Adjournment.

Attendance is open to the public. Members of the public may present oral statements at the meetings. Persons wishing to present oral statements should notify the Executive Director of CTAC no later than the day before the meeting. Any member of the public may present a written statement to the Subcommittee at any time.

FOR FURTHER INFORMATION CONTACT: Lieutenant Commander R.H. Fitch, U.S. Coast Guard Headquarters (G-MTH-1), 2100 Second Street SW., Washington, DC 20593-0001, (202) 267-1217.

Dated: April 14, 1988.

P. C. Lauridsen

Captain, U.S. Coast Guard, Acting Chief, Office of Marine Safety Security and Environmental Protection.

[FR Doc. 88-8797 Filed 4-20-88; 8:45 am]

BILLING CODE 4910-14-M

[CGD 88-028]

Houston/Galveston Navigation Safety Advisory Committee

Pursuant to section 10(a)(2) of the Federal Advisory Committee Act (Pub. L. 92-463; 5 U.S.C. App. I) notice is hereby given of the seventeenth meeting of the Houston/Galveston Navigation Safety Advisory Committee. The meeting will be held on Thursday, May 26, 1988 in the conference room of the Houston Pilots Office, 8150 South Loop East, Houston, Texas. The meeting is scheduled to begin at approximately 9:30 a.m. and end at approximately 1:00 p.m. The agenda for the meeting consists of the following items:

1. Call to Order.
2. Announcement of the transfer of the Committee directorate to the Aids to Navigation Branch, Eighth Coast Guard District.
3. Presentation of the minutes of the Inshore and Offshore Waterways Subcommittees and discussion of recommendations.
4. Discussion of previous recommendations made by the Committee.
5. Presentation of any additional new items for consideration of the Committee.
6. Adjournment.

The purpose of this Advisory Committee is to provide recommendations and guidance to the Commander, Eighth Coast Guard District on navigation safety matters affecting the Houston/Galveston area.

Attendance is open to the public. Members of the public may present written or oral statements at the meeting.

Additional information may be obtained from Commander V.O. Eschenburg, USCG, Executive Secretary, Houston/Galveston Navigation Safety Advisory Committee, c/o Commander, Eighth Coast Guard District (m), Room 1341, Hale Boggs Federal Building, 500 Camp Street, New Orleans, LA 70130-3396, telephone number (504) 589-6901.

Dated: March 10, 1988.

Peter J. Rots,

Rear Admiral, U.S. Coast Guard Commander, Eighth Coast Guard District.

[FR Doc. 88-8796 Filed 4-20-88; 8:45 am]

BILLING CODE 4910-14-M

[CGD 88-027]

Houston/Galveston Navigation Safety Advisory Committee; Offshore Waterway Management Subcommittee Meeting

Pursuant to section 10(a)(2) of the Federal Advisory Committee Act (Pub. L. 92-463; 5 U.S.C. App. I) notice is hereby given of a meeting of the Offshore Waterway Management Subcommittee of the Houston/Galveston Navigation Safety Advisory Committee. The meeting will be held on Thursday, May 12, 1988 at the Houston Yacht Club, 3620 Miramar Drive, LaPorte, Texas. The meeting is scheduled to begin at 10:30 a.m. and end at 12:00 p.m. The agenda for the meeting consists of the following items:

1. Call to Order.
2. Discussion of previous recommendations made by the full Advisory Committee and the Offshore Waterway Management Subcommittee.
3. Presentation of any additional new items for consideration to the Subcommittee.
4. Adjournment.

Attendance is open to the public. With advance notice, members of the public may present oral statements at the meeting. Prior to presentation of their oral statements, but not later than the day before the meeting, members of the public shall submit, in writing, to the Executive Secretary of the Houston/Galveston Navigation Safety Advisory Committee, the subject of their comments, a general outline signed by the presenter, and the estimated time required for presentation. Individuals making the presentation shall also provide their name, address, and, if applicable, the organization they are representing. Any member of the public may present a written statement to the Advisory Committee at any time.

Additional information may be obtained from Commander V. O. Eschenburg, USCG, Executive Secretary, Houston/Galveston Navigation Safety Advisory Committee, c/o Commander, Eighth Coast Guard District (m), Room 1341, Hale Boggs Federal Building, 500 Camp Street, New Orleans, LA 70130-3396, telephone number (504) 589-6901.

Dated: March 10, 1988.

Peter J. Rots,

Rear Admiral, U.S. Coast Guard Commander, Eighth Coast Guard District.

[FR Doc. 88-8795 Filed 4-20-88; 8:45 am]

BILLING CODE 4910-14-M

VOL 53 ISS 77 AP 21 1988 UMI

Federal Aviation Administration

Advisory Circular; Flight Test Guide for Certification of Part 23 Airplanes

AGENCY: Federal Aviation Administration (FAA), DOT.

ACTION: Proposed Advisory Circular (AC) availability and request for comments.

SUMMARY: This notice announces the availability of and request for comments on AC 23-8X which is a revision to AC 23-8 dated October 20, 1987. This proposed AC contains new material generated as a result of the airworthiness standards for commuter category airplanes. The proposed AC provides information and guidance concerning acceptable means of showing compliance with Part 23 of the Federal Aviation Regulations (FAR) concerning flight tests and pilot judgments and is one method being utilized to achieve national standardization in normal, utility, acrobatic, and commuter airplane certification.

DATE: Commenters must identify File AC 23-8X; Subject: Flight Test Guide for Certification of Part 23 Airplanes, and comments must be received on or before July 20, 1988.

ADDRESS: Send all comments on the proposed AC to: Federal Aviation Administration, ATTN: Standards Office (ACE-110), 601 East 12th Street, Kansas City, Missouri 64106.

FOR FURTHER INFORMATION CONTACT: Frank Stogsdill, Aerospace Engineer, Standards Office (ACE-110), Aircraft Certification Division, Federal Aviation Administration, 601 East 12th Street, Kansas City, Missouri 64106; commercial telephone (816) 426-6941, or FTS 867-6941.

SUPPLEMENTARY INFORMATION: Any person may obtain a copy of this proposed AC by writing to: Federal Aviation Administration, Aircraft Certification Division, Standards Office (ACE-110), 601 East 12th Street, Kansas City, Missouri 64106.

Comments Invited

Interested parties are invited to submit comments on the proposed AC. The proposed AC and comments received may be inspected at the Standards Office (ACE-110), Room 1656, Federal Office Building, 601 East 12th Street, Kansas City, Missouri, between the hours of 7:30 a.m. and 4:00 p.m. weekdays, except Federal holidays.

Background

AC 23-8, Flight Test Guide for Certification of Normal, Utility, and Acrobatic Category Airplanes, was published to replace FAA Order 8110.7, Engineering Flight Test Guide for Small Airplanes, dated June 20, 1972, and to consolidate existing flight test policy. AC 23-8 did not cover commuter category airplanes.

Issued in Kansas City, Missouri, April 8, 1988.

Barry D. Clements,

Manager, Aircraft Certification Division.

[FR Doc. 88-8710 Filed 4-20-88; 8:45 am]

BILLING CODE 4910-13-M

UNITED STATES INFORMATION AGENCY

Reporting and Information Collection Requirements Under OMB Review

AGENCY: United States Information Agency.

ACTION: Notice of reporting requirements submitted for OMB review.

SUMMARY: Under the provisions of the Paperwork Reduction Act (44 U.S.C., Chapter 35), agencies are required to submit proposed or established reporting and record keeping requirements to OMB for review and approval, and to publish a notice in the Federal Register notifying the public that the Agency has made such a submission. USIA is requesting approval of a form used in the processing of applications for auditions under our Artistic Ambassador Program (OMB 3116-0181). USIA intends to fulfill the requirements of the program under the Mutual Educational and Cultural Exchange Act of 1961, Pub. L. 87-256. Respondents will be required to respond only one time.

DATE: Comments must be received by May 9, 1988.

COPIES: Copies of the Request for Clearance (SF-83), supporting statement, transmittal letter and other documents submitted to OMB for approval may be obtained from the USIA Clearance Officer. Comments on the items listed should be submitted to the Office of Information and Regulatory Affairs of OMB. Attention: Desk Officer for USIA, and also to the USIA Clearance Officer.

FOR FURTHER INFORMATION CONTACT: Agency Clearance Officer, Retta Graham-Hall, United States Information Agency, M/AS, 301 4th Street SW., Washington, DC 20547. Telephone (202) 485-7501, and OMB review: Francine Picoult, Office of Information and Regulatory Affairs, Office of Management and Budget, New Executive Office Bldg., Washington, DC 20503. Telephone (202) 395-7340.

SUPPLEMENTARY INFORMATION:

Title: Artistic Ambassador Program", Biographic Information Form for Auditioners, and unnumbered form.

Abstract: This form is intended to obtain information from aspiring musicians who are interested in competing for the chance to represent the United States overseas. Candidates are screened, and through a process of elimination, 4 or 5 finalists are selected. Overseas tours are from 5 to 6 weeks in duration, during which the successful candidates will give concerts for foreign audiences and represent the United States through personal contacts and the presentation of American art and culture. This program is intended to fulfill the requirements for the Mutual Educational and Cultural Exchange Act of 1961, Pub. L. 87-256, imposed upon USIA to strengthen international cooperative relations through tours in foreign countries by creative performing artists.

Proposed Frequency of Responses: No. of Respondents—434; Recordkeeping Hours—1.5; Total Annual Burden—651.

Dated: April 14, 1988.

Charles N. Canestro,

Federal Register Liaison.

[FR Doc. 88-8725 Filed 4-20-88; 8:45 am]

BILLING CODE 8230-01-M

VETERANS ADMINISTRATION

Availability of Report of Library Service Program Evaluation

Notice is hereby given that the Library Service Program (38 U.S.C. 219) Evaluation has been completed.

Single copies of the Library Service Program Report are available. Reproduction of multiple copies can be arranged at the user's expense.

Direct inquiries, specifying the name of the program evaluation desired, to Mr. H. Raymond Wilburn, Director, Studies and Evaluation Service, Veterans Administration (072), 810 Vermont Avenue NW., Washington, DC 20420.

Dated: April 15, 1988.

By direction of the Administrator

Raymond S. Blunt,

Director, Office of Program Analysis and Evaluation.

[FR Doc. 88-8801 Filed 4-20-88; 8:45 am]

BILLING CODE 8320-01-M

THE WHITE HOUSE CONFERENCE FOR A DRUG FREE AMERICA

Meeting of Conferees

ACTION: Notice of Meeting.

SUMMARY: The White House Conference for a Drug Free America will host a meeting of its Conferees on May 10 and 11, 1988, to take comments from the Conferees respecting substantive provisions of the proposed report to the President and the Congress. The meeting will occur at 1111 18th Street NW., 8th floor conference room from 9:30 a.m. to 5:00 p.m. each day with breaks for lunch and coffee.

SUPPLEMENTARY INFORMATION: The White House Conference for a Drug Free America was mandated by the Anti-Drug Abuse Act of 1986, and established by President Reagan's Executive Order #12595, of May 5, 1987.

The Conference has a broad mandate to review and critically assess all areas of the drug abuse crisis in the U.S. It has brought together knowledgeable individuals from the public and private sectors who are concerned with drug abuse prevention, education, and treatment, and the production, trafficking and distribution of illicit drugs.

Through a series of meetings and forums, the Conference has sought to focus public attention on effective methods of curbing drug abuse; look at the essential role of parents and family members in preventing drug abuse; explore ways to foster an attitude of intolerance of illicit drugs nationwide; and help eliminate both the supply and demand for these drugs.

Conferees have been appointed by the President on the basis of their experience and commitment to a drug free society. These include: members of the President's Cabinet, state and local officials, business leaders, educators, religious leaders, sports commissioners, coaches and athletes, law enforcement officials, representatives of family groups, youth, and those working in drug abuse prevention, treatment, rehabilitation, and research.

Supporting the Chairman was a series of Committees:

—Drug-Free Workplace
—Drug-Free Education
—Drug Abuse Treatment
—Drug-Free Sports
—Drug Abuse Enforcement
—Drug Abuse Prevention
—Drug-Free Transportation
—Drug-Free Public Housing
—International Drug Control
—Drug-Free Media and Entertainment

To receive additional information about the Conference call (202) 254-4100, or write: The White House Conference For A Drug Free America, 726 Jackson Place NW., Washington, DC 20503.

William H. Oltmann,

Deputy Executive Director, The White House Conference For A Drug Free America.

[FR Doc. 88-9711 Filed 4-20-88; 8:45 am]

BILLING CODE 3180-01-M

Sunshine Act Meetings

Federal Register
Vol. 53, No. 77
Thursday, April 21, 1988

This section of the FEDERAL REGISTER contains notices of meetings published under the "Government in the Sunshine Act" (Pub. L. 94-409) 5 U.S.C. 552b(e)(3).

FEDERAL COMMUNICATIONS COMMISSION

FCC To Hold Open Commission Meeting, Thursday, April 21, 1988

April 14, 1988.

The Federal Communications Commission will hold an Open Meeting on the subjects listed below on Thursday, April 21, 1988, which is scheduled to commence at 9:30 a.m., in Room 856, at 1919 M Street, NW., Washington, DC.

Agenda, Item No., and Subject

Private Radio—1—*Title:* Amendment of Part 94 of the rules regarding point-to multipoint use of the 2.5, 10.6 and 18 GHz bands by private operational-fixed microwave licensees; Amendment of Part 1 concerning general procedures for filing applications in the Private Operational-Fixed Microwave Service. *Summary:* The Commission will consider whether to adopt a Notice of Proposed Rulemaking to reexamine some of its technical and procedural rules governing point-to-multipoint operations by private radio licensees in the 2.5, 10.6 and 18 GHz bands.

Common Carrier—1—*Title:* Amendment of the Commission's Rules for Rural Cellular Radio Service, CC Docket No. 85-388. *Summary:* The Commission will consider action in these proceedings.

Common Carrier—2—*Title:* Complaint against Intercambio, Inc.; and Dan Glassoff, for alleged violation of 47 U.S.C. section 223(b). *Summary:* The Commission will consider whether to take further action in this proceeding.

Common Carrier—3—*Title:* Complaint against Audio Enterprises, Inc., and Wendy King, for alleged violation of 47 U.S.C. section 223(b). *Summary:* The Commission will consider whether to take further action in this proceeding.

Mass Media—1—*Title:* Policy Statement Regarding Terrain Shielding in the Evaluation of Television Translator, Television Booster and Low Power Television Applications. *Summary:* The Commission will consider whether to grant waivers of its low power television acceptance standards concerning interference protection based on acceptance terrain showings and consideration of any written assents from affected broadcast permittees and licensees.

This meeting may be continued the following work day to allow the Commisson to complete appropriate action.

Additional information concerning this meeting may be obtained from Sarah Lawrence, Office of Public Affairs, telephone number (202) 632-5050.

Issued: April 14, 1988.

Federal Communications Commission.

H. Walker Feaster III,

Acting Secretary.

[FR Doc. 88-8847 Filed 4-19-88; 11:18 am]

BILLING CODE 6712-01-M

FEDERAL ELECTION COMMISSION

"FEDERAL REGISTER" NO. 88-8346.

PREVIOUSLY ANNOUNCED DATE AND TIME: Thursday, April 21, 1988, 10:00 a.m.

THE FOLLOWING ITEM WAS ADDED TO THE AGENDA:

Directive 24—Internal Procedures on Public Financing of Presidential Candidates.

* * * * *

DATE AND TIME: Thursday, April 28, 1988, following the open meeting.

PLACE: 999 E Street, NW., Washington, DC.

STATUS: This meeting will be closed to the public.

ITEMS TO BE DISCUSSED:

Compliance matters pursuant to 2 U.S.C. 437g.

Audits conducted pursuant to 2 U.S.C. 437g, 438(b), and Title 26, U.S.C.

Matters concerning participation in civil actions or proceedings or arbitration.

Internal personnel rules and procedures or matters affecting a particular employee.

* * * * *

DATE AND TIME: Thursday, April 28, 1988, 10:00 a.m.

PLACE: 999 E Street, NW., Washington, DC (Ninth Floor).

STATUS: This meeting will be open to the public.

MATTERS TO BE CONSIDERED:

Setting of Dates and Future Meetings.

Correction and Approval of Minutes.

Eligibility Report for Candidates to Receive Presidential Primary Matching Funds.

Routine Administrative Matters.

PERSON TO CONTACT FOR INFORMATION: Mr. Fred Eiland, Information Officer, Telephone: 202-376-3155.

Marjorie W. Emmons,

Secretary of the Commission.

[FR Doc. 88-8884 Filed 4-19-88; 8:45 am]

BILLING CODE 6715-01-M

POSTAL SERVICE BOARD OF GOVERNORS

The Board of Governors of the United States Postal Service, pursuant to its Bylaws (39 CFR 7.5) and the Government in the Sunshine Act (5 U.S.C. 552b), hereby gives notice that it intends to hold a meeting at 1:00 p.m. on Monday, May 2, 1988, in Washington, DC, and at 8:30 a.m. on Tuesday, May 3, 1988, in the Benjamin Franklin Room, U.S. Postal Service Headquarters, 475 L'Enfant Plaza, SW., Washington, DC. As indicated in the following paragraph, the May 2 meeting is closed to the public. The May 3 meeting is open to the public. The Board expects to discuss the matters stated in the agenda which is set forth below. Requests for information about the meeting should be addressed to the Secretary of the Board, David F. Harris, at (202) 268-4800.

At its meeting on April 4, 1988, the Board voted to close to public observation its meeting scheduled for May 2, 1988, to consider certain mail classification matters that were deferred in the March 22, 1988, Decision of the Governors of the United States Postal Service on the Recommended Decision of the Postal Rate Commission on Postal Rate and Fee Changes (See 53 FR 12746, April 18, 1988).

Agenda

Monday Session

May 2, 1988—1:00 p.m. (Closed)

1. Consideration of certain mail classification matters proposed by the Postal Rate Commission but deferred from the March 22 decision.

Tuesday Session

May 3, 1988—8:30 a.m. (Open)

1. Minutes of the Previous Meeting, April 4-5, 1988.
2. Remarks of the Postmaster General.
3. Quarterly Report on Service Performance. (Mr. Mulligan)
4. Quarterly Report on Financial Performance. (Mr. Coppie)
5. Capital Investments. (Mr. Smith)
   a. Daytona Beach, Florida, General Mail Facility
   b. South Tampa Bay, Florida, Mail Processing Center
6. Tentative Agenda for June 6-7, 1988, meeting in Springfield, Missouri.

David F. Harris,

Secretary.

[FR Doc. 88-8873 Filed 4-19-88; 8:45 am]

BILLING CODE 7710-12-M

UNITED STATES INSTITUTE OF PEACE

TIME AND DATE: 9:00 a.m.–5:00 p.m. April 28 and 29, 1988.

PLACE: American Chemical Society, 1155 Sixteenth Street NW., Washington, DC

STATUS: Open (portions may be closed pursuant to subsection (c) of section 552(b) of title 5, United States Code, as provided in subsection 1706(h)(3) of the United States Institute of Peace Act, Pub. L. 98–525).

PURPOSE AND AGENDA: Meeting of the Board of Directors convened. Chairman's Report. President's Report. Committee Reports. Consideration of the minutes of the twenty-second meeting. Consideration of grants application matters.

CONTACT: Mrs. Olympia Diniak. Telephone: (202) 457–1700.

Dated: April 20, 1988.

Samuel W. Lewis,

President, United States Institute of Peace.

[FR Doc. 88–8864 Filed 4–19–88; 12:53 pm]

BILLING CODE 3155-01-M

Corrections

Federal Register
Vol. 53, No. 77
Thursday, April 21, 1988

This section of the FEDERAL REGISTER contains editorial corrections of previously published Presidential, Rule, Proposed Rule, and Notice documents and volumes of the Code of Federal Regulations. These corrections are prepared by the Office of the Federal Register. Agency prepared corrections are issued as signed documents and appear in the appropriate document categories elsewhere in the issue.

DEPARTMENT OF AGRICULTURE

Agricultural Marketing Service

7 CFR Part 911

Limes Grown in Florida; Amendments to Container Regulations

Correction

In rule document 88-220 beginning on page 402 in the issue of Thursday, January 7, 1988, make the following correction:

§ 911.329 [Corrected]

On page 403, in the first column, in § 911.329(a)(1), in the first line, after "shall" insert "handle".

BILLING CODE 1505-01-D

DEPARTMENT OF COMMERCE

International Trade Administration

[A-588-703]

Final Determination of Sales at Less Than Fair Value; Certain Internal-Combustion, Industrial Forklift Trucks From Japan

Correction

In notice document 88-8215 beginning on page 12552 in the issue of Friday, April 15, 1988, make the following correction:

On page 12552, in the second column, under **Case History**, after the second paragraph the following text was omitted:

On February 23, 1988, we issued a notice further rescheduling the public hearing until March 10, 1988 (53 FR 6681, March 2, 1988).

Between November 5 and 17, 1987, petitioners alleged that the home market sales of forklifts of Komatsu, Toyo Umpanki Co., Ltd. (TCM), Sumitomo, Nissan, and Toyota were being made at below their costs of production and requested that we initiate an investigation of their allegations. Given the timing of the filing of these allegations, we were unable to consider them for the preliminary determination. Based on the information submitted by petitioners in support of their allegations, we initiated an investigation of sales below cost of production for each of those manufacturers of forklifts except Toyota. We did not initiate such an investigation with respect to Toyota because there was insufficient evidence to support the allegation.

We issued cost of production questionnaires to Komatsu, TCM, Sumitomo, and Nissan during November 1987, and received responses during December 1987.

On December 7, 1987, TCM informed the Department of certain errors in its response submitted prior to the preliminary determination and requested the opportunity to submit revised information prior to verification. On December 31, 1987, the Department notified TCM that the revisions necessary to correct its response were so extensive as to constitute a new response which was submitted too late in the investigatory process. Therefore, we did not conduct verification of TCM's sales and cost of production responses, nor have we used these responses in our final determination.

On December 18, 1987, we received an initial questionnaire response from Kasagi Forklift, Inc. (Kasagi). Because the rsponse was submitted after the preliminary determination, we did not conduct verification at Kasagi, nor have we used its response for this determination.

Verification of the questionnaire responses submitted by Komatsu, Nissan, Toyota, Sumitomo, and Sanki Industrial Co., Ltd. (Sanki) was conducted in Japan and in the United States during January, February, and March 1988. On February 2, 1988, we conducted verification of TCM's monthly shipment data for purposes of our critical circumstances determination.

A public hearing was held on March 10, 1988. Petitioners, respondents, and other interested parties filed pre-hearing briefs on March 7, 1988, and post-hearing briefs on March 18, 1988.

BILLING CODE 1505-01-D

DEPARTMENT OF EDUCATION

National Advisory Board on International Education Programs; Open Meeting

Correction

In notice document 88-8187 appearing on page 12449 in the issue of Thursday, April 14, 1988, make the following correction:

In the first column, in the **SUMMARY**, in the date line, "April 19, 1988" should read "April 28, 1988".

BILLING CODE 1505-01-D

DEPARTMENT OF HEALTH AND HUMAN SERVICES

Food and Drug Administration

21 CFR Parts 349 and 369

[Docket No. 80N-0145]

Ophthalmic Drug Products for Over-the-Counter Human Use; Final Monograph

Correction

In rule document 88-4585 beginning on page 7076 in the issue of Friday, March 4, 1988, make the following corrections:

1. On page 7076, in the first column, in the **EFFECTIVE DATE** line, " March 6, 1988" should read "March 6, 1989".

2. On page 7086, in the second column, in the third paragraph, in the 10th line, after "eyewash", delete the period and insert "when" and lowercase "The".

BILLING CODE 1505-01-D

DEPARTMENT OF HEALTH AND HUMAN SERVICES

Food and Drug Administration

21 CFR Part 524

Ophthalmic and Topical Dosage Form New Animal Drugs not Subject to Certification; Levamisole

Correction

In rule document 88-5115 appearing on page 7504 in the issue of Wednesday, March 9, 1988, make the following correction:

In the second column, in the first line, "levamisole" was misspelled.

BILLING CODE 1505-01-D

DEPARTMENT OF HEALTH AND HUMAN SERVICES

Food and Drug Administration

[Docket Nos. 87P-0214/CP through 87P-0214/CP0013]

Magnetic Resonance Diagnostic Device; Panel Recommendation and Report on Petitions for MR Reclassification

Correction

In notice document 88-5116 beginning on page 7575 in the issue of Wednesday, March 9, 1988, make the following corrections:

1. On page 7578, in the second column, under **References**, in number 3, in the second line, "Electronic" should read "Electric".

2. On the same page, in the third column, under **References**, in number 12, in the second line, the docket number should read "87P-0214/CP0010".

BILLING CODE 1505-01-D

VOL 53 ISS 77 APR 21 1988 UMI

federal register

Thursday
April 21, 1988

Part II

Department of the Interior

Fish and Wildlife Service

50 CFR Part 17

Endangered and Threatened Wildlife and Plants; Cooleys Meadowrue, Dwarf-flowered Heartleaf, Little-wing Pearlymussel, Alabama Canebrake Pitcher-plant; Proposed Rules

VOL 53 ISS 77 AP 21 1988 UMI

DEPARTMENT OF THE INTERIOR

Fish and Wildlife Service

50 CFR Part 17

Endangered and Threatened Wildlife and Plants; Proposed Endangered Status for Cooley's Meadowrue

AGENCY: Fish and Wildlife Service, Interior.

ACTION: Proposed rule.

SUMMARY: The Service proposes to list *Thalictrum cooleyi* (Cooley's meadowrue), a perennial herb limited to 10 populations in North Carolina and Florida, as an endangered species under the authority of the Endangered Species Act of 1973, as amended (Act). *Thalictrum cooleyi* is endangered by residential and industrial development, mining, drainage activities associated with silviculture and agriculture, and suppression of fire. This proposal, if made final, would implement Federal protection provided by the Act for *Thalictrum cooleyi*. The Service seeks data and comments from the public on this proposal.

DATES: Comments from all interested parties must be received by June 20, 1988. Public hearing requests must be received by June 6, 1988.

ADDRESSES: Comments and materials concerning this proposal should be sent to the Field Supervisor, Asheville Field Office, U.S. Fish and Wildlife Service, 100 Otis Street, Room 224, Asheville, North Carolina 28801. Comments and materials received will be available for public inspection, by appointment, during normal business hours at the above address.

FOR FURTHER INFORMATION CONTACT: Ms. Nora Murdock at the above address (704/259-0321 or FTS 672-0321).

SUPPLEMENTARY INFORMATION:

Background

Thalictrum cooleyi, described by H.E. Ahles (1939) from material collected in Onslow County, North Carolina, is a rhizomatous perennial herb. The stems, which generally do not exceed 1 meter in height (but sometimes reach 2 meters on recently burned sites), are erect in full sun; in shade they are lax and sometimes lean on other plants or trail along the ground. Leaf shape (as well as texture) varies considerably but is usually narrowly lanceolate and unlobed, although occasionally two- to three-lobed leaves are seen. The unisexual flowers are born in mid- to late June in an open panicle on slender pedicels. The flowers lack petals, but staminate ones have yellowish to white sepals and lavender filaments about 5 to 7 millimeters long. Pistillate flowers are smaller and have greenish sepals. The fruits, which mature in August and September, are narrowly ellipsoidal achenes approximately 5 to 6 millimeters long (Radford *et al.* 1964, Kral 1983, Rome 1987, Leonard 1987). According to Ahles (1939), who described the species, *Thalictrum cooleyi* differs from the other similar species in the *Leucocoma* section of this genus in having lavender rather than white filaments (although this character is not always consistent even within the same population), in having much narrower leaflets that are narrowly lanceolate instead of oblong to ovate, and in having fewer leaf divisions.

Thalictrum cooleyi is a species endemic to the Southeastern Coastal Plain, where it is currently known from nine locations in North Carolina and one in Florida. The species occurs in moist to wet bogs and savannas and savanna-like openings on circumneutral soils and is dependent upon some form of disturbance to maintain the open quality of its habitat. Currently, artificial disturbance, such as powerline and road right-of-way maintenance and plowed firebreaks, are maintaining some of the openings historically provided by naturally occurring periodic fires.

Fifteen populations of *Thalictrum cooleyi* have been reported historically from seven counties in North Carolina, Georgia, and Florida. The report of the Georgia population is now believed to have been based on a misidentification (Leonard 1987). The 10 remaining populations (located in Walton County, Florida; and Columbus, Onslow, and Pender Counties, North Carolina) are all in private ownership, with The Nature Conservancy owning part of one of the sites in Pender County, North Carolina. Extirpated populations are believed to have succumbed as a result of fire suppression and silvicultural and agricultural activities. The continued existence of *Thalictrum cooleyi* is threatened by these activities as well as mining (part of one population exists on the edge of an inactive marl pit mine), drainage, highway construction/improvement, and herbicide use.

Federal government actions on this species began with section 12 of the Endangered Species Act of 1973 (16 U.S.C. 1531 *et seq.*), which directed the Secretary of the Smithsonian Institution to prepare a report on those plants considered to be endangered, threatened, or extinct. This report, designated as House Document No. 94-51, was presented to Congress on January 9, 1975. The Service published a notice in the July 1, 1975, **Federal Register** (40 FR 27832) of its acceptance of the report of the Smithsonian Institution as a petition within the context of section 4(c)(2) (now section 4(b)(3)) of the Act and of its intention thereby to review the status of the plant taxa named within.

On December 15, 1980, the Service published a revised Notice of Review for Native Plants in the **Federal Register** (45 FR 82480); *Thalictrum cooleyi* was included in that notice as a category-1 species. Category-1 species are those species for which the Service currently has on file substantial information on biological vulnerability and threats to support proposing to list them as endangered or threatened species. Subsequent revisions of the 1980 notice have maintained *Thalictrum cooleyi* in category-1.

Section 4(b)(3)(B) of the Act, as amended in 1982, requires the Secretary to make certain findings on pending petitions within 12 months of their receipt. Section 2(b)(1) of the 1982 amendments further requires that all petitions pending on October 13, 1982, be treated as having been newly submitted on that date. This was the case for *Thalictrum cooleyi* because of the acceptance of the 1975 Smithsonian report as a petition. On October 13, 1983; October 12, 1984; October 11, 1985; October 10, 1986, and October 14, 1987; the Service found that the petitioned listing of *Thalictrum cooleyi* was warranted but precluded by other listing actions of a higher priority and that additional data on vulnerability and threats was still being gathered. Publication of this proposal constitutes the final 1-year finding that is required.

Summary of Factors Affecting the Species

Section 4(a)(1) of the Act and regulations (50 CFR Part 424) promulgated to implement the listing provisions of the Act set forth the procedures for adding species to the Federal lists. A species may be determined to be an endangered or threatened species due to one or more of the five factors described in section 4(a)(1). These factors and their application to *Thalictrum cooleyi* Ahles (Cooley's meadowrue) are as follows:

A. *The present or threatened destruction, modification, or curtailment of its habitat or range. Thalictrum cooleyi* has been and continues to be endangered by destruction or adverse alteration of its habitat. Since discovery of the species, approximately one-fourth of the known populations have been extirpated largely due to fire suppression and conversion of the

habitat for silvicultural and agricultural purposes. Fire suppression is a serious problem for this species and will be discussed in detail under factor "E" below. At least nine of the remaining ten populations are currently threatened by habitat alteration (Rayner 1980, Leonard 1987).

Four of these populations survive on roadsides and another three are in powerline rights-of-way. All of these populations are small, which increases their vulnerability to extirpation as a result of highway and right-of-way maintenance and improvement, particularly if herbicides are used. The nine populations remaining in North Carolina probably represent the fragmented remains of what were once two larger populations—the six sites in Onslow and Pender Counties are all within a 6.5 kilometer radius, and the three sites in Columbus County are within a 4.0 kilometer radius. These nine sites now support a total of approximately 700 plants (which may be an overestimate due to the rhizomatous nature of the species) (Leonard 1987). Areas within the small radii occupied by the remaining colonies in North Carolina have been bulldozed, planted in fields, converted to pastures, or drained, undoubtedly destroying *Thalictrum cooleyi* populations in the process (Rayner 1980, Leonard 1987). One of the Pender County, North Carolina, populations was recently impacted by private road maintenance operations which resulted in most of the plants being covered with fill material. The Walton County, Florida, site has been recently impacted by commercial timber operations, and only nine mature plants remain there (Deborah White, Florida Natural Area Inventory, personal communication, 1987).

As stated by Mansberg (1985) the "extreme narrowness of geographic range and scarcity of appropriate habitat further increases the severity of the threats" faced by the species. Although, as stated in the "Background" section above, this species requires some form of disturbance to maintain its open habitat and can withstand mowing and timber-harvesting operations if properly done, it cannot withstand bulldozing, drainage, conversion to pine plantation, or direct application of herbicides. In addition, the small populations that survive on road edges could be easily destroyed by highway improvement projects or right-of-way maintenance activities if these are not done in a manner consistent with protecting *Thalictrum cooleyi*.

B. *Overutilization for commercial, recreational, scientific, or educational purposes. Thalictrum cooleyi* is not currently a significant component of the commercial trade in native plants. However, because of its small and easily accessible populations, it is vulnerable to taking and vandalism that could result from increased specific publicity. Rayner (1980) stated that although it is unlikely that it will ever be of commercial or horticultural interest, delineation of critical habitat for *Thalictrum cooleyi* would probably increase collections made for scientific or educational purposes.

C. *Disease or predation.* Not applicable to this species at this time.

D. *The inadequacy of existing regulatory mechanisms. Thalictrum cooleyi* is afforded legal protection in North Carolina by North Carolina General Statutes, SS 106–202.12 to 106–202.19 (Cum. Supp. 1985), which provides for protection from intrastate trade (without a permit), for monitoring and management of State-listed species, and prohibits taking of plants without written permission of landowners. *Thalictrum cooleyi* is listed in North Carolina as endangered. This species is not listed by the State of Florida, where it was thought to have been extirpated until very recently. State prohibitions against taking are difficult to enforce and do not cover adverse alterations of habitats, such as disruption of drainage patterns and water tables or exclusion of fire. Section 404 of the Federal Water Pollution Control Act (FWPCA) could potentially provide some protection for the habitat of *Thalictrum cooleyi*; however, most, if not all, of the sites where it occurs do not meet the wetlands criteria of the FWPCA. The Endangered Species Act would provide additional protection and encouragement of active management for *Thalictrum cooleyi*.

E. *Other natural or manmade factors affecting its continued existence.* As mentioned in the "Background" section of this proposed rule, many of the remaining populations are small in numbers of individual stems and in terms of area covered by the plants. In addition, the rhizomatous nature of the species indicates that there are many fewer individual plants in existence than stem counts would indicate. There is therefore low genetic variability within populations, making it more important to maintain as much habitat and as many of the remaining colonies as possible. In addition, the dioecious nature of the species further increases the vulnerability of extremely small populations, where plants of only one sex may remain. Leonard (1987) observed a ratio of male to female plants (in all populations) of three to one, a situation which probably hinders reproduction in recently colonized sites and in sites with very few plants.

Leonard (1987) also noted that the species is not prolific in terms of the number of seeds produced and that it seems to lack an effective seed distribution mechanism, which further inhibits colonization of new sites. Much remains unknown about the demographics and reproductive requirements of this species. Fire or some other suitable form of disturbance, such as mowing or careful clearing, is essential to maintaining the savanna and bog edges where *Thalictrum cooleyi* occurs. Without such periodic disturbance, this type of habitat is gradually overtaken and eliminated by the shrubs and trees of the adjacent woodlands. As the woody species increase in height and density, they overtop the *Thalictrum cooleyi*, which is shade-intolerant. The current distribution of this species is ample evidence of its dependence on disturbance. Of the ten remaining populations, seven are on roadsides or in powerline rights-of-way, and the other three are in areas that have been exposed to periodic fire. Populations in areas that have been recently burned tend to be more vigorous and to bloom more profusely.

The Service has carefully assessed the best scientific and commercial information available regarding the past, present, and future threats faced by this species in determining to propose this rule. Based on this evaluation, the preferred action is to list *Thalictrum cooleyi* as endangered. With one-fourth of the species' populations already having been eliminated, and only 10 remaining in existence; and, based upon its dependence on some form of active management, it definitely warrants protection under the Act. Endangered status seems appropriate because of the imminent serious threats facing most populations. As stated by Rayner (1980), "*Thalictrum cooleyi* certainly is one of the rarest, most directly threatened species in the entire United States. It should receive top priority for listing as an endangered species." Critical habitat is not being designated for the reasons discussed below.

Critical Habitat

Section 4(a)(3) of the Act, as amended, requires that, to the maximum extent prudent and determinable, the Secretary designate any habitat of a species, which is considered to be critical habitat, at the time the species is determined to be endangered or

threatened. The Service finds that designation of critical habitat is not prudent for *Thalictrum cooleyi* at this time. As discussed under factor "B" in the "Summary of Factors Affecting the Species," *Thalictrum cooleyi* is threatened by taking, an activity difficult to enforce against and not regulated by the Act with respect to plants, except for a prohibition against removal and reduction to possession of endangered plants from lands under Federal jurisdiction. Since none of the populations of this species occurs on Federal lands, these prohibitions of the Act offer it no protection. Publication of critical habitat descriptions would make this species even more vulnerable and increase State enforcement problems. All involved parties and landowners will be notified of the location and importance of protecting and managing this species' habitat.

Available Conservation Measures

Conservation measures provided to species listed as endangered or threatened under the Act include recognition, recovery actions, requirements for Federal protection, and prohibitions against certain practices. Recognition through listing encourages and results in conservation actions by Federal, State, and private agencies, groups, and individuals. The Act provides for possible land acquisition and cooperation with the States and requires that recovery actions be carried out for all listed species. Such actions are initiated by the Service following listing. The protection required of Federal agencies and the prohibitions against taking are discussed, in part, below.

Section 7(a) of the Act, as amended, requires Federal agencies to evaluate their actions with respect to any species that is proposed or listed as endangered or threatened and with respect to its critical habitat if any is being designated. Regulations implementing this interagency cooperation provision of the Act are codified at 50 CFR Part 402. Section 7(a)(4) requires Federal agencies to confer informally with the Service on any action that is likely to jeopardize the continued existence of a proposed species or result in the destruction or adverse modification of proposed critical habitat. If a species is subsequently listed, Section 7(a)(2) requires Federal agencies to ensure that activities they authorize, fund, or carry out are not likely to jeopardize the continued existence of such a species or to destroy or adversely modify its critical habitat. If a Federal action may adversely affect a listed species or its critical habitat, the responsible Federal agency must enter into formal consultation with the Service.

Federal activities that could impact *Thalictrum cooleyi* and its habitat in the future include, but are not limited to, the following: powerline construction, maintenance, and improvement; highway construction, maintenance, and improvement; drainage alterations; and permits for mineral exploration and mining. The Service will work with the involved agencies to secure protection and proper management of *Thalictrum cooleyi* while accommodating agency activities to the extent possible.

The Act and its implementing regulations found at 50 CFR 17.61, 17.62, and 17.63 set forth a series of general trade prohibitions and exceptions that apply to all endangered plants. With respect to *Thalictrum cooleyi*, all trade prohibitions of Section 9(a)(2) of the Act, implemented by 50 CFR 17.61, would apply. These prohibitions, in part, would make it illegal for any person subject to the jurisdiction of the United States to import or export, transport in interstate or foreign commerce in the course of commercial activity, sell or offer for sale this species in interstate or foreign commerce, or to remove and reduce to possession the species from areas under Federal jurisdiction. Certain exceptions can apply to agents of the Service and State conservation agencies. The Act and 50 CFR 17.62 and 17.63 also provide for the issuance of permits to carry out otherwise prohibited activities involving endangered species under certain circumstances. It is anticipated that few trade permits would ever be sought or issued, since *Thalictrum cooleyi* is not common in cultivation or in the wild. Requests for copies of the regulations on plants and inquiries regarding them may be addressed to the Office of Management Authority, U.S. Fish and Wildlife Service, P.O. Box 27329, Central Station, Washington, DC 20038-7329 (202/343-4955).

Public Comments Solicited

The Service intends that any final action resulting from this proposal will be as accurate and as effective as possible. Therefore, any comments or suggestions from the public, other concerned governmental agencies, the scientific community, industry, or any other interested party concerning any aspect of this proposed rule are hereby solicited. Comments particularly are sought concerning:

(1) Biological, commercial trade, or other relevant data concerning any threat (or lack thereof) to *Thalictrum cooleyi*;

(2) The location of any additional populations of *Thalictrum cooleyi* and the reasons why any habitat should or should not be determined to be critical habitat as provided by Section 4 of the Act;

(3) Additional information concerning the range and distribution of this species; and

(4) Current or planned activities in the subject area and their possible impacts on *Thalictrum cooleyi*.

Final promulgation of any regulation on *Thalictrum cooleyi* will take into consideration the comments and any additional information received by the Service, and such communications may lead to adoption of a final regulation that differs from this proposal.

The Endangered Species Act provides for a public hearing on this proposal, if requested. Requests must be filed within 45 days of the date of the proposal. Such requests must be made in writing and addressed to the Field Supervisor, Endangered Species Field Office (see "Addresses" section).

National Environmental Policy Act

The Fish and Wildlife Service has determined that an Environmental Assessment, as defined under the authority of the National Environmental Policy Act of 1969, need not be prepared in connection with regulations adopted pursuant to Section 4(a) of the Endangered Species Act of 1973, as amended. A notice outlining the Service's reasons for this determination was published in the Federal Register on October 25, 1983 (48 FR 49244).

References Cited

Ahles, H. 1939. *Thalictrum cooleyi* sp. nov. Brittonia 11:68-70.

Kral, R. 1983. A report on some rare, threatened, or endangered forest-related vascular plants of the South. Tech. publ. R8-TP-2. USDA Forest Service. 4:28-431.

Leonard, S. 1987. Inventory of populations of *Thalictrum cooleyi* and its occurrence sites in North Carolina. Report to the North Carolina Natural Heritage Program, Raleigh, NC. 16 pp.

Mansberg, L. 1985. *Thalictrum cooleyi*; draft global element ranking form prepared for The Nature Conservancy; North Carolina Natural Heritage Program, Raleigh, NC. 2 pp.

Radford, A., H. Ahles, and C. Bell. 1964. Manual of the vascular flora of the Carolinas. UNC Press, Chapel Hill. 459-462.

Rayner, D. 1980. Status report on *Thalictrum cooleyi* Ahles, submitted to U.S. Fish and Wildlife Service, Atlanta, GA.

Rome, A. 1987. *Thalictrum cooleyi*; draft stewardship abstract. The Nature Conservancy, Arlington, VA. 9 pp.

Author

The primary author of this proposed rule is Ms. Nora Murdock, Asheville Field Office, U.S. Fish and Wildlife

Service, 100 Otis Street, Room 224, Asheville, North Carolina 28801 (704/259-0321 or FTS 672-0321).

List of Subjects in 50 CFR Part 17

Endangered and threatened wildlife, Fish, Marine mammals, Plants (agriculture).

Proposed Regulation Promulgation

PART 17—[AMENDED]

Accordingly, it is hereby proposed to amend Part 17, Subchapter B of Chapter I, Title 50 of the Code of Federal Regulations, as set forth below:

1. The authority citation for Part 17 continues to read as follows:

Authority: Pub. L. 93-205, 87 Stat. 884; Pub. L. 94-359, 90 Stat. 911; Pub. L. 95-632, 92 Stat. 3751; Pub. L. 96-159, 93 Stat. 1225; Pub. L. 97-304, 96 Stat. 1411 (16 U.S.C. 1531 *et seq.*); Pub. L. 99-625, 100 Stat. 3500 (1986), unless otherwise noted.

2. It is proposed to amend § 17.12(h) by adding the following, in alphabetical order under the family Ranunculaceae, to the List of Endangered and Threatened Plants:

§ 17.12 Endangered and threatened plants.

* * * * *

(h) * * *

Species		Historic range	Status	When listed	Critical habitat	Special rules
Scientific name	Common name					
Ranunculaceae—Buttercup family:						
*	*	*	*	*	*	*
Thalictrum cooleyi	Cooley's meadowrue	U.S.A. (NC, FL)	E	NA	NA	
*	*	*	*	*	*	*

Dated: March 25, 1988.

Susan Recce,

Acting Assistant Secretary for Fish and Wildlife and Parks.

[FR Doc. 88-8772 Filed 4-20-88; 8:45 am]

BILLING CODE 4310-55-M

50 CFR Part 17

Endangered and Threatened Wildlife and Plants; Proposed Threatened Status for Dwarf-flowered Heartleaf

AGENCY: Fish and Wildlife Service, Interior.

ACTION: Proposed rule.

SUMMARY: The Service proposes to determine threatened status for the plant *Hexastylis naniflora* (dwarf-flowered heartleaf). It is known only from a small portion of the upper piedmont of southern North Carolina and adjacent South Carolina. Most of the known populations are threatened by residential and industrial development, conversion of habitat to pasture or small ponds, timber-harvesting, or cattle-grazing. This proposal, if made final, would implement the protection of the Endangered Species Act of 1973, as amended (Act). The Service seeks relevant data and comments from the public on this proposal.

DATES: Comments from all interested parties must be received by June 20, 1988. Public hearing requests must be received by June 6, 1988.

ADDRESSES: Comments and materials concerning this proposal should be sent to the Field Supervisor, Asheville Field Office, U.S. Fish and Wildlife Service, 100 Otis Street, Room 224, Asheville, North Carolina 28801. Comments and materials received will be available for public inspection, by appointment, during normal business hours at the above address.

FOR FURTHER INFORMATION CONTACT: Mr. Robert R. Currie at the above address (704/259-0321 or FTS 672-0321).

SUPPLEMENTARY INFORMATION:

Background

Hexastylis naniflora is a rare low-growing herbaceous plant in the birthwort family (Aristolochiaceae). The species was described by Blomquist (1957) in his revision of the North American members of the genus *Hexastylis*. The plant's heart-shaped leaves are dark green in color, evergreen and leathery, and are supported by long thin petioles from a subsurface rhizome. Maximum height rarely exceeds 15 centimeters (6 inches). The jug-shaped flowers are usually beige to dark brown in color and appear from mid-March to early June. The flowers are small and inconspicuous and are found near the base of the petioles. The fruit matures from mid-May to early July (Blomquist 1957, Gaddy 1980, 1981). *Hexastylis naniflora* grows in acidic soils along bluffs and adjacent slopes, in boggy areas next to streams and creekheads, and along the slopes of nearby hillsides and ravines (Gaddy 1980, 1981). The species is distinguished from other members of the genus *Hexastylis* by its small flowers and its distinctive habitat.

Hexastylis naniflora is known only from an eight-county area in the upper piedmont of North Carolina and adjacent South Carolina. There are 24 known populations of this species. The following summary of the known distribution of *Hexastylis naniflora*, by State and county, is extracted primarily from Gaddy (1980, 1981). Additional information was supplied by Rayner (South Carolina Wildlife and Marine Resources Department, personal communication, 1986, 1987), Mansberg (North Carolina Department of Natural Resources and Community Development, personal communication, 1986, 1987), and Newberry (University of South Carolina at Spartanburg, personal communication, 1987).

South Carolina

Cherokee County supports only one population of approximately 150 plants. The plants are growing in an area which has been adversely impacted by siltation from road construction.

Greenville County supports eight populations of *Hexastylis naniflora*. The populations vary in size from 50 to several hundred individuals. Most of the populations are adjacent to the rapidly expanding Greenville urban area or its suburbs and are threatened by loss of habitat to residential, commercial, or industrial construction. Agricultural activities, such as conversion of woodlands to pasture or construction of small ponds, also threaten the species. Timber-harvesting, except on a small, selective cut scale, would also adversely impact the species.

Spartanburg County supports three populations of the species. One of these contains 2 individuals, one contains 75 individuals, and the last contains approximately 1,400 individuals. The largest population in the county once contained over 4,000 plants; however, 64 percent of the population was destroyed by reservoir construction. Most of the remaining plants in this population are being protected from further destruction

by the City of Spartanburg (Commissioners of Public Works). The smallest population is within the right-of-way of the planned relocation of an interstate highway. The population of 75 plants has been adversely impacted by soil erosion caused by grazing cattle.

North Carolina

Cleveland County contains three populations. One of these supports only 10 plants and occurs on a poor quality site. The other two populations contain about 200 plants each. These two larger populations are threatened by timber-harvesting, conversion of their habitat to pasture or small ponds, and cattle-grazing.

Catawba County supports one large, healthy population of over 1,000 plants. This site has been protected to a limited extent through the Natural Areas Registry Program of the North Carolina Natural Heritage Program. This program alerts cooperative landowners to the significance of natural features on their property. It does not, however, provide long-term protection from the threats facing most populations of *Hexastylis naniflora*.

Burke County contains three populations, varying in size from 10 to approximately 500 individuals. The smallest population is on a poor quality site that is littered with trash. The two larger populations remain vulnerable to loss or adverse modification of their habitat.

Rutherford County currently contains three populations of *Hexastylis naniflora*. A fourth population was recently destroyed by road construction. The largest population, containing over 1,000 plants, is a registered natural area and thereby receives limited short-term protection. The smaller populations, 60 and 250 individuals respectively, are threatened by the same activities that have previously been mentioned.

There are two records of *Hexastylis naniflora* from Lincoln County. One population has not been recently verified and may be lost. The other contains about 160 healthy plants. The site supporting these plants has been selectively logged and remains vulnerable to destruction by clear-cutting of timber and other previously referred to activities.

Federal government actions on this species began with section 12 of the Endangered Species Act of 1973 (16 U.S.C. 1531 *et seq.*), which directed the Secretary of the Smithsonian Institution to prepare a report on those plants considered to be endangered, threatened, or extinct. This report, designated as House Document No. 94-51, was presented to Congress on January 9, 1975. On July 1, 1975, the Service published a notice (40 FR 27823) which formally accepted the Smithsonian report as a petition within the context of section 4(c)(2) (now section 4(b)(3)) of the Act. By accepting this report as a petition, the Service also acknowledged its intention to review the status of those plant taxa named within the report. *Hexastylis naniflora* was included in the Smithsonian report and the July 1, 1975, Notice of Review. On June 16, 1976, the Service published a proposed rule (41 FR 24523) to determine approximately 1,700 vascular plant taxa to be endangered species pursuant to section 4 of the Act; *Hexastylis naniflora* was included in this proposal.

The 1978 amendments to the Act required that all proposals over 2 years old be withdrawn. On December 10, 1979 (44 FR 70796), the Service published a notice withdrawing plants proposed on June 16, 1976. In 1979, the Service also funded a status survey for this species with the final status report being completed in 1980. Based upon the information provided in the status report, *Hexastylis naniflora* was included as a category-1 species in the December 15, 1980, revised Notice of Review for Native Plants (45 FR 82480). *Hexastylis naniflora* was again included as a category-1 species in the September 27, 1985, publication of an updated Notice of Review for Native Plants (50 FR 39526). Category-1 species are those for which the Service currently has on file information to support the proposed addition of the species to the Federal list of endangered and threatened species. Publication of proposed rules for some of these species has been delayed because of the large number of species within this category.

All plants included in the comprehensive plant notices are treated as under petition. Section 4(b)(3)(B) of the Act, as amended in 1982, requires the Secretary to make certain findings on pending petitions within 12 months of their receipt. Section 2(b)(1) of the 1982 amendments further requires that all petitions pending on October 13, 1982, be treated as having been newly submitted on that date. This was the case for *Hexastylis naniflora* because of the acceptance of the 1975 Smithsonian report as a petition. In 1983, 1984, 1985, 1986, and 1987, the Service found that the petitioned listing of *Hexastylis naniflora* was warranted but precluded by other listing actions of a higher priority and that additional data on vulnerability and threats was still being gathered. Publication of this proposal constitutes the final 1-year finding that is required.

Summary of Factors Affecting the Species

Section 4(a)(1) of the Act and regulations (50 CFR Part 424) promulgated to implement the listing provisions of the Act set forth the procedures for adding species to the Federal lists. A species may be determined to be an endangered or threatened species due to one or more of the five factors described in section 4(a)(1). These factors and their application to *Hexastylis naniflora* Blomquist (dwarf-flowered heartleaf) are as follows:

A. *The present or threatened destruction, modification, or curtailment of its habitat or range.* Gaddy (1981) found that much of the habitat that *Hexastylis naniflora* prefers has been destroyed by peach orchards, pastures, housing developments, and ponds. During searches for additional populations of the species, Gaddy (1981) discovered that many small ponds had been constructed at what were formerly springy creekheads that may have supported the species.

A large number of the known *Hexastylis naniflora* populations occur near expanding urban areas and are threatened by the residential, commercial, and industrial development associated with this growth. Populations occuring in more rural areas are threatened by habitat alteration or loss from land conversion to pasture or other agricultural uses, cattle-grazing, intensive timber-harvesting, residential construction, and construction of small ponds. Only three populations currently receive some form of protection. The City of Spartanburg, South Carolina, through a policy statement issued by the Commissioners of Public Works, has agreed to protect most of the largest South Carolina population. Two of the larger North Carolina populations are registered natural areas under the North Carolina Natural Heritage Program and thereby receive short-term protection from loss or alteration. Registry agreements are, however, nonbinding; and these two populations remain vulnerable to destruction in the long term.

B. *Overutilization for commercial, recreational, scientific, or educational purposes. Hexastylis naniflora* is not currently a significant component of the commercial trade in native plants; however, the species has potential for horticultural use, and publicity surrounding the listing of the species could generate an increased demand.

C. *Disease or predation.* Not applicable to this species at this time.

D. *The inadequacy of existing regulatory mechanisms. Hexastylis naniflora* is listed as an endangered species in North Carolina and is offered legal protection in that State. North Carolina General Statute 19–B, 202.12–202.19, provides State-listed plants protection from intrastate trade without a permit and for monitoring and management of populations of listed species. Although unofficially recognized as an endangered component of South Carolina's flora by the South Carolina Wildlife and Marine Resources Department, *Hexastylis naniflora* has no official protection status in the State. Section 404 of the Clean Water Act could potentially provide some protection for the dwarf-flowered heartleaf's habitat; however, most of the sites where it occurs do not meet the wetlands criteria of the Clean Water Act. The Endangered Species Act will provide additional protection for *Hexastylis naniflora.*

E. *Other natural or manmade factors affecting its continued existence.* Several of the known populations of *Hexastylis naniflora* occur on steep ravine slopes, which also support stands of mountain laurel (*Kalmia latiflora*) or *Rhododendron* spp. These stands are often very dense and reduce the amount of light reaching the *Hexastylis naniflora* plants growing below. Under these conditions the plants often show reduced vigor and reduced flower and fruit production. Careful, selective logging or natural tree fall would open up these populations to more light. Additional light, if not accompanied by increased siltation from the intensive soil disturbances associated with forest clear-cutting, probably would benefit these populations (Gaddy 1981).

The Service has carefully assessed the best scientific and commercial information available regarding the past, present, and future threats faced by this species in determining to propose this rule. Based on this evaluation, the preferred action is to list *Hexastylis naniflora* as a threatened species. Threatened status seems appropriate because of the number of populations that currently exist and the protection provided to several of the larger populations. Critical habitat is not being designated for the reasons discussed below.

Critical Habitat

Section 4(a)(3) of the Act, as amended, requires that, to the maximum extent prudent and determinable, the Secretary designate any habitat of a species, which is considered to be critical habitat, at the time the species is determined to be endangered or threatened. Most populations of this species are small, and loss of even a few individuals to activities such as collection for scientific purposes could extirpate the species from some locations. Taking, without permits, is only prohibited by the Act from locations under Federal jurisdiction; however, none of the known populations is under Federal jurisdiction. Therefore, publication of critical habitat descriptions and maps would increase the vulnerability of the species without significantly increasing protection. The owners and managers of all the known populations of *Hexastylis naniflora* will be made aware of the plant's location and of the importance of protecting the plant and its habitat. No additional benefits would result from a determination of critical habitat. Therefore, the Service concludes that it is not prudent to designate critical habitat for *Hexastylis naniflora.*

Available Conservation Measures

Conservation measures provided to species listed as endangered or threatened under the Endangered Species Act include recognition, recovery actions, requirements for Federal protection, and prohibitions against certain practices. Recognition through listing encourages and results in conservation actions by Federal, State, and private agencies, groups, and individuals. The Endangered Species Act provides for possible land acquisition and cooperation with the States and requires that recovery actions be carried out for all listed species. Such actions are initiated by the Service following listing. The protection required of Federal agencies and the prohibitions against taking are discussed, in part, below.

Section 7(a) of the Act, as amended, requires Federal agencies to evaluate their actions with respect to any species that is proposed or listed as endangered or threatened and with respect to its critical habitat, if any is being designated. Regulations implementing this interagency cooperation provision of the Act are codified at 50 CFR Part 402. Section 7(a)(4) requires Federal agencies to confer informally with the Service on any action that is likely to jeopardize the continued existence of a proposed species or result in the destruction or adverse modification of proposed critical habitat. If a species is subsequently listed, section 7(a)(2) requires Federal agencies to ensure that activities they authorize, fund, or carry out are not likely to jeopardize the continued existence of such a species or to destroy or adversely modify its critical habitat. If a Federal action may affect a listed species or its critical habitat, the responsible Federal agency must enter into formal consultation with the Service. All of the known populations of *Hexastylis naniflora* are on privately or municipally owned land. The only known Federal activity that may affect this species is the relocation of an interstate highway in South Carolina. A small population consisting of two clumps of plants may be lost during construction of this project. It is not anticipated that this loss, if it should occur, will significantly affect the status of *Hexastylis naniflora.*

The Act and its implementing regulations found at 50 CFR 17.71 and 17.72 set forth a series of general trade prohibitions and exceptions that apply to all threatened plants. All trade prohibitions of section 9(a)(2) of the Act, implemented by 50 CFR 17.71, would apply. These prohibitions, in part, would make it illegal for any person subject to the jurisdiction of the United States to import or export, transport in interstate or foreign commerce in the course of a commercial activity, sell or offer for sale this species in interstate or foreign commerce, or to remove and reduce to possession the species from areas under Federal jurisdiction. Seeds from cultivated specimens of threatened plant species are exempt from these prohibitions provided that a statement of "cultivated origin" appears on their containers. Certain exceptions can apply to agents of the Service and State conservation agencies. The Act and 50 CFR 17.72 also provide for the issuance of permits to carry out otherwise prohibited activities involving threatened species under certain circumstances. It is anticipated that few trade permits would ever be sought or issued, since *Hexastylis naniflora* is not common in cultivation or in the wild. Requests for copies of the regulations on plants and inquiries regading them may be addressed to the Office of Management Authority, P.O. Box 27329, Central Station, U.S. Fish and Wildlife Service, Washington, D.C. 20038–7329 (202/343–4955).

Public Comments Solicited

The Service intends that any final action resulting from this proposal will be as accurate and as effective as possible. Therefore, any comments or suggestions from the public, other concerned governmental agencies, the scientific community, industry, or any other interested party concerning any aspect of this proposed rule are hereby solicited. Comments particularly are sought concerning:

(1) biological, commercial trade, or other relevant data concerning any threat (or lack thereof) to *Hexastylis naniflora;*

(2) the location of any additional populations of *Hexastylis naniflora* and the reasons why any habitat should or should not be determined to be critical habitat as provided by Section 4 of the Act;

(3) additional information concerning the range and distribution of this species; and

(4) current or planned activities in the subject area and their possible impacts on *Hexastylis naniflora.*

Final promulgation of the regulation on *Hexastylis naniflora* will take into consideration the comments and any additional information received by the Service, and such communications may lead to adoption of a final regulation that differs from this proposal.

The Endangered Species Act provides for a public hearing on this proposal, if requested. Requests must be filed within 45 days of the date of this proposal. Such requests must be made in writing and addressed to the Field Supervisor, Asheville Field Office, U.S. Fish and Wildlife Service, 100 Otis Street, Room 224, Asheville, North Carolina 28801.

National Environmental Policy Act

The Fish and Wildlife Service has determined that an Environmental Assessment, as defined under the authority of the National Environmental Policy Act of 1969, need not be prepared in connection with regulations adopted pursuant to Section 4(a) of the Endangered Species Act of 1973, as amended. A notice outlining the Service's reasons for this determination was published in the **Federal Register** on October 25, 1983 (48 FR 49244).

References Cited

Blomquist, H.L. 1957. A revision of *Hexastylis* of North America. Brittonia 8(4):255–281.

Gaddy, L.L. 1980. Status report on *Hexastylis naniflora* Blomquist. Unpublished report prepared under contract to the U.S. Fish and Wildlife Service, Southeast Region, Atlanta, GA. 32 pp.

Gaddy, L.L. 1981. The status of *Hexastylis naniflora* Blomquist in North Carolina. Unpublished report prepared under contract to the Plant Protection Program, North Carolina Department of Agriculture. 63 pp.

Author

The primary author of this proposed rule is Mr. Robert R. Currie, Asheville Field Office, U.S. Fish and Wildlife Service, 100 Otis Street, Room 224, Asheville, North Carolina 28801 (704/259–0321 or FTS 672–0321).

List of Subjects in 50 CFR Part 17

Endangered and threatened wildlife, Fish, Marine mammals, Plants (agriculture).

Proposed Regulation Promulgation

PART 17—[AMENDED]

Accordingly, it is hereby proposed to amend Part 17, Subchapter B of Chapter I, Title 50 of the Code of Federal Regulations, as set forth below:

1. The authority citation for Part 17 continues to read as follows:

Authority: Pub. L. 93–205, 87 Stat. 884; Pub. L. 94–359, 90 Stat. 911; Pub. L. 95–632, 92 Stat. 3751; Pub. L. 96–159, 93 Stat. 1225; Pub. L. 97–304, 96 Stat. 1411 (16 U.S.C. 1531 *et seq.*); Pub. L. 99–625, 100 Stat. 3500 (1986), unless otherwise noted.

2. It is proposed to amend § 17.12(h) by adding to the following, in alphabetical order under the family Aristolochiaceae, to the List of Endangered and Threatened Plants:

§ 17.12 Endangered and threatened plants.

* * * * *

(h) * * *

Species		Historic range	Status	When listed	Critical habitat	Special rules
Scientific name	Common name					
*	*	*	*	*	*	*
Aristolochiaceae—Heartleaf family:						
Hexastylis naniflora	Dwarf-flowered heartleaf	U.S.A. (NC, SC)	T		NA	NA
*	*	*	*	*	*	*

Dated: March 24, 1988.

Susan Recce,

Acting Assistant Secretary for Fish and Wildlife and Parks.

[FR Doc. 88–8773 Filed 4–20–88; 8:45 am]

BILLING CODE 4310–55–M

---

50 CFR Part 17

Endangered and Threatened Wildlife and Plants; Proposal to List the Little-wing Pearlymussel as an Endangered Species

AGENCY: Fish and Wildlife Service, Interior.

ACTION: Proposed rule.

SUMMARY: The Service proposes to list the little-wing pearlymussel (*Pegias fabula*) as an endangered species under the Endangered Species Act of 1973, as amended. This species has been reported historically from 27 river reaches in Alabama, North Carolina, Kentucky, Tennessee, and Virginia. Only six small populations are known to survive: three in Kentucky, one in Tennessee, and two in Virginia. The species' decline has resulted primarily from habitat and water quality deterioration caused by impoundments and by pollution and siltation resulting from mining, agriculture, and construction activities. Owing to the species' limited distribution, any factor that adversely modifies habitat or water quality in the short river reaches that the species inhabits could threaten its survival. This proposed action, if made final, would extend the protections provided the Endangered Species Act to this species. Comments and information pertaining to this proposal are sought from the public.

DATES: Comments from all interested parties must be received by June 20, 1988. Public hearing requests must be received by June 6, 1988.

ADDRESSES: Comments and materials concerning this proposal should be sent to the Field Supervisor, Endangered Species Field Office, U.S. Fish and Wildlife Service, 100 Otis Street, Room 224, Asheville, North Carolina 28801. Comments and materials received will be available for public inspection, by appointment, during normal business hours at the above address.

FOR FURTHER INFORMATION CONTACT: Mr. Richard G. Biggins at the above address (704/259–0321 or FTS 672–0321).

SUPPLEMENTARY INFORMATION:

Background

The little-wing pearlymussel (*Pegias fabula*) was originally described by Lea (1838) as *Margaritana fabula.* Simpson (1900) placed the species by itself in his new genus *Pegias* and listed previous

scientific name combinations that had been applied to this species. Ortmann (1914) considered *Pegias* to be a subgenus of *Alasmidonta*; that change has been followed by few subsequent authorities. The Service follows Simpson (1900) and Clarke (1981) in considering *Margaritana curreyiana* Lea, 1840 to be as synonym of *Pegias fabula*.

The little-wing pearlymussel has been recorded historically from 27 river reaches in Alabama, North Carolina, Kentucky, Tennessee, and Virginia. All of the reported localities are in either the Tennessee or the Cumberland River drainages (Ahlstedt 1986, Bakaletz 1986, Clarke 1981, Stansbery 1976). Based on a recently completed Service-funded survey (Ahlstedt 1986) involving extensive field studies of potential and historic habitat in Cumberland and Tennessee River tributaries, the results of a study funded by the U.S. Army Corps of Engineers (Corps) (Bakaletz 1986), and the results of a survey conducted by Virginia Polytechnic Institute and State University (Richard Neves, Virginia Polytechnic Institute and State University, personal communication, 1987), the little-wing pearlymussel is now apparently restricted to six short stream reaches—three in southeastern Kentucky, two in southwestern Virginia, and one in central Tennessee. The Kentucky populations are on both public and private lands, while the Tennessee and Virginia populations are primarily on private lands. Habitat loss and water quality deterioration, attributable to impoundments, to industrial and municipal pollution, and to siltation resulting from mining, agriculture, large land disturbances, and construction activities, are the primary reasons for the species' decline. However, some losses are apparently due to other factors or to less drastic changes in water and habitat quality, as some populations have been extirpated from stream reaches that still contain mussel communities comprising other species (Stansbery 1976).

Horse Lick Creek in Jackson and Rockcastle Counties, Kentucky, presently contains the most extensive little-wing pearlymussel population, but it is threatened by coal mining activities and oil and gas exploration (Ahlstedt 1986). The Big South Fork Cumberland River, McCreary County, Kentucky, contains a restricted population (Bakaletz 1986). This population occurs in a short river section that is limited both upstream and downstream by deteriorating water quality resulting from poor land use practices and the impact of coal mining. The population in the Little South Fork Cumberland River, McCreary and Wayne Counties, Kentucky, once contained a substantial number of individuals; but recent mussel collections in this stream reach (Ahlstedt 1986, Skip Call, Kentucky Department for Environmental Protection, personal communication, 1985) have revealed large numbers of dead little-wing pearlymussels and other species, including a federally listed endangered species, the Cumberland bean pearlymussel (*Villosa trabalis*). The Virginia populations of the little-wing pearlymussel are restricted to a single shoal in the North Fork Holston River in Smyth County and a short river reach in the Clinch River in Tazewell County. These populations are small and are vulnerable to toxic chemical spills and siltation from land use changes and construction. The Tennessee population is in Cane Creek, Van Buren County. This population is also very small (probably inhabits less than 2 river miles) and vulnerable to toxic chemical spills.

The little-wing pearlymussel, the only species in the genus *Pegias*, is small, not exceeding 1.5 inches (3.8 centimeters) in length and 0.5 inch (1.3 centimeters) in width. The shell's outer suface (periostracum) is usually eroded, giving the shell a chalky or ashy white appearance. When present, however, the periostracum is light green or dark yellowish brown with dark rays of variable width along the anterior portion of the shell (Ahlstedt 1986). The species inhabits small, cool, high-to-moderate gradient streams, where it is usually found in the transition zone between pools and riffles. Like other freshwater mussels, it feeds by filtering food particles from the water. Like most species in its family (Unionidae), its reproductive cycle probably includes a larval stage that parasitizes a host fish. The mussel's life span, host fish species, and many other aspects of its life history are unknown.

The little-wing pearlymussel was recognized by the Service in the May 22, 1984 **Federal Register** (49 FR 21664) as a species that was being considered for possible addition to the List of Endangered and Threatened Wildlife. On June 22, 1987, the Service notified Federal, State, and local governmental agencies by mail (State fish and wildlife agencies were also contacted by telephone) that the species' status was being reviewed and that the species could be proposed for listing. The Service received 15 responses to the notification. Support for Federal protection was expressed by all three States involved, and no party voiced any objection to proposing Federal protection.

Summary of Factors Affecting the Species

Section 4(a)(1) of the Endangered Species Act (16 U.S.C. 1531 *et seq.*) and regulations (50 CFR Part 424) promulgated to implement the listing provisions of the Act set forth the procedures for adding species to the Federal Lists. A species may be determined to be an endangered or threatened species due to one or more of the five factors described in Section 4(a)(1). These factors and their application to the little-wing pearlymussel (*Pegias fabula*) are as follows:

A. *The present or threatened destruction, modification, or curtailment of its habitat or range.* Of the 27 river reaches reported to have supported little-wing pearlymussel populations (Ahlstedt 1986, Clarke 1981, Stansbery 1976), only six (three in Kentucky, two in Virginia, and one in Tennessee) are known to still support the species (Ahlstedt 1986, Bakaletz 1986, Richard Neves, personal communication, 1987) (see "Background" section). The species has apparently been extirpated from Alabama (two historic populations lost) and North Carolina (one historic population lost). Although it still survives in Kentucky, Tennessee, and Virginia, three populations in Kentucky, nine Tennessee populations, and six of Virginia's populations are believed to have been extirpated. The loss of some populations can be linked to specific causes, such as the impacts of coal mining, industrial and municipal pollution, and impoundments. However, other populations have apparently been lost to the general deterioration in aquatic habitat quality. Stansbery (1976) states, concerning this species, "Its disappearance from several sites which still retain populations of other species indicates a form highly sensitive to current changes."

Ahlstedt (1986) surveyed 55 potential and historic habitats but was able to find a total of only 17 live specimens. Seven live and three dead specimens were found in Horse Lick Creek in Jackson and Rockcastle Counties, Kentucky. This population, which extends over at least 10 creek miles, is apparently the healthiest of the surviving populations. Horse Lick Creek, identified by the Kentucky Division for Environmental Protection as one of Kentucky's Outstanding Resource Waters, has good habitat and water quality and a complex mussel fauna.

The Horse Lick Creek watershed is remote, not extensively developed, and partially within the Daniel Boone National Forest. However, the watershed has oil, gas, and coal deposits, and the exploration and development of these resources has already begun. This population can be protected only if the survival of the species is considered during the development of these resources.

In a recent study funded by the Corps (Bakaletz 1986), a small population of the little-wing pearlymussel was discovered in a 2.1-mile (approximately) section of the Big South Fork Cumberland River (McCreary County, Kentucky) within the Big South Fork National River and Recreation Area administered by the National Park Service. Much of the Big South Fork Cumberland River is impacted by siltation and acid mine drainage from coal mining activities. However, the short reach inhabited by this species is in a river section that has recovered from upstream impacts and is above the coal mining and impoundment impacts that degrade the lower river. Fourteen other mussel species also occur in this river reach including the Federally listed Cumberland bean pearly mussel (*Villosa trabalis*). The tan riffle shell (*Epioblasma walkeri*) has also been reported from this reach, but the report may be in error. However, the little-wing pearlymussel, possibly due to its greater sensitivity to environmental degradation, does not inhabit the entire river reach (more than 10 miles) populated by the two Federally protected mussels.

Sampling in the Little South Fork Cumberland River, McCreary and Wayne Counties, Kentucky, produced 3 live and 126 dead specimens. This population, which extends over about 10 river miles, was once relatively large, but recent deterioration in water quality has had a severe impact on the river's mussel community. Studies by the Kentucky Department for Environmental Protection (Sherri Evans and Skip Call, Kentucky Department for Environmental Protection, personal communications, 1986) indicate that the lower portion of the river section inhibited by the species is being impacted by drainage from abondoned mined lands. Lick Creek, a tributary in this river reach, was found to have substantially elevated concentrations of dissolved solids, sulphates, aluminum, iron, and manganese in November 1985 (Sherri Evans, personal communication, 1986). Although 52 dead specimens were found below Lick Creek, no live little-wing pearlymussels were encountered in this river reach.

Four live and three dead specimens were taken from Cane Creek, Van Buren County, Tennessee. This river has very limited mussel habitat with the species apparently limited to less than 2 river miles. Downstream from the population, Cane Creek is impounded by Great Falls Lake on the Caney Fork River. While upstream from the population the bouldery substrate is unsuitable habitat for this species, and at some points upstream the creek goes underground. Some siltation is apparent downstream from a recently constructed bridge.

The population in the North Fork Holston River (three live and three dead specimens collected), Smyth County, Virginia, is small. The North Fork Holston River has been sampled at a number of sites, and, except for one individual taken near Saltville, Virginia, all specimens past and present have been taken at one shoal near Nebo, Virginia.

A small population (six relic shells and one live animal collected) exists in the Clinch River in Tazewell County, Virginia. This population, like the North Fork Holston and Cane Creek populations, is apparently small and ranges over a short river reach.

Potential threats to the species and its habitat could arise from development of coal and/or gas reserves in the watersheds of Horse Lick Creek, Big South Fork Cumberland River, the Little South Fork Cumberland River, and Cane Creek. However, it should be noted that the Service has issued a no-jeopardy opinion under Section 7 of the Endangered Species Act to the Office of Surface Mining with respect to its approval of the coal mine regulation program of the Commonwealth of Kentucky. Although no final determination can be made until and unless the little-wing pearlymussel is listed and a consultation undertaken, the Service has no evidence that mining activities conducted in accordance with State and Federal regulations are a threat to the species. Rather, past unregulated activities have contributed to the species' decline, and current activities not in compliance with appropriate regulations may be a threat to the species. All six populations could potentially be impacted by such actions as road construction, stream channel modifications, logging activities, impoundments, sewage treatment plant discharges, land use changes, and other projects in the watershed if such activities are not planned and implemented with the survival of the species and the protection of its habitat in mind. As these populations inhabit only short stream reaches that are all within 1 to 5 miles of bridges and fords, they are all vulnerable to toxic spills.

B. *Overutilization for commercial, recreational, scientific, or educational purposes.* The specific areas inhabited by the species are presently unknown to the general public. As a result, overutilization of the species has not been a problem. However, through listing and the publicity it brings to a species, the problem of vandalism may arise, especially if maps of specific occupied habitat areas were identified through critical habitat designation. (See "Critical Habitat" section for reasons why critical habitat is not being designated.)

C. *Disease or predation.* Although the little-wing pearlymussel is undoubtedly consumed by predatory animals, there is no evidence that predation threatens the species. However, freshwater mussel die-offs have recently been reported throughout the Mississippi River basin, including the Tennessee River and its tributaries (Richard Neves, personal communication, 1986). The cause of the die-offs has not been determined, but significant losses have occurred in some populations. If this problem spreads to river reaches containing this species, significant losses could occur and further endanger the species' survival. Disease is one of the possible explanations for these die-offs.

D. *The inadequacy of existing regulatory mechanisms.* The States of Kentucky, Tennessee, and Virginia prohibit taking wildlife and fish, including freshwater mussels, for scientific purposes without a State collecting permit. However, these State laws do not protect the species' habitat from the potential impacts of Federal actions. Federal listing will provide the species additional protection under the Endangering Species Act by requiring a Federal permit to take the species and by requiring Federal agencies to consult with the Service when projects they fund, authorize, or carry out may affect the species.

E. *Other natural or manmade factors affecting its continued existence.* All six known populations are small and isolated. This isolation blocks the natural interchange of genetic material between populations, and small population size reduces the reservoir of genetic variability within the populations. The lack of genetic diversity could adversely affect, over time, the species' ability to evolve and respond to natural habitat changes. The sizes of the little-wing pearlymussel populations are unknown, but

considering the limited extent of available habitat and the densities of individuals (no little-wing pearlymussels were taken in 30 quantitative quadrat samples (Ahlstedt 1986)), it is likely these populations, with the possible exception of that in Horse Lick Creek, are now below the generally accepted level (Soule' 1980) required to maintain long-term genetic viability.

The Service has carefully assessed the best scientific and commercial information available regarding the past, present, and future threats faced by this species in determining to propose this rule. Based on this evaluation, the preferred action is to list the little-wing pearlymussel (*Pegias fabula*) as an endangered species. Historical records reveal that the species, although rare, was once widely distributed in many cool-water tributaries of the Tennessee and Cumberland Rivers. Now only six small, isolated populations are known to survive. Four are threatened by coal mining and/or oil and gas resource development, and all six populations, owing to their small size, are vulnerable to toxic spills. This species is also apparently very sensitive to environmental change, as it has been extirpated from many streams that still contain diverse mussel communities. Owing to the species' history of population losses, its apparent sensitivity to environmental change, and the vulnerable nature of all six populations, threatened status does not appear appropriate for this species. (See "Critical Habitat" section for a discussion of why critical habitat is not being proposed for the little-wing pearlymussel.)

Critical Habitat

Section 7(a)(2) of the Endangered Species Act, as amended, requries Federal agencies to ensure that activities they authorize, fund, or carry out are not likely to jeopardize the continued existence of a listed species or to destroy or adversely modify its critical habitat. Section 4(a)(3) requires that critical habitat be designated, to the maximum extent prudent and determinable, concurrent with the determination that a species is endangered or threatened. The Service finds that a determination of critical habitat for the little-wing pearlymussel is not prudent. Such a determination would result in no known benefit to the species. As part of the development of this proposed rule, Federal agencies have been notified of the little-wing pearlymussel's distribution and have been requested to provide data on proposed Federal projects that might adversely affect the species. No specific projects were identified. Should any potential adverse effects arise from future projects, the involved Federal agencies will already have the species' distributional data needed to determine if the species may be impacted by their action. The listing of a species and the publicity that arises as a consequence creates the potential for vandalism. Through the designation of critical habitat and the requirement for maps and specific habitat descriptions, the threat to the species from vandalism increases. Therefore, the Service believes that designation of critical habitat would not be prudent because no benefit to the species has been identified that would outweigh the potential threat of vandalism or collection, which would be exacerbated by publication of detailed critical habitat maps and descriptions.

Available Conservation Measures

Conservation measures provided to species listed as endangered or threatened under the Endangered Species Act include recognition, recovery actions, requirements for Federal protection, and prohibitions against certain practices. Recognition through listing encourages and results in conservation actions by Federal, State, and private agencies, groups, and individuals. The Endangered Species Act provides for possible land acquisition and cooperation with the States and requires that recovery actions be carried out for all listed species. Such actions are initiated by the Service following listing. The protection required of Federal agencies and the prohibitions against taking and harm are discussed, in part, below.

Section 7(a) of the Act, as amended, requires Federal agencies to evaluate their actions with respect to any species that is proposed or listed as endangered or threatened and with respect to its critical habitat, if any is being designated. Regulations implementing this interagency cooperation provision of the Act are codified at 50 CFR Part 402. Section 7(a)(4) requires Federal agencies to confer informally with the Service on any action that is likely to jeopardize the continued existence of a proposed species or result in destruction or adverse modification of proposed critical habitat. If a species is subsequently listed, Section 7(a)(2) requires Federal agencies to ensure that activities they authorize, fund, or carry out are not likely to jeopardize the continued existence of such a species or to destroy or adversely modify its critical habitat. If a Federal action may affect a listed species or its critical habitat, the responsible Federal agency must enter into formal consultation with the Service.

The Service is aware of only three Federal agencies (U.S. Forest Service, Office of Surface Mining, and National Park Service) that are presently involved with programs that may affect the species. The Service has been in contact with them concerning the potential impacts of their activities on the species and its habitat. Other Federal activities that could impact the species and its habitat include, but are not limited to, the carrying out of or the issuance of permits for hydroelectric facility and reservoir construction, stream alteration, wastewater facility development, and road and bridge construction. It has been the experience of the Service, however, that nearly all Section 7 consultations are resolved so that the species is protected and the project objectives can be met.

The Act and implementing regulations found at 50 CFR 17.21 set forth a series of general prohibitions and exceptions that apply to all endangered wildlife. These prohibitions, in part, make it illegal for any person subject to the jurisdiction of the United States to take, import or export, ship in interstate commerce in the course of commercial activity, or sell or offer for sale in interstate or foreign commerce any listed species. It also is illegal to possess, sell, deliver, carry, transport, or ship any such wildlife that has been taken illegally. Certain exceptions apply to agents of the Service and State conservation agencies.

Permits may be issued to carry out otherwise prohibited activities involving endangered wildlife species under certain circumstances. Regulations governing permits are at 50 CFR 17.22 and 17.23. Such permits are available for scientific purposes, to enhance the propagation or survival of the species, and/or for incidental take in connection with otherwise lawful activities. In some instances, permits may be issued during a specified period of time to relieve undue economic hardship that would be suffered if such relief were not available.

Public Comments Solicited

The Service intends that any final action from this proposal will be as accurate and as effective as possible. Therefore, any comments or suggestions from the public, other concerned governmental agencies, the scientific community, industry, or any other interested party concerning any aspect of this proposal are hereby solicited. Comments particularly are sought concerning:

BEST COPY AVAILABLE

(1) biological, commercial trade, or other relevant data concerning any threat (or lack thereof) to this species;

(2) the location of any additional populations of this species and the reasons why any habitat should or should not be determined to be critical habitat as provided by section 4 of the Act;

(3) additional information concerning the range and distribution of this species; and

(4) current or planned activities in the subject area and their possible impacts on this species.

Final promulgation of the regulation on this species will take into consideration the comments and any additional information received by the Service, and such communications may lead to adoption of a final regulation that differs from this proposal.

The Endangered Species Act provides for a public hearing on this proposal if one is requested. Requests must be filed within 45 days of the date of the proposal. Such requests must be made in writing and addressed to the Endangered Species Field Office, 100 Otis Street, Room 224, Asheville, North Carolina 28801.

National Environmental Policy Act

The Fish and Wildlife Service has determined that an Environmental Assessment, as defined under the authority of the National Environmental Policy Act of 1969, need not be prepared in connection with regulations adopted pursuant to section 4(a) of the Endangered Species Act of 1973, as amended. A notice outlining the Service's reasons for this determination was published in the Federal Register on October 25, 1983 (48 FR 49244).

References Cited

Ahlstedt, S.A. 1986. A status survey of the little-wing pearlymussel (*Pegias fabula*) (Lea 1838). Report submitted in fulfillment of U.S. Fish and Wildlife Service Contract No. 14-16-0004-84-027. 38 pp.

Bakaletz, S. 1986. Letter to the U.S. Fish and Wildlife Service describing discovery of the little-wing pearlymussel (*Pegias fabula*) in the Big South Fork Cumberland River, Kentucky, dated May 29, 1986. 2 pp.

Clarke, A.H. 1981. The Tribe Alasmidontini (Unionidae: Anodontinae), Part I: *Pegias*, *Alasmidonta*, and *Arcidens*. Smithsonian Contributions to Zoology, No. 326. 101 pp.

Lea, I. 1838. Descriptions of new freshwater and land shells. Transactions of the American Philosophical Society, New Series, 6:1-154, plates 1-24. (Reprinted in 1839 in Observations on the Genus Unio, 2:1-154, plates 1-24.)

Ortmann, A. E. 1914. Studies in naiades (in part). The Nautilus 28:41-47, 65-69.

Simpson, C.T. 1900. Synopsis of the naiades, or pearly fresh-water mussels. Proceedings of the U.S. National Museum 22(1205):501-1004.

Soule, M.E. 1980. Thresholds for survival: maintaining fitness and evolutionary potential. Pages 151-169 IN: M.E. Soule and B.A. Wilcox (eds.), Conservation Biology. Sinauer Assoc., Inc., Sunderland, MA.

Stansbery, D.H. 1976. Status of endangered fluviatile mollusks in central North America: *Pegias fabula* (Lea, 1838). Report submitted in fulfillment of U.S. Fish and Wildlife Service Contract No. 14-16-0008-755. 6 pp.

Author

The primary author of this proposed rule is Richard G. Biggins, Endangered Species Field Office, 100 Otis Street, Room 224, Asheville, North Carolina 28801 (704/259-0321 or FTS 672-0321).

List of Subjects in 50 CFR Part 17

Endangered and threatened wildlife, Fish, Marine mammals, Plants (agriculture).

Proposed Regulation Promulgation

PART 17—[AMENDED]

Accordingly, it is hereby proposed to amend Part 17, Subchapter B of Chapter I, Title 50 of the Code of Federal Regulations, as set forth below:

1. The authority citation for Part 17 continues to read as follows:

Authority: Pub. L. 93-205, 87 Stat. 884; Pub. L. 94-359, 90 Stat. 911; Pub. L. 95-632, 92 Stat. 3751; Pub. L. 96-159, 93 Stat. 1225; Pub. L. 97-304, 96 Stat. 1411 (16 U.S.C. 1531 *et seq.*); Pub. L. 98-625, 100 Stat. 3500 (1986); unless otherwise noted.

2. It is proposed to amend § 17.11(h) by adding the following, in alphabetical order under "CLAMS," to the List of Endangered and Threatened Wildlife:

§ 17.11 Endangered and threatened wildlife.

* * * * *

(h) * * *

Species								
Common name	Scientific name	Historic range	Vertebrate population where endangered or threatened	Status	When listed	Critical habitat	Special rules
CLAMS							
*	*	*	*	*	*	*	
Pearlymussel, little-wing	*Pegias fabula*	U.S.A. (KY,TN,VA)	NA	E		NA	NA
*	*	*	*	*	*	*	

Dated: March 25, 1988.

Susan Recce,

Acting Assistant Secretary for Fish and Wildlife and Parks.

[FR Doc. 88-8774 Filed 4-20-88; 8:45 am]

BILLING CODE 4310-55-M

50 CFR Part 17

Endangered and Threatened Wildlife and Plants; Proposed Endangered Status for Alabama Canebrake Pitcher-plant

AGENCY: Fish and Wildlife Service, Interior.

ACTION: Proposed rule.

SUMMARY: The Service proposes to determine a plant, *Sarracenia rubra* ssp. *alabamensis* (Alabama canebrake pitcher-plant), to be an endangered species under the authority contained in the Endangered Species Act (Act) of 1973, as amended. *Sarracenia rubra* ssp. *alabamensis* is currently known from only 11 sites in three central Alabama counties. However, only three of these are of significant size and two sites are imminently threatened. Over 50 percent of this species' populations have been lost through habitat destruction, succession (due to fire exclusion), over-collecting, and adverse land use practices. Extant populations continue

to be degraded by these factors. This proposed rule, if made final, will extend the Act's protection to *Sarracenia rubra* ssp. *alabamensis*. The Service seeks data and comments from the public on this proposed rule.

DATES: Comments from all interested parties must be recieved by June 20, 1988. Public hearing requests must be received by June 6, 1988.

ADDRESS: Comments and materials concerning this propsal should be sent to the Jackson Field Office, U.S. Fish and Wildlife Service, Jackson Mall Office Center, Suite 316, 300 Woodrow Wilson Avenue, Jackson, Mississippi 39213. Comments and materials received will be available for public inspection, by appointment, during normal business hours at the above address.

FOR FURTHER INFORMATION CONTACT: Ms. Cary Norquist at the above address (601/695-4900 or FTS 490-4900).

SUPPLEMENTARY INFORMATION:

Background

Sarracenia rubra ssp. *alabamensis*, is a member of the pitcher-plant family, is a carnivorous heb arising from a rhizome. This species produces two types of pitchers (hollow leaves) and occasional phyllodia (flattened leaves) each season. Spring pitchers, appearing with flowers, are 20–50 centimeters (cm) (7.87–19.7 inches) in length and recurved; the summer pitchers are larger (20–70 cm (7.87–27.6 inches)) and erect. Flowers are maroon in color and borne singly on scapes up to 60 cm (2 feet) tall. The fruit is a capsule. Flowering occurs from late April through early June (Case and Case 1974 and 1976, Kral 1983, McDaniel 1986, McDaniel and Troup 1982).

Sarracenia rubra ssp. *alabamensis* is endemic to a three county area in central Alabama. The first collections of this species were made during the early 1900's by Pollard and Maxon (McDaniel and Troup 1982) and Harper (1918, 1922). However, Case and Case (1974) were the first to formally recognize these plants as a distinct taxon.

There has been considerable disagreement regarding the proper taxonomic disposition of this taxon and the *Sarracenia rubra* complex in general. The taxonomic history of *Sarracenia rubra* ssp. *alabamensis* has been discussed in detail by various authors (Case and Case 1976. McDaniel 1986. McDaniel and Troup 1982). *Sarracenia rubra* ssp. *alabamensis* was given no recognition within *Sarracenia rubra* by Bell (1949). In other studies it has been referred to as a regional variant (McDaniel 1966, 1971), a subspecies (Schnell 1977, 1979), and a species (Case and Case 1974, 1976, McDaniel 1986). According the Case and Case (1976) and McDaniel (1986), confusion regarding its taxonomic validity stems from the presence of alleged "intermediates" that are actually ecologically induced variants or introgressed hybrids. Hybridization has been well documented in *Sarracenia* special (Bell 1952, Bell and Case 1956, McDaniel 1971).

Detailed comparisons of *Sarracenia rubra* ssp. *alabamensis* with other members of the *Sarracenia rubra* complex (*Sarracenia rubra* ssp. *jonesii*, *Sarracenia rubra* ssp. *wherryi*, *Sarracenia rubra* ssp. *gulfensis*, *Sarracenia rubra* ssp. *rubra*) are given by Case and Case (1976), Schnell (1977), and McDaniel (1986). Leaf shape is accepted as the most significant diagnostic character in *Sarracenia* (Bell 1949, Case and Case 1976, McDaniel 1971, 1986, Schnell 1977). Authors agree that *Sarracenia rubra* ssp. *alabamensis*' distinctiveness is best displayed in its large summer pitchers that are distinctively shaped, puberulent, yellow-green in color and inconspicuously veined and aerolate in the upper portion (Case and Case 1974, 1976, McDaniel 1986, Schnell 1977). *Sarracenia rubra* ssp. *alabamensis* and other members of the *Sarracenia rubra* complex maintain their morphological distinction when grown under standardized conditions (Case and Case 1976, Schnell 1977).

Sarracenia rubra ssp. *alabamensis* occurs in sandhill seeps, swamps, and bogs along the fall-line of central Alabama. Soils are acidic, highly saturated, deep peaty sands or clays. Historically, *Sarracenia rubra* ssp. *alabamensis* occurred in pristine habitat described as open boggy areas with little woody competition (Case 1974, Harper 1922). However, due to fire exclusion, much of this habitat has become invaded by woody vegetation. Populations which have survived in these areas are weak and declining due to increased competition and shading. Other remaining habitat has been adversely modified by changes in land use, particularly increased agricultural usage, and are now located in pastures or on rights-of-way.

This pitcher-plant grows in full sun or light shade in association with cinnamom fern (*Osmunda cinnamomea*), pipeworts (*Ericocaulon* sp.), orchids (*Calopogon*, *Cleistes*, *Pogonia*), yellow-eyed grasses (*Xyris* sp.), beak rushes (*Rhynchospora* sp.), sundews (*Drosera* sp.), and butterworts (*Pinguicula* sp.). Woody associates may include cane (*Arundinaria tecta*), bamboo-vine (*Smilax laurifolia*), sweet bay (*Magnolia virginiana*), alder (*Alnus* sp.), red maple (*Acer rubrum*), poison sumac (*Rhus vernix*), and wax myrtle (*Myrica* sp.)

Sarracenia rubra ssp. *alabamensis* has been reported from 27 sites in central Alabama; however, 16 of these populations have been destroyed through habitat destruction, herbicide application, over-collecting, and/or succession (due to fire exclusion). Extensive searches of suitable habitat for additional populations have been conducted for over 20 years by F. Case (pers. comm. 1987), McDaniel and Troup (1982) and many others. Currently, *Sarracenia rubra* ssp. *alabamensis* is known to exist at only 11 sites in central Alabama including four populations in Autauga County, five in Chilton County, and two in Elmore County. Only three populations are of significant size with approximately 100 to 300 plants. Of the remaining sites, two have limited populations (25–40 individuals) and six have poor populations (2–20 individuals). As previously discussed, most populations occur in impacted areas. Consequently, individuals have been lost at many of these sites due to adverse land use practices. All sites are on privately-owned lands.

Federal actions involving *Sarracenia rubra* ssp. *alabamensis* began with Section 12 of the Endangered Species Act of 1973, which directed the Secretary of the Smithsonian Institution to prepare a report on those plants considered to be endangered, threatened, or extinct. This report, designated as House Document No. 94–51, was presented to Congress on January 9, 1975. On July 1, 1975, the Service published a notice in the **Federal Register** (40 FR 27823) of its acceptance of the report of the Smithsonian Institution as a petition within the context of section 4(c)(2), now section 4(b)(3)(a), of the Act and of its intention thereby to review the status of those plants. On June 16, 1976, the Service published a proposed rule in the **Federal Register** (41 FR 24523) to determine approximately 1,700 vascular plant species to be endangered species pursuant to Section 4 of the Act. *Sarracenia rubra* ssp. *alabamensis* was included in the Smithsonian petition and the 1976 proposal. General comments received in relation to the 1976 proposal were summarized in an April 26, 1978, **Federal Register** publication (43 FR 17909).

The Endangered Species Act Amendments of 1978 required that all proposals over 2 years old be withdrawn. A 1-year grace period was given to proposals already over 2 years old. In the December 10, 1979, **Federal Register** (44 FR 70796), the Service

published and notice of withdrawal of the June 16, 1976, proposal, along with four other proposals that had expired.

Sarracenia rubra ssp. *alabamensis* was include as a Category 1 species in a revised list of plants under review for threatened or endangered classification published in the December 15, 1980, **Federal Register** (45 FR 82480). Category 1 comprises taxa for which the Service presently has sufficient biological information to support their being proposed to be listed as endangered or threatened species. On November 28, 1983, the Service published a supplement to the Notice of Review for Native Plants in the **Federal Register** (48 FR 53640); the plant notice was again revised September 27, 1985 (50 FR 39526). *Sarracenia rubra* ssp. *alabamensis* was included as a Category 2 species in the 1983 supplement and the 1985 revised notice. Category 2 species are those for which listing as endangered or threatened species may be warranted but for which substantial data on biological vulnerability and threats are not currently known or on file to support a proposed rule. Data obtained over the last few years now supports its reelevation to Category 1 and listing as endangered. The data demonstrate a limited distribution and continuing threats to the species.

Section 4(b)(3) of the Endangered Species Act, as amended in 1982, requires the Secretary to make certain findings on pending petitions within 12 months of their receipt. Section 2(b)(1) of the 1982 Amendments further requires that all petitions pending on October 13, 1982, be treated as having been newly submitted on that date. This was the case for *Sarracenia rubra* ssp. *alabamensis* because of the acceptance of the 1975 Smithsonian report as a petition. In October of 1983, 1984, 1985, 1986, and 1987, the Service found that the petitioned listing of *Sarracenia rubra* ssp. *alabamensis* was warranted, but that listing this species was precluded due to other higher priority listing actions and additional data were being gathered. Publication of the present proposal constitutes the final 1-year finding required on or before October 13, 1988.

Summary of Factors Affecting the Species

Section 4(a)(1) of the Endangered Species Act (16 U.S.C. 1531 *et seq.*) and regulations (50 CFR Part 424) promulgated to implement the listing provisions of the Act set forth the procedures for adding species to the Federal Lists. A species may be determined to be an endangered or threatened species due to one or more of the five factors described in section 4(a)(1). These factors and their application to *Sarracenia rubra* Walt. ssp. *alabamensis* (Case and Case) Schnell (Alabama canebrake pitcher-plant) are as follows:

A. *The present or threatened destruction, modification, or curtailment of its habitat or range. Sarracenia rubra* ssp. *alabamensis* occurs in small, localized colonies at only 11 sites in central Alabama (see "Background" for more detailed distributional information). Most of the species' habitat has been destroyed or adversely modified through clearing and drainage for agricultural usage (e.g., pastureland, row crops.) The intensive pressure from agricultural utilization of the habitat is evident in the fact that half of the extant populations occur in converted pastureland. Use of habitat as unimproved pasture may benefit plants by eliminating competing vegetation (Folkerts 1976), as long as the drainage is unaffected and the area is not overgrazed. However, with overgrazing, the soils become highly compacted and the plants are more likely to be trampled by cattle. One site supporting a vigorous population is imminently threatened by attempts to drain the area and convert it to pastureland. Many of the hillside bogs have served as sites for the construction of farm ponds. One of the largest populations once known for *Sarracenia rubra* ssp. *alabamensis* has declined from several hundred plants to less than 20 individuals due to direct destruction and soil moisture alterations associated with the construction of one such farm pond (Gibson 1982). All populations in agricultural sites have been degraded and several have lost individuals from such agricultural practices as outlined above.

Gravel mining poses a threat to this species and its habitat due to the gravel subsurface of many of the bogs. One area containing *Sarracenia rubra* ssp. *alabamensis* is presently an active mining site and one of the three largest extant populations is imminently threatened by plans for such an operation.

A number of populations were once located near railroad rights-of-way in Elmore and Autauga Counties, Alabama. Herbicide spraying along the rights-of-way contributed to the loss of many of these populations (R. Troup pers. comm. 1987) and poses a threat to extant populations on rights-of-way.

B. *Overutilization for commercial, recreational, scientific, or educational purposes.* Like many carnivorous plants, *Sarracenia rubra* ssp. *alabamensis* is vulnerable to over-collection by commercial plant dealers and hobbyists. Taking is a well-documented threat to this species (F. Case pers. comm. 1987, Folkerts 1976, Gibson 1982, Kral 1983, McDaniel and Troup 1982, Troup pers. comm. 1987) and has contributed to the destruction of several historical populations and significantly degraded many existing populations. In 1975, a collector ran an advertisement in a local newspaper offering a $20 reward for locational information and additional fees for collecting specimens.

C. *Disease or predation.* Although cattle have been known to feed on pitcher plants (Folkerts 1976), predation is not considered to be a significant threat to this species. *Sarracenia rubra* ssp. *alabamensis* is not known to be threatened by disease.

D. *The inadequacy of existing regulation mechanisms.* There are no State or Federal laws protecting this species or its habitat. The Act would provide protection (see "Available Conservation Measures" below) and encourage active management for this species.

E. *Other natural or manmade factors affecting its continued existence.* This species occurs in a specialized habitat type which evolved under the influence of periodic fires. Suppression of these naturally occurring fires from this habitat has resulted in succession and eventual elimination of plants through shading and overcrowding. As discussed in the "Background" section, much of this species' habitat has been degraded through succession. The loss of as many as five populations has been attributed to this factor (F. Case pers. comm. 1987, McDaniel and Troup 1982, R. Troup pers. comm. 1987) and many existing populations face a similar fate. Plants in sites which have been without fire for a period are weak and rarely flowering. Conservation of this species will require active site management through prescribed fire and hand-clearing. The relatively recent invasion of Japanese honeysuckle (*Lonicera japonica*) into this species' habitat (Case and Case 1974, Folkerts 1976, Kral 1983) is considered to be a significant threat.

This pitcher plant is vulnerable due to its restricted range and limited amount of suitable habitat. Local extinction through natural causes is possible at those sites supporting few individuals.

The Service has carefully assessed the best scientific and commercial information available regarding the past, present, and future threats faced by this species in determining to propose this rule. Based on this evaluation, the preferred action is to list *Sarracenia*

rubra ssp. *alabamensis* as an endangered species. Over 50 percent of the species' populations have been destroyed and remaining populations are imminently threatened, including two of the three remaining sites that support large, vigorous populations. No sites are protected. *Sarracenia rubra* ssp. *alabamensis* is in danger of extinction throughout all or significant portions of its range; thus an endangered species is defined by the Act. Critical habitat is not being designated for the reasons discussed below.

Critical Habitat

Section 4(a)(3) of the Act, as amended, requires that to the maximum extent prudent and determinable, the Secretary designate any habitat of a species which is considered to be critical habitat at the time the species is determined to be endangered or threatened. The Service finds that designation of critical habitat is not prudent for this species at this time. As discussed under Factor B in the "Summary of Factors Affecting the Species," *Sarracenia rubra* ssp. *alabamensis* is threatened by taking, an action not regulated by the Endangered Species Act with respect to plants, except for a prohibition against removal and reduction to possession of endangered plants from lands under Federal jurisdiction. All populations occur on private property. Publication of critical habitat descriptions would make this species even more vulnerable. Confidentiality of locations is considered a key factor in its protection. The major landowners have been contacted and informed of the locations and importance of protecting this species and its habitat. Protection of this species' habitat will be addressed through the recovery process and through the Section 7 jeopardy standard. Therefore, it would not be prudent to determine critical habitat for this species at this time.

Available Conservation Measures

Conservation measures provided to species listed as endangered or threatened under the Endangered Species Act include recognition, recovery actions, requirements for Federal protection, and prohibitions against certain practices. Recognition through listing encourages and results in conservation actions by Federal, State, and private agencies, groups, and individuals. The Endangered Species Act provides for possible land acquisition and cooperation with the States and requires that recovery actions be carried out for all listed species. Such actions are initiated by the Service following listing. The protection required of Federal agencies and the prohibitions against taking are discussed, in part, below.

Section 7(a) of the Act, as amended, requires Federal agencies to evaluate their actions with respect to any species that is proposed or listed as endangered or threatened and with respect to its critical habitat, if any is being designated. Regulations implementing this interagency cooperation provision of the Act are codified at 50 CFR Part 402. Section 7(a)(4) requires Federal agencies to confer informally with the Service on any action that is likely to jeopardize the continued existence of a proposed species or result in destruction or adverse modification of proposed critical habitat. If a species is listed subsequently, section 7(a)(2) requires Federal agencies to ensure that activities they authorize, fund, or carry out are not likely to jeopardize the continued existence of such a species or to destroy or adversely modify its critical habitat. If a Federal action may affect a listed species or its critical habitat, the responsible Federal agency must enter into formal consultation with the Service.

All presently known populations of this pitcher plant are on private land. Currently, no activities to be authorized, funded, or carried out by Federal agencies are known that would affect this species.

The Act and its implementing regulations found at 50 CFR 17.61, 17.62, and 17.63 set forth a series of general trade prohibitions and exceptions that apply to all endangered plants. All trade prohibitions of section 9(a)(2) of the Act, implemented by 50 CFR 17.61, would apply. These prohibitions, in part, would make it illegal for any person subject to the jurisdiction of the United States to import or export any endangered plant, transport it in interstate or foreign commerce in the course of a commercial activity, sell or offer it for sale in interstate or foreign commerce, or remove it from areas under Federal jurisdiction and reduce it to possession. Certain exceptions can apply to agents of the Service and State conservation agencies. The Act and 50 CFR 17.62 and 17.63 also provide for the issuance of permits to carry out otherwise prohibited activities involving endangered species under certain circumstances. It is anticipated that few trade permits would ever be sought or issued since the plant is not common in cultivation or in the wild. Requests for copies of the regulations on plants and inquiries regarding them may be addressed to the Office of Management Authority, U.S. Fish and Wildlife Service, P.O. Box 27329, Central Station, Washington, D.C. 20038–7329 (202/343–4955).

On June 6, 1981, *Sarracenia rubra* ssp. *alabamensis* was included in Appendix I of the Convention on International Trade in Endangered Species of Wild Fauna and Flora (CITES). The effect of this listing is that both export and import permits are required before international shipment may occur. Such shipment is strictly regulated by CITES member nations to prevent it from being detrimental to the survival of the species, and cannot be allowed if it is for primarily commercial purposes. If plants are certified as artificially propagated, however, international shipment requires only export documents under CITES, and commercial shipments may be allowed.

Public Comments Solicited

The Service intends that any final action resulting from this proposal will be as accurate and as effective as possible. Therefore, any comments or suggestions from the public, other concerned governmental agencies, the scientific community, industry, or any other interested party concerning any aspect of this proposal are hereby solicited. Comments particularly are sought concerning:

(1) biological, commercial trade, or other relevant data concerning any threat (or lack thereof) to this species;

(2) the location of any additional populations of this species and the reasons why any habitat should or should not be determined to be critical habitat as provided by Section 4 of the Act;

(3) additional information concerning the range and distribution of this species; and

(4) current or planned activities in the subject area and their possible impacts on this species.

Final promulgation of the regulation on this species will take into consideration the comments and any additional information received by the Service, and such communications may lead to adoption of a final regulation that differs from this proposal.

The Endangered Species Act provides for a public hearing on this proposal, if requested. Requests must be filed within 45 days of the date of the proposal. Such requests must be made in writing and addressed to Field Supervisor, Jackson Field Office (see **ADDRESSES** section).

National Environmental Policy Act

The Fish and Wildlife Service has determined that an Environmental Assessment, as defined under the

authority of the National Environmental Policy Act of 1969, need not be prepared in connection with regulations adopted pursuant to Section 4(a) of the Endangered Species Act of 1973, as amended. A notice outlining the Service's reasons for this determination was published in the **Federal Register** on October 25, 1983 (48 FR 49244).

References Cited

Bell, C.R. 1949. A cytotaxonomic study of the Sarraceniaceae of North America. J. Elisha Mitchell Sci. Soc. 65:137–166.

Bell, C.R. 1952. Natural hybrids in the genus *Sarracenia*. I. History, distribution and taxonomy. J. Elisha Mitchell Sci. Soc. 68:55–80.

Bell, C.R., and F.W. Case. 1956. Natural hybrids in the genus *Sarracenia*. II. Current notes on distribution. J. Elisha Mitchell Sci. Soc. 72:143–152.

Case, F.W., and R.B. Case. 1974. *Sarracenia alabamensis*, a newly recognized species from central Alabama. Rhodora 76:650–665.

Case, F.W., and R.B. Case. 1976. The *Sarracenia rubra* complex. Rhodora 78:270–325.

Folkerts, G.W. 1976. Endangered and threatened carnivorous plants of North America, pp. 301–318. *In:* Extinction is Forever: The Status of Threatened and Endangered Plants of the Americas. New York Bot. Garden.

Gibson, T.C. 1982. Letter to Fish and Wildlife Service regarding *Sarracenia rubra* ssp. *alabamensis*.

Harper, R.M. 1918. The American pitcher-plants. J. Elisha Mitchell Sci. Soc. 34:110–125.

Harper, R.M. 1922. Some pine-barren bogs in central Alabama. Torreya 22:57–59.

Kral, R. 1983. A report on some rare, threatened, or endangered forest-related vascular plants of the South. USDA, Forest Service, Tech. Pub. R8–TP2, pp. 549–552.

McDaniel, S.T. 1966. A taxonomic revision of *Sarracenia* (*Sarraceniaceae*). *Ph.D. Dissertation, Florida State University, Tallahassee. 128 pp.*

McDaniel, S.T. 1971. The genus *Sarracenia* (*Sarraceniaceae*). *Bull. Tall Timbers Research Sta. No. 9.*

McDaniel, S.T. 1986. Taxonomic study of three *Sarracenia* subspecies (*S. rubra* ssp. alabamensis, S. rubra ssp. *wherryi*, and *S. rubra* ssp. *jonesii*). Provided under contract to the U.S. Fish and Wildlife Service, Southeast Region, Atlanta, Georgia. 15 pp.

McDaniel, S.T., and R.L. Troup. 1982. Status report on *Sarracenia alabamensis* subsp. *alabamensis*. Provided under contract to the U.S. Fish and Wildlife Service, Southeast Region, Atlanta, Georgia. 17 pp.

Schnell, D.E. 1977. Infraspecific variation in *Sarracenia rubra* Walt.: some observations. Castanea 42:149–170.

Schnell, D.E. 1979. *Sarracenia rubra* Walter ssp. *qulfensis;* a new subspecies. Castanea 44:217–223.

Author

The primary author of this proposed rule is Cary Norquist (see **ADDRESSES** section (601/965–4900 or FTS 490–4900).

List of Subjects in 50 CFR Part 17

Endangered and threatened wildlife, Fish, Marine mammals, Plants (agriculture).

Proposed Regulation Promulgation

PART 17—[AMENDED]

Accordingly, it is hereby proposed to amend Part 17, Subchapter B of Chapter I, Title 50 of the Code of Federal Regulations, as set forth below:

1. The authority citation for Part 17 continues to read as follows:

Authority: Pub. L. 93–205, 87 Stat. 884; Pub. L. 94–359, 90 Stat. 911; Pub. L. 95–632, 92 Stat. 3751; Pub. L. 96–159, 93 Stat. 1225; Pub. L. 97–304, 96 Stat. 1411 (16 U.S.C. 1531 *et seq.*); Pub. L. 99–625, 100 Stat. 3500 (1986), unless otherwise noted.

2. It is proposed to amend § 17.12(h) by adding the following, in alphabetical order under Sarraceniaceae, to the List of Endangered and Threatened Plants:

§ 17.12 Endangered and threatened plants.

* * * * *

(h) * * *

Species: Scientific name	Species: Common name	Historic range	Status	When listed	Critical habitat	Special rules
Sarraceniaceae—Pitcher plant family:						
*	*	*	*	*	*	*
Sarracenia rubra ssp. *alabamensis* (=*Sarracenia alabamensis* ssp. *alabamensis*).	Alabama canebrake pitcher-plant.	U.S.A. (AL)	E		NA	NA
*	*	*	*	*	*	*

Dated: March 25, 1988.

Susan Recce,

Acting Assistant Secretary for Fish and Wildlife and Parks.

[FR Doc. 88–8775 Filed 4–20–88; 8:45 am]

BILLING CODE 4310–55–M

Reader Aids

Federal Register

Vol. 53, No. 77

Thursday, April 21, 1988

INFORMATION AND ASSISTANCE

Federal Register

Index, finding aids & general information	523-5227
Public inspection desk	523-5215
Corrections to published documents	523-5237
Document drafting information	523-5237
Machine readable documents	523-5237

Code of Federal Regulations

Index, finding aids & general information	523-5227
Printing schedules	523-3419

Laws

Public Laws Update Service (numbers, dates, etc.)	523-6641
Additional information	523-5230

Presidential Documents

Executive orders and proclamations	523-5230
Public Papers of the Presidents	523-5230
Weekly Compilation of Presidential Documents	523-5230

The United States Government Manual

General information	523-5230

Other Services

Data base and machine readable specifications	523-3408
Guide to Record Retention Requirements	523-3187
Legal staff	523-4534
Library	523-5240
Privacy Act Compilation	523-3187
Public Laws Update Service (PLUS)	523-6641
TDD for the deaf	523-5229

FEDERAL REGISTER PAGES AND DATES, APRIL

10519-10868 1
10869-11030 4
11031-11238 5
11239-11486 6
11487-11632 7
11633-11814 8
11815-11990 11
11991-12136 12
12137-12370 13
12371-12508 14
12509-12670 15
12671-12758 18
12759-12908 19
12909-13096 20
13097-13234 21

CFR PARTS AFFECTED DURING APRIL

At the end of each month, the Office of the Federal Register publishes separately a List of CFR Sections Affected (LSA), which lists parts and sections affected by documents published since the revision date of each title.

3 CFR

Proclamations:
5784 10519
5785 10521
5786 10523
5787 11031
5788 11489
5789 11809
5790 11811
5791 11813
5792 12365
5793 12367
5794 12369
5795 12671
5796 12673
5797 13094

Executive Orders:
12634 11041
12635 12134

Administrative Orders:
Memorandums:
Mar. 31, 1988 11039
Presidential Determinations:
No. 88-10 of February 29, 1988 11487

5 CFR

831 11633
842 11633
1001 13097
1633 11815

Proposed Rules:
300 13121
531 13121
1632 11864
2431 10885

7 CFR

2 11636
300 10525
301 11825
318 12909
340 12910
400 10526
426 12759
724 12675
725 12675
726 12675
907 12371
908 12371
910 ..... 10527, 11636, 12509
911 ..... 11830, 13217
917 11832
929 12373
946 11043
981 12374
1032 11637
1064 11590
1126 11638
1421 11239
1864 13098
1927 13098
1951 13098
1955 13098
1956 13098
3600 11639
3601 11639

Proposed Rules:
6 11091
11 13125
53 10545
54 10545
401 12774
449 11299
916 12687
917 ..... 11669, 12691
918 11867
946 12423
949 10887
1030 10894
1065 12424
1106 11092
1497 11474
1498 11474
1530 11098
1550 13125
1700 11511
1701 10545
1900 12695
1980 12695
3403 13048

8 CFR

Proposed Rules:
3 11300
208 11300
236 11300
242 11300
253 11300

9 CFR

77 ..... 11491, 12913
92 ..... 11043, 12640

Proposed Rules:
78 12019

10 CFR

430 10869
600 12137
1010 ..... 11240, 12497

Proposed Rules:
2 11310
40 13128
50 ..... 11311, 12425

12 CFR

202 11044
205 11046
226 ..... 11047, 11055
229 11832
265 ..... 11640, 12509
547 13105
548 13105

549 ... 13105
563 ... 11242, 11243, 13105
569a ... 13105
569b ... 13105
569c ... 13105
611 ... 12140
615 ... 12140

Proposed Rules:
563 ... 13131, 13133
571 ... 13133
588 ... 13133

13 CFR
308 ... 12510

14 CFR
Ch. III ... 11004
21 ... 13113
23 ... 13113
39 ... 11246, 11641–11643, 11837, 11838, 12141, 12376, 12511, 12914, 12915, 13114
71 ... 10528, 11020, 11060, 11061, 11839–11841, 12916–12918, 13115, 13116
97 ... 11062, 12377
121 ... 12358
135 ... 12358

Proposed Rules:
Ch. I ... 11868
21 ... 11869
23 ... 11869
27 ... 10826, 11162
29 ... 10826, 11162
39 ... 11674–11676, 11678, 11871, 12427, 12947
71 ... 10546, 11100, 11101, 12866, 12947
73 ... 11102
298 ... 12774

15 CFR
370 ... 12668
371 ... 12668
373 ... 12668
378 ... 12668
379 ... 12668
385 ... 12668
399 ... 12668

Proposed Rules:
7 ... 12880

16 CFR
13 ... 11247, 12379

Proposed Rules:
13 ... 12534

17 CFR
30 ... 11491
200 ... 12412, 12918
229 ... 12924
230 ... 11841, 12918
239 ... 12918
240 ... 11841, 12924
249 ... 12924

Proposed Rules:
Ch. IV ... 12428
200 ... 12429
229 ... 12948
249 ... 12948

18 CFR
37 ... 11191, 12931
154 ... 11191
157 ... 11644, 11845
389 ... 12676, 12677

Proposed Rules:
272 ... 12704
274 ... 12704

19 CFR
7 ... 12143
103 ... 12937

20 CFR
10 ... 11594
416 ... 12938

Proposed Rules:
10 ... 11596

21 CFR
179 ... 12756
184 ... 11247
193 ... 12942
340 ... 11731
349 ... 13217
369 ... 13217
444 ... 12644, 12658
452 ... 12414
510 ... 11492
520 ... 11063
522 ... 11064, 11493
524 ... 11064, 12512, 13217
540 ... 11492
558 ... 11065, 11251
561 ... 11938, 12640, 12942
610 ... 12760
640 ... 12760
660 ... 12760
800 ... 11251
803 ... 11251
807 ... 11251
808 ... 11251
809 ... 11251
812 ... 11251
813 ... 11251
820 ... 11251
860 ... 11251
861 ... 11251
862 ... 11645
864 ... 11251
866 ... 11251
876 ... 11251
895 ... 11251
1002 ... 11251
1005 ... 11251
1010 ... 11251
1020 ... 11251
1030 ... 11251
1040 ... 11251
1050 ... 11251
1308 ... 10834, 10861, 10869

Proposed Rules:
133 ... 11312
172 ... 13134
175 ... 11402
176 ... 11402
177 ... 11402
178 ... 11402
193 ... 11938
332 ... 12778
357 ... 12779
561 ... 11313

22 CFR
120 ... 11494, 12099
121 ... 11494, 12099
122 ... 11494, 12099
123 ... 11494, 12099
124 ... 11494, 12099
125 ... 11494, 12099
126 ... 11494, 12099
127 ... 11494, 12099
128 ... 11494, 12099
514 ... 10528
602 ... 10529
706 ... 11992

Proposed Rules:
204 ... 11872
602 ... 12430

23 CFR
650 ... 11065
657 ... 12768
658 ... 12145
771 ... 11065
1204 ... 11255
1205 ... 11255

Proposed Rules:
625 ... 11875
626 ... 11875
1309 ... 11679

24 CFR
50 ... 11224
200 ... 11270
201 ... 11997
203 ... 10529, 11997
221 ... 11224
234 ... 11997
236 ... 11224
241 ... 11224
248 ... 11224

Proposed Rules:
35 ... 11164
200 ... 11164, 12431
510 ... 11164
511 ... 11164
570 ... 11164
882 ... 11164
886 ... 11164
888 ... 12278
941 ... 11164
965 ... 11164
968 ... 11164

25 CFR
61 ... 11271

26 CFR
1 ... 11002, 11066, 11162, 11731, 12000, 12149, 12513, 12677, 12678
602 ... 11066, 11162, 11731, 12000

Proposed Rules:
1 ... 11103, 11876, 12433, 12534, 12705

27 CFR

Proposed Rules:
4 ... 12024
12 ... 12024

28 CFR
0 ... 10870, 10871, 11645
66 ... 12099
71 ... 11645

Proposed Rules:
16 ... 12151

29 CFR
102 ... 10872
1907 ... 12102
1910 ... 11414, 12102
2610 ... 10530
2622 ... 10530
2644 ... 10531
2676 ... 12514

Proposed Rules:
516 ... 11590, 12497
530 ... 11590, 12497
1404 ... 12952
1910 ... 11511
1915 ... 11511
1917 ... 11511
1918 ... 11511
2550 ... 11886
2580 ... 11886

30 CFR
48 ... 12415
75 ... 11395
250 ... 10596, 12227
256 ... 10596, 12227
773 ... 11606
934 ... 11500

Proposed Rules:
20 ... 12250
75 ... 12250
77 ... 12250, 12253
785 ... 11685
823 ... 11685
935 ... 11887, 12705
948 ... 11888

31 CFR

Proposed Rules:
103 ... 11513

32 CFR
388 ... 10876
706 ... 12515

Proposed Rules:
45 ... 12034

33 CFR
84 ... 10532
95 ... 13117
100 ... 11502, 12415, 13118
117 ... 10533, 10534, 12416, 12417
165 ... 12417, 12679, 13118, 13119
173 ... 13117
177 ... 13117

Proposed Rules:
100 ... 11515, 12434, 12706
110 ... 11395, 11515
117 ... 11516, 11517, 12434, 12535, 12707, 12708

34 CFR
99 ... 11942
600 ... 11208
657 ... 10820
668 ... 11208

Proposed Rules:
105 ... 10808

35 CFR
103 ... 12516

36 CFR
1202 ... 12150
1258 ... 12150

37 CFR
10 ... 13120

38 CFR
17 ... 13120

36 11502

39 CFR

Proposed Rules:
111 11685

40 CFR

22 12256
24 12256
52 ..... 11068, 11273, 11655, 11847, 12417, 12896, 13121
60 ..... 11590, 12008, 12009, 12496, 12517
61 12517
180 ..... 11071, 11274, 11938, 12151, 12418, 12640, 12943
228 12944
300 12680
372 12748
704 12522
707 12522
710 12522
712 12522
716 12522
717 12522
720 12522
721 12522
723 12522
750 12522
761 12522
763 12522
790 12522
796 12522
797 12522
799 12522

Proposed Rules:
52 ..... 11314, 11686, 11688, 12161, 12435, 12906, 12962, 13135
60 12962
116 11889
117 11889
180 10895
261 12162
264 11742
265 11742
268 11742
271 11742
302 ..... 11889, 11890, 12868
355 12868
372 12035
761 11104
763 10546
795 12748
796 11104
799 12748

41 CFR

101-25 11847
101-40 11849
101-49 12766

Proposed Rules:
201-33 11518

42 CFR

405 ..... 11504, 12010, 12945
406 12945
409 12945
410 12945
413 ..... 12016, 12641, 12945
416 ..... 11504, 12945
418 11504
421 12945
434 12010
435 12681
436 12681
442 11504
482 11504
489 12945
498 12945

Proposed Rules:
405 ..... 12037, 12641
412 12641
413 12641
489 12641

43 CFR

Proposed Rules:
3160 11318

Public Land Orders:
6670 10535
6671 12419
6672 12420
6673 12420

44 CFR

67 ..... 11510, 12152
80 11275
82 11275
83 11275
205 12681

Proposed Rules:
61 10547
67 12536

45 CFR

36 11279
79 11656
96 11656
1611 12017

Proposed Rules:
303 12041
606 10896
1356 12436

46 CFR

26 13117
35 13117
78 13117
97 13117
109 13117
185 13117
197 13117
572 11072

Proposed Rules:
Ch. I 11440
502 12440

47 CFR

0 11849
1 11851
2 ..... 10878, 11855
15 11861
22 11855
43 12526
63 12526
73 ..... 11668, 11863, 12152-12154, 12528, 12768-12770, 12946
90 ..... 11849, 12154
94 11855

Proposed Rules:
Ch. I 10549, 10550
43 12546
63 12546
68 12546
73 ..... 10905, 11690, 12167-12169, 12547-12549, 12779, 12963, 12964
97 12780

48 CFR

15 10828
25 12128
31 ..... 10828, 12128
52 ..... 10828, 12128
215 11073
227 10780
242 11073
252 ..... 10780, 11073
439 12748
452 12748
1033 12770
1801 13056
1807 13056
1815 13056
1819 13056
1822 13056
1825 13056
1827 13056
1829 13056
1832 13056
1836 13056
1837 13056
1842 13056
1849 13056
1851 13056
1852 13056
1853 13056
1870 13056
2804 ..... 12421, 12866
2832 12421
2852 12421

Proposed Rules:
43 11795
47 11795
52 ..... 11795, 12501
916 11318
931 11318
952 11318
1505 11519
1506 11519

49 CFR

387 12158
533 11074
571 ..... 11280, 12528
1160 10536

Proposed Rules:
171 ..... 11320, 12442
172 12442
173 ..... 11320, 12442
174 12442
175 12442
176 12442
177 ..... 11618, 12442
178 12442
179 12442
192 10906
383 12504
391 12504
571 11105
840 11520
1185 12443

50 CFR

17 ..... 10879, 11609, 11612
23 12497
285 11510
301 10536
672 11297
675 12772

Proposed Rules:
17 ..... 12787, 13220-13230
18 12043
228 12169
644 11321
650 12709
653 12790
658 12046
683 12712

LIST OF PUBLIC LAWS

Last List April 15, 1988

This is a continuing list of public bills from the current session of Congress which have become Federal laws. It may be used in conjunction with "P L U S" (Public Laws Update Service) on 523-6641. The text of laws is not published in the **Federal Register** but may be ordered in individual pamphlet form (referred to as "slip laws") from the Superintendent of Documents, U.S. Government Printing Office, Washington, DC 20402 (phone 202-275-3030).

H.R. 3459/Pub. L. 100-290

Orphan Drug Amendments of 1988. (Apr. 18, 1988; 102 Stat. 90; 3 pages) Price: $1.00

S.J. Res. 234/Pub. L. 100-291

Designating the week of April 17, 1988, as "Crime Victims Week." (Apr. 18, 1988; 102 Stat. 93; 1 page) Price: $1.00

VOL 53 ISS 77 AP 21 1988 UMI

Just Released

Code of Federal Regulations

Revised as of January 1, 1988

Quantity	Volume	Price	Amount
_____	Title 3—The President Parts 100 and 101 (Stock No. 869-004-00002-2)	$11.00	$_____
_____	Title 7—Agriculture Parts 1940 to 1949 (Stock No. 869-004-00023-5)	21.00	_____
_____	Part 2000 to End (Stock No. 869-004-00025-1)	6.50	_____
_____	Title 9—Animals and Animal Products Part 200 to End (Stock No. 869-004-00028-6)	17.00	_____
		Total Order	$_____

A cumulative checklist of CFR issuances appears every Monday in the Federal Register in the Reader Aids section. In addition, a checklist of current CFR volumes, comprising a complete CFR set, appears each month in the LSA (List of CFR Sections Affected).

Please do not detach

Order Form

Mail to: Superintendent of Documents, U.S. Government Printing Office, Washington, D.C. 20402

Enclosed find $_____ Make check or money order payable to Superintendent of Documents. (Please do not send cash or stamps). Include an additional 25% for foreign mailing.

Charge to my Deposit Account No.

☐☐☐☐☐☐☐–☐

Order No._____

VISA

MasterCard

Credit Card Orders Only

Total charges $_____ Fill in the boxes below

Credit Card No. ☐☐☐☐☐☐☐☐☐☐☐☐☐☐☐☐☐☐☐

Expiration Date Month/Year ☐☐☐☐

Please send me the **Code of Federal Regulations** publications I have selected above.

Name—First, Last

Street address

Company name or additional address line

City State ZIP Code

(or Country)

PLEASE PRINT OR TYPE

For Office Use Only.

	Quantity	Charges
Enclosed		
To be mailed		
Subscriptions		
Postage		
Foreign handling		
MMOB		
OPNR		
UPNS		
Discount		
Refund		

ount

ttach

.C. 20402

ow

y	Charges

VOL
53

ISS
77

AP
21

1988

UMI

VOL
53

ISS
78

AP
22

1988

UMI

4-22-
Vol. 5

Unite
Gove
Printi
SUPER
OF DOC
Washing

OFFICIA
Penalty f

4-22-88
Vol. 53 No. 78

federal register

Friday
April 22, 1988

United States
Government
Printing Office
SUPERINTENDENT
OF DOCUMENTS
Washington, DC 20402

OFFICIAL BUSINESS
Penalty for private use, $300

**********5-DIGIT 48106
A FR SERIA300S NOV 88 R
SERIALS PROCESSING
UNIV MICROFILMS INTL
300 N ZEEB RD
ANN ARBOR MI 48106

SECOND CLASS NEWSPAPER
Postage and Fees Paid
U.S. Government Printing Office
(ISSN 0097-6326)

VOL
53

ISS
78

AP
22

1988

UMI

4-22-88
Vol. 53
Pages

4-22-88
Vol. 53 No. 78
Pages 13235-13398

federal register

Friday
April 22, 1988

BEST COPY AVAILABLE

FEDERAL REGISTER Published daily, Monday through Friday, (not published on Saturdays, Sundays, or on official holidays), by the Office of the Federal Register, National Archives and Records Administration, Washington, DC 20408, under the Federal Register Act (49 Stat. 500, as amended; 44 U.S.C. Ch. 15) and the regulations of the Administrative Committee of the Federal Register (1 CFR Ch. I). Distribution is made only by the Superintendent of Documents, U.S. Government Printing Office, Washington, DC 20402.

The **Federal Register** provides a uniform system for making available to the public regulations and legal notices issued by Federal agencies. These include Presidential proclamations and Executive Orders and Federal agency documents having general applicability and legal effect, documents required to be published by act of Congress and other Federal agency documents of public interest. Documents are on file for public inspection in the Office of the Federal Register the day before they are published, unless earlier filing is requested by the issuing agency.

The **Federal Register** will be furnished by mail to subscribers for $340.00 per year, or $170.00 for 6 months in paper form, or $188.00 per year, or $94.00 for six months in microfiche form, payable in advance. The charge for individual copies is $1.50 for each issue, or $1.50 for each group of pages as actually bound. Remit check or money order, made payable to the Superintendent of Documents, U.S. Government Printing Office, Washington, DC 20402, or charge to your GPO Deposit Account or VISA or Mastercard.

There are no restrictions on the republication of material appearing in the **Federal Register**.

How To Cite This Publication: Use the volume number and the page number. Example: 52 FR 12345.

SUBSCRIPTIONS AND COPIES

PUBLIC

Subscriptions:

Paper or fiche	202-783-3238
Magnetic tapes	275-3328
Problems with public subscriptions	275-3054

Single copies/back copies:

Paper or fiche	783-3238
Magnetic tapes	275-3328
Problems with public single copies	275-3050

FEDERAL AGENCIES

Subscriptions:

Paper or fiche	523-5240
Magnetic tapes	275-3328
Problems with Federal agency subscriptions	523-5240

For other telephone numbers, see the Reader Aids section at the end of this issue.

Contents

Federal Register
Vol. 53, No. 78
Friday, April 22, 1988

ACTION
NOTICES
Grants; availability, etc.:
VISTA Literacy Corps projects, 13298

Administrative Conference of the United States
NOTICES
Valuation of human life in regulatory decisionmaking; draft recommendation, 13299

Agricultural Marketing Service
RULES
Lemons grown in California and Arizona, 13242

Agriculture Department
See Agricultural Marketing Service; Animal and Plant Health Inspection Service; Farmers Home Administration; Food Safety and Inspection Service; Forest Service; Soil Conservation Service

Air Force Department
NOTICES
Meetings:
Community College Board of Visitors, 13312

Animal and Plant Health Inspection Service
RULES
Plant-related quarantine, domestic:
Citrus canker, 13241

Arctic Research Commission
NOTICES
Meetings, 13301

Army Department
NOTICES
Meetings:
Coastal Engineering Research Board, 13312
Science Board, 13313

Arts and Humanities, National Foundation
See National Foundation on the Arts and the Humanities

Blind and Other Severely Handicapped, Committee for Purchase From
See Committee for Purchase From the Blind and Other Severely Handicapped

Commerce Department
See also Economic Development Administration; International Trade Administration; National Bureau of Standards
NOTICES
Agency information collection activities under OMB review, 13301

Committee for Purchase From the Blind and Other Severely Handicapped
NOTICES
Procurement list, 1988:
Additions and deletions, 13309, 13310
(2 documents)

Commodity Futures Trading Commission
PROPOSED RULES
Conflict of interests, 13288
Speculative position limits; positions with common owners but independently controlled; exemption, 13290
NOTICES
Contract market proposals:
Coffee, Sugar, & Cocoa Exchange, Inc.—
International Market Index, 13310

Defense Department
See also Air Force Department; Army Department
RULES
Civilian health and medical program of uniformed servies (CHAMPUS):
Birthing centers, etc.; definitions, 13258
Federal Acquisition Regulation (FAR):
Federal public works projects restrictions and American aerospace exports promotion at domestic and international exhibits
Correction, 13274
NOTICES
Agency information collection activities under OMB review, 13311
(3 documents)
Meetings:
Science Board, 13312
Science Board task forces, 13312
Wage Committee, 13312

Drug Enforcement Administration
NOTICES
Applications, hearings, determinations, etc.:
A.J. Meyer Pharmacy, 13338
Clements, Harry Michael, M.D., 13337

Economic Development Administration
RULES
Financial assistance requirements:
Flood hazards and environmental requirements, 13252

Education Department
NOTICES
Agency information collection activities under OMB review, 13313

Employment and Training Administration
NOTICES
Adjustment assistance:
Lake Shore, Inc., 13340

Employment Standards Administration
NOTICES
Minimum wages for Federal and federally-assisted construction; general wage determination decisions, 13340

Energy Department
See also Federal Energy Regulatory Commission
NOTICES
Grants and cooperative agreements; availability, etc.:
Idaho—
Foundry industry technology and development, 13314

Environmental Protection Agency
RULES
Hazardous waste:
Identification and listing—
Chemical Abstracts Service registry numbers and listing corrections, 13382
NOTICES
Committees; establishment, renewal, termination, etc.:
Municipal Solid Waste Task Force, 13316
Environmental statements; availability, etc.:
Agency statements—
Comment availabilty, 13318
Weekly receipts, 13317
Health risk assessment; guidelines, etc.:
Methyl isocyanate, 13318
Pesticide registration, cancellation, etc.:
Chlordane and heptachlor termiticides; correction, 13379
Toxic and hazardous substances control:
Chemical testing—
Data receipt, 13319
(2 documents)

Executive Office of the President
See Presidential Documents

Export Administration
See International Trade Administration

Farmers Home Administration
RULES
Program regulations:
Rural housing—
Rental housing displacement prevention, 13244
Section 502 loan policies, procedures, and authorizations; square foot exemption, 13243

Federal Aviation Administration
RULES
Airworthiness directives:
CASA, 13252
Restricted areas, 13253
PROPOSED RULES
Airworthiness directives:
Boeing, 13285, 13286
(2 documents)
Airworthiness standards:
Special conditions—
GROB Model 115 Series airplanes, 13283
Control zones, 13287

Federal Communications Commission
RULES
Common carrier services:
International carrier circuits distribution policy development among available facilities during post-1988 period, 13270
Radio and television broadcasting:
Fairness doctrine; adjudication ruling, 13270
NOTICES
Agency information collection activities under OMB review, 13320
(2 documents)

Federal Deposit Insurance Corporation
NOTICES
Meetings; Sunshine Act, 13377
(3 documents)

Federal Emergency Management Agency
RULES
Flood insurance; communities eligible for sale:
Louisiana, et al., 13268

Federal Energy Regulatory Commission
RULES
Natural Gas Policy Act:
Purchased gas adjustment regulations
Correction, 13254
NOTICES
Electric rate, small power production, and interlocking directorate filings, etc.:
Northern States Power Co. et al., 13315
Organization, functions, and authority delegations:
Filing location change, 13316

Federal Highway Administration
NOTICES
Meetings:
Commercial Motor Vehicle Safety Regulatory Review Panel, 13374

Federal Home Loan Bank Board
PROPOSED RULES
Proposed rules; regulatory review period for board action, extension, 13382

Federal Maritime Commission
RULES
Practice and procedure:
Petitions for review of final agency orders, receipt; designation of General Counsel et al., 13270

Federal Railroad Administration
NOTICES
Exemption petitions, etc.:
New Jersey Transit Rail Operations, Inc., 13374

Federal Reserve System
RULES
Truth in lending (Regulation Z):
Official staff commentary update
Correction, 13379
(2 documents)
NOTICES
Meetings; Sunshine Act, 13377
Applications, hearings, determinations, etc.:
Center Banks Inc., et al., 13320
Dorton, O.T., 13321
Fait, Richard A., 13321
Great Bay Bankshares, Inc., et al., 13321
NESB Corp. et al., 13322

Fish and Wildlife Service
PROPOSED RULES
Endangered and threatened species:
Tooth cave pseudoscorpion, etc.
Correction, 13379

Food and Drug Administration
PROPOSED RULES
Medical devices:
Breathing frequency monitor (neonatal apnea monitor); performance standard development, 13296
NOTICES
Human drugs:
Export applications—
ENLON (Edrophonium chloride injection, USP), 13323

VOL 53 ISS 78 APR 22 1988 UMI

Patent extension; regulatory review period determinations—
Novantrone, 13324
Meetings:
Consumer information exchange, 13325

Food Safety and Inspection Service
RULES
Meat and poultry inspection:
Fee increases, 13396

Forest Service
RULES
Administration:
Appeal of decision—
National Forest System, 13263

General Services Administration
RULES
Federal Acquisition Regulation (FAR):
Federal public works projects restrictions and American aerospace exports promotion at domestic and international exhibits
Correction, 13274

Health and Human Services Department
See also Food and Drug Administration; Health Resources and Services Administration; Public Health Service; Social Security Administration
NOTICES
Agency information collection activities under OMB review, 13322

Health Resources and Services Administration
See also Public Health Service
NOTICES
Grants and cooperative agreements:
Health careers opportunity program, etc.
Low income levels, 13325

Interior Department
See also Fish and Wildlife Service; Land Management Bureau; Minerals Management Service; National Park Service
RULES
Hearings and appeals procedures:
Public lands, 13266

International Trade Administration
NOTICES
Antidumping:
Digital readout systems and subassemblies from Japan, 13302
Countervailing duties:
Carbon steel wire rod from—
Malaysia, 13303

Interstate Commerce Commission
NOTICES
Motor carriers:
Compensated intercorporate hauling operations, 13333
Declaratory order petitions—
Shuttle Express, 13335
Railroad operation, acquisition, construction, etc.:
Chicago West Pullman Corp. et al., 13335
Ohio Central Railroad, 13335

Justice Department
See also Drug Enforcement Administration
NOTICES
Agency information collection activities under OMB review, 13336
U.S. Trustee System; judicial districts certifications:
Arizona, 13335

Labor Department
See also Employment and Training Administration; Employment Standards Administration; Mine Safety and Health Administration; Pension and Welfare Benefits Administration
NOTICES
Agency information collection activities under OMB review, 13339
Meetings:
Trade Negotiations and Trade Policy Labor Advisory Committee, 13339

Land Management Bureau
NOTICES
Classification of public lands:
Nevada, 13331
Meetings:
Salem District Advisory Council, 13332

Mine Safety and Health Administration
NOTICES
Safety standard petitions:
AMAX Coal Co., 13341
Bethlehem Mines Corp., 13341
Cougar Coal Co., Inc., 13342
Emmanuel Coal Co., 13342
Freeman United Coal Mining Co., 13342
Helen Mining Co., 13343
Kerr-McGee Coal Corp., 13343
Larkk Mining Co., 13344
Mullins & Sons Coal Co., Inc., 13344

Minerals Management Service
NOTICES
Outer Continental Shelf operations:
Gulf of Mexico—
Lease sale; correction, 13332

National Aeronautics and Space Administration
RULES
Federal Acquisition Regulation (FAR):
Federal public works projects restrictions and American aerospace exports promotion at domestic and international exhibits
Correction, 13274

National Bureau of Standards
NOTICES
Senior Executive Service:
General and Limited Performance Review Board; membership, 13309

National Foundation on the Arts and the Humanities
NOTICES
Agency information collection activities under OMB review, 13363

National Highway Traffic Safety Administration
RULES
Motor vehicle theft prevention standard:
High theft lines; listing, 13274

NOTICES
Motor vehicle safety standards; exemption petitions, etc.:
General Motors Corp., 13375

National Labor Relations Board
NOTICES
Meetings; Sunshine Act, 13377

National Park Service
NOTICES
Concession contract negotiations:
Best's Studio, Inc., 13332
Charlestown Navy Yard, MA; restaurant services and facilities, 13332
Golf Course Specialists, Inc., 13332

National Science Foundation
NOTICES
Committees; establishment, renewal, termination, etc.:
Alan T. Waterman Award Committee, 13363

Nuclear Regulatory Commission
PROPOSED RULES
Uranium enrichment facilities; licensing, 13276
NOTICES
Meetings:
Reactor Safeguards Advisory Committee, 13363, 13364 (3 documents)
Applications, hearings, determinations, etc.:
Detroit Edison Co. et al., 13364

Panama Canal Commission
NOTICES
Agency information collection activities under OMB review, 13365

Pension and Welfare Benefits Administration
NOTICES
Employee benefit plans; prohibited transaction exemptions:
Alliance Capital Management Corp., 13344
Carpenters Pension Trust for Southern California et al., 13345
Getter Trucking, Inc., et al., 13361

Presidential Documents
PROCLAMATIONS
Special observances:
Jewish Heritage Week (Proc. 5798), 13235
Law Day, U.S.A. (Proc. 5799), 13237
EXECUTIVE ORDERS
Committees; establishment, renewal, termination, etc.:
Railroad labor dispute; emergency board (EO 12636), 13239

Public Health Service
See also Food and Drug Administration; Health Resources and Services Administration
NOTICES
Grants; availability, etc.:
Family planning nurse practitioner training program, 13328
General family planning training projects, 13325
Health education assistance loan (HEAL) program:
Insurance premium rate and interest rates, 13331

Securities and Exchange Commission
NOTICES
Meetings; Sunshine Act, 13378
Self-regulatory organizations; proposed rule changes:
National Association of Securities Dealers, Inc., 13367, 13370 (2 documents)
New York Stock Exchange, Inc., 13371
Self-regulatory organizations; unlisted trading privileges:
Midwest Stock Exchange, Inc., 13370
Philadelphia Stock Exchange, Inc., 13370

Social Security Administration
RULES
Supplemental security income:
Real property disposition and transfer of assets; eligibility determination, 13254

Soil Conservation Service
NOTICES
Environmental statements; availability, etc.:
Upper Fifteen Mile Creek Watershed, GA, 13301

Transportation Department
See also Federal Aviation Administration; Federal Highway Administration; Federal Railroad Administration; National Highway Traffic Safety Administration
NOTICES
Aviation proceedings:
International cargo flexibility level adjustment, 13373

Treasury Department
NOTICES
Agency information collection activities under OMB review, 13376

Separate Parts In This Issue

Part II
Environmental Protection Agency, 13382

Part III
Department of Agriculture, 13396

Reader Aids
Additional information, including a list of public laws, telephone numbers, and finding aids, appears in the Reader Aids section at the end of this issue.

VOL 53 ISS 78 APR 22 1988 UMI

CFR PARTS AFFECTED IN THIS ISSUE

A cumulative list of the parts affected this month can be found in the Reader Aids section at the end of this issue.

3 CFR
Proclamations:
5798 13235
5799 13237

3 CFR
Executive Orders:
12636 13239

7 CFR
301 13241
910 13242
1944 (2 documents) 13243, 13244
1965 13244

9 CFR
307 13396
350 13396
351 13396
352 13396
354 13396
355 13396
362 13396
381 13396

10 CFR
Proposed Rules:
76 13276

12 CFR
226 (2 documents) 13379
Proposed Rules:
522 13282
541 13282
542 13282
543 13282
544 13282
545 13282
547 13282
548 13282
549 13282
563 13282
569a 13282
569b 13282
569c 13282
571 13282

13 CFR
309 13252

14 CFR
39 13252
71 13253
73 13253
Proposed Rules:
21 13283
23 13283
39 (2 documents) 13285, 13286
71 13287

17 CFR
Proposed Rules:
140 13288
150 13290

18 CFR
154 13254

20 CFR
416 13254

21 CFR
Proposed Rules:
868 13296

32 CFR
199 13258

36 CFR
211 13263

40 CFR
261 13382

43 CFR
4 13266

44 CFR
64 13268

46 CFR
502 13270

47 CFR
Ch. I 13270
73 13272

48 CFR
31 13274

49 CFR
541 13274

50 CFR
Proposed Rule:
17 13379

VOL
53
ISS
78
AP
22
1988
UMI

Federal
Vol. 53,
Friday,

Title 3

The I

[FR Doc.
Filed 4-2
Billing co

Federal Register
Vol. 53, No. 78
Friday, April 22, 1988

Presidential Documents

Title 3—

The President

Proclamation 5796 of April 20, 1988

Jewish Heritage Week, 1988

By the President of the United States of America

A Proclamation

The heritage of the Jewish people finds expression in America today just as in the days of our Founders. During Jewish Heritage Week, we recall that throughout our history the American people have drawn inspiration from and analogies to Jewish history. That history—which in this century alone includes the horrors of the Holocaust, the establishment of the modern State of Israel, and the current struggle of Soviet Jewry for freedom—symbolizes humanity's long and continuing quest for liberty.

Happily, the United States, the land of the free, has become home to a thriving Jewish community whose members have made inestimable contributions to our national life. Jews have distinguished themselves in virtually every field, to the benefit of us all. Jewish Heritage Week, which this year includes April 21, the 40th anniversary of the founding of Israel, is a fitting occasion for us to study once again the lessons of Jewish history and to rededicate ourselves to the ideals of freedom for all peoples.

The Congress, by House Joint Resolution 527, has designated the period of April 17 through April 24, 1988, as "Jewish Heritage Week" and has authorized and requested the President to issue a proclamation in observance of this event.

NOW, THEREFORE, I, RONALD REAGAN, President of the United States of America, do hereby proclaim the period of April 17 through April 24, 1988, as Jewish Heritage Week. I call upon the people of the United States, interested organizations, and Federal, State, and local government officials to observe this week with appropriate ceremonies and activities.

IN WITNESS WHEREOF, I have hereunto set my hand this twentieth day of April, in the year of our Lord nineteen hundred and eighty-eight, and of the Independence of the United States of America the two hundred and twelfth.

Ronald Reagan

[FR Doc. 88-9032
Filed 4-20-88; 4:39 pm]
Billing code 3195-01-M

VOL
53

ISS
78

AP
22

1988

UMI

Presidential Documents

Proclamation 5799 of April 20, 1988

Law Day, U.S.A., 1988

By the President of the United States of America

A Proclamation

For more than three decades our country has observed May 1 as Law Day, U.S.A., in grateful recognition that our free Republic is a government of laws, not men. On Law Day, U.S.A., we join in proud commemoration of America's legacy of liberty, justice, and self-government, and we pause to salute those past and present who have served and sacrificed to win and protect our freedom and to preserve law and tranquility in our communities—including the men and women of law enforcement whose daily courage and dedication make our laws and liberties a living reality.

Because ours is a government by consent of the people, we are our own lawgivers; hence, the virtuousness of our laws depends on our individual and civic virtues. That is truly something to remember on any Law Day, U.S.A., but especially in a national election year, when we recall how important it is that each of us be familiar with our rights and liberties and with the legal and political guarantees of our freedoms. Only through knowledge, awareness, and love of country can we take full part in the self-government that is ours as Americans to perpetuate.

This is why all Americans of legal voting age should make up their minds, this year and each year, to vote in every election for which they are eligible and to observe all election laws faithfully. By voting, we have our say in who our representatives are and thereby in the shaping of laws that affect us, our communities, our States, and our Nation. We should always remember that those who vote not only demonstrate their voice in public affairs but also exercise one of the precious rights for which brave people around the globe today fight and die just as did our ancestors. Let us understand that our voting is a way to keep faith with them, with our fellow citizens, with the brave Americans who defend us at home and abroad, and with all who cherish our American heritage of liberty, justice, and equality before the law.

NOW, THEREFORE, I, RONALD REAGAN, President of the United States of America, in accordance with Public Law 87–20 of April 7, 1961, do hereby proclaim Sunday, May 1, 1988, as Law Day, U.S.A. I urge the people of the United States to use this occasion to reflect on our birthright of freedom, to express gratitude to those who protect our country and our communities, to familiarize themselves with the need to vote, and to encourage and assist others to vote. I ask the legal profession, schools, public bodies, libraries, courts, the communications media, businesses, the clergy, civic, service, and fraternal organizations, and all interested individuals and organizations to join in efforts to focus attention on voting. I also call upon all public officials to display the flag of the United States on all government buildings on Law Day, U.S.A.

IN WITNESS WHEREOF, I have hereunto set my hand this 20th day of April, in the year of our Lord nineteen hundred and eighty-eight, and of the Independence of the United States of America the two hundred and twelfth.

Ronald Reagan

[FR Doc. 88-9033
Filed 4-20-88; 4:40 pm]
Billing code 3195-01-M

Editorial note: For the President's remarks of April 20 on signing Proclamation 5799, see the *Weekly Compilation of Presidential Documents* (vol. 24, no. 16).

VOL 53 ISS 78 AP 22 1988 UMI

Presidential Documents

Executive Order 12636 of April 20, 1988

Establishing an Emergency Board To Investigate a Dispute Between the Chicago and North Western Transportation Company and Certain of Its Employees Represented by the United Transportation Union

A dispute exists between the Chicago and North Western Transportation Company and certain of its employees represented by the United Transportation Union.

The dispute has not heretofore been adjusted under the provisions of the Railway Labor Act, as amended ("the Act").

This dispute, in the judgment of the National Mediation Board, threatens substantially to interrupt interstate commerce to a degree such as to deprive a section of the country of essential transportation service.

NOW, THEREFORE, by the authority vested in me by Section 10 of the Act, as amended (45 U.S.C. 160), it is hereby ordered as follows:

Section 1. *Establishment of Board.* There is established, effective April 22, 1988, a board of three members to be appointed by the President to investigate this dispute. No member shall be pecuniarily or otherwise interested in any organization of railroad employees or any carrier. The board shall perform its functions subject to the availability of funds.

Sec. 2. *Report.* The board shall report its finding to the President with respect to the dispute within 30 days from the date of its creation.

Sec. 3. *Maintaining Conditions.* As provided by Section 10 of the Act, as amended, from the date of the creation of the board and for 30 days after the board has made its report to the President, no change, except by agreement of the parties, shall be made by the Carrier or the employees in the conditions out of which the dispute arose.

Sec. 4. *Expiration.* The board shall terminate upon the submission of the report provided for in Section 2 of this Order.

Ronald Reagan

THE WHITE HOUSE,
April 20, 1988.

[FR Doc. 88-9034
Filed 4-20-88; 4:41 pm]
Billing code 3195-01-M

Editorial note: For the text of a White House announcement, dated April 20, on the labor dispute, see the *Weekly Compilation of Presidential Documents* (vol. 24, no. 16).

VOL
53
ISS
78
AP
22
1988
UMI

Ru

This s
contain
genera
of wh
the Co
publish
U.S.C.
The C
by the
Prices
first F
week.

DEPA

Anim
Servi

7 CFR

[Dock

Citrus
Desig
Prod

AGEN
Inspe

ACTIO
comm

SUMM
entire
comm
Befor
rule.
desig
produ
neces
meets
entire
citrus
interi
certa
citrus
into
exper
if acc

DATE
1988.
writt
recei

ADDR
copie
USDA
Box
Pleas
Dock
recei
of th
and
exce

Rules and Regulations

Federal Register
Vol. 53, No. 78
Friday, April 22, 1988

This section of the FEDERAL REGISTER contains regulatory documents having general applicability and legal effect, most of which are keyed to and codified in the Code of Federal Regulations, which is published under 50 titles pursuant to 44 U.S.C. 1510.
The Code of Federal Regulations is sold by the Superintendent of Documents. Prices of new books are listed in the first FEDERAL REGISTER issue of each week.

DEPARTMENT OF AGRICULTURE

Animal and Plant Health Inspection Service

7 CFR Part 301

[Docket No. 88-050]

Citrus Canker; All of Louisiana Designated Commercial Citrus-Producing Area

AGENCY: Animal and Plant Health Inspection Service, USDA.

ACTION: Interim rule and request for comments.

SUMMARY: We have designated the entire State of Louisiana as a commercial citrus-producing area. Before the effective date of this interim rule, only part of Louisiana was designated as a commercial citrus-producing area. Our action was necessary because Louisiana no longer meets the criteria for having less than an entire state designated as a commercial citrus-producing area. As a result of this interim rule, regulated fruit produced in certain areas quarantined because of citrus canker may be moved interstate into Louisiana for other than experimental or scientific purposes, only if accompanied by a certificate.

DATES: Interim rule effective April 18, 1988. Consideration will be given only to written comments postmarked or received on or before June 21, 1988.

ADDRESSES: Send an original and three copies of your comments to APHIS, USDA, Room 1143, South Building, P.O. Box 96464, Washington, DC 20090-6464. Please state that your comments refer to Docket No. 88-050. Comments we receive may be inspected at Room 1141 of the South Building between 8 a.m. and 4:30 p.m., Monday through Friday, except holidays.

FOR FURTHER INFORMATION CONTACT: Eddie W. Elder, Chief Operations Officer, Domestic and Emergency Operations Staff, PPQ, APHIS, USDA, Room 610, Federal Building, 6505 Belcrest Road, Hyattsville, MD 20782; 301-436-6365.

SUPPLEMENTARY INFORMATION: Citrus canker is a plant disease caused by strains of the bacterium *Xanthomonas campestris* pv. *citri* (Hasse) Dye. The disease is known to affect plants and plant parts, including fruit, of citrus and citrus relatives (Family Rutaceae). It can cause defoliation and other serious damage to the leaves and twigs of susceptible plants. It may also make the fruit of diseased plants unmarketable by causing lesions on the fruit. Infected fruit may also drop from trees before reaching maturity. Some strains of *Xanthomonas campestris* pv. *citri* (Hasse) Dye are aggressive and can infect susceptible plants rapidly and lead to extensive economic losses in commercial citrus-producing areas.

To help prevent the spread of citrus canker, we regulate the interstate movement of certain plants, plant parts, and other articles from areas of the United States quarantined because of citrus canker. These regulations are contained in 7 CFR 301.75 and are referred to below as the regulations.

In accordance with the regulations, regulated fruit produced in certain quarantined areas may be moved interstate from the quarantined areas as follows: (1) With a Departmental permit for scientific or experimental purposes; (2) with a limited permit to areas of the United States that are not commercial citrus-producing areas; or (3) with a certificate to any area of the United States, including commercial citrus-producing areas.

Florida is the only area of the United States quarantined because of citrus canker. Before the effective date of this interim rule, areas designated as commercial citrus-producing areas were American Samoa, Arizona, California, Florida, Guam, Hawaii, Northern Mariana Islands, Puerto Rico, Texas, Virgin Islands of the United States, and that portion of Louisiana south of a line formed by the following interstate highways: Beginning on Interstate 10 at the western boundary of the state, extending to the junction of Interstate 10 and Interstate 12 in East Baton Rouge Parish, extending on Interstate 12 to the junction of Interstate 10 and Interstate 12 in St. Tammany Parish, and extending on Interstate 10 to the Mississippi state line.

Less than the entire State of Louisiana was designated as a commercial citrus-producing area in accordance with § 301.75-4(b) of the regulations. This paragraph contains three conditions that must be met before less than entire state may be designated as a commercial citrus-producing area.

(1) The Administrator must determine that there are no commercial citrus plantings in the area of the state not designated as commercial citrus-producing area;

(2) The state must not allow the interstate movement into its commercial citrus-producing area of regulated fruit that has come into other areas of the state from a quarantined area with a limited permit;

(3) The designation of less than the entire state as a commercial citrus-producing area must otherwise be adequate to prevent the interstate spread of citrus canker.

We have been notified by the Commissioner of Agriculture for the State of Louisiana that Louisiana no longer meets the above criteria. Specifically, the Commissioner notified us that:

(1) The part of Louisiana not previously designated as a commercial citrus-producing area contains commercial citrus plantings; and

(2) Louisiana does not have the means to prevent the intrastate movement into its commercial citrus-producing area of regulated fruit that has come into other areas of the state from Florida with a limited permit.

Under these circumstances, we have also determined that designation of less than the entire State of Louisiana as a commercial citrus-producing area is not adequate to prevent the interstate spread of citrus canker. Therefore, we have designated the entire State of Louisiana as a commercial citrus-producing area.

Miscellaneous

We have changed the reference to "citrus producing" on the regulations to "citrus-producing" for clarity.

Emergency Action

The Acting Administrator of the Animal and Plant Health Inspection Service has determined that an emergency exists that warrants publication of this interim rule without prior opportunity for public comment. Information supplied by the Commissioner of Agriculture for the State of Louisiana indicates that designation of less than the entire State of Louisiana as a commercial citrus-producing area is not adequate to prevent the interstate spread of citrus canker. Immediate action is necessary to stop regulated fruit produced in Florida from moving interstate into Louisiana for other than experimental or scientific purposes, without a certificate.

Since prior notice and other public procedures with respect to this interim rule are unnecessary, impracticable and contrary to the public interest under these emergency conditions, there is good cause under 5 U.S.C. 553 for making this interim rule effective upon signature. We will consider comments postmarked or received within 60 days of publication of this interim rule in the **Federal Register**. Any amendments we make to this interim rule as a result of these comments will be published in the **Federal Register** as soon as possible following the close of the comment period.

Executive Order 12291 and Regulatory Flexibility Act

We are issuing this rule in conformance with Executive Order 12291, and we have determined that it is not a "major rule." Based on information compiled by the Department, we have determined that this rule will have an effect on the economy of less than $100 million; will not cause a major increase in costs or prices for consumers, individual industries, federal, state, or local government agencies, or geographic regions; and will not cause a significant adverse effect on competition, employment, investment, productivity, innovation, or the ability of United States-based enterprises to compete with foreign-based enterprises in domestic or export markets.

For this action, the Office of Management and Budget has waived the review process required by Executive order 12291.

This emergency situation makes compliance with section 603 and timely compliance with section 604 of the Regulatory Flexibility Act (5 U.S.C. 603 and 604) impracticable. This rule may have a significant economic impact on a substantial number of small entities. If we determine this is so, then we will discuss the issues raised by section 604 of the Regulatory Flexibility Act in our Final Regulatory Impact Analysis.

Paperwork Reduction Act

This rule contains no new information collection or recordkeeping requirements under the Paperwork Reduction Act of 1980 (44 U.S.C. 3501 et seq.).

Executive Order 12372

This program/activity is listed in the Catalog of Federal Domestic Assistance under No. 10.025 and is subject to the provisions of Executive Order 12372, which requires intergovernmental consultation with state and local officials. (See 7 CFR Part 3015, Subpart V.)

List of Subjects in 7 CFR Part 301

Agricultural commodities, Citrus canker, Plant disease, Plant pests, Plants (Agriculture), Quarantine, Transportation.

Accordingly, we have amended Part 301 as follows:

PART 301—DOMESTIC QUARANTINE NOTICES

1. The authority citation for Part 301 is revised to read as follows:

Authority: 7 U.S.C. 150bb, 150dd, 150ee, 150ff, 161, 162, and 164–167; 7 CFR 2.17, 2.51, and 371.2(c).

2. Section 301.75–4 is revised to read as follows:

§ 301.75–4 Commercial citrus-producing areas.

(a) The following are designated as commercial citrus-producing areas:

American Samoa	Northern Mariana Islands
Arizona	Puerto Rico
California	Texas
Florida	Virgin Islands of the United States
Guam	
Hawaii	
Louisiana	

* * * * *

Subpart 301.75 [Amended]

3. In Subpart 301.75, in every place "citrus producing" appears it is revised to read "citrus-producing.

Done in Washington, DC, this 18th day of April 1988.

James W. Glosser,

Acting Administrator, Animal and Plant Health Inspection Service.

[FR Doc. 88–8859 Filed 4–21–88; 8:45 am]

BILLING CODE 3410-34-M

Agricultural Marketing Service

7 CFR Part 910

[Lemon Reg. 610]

Lemons Grown in California and Arizona; Limitation of Handling

AGENCY: Agricultural Marketing Service, USDA.

ACTION: Final rule.

SUMMARY: Regulation 610 establishes the quantity of fresh California-Arizona lemons that may be shipped to market at 360,000 cartons during the period April 24 through April 30, 1988. Such action is needed to balance the supply of fresh lemons with market demand for the period specified, due to the marketing situation confronting the lemon industry.

DATES: Regulation 610 (§ 910.910) is effective for the period April 24 through April 30, 1988.

FOR FURTHER INFORMATION CONTACT: Raymond C. Martin, Section Head, Volume Control Programs, Marketing Order Administration Branch, F&V, AMS, USDA, Room 2523, South Building, P.O. Box 96456, Washington, DC 20090–6456; telephone: (202) 447–5697.

SUPPLEMENTARY INFORMATION: This final rule has been reviewed under Executive Order 12291 and Departmental Regulation 1512–1 and has been determined to be a "non-major" rule under criteria contained therein.

Pursuant to requirements set forth in the Regulatory Flexibility Act (RFA), the Administrator of the Agricultural Marketing Service has determined that this action will not have a significant economic impact on a substantial number of small entities.

The purpose of the RFA is to fit regulatory action to the scale of business subject to such actions in order that small businesses will not be unduly or disproportionately burdened. Marketing orders issued pursuant to the Agricultural Marketing Agreement Act, and rules issued thereunder, are unique in that they are brought about through group action of essentially small entities acting on their own behalf. Thus, both statutes have small entity orientation and compatibility.

This regulation is issued under Marketing Order No. 910, as amended (7 CFR Part 910) regulating the handling of lemons grown in California and Arizona. The order is effective under the Agricultural Marketing Agreement Act (the "Act," 7 U.S.C. 601–674), as amended. This action is based upon the recommendation and information submitted by the Lemon Administrative

Comm[illegible] and upon other available information. It is found that this action will tend to effectuate the declared policy of the Act.

This regulation is consistent with the marketing policy for 1987–88. The committee met publicly on April 19, 1988, in Los Angeles, California, to consider the current and prospective conditions of supply and demand and recommended, by a unanimous vote, a quantity of lemons deemed advisable to be handled during the specified week. The committee reports that the market for lemons is good.

Pursuant to 5 U.S.C. 553, it is further found that it is impracticable, unnecessary, and contrary to the public interest to give preliminary notice and engage in further public procedure with respect to this action and that good cause exists for not postponing the effective date of this action until 30 days after publication in the **Federal Register** because of insufficient time between the date when information became available upon which this regulation is based and the effective date necessary to effectuate the declared purposes of the Act. Interested persons were given an opportunity to submit information and views on the regulation at an open meeting. It is necessary, in order to effectuate the declared purposes of the Act, to make these regulatory provisions effective as specified, and handlers have been apprised of such provisions and the effective time.

List of Subjects in 7 CFR Part 910

Marketing agreements and orders, California, Arizona, Lemons.

For the reasons set forth in the preamble, 7 CFR Part 910 is amended as follows:

PART 910—LEMONS GROWN IN CALIFORNIA AND ARIZONA

1. The authority citation for 7 CFR Part 910 continues to read as follows:

Authority: Secs. 1–19, 48 Stat. 31, as amended; 7 U.S.C. 601–674.

2. Section 910.910 is added to read as follows:

Note: This section will not appear in the Code of Federal Regulations.

§ 910.910 Lemon Regulation 610.

The quantity of lemons grown in California and Arizona which may be handled during the period April 24, 1988, through April 30, 1988, is established at 350,000 cartons.

Dated: April 20, 1988.

Robert C. Keeney,

Deputy Director, Fruit and Vegetable Division, Agricultural Marketing Service.

[FR Doc. 88–8982 Filed 4–21–88; 8:45 am]

BILLING CODE 3410-02-M

Farmers Home Administration

7 CFR Part 1944

Section 502 Rural Housing Loan Policies, Procedures and Authorizations; Square Foot Exemption

AGENCY: Farmers Home Administration, USDA.

ACTION: Final rule.

SUMMARY: The Farmers Home Administration (FmHA) amends its section 502 Rural Housing loan regulations. This action is taken to implement a provision of law. The intended effect is to remove program restrictions on requirements for existing dwellings.

EFFECTIVE DATE: April 22, 1988.

FOR FURTHER INFORMATION CONTACT: Joyce M. Halasz, Loan Specialist, Single Family Housing Processing Division, Farmers Home Administration, U.S. Department of Agriculture, Room 5338–S, 14th and Independence Avenue SW., Washington, DC 20250, Telephone: (202) 382–1474.

SUPPLEMENTARY INFORMATION: This action has been reviewed under USDA procedures established in Departmental Regulation 1512–1 which implements Executive Order 12291 and has been classified as "nonmajor." This action will result in an annual effect on the economy of less than $100 million and will neither result in a major increase in cost or prices, nor adversely affect competition, employment, or the ability of United States based enterprises to compete with foreign-based enterprises in domestic or export markets. There is no impact on budget levels, and funding allocations will not be affected because of this action.

Discussion

It is the policy of this Department and required by section 534 of the Housing Act of 1949, unless on an emergency basis, to publish for comment rules relating to public property, loans, grants, benefits, or contracts, notwithstanding the exemption in 5 U.S.C. 553 with respect to such rules. This action, however, is published as a final rule effective immediately. Because it is mandated by Congress, this action is published on an emergency basis under the Housing Act. The 1988 Continuing Resolution, H.J. Res. 395, Pub. L. 100–202, is quite specific and clear on what FmHA must do to comply with the law and no public comments could change the statutorily required changes.

Strict adherence to current regulations restricting the square feet of living area permitted for existing houses to be financed by the agency was eliminating many modest, decent, safe and sanitary existing homes from availability to potential FmHA RH 502 borrowers. FmHA District Directors will be authorized to exempt any square foot limitation on a modest existing house.

Section 1944.16(h)(5) of 7 CFR Part 1944 establishes limitations on the number of square feet of living area for a house financed by FmHA. It may contain no more than 1300 square feet for a household of two or more or no more than 1008 square feet for a household of one. Larger homes, necessary to meet special needs, are subject to square foot limitations established, by number of occupants and/or number of bedrooms required, for new construction. For example, the maximum for a six-person household needing 4 bedrooms is 1248; or 1368, 120 square feet more, if 5 bedrooms are needed. Modest homes already financed by FmHA and being transferred or sold from inventory are exempt from these limitations.

Section 632 of the Agricultural Programs Title, H.J. Res. 395, "Making Further Continuing Appropriations for the Fiscal Year Ending September 30, 1988," Pub. L. 100–202, requires the Secretary of Agriculture to permit each FmHA district office to exempt any existing dwelling from any limitation established by the Secretary on the number of square feet of living area that may be contained in a dwelling to be eligible for a loan under section 502 of the Housing Act of 1949, if the dwelling is modest in design, size, and cost for the area in which it is located. FmHA is implementing the change immediately. As long as FmHA has square foot limits for existing housing, FmHA is mandated to allow District Directors to exempt existing dwellings from these limits on a case-by-case basis.

This program is listed in the Catalog of Federal Domestic Assistance under No. 10.410. For the reasons set forth in the Final Rule-Related Notice to 7 CFR Part 3015, Subpart V, 48 FR 29115, June 24, 1983, it is excluded from the scope of Executive Order 12372 which requires intergovernmental consultation with State and local officials.

This document has been reviewed in accordance with 7 CFR Part 1940,

Subpart G, "Environmental Program." FmHA has determined that this action does not constitute a major Federal action significantly affecting the quality of the human environment and in accordance with the National Environmental Policy Act of 1969, Pub. L. 91-190, an Environmental Impact Statement is not required.

List of Subjects in 7 CFR Part 1944

Home improvement, Loan programs—Housing and community development, Low- and moderate-income housing—Rental, Mobile homes, Mortgages, Rural housing, Subsidies.

Therefore, Chapter XVIII, Title 7, Code of Federal Regulations is amended as follows:

PART 1944—HOUSING

1. The authority citation for Part 1944 continues to read as follows:

Authority: 42 U.S.C. 1480; 7 CFR 2.23, 2.70.

Subpart A—Section 502 Rural Housing Loan Policies, Procedures and Authorizations

2. Section 1944.16 is amended by revising paragraph (h)(5)(ii) and adding paragraph (h)(5)(iii) to read as follows:

§ 1944.16 Dwelling requirements.

* * * * *

(h) * * *

(5) * * *

(ii) the house is being transferred by assumption of a 502 loan, or a credit sale is being made, and the County Supervisor determines, in either case, that the house is typical of modest homes in the area. In all cases, every effort will be made to provide housing which does not exceed the needs of the applicant/borrower; or

(iii) the District Director determines and documents in the case file that the house is modest in size, design and cost for the area in which it is located, and exempts it from the limitations established in this paragraph on the square feet of living area.

* * * * *

Dated: April 1, 1988.

Neal Sox Johnson,

Acting Administrator, Farmers Home Administration.

[FR Doc. 88-8899 Filed 4-21-88; 8:45 am]

BILLING CODE 3410-07-M

---

7 CFR Parts 1944 and 1965

Rural Rental Housing Displacement Prevention

AGENCY: Farmers Home Administration, USDA.

ACTION: Interim rule with request for comments.

SUMMARY: The Farmers Home Administration (FmHA) revises its rural rental housing (RRH) and labor housing (LH) regulations which deal with transfer and prepayment of these loans. The action is being taken to alleviate the problems caused by the displacement of tenants from projects after the FmHA loans are prepaid. All changes are being made as mandated by the provisions of Subtitle C, "Rural Rental Housing Displacement Prevention," portion of the Housing and Community Development Act of 1987.

DATES: The effective date of this regulation is May 23, 1988. Comments must be submitted on or before June 21, 1988.

ADDRESSES: Submit written comments in duplicate to the Office of the Chief, Directives and Forms Management Branch, Farmers Home Administration, Room 6346, South Agriculture Building, Washington, DC 20250. All written comments made pursuant to this notice will be available for public inspection during regular work hours at the above address.

FOR FURTHER INFORMATION CONTACT: Arlene Halfon, Senior Loan Specialist, Multiple Housing Servicing and Property Management Division, FmHA, Room 5329, South Agriculture Building, Washington, DC 20250, telephone (202) 447-3187.

SUPPLEMENTARY INFORMATION:

Classification: This action has been reviewed under USDA procedures established in Departmental Regulation 1512-1, which implements Executive Order 12291 and has been determnined to be "nonmajor." It will not result in an annual effect on the economy of $100 million or more; a major increase in costs or prices for consumers, individual industries, Federal, State or local government agencies, or geographic regions or significant adverse effects on competition, employment, investment, productivity, innovations, or on the ability of United States-based enterprises to compete with foreign-based enterprises in domestic or export markets.

Environmental Impact Statement: This document has been reviewed in accordance with 7 CFR Part 1940, Subpart G, "Environmental Program." It is the determination of FmHA that this action does not constitute a major Federal action significantly affecting the quality of the human environment and, in accordance with the National Environmental Policy Act of 1969, Pub. L. 91-190, an Environmental Impact Statement is not required.

Intergovernmental Review: This program/activity is listed in the Catalog of Federal Domestic Assistance under Nos. 10.427, Rural Rental Assistance Payments (Rental Assistance); 10.415, Rural Rental Housing Loans; 10.405, Farm Labor Housing Loans and Grants. For the reasons set forth in the Final Rule related Notice(s) to 7 CFR Part 3015, Subpart V, this program/activity is included in the scope of Executive Order 12372, which requires intergovernmental consultation with State and local officials.

Regulatory Flexibility Act: In compliance with the Regulatory Flexibility Act (Pub. L. 96-354), Mr. Vance Clark, Administrator of FmHA, has determined that this action will not have a significant economic impact on a substantial number of small entities because only a few hundred borrowers will likely attempt to prepay annually.

General Information

Background and Statutory Authority

The Housing and Community Development Amendments to the Housing Act of 1949, signed into law in 1979, and the Housing and Community Development Act of 1980, implemented in § 1965.90 of Subpart B of Part 1965 of this chapter, provides that FmHA section 514 and section 515 Multi-family Housing borrowers, who received loans prior to December 21, 1979, and who have not subsequently become subject to restrictions due to specified servicing actions, may prepay their loans and remove their housing from the low- and moderate-income market without restrictions. Those who received loans on or after December 21, 1979, are only eligible to prepay after their restrictive-use requirements expire in either 15 or 20 years from the date of the loan.

Under these provisions, 51 percent of FmHA projects and 44 percent of FmHA units nationwide are eligible to prepay. To keep the problems of tenants displaced from these prepaid projects from growing severe, Congress issued several moratoriums in 1986 and 1987 preventing prepayments, except under specified regulations. FmHA, in June 1987, issued revised regulations to ease the burden of displacement on tenants. The latest legislative action on this issue was the passage of the Housing and Community Development Act of 1987. This law included provisions dealing with "Rural Rental Housing Displacement Prevention." As part of the law, Congress mandated that FmHA

issue regulations to carry out the legislation within 60 days of enactment.

The Housing and Community Development Act of 1987 also mandates that FmHA not charge a transfer fee when multifamily housing is being transferred. Since the regulations dealing with prepayment affect transfers of loans, both as part of an incentive package not to prepay, and with transfers to non-profit organizations as an alternative to prepayment, it is determined appropriate to include this mandated change with this emergency package. Eliminating the transfer fee should be seen as one way to achieve the goal of encouraging both these types of transfers.

This regulation is being issued to implement the requirements of the law imposing restrictions on the prepayment of sections 514 and 515 loans approved prior to December 21, 1979, and to mitigate the problems which prepayment creates for displaced tenants. In response to Congress' mandate for immediate implementation, it is being issued, on an emergency basis, as an interim rule. This is in compliance with 5 U.S.C. 553, "The Administrative Procedures Act," which allows an exception to proposed rulemaking and comment period, for good cause, if comment is shown to be unnecessary, impractical or contrary to the public good. It would be impractical to go through a public comment period since Congress has mandated issuance of regulations within 60 days.

Due to this rule's impact on the public, however, comments are invited. If comments are received which are consistent with the new legislation, and serve its purposes in a more appropriate manner than these regulations, changes will be considered.

By means of this Notice, FmHA is soliciting expressions of interest by local, regional, and national non-profit organizations interested in purchasing multifamily housing projects, in accordance with the procedures contained in Paragraph VI of Exhibit E of this Interim Rule. Local and Statewide organizations which meet the requirements contained in Paragraph VI C of Exhibit E should submit their names, addresses and contact persons to the FmHA State Office(s) in the States in which they are eligible. Eligible regional and nationwide organizations should submit their names, addresses, contact persons and area(s) of interest to the Multiple Housing Servicing and Property Management Division, FmHA, Room 5321, South Agriculture Building, Washington, DC 20250. Information submitted will be compiled and forwarded to the States periodically as a Procedure Notice. State Offices will be responsible for compiling and forwarding the information to appropriate District Offices.

The major changes and additions in this rule are as follows:

1. Exhibit E has been added to FmHA Instruction 1965–B to provide step-by-step guidance on procedures to be followed when a request is received to prepay a pre-December 21, 1979, loan, and to provide restrictive-use provisions to be used for the various options to be chosen.

2. Changes have been made in § 1965.90 of FmHA Instruction 1965–B to identify the appropriate provisions of Exhibit E, and to incorporate other minor changes in the new law.

3. All mention of transfer fees are being deleted from Section 1965.65 of FmHA Instruction 1965–B.

4. A change is made to Section 1944.237 of FmHA Instruction 1944–E to provide for subsequent loans to be made under prescribed conditions to avert prepayment.

List of Subjects

7 CFR Part 1944

Administrative practice and procedure, Aged, Handicapped, Loan Programs—Housing and community development, Low- and moderate-income housing, Mobile homes, Mortgages, Nonprofit organizations, Rent subsidies, Rural housing.

7 CFR Part 1965

Administrative practice and procedure, Low- and moderate-income housing—Rental, Mortgages.

Accordingly, Chapter XVIII, Title 7, Code of Federal Regulations is amended as follows:

PART 1944—HOUSING

1. The authority citation for Part 1944 continues to read as follows:

Authority: 42 U.S.C. 1480; 7 CFR 2.23; 7 CFR 2.70.

Subpart E—Rural Rental Housing Loan Policies, Procedures and Authorizations

§ 1944.237 [Amended]

2. In § 1944.237, paragraph (a) is amended by adding the following phrase at the end of the paragraph: "or for equity and other purposes when authorized by Exhibit E to Subpart B of FmHA Instruction 1965 to avert prepayment."

3. In § 1944.237, paragraph (b) is amended by adding the following phrase at the end of the paragraph: " or for equity and other purposes when necessary to avert prepayment."

4. In § 1944.237, paragraph (e) is amended by adding the following phrase at the end of the first sentence: "except when the loan is made for equity and other purposes to avert prepayment. In the latter case, the provisions of Exhibits E–3 and E–4 of Subpart B of FmHA Instruction 1965 will be used, as appropriate."

PART 1965—REAL PROPERTY

5. The authority citation for Part 1965 continues to read as follows:

Authority: 7 U.S.C. 1989; 42 U.S.C. 1480; 5 U.S.C. 301; 7 CFR 2.23; 7 CFR 2.70.

Subpart B—Security Servicing for Multiple Housing Loans

§ 1965.65 [Amended]

6. In § 1965.65, paragraph (a)(8) is removed and paragraph (a)(9) is redesignated as (a)(8).

7. Section 1965.90 is revised to read as follows:

§ 1965.90 Payment in full.

(a) *General requirements.* Payment in full of an FmHA loan requires certain actions be taken by FmHA to evidence satisfaction of the account and to ease the transition of the tenants that may be affected by the conversion of a federally-financed project to a conventionally-financed one. The borrower's cooperation in these actions will assist in the orderly close-out of the account.

(1) *Final installments.* Borrowers must advise the District Office servicing the account of any final installment payment to facilitate the prompt preparation of any required releases and closeout actions.

(2) *Prepayment.* Borrowers seeking to prepay a multiple family housing loan must:

(i) At least 180 days in advance of the anticipated prepayment date (unless an exception is granted in accordance with paragraph (d)(5) of this section), submit a written request to prepay, and provide the District Office with complete and well-documented information necessary to complete the prepayment report as outlined in Exhibit C of this subpart.

(ii) Certify that they will continue to administer housing in accordance with Fair Housing policies.

(iii) Comply with all other applicable requirements for prepaying borrowers contained in Exhibit E and paragraphs (b)(2) and (d)(2) of this section.

(3) *Denial of prepayment request.* Borrowers subject to restrictive-use provisions will be denied a request to

prepay if conditions stated in this subpart as required for prepayment cannot be met, or if the information submitted with the prepayment request cannot be verified. If the borrower is denied a request to prepay, the District Director will provide a letter stating the reasons for the denial and the right to appeal the decision in accordance with Subpart B of Part 1900 of this Chapter. Upon the scheduling of a prepayment appeal hearing, the District Office will notify tenants that they may submit comments concerning the proposed prepayment.

(b) *Special requirements*—(1) *Applicability of prepayment restrictive-use clause to loans approved prior to December 21, 1979.* Prepayment requests for loans approved prior to December 21, 1979, will be handled in accordance with the provisions of Exhibit E to this subpart. If such loan was made subject to restrictive-use clauses due to a servicing action (reamortization or a transfer and assumption on same or new terms to an eligible borrower), such loan will be subject to the remaining provisions of this paragraph.

(2) *Applicability of prepayment restrictive-use clause to loans approved on or after December 21, 1979, or subsequently made subject to these restrictions.* For any multiple family housing loan approved on or after December 21, 1979, or which has been subsequently made subject to prepayment restrictive-use provisions, prepayments may be accepted only if the title to the real property is made subject to the applicable restrictive-use clause set out at paragraphs (b)(2)(i) or (b)(2)(ii) of this section, or upon granting an exception in accordance with paragraph (b)(3) of this section. The restrictive-use period is: Fifteen or twenty years from the date on which the last loan was closed or the loan was subsequently made subject to such provisions as a result of a servicing action as specified in this subpart (fifteen years if the loan has not received interest credit, rental assistance, or Section 8 assistance under a Housing Assistance Payment contract; twenty years if the loan has received any of these forms of assistance).

(i) Project loans subject to this section as a result of a servicing action as set forth in paragraph (b)(1) of this section, with outstanding FmHA debt, will have the following prepayment restrictive-use clause inserted in the deed, conveyance instrument, loan agreement/resolution, assumption agreement, or reamortization agreement, as appropriate.

The borrower and any successors in interest agree to use the housing for the purpose of housing people eligible for occupancy as provided in section 514 or section 515 of Title V of the Housing Act of 1949 and FmHA regulations then extant during this _____ (15 Years for unsubdized or 20 years for subsidized loans) period beginning _____. (The date the last loan on the project is closed or date the project was last made subject to the prepayment restrictive-use provisions as a result of servicing actions authorized under this subpart or other subparts). No person occupying the housing shall be required to vacate prior to the close of such _____ (15 or 20 year) period because of early prepayment. The borrower will be released during such period from these obligations only when the Government determines that there is no longer a need for such housing or that such other financial assistance provided to the residents of such housing will no longer be provided due to no fault, action or lack of action on the part of the borrower. A tenant may seek enforcement of this provision as well as the Government.

(ii) Project loans subject to this section, which are being prepaid, for which an exception to the restrictive-use clause cannot be granted, will have the following restrictive-use clause inserted in the deed, conveyance instrument, deed of release or satisfaction, as appropriate:

The owner and any successors in interest agree that the housing located on this property will be used only as authorized under section 514 or 515 of Title V of the Housing Act of 1949, as amended, and FmHA regulations then extant until __ (insert date, 15 years for unsubsidized or 20 years for subsidized loans, from the date the last loan on the project was closed or the project was last made subject to the prepayment restrictive-use provisions as a result of servicing actions authorized under this subpart or other subparts). A tenant may seek enforcement of this provision as well as the Government. No person occupying the housing shall be required to vacate during such period because of early prepayment. The owner also agrees to keep a notice posted at the project, for the remainder of the restrictive-use period, in a place available for tenant inspection, stating that the project is to be used in accordance with the Housing Act, and that management practices and rental rates will be consistent with those necessary to maintain the project for low- and moderate-income tenants for the remainder of the restrictive-use period.

Exhibit A of this Subpart sets forth the format for this notice.

(3) *Exception to prepayment restrictive-use clause.* An exception may be made to the restrictive-use clause for projects when the State Director determines that:

(i) There is no longer a need for such housing and related facilities to be so utilized, or

(ii) Federal or other financial assistance provided to the residents of such housing will no longer be provided due to no fault, action or lack of action on the part of the borrower.

(4) *Determination to release restrictive-use clause.* The determination to be made in paragraph (b)(3)(i) of this section, that there is no longer a need for such housing and related facilities to be so utilized, may be made when:

(i) There will be no change in the use of the housing and related facilities, and no likely increase in rental or other charges as a result of prepayment, which will cause the low- and moderate-income and elderly or handicapped tenants occupying the assisted housing at the time of the offer or request to reasonably expect to be unable to remain in occupancy for such period (15 or 20 years).

(ii) Affordable, decent, safe, sanitary and nonassisted alternative housing, or vacant assisted units for which there is no waiting list, is available to the tenants who are likely to be displaced as a result of the change or increase, and

(iii) In the case of housing or related facilities containing more than 10 dwelling units, that the changes likely to occur as a result of the prepayment will not have a substantial adverse effect on the supply of affordable, decent, safe, and sanitary housing available to low- and moderate-income and elderly or handicapped persons in the area in which the housing and related facilities are located.

(c) *Final payments and release of security.* The FmHA office charged with servicing the account must ensure payments in full and release of security are processed in the manner set out at Part 1866 of this chapter (FmHA Instruction 451.4), Subparts A and B of Part 1951, and Subpart A of Part 1962 of this chapter, as applicable, and appropriate program requirements and regulations. FmHA's interest in the property insurance will be released in accordance with § 1806.4 (a)(3) of Subpart A of Part 1806 of this chapter (paragraph IV A 3 of FmHA Instruction 426.1). Interest in other insurance and security will be released as appropriate. In all cases, references to County Supervisor shall be construed to mean District Director when applied to multiple family housing borrowers.

(d) *Special FmHA processing requirement.* In order to alleviate tenant displacement problems the District Director will take the following actions upon receiving notification of intent to prepay any RRH, RCH or LH loans:

VOL 53 ISS 78 APR 22 1988 UMI

(1) Follow instructions in Exhibit E for loans approved prior to December 21, 1979.

(2) *Notification to tenants.* Immediately notify *each* tenant of the property by Certified Mail, Return Receipt Requested, and prepare notices for the borrower to post in the project. The District Director will not wait to determine if submitted information is accurate or if prepayment will be accepted or denied before sending the notification to tenants. The letter and notices will contain all the following information necessary to allow tenants to make informed choices (Exhibit B of this subpart is provided as a guide for this purpose):

(i) That the borrower plans to repay the FmHA loan on a specified date, and remove the housing from the FmHA program if all requirements imposed by FmHA are met.

(ii) The level at which rents at the project are expected to be placed subsequent to prepayment.

(iii) That each tenant will be affected by this change in rents at final lease expiration which will not occur prior to the prepayment.

(iv) That all displaced tenants and those experiencing rent overburen as defined in paragraph XIV A 4 of Exhibit B to Subpart C of Part 1930 of this chapter will be eligible for Letters of Entitlement that will place them at the top of all waiting lists for any FmHA project in any location for which they qualify.

(v) Instructions on how to apply for a Letter of Entitlement; that they have up to the termination of their final lease to apply for these letters; that they will have up to 60 days after receipt of the letters to use them to be placed on FmHA waiting lists; and that the letters will serve to maintain their names on these waiting lists until they are reached, or purged in accordance with paragraph VI C 7 of Exhibit B to Subpart C of Part 1930 of this chapter.

(vi) The names, location, number of apartments, and unit sizes of other FmHA projects in the market area and whether they serve senior citizens or families.

(vii) The names and locations of other subsidized housing and Agencies which administer housing subsidies or aid in relocation anywhere in the market area.

(viii) That those tenants on rental assistance (RA), who move to another FmHA project at which they are eligible for RA as soon as their name is reached on a waiting list entered with a letter of priority entitlement, will receive RA in the new project if the project is eligible to receive and administer RA. This RA will remain at the receiving project if the tenant then moves to another FmHA project.

(ix) That those tenants choosing to stay in their units after prepayment and pay the higher rents, with or without subsidy, are entitled to do so, unless evicted for a cause unrelated to prepayment.

(x) That in accordance with Title V of the Housing Act of 1949, as amended, which states that certain FmHA loans may be subject to restrictive-use covenants if the loan is prepaid, a tenant, as well as the government, may seek enforcement of the provisions.

(xi) That all letters of priority will be issued in accordance with Title VI of the Civil Rights Act of 1964, as codified in Subpart E of Part 1901 of this chapter.

(xii) That a 30-day comment period is available to tenants to present evidence on a proposed excepton when one is requested for release of restrictive-use provisions, accepting prepayment with or without restrictive-use provisions for loans which to not already contain these provisions, or the 180-day notification period.

(xiii) That it is possible that the housing may remain in the program after the above date under certain circumstances, and tenants will be notified if this is the case (if applicable).

(xiv) Any other information pertinent to the particular case.

(3) *Notification to other Agencies.* At the time tenants are notified, the FmHA State and District Offices, as appropriate, will send a letter of notification to interested non-profit organizations and other local, State and Federal agencies which provide housing assistance to low- and moderate-income people, or which may be interested in purchasing a project for such purposes. The letter will apprise the organizations of the offer to prepay, the extent of any anticipated displacement, and (if applicable) the possibility of transfer with incentives or sale to a non-profit organization. Generally, the FmHA State Office will notify State and Federal agencies and the District Office will notify local agencies.

(4) *Acknowledgment letter.* Send an acknowledgment letter to the borrower upon receipt of a complete prepayment request. The letter must specify the date on which a complete request was received, and inform the borrower that prepayment commitments should not be finalized until the Agency issues a letter of consent. The letter should state the length of time it is likely to take before any decision is made.

(5) *Prepayment in less than 180 days.* Receipt of a prepayment request less than 180 days in advance of the projected prepayment date may not be processed unless:

(i) The tenants have been given a 30-day comment period,

(ii) FmHA verifies that *no* tenant displacement nor other adverse effects on tenants will occur during the 6-month period, and

(iii) The District Office determines that there is time to prepare an accurate prepayment report in a shorter period of time.

(6) *Letters of Priority Entitlement.* Notification on how and where to apply for a letter of entitlement will be posted in the project by the borrower at the time of notification of intent to prepay. The notices will remain posted until 60 days prior to the expiration of any leases still in effect. Upon receipt of a request for a letter of priority entitlement, the District Director will prepare the letter which will include a statement that the affected tenant has 60 days to apply in writing with other FmHA RRH projects in any location. The letter of priority entitlement will enable those tenants to be placed at the top of the waiting list in the projects which have units for which they qualify. A list of FmHA RRH projects in the market area, with addresses and telephone numbers, will be included as part of the letter of priority entitlement. Eligible tenants in LH projects will also be advised of other available LH projects in the area.

(7) *Prepayment report.* Send a report, completed in the format of Exhibit C of this subpart, on each prepayment case to the State Director for indefinite retention. Any information for the report supplied by the borrower must be researched and verified by the District Office. The State Office will forward a copy of this report to the National Office in accordance with § 1951.264 of Subpart F of Part 1951 of this chapter.

(8) *Processing of a potential violation of the prepayment restrictive-use clause.* Should the District Office staff receive a written complaint or become otherwise aware of a violation of the prepayment restrictive-use clause or other agreement set out in paragraphs (b)(2)(i) or (ii) of this section or in Exhibit E, by the owner of a previously FmHA-financed project, the following actions will be taken:

(i) The complainants will be informed that they may pursue enforcement through the courts.

(ii) The complaint will be subject to a preliminary evaluation by FmHA. The evaluation may warrant gathering added information. Should this preliminary evaluation indicate the complaint is not valid, the complainant will be so

BEST COPY AVAILABLE

informed. Should the preliminary evaluation indicate the complaint is or may be valid, the complaint, facts gathered, evaluation report and staff recommendation will be forwarded to the State Office for processing.

(iii) Should the State Office staff determine a violation of the restrictive-use provisions has likely occurred, the Administrator will be contacted. The OGC will be asked to provide advice in such cases. The complaint may then be referred to the Department of Justice or other appropriate Agency for enforcement. A copy of any complaint submitted to the Department of Justice or other appropriate Agency with a request to seek enforcement of the restrictive-use provisions should be forwarded to the Administrator.

(9) *Relationship with acceleration of accounts.* Any prepayment of an FmHA loan subject to restrictive-use provisions, prepaid in response to an acceleration of the account, will have the appropriate restrictive-use language inserted, with the advice of OGC, in the deed of release or satisfaction, as appropriate. If a project is sold at foreclosure, the restrictive-use provisions will be added to the deed.

(10) *Relationship with bankruptcy.* A bankruptcy proceeding will have no effect on this contractual requirement for restrictive-use.

8. Exhibit A of Subpart B is revised to read as follows:

Exhibit A—Exhibit for Borrower to Use as a Guide to Notify Tenants of Compliance with Title V of the Housing Act of 1949, As Amended

Notice To Tenants

This apartment complex was previously financed through the U.S. Department of Agriculture, Farmers Home Administration (FmHA). As a condition of paying the FmHA indebtedness, the owners agreed to operate the complex in accordance with section 514 or section 515 of the Housing Act of 1949, and FmHA regulations until _____ (insert expiration date of 15-year period for unsubsidized or 20-year period for subsidized loans). This requires that apartments be rented to tenants qualified by income, and that management policies and rental rates at the project are consistent with such use.

If you have any reason to believe that the requirements of the Housing Act of 1949 or the regulations of the FmHA are being violated in the operation of this complex, you are advised to contact the FmHA office listed below or any other FmHA office listed in the telephone directory under U.S. Government.

_____

_____

_____

9. Exhibit B of Subpart B is revised to read as follows:

Exhibit B—Guide Letter To Notify Tenant of Pending Prepayment

Notice of Owners Intent To Prepay

TO: Tenants of (Name of Project).

The owners of (Name of Project) have requested to pay their FmHA loan in full, and remove the housing from the FmHA program. If FmHA can accept the payment, rental rates may no longer be subsidized by FmHA, and it is anticipated that rents may change to approximately _____ for a _____ unit and _____ for a _____ unit. You would not be affected by these increases until the date your final lease expires or the date of prepayment, whichever occurs last. Under no circumstances will prepayment be accepted before _____.

(If applicable): It is possible that the housing may remain in the FmHA program after the above date. You will be notified if this is the case, or if the time until the prepayment is extended significantly.

You may apply for a letter of priority entitlement to be placed on the waiting list of any FmHA-financed project in the country for which you qualify. You will have up to the date your final lease expires, the above date, or the date of prepayment, whichever occurs last, to apply for this letter and it will be valid for 60 days after issue. If you are currently receiving rental assistance (RA), you are eligible to receive RA at the project to which you are moving, and the project to which you are moving is eligible to administer RA, and RA will continue when you move to the new project. If you choose to remain in your present apartment and pay the higher rent, with or without outside subsidy, you may not be evicted without good cause.

Other FmHA projects in this area, their addresses, telephone numbers and the size of their units are:

Other agencies which may be able to offer you housing or help to find you other housing and their telephone numbers are:

(If applicable): This prepayment will be accepted before (_____) because the determination was made that:

(If applicable): All tenants currently in residence at this project have 30 days to present evidence contrary to the basis for this determination.

In accordance with Title V of the Housing Act of 1949, as amended, tenants as well as the government may seek enforcement of the provisions under which an FmHA Multi-family housing loan may be prepaid.

All equal opportunity provisions apply to the issuance of the letters of priority.

If you have any questions or wish to apply for a letter of priority, please write or call:

_____

_____

_____

_____

District Director

10. Exhibit C of Subpart B is revised to read as follows:

Exhibit C—Report on Prepayment

1. Name of borrower.
2. Name of project.
3. Case and project number.
4. Date of all loan approvals, transfers and reamortizations.
5. Type of borrower entity and plan of operation.
6. The number of units in the project.
7. The number of eligible tenants presently occupying units.
8. The estimated replacement cost per unit.
9. The estimate of the number of households that will be displaced as a result of prepayment.
10. The estimated relocation cost of the households being displaced.
11. An indication of the displaced households' ability to pay relocation costs.
12. The income range of the tenants presently in the project.
13. The number of elderly tenants in the project.
14. The present rents and rents projected after prepayment.
15. The number and type of Section 8 or RA units, and whether Section 8 will continue after prepayment.
a. The earliest date borrower can "opt-out" of Section 8.
16. Any cause of displacement other than rent.
17. The availability of other vacant units in the area and their rental structure.
18. The District Office's recommendation on the final action.
19. Date of prepayment.
20. Whether restrictive-use provisions are operable and date they expire.
21. Whether restrictive-use provisions will remain in release of security documents and, if an exception was granted, the basis for this exception.
22. Whether (and which) incentives were offered to remain in the program and reason for non-acceptance (if known).
23. Whether housing was offered for sale to a non-profit or public agency and the result.

11. Exhibit E of Subpart B is added to read as follows:

Exhibit E—Prepayment of Loans Not Subject To Restrictive-Use Provisions

I. *Purpose:*

A. This Exhibit provides step-by-step guidance for use when requests to prepay multiple family housing loans are received for projects which are not subject to restrictive-use provisions. Generally, this would be any project for which the last loan was obligated prior to December 21, 1979, and which has not subsequently become subject to restrictive-use provisions due to servicing actions. All provisions of this Exhibit are subject to the availability of funds, and any special appropriations required by the Housing and Community Development Act of 1987 (Pub. L. 100-42).

B. Requests to pay FmHA multiple family housing loans in full require that certain actions be taken to ensure the affordability of the housing for specified tenants for a guaranteed period of time. When prepayment cannot be accepted without displacement of tenants or impact on the supply of affordable

housing for tenants served by the Section 514 or Section 515 programs, FmHA is required to take certain actions: provide incentives to borrowers to remain in the program themselves or to sell the project to a new borrower who will; or require that borrowers sell their projects to non-profit borrowers who, with FmHA assistance, will continue to operate the project for the benefit of very-low- and low-income tenants. FmHA assistance to non-profits through the latter provision are limited by legislation each year.

C. Notwithstanding any provisions set out in other Agency regulations, the provisions of this Exhibit will prevail where a conflict exists.

D. This Exhibit refers FmHA field staff to Section 1965.90 of this Subpart at various points in the process for further direction on the acceptance of prepayment. This is done for further guidance on the handling of specific requirements, and when it is determined that prepayment may be accepted. All references to Section 1965.90 are, therefore, abbreviated to "1965.90" with no further reference. For purposes of this Exhibit, refinancing, sales of property, and payment in full by the borrower from other assets will be covered by the term "prepayment."

II. *Loans Not Covered By This Exhibit:* For loans approved on or after December 21, 1979, or made subject to restrictive-use provisions due to covered servicing actions or transfers, prepayment will continue to be processed in accordance with the procedures outlined in § 1965.90.

III. *Prepayment of Loans Covered By This Exhibit:* For loans approved prior to December 21, 1979, and not subsequently made subject to restrictive-use provisions the following steps will be followed, in addition to the procedures outlined in § 1965.90(d), when a borrower wishes to prepay.

A. *Request to Prepay.* In accordance with § 1965.90 (a)(2), borrowers seeking to prepay multiple family housing loans (RRH and LH) must submit a complete prepayment request to the District Office. A prepayment request will not be considered complete until all the following documents have been submitted:

1. A written request to prepay;

2. Complete and well-documented information necessary to prepare the prepayment report as outlined in Exhibit C of this Subpart; and

3. Certification that they will continue to administer housing in accordance with Fair Housing policies.

B. *Receipt of Incomplete Requests.* If an incomplete request is submitted, the District Office will return it to the borrower specifying what additional information is needed.

C. *Notification to Tenants and Agencies.* When a complete repayment request is received, FmHA will immediately notify tenants and all housing agencies and nonprofit organizations which are known to be interested in housing, of the possible pending prepayment. These notifications will be sent in accordance with § 1965.90 (d)(2) and (3), Exhibit B to this subpart, and paragraph VI of this Exhibit.

D. *Acknowledgment of Request.* The District Office will send an acknowledgment letter to the borrower in accordance with § 1965.90(d)(4). It will state that a complete request to prepay was received and specify the date of receipt.

E. *Notification to National Office.* The District Office will notify the FmHA State Office, which in turn will notify the Assistant Administrator, Housing in the National Office, by Electronic Mail, using the format of FmHA Form 1965–B–1, within 10 working days of the receipt of a complete request. The National Office will maintain a waiting list, and the incentives and transfers which are ready for processing will be authorized in the order in which the original complete prepayment requests were received. Authorizations for the transfers to non-profits will be given until the nationwide annual maximum is reached. The status of the waiting list will be provided to the States periodically. Prepayment requests received prior to the effective date of this regulation will not serve to place borrowers on the waiting list for priority for incentives and transfers to non-profits. Priority will be established for all requests received on the effective date by means of a lottery. Thereafter, they will be prioritized in order of receipt.

IV. *Determination of Need and Acceptance of Prepayment:*

A. *Determination of Need.* The District Office will review local market conditions, information submitted for the prepayment report, and responses to a 30–day tenant comment period. They will determine whether the housing is needed. Section 1965.90 (b)(4) may be used in helping to make this determination. The District Office may accept prepayment if:

1. The borrower enters into an agreement that obligates the utilization of the assisted housing and related facilities for the purposes specified in section 514 or 515 for a 20–year period calculated from the date on which the last loan on the project was made and agrees that upon termination of the 20–year period to offer to sell the assisted housing and related facilities to a qualified non-profit organization or public agency in accordance with Paragraph VI of this Exhibit. The provisions in Exhibit E–1 should be used for this purpose. This agreement will be inserted in the deed or deed of release or satisfaction, as appropriate. If such an agreement is signed in a project with section 8 subsidy, the local Department of Housing and Urban Development (HUD) office must be notified; or

2. It is determined by FmHA that housing opportunities for minorities will not be materially affected as a result of the prepayment, and the borrower enters into an agreement that obligates the borrower and any successors in interest to ensure that current tenants will not be displaced due to: (a) a change in the use of the housing, or (b) an increase in rental or other charges, as a result of the prepayment. The restrictive-use provisions contained in Exhibit E–2 will be inserted in the deed, deed of release, or satisfaction, as appropriate; or

3. It is determined by FmHA that housing opportunities for minorities will not be materially affected as a result of the prepayment, there is an adequate supply of safe, decent, and affordable rental housing within the market area of the housing and related facilities, and sufficient actions have been taken to ensure that the rental housing will be made available to each tenant upon displacement. The requirements of § 1965.90(d) (2) and (3) and Exhibit B of this Subpart will be followed.

B. *Acceptance of Prepayment.* If prepayment can be accepted, the provisions of § 1965.90(d) will be followed, and the National Office will be notified by the State Office to remove the name from the waiting list for incentives and transfer funding. FmHA Form 1965–B–1 will be used for this purpose. Tenants will be given a 30–day notice prior to the prepayment, by the District Office. Tenants will be further advised that if they feel a prepayment has been accepted without compliance with the conditions outlined in this Exhibit, a review by the State Director may be requested.

V. *District Office Actions when Prepayment is Not Accepted:*

A. *Notification to New Tenants.* If prepayment cannot be accepted under the conditions specified in paragraph IV of this Exhibit, leases of tenants who move to the project will state that a prepayment of the loan is pending, and that they have been given a copy of the letter sent to tenants in accordance with paragraph III C of this Exhibit.

B. *Appeal Rights.* The borrower will be notified by letter that:

1. Prepayment was denied in accordance with § 1965.90(a)(3). Accordingly, appeal rights will be given.

2. Within 7 days of the date of the letter, the borrower may notify the District Office that he/she will reserve the right to appeal, to allow for the opportunity to review any incentives not to prepay which FmHA may offer. If this notice is not given, the appeal must be received within 30 days in accordance with FmHA Instruction 1900–B.

3. If the borrower does not respond within 30 days, the State Office will advise the National Office by means of FmHA Form 1965–B–1 to remove the name from the waiting list. Tenants and any agencies notified in accordance with paragraph III C will be notified by the District Office that prepayment will not take place.

C. *Offer of Incentives to Extend Low-Income Use.* If the borrower loses the appeal or requests an incentive offer, the borrower will show evidence of the nature of the prepayment to be made, whether through refinancing or sale of the project. If the possibility of an actual prepayment cannot be demonstrated by the borrower, no incentives will be offered. If they can be shown, the District Office will send a letter stating that:

1. A package of one-time incentives is being offered to extend the low-income use of the housing. (These will be enumerated in accordance with paragraph V D 2 of this Exhibit.)

2. Appropriation limitations may restrict available incentives each year. The actual receipt of these incentives may not be forthcoming in the near future, although the acceptance of the offer will be maintained on the waiting list.

3. The waiting list will be maintained by the National Office based on the date of the original complete prepayment request, in accordance with paragraph III A of this Exhibit.

4. Any agreement entered into to accept these one-time incentives will require the borrower to sign a restrictive-use provision obligating the housing to the low- and moderate-income program for 20 years from the date the agreement is executed.

5. That within 30 days, the borrower must either accept or reject the incentive package or appeal this action. If the borrower does not respond within 30 days, the prepayment request will be voided.

D. *Determination of Incentives to Be Offered.*

1. *Criteria for selection of incentives.* The incentives offered in accordance with paragraph V C will be selected based on the following criteria:

a. Those deemed necessary by local market conditions and alternative uses for the housing;

b. Those determined to be the least costly alternative for the Federal Government;

c. Those that provide a fair return to the borrower;

d. Those that would allow the project to maintain financial feasibility, with the amount of RA which can reasonably be expected to be available.

e. The District Office's evaluation of:

(i) The borrower's capability and willingness to continue to meet the purposes of the program;

(ii) The source of funds for prepaying the loan.

2. *Incentives to be offered.* The incentives will be selected from the following options:

a. Increase the maximum rate of return on the initial investment to 10 percent, whether for the current borrower or to a transferee, when the transfer is being undertaken in accordance with this paragraph.

b. Convert full profit to limited profit loans, either as Plan II or Plan I Section 8, should it become available, or reduce the interest rates for loans with Section 8 subsidy to make contract rents more feasible.

c. Subject to availability, a market determination of need, and tenant need, offer RA and priority for it for units not currently receiving RA in the project. (Any RA above this amount would be allocated in accordance with RA allocation procedures used for all projects.)

d. Subject to availability of funds, make a subsequent loan for equity on the project up to the difference between the present loan and 90 percent of the project's appraised fair market value as determined by an FmHA appraisal in accordance with FmHA Instruction 1922–B (available in any FmHA office). This loan may be made to the present borrower or to a borrower to whom the project is transferred in accordance with § 1965.65 of this Subpart. At the time of the equity loan, the existing loan may be reamortized in accordance with § 1965.70 of this Subpart.

E. *Borrower Response.*

1. *Borrower does not respond or loses the appeal.* If the borrower does not respond or loses the appeal, the State Office will advise the National Office by means of Form FmHA 1965–B–1 to remove the name from the waiting list. Tenants and any agencies notified in accordance with paragraph III C will be notified by the District Office that prepayment will not take place.

2. *Borrower accepts or rejects incentive package.* If the borrower makes a decision concerning acceptance or rejection of the incentive package, Form FmHA 1965–B–1 will be used by the State Office to notify the National Office of the decision.

F. *When The Borrower Accepts the Incentive Package.*

1. *Authorization to proceed.* When the borrower accepts the incentive package, the State Office will wait for authorization from the National Office to proceed with the processing of the incentives. National Office will issue these authorizations for those ready to implement the incentives, in the order in which a complete prepayment request was received, in accordance with paragraph III A of this Exhibit.

2. *Processing the incentives.* When authorization to proceed is received, the District Office will process the incentives, with or without a transfer of borrower, and make the following amendments to the loan and RA agreements, as appropriate:

a. If the rate of return on investment is changed, an addendum will be added to the loan agreement modifying the relevant paragraph.

b. If a conversion of profit type is made, the procedures of paragraph IV A 2 e of Exhibit B of Subpart C of Part 1930 of this Chapter will be followed. If the interest subsidy is increased, the "Interest Credit and Rental Assistance Agreement" (Form FmHA 1944–7), will be amended accordingly.

c. Any change in the amount of RA will require executing a RA agreement or a change in the existing RA agreement, in accordance with Section V C of Exhibit E of Subpart C of Part 1930 of this Chapter.

d. Loans for equity will be made in accordance with the appropriate Sections of Subpart E of Part 1944 of this Chapter. In accordance with Section 1951.517(b)(1) of Subpart K of Part 1951 of this Chapter, the equity loan will be a PASS loan and all existing loans in the project will be converted to PASS.

3. *Restrictive-use provisions.* The restrictive-use provisions contained in Exhibit E–3 will be inserted in the deed, loan agreement/resolution, assumption agreement, or reamortization agreement, as appropriate.

4. *Rent Increases.* Any rent increases resulting from acceptance of an incentive offer will be subject to the tenant notification requirements contained in paragraph IV C of Exhibit C to Subpart C of Part 1930 of this Chapter. Tenants will be advised that a review by the State Director may be requested if it is felt that the provisions of this paragraph were not correctly followed.

VI. *When the Borrower Rejects the Incentive Package:* Sale to non-profit organization or public agency:

If no incentive agreement is reached between FmHA and the borrower, the borrower will be required to offer to sell the project to a non-profit organization or public agency. The following steps will be taken in this process.

A. *Determination of Fair Market Value.* The housing's fair market value will be determined by two independent appraisers qualified to perform multi-family housing appraisals, one of whom shall be selected by the State Office and paid by FmHA, and the other selected and paid by the borrower. The appraisals will be conducted in accordance with FmHA Instruction 1922–B (available in any FmHA Office). If the two appraisers fail to agree on the fair market value, the District Office and borrower will jointly select and pay a third appraiser, whose appraisal shall be binding on the FmHA and the borrower.

B. *Borrower Advertises the Project.* The State Office will periodically compile the list of interested non-profit organizations and public agencies and forward the list to appropriate District Offices. The District Office will provide the borrower with the list of all the organizations which have expressed an interest in purchasing a project in the subject area. Unless the borrower already has a bona fide purchase offer from a local non-profit organization, the borrower will be expected to contact each organization on the list individually with an offer to sell, and with enough information about the project to allow the prospective purchaser to make an informed decision. In addition, the borrower will advertise the housing for sale to a local qualified non-profit organization or public agency. If no qualified local agency is found to purchase the housing within 60 days, the District Office will authorize the borrower to seek an existing qualified national or regional non-profit organization to purchase the housing. Advertising to the latter may begin after 60 days but prior to 120 days after advertising to local organizations begin. Purchase offers from regional or national organizations on the master list may not be accepted before this time. Advertisements will be placed, as appropriate, in local newspapers, national housing publications, and other media determined appropriate by the State Office.

C. *Qualifications of Non-Profit Borrower to Purchase.* Notwithstanding the requirements of § 1944.211(a)(10) of Subpart E of Part 1944 of this Chapter, non-profit organizations for the purpose of this paragraph need not be broadly-based nor organized solely to provide housing under section 514 or 515. Non-profit organizations qualified to buy the housing through this procedure must:

1. Be capable of managing the housing and related facilities for its remaining useful life, either by themselves or through a management agent.

2. Agree that "no subsequent transfer of the housing and related facilities will be permitted during the remaining useful life of the housing and related facilities unless the Secretary determines that the transfer will further the provision of housing and related facilities for low-income families or persons, or there is no longer a need for such housing and related facilities." Generally, transfers from regional or nationwide organizations to qualified local non-profit organizations will be acceptable. However, under no condition will a transfer be approved to an entity in which the non-profit borrower holds an interest.

3. Agree to obligate itself and successors in interest to maintain the housing for very-low- and low-income families or persons for its remaining useful life. The provision in Exhibit E-4 will be used and inserted in the deed, loan agreement/resolution and/or assumption agreement, as appropriate.

4. Show feasibility of the project, with anticipated funding which will be authorized in accordance with paragraph E-3 of this subsection, and any RA or debt forgiveness allocations which can reasonably be anticipated to be available for the project at the time of the transfer.

D. *Authorization for Transfer.* The National Office will authorize transfer-funding for projects which have completed the steps outlined in this subsection, and for which the transfer and assumption are ready to be processed. Subject to the nationwide maximum funding allowed, the authorizations for those ready to be processed will be issued in the order of the date a complete prepayment request was received by the District Office in accordance with paragraph III A of this Exhibit.

E. *District Office Actions when Transfer is Authorized.* When notified by the National Office that the transfer may be processed, the District Office will:

1. Notify tenants that prepayment of the loan will not be taking place.

2. Approve the assumption in accordance with § 1965.65 of this subpart.

3. Process the loan to the non-profit organization or public agency in accordance with Subpart E of Part 1944 of this Chapter for the following purposes, when necessary, the total of which may exceed 102 percent of the fair market value:

a. Direct costs incurred in purchasing and assuming responsibility for the housing and related facilities. These costs may include legal fees for purchasing but not for organizing the entity, architectural fees, appraisal fees, packaging fees and/or other expenses as authorized by the State Director. Funds for these direct costs may be provided in the form of an advance (instructions for doing so to be provided administratively) and be added to the amount of the loan at closing;

b. First year operating expenses not to exceed 2 percent of the project's appraised fair market value, when necessary;

c. Loan to pay for the equity in the project as determined by the independent appraisal;

4. Transfer the RA to the non-profit borrower in accordance with paragraph XV B 1 of Exhibit E of Subpart C of Part 1930 of this chapter;

5. Follow tenant notification requirements contained in the rent increase procedures in paragraph IV C of Exhibit C to Subpart C of Part 1930 of this chapter. Tenants will also be advised that a review by the State Director may be requested if it is felt that the procedures contained in this Exhibit for transfers to non-profit organizations have not been properly followed.

F. *Rental Subsidies.* Any RA transferred with the project will continue to benefit the tenant to whom it was assigned. An attempt will be made, however, to provide every tenant with a rental subsidy. Subject to appropriations, of which the field will be advised by the National Office, this will be done by allocating more units of RA and/or using forgiveness of debt for the project as specified below. While a project may have a combination of RA and forgiveness of debt, any one tenant will only have rents subsidized by one or the other.

1. Forgiveness of debt, with or without RA, will be handled in the following way:

a. A determination will be made of the number of units not receiving RA.

b. The total monthly FmHA-subsidized debt payment will be divided by the number of units determined in (a) above. This figure, or the basic rent for each unit, whichever is less, will be the maximum debt forgiveness which may be given to each non-RA unit.

c. A calculation will be made of the extent of overburden which will be experienced by each tenant not receiving RA.

d. For any tenant whose overburden would exceed that allowed to be forgiven, as calculated in (b) above, an attempt will be made to assign RA to the project.

e. If sufficient RA can be assigned to accommodate all tenants identified in (d), skip to (f) below. If some servicing RA is assigned, but a sufficient amount is not available, the RA should be assigned to those tenants experiencing the greatest overburden and steps (a) and (b) should be repeated.

f. The tenant contribution will be calculated for each remaining tenant not receiving RA using the same methods used to calculate RA. The reduction in rent for any one tenant, however, may not exceed the amount of debt forgiveness available for each tenant; that is, the amount calculated in steps (a) and (b) above. Appropriate changes will be made in lease agreements, with the words "rental forgiveness" being substituted for "rental assistance."

g. As servicing RA becomes available in future years, it will be assigned to those tenants who continue to experience rent overburden under this procedure, and the calculation made in steps (a) and (b) will be updated.

2. The borrower's debt payment to FmHA will be reduced by the amount of reduction in rent paid by tenants in non-RA units in accordance with paragraph VI F 1 above. This reduction in rent will be forgiven. The procedure to be used by the District Office to report the forgiveness to the Finance Office will be issued to the field administratively.

VII. *Accepting Prepayment When Non-Profit Organizations Do Not Apply or Funds Are Not Available:* The District Office will accept prepayment in accordance with the procedures set forth in § 1965.90 (d)(2), (d)(5) and (d)(6) upon the following conditions: (Note: If prepayment is accepted, the State Office will use FmHA Form 1965-B-1 to notify the National Office to remove the project from the list for transfer-funding.)

A. *No Offer to Purchase.* No qualified non-profit organization has made a bona fide offer to purchase the housing for its fair market value and shown feasibility for such a purchase, and

1. Funds are available for the purpose;

2. At least a 180-day period has expired since the offer to sell to a local non-profit or public agency was made;

3. For at least a period of 60 days of the 180 days the offer had also been made to regional and national organizations;

4. There is proof that all organizations whose name was provided by the District or State Office were contacted in accordance with paragraph VI B of this Exhibit and offered the housing for purchase; or

B. *Funds Are Not Available.* No funds have been available for transfer-funding for any project in the country for a period of 15 months. (Note: This determination is not made based on the length of time the particular project has been on the waiting list. National Office will periodically advise State Offices of the status of the waiting list.)

Exhibit E-1—Restrictive-Use Provisions for Those Who Prepay in Accordance With Paragraph IV A 1

The owner and any successors in interest agree to use the housing for the purpose of housing low- and moderate-income people eligible for occupancy as provided in FmHA regulations then extant during this 20 year period beginning (date of the last loan). A tenant may seek enforcement of this provision as well as the Government. No eligible person occupying or wishing to occupy the housing shall be required to vacate or denied occupancy prior to the close of such 20 year period because of early prepayment. The owner also agrees to keep a notice posted at the project, for the remainder of this 20 year period, in a place available for tenant inspection, stating that the project is to be used in accordance with the Housing Act, and that management practices and rental rates will be consistent with those necessary to maintain the project for low- and moderate-income tenants for the remainder of the restrictive-use period. (Exhibit A of this subpart sets forth the format for this notice.) At the expiration of this period ending (*date*), the housing and related facilities will be offered for sale to a qualified nonprofit organization or public agency, as determined by FmHA.

Exhibit E-2—Restrictive-Use Provisions for Those Who Prepay in Accordance With Paragraph IV A 2

The owner and any successors in interest agree to use the housing for the purpose of housing low- and moderate-income people eligible for occupancy as provided in FmHA regulations then extant. A tenant may seek enforcement of this provision as well as the Government. No eligible person occupying the housing shall be required to vacate because of early prepayment. The owner also agrees to keep a notice posted at the project, in a place available for tenant inspection, stating that the project is to be used in accordance with the Housing Act, and that management practices and rental rates will be consistent with those necessary to maintain the project for low- and moderate-income tenants. (Exhibit A of this Subpart sets forth the format for this notice.)

Exhibit E-3—Restrictive-Use Provisions for Those Accepting Incentives Not to Prepay

The borrower and any successors in interest agree to use the housing for the purpose of housing low- and moderate-income people eligible for occupancy as provided in FmHA regulations then extant during this 20 year period beginning (date the

current agreement or action takes place). A tenant may seek enforcement of this provision as well as the Government. No person occupying or wishing to occupy the housing shall be required to vacate or be denied occupancy prior to the close of such 20 year period because of early prepayment.

Exhibit E-4—Restrictive-Use Provisions for Non-Profit Organizations to Whom Loan Was Transferred in Accordance With Paragraph VI

The borrower and any successors in interest agree to use the housing for the purpose of housing very-low- and low-income people eligible for occupancy as provided in FmHA regulations then extant during the remaining useful life of the project beginning (date of this transfer). A tenant may seek enforcement of this provision as well as the Government. No person occupying or wishing to occupy the housing shall be required to vacate or denied occupancy prior to the end of the remaining useful life of the project because of early prepayment. The borrower agrees further that the housing or related facilities cannot be transferred during the remaining useful life of the housing and related facilities, unless the Government determines that the transfer will further the provision of the housing and related facilities for low-income families or persons, or there is no longer a need for such housing and related facilities by low-income families or persons.

Date: March 29, 1988.

Vance L. Clark,

Administrator, Farmers Home Administration.

[FR Doc. 88-8900 Filed 4-21-88; 8:45 am]

BILLING CODE 3410-07-M

DEPARTMENT OF COMMERCE

Economic Development Administration

13 CFR Part 309

[Docket No. 50690-7236]

General Requirements for Financial Assistance; Flood Hazard and Environmental Requirements

AGENCY: Economic Development Administration (EDA), Commerce.

ACTION: Final rule.

SUMMARY: This rule adopts as final, without change, the Economic Development Administration's (EDA) interim regulations at 13 CFR Part 309, § 309.15—"Flood Hazard," and § 309.18—"Environmental Requirements." Section 309.15 on Flood Hazard was amended to include the most recent applicable Executive Order, to substitute the Federal Emergency Management Agency (FEMA) for the Department of Housing and Urban Development (HUD) and to refer to the National Flood Insurance Act of 1986, as amended. Section 309.18 on Environmental Requirements was amended to cite pertinent legal authority.

EFFECTIVE DATE: June 25, 1986.

FOR FURTHER INFORMATION CONTACT: James F. Marten, Deputy Chief Counsel, Economic Development Administration, U.S. Department of Commerce, Herbert C. Hoover Building, 14th Street, between Pennsylvania and Constitution Avenues, NW., Room 7001, Washington, DC 20230, (202) 377-5441.

SUPPLEMENTARY INFORMATION: EDA published an interim rule concerning these changes on June 25, 1986 [51 FR 23042], and allowed interested persons 60 days to comment. No comments were received. EDA is adopting as a final rule, without change, 13 CFR Part 309, "General Requirements for Financial Assistance," § 309.15, "Flood Hazard," and § 309.18, "Environmental Requirements."

Under Executive Order 12291, the Department must judge whether a regulation is "major" within the meaning of Section 1 of the Order and, therefore, subject to the requirement that a Regulatory Impact Analysis be prepared. This regulation is not major because it is not likely to result in an annual effect on the economy of $100 million or more; a major increase in costs or prices for consumers, individual industries, Federal, state, or local government agencies, or geographic regions; or significant adverse effects on competition, employment, investment, productivity, innovation, or on the ability of United States-based enterprises to compete with foreign-based enterprises in domestic or export markets.

Accordingly, neither a preliminary nor final Regulatory Impact Analysis has to be or will be prepared.

This final rule is exempt from all requirements of 5 U.S.C. 553 including notice and opportunity to comment and delayed effective date because it relates to agency grants, benefits and contracts.

No other law requires that notice and opportunity for comment be given for the rule.

Accordingly, the Department's General Counsel has determined and so certified to the Office of Management and Budget, that dispensing with notice and opportunity for comment is consistent with the Administrative Procedure Act (APA) and all other relevant laws.

Since notice and an opportunity for comment are not required to be given for this rule under § 553 of the APA (5 U.S.C. 553) or any other law under § 603(a) and § 604(a) of the Regulatory Flexibility Act (5 U.S.C. 603(a), 604(a)), no initial or final Regulatory Flexibility Analysis has been or will be prepared.

This rule does not contain a collection of information for purposes of the Paperwork Reduction Act (Pub. L. 96-511).

List of Subjects in 13 CFR Part 309

Community development, Grant programs—community development, Loan programs—community development, Penalties.

Under authority of Sec. 701, Pub. L. 89-136, 79 Stat. 570 (42 U.S.C. 3211); Sec 1-105, Department of Commerce Organization Order 10-4, *as amended* (40 FR 56702), the interim regulation amending 13 CFR Part 309 which was published June 25, 1986 (51 FR 23042) is adopted as final without changes.

Dated: April 12, 1988.

James L. Perry,

Acting Assistant Secretary for Economic Development.

[FR Doc. 88-8865 Filed 4-21-88; 8:45 am]

BILLING CODE 3510-24-M

DEPARTMENT OF TRANSPORTATION

Federal Aviation Administration

14 CFR Part 39

[Docket No. 87-NM-164-AD; Amdt. 39-5899]

Airworthiness Directives; CASA Model C-212 Series Airplanes

AGENCY: Federal Aviation Administration (FAA), DOT.

ACTION: Final rule.

SUMMARY: This amendment adopts a new airworthiness directive (AD), applicable to CASA Model C-212 series airplanes, which requires replacement of the existing fuel shut-off valves with new ones. This amendment is prompted by reports of failures in the operation of electrical motor fuel shut-off valves. This condition, if not corrected, could lead to inability to shut off the fuel supply in the event of a fire.

EFFECTIVE DATE: June 1, 1988.

ADDRESSES: The applicable service information may be obtained from Contrucciones Aeronauticas S.A., Getafe, Madrid, Spain. This information may be examined at the FAA, Northwest Mountain Region, 17900 Pacific Highway South, Seattle, Washington, or the Seattle Aircraft Certification Office, 9010 East Marginal Way South, Seattle, Washington.

FOR FURTHER INFORMATION CONTACT: Mr. A. Scholes, Standardization Branch, ANM-113; telephone (206) 431-1979. Mailing address: FAA, Northwest Mountain Region, 17900 Pacific Highway South, C-68966, Seattle, Washington 98168.

SUPPLEMENTARY INFORMATION: A proposal to amend Part 39 of the Federal Aviation Regulations to include an airworthiness directive, applicable to CASA Model C-212 series airplanes, which requires replacement of the existing fuel shut-off valves with new valves, was published in the Federal Register on January 19, 1988 (53 FR 1372).

Interested parties have been afforded an opportunity to participate in the making of this amendment. No comments were received in response to the proposal.

After careful review of the available data, the FAA has determined that air safety and the public interest require the adoption of the rule as proposed.

It is estimated that 8 airplanes of U.S. registry will be affected by this AD, that it will take approximately 4 manhours per airplane to accomplish the required actions, and that the average labor cost will be $40 per manhour. Estimated cost for parts per airplane is $3,500. Based on these figures, the total cost impact of this AD to U.S. operators is estimated to be $29,280.

For the reasons discussed above, the FAA has determined that this regulation is not considered to be major under Executive Order 12291 or significant under DOT Regulatory Policies and Procedures (44 FR 11034; February 26, 1979) and it is further certified under the criteria of the Regulatory Flexibility Act that this rule will not have a significant economic impact, positive or negative, on a substantial number of small entities because of the minimal cost of compliance per airplane ($3,660). A final evaluation has been prepared for this regulation and has been placed in the docket.

List of Subjects in 14 CFR Part 39

Aviation safety, Aircraft.

Adoption of the Amendment

Accordingly, pursuant to the authority delegated to me by the Administrator, the Federal Aviation Administration amends § 39.13 of Part 39 of the Federal Aviation Regulations as follows:

PART 39—[AMENDED]

1. The authority citation for Part 39 continues to read as follows:

Authority: 49 U.S.C. 1354(a), 1421 and 1423; 49 U.S.C. 106(g) (Revised Pub. L. 97-449, January 12, 1983); and 14 CFR 11.89.

§ 39.13 [Amended]

2. By adding the following new airworthiness directive:

CASA: Applies to Model C-212 series airplanes, serial numbers as listed in CASA Service Bulletin 212-28-15, dated April 11, 1983, certificated in any category. Compliance is required within 5 months after the effective date of this AD, unless previously accomplished.

To prevent inability to close fuel shut-off valves in the event of a fire, accomplish the following:

A. Replace the fuel shut-off valves with new modified valves, in accordance with CASA C-212 Service Bulletin 212-28-15, dated April 11, 1983.

B. An alternate means of compliance or adjustment of the compliance time, which provides an acceptable level of safety and which has the concurrence of an FAA Principal Maintenance Inspector, may be used when approved by the Manager, Standardization Branch, ANM-113, FAA, Northwest Mountain Region.

C. Special flight permits may be issued in accordance with FAR 21.197 and 21.199 to operate airplanes to a base for the accomplishment of the modifications required by this AD.

All persons affected by this directive who have not already received the appropriate service document from the manufacturer may obtain copies upon request to Contrucciones Aeronauticas S.A., Getafe, Madrid, Spain. This document may be examined at the FAA, Northwest Mountain Region, 17900 Pacific Highway South, Seattle, Washington, or the Seattle Aircraft Certification Office, 9010 East Marginal Way South, Seattle, Washington.

This amendment becomes effective June 1, 1988.

Issued in Seattle, Washington, on April 12, 1988.

Frederick M. Isaac,
Acting Director, Northwest Mountain Region.

[FR Doc. 88-8822 Filed 4-21-88; 8:45 am]

BILLING CODE 4910-13-M

---

14 CFR Parts 71 and 73

[Airspace Docket No. 87-AWP-36]

Subdivision of Restricted Areas R-3104 and R-3107; Hawaii

AGENCY: Federal Aviation Administration (FAA), DOT.

ACTION: Correction to final rule.

SUMMARY: This action corrects the titles of restricted areas in Hawaii. Inadvertently, the titles of R-3107, R-3107A and R-3107B were called Kaula, HI, when they should have been called Kaula Rock, HI. This action corrects that mistake.

EFFECTIVE DATE: 0901 UTC, May 5, 1988.

FOR FURTHER INFORMATION CONTACT: Paul Gallant, Airspace Branch (ATO-240), Airspace-Rules and Aeronautical Information Division, Air Traffic Operations Service, Federal Aviation Administration, 800 Independence Avenue SW., Washington, DC 20591; telephone: (202) 267-8253.

SUPPLEMENTARY INFORMATION:

History

Federal Register Document 88-4939 was published on March 8, 1988, that subdivided Restricted Areas R-3104 and R-3107 in Hawaii (53 FR 7352). Inadvertently, the titles of R-3107, R-3107A and R-3107B were called Kaula, HI, when they should have been called Kaula Rock, HI. This action corrects that mistake.

The FAA has determined that this regulation only involves an established body of technical regulations for which frequent and routine amendments are necessary to keep them operationally current. It, therefore—(1) Is not a "major rule" under Executive Order 12291; (2) is not a "significant rule" under DOT Regulatory Policies and Procedures (44 FR 11034; February 26, 1979); and (3) does not warrant preparation of a regulatory evaluation as the anticipated impact is so minimal. Since this is a routine matter that will only affect air traffic procedures and air navigation, it is certified that this rule will not have a significant economic impact on a substantial number of small entities under the criteria of the Regulatory Flexibility Act.

List of Subjects in 14 CFR Parts 71 and 73

Aviation safety, Continental control area, Restricted areas.

Adoption of the Correction

Accordingly, pursuant to the authority delegated to me, in the Federal Register Document 88-4939, on page 7352 of the Federal Register on March 8, 1988, the titles of R-3107, R-3107A and R-3107B in the amendment to § 73.31 are corrected to read as follows:

PART 73—SPECIAL USE AIRSPACE

1. The authority citation for Part 73 continues to read as follows:

Authority: 49 U.S.C. 1348(a), 1354(a), 1510, 1522; Executive Order 10845; 49 U.S.C. 106(g) (Revised Pub. L. 97-449, January 12, 1983); 14 CFR 11.69.

§ 73.31 [Amended]

2. Section 73.31 is amended to read as follows:

R-3107 Kaula Rock, HI [Remove]
R-3107A Kaula Rock, HI [New]
R-3107B Kaula Rock, HI [New]

Issued in Washington, DC, on April 14, 1988.

Shelomo Wugalter,

Manager, Airspace-Rules and Aeronautical Information Division.

[FR Doc. 88-8823 Filed 4-21-88; 8:45 am]

BILLING CODE 4910-13-M

DEPARTMENT OF ENERGY

Federal Energy Regulatory Commission

18 CFR Part 154

[Docket No. RM85-14-000, Orders No. 483, 483-A]

Revisions to the Purchased Gas Adjustments Regulations

Issued April 18, 1988.

AGENCY: Federal Energy Regulatory Commission.

ACTION: Final rule; correction notice.

SUMMARY: The Federal Energy Regulatory Commission (Commission) is correcting its final rule, Revisions to the Purchased Gas Adjustment Regulations, 52 FR 43854 (Nov. 17, 1987) and the Order on Rehearing on the Revisions to the Purchased Gas Adjustment Regulations, 53 FR 7495 (Mar. 9, 1988).

EFFECTIVE DATE: April 18, 1988.

FOR FURTHER INFORMATION CONTACT: Andrew S. Katz, Office of the General Counsel, Federal Energy Regulatory Commission, 825 N. Capitol Street NE., Washington, DC 20426, Phone: (202) 357-8020.

SUPPLEMENTARY INFORMATION: On November 10, 1987, and March 2, 1988 respectively, the Commission issued its final rule and order on rehearing for Revisions to the Purchased Gas Adjustment Regulations. In the final rule, § 154.306(c) contains a typographical error that incorrectly reverses the order of the two elements in the formula in this section. The Commission is correcting this error.

Lois D. Cashell

Acting Secretary.

PART 154—RATE SCHEDULES AND TARIFFS

1. The authority citation for Part 154 continues to read as follows:

Authority: Natural Gas Act, 15 U.S.C. 717-717w (1982); Department of Energy Organization Act, 42 U.S.C. 7102-7352 (1982); E.O. 12009, 3 CFR 1978 Comp., p. 142; Independent Offices Appropriations Act, 31 U.S.C. 9701 (1970).

2. In § 154.306, paragraph (c) is revised to read as follows:

§ 154.306 Assessment of past performance.

* * * * *

(c) *Gas costs requiring specific approval for surcharge recovery.* The amount of gas cost which requires specific approval by the Commission for surcharge recovery is the difference obtained by subtracting Y from X, if greater than zero, where:

X = The actual cost of gas purchased in a test interval determined in paragraph (d) of this section; and

Y = The test amount determined by multiplying the computed projected gas costs, determined in paragraph (e) of this section, by 1.03.

* * * * *

[FR Doc. 88-8835 Filed 4-21-88; 8:45 am]

BILLING CODE 6717-01-M

DEPARTMENT OF HEALTH AND HUMAN SERVICES

Social Security Administration

20 CFR Part 416

[Reg. No. 16]

Supplemental Security Income for the Aged, Blind, and Disabled; Real Property Which Is Not Counted When It Cannot Be Sold and Transfer of Assets For Less Than Fair Market Value

AGENCY: Social Security Administration, HHS.

ACTION: Interim rule with request for comments.

SUMMARY: We are amending regulations under the Supplemental Security Income (SSI) program to implement sections 9103 and 9104 of Pub. L. 100-203 (the Omnibus Budget Reconciliation Act of 1987) dealing with the disposition and transfer of resources in determining eligibility for SSI benefits. Both provisions are effective April 1, 1988.

EFFECTIVE DATE: These rules are effective on an interim basis on April 22, 1988. We will consider any comments we receive by June 21, 1988.

ADDRESSES: Comments should be submitted in writing to the Commissioner of Social Security, Department of Health and Human Services, P.O. Box 1585, Baltimore, MD. 21235, or delivered to the Office of Regulations, Social Security Administration, 3-B-4 Operations Building, 6401 Security Boulevard, Baltimore, MD. 21235, between 8:00 a.m. and 4:30 p.m. on regular business days. Comments received may be inspected during these same hours by making arrangements with the contact person shown below.

FOR FURTHER INFORMATION CONTACT: Henry D. Lerner, Legal Assistant, Office of Regulations, Social Security Administration, 6401 Security Boulevard, Baltimore, MD. 21235, telephone (301) 965-1756.

SUPPLEMENTARY INFORMATION: Under existing provisions of title XVI of the Social Security Act (the Act), the resources that an individual owns, with certain exceptions, are counted in determining an individual's eligibility for SSI. Sections 9103 and 9104 of the Omnibus Budget Reconciliation Act of 1987, Pub. L. 100-203, make certain changes to the statutory resource provisions.

Section 9103

Section 9103 amends section 1613(b) of the Act to add a new paragraph (2) which provides that notwithstanding the provisions of paragraph (1) (the conditional payment provisions of section 1613(b)) the sale of real property shall not be required for so long as the property cannot be sold because: (1) It is jointly owned and its sale would cause undue hardship due to loss of housing for the other owner(s); (2) its sale is barred by a legal impediment; or (3) as determined by regulations issued by the Secretary, the owner's reasonable efforts to sell it have been unsuccessful. These changes are effective April 1, 1988.

Loss of Housing for Joint Owner

Under existing regulations, if an individual has the legal right to sell property jointly owned with another, we will consider the property to be a countable resource to the individual. There is no provision in the regulations for waiving the requirement to dispose of excess resources in the form of real property on the basis of undue hardship to a co-owner. An individual who owns excess nonliquid resources (real or personal) cannot receive regular SSI benefits but can receive time-limited benefits conditioned on the agreement to dispose of the property; in return, we will not consider the excess property in determining the individual's eligibility for SSI benefits subject to repayment of the benefits received from the proceeds of the disposition.

Under these revised regulations, we will not count excess real property as a

resource for conditional benefits purposes for so long as:

- It is jointly owned; and
- Sale of the property would cause the other owner undue hardship due to loss of housing. We are defining undue hardship as occurring when the property serves as the principal place of residence for one (or more) of the other owners; sale of the property would result in loss of that residence; and no other housing would be readily available for the displaced other owner (e.g., the other owner does not own another house that is legally available for occupancy.)

However, if undue hardship ceases to exist, the value of the eligible individual's interest in the property will be included in his or her countable resources effective with the month following the month the hardship ceased.

Sale Barred by Legal Impediment

Although the Act does not define "resources" for SSI purposes, regulations at 20 CFR 416.1201 have contained the same basic definition since the beginning of the program. Under those regulations, resources are (in addition to cash and liquid assets) any real or personal property that an individual owns and could convert to cash to be used for his or her support and maintenance. If an individual has the right, authority or power to liquidate property, or his or her share of the property, it is considered a resource. Conversely, if an individual does not have the right, authority, or power to liquidate property (e.g., there is a legal impediment to its sale), the property is not considered a resource at all. Accordingly, since this statutory amendment which added section 1613(b)(2)(B) reflects current policy, no regulatory change is required to implement it.

Reasonable Efforts to Sell

Current regulations at 20 CFR 416.1240(c) provide that, if an individual fails to dispose of excess real property within 6 months (or 9 months if there is good cause for an extension), regardless of the efforts made to dispose of it, we will count the property for SSI purposes and the individual will be ineligible for benefits. In counting the resource, we use the original estimate of current market value (i.e., the estimate which resulted in the determination of excess resources and led to the individual's choice of conditional benefits) unless the individual submits evidence establishing a lower value. The value estimate applies retroactively to the beginning of the conditional benefits period. The resultant overpayment calculated under the original estimate of current market value, or the revised estimate if there is one, must be refunded.

We are amending the regulations so that we will not consider excess real property in an individual's countable resources for so long as the owner's reasonable efforts to sell it have been unsuccessful. The basis for our determining whether efforts to sell are reasonable, as well as unsuccessful, will be the conditional benefits period. The conditional benefits period for real property is being revised to 9 months which parallels the current 6-month basic disposal period plus the 3-month extension granted for good cause. We chose 9 months for the conditional payment period for real property since that was the maximum period previously allowed for disposing of real property. We believe it is reasonable to use this maximum disposition period to evaluate the reasonableness of the individual's efforts to sell. We believe this requirement of a conditional payment period is provided for under section 1613(b)(2)(C) of the Act, which authorizes the Secretary to determine by regulation whether the owner has been making reasonable efforts to sell which have been unsuccessful. We believe it is reasonable first to require an individual to enter into a conditional payment agreement and attempt to sell excess real property because section 9103 along with its legislative history (H.R. Rep. No. 495, 100th Cong., 1st Sess. 822–23 (1987)) does not suggest that conditional payments should not first be required in order for real property not to be included in countable resources. Rather, they merely provide that once reasonable efforts have been demonstrated (as defined by the Secretary in regulations), and such efforts have proven unsuccessful, the individual's eligibility for SSI benefits is no longer conditioned upon the disposal of the individual's property; instead, the property will not be counted as a resource and the individual will be eligible for SSI benefits for so long as he or she continues reasonable efforts to sell. Until such time as reasonable efforts to sell are determined to be unsuccessful, we will condition benefits on the disposition of the property pursuant to section 1613(b)(1). If we determine that reasonable efforts to sell have been unsuccessful, further SSI payments will not be subject to repayment if the property is ever sold; only the 9 months' conditional benefits will be subject to recovery.

Under the amended regulations, a conditional benefits period involving excess real property begins as described at 20 CFR 416.1242(a). The conditional benefits period ends at the earliest of the following:

- Sale of the property;
- Lack of continued reasonable efforts to sell;
- The individual's written request for cancellation of the agreement;
- Countable resources, even without the conditional exclusion, fall below the applicable limit (e.g., liquid resources have been depleted); or
- The 9 months of conditional benefits have been paid.

In addition, these regulations specify that reasonable efforts to sell property consist of taking all necessary steps to sell it in the geographic area covered by the media serving the area in which the property is located. (As under current policy, the asking price is to be no higher than the latest estimate of current market value.) More specifically, making a reasonable effort to sell would mean that:

- Except for gaps of no more than 1 week, an individual must attempt to sell the property by listing it with a real estate agent or by undertaking to sell it personally;
- Within 30 days of signing a conditional benefits agreement, and absent good cause for not doing so, the individual must have:

—Listed the property with an agent; or

—Begun to advertise it in at least one of the appropriate local media, placed a "For Sale" sign on the property (if permitted), begun to conduct "open houses" or otherwise show the property to interested parties on a continuous basis, and attempted any other appropriate methods of sale; and

- The individual does not decline any reasonable offer to buy and accepts the burden of demonstrating that when an offer is rejected it is because the offer was not reasonable. We are requiring the individual to submit additional evidence of why an offer of at least two-thirds of the latest current market value was not accepted in order to permit the rejection of frivolous offers and still account for changing market conditions.

We will contact the individual periodically to verify the existence of reasonable efforts to sell. For so long as the individual is making reasonable efforts to sell, the property in question is not counted as a resource. Should the individual cease his reasonable efforts to sell, the property is countable effective with the month following cessation of such efforts.

In addition to revising the conditional benefits period to 9 months for excess real property, we are adopting a definition of good cause to encompass situations where circumstances beyond an individual's control prevent taking the required action to accomplish "reasonable efforts to sell."

In applying this reasonable efforts to sell provision, an individual who has received 9 months of conditional benefits and whose benefits have been suspended as described at 20 CFR 416.1321 for reasons unrelated to the property not counted under the conditional benefits agreement, but whose eligibility has not been terminated as defined at 20 CFR 416.1331 through 416.1335, can continue to have the excess real property not included in countable resources upon reinstatement of SSI payments if reasonable efforts to sell the property resume within 1 week of reinstatement. Such an individual will not have to go through a subsequent conditional benefits period.

If a conditional benefits period is in effect when an individual's benefits are suspended for reasons unrelated to reasonable efforts to sell, the 9-month conditional benefits/evaluation period will not include any months for which benefits were suspended. When the suspension has ended, the remainder of the 9-month period will begin to run. However, an individual whose eligibility has been terminated as defined at 20 CFR 416.1331 through 416.1335 and who subsequently reapplies would be subject to a new conditional benefits period if he or she still owns excess real property. This requirement for a new conditional benefits period is based on the fact that in the termination situation the individual will be proceeding with a new application while in the suspension situation the original application is still in effect. This approach is consistent with the statutory distinction between suspension and termination (section 1631(e) of the Act) as well as with our long-standing administrative distinction between those situations.

Section 9104

Section 9104 of Pub. L. 100-203 amends section 1613(c) of the Act by adding a new paragraph (4). That paragraph requires that the Secretary, by regulation, provide for suspending the application of the transfer of assets provision of section 1613(c)(1) of the Act to the extent in any instance that the Secretary determines that such suspension is necessary to avoid undue hardship. These changes are effective April 1, 1988.

Section 1613(c) (1) through (3) of the Act requires counting as a resource the uncompensated value of an asset which an eligible individual (or eligible spouse) owned and has given away or sold for less than fair market value. If the individual can present convincing evidence that the transfer occurred exclusively for a reason other than establishing eligibility for SSI and/or Medicaid benefits, then the uncompensated value will not be counted. Otherwise, the uncompensated value will be counted as a resource for 24 months from the date of transfer, even if the transfer occurred prior to filing for benefits. Prior to the enactment of Pub. L. 100-203, there was no provision for waiver of the counting requirement in situations where application of the transfer of assets rule resulted in undue hardship.

Prior to these amended regulations, the regulations at 20 CFR 416.1246 closely followed the prior statutory provision. They also provide for situations where the "transferred" resource is returned to the individual and where the individual receives additional compensation for the transferred resource; and define "fair market value".

Under these amended regulations, we will:

- Suspend counting the uncompensated value of the transferred resource for any month in the statutory 24-month period where such counting would cause the individual undue hardship;
- Resume counting the uncompensated value for any month of the 24-month period remaining for which counting would not cause undue hardship; and
- Make no change in the way the 24-month period is determined when counting is suspended for 1 or more months.

In addition, undue hardship will be found to exist when: (1) An individual alleges that failure to receive SSI benefits would deprive him or her of food or shelter; and (2) the applicable Federal benefit rate (plus the federally-administered State supplementary payment level) exceeds the sum of: The individual's monthly countable and excludable income and monthly countable and excludable liquid resources.

Justification for Dispensing With Rulemaking Procedures

We are publishing these amendments to the regulations implementing sections 9103 and 9104 of Pub. L. 100-203 as interim final rules instead of proposed rules.

The Department, even when not required by statute, as a matter of policy, generally follows the Administrative Procedure Act (APA) notice of proposed rulemaking and public comment procedures specified in 5 U.S.C. 553 in the development of its regulations. The APA provides exceptions to its notice and comment procedures when an agency finds there is good cause for dispensing with such procedures. Section 553(b)(3)(B) of the APA exempts application of notice and comment rulemaking procedures "when the agency for good cause finds * * * that notice and public procedures thereon are impracticable, unnecessary, or contrary to the public interest." We are dispensing with notice and comment rulemaking in the case of these rules because such rulemaking is impracticable in view of the short statutory effective date. Public Law 100-203 was enacted on December 22, 1987, and these provisions are effective on April 1, 1988. Moreover, we believe it would be contrary to the public interest to delay publication of necessary regulations in this case. Both sections 9103 and 9104 generally advantage SSI claimants. We believe that the short effective date of these sections shows that Congress intended for claimants to benefit from them quickly. Congress also required us to implement these provisions by regulation. If the agency were required to undertake notice and comment procedures, final regulations implementing these provisions would not be published until sometime after April 1, 1988, thus thwarting congressional intent.

Regulatory Procedures

Executive Order 12291

The Secretary has determined that these are not major rules under Executive Order 12291 since the program and administrative costs of these interim regulations will be insignificant and the threshold criteria for a major rule are not otherwise met. Therefore, a regulatory impact analysis is not required.

Paperwork Reduction Act

These interim regulations impose no additional reporting and recordkeeping requirement requiring Office of Management and Budget clearance.

Regulatory Flexibility Act

We certify that these interim regulations will not have a significant economic impact on a substantial number of small entities because these rules affect only individuals and States. Therefore, a regulatory flexibility

analysis as provided in Pub. L. 96-354, the Regulatory Flexibility Act, is not required.

(Catalog of Federal Domestic Assistance Program No. 13.807, Supplementary Security Income Program).

List of Subjects in 20 CFR Part 416

Administrative practice and procedure, Aged, Blind, Disability benefits, Public assistance programs, Supplemental Security Income.

Dated: March 29, 1988.

Dorcas R. Hardy,

Commissioner of Social Security.

Approved: April 1, 1988.

Otis R. Bowen,

Secretary of Health and Human Services.

Subpart L of Part 416 of Chapter III of Title 20 of the Code of Federal Regulations is amended as follows:

PART 416—[AMENDED]

1. The authority citation for Subpart L of Part 416 continues to read as follows:

Authority: Secs. 1102, 1602, 1611, 1612, 1613, 1614(f), 1621 and 1631 of the Social Security Act; 42 U.S.C. 1302, 1381a, 1382, 1382a, 1382b, 1382c(f), 1382j and 1383; sec. 211 of Pub. L. 93-66, 87 Stat. 154.

2. Section 416.1242 is amended by revising paragraphs (a) and (b) to read as follows:

§ 416.1242 Time limits for disposing of resources.

(a) In order for payment conditioned on the disposition of nonliquid resources to be made, the individual must agree in writing to dispose of real property within 9 months and personal property within 3 months. The time period will begin on the date the written agreement to dispose of the resources is signed by the individual and submitted to us. However, in case of an individual who is disabled, the time period will begin with the date the individual is determined to be disabled.

(b) The 3-month time period for disposition of personal property will be extended an additional 3 months where it is found that the individual had "good cause" for failing to dispose of the resources within the original time period. The rules on the valuation of real property not disposed of within 9 months are described in § 416.1245(b).

* * * * *

3. Section 416.1245 is added to read as follows:

§ 416.1245 Exceptions to required disposition of real property.

(a) *Loss of housing for joint owner.* Excess real property which would be a resource under § 416 1201 is not a countable resource for conditional benefit purposes when:

(1) It is jointly owned; and

(2) sale of the property by an individual would cause the other owner undue hardship due to loss of housing. Undue hardship would result when the property serves as the principal place of residence for one of the other owners, sale of the property would result in loss of that residence, and no other housing would be readily available for the displaced other owner (e.g., the other owner does not own another house that is legally available for occupancy.) However, if undue hardship ceases to exist, its value will be included in countable resources as described in § 416.1207.

(b) *Reasonable efforts to sell.* (1) Excess real property is not included in countable resources for so long as the individual's reasonable efforts to sell it have been unsuccessful. The basis for determining whether efforts to sell are reasonable, as well as unsuccessful, will be a 9-month conditional benefits period described in § 416.1242. If it is determined that reasonable efforts to sell have been unsuccessful, further SSI payments will not be conditioned on the disposition of the property and only the 9 months of conditional benefits will be subject to recovery. In order to be eligible for payments after the conditional benefits period, the individual must continue to make reasonable efforts to sell.

(2) A conditional benefits period involving excess real property begins as described at § 416.1242(a). The conditional benefits period ends at the earliest of the following times:

(i) Sale of the property;

(ii) Lack of continued reasonable efforts to sell;

(iii) The individual's written request for cancellation of the agreement;

(iv) Countable resources, even without the conditional exclusion, fall below the applicable limit (e.g., liquid resources have been depleted); or

(v) The 9 months of conditional benefits have been paid.

(3) Reasonable efforts to sell property consist of taking all necessary steps to sell it in the geographic area covered by the media serving the area in which the property is located, unless the individual has good cause for not taking these steps. More specifically, making a reasonable effort to sell means that:

(i) Except for gaps of no more than 1 week, an individual must attempt to sell the property by listing it with a real estate agent or by undertaking to sell it himself;

(ii) Within 30 days of signing a conditional benefits agreement, and absent good cause for not doing so, the individual must:

(A) List the property with an agent; or

(B) Begin to advertise it in at least one of the appropriate local media, place a "For Sale" sign on the property (if permitted), begin to conduct "open houses" or otherwise show the property to interested parties on a continuous basis, and attempt any other appropriate methods of sale; and

(iii) The individual accepts any reasonable offer to buy and has the burden of demonstrating that an offer was rejected because it was not reasonable. If the individual receives an offer that is at least two-thirds of the latest estimate of current market value, the individual must present evidence to establish that the offer was unreasonable and was rejected.

(4) An individual will be found to have "good cause" for failing to make reasonable efforts to sell under paragraph (b)(3) of this section if he or she was prevented by circumstances beyond his or her control from taking the steps specified in paragraphs (b)(3)(i) through (ii) of this section.

(5) An individual who has received 9 months of conditional benefits and whose benefits have been suspended as described at § 416.1321 for reasons unrelated to the property excluded under the conditional benefits agreement, but whose eligibility has not been terminated as defined at §§ 416.1331 through 416.1335, can continue to have the excess real property not included in countable resources upon reinstatement of SSI payments if reasonable efforts to sell the property resume within 1 week of reinstatement. Such an individual will not have to go through a subsequent conditional benefits period. However, the individual whose eligibility has been terminated as defined at §§ 416.1331 through 416.1335 and who subsequently reapplies would be subject to a new conditional benefits period if there is still excess real property.

4. Section 416.1246 is amended by revising paragraphs (d) and (f) to read as follows:

§ 416.1246 Disposal of resources at less than fair market value.

* * * * *

(d)(1) *Uncompensated value—General.* The uncompensated value is the fair market value of a resource at the time of transfer minus the amount of compensation received by the individual (or eligible spouse) in exchange for the resource. However, if the transferred resource was partially excluded, we will not count uncompensated value in an

amount greater than the countable value of the resource at the time of transfer.

(2) *Suspension of counting as a resource the uncompensated value where necessary to avoid undue hardship.* We will suspend counting as a resource the uncompensated value of the transferred asset for any month in the 24-month period if such counting will result in undue hardship. We will resume counting the uncompensated value as a resource for any month of the 24-month period in which counting will not result in undue hardship. We will treat as part of the 24-month period any months during which we suspend the counting of uncompensated value.

(3) *When undue hardship exists.* Undue hardship exists when: (i) An individual alleges that failure to receive SSI benefits would deprive the individual of food or shelter; and (ii) the applicable Federal benefit rate (plus the federally-administered State supplementary payment level) exceeds the sum of: The individual's monthly countable and excludable income and monthly countable and excludable liquid resources.

* * * * *

(f) *Applicability.* These rules apply to all individuals who filed for SSI benefits on March 1, 1981, or later and to all redeterminations of claims which were filed on March 1, 1981, or later.

Exception: The rules regarding the suspension of the uncompensated value penalty for undue hardship described in paragraphs (d)(2) and (d)(3) of this section are effective April 22, 1988.

[FR Doc. 88-8850 Filed 4-21-88; 8:45 am]

BILLING CODE 4190-11-M

DEPARTMENT OF DEFENSE

Office of the Secretary

32 CFR Part 199

[DoD 6010.8-R; Amdt. 9]

Civilian Health and Medical Program of the Uniformed Services (CHAMPUS); Birthing Centers

AGENCY: Office of the Secretary, DoD.

ACTION: Final rule.

SUMMARY: This final rule defines and establishes birthing centers as a category of institutional health care provider, prescribes the criteria for assessing a birthing center application for authorized status and the birthing center reimbursement method.

EFFECTIVE DATE: May 23, 1988.

ADDRESS: Office of the Civilian Health and Medical Program of the Uniformed Services (OCHAMPUS), Office of Program Development, Aurora, CO 80045-6900.

FOR FURTHER INFORMATION CONTACT: Joseph W. Baker, Office of Program Development, OCHAMPUS, telephone (303) 361-4019.

SUPPLEMENTARY INFORMATION: In FR Doc. 77-7834, appearing in the **Federal Register** on April 4, 1977 (42 FR 17972), the Office of the Secretary of Defense published its regulation, DoD 6010.8-R, "Implementation of the Civilian Health and Medical Program of the Uniformed Services (CHAMPUS)," as Part 199 of this title. DoD Regulation 6010.8-R was reissued in the **Federal Register** on July 1, 1986 (51 FR 24008).

I. Background

On February 20, 1987, a proposed rule was published in the **Federal Register** (52 FR 5313) which offered the opportunity for public comment on the CHAMPUS proposal to establish birthing centers as a category of institutional health care provider.

II. Discussion of Comments

We received 48 items of correspondence in response to the proposed rule. Of these, 19 were from private citizens, 10 were from DoD components and other Federal agencies, 10 were from birthing centers, 6 were from individual health care providers, 2 were from professional associations, and 1 was from a regional perinatal planning program. All but two of the commenters expressed general support for the proposal. The essence of the comments and questions, and our responses to them, follow.

Comment: Two commenters were opposed to the authorization of birthing centers as CHAMPUS providers based upon the commenters' opinion that only hospitals, or birthing centers within hospitals, can provide the full measure of safety required for childbirth.

Response: While it is true that freestanding birthing centers do not have the capacity to respond to unanticipated emergencies in the same way as hospitals, it is equally true that the clientele of freestanding birthing centers are not ill and do not manifest any symptoms or history that current medical practice recognizes as a threat or risk to the course of maternity care and childbirth. To limit all childbirth to the hospital setting presumes that every pregnancy is, to some degree, characterized by pathology and ignores the magnitude of the population of women with normal pregnancies who subsequently experience a normal childbirth. We are confident that the requirements of this rule (which includes risk evaluation and emergency management procedures approved by a board certified or board eligible obstetrician-gynecologist and pediatrician, as appropriate) minimize risk through various levels of oversight, by limiting the clientele to lowest-risk women, and by allowing the individual woman, in consultation with the provider of her maternity care, to make an informed choice.

Comment: Several commenters recommended that the licensure requirement conform to whatever local license, if any, is required. Others felt that the licensure requirement should be limited to birthing center specific license.

Response: We conclude that licensure of a particular type is essential to establish local oversight. We have clarified that the birthing center must be licensed as a birthing center where such license is available and otherwise specifically licensed as an ambulatory health care facility.

Comment: One commenter suggested that if the acute care hospital is not designated as a perinatal receiving center for infants, it have a link for consultation and transfer to a hospital which has such a designation.

Response: We feel that the required pediatrician oversight is sufficient to assure that the appropriate emergency care resources are used.

Comment: Several commenters felt that the requirement for a memorandum of understanding (MOU) with a backup hospital was only appropriate when hospital house staff were to follow a woman in the event of a transfer.

Response: We have modified this standard to include either a MOU with a hospital or a MOU with a physician with admitting privileges at a qualified backup hospital.

Comment: One commenter suggested that the physician oversight memorandum of understanding (MOU) be with a board certified family practitioner who, in turn, has a formal consultative-referral arrangement with an obstetrician-gynecologist and a pediatrician.

Response: We conclude that the oversight function which this MOU establishes is best accomplished when the birthing center has a direct relationship with a qualified obstetrician-gynecologist and pediatrician.

Comment: One birthing center felt that laboratory work should be taken out of the all-inclusive rate as the scope of laboratory work, in their experience, varies with each woman.

Response: The all-inclusive rate includes the laboratory services usually associated with a pregnant woman's comprehensive physical and routine prenatal care. These tests reflect generally accepted national practice and will be specified in administrative instructions. Other medically necessary laboratory services will be covered separately.

Comment: Two commenters felt that a Nonavailability Statement (NAS) should not be required.

Response: Under current DoD policy, a NAS is only required for inpatient care; therefore, a NAS is not currently required for birthing center services.

Comment: Several commenters felt that specific accreditation organizations should be identified in the Rule.

Response: Because the CHAMPUS has no control over the standards or accreditation process of any private sector organization, we conclude that it is more appropriate to establish CHAMPUS standards and designate in administrative instructions those accreditation groups which have compatible standards.

Comment: One commenter felt that it was unacceptable to permit the practice of maternity care by non-physicians without also requiring physician direction and responsibility for that practice.

Response: The CHAMPUS recognition of both physicians and certified nurse-midwives as individual professional providers of health care for CHAMPUS beneficiaries is required by the law which governs the Program.

Comment: One commenter recommended that augmentation of labor be allowed when under the direction of an obstetrician and a fetal monitor is used.

Response: We feel that the prohibition of labor augmentation reinforces the requirement that birthing center clientele be limited to those with a clearly low-risk pregnancy.

Comment: One commenter pointed out that the standards fail to make provision for informed consent.

Response: We have incorporated a requirement that the woman admitted be informed in writing of the nature and scope of the center's program and of the limitations and possible risks associated with maternity care and childbirth in the center.

Comment: One commenter noted that the CHAMPUS birthing center standards include recommendations and guidelines for ambulatory care obstetrics published by the American College of Obstetricians and Gynecologist (ACOG), but that the ACOG standards do not speak to birth services in an ambulatory setting.

Response: The CHAMPUS standard for policy and procedures has been revised to eliminate references to the publications of specific professional organizations.

Comment: One commenter felt that a birthing center should be required to meet either CHAMPUS standards or have national accreditation, but not both.

Response: Accreditation by a national organization with standards accepted by the Director, OCHAMPUS, acts to verify and reinforce the CHAMPUS standards. Relying solely upon the standards of a national body would effectively eliminate CHAMPUS control over the standards established for CHAMPUS-authorized institutional providers.

Comment: One commenter held the view that the requirement to report an emergency transfer to a hospital was not necessary as the fact could be determined by the bills submitted by the facilities involved.

Response: This requirement is retained as it provides the most timely notice to the CHAMPUS for quality assurance oversight.

Comment: CHAMPUS should actively educate users of the benefits of birthing centers and CHAMPUS should compile the data to which it has access from birthing centers to establish a statistical basis for the safe use of birthing centers.

Response: The CHAMPUS routinely disseminates benefit information through news releases, communications with Health Benefit Advisors associated with Uniformed Services Medical Treatment Facilities, and through publication of informational materials. The gathering and analysis of the type of information required to complete evaluative research of acceptable quality is beyond the scope of the CHAMPUS.

III. Summary of Changes

In addition to editorial changes for clarity throughout the Rule, the following substantial changes have been made:

At § 199.2(b), definitions not in the proposed rule have been added for "institutional provider" and "backup hospital."

A technical revision, not a part of the proposed rule, is made to § 199.4(a)(9)(i) to incorporate changes in 10 U.S.C. 1079 previously contained in a "Note" at this location.

Section 199.4(a)(9)(v) now incorporates the Nonavailability Statement information located at § 199.4(e)(16)(iii) in the proposed rule.

Section 199.4(e)(16)(ii) now specifies the cost-share formula to be applied in various situations and incorporate (16)(iv) in the proposed rule. This change is expected to improve beneficiary service by reducing the steps routinely required for claim adjudication.

Section 199.6(a)(9), a new paragraph, is added to describe the general scope of authorized institutional provider status.

Section 199.6(b)(1)(ii) adds a requirement that, except for Residential Treatment Centers, institutional claims subject to a CHAMPUS-determined all-inclusive rate reimbursement method may be submitted only after the beneficiary has been discharged or transferred from the institutional provider's facility or program.

At § 199.6(b)(4)(xi)(A)(*2*), we have clarified that birthing center specific license is required where available and license as a type of ambulatory health care facility is required where birthing center specific license is not available.

At § 199.6(b)(4)(xi)(A)(*5*)(*i*) we have added a requirement that the birthing center participate in CHAMPUS.

Section 199.6(b)(4)(xi)(A)(*5*)(*ii*) has been rewritten to clarify the intent.

Section 199.6(b)(4)(xi)(A)(*5*)(*iii*) has been deleted and the remaining paragraphs renumbered.

At § 199.6(b)(4)(xi)(B)(*2*), we have replaced the references to the American College of Obstetricians and Gynecologists (ACOG) and the American College of Nurse-Midwives (ACNM) publications with categories of required written policy and procedures.

At § 199.6(b)(4)(xi)(B)(*3*), a requirement for informed consent has been added.

At § 199.6(b)(4)(xi)(B)(*7*), the requirement for a memorandum of understanding (MOU) with a backup hospital has been changed to allow, as an alternative, a MOU with a physician with admitting privileges at a qualified backup hospital.

References in the proposed rule to § 199.6(e) are now incorporated in § 199.14(e) as § 199.6(e) material was moved to § 199.14 by a previous amendment.

Section 199.14(f)(4)(iv) has been rewritten to clarify the intent.

Section 199.14(f)(4)(vi) has been added to emphasize that the beneficiary's share of the total reimbursement to a birthing center is limited to the cost-share amount plus the amount billed for noncovered services and supplies.

IV. Regulatory Impacts

The Office of CHAMPUS has determined that this regulation is not a major rule under Executive Order 12291

because it neither increases nor decreases the scope of the Program's existing maternity benefit but only provides the administrative framework to allow Program beneficiaries another source of maternity care services currently covered under the Program. Consequently, the addition of birthing centers as a source of maternity care will (1) allow the Program to avoid an estimated $1 million of annual benefit cost compared to normal maternity care provided by other authorized Program sources, an amount far below the executive order threshold of an annual effect on the economy of $100 million or more; (2) will not change the consumer's share of the cost for normal maternity care for most beneficiaries and is expected to reduce cost for some beneficiaries as the total cost of birthing center care is estimated to be an average 25 percent less than normal maternity care ending in an inpatient delivery; (3) has no general affect upon the health care industry as it concerns only the maternity care segment of that industry; (4) will not cause increased cost to the maternity care segment as it is applicable only to those birthing centers who voluntarily request CHAMPUS-approved status and the requirements for such status established by this rule are not unique or unusual within the health care industry; (5) places no regulatory burden upon Federal, State, or local government agencies, or geographic regions; and (6) does not have any direct or indirect adverse effect on competition, employment, investment, productivity, innovation, or on the ability of the United States-based enterprises to compete with foreign-based enterprises in domestic or export markets as it does not concern these aspects of the market place directly and will, at the extreme, involve less than five percent of the CHAMPUS users of normal maternity care within the United States.

Further, we certify that this final rule will not have a significant economic impact on a substantial number of small entities under the criteria of the Regulatory Flexibility Act because (1) this rule only provides the administrative framework to allow Program beneficiaries to avail themselves of maternity care services currently covered under the Program; (2) no birthing center is required by this Rule to become an authorized provider to CHAMPUS beneficiaries; (3) any entity which applies for CHAMPUS-approved status as a birthing center does so voluntarily; (4) this Rule does not guarantee payment or patronage; (5) hospital provider status is not affected by this rule; (6) hospitals are not affected economically by this rule as the portion of hospital normal delivery business which might shift to a birthing center is not expected to annually exceed one half of one percent of annual hospital charges by all payers for normal delivery; and (7) birthing centers cannot be termed a substantial population of small entities impacted by this rule as they constitute less than five percent of the institutional childbirth providers in the United States.

List of Subjects in 32 CFR Part 199

Claims, Handicapped, Health insurance, and Military Personnel.

PART 199—[AMENDED]

Accordingly, 32 CFR Part 199 is amended as follows:

1. The authority citation for Part 199 continues to read as follows:

Authority: 10 U.S.C 1079, 1086, 5 U.S.C. 301.

2. Section 199.2 is amended by revising the definitions of "admission" and "certified nurse-midwife" and by adding definitions for "backup hospital," "birthing center," "birthing room," "freestanding," "high-risk pregnancy," "institution-affiliated," "institution-based," "institutional provider," "low-risk pregnancy," "most-favored rate," and "natural childbirth" in alphabetical order to read as follows:

§ 199.2 Definitions.

* * * * *

(b) Specific definitions. * * *

Admission. The formal acceptance by a CHAMPUS authorized institutional provider of a CHAMPUS beneficiary for the purpose of diagnosis and treatment of illness, injury, pregnancy, or mental disorder.

* * * * *

Backup hospital. A hospital which is otherwise eligible as a CHAMPUS institutional provider and which is fully capable of providing emergency care to a patient who develops complications beyond the scope of services of a given category of CHAMPUS-authorized freestanding institutional provider and which is accessible from the site of the CHAMPUS-authorized freestanding institutional provider within an average transport time acceptable for the types of medical emergencies usually associated with the type of care provided by the freestanding facility.

* * * * *

Birthing center. A health care provider which meets the applicable requirements established by § 199.6(b) of this Part.

Birthing room. A room and environment designed and equipped to provide care, to accommodate support persons, and within which a woman with a low-risk, normal, full-term pregnancy can labor, deliver and recover with her infant.

* * * * *

Certified nurse-midwife. An individual who meets the applicable requirements established by § 199.6(c) of this Part.

* * * * *

Freestanding. Not "institution-affiliated" or "institution-based."

* * * * *

High-risk pregnancy. A pregnancy is high-risk when the presence of a currently active or previously treated medical, anatomical, physiological illness or condition may create or increase the likelihood of a detrimental effect on the mother, fetus, or newborn and presents a reasonable possibility of the development of complications during labor or delivery.

* * * * *

Institution-affiliated. Related to a CHAMPUS-authorized institutional provider through a shared governing body but operating under a separate and distinct license or accreditation.

Institution-based. Related to a CHAMPUS-authorized institutional provider through a shared governing body and operating under a common license and shared accreditation.

Institutional provider. A health care provider which meets the applicable requirements established by § 199.6(b) of this Part.

* * * * *

Low-risk pregnancy. A pregnancy is low-risk when the basis for the ongoing clinical expectation of a normal uncomplicated birth, as defined by reasonable and generally accepted criteria of maternal and fetal health, is documented throughout a generally accepted course of prenatal care.

* * * * *

Most-favored rate. The lowest usual charge to any individual or third-party payer in effect on the date of the admission of a CHAMPUS beneficiary.

* * * * *

Natural childbirth. Childbirth without the use of chemical induction or augmentation of labor or surgical procedures other than episiotomy or perineal repair.

* * * * *

3. Section 199.4 is amended by revising paragaphs (a)(9)(i), (a)(9)(v) and (b)(1), removing paragraphs (c)(3)(xi) and (c)(3)(xii), redesignating paragraphs

(c)(3)(xiii) and (c)(3)(xiv) as (c)(3)(xi) and (c)(3) (xii) and adding paragraph (e)(16) to read as follows:

§ 199.4 Basic program benefits.

* * * * *

(a) * * *

(9) * * *

(i) *Rules applicable to issuance of Nonavailability Statement (NAS) (DD Form 1251).*

(A) The ASD(HA) is responsible for issuing rules and regulations regarding Nonavailability Statements.

(B) A NAS is required for services in connection with nonemergency inpatient hospital care if such services are available at a facility of the Uniformed Services located within a 40-mile radius of the residence of the beneficiary, except that a NAS is not required for services otherwise available at a facility of the Uniformed Services located within a 40-mile radius of the beneficiary's residence when another insurance plan or program provides the beneficiary primary coverage for the services.

* * * * *

(v) *Nonavailability Statement (NAS) and Claims Adjudication.* (A) A NAS is valid for the adjudication of CHAMPUS claims for all related care otherwise authorized by this Part which is received from a civilian source while the beneficiary resided within the Uniformed Service facility catchment area which issued the NAS.

(B) A requirement for a NAS for inpatient hospital maternity care must be met for CHAMPUS cost-share of any related outpatient maternity care.

* * * * *

(b) *Institutional benefits*—(1) *General.* Services and supplies provided by an institutional provider authorized as set forth in § 199.6 of this Part may be cost-shared only when such services or supplies (i) are otherwise authorized by this Part; (ii) are medically necessary; (iii) are ordered, directed, prescribed, or delivered by an OCHAMPUS-authorized individual professional provider as set forth in § 199.6 of this Part or by an employee of the authorized institutional provider who is otherwise eligible to be a CHAMPUS authorized individual professional provider; (iv) are delivered in accordance with generally accepted norms for clinical practice in the United States; (v) meet established quality standards; and (vi) comply with applicable definitions, conditions, limitations, exceptions, or exclusions as otherwise set forth in this Part.

* * * * *

(c) * * *

(3) * * *

(xi) *Well-baby care.* * * *

(xii) *Private duty (special) nursing*

* * *

(e) * * *

(16) *Maternity care.* (i) *Benefit.* The CHAMPUS Basic Program may share the cost of medically necessary services and supplies associated with maternity care which are not otherwise excluded by this Part. However, failure by a beneficiary to secure a required Nonavailability Statement (NAS) (DD Form 1251) as set forth in paragraph (a)(9) of this section will waive that beneficiary's right to CHAMPUS cost-share of certain maternity care services and supplies.

(ii) *Cost-share.* Subject to applicable Nonavailability Statement (NAS) requirements, maternity care cost-share shall be determined as follows:

(A) Inpatient cost-share formula applies to maternity care ending in childbirth in, or on the way to, a hospital inpatient childbirth unit, and for maternity care ending in a non-birth outcome not otherwise excluded by this Part.

(B) Ambulatory surgery cost-share formula applies to maternity care ending in childbirth in, or on the way to, a birthing center to which the beneficiary is admitted and from which the beneficiary has received prenatal care, or a hospital-based outpatient birthing room.

(C) Outpatient cost-share formula applies to maternity care which terminates in a planned childbirth at home.

(D) Otherwise covered medical services and supplies directly related to "Complications of pregnancy," as defined in § 199.2 of this Part, will be cost-shared on the same basis as the related maternity care for a period not to exceed 42 days following termination of the pregnancy and thereafter cost-shared on the basis of the inpatient or outpatient status of the beneficiary when medically necessary services and supplies are received.

* * * * *

4. Section 199.6 is amended by adding new paragraphs (a)(9) and (b)(4)(xi) and by revising paragraph (b)(1)(ii), to read as follows:

§ 199.6 Authorized providers.

(a) * * *

(9) *Limitation to authorized institutional provider designation.* Authorized institutional provider status granted to a specific institutional provider applicant does not extend to any institution-affiliated provider, as defined in § 199.2, of that specific applicant.

(b) *Institutional providers.* (1) * * *

(ii) Billing practices.

(A) Each institutional billing, including those institutions subject to the CHAMPUS DRG-based reimbursement method or a CHAMPUS-determined all-inclusive rate reimbursement method, must be itemized fully and sufficiently descriptive for the CHAMPUS to make a determination of benefits.

(B) Institutional claims subject to the CHAMPUS DRG-based reimbursement method or a CHAMPUS-determined all-inclusive rate reimbursement method, may be submitted only after the beneficiary has been discharged or transferred from the institutional provider's facility or program.

(C) Institutional claims for Residential Treatment Centers and all other institutional providers, except those listed in (B) above, should be submitted to the appropriate CHAMPUS fiscal intermediary at least every 30 days.

* * * * *

(4) * * *

(xi) *Birthing centers.* A birthing center is a freestanding or institution-affiliated outpatient maternity care program which principally provides a planned course of outpatient prenatal care and outpatient childbirth service limited to low-risk pregnancies; excludes care for high-risk pregnancies; limits childbirth to the use of natural childbirth procedures; and provides immediate newborn care.

(A) *Certification requirements.* A birthing center which meets the following criteria may be designated as an authorized CHAMPUS institutional provider:

(*1*) The predominant type of service and level of care rendered by the center is otherwise authorized by this Part.

(*2*) The center is licensed to operate as a birthing center where such license is available, or is specifically licensed as a type of ambulatory health care facility where birthing center specific license is not available, and meets all applicable licensing or certification requirements that are extant in the state, county, municipality, or other political jurisdiction in which the center is located.

(*3*) The center is accredited by a nationally recognized accreditation organization whose standards and procedures have been determined to be acceptable by the Director, OCHAMPUS, or a designee.

(*4*) The center complies with the CHAMPUS birthing center standards set forth in this Part.

(*5*) The center has entered into a participation agreement with

OCHAMPUS in which the center agrees, in part, to:

(*i*) Participate in CHAMPUS and accept payment for maternity services based upon the reimbursement methodology for birthing centers;

(*ii*) Collect from the CHAMPUS beneficiary only those amounts that represent the beneficiary's liability under the participation agreement and the reimbursement methodology for birthing centers, and the amounts for services and supplies that are not a benefit of the CHAMPUS;

(*iii*) Permit access by the Director, OCHAMPUS, or a designee, to the clinical record of any CHAMPUS beneficiary, to the financial and organizational records of the center, and to reports of evaluations and inspections conducted by state or private agencies or organizations;

(*iv*) Submit claims first to all health benefit and insurance plans primary to the CHAMPUS to which the beneficiary is entitled and to comply with the double coverage provisions of this Part;

(*v*) Notify CHAMPUS in writing within 7 days of the emergency transport of any CHAMPUS beneficiary from the center to an acute care hospital or of the death of any CHAMPUS beneficiary in the center.

(*6*) A birthing center shall not be a CHAMPUS-authorized institutional provider and CHAMPUS benefits shall not be paid for any service provided by a birthing center before the date the participation agreement is signed by the Director, OCHAMPUS, or a designee.

(B) *CHAMPUS birthing center standards.*—(*1*) *Environment:* The center has a safe and sanitary environment, properly constructed, equipped, and maintained to protect health and safety and meets the applicable provisions of the "Life Safety Code" of the National Fire Protection Association.

(*2*) *Policies and procedures:* The center has written administrative, fiscal, personnel and clinical policies and procedures which collectively promote the provision of high-quality maternity care and childbirth services in an orderly, effective, and safe physical and organizational environment.

(*3*) *Informed consent:* Each CHAMPUS beneficiary admitted to the center will be informed in writing at the time of admission of the nature and scope of the center's program and of the possible risks associated with maternity care and childbirth in the center.

(*4*) *Beneficiary care:* Each woman admitted will be cared for by or under the direct supervision of a specific physician or a specific certified nurse-midwife who is otherwise eligible as a CHAMPUS individual professional provider.

(*5*) *Medical direction:* The center has written memoranda of understanding (MOU) for routine consultation and emergency care with an obstetrician-gynecologist who is certified or is eligible for certification by the American Board of Obstetrics and Gynecology or the American Osteopathic Board of Obstetrics and Gynecology and with a pediatrician who is certified or eligible for certification by the American Board of Pediatrics or by the American Osteopathic Board of Pediatrics, each of whom have admitting privileges to at least one backup hospital. In lieu of a required MOU, the center may employ a physician with the required qualifications. Each MOU must be renewed annually.

(*6*) *Admission and emergency care criteria and procedures.* The center has written clinical criteria and administrative procedures, which are reviewed and approved annually by a physician related to the center as required by paragraph (b)(4)(xi)(B)(*5*) above, for the exclusion of a woman with a high-risk pregnancy from center care and for management of maternal and neonatal emergencies.

(*7*) *Emergency treatment.* The center has a written memorandum of understanding (MOU) with at least one backup hospital which documents that the hospital will accept and treat any woman or newborn transferred from the center who is in need of emergency obstetrical or neonatal medical care. In lieu of this MOU with a hospital, a birthing center may have an MOU with a physician, who otherwise meets the requirements as a CHAMPUS individual professional provider, and who has admitting privileges to a backup hospital capable of providing care for critical maternal and neonatal patients as demonstrated by a letter from that hospital certifying the scope and expected duration of the admitting privileges granted by the hospital to the physician. The MOU must be reviewed annually.

(*8*) *Emergency medical transportation.* The center has a written memorandum of understanding (MOU) with at least one ambulance service which documents that the ambulance service is routinely staffed by qualified personnel who are capable of the management of critical maternal and neonatal patients during transport and which specifies the estimated transport time to each backup hospital with which the center has arranged for emergency treatment as required in paragraph (b)(4)(xi)(B)(*7*) above. Each MOU must be renewed annually.

(*9*) *Professional staff.* The center's professional staff is legally and professionally qualified for the performance of their professional responsibilities.

(*10*) *Medical records.* The center maintains full and complete written documentation of the services rendered to each woman admitted and each newborn delivered. A copy of the informed consent document required by paragraph (b)(4)(xi)(B)(*3*), above, which contains the original signature of the CHAMPUS beneficiary, signed and dated at the time of admission, must be maintained in the medical record of each CHAMPUS beneficiary admitted.

(*11*) *Quality assurance.* The center has an organized program for quality assurance which includes, but is not limited to, written procedures for regularly scheduled evaluation of each type of service provided, of each mother or newborn transferred to a hospital, and of each death within the facility.

(*12*) *Governance and administration.* The center has a govening body legally responsible for overall operation and maintenance of the center and a full-time employee who has authority and responsibility for the day-to-day operation of the center.

* * * * *

5. Section 199.14 is amended by adding a new paragraph (e) and redesignating the existing paragraphs (e) through (g) as (f) through (h).

§ 199.14 Provider reimbursement methods.

* * * * *

(e) *Reimbursement of birthing centers.* (1) Reimbursement for maternity care and childbirth services furnished by an authorized birthing center shall be limited to the lower of the CHAMPUS established all-inclusive rate or the center's most-favored all-inclusive rate.

(2) The all-inclusive rate shall include the following to the extent that they are usually associated with a normal pregnancy and childbirth: laboratory studies, prenatal management, labor management, delivery, post-partum management, newborn care, birth assistant, certified, nurse-midwife professional services, physician professional services, and the use of the facility.

(3) The CHAMPUS established all-inclusive rate is equal to the sum of the CHAMPUS area prevailing professional charge for total obstetrical care for a normal pregnancy and delivery and the sum of the average CHAMPUS allowable institutional charges for supplies, laboratory, and delivery room for a hospital inpatient normal delivery.

The CHAMPUS established all-inclusive rate areas will coincide with those established for prevailing professional charges and will be updated concurrently with the CHAMPUS area prevailing professional charge database.

(4) Extraordinary maternity care services, when otherwise authorized, may be reimbursed at the lesser of the billed charge or the CHAMPUS allowable charge.

(5) Reimbursement for an incomplete course of care will be limited to claims for professional services and tests where the beneficiary has been screened but rejected for admission into the birthing center program, or where the woman has been admitted but is discharged from the birthing center program prior to delivery, adjudicated as individual professional services and items.

(6) The beneficiary's share of the total reimbursement to a birthing center is limited to the cost-share amount plus the amount billed for noncovered services and supplies.

(f) *Reimbursement of individual health-care professionals and other noninstitutional health-care providers.* * * *

(g) *Outside the United States.* * * *

(h) *Implementing instructions.* * * *

L.M. Bynum,

Alternate OSD Federal Register Liaison Officer, Department of Defense.

April 15, 1988.

[FR Doc. 88-8672 Filed 4-21-88; 8:45 am]

BILLING CODE 3810-01-M

DEPARTMENT OF AGRICULTURE

Forest Service

36 CFR Part 211

Appeal of Decisions Concerning the National Forest System

AGENCY: Forest Service, USDA.

ACTION: Final rule.

SUMMARY: This final rule revises Forest Service procedures governing appeals of returned or defaulted timber sales on National Forests. The final rule is essentially the same as the interim rule published January 28, 1988 (53 FR 2490), except that the eligibility requirements have been changed to accept all appeals filed between January 28–February 29, 1988, without regard to whether they meet the criteria of the interim rule. In addition, the final rule will allow anyone else to appeal a decision to reoffer a sale of returned or defaulted timber made prior to January 28, 1988, will allow interested persons to submit comments on any appeal filed, and clarify the filing period for appeals for those persons who receive written notice of a decision. This rule will end the present uncertainties as to whom may appeal decisions to reoffer returned or defaulted timber sales and provide for the orderly processing of those appeals in an expeditious manner.

EFFECTIVE DATE: This rule is effective April 22, 1988.

FOR FURTHER INFORMATION CONTACT: Larry Hill, Staff Assistant for Operations, National Forest System, Forest Service, USDA, P.O. Box 96090, Washington, DC 20090-6090, (202) 382-9349.

SUPPLEMENTARY INFORMATION:

Background

The Federal Timber Contract Payment Modification Act of 1984 (FTCPMA) (16 U.S.C. 618; Pub. L. 98-478) allowed purchasers of timber sale contracts on National Forests the opportunity to buy out of a certain volume of timber under qualifying timber sale contracts, and directed that timber from returned or defaulted timber sales be given preference for resale in the Forest Service timber sale program.

In processing the resale of the returned or defaulted sales, the Forest Service took the position that a decision to reoffer timber from returned or defaulted timber sales was a reaffirmation of the original decision to offer the timber for sale, and, therefore, the review and subsequent reoffering would not constitute an appealable decision under the Agency's administrative appeal regulations at 36 CFR 211.18.

In October 1986, Congress provided specific direction in section 320 of the Appropriations Act for Fiscal Year 1987 (Pub. L. 99-951) that the reoffered sales would be subject to only one level of administrative appeal and that any such appeal must be resolved within 90 days of receipt.

Following the dismissal of an appeal on the North Roaring Devil reoffer sale of December 5, 1985, Oregon Natural Resources Council and the Breitenbush Community filed suit in the U.S. District Court for the District of Oregon alleging that the dismissal of the appeal was improper and subsequently appealed the lower court's decision to the Ninth Circuit Court of Appeals. On December 21, 1987, the Ninth Circuit ruled that a reoffer by the Forest Service is a decision within the meaning of the Agency's administrative appeal regulations at 36 CFR 211.18, and that section 320 of the Appropriations Act could not apply retroactively to appeals of sales reoffered prior to the passage of the appropriations language.

On January 28, 1988 (53 FR 2490), the Forest Service published an interim rule providing procedures by which individuals or groups could appeal Forest Service decisions to reoffer returned or defaulted timber sales on National Forests. The new rule was promulgated at 36 CFR 211.17, and was effective upon publication. The principal procedures contained in the interim rule are as follows:

1. Decisions to reoffer returned or defaulted timber sales made prior to October 30, 1986, are entitled to a 2-level appeal process, and similar decisions made after October 30, 1986, are entitled to a 1-level appeal process, both to be completed within 90 days.

2. Only persons or organizations who previously submitted a timely Notice of Appeal, pursuant to 36 CFR 211.18, on a decision to reoffer a sale of returned or defaulted timber and whose appeal was subsequently dismissed as untimely because the Forest Service did not consider reoffer of the sale an appealable decision, would have an opportunity to resubmit their appeal. These parties had 30 days from publication of the interim rule to submit their notice of appeal.

3. Notice of decisions to reoffer timber sales appealable under this section made after January 28, 1988 are to be published in a local newspaper of general circulation. Any individual or organization, except the defaulting purchaser of a reoffered timber sale, has 30 days from publication of the notice of decision to reoffer a timber sale to file a notice of appeal.

4. Intervention is not allowed nor are procedural appeals, such as appealing decisions to deny a stay.

5. A responsive statement from the initial Forest Officer who made the decision to reoffer the sale is not required.

6. No extensions of time would be allowed for appellants or the Forest Service.

Although these provisions in the interim rule were made effective immediately, the Forest Service invited public comment which the agency would consider in promulgating a final rule.

Analysis of Public Comment

The interim rule generated three responses: One from a coalition of environmental groups, one from a forest products organization, and one from a recreation-oriented service organization. All responses contained specific suggestions that were considered in developing the final rule.

Responses received are available for review at the Office of the Deputy Chief, National Forest System, Forest Service, USDA, Room 4211, South Agriculture Building, 12th and Independence Avenues SW., Washington, DC 20250, (202) 382-9346.

The discussion which follows summarizes the major comments and suggestions received on the interim rule, and the Department's responses to these comments.

Comment: One organization was extremely concerned about the implementation of a draft rule concurrent with the comment period.

Response: The rule that was published on January 28, 1988, was not a draft or proposed rule. Rather, it was published as an interim rule, effective upon publication, because of the need to facilitate the orderly offering and review of decisions pertaining to reoffered sales and to lessen potential impacts in timber-dependent communities and upon the Agency's timber sale program.

Comment: One organization stated that the current opinion in *Pilchuck Audubon Society v. Forest Service* should have been considered in the preparation of the interim rule.

Response: The referenced court decision has been considered in the development of the final rule. The broadening of who may appeal decisions to reoffer timber sales under this rule specifically reflects consideration of the court's decision.

Comment: Two organizations commented that the rule should allow any citizen the right of administrative appeal, irrespective of prior attempts.

Response: At the end of the 30-day appeal period allowed in the interim rule, February 29, 1988, approximately 225 appeals had been received from individuals and groups wishing to appeal decisions to reoffer a sale of returned or defaulted timber. The majority of these appeals were from individuals and groups who had not previously appealed the reoffering because they had been advised that such sales were not appealable.

The agency believes that the interim rule published at 36 CFR 211.17 responded to the 9th Circuit Court decision. However, the appeals received in response to the interim rule are a forceful expression of public sentiment to participate in reoffer decisions through the appeals process. For this reason, all appeals filed in response to the 30-day appeal period provided in the interim rule (January 28–February 29, 1988) will be accepted and processed, regardless of any intermediate decisions dismissing those appeals because they were not eligible pursuant to section (c)(1). It will not be necessary for any of these appeals to be resubmitted for processing. Further, the process will be opened to anyone else wishing to appeal a decision to reoffer a sale of returned or defaulted timber made prior to January 28, 1988. A 30-day filing period following publication of this final rule will be allowed for submission of appeals.

Comment: One organization requested that the rule provide for procedural appeals, oral presentations, and similar process-type actions that are provided for in other appeal regulations.

Response: The complex procedures provided in other appeal rules would create undue delays. In order to meet the shorter deadlines for processing appeals of decisions to reoffer timber sales returned or defaulted as required by section 320 of the Appropriations Act for FY 1987, it is necessary to streamline the procedures. However, nothing in the final rule prohibits the Reviewing Officer from contacting or meeting with appellants to obtain additional information needed or to resolve issues within the context of this rule.

Comment: One organization requested that intervention should be provided for in the interim rule.

Response: Section (j)(4) of the interim rule states that the Reviewing Officer shall conduct a review on the record which consists of, among other things, any other written comments received. This provision for written comment was intended to take the place of specified procedures for intervenors; however, the intent is somewhat obscured by its location. Therefore, a new section has been added in the final rule at (f) allowing interested persons to submit comments for the record. Additionally, section (n) has been clarified to make explicit who the Reviewing Officer may involve in acquiring information. This section also provides the Reviewing Officer the authority to discuss issues related to the appeal with appellants, the Forest officer making the initial decision to reoffer, or those receiving notice pursuant to paragraph (c) of this section, since these parties represent those that would be most affected by potential agreements or settlements that may be reached through conflict resolution.

Comment: One respondent suggested that the rule be modified to require that notice be given to parties to written instruments issued by the Forest Service who are affected by a reoffer decision, and to other parties who have requested notice of specific decisions, a procedure provided for in 36 CFR 211.18(a)(2).

Response: Section (b) of the interim rule requires that notice of decisions appealable under this section made after the effective date of the regulation shall be published in a local newspaper of general circulation. The final rule modifies this section to incorporate the above suggestion, by giving notice of future reoffer decisions to parties to written instruments issued by the Forest Service who are affected by the decision, as well as to other interested parties who have requested written notification of the specific decision. These notice requirements are moved to a new paragraph (c) for ease of reference and subsequent paragraphs are redesignated.

Comment: To permit ample time to appeal, one commenter suggested that the rule provide that affected parties and those requesting written notice of reoffer decision be given their written notice no later than the date of newspaper publication.

Response: Section (f) of the interim rule provides that appeals be filed within 30 days of the notice of decision for those decisions made after January 28, 1988. The final rule describes filing procedures at section (h), and includes provision in (h)(3) that the 30-day filing period for parties entitled to written notice pursuant to section (b) begins on the date immediately following the date on the written notice. The intent is to ensure that those entitled to written notice have no less time to file an appeal than those who are notified about reoffer decisions through newspaper notice.

Comment: One organization felt that the final rule should include a provision for automatic stays.

Response: A request for stay is not made automatic because it might adversely affect the rights and interests of others, or otherwise not be in the public interest. The final rule provides procedures for a case-by-case analysis of each stay request based upon the merits of each request.

Two comments in one response did not pertain to the rule change and are not responded to in this discussion.

One response was supportive of the procedures prohibiting time extensions, not allowing procedural appeals, limiting the levels and time allowed for processing, and the dismissal provisions. All of these provisions have been retained in the final rule.

There was some confusion about who could appeal future decisions to reoffer sales that were returned or defaulted. It was the intent of the interim rule that future decisions would be appealable by anyone, except the defaulting purchaser of a reoffered timber sale. The ambiguity

between paragraphs (c) and (d) has been corrected.

In issuing this final rule, the Department has taken into account the general public's right to appeal, third party relationships that can be involved in such appeals, and the need to maintain a timber sale program in the affected communities. Because of the necessity to resolve uncertainties surrounding pending timber sale reoffer appeals and the impacts of continued delays such uncertainties create on the timber sale program and timber dependent communities, it is in the public interest to make this final rule effective upon publication.

Regulatory Impact

This action does not constitute a major rule as defined in Executive Order 12291. The rule will have no effect on the Nation's economy, or substantial numbers of individuals or businesses, or on the quality of the human environment. The final rule does not contain an information collection or recordkeeping requirement as defined in the Paperwork Reduction Act of 1980.

List of Subjects in 36 CFR Part 211

Administrative practice and procedure, Intergovernmental relations (Federal/State cooperation), National forest.

Therefore, for the reasons set forth in the preamble, Subpart B of Part 211 of chapter II of Title 36 of the Code of Federal Regulations is hereby amended as follows:

PART 211—[AMENDED]

1. The authority citation for Part 211 continues to read:

Authority: 30 Stat. 35, as amended, sec. 1, 33 Stat. 628 (16 U.S.C. 551, 472).

Subpart B—[Amended]

2. Revise § 211.17 to read as follows:

§ 211.17 Appeal of decisions to reoffer returned or defaulted timber sales on National Forests.

(a) *Purpose.* These rules provide an expedited and streamlined administrative appeal process for decisions to reoffer sales of timber that were returned to the Government under the provisions of the Federal Timber Contract Modification Payment Act of 1984 (16 U.S.C. 618) or that were defaulted by the purchaser.

(b) *Matters subject to appeal.* The procedures established in this section apply only to decisions to reoffer timber sales resulting from returned or defaulted timber sale contracts. Implementing decisions, such as advertising and/or awarding a reoffered sale, made subsequent to the initial decision to reoffer a returned or defaulted sale are not appealable under this section or 36 CFR 211.18.

(c) *Notice requirements.* (1) Notice of decisions appealable under this section and made after April 22, 1988, shall be published in a local newspaper of general circulation and also shall be provided in writing to parties to written instruments issued by the Forest Service who are known to be affected by the decision, as well as to any other interested persons or organizations who have requested notification of the specific decision.

(2) If the sale that is the subject of an appeal has been bid upon or awarded, the Reviewing Officer shall immediately notify the apparent high bidder or sale awardee of the appeal and the opportunity to comment as provided for in paragraph (f) of this section.

(d) *Who may appeal.* The process set forth in this section is available to:

(1) Any individual or organization who, following publication of the interim rule at 36 CFR 211.17 on January 28, 1988, submitted a timely Notice of Appeal on a decision to reoffer a sale of returned or defaulted timber.

(2) Any other individual or organization wishing to appeal a decision made prior to January 28, 1988, to reoffer a sale of returned or defaulted timber.

(3) Except as provided in paragraph (e) of this section, any individual or organization may appeal a decision made after January 28, 1988, to reoffer timber resulting from returned or defaulted timber sales.

(e) *Who may not appeal.* The process set forth in this section is not available to the defaulting purchaser of the original timber sale that is being or has been reoffered.

(f) *Who may comment.* Any person or organization interested in an appeal of a decision under this subpart may submit written comments to the Reviewing Officer for inclusion in the record.

(g) *Levels of appeal.* For decisions to reoffer timber sales made after October 30, 1986, one level of administrative appeal is available. For decisions to reoffer timber sales made prior to October 30, 1986, two levels of administrative appeal are available; the second level being to the next higher administrative level.

(1) Appeals of decisions to reoffer timber sales made by a District Ranger shall be filed with the Forest Supervisor.

(2) Appeals of decisions to reoffer timber sales made by a Forest Supervisor shall be filed with the Regional Forester.

(h) *Filing procedures.* To appeal a decision under this section, an appellant must file a written notice of appeal with the Reviewing Officer. If an appellant wishes to request a stay of implementation of the decision, the request must accompany the notice of appeal and be made in accordance with paragraph (j) of this section. The appellant must simultaneously provide a copy of the notice of appeal and any stay request to the Forest officer making the initial decision to reoffer.

(1) For appeals filed pursuant to paragraph (d)(1) of this section, the notice of appeal must have been submitted by February 29, 1988.

(2) All notices of appeal pursuant to paragraph (d)(2) of this section must be submitted by May 23, 1988.

(3) All notices of appeal pursuant to paragraph (d)(3) of this section must be filed within 30 days of publication of the notice of decision, or from the date of the written decision for those parties pursuant to paragraph (c)(1) of this section entitled to receive written decision.

(i) *Extensions of time.* There shall be no extension of the time periods specified in this section for either an appellant or the Forest Service.

(j) *Content of notice of appeal.* Parties appealing a decision to reoffer a sale must include the following information in the written notice of appeal:

(1) The timber sale being appealed;

(2) Either the decision date or the date notice of the decision was published;

(3) The Forest Officer who made the decision;

(4) How the appellant is affected by the decision;

(5) The relief desired; and

(6) A description of environmentally significant modifications or changed circumstances which are alleged to have occurred between when the initial timber sale was offered and sold and the date of the appeal on the decision to reoffer the sale.

(k) *Second level appeals.* For appeals to the second level filed pursuant to paragraph (g) of this section, a notice of appeal must be filed with the next higher administrative level within 15 days from the date of the first level Reviewing Officer's appeal decision. If the first level Reviewing Officer is the Forest Supervisor, the appeal is to the Regional Forester. If the first level Reviewing Officer is the Regional Forester, the appeal is to the Chief. The notice need only include the documents submitted at the previous level, the first level decision letter, and a statement addressing why the appellant believes the Reviewing Officer's decision is

erroneous. A copy of that statement must be provided to the first level Reviewing Officer also. The first level Reviewing Officer may provide a response to the notice of appeal to the second level Reviewing Officer; and must send a copy to the appellant. The review will be based on the existing record from the first level appeal, the second level notice of appeal, and any response by the first level Reviewing Officer. A decision shall be issued within 45 days after receiving the notice of appeal.

(l) *Stays.* (1) To request a stay, the appellant must:

(i) File a written request with the Reviewing Officer at the time the appeal is filed, simultaneously providing a copy to the Forest officer who made the initial decision to reoffer the timber sale in question.

(ii) Provide a written justification of the need for a stay, which includes a description of the specific activities to be stayed, and specific reasons why the stay should be granted, including:

(A) Harmful site-specific impacts or effects on resources in the area affected by the reoffered timber sale; and

(B) How the cited effects and impacts would prevent a meaningful decision on the merits.

(2) The Reviewing Officer shall rule on a stay request no later than 10 calendar days from receipt.

(i) If a stay is granted, the stay shall specify the activities to be stopped, duration of the stay, and reasons for granting the stay.

(ii) If a stay is denied in whole or in part, the decision shall specify the reasons for the denial.

(iii) A copy of the decision shall be sent to the appellant and the Forest Officer who made the initial decision to reoffer.

(iv) A Reviewing Officer's decision on a stay is not subject to further appeal or review.

(m) *Review procedures.* (1) The Reviewing Officer shall determine if the notice of appeal has been timely filed. In the event of question, legible postmarks will be considered evidence of timely filing. Where postmarks are illegible, the Reviewing Officer shall rule on the timely receipt of the notice of appeal. If the appeal is untimely, the Reviewing Officer will immediately dismiss the appeal and notify the Forest officer making the initial decision and the appellant.

(2) Upon receipt of a copy of the notice of appeal, the Forest Officer making the decision to reoffer a sale shall assemble the relevant decision documents and pertinent records and transmit them to the Reviewing Officer within 15 calendar days.

(3) In transmitting the decision documentation to the Reviewing Officer, the Forest Officer shall indicate how and specifically where the appellant's issues are addressed. Where time permits, the Forest Officer may also respond briefly to issues raised in the notice of appeal. A copy of the transmittal letter shall be provided to the appellant(s).

(4) The record on which the Reviewing Officer shall conduct a review consists of the notice of appeal, any other written comments received, the official documentation prepared by the Forest Officer making the initial decision to reoffer, and any related correspondence, including additional information requested by the Reviewing Officer.

(5) The review record is open to public inspection.

(n) *Requests for additional information.* At any time during the review, the Reviewing Officer may request additional information from an appellant, the Forest officer making the initial decision to reoffer, or anyone who has submitted written comments. In addition, the Reviewing Officer may discuss issues related to the appeal with the Forest officer making the initial decision to reoffer, appellants, or those receiving notice pursuant to paragraph (c) of this section, as needed to clarify information submitted or to seek resolution of the issues in question.

(o) *Decision.* (1) The Reviewing Officer shall issue a final decision on the appeal, in writing, within 90 days of the Reviewing Officer's receipt of the notice of appeal, with a copy to any person submitting comments.

(2) The Reviewing Officer's decision shall either affirm or reverse the original decision in whole or in part and include the reason(s) for the decision. The Reviewing Officer's decision may include instructions for further action by the Forest Officer making the initial decision.

(3) The Reviewing Officer's decision is the final administrative decision of the Department of Agriculture and that decision is not subject to further review under this section or any other appeal regulation, except for appeals to the second level filed pursuant to paragraph (g) of this section.

(p) *Dismissal.* (1) A Reviewing Officer shall dismiss and appeal without decision on the merits when:

(i) The appeal is not received within the time specified in paragraph (h) of this section;

(ii) The requested relief cannot be granted under existing facts, law or regulation;

(iii) The notice of appeal does not meet the requirements of paragraph (i) of this section;

(iv) The appellant withdaws the appeal; or

(v) The Forest Officer making the initial decision to reoffer a sale withdraws that decision.

(2) An appeal may be dismissed in whole or in part if an appellant challenges a Decision Notice or Record of Decision without referring to (i) changed circumstances or (ii) environmentally significant modifications which are alleged to have occurred after the initial timber sale was offered and the decision made to sell the timber.

(3) A Reviewing Officer's decision to dismiss is not subject to further appeal or review.

(4) A Reviewing Officer shall give written notice of dismissal to the appellant and Forest Officer whose initial decision or appeal decision is being appealed.

Dated: April 12, 1988

Richard E. Lyng,

Secretary.

[FR Doc. 88-8838 Filed 4-21-88; 8:45 am]

BILLING CODE 3410-11-M

DEPARTMENT OF THE INTERIOR

Office of Hearings and Appeals

43 CFR Part 4

Department Hearings and Appeals Procedures

AGENCY: Office of Hearings and Appeals, Department of the Interior.

ACTION: Final rulemaking.

SUMMARY: This rulemaking revises Departmental regulation § 4.413 *Service of notice of appeal and of other documents,* in 43 CFR Part 4, Subpart E—Special Rules Applicable to Public Land Hearings and Appeals, to clarify and update procedural requirements for service by appellants of a notice of appeal and of other documents upon counsel who may represent the Government as a party in appeal proceedings before the Interior Board of Land Appeals. Procedural requirements within the existing regulation § 4.413, pertaining to the manner of service of appeals documents and with respect to proof of service of appeals documents, as provided in § 4.401(c) of this title, are unchanged.

EFFECTIVE DATE: June 21, 1988. A 60-day effective date for implementation of the revised regulation has been chosen to allow the public to become familiar with the revised regulation.

ADDRESS: Any inquiries should be addressed to: Chief Administrative Judge, Interior Board of Land Appeals, Office of Hearings and Appeals, 4015 Wilson Boulevard, Arlington, VA 22203.

FOR FURTHER INFORMATION CONTACT: Frances A. Patton, Special Counsel; telephone: (703) 235-3810 (not toll free).

SUPPLEMENTARY INFORMATION: This rulemaking is designed principally to clarify procedural requirements for service by appellants of a notice of appeal and of other documents upon counsel who may represent the Government as a party in appeal proceedings before the Interior Board of Land Appeals. Procedural requirements pertaining to the manner of service of appeals documents and with respect to proof of service of appeals documents are unchanged.

Added to the regulation as revised, within subparagraph (c)(1), are requirements for service of a notice of appeal and of other documents upon the Associate Solicitor, Division of Energy and Resources, Office of the Solicitor, U.S. Department of the Interior (USDI), where the appeal it taken from a decision of the Director of the Minerals Management Service, USDI. Removed is the outdated reference in the existing regulation for service of appeals documents upon the Director of the U.S. Geological Survey.

Provisions have also been added to the regulation as revised, within subparagraph (c)(3), with respect to appeals taken from decisions of an adminstrative law judge, requiring service by appellants of a notice of appeal and of other ducments upon the attorney from the Office of the Solicitor USDI, who represented the Bureau of Land Management or the Minerals Management Service at a hearing, or in the absence of a hearing, who was served with a copy of the decision of the administrative law judge; or, upon the attorney from the Office of the General Counsel, U.S. Department of Agriculture, who represented the U.S. Forest Service at the hearing or, in the absence of a hearing, who was served with a copy of the decision by the administrative law judge where the hearing or decision of the administrative law judge involves a mining claim on national forest lands.

The revised regulation lists, in subparagraph (c)(2), State Offices of the Bureau of Land Management, USDI, and identifies in such listing for service of appeals documents, the particular Regional Solicitor or Field Solicitor of the Office of the Solicitor, USDI, who provides that State Office and its subdivisions with legal services and who may represent the Government as a party in the appeal proceedings. It provides, in subparagraph (c)(4), for service on such counsel until such time as a notice of appearance or substitution of counsel is filed in the proceedings, and thereafter for service as directed by the notice of appearance or substitution of counsel.

This rulemaking is being published as a final rule without prior publication of a proposed rule because changes are being made only to a rule of agency organization, procedure, and practice. 5 U.S.C. 553(b)(A). Further, the effect of this rulemaking is limited to clarification, updating, and reogranization of provisions in the existing Departmental regulation and prompt revision of the regulation is in the public interest.

Federal Paperwork Reduction Act

This rule does not contain information collection requirements which require approval by the Office of Management and Budget under 44 U.S.C. 3501 *et seq.*

Compliance With Other Laws

The Department has determined that this document constitutes a revision of a rule of agency organization, procedure, and practice, not subject to the provisions of Executive Order 12291, and certifies that this document will not have a significant economic effect on a substantial number of small entities under the Regulatory Flexibility Act, 5 U.S.C. 601 *et seq.* The Department of the Interior has also determined, on the basis of the categorical exclusion of regulations of a procedural nature set forth at 516 DM 2 Appendix 1, section 1.10, that this rulemaking will not significantly affect the quality of the human environment.

This rule was drafted by William Murray, Assistant Solicitor, Onshore Minerals, and other attorneys in the Office of the Solicitor and submitted to the Office of Hearings and Appeals. The final rulemaking was prepared by Frances A. Patton, Special Counsel, Office of Hearings and Appeals.

List of Subjects in 43 CFR Part 4

Administrative practice and procedure, Public lands.

Dated: February 10, 1988.

Earl Gjelde,

Under Secretary.

Accordingly, 43 CFR Part 4 is amended as follows:

PART 4—[AMENDED]

43 CFR Part 4 is amended as follows:

1. The authority citation for Part 4 continues to read:

Authority: R.S. 2478, as amended, 43 U.S.C. 1201, unless otherwise noted.

Subpart E—Special Rules Applicable to Public Land Hearings and Appeals

2. Section 4.413 is revised, as set forth below:

§ 4.413 Service of notice of appeal and of other documents.

(a) The appellant shall serve a copy of the notice of appeal and of any statement of reasons, written arguments, or briefs on each adverse party named in the decision from which the appeal is taken and on the Office of the Solicitor as identified in paragraph (c) of this section. Service must be accomplished in the manner prescribed in § 4.401(c) of this title not later than 15 days after filing the document.

(b) Failure to serve within the time required will subject the appeal to summary dismissal as provided in § 4.402 of this title.

(c)(1) If the appeal is taken from a decision of the Director, Minerals Management Service, or of the Director, Bureau of Land Management, the appellant will serve the Associate Solicitor, Division of Energy and Resources, Office of the Solicitor, U.S. Department of the Interior, Washington, DC 20240.

(2) If the appeal is taken from a decision of other Bureau of Land Management (BLM) offices listed below (*see* § 1821.2-1(d) of this title), the appellant shall serve the appropriate Regional or Field Solicitor as identified:

(i) BLM Alaska State Office, including all District and Area Offices within its area of jurisdiction:

Regional Solicitor, Alaska Region, U.S. Department of the Interior, 701 C Street, Box 34, Anchorage, AK 99513;

(ii) BLM Arizona State Office, including all District and Area Offices within its area of jurisdiction:

Field Solicitor, U.S. Department of the Interior, 505 North Second Street, Suite 150, Phoenix, AZ 85004-3904;

(iii) BLM California State Office, including all District and Area Offices within its area of jurisdiction:

Regional Solicitor, Pacific Southwest Region, U.S. Department of the Interior, 2800 Cottage Way, Room E-2753, Sacramento, CA 95825-1890;

BEST COPY AVAILABLE

(iv) BLM Colorado State Office, including all District and Area Offices within its area of jurisdiction:

Regional Solicitor, Rocky Mountain Region, U.S. Department of the Interior, P.O. Box 25007, Denver Federal Center, Denver, CO 80225;

(v) BLM Eastern States Office, including all District and Area Offices within its area of jurisdiction:

Associate Solicitor, Division of Energy and Resources, Office of the Solicitor, U.S. Department of the Interior, Washington, DC 20240;

(vi) BLM Idaho State Office, including all District and Area Offices within its area of jurisdiction:

Field Solicitor, U.S. Department of the Interior, Federal Building, U.S. Courthouse, 550 West Fort Street, Box 020, Boise, ID 83724;

(vii) BLM Montana State Office, including all District and Area Offices within its area of jurisdiction:

Field Solicitor, U.S. Department of the Interior, P.O. Box 31394, Billings, MT 59107-1394;

(viii) BLM Nevada State Office, including all District and Area Offices within its area of jurisdiction:

Regional Solicitor, Pacific Southwest Region, U.S. Department of the Interior, 2800 Cottage Way, Room E-2753, Sacramento, CA 95825-1890;

(ix) BLM New Mexico State Office, including all District and Area Offices within its area of jurisdiction:

Field Solicitor, U.S. Department of the Interior, P.O. Box 1042, Santa Fe, MN 87504-1042;

(x) BLM Oregon State Office, including all District and Area Offices within its area of jurisdiction:

Regional Solicitor, Pacific Northwest Region, U.S. Department of the Interior, Lloyd 500 Building, Suite 607, 500 N.E. Multnomah Street, Portland, OR 97232;

(xi) BLM Utah State Office, including all District and Area Offices within its area of jurisdiction:

Regional Solicitor, Intermountain Region, U.S. Department of the Interior, 6201 Federal Building, 125 South State Street, Salt Lake City, UT 84138-1180;

(xii) BLM Wyoming State Office, including all District and Area Offices within its area of jurisdiction:

Regional Solicitor, Rocky Mountain Region, U.S. Department of the Interior, P.O. Box 25007, Denver Federal Center, Denver, CO 80225;

(3) If the appeal is taken from the decision of an administrative law judge, the appellant shall serve the attorney from the Office of the Solicitor who represented the Bureau of Land Management or the Minerals Management Service at the hearing or, in the absence of a hearing, who was served with a copy of the decision by the administrative law judge. If the hearing involved a mining claim on national forest land, the appellant shall serve the attorney from the Office of General Counsel, U.S. Department of Agriculture, who represented the U.S. Forest Service at the hearing or, in the absence of a hearing, who was served with a copy of the decision by the administrative law judge.

(4) Parties shall serve the Office of the Solicitor as identified in this paragraph until such time that a particular attorney of the Office of the Solicitor files and serves a Notice of Appearance or Substitution of Counsel. Thereafter, parties shall serve the Office of the Solicitor as indicated by the Notice of Appearance or Substitution of Counsel.

(d) Proof of such service as required by § 4.401(c) must be filed with the Board (address: Board of Land Appeals, Office of Hearings and Appeals, 4015 Wilson Boulevard, Arlington, VA 22203), within 15 days after service unless filed with the notice of appeal.

[FR Doc. 88-8888 Filed 4-21-88; 8:45 am]

BILLING CODE 4310-79-M

FEDERAL EMERGENCY MANAGEMENT AGENCY

44 CFR Part 64

[Docket No. FEMA 6784]

Suspension of Community Eligibility

AGENCY: Federal Emergency Management Agency, FEMA.

ACTION: Final rule.

SUMMARY: This rule lists communities, where the sale of flood insurance has been authorized under the National Flood Insurance Program (NFIP), that are suspended on the effective date shown in this rule because of noncompliance with the revised floodplain management criteria of the NFIP. If FEMA receives documentation that the community has adopted the required revisions prior to the effective suspension date given in this rule, the community will not be suspended and the suspension will be withdrawn by publication in the **Federal Register**.

EFFECTIVE DATE: May 4, 1988.

FOR FURTHER INFORMATION CONTACT: Frank H. Thomas, Assistant Administrator, Office of Loss Reduction, Federal Insurance Administration, Federal Center Plaza, 500 C Street, SW., Room 416 Washington, DC 20472, (202) 646-2717.

SUPPLEMENTARY INFORMATION: The NFIP enables property owners to purchase flood insurance at rates made responsible through a Federal subsidy. In return, communities agree to adopt and administer local floodplain management measures aimed at protecting lives and new construction from future flooding. Section 1315 of the National Flood Insurance Act of 1968, as amended (42 U.S.C. 4022), prohibits flood insurance coverage as authorized under the NFIP (42 U.S.C. 4001-4128) unless an appropriate public body shall have adopted adequate floodplain management measures with effective enforcement measures.

On August 25, 1986, FEMA published a final rule in the **Federal Register** that revised the NFIP floodplain management criteria. The rule became effective on October 1, 1986. As a condition for continued eligibility in the NFIP, the criteria at 44 CFR 60.7 require communities to revise their floodplain management regulations to make them consistent with any revised NFIP regulation within 6 months of the effective date of that revision or be subject to suspension from participation in the NFIP.

The communities listed in this notice have not amended or adopted floodplain management regulations that incorporate the rule revision. Accordingly, the communities are not compliant with NFIP criteria and will be suspended on the effective date shown in this final rule. However, some of these communities may adopt and submit the required documentation of legally enforceable revised floodplain management regulations after this rule is published but prior to the actual suspension date. These communities will not be suspended and will continue their eligibility for the sale of insurance. A notice withdrawing the suspension of the communities will be published in the **Federal Register**. In the interim, if you wish to determine if a particular community was suspended on the suspension date, contact the appropriate FEMA Regional Office or the NFIP servicing contractor.

The Administrator finds that notice and public procedures under 5 U.S.C. 533(b) are impracticable and unnecessary because communities listed in this final rule have been adequately notified. Each community receives a 90- and 30-day notification addressed to the Chief Executive Officer that the community will be suspended unless the required floodplain management measures are met prior to the effective

suspension date. For the same reasons, this final rule may take effect within less than 30 days.

Pursuant to the provision of 5 U.S.C. 605(b), the Administrator, Federal Insurance Administration, FEMA, hereby certifies that this rule, if promulgated, will not have a significant economic impact on a substantial number of small entities. As stated in section 2 of the Flood Disaster Protection Act of 1973, the establishment of local floodplain management together with the availability of flood insurance decreases the economic impact of future flood losses to both the particular community and the nation as a whole. This rule in and of itself does not have a significant economic impact. Any economic impact results from the community's decision not to adopt adequate floodplain management measures, thus placing itself in noncompliance with the Federal standards required for community participation.

List of Subjects in 44 CFR Part 64

Flood insurance, Floodplains.

PART 64—[AMENDED]

1. The authority citation for Part 64 continues to read as follows:

Authority: 42 U.S.C. 4001 et. seq., Reorganization Plan No. 3 of 1978, E.O. 12127.

2. Section 64.6 is amended by adding in alphabetical sequence new entries to the table.

§ 64.6 List of eligible communities.

State and Community Name	County or Parish	Community No.	Effective date
Louisiana:			
Carencro, Town of	Lafayette	220103	May 4, 1988.
Covington, City of	St. Tammany	220200	Do.
Donaldsonville, City of	Ascension	220014	Do.
Elton, Town of	Jefferson Davis	220096	Do.
Ferriday, Town of	Concordia	220055	Do.
Gilbert, Village of	Franklin	220073	Do.
Goldonna, Village of	Natchitoches	220290	Do.
Greensburg, Town of	St. Helena	220330	Do.
Grosse Tete, Village of	Iberville	220084	Do.
Henderson, Town of	St. Martin	220189	Do.
Jackson, Town of	East Feliciana	220333	Do.
Lockport, Town of	Lafourche	220254	Do.
Morse, Village of	Acadia	220007	Do.
Oil City, Town of	Caddo	220262	Do.
Ponchatoula, Town of	Tangipahoa	220211	Do.
New Mexico: Gallup, City of	McKinley	350042	Do.
Oklahoma:			
Boynton, Town of	Muskogee	400120	Do.
Colony, Town of	Washita	400253	Do.
Howe, Town of	LeFlore	400091	Do.
Spencer, City of	Oklahoma	400412	Do.
Sperry, Town of	Tulsa	400213	Do.
Sulphur, City of	Murray	400119	Do.
Warr Acres, City of	Oklahoma	400449	Do.
Texas:			
Albany, City of	Shackelford	480565	Do.
Beverly Hills, City of	McLennan	480625	Do.
Brookshire, Town of	Waller	481097	Do.
Burkburnett, City of	Wichita	480658	Do.
Cedar Hill, City of	Dallas	480168	Do.
Celina, City of	Collin	480133	Do.
Chandler, City of	Henderson	480328	Do.
Unincorporated Areas	Coryell	480768	Do.
Diboll, City of	Angelina	480008	Do.
Fulton, Town of	Aransas	480012	Do.
Glenn Heights, City of	Ellis	481265	Do.
Grey Forest, City of	Bexar	480039	Do.
LaJoya, City of	Hidalgo	480341	Do.
La Villa, City of	....Do	480342	Do.
Lumberton, City of	Hardin	481111	Do.
McAllen, City of	Hidalgo	480343	Do.
Quintana, Village of	Brazoria	481301	Do.
Rockwall, City of	Rockwall	480547	Do.
Rollingwood, City of	Travis	481029	Do.
San Benito, City of	Cameron	480113	Do.
San Juan, City of	Hidalgo	480346	Do.
San Leanna, City of	Travis	481305	Do.
Santa Rosa, City of	Cameron	480114	Do.
Silsbee, City of	Hardin	480285	Do.
Waller, City of	Waller	480541	Do.
Whitney, Town of	Hill	480665	Do.
Woodsboro, Town of	Refugio	480987	Do.

Issued: April 18, 1988.

Harold T. Duryee,

Administrator, Federal Insurance Administration.

[FR Doc. 88-8840 Filed 4-21-88; 8:45 am]

BILLING CODE 6718-21-M

FEDERAL MARITIME COMMISSION

46 CFR Part 502

[Docket No. 88-12]

Designation of Office to Receive Petitions for Review of Agency Orders

AGENCY: Federal Maritime Commission.

ACTION: Final rule.

SUMMARY: This rule designates the office and officer who must receive petitions for review under 28 U.S.C. 2112(a), as amended by Pub. L. No. 100-236, 10 Stat. 1731 (1988). The Commission designates the Office of General Counsel and the General Counsel.

EFFECTIVE DATE: April 22, 1988.

FOR FURTHER INFORMATION CONTACT: Robert D. Bourgoin, General Counsel, Office of the General Counsel, Federal Maritime Commission, Washington, DC 20573, (202) 523-5740.

SUPPLEMENTARY INFORMATION: On January 8, 1988, Congress enacted Pub. L. No. 100-236, 101 Stat. 1731 (1988), which amends 28 U.S.C. 2112(a) governing the selection of the appropriate court when petitions for review of agency orders are filed in two or more courts of appeal. The amendments to 28 U.S.C. 2112(a) are intended to replace, in part, the prior method of determining the proper court, the so-called "first to file" rule, and the resulting practice of the "race to the courthouse" when agency orders were issued. S. Rep. No. 263, 100th Cong., 1st. Sess. 1, *reprinted in* 1988 U.S. Code Cong. & Admin. News 3198. The amendments take effect 180 days after the date of enactment, July 6, 1988. Pub. L. 100-236, sec. 3, 101 Stat. 1731, 1732 (1988).

As amended, 28 U.S.C. 2112(a)(2) requires each agency to designate by rule the office and the officer who must receive petitions for review. The Commission designates the Office of General Counsel and the General Counsel and amends its Rules of Practice and Procedure at 46 CFR 502.2(b) to reflect those designations.

Finally, because this amendment to the Commission's Rules of Practice and Procedure has no effect on the substantive rights of parties and is a procedure specifically required by statute, public rulemaking procedure may be dispensed with pursuant to 5 U.S.C. 553(b)(A) and the amendment may become effective upon publication, pursuant to 5 U.S.C. 553(d)(3).

The Commission has determined that this rule is not a "major rule" as defined in Executive Order 12291, 46 FR 12193, February 27, 1981, because it will not result in:

(1) An annual effect on the economy of $100 million or more;

(2) A major increase in cost or process for consumers, individual industries, Federal, State or local government agencies; or geographic regions; or,

(3) Significant adverse effect on competition, employment, investment productivity, innovations, or on the ability of United States-based enterprises to compete with foreign-based enterprises in domestic or export markets.

The Acting Chairman of the Federal Maritime Commission certifies pursuant to section 604(b) of the Regulatory Flexibility Act, 5 U.S.C. 601, et seq., that this rule will not have a significant economic impact on a substantial number of small entities, including small businesses, small organizational units or small governmental jurisdictions.

List of Subjects in 46 CFR Part 5

Administrative practice and procedure.

Therefore, pursuant to 5 U.S.C. 553 and 28 U.S.C. 2112(a)(2), Part 502 of Title 46, Code of Federal Regulations, is amended as follows:

PART 502—[AMENDED]

1. The Authority Citation for Part 502 is revised to read as follows:

Authority: 5 U.S.C. 504, 551, 552, 553, 559; 12 U.S.C. 1141j(a); 18 U.S.C. 207; 28 U.S.C. 501(c)(3); 28 U.S.C. 2112(a); 46 U.S.C. app. 817, 820, 821, 826, 841a, 1114(b), 1705, 1707-1711, 1713-1716; and E.O. 11222 of May 8, 1965 (30 FR 6469).

2. In § 502.2, paragraph (b) is revised to read as follows:

§ 502.2 Filing of documents; hours; mailing address.

* * * * *

(b) Except for exhibits filed pursuant to § 502.118(b)(4) and petitions for review of final agency orders served on the Commission pursuant to 28 U.S.C. 2112(a), all documents required to be filed in, and correspondence relating to proceedings governed by this part should be addressed to "Secretary, Federal Maritime Commission, Washington, DC 20573-0001." Petitions for review of final agency orders served on the Commission pursuant to 28 U.S.C. 2112(a) shall be addressed to "General Counsel, Office of the General Counsel, Federal Maritime Commission, Washington, DC 20573-0001."

* * * * *

By the Commission.

Joseph C. Polking,

Secretary.

[FR Doc. 88-8851 Filed 4-21-88; 8:45 am]

BILLING CODE 6730-01-M

FEDERAL COMMUNICATIONS COMMISSION

47 CFR Ch. I

[CC Docket No. 87-67; FCC 88-122]

Policy for the Distribution of United States International Carrier Circuits Among Available Facilities During the Post-1988 Period

AGENCY: Federal Communications Commission.

ACTION: Final rule.

SUMMARY: By this Report and Order the Commission has decided to end all circuit distribution guidelines placed on the circuits used by AT&T for the provision of international message telephone service (IMTS) and 800-service overseas. In reaching this conclusion, the Commission found that circuit distribution guidelines that guarantee minimum levels of traffic to INTELSAT have served their purpose and are no longer needed to carry out the objectives of the Communications Satellite Act. It found that continuation of guidelines would be unnecessary in view of the successful growth of INTELSAT and the clear commitment of AT&T to continue to make substantial use of the INTELSAT system under its long-term agreement with Comsat. It also found that the continuation of guidelines would create disincentives for INTELSAT to take steps necessary to adapt to an increasingly competitive environment and be inconsistent with development of a policy that permits carriers and users to make facilities and service decisions free from unnecessary regulatory interferences.

EFFECTIVE DATE: May 23, 1988.

ADDRESS: Federal Communications Commission, 1919 M Street NW., Washington, DC 20554.

FOR FURTHER INFORMATION CONTACT: James Ball, International Facilities Division, Common Carrier Bureau, (202) 632-7265.

SUPPLEMENTARY INFORMATION: This is a summary of the Commission's Report and Order in Common Carrier Docket

87-67, FCC 88-122, adopted March 24, 1988, and released April 14, 1988.

The full text of this Commission decision is available for inspection and copying during normal business hours in the FCC Dockets Branch (Room 230), 1919 M Street NW., Washington, DC. The complete text of this decision may also be purchased from the Commission's copy contractor, International Transcription Service, (202) 857-3800, 2100 M Street NW., Suite 140, Washington, DC 20037.

Summary of Report and Order

1. The Commission initiated this proceeding on April 10, 1987 with the release of a Notice of Proposed Rulemaking (NPRM) (52 FR 13727, April 24, 1987) for the purpose of developing a policy for the distribution of United States international carrier circuits among available facilities during the post-1988 period. Comments in this proceeding were filed June 1, 1987 and reply comments, June 16, 1987. On October 9, 1987, Comsat and AT&T submitted joint supplemental comments containing an agreement concerning AT&T's future satellite circuit use. Comments and reply comments on this submission were received November 16 and December 1, 1987, respectively.

2. In the NPRM, the Commission tentatively concluded that it should consider development of its post-1988 circuit distribution policy on a worldwide basis rather than continue to develop such policies on a region-by-region basis. The Commission also tentatively concluded that the blanket exemption from circuit distribution guidelines for North Atlantic and Pacific Ocean region circuits used by all U.S. carriers except AT&T to provide all services should be continued and extended to all regions of the world. None of the parties objected to this tentative conclusion.

3. The NPRM primarily focused on the distribution of AT&T's IMTS and 800-service overseas circuits in the post-1988 period. Comments were initially requested on three policy options with a common theme of movement away from the imposition of circuit distribution guidelines on AT&T. Under the first option, the Commission would remove itself from decisions about the distribution of all circuits, including AT&T's IMTS and 800-service overseas circuits, at year end 1988. The second opinion would continue the current process of phasing in increased flexibility for AT&T in its circuit distribution while concurrently phasing out Commission involvement in those decisions. The third option would phase out Commission involvement in circuit distribution over a time period equal to that in which INTELSAT uses space segment in which it has invested capital. The NPRM also invited submission of other circuit distribution policy alternatives for the post-1988 period, set forth the factors the Commission would consider in analyzing the various post-1988 circuit distribution policy options and requested the information from AT&T and Comsat necessary to perform such analysis.

4. Comsat and AT&T subsequently submitted joint supplemental comments in the proceeding. The joint supplemental comments presented the Commission with an agreement between the parties in which they established: (1) A set of commitments relating to AT&T's worldwide use of Comsat's INTELSAT space segment capacity for the IMTS circuits activated through 1994, and (2) a framework for discussions and exchanges of information that would provide a basis for AT&T's further use of Comsat's INTELSAT space segment capacity after 1994. Comsat and AT&T intended the agreement as a replacement for Commission imposed circuit distribution guidelines. They requested the Commission find that the agreement consistent with the public interest and rely upon it as a basis for withdrawing all circuit distribution guidelines affecting the distribution of AT&T's IMTS circuits. The agreement is intended to be non-exclusive and does not preclude Comsat from reaching similar agreements with other U.S. international service carriers with respect to their IMTS traffic. The agreement also does not preclude AT&T from placing traffic not covered by the agreement on facilities of its choice, consistent with U.S. law and international obligations.

5. We conclude that we should end imposition of circuit distribution guidelines at this time. In reaching this conclusion, we have found that: (1) Circuit distribution guidelines that guarantee minimum levels of traffic to INTELSAT have served their purpose and are no longer needed to carry out the objectives of the Communications Satellite Act; (2) a continued regulatory policy that acts to merely guarantee traffic to INTELSAT creates disincentives for it to take steps necessary to adapt to an increasingly competitive environment; and (3) continuation of guidelines would be inconsistent with development of a policy that permits carriers and users to make facilities and service decisions free from unnecessary regulatory interference.

6. We have further concluded that, with certain modifications, the Comsat/AT&T agreement provides a basis for ending all circuit distribution guidelines at this time. The agreement assures INTELSAT of a substantial amount of AT&T traffic in the future which will provide a firm basis for INTELSAT's operations. Equally important, the agreement gives INTELSAT and Comsat substantial incentives to adapt to an increasingly competitive environment. This action, in concert with that already taken by the Common Carrier Bureau in considering the Comsat's tariff filing to implement the agreement, will preserve the ability of other U.S. carriers to make future facilities choices to meet their needs in a competitive environment. We have, however, retained jurisdiction and will monitor AT&T's future facility choices and Comsat's service offerings to: (1) Preserve our ability to ensure continued fulfillment of the objectives of the Communications Satellite Act; (2) promote the successful development of competition in international communications; and (3) provide satellite facilities that satisfy national defense and security needs.

Ordering Clauses

7. Accordingly, *it is ordered* that all circuit distribution guidelines currently applicable to AT&T's IMTS and 800-service overseas are *hereby terminated.*

8. *It is further ordered* that, subject to the modifications required in paragraph 47 of the Report and Order, the Comsat/AT&T agreement shall serve as the basis for ending all current circuit distribution guidelines applicable to AT&T IMTS and 800-service overseas.

9. *It is further ordered* that Comsat and AT&T shall submit to the Commission the modifications to the agreement that are required in paragraph 47 of the Report and Order within 30 days of the effective date of this Order.

10. *It is further ordered* that Comsat and AT&T shall apprise the Commission of any negotiations that may result in changes in or extensions of terms of the agreement and shall submit such changes or extensions to the Commission for review as soon as possible but no later than 90 days before they are to take effect. The changes or extensions may take effect absent Commission action to the contrary prior to the end of the 90-day period.

11. *It is further ordered* that the Commission shall monitor AT&T's facility choices and Comsat's services in order to: (1) Ensure continued fulfillment of the objectives of the Communications Satellite Act; (2) preserve the ability of

other U.S. carriers to compete in the international communications market; and (3) provide satellite facilities that satisfy national defense and security requirements.

12. *It is further ordered* that the Commission retains jurisdiction over the Comsat/AT&T agreement to require further changes in the agreement after notice and opportunity for comment in order to ensure fulfillment of the objectives identified in paragraph 54 of the Report and Order.

13. *It is further ordered* that AT&T shall submit to the Commission for public availability a copy of each semi-annual report that it provides to Comsat as required under Article VII of the agreement.

14. *It is further ordered* that Comsat and AT&T shall provide the Commission with any additional information which may be required in the future to ensure fulfillment of the objectives stated in paragraph 55 of the Report and Order.

15. *It is further ordered* that NTIA's motion to accept late filed comments and M/A-COM's motion to accept late filed reply comments are *granted*.

16. *It is further ordered* that this proceeding is *terminated*.

17. The information collection requirement in paragraph 56 of the Report and Order is not subject to the clearance procedures of section 3507 of the Paperwork Reduction Act of 1980, 20 U.S.C. 1221–23, since less than 10 persons are required to respond.

18. Pursuant to section 605(b) of the Regulatory Flexibility Act, 5 U.S.C. section 605, *it is certified* that sections 603 and 604 of the Act do not apply because the policy changes adopted in this proceeding will not have a significant economic impact on small entities. See 5 U.S.C. sections 603, 605(b) (1976). The Regulatory Flexibility Act does not apply to this proceeding because the Act excludes from its application all proceedings such as this that involve "a rule of particular applicability relating to rates, wages, corporate or financial structures or reorganizations thereof, pries, facilities, appliances, services, or allowances therefor or to valuations costs or accounting practices relating to such rates, wages, structures, prices, appliances, services, or allowances."

19. *It is further ordered* that the Secretary of the Commission shall cause a summary of this Report and Order to be published in the **Federal Register** and shall mail a copy of this decision to the Chief for Advocacy of the Small Business Administration.

Federal Communications Commission.

H. Walker Feaster III,

Acting Secretary.

[FR Doc. 88–8841 Filed 4–21–88; 8:45 am]

BILLING CODE 6712-01-M

---

47 CFR Part 73

[FCC 88-131]

Syracuse Peace Council v. Television Station WTVH, Syracuse, NY; Fairness Doctrine

AGENCY: Federal Communications Commission.

ACTION: Final rule.

SUMMARY: Through this action, the Federal Communications Commission reaffirmed its earlier decision (52 FR 31768, August 24, 1987) that enforcement of the fairness doctrine violates the first amendment and, therefore, is no longer in the public interest. The action was taken to respond to several petitions filed as a result of that earlier decision.

EFFECTIVE DATE: April 8, 1988.

ADDRESS: 1919 M Street, NW., Washington, DC 20554.

FOR FURTHER INFORMATION CONTACT: Richard J. Bozzelli, Special Assistant to the General Counsel, (202) 632–7020.

SUPPLEMENTARY INFORMATION: This is a summary of the Commission's *Memorandum Opinion and Order*, FCC 88–131, adopted March 24, 1988, and released April 7, 1988.

The full text of this Commission decision is available for inspection and copying during normal business hours in the FCC Dockets Branch (Room 230), 1919 M Street, Northwest, Washington, DC. The complete text of this decision may also be purchased from the Commission's copy contractor, International Transcription Services, (202) 857–3800, 2100 M Street, Northwest, Suite 140, Washington, DC 20037.

Summary of Memorandum Opinion and Order

1. On August 4, 1987, the Commission responded to the remand decision of the United States Court of Appeals in *Meredith Corp. v. FCC* by concluding that the fairness doctrine, on its face, violated the first amendment and contravened the public interest. (52 FR 31768, August 24, 1987). Thus, the Commission vacated its earlier order, 99 FCC 2d 1389 (1984), in which it had determined that Meredith Corporation, licensee of television station WTVH in Syracuse, New York, had violated the fairness doctrine, and terminated the proceeding.

2. In response to the 1987 decision, the Commission received the following filings: (1) A Petition for Reconsideration of Geller and Lampert filed September 1, 1987, by Henry Geller and Donna Lampert (Geller and Lampert); (2) a Petition for Partial Reconsideration of the Order, filed September 3, 1987, by Freedom of Expression Foundation, Inc. (FEF); (3) a Partial Opposition to the Petition for Reconsideration of Geller and Lampert, filed September 11, 1987, by Telecommunications Research and Action Center and Syracuse Peace Council (TRAC); (4) an Opposition to the Petition for Reconsideration of Geller and Lampert filed September 16, 1987, by Meredith Corporation (Meredith); (5) an Opposition to Petition for Reconsideration of Geller and Lampert filed September 16, 1987, by the Radio-Television News Directors Association (RTNDA); (6) an Opposition to the Petition of Freedom of Expression Foundation for Partial Reconsideration of the Order, filed September 16, 1987, by People for the American Way (PFAW); (7) an Opposition to the Petition for Reconsideration of Geller and Lampert, filed October 23, 1987, by CBS Inc. (CBS); (8) an Opposition to Petitions for Reconsideration and Clarification filed October 26, 1987, by the Office of Communication of the United Church of Christ and the Communications Commission of the National Council of Churches (UCC); (9) a Reply to Opposition petitions filed November 9, 1987, by Geller and Lampert.

3. FEF asked that the Commission reconsider footnote 75 of the August *Order*, in which the Commission noted, "[W]e need not—and do not—decide here what effect today's ruling will have on every conceivable application of the fairness doctrine." FEF argued that the Commission should specifically determine that continued enforcement of the personal attack rule and the political editorial rule also violates the first amendment. The Commission denied that request because the issues were beyond the scope of this proceeding. However, the FEF petition was referred to a separate, pending proceeding with respect to a Joint Petition for Expedited Rulemaking Action and for Clarification of Memorandum Opinion and Order Ending Enforcement of the Fairness Doctrine, filed August 25, 1987, by the Radio-Television New Directors and others. That petition requested that the Commission either conclude the rulemaking proceeding currently outstanding with respect to the personal attack and political editorial rules (48 FR 28, 295, 1983) or clarify the August

Order, concluding that those rules would no longer be applied to radio and television licensees.

4. Geller and Lampert asked that the Commission reconsider the August *Order* on the grounds that: (1) Enforcement of the fairness doctrine is mandated by the Communications Act; (2) the Commission should have considered alternative means of enforcing the fairness doctrine before eliminating it; and (3) the Commission erred in elimination the first prong of the doctrine, which required broadcasters to cover controversial issues of vital importance to their communities. Additionally, Geller and Lampert urged the Commission to adopt their proposed alternative of implementing a malice test in the contemporaneous, case-by-case enforcement of the doctrine and to increase enforcement of the first prong in conjunction with its enforcement of the malice alternative. Numerous comments were received supporting or opposing the Geller and Lampert petition, and all were considered before the Commission reached its decision.

5. The Commission, in its current *Memorandum Opinion and Order*, denied the Geller and Lampert petition for reconsideration, maintaining that, in light of decisions by the Federal Court of Appeals, the fairness doctrine was not mandated by the Communications Act and that the Commission was obligated to consider and rule on Meredith's constitutional arguments in its defense. Furthermore, because the fairness doctrine was not codified, the Commission was under no legal obligation to consider or to adopt alternatives to the doctrine before ruling on Meredith's claim that the doctrine was unconstitutional as then administered. The Commission pointed out that, in a separate proceeding (*Fairness Alternatives Report*, 2 FCC Red 5272, (1987)), it considered and rejected, as constitutionally unsound and contrary to the public interest, alternatives to the doctrine, and in the instant decision, it again rejected for similar reasons, alternatives to the doctrine including the contemporaneous, case-by-case malice approach proposed by Geller and Lampert.

6. The Commission also rejected the argument that the doctrine cannot be eliminated without eviscerating the general public interest mandate under the statute. Instead, the Commission emphasized that their action leaves sections 312(a)(7) and 315, as well as the Act's public interest mandate, intact. In fact, because the Commission found in this proceeding that the fairness doctrine violated the first amendment, its elimination, *a fortiori*, was consistent with, not violative of, the Commission's public interest mandate.

7. The current Geller and Lampert proposal, the Commission stated, failed to achieve "the First Amendment principles underlying the doctrine." The Commission saw little difference between the current Geller and Lampert proposal and an earlier Geller and Lampert proposal that the Commission had already rejected. The Commission asserted that, although the current Geller and Lampert proposal would reduce the chilling effects associated with the fairness doctrine, it would not eliminate them. It added that, in its August *Order*, it found that the existing multiplicity of broadcast outlets allows achievement of the fairness doctrine's goal of diversity of viewpoints without government intervention into the content of speech. Thus, no content-based alternative to the doctrine was deemed necessary to achieve that goal.

8. Finally, the Commission denied the petitioners' request to reconsider the decision to discontinue enforcement of the first prong of the fairness doctrine. Geller and Lampert argued that the decision should be reversed because that prong was eliminated without adequate notice and that there was insufficient reason for that elimination. They also argued that enforcement of the prong was mandated by the Communications Act.

9. In denying this request for reconsideration, the Commission stated that, in eliminating the first prong of the fairness doctrine in August, it had not ruled that the first prong obligation standing alone was unconstitutional. Rather, the Commission found that because "both parts of the doctrine are interdependent and integral to the overall regulatory scheme [of fairness]," it would not sever the first part of the doctrine and consider only whether to continue enforcement of the second part. Instead, it decided that if the enforcement of the doctrine was unconstitutional, it would discontinue enforcement of the entire doctrine, because the elimination of either part would essentially make the doctrine, as it had developed over the years, a nullity. That is, while the first part of the doctrine might conceivably be enforced as an independent policy matter, it simply would not then be the "fairness doctrine," but a new programming requirement devoid of the essential "fairness" component of the old policy. Also, according to the Commission, such a policy would be largely duplicative of the current requirement that broadcasters cover issues that are responsive to the needs and interests of their communities.

10. Geller and Lampert argued that, by eliminating the first prong obligation in August, the Commission called into question the continued validity of the issue responsive obligation. The Commission rejected this contention, noting that, although the first part of the fairness doctrine may overlap with other regulatory requirements developed in other contexts, it was not intended to suggest that the first part obligation under the fairness doctrine and the duty to air issue responsive programming are identical. Thus, petitioners' view that, by eliminating the first prong of the doctrine, the Commission has effectively declared unconstitutional its policy requiring broadcasters to provide programming responsive to the needs and interests of their communities is incorrect. Indeed, the Commission explicitly noted in its August decision that the constitutionality of the issue responsive obligation was not at issue in this case. Issue responsive obligations remain in full force and effect, and to the extent that petitioners fear that licenses will no longer cover issues of interest to their communities, the Commission believes that the continued existence of the issue responsive obligation should alleviate that fear.

11. *Accordingly, it is ordered* That the Petition of Freedom of Expression Foundation for Partial Reconsideration of the Order *is denied* to the extent indicated herein and *is referred*, together with the corresponding oppositions filed thereto, for consideration in connection with the separate proceeding regarding the personal attack and political editorial rules.

12. *It is further ordered* That the Petition for Reconsideration of Geller and Lampert *is denied*.

List of Subjects in 47 CFR Part 73

Radio broadcasting, Television broadcasting.

Federal Communications Commission.

H. Walker Feaster III,

Acting Secretary.

[FR Doc. 88-8843 Filed 4-21-88; 8:45 am]

BILLING CODE 6712-01-M

VOL 53 ISS 78 AP 22 1988 UMI

DEPARTMENT OF DEFENSE

GENERAL SERVICES ADMINISTRATION

NATIONAL AERONAUTICS AND SPACE ADMINISTRATION

48 CFR Part 31

Federal Acquisition Regulation (FAR); Promotion of American Aerospace Exports of Domestic and International Exhibits; Correction

AGENCIES: Department of Defense (DoD), General Services Administration (GSA), and National Aeronautics and Space Administration (NASA).

ACTION: Final rule; correction.

SUMMARY: This document corrects a final rule in Federal Acquisition Circular (FAC) 84-36 published in the Federal Register on Tuesday, April 12, 1988 (53 FR 12128).

FOR FURTHER INFORMATION CONTACT: Margaret A. Willis, FAR Secretariat, Room 4041, GS Building, Washington, DC 20405, (202) 523-4755.

SUPPLEMENTARY INFORMATION: In FR Doc. 88-7992 beginning on page 12128, make the following correction:

31.205-1 [Corrected]

On page 12130, in the second column, in the third sentence, add a period following the word "demonstration" and begin a fourth sentence by adding the three words "This paragraph applies".

List of Subjects in 48 CFR Part 31

Government procurement.

Dated: April 18, 1988.

Harry S. Rosinski,

Acting Director, Office of Federal Acquisition and Regulatory Policy.

[FR Doc. 88-8914 Filed 4-21-88; 8:45 am]

BILLING CODE 6820-61-M

DEPARTMENT OF TRANSPORTATION

National Highway Traffic Safety Administration

49 CFR Part 541

[Docket No. T84-01; Notice 14]

Technical Amendment; Final Listing of High-Theft Lines for 1988 Model Year; Motor Vehicle Theft Prevention Standard

AGENCY: National Highway Traffic Safety Administration, DOT.

ACTION: Technical Amendment.

SUMMARY: This technical amendment adds a new car line to the January 5, 1988, final listing of high-theft lines for Model Year (MY) 1988 published by the agency in its Final Rule at 53 FR 133. The new MY 1988 car line was determined to be a likely high-theft vehicle but was inadvertently omitted from the agency's MY 1988 listing. The list of high-theft car lines is intended to inform the public, particularly law enforcement groups, of the car lines that are subject to the marking requirements of the theft prevention standard for MY 1988.

EFFECTIVE DATE: This amendment becomes effective April 22, 1988.

FOR FURTHER INFORMATION CONTACT: Ms. Barbara A. Kurtz, NHTSA, 400 Seventh Street SW., Washington, DC 20590 (202-366-4808).

SUPPLEMENTARY INFORMATION: On October 24, 1985, NHTSA published a new Part 541, Federal Motor Vehicle Theft Prevention Standard, 50 FR 43166. Part 541 sets forth performance requirements for inscribing or affixing identification numbers into or onto covered original equipment major parts, and the replacement parts for those original equipment parts, on all vehicles in lines selected as high-theft lines.

Section 603(a)(2) of the Motor Vehicle Information Cost Savings Act (15 U.S.C. 2023(a)(2), hereinafter "the Cost Savings Act") specifies that NHTSA shall select high-theft lines with the agreement of the manufacture, if possible. NHTSA has published the procedures that it follows in selecting lines as high-theft lines at 49 CFR Part 542. On January 5, 1988, the agency published its listing of high-theft MY 1988 car lines at 53 FR 133 which included five newly selected lines for MY 1988 and those car lines that were previously selected as high-theft car lines beginning with MY 1987. A sixth MY 1988 car line was inadvertently omitted from the final listing. This amendment corrects that error, by adding the General Motors Buick Reatta car line to the list.

Section 603(d) of the Cost Savings Act (15 U.S.C. 2023(d)) provides that the theft prevention standard must continue to apply to all lines that have been selected as high-theft lines, unless those previously selected lines receive an exemption under section 605 of the Cost Savings Act (15 U.S.C. 2025).

Section 605 provides that a manufacturer may petition to have a high-theft line exempted from the requirements of Part 541, if the line is equipped as standard equipment with an anti-theft device. The exemption is granted if NHTSA determines that the standard equipment anti-theft device is likely to be as effective as compliance with Part 541 in reducing and deterring motor vehicle thefts. The omitted car line does not have an anti-theft device installed as standard equipment.

The revised listing is intended to inform the public, particularly law enforcement groups, concerning which car lines are subject to the marking requirements of the theft prevention standard for the 1988 model year, and which car lines are exempted from the theft prevention standard for the 1988 model year because of standard equipment anti-theft devices.

To repeat, the agency and motor vehicle manufacturers have come to an agreement on these selected car lines, including the omitted line, in accordance with 49 CFR Part 542, and section 603 of the Cost Savings Act. Accordingly, this correction would not impose any additional responsibilities on vehicle manufacturers. It would only inform the public of previous agency action and ensure that all determined likely high-theft car lines are listed.

Accordingly, NHTSA finds for good cause that notice and opportunity for comment on this correction are unnecessary. Based on these same facts, the agency finds for good cause that this correction should be effective as soon as it is published.

List of Subjects in 49 CFR Part 541

Administrative practice and procedure, Labeling, Motor vehicles, Reporting and recordkeeping requirements.

In consideration of the foregoing, 49 CFR Part 541 is amended as follows:

PART 541—[AMENDED]

1. The authority citation for Part 541 continues to read as follows:

Authority: 15 U.S.C. 2021-2024, and 2026; delegation of authority at 49 CFR 1.50.

2. Appendix A of Part 541 is revised for General Motors car lines to read as follows:

Appendix A—Lines Subject to the Requirements of This Standard

* * * * *

Manufacturer	Subject lines
General Motors	Buick Electra.
	Buick LeSabre.
	Buick Reatta.
	Buick Regal.
	Buick Riviera.
	Cadillac Deville.
	Cadillac Eldorado.
	Cadillac Seville.
	Chevrolet Camaro.
	Chevrolet Nova.
	Oldsmobile Cutlass Supreme.

Manufacturer	Subject lines
	Oldsmobile Delta 88. Oldsmobile 98. Oldsmobile Toronado. Pontiac Bonneville. Pontiac Fiero. Pontiac Firebird. Pontiac Grand Prix.

* * * * *

Issued on April 18, 1988.

Diane K. Steed,

Administrator.

[FR Doc. 88-8829 Filed 4-21-88; 8:45 am]

BILLING CODE 4910-59-M

Proposed Rules

Federal Register
Vol. 53, No. 78
Friday, April 22, 1988

This section of the FEDERAL REGISTER contains notices to the public of the proposed issuance of rules and regulations. The purpose of these notices is to give interested persons an opportunity to participate in the rule making prior to the adoption of the final rules.

NUCLEAR REGULATORY COMMISSION

10 CFR Part 76

Regulation of Uranium Enrichment Facilities

AGENCY: Nuclear Regulatory Commission.

ACTION: Advance notice of proposed rulemaking.

SUMMARY: The Nuclear Regulatory Commission (NRC) is considering the addition of new regulations Title 10 (Part 76) for uranium enrichment facilities. The construction and operation of such facilities currently would be licensed pursuant to the Commission's regulations in 10 CFR Part 50 for other production and utilization facilities, such as nuclear power plants. In this notice, the Commission presents its current analysis of the applicability of the existing regulations, in 10 CFR Part 50, to uranium enrichment facilities and poses questions for the purpose of eliciting comments on whether a separate set of regulations for uranium enrichment licensing is desirable.

The General Design Criteria presented in this notice may be proposed for codification in the new regulation. These criteria may also be modified, depending on comments received in response to this notice, and upon further staff analysis.

DATES: The comment period expires on July 21, 1988. Comments received after this date will be considered if it is practical to do so, but assurance of consideration cannot be given except as to comments received on or before this date.

ADDRESSES: *Mail comments to:* The Secretary of the Commission, U.S. Nuclear Regulatory Commission, Washington, DC 20555, Attention: Docketing and Service Branch.

Deliver comments to: 11555 Rockville Pike (One White Flint North) Rockville, MD, between 7:30 a.m. and 4:15 p.m. Examine copies of comments received at: the NRC Public Document Room, 1717 H Street NW., Washington, DC

FOR FURTHER INFORMATION CONTACT: A. Thomas Clark, Jr., Office of Nuclear Material Safety and Safeguards, U.S. Nuclear Regulatory Commission; Washington, DC 20555, telephone (301) 492-0697.

SUPPLEMENTARY INFORMATION:

Background

A uranium enrichment facility is a production facility as defined by section 11(v) of the Atomic Energy Act of 1954, as amended. The regulations which currently govern the Commission's review and evaluation of an application for a production facility are contained in 10 CFR Part 50. Part 50 provides no specific guidance for licensing uranium enrichment facilities. The NRC staff has never received an application for a uranium enrichment facility. The staff, however, has licensed facilities which process uranium hexafluoride, which is the principal chemical form of uranium used in the gaseous diffusion process and the centrifuge process, the current methods used to produce enriched uranium.

However, other methods for enriching uranium can be and are being developed. For example, for several years the Department of Energy has fostered the development of an Atomic Vapor Laser Isotope Separation (AVLIS) process for enriching uranium. The commercial use of these methods would also be subject to regulation by the Commission.

On April 7, 1986, the Department of Energy (the Department or DOE) published a notice in the **Federal Register** (51 FR 11811) requesting expressions of interest for participation in the Department's uranium enrichment program. In addition, on February 17, 1987, the Department submitted a report to the Congress on the privatization of DOE's uranium enrichment enterprise. The report was prepared in response to issues raised in Conference Report H.R. 99-1005 (House Joint Resolution 738 Continuing Appropriation, 1987). The letter transmitting the report indicated that a more specific recommendation would be made by the Department at the end of March on the restructuring of the enrichment enterprise. On March 31, 1987, the Department provided further details on the proposed restructuring. The principal component of the restructuring would be a federally chartered enrichment corporation, which might be subject to regulation by the U.S. Nuclear Regulatory Commission. The NRC staff has also been meeting with some private companies, all of which are expressing an interest in engaging in uranium enrichment under NRC license and regulation.

This advance notice of proposed rulemaking is being published to provide the public, the Department, and the prospective regulated industry an opportunity to provide advice and recommendations to the Commission on the subject of uranium enrichment licensing. The NRC staff has developed guidance, provided below, which would form the foundation for a new rule, if initiated. Because rulemaking may take several years, and applications for private enrichment might be imminent, the NRC staff will proceed with the review of applications and issuance of appropriate licenses and permits, on the basis of the current regulations in 10 CFR Part 50 and the guidelines contained in this advance notice subject to any revisions which might be appropriate based on comments received.

As noted above, current regulations already provide a framework for the licensing review of production facilities. The initiation of a rulemaking to more closely define the substance of NRC review should not hold up the processing to completion of submitted applications.

Uranium Hexafluoride and Public Health and Safety of Uranium Enrichment

Although the regulation of uranium enrichment facilities could include any type of technically feasible enrichment process, as a practical matter the two predominant techniques, gaseous diffusion and gaseous centrifugation, enrich the uranium utilizing the chemical form of uranium hexafluoride. The principal reason for using this form is that the compound is a gas at reasonable temperatures and pressures. The release of uranium hexafluoride from process equipment is a more severe chemical (toxicological) hazard than a radiation (radiological) hazard as discussed below.

If uranium hexafluoride is released to the atmosphere it will react

exothermally with moisture in the air to produce hydrogen fluoride (HF) and uranyl fluoride (UO_2F_2). Both compounds can be toxic. Hydrogen fluoride is a corrosive acid vapor which can severely damage tissue, especially the moist tissue of the lungs if inhaled in sufficient concentrations. If uranyl fluoride is inhaled or ingested, it can cause internal injury to the kidneys and sufficient quantities can be lethal.

In order to demonstrate that the chemical hazard of uranium hexafluoride reaction products far exceeds that of its radiation hazard one might consider the following example related to just one of the reaction products, uranyl fluoride. If a person inhaled sufficient uranyl fluoride, as a result of being exposed to a plume from released uranium hexafluoride (enriched to six percent U-235), such that there was a 50/50 chance of surviving (50 percent lethality) the chemically toxic effects, that person would receive only about 2.5 rem committed (lifetime) total body dose equivalent or about the maximum amount a radiation worker can receive in one calendar quarter (3 rem). Obviously, even further chemical injury could be sustained by the same individual from the hydrogen fluoride produced during the same release of uranium hexafluoride.

Design Guidance Standards Based on Chemical Effects

Based on the above discussion the staff will be guided mainly by the chemical effects of reaction products from uranium hexafluoride in its outlook on design for the protection of the health and safety of the public. The Atomic Energy Act provides authority for the Commission to consider any consequence to the public health and safety inherent in the physical characteristics of licensed source or special nuclear material such as uranium hexafluoride. The staff herein proposes reference values to be used for the evaluation of sites and designs with respect to potential accidents at uranium enrichment facilities. These proposed reference values for UO_2F_2 and HF, based on chemical toxicity, are intedned to be comparable with the original intent of the reactor siting criteria in 10 CFR Part 100, i.e., a whole-body radiation dose guideline value fixed at the point where it is believed that clinically observable threshold effects begin to occur. The staff thus proposes using quantities or concentration values which are at the lower range or average threshold level for chemically toxic effects which, if exceeded, could cause transient or permanent injury.

The staff considers that an intake of about 9 mg of uranium is the level at which slight transient kidney injury is expected to occur, and an intake of about 40 mg of uranium is a reasonable estimate of the threshold level at which permanent kidney damage may begin to occur (see NUREG-1140).[1] Therefore, for design purposes the staff is considering the calculated maximum amount that an adult at or behond the controlled site boundary could inhale, as a result of credible accidents of low probability to be in the range of 9 to 40 mg. Facilities designed such that maximum effects would not exceed this range should not have a significant adverse effect on the health and safety of the public.

For exposure to HF, levels which cause permanent injury are not clearly defined. Exposure to HF at a concentration of 100 mg/m^3 is estimated to be unbearable for one minute. HF at 13 mg/m^3 would be detectable by smell and cause possible irritation. Above 26 mg/m^3, HF would cause irritation and possible health effects.[2] Therefore, the staff considers that 26 mg/m^3 HF is the maximum concentration that a person at or beyond the controlled site boundary could be exposed for short periods, as a result of credible incidents of low probability. Enrichment facilities designed to limit any release to a value below this reference concentration will not have a significant adverse effect on the health and safety of the public.

Analysis of the Applicability of 10 CFR Part 50 to Uranium Enrichment

The NRC staff has reviewed each section of 10 CFR Part 50 to determine which sections do not apply, which sections will apply, including the nature of their applicability, and those which will apply in part. This analysis is based on the staff's judgment as to technical and procedural applicability. The analysis is intended to form a basis for the NRC staff's approach to licensing of uranium enrichment facilities.

A. Those Sections of 10 CFR Part 50 Which Do Not Apply

1. Sections and appendices related only to nuclear reactor licensing:

Sections 50.34a, 50.36a, 50.43, 50.44, 50.46, 50.47, 50.48, 50.49, 50.55a, 50.60, 50.61, 50.62, 50.64, 50.72, 50.73, and 50.109.

Appendices A, C, E, G, H, I, J, K, L, M, N, O, Q, and R.

2. Sections not applicable for reasons other than 1:

Section	Reason
50.11	Exemptions for Federal agencies
50.21	Research and development only
Appendix D	Reserved
Appendix F	Reprocessing only
Appendix P	Reserved

B. Those Sections of 10 CFR Part 50 Which Apply Completely

1. Sections related to administrative procedures: Section 50.1 through 50.10, 50.12, 50.13, 50.20 through 50.32, 50.36b, 50.37 through 50.40, 50.41, 50.42, 50.45, 50.50 through 50.53, 50.56, 50.58, 50.59, 50.70, 50.78, 50.80 through 50.110 except 50.109.

2. Appendix B.

C. Those Sections of 10 CFR Part 50 Which Apply Partially

1. Paragraphs (g) and (i) of § 50.33 do not apply; all other paragraphs apply.

2. Section 50.33a refers to information requested by the Attorney General for antitrust review. Paragraph (c) is reserved. Paragraphs (a), (b), and (d) apply only to nuclear power reactors. Paragraph (e) applies to a uranium enrichment application.

3. Section 50.34, "Contents of Applications; technical information," applies in part to a uranium enrichment plant. The extent to which paragraphs of § 50.34 apply is discussed below:

A. Paragraph (a), Preliminary Safety Analysis Report

The following paragraphs pertain principally to nuclear power plants: (1), (3)(i), (4), (10), and (11). Replacement paragraphs related directly to the intent of these paragraphs should be prepared unless they are only applicable to nuclear power plants.

B. Paragraph (b), Final Safety Analysis Report

The following paragraphs pertain principally to nuclear power plants: (1), (2)(i), (4), (6)(v), (6)(vii), and (9). Replacement paragraphs related directly to the intent of these paragraphs should be prepared unless they are only applicable to nuclear power plants.

C. Paragraph (c), Physical Security Plan

This paragraph applies in its entirety.

[1] Copies of NUREG-1140 may be purchased from the Superintendent of Documents, U.S. Government Printing Office, P.O. Box 37082, Washington, DC 20013-7082. Copies are also available from the National Technical Information Service, 5285 Port Royal Road, Springfield, VA 22161. A copy is also available for public inspection and/or copying at the NRC Public Document Room, 1717 H Street NW., Washington, DC.

[2] Just, R.A., "Report on Toxicological Studies Concerning Exposures to UF_6 and UF_6 Hydrolysis Products," KID-5573, Rev. 1, July 1984.

D. Paragraph (d), Safeguards Contingency Plan

This paragraph applies in its entirety.

E. Paragraph (e) applies in its entirety.

F. Paragraph (f) does not apply.

G. Paragraph (g) does not apply.

4. Section 50.35 applies, except for paragraph (a)(4)(ii), which refers to nuclear power reactor siting criteria. A replacement paragraph related to siting criteria for a uranium enrichment facility should be prepared.

5. Section 50.36 applies in part to uranium enrichment. The following paragraphs related to nuclear power plants will not apply: (c)(1)(i)(A) and (c)(1)(ii)(A). Paragraphs (c)(1)(i)(B) and (c)(1)(ii)(B) apply to fuel reprocessing plants, but could equally as well apply to uranium enrichment plants. Paragraph (c)(2) applies to both nuclear power plants and reprocessing plants. This paragraph could apply to uranium enrichment plants in the same manner as it applies to fuel reprocessing plants. All other paragraphs apply to uranium enrichment except (c)(7), which is specific to nuclear power plants.

6. Section 50.54, "Conditions of Licenses," applies in part to uranium enrichment. Paragraph (a) applies to nuclear power plants and fuel reprocessing plants, but could be applied to a uranium enrichment plant. The following paragraphs apply to a uranium enrichment plant in their entirety: (b), (c), (d), (e), (f), (g), (h), (i), (l), (n), (p), (v), (x), (y), (aa), and (cc). The following paragraphs apply only to nuclear power plants: (j), (m), (o), (q), (r), (s), (t), (u, (w), (z), and (bb). Paragraphs (i-l), and (k), apply to operator licensing and may or may not be applicable to uranium enrichment.

7. Section 50.55, "Conditions of construction permits," applies in part to uranium enrichment. The following paragraphs apply in their entirety to uranium enrichment: (a), (b), (c), and (d). Paragraph (e) applies only to nuclear power plants. Paragraph (f) applies to both nuclear power plants and fuel reprocessing plants (quality assurance) and could apply to a uranium enrichment plant.

8. Section 50.57, "Issuance of operating license," applies in part to uranium enrichment. Paragraphs (a) and (b) apply wholly. Paragraph (c) applies only to nuclear power plants.

9. Section 50.71, "Maintenance of records, making of reports," Paragraphs (a) through (d) apply wholly. Paragraph (e) applies to nuclear power plants, but could apply to a uranium enrichment plant.

Existing Regulatory Basis for Applying Safeguards to Enrichment Facilities

1. Section 50.34(c) requires that each applicant for a license to operate a production or utilization facility must include a physical security plan as part of their application.

2. Section 50.78 requires each holder of a construction permit (issued under Part 50), if requested by the Commission, to submit installation information on Form N-71, permit verification thereof by the International Atomic Energy Agency, and take such other action as may be necessary to implement the US/IAEA Safeguards Agreement, in the manner set forth in §§ 75.6 and 75.11 through 75.14.

3. Section 73.1(b)(1)(i) states that Part 73 prescribes requirements for the physical protection of production and utilization facilities licensed pursuant to Part 50.

4. The material control and accountability requirements of § 70.51(b)(1), (2), (5), and (6), § 70.51(c) and 70.51(d) pertain to enrichment facilities.

5. The Material Control and Accountability Reform Rule, as contained in §§ 74.51, 74.53, 74.55, 74.57, and 74.59, pertains to facilities authorized to possess five formula kilograms (or more) of strategic special nuclear material, except for reprocessing plants and nuclear reactors licensed pursuant to Part 50. Thus, this rule would apply to an enrichment facility that handles or produces high enriched uranium (but not those limited to low enriched uranium production).

6. Sections 70.51, 70.57, and 70.58 (in their entirety) pertain to any facility authorized to possess special nuclear material to moderate strategic significance, except that nuclear reactors licensed pursuant to Part 50 are exempted from §§ 70.57 and 70.58. Thus, an enrichment facility that handles or produces uranium enriched above 10 percent but less than 20 percent (in the U-235 isotope) would be subject to §§ 70.51, 70.57, and 70.58.

Existing Safeguards Regulations That do not Apply to Enrichment Facilities but Could be Applied Either by a Condition of License or by Amending 10 CFR Part 74

1. Section 74.31 (i.e., the Low Enriched Uranium Reform Rule) contains material control and accountability (MC&A) regulations for facilities authorized to possess special nuclear material of low strategic significance, but specifically exempts production and utilization facilities licensed pursuant to Part 50.

Draft General Design Criteria for Uranium Enrichment

The staff has prepared draft General Design Criteria for uranium enrichment which are intended to apply to any technique used for that purpose. These draft General Design Criteria have been drawn from several sources, including those previously proposed for other types of fuel cycle facilities and those in use in 10 CFR Part 50 for nuclear power plants. They are intended to provide general guidance as to topics which must be considered and the overall performance objectives related to each criterion. The actual implementation of the general design criteria will be different than in the case of nuclear power plants and will depend upon the specific processes and designs being considered and will be commensurate with the safety function of the specific structures, systems or components related to those designs. As experience is gained on the application of the criteria, modifications may be deemed appropriate to the criteria. It is also expected that designs to implement the criteria will in most instances not be comparable with that of nuclear power plants. In particular, the confinement criteria might apply to only limited areas of the plant where significant releases could occur which, in turn, could cause exposure in excess of the reference values for toxic effects.

As discussed in a previous section of this notice, the current technologies, using the chemical form uranium hexafluoride, would be of more immediate concern. In this section we provide these draft criteria as based on the NRC staff's current considerations as to potential hazard to the health and safety of the public. We note, in particular, that the draft criteria presented for design for effects of natural phenomena are characterized by return periods. These criteria should be used in conjunction with data provided by competent authorities which relate design variables such as ground acceleration and wind speed to return period.

General Design Criteria

An application for a construction permit for a uranium enrichment facility must include the principal design criteria for the proposed facility. These General Design Criteria establish minimum requirements for the principal design criteria which are commensurate with their safety function. These General Design Criteria may not be complete. Any omissions do not relieve the applicant from the requirement of

providing the necessary safety features in the design of a specific facility. In addition to satisfying the General Design Criteria, the applicant must:

(1) Design against the loss of confinement capability or other capability which would jeopardize the health and safety of the public where such loss of capability results from any single failure in systems having safety significance;

(2) Provide diversity in systems commensurate with their safety function;

(3) Minimize the possibility of non-random, concurrent failures of important elements in protection systems;

(4) Provide design criteria and design bases for resistance of parts of the facility to upper limit accidents and for maximum probable natural phenomena when the consequences of such events endanger the health and safety of the public;

(5) Provide adequate protection for employees from hazards which could affect their performance of actions required to protect the public from exposure to hazardous materials.

There may be some facilities for which the General Design Criteria are not sufficient and for which additional criteria must be satisfied in the interest of public safety. Also some of the General Design Criteria may not be necessary or appropriate for a specific facility. For facilities such as these, departures from the General Design Criteria must be identified and justified.

General Requirements

Quality Standards and Records

Structures, systems, and components which are determined to have safety significance shall be designed, fabricated, erected, and tested in accordance with the quality assurance criteria set forth in Appendix B to 10 CFR Part 50. Appropriate records of the design, fabrication, erection, and testing of structures, systems, and components which are determined to have safety significance must be maintained by or under the control of the licensee throughout the life of the facility.

Protection Against Environmental Conditions

(a) Structures, systems, and components which are determined to have safety significance shall be designed to withstand the effects of, and be compatible with, the environmental conditions associated with operation, maintenance, shutdown, testing, and accidents.

(b) Structures, systems, and components which are determined to have safety significance shall be protected against dynamic effects, including effects of missiles and discharging fluids, that may result from natural phenomena, accidents at nearby industrial, military, or transportation facilities, equipment failure, and other similar events and conditions both inside and outside the facility.

Protection Against Fires and Explosions

Structures, systems, and components which are determined to have safety significance must be designed and located so that they can continue to perform their safety functions effectively under credible fire and explosion exposure conditions. Non-combustible and heat resistance materials must be used wherever practical throughout the facility, particularly in locations vital to the control of hazardous materials and to the maintenance of safety control functions. Explosion and fire detection, alarm, and suppression systems shall be designed and provided with sufficient capacity and capability to minimize the adverse effects of fires and explosion on structures, systems, and components which are determined to have safety significance. The design must include provisions to protect against adverse effects that might result from either the operation or the failure of the fire suppression system.

Sharing of Structures, Systems, and Components

Structures, systems, and components which are determined to have safety significance must not be shared between an enrichment facility and other facilities unless it is shown that such sharing will not impair the capability of the enrichment facility to perform its safety functions, including the ability to return to a safe condition in the event of an accident.

Proximity of Sites

An enrichment facility located near other nuclear facilities must be designed to ensure that the cumulative effects of their combined operations will not constitute an unreasonable risk to the health and safety of the public.

Testing and Maintenance of Systems and Components

Systems and components that are determined to have safety significance must be designed to permit inspection, maintenance, and testing.

Emergency Capability

Structures, systems, and components which are determined to have safety significance must be designed for emergencies. The design must provide for accessibility to the equipment of onsite and available offsite emergency facilities and services such as hospitals, fire and police departments, ambulance service, and other emergency agencies.

Design Basis for Normal Operation, for Accidents, and for Protection Against Natural Phenomena

Design

(a) Enrichment facilities must be designed so that the concentration of hazardous materials at or beyond the boundary of the exclusion area (1) under normal operating conditions, shall be as low as is reasonably achievable, and (2) as the result of design basis accidents including those of low probability, shall not create any undue risk to the health and safety of the public.

(b) The design of the facility must be adequate to provide protection against severe external events that could result in the release of quantities and concentrations of hazardous material which may be of public health and safety significance. The design bases for such events shall take into account their historic frequency and severity in the region of the site and the potential risk to public health and safety, including the inventory of hazardous materials in the facility and the size and the proximity of the population at risk. The type of severe events to be considered will vary among sites, however, earthquakes, tornadoes, and floods shall be considered in all cases, as described in paragraphs c, d, and e below.

(c) Historical information concerning the regional seismicity interpreted in light of regional structural geology and site geological conditions shall be used for determining the maximum vibratory ground motion which reasonably could be expected to affect the site during the operating life of the facility. Such an earthquake will have a mean return period of the order of 500 years.[3] Design earthquakes of shorter return period may be proposed, and shall be justified through considerations of the incremental risk to public health and safety relative to the 500-year interval.

(d) Historical information concerning the regional and local incidence and severity of tornadoes shall be used to establish a site-specific design tornado event. The characteristics of the design

[3] The return period should be related to vibratory ground motion through the use of seismic risk maps such as Figure CI-2 of "Tentative Provisions for the Development of Seismic Regulations for Buildings," Applied Technology Council, ATC 3-06, U.S. Department of Commerce-National Bureau of Standards Special Publication 510, National Science Foundation Publication 78-8. (An update of this map is expected soon.)

tornado shall be determined considering both the tornado frequency for the region in which the facility is located, as well as the frequency of occurrence for a tornado of a given intensity within that region.[4]

(e) The design basis flood as a minimum shall be the Standard Project Flood as defined and in common use by the Corps of Engineers. The Standard Project Flood is the floor resulting from the most severe flood-protection rainfall depth-area-duration relationship and isohyetal pattern of any storm that is considered reasonably characteristic of the region in which the watershed is located. If snow melt may be substantial, appropriate amounts shall be included with the floor-producing rainfall. When floods are predominantly caused by snowmelt, the Standard Project Flood shall be based on critical combinations of snow, temperature, and water losses.

(f) Structures, systems, and components which must withstand the design basis earthquake to meet the requirements of paragraph (a) shall be designed using a suitable dynamic analysis or a suitable qualification test to demonstrate that they can withstand the seismic and other concurrent loads, except where it can be demonstrated that the use of an equivalent static load method provides adequate conservatism.

(g) Conservative estimates of atmospheric dispersion of hazardous material based on local meteorological conditions shall be used to evaluate the impact of normal operations and of design basis accidents to demonstrate compliance with the requirements of paragraph (a).

Confinement Barriers and Systems

Confinement systems shall consist of confinement barriers and equipment which control against the release of hazardous materials to the environment. The confinement systems which are significant to safety shall be designed to protect against the effects of accidents or external natural phenomena and shall be fabricated, erected, appropriately tested, and maintained to ensure prevention of abnormal leakage, rapidly propagating failure, or gross rupture during the design life of the facility.

Compartmentalization of process inventory, when used as a method of reducing the amount of hazardous material capable of being released by any single or local failure of primary containment, shall be considered in design as a means to effectively isolate and contain the process inventory in modular units or states for all reasonable normal or abnormal conditions.

Ventilation Systems

Ventilation systems required for the confinement of hazardous materials shall be designed and appropriately tested to ensure their operability during normal or abnormal conditions. To accomplish this objective, these systems shall be designed to meet the following requirements:

(a) The desired ventilating air flow direction shall be maintained under operating and accident conditions.

(b) The ventilation system shall accommodate changes in operating conditions, such as variations in temperature or pressure, and shall be capable of safely controlling all off-gases that could be associated with normal or accident conditions.

(c) The continuity of necessary ventilation shall be assured by means of alternate equipment, fail-safe systems, or other provisions.

(d) Provisions shall be made for testing, during normal operations, all component functions having safety significance to the extent necessary to provide reasonable assurance that they will perform their design safety functions.

(e) Ventilation systems shall be designed to permit the continued occupancy of any and all areas where such occupancy is required for normal plant operations, for safe shutdown, and for maintaining the facility in a safe shutdown condition. Their design shall include protection against the intake and accumulation of hazardous materials. The design shall also permit the timely and safe evacuation of personnel from all areas.

(f) Ventilation systems shall be designed to confine the hazardous materials during normal operation and to ensure that the release of hazardous materials in the effluent gases is as low as reasonably achievable. Such systems shall also be designed to retain their confinement and separation capability to minimize releases resulting from an accident condition.

Process Safety

Protection Systems

(a) Protection systems shall be designed (1) to initiate action that will assure that specified acceptable operating design limits are not exceeded as a result of operational occurrences and (2) to sense potentially hazardous or accident conditions, and to activate systems and components required to ensure the safety of operating personnel and the public or to give audible and visual alarm so that action can be taken in a timely manner to ensure such safety. Systems and components shall be activated automatically where this mode is compatible with the safety requirements to be satisfied.

(b) Protection systems shall have reliability and *in situ* testability. The design or protection systems shall consider alternate methods at least sufficient to ensure that (1) no single failure results in loss of the protection functions and (2) removal from service of any component does not result in loss of the protection system such that it will operate with acceptable reliability. The protection systems shall be designed to permit the periodic testing of their functions while the plant is in operation to determine competency to perform their intended safety functions.

(c) Protection system shall be designed to fail into a safe state or into a state demonstrated to be acceptable on some other defined basis if conditions such as disconnection of the system, loss of energy or motive power, or adverse environments are experienced.

Instrumentation and Control Systems

Instrumentation and control systems shall be provided to monitor variables and operating systems that are significant to safety over anticipated ranges for normal operation, for abnormal operation, for accident conditions, and for safe shutdown. These systems shall ensure adequate safety of process and utility service operations in connection with their safety function. The variables and systems that require constant surveillance and control include process systems having safety significance, the overall confinement system, confinement barriers and their associated systems, and other systems that affect the overall safety of the plant. Controls shall be provided to maintain these variables and systems within the prescribed operating ranges under all normal conditions. Instrumentation and control systems shall be designed to fail into a safe state or to assume a state

[4] The techniques used in "U.S. Tornadoes, Part 1, 70-Year Statistics, T. Theodore Fujita, the University of Chicago," "Historical Extreme Winds for the United States—Atlantic and Gulf of Mexico Coastlines, M.J. Changery, NOAA, May 1982, NUREG/CR-2639," and "Methodology for Estimating Extreme Winds for Probabilistic Risk Assessments," J. V. Ramsdell, et al., NUREG/CR-4492, PNL-5737, October 1986, to relate return period to design wind speed serve as examples of acceptable techniques. Mean return periods of 10,000 years are likely to yield satisfactory wind speeds.

VOL 53 ISS 78 AP 22 1988 UMI

demonstrated to be acceptable on some other basis if conditions such as disconnection, loss of energy or motive power, or adverse environments are experienced.

Separation of Protection Systems and Control Systems

Protection systems shall be separated from control systems to the extent that a change or failure in a control system leaves intact a protection system with acceptable reliability and independence requirements.

Control Areas

A control room or control areas shall be designed to permit occupancy and actions to be taken to operate the plant safely under normal conditions and under abnormal or accident conditions to either operate the plant safely or to shut down the plant and maintain the plant in a safe condition. There shall be an alternate system designed to allow the plant to be put into a safe condition if any one control room or control area is removed from service.

Process Systems as Primary Confinement Barriers

Process components and systems are the primary confinement barrier. The design of each process system shall provide capability for the system to maintain its integrity and operability as necessary to protect the public health and safety. Provisions shall be included for the safe handling of anticipated nonroutine process conditions.

Utility Services

Onsite utility service systems shall be provided when such onsite service is necessary for emergency use to protect the health and safety of the public. Onsite utility services shall meet the following criteria:

(a) The design of each utility service system required for emergency conditions shall provide for the meeting of safety demands under normal and abnormal conditions. The design of utility services and distribution systems having safety significance shall include alternate systems to the extent necessary to maintain, with adequate capacity, the ability to perform safety functions assuming a single failure.

(b) Emergency utility services shall be designed to permit testing of their functional operability and capacity, including the full operational sequence of each system for transfer between normal and emergency supply sources, and the operation of associated safety systems.

(c) Provisions shall be made so that, in the event of a loss of the primary electric power source or circuit, reliable and timely emergency power will be provided to instruments, confinement systems, utility service systems, and process systems in amounts sufficient to allow operations to be shut down safely and to be maintained in a safe shutdown condition with all safety devices essential to safe shutdown functioning.

Nuclear Criticality Safety

Safety Margins

The design of process and storage systems shall include demonstrable margins of safety for the nuclear criticality parameters that are commensurate with the uncertainties in the process and storage conditions, in the data and methods used in calculations, and in the nature of the immediate environment under accident conditions. All process and storage systems shall be designed to be maintained subcritical and to ensure that no nuclear criticality accident can occur unless at least two unlikely, independent, and concurrent or sequential changes have occurred in the conditions essential to nuclear criticality safety.

Methods of Control

(a) Favorable geometry, in which equipment or systems are subcritical by virtue of neutron leakage under worst credible conditions, is the preferred method of nuclear criticality control.

(b) Where the favorable geometry method of nuclear criticality control is not practical, the use of permanently fixed neutron-absorbing materials (poisons) is the next preferred method of control.

(c) Where both the favorable geometry and the permanently fixed neutron-absorbing materials (poisons) methods of nuclear criticality control are not practical, administrative controls of moderation, fissile material concentration, total fissile material, or the use of soluble neutron-absorbing materials (poisons) shall be employed when combined with margins of safety measurements or appropriate analysis and engineered safety features.

Neutron Absorbers

Where solid neutron-absorbing materials (poisons) are used for the prevention of nuclear criticality, the design shall provide for positive means to verify their continued efficacy. Soluble neutron absorbing materials may be used as a primary nuclear criticality control provided (a) two independent methods are provided to ensure the presence of the required concentration of neutron absorber and (b) the equipment containing the fissile material is located behind sufficient barriers and shielding to reduce the probability and extent of accidental contamination of the environment and accidental radiation exposure to personnel in the event of a criticality accident.

Ancillary Criteria for Nuclear Criticality Safety

(a) Process and storage systems shall be designed to ensure that no mechanisms that could cause segregation of fissile materials can be present in components whose nuclear criticality safety is dependent on the homogeneous distribution of fissile material.

(b) Components whose nuclear criticality safety is dependent on a limiting concentration of fissile material shall be designed so that either (1) mechanisms that could cause critical concentrations of fissile materials are not present or (2) concentration is controlled by positive instrumental means.

(c) Process and storage systems shall be designed to ensure that the transfer of fissile material from safe systems to unsafe systems is not possble as a consequence of any single failure or operating error.

(d) Confinement system components shall be designed to ensure that leakage from equipment or from one confinement zone to another confinement zone cannot result in a condition that would result in nuclear criticality.

(e) The spacing between discrete accumulations of fissile materials shall be controlled so as to maintain a subcritical state.

(f) A criticality monitoring system shall be maintained in each area where special nuclear material is handled, used, or stored which will energize clearly audible alarm signals if accidental criticality occurs.

Radiological Protection

Exposure Control

Radiation protection systems must be provided for all areas and operations where onsite personnel may be exposed to radiation or airborne radioactive materials. Structures, systems, and components for which operation, maintenance, and required inspections may involve occupational exposure must be designed, fabricated, located, shielded, controlled, and tested so as to control external and internal radiation exposures to personnel. The design must include means to:

(a) Prevent the accumulation of radioactive material in those systems requiring access;

(b) Decontaminate those systems to which access is required;

(c) Control access to areas of potential contamination or radiation;

(d) Measure and control contamination of areas requiring access;

(e) Minimize the time required to perform work in the vicinity of radioactive components; for example, by providing sufficient space for ease of operation and designing equipment for ease of repair and replacement; and

(f) Shield personnel from radiation exposure.

Radiological Alarm Systems

Radiological alarm systems must be provided in accessible work areas as appropriate to warn operating personnel of radiation and airborne radioactive material concentrations above a given setpoint and of concentrations of radioactive material in effluents above control limits. Radiation alarm systems must be designed with provisions for calibration and testing their operability.

Effluent and Direct Radiation Monitoring

(a) As appropriate effluent systems must be provided. Means for measuring the amount of radionuclides in effluents during normal operations and under accident conditions must be provided for these systems. A means of measuring the flow of the diluting medium, either air or water, must also be provided.

(b) Areas containing radioactive materials must be provided with systems for measuring the direct radiation levels in and around these areas.

Effluent Control

Facilities must be designed to provide means to limit levels as low as is reasonably achievable the release of radioactive materials in effluents during normal operations; and control the release of radioactive materials under accident conditions.

Decommissioning

The facility must be designed so as to facilitate decommissioning. Provisions must be made to facilitate decontamination of structures and equipment, and facilitate the removal of radioactive wastes and contaminated materials at the time the facility is permanently decommissioned.

Review Plan Topics for NRC Staff

The Commission has taken into account the information contained in the previous paragraphs in this notice, the information guidance set forth in Regulatory Guide 3.2.5, "Standard Format and Content of Safety Analysis Reports for Uranium Enrichment Facilities," and experience gained in previous evaluations of other types of fuel cycle facilities in order to determine the individual topics for its review and evaluation of the safety of a uranium enrichment facility. These topics are as follows: seismology, geology, hydrology, meteorology, site location factors, structural analysis, mechanical equipment analysis, criticality prevention, fire/explosion prevention and protection, ventilation system analysis, identification and sharing of structures, systems, and components important to safety, radioactive waste treatment, packaging, and disposal, radiation protection, chemical safety, accident analysis and emergency planning, decontamination and decommissioning, management organization and quality assurance, technical specifications, human factors, operator licensing, safeguarding special nuclear material, and the protection of classified information. It is expected that each of these topics will be addressed separately in any safety evaluation report prepared by the staff for a uranium enrichment facility.

Questions Related to the Regulation of Uranium Enrichment Facilities

In light of the previous discussion, the U.S. Nuclear Regulatory Commission is particularly interested in receiving comments concerning the following:

1. Are the siting criteria set forth in the General Design Criteria appropriate and complete for uranium enrichment facilities?

2. Are there factors related to protection of the environment and the public other than the chemical toxicity of the reaction products of uranium hexafluoride, that are not taken into account in the bounding conditions in the General Design Criteria?

3. Should the criteria of Appendix B to 10 CFR Part 50, "Quality Assurance Criteria for Nuclear Power Plants and Fuel Reprocessing Plants," be applied in its present form to uranium enrichment facilities?

4. What activities should be performed by a licensed operator and what requirements should apply?

5. Should the technical specification categories applicable to fuel reprocessing plants, as set forth in 10 CFR 50.36, be applied to uranium enrichment facilities?

6. Considering the discussion in this notice concerning the health effects to persons by the uptake of uranium, what value of uranium mass should be used for a basis of design calculation comparable to the twenty-five rem whole body value used for guidance in 10 CFR Part 100?

List of Subjects for Proposed 10 CFR Part 76

Classified information, Hazardous substances, Penalty, Radiation protection, Reporting and recordkeeping requirements, Security measures, Source material, Special nuclear material, Uranium.

The authority citation for this document is:

(Sec. 161, 68 Stat. 948, as amended (42 U.S.C. 2201); sec. 201, 88 Stat. 1242, as amended (42 U.S.C. 5841)).

Dated at Rockville, MD, this 18th day of April 1988.

For the Nuclear Regulatory Commission.

Samuel J. Chilk,

Secretary of the Commission.

[FR Doc. 88-8883 Filed 4-21-88; 8:45 am]

BILLING CODE 7590-01-M

FEDERAL HOME LOAN BANK BOARD

12 CFR Parts 522, 541, 542, 543, 544, 545, 547, 548, 549, 563, 569a, 569b, 569c, and 571

[No. 88-271]

Extension of Time Period for Board Action on Certain Outstanding Proposals

Date: April 11, 1988.

AGENCY: Federal Home Loan Bank Board.

ACTION: Proposed rules; extension of time period for board action.

SUMMARY: Pursuant to its recently adopted regulatory review procedures, *see* Board Res. No. 88-289, published in the **Federal Register** on Thursday, April 21, 1988 the Federal Home Loan Bank Board ("Board") hereby gives notice that it is extending the time period for Board action on the following outstanding proposed regulations outlined in **SUPPLEMENTARY INFORMATION** until October 11, 1988.

This extension of time will allow the Board to further study the issues raised by the proposals in light of passage of the Competitive Equality Banking Act of 1987. The Board is not soliciting additional comments on these proposals, it is only extending the time period for possible Board action until October 11, 1988, pursuant to its recently adopted regulatory review procedures.

DATE: The time period for possible Board action on these proposals expires on October 11, 1988.

FOR FURTHER INFORMATION CONTACT: Deborah Dakin, Acting Regulatory Counsel, (202) 377-6445; or Carol J. Rosa, Paralegal Specialist, (202) 377-7037, Regulations and Legislation Division, Office of General Counsel, Federal Home Loan Bank Board, 1700 G Street, NW., Washington, DC 20552 or the appropriate contact persons listed in the referenced **Federal Register** documents.

SUPPLEMENTARY INFORMATION: The outstanding proposals to be considered further by the Board for possible final action are:

1. Corporate Governance Part I, adopted by the Board on September 13, 1985; 50 FR 38832 (Sept. 25, 1985);

2. Conservators and Receivers, adopted by the Board on November 8, 1985; 50 FR 48970 (Nov. 27, 1985);

3. Corporate Governance Part II, adopted by the Board on November 22, 1985; 50 FR 52462 (Dec. 24, 1985);

4. Over-the-Counter Financial Options Trading; Accounting for Financial Options, adopted by the Board on December 20, 1985; 50 FR 53336 (Dec. 31, 1985);

5. Adjustable Rate Mortgage Home Loan Disclosures, adopted by the Board on January 29, 1987; 52 FR 3665 (Feb. 5, 1987);

6. Accounting Policy Relating to Acquisition, Development and Construction Loans, adopted by the Board on March 4, 1987; 52 FR 7887 (March 13, 1987);

7. Indemnification of FHLBank Officers, Directors and Employees, adopted by the Board on April 1, 1987; 52 FR 12425 (April 16, 1987);

8. Regulatory Capital Requirements, adopted by the Board on June 10, 1987; 52 FR 23645 (June 25, 1987).

The Board notes that this action does not constitute a representation that the Board will take final action with respect to these proposals, only that it may do so within the six-month extended time. Moreover, this action carries no implication whatsoever with respect to the Board's view of the merits of the proposals listed here.

By the Federal Home Loan Bank Board.

John F. Ghizzoni,
Assistant Secretary.

[FR Doc. 88-8901 Filed 4-21-88; 8:45 am]
BILLING CODE 6720-01-M

DEPARTMENT OF TRANSPORTATION

Federal Aviation Administration

14 CFR Parts 21 and 23

[Docket No. 056CE, Notice No. 23-ACE-041]

Special Conditions; GROB Model 115 Series Airplanes

AGENCY: Federal Aviation Administration (FAA), DOT.

ACTION: Notice of Proposed Special Conditions.

SUMMARY: This special condition is proposed for the GROB Model 115 Series Airplanes. The airplane will have a novel and unusual design feature when compared to the state of technology envisaged in the airworthiness standards of 14 CFR Part 23 of the Federal Aviation Regulations (FAR). This novel and unusual design feature includes the use of composite materials for primary flight structure, for which the regulations do not contain adequate or appropriate airworthiness standards. This notice contains the additional safety standards which the Administrator considers necessary to establish a level of safety equivalent to that provided by the airworthiness standards of Part 23.

DATE: Comments must be received on or before May 23, 1988.

ADDRESS: Comments on this proposal may be mailed in duplicate to: Federal Aviation Administration, Office of the Regional Counsel, ACE-7, Attention: Rules Docket Clerk, Docket No. 056CE, Room No. 1558, 601 East 12th Street, Kansas City, Missouri 64106. All comments must be marked: Docket No. 056CE. Comments may be inspected in the Rules Docket weekdays, except Federal holidays, between 7:30 a.m. and 4:00 p.m.

FOR FORTHER INFORMATION CONTACT: Bobby W. Sexton, Aerospace Engineer, Standards Office (ACE-110), Aircraft Certification Division, Central Region, Federal Aviation Administration, Room 1656, 601 East 12th Street, Federal Office Building, Kansas City, Missouri 64106; telephone (816) 426-5688.

SUPPLEMENTARY INFORMATION:

Comments Invited

Interested persons are invited to participate in the making of these special conditions by submitting such written data, views, or arguments as they may desire. Communications should identify the regulatory docket or notice number and be submitted in duplicate to the address specified above. All communications received on or before the closing date for comments specified above will be considered by the Administrator before taking further rulemaking action on this proposal. Commenters wishing the FAA to acknowledge receipt of their comments submitted in response to this notice must include a self-addressed, stamped postcard on which the following statement is made: "Comments to Docket No. 056CE." The postcard will be date stamped and returned to the commenter. The proposals contained in this notice may be changed in light of the comments received. All comments received will be available, both before and after the closing date for comments, in the Rules Docket for examination by interested parties. A report summarizing each substantive public contact with FAA personnel concerned with this rulemaking will be filed in the docket.

Type Certification Basis

The type certification basis for the GROB Model 115 Airplane is as follows: Part 21 of the Federal Aviation Regulations (FAR), § 21.29; Part 23, effective February 1, 1965, as amended by amendments 23-1 through 23-32, effective December 12, 1985; Part 36, effective December 1, 1969, as amended by amendments 36-1 through the amendment effective on the date of type certification; exemptions, if any; and the special conditions that may result from this proposal.

Background

On June 23, 1986, GROB Werke GmbH and Company KG, Flugzeugbau, Am Flugplatz, D-8939 Mattsies, Federal Republic of Germany, made application to the FAA for a type certificate for the GROB Model 115 Airplane. The GROB Model 115 will be a two-place, single-engine airplane with tricycle landing gear, a gross weight of 1874 pounds, and constructed using composite material in the primary structure.

Special conditions may be issued and amended, as necessary, as part of the type certification basis if the Administrator finds that the airworthiness standards designated in accordance with § 21.17(a)(1) do not contain adequate or approprate safety standards because of novel or unusual design features of an airplane. Special conditions, as appropriate, are issued in accordance with § 11.49, after public notice, as required by §§ 11.28 and 11.29(b), effective October 14, 1980, and will become part of the type certification basis, as provided by § 21.17(a)(2).

The proposed type design of the GROB Model 115 Airplane contains a novel or unusual design feature not

envisaged by the applicable Part 23 airworthiness standards. Special conditions are considered necessary because the airworthiness standards of Part 23 do not contain adequate or appropriate safety standards for the novel or unusual design feature of the GROB Model 115 Airplane.

The GROB Model 115 airframe is made of advanced composite material and is assembled by the extensive use of bonding. This material and its assembly is completely different from the typical semi-monocoque aluminum airframes that have been predominant since the early 1940's. Composite material of the type used on the GROB Model 115 Airplane is generally not susceptible to initiation of fatigue cracks by the application of repetitive loads, but is susceptible to damage in the form of cracks, breaks, and delaminations from instrinsic and discrete source growing under application of repetitive loads. Because of this and other factors, the FAA has determined that the wing fatigue requirements of § 23.572 are inadequate to assure that composite material structure can withstand the repeated loads of variable magnitude expected in service.

The use of composite materials and extensive bonding of these materials in primary flight structure is a novel and unusual design feature with respect to the type of airplane construction envisaged by the existing airworthiness standards of Part 23. Because the requirements of Part 23 do not require the level of substantiation necessary for composite material structure, special conditions are proposed to include the necessary airworthiness standards, as a part of the type certification basis for the GROB Model 115 Airplane. This special condition is proposed to assure that a level of safety exists for airplanes from bonded, composite materials equivalent to those existing for aluminum airplanes.

The proposed special condition will require the wings and other composite structural components critical to safe flight be evaluated by damage tolerance criteria. The damage tolerance consideration includes principal strucrural elements such as the wing, wing carry-through, wing attaching structure, fuselage, and the vertical and horizontal stabilizers and their carry-through structures, since failure of these structures could have catastrophic results. When damage tolerance is shown to be impractical, the proposed special condition is worded to permit approval, based on safe-life testing. Metal details may continue to be evaluated to the fatigue requirements of § 23.572.

Damage tolerance criteria for composite structure, in combination with the existing material requirements of Part 23, such as §§ 23.603 and 23.613, will provide a level of safety for the composite material airframe structure used in the GROB Model 115 Airplane equivalent to that required by the airworthiness standards of Part 23.

In addition to those components requiring fatigue/damage tolerance evaluations, other components that are critical to flight safety, such as moveable control surfaces and wing flaps, must also be protected against loss of strength or stiffness. Protection conventionally is provided through design and inspection. Since composite material strength is susceptible to manufacturing defects and damage from discrete sources, including lightning strikes, process controls and inspectability are limited; therefore, structures design must provide for these limits with adequate protection allowances.

The lack of adequate service experience with composite material structures in airplanes type certificated to the airworthiness standards of Part 23, the unusual mechanical properties characteristics, and the experience with composite material structural bonding, to date, necessitate proposing special conditions to assure an appropriate level of safety for the GROB Model 115 airframe structure. This proposed special condition is intended to require: (1) Accounting for environment effects; i.e., temperature and humidity on material mechanical properties in all structural substantiation analyses and tests, (2) limit load residual strength with impact damage from discrete sources; (3) ability to carry ultimate load with realistic intrinsic and discrete impact damage at the threshold of detectability, and (4) design features to prevent disbonds greater than the disbonds for which limit load capability has been shown. Proof-testing of each production component to limit load and reliance on manufacturing quality control procedures between limit and ultimate load may be used in lieu of "design features", provided each bonded joint is subjected to its critical design limit load during the proof testing. Acceptable non-destructive testing techniques do not yet exist in state-of-the-art composite technology to reliably identify weak bonds. However, proof-testing of each production article may be discontinued if such tests are developed and accepted by the FAA.

Because the composite material and bonding may require preventative maintenance and inspection procedures different from those commonly utilized for aluminum airframes, the proposed special condition requires that instructions for continued airworthiness be established in addition to those required by § 23.1529.

List of Subjects in 14 CFR Parts 21 and 23

Aviation safety, Aircraft, Air transportation, Safety, Tires.

The authority citation for this special condition is as follows:

Authority: Secs. 313(a), 601, and 603 of the Federal Aviation Act of 1958; as amended (49 U.S.C. 1354(a), 1421, and 1423); 49 U.S.C. 106(g) (Revised Pub. L. 97–449, January 12, 1983); 14 CFR 21.16 and 21.17; and 14 CFR 11.28 and 11.49.

The Proposed Special Condition

Accordingly, the Federal Aviation Administration proposes the following special condition as a part of the type certification basis for the GROB Model 115 Airplanes:

1. Evaluation of Composite Structure

In lieu of complying with § 23.572, and in addition to the requirements of §§ 23.603 and 23.613, airframe structure, the failure of which would result in catastrophic loss of airplane, in each wing, wing carry-through, wing attaching structure, horizontal stabilizer, stabilizer carry-through and attaching structures fuselage, vertical stabilizer and attaching structure, wing flaps, and all movable control surfaces must be evaluated to damage tolerance criteria prescribed in paragraphs (a) through (j) of this special condition, unless shown to be impractical. In cases shown to be impractical, the aforementioned structure must be evaluated in accordance with the criteria of paragraphs (a) and (k) of this special condition. Where bonded joints are used, the structure must also be evaluated in accordance with the residual strength criteria in paragraph (h) of this special condition.

(a) It must be demonstrated by tests, or by analysis supported by tests, that the structure is capable of carrying ultimate load with impact damage. The level of impact damage considered need not be more than the established threshold of detectability considering the inspection procedures employed.

(b) The growth rate of damage that may occur from fatigue, corrosion, intrinsic defects, manufacturing defects; e.g., bond defects, or damage from discrete sources under repeated loads

expected in service; i.e., between the time at which damage becomes initially detectable and the time at which the extent of damage reaches the value selected by the applicant for residual strength demonstration, must be established by tests or by analysis supported by tests.

(c) The damage growth, between initial detectability and the value selected for residual strength demonstrations, factored to obtain inspection intervals, must permit development of an inspection program suitable for application by operation and maintenance personnel.

(d) Instructions for continued airworthiness for the airframe must be established consistent with the results of the damage tolerance evaluations. Inspection intervals must be set so that after the damage initially becomes detectable by the inspection method specified, the damage will be detected before it exceeds the extent of damage for which residual strength is demonstrated.

(e) Loads spectra, load truncation, and the locations and types of damage considered in the damage tolerance evaluations must be documented in test proposals.

(f) The structure of the fuselage must be shown by residual strength tests, or by analysis supported by residual strength tests, to be able to withstand critical limit flight loads, considered as ultimate loads, with damage consistent with the results of the damage tolerance evaluations.

(g) Each wing, wing carry-through, wing attaching structure, vertical stabilizer, horizontal stabilizer, horizontal stabilizer carry-through and attaching structure, wing flaps, and all movable control surfaces, must be shown by residual strength tests, or analysis supported by residual strength tests, to be able to withstand critical limit flight loads, considered as ultimate loads, with the extent of damage consistent with the results of the damage tolerance evaluations.

(h) In lieu of a non-destructive inspection technique which assures ultimate strength of each bonded joint, the limit load capacity of each bonded joint critical to safe flight must be substantiated by either of the following methods used singly or in combination:

(1) The maximum disbonds of each bonded joint consistent with the capability to withstand the loads in paragraphs (f) and (g) of this special condition must be determined by analysis, tests, or both. Disbonds of each bonded joint greater than this must be prevented by design features.

(2) Proof testing must be conducted on each production article which will apply the critical limit design load to each critical bonded joint.

(i) The effects of material variability and environmental conditions; e.g., exposure to temperature, humidity, erosion, ultraviolet radiation, and/or chemicals, on the strength and durability properties of the composite materials must be accounted for in the damage tolerance evaluations and in the residual strength tests.

(j) The airplane must be shown by analysis to be free from flutter to V_D with the extent of damage for which residual strength is demonstrated.

(k) For those structures where the damage tolerance method is shown to be impractical, the strength of such structures must be demonstrated by tests, or analysis supported by tests, to be able to withstand the repeated loads of variable magnitude expected in service. Impact damage in composite material components which may occur must be considered in the demonstration. The impact damage level considered must be consistent with detectability by the inspection procedures employed.

Issued in Kansas City, Missouri, on April 1, 1988.

Paul K. Bohr,

Director, Central Region.

[FR Doc. 88-8826 Filed 4-21-88; 8:45 am]

BILLING CODE 4910-13-M

---

14 CFR Part 39

[Docket No. 88-NM-28-AD]

Airworthiness Directives; Boeing Model 767 Series Airplanes

AGENCY: Federal Aviation Administration (FAA), DOT.

ACTION: Notice of Proposed Rulemaking (NPRM).

SUMMARY: This notice proposes a new airworthiness directive (AD), applicable to Boeing Model 767 series airplanes, which would require inspection of the aft pressure bulkhead for damage and cracking, and repair, if necessary. This proposal is prompted by reports of damage on the aft side of the pressure bulkhead sustained during maintenance operations. This condition, if not corrected, could lead to failure of the aft pressure bulkhead and depressurization of the airplane.

DATE: Comments must be received no later than June 15, 1988.

ADDRESSES: Send comments on the proposal in duplicate to Federal Aviation Administration, Northwest Mountain Region, Office of the Regional Counsel (Attn: ANM-103), Attention: Airworthiness Rules Docket No. 88-NM-28-AD, 17900 Pacific Highway South, C-68966, Seattle, Washington 98168. The applicable service information may be obtained from the Boeing Commercial Airplane Company, P.O. Box 3707, Seattle, Washington 98124. This information may be examined at the FAA, Northwest Mountain Region, 17900 Pacific Highway South, Seattle, Washington, or Seattle Aircraft Certification Office, FAA, Northwest Mountain Region, 9010 East Marginal Way South, Seattle, Washington.

FOR FURTHER INFORMATION CONTACT: Ms. Barbara J. Baillie, Airframe Branch, ANM-120S; telephone (206) 431-1927. Mailing address: FAA, Northwest Mountain Region, 17900 Pacific Highway South, C-68966, Seattle, Washington 98168.

SUPPLEMENTARY INFORMATION:

Comments Invited

Interested persons are invited to participate in the making of the proposed rule by submitting such written data, views, or arguments as they may desire. Communications should identify the regulatory docket number and be submitted in duplicate to the address specified above. All communications received on or before the closing date for comments specified above will be considered by the Administrator before taking action on the proposed rule. The proposals contained in this Notice may be changed in light of the comments received. All comments submitted will be available, both before and after the closing date for comments, in the Rules Docket for examination by interested persons. A report summarizing each FAA/public contact concerned with the substance of this proposal will be filed in the Rules Docket.

Availability of NPRM

Any person may obtain a copy of this Notice of Proposed Rulemaking (NPRM) by submitting a request to the FAA, Northwest Mountain Region, Office of the Regional Counsel (Attn: ANM-103), Attention: Airworthiness Rules Docket No. 88-NM-28-AD, 17900 Pacific Highway South, C-68966, Seattle, Washington 98168.

Discussion: Several operators of Boeing Model 767 series airplanes have reported damage (e.g., dents, tears, nicks, gouges, corrosion, or scratches) on the aft side of the aft pressure bulkhead sustained while accomplishing maintenance operations in the bulkhead vicinity. This type of accidental damage

to the aft pressure bulkhead, if left undetected, could lead to failure of the bulkhead and depressurization of the airplane.

The FAA has reviewed and approved Boeing Service Bulletin 767-53-0026, dated November 19, 1987, which describes inspection procedures and references repairs for aft pressure bulkhead damage and cracking.

Since this condition is likely to exist or develop on other airplanes of this same type design, an AD is proposed which would require inspection for damage or cracking, and repair, if necessary, of the aft pressure bulkhead, in accordance with the service bulletin previously mentioned.

It is estimated that 82 airplanes of U.S. registry would be affected by this AD, that it would take approximately 12 manhours per airplane to accomplish the required actions, and that the average labor cost would be $40 per manhour. Based on these figures, the total cost impact of the AD on U.S. operators is estimated to be $39,360.

For these reasons, the FAA has determined that this document (1) involves a proposed regulation which is not major under Executive Order 12291 and (2) is not a significant rule pursuant to the Department of Transportation Regulatory Policies and Procedures (44 FR 11034; February 26, 1979); and it is further certified under the criteria of the Regulatory Flexibility Act that this proposed rule, if promulgated, will not have a significant economic impact, positive or negative, on a substantial number of small entities because few, if any, Model 767 airplanes are operated by small entities. A copy of a draft regulatory evaluation prepared for this action is contained in the regulatory docket.

List of Subjects in 14 CFR Part 39

Aviation safety, Aircraft.

The Proposed Amendment

Accordingly, pursuant to the authority delegated to me by the Administrator, the Federal Aviation Administration proposes to amend § 39.13 of Part 39 of the Federal Aviation Regulations (14 CFR 39.13) as follows:

PART 39—[AMENDED]

1. The authority citation for Part 39 continues to read as follows:

Authority: 49 U.S.C. 1354(a), 1421 and 1423; 49 U.S.C. 106(g) (Revised Pub. L. 97-449, January 12, 1983); and 14 CFR 11.89.

§ 39.13 [Amended]

2. By adding the following new airworthiness directive:

Boeing: Applies to Model 767 series airplanes, line numbers 1 through 175, certificated in any category. Compliance required as indicated, unless previously accomplished.

To prevent a condition that would lead to depressurization of the airplane, accomplish the following:

A. Prior to the accumulation of 6,000 flight cycles or within the next 1,000 flight cycles after the effective date of this AD, whichever occurs later, and thereafter at intervals not to exceed 6,000 flight cycles, perform a detailed visual inspection of the aft side of the entire Body Station 1582 pressure bulkhead for damage (as defined in the Structural Repair Manual) and cracking, in accordance with Boeing Service Bulletin 767-53-0026, dated November 19, 1987, or later FAA-approved revisions.

B. Repair damage and/or cracking, prior to further flight, in accordance with Boeing Service Bulletin 767-53-0026, dated November 19, 1987, or later FAA-approved revisions.

C. An alternate means of compliance or adjustment of the compliance time, which provides an acceptable level of safety and which has the concurrence of an FAA Principal Maintenance Inspector, may be used when approved by the Manager, Seattle Aircraft Certification Office, FAA, Northwest Mountain Region.

D. Special flight permits may be issued in accordance with FAR 21.197 and 21.199 to operate airplanes to a base in order to comply with the requirements of this AD.

All persons affected by this directive who have not already received the appropriate service documents from the manufacturer may obtain copies upon request to the Boeing Commercial Airplane Company, P.O. Box 3707, Seattle, Washington 98124. These documents may be examined at the FAA, Northwest Mountain Region, 17900 Pacific Highway South, Seattle, Washington, or Seattle Aircraft Certification Office, FAA, Northwest Mountain Region, 9010 East Marginal Way South, Seattle, Washington.

Issued in Seattle, Washington, on April 12, 1988.

Frederick M. Isaac,

Acting Director, Northwest Mountain Region.

[FR Doc. 88-8624 Filed 4-21-88; 8:45 am]

BILLING CODE 4910-13-M

---

14 CFR Part 39

[Docket No. 88-NM-29-AD]

Airworthiness Directives; Boeing Model 767 Series Airplanes

AGENCY: Federal Aviation Administration (FAA), DOT.

ACTION: Notice of Proposed Rulemaking (NPRM).

SUMMARY: This notice proposes a new airworthiness directive (AD), applicable to certain Boeing Model 767 seiries airplanes, which would require the covering of a gap in the engine compartment firewall between the core cowl and thrust reverser cowl interface at the pylon to cowl fillet fairing. This proposal is prompted by reports of a gap in the firewall in this area of approximately ⅜ inch by 4 inches. It has been determined that this gap exists on all Model 767 airplanes. This condition, if not corrected, could lead to penetration of an engine fire through this gap, which may then spread to other parts of the airplane.

DATE: Comments must be received no later than June 10, 1988.

ADDRESSES: Send comments on the proposal in duplicate to Federal Aviation Administration, Northwest Mountain Region, Office of the Regional Counsel (Attn: ANM-103), Attention: Airworthiness Rules Docket No. 88-NM-29-AD, 17900 Pacific Highway South, C-68966, Seattle, Washington 98168. The applicable service information may be obtained from the Boeing Commercial Airplane Company, P.O. Box 3707, Seattle, Washington 98124. This information may be examined at the FAA, Northwest Mountain Region, 17900 Pacific Highway South, Seattle, Washington, or Seattle Aircraft Certification Office, FAA, Northwest Mountain Region, 9010 East Marginal Way South, Seattle, Washington.

FOR FURTHER INFORMATION CONTACT: Mr. Steven P. Clark, Propulsion Branch, ANM-140S; telephone (206) 431-1963. Mailing address: FAA, Northwest Mountain Region, 17900 Pacific Highway South, C-68966, Seattle, Washington 98168.

SUPPLEMENTARY INFORMATION:

Comments Invited

Interested persons are invited to participate in the making of the proposed rule by submitting such written data, views, or arguments as they may desire. Communications should identify the regulatory docket number and be submitted in duplicate to the address specified above. All communications received on or before the closing date for comments specified above will be considered by the Administrator before taking action on the proposed rule. The proposals contained in this Notice may be changed in light of the comments received. All comments submitted will be available, both before and after the closing date for comments, in the Rules Docket for examination by interested persons. A

report summarizing each FAA/public contact concerned with the substance of this proposal will be filed in the Rules Docket.

Availability of NPRM

Any person may obtain a copy of this Notice of Proposed Rulemaking (NPRM) by submitting a request to the FAA, Northwest Mountain Region, Office of the Regional Counsel (Attn: ANM-103), Attention: Airworthiness Rules Docket No. 88-NM-29-AD, 17900 Pacific Highway South, C-68966, Seattle, Washington 98168. *Discussion:* Recently, a gap was found in the engine firewall of a production Model 767 airplane between the core cowl and thrust reverser cowl interface at the pylon to cowl fillet fairing. The gap is approximately ⅜ inch wide by 4 inches long. The gap was found on an airplane equipped with Pratt and Whitney JT9D-7R4 engines; however, it has since been determined that the gap also exists on airplanes equipped with General Electric CF6-80A, -80A2, and -80C2 engines. This firewall gap results from an error in the basic type design of the airplane; therefore, it exists on all delivered Model 767 airplanes.

The purpose of the firewall is to isolate the rest of the airplane from a fire in the engine compartment. This firewall gap, if not corrected, could lead to penetration of an engine fire through the gap, which may then spread to other parts of the airplane.

Since this condition exists on other airplanes of this same type design, an AD is proposed which would require the installation of a firewall seal to cover the gap, in a manner approved by the Manager, Seattle Aircraft Certification Office, FAA, Northwest Mountain Region. Boeing is currently developing service bulletins for both the Pratt and Whitney JT9D and General Electric CF6 installations, which would accomplish the intent of this proposed AD. When these service bulletins are reviewed and approved by the FAA, they may be referenced as an acceptable means of compliance with this AD.

It is estimated that 88 airplanes of U.S. registry would be affected by this AD, that it would take approximately 14 manhours per airplane to accomplish the required actions, and that the average labor cost would be $40 per manhour. It is estimated that parts would cost approximately $1,800 per airplane. Based on these figures, the total cost impact of the AD on U.S. operators is estimated to be $207,680.

For these reasons, the FAA has determined that this document (1) involves a proposed regulation which is not major under Executive Order 12291 and (2) is not a significant rule pursuant to the Department of Transportation Regulatory Policies and Procedures (44 FR 11034; February 26, 1979); and it is further certified under the criteria of the Regulatory Flexibility Act that this proposed rule, if promulgated, will not have a significant economic impact, positive or negative, on a substantial number of small entities because few, if any, Model 767 series airplanes are operated by small entities. A copy of a draft regulatory evalution prepared for this action is contained in the regulatory docket.

List of Subjects in 14 CFR Part 39

Aviation safety, Aircraft.

The Proposed Amendment

Accordingly, pursuant to the authority delegated to me by the Administrator, the Federal Aviation Administration proposes to amend § 39.13 of Part 39 of the Federal Aviation Regulations (14 CFR 39.13) as follows:

PART 39—[AMENDED]

1. The authority citation for Part 39 continues to read as follows:

Authority: 49 U.S.C. 1354(a), 1421 and 1423; 49 U.S.C. 106(g) (Revised Pub. L. 97-449, January 12, 1983); and 14 CFR 11.89.

§ 39.13 [AMENDED]

2. By adding the following new airworthiness directive:

Boeing: Applies to Model 767 series airplanes, certificated in any category. Compliance required as indicated, unless previously accomplished.

To preclude the spread of an engine fire to other parts of the airplane through a gap in the engine firewall, accomplish the following:

A. Within 90 days after the effective date of this AD, install a firewall seal to cover a gap located between the engine core cowl and thrust reverser cowl at the pylon to cowl fillet fairing, in a manner approved by the Manager, Seattle Aircraft Certification Office, FAA, Northwest Mountain Region.

B. An alternate means of compliance or adjustment of the compliance time, which provides an acceptable level of safety and which has the concurrence of an FAA Principal Maintenance Inspector, may be used when approved by the Manager, Seattle Aircraft Certification Office, FAA, Northwest Mountain Region.

All persons affected by this directive who have not already received the appropriate service documents from the manufacturer may obtain copies upon request to the Boeing Commercial Airplane Company, P.O. Box 3707, Seattle, Washington 98124. These documents may be examined at the FAA, Northwest Mountain Region, 17900 Pacific Highway South, Seattle, Washington, or Seattle Aircraft Certification Office, FAA, Northwest Mountain Region, 9010 East Marginal Way South, Seattle, Washington.

Issued in Seattle, Washington, on April 14, 1988.

Frederick M. Isaac,

Acting Director, Northwest Mountain Region.

[FR Doc. 88-8825 Filed 4-21-88; 8:45 am]

BILLING CODE 4910-13-M

---

14 CFR Part 71

[Airspace Docket No. 88-ANE-11]

Proposed Control Zone for Boire Field, Nashua, NH

AGENCY: Federal Aviation Administration (FAA), DOT.

ACTION: Notice of proposed rulemaking.

SUMMARY: This notice (NPRM) proposes to designate a control zone to encompass airspace surrounding the airport of Boire Field, Nashua, NH. The action will allow positive control of aircraft operations in the vicinity of the airport during instrument meteorological conditions. Airspace affected by designation of the control zone extends upward from the surface of the ground within a five-mile radius of the airport, with extensions needed to contain IFR arrival and departure operations. The control zone is planned on a part-time schedule as follows:

October 1–April 30, from 8:00 a.m. local to 6:00 p.m. local.

May 1–September 30, from 7:00 a.m. local to 9:00 p.m. local.

DATE: Comments must be received on or before June 17, 1988.

ADDRESSES: Send comments on the proposal in triplicate to: Federal Aviation Administration, ANE-530; Manager, Operations, Procedures, and Airspace Branch, Air Traffic Division; 12 New England Executive Park; Burlington, MA 01803.

The official docket may be examined in the Office of the Regional Counsel, FAA New England Region; 12 New England Executive Park; Burlington, MA 01803; telephone 617-273-7309.

FOR FURTHER INFORMATION CONTACT: John Silva, Airspace Specialist; Operations, Procedures, and Airspace Branch, Air Traffic Division; Federal Aviation Administration; 12 New England Executive Park; Burlington, MA 01803; telephone 617-270-2428.

SUPPLEMENTARY INFORMATION:

Comments Invited

Interested parties are invited to participate in this proposed rulemaking by submitting such written data, views

BEST COPY AVAILABLE

or arguments as they may desire. Comments that provide the factual basis supporting the views and suggestions presented are particularly helpful in developing reasoned regulatory decisions on the proposal. Comments are specifically invited on the overall regulatory, economic, environmental, and energy aspects of the proposal. Communications should identify the airspace docket and be submitted in triplicate to the address listed above. Commenters wishing the FAA to acknowledge receipt of their comments on this notice must submit with those comments a self-addressed, stamped postcard on which the following statement is made: "Comments to Airspace Docket No. 88-ANE-11." The postcard will be date/time stamped and returned to the commenter. All communications received before the specified closing date for comments will be considered before taking action on the proposed rule. The proposal contained in this notice may be changed in consideration of the comments received. All comments submitted will be available for examination in the Office of Regional Counsel, FAA New England Region; 12 New England Executive Park; Burlington, MA 01803; both before and after the closing date for comments. A report summarizing each substantive public contact with FAA personnel concerned with this rulemaking will be filed in the docket.

Availability of NPRM

Any person may obtain a copy of this Notice of Proposed Rulemaking (NPRM) by submitting a request to the Federal Aviation Administration; Manager, Operations, Procedures, and Airspace Branch; 12 New England Executive Park; Burlington, MA 01803. Communications must identify the notice number of this NPRM. Persons interested in being placed on a mailing list for future NPRM's should also request a copy of Advisory Circular No. 11-2 which describes the application procedure.

The Proposal

The FAA is considering an amendment to § 71.171 of Part 71 of the Federal Aviation Regulations (14 CFR Part 71) to designate a control zone to encompass airspace surrounding Boire Field, Nashua, NH. This action will allow for positive control of aircraft operations in the vicinity of the airport during instrument meteorological conditions and enhance aviation safety in that area. Section 71.171 of Part 71 of the Federal Aviation Regulations was republished in FAA Order 7400.6D dated January 4, 1988.

The FAA has determined that this proposed regulation only involves an established body of technical regulations for which frequent and routine amendments are necessary to keep them operationally current. It, therefore, (1) is not a "major rule" under Executive Order 12291; (2) is not a "significant rule" under DOT Regulatory Policies and Procedures (44 FR 11034; February 26, 1979); and (3) does not warrant preparation of a regulatory evaluation as the anticipated impact is so minimal. Since this is a routine matter that will only affect air traffic procedures and air navigation, it is certified that this rule, when promulgated, will not have a significant economic impact on a substantial number of small entities under the criteria of the Regulatory Flexibility Act.

List of Subjects in 14 CFR Part 71

Aviation safety, Control zone.

The Proposed Amendment

Accordingly, pursuant to the authority delegated to me, the Federal Aviation Administration (FAA) proposes to amend Part 71 of the Federal Aviation Regulations (14 CFR Part 71) as follows:

PART 71—DESIGNATION OF FEDERAL AIRWAYS, AREA LOW ROUTES, CONTROLLED AIRSPACE, AND REPORTING POINTS

1. The authority citation for Part 71 continues to read as follows:

Authority: 49 U.S.C. 1348 (a), 1354 (a), 1510; Executive Order 10854; 49 U.S.C. 106 (g) (Revised Pub. L. 97-449, January 12, 1983); 14 CFR 11.69.

§ 71.171 [Amended]

2. Section 71.171 is amended as follows:

Nashua, NH (NEW)

Within a 5-mile radius of Boire Field, Nashua, NH (lat. 42°,46'54" N., long. 71°,30',55" W.), and within 4 miles each side of the Manchester VORTAC 249° radial, extending from the 5-mile radius zone to 3 miles southwest of the VORTAC, excluding that portion within the Manchester Control Zone, and within 3 miles each side of 303° T (319° M) bearing from the Lowis NDB (lat. 42°49'24' N., long. 71°36'10" W.), extending from the 5-mile radius zone to 8 miles northwest of the airport. This control zone is effective during the specific days and time established in advance by a Notice to Airmen. The effective days will thereafter be continuously published in the Airport/Facility Directory.

Issued in Burlington, Massachusetts, on April 8, 1988.

James I. Lucas,

Manager, Air Traffic Division, New England Region.

[FR Doc. 88-8827 Filed 4-21-88; 8:45 am]

BILLING CODE 4910-13-M

COMMODITY FUTURES TRADING COMMISSION

17 CFR Part 140

Conduct of Members and Employees of the Commission

AGENCY: Commodity Futures Trading Commission.

ACTION: Proposed rule.

SUMMARY: The Commission proposes to revise its Code of Conduct for Commission members and employees. Section 140.735-8(a) of the Commission's Code of Conduct, 17 CFR 140.735-8(a), generally prohibits Commission members or employees from accepting any gift, meal, entertainment or other thing of monetary value from an organization or person with whom they transact official business. Section 140.735-8(b) of the Code of Conduct, 17 CFR 140.735-8(b), provides several exceptions to this general prohibition.

The proposed rule changes would revise certain of these exceptions to conform to an interpretation of similar governmentwide ethics provisions recently issued by the Office of Government Ethics. The revisions would permit commission members and employees to accept food and refreshments at certain meetings and, under certain circumstances, at widely-attended events sponsored by what otherwise might be prohibited sources, provided that the General Counsel approves such acceptance in advance. The Commission's proposed rule changes, which relate solely to agency organization, procedure, and practice, have been approved by the Office of Government Ethics of the Office of Personnel Management.

DATE: Comments must be submitted on or before June 6, 1988.

ADDRESS: Comments should be submitted to the Office of the Secretariat, Commodity Futures Trading Commission, 2033 K Street NW., Washington, DC 20581.

FOR FURTHER INFORMATION CONTACT: Helen G. Blechman, Assistant General Counsel, Office of the General Counsel, Commodity Futures Trading Commission, 2033 K Street NW.,

Washington, DC 20581. Telephone: (202) 254-9880.

SUPPLEMENTARY INFORMATION: The Commission has generally deemed informal contacts and interchange of ideas with members of the commodities industry, their representatives, and other individuals or entities with an interest in its regulatory actions to be an important supplement to the formal appearance and submissions made to the Commission by these entities and persons. Accordingly, Commission members and staff frequently participate in educational programs sponsored by non-federal entities that serve to educate the commodities industry and the general public about the Commission's regulatory activities. In addition to formal educational programs, Commission members and employees are often invited to attend group functions given by regulated entities, self-regulatory organizations, trade associations, and other entities having an interest in Commission activities and business. Commission staff is also often invited with other federal officials to attend trade fairs and similar gatherings which display new equipment and services that are becoming available to the government. The Commission deems the opportunities for sharing views and obtaining information at such widely-attended gatherings to be beneficial to the functioning of the agency.

However, as explained below, an October 23, 1987 Office of Government Ethics ("OGE") memorandum interpreting Executive Order 11222 and 5 CFR 735.202 precludes Commission members and employees from accepting food and refreshment at certain of these gatherings absent an amendment to the Commission's Code of Conduct.

Section 140.735-8(a) of the Commission's Code of Conduct, 17 CFR 140.735-8(a), which is patterned after Section 201 of the Executive Order 11222 and 5 CFR 735.202(a), prohibits Commission members or employees from accepting, directly or indirectly, any gift, gratuity, favor, meal, entertainment or other thing of monetary value from an organization or person (1) with whom they transact business on behalf of the United States; (2) who has, or is seeking to obtain, contractual or other business or financial relations with the Commission; (3) who conducts operations or activities regulated by the Commission; or (4) who has interests that may be substantially affected by the performance or nonperformance of their official duty. Section 140.735-8(b), 17 CFR 140.735-8(b), provides several exceptions to this general prohibition in accordance with Executive Order 11222 and 5 CFR 735.202(b). For example, 140.735-8(b)(3), 17 CFR 140.735-8(b)(3), permits acceptance "when, on infrequent occasions, food and refreshments of nominal value are offered in the ordinary course of a luncheon or dinner meeting or other meeting."

Stated to reflect long-term policy, the OGE October 23, 1987 memorandum interpreted language identical to that found in § 140.735-8(b)(3) to permit acceptance of food and refreshments only at:

(1) the kind of luncheon or dinner attended by a large group at which the commission member or employee is the guest speaker (the "rubber chicken" exception), or

(2) the real working meeting at which food is brought in to facilitate the continuance of the work and is not itself the focus of the meeting (the "working meeting" exception).

See 5 CFR 735.202(b)(2). Under the OGE interpretation, Commission members and employees are precluded under 17 CFR 140.735-8(b)(3) from accepting food and refreshments during so called "one-on-one" meetings or at more widely-attended events unless either the "rubber chicken" or "working meeting" exceptions apply. The present proposal provides notice of the OGE interpretation by adding a footnote to 17 CFR 140.735-8(b)(3).

OGE's October 23, 1987 memorandum also encourages agencies to promulgate a regulation permitting acceptance of food and refreshments at widely-attended group events sponsored by what otherwise might be prohibited sources. Such group events may, include, *inter alia*, conferences, seminars, receptions or holiday parties sponsored by regulated entities, or trade fairs sponsored by entities seeking to obtain contractual or other business with the Commission, at which food and refreshments are served.

In accordance with OGE's suggestion, 5 CFR 735.202(b) and Executive Order 11222 (which permits agency heads to adopt regulations providing for "such exceptions [to the general prohibition against acceptance of food and refreshments] as may be necessary and appropriate in view of the nature of their agency's work and the duties and responsibilities of their employees"), the Commission is proposing to add § 140.735-8(b)(9) to its Code of Conduct. The proposed rule would permit Commission members and employees to accept food and refreshments at widely-attended events sponsored by what otherwise might be prohibited sources, provided that the General Counsel approves such acceptance in advance. The General Counsel's determination shall be made after consideration of the five factors set forth in the proposed rule.

Regulatory Flexibility Act; Paperwork Reduction Act

The Regulatory Flexibility Act, 5 U.S.C. 601 *et seq.*, requires agencies to consider the impact of proposed rules on small entities. It is not anticipated that these proposed revisions to the Code of Conduct will impose any new burden on small entities. Accordingly, the Chairman, on behalf of the Commission, hereby certifies pursuant to 5 U.S.C. 605(b) that the rules proposed herein, if promulgated, would not have a significant economic impact on a substantial number of small entities.

The Paperwork Reduction Act, 44 U.S.C. 3504(h)(1), requires that no later than the publication of a notice of proposed rulemaking in the **Federal Register**, agencies shall forward a copy of any proposed rule which contain a collection of information requirement to the Director of the Office of Management and Budget. Because the rules proposed herein do not contain a collection of information requirement, or an "information collection request" within the meaning of 44 U.S.C. 3502(4), the Commission has determined that the provisions of the Paperwork Reduction Act do not apply.

List of Subjects in 17 CFR Part 140

Commodity futures, Conflicts of interests, Ethics, Organization, Functions and Procedures.

PART 140—[AMENDED]

Accordingly, the Commission, pursuant to the authority contained in Executive Order 11222 and 5 CFR 735.202(b)(2), proposes to amend its Code of Conduct, Subpart C of Part 140 of Chapter I of Title 17 of the Code of Federal Regulations as specified below:

1. The authority citation for Part 140, Subpart C, continues to read as follows:

Authority: Sec. 8a(5), 49 Stat. 1501, as amended (7 U.S.C. 12a(5)); E.O. 11222, 3 CFR, 1964-1965 Comp.; 5 CFR 735.104.

1a. Section 140.735-8(b) is proposed to be revised to read as follows:

§ 140.735-8 [Amended]

* * * * *

(b) *Exceptions.* This paragraph does not apply: (1) To things of nomial value; (2) when the circumstances make it clear that it is obvious family or personal relationships rather than the business of the persons concerned which govern and are the motivating

factors; (3) when, on infrequent occasions, food and refreshments of nominal value are offered in the ordinary course of a luncheon or dinner meeting or other meeting [14a]; (4) when unsolicited advertising or promotional materials, such as pens, pencils, note pads, calendars and other items of nominal value are offered; (5) when local transportation is provided to the member or employee while he is on official business and alternative arrangements are impracticable; (6) when the Commission, after due consideration, determines that an exeption is warranted and appropriate in a particular situation; (7) to customary loans from banks or other financial institutions on customary terms to finance proper and usual activities of employees such as home mortgage loans; (8) if the General Counsel approves in advance, to reasonable travel and subsistence expense reimbursement by potential employers provided the Commission member or employee is engaged in bona fide post-Commission employment negotiations and is not on official business at the time; or

2. In § 140.735–8, a new paragraph (b)(9) is proposed to be added as follows:

§ 140.735–8 [Amended]

* * * * *

(b) * * *

(9) if the General Counsel approves in advance, to attendance and acceptance of food and refreshments served at widely-attended group events. In deciding whether Commission members and employees may attend and accept food and refreshments at such group events, the General Counsel will consider whether:

(i) It is in the Commission's interest that the Commission member or employee attend the event where food and refreshments are being served;

(ii) The sponsor of the event is an individual or entity that is regulated by the Commission, or an individual or entity that has some other business connection with the Commission or is directly involved in a matter pending before the Commission so that the timing or other circumstances surrounding the event would create an appearance of impropriety that outweighs the agency's interest in the Commission member's or employee's attendance;

(iii) The event will be of mutual interest to the government and industry such as a reception, seminar, conference, industry trade fair, or training session, whose informational value is not merely incidential to its entertainment value (In instances where the Commission has paid for a member's or employee's admission to a conference or seminar, the member or employee may participate in all events hosted by the conference organizers as part of the paid admission. However, attendance and acceptance of food and refreshments at receptions and other events hosted by parties other than the conference sponsor, but held during the course of the conference, must be approved in advance by the General Counsel in accordance with the requirements of this section);

(iv) The food and refreshments offered in conjunction with the event will be excessive;

(v) There are many other relevant factors that should be considered in reaching a determination.

* * * * *

Issued in Washington, DC, on April 18, 1988 by the Commission.

Jean A. Webb,

Secretary to the Commission.

[FR Doc. 88–8789 Filed 4–21–88; 8:45 am]

BILLING CODE 6351-01-M

[14a] For purposes of paragraph (b)(3) of this section, the Office of Government Ethics of the Office of Personnel Management, has defined the term "meeting" to mean a luncheon, dinner, or other meeting attended by a large group at which the Commission member or employee is the guest speaker, or a meeting at which food or refreshment is brought in to facilitate the continuance of the work and is not itself the focus of the meeting. *See* October 23, 1987 Memorandum Re: Acceptance of Food and Refreshments by Executive Branch Employees from Donald E. Campbell, Acting Director, Office of Government Ethics at 4–5.

---

17 CFR Part 150

Exemption From Speculative Position Limits for Positions Which Have a Common Owner but Which Are Independently Controlled

AGENCY: Commodity Futures Trading Commission.

ACTION: Proposed rule.

SUMMARY: The Commodity Futures Trading Commission ("Commission") recently amended speculative position limits for futures contracts on various agricultural commodities. 52 FR 38914 (October 20, 1987). At that time, the Commission amended the structure of, and particular levels set for, Federal speculative position limits. The Commission noted that the remaining portion of its reexamination of speculative position limits would involve issues relating to its aggregation policy. Accordingly, the Commission is now proposing rule amendments involving the aggregation of positions which have a common owner but are independently controlled.

DATE: Comments must be received by July 21, 1988.

ADDRESS: Comments should be sent to the Office of the Secretariat, Commodity Futures Trading Commission, 2033 K Street, NW., Washington, DC 20581 and should make reference to "Exemption for Independently Controlled Positions."

FOR FURTHER INFORMATION CONTACT: John Mielke, Associate Director, or Paul M. Architzel, Chief Counsel, Division of Economic Analysis, Commodity Futures Trading Commission, 2033 K Street, NW., Washington, DC 20581. (202) 254–3310 or 254–6990, respectively.

SUPPLEMENTARY INFORMATION:

I. Background

A. Statutory Framework

Speculative position limits have been a tool for the regulation of futures markets for over half a century. During this time, the Congress consistently has expressed confidence in the use of speculative position limits as an effective means of preventing unreasonable or unwarranted price fluctuations. Indeed, one purpose of the Commodity Exchange Act, 7 U.S.C. 1 *et seq.* (1982) ("Act"), is

> to provide a measure of control over those forms of speculative activity which too often demoralize the markets to the injury of producers and consumers and the exchanges themselves.

H.R. Rep. No. 421, 74th Cong., 1st Sess. 1 (1935).

In this regard, section 4a(1) of the Act, 7 U.S.C. 6a(1), states that:

> [e]xcessive speculation in any commodity under contracts of sale of such commodity for future delivery made on or subject to the rules of contract markets causing sudden or unreasonable fluctuations or unwarranted changes in the price of such commodity, is an undue and unnecessary burden on interstate commerce in such commodity.

Accordingly, the Congress provided the Commission with the authority to

> fix such limits on the amount of trading which may be done or positions which may be held by any person under contracts of sale of such commodity for future delivery on or subject to the rules of any contract market as the Commission finds are necessary to diminish, eliminate, or prevent such burden.

Section 4a(1) of the Act.

The Commission's predecessor agency, the Commodity Exchange Authority, promulgated speculative position limits for futures contracts on many of those commodities which were then regulated under the Act. These included speculative position limits on

corn, wheat, other grains, cotton, soybeans and other agricultural commodities. *See* 17 CFR Part 150.

Effective enforcement of speculative position limits is dependent, in part, on a clear understanding of what positions are to be included in determining whether the applicable limit has been breached. The Congress recognized this requirement by including within section 4a of the Act a standard for the aggregation of positions. Thus, section 4a(1) provides that:

> [i]n determining whether any person has exceeded such limits, the positions held and trading done by any persons directly or indirectly controlled by such person shall be included with the positions held and trading done by such person; and further, such limits upon positions and trading shall apply to positions held by, and trading done by, two or more persons acting pursuant to an expressed or implied agreement or understanding, the same as if the positions were held by, or the trading were done by, a single person.

This aggregation standard has remained central to the meaningful enforcement of speculative position limits since its enactment.

In 1968, the Congress amended the language of the aggregation standard to include positions "held by" one trader for another. Pub. L. 90–258, Sec. 2, 82 Stat. 26 (1968). The Senate Report accompanying the 1968 amendment stated that:

> [a]all of the changes made by this section incorporate longstanding administrative interpretations reflected in orders of the [Commodity Exchange] Commission.

S. Rep. No. 947. 90th Cong., 2d Sess. 5 (1968).[1]

B. Regulatory Framework

Since its creation, the Commission periodically has reviewed its policies pertaining to speculative position limits. For example, the Commission initially redefined "hedging" (42 FR 42748 (August 24, 1977)), raised speculative position limits in wheat (41 FR 35060 (August 19, 1976)), and published a policy statement on aggregation (44 FR 33839 (June 13, 1979)).

Subsequently, after gaining greater experience with the administrative of speculative position limits, the Commission thoroughly reexamined its speculative position limit policy. As a result, the Commission promulgated Rule 1.61, 17 CFR 1.61 (1987), which requires that all contract markets not subject to Federal speculative position limits adopt and enforce exchange-set speculative position limits. More recently, the Commission has issued a clarification of its hedging definition with regard to the "temporary substitute" and "incidental" tests 52 FR 27195 (July 20, 1987), and issued guidelines regarding the inclusion of exemptions from exchange-set speculative position limits in financial futures contracts for risk-management positions. 52 FR 34633 (September 14, 1987). Finally, the Commission revised Federal speculative position limits, adding Federal limits for soybean meal and soybean oil and amending the structure and levels of speculative position limits. 52 FR 38914 (October 20, 1987). At that time, the Commission noted that it was studying issues related to its aggregation policy, the remaining area to be addressed during this ongoing reevalation of speculative position limit policy.

C. Existing Commission Policy on Aggregation

In 1979, the Commission issued its Statement of Policy on Aggregation of Accounts and Adoption of Related Reporting Rules ("1979 Aggregation Policy"), 44 FR 33839 (June 13, 1979). In that interpretation, the Commission provided guidance to futures commission merchants ("FCMs") and others regarding the aggregation of positions for participants in controlled and guided account programs. At its heart, the Commission's 1979 Aggregation Policy regarding control of trading is premised upon the belief that:

> All traders who operate customer trading programs share the ability, through control of large trading blocks, to influence the market.

44 FR 33839, 33842.

The 1979 Aggregation Policy provided guidance with respect to the meaning of the "control" criterion of the aggregation standard contained in section 4a of the Act. In that policy statement, the Commission reasoned that the burden of determining, in the first instance, whether an FCM controls trading programs is properly placed on the FCM. The Commission further determined that FCMs will be assumed to control all discretionary customer accounts and accounts which are part of a customer trading program "unless specified conditions indicative of the absence of control exist." These factors include, among others: Account opening agreements which vest authority in a trader other than the FCM to direct trading on behalf of the customer; advertising which indicates that a trader other than the FCM directs trading in a specified trading program; agreements between the FCM and other traders which demonstrate the nature of the relationship between the two; the degree of supervision by the FCM of independent traders; confidentiality of trading decisions of a customer trading program from others; lack of access to general research information of the FCM; minimal financial interests by the FCM in the independent accounts;[2] and lack of common trading patterns. 44 FR 33843–44.

D. Requests for Reassessment of Commission Aggregation Policy

Representatives of certain segments of the futures industry, such as commodity pool operators and commodity trading advisors, have brought to the Commission's attention issues concerning the application of the aggregation standard to managed trading accounts. In this regard, it should be noted that such issues were also raised before the Congress during the Commission's 1986 reauthorization.[3] These concerns focus on the "ownership" criterion of the aggregation standard.

In this regard, the Commission received from the Managed Futures Trade Association ("MFTA") a petition for rulemaking to amend Commission Rule 1.61(g), the rule which establishes the aggregation standard exchanges must adopt in connection with the enforcement of exchange-set speculative position limits.[4] The MFTA petition,

---

[1] Prior to the creation of the Commission, section 4a(1) had long been the subject of interpretative statements issued by the Administrator of the Commodity Exchange Authority. *See* 44 FR 33843 (June 13, 1979) for a discussion of these interpretive statements.

[2] In addition to the aggregation of positions of persons trading in concert, the aggregation standard in the Act contains two criteria, ownership or control. The 1979 Aggregation Policy noted that a financial interest by an FCM in a guided account program which is ten percent or greater, in addition to fulfilling the ownership criterion, is also considered to be an indicia of control. See also, Commission Rule 1.3(y), 17 CFR 1.3(y) (1987).

[3] During the Commission's 1986 reauthorization, the House of Representatives reported that:

> [d]uring the Subcommittee hearings on reauthorization, several witnesses expressed dissatisfaction with the manner in which certain market positions are aggregated for purposes of determining compliance with speculative limits fixed under Section 4a of the Act. The witnesses suggested that, in some instances, aggregation of positions based on ownership without actual control unnecessarily restricts a trader's use of the futures and options markets. In this connection, concern was expressed about the application of speculative limits to the market positions of certain commodity pools and pension funds using multiple trading managers who trade independently of each other.

H.R. Rep. No. 624, 99th Cong., 2d Sess. (1986) at page 43.

[4] Commission Rule 1.61(g) provides that:

> In determining whether any person has exceeded the [exchange-set speculative position] limits established under paragraphs (a) and/or (b) of this section, all positions in accounts for which such person by power of attorney or otherwise directly or

Continued

dated May 20, 1987, requests that the Commission amend the existing aggregation standard required to be adopted by exchanges by adding a proviso to exclude the separate accounts of a commodity pool where trading in those accounts is directed by unaffiliated commodity trading advisors acting independently.[5]

The petition argues that the current ownership standard as applied to "multiple-advisor commodity pools, is unfair and unrealistic." MFTA Petition at page 4. The petitioner reasons that:

> The multi-advisor commodity pool may (own) the accounts and the positions in the accounts, but the pool operator does not control or influence the trading of the positions. The Commission must recognize that such ownership by a pool will not result in any trading practice which may effect an unwarranted or unreasonable price fluctuation in a futures or options contract, because the owner of the accounts is not directing, controlling or coordination in any manner the trading.
>
> MFTA Petition at page 5.

The Petitioner further reasons that the application of the aggregation standard to such multi-advisor pools "interferes with the appropriate functioning of a commodity pool as an investment vehicle for the public customer," and that, by permitting economies of scale with respect to the administrative expenses of commodity pools, "the ultimate beneficiaries of exempting multi-advisor pools from certain of the aggregation requirements would be their public investors." MFTA Petition at page 7.

In addition to the MFTA Petition, the Commission received a similar Petition for Rulemaking from the Chicago Board of Trade, dated May 19, 1987 ("CBT Petition"). The CBT Petition also sought to revise the aggregation standard by "not requir[ing] the owner of futures and options positions to combine them for purposes of determining compliance with speculative limits if he does not also control trading." CBT Petition at page 1.

The CBT Petition provided for an exemptive procedure and a case-by-case determination upon application to the exchange. With respect to exemptions for such positions from Federal speculative position limits, the CBT Petition requested that the Commission cede this authority to the exchanges.

The CBT supported its petition on grounds similar to the MFTA Petition. In particular, the CBT argues that

> this petition should free many futures and options market participants from limitations they face currently on their use of these markets. This revision should increase market liquidity and make the markets more attractive for risk management activities. It should result in fuller realization of the fundamental economic purposes of the markets and an improved competitive position of the U.S. futures and options markets vis-a-vis foreign exchanges and domestic off-exchange products. CBT Petition at pages 7–8.

II. Accommodation of Changing Market Conditions

The rationale advanced by the MFTA and CBT Petitions for eliminating the ownership criterion for aggregating positions is that, where unaffiliated, independent advisors control the trading of commonly owned accounts, and follow different trading programs, the overall position should not trade as a block and, therefore, should not unduly influence the market. This is consistent, the Petitions argued, with the Commission's rationale for its aggregation policy—that is, to restrict positions of such a magnitude that can affect the markets. However, to the extent that the trading by various advisors is in fact independent and follows different programs, the entity's speculative position generally should be spread throughout the markets. Thus, the random trading of independent accounts controllers normally should lessen the impact of speculative position limits on the entity's trading. Moreover, while the factual circumstances and nuances of control of accounts may vary, ownership generally is susceptible to ready verification.

Nevertheless, the Commission is aware that entities currently using multiple account controllers remain concerned that unless they provide internal review and controls, the overall position of the entity, on occasion, may exceed speculative position limits for particular markets. Such entities have further reasoned that the consequent requirement to track the positions of their independent controllers and to take remedial action is administratively difficult. They argue that such arrangements lead to inefficient operations and can compromise the independent judgment of the account controllers. Finally, such entities have argued that the current aggregation policy acts as a cap on the amount of capital which can be included within a multi-advisor entity resulting in increased administrative and operational overhead.

In this regard, the Commission considered carefully the MFTA and CBT Petitions and the opinions made known to it concerning these issues. Both ownership and control have long been included as the appropriate aggregation criteria in the Act and Commission regulations. Generally, inclusion of both criteria has resulted in a bright-line test for aggregating positions. And as noted above, although the factual circumstances surrounding the control of accounts and positions may vary, ownership generally is clear.

The present aggregation standard aids futures traders in classifying positions which must be aggregated by establishing a clear standard for enforcement of the speculative position limits. In the absence of an ownership criterion in the aggregation standard, each potential speculative position limit violation would have to be analyzed with regard to the individual circumstances surrounding the degree of trading control of the positions in question. This would greatly increase uncertainty. Accordingly, the Commission denies the MFTA Petition and reaffirms the appropriateness of including both control and ownership as bases for aggregating positions.

Nevertheless, the Commission has determined to grant limited relief by proposing an additional exemption from speculative position limits for positions of commodity pools which are traded in separate accounts by unaffiliated account controllers acting independently. As explained in greater detail below, such an exemption from speculative position limits would be available on a case-by-case basis, upon application to the Commission. This approach is consistent, for the most part, with the relief requested by the MFTA Petition.[6] The Commission believes that

---

indirectly controls trading shall be included with the positions held by such person; such limits upon positions shall apply to positions held by two or more persons acting pursuant to an expressed or implied agreement or understanding, the same as if the positions were held by a single person.

This standard is based upon the criteria set forth in section 4a of the Act.

[5] Unlike the 1979 Aggregation Policy which focused on the control test of aggregation, the MFTA Petition is addressed to the "holds" or ownership part of the aggregation standard. The criteria included in the MFTA Petition appear to be derived from those of Commission Rule 1.46, 17 CFR 1.46 (1987), which requires the closing out of off setting positions except for positions carried in the separate accounts of a commodity pool where trading in the accounts is directed by unaffiliated commodity trading advisors acting independently. 17 CFR 1.46(d)(4)

[6] The approach proposed by the Commission is, in some ways, also similar to that of the CBT Petition. However, the Commission is proposing an exemption from speculative position limits for such positions rather than altering the aggregation standard itself. Moreover, the CBT Petition contains certain other provisions which have not been justified adequately. These include, in particular, permitting applicants to file for an exemption after speculative position limits have been exceeded and

Continued

the proposed exemption fully addresses the legitimate needs of market participants, in particular multi-advisor commodity pools, but retains the benefit of the bright-line aggregation standard. Moreover, this approach appears to be consistent with the understanding of the House of Representatives, which reported that:

> the Commission is not prohibited from granting exemptions from the literal application of the speculative limits set under the provisions of Section 4a so long as such exemptions are not contrary to the stated purposes of those provisions. In this regard, the Committee recognizes the Commission's concern about the effect that any such exemptions may have on speculative activity * * *. H.R. Rep. No. 624, 99th Cong., 2d Sess. 43 (1986).

III. The Proposed Rules

The Commission is proposing to provide an exemption from speculative position limits in addition to the existing exemptions for bona fide hedging transactions and spread or arbitrage positions between futures and option contracts.[7] This additional exemption from speculative position limits is proposed for positions held in the separate accounts of independent account controllers of a commodity pool operator or the operator of a trading vehicle which is excluded, or who has itself qualified for exclusion, from the definition of "pool" or "commodity pool operator," respectively, under Commission Rule 4.5, 17 CFR 4.5 (1987).[8]

The Commission is proposing that the exemption be made available upon a case-by-case determination. This requires that commodity pool operators or other eligible market users apply to the Commission for an exemption in advance of exceeding speculative position limits. Similar to the exemption for anticipatory hedges (17 CFR 1.3(z)(2)(i)(B), (ii)(C) and (III), the proposed exemption for multi-advisor accounts is restricted during contract expiration. As proposed, the exemption applies only to positions outside of the spot month. Under this exemption, the overall positions of the commodity pool operator or other eligible entity would be set for particular contract markets at a level in accordance with the application filed by the entity with the Commission and consistent with the Act's objectives of maintaining fair and orderly markets. However, as proposed, the overall position held or controlled by each independent account controller may not exceed applicable speculative position limits.

The Commission proposes to define "independent account controller" as a person authorized to control trading on behalf of, but without the day-to-day direction of, a commodity pool operator or entity excluded from that definition or from the "pool" definition under Commission Rule 4.5 on whose behalf the person trades. Moreover, the independent account controller must be unaffiliated with any other such account controller. This requirement is consistent with Commission Rule 1.46, 17 CFR 1.46 as amended by 53 FR 609 (January 11, 1988), and with the MFTA Petition.

To qualify as being unaffiliated, independent account controllers may neither control another account controller directly or indirectly, nor be under the common control, either direct or indirect, of another entity. In this regard, it should be noted that for the exemption to be available, the unaffiliated independent account controller may not be an employee of the commodity pool operator nor have an employment or other contractual relationship with any other commodity trading advisor trading for the commodity pool. This provision ensures that the account controller will, in fact, have a relationship sufficiently independent of the commodity pool operator or other entity. Nevertheless, the Commission is requesting comment on whether, in certain instances, an employee of a commodity pool operator can trade with the same degree of independence as an unaffiliated account controller. In this regard, commenters should address what specific internal procedures, if any, would ensure that trading decisions by employees in fact are independent. That is, are there standards or criteria which provide an appropriate basis for enforcement under which a person associated with a commodity pool operator could be deemed to be operating an independent program for aggregation purposes? With respect to associated persons of futures commission merchants, however, as explained in connection with the recent amendment to Commission Rule 1.46, such an associated person may be deemed to be unaffiliated where that associated person: (1) Is separately registered as a commodity trading advisor, (2) separately promotes and holds himself out to the public as an independent CTA, (3) directs trading based upon the trader's own independent trading system and (4) provides a separate disclosure document to the customer. See, 53 FR 609 at page 611 (January 11, 1988).

With respect to the role of commodity pool operator, or similar entity, the Commission recognizes that the commodity pool operator is required to supervise diligently the handling of its trading vehicle by the account controller. In relation to trading, this generally consists of overseeing that the account controllers' trading adheres to previously specified conditions. In the event such supervision results in the pool operator advising the independent account controller on day-to-day operations or trading decisions, the account controller can no longer claim independence.

In order to obtain this exemption, the commodity pool operator or entity excluded from that definition under Rule 4.5 must demonstrate to the Commission the independence of its account controllers. The evidence specifically required by the proposed rule includes notarized affidavits of the commodity pool operator and of the independent account controllers. These affidavits must detail the delegation of trading control to the independent account controller and the relationship of the independent account controller to the pool operator or other entity and to the other account controllers. In this regard, independent account controllers must certify that they have no knowledge of the trading decisions of other independent account controllers.

---

the potential applicability of the exemption to traders other than commodity pool operators or other similar entities. Moreover, the granting by exchanges of exemptions from Federal speculative position limits would be administratively inefficient and confuse the enforcement of those limits. Accordingly, the Commission denies the CBT Petition.

[7] It should be noted that certain additional exemptions from exchange-set speculative position limits have been established pursuant to Commission Rule 1.61, 17 CFR 1.61. In particular, the Commission, consistent with the recommendation of its Financial Products Advisory Committee, issued guidelines regarding the inclusion of exemptions from exchange-set speculative position limits for certain risk-management positions. 52 FR 34633 (September 14, 1987).

[8] Under Rule 4.5(a)(4), certain trading vehicles are deemed not to be commodity pools because of their very nature. Thus, their operators need not take any action—*i.e.*, to make certain representations on operating criteria—to take advantage of the relief available under the rule. The operators of other trading vehicles set forth in Rule 4.5 must, however, make such representations for relief to be effective—*e.g.*, that the vehicle will trade commodity interests solely for bona fide hedging purposes or, alternatively, with respect to certain long positions, in an "unleveraged," incidental manner.

The Commission wishes to make clear, then, that in proposing this exemption from speculative position limits for the operators of Rule 4.5 trading vehicles it has not sought to expand upon the operating criteria of the rule or to disturb any existing relief from position limits that may be available to these persons. Rather, the Commission has sought to ensure that these persons would be entitled to the same relief from speculative position limits as provided for commodity pool operators.

In support of the affidavits, documents such as powers of attorney, account opening documents, and updated CFTC Form 40s are required. As proposed, the exemption is available only to independent account controllers who are registered with the Commission as a futures commission merchant, introducing broker, commodity trading advisor, or associated person of a futures commission merchant, introducing broker or commodity trading advisor.

The Commission, in its discretion, may approve, deny, approve upon conditions, or rescind approval of applications previously approved by the Commission. In particular, the Commission may condition its approval to specified contract markets or to a specified overall level. An adverse action by the Commission on any such application, including denial of the application, approval upon conditions, or withdrawal of a previous approval, will be accompanied by a brief statement of the grounds of the action. The Commission may rescind approval of or modify a previously granted application at any time.

Subject to the above, exemptions which have been granted will remain in force as long as the conditions noted on the application continue to exist. Notice of any material changes in the facts stated on an application must be filed with the Commission within ten days of their occurrence. Moreover, notice of the addition or substitution of independent account controllers must be made to the Commission prior to trading by the additional account controllers. Finally, the Commission, in its discretion, may issue a special call for supplementation or updating of applications.

The Commission proposes to delegate to the Director of the Division of Economic Analysis, or the Director's delegee, the authority to approve, deny, approve, deny, approve upon conditions, or rescind approval of previously approved applications for exemptions and to issue special calls for supplementation and updating of applications.

III. Related Issues

In addition to the general issues discussed above regarding the continued applicability of the ownership criterion, questions also have been raised regarding the continued appropriateness of the Commission's aggregation standard which provides that a beneficial interest in an account or positions of ten percent or more constitutes a financial interest tantamount to ownership. This threshold financial interest serves to establish ownership under both the ownership criterion of the aggregation standard and as one of the indicia of control under the 1979 Aggregation Policy.

In particular, certain instances have come to the Commission's attention where beneficial ownership in several otherwise unrelated accounts may be greater than ten percent, but the circumstances surrounding the financial interest clearly exclude the owner from control over the positions. The Commission is requesting comment on whether further revisions to current Commission rules and policies regarding ownership are advisable in light of the exemption hereby being proposed. If such financial interests raise issues not addressed by the proposed exemption for independent account controllers, what approach best resolves those issues while maintaining a bright-line aggregation test?

In proposing the exemption from speculative position limits for such positions, the Commission is not proposing to amend its reporting requirements. However, the Commission may find it necessary to issue special calls for Form 103 reports to some account holders or owners to monitor better their overall positions.

Finally, the Commission anticipates that at such time as it adopts a final rule establishing the above proposed exemption from Federal speculative position limits, it will provide explicit guidance to the exchanges regarding similar permissible exchange exemptions.[9] In particular, the Commission intends to describe the elements for such an exemption from exchange speculative positions limits which should be included in proposed exchange rules submitted for Commission approval under Commission Rules 1.61(e) and 1.41 and section 5a(12) of the Act. The Commission, at this time, however, seeks comment regarding particular issues, if any, which may arise from the exemptive provision proposed herein if applied to exchange speculative position limits in a self-regulatory setting.

IV. Other Related Matters

A. Regulatory Flexibility Act

The Regulatory Flexibility Act ("RFA"), 5 U.S.C. 601 *et seq.*, requires that agencies, in proposing rules, consider the impact of these rules on small entities. The Commission has previously determined that "large traders" are not "small entities" for purposes of the RFA. 47 FR 18618 (April 30, 1982). These proposed rules are exemptions from limits on the size of speculative positions which typically may be held by the largest traders in these markets. Accordingly, if promulgated, these rules would have no significant impact on a substantial number of small entities. For the above reason, and pursuant to section 3(a) of the RFA, 5 U.S.C. 605(b), the Chairman, on behalf of the Commission, hereby certifies that these regulations will not have a significant economic impact on a substantial number of small entities. However, the Commission particularly invites comments from any firms or other persons which believe the promulgation of these amendments might have a significant impact upon their activities.

B. Paperwork Reduction Act

The Paperwork Reduction Act of 1980, (PRA) 44 U.S.C. 3501 *et seq.*, imposes certain requirements on Federal agencies (including the Commission) in connection with their conducting or sponsoring any collection of information as defined by the PRA. In compliance with the PRA the Commission has submitted these proposed rules and their associated information collection requirements to the Office of Management and Budget.

Persons wishing to comment on the information which would be required by these proposed rules should contact Bob Neal, Office of Managment and Budget, Room 3228, NEOB, Washington, DC 20503, (202) 395-7340. Copies of the information collection submission to OMB are available from Joseph G. Salazar, CFTC Clearance Officer, 2033 K Street NW., Washington, DC 20581, (202) 254-9735.

List of Subjects in 17 CFR Part 150

Agricultural commodities, Exemptions from speculative position limits, Position limits.

In consideration of the foregoing and pursuant to the authority contained in the Commodity Exchange Act, and in particular, sections 2(a)(11), 4a and 8a(5) of the Commodity Exchange Act, 7 U.S.C. 4a(j) 6a, and 12a(5), the Commodity Futures Trading Commission hereby proposes to amend Part 150 of Chapter I of Title 17 of the Code of Federal Regulations as follows:

[9] In this regard, it should be noted that by letter dated February 24, 1988, the Chicago Board of Trade submitted for Commission approval under section 5a(12) of the Act proposed amendments to CBT rules which would exempt from its speculative position limits, on a case-by-case determination, positions owned, but not controlled, by a trader. That submission currently is pending.

VOL 53 ISS 78 AP 22 1988 UMI

PART 150—LIMITS ON POSITIONS

1. The authority citation for Part 150 continues to read as follows:

Authority: 7 U.S.C. 6a and 12a(5) (1982).

2. Section 150.1 is amended by adding a paragraph (d) to read as follows:

§ 150.1 Definitions.

As used in this part—

* * * * *

(d) "Independent account controller" means a person registered as a futures commission merchant, introducing broker, commodity trading advisor, or associated person of a futures commission merchant, introducing broker or commodity trading advisor authorized to control trading by, and on behalf of, but without the day-to-day direction of a commodity pool operator or the operator of a trading vehicle which is excluded, or who itself has qualified for exclusion from, the definition of the term "pool" or "commodity pool operator," respectively, under § 4.5 of this Chapter, who is unaffiliated with any other such independent account controller trading for the commodity pool or trading vehicle and whose trading is supervised by the pool operator or trading vehicle only to the minimal degree necessary to fulfill its duty to supervise diligently the trading for such pool or trading vehicle.

* * * * *

3. Section 150.3 is proposed to be revised to read as follows:

§ 150.3 Exemptions.

(a) *Positions which may exceed limits.* The position limits set forth in § 150.2 of this part may be exceeded to the extent such position are:

(1) *Bona fide* hedging transactions as defined in § 1.3(z) of this chapter;

(2) Spread or arbitrage positions between futures and option contract traded on the same board of trade in any one commodity which are as a totality offsetting, and upon such conditions as specified by the board of trade in rules adopted pursuant to §§ 1.64 and 1.41 of this chapter; or

(3) Positions not for the spot month and which are carried for a commodity pool operator, or the operator of a trading vehicle which is excluded, or who itself has qualified for exclusion from, the definition of the term "pool" or "commodity pool operator," respectively, under § 4.5 of this Chapter, in the separate account or accounts of an independent account controller which has been approved by the Commission under paragraph (b) of this section, *provided however,* that the overall positions held or controlled by each such independent account controller may not exceed the limits specified in § 150.2 of this part.

(b) *Application for exemption of independent account controllers.* Any commodity pool operator or the operator of a trading vehicle which is excluded, or who itself has qualified for exclusion from, the definition of the term "pool" or "commodity pool operator," respectively, under § 4.5 of this Chapter, who directly or indirectly holds but does not control positions in contract markets having speculative position limits set forth in § 150.2 of this part, may file with the Commission an application for exemption from those limits for the positions held or controlled by an independent account controller.

(1) *Filing the application.* Such applications shall be made to the Commission's regional office to which the trader would be required to file a Form 40 report under § 18.04 of this Chapter, unless otherwise directed by the Commission or its delegee, and must include the following:

(i) An affidavit, duly notarized, of the commodity pool operator or the operator of a trading vehicle which is excluded, or who itself has qualified for exclusion from, the definition of the term "pool" or "commodity pool operator," respectively, under § 4.5 of this Chapter, identifying each independent account controller and stating that each named independent account controller has been delegated authority to trade the account without further direction and that the commodity pool operator or the operator of a trading vehicle which is excluded, or who itself has qualified for exclusion from, the definition of the term "pool" or "commodity pool operator," respectively, under § 4.5 of this Chapter, retains only such oversight as appropriate to fulfill its duty to supervise diligently trading by the independent account controllers. If the applicant is an organization, the affidavit must be that of a partner, officer or trustee authorized by the organization to bind the organization;

(ii) An affidavit, duly notarized, of each independent account controller certifying that the controller in fact exercises complete authority with respect to directing the trading of the account, is unaffiliated, and does not have knowledge of trading decisions by any other account controller; and

(iii) Documents supporting the above affidavits including:

(A) A list of the contract markets having speculative position limits in § 150.2 of this Chapter for which the exemption is requested;

(B) A binding power of attorney or other such binding grant of authority memorializing the relationship between the owner and each independent account controller;

(C) Proof of registration of each account controller with the Commission or a list of each such person's category of registration, registration identification number, effective date of the registration and name of the registrant if different from that on the application;

(D) Account opening documents verifying that the independent account controller maintains a separate account for such trading;

(E) Updated Form 40s of the independent account controller and owner, as required by § 18.04 of this Chapter, unless such forms have been filed with the Commission under separate cover, and

(F) Any additional information required by the Commission which, in light of the circumstances of the application, appears to be necessary to demonstrate the nature of the relationship between the owner and independent account controller.

(2) *Approval of application for exemption for independent account controllers.* The Commission may remit and not accept for filing incomplete applications. In its discretion, based upon the evidence provided in the application, the Commission may approve, deny or approval upon conditions applications for exemptions from the speculative position limits set forth in § 150.2 of this Part. Commission denial or approval upon conditions of such an application for exemption shall be accompanied by a brief statement of the grounds of denial or conditions. Commission approval of such an application may be withdrawn or modified at any time. Withdrawal or modification of a previously granted approval of such an exemption shall be accompanied by a brief statement of the grounds of withdrawal or modification.

(3) *Supplementation and updating of applications.* To remain valid, applications must be supplemented or updated:

(i) Ten days prior to the addition or substitution of independent account controllers or other change in the ownership or control of the accounts of registration status of the account owners or independent account controllers;

(ii) Within ten days of any other material change in the application; or

(iii) Within such time as maybe specified by the Commission upon special call by the Commission to the applicant.

(4) *Delegation of authority.* (i) The Commodity Futures Trading Commission hereby delegates, until the

Commission orders otherwise, to the Director of the Division of Economic Analysis or the Director's delegee the authority to remit and not accept for filing incomplete applications, to approve, deny approval upon conditions, withdraw approval or modify applications for exemption filed under § 150.3 of this Part, and to issue special calls for supplementation and updating of such applications.

(ii) The Director of the Division of Economic Analysis may submit any matter which has been delegated to the Director under paragraph (b)(4)(i) of this section to the Commission for its consideration.

(iii) Nothing in this section may prohibit the Commission, at its election, from exercising the authority delegated to the Director of the Division of Economic Analysis under paragraph (b)(4)(i) of this section.

Issued in Washington, DC, this 19th day of April, 1988, by the Commission.

Jean A. Webb,

Secretary of the Commission.

[FR Doc. 88-8871 Filed 4-21-88; 8:45 am]

BILLING CODE 6351-01-M

DEPARTMENT OF HEALTH AND HUMAN SERVICES

Food and Drug Administration

21 CFR Part 868

[Docket No. 83N-0193]

Medical Devices; Offers To Submit or to Develop a Performance Standard for Breathing Frequency Monitor (Neonatal Apnea Monitor)

AGENCY: Food and Drug Administration.

ACTION: Notice of disposition of offers.

SUMMARY: The Food and Drug Administration (FDA) is announcing that two offers to develop a performance standard for breathing frequency monitors were submitted in response to a request for offers published in the Federal Register. The offer submitted by the Emergency Care Research Institute was accepted and a Cooperative Agreement Award of $249,991 was granted to support the development effort for the first year.

FOR FURTHER INFORMATION CONTACT: Regarding questions of a technical nature: Glenn E. Conklin, Center for Devices and Radiological Health (HFZ-84), Food and Drug Administration, 5600 Fishers Lane, Rockville, MD 20857, 301-443-4874.

Regarding questions about the cooperative agreement process: Robert L. Robins, Grants and Assistance Agreements Section, (HFA-520), Food and Drug Administration, 5600 Fishers Lane, Rockville, MD 20857, 301-443-6170.

SUPPLEMENTARY INFORMATION:

I. Background

In the Federal Register of September 10, 1982 (47 FR 39816), FDA published a final rule classifying the generic type device breathing frequency monitor (21 CFR 868.2375) into class II. Both the neonat l ventilatory effort monitor (apnea monitor) and the breathing frequency monitor were grouped into that generic type of device.

In the Federal Register of July 8, 1983 (48 FR 31392), FDA initiated a proceeding to establish for the breathing frequency monitor a performance standard under section 514 of the Federal Food, Drug, and Cosmetic Act (the act) (21 U.S.C. 360d). FDA did not receive any request for a change in the classification of the device. Therefore, further action was not required under section 514(b) of the act.

In the Federal Register of February 26, 1986 (51 FR 6886), FDA continued the proceeding to establish a performance standard for the breathing frequency monitor, pursuant to section 514(c) of the act and 21 CFR Part 861, by publishing a notice inviting any interested person, including any Federal agency, to submit, on or before April 28, 1986, an existing standard as a proposed performance standard for the device or to submit an offer to develop such a proposed standard. By that notice, FDA limited the proceeding to those breathing frequency monitors commonly called neonatal apnea monitors which are intended for use on infants to detect cessation of breathing.

In the Federal Register of July 1, 1986 (51 FR 23832), FDA advised that in accordance with the provisions of section 514(e)(3) of the act and 21 CFR 861.32, if any offer to develop a performance standard for a class II device for which the agency has issued a notice under section 514(c) of the act is accepted, FDA may, upon application (which may be made before the acceptance of the offer), agree to contribute to the offeror's cost in developing a proposed standard if FDA determines that such contribution is likely to result in a more satisfactory standard than would be developed without such contribution. Support would be provided through the means of a Cooperative Agreement Award to non-Federal institutions and individuals and through an interagency agreement to Federal institutions. Cooperative Agreement Awards would be subject to the cost principles set forth in the Federal Acquisition Regulations System. Cooperative agreements are authorized under Pub. L. 95-224 and interagency agreements under the Economy Act of 1932 as amended (31 U.S.C. 1535; formerly 31 U.S.C. 686). Subsequently, FDA allocated approximately $250,000 to contribute to the offeror's cost for the first year of effort in developing a proposed standard.

II. Discussion

A special review committee of agency experts was established on February 5, 1987, by the Director, Center for Devices and Radiological Health. The purpose of this committee was to review and evaluate the five offers submitted in response to the notice in the Federal Register of February 26, 1986 (51 FR 6886). No offer or existing standard was received from any Federal agency, and FDA has determined that it is not feasible to pursue the development of a performance standard by a Federal agency.

Because the standards development process did not appear to be well understood by the applicants and because the notice announcing the conditions under which Federal funds would be available was not published until after their submissions, the five offers were considered to be pre-applications. Only pre-applicants were determined to be eligible to submit a formal application. In letters dated March 6, 1987, each pre-applicant was invited to submit a formal application by April 6, 1987. The agency enclosed information, including evaluation criteria and comments on the pre-application, to assist the pre-applicants in preparing a fully responsive formal application.

Two formal competitive applications for the cooperative agreement to develop the apnea monitor standard were received. These were from the Department of Pediatrics, University of Washington, Seattle, WA 98195, and from the Emergency Care Research Institute (ECRI), 5200 Butler Pike, Plymouth Meeting, PA 19462. Each application was reviewed and evaluated, based upon the published criteria. The committee found ECRI to be more responsive to the agency's needs and recommended approval of that application at the requested level of funding.

Accordingly, the committee unanimously recommended approval of the proposal submitted by ECRI, finding, inter alia, that the application addressed the published evaluation criteria very well, that ECRI has extensive

experience in testing medical devices including apnea monitors, and that ECRI appears to have excellent facilities and has proposed to make use of nationally renown clinical centers and consultants.

While the committee found that the University of Washington appears to have good facilities and credentials, the committee concluded that the applicant did not appear to have sufficient experience in developing standards or in techniques used to test apnea monitors, and that the application lacked a suitably specific plan of action.

A summary evaluation statement for both applications was submitted for review to the National Advisory Environmental Health Sciences Council at its meeting on June 1 and 2, 1987. The council concurred with the recommendation of the special review committee.

In accordance with the provisions of section 514(e)(1) of the act and 21 CFR 861.28, FDA has determined that ECRI is qualified to develop a performance standard for neonatal apnea monitors and is technically competent to undertake and complete the development of that standard as specified in the proposed rule in the **Federal Register** of February 26, 1986 (51 FR 6886). FDA has also determined that ECRI will qualify with respect to procedures prescribed for performance standards development (21 CFR Part 861). In making those determinations, FDA has considered ECRI's financial stability, expertise, experience, and any potential conflicts of interest and other relevant information submitted pursuant to section 514(c)(3) of the act and 21 CFR 861.26.

In accordance with the provisions of section 514(e)(3) of the act and 21 CFR 861.32, FDA has further determined that contribution to the offeror's cost in developing a proposed standard is likely to result in a more satisfactory standard than would be developed without such contribution. Accordingly, FDA has agreed to contribute to that cost.

III. Cooperative Agreement Award

The agency issued a Notice of Grant Award (cooperative agreement) to ECRI in the amount of $249,991 for the first year of a 3-year project period. This award may be renewed noncompetitively for the second and third year. Continuation of the project is predicated upon successful performance and the availability of Federal appropriations.

The financial terms of the cooperative agreement are: (1) The agreement shall follow the appropriate cost principles for grants as defined by the Office of Management and Budget circular pertinent to ECRI as a nonprofit organization (circular A–122); (2) the grantee shall submit quarterly financial status reports to the Grants and Assistance Agreements Section, FDA (address above) and (3) the grantee shall submit an Indirect Cost Proposal to the Division of Cost Allocation, Department of Health and Human Services, Region III, within 90 days after receipt of the Notice of Grant Award (cooperative agreement).

Pursuant to 21 CFR 20.90, data and information otherwise exempt from public disclosure may be disclosed to the grantee and its employees for use only in their work for FDA under the cooperative agreement. The grantee shall submit written assurance to the Grants and Assistance Agreements Section that all criteria set forth in 21 CFR 20.90 shall be implemented.

The primary product to be delivered to FDA by ECRI, by the end of the first year, is a draft performance-standard document. This standard must contain definitions, performance requirements, test methods, and labeling requirements (including disclosure requirements). In addition, the document must contain an introduction, applicable references, and necessity and feasibility rationale for each of the requirements of the standard. The standard shall require that device labeling include a statement of the intended uses of the device; instructions for each intended use; a description of malfunctions; uses not intended for the device; adequate maintenance and service information; and a theory of operation description, including any algorithms or filtering used in the detection of apnea. The test methods developed must be readily usable by manufacturers and by CDRH for determining compliance with the standard. While clinical trials may be necessary for validation of these test methods and for design validation of prototype apnea monitors, routine testing of apnea monitors for compliance with the standard should be possible without subjecting each production unit to clinical trials.

The following additional items are to be delivered to FDA by ECRI, by the end of the first year: (1) A final report that includes a description of the work performed under the cooperative agreement, additional rationale for the necessity and feasibility for each of the requirements of the standard, including an assessment of the degree of risk of illness or injury designed to be eliminated or reduced by the proposed standard, and a list of references used in the development of the standard; (2) hard copies of the references mentioned above, and (3) a mailing list for use for distribution of the draft proposed standard to interested persons.

Pursuant to 21 CFR 861.30, the agency will provide interested persons an opportunity to participate in the development of the standard by accepting comments on the draft performance standard. The agency will give notice in the **Federal Register** of the opportunity to submit comments.

During the second year, FDA expects the grantee to provide consultation to assist CDRH in reviewing the public comments on the draft performance-standard document. During the third year, FDS expects to publish the proposed performance standard in the **Federal Register** in a notice of proposed rulemaking, and expects the grantee to provide consultation to assist CDRH in reviewing the public comments on the proposed performance standard. The level of effort in the second and third years will depend on the outcome of the first year of the cooperative agreement and the amount and nature of the public comment received on the draft performance standard and on the proposed performance standard.

The grantee must agree to waive patent rights for any equipment developed under this agreement. FDA must be given (nonexclusive) rights to use, reproduce, and disseminate all materials, test equipment, and methodology developed or required to implement the standard, so that all of the foregoing will remain in the public domain.

Dated: April 13, 1988.

Ronald G. Chesemore,

Acting Associate Commissioner for Regulatory Affairs.

[FR Doc. 88–8874 Filed 4–21–88; 8:45 am]

BILLING CODE 4160–01–M

Notices

Federal Register
Vol. 53, No. 78
Friday, April 22, 1988

This section of the FEDERAL REGISTER contains documents other than rules or proposed rules that are applicable to the public. Notices of hearings and investigations, committee meetings, agency decisions and rulings, delegations of authority, filing of petitions and applications and agency statements of organization and functions are examples of documents appearing in this section.

ACTION

VISTA Literacy Corps Projects; Availability of Funds

AGENCY: ACTION.

ACTION: Notice of Availability of Funds; VISTA Literacy Corps Project.

ACTION announces the availability of funds for fiscal year 1988 for a new VISTA Literacy Corps grant authorized by section 109 of the Domestic Volunteer Service Act Amendments of 1986 (Pub. L. 99-551) in the Commonwealth of Puerto Rico. VISTA Literacy Corps grants are for a twelve month period. No requests for renewals or continuations may be sought by grantees under this announcement.

Application packages and technical assistance on grant preparation are available from: Ruben Nazario, State Director, ACTION, Frederico DeGetau Federal Office Building, Carlos Chardon Avenue, Suite 662, Hato Rey, PR 00918, (809) 753-4314.

A. Background and Purpose

Volunteers In Service to America (VISTA) is authorized under Title I, Part A of the Domestic Volunteer Service Act of 1973, as amended (Pub. L. 93-113). The statutory mandate of the VISTA program is to eliminate and alleviate poverty and its related problems in the United States. VISTA is a full-time, year-long volunteer program which encourages and enables men and women 18 years and older from all backgrounds to perform meaningful and constructive volunteer service. The Volunteers live among, and at the economic level of, the low-income people served. The VISTA program has served poor individuals most effectively by assisting low-income communities and residents to develop the facility, skills, and resources needed for achieving self-sufficiency. VISTA also enlists the commitment and support of the private sector toward attainment of this goal. Literacy training and education represent a longstanding and integral part of the VISTA mission. VISTA Volunteers have been involved in the mobilization of community efforts to combat illiteracy among disadvantaged populations since the inception of the VISTA program.

The Domestic Volunter Service Act Amendments of 1986 directed the VISTA program to commit additional volunteers to the literacy challenge through the formation of the VISTA Literacy Corps.

The statutory purpose of the VISTA Literacy Corps is to use VISTA Volunteers in developing, strengthening, supplementing and expanding the literacy efforts of both public and private nonprofit organizations at the local, State, and Federal levels to mobilize local, State, Federal and private sector financial and volunteer resources in attacking the problem of illiteracy, particularly within low-income areas throughout the United States. In addition, the VISTA Literacy Corps will encourage public/private partnerships; promote voluntarism; heighten the visibility of the literacy issue; and increase the capacity of low-income communities to address their respective literacy needs.

Objectives

The grant will utilize VISTA Volunteers in the following emphasis areas:

1. Literacy projects to provide comprehensive services that will curb the intergenerational transfer of illiteracy within low-income families by instructing parents and children together. In particular VISTA will seek literacy programs affiliated with libraries and Head Start projects that focus on the overall concerns of low-income families in need. Such programs should have the reading materials available that will entice and challenge all age groups represented in the family unit.

2. Literacy projects that provide special programs that will benefit unemployed parents. Cooperative arrangements with social services offices and job training partnership sites will receive priority consideration.

3. Literacy projects to concentrate on preventive educational training for potential school dropouts and other low-income young adults who may be "educationally at risk" as well as programs that offer retraining and remedial skills enhancement, particularly to inner-city youth.

B. Eligible Applicants

Eligible applicants for the VISTA Literacy Corps grant include: public or private nonprofit agencies; local, State and national literacy councils and organizations; community-based nonprofit organizations; local and State education agencies; local and State agencies administering adult basic education programs; educational institutions; libraries; anti-poverty organizations; and local, municipal and State governmental entities designated to administer job training plans under the Job Training Partnership Act.

C. Scope of Grant

The grant will support 10-15 VISTA Volunteers for one year of service. The amount of the grant includes the monthly subsistence and readjustment allowance for VISTA Volunteers. This support is commensurate with the cost-of-living of the assignment area and covers the cost of food, housing and incidentals, and a monthly stipend paid to the VISTA Literacy Corps Volunteer upon completion of his/her service.

The average Federal cost of one volunteer service year, i.e. total Federal cost divided by total number of VISTA volunteers, cannot exceed $8,000 nor will the amount of Federal funding for a single grant exceed $120,000. Grants of 10-15 volunteers may range from $80,000—$120,000 in Federal funds.

Applicants should demonstrate their commitment for matching the Federal contribution toward the operation of the VISTA Literacy Corps grant in the areas of volunteer transportation, supervision, and/or training. This support can be achieved through cash or allowable in-kind contributions. In particular, there must be a 50% non-Federal match for the supervisor's salary and fringe benefits. The supervisor of the VISTA project must serve on a full-time basis.

Publication of this announcement does not obligate ACTION to award a grant or to obligate the entire amount of funds available, or any part thereof, for grants under the VISTA Literacy Corps program.

VOL 53 ISS 78 APR 22 1988 UMI

D. General Criteria for Grant Selection

The general criteria for the VISTA Literacy Corps projects are consistent with those established for the selection of VISTA sponsors and projects. All of the following elements must be incorporated in the applicant's submission.

The project must:

• Be poverty-related in scope and otherwise comply with the provisions of the Domestic Volunteer Service Act of 1973 as amended (42 U.S.C. 4951, *et seq.*) applicable to VISTA and all published regulations, guidelines and ACTION policies;

• Comply with applicable financial and fiscal requirements established by ACTION or other elements of the Federal Government;

• Show that the goals, objectives, and volunteer tasks are attainable within the time frame during which the volunteers will be working on the project and will produce a measurable and verifiable result;

• Provide for reasonable efforts to recruit and involve low-income community residents in the planning, development and implementation of the VISTA project;

• Outline specific plans for the continuation of program activities upon the completion of ACTION funding;

• Have evidence of local public and private sector support (in the form of endorsement letters limited to those organizations, government entities, and institutions that are aware of and will be involved in supporting the VISTA project's efforts);

• Have a permanent mechanism of self-evaluation;

• provide frequent and effective supervision of the volunteers;

• Identify resources needed and make them available to volunteers to perform their tasks;

• Have the management and technical capability to implement the project successfully.

In addition to the general criteria, the authorizing statute stipulates that priority consideration will be given to the following literacy programs and projects that apply for funding:

• Those that assist individuals in greatest need of literacy training who reside in unserved or underserved areas with the highest concentration of illiteracy and of low-income individuals and families;

• Those that serve individuals reading at zero to fourth grade levels;

• Those that focus on providing literacy services to high risk populations;

• Those that operate in areas with the highest concentration of individuals and families living at or below the poverty level;

• Those providing literacy services to parents of disadvantaged children between the ages of two and eight who may be educationally at risk; and

• Statewide programs and projects that encourage the creation of new literacy efforts, encourage corrdination of intrastate literacy efforts and provide technical assistance to local literacy efforts.

E. Application Review Process

ACTION Region 2 will review and evaluate all eligible applications from the State/Commonwealth within their jurisdiction prior to submission to the Director of VISTA and Student Community Service Programs, ACTION, for final selection. ACTION reserves the right to ask for evidence of any claims of past performance or future capability.

F. Application Submission and Deadline

One signed original and two copies of all completed applications must be submitted to the appropriate ACTION Regional Office as noted in paragraph 2 of this announcement. The deadline for receipt of applications is 5 p.m. local time, Friday, June 10, 1988. Applications post-marked 5 days before the deadline date will also be accepted for consideration.

All grant applications and accompanying material must be in English an consist of:

a. VISTA Project Application (Form A-1421) and the VISTA Application for Federal Assistance (Form A-1421 B) with a detailed budget justification.

b. CPA certification of accounting capability.

c. Copy of recent Articles of Incorporation.

d. Proof of non-profit status or an application for non-profit status, and related documentation.

e. Current resume of potential VISTA Supervisor, if available, or the resume of the director of the applicant agency or project.

f. Organizational chart illustrating the relationship of the VISTA project to the overall objectives of the sponsor organization.

g. List of the members of the Board of Directors including their professional affiliations and/or literacy-related activities.

Signed at Washington, DC, this 20th day of April, 1988.

Donna M. Alvarado,

Director.

FR Doc. 88-8953 Filed 4-21-88; 8:45 am]

BILLING CODE 6050-28-M

ADMINISTRATIVE CONFERENCE OF THE UNITED STATES

Valuation of Human Life in Regulatory Decisionmaking

AGENCY: Administrative Conference of the United States.

ACTION: Request for public comments; notice of meeting.

SUMMARY: The Administrative Conference's Committee on Regulation has under consideration a draft recommendation on valuation of human life in regulatory decisionmaking. Interested persons are invited to comment on the draft recommendation.

DATE: Please submit comments by May 5, 1988.

ADDRESS: Send comments to Sara Gordon, Administrative Conference of the United States, 2120 L Street, NW., Suite 500, Washington, DC 20037.

FOR FURTHER INFORMATION CONTACT: Sara Gordon, 202-254-7065.

SUPPLEMENTARY INFORMATION: The Administrative Conference's Committee on Regulation has under consideration a draft recommendation on valuation of human life in regulatory decisionmaking. The proposed recommendations are based in part on a draft report co-authored by Professor Clayton P. Gillette, Professor of Law at Boston University School of Law and Professor Thomas D. Hopkins, Associate Professor in the Department of Economics at American University. The text of the draft recommendations is printed in full below. Copies of the draft report are available from the Administrative Conference of the United States.

Regulations intended to lessen risks of accidents and illness ordinarily impose compliance costs on regulated entities and on rulemaking agencies. Promulgation of such regulations is a multi-faceted process, and these recommendations address one set of frequently encountered issues—the valuation of human life. Placement of a dollar value on human life is controversial and complex, and a wide array of approaches may be employed. The Conference recognizes the embryonic state of knowledge on this issue, and realizes that both methodologies and results will vary

across agencies. In this environment, however, it would be useful for agencies to take measures that would reveal publicly the processes by which they have determined the valuation of life incorporated in policy decisions. The Office of Management and Budget (OMB) could facilitate consistency by providing a central clearinghouse for research and information on life valuation issues.

The Conference's Committee on Regulation is tentatively scheduled to meet on Thursday, May 12 at 10 a.m. in the 9th Floor Conference Room of Steptoe & Johnson, 1330 Connecticut Avenue, NW., Washington, DC should further consideration of the recommendations be required in light of any comments that might be received. The Committee will decide whether to approve a draft recommendation for consideration by the Administrative Conference at its Plenary Sessions on June 9 and 10, 1988. Comments should be sent to the address given above.

Recommendation 88———

Valuation of Human Life in Regulatory Decisionmaking

Regulations intended to lessen risks of accidents and illness ordinarily impose compliance costs on regulated entities and on rulemaking agencies. In return, society gains numerous benefits, most notably the avoidance of fatalities, injuries and disease, and in some instances a reduction in property damage. Promulgation of such regulations is a multi-faceted process, and this recommendation addresses one set of frequently encountered issues—the valuation of human life.

Agencies often make reasonable estimates of the reduction in fatalities likely to follow implementation of a particular regulation, and of the further reduction likely for a somewhat more stringent regulation. It is rarely if ever possible to eliminate risk altogether, and it is nearly always the case that greater risk reduction raises compliance costs. Faced with such situations, agencies cannot avoid placing a value—either explicitly or implicitly—on the societal benefits of risk reduction. This recommendation addresses agency practices and constraints in benefits valuation when the benefit at issue is fatality avoidance.

Placement of a dollar value on human life is controversial and complex, and a wide array of approaches may be employed. Some agencies reject all explicit life monetization efforts, while others routinely build dollar estimates of life savings into their regulatory proposals. This diversity can be sharp even within the same department. Those agencies that are willing to utilize explicit normative benchmarks for the value of life appear to be moving toward reliance on the same basic estimating technique, generally referred to as "willingness-to-pay." This technique is premised on the assumption that by examination of marketplace behavior, one can roughly ascertain how much individuals would be willing to pay in order to reduce the probability of death from a particular hazard or cause, or how much they would accept (e.g., salary increases) to have that probability increased.

A broad range of dollar values can be observed in regulatory outcomes across programs and departments. In part, this reflects differing views about what explicit value is suitable for a given type of hazard, and in part it reflects judgments that, for reasons of policy or legal constraints, decisions should take no account of the value of life implicit in those decisions. Agencies retain substantial discretion in justifying decisions to implement or reject proposed regulations based on factors only tangentially related to the relative benefits that would be conferred through regulations.

The Conference recognizes the embryonic state of knowledge on this issue, and realizes that both methodologies and results will vary across agencies. In this environment, however, it would be useful for agencies to take measures that would reveal publicly the processes through which they have determined the valuation of life incorporated in policy decisions. Such a procedure will provide useful clarification and exposition of the unavoidable tradeoffs in regulating hazards, and will also assist in drawing attention to those hazards where further protection may be feasible at acceptable cost.

In this way, agency practice may also be measured against developments in the valuation techniques and evaluated for consistency with other agencies as well as with other regulations in the same agency. The Office of Management and Budget (OMB), in its oversight of executive branch regulatory activities, could facilitate consistency by providing a central clearinghouse for research and information on life valuation issues. OMB should also assist agencies by updating its guidance concerning discount rates used by agencies in deriving present value equivalents of future effects. The current government-wide general guidance on discounting is contained in OMB Circular A-94 which has not been updated since 1972.

Recommendation

1. Agencies that adopt regulations on the justification that the number of lives subsequently saved warrants incurring the associated compliance costs should state an explicit valuation utilized, or should disclose the amount per statistical life implicit in that determination and in alternative levels of stringency. Exceptions to this principle might exist where empirical information about either the regulation's costs or benefits is highly conjectural or where the benefits include a variety of non-market improvements where monetizable benefits are not obvious, e.g., aesthetic gains. In such cases agencies should strive to describe the imprecision of the valuation process so as to minimize the perception of substantial certainty.

2. In implementing paragraph 1, agencies should continue to use and develop appropriate methodologies for placing value on human life, including the "willingness-to-pay" methodology, but with full recognition that there remain substantial limitations on the ability of event the most complete study to incorporate all the variables that affect social valuations of human life. An agency's valuation should be accompanied by a statement of variables that the agency believes to have been slighted or omitted from consideration but that would affect (positively or negatively) the explicit values dervied. The agency also should explain how it factors any additional criteria.

3. Whenever agencies choose to discount costs and benefits in implementing paragraph 1, they should clearly and fully disclose what rates they are using, the methodology that generated those rates, and the sensitivity of outcomes to the particular rates applied. The Office of Management and Budget (OMB) should revise its guidance concerning the use of a discount rate in the valuation of costs and benefits to reflect recent learning on the subject, whether through revision of OMB Circular A-94 or through other means. However, such guidance should not necessarily adopt a specific discount rate. Rather, it should articulate the various methods by which a discount rate can be derived and the scope of subjects to which it can be applied.

4. OMB should create a central clearinghouse for research and information on life valuation issues. To this end, OMB should continue and expand its discussion of agency practices in the life valuation area (initiated in its 1987-88 edition of the

annual Regulatory Program of the United States Government).

Dated: April 19, 1988.

Jeffrey S. Lubbers,

Research Director.

[FR Doc. 88-8902 Filed 4-21-88; 8:45 am]

BILLING CODE 6116-01-M

DEPARTMENT OF AGRICULTURE

Soil Conservation Service

Upper Fifteen Mile Creek Watershed, GA

AGENCY: Soil Conservation Service, USDA.

ACTION: Notice of a finding of no significant impact.

SUMMARY: Pursuant to section 102(2)(C) of the National Environmental Policy Act of 1969; the Council on Environmental Quality Guidelines (40CFR Part 1500); and the Soil Conservation Service Guidelines (7 CFR Part 650); the Soil Conservation Service, U.S. Department of Agriculture, gives notice that an environmental impact statement is not being prepared for the Upper Fifteen Mile Creek Watershed, Emanuel and Jenkins Counties, Georgia.

FOR FURTHER INFORMATION CONTACT: B.C. Graham, State Conservationist, Soil Conservation Service, Federal Building, Box 13, 355 East Hancock Avenue, Athens, Georgia 30601; telephone: 404-546-2273.

SUPPLEMENTARY INFORMATION: The environmental assessment of this federally assisted action indicates that the project will not cause significant adverse local, regional, or national impacts on the environment. As a result of these findings, B.C. Graham, State Conservationist, has determined that the preparation and review of an environmental impact statement are not needed for this project.

The project concerns are reduced soil productivity from rill, sheet, and ephemreal gully erosion affecting cropland and offsite erosion sediment damage. The planned works of improvement include cost sharing and accelerated technical assistance to increase the application of land treatment measures such as terraces, grassed waterways, water and sediment control basins, diversions, contouring, underground outlets, and crop residue use.

The Finding of No Significant Impact (FONSI) has been forwarded to the Environmental Protection Agency and to various Federal, State, and local agencies, and interested parties. A limited number of copies of the environmental assessment are available to fill single copy requests at the above address. Basic data developed during the environmental assessment are on file and may be reviewed by contacting Mr. B.C. Graham.

No administrative action on implementation of the proposal will be taken until 30 days after the date of this publication in the **Federal Register.**

(This activity is listed in the Catalog of Federal Domestic Assistance under No. 10.904—Watershed Protection and Flood Prevention—and is subject to the provisions of Executive Order 12372 which requires intergovernmental consultation with State and local officials)

B.C. Graham,

State Conservationist.

Date: April 15, 1988.

[FR Doc. 88-8832 Filed 4-21-88; 8:45 am]

BILLING CODE 3410-16-M

ARCTIC RESEARCH COMMISSION

Meeting

Notice is given that the Arctic Research Commission will meet in Washington, DC on 2-3 May 1988. On 2 May 1988 at 9:00 a.m. The Commission will meet with the Interagency Arctic Research Policy Committee at the U.S. Department of Interior, Room 5160, 18th & C Streets, NW., Washington, DC.

At 1:30 p.m. on 2 May, the Commission will hold an open meeting at the Arctic Research Commission Office, Interstate Commerce Commission Building, Room 6333, 12th & Constitution Avenue, NW. Topics discussed include:

1. Opening Remarks by Chairman (J. Roederer)
2. Comments from the Interagency Arctic Research Policy Committee (E. Bloch)
3. International Cooperation in Arctic Research (J. Roederer, R. Corell)
4. Arctic Information and Data (J. Roederer, T. Laughlin)
5. Logistics Support for Arctic Research (L. Perrigo)

The Commission will meet in Executive Session in the Commission Office, Interstate Commerce Commission Building, Room 6333, 12th & Constitution Avenue, NW. 3 May 1988. Topics to be discussed include Commission budget and finances, membership of Commission, and future plans and activities.

FOR FURTHER INFORMATION CONTACT: Mr. Lyle Perrigo, (907) 257-2738.

W. Timothy Hushen,

Executive Director, U.S. Arctic Research Commission.

[FR Doc. 88-8892 Filed 4-21-88; 8:45 am]

BILLING CODE 7555-01-M

DEPARTMENT OF COMMERCE

Agency Information Collection Under Review by the Office of Management and Budget (OMB)

DOC has submitted to OMB for clearance the following proposal for collection of information under the provisions of the Paperwork Reduction Act (44 U.S.C. Chapter 35).

Agency: National Bureau of Standards

Title: NBS Manufacturing Technology Centers

Form Number: Agency—N/A; OMB—N/A

Type of Request: New Collection

Burden: 20 respondents; 800 reporting hours NBS is establishing a new program for the purpose of accelerating the transfer of advanced manufacturing technology to small and medium-sized U.S. businesses. The goal of the NBS Manufacturing Technology Centers Program will be to assist firms in improving their productivity and competitiveness. NBS will solicit applications for nonprofit institutions that propose to develop and operate a Manufacturing Technology Center. The information collected will be used to evaluate the applicants resources and abilities.

Affected Public: Non-profit institutions

Frequency: One-time application; Annually

Respondent's Obligation: Required for benefit

OMB Desk Officer: Frank Reeder 395-3785

Copies of the above information collection proposal can be obtained by calling or writing DOC Clearance Officer, Edward Michals, (202) 377-3271, Department of Commerce, Room 6622, 14th and Constitution Avenue, NW., Washington, DC 20230.

Written comments and recommendations for the proposed information collection should be sent to Frank Reeder, OMB Desk Officer, Room 3235, New Executive Office Building, Washington, DC 20503.

Date: April 18, 1988.

Edward Michals,

Departmental Clearance Officer, Office of Management and Organization.

[FR Doc. 88-8949 filed 4-21-88; 8:45 am]

BILLING CODE 3510-CW-M

International Trade Administration

[A-588-803]

Initiation of Antidumping Duty Investigation; Digital Readout Systems and Subassemblies Thereof From Japan

AGENCY: Import Adminstration, International Trade Administration, Department of Commerce.

ACTION: Notice.

SUMMARY: On the basis of a petition filed in proper form with the U.S. Department of Commerce, we are initiating an antidumping duty investigation to determine whether imports of digital readout systems and subassemblies thereof from Japan are being, or are likely to be, sold in the United States at less than fair value. We are notifying the U.S. International Trade Commission (ITC) of this action so that it may determine whether imports of this product materially injure, or threaten material injury to, a U.S. industry. If this investigation proceeds normally, the ITC will make its preliminary determination on or before May 12, 1988. If that determination is affirmative, we will make a preliminary determination on or before September 6, 1988.

EFFECTIVE DATE: April 22, 1988.

FOR FURTHER INFORMATION CONTACT: Raymond Busen or John Brinkmann, Office of Investigations, Import Administration, International Trade Administration, U.S. Department of Commerce, 14th Street and Constitution Avenue NW., Washington, DC 20230; telephone (202) 377-3464 or 377-3965.

SUPPLEMENTARY INFORMATION:

The Petition

On March 28, 1988, we received a petition in proper form filed by Anilam Electronics Corporation on behalf of U.S. producers of digital readout systems and subassemblies thereof. In compliance with the filing requirements of 19 CFR 353.36, petitioner alleges that imports of digital readout systems and subassemblies thereof from Japan are being, or are likely to be, sold in the United States at less than fair value within the meaning of section 731 of the Tariff Act of 1930, as amended (the Act), and that these imports materially injure, or threaten material injury to, a U.S. industry.

United States Price and Foreign Market Value

United States price was based on U.S. selling prices to end users. Petitioner deducted ocean freight and insurance, inland freight, U.S. Customs duties, and handling charges.

Petitioner based foreign market value on a Japanese manufacturer's retail price quotes to Japanese end users.

Based upon a comparison of United States price and foreign market value, petitioner alleges dumping margins of between 62 and 104 percent.

Initiation of Investigation

Under section 732(c) of the Act, we must determine, within 20 days after a petition is filed, whether it sets forth the allegations necessary for the initiation of an antidumping duty investigation and whether it contains information reasonably available to the petitioners supporting the allegations.

We examined the petition on digital readout systems and subassemblies thereof from Japan and found that it meets the requirements of section 732(b) of the Act. Therefore, in accordance with section 732 of the Act, we are initiating an antidumping duty investigation to determine whether imports of digital readout systems and subassemblies thereof from Japan are being, or are likely to be, sold in the United States at less than fair value. If our investigation proceeds normally, we will make our preliminary determination by September 6, 1988.

Scope of Investigation

The United States has developed a system of tariff classification based on the international harmonized system of Customs nomenclature. The U.S. Congress is considering legislation to convert the United States to this Harmonized System (HS). In view of this, we will be providing both the appropriate *Tariff Schedules of the United States Annotated* (*TSUSA*) item numbers and the appropriate HS item numbers with our product descriptions on a test basis, pending Congressional approval. As with the *TSUSA*, the HS item numbers are provided for convenience and Customs purposes. The written description remains dispositive.

We are requesting petitioners to include the appropriate HS item number(s) as well as the *TSUSA* item number(s) in all new petitions filed with the Department. A reference copy of the proposed HS schedule is available for consultation at the Central Records Unit, Room B-099, U.S. Department of Commerce, 14th Street and Constitution Avenue NW., Washington, DC 20230. Additionally, all Customs officers have reference copies and petitioners may contact the Import Specialist at their local Customs office to consult the schedule.

The products covered by this investigation are digital readout systems and those subassemblies, and parts thereof, that are dedicated exclusively for use in the manufacture or production of digital readout systems. The term dedicated exclusively for use only encompasses those subassemblies that are specifically designed for use in digital readout systems, and may not be used for other purposes. The Department will determine whether certain subassemblies meet the above criteria during the course of this investigation. The products are currently provided for under *TSUSA* item number 710.8080 and currently classifiable under HS item number 9031.80.0080.

Digital readout systems (DROs) generally consist of an electronic console and one measurement transducer for each axis of linear or rotational displacement to be measured. Subassemblies consist of electronic consoles or transducers, the major components of DROs, and the major components of electronic consoles, namely printed circuit boards, and the two major components of transducers, glass strips with chrome grating, and reading heads. DROs provide linear or rotational displacement information for high precision industrial equipment such as metalworking machine tools.

Notification of ITC

Section 732(d) of the Act requires us to notify the ITC of this action and to provide it with the information we used to arrive at this determination. We will notify the ITC and make available to it all nonprivileged and nonproprietary information. We will allow the ITC access to all privileged and business proprietary information in our files, provided it confirms in writing that it will not disclose such information either publicly or under administrative protective order without written consent of the Acting Assistant Secretary for Import Administration.

Preliminary Determination by ITC

The ITC will determine by May 12, 1988 whether there is a reasonable indication that imports of DROs and subassemblies thereof from Japan materially injure, or threaten material injury to, a U.S. industry. If its determination is negative, the investigation will terminate; otherwise,

it will proceed according to the statutory and regulatory procedures.

This notice is published pursuant to section 732(c)(2) of the Act.

Joseph A. Spetrini,

Acting Assistant Secretary for Import Administration.

April 18, 1988.

[FR Doc. 8809 Filed 4-21-88; 8:45 am]

BILLING CODE 3510-DS-M

[C-557-701]

Final Affirmative Countervailing Duty Determination and Countervailing Duty Order; Carbon Steel Wire Rod From Malaysia

AGENCY: Import Administration, International Trade Administration, Commerce.

ACTION: Notice.

SUMMARY: We determine that certain benefits which constitute bounties or grants within the meaning of the countervailing duty law are being provided to manufacturers, producers, or exporters in Malaysia of carbon steel wire rod (wire rod) as described in the "Scope of Investigation" section of this notice. The estimated net bounty or grant is 17.71 percent *ad valorem* for all manufacturers, producers, or exporters in Malaysia of wire rod.

We are directing the U.S. Customs Service to suspend liquidation of all entries of wire rod from Malaysia that are entered, or withdrawn from warehouse, for consumption on or after the date of publication of this notice, and to require a cash deposit on entries of these products in the amount equal to the estimated net bounty or grant.

EFFECTIVE DATE: April 22, 1988.

FOR FURTHER INFORMATION CONTACT: Carole Showers or Gary Taverman, Office of Investigations, Import Administration, International Trade Administration, U.S. Department of Commerce, 14th Street and Constitution Avenue NW., Washington, DC 20230; telephone: (202) 377-3217 or 377-0161.

SUPPLEMENTARY INFORMATION:

Final Determination

Based on our investigation, we determine that benefits which constitute bounties or grants within the meaning of section 303 of the Tariff Act of 1930, as amended (the Act), are being provided to manufacturers, producers, or exporters in Malaysia of wire rod. For purposes of this investigation, the following programs are found to confer bounties or grants:

- Export Credit Refinancing.
- Pioneer Status Under the Investment Incentives Act of 1968.

We determine the estimated net bounty or grant to be 17.71 percent *ad valorem* for all manufacturers, producers, or exporters in Malaysia of wire rod.

Case History

Since the last Federal Register publication pertaining to this investigation [*Preliminary Negative Countervailing Duty Determination: Carbon Steel Wire Rod from Malaysia* (*Wire Rod II*) (53 FR 3413, February 5, 1988)], the following events have occurred. We conducted verification in Malaysia from February 25 to March 5, 1988, of the questionnaire responses of the Government of Malaysia, Amalgamated Steel Mills Bhd. (ASM), Perdama Corporation Sdn. Bhd. (Perdama), and Tejana Trading Corporation Sdn. Bhd. (Tejana). A supplemental reponse based on information reviewed at verification was submitted by the respondents on March 18, 1988. Prehearing briefs were filed on March 30, 1988. A public hearing was held on March 31, 1988. Posthearing briefs were filed on April 8, 1988.

Scope of Investigation

For purposes of this investigation, the term "carbon steel wire rod" covers a coiled, semi-finished, hot-rolled carbon steel product of approximately round soild cross-seciton, not under 0.20 inch in diameter, not over 0.74 inch in diameter, tempered or not tempered, treated or not treated, not manufactured or partly manufactured, and valued over or under 4 cents per pound. Wire rod is currently classified under items 607.1400, 607.1710, 607.1720, 607.1730, 607.2200, and 607.2300 of the *Tariff Schedules of the United States Annotated* and under items 7213.20.00, 7213.31.30, 7213.31.60, 7213.39.00, 7213.41.30, 7213.41.60, 7213.49.00, and 7213.50.00 of the Harmonized System.

Analysis of Programs

Throughout this notice, we refer to certain principles applied to the facts of the current investigation. These general principles are described in the "Subsidies Appendix" attached to the notice of *Cold-Rolled Carbon Steel Flat-Rolled Products from Argentina: Final Affirmative Countervailing Duty Determination and Countervailing Duty Order* (49 FR 18006, April 26, 1984).

For purposes of this final determination, the period for which we are measuring bounties or grants ("the review period") is calendar year 1986. Based upon our analysis of the petition, the responses to our questionnaire, verification, and written comments from respondents and petitioners, we determine the following:

I. Programs Determined To Confer Bounties or Grants

We determine that bounties or grants are being provided to manufacturers, producers, and exporters in Malaysia of wire rod under the following programs:

A. Export Credit Refinancing

The Bank Negara Malaysia, the central bank of Malaysia, provides short-term export credit refinancing through commerical banks. The Export Credit Refinancing (ECR) programs, as revised in January 1986, provided pre- and post-shipment financing of exports for periods of up to 90 days. In December 1986, the maximum periods for financing under these programs were extended to 120 and 180 days, respectively. Currently, ECR offers order-based pre- and post-shipment financing and "certificate of performance" (CP) based pre-shipment financing. Order-based financing is provided on specific sales to specific markets. CP-based financing, which is a line of credit based on the previous 12 months' export performance, cannot be tied to specific sales in specific markets.

We verified that all three respondents received financing under the order-based ECR loan programs and that, of the three companies, only ASM received financing under the CP-based ECR loan program. Because only exporters are eligible for ECR loans, we determine that they are countervailable to the extent that they are provided at preferential rates.

In order to determine whether these loans were provided at preferential rates, we compared the interest rate charged to a benchmark interest rate. As a benchmark for short-term loans, it is our practice to use the most comparable, predominant commercial rate for short-term financing. For purposes of this determination, we are using the 90-day Bankers' Acceptance (BA) rate as the most comparable and commonly used alternative source of short-term financing. Based on this comparison, we find that ECR loans are provided at preferential rates and, therefore, are countervailable.

To calculate the benefit from ECR loans on which interest was paid in 1986, we used our short-term loan methodology, as set forth in the Subsidies Appendix. Because the order-based ECR loans were shipment specific, we included only those loans which financed exports of wire rod to the United States. For the order-based

ECR loans, we calculated the amount of interest that would have been paid using the BA benchmark and subtrated the amount of interest that was actually paid. We cumulated the interest benefits of the three respondents and divided by wire rod exports to the United States. The total value of wire rod exports to the United States is equal to the value of ASM's wire rod sales to the United States, which include sales made through Perdama and Tejana, plus the appropriate trading company markup.

Because the CP-based ECR loans were not shipment specific, we included interest paid on all loans outstanding in 1986. We calculated the amount of interest that would have been paid using the BA benchmark and subtracted the amount of interest that was actually paid. We divided this interest benefit by total exports to all countries, including only the trading company markup for wire rod sales to the United States since this was the only product on which trading company markup was provided and verified.

Adding the benefits from the order- and CP-based financing, we calculated an estimated net bounty or grant of 0.49 percent *ad valorem*.

B. Pioneer Status Under the Investment Incentives Act of 1968

In accordance with the Investment Incentives Act of 1968, as amended, pioneer status is available to companies producing a product (1) with favorable prospects of further development, including deveopment for export, or (2) currently being producred in insufficient quantities to meet the development needs of Malaysia, including export. Benefits granted under pioneer status include exemptions on the portion of income derived from sales of the pioneer product from the following: (1) the 40 percent corporate income tax, (2) the five percent development tax, (3) the three percent excess profits tax, and (4) the 40 percent dividend tax. Pioneer status benefits are available for a period of up to five years. The Investment Incentives Act also provides for extension of benefits for a period of up to three years. We verified that pioneer status was granted to ASM for wire rod production for the five-year period from July 1, 1979 to June 30, 1984. ASM received an extension of its pioneer status benefits through the 1987 tax year.

In our preliminary determination, we stated that additional information was needed to determine whether pioneer status conferred bounties or grants on the manufacture, production, or exportation of wire rod from Malaysia. In order to determine if the provision of pioneer status constitutes a countervailable subsidy, we must determine if the benefits provided are limited to a specific enterprise or industry, or group of enterprises or industries, in accordance with section 771(5)(B) of the Act. We typically consider three factors when making this determination: (1) the extent to which a foreign government acts (as demonstrated in the language of the relevant enacting legislation and implementing regulations) to limit the availability of a program; (2) the number of enterprises, industries, or groups thereof that actually use a program, which may include the examination of disproportionate or dominant users; and (3) the extent, and manner in which, the government exercises discretion in making the program available.

With respect to the first factor outlined above, the language of the Investment Incentives Act does not appear to limit pioneer status benefits to specific industries or companies. For example, Part II, Chapter 1, Section 4(1) of this Act states: "Any company . . . being desirous of establishing or participating in a pioneer industry for the purpose of producing any pioneer product or products and intending that a factory be constructed in Malaysia for that purpose, may make an application in writing to the Minister for a pioneer certificate * * *."

With respect to factor two, at verification we reviewed a Malaysian Industrial Development Authority computer printout, organized by industrial classification, which listed all companies that received pioneer status from January 1980 through November 1987. According to the printout, pioneer status benefits have been approved for hundreds of companies and almost as many products cutting across numerous industrial sectors. We learned at verification, however, that approximately 40 percent of those companies that apply for pioneer status have been rejected.

With respect to the third factor—government discretion in administering the subsidy program—the Investment Incentives Act does not give specific guidelines to be followed when either approving or denying pioneer status. It is our general policy when verifying domestic programs to review the procedures for approving or rejecting applications for benefits. In *Certain Refrigerator Compressors from the Republic of Singapore: Preliminary Results of Countervailing Duty Administrative Review* (50 FR 6025, February 13, 1985, *see* also the public verification report of November 19, 1984, for this review C-559-001), we asked for and received documentation showing the reasons for approval or rejection of applications for a training grant program. This documentation was requested even though thousands of applications covering a wide range of industries were approved yearly. Based on the review of that information, we found that program to be not countervailable. We followed similar procedures in *Final Affirmative Countevailing Duty Determination: Certain Fresh Cut Flowers from the Netherlands* (52 FR 3301, February 3, 1987). In that case we examined a program involving benefits provided by the European Community (EC) for the creation of cooperative organizations, and found that the Government of the Netherlands limited its selection of programs and projects to be sent to the EC for consideration. We also stated that we were unable to verity any standard criteria applied by the EC in the approval process of member status' sectoral programs and the individual investment project applications under the sectoral programs. As we stated in that case "because we saw no evidence of standard criteria applied in the approval of programs by the EC" we found that program to be limited to a specific group of enterprises or industries within the agricultural sector of the Netherlands and therefore countervailable. (*See* also *Final Affirmative Countervailing Duty Determination: Live Swine and Fresh, Chilled and Frozen Pork Products from Canada* (50 FR 25097, June 17, 1985).)

We must examine relevant documents to ensure that a situation does not exist where a program, which based on the statute appears to be available to all companies in a country, is being administered in a manner that is distortive. For example, the government could use its discretion in administering a program that is on its face available to all companies in a country to favor some applicants over others. Or the government might favor companies in a region requiring development over companies in more prosperous areas. In both cases, the domestic program would favor "specific" enterprises or industries. Accordingly, it is important for the Department to determine in each case the criteria used for granting or denying applications for domestic programs. In this case, the government did not provide information that would have allowed the Department to make this determination.

In this investigation, the Department recognized in its preliminary determination that government standards for approving or rejecting

applications could only be determined through review of approval and denial documentation and that, with the information available at the time of that determination, it was not even possible to determine on what basis ASM's original designation as a pioneer company was based. We thus notified the Government of Malaysia in our verification outline that it should be prepared to discuss the purpose and the provisions of the pioneer status program and provide application and approval files for review.

During verification, we askd to review information explaining the reasons for granting or denying a company's request for pioneer status. The Government of Malaysia denied us access to this information. We were eventually permitted, less than one week prior to this final determination, to view two documents which purported to demonstrate why ASM was granted pioneer status. The information shown to us at this very late date applied only to ASM. We could not verify this information not tie it to other documents. We still have not seen, however, any supporting documentation demonstrating the general approval process and guidelines followed that would allow us to determine the standards under which pioneer status is granted or denied. We were told at verification, however, that another wire rod company (a company that did not export to the United States) was rejected for pioneer status benefits. Three days prior to this determination, respondent told us that the statement made at verification about this company was incorrect. These apparent contradictory statements underscore the importance of reviewing at verification all relevant documentation pertaining to the program.

Because we were not able to review documents pertaining to the approval or rejection of applications for this program, we are unable to determine that the provision of pioneer status is non-specific. Therefore, we determine the program to be countervailable. Because we find the original granting of pioneer status to be countervailable, we also determine that any extension of such benefits is countervailable.

To calculate the benefit conferred by pioneer status, we applied the corporate tax rate of 40 percent and the development tax rate of five percent to the total tax-exempt income, as claimed on ASM's amended 1986 tax return, derived from the sales of wire rod, the designated pioneer status product. We next applied the excess profits tax rate of three percent to the tax-exempt income over two million ringgit. We then applied the dividends tax rate to the amount of dividends paid as reported in ASM's 1986 (amended) tax return. Finally, we added the benefits derived from each of the tax-exempt benefits and divided that amount by total sales of wire rod to arrive at a bounty or grant rate of 17.22 percent. The total value of wire rod sales is equal to the value of ASM's wire rod sales, which include export sales made through Perdama and Tejana, plus the appropriate trading company mark-up.

II. Programs Determined Not to Confer Bounties or Grants

We determine that bounties or grants are not being provided to manufacturers, producers, or exporters in Malaysia of wire rod under the following programs:

A. Loans from Malaysian Industrial Development Finance Corporation (MIDF)

MIDF, a public company incorporated under the Companies Act of Malaysia, was established in 1960 by the Malaysian government to provide a source of long-term financing for industrial development in Malaysia. Government holdings in MIDF account for 43.81 percent of total issued capital.

MIDF is not a bank; rather, it borrows money on the open market and then lends this money at a fixed rate above its own cost of borrowing. It provides long-term loans for purchasing machinery, building factories, and expanding existing manufacturing facilities. MIDF funds are only available for the financing of fixed assets. In Malaysia, MIDF is the prime lender of fixed-rate loans. We verified that one respondent, ASM, obtained long-term loans from MIDF that were outstanding during the review period.

At verification, we learned that in almost every case, MIDF financing was made through, and in conjunction with, commercial bank participation. For example, in the case of ASM, MIDF financing was one component of a loan package assembled by a Malaysian commercial bank. Once a loan package is developed, the commercial bank contacts MIDF on behalf of its client to apply for MIDF financing. MIDF relies on the initial screening done by the banks in order to provide financing to commercially-sound companies. The main guideline for receiving MIDF financing is the commercial-viability of the project and company. MIDF does its own internal assessment of the applicant focusing on (1) background, (2) management, (3) credit worthiness, (4) marketing, and (5) technical, financial, and economic benefits. At verification, we saw no evidence that such guidelines were not followed.

We have verified that MIDF financing has been provided to a wide variety of industries, including, among others, the food, steel, non-ferrous metals, machinery, wood products, textile, rubber, chemical and paper industries. Further, in contrast to our treatment of benefits provided under the Pioneer Status program, we have verified that MIDF financing is provided in accordance with guidelines which are followed by both the MIDF and commercial banks when reviewing projects for commercial feasibility. As such, we determine that these loans are not limited to a specific enterprise or industry, or group of enterprises or industries, and are not countervailable.

B. New Investments Fund

The Bank Negara Malaysia administers the New Investments Fund (NIF), providing long-term loans to promote further investment in, and development of, new productive capacity in the manufacturing, agriculture, tourism, and mining sectors. This program has been in effect since September 1985. NIF interest rates are variable and are tied to movement in the "basic lending rate." At verification, we found that this program was terminated as of December 29, 1987.

NIF guidelines were established by the Bank Negara, with advice from the Association of Malaysian Banks. These guidelines were then published and distributed to all commercial banks. NIF loans are provided to companies that have qualified for financing from commercial lending institutions. As with MIDF financing, NIF loans are given in connection with other commercial bank financing. We verified that ASM obtained an NIF loan in 1986 to finance modernization of its facilities. This NIF loan was made in connection with several other long-term loans from commercial banks.

At verification, we reviewed the process by which NIF loans are either approved or rejected for each industrial sector. We found no evidence that the published guidelines were not consistently applied. We also verified that NIF loans were provided to a wide range of industries in the manufacturing, agriculture, tourism, and mining sectors. As such, we determine that these loans are not limited to a specific enterprise or industry, or group of enterprises or industries, and are not countervailable.

C. Duty Drawback and Duty Exemptions

The Government of Malaysia allows for duty drawback and duty exemption

on imported materials physically incorporated into exported products, and for duty exemption on certain imported machinery. We verified that ASM received duty drawback and duty exemption on imported scrap and billets, and duty exemption for machinery imported into Malaysia in 1986.

Non-excessive import duty drawback and duty exemption on items physically incorporated into the final exported product are not countervailable. At verification, we reviewed the control systems used by the government to assure that duty drawback and duty exemption on imported scrap and billet met the two criteria outlined above. Because we found that these two criteria were met, we determine that duty drawback and duty exemption on physically incorporated inputs of wire rod are not excessive and, therefore, do not confer bounties or grants to manufacturers or producers of wire rod in Malaysia.

In accordance with section 771(5)(B) of the Act, duty exemption on imports of machinery is not countervailable if the benefits provided are not limited to a specific enterprise or industry, or group of enterprises or industries. At verification, we learned that machinery can be exempted from duty if it is not produced in Malaysia. Such machinery is contained on a list published by the Ministry of Finance and followed by Ministry of Customs officials at each port. We found that there is no application process for receiving these benefits. If an item is contained on the list, no duty is required. This list includes machinery used in a wide range of industries. We verified that each piece of duty-exempt machinery imported by ASM during 1986 was contained on the published list. We also verified that this exemption was not tied to any export requirement.

Because duty exemption of machinery is not limited to a specific enterprise or industry, or group of enterprises or industries, we determine that this program does not confer bounties or grants to manufacturers, producers, and exporters of wire rod in Malaysia.

D. Initial and Annual Depreciation Allowance

ASM, Perdama, and Tejana used the depreciation allowances contained in section 3 of the Income Tax Act of 1967. This section provides for a fixed initial depreciation allowance of 20 percent. This initial allowance is taken in conjunction with the annual depreciation allowance in the first year for recurring qualifying plant expenditures. Annual allowances are provide for in Schedules A & B of the Income Tax Act. The allowance is taken on a straight-line basis and is not to exceed 100 percent of the value of the asset. These are the standard depreciation allowances permitted in Malaysia; they are not tied to specific industries. Malaysian depreciation allowances are based on the useful life of the asset. There is no evidence on the record that annual allowances for steel are excessive or do not reflect the useful life of the assets. Therefore, we determine that initial and annual allowances are not countervailable.

III. Programs Determined Not To Be Used

We determine, based on verified information, that manufacturers, producers, or exporters in Malaysia of wire rod did not apply for, claim, or receive benefits during the review period for exports of wire rod to the United States under the following programs. These programs were described in *Wire Rod II*, supra, unless otherwise noted:

A. Export Tax Incentives

1. Abatement of Taxable Income Based on the Ratio of Export Sales to Total Sales and of Five Percent of the Value of Indiguenous Materials Used in Exports.

2. Allowance of a Percentage of Net Taxable Income Under Section 29 of the Investment Incentives Act of 1968.

(This program was listed as an abatement program in *Wire Rod II*.)

3. Allowance of Taxable Income of Five Percent for Trading Companies Exporting Malaysian-made Products.

(This program was listed as an abatement program in *Wire Rod II*.)

4. Double Deduction For Export Credit Insurance.

5. Double Deduction for Export Promotion.

6. Industrial Building Allowance.

B. Export Insurance Program

C. Government Financial Assistance

1. Long-Term Loans from the Industrial Development Bank of Malaysia (IDBM).

2. Long-Term Loans from the Development Bank of Malaysia (DBM).

D. Other Tax Incentives

1. Pioneer Status Under the Promotion of Investments Act of 1986.

2. Investment Tax Credit/Investment Tax Allowance.

3. Accelerated Depreciation Allowance.

The Income Tax Act of 1967, as amended in 1979, provides for accelerated depreciation to manufacturing and processing industries. Subsequent revisions of this allowance extended eligibility to the non-manufacturing sectors, as well as excluding certain types of plant and equipment. Under this program, the current annual allowance is set at 40 percent of the qualifying plant expenditures. Pioneer designated companies are ineligible to receive accelerated depreciation. We verified that none of the companies under investigation claimed allowances under this program during the review period.

4. Reinvestment Allowances.

Section 133A of the Income Tax Act of 1967 provides for a reinvestment allowance of 25 percent for capital expenditures on a factory, plant, or machinery for any approved project. Companies with pioneer status are ineligible to use this allowance. We verified that none of the companies under investigation claimed benefits under this program during the review period.

5. Reduction in the Cost of State Land for New Industry and Agriculture.

Individual state government authorities in Malaysia have control over prices charged on purchases of land in their respective states. We verified that none of the respondents received government-sponsored price reductions on their land.

IV. Programs Determined Not To Exist

We determine, based on verified information, that the following programs do not exist. These programs were described in *Wire Rod II*:

A. Abatement of Taxable Income of Five Percent of the Value of Malaysian Made Inputs Incorporated into Exports

B. Abatement of Taxable Income Based on a Percentage of the Value-Added of Exported Products

Interested Party Comments

Comment 1: Petitioners argue that the Department should use the average of the banker's acceptance (BA) rate and the overdraft rate as the benchmark for the ECR program. In support of their contention, petitioners cite *Oil Country Tubular Goods from Argentina; Preliminary Results of Countervailing Duty Administration Review (OCTG)* (51 FR 41649, November 18, 1986) where the Department used a weighted-average of several types of short-term financing as its benchmark.

Respondents contend that BA financing is the commercial equivalent of ECR financing and, therefore, the BA rate should be used as the benchmark for calculating benefits from ECR financing. Respondents further contend

that the use of the 90-day BA rate overstates the benefit from ECR financing and that the Department should use either the 30- or 60-day BA rates as a benchmark depending on the number of days the loan was outstanding. Finally, respondents state that no current benefit from ECR financing is being provided to Malaysian exporters since the commercial rate for BA financing is now less than the ECR financing interest rate.

DOC Position: In calculating benefits from short-term loans, the Subsidies Appendix states that the Department will use "the most appropriate national average commercial method of short-term financing". In *OCTG*, the Department found that there was no predominant alternative form of short-term financing comparable to the program under review. Therefore, we used as a benchmark a weighted-average of short-term commercial lending rates. In this case, however, BA financing is the predominant alternative form of financing in Malaysia for trade financing. Therefore, we consider the BA interest rate as the most appropriate rate to use as our benchmark.

As already stated, these loans are granted for up to 90 days. Further, the only BA rates contained in the questionnaire response were the 90-day rates. Respondents did not submit information concerning 30- and 60-day rates until several weeks after verification had ended, information which was not verified. Therefore, we have used the 90-day BA rate as our benchmark.

Finally, when calculating the benefit from a loan program, we look at the interest rates in effect during the review period. Only when a government has made a program-wide change prior to our preliminary determination that can be verified and measured do we take those changes into account. Fluctuating benchmark interest rates do not constitute a program-wide change. Therefore, we are not making any adjustment to our benefit calculation for the ECR program.

Comment 2: Petitioners argue that for the ECR loan received by ASM on a U.S. wire rod order which was subsequently cancelled, the Department should use the value of exports of wire rod to the United States as the denominator for valuing this subsidy since the loan benefits U.S. sales activities.

Respondents assert that, although the loan was granted based upon an export order of wire rod to the United States which was subsequently cancelled, any benefit received from that loan was not linked to any shipment to the United States during the review period. Respondents believe that the Department should exclude any benefit on the cancelled sale in their calculations or, at most, attribute any benefit accrued to total exports of all products.

DOC Position: We recognize that the sale to the United States on which this loan was based was cancelled. However, the funds were received by ASM and must be accounted for in our subsidy calculation. While respondents would have us allocate the benefits from this loan over total exports, we could only consider following that methodology if we had complete information on all loans received on cancelled sales. Since we do not have that information, we have allocated the benefit from the loan in question only over exports to the United States.

Comment 3: Petitioners argue that, since the Malaysian Government denied the Department access to documents relating to the exercise of discretion in granting or denying pioneer status, the Department must make adverse inferences regarding this program and determine that this program confers a bounty or grant. Petitioners further claim that respondents offered only circumstantial evidence and general explanations during the verification concerning this program.

Petitioners assert that there are two bases for finding pioneer benefits under the Investment Incentive Act of 1968 (the 1968 Act) countervailable. They state that under the 1968 Act, the Malaysian Government may grant pioneer status for export purposes. Alternatively, they contend that the initial granting of pioneer status may be characterized as a countervailable domestic subsidy limited to a specific group of industries or companies.

Respondents content that the Department saw every document at verification relating to pioneer status with the exception of an inter-agency memorandum recommending ASM's approval. Respondents argue that the Malaysian Government operates under legal constraints similar to those under which the U.S. Government will not release inter-agency memoranda. Furthermore, respondents state that the Department gave no notice to the Government of Malaysia before or during verification that disclosure of this particular document would ne necessary.

Respondents believe that benefits under pioneer status are not limited to any sector or region of the Malaysian economy, nor are they provided exclusively to companies that export.

Respondents state that export potential is just one of many factors considered in granting pioneer status; the program is not limited to exporters. They also state that pioneer benefits apply equally to both domestic and export sales.

DOC Position: See section I.B. of this notice.

Comment 4: Petitioners argue that, even if the Department finds the granting of pioneer status not countervailable, ASM's receipt of an additional year of pioneer benefits for producing a priority product is a countervailable benefit. They state that most pioneer products are not priority products, and that many of those products on the priority list have export requirements. Petitioners believe that respondents have admitted to the significant discretion the Government exercises in the designation of products as priority products. They further argue that ASM's eligibility for benefits denied to other sectors of the steel industry illustrates the program's discrimination with regard to different products within specific industries and the targeted nature of the priority product extension.

Respondents contend that the extension of pioneer status for priority products is automatic and applicable to virtually all manufactured products in Malaysia. Respondents assert that the designation "priority product" has been applied to products from virtually every sector of the economy. They believe that, given the breadth of industries and products receiving priority status, the extension for priority products should not be considered countervailable.

DOC Position: Given that we have found the initial provision of pioneer status to be countervailable, extensions of those benefits are also countervailable. *See* section I.B. of this notice.

Comment 5: With respect to calculation of benefits derived from the granting of pioneer status, petitioners state that the exemptions from payment of the income tax, development tax, dividend tax, and the excess profits tax should be countervailed and valued at what would have been paid during the review period.

Respondents contend that, even if pioneer status and/or its extension were found to be countervailable, ASM received no benefit during the review period. ASM's original pioneer status benefits ended in the 1985 tax year, and either with or without the extension, ASM was not liable for the payment of any taxes in the 1986 tax year. Therefore, according to respondents, the extension of pioneer status benefits had no effect on ASM's tax liability.

BEST COPY AVAILABLE

Respondents finally argue that, if the Department does consider pioneer status benefits to be countervailable, then it should recognize that ASM's eligibility will expire after the 1987 tax year and follow its policy to take into account changes in programs and eligibility.

DOC Position: When calculating the benefit from an income tax program, we generally compare the amount of tax paid when a company uses the program to the amount of tax it would pay absent the program. In this case, we saw that ASM would have paid no taxes during the review period even absent the program. However, the reason it would not have paid taxes is due at least in part, if not solely, to the fact that the carried-forward capital allowances it applied against taxable income were much larger than they would have been if ASM had not enjoyed pioneer status in prior years. Therefore, we determined that the capital allowances used to offset income in 1986 were due to ASM's pioneer status in previous years and found the total exemption on income from the pioneer status product in that year to be a benefit. *See* section I.B. of this notice.

As stated above, when calculating a benefit for a tax program we look at benefits received during the review period. Only when a government has made a program-wide change prior to our preliminary determination that can be verified and measured do we take those changes into account. In this case, we do not consider ASM's change in eligibility status to constitute a program-wide change. Therefore, we are not making any adjustment to our benefit calculation for the pioneer status program.

Comment 6: Petitioners argue that ASM benefitted from an abatement of five percent of taxable income under section 29 of the Investment Incentive Act of 1968. They state that in its prior investigation of wire rod from Malaysia, the Department verified that Angkasa Marketing, an ASM subsidiary, claimed this abatement for U.S. exports in the 1985 and 1986 years of assessment.

Petitioners argue that the difference in corporate identity should be ignored since the ASM owns 100% of Angkasa, Angkasa and ASM share the same board of directors and general manager, the financial results of Angkasa are consolidated with ASM, ASM controls Angkasa's export activities, and ASM directly benefits financially from benefits received by Angkasa. In support of its argument, petitioners cite the Department's remand determination in *Remand of Carbon Steel Wire Rod from Saudi Arabia (Saudi Wire Rod)* February 1, 1988, before the Court of International Trade) where the Department said the activities of a subsidiary may benefit its parent. Furthermore, according to petitioners, in the *Final Affirmative Countervailing Duty Determination: Brass Sheet and Strip from France) (Brass Sheet)* (52 FR 1218, January 12, 1987), the Department ruled that a subsidy granted to the parent corporation, which did not export during the period of investigation, was found to have benefitted the subsidiary that did export, even where the companies paid taxes separately and maintained separate financial records.

Petitioners believe Angkasa and ASM must be treated as a single entity to prevent the evasion of the countervailing duty law. They believe that a company may attempt to evade an order by exporting to the United States through different subsidiaries. If the Department does not reverse its preliminary decision, petitioners state that it will invite the circumvention of the countervailing duty law. Petitioners assert that the Department should conclude in its final determination that section 20 benefits claimed by Angkasa are countervailable and benefitted ASM.

Respondents contend that, since Angkasa did not export to the United States during the review period, it should not be under investigation. Respondents further contend that Angkasa and ASM are separate entities and should be so considered by the Department because they file separate tax returns, maintain separate financial statements and accounting records, and operate from separate office buildings. Respondents argue that the Department has rejected the argument that money is fungible and that benefits to other products and other related parties necessarily flow to the product and company under investigation. Respondent cites *Final Affirmative Countervailing Duty Determination: Iron Ore Pellets from Brazil* (51 FR 21961, June 17, 1986) to support this contention.

Respondents state that the standard methodology of the Department is to treat individual corporate entities separately unless there is a suspicion of a specific transfer of benefits. In this investigation, nothing suggests that benefits flowed from Angkasa to ASM. Furthermore, the Department learned at verification that it is impermissible to transfer such tax benefits to another company.

Respondents request that the Department continue its established practice of treating corporate entities separately and only investigate those companies that export to the United States during the review period. Furthermore, respondents believe that since Angkasa has not exported wire rod since 1986 or accrued any additional export allowance, the Department has no need to make an affirmative determination and set a deposit rate for a program that can no longer be used. Respondents suggest that even if the Department imputes Angkasa's export allowance to ASM, the subsidy would be zero.

DOC Position: Although Angkasa is wholly-owned by ASM, each company files separate income tax returns. The two companies report separate incomes, and there is no evidence that Angkasa passes on a benefit that it receives on its income to ASM. In fact, Malaysian law prohibits the transfer of income tax benefits.

In the past, the Department has not normally considered a company and its wholly-owned subsidiaries as one company for purposes of determining countervailing duties. For example, in *Brass Sheet*, although the Department recognized that money can pass from a parent to its subsidiaries and vice-versa, the benefits found in that case were attributed solely to the sales of the subsidiary. *Saudi Wire Rod*, cited by the petitioners deals with the transfer of ownership of a subsidiary of a government-owned company to another government-owned company. It does not address how benefits given directly to that subsidiary would be allocated.

Petitioners have raised the very troubling prospect of a subsidiary and its parent evading duties by alternating the years in which they apply for tax benefits or in which they export to the United States. At this time, we see no evidence of such a pattern developing between ASM and Angkasa. We will carefully monitor the activities of ASM and Angkasa during an administrative review, if one is requested, to ensure that transfer of benefits is not occurring. Because Angkasa is not being excluded from this determination, if it should resume exporting wire rod to the United States, any subsidies it receives in connection with such exports would be reflected in any countervailing duties assessed.

Verification

Except where noted, we verified the information used in making our final determination in accordance with section 776(a) of the Act. We used standard verification procedures including meeting with government and company officials, examination of relevant accounting records, and examination of original source

documents of the respondents. Our verification results are outlined in detail in the public versions of the verification reports which are on file in the Central Records Unit (Room B-099) of the Main Commerce Building.

Suspension of Liquidation

We are directing the U.S. Customs Service to suspend liquidation on all entries of wire rod from Malaysia which are entered, or withdrawn from warehouse, for consumption on or after the date of publication of this notice in the Federal Register. In accordance with section 706(a) of the Act (19 U.S.C. 1671e), we are directing the U.S. Customs Service to require a cash deposit equal to 17.71 percent *ad valorem* for each entry of the subject merchandise. This suspension of liquidation will remain in effect until further notice.

This determination is published pursuant to section 705(d) of the Act [19 U.S.C. 1671d(d)].

April 18, 1988.

Joseph A. Spetrini,

Acting Assistant Secretary for Import Administration.

[FR Doc. 88-8890 Filed 4-21-88; 8:45 am]

BILLING CODE 3510-DS-M

National Bureau of Standards

Senior Executive Service; Membership of General and Limited Performance Review Boards

The purpose of the General Performance Review Board (GPRB) is to review performance agreements, appraisals, ratings, and recommended action pertaining to employees in the Senior Executive Service and to make appropriate recommendations to the Director of NBS concerning such matters in such a manner as will assure the fair and equitable treatment of senior executives. The GPRB performs its review functions for all NBS senior executives except those who are members of the NBS Executive Board and those who are members of the GPRB.

The Limited Performance Review Board (LPRB) performs its review functions for all NBS senior executives who are members of the NBS Executive Board (except the NBS Deputy Director) and those senior executives who are members of the NBS GPRB.

The individuals who have been newly appointed by the Director of NBS to membership on the GPRB and LPRB or have had their term of membership extended are listed below:

GPRB

Dr. James E. Hill, Chief, Building Environment Division, National Engineering Laboratory, National Bureau of Standards, Gaithersburg, Maryland 20899. Term: January 1, 1988 to December 31, 1989;

Dr. Willie E. May, Chief, Organic Analytical Research Division, National Measurement Laboratory, National Bureau of Standards, Gaithersburg, Maryland 20899. Term: January 1, 1988 to December 31, 1989.

LPRB

Dr. Jeffrey D. Rosendhal, Assistant Associate Administrator for Space Science and Applications (Science), National Aeronautics and Space Administration, Washington, DC 20546. Term: January 1, 1988 to December 31, 1989.

The full membership and expiration dates of the GPRB and LPRB are listed below:

GPRB

Dr. Karl G. Kessler, Chair, Associate Director for International and Academic Affairs, Office of the Director, National Bureau of Standards, Gaithersburg, Maryland 20899. Expiration of Appointment: December 31, 1988;

Dr. James E. Hill, Chief, Building Environment Division, National Engineering Laboratory, National Bureau of Standards, Gaithersburg, Maryland 20899. Term: January 1, 1988 to December 31, 1989;

Dr. Willie E. May, Chief, Organic Analytical Research Division, National Measurement Laboratory, National Bureau of Standards, Gaithersburg, Maryland 20899. Term: January 1, 1988 to December 31, 1989;

Dr. Donald J. Sullivan, Chief, Time and Frequency Division, National Measurement Laboratory, National Bureau of Standards, Boulder, Colorado 80303. Expiration of Appointment: December 31, 1988;

Dr. William Tolles, Superintendent, Chemistry Division, Code 6100, Naval Research Laboratory, Washington, DC 20375-5000. Expiration of Appointment: December 31, 1988;

Dr. Sheldon Wiederhorn, Group Leader, Mechanical Properties, Institute for Materials Science and Engineering, National Bureau of Standards, Gaithersburg, Maryland 20899. Expiration of Appointment: December 31, 1988.

Ms. Helen M. Wood, Deputy Director, Institute for Computer Sciences and Technology, National Bureau of Standards, Gaithersburg, Maryland 20899. Expiration of Appointment: December 31, 1988.

LPRB

Dr. Burton H. Colvin, Chair, Director of Academic Affairs, Office of the Director, National Bureau of Standards, Gaithersburg, Maryland 20899. Expiration of Appointment: December 31, 1988;

Dr. Jeffrey D. Rosendhal, Assistant Associate Administrator for Space Science and Applications (Science) National Aeronautics and Space Administration, Washington, DC 20546. Term: January 1, 1988 to December 31, 1989;

Dr. Donald K. Stevens, Associate Director for Basic Energy Sciences, Office of Energy Research, Department of Energy, Washington, DC 20545. Expiration of Appointment: December 31, 1988.

FOR FURTHER INFORMATION CONTACT: Mrs. Elizabeth W. Stroud, Chief, Personnel Division, National Bureau of Standards, Gaithersburg, Maryland, telephone 301-975-3000.

Ernest Ambler,

Director.

Date: April 19, 1988.

[FR Doc. 88-8955 Filed 4-21-88; 8:45 am]

BILLING CODE 3510-13-M

COMMITTEE FOR PURCHASE FROM THE BLIND AND OTHER SEVERELY HANDICAPPED

Procurement List 1988; Additions

AGENCY: Committee for Purchase from the Blind and Other Severely Handicapped.

ACTION: Additions to Procurement List.

SUMMARY: This action adds to Procurement List 1988 commodities to be produced by and a service to be provided by workshops for the blind or other severely handicapped.

EFFECTIVE DATE: May 23, 1988.

ADDRESS: Committee for Purchase from the Blind and Other Severely Handicapped, Crystal Square 5, Suite 1107, 1755 Jefferson Davis Highway, Arlington, Virginia 22202-3509.

FOR FURTHER INFORMATION CONTACT: C.W. Fletcher, (703) 557-1145.

SUPPLEMENTARY INFORMATION: On February 12, 1988 the Committee for Purchase from the Blind and Other Severely Handicapped published a notice (53 FR 4200) of proposed additions to Procurement List 1988, December 10, 1987 (52 FR 46928).

Additions

After consideration of the relevant matter presented, the Committee has determined that the commodities and service listed below are suitable for procurement by the Federal Government under 41 U.S.C. 46–48c, 85 Stat. 77 and 41 CFR 51–2.6.

I certify that the following actions will not have a significant impact on a substantial number of small entities. The major factors considered were:

a. The actions will not result in any additional reporting, recordkeeping or other compliance requirements.

b. The actions will not have a serious economic impact on any contractors for the commodities and service listed.

c. The actions will result in authorizing small entities to produce the commodities and provide the service procured by the Government.

Accordingly, the following commodities and service are hereby added to Procurement List 1988:

Commodities

Applicator, Wax
7920-00-633-8774
Pad, Wax Applicator
7920-00-633-8274
Buckle, Belt
8315-00-664-9126
8315-01-069-4982

Service

Janitorial Service
Federal Building, U.S. Post Office and Courthouse, Bryson City, North Carolina

C.W. Fletcher,
Executive Director.

[FR Doc. 88-8877 Filed 4-21-88; 8:45 am]

BILLING CODE 6820-33-M

Procurement List 1988; Proposed Additions and Deletions

AGENCY: Committee for Purchase from the Blind and Other Severely Handicapped.

ACTION: Proposed Additions to and Deletions from Procurement List.

SUMMARY: The Committee has received proposals to add to and delete from Procurement List 1988 services to be provided and commodities to be produced by workshops for the blind or other severely handicapped.

DATES: Comments must be received on or before: May 23, 1988.

ADDRESS: Committee for Purchase from the Blind and Other Severely Handicapped, Crystal Square 5, Suite 1107, 1755 Jefferson Davis Highway, Arlington, Virginia 22202–3509.

FOR FURTHER INFORMATION: C.W. Fletcher, (703) 557–1145.

SUPPLEMENTARY INFORMATION: This notice is published pursuant to 41 U.S.C. 47(a)(2), 85 Stat. 77 and 41 CFR 51–2.6. Its purpose is to provide interested persons an opportunity to submit comments on the possible impact of the proposed actions.

Additions

If the Committee approves the proposed additions, all entities of the Federal Government will be required to procure the services and commodity listed below from workshops for the blind or other severely handicapped.

It is proposed to add the following services and commodity to Procurement List 1988, December 10, 1987 (52 FR 46926).

Commodity

Mattress, Cover
7210-00-082-2081

Services

Janitorial/Custodial
Naval Weapons Station, Concord, California
Janitorial/Custodial
Targhee National Forest Supervisor's Office Building, 420 North Bridge Street, St. Anthony, Idaho
Janitorial/Custodial
Federal Office Building, Martinsburg, West Virginia
Janitorial/Custodial
Federal Building, 4th and F Street, Anchorage, Alaska
Janitorial/Custodial
911 Tacical Airlift Group, Pittsburg, Pennsylvania

Deletions

It is proposed to delete the following commodites and service from the Procurement List 1988, December 10, 1987 (52 FR 46926).

Commodities

Screwdriver, Cross Tip
5120-00-580-2361
5120-00-237-8174
Slippers, Convalescent Patient
6532-00-241-6393
6532-00-279-7794
6532-00-079-7889
6532-00-079-7899
6532-00-079-7902
6532-00-079-7904
6532-00-079-5055
6532-00-079-5056
6532-00-079-5057
Tape Stiffner Assembly
1330-01-051-1533

Service

Grounds Maintenance
Naval Postgraduate School, Monterey, California

C.W. Fletcher,
Executive Director.

[FR Doc. 88-8878 Filed 4-21-88; 8:45 am]

BILLING CODE 6820-33-M

COMMODITY FUTURES TRADING COMMISSION

Coffee, Sugar and Cocoa Exchange Proposed Futures Contract

AGENCY: Commodity Futures Trading Commission.

ACTION: Notice of availability of the terms and conditions of proposed commodity futures contract.

SUMMARY: The Commodity Futures Trading Commission ("Commission") previously published in the **Federal Register** a proposal of the Coffee, Sugar & Cocoa Exchange ("CSCE") for designation as a futures contract market in the International Market Index. The Director of the Division of Economic Analysis ("Division") of the Commodity Futures Trading Commission, acting pursuant to the authority delegated by Commission Regulation 140.96, has determined that, in this instance, an additional period for public comment is warranted.

DATE: Comments must be received on or before May 23, 1988.

ADDRESS: Interested persons should submit their views and comments to Jean A. Webb, Secretary, Commodity Futures Trading Commission, 2033 K Street NW., Washington, DC 20581. Reference should be made to the CSCE International Market Index futures contract.

FOR FURTHER INFORMATION CONTACT: Naomi Jaffe, Division of Economic Analysis, Commodity Futures Trading Commission, 2033 K Street NW., Washington, DC 20581, (202) 254–7227.

SUPPLEMENTARY INFORMATION: On October 22, 1987, the Commission published in the **Federal Register**, for a 60-day comment period, a notice of availability of the CSCE's proposed terms and conditions for the International Market Index futures contract (52 FR 39555). On February 5, 1988, the Commission republished in the **Federal Register**, for a 30-day comment period, notice of the availability of the terms and conditions of this proposed contract (53 FR 3420). In an April 15, 1988 letter to the Commission, the CSCE requested that the Commission republish the terms and conditions of the proposed contract "so that the public

and other interested parties may have the opportunity to comment on the application." As noted, the Director of the Division has determined that, for this proposed contract, an additional comment period is warranted.

Copies of the terms and conditions of the proposed futures contract will be available for inspection at the Office of the Secretariat, Commodity Futures Trading Commission, 2033 K Street, NW., Washington, DC 20581. Copies of the terms and conditions can be obtained through the Office of the Secretariat by mail at the above address or by phone at (202) 254-6314.

Other materials submitted by the CSCE in support of the application for contract market designation may be available upon request pursuant to the Freedom of Information Act (5 U.S.C. 552) and the Commission's regulations thereunder (17 CFR Part 145 (1987)), except to the extent they are entitled to confidential treatment as set forth in 17 CFR 145.5 and 145.9. Requests for copies of such materials should be made to the FOI, Privacy and Sunshine Acts Compliance Staff of the Office of the Secretariat at the Commission's headquarters in accordance with 17 CFR 145.7 and 145.8.

Any person interested in submitting written data, views or arguments on the terms and conditions of the proposed futures contract, or with respect to other materials submitted by the CSCE in support of the application, should send such comments to Jean A. Webb, Secretary, Commodity Futures Trading Commission, 2033 K Street NW., Washington, DC, 20581, by the specified date.

Issued in Washington, DC on April 19, 1988.

Paula A. Tosini,

Director, Division of Economic Analysis.

[FR Doc. 88-8870 Filed 4-21-88; 8:45 am]

BILLING CODE 6351-01-M

DEPARTMENT OF DEFENSE

Public Information Collection Requirement Submitted to OMB for Review

ACTION: Notice.

The Department of Defense has submitted to OMB for clearance the following proposal for collection of information under the provisions of the Paperwork Reduction Act (44 U.S.C. Chapter 35).

Title, Applicable Form, and Applicable OMB Control Number: Carrier Selection and Performance; DLA Form 1773; and None.

Type of Request: New.

Annual Burden Hours: 625.

Annual Responses: 2,500.

Needs and Uses: The Defense Logistics Agency (DLA), Office of the Secretary of Defense will use the form to provide information to DoD contractors regarding the selection of carriers to transport DoD purchased material. Contractors will use the information to contact primary or alternater carriers and to report performance or service deficiencies by carriers to DLA regional area offices. DLA reports carrier performance to the Military Traffic Management Command as part of their Carrier Performance Program.

Affected Public: Businesses or other for-profit.

Frequency: Daily.

Respondent's Obligation: Mandatory.

OMB Desk Officer: Mr. Edward Springer.

Written comments and recommendations on the proposed information collection should be sent to Mr. Edward Springer at Office of Management and Budget Desk Officer, Room 3235, New Executive Office Building, Washington, DC 20503.

DOD Clearance Officer: Ms. Pearl Rascoe-Harrison.

A copy of the information collection proposal may be obtained from, Ms. Rascoe-Harrison WHS/DIOR, 1215 Jefferson Davis Highway, Suite 1204, Arlington, Virginia 22202-4302, telephone (202) 746-0933.

L.M. Bynum,

Alternate OSD Federal Register Liaison Officer, Department of Defense.

April 18, 1988.

[FR Doc. 88-8903 Filed 4-21-88; 8:45 am]

BILLING CODE 3810-01-M

Public Information Collection Requirement Submitted to OMB for Review

ACTION: Notice.

The Department of Defense has submitted to OMB for clearance the following proposal for collection of information under the provisions of the Paperwork Reduction Act (44 U.S.C. Chapter 35).

Title, Applicable Form, and Applicable OMB Control Number: Application for Training Leading to a Commission in the United States Air Force; AF Form 56; and OMB Control Number 0701-0001.

Type of Request: Extension.

Annual Burden Hours: 2,067.

Annual Responses: 6,200.

Needs and Uses: The Air Force uses AF Form 56 to collect information from applicants for training leading to a commission in the Air Force. Air Force application processing activities and approval authorities use the information submitted on the form to select applicants who qualify for officer training.

Affected Public: Applicants for training leading to an Air Force commisison.

Frequency: On Occasion.

Respondent's Obligation: Required to obtain or retain a benefit.

OMB Desk Officer: Mr. Edward Springer.

Written comments and recommendations on the proposed information collection should be sent to Mr. Edward Springer at Office of Management and Budget, Desk Officer, Room 3235, New Executive Office Building, Washington, DC 20503.

DOD Clearance Officer: Ms. Pearl Rascoe-Harrison.

A copy of the information collection proposal may be obtained from, Ms. Rascoe-Harrison WHS/DIOR, 1215 Jefferson Davis Highway, Suite 1204, Arlington, Virginia 22202-4302, telephone (202) 746-0933.

L.M. Bynum,

Alternate OSD Federal Register Liaison Officer, Department of Defense.

April 18, 1988.

[FR Doc. 88-8904 Filed 4-21-88; 8:45 am]

BILLING CODE 3810-01-M

Public Information Collection Requirement Submitted to OMB for Review

ACTION: Notice.

The Department of Defense has submitted to OMB for clearance the following proposal for collection of information under the provisions of the Paperwork Reduction Act (44 U.S.C. Chapter 35).

Title, Applicable Form, and Applicable OMB Control Number. Department of Defense Standard Tender of Freight Services; MTMC Form MT 364-R; and OMB Control Number 0704-0261.

Type of Request: Revision.

Annual Burden Hours: 10,184.

Annual Responses: 13,578.

Needs and Uses: The information, in uniform format, is used to determine freight transportation charges, accessorial and security service costs, and to select carriers for 1.2 million GBL freight shipments annually. Respondents are freight carriers of all modes, except air cargo.

Affected Public: Businesses or other for profit, and small businesses or organizations.

Frequency: On Occasion.

Respondent's Obligation: Required to obtain or retain a benefit.

OMB Desk Officer: Mr. Edward Springer.

Written comments and recommendations on the proposed information collection should be sent to Mr. Edward Springer at Office of Management and Budget, Desk Officer, Room 3235, New Executive Office Building, Washington, DC 20503.

DOD Clearance Officer: Ms. Pearl Pascoe-Harrison.

A copy of the information collection proposal may be obtained from, Ms. Mascoe-Harrison WHS/DIOR, 1215 Jefferson Davis Highway, Suite 1204, Arlington, Virginia 22202-4302, telephone (202) 746-0933.

L.M. Bynum,

Alternate OSD Federal Register Liaison Officer, Department of Defense.

April 18, 1988.

[FR Doc. 88-8905 Filed 4-21-88; 8:45 am]

BILLING CODE 3810-01-M

Office of the Secretary

Defense Science Board 1988 Summer Study on Countering Soviet Fire Support; Change in Location of Advisory Committee Meeting Notice

SUMMARY: The meeting of the Defense Science Board 1988 Summer Study on Countering Soviet Fire Support scheduled for April 20-21, 1988 as published in the **Federal Register** (Vol. 53, No. 35, Page 5293, Tuesday, February 23, 1988, FR Doc. 88-3772) will be held at Fort Sill, Oklahoma.

Linda M. Bynum,

Alternate OSD Federal Register Liaison Officer, Department of Defense.

April 18, 1988.

[FR Doc. 88-8906 Filed 4-21-88; 8:45 am]

BILLING CODE 3810-01-M

Defense Science Board Task Force on Subgroup to the Strategic Air Defense; Cancellation of Meeting

SUMMARY: The meeting notice for the Defense Science Board Task Force on Subgroup to the Strategic Air Defense for March 30, 1988 as published in the **Federal Register** (Vol. 53, No. 30, Page 4441, Tuesday, February 16, 1988, FR Doc. 88-3218.) has been cancelled.

Linda M. Bynum,

Alternate OSD Federal Register Liaison Officer, Department of Defense.

April 18, 1988.

[FR Doc. 88-8907 Filed 4-21-88; 8:45 am]

BILLING CODE 3810-01-M

Department of Defense Wage Committee; Closed Meetings

Pursuant to the provisions of section 10 of Pub. L. 92-463, the Federal Advisory Committee Act, notice is hereby given that a meeting of the Department of Defense Wage Committee will be held on Tuesday, May 3, 1988; Tuesday, May 10, 1988; Tuesday, May 17, 1988; Tuesday, May 24, 1988; and Tuesday, May 31, 1988 at 10:00 a.m. in Room 1E801, The Pentagon, Washington, DC.

The Committee's primary responsibility is to consider and submit recommendations to the Assistant Secretary of Defense (Force Management and Personnel) concerning all matters involved in the development and authorization of wage schedules for federal prevailing rate employees pursuant to Pub. L. 92-392. At this meeting, the Committee will consider wage survey specifications, wage survey data, local wage survey committee reports and recommendations, and wage schedules derived therefrom.

Under the provisions of section 10(d) of Pub. L. 92-463, meetings may be closed to the public when they are "concerned with matters listed in 5 U.S.C. 552b." Two of the matters so listed are those "related solely to the internal personnel rules and practices of an agency," (5 U.S.C. 552b(c)(2)), and those involving "trade secrets and commercial or financial information obtained from a person and privileged or confidential" (5 U.S.C. 552b(c)(4)).

Accordingly, the Deputy Assistant Secretary of Defense (Civilian Personnel Policy) hereby determines that all portions of the meeting will be closed to the public because the matters considered are related to the internal rules and practices of the Department of Defense (5 U.S.C. 552b(c)(2)), and the detailed wage data considered by the Committee during its meetings have been obtained from officials of private establishments with a guarantee that the data will be held in confidence (5 U.S.C. 552(c)(4)).

However, members of the public who may wish to do so are invited to submit material in writing to the chairman concerning matters believed to be deserving of the Committee's attention.

Additional information concerning this meeting may be obtained by writing the Chairman, Department of Defense Wage Committee, Room 3D264, The Pentagon, Washington, DC 20301.

L.M. Bynum,

Alternate OSD Federal Register Liaison Officer, Department of Defense.

April 18, 1988.

[FR Doc. 88-8908 Filed 4-21-88; 8:45 am]

BILLING CODE 3810-01-M

Department of the Air Force

Community College of the Air Force; Meeting

The Community College of the Air Force (CCAF) Board of Visitors will hold a meeting on May 24, 1988 at 8:00 am in the CCAF Conference Room, Room 121 Building 836, located at Maxwell Air Force Base, Montgomery, Alabama.

The meeting is open to the public. Agenda items include: Update on the State of the College; Changes to the 1989-90 *CCAF General Catalog;* The DANTES Telecourse Testing Program; Growth, Advancement, and Assessment; and an Update on the Student Processing System.

For further information contact Major Peter Macchia, Jr., (205) 293-7937, Community College of the Air Force, Maxwell Air Force Base, Montgomery, Alabama 36112-6655.

Patsy J. Conner,

Air Force Federal Register Liaison Officer.

[FR Doc. 88-8934 Filed 4-21-88; 8:45 am]

BILLING CODE 3910-01-M

Department of the Army

Coastal Engineering Research Board; Open Meeting

In accordance with section 10(a)(2) of the Federal Advisory Committee Act (Pub. L. 92-463), announcement is made of the following committee meeting:

Name of Committee: Coastal Engineering Research Board (CERB).

Date of Meeting: May 18-20, 1988.

Place: Olympia Village, Oconomowoc, Wisconsin.

Time: 8:30 a.m. to 4:45 p.m. on May 18; 8:00 a.m. to 5:00 p.m. on May 19; 8:00 a.m. to 12:00 noon on May 20.

Theme: Coastal Engineering Implications of Changes in the Great Lakes Water Levels.

Proposed Agenda: The morning session on May 18 will consist of a review of CERB business, presentations and discussions on Graduate Education Initiative, Update of FY 88 Coastal Engineering R&D Program, and a general overview and briefing on the field trip.

The afternoon of May 18 will be devoted to a boat trip and tour of the Milwaukee Harbor structures, Milwaukee water intake, and southeast Wisconsin shoreline to Racine where there will be a ground tour of Racine Harbor.

The session on May 19 will consist of several presentations entitled: A Great Lakes Overview, The Riparian Viewpoint, IJC Task Force and Reference Study, Open Coast and Wave Runup Studies, Great Lakes Coastal Flooding and Pub. L. 99 Advance Measures, Wave Information Study, Chicago Lakefront, Shore Response to Changing Lake Levels, Monitoring Completed Coastal Projects Program, and Beach Nourishment—Design, Objectives, and Results. The session will also consist of a panel discussion entitled Problems and Actions Resulting from Fluctuating Lake Levels.

On May 20 there will be a presentation on North Central Division Coastal Engineering Research Needs and a panel discussion on Coastal R&D on the Great Lakes—Present and Future. Recommendations by members of the Board will also be presented.

This meeting is open to the public; participation by the public is scheduled for 10:15 a.m. on May 20.

The entire meeting is open to the public subject to the following:

1. Since seating capacity of the meeting room is limited, advance notice of intent to attend, although not required, is requested in order to assure adequate arrangements for those wishing to attend.

2. Oral participation by public attendees is encouraged during the time scheduled on the agenda; written statements may be submitted prior to the meeting or up to 30 days after the meeting.

Inquiries and notice of intent to attend the meeting may be addressed to Colonel Dwayne G. Lee, Executive Secretary, Coastal Engineering Research Board, U.S. Army Engineer Waterways Experiment Station, P.O. Box 631, Vicksburg, Mississippi 39180-0631.

Dwayne G. Lee,

Colonel, Corps of Engineers, Executive Secretary.

[FR Doc. 88-8831 Filed 4-21-88; 8:45 am]

BILLING CODE 3710-08-M

Army Science Board; Closed Meeting

In accordance with section 10(a)(2) of the Federal Advisory Committee Act (Pub. L. 92-463), announcement is made of the following Committee Meeting:

Name of The Committee: Army Science Board (ASB).

Dates of Meeting: 9-13 May 1988.

Times of Meetings:

1200-2100 hours, 9 May
0800-1300 hours, 10 May
0800-2000 hours, 11 May
0800-1700 hours, 12 May
0800-1215 hours, 13 May

Place: Monterey, CA.

Agenda: The Army Science Board Ad Hoc Subgroup for Tactical Applications of Directed Energy Weapons (DEW) will meet for the purpose of attending hearings and presentation by DoD and DOE organizations on High Power Microwave programs and initiatives. This meeting will be closed to the public in accordance with section 552b(c) of Title 5, U.S.C., specifically subparagraph (1) thereof, and Title 5, U.S.C., Appendix 2, subsection 10(d). The classified and unclassified matters and proprietary information to be discussed are so inextricably intertwined so as to preclude opening any portion of the meeting. Contact the Army Science Board Administrative Officer, Sally Warner, for further information at (202) 695-3039 or 695-7046.

Sally A. Warner,

Administrative Officer Army Science Board.

[FR Doc. 88-8820 Filed 4-21-88; 8:45 am]

BILLING CODE 3710-08-M

DEPARTMENT OF EDUCATION

Proposed Information Collection Requests

AGENCY: Department of Education.

ACTION: Notice of proposed information collection requests.

SUMMARY: The Director, Information Technology Services, invites comments on the proposed information collection requests as required by the Paperwork Reduction Act of 1980.

DATE: Interested persons are invited to submit comments on or before May 23, 1988.

ADDRESSES: Written comments should be addressed to the Office of Information and Regulatory Affairs, Attention: Jim Houser, Desk Officer, Department of Education, Office of Management and Budget, 726 Jackson Place NW., Room 3208, New Executive Office Building, Washington, DC 20503. Requests for copies of the proposed information collection requests should be addressed to Margaret B. Webster, Department of Education, 400 Maryland Avenue SW., Room 5624, Regional Office Building 3, Washington, DC 20202.

FOR FURTHER INFORMATION CONTACT: Margaret B. Webster, (202) 732-3915.

SUPPLEMENTARY INFORMATION: Section 3517 of the Paperwork Reduction Act of 1980 (44 U.S.C. Chapter 35) requires that the Office of Management and Budget (OMB) provide interested Federal agencies and the public an early opportunity to comment on information collection requests. OMB may amend or waive the requirement for public consultation to the extent that public participation in the approval process would defeat the purpose of the information collection, violate State or Federal law, or substantially interfere with any agency's ability to perform its statutory obligations.

The Director, Information Technology Services, publishes this notice containing proposed information collection requests prior to submission of these requests to OMB. Each proposed information collection, grouped by office, contains the following: (1) Type of review requested, e.g., new, revision, extension, existing or reinstatement; (2) Title; (3) Frequency of collection; (4) The affected public; (5) Reporting burden; and/or (6) Recordkeeping burden; and (7) Abstract. OMB invites public comment at the address specified above. Copies of the requests are available from Margaret Webster at the address specified above.

Dated: April 19, 1988.

Carlos U. Rice,

Director for Information Technology Services.

Office of Educational Research and Improvement

Type of review: New
Title: Survey on Education Partnerships
Frequency: One time only
Affected Public: Individuals or households
Reporting Burden:
Responses: 1,600
Burden Hours: 480
Recordkeeping:
Recordkeepers: 0
Burden Hours: 0
Abstract: This survey will collect information from school principals concerning the number of partnerships the kinds of support they provide to schools, and the number of students directly involved in these partnerships. The study is needed to determine what has happened since the White House called upon the Department to encourage involvement of the private sector in education.

Type of Review: New
Title: Locator Information Update for NPSAS Longitudinal Components
Frequency: One time only
Affected Public: Individuals or households
Reporting Burden:
Responses: 4,000
Burden Hours: 200
Recordkeeping:
Recordkeepers: 0
Burden Hours: 0
Abstract: This locator information update will obtain information on the enrollment and completion status of a subsample of students who

participated in the National Postsecondary Student Aid Study (NPSAS). The Department will use the information to conduct a field test linking longitudinal activities to the NPSAS and to determine the parameters necessary for the design of a base year sample to support longitudinal linkages.

Office of Postsecondary Education

Type of Review: Revision
Title: Perkins Loan Program Assignment Form
Frequency: On occasion
Affected Public: Individuals or households
Reporting Burden:
Responses: 80,000
Burden Hours: 40,000
Recordkeeping:
Recordkeepers: 3,000
Burden Hours: 1,500
Abstract: This form will be used to collect pertinent information regarding defaulted student loans from institutions participating in the Perkins Loan Program. The institutions use this form to assign defaulted student loans to the Federal Government for collection.

Type of Review: Extension
Title: Lender's Application for Payment of Insurance Claim
Frequency: On occasion
Affected Public: Businesses or other for-profit; non-profit institutions
Reporting Burden:
Responses: 24,000
Burden Hours: 3,600
Recordkeeping:
Recordkeepers: 12,000
Burden Hours: 1,440
Abstract: This form will be used by lenders to request payment of a claim under the Federal Insured Student Loan Program. The Department uses the information to match disbursement data for claim payment validation, to calculate the claim payment amount, and to provide the basis used in the collection of defaulted loans.

Type of Review: New
Title: Federal Collection Productivity Study
Frequency: One time only
Affected Public: Businesses or other for-profit
Reporting Burden:
Responses: 7
Burden Hours: 28
Recordkeeping:
Recordkeepers: 0
Burden Hours: 0
Abstract: The data collected in the study will provide the Department with information on the relative cost effectiveness of commercial collection activities versus Regional Office collection activities. The information is necessary to allow the Department to make informed decisions regarding allocation of resources for collection activities.

[FR Doc. 88-8872 Filed 4-21-88; 8:45 am]
BILLING CODE 4000-01-M

DEPARTMENT OF ENERGY

Idaho Operations Office, Foundry Industry Technology Development

AGENCY: Department of Energy.

ACTION: Solicitation for Financial Assistance Applications No. DE-PS07-88ID12724 for Foundry Industry Technology Development.

SUMMARY: The U.S. Department of Energy (DOE), Idaho Operations Office, is seeking applications for cost-sharing research for technology development in the foundry industry. The objective of this solicitation is to develop advanced technology to improve the competitive position of the U.S. Foundry Industry. This may be accomplished through major gains in manufacturing productivity and/or process cost reduction and/or product quality improvement. It is also desirable that the developed technology led to reduced energy consumption in the industry. The DOE has identified the following project areas to have significant potential for research and development in the foundry industry. However, applications are *not* limited to these projects areas, and the listed areas are *not* in any order of priority. *All* applications should explain why industry is not already pursuing the concept to be developed and why DOE funding is appropriate.

1. Novel raw materials or molten metal beneficiation or utilization.
   - Novel utilization of scrap turnings and borings.
   - Removal of tramp elements from scrap or molten metal.
   - Effective removal of manganese for high quality austempered ductile iron.
2. Optimization and/or process control of the foundry cupola.
   - Development of an on-line process model to characterize cupola melting.
   - Development of an on-line process control system for the cupola
   - Development of alternate cupola fuels (e.g., formcoke).
3. Development of new molding methods and/or molding materials.
   - Development of molding materials to replace sand.
   - Moldless casing utilizing electromagnetic shaping.
4. Development and/or optimization of new pattern-making technology.
   - Development of new pattern materials.
   - Optimizaton of the evaporative casting process.

The DOE anticipates awarding between one and four Cooperative Agreements as a result of this solicitation. Each agreement will provide Federal assistance to a research project on a cost-sharing basis. The DOE anticipates that $400,000 will be available for funding Phase I of awarded projects. Applications which do not state that the applicant will cost share 20% or more of Phase I and 20% or more of Phase II, will not be evaluated. At the end of Phase I, a go/no go decision will be made by the DOE and project participants as to whether the project will continue into Phase II. The DOE's decision will be based on the results of Phase I and the availability of funds. An additional $1,000,000 is anticipated to be available for funding Phase II projects. Private industry, educational institutions, nonprofit organizations, individuals, or other private organizations are invited to respond to this announcement. Applications from Federal agencies and/or laboratories owned, operated, or under the cognizance of the Federal Government will not be considered for selection and should not respond.

DATES: This solicitation will be issued on April 15, 1988. Applications are due by July 18, 1988.

Contracts: Potential applicants desiring to receive a copy of this solicitation should provide a written request to: E. M. Bowhan, Contracts Management Division, U.S. Department of Energy, Idaho Operations Office, 785 DOE Place, Idaho Falls, Idaho 83402.

Issued at Idaho Falls, Idaho, on April 13, 1988.

H. B. Clark,
Director, Contracts Management Division.

[FR Doc. 88-8833 Filed 4-21-88; 8:45 am]
BILLING CODE 6450-01-M

Federal Energy Regulatory Commission

[Docket Nos. ER88-343-000 et al.]

Northern States Power Company, et al.; Electric Rate, Small Power Production, and Interlocking Directorate Filings

April 19, 1988.

Take notice that the following filings have been made with the Commission:

1. Northern States Power Company

[Docket No. ER88-343-000]

Take notice that on April 13, 1988, Northern States Power Company (Minnesota) (NSP) tendered for unilateral filing as an initial rate six copies of unexecuted service agreements and rate schedules for transmission service provided by NSP to the following customers: the cities of Adrian, Jackson, Mountain Lake, Lakefield, Springfield, Westbrook, Windom, and Worthington, Minnesota, and Cooperative Power Association (CPA).

The eight cities and CPA purchase power and energy from either the Missouri Basin Municipal Power Agency (MBMPA) or the Western Area Power Administration (WAPA) or both. They require transmission service from NSP to deliver that power and energy from NSP interconnections with WAPA to NSP's interconnections with the system of Interstate Power Company, with which they are directly connected. The Company seeks in this filing to bring service to the eight cities and CPA under its current transmission rate of $14.77 per kilowatt per year filed on October 30, 1987 to reflect the reduction in the Federal income tax rate from 46% to 34%. That filing was accepted by order of December 4, 1987 in Docket No. ER88-76-000.

NSP requests that the present filing to place the eight cities and CPA on the $14.77 rate be allowed to become effective on July 1, 1988.

NSP has served copies of the filing on each affected customer and state commission.

Comment date: May 3, 1988, in accordance with Standard Paragraph E at the end of this notice.

2. Columbus Southern Power Company

[Docket No. ER88-344-000]

Take notice that on April 14, 1988, Columbus Southern Power Company (CSP) tendered for filing a Supplemental Agreement (Agreement) between the City of Westerville, Ohio (Westerville) and CSP dated as of January 1, 1988. The Agreement between Westerville and CSP revises the service agreements entered into as of March 12, 1982, May 1, 1983, and June 1, 1986, so as to provide Westerville with a reduced rate for long-term full requirements service and to reflect the decrease in the Federal corporate income tax rate pursuant to the Tax Reform Act of 1986.

CSP and Westerville request an effective date of January 1, 1988, and therefore request waiver of the Commission's notice requirements.

Copies of the filing were served upon the Public Utilities Commission of Ohio and the City of Westerville, Ohio.

Comment date: May 3, 1988, in accordance with Standard Paragraph E at the end of this notice.

3. HL Power Company

[Docket No. ER88-345-000]

Take notice that on April 14, 1988, HL Power Company (HLPC) tendered for filing, pursuant to 18 CFR 35.1 and 35.12, proposed HL Power Company Initial Rate Schedule No. 1 and Rate Schedule No. 2, applicable to the sale of energy and capacity by HLPC to Pacific Gas and Electric Company (PG&E) from a 32 net NW geothermal/biomass fueled small power production facility to be constructed near Wendel in Lassen County, California (Facility). HLPC applied for Federal Energy Regulatory Commission (FERC) certification of the Facility's qualifying status under Section 201 of the Public Utility Regulatory Policies Act of 1978 (PURPA) on January 11, 1988 in Docket No. QF 88-189-000.

The proposed Initial Rate Schedule is set forth in that certain "As-Delivered Capacity and Energy Standard Offer No. 1 Power Purchase Agreement," dated March 22, 1985, between GeoProducts Corporation and PG&E (SO-1).[1] The SO-1 is an unmodified "standard offer" pre-approved by the California Public Utilities Commission (CPUC). It establishes that the rate for sales to PG&E shall be equal to PG&E's full short run avoided operating costs as approved by the CPUC.

The proposed Rate Schedule No. 2 is set forth in that certain "Long Term Energy and Capacity Standard Offer No. 4 Power Purchase Agreement," dated March 22, 1985, between GeoProducts certain "Long Term Energy and Capacity Standard Offer No. 4 Power Purchase Agreement," dated March 22, 1985, between GeoProducts Corporation and PG&E (SO-4).[2] The SO-4 is an unmodified "standard offer" pre-approved by the CPUC. It establishes that the rate for sales of energy and capacity to PG&E for the first ten years shall be at the state-forecast prices as set forth in the SO-4. Thereafter, rates for sales shall equal PG&E's full short run avoided operating costs.

HLPC requests waivers of, or pre-approval pursuant to the followng provisions of FERC's regulations: 18 CFR Parts 33, 41, 45, 46, 50, 101, and 141 and 18 CFR 35.3(b), 35.12(b)(2)(ii), and 35.15(b)(5).

Due to the fact that the proposed rate schedules are not based on the cots of the selling utility (HLPC) to produce the power, but rather on the avoided costs of the purchasing utility (PG&E), extensive and detailed reporting of HLPC costs are therefore not required to enable FERC to evaluate the justness and reasonableness of the proposed rates nor does HLPC possess significant market power, or serve direct customers such that the full weight of the protective provisions of the Federal Power Act must be imposed.[3]

Comment date: May 3, ,1988, in accordance with Standard Paragraph E at the end of this notice.

Standard Paragraph

E. Any person desiring to be heard or to protest said filing should file a motion to intervene or protest with the Federal Energy Regulatory Commission, 825 North Capitol Street N.E., Washington, DC 20426, in accordance with Rules 211 and 214 of the Commission's Rules of Practice and Procedure (18 CFR 385.211 and 385,214). All such motions or protests should be filed on or before the comment date. Protests will be considered by the Commission in determining the appropriate action to be taken, but will not serve to make protestants parties to the proceeding. Any person wishing to become a party

---

[1] The SO-1 and was assigned to GeoPower Corporation (GeoPower), a wholly-owned subsidiary of GeoProducts, pursuant to that certain Agreement of Transfer and Assignment of Assets, dated September 3, 1986 and, for financing purposes only, to Commercial Union Leasing Corporation (CULC), which assignments received PG&E's written consent on January 15, 1987. GeoPower subsequently assigned the SO-1 to HLPC pursuant to that certain Assignment Agreement dated as of March 1, 1988, which assignment was consented to by PG&E on April 7, 1988. (The CULC security interest was terminated on April 7, 1988).

[2] The SO-4 was assigned to GeoPower pursuant to that certain Agreement of Transfer and Assignment of Assets, dated September 3, 1986, and, for financing purposes only, to CULC, pursuant to that certain Assignment Agreement, dated as of March 1, 1988, which assignments received PG&E's written consent on September 10, 1986. Subsequently, GeoPower assigned the SO-4 to HLPC on March 23, 1988, which assignment received PG&E's consent on April 7, 1988. (The CULC security interest was terminated on April 7, 1988).

[3] See, *e.g. Orange and Rockland Utilities, Inc.*, 42 FERC ¶61,012 (1988), *St. Joe Minerals Corp.*, 23 FERC ¶61,208 (1983), *Wheelabrator-Frye, Inc.*, 19 FERC ¶61,266 (1982) and *Resource Recovery (Dade County), Inc.*, 20 FERC ¶61,138 (1982).

must file with the Commission and are available for public inspection.

Lois D. Cashell,

Acting Secretary.

[FR Doc. 88-8882 Filed 4-21-88; 8:45 am]

BILLING CODE 6717-01-M

New Filing Location

April 18, 1988.

Effective April 25, 1988, all filings hand-delivered by anyone other than Commission Staff are to be submitted to the Secretary through the Public Reference Room (Room 1000). The purpose of this change is to restrict messenger traffic to the first floor. Commission Staff should continue to submit its filings to Room 3110. The staff of the Public Reference Room will time-stamp filings (and return stamped copies if requested). Anyone with courtesy copies of filings to be delivered to other Commission offices should leave them with the staff of the Public Reference Room for delivery. Further processing of filings will be done by the Dockets Branch. Filings will be subject to rejection for lack of applicable fees and proper number of copies.

Lois D. Cashell,

Acting Secretary.

[FR Doc. 88-8881 Filed 4-21-88; 8:45 am]

BILLING CODE 6717-01-M

ENVIRONMENTAL PROTECTION AGENCY

[Docket No. F-88-MTFN-FFFFF; FRL-3368-5]

Municipal Solid Waste Task Force

AGENCY: Environmental Protection Agency.

ACTION: Notice.

SUMMARY: The Environmental Protection Agency (EPA) today announces the formation of a Municipal Solid Waste Task Force (The "Task Force") in the Office of Solid Waste (OSW) whose prinicpal function is the development of a national strategy regarding the management of municipal solid waste. The Agency intends to develop and announce this national strategy during 1988 and is, at this time, seeking initial public input to its development.

DATES: The Agency is requesting that all information submitted in response to today's notice be submitted on or before May 13, 1988. Three public meetings will be held in Boston, Massachusetts on May 9, 1988, Seattle, Washington on May 11, 1988, and Dallas, Texas on May 13, 1988.

ADDRESSES: (1) *Public Meetings*—The public meetings will be held to receive public comments on the development of a national strategy regarding municipal solid waste management. Oral and written statements or information may be submitted at the public meetings. The Task Force is expecially interested in oral presentations that focus on two areas. The first topic of interest is identification of issues on which the Task Force should focus in developing a national strategy. Second, the Task Force is seeking comments on the appropriate roles for federal, state, and local government, industry, and the general public in managing the municipal solid waste problem. Oral presentations must be limited to a maximum of 10 minutes. In addition, time will be available at the end of the day for general comments from the public. The meetings will begin at 10:00 a.m. and will be held in the following locations:

May 9, 1988
Sheraton Needham Hotel
100 Cabot Street
Needham Heights, Massachusetts

May 11, 1988
Seattle Center
Lopez Room (Inside Center Grounds at NW Corner) 1st Avenue North and Republican Streets
Seattle, Washington

May 13, 1988
U.S. Environmental Protection Agency
12th Floor Conference Room
1445 Ross Avenue
Dallas, Texas

Those persons interested in speaking at the public meetings should call the RCRA Hotline at 1-800-424-9346 on or before May 5, 1988 to botain scheduling information.

(2) *Written Comments*—The public should send one or more copies of their comments and/or information in response to this notice to the following address: EPA RCRA Docket (WH-562), 401 M Street SW., Washington, DC 20406. Comments should be identified by regulatory docket reference code F-88-MTFN-FFFFF. The docket is open from 9:30 a.m. to 3:30 p.m. Monday through Friday, except for federal holidays. The public must make an appointment to reveiw docket materials and should call Michelle Lee at (202) 475-9327 for appointments. The public may copy at no cost a maximum of 50 pages of meterial from any one regulatory docket. Additional copies cost $.20 per page.

FOR FURTHER INFORMATION CONTACT: Susie Goldring, Municipal Solid Waste Task Force, Office of Solid Waste (WH-562), U.S. Environmental Protection Agency, 401 M Street SW., Washington, DC 20460, (202) 382-6261.

SUPPLEMENTARY INFORMATION:

I. Authority

The authority for the activities discussed in this notice are found in the Solid Waste Disposal Act, as amended by the Resource Conservation and Recovery Act, as amended, 42 U.S.C. 6901 *et seq.* and in the Toxic Substances Control Act, as amended, 15 U.S.C. 2601 *et seq.*

II. Background

Many areas of the United States are today facing very serious difficulties in managing municipal solid waste. In some areas, particularly the large-population metropolitan areas, the problem has been described as reaching crisis proportions. The problem can be illustrated as follows:

- We as a nation relentlessly produce more and more muinicipal solid waste, about 150 million tons per year now, with about a 20% increase expected by the year 2000. Options for reducing the amount of solid waste needing disposal, such as source reduction and recycling, are only beginning to be seriously considered as important components of solid waste management in many areas of the United States.
- Nearly one-third of existing municipal solid waste landfills will be full in about the next 5-7 years. A few examples: in Connecticut all landfill capacity will be largely exhausted by 1990 and in Illinoois by 1993. New York State has had 18 landfills closed recently with no new ones opened. Los Angeles expects to run out of landfill capacity within about 5-6 years.
- Many existing municipal solid waste landfills are inadequately located, designed, operated, or maintained and are, therefore, less than fully protective of human health and the environment. Although closure or upgrading of these facilities is necessary, such closures contribute to the solid waste management dilemma in the sense that available, albeit substandard, disposal options are reduced.
- Largely in response to the need for enahnced measures for environmental protection, and because of the increased scarcity of available sites for many communities, costs of waste management are soaring. In some areas, disposal costs range up to and over $100 per ton, whereas only a few years ago costs were frequently less than $10 per ton.
- Incinerators, which have advantages such as greatly reducing waste volumes and the potential for

energy generation, are proving difficult to site due to concerns over air emissions. In addition, ash management and disposal is a significant problem area for incinerators.

Due to (1) the magnitude of municipal solid waste management problems facing this country, (2) the elements of commonality present in certain of these issues for many states and municipalities, and (3) the fact that some possible solutions are regional, interstate, or federal in nature, the Agency believes that a national strategy for the management of municipal solid waste is necessary.

III. Goals of the Task Force

The goals of EPA's Municipal Solid Waste Task Force are to develop a national strategy for effective management of municipal solid waste and to identify how the strategy can be implemented. In working towards these goals, the Task Force intends to accomplish the following:

(1) Identify current practices and programs regarding municipal solid waste management, including federal state, regional, municipal, and foreign programs. Identification of these programs will include legislative and regulatory programs at all levels of government, as well as actual generation, collection, transport, treatment, storage, and disposal practices.

(2) Identify the problems causing ineffective management of municipal solid waste.

(3) Identify and publicize successful programs for municipal solid waste management.

(4) Establish and maintain effective communication with all parties involved with management of municipal solid waste.

(5) Identify existing federal authorities regarding municipal solid waste.

(6) Identify incentives and barriers to source reduction, recycling, and other waste management options.

(7) Identify appropriate roles for federal, state, and local government, private industry, and the general public and actions for which each should be responsible.

(8) Identify ongoing research, as well as needed research, regarding municipal solid waste management.

(9) Issue a draft strategy report in July 1988 and a final strategy document in December 1988. Public meetings on the strategy report will be held in several locations nationally following both the draft and final issuances.

IV. Scope of the Municipal Solid Waste Strategy

In its work, EPA intends to develop a national strategy for addressing municipal solid waste. This strategy will build on work underway in the Agency and by others and will address the following areas:

(1) The role and feasibility of:
- Source Reduction
- Recycling
- Waste Treatment
- Incineration/Energy Recovery
- Landfilling

(2) The health and environmental impacts of all major aspects of and options for municipal solid waste management.

(3) Current and future capacity/capability issues.

(4) The need for and types of public education and information regarding municipal solid waste management.

(5) The following components of the municipal solid waste stream will be addressed, including volume, types, sources, current practices, recycling/reuse markets and value, scarcity of material, toxicity, energy value, impacts of waste management capacity, etc. The scope of assessment will depend on the particular component.
- Paper/Paper Products
- Plastics
- Food/Yard Wastes
- Tires
- Ferrous Metals
- Non-Ferrous Metals
- Glass
- Batteries (wet and dry)
- "White Goods"/Appliances
- Municipal Waste Combustion Ash
- Asbestos
- Municipal Sewage Sludge
- Used Oil
- Household Hazardous Waste
- Small Quantity Generator Hazardous Waste
- Infectious Waste

(6) Several other wastes will not be directly addressed by the Task Force, including construction and demolition waste, automobiles, and non-hazardous industrial sludge.

(7) The appropriate role for governmental procurement of recycled materials.

(8) The need for federal incentives for source reduction and recycling markets and programs.

(9) The need for and role of product and raw material substitution to increase waste recyclability or reduce the toxicity or volume of wastes.

V. Request for Information

The Municipal Solid Waste Task Force is interested in receiving comments and information pertaining to the goals and scope of the Task Force's work as identified above. The Task Force is particularly interested in receiving information on successful municipal waste management efforts and programs at the Federal, state, local, and foreign government levels in the private sector.

Date: April 18, 1988.

Jack W. McGraw,

Acting Assistant Administrator for Solid Waste and Emergency Response.

[FR Doc. 88-8855 Filed 4-21-88; 8:45 am]

BILLING CODE 6560-50-M

[ER-FRL-3363-7]

Environmental Impact Statements; Availability

Responsible Agency: Office of Federal Activities, General Information (202) 382-5075 or (202) 382-5074. Availability of Environmental Impact Statements Filed April 11, 1988 Through April 15, 1988 Pursuant to 40 CFR 1506.9.

EIS No. 880114, Final, BLM, WY, Sohare Creek Unit Exploratory Oil Well No. 1-35, Approval and Permits, Bridger-Teton National Forest, Teton County, WY, Due: May 23, 1988, Contact: Bill McMahan (307) 382-5350. Department of the Interior/Bureau of Land Management and the Department of Agriculture and Joint Lead Agencies on this project.

EIS No. 880115, Final, AFS, OR, Bull Run Blowdown Wind Damaged Trees Management Plan, Implementation, Mt. Hood National Forest, Clackamas, Hood River and Multnomah Counties, OR, Due: May 23, 1988, Contract: E. R. Hardman (503) 695-2276.

EIS No. 880116, Draft, BLM, AK, Beaver Creek Watershed, Placer Mining Management Plan, Approval and 404 Permit, Implementation, White Mountain National Recreation Area, Anchorage, AK, Due: June 20, 1988, Contact: Richard Dworsky (907) 271-3114.

EIS No. 880117, Draft, NPS, AK, Wrangell-St. Elias National Park and Preserve Wilderness Recommendations, Designation or Nondesignation AK, Due: July 18, 1988, Contact: Linda Nebel (907) 257-2654.

EIS No. 80118,Final, NPS, ID, MT, WY, Fishing Bridge Developed Area, Development Concept Plan, Implementation, Yellowstone National Park, Fremont County, ID, Park and Gallatin Counties, MT and Park and Teton Counties, WY, Due: May 23,

1988, Contact: Christine L. Turk (303) 969-2310.

EIS No. 880119, Final, UAF, GU, Uruno Beach (Urunao Beach) Cleanup Program, Implementation, Guam, Due: May 23, 1988, Contact: Bill Taylor (402) 294-5854.

Dated: April 19, 1988.

William D. Dickerson,

Deputy Director, Office of Federal Activities.

[FR Doc. 88-8879 Filed 4-21-88; 8:45 am]

BILLING CODE 6560-50-M

[ER-FRL-3368-8]

Environmental Impact Statements and Regulations; Availability of EPA Comments

Availability of EPA comments prepared April 4, 1988 through April 8, 1988 pursuant to the Environmental Review Process (ERP), under section 309 of the Clean Air Act and section 102(2)(c) of the National Environmental Polciy Act as amended. Requests for copies of EPA comments can be directed to the Office of Federal Activities at (202) 382-5075/76.

Summary of Rating Definitions

Environmental Impact of the Action

LO—Lack of Objections

The EPA review has not identified any potential environmental impacts requiring substantive changes to the proposal. The review may have disclosed opportunities for application of mitigation measures that could be accomplished with no more than minor changes to the proposal.

EC—Environmental Concerns

The EPA review has identified environmental impacts that should be avoided in order to fully protect the environment. Corrective measures may require changes to the preferred alternative or application of mitigation measures that can reduce the environmental impact. EPA would like to work with the lead agency to reduce these impacts.

EO—Environmental Objections

The EPA review has identified significant environmental impacts that must be avoided in order to provide adequate protection for the environment. Corrective measures may require substantial changes to the preferred alternative or consideration of some other project alternative (including the no action alternative or a new alternative). EPA intends to work with the lead agency to reduce these impacts.

EO—Environmental Unsatisfactory

The EPA review has identified adverse environmental impacts that are of sufficient magnitude that they are unsatisfactory from the standpoint of public health or welfare or environmental quality. EPA intends to work with the lead agency to reduce these impacts. If the potentially unsatisfactory impacts are not corrected at the final EIS stage, this proposal will be recommended for referral to the CEO.

Adequacy of the Impact Statement

Category 1—Adequate

EPA believes the draft EIS adequately sets forth the environmental impact(s) of the preferred alternative and those of the alternatives reasonable available to the project or action. No further analysis or data collection is necessary, but the reviewer may suggest the addition of clarifying language or information.

Category 2—Insufficient Information

The draft EIS does not contain sufficient information for EPA to fully assess environmental impacts that should be avoided in order to fully protect the environment, or the EPA reviewer has identified new reasonably available alternatives that are within the spectrum of alternatives analyzed in the draft EIS, which could reduce the environmental impacts of the action. The identified additional information, data, analyses, or discussion should be included in the final EIS.

Category 3—Inadequate

EPA does not believe that the draft EIS adequately assesses potentially significant environmental impacts of the action, or the EPA reviewer has identified new, reasonably available alternatives that are outside of the spectrum of alternatives analyzed in the draft EIS, which should be analyzed in order to reduce the potentially significant environmental impacts. EPA believes that the identified additional information, data, analyses, or discussions are of such a magnitude that they should have full public review at a draft stage. EPA does not believe that the draft EIS is adequate for the purposes of the NEPA and/or section 309 review, and thus should be formally revised and made available for public comment in a supplemental or revised draft EIS. On the basis of the potential significant impacts involved, this proposal could be a candidate for referral to the CEQ.

Final EISs

ERP No. F-AFS-D02003-VA. South Coeburn Field, Natural Gas Pipeline and Road Construction and Drilling Development, Approval, Jefferson National Forest, Clinch Ranger District, Wise and Scott Counties, VA.

Summary

Most of the concerns EPA raised on the draft have been satisfactorily addressed. However, some concern still remains regarding the impact to sensitive habitat from excessive run-off during major storm events.

Note: This review should have appeared in the FR Notice published on 4-15-88.

Dated: April 19, 1988.

William D. Dickerson,

Deputy Director, Office of Federal Activities.

[FR Doc. 88-8880 Filed 4-21-88; 8:45 am]

BILLING CODE 6560-50-M

[ECAO-R-076 FRL-3368-6]

Draft Health Assessment Document for Methyl Isocyanate

AGENCY: Environmental Protection Agency.

ACTION: Notice of public meeting.

SUMMARY: This notice announces a workshop to be held by the Environmental Criteria and Assessment Office of EPA'S Office of Health and Environmental Assessment to facilitate preparation of an external review draft of a Health Assessment Document for Methyl Isocyanate. The conference site is the Ramada Inn, 1520 Blue Ridge Road, Raleigh, North Carolina.

DATES: The workshop will be held on May 2 and 3, 1988, from 8:30 a.m. to 4:30 p.m. Members of the public are invited to attend as observers.

FOR FURTHER INFORMATION CONTACT: Mr. Mark Greenberg, Project Manager for Methyl Isocyanate, U.S. Environmental Protection Agency, Environmental Criteria and Assessment Office, MD-52, Research Triangle Park, NC 27711 (919) 541-4156 or (FTS 629-4156).

SUPPLEMENTARY INFORMATION: In the fall of 1987, EPA's Office of Air Quality Planning and Standards (OAQPS) requested that the Environmental Criteria and Assessment Office (ECAO), Office of Health and Environmental Assessment (OHEA), prepare a health assessment document for methyl isocyanate. The document will be used by EPA in the decision-making process to possibly regulate methyl isocyanate under the Clean Air Act, 42 U.S.C., 7401 et seq.

ECAO is now assembling a panel of scientifically and technically qualified persons to review the draft document at

the workshop. Copies of the workshop draft will be made available to the public at the meeting, and observers will have an opportunity to make brief oral statements. The draft document subsequently will be revised and released as an external review draft. Ample opportunity will be provided for public review and submission of written comments upon release of the first external review draft. The public comment period will be announced in a subsequent **Federal Register** notice.

Date: April 12, 1988.

Carl R. Gerber,

Acting Assistant Administrator for Research and Development.

[FR Doc. 88-8858 Filed 4-21-88; 8:45 am]

BILLING CODE 6560-50-M

[OPTS-44022; FRL-3369-1]

TSCA Chemical Testing; Receipt of Test Data

AGENCY: Environmental Protection Agency (EPA).

ACTION: Notice.

SUMMARY: This notice announces test data submissions received by EPA during January-March, 1988, from voluntary industry testing programs on certain chemical substances or groups of chemicals considered by EPA under section 4 of the Toxic Substances Control Act (TSCA).

FOR FURTHER INFORMATION CONTACT: Michael M. Stahl, Acting Director, TSCA Assistance Office (TS-799), Office of Toxic Substances, Environmental Protection Agency, Room E-B44, 401 M Street SW., Washington, DC 20460, Telephone: (202) 382-3790.

SUPPLEMENTARY INFORMATION: Section 4(d) of TSCA requires the EPA to issue a notice in the **Federal Register** reporting the receipt of test data submitted pursuant to test rules promulgated under section 4(a). In the **Federal Register** of June 30, 1986 (51 FR 23705), EPA issued procedures for entering into Enforceable Consent Agreements (ECAs) under section 4 of TSCA. Those procedures provide that EPA will follow the procedures specified in section 4(d) in providing notice of test data received pursuant to ECAs. In addition, EPA from time to time receives industry submissions of test data developed voluntarily (*i.e.*, not under test rules or ECAs) on chemicals EPA has considered for testing under section 4. Although not required by section 4(d), EPA issues periodically notices of receipt of such test data.

I. Test Data Submissions

This notice announces test data submissions received during January-March, 1988, from voluntary industry testing programs.

The following table lists the chemicals by Chemical Abstracts Service Registry Number (CAS No.), date received, submitter, and study.

TABLE 1.—VOLUNTARY TEST DATA SUBMISSIONS UNDER TSCA SECTION 4, 2ND QUARTER (JANUARY-MARCH) FY '88

Chemical	CAS No.	Date received	Submitter	Study
Butylbenzylphthalate	85-68-7	Feb. 2, 1988	Monsanto Chemical Co.	Acute toxicity to mysid shrimp (*Mysidopsis bahia*) under 96-h flow-through conditions.
Biphenyl	92-52-4	Feb. 10, 1988	Dow Chemical Co.	Chronic toxicity to *Daphnia magna* Straus under 21-day flow-through conditions.
Octamethylcyclotetrasiloxane	556-67-2	Feb. 10, 1988	Dow Chemical Co.	Chronic reproductive limit test to *D. magna*.
4-(1,1,3,3-tetramethylbutyl)phenol	140-66-9	Feb. 23, 1988	CMA [1]	Chronic toxicity to *D. magna* under flow-through conditions.
Butylbenzylphthalate	85-68-7	Mar. 10, 1988	Monsanto Chemical Co.	Experimental freshwater microcosm biodegradability (Orig. date: Sept. 17, 1986; Rev. date: Jan. 28, 1988).

CMA[1] Chemical Manufacturers Association.

EPA has established a public record for this quarterly receipt of data notice (docket number OPTS-44022). This record includes copies of all studies reported in this notice. The record is available for inspection from 8 a.m. to 4 p.m., Monday through Friday, except legal holidays, in the OPTS Reading Room, NE-G004, 401 M Street SW., Washington, DC 20460.

Dated: April 15, 1988.

Joseph J. Merenda,

Director, Existing Chemical Assessment Division.

[FR Doc. 88-8856 Filed 4-21-88; 8:45 am]

BILLING CODE 6560-50-M

[OPTS-44505; FRL-3369-9]

TSCA Chemical Testing; Receipt of Test Data

AGENCY: Environmental Protection Agency (EPA).

ACTION: Notice.

SUMMARY: This notice announces the receipt of test data on bisphenol A (BPA), submitted pursuant to a final test rule under the Toxic Substances Control Act (TSCA). Publication of this notice is in compliance with section 4(d) of TSCA.

FOR FURTHER INFORMATION CONTACT: Michael M. Stahl, Acting Director, TSCA Assistance Office (TS-799), Office of Toxic Substances, Environmental Protection Agency, Room EB-55, 401 M Street SW., Washington, DC 20460, (202), 554-1404.

SUPPLEMENTARY INFORMATION: Section 4(d) of TSCA requires EPA to publish a notice in the **Federal Register** reporting the receipt of test data submitted pursuant to test rules promulgated under section 4(a) within 15 days after the data is received.

I. Test Data Submission

Test data for bisphenol A (BPA), CAS No. 80-05-7, was submitted by the Dow Chemical Company pursuant to a test rule at 40 CFR 799.940. It was received

by EPA on April 7, 1988. The submission describes a 13-week aerosol toxicity study with Fischer 344 rats. Inhalation toxicity testing is required by this test rule. BPA is used in the manufacture of polycarbonate resins, epoxy resins, and polysulfone and phenoxy resins.

EPA has initiated its review and evaluation process for this data submission. At this time, the Agency is unable to provide any determination as to the submission's completeness.

II. Public Record

EPA has established a public record for this TSCA section 4(d) receipt of data notice (docket number OPTS-44505). This record includes copies of all studies reported in this notice. The record is available for inspection from 8 a.m. to 4 p.m., Monday through Friday, except legal holidays, in the TSCA Public Docket Office, Room NE-G004, 401 M Street SW., Washington, DC 20460.

Authority: 15 U.S.C. 2603.

Dated: April 15, 1988.

J. Merenda,

Director, Existing Chemical Assessment Division, Office of Toxic Substances.

[FR Doc. 88-8857 Filed 4-21-88; 8:45 am]

BILLING CODE 6560-50-M

FEDERAL COMMUNICATIONS COMMISSION

Information Collection Requirement Approval by Office of Management and Budget

April 14, 1988.

The following information collection requirements have been approved by the Office of Management and Budget under the Paperwork Reduction Act of 1980 (44 U.S.C. 3507). For further information contact Doris Benz, Federal Communications Commission, telephone (202) 632-7513.

OMB No.: 3060-0016
Title: Application for Authority to Construct or Make Changes in a Low Power TV, TV Translator or TV Booster Station
Form No.: FCC 346. A revised application form has been approved for use through 1/31/91. The May 1987 edition with a previous expiration date of 1/31/88 will remain in use until revised forms are available. At that time, a Public Notice will be issued containing information on availability and implementation

OMB No.: 3060-0017
Title: Application for a Low Power TV, TV Translator or TV Booster Station License
Form No.: FCC 347. A revised application form has been approved for use through 1/31/91. The June 1987 edition with an expiration date of 4/30/89 will remain in use until revised forms are available. At that time, a Public Notice will be issued containing information on availability and implementation

OMB No.: 3060-0405
Title: Application for Authority to Construct or Make Changes in an FM Translator or FM Booster Station
Form No.: FCC 349. A new application form has been approved for use through 1/31/91. A Public Notice will be issued containing information on availability and implementation

OMB No.: 3060-0404
Title: Application for an FM Translator or FM Booster Station License
Form No.: FCC 350. A new application form has been approved for use through 1/31/91. A Public Notice will be issued containing information on availability and implementation

OMB No.: 3060-0113
Title: Broadcast Equal Employment Opportunity Program Report
Form No.: FCC 396. A revised report form has been approved for use through 9/30/90. The January 1988 edition is currently being mailed out with renewal packages. All previous editions are obsolete

OMB No.: 3060-0057
Title: Application for Equipment Authorization
Form No.: FCC 731. A revised application form has been approved for use through 1/31/91. The March 1985 edition with a previous expiration date of 1/31/88 will remain in use until the revised March 1988 edition is available. At that time all previous editions will be obsolete

Federal Communications Commission.

H. Walker Feaster III,

Acting Secretary.

[FR Doc. 88-8845 Filed 4-21-88; 8:45 am]

BILLING CODE 6712-01-M

Public Information Collection Requirement Submitted to Office of Management and Budget for Review

April 14, 1988.

The Federal Communications Commission has submitted the following information collection requirement to OMB for review and clearance under the Paperwork Reduction Act of 1980 (44 U.S.C. 3507).

Copies of this submission may be purchased from the Commission's copy contractor, International Transcription Service, (202) 857-3800, 2100 M Street NW., Suite 140, Washington, DC 20037. For further information on this submission contact Terry Johnson, Federal Communications Commission, (202) 632-7513. Persons wishing to comment on this information collection should contact J. Timothy Sprehe, Office of Management and Budget, Room 3235 NEOB, Washington, DC 20503, (202) 395-4814.

OMB Number: None
Title: Sections 1.720-1.734, Formal Complaints Against Common Carriers
Action: Existing collection in use without an OMB control number
Respondents: Individuals or households, businesses or other for-profit (including small businesses), and non-profit institutions
Frequency of Response: On occasion
Estimated Annual Burden: 200 Responses, 2,000 Hours
Needs and Uses: Section 208 of the Communications Act, 47 U.S.C. 208, provides that any person may file a complaint with the Federal Communications Commission regarding acts or omissions of common carriers subject to the Communications Act. This section obligates the Commission to serve such complaints on the affected carrier for response or resolution. Section 208 also obligates the Commission to investigate unsatisfied complaints. Sections 1.720 through 1.734 of the Commission's rules (47 CFR 1.70-1.734) were promulgated to implement section 208.

Federal Communications Commission.

H. Walker Feaster III,

Acting Secretary.

[FR Doc. 88-8846 Filed 4-21-88; 8:45 am]

BILLING CODE 6712-01-M

FEDERAL RESERVE SYSTEM

Center Banks Inc. et al.; Formations of; Acquisitions by; and Mergers of Banks Holding Companies

The companies listed in this notice have applied for the Board's approval under section 3 of the Bank Holding Company Act (12 U.S.C. 1842) and § 225.14 of the Board's Regulation Y (12 CFR 225.14) to become a bank holding company or to acquire a bank or bank holding company. The factors that are considered in acting on the applications are set forth in section 3(c) of the Act (12 U.S.C. 1842(c)).

Each application is available for immediate inspection at the Federal Reserve Bank indicated. Once the application has been accepted for processing, it will also be available for inspection at the offices of the Board of Governors. Interested persons may express their views in writing to the Reserve Bank or to the offices of the Board of Governors. Any comment on an application that requests a hearing must include a statement of why a

written presentation would not suffice in lieu of a hearing, identifying specifically any questions of fact that are in dispute and summarizing the evidence that would be presented at a hearing.

Unless otherwise noted, comments regarding each of these applications must be received not later than May 13, 1988.

A. Federal Reserve Bank of New York (William L. Rutledge, Vice President) 33 Liberty Street, New York, New York 10045:

1. *Center Banks Incorporated,* Skaneateles, New York; to become a bank holding company by acquiring 100 percent of the voting shares of Skaneateles Savings Bank, Skaneateles, New York, which operates a savings bank life insurance department.

B. Federal Reserve Bank of Cleveland (John J. Wixted, Jr., Vice President) 1455 East Sixth Street, Cleveland, Ohio 44101:

1. *Pikeville National Corporation,* Pikeville, Kentucky; to acquire 100 percent of the voting shares of The Exchange Bank of Kentucky, Mt. Sterling, Kentucky.

C. Federal Reserve Bank of St. Louis (Randall C. Sumner, Vice President) 411 Locust Street, St. Louis, Missouri 63166:

1. *Liberty National Bancorp, Inc.,* Louisville Kentucky; to acquire 100 percent of the voting shares of Bank of Jessamine, Inc., Nicholasville, Kentucky.

D. Federal Reserve Bank of Kansas City (Thomas M. Hoenig, Senior Vice President) 925 Grand Avenue, Kansas City, Missouri 64198:

1. *Meader Insurance Agency, Inc.,* Waverly, Kansas; to acquire 24.6 percent of the voting shares of Coffey County Bank Shares, Inc., Burlington, Kansas, and thereby indirectly acquire The Strawn State Bank, New Strawn, Kansas.

2. *Woodland Holding Company,* Woodland Park, Colorado; to become a bank holding company by acquiring 80 percent of the voting shares of Mountain National Bank, Woodland Park, Colorado.

Board of Governors of the Federal Reserve System, April 19, 1988.

James McAfee,

Associate Secretary of the Board.

[FR Doc. 88-8938 Filed 4-21-88; 8:45 am]

BILLING CODE 6210-01-M

Change in Bank Control Notice; Acquisition of Shares of Banks or Bank Holding Companies; O.T. Dorton

The notificant listed below has applied under the Change in Bank Control Act (12 U.S.C. 1817(j)) and § 225.41 of the Board's Regulation Y (12 CFR 225.41) to acquire a bank or bank holding company. The factors that are considered in acting on notices are set forth in paragraph 7 of the Act (12 U.S.C. 1817(j)(7)).

The notices are available for immediate inspection at the Federal Reserve Bank indicated. Once the notices have been accepted for processing, they will also be available for inspection at the offices of the Board of Governors. Interested persons may express their views in writing to the Reserve Bank indicated for that notice or to the offices of the Board of Governors. Comments must be received not later than May 9, 1988.

A. Federal Reserve Bank of Cleveland (John J. Wixted, Jr., Vice President) 1455 East Sixth Street, Cleveland, Ohio 44101:

1. *O.T. Dorton,* to acquire 4.0 percent; Betty M. Dorton, to acquire 1.7 percent; Flora B. Dorton, to acquire 4.4 percent; and D.H. Dorton Trust, to acquire 1.9 percent of the voting shares of Citizens National Corporation, Paintsville, Kentucky. All of the Applicants reside in Paintsville, Kentucky.

Board of Governors of the Federal Reserve System, April 19, 1988.

James McAfee,

Associate Secretary of the Board.

[FR Doc. 88-8939 Filed 4-21-88; 8:45 am]

BILLING CODE 6210-01-M

Change in Bank Control Notice; Acquisition of Shares of Banks or Bank Holding Companies; Richard A. Fait

The notificant listed below has applied under the change in Bank Control Act (12 U.S.C. 1817(j)) and § 225.41 of the Board's Regulation Y (12 CFR 225.41) to acquire a bank or bank holding company. The factors that are considered in acting on notices are set forth in paragraph 7 of the Act (12 U.S.C. 1817(j)(7)).

The notices are available for immediate inspection at the Federal Reserve Bank indicated. Once the notices have been accepted for processing, they will also be available for inspection at the offices of the Board of Governors. Interested persons may express their views in writing to the Reserve Bank indicated for that notice or to the offices of the Board of Governors. Comments must be received not later than May 11, 1988.

A. Federal Reserve Bank of Minneapolis (James M. Lyon, Vice President) 250 Marquette Avenue, Minneapolis, Minnesota 55480:

1. *Richard A. Fait,* to acquire 47 percent of the voting shares of Investment Corporation of America, Sioux Falls, South Dakota, and thereby indirectly acquire The Peoples Bank, Conde, South Dakota.

Board of Governors of the Federal Reserve System, April 19, 1988.

James McAfee,

Associate Secretary of the Board.

[FR Doc. 88-8940 Filed 4-21-88; 8:45 am]

BILLING CODE 6210-01-M

Great Bay Bankshares, Inc. et al.; Applications To Engage de Novo in Permissible Nonbanking Activities

The companies listed in this notice have filed an application under § 225.23(a)(1) of the Board's Regulation Y (12 CFR 225.23(a)(1)) for the Board's approval under section 4(c)(8) of the Bank Holding Company Act (12 U.S.C. 1843(c)(8)) and § 225.21(a) of Regulation Y (12 CFR 225.21(a)) to commence or to engage *de novo,* either directly or through a subsidiary, in a nonbanking activity that is listed in § 225.25 of Regulation Y as closely related to banking and permissible for bank holding companies. Unless otherwise noted, such activities will be conducted throughout the United States.

Each application is available for immediate inspection at the Federal Reserve Bank indicated. Once the application has been accepted for processing, it will also be available for inspection at the offices of the Board of Governors. Interested persons may express their views in writing on the question whether consummation of the proposal can "reasonably be expected to produce benefits to the public, such as greater convenience, increased competition, or gains in efficiency, that outweigh possible adverse effects, such as undue concentration of resources, decreased or unfair competition, conflicts of interests, or unsound banking practices." Any request for a hearing on this question must be accompanied by a statement of the reasons a written presentation would not suffice in lieu of a hearing, identifying specifically any questions of fact that are in dispute, summarizing the evidence that would be presented at a hearing, and indicating how the party commenting would be aggrieved by approval of the proposal.

Unless otherwise noted, comments regarding the applications must be received at the Reserve Bank indicated or the offices of the Board of Governors not later than May 12, 1988.

A. Federal Reserve Bank of Boston (Robert M. Brady, Vice President) 600 Atlantic Avenue, Boston, Massachusetts 02106:

1. *Great Bay Bankshares, Inc.*, Dover, New Hampshire; to engage *de novo* through its subsidiary, Constitution Trust Company, Dover, New Hampshire, in trust company functions pursuant to § 225.25(b)(3) of the Board's Regulation Y.

B. Federal Reserve Bank of San Francisco (Harry W. Green, Vice President) 101 Market Street, San Francisco, California 94105:

1. *Frontier Group Incorporated*, La Palma, California; to engage *de novo* through its subsidiary, Frontier Services, Inc., La Palma, California, in originating and brokering real estate loans pursuant to § 225.25(b)(1) of the Board's Regulation Y.

Board of Governors of the Federal Reserve System, April 19, 1988.

James McAfee,

Associate Secretary of the Board.

[FR Doc. 88-8941 Filed 4-21-88; 8:45 am]

BILLING CODE 6210-01-M

NESB Corp. et al.; Formations of; Acquisitions by; and Mergers of Bank Holding Companies

The companies listed in this notice have applied for the Board's approval under section 3 of the bank Holding Company Act (12 U.S.C. 1842) and § 225.14 of the Board's Regulation Y (12 CFR 225.14) to become a bank holding company or to acquire a bank or bank holding company. The factors that are considered in acting on the applications are set forth in section 3(c) of the Act (12 U.S.C. 1842(c)).

Each application is available for immediate inspection at the Federal Reserve Bank indicated. Once the application has been accepted for processing, it will also be available for inspection at the offices of the Board of Governors. Interested persons may express their views in writing to the Reserve Bank or to the offices of the Board of Governors. Any comment on an application that requests a hearing must include a statement of why a written presentation would not suffice in lieu of a hearing, identifying specifically any questions of fact that are in dispute and summarizing the evidence that would be presented at a hearing.

Unless otherwise noted, comments regarding each of these applications must be received not later than May 13, 1988.

A. Federal Reserve Bank of Boston (Robert M. Brady, Vice President) 600 Atlantic Avenue, Boston, Massachusetts 02106:

1. *NESB Corp.*, New London, Connecticut; to acquire 100 percent of the voting shares of OmniBank of Connecticut, Inc., Madison, Connecticut.

B. Federal Reserve Bank of New York (William L. Rutledge, Vice President) 33 Liberty Street, New York, New York 10045:

1. *United National Bancorp*, Branchburg, New Jersey; to become a bank holding company by acquiring 100 percent of the voting shares of Newco National Bank, Plainfield, New Jersey (an interim bank); United National Bank, Plainfield, New Jersey; and The First National Bank of Blairstown, Blairstown, New Jersey.

2. *Vista Bancorp, Inc.*, Phillipsburg, New Jersey; to become a bank holding company by acquiring 100 percent of the voting shares of The Phillipsburg National Bank & Trust Company, Phillipsburg, New Jersey.

C. Federal Reserve Bank of Richmond (Lloyd W. Bostian, Jr., Vice President) 701 East Byrd Street, Richmond, Virginia 23261:

1. *NCNB Corporation*, Charlotte, North Carolina; to merge with USBancorp, Inc., St. Petersburg, Florida, and thereby indirectly acquire USBank, St. Petersburg, Florida.

D. Federal Reserve Bank of Chicago (David S. Epstein, Vice President) 230 South LaSalle Street, Chicago, Illinois 60690:

1. *BancSecurity Corporation*, Marshalltown, Iowa; to acquire 100 percent of the voting shares of Kellogg-Sully Bank & Trust, Kellogg, Iowa.

E. Federal Reserve Bank of Minneapolis (James M. Lyon, Vice President) 250 Marquette Avenue, Minneapolis, Minnesota 55480:

1. *First Bank System, Inc.*, Minneapolis, Minnesota; to acquire 100 percent of the voting shares of Cottage Grove Bancorporation, Inc., Cottage Grove, Minnesota, and thereby indirectly acquire Minnesota National Bank—Cottage Grove, Cottage Grove, Minneapolis.

Board of Governors of the Federal Reserve System, April 19, 1988.

James McAfee,

Associate Secretary of the Board.

[FR Doc. 88-8942 Filed 4-21-88; 8:45 am]

BILLING CODE 6210-01-M

DEPARTMENT OF HEALTH AND HUMAN SERVICES

Office of the Secretary

Agency Forms Submitted to the Office of Management and Budget for Clearance

Each Friday the Department of Health and Human Services (HHS) publishes a list of information collection packages it has submitted to the Office of Management and Budget (OMB) for clearance in compliance with the Paperwork Reduction Act (44 U.S.C. Chapter 35). The following are those packages submitted to OMB since the last list was published on April 1, 1988.

Health Care Financing Administration

(Call Reports Clearance Officer on 301-594-1238 for copies of package)

1. PRO Contracts—Solicitation of Statements of Interest—42 CFR 462.102 and 462.103—NEW—This notice is a solicitation of sources for the procurement of medical review services. The information is required for potential contractors to demonstrate that they meet the statutory requirements as peer review organizations. Respondents: Small businesses or organizations. Number of Respondents: 1; Frequency of Response: Occasionally; Estimated Annual Burden: 1 hour.

2. HMO/CMP Disenrollment Form—0938-0506—This form is completed by the Social Security field offices if medicare beneficiaries wish to disenroll from an HMO/CMP. Respondents: Individuals or households, Businesses or other for-profit. Number of Respondents: 12,000; Frequency of Response: Occasionally; Estimated Annual Burden: 396 hours.

OMB Desk Officer: Allison Herron.

Social Security Administration

(Call Reports Clearance Officer on 301-965-4149 for copies of package)

1. Transitional Employment Reinterview Project—NEW—This survey will collect information to determine the effectiveness of the transitional employment services in increasing employment and economic independence of SSI recipients with mental retardation. Respondents: Individuals or households. Businesses or other for-profit. Number of Respondents: 1,384; Frequency of Response: 1; Estimated Annual Burden: 664 hours.

2. Request for Waiver and Recovery Questionnaire—0960-0037—The SSA-632 is needed by the Social Security Administration to collect information which is used to determine whether a person who has been overpaid benefits has the ability to repay them, or if SSA can authorize a waiver of the overpayment. Respondents: Individuals or households. Number of Respondents: 500,000; Frequency of Response: Occasionally; Estimated Annual Burden: 333,333 hours.

OMB Desk Officer: Shannah Koss-McCallum.

Public Health Services

(Call Reports Clearance Officer on 202-245-2100 for copies of package)

Centers for Disease Control

1. Family of HIV Seroprevalence Surveys—NEW—This study is designed to measure the level of HIV prevalence in the U.S. It consists of a family of both blinded and non-blinded serologic surveys among patients in TB clinics, STD clinics, family planning and other women's health clinics and drug abuse treatment clinics, as well as studies among HIV positive blood donors and transfusion recipients and their heterosexual partners. Responsents: Individuals or households. Number of Respondents: 42,393; Frequency of Response: One-time; Estimated Annual Burden: 11,495 hours.

Food and Drug Administration

1. Sponsored Compounds in Food-Producing Animals; Criteria and Procedures for Evaluating Safety of Carcinogenic Residues—0910-0228—Although the FD&C Act prohibits approval of food additives, new animal drugs, and color additives that have been shown to induce cancer in animals or humans, there are exceptions under specified conditions. Section 512(d)(1)(H) allows approval when such drugs will not adversely affect the animals and more importantly no residue of the drug will be found in the edible portions of the animal. 21 CFR 500, Subpart E addresses FDA's operational definition of no residue. Respondents: Businesses or other for-profit. Number of Respondents: 0; Frequency of Response: 0; Estimated Annual Burden: 1 hour.

2. Good Laboratory Practice Regulations for Nonclinical Laboratory Studies—21 CFR 58—0910-0119—The GLP regulations are intended to assure the quality and integrity of the safety data submitted to FDA in support of the approval of regulated products. The required information will help assure that only safe products are approved for marketing. Respondents: Businesses or other for-profit, Federal agencies or employees, Non-profit institutions, Small businesses or organizations. Number of Respondents: 600; Frequency of Response: Occasionally; Estimated Annual Burden: 1,754,900 hours.

3. Transmittal of Periodic Reports and Promotional Material for New Animal Drugs—0910-0019—These reporting and recordkeeping requirements are required of applicants/New Animal Drugs or Medicated Feeds. FDA uses this information to determine if approval should be withdrawn or suspended. FDA can withdraw or suspend approval if information indicates a product is unsafe or ineffective of if the applicant does not comply with these requirements. Respondents: Businesses or other for-profit, Small businesses or organizations. Number of Respondents: 1,500; Frequency of Response: Occasionally; Estimated Annual Burden: 17,275 hours.

National Institutes of Health

1. Basic Office of Cancer Communications (OCC) National Knowledge, Attitude and Behavior Survey (National KAB Survey)—NEW—The National KAB survey will be an on-going tracking system of the public's knowledge, attitudes and behavior as they relate to cancer and OCC programs. 2653 interviews will be completed each year, 50 per week, quarterly reporting of results will be used to tailor future mass communications. Respondents: Individuals or households. Number of Respondents: 3,763; Frequency of Response: Single-time; Estimated Annual Burden: 990 hours.

2. Avoidable Mortality from Cancers in Black Populations: Public Education to Increase Participation of Black Women in Cervical Screening—NEW—A telephone survey of 900 black women will be conducted pre-post a community based cervical cancer education program. The data will help guide NCI's National Cancer Prevention and Control program and provide needed information to assess an educational intervention in the black population. Respondents: Individuals or households. Number of Respondents: 8,953; Frequency of Response: Single-time; Estimated Annual Burden: 534 hours.

OMB Desk Officer: Shannah Koss-McCallum.

As mentioned above, copies of the information collection clearance packages can be obtained by calling the Reports Clearance Officer, on one of the following numbers:

PHS: 202-245-2100
HCFA: 301-594-1238
SSA: 301-965-4149

Written comments and recommendations for the proposed information collections should be sent directly to the appropriate OMB Desk Officer designated above at the following address: OMB Reports Management Branch, New Executive Office Building, Room 3208, Washington, DC 20503. Attn: (name of OMB Desk Officer).

Date: April 19, 1985.

James F. Trickett,

Deputy Assistant Secretary, Administrative and Management Services.

[FR Doc. 88-8894 Filed 4-21-88; 8:45 am]

BILLING CODE 4150-04-M

Food and Drug Administration

[Docket No. 88N-0146]

Drug Export; ENLON® (Edrophonium Chloride Injection, USP)

AGENCY: Food and Drug Administration.

ACTION: Notice.

SUMMARY: The Food and Drug Administration (FDA) is announcing that Anaquest has filed an application requesting approval for the export of the human drug ENLON® (edrophonium chloride injection, USP) to Canada and Switzerland.

ADDRESS: Relevant information on this application may be directed to the Dockets Management Branch (HFA-305), Food and Drug Administration, Rm. 4-62, 5600 Fishers Lane, Rockville, MD 20857, and to the contact person identified below. Any future inquiries concerning the export of human drugs under the Drug Export Amendments Act of 1986 should also be directed to the contact person.

FOR FURTHER INFORMATION CONTACT: Rudolf Apodaca, Division of Drug Labeling Compliance (HFN-310), Center for Drug Evaluation and Research, Food and Drug Administration, 5600 Fishers Lane, Rockville, MD 20857, 301-295-8063.

SUPPLEMENTARY INFORMATION: The Drug Export Amendments Act of 1986 (Pub. L. 99-660) (section 802 of the Federal Food, Drug, and Cosmetic Act (the act) (21 U.S.C. 382)) provides that FDA may approve applications for the export of drugs that are not currently approved in the United States. The approval process is governed by section 802(b) of the act. Section 802(b)(3)(B) of the act sets forth the requirements that must be met in an application for approval. Section 802(b)(3)(C) of the act requires that the agency review the application within 30 days of its filing to determine whether the requirements of section 802(b)(3)(B) have been satisfied. Section 802(b)(3)(A) of the act requires that the agency publish a notice in the **Federal Register** within 10 days of the filing of an application for export to facilitate public participation in its review of the application. To meet this requirement, the agency is providing notice that Anaquest, 100 Mountain Ave., Murray

Hill, New Providence, NJ 07974, has filed an application requesting approval for the export of the drug ENLON® (edrophonium chloride injection, USP) to Canada and Switzerland. This drug is recommended as a reversal agent or antagonist of nondepolarizing muscle relaxants (neuromuscular blocking agents) such as tubocurarine, atracurium, vecuronium, metocurine or pancuronium, and as adjunctive therapy in the treatment of respiratory depression caused by curare overdosage. The application was received and filed in the Center for Drug Evaluation and Research on April 8, 1988, which shall be considered the filing date for purposes of the act.

Interested persons may submit relevant information on the application to the Dockets Management Branch (address above) in two copies (except that individuals may submit single copies) and identified with the docket number found in brackets in the heading of this document. These submissions may be seen in the Dockets Management Branch between 9 a.m. and 4 p.m., Monday through Friday.

The agency encourages any person who submits relevant information on the application to do so by May 2, 1988, and to provide an additional copy of the submission directly to the contact person identified above, to facilitate consideration of the information during the 30-day review period.

This notice is issued under the Federal Food, Drug, and Cosmetic Act (sec. 802, Pub. L. 99-660 (21 U.S.C. 382)) and under authority delegated to the Commissioner of Food and Drugs (21 CFR 5.10) and redelegated to the Center for Drug Evaluation and Research (21 CFR 5.44).

Dated: April 13, 1988.

Daniel L. Michels,

Director, Office of Compliance, Center for Drug Evaluation and Research.

[FR Doc. 88-8834 Filed 4-21-88; 8:45 am]

BILLING CODE 4160-01-M

[Docket No. 88E-0132]

Determination of Regulatory Review Period for Purposes of Patent Extension; Novantrone®

AGENCY: Food and Drug Administration.

ACTION: Notice.

SUMMARY: The Food and Drug Administration (FDA) has determined the regulatory review period for Novantrone® and is publishing this notice of that determination as required by law. FDA has made the determination because of the submission of an application to the Commissioner of Patents and Trademarks, Department of Commerce, for the extension of a patent which claims that human drug product.

ADDRESS: Written comments and petitions should be directed to the Dockets Management Branch (HFA-305), Food and Drug Administration, Rm. 4-62, 5600 Fishers Lane, Rockville, MD 20857.

FOR FURTHER INFORMATION CONTACT: Philip L. Chao, Office of Health Affairs (HFY-20), Food and Drug Administration, 5600 Fishers Lane, Rockville, MD 20857, 301-443-1382.

SUPPLEMENTARY INFORMATION: The Drug Price Competition and Patent Term Restoration Act of 1984 (Pub. L. 98-417) generally provides that a patent may be extended for a period of up to 5 years so long as the patented item (human drug product, medical device, food additive, or color additive) was subject to regulatory review by FDA before the item was marketed. Under that act, a product's regulatory review period forms the basis for determining the amount of extension an applicant may receive.

A regulatory review period consists of two periods of time: a testing phase and an approval phase. For human drug products, the testing phase begins when the exemption to permit the clinical investigations of the drug becomes effective and runs until the approval phase begins. The approval phase starts with the initial submission of an application to market the human drug product and continues until FDA grants permission to market the drug product. Although only a portion of a regulatory review period may count toward the actual amount of extension that the Commissioner of Patents and Trademarks may award (for example, half the testing phase must be subtracted as well as any time that may have occurred before the patent was issued), FDA's determination of the length of a regulatory review period for a human drug product will include all of the testing phase and approval phase as specified in 35 U.S.C. 156(g)(1)(B).

FDA recently approved for marketing the human drug product Novantrone® (mitoxantrone hydrochloride) which, in combination with other approved drugs, is indicated in the initial therapy of acute nonlymphocytic leukemia in adults. Subsequent to this approval, the Patent and Trademark Office received two patent term restoration applications for Novantrone® from American Cyanamid Co. (U.S. Patent Nos. 4,278,689 and 4,197,249) and requested FDA's assistance in determining the patent's eligibility for patent term restoration. FDA, in a letter dated March 7, 1988, advised the Patent and Trademark Office that the human drug product had undergone a regulatory review period and that the active ingredient, mitoxantrone hydrochloride, represented the first permitted commercial marketing or use of that active ingredient. Shortly thereafter, the Patent and Trademark Office requested that FDA determine the product's regulatory review period. A regulatory review period determination for the product under U.S. Patent No. 4,278,689 was published in the **Federal Register** on March 30, 1988 (53 FR 10291). This notice of regulatory review period determination pertains to the application for U.S. Patent No. 4,197,249 and is essentially identical to the previous notice of regulatory review period determination.

FDA has determined that the applicable regulatory review period for Novantrone® is 3,145 days. Of this time, 1,836 days occurred during the testing phase of the regulatory review period, while 1,309 days occurred during the approval phase. These periods of time were derived from the following dates:

1. *The date an exemption under section 505(i) of the Federal Food, Drug, and Cosmetic Act became effective:* May 16, 1979. The applicant claims April 16, 1979, as the date the investigational new drug application (IND) for the drug became effective. However, FDA records indicate that the IND was received on April 16, 1979, and pursuant to FDA regulations, became effective on May 16, 1979.

2. *The date the application was initially submitted with respect to the human drug product under section 505(b) of the Federal Food, Drug, and Cosmetic Act*: May 24, 1984. The applicant claims that a new drug application for Novantrone® (NDA 19-297) was initially submitted on May 18, 1984. However, FDA did not receive the application until May 24, 1984.

3. *The date the application was approved*: December 23, 1987. FDA has verified the applicant's claim that NDA 19-297 was approved on December 23, 1987.

This determination of the regulatory review period establishes the maximum potential length of a patent extension. However, the U.S. Patent and Trademark Office applies several statutory limitations in its calculations of the actual period for patent extension. In its application for patent extension, this applicant seeks 730 days of patent term extension.

Anyone with knowledge that any of the dates as published is incorrect may, on or before June 21, 1988, submit to the

Dockets Management Branch (address above) written comments and ask for a redetermination. Furthermore, any interested person may petition FDA, on or before October 19, 1988, for a determination regarding whether the applicant for extension acted with due diligence during the regulatory review period. To meet its burden, the petition must contain sufficient facts to merit an FDA investigation. (See H. Rept. 857, Part 1, 98th Cong., 2d Sess., pp. 41–42, 1984.) Petitions should be in the format specified in 21 CFR 10.30.

Comments and petitions should be submitted to the Dockets Management Branch (address above) in three copies (except that individuals may submit single copies) and identified with the docket number found in brackets in the heading of this document. Comments and petitions may be seen in the Dockets Management Branch between 9 a.m. and 4 p.m., Monday through Friday.

Dated: April 14, 1988.

Stuart L. Nightingale,

Associate Commissioner for Health Affairs.

[FR Doc. 88–8866 Filed 4–21–88; 8:45 am]

BILLING CODE 4160-01-M

Consumer Participation: Open Meeting

AGENCY: Food and Drug Administration.

ACTION: Notice.

SUMMARY: The Food and Drug Administration (FDA) is announcing the following consumer exchange meeting: San Francisco District Office, chaired by Ronald M. Johnson, District Director. The topic to be discussed is the new drug approval process.

DATE: Friday, May 6, 1988; 10 a.m. to 12 m.

ADDRESS: Clemens Room, Clark County Health Department, 625 Shadow Lane, Las Vegas, NV 89127.

FOR FURTHER INFORMATION CONTRACT: Janet McDonald, Consumer Affairs Officer, Food and Drug Administration, 50 United Nations Plaza, Rm. 524, San Francisco, CA 94102, 415–556–1457.

SUPPLEMENTARY INFORMATION: The purpose of this meeting is to encourage dialogue between consumers and FDA officials, to identify and set priorities for current and future health concerns, to enhance relationship between local consumers and FDA's District Offices, and to contribute to the agency's policymaking decisions on vital issues.

Dated: April 15, 1988.

John M. Taylor,

Assoicate Commissioner for Regulatory Affairs.

[FR Doc. 88-8867 File 4-21-88; 8:45 am]

BILLING CODE 4160-01-M

Health Resources and Services Administration

"Low Income Levels" for Health Careers Opportunity Program, Financial Assistance for Disadvantaged Health Professions Students, Nursing Special Project Grants, and Area Health Education Centers

This Notice updates the income levels that are used to define a "low income family" for the support of training for individuals from disadvantaged backgrounds as provided for under section 787, Health Careers Opportunity Program, and the program of Financial Assistance for Disadvantaged Health Professions Students, section 820, Nursing Special Project Grants, and section 781, Area Health Education Centers of the Public Health Service Act as amended.

Sections 57.1804(b)(2) and 57.1905(b)(2) of the progam regulations (42 CFR Part 57, Subparts S and T) require that the Secretary publish periodically in the **Federal Register** the low income levels which will be used for Public Health Service grants to institutions which provide training for individuals from disadvantaged backgrounds.

The Health Professions Training Assistance Act of 1985, enacted on October 22, 1985, amended section 787 to include stipends under subsections (a)(2)(F) and (b) to individuals from disadvantaged backgrounds and of exceptional financial need (as defined by regulations issued by the Secretary under section 758), who are students at schools of medicine, osteopathy or dentistry.

The income figures below were taken from low income levels, published by the U.S. Bureau of the Census, using an index adopted by a Federal Interagency committee for use in a variety of Federal Programs, then mutiplied by a factor of 1.3 for adaptation to health professions grant programs for which training for individuals from disadvantaged backgrounds is supported. The income figures have been updated to reflect increases in the Consumer Price Index through December 31, 1987.

Size of parents family [1]	Income level [2]
1	$7,600
2	9,900
3	11,800
4	15,100
5	17,800
6 or more	20,000

[1] Includes only dependents listed on Federal income tax forms.

[2] Rounded to $100. Adjusted gross income for calendar year 1987.

Dated: April 18, 1988.

David N. Sundwall,

Administrator, Assistant Surgeon General.

[FR Doc. 88–8868 Filed 4–21–88; 8:45 am]

BILLING CODE 4160-15-M

Public Health Service

Announcement of Availability of Grants for General Family Planning Training Projects

AGENCY: Office of Family Planning, PHS, HHS.

ACTION: Notice.

SUMMARY: The Office of Population Affairs, Office of Family Planning requests applications for grants under the Family Planning Service Training Program authorized under section 1003 of the Public Health Service (PHS) Act [42 U.S.C. 300a–1(a)]. Funds are available to train family planning personnel in order to maintain the high level of performance of family planning service projects.

The Office of Family Planning (OFP) administers Title X of the Public Health Service Act which provides funds for a general training center in each of the ten DHHS regions. The regional training centers provide training to enable service grantees to improve the delivery of family planning services to persons from low-income families and other persons desiring such services.

ADDRESS: Application kits may be obtained from and applications must be submitted to: Grants Management Office, Office of Population Affairs, Room 736E, H.H.H. Building, 200 Independence Avenue SW., Washington, DC 20201.

DATE: Applications must be postmarked or received at the above address no later than close of business June 21, 1988. Private metered postmarks will not be acceptable as proof of timely mailing. Applications which are postmarked or delivered to the Grants Management Office later than June 21, 1988, will be judged late and will not be accepted for review. Applications which do not conform to the requirements of this

program announcement and/or do not meet the assurances for project requirements in 42 CFR Part 59, Subpart C will not be accepted for review. Applicants will be so notified, and the applications will be returned.

FOR FURTHER INFORMATION CONTACT: Grants Management Office at area code 202/245-0146 or Program Office at area code 202/245-0151. Staff are available to answer questions and provide limited technical assistance in the preparation of grant applications.

SUPPLEMENTARY INFORMATION: Title X of the Public Health Service Act, 42 U.S.C. 300 *et seq.*, authorizes the Secretary of Health and Human Services to award grants for projects to provide training for family planning personnel. (Catalog of Federal Domestic Assistance Number 13.260). This notice announces the availability of approximately $1,480,000 in funding for seven general training projects described below. Grants will be made to public and/or private nonprofit organizations to assist in the establishment and operation of regional training centers. The award of a grant will take into account the project's ability to meet DHHS requirements and the extent to which the project will provide high quality training to Title X grantees, delegate agencies and clinics in order to improve the delivery of services to family planning users. Applications are invited for the following seven grants:

One general training grant for Department of Health and Human Services (DHHS) Region I (Connecticut, Maine, Massachusetts, New Hampshire, Rhode Island, Vermont). A funding range of $150,000-$166,000 is under consideration for this grant.

One general training grant for DHHS Region III (Delaware, District of Columbia, Maryland, Pennsylvania, Virginia, West Virginia). A funding range of $247,000-$273,000 is under consideration for this grant.

One general training grant for DHHS Region IV (Alabama, Florida, Georgia, Kentucky, Mississippi, North Carolina, South Carolina, Tennessee). A funding range of $282,000-$311,000 is under consideration for this grant.

One general training grant for DHHS Region V (Illinois, Indiana, Michigan, Minnesota, Ohio, Wisconsin). A funding range of $260,000—$287,000 is under consideration for this grant.

One general training grant for DHHS Region VII (Iowa, Kansas, Missouri, and Nebraska). A funding range of $137,000—$151,000 is under consideration for this grant.

One general training grant for DHHS Region VIII (Colorado, Montana, North Dakota, South Dakota, Utah, Wyoming). A funding range of $125,000—$139,000 is under consideration for this grant.

One general training grant for DHHS Region IX (Arizona, California, Hawaii, Nevada, American Samoa, Trust Territory of the Pacific Islands, Guam, Commonwealth of Northern Mariana Islands). A funding range of $208,000—$230,000 is under consideration for this grant.

Grants will be approved for project periods up to three years. Grants are funded in annual increments (budget periods). Funding for all approved budget periods beyond the first year of the grant is contingent upon satisfactory progress of the project, adequate stewardship of Federal funds, and availability of funds.

Statutory and Regulatory Background

Title X of the Public Health Service Act, enacted by Pub. L. 91-572, authorizes grants for projects to provide family planning services to persons from low-income families and others. Section 1001 of the Act (as amended by Pub. L. 94-63 and 95-613) authorizes grants "to assist in the establishment and operation of family planning projects which offer a broad range of acceptable and effective family planning methods, including natural family planning methods, infertility services, and services to adolescents." Section 1003 of the Act, as amended, authorizes the Secretary to make grants to entities and individuals to provide the training for personnel to carry out the family planning service programs.

Prospective applicants and grantees should refer to the regulations in their entirety. The regulations set out at 42 CFR, Part 59, Subpart C, govern grants for general family planning service training.

Role and Operation of the Training Program

The purpose of short-term training, continuing education, in-service education and staff development supported under the Title X General Family Planning training program is to improve or maintain at a high level the performance of family planning service providers.

Under the regulations, "training" means job-specific skill development. This may include traditional classroom or practical training, although development or use of self-paced, self-instructional or mediated training materials which utilize technological advancements in the learning field are also encouraged. Grantees may provide training services directly or indirectly through subcontractors or consultants.

Successful applicants will be required to work closely with a network of agencies including the Federal Central and Regional Office staff, Title X service delivery providers and regional training advisory committees. This involves review and implementation of National and regional training priorities, solicitation of advice from the regional training advisory committee, and consultation with Title X service delivery providers about training priorities, course content and curricula, and adjustments to reflect changing personnel needs or the results of training program self evaluations or post-training feedback from participants or Title X service grantees.

Proposals must focus at least fifty (50) percent of the training effort in the national training priority areas: (1) Clinic management, (2) counseling and client education, (3) family involvement, (4) management of infertility, including adoption, (5) natural family planning (NFP), (6) program management, (7) prevention of sexually transmitted diseases (STDs), including HIV infection and AIDS, (8) adolescent abstinence from premarital sexual activity, and (9) male involvement. (NFP includes various methods and techniques which teach fertility awareness. NFP does not include methods which combine fertility awareness with the use of another contraceptive method as a backup.)

Successful applicants will be responsible for the overall management of a training program within the geographic area for which the grant is made. This role includes:

- Developing an annual training plan, reflecting national and regional priorities and the training needs of local Title X service grantees;
- Developing criteria for selection of staff for training, including prerequisite qualifications. Such criteria should reflect a sensitivity to the unique needs of grantees for certain types of training, priority for rural areas or Health Manpower Shortage Areas (HMSAs), or other relevant factors;
- Developing a process to review training applications from Title X service grantee personnel. Training grantees will make the final decision about candidates' suitability for training, applying the criteria discussed above;
- Maintaining a balanced training program which uses available resources in the most efficient manner. This involves a balance among the various types of training areas, (e.g., administration, financial management, clinical services);

• Monitoring the balance, utility and efficiency of various training courses through trainee post-training evaluation, as well as the evaluation of training effects provided by trainee's supervisors;

• Sharing materials developed with other training programs so as to avoid unnecessary duplication of effort. All materials developed with Title X funds should be made available at cost to other Title X projects upon request;

• Facilitating trainee receipt of continuing education units where appropriate; and

• Planning an annual regional continuing education conference and attending at least one national training meeting annually.

Training grantees must receive approval of all training curricula before use, but submission with the application is not required. Reports on the progress of the training program may be requested of the grantee from time to time by the central office.

Application Requirements

Applications must be submitted on the forms supplied (PHS-5161-1) and in the manner prescribed in the application kits available from the Office of Grants Management. Applicants are required to submit an application signed by an individual authorized to act for the applicant agency or organization and to assume for the organizaiton the obligations imposed by the terms and conditions of the grant award. Applicants are required to submit an original application and two copies.

Accepted applications will be subjected to a competitive review process. The results of this review will assist the Deputy Assistant Secretary for Population Affairs in considering competing applications and in making the final funding decisions.

Any public or private nonprofit organization or agency is eligible to apply for a grant. It is not required that the entities applying for a grant be physically located in these regions at the time of application. However, as specified above, only entities proposing to serve Regions I, III, IV, V, VII, VIII, and IX will be eligible to apply under this announcement.

A copy of the legislation and regulations governing this program will be sent to applicants as part of the application kit package. Applicants should use the legislation, regulations and information included in this announcement to guide them in developing their applications. Applications should be limited to fifty (50) doubled-spaced pages, not including appendices providing curriculum vitae or statements of organizational capabilities. Awards will be made only to those applicants who have met all applicable requirements.

Section 1008 states that none of the funds appropriated under this title shall be used in programs where abortion is a method of family planning. In addition, the Department maintains an historical policy that grantees may not encourage or promote abortion as a method of family planning within the Title X program.

Part 700.4 of the PHS Grants Administration Manual requires each program office to make a determination as to whether the program is likely to receive a significant number of applications from advocacy organizations and develop criteria to determine the extent to which the organization's advocacy position may impact upon its performance as a grantee. As defined in the PHS Grants Manual, an advocacy organization is one which espouses a position or course of conduct that conflicts with the purposes of the grant program. In light of the specific abortion restriction of Section 1008, for the purposes of the Title X program, advocacy organizations are those which advocate abortion as a method of family planning.

For purposes of the Title X program, organizations will be determined to be advocacy organizations which use a significant amount of their resources to:

• Lobby for the passage of legislation to increase in any way the availability of abortion as a method of family planning;

• Provide speakers to promote the use of abortion as a method of family planning;

• Pay dues to any group that as a significant part of its activities advocates abortion as a method of family planning;

• Use legal action to make abortion available as a method of family planning; or,

• Develop or disseminate materials which advocate abortion as a method of family planning.

If your organization is presently engaged in any of the above activities, you are required to provide a detailed description of those activities in your application (including the amount of your organization's resources devoted to those activities) and how they relate to or are separate from the proposed Title X project. It must be emphasized that advocacy organizations are not precluded from applying for or receiving support under the Title X program. However, pursuant to Part 700 of the PHS Grants Administration Manual, the Office of Population Affairs must determine whether and to what extent advocacy is likely to impact on the performance of the Title X project. The Office of Population Affairs will use the following criteria for determining any such impact:

• The existence of separable accounting records;

• The absence of abortion advocacy from curriculum and/or educational materials of the proposed project;

• Selection methods which will insure that the selection of individual and organizational participants into the project's training programs will not be based on the individual's or organization's position on abortion; and

• The presence of institutional safeguards such as personnel policies, procedures, or instructions that are designed to insure that advocacy activities will not intrude into the Title X project.

Grant Award

Eligible competing grant applications will be reviewed and assessed against the following criteria:

1. The extent to which the proposed training program will improve or increase the delivery of services to Title X clients, particularly persons from low-income families. (5 points)

2. The extent to which the proposed training program has the potential to fulfill the training needs of the family planning service grantees in the areas to be served, which may include among other things:

a. Development of a capability within family planning service projects to provide pre- and in-service training to their own staffs;

b. Improvement of the family planning service delivery skills of family planning and health services personnel; and

c. Improvement in the utilization and career development of paraprofessional and paramedical manpower in family planning services. (20 points)

3. The extent to which the training program proposes appropriate strategies to improve the provision of family planning services in rural areas and HMSAs. (20 points)

4. The capacity of the applicant to make rapid and effective use of the training grant. (5 points)

5. The administrative and management capability and competence of the applicant. (20 points)

6. The competence of the project staff in relation to the services to be provided. (15 points)

7. The applicant's presentation of the project's objectives, the methods for achieving project objectives, the ability to involve providers and the regional

BEST COPY AVAILABLE

office, and the results or benefits expected. (15 points)

In making grant award decisions the Deputy Assistant Secretary for Population Affairs (DASPA) will take into consideration such factors as the following:

1. The project's objectives on achieving results in national training priority areas and probable effectiveness in furthering national goals.

2. The service provider's commitment to and involvement in the planning and implementation of the training project.

3. The usefulness to Title X service providers of the proposed training project and its potential for complementing existing training needs.

4. Where competing projects are of approximately equal quality and only one grant can be funded, priority will be given to applicants who will maintain or expand the diversity of experience and approaches of grantees within the Title X training program.

5. The reasonableness of the cost of the project to government and others.

6. The availability of funds.

Review Under Executive Order 12372

Applicants under this announcement are subject to the review requirements of Executive Order 12372, State Review of Applications for Federal Financial Assistance, as implemented by 45 CFR Part 100. As soon as possible, the applicant should discuss the project with the State Single Point of Contact (SPOC) for each State in the area to be served. The application kit contains the currently available listing of the SPOCs which have elected to be informed of the submission of applications. For those States not represented on the listing, further inquiries should be made by the applicant regarding the submission to the Grants Management Office, Office of Population Affairs, Room 736E H.H.H. Building, 200 Independence Avenue, SW. Washington, DC 20201. Such comments must be received by the Office of Population Affairs August 22, 1988, to be considered.

When final funding decisions have been made, each applicant will be notified by letter of the outcome of their application. The official document notifying an applicant that a project application has been approved for funding is the Notice of Grant Award, which specifies to the grantee the amount of money awarded, the purposes of the grant, and terms and conditions of the grant award.

Date: March 15, 1988.

Nabers Cabaniss,

Deputy Assistant Secretary for Population Affairs.

[FR Doc. 88-8957 Filed 4-21-88; 8:45 am]

BILLING CODE 4150-17-M

Announcement of Availability of Grants for Family Planning Nurse Practitioner Training Program

AGENCY: Office of Family Planning, PHS, HHS.

ACTION: Notice.

SUMMARY: The Office of Population Affairs, Office of Family Planning requests applications for grants under the Family Planning Service Training Program authorized under section 1003 of the Public Health Service (PHS) Act [42 U.S.C. 300a-1(a)]. Funds are available to train nurse practitioners in order to maintain the high level of performance of family planning service projects.

The Office of Family Planning (OFP) administers Title X of the Public Health Service Act which provides funds for nurse practitioner training programs. These programs provide skill-based knowledge for registered professional nurses employed in Title X clinics and will enable service grantees to improve the delivery of family planning services to persons from low-income families and other persons desiring such services.

ADDRESS: Application kits may be obtained from and applications must be submitted to: Grants Management Office, Office of Population Affairs, Room 736E, H.H.H. Building, 200 Independence Avenue SW. Washington, DC 20201.

DATE: Applications must be postmarked or received at the above address no later than close of business June 21, 1988. Private metered postmarks will not be acceptable as proof of timely mailing. Applications which are postmarked or delivered to the Grants Management Office later than June 21, 1988, will be judged late and will not be accepted for review. Applications which do not conform to the requirements of this program announcement or meet the assurances for project requirements in regulation 42 CFR Part 59, Subpart C will not be accepted for review. Applicants will be so notified, and the applications will be returned.

FOR FURTHER INFORMATION CONTACT: Grants Management Office at area code 202/245-0146 or Program Office at area code 202/245-0151. Staff are available to answer questions and provide limited technical assistance in the preparation of grant applications.

SUPPLEMENTARY INFORMATION: Title X of the Public Health Service Act, 42 U.S.C. 300 *et seq.*, authorizes the Secretary of Health and Human Services to award grants for projects to provide training for family planning service personnel. (Catalog of Federal Assistance Number 13.260). This notice announces the availability of approximately $950,000 in funding for five nurse practitioner training projects described below. Grants will be made to public and/or private nonprofit organizations to assist in the establishment and operation of nurse practitioner projects. The award of a grant will take into account the project's ability to meet DHHS requirements and the extent to which the project will provide high quality training to personnel to ensure the delivery of services to family planning users. Applications are invited for the following five grants:

One grant with a range of $185,000–$205,000 is under consideration to train nurse practitioners from the following regions:

Region I—(Connecticut, Maine, Massachusetts, New Hampshire, Rhode Island and Vermont);

Region II—(New Jersey, New York, Puerto Rico and the Virgin Islands);

Region III—(Delaware, Maryland, Pennsylvania, Virginia, West Virginia and the District of Columbia).

One grant with a funding range of $164,000–$182,000 is under consideration to train nurse practitioners from the following region:

Region IV—(Alabama, Florida, Georgia, Kentucky, Mississippi, N. Carolina, S. Carolina and Tennessee).

One grant with a funding range of $127,000–$141,000 is under consideration to train nurse practitioners from the following region:

Region V—(Illinois, Indiana, Michigan, Minnesota, Ohio, Wisconsin).

One grant with a funding range of $203,000–$225,000 is under consideration to train nurse practitioners from the following regions:

Region VI—(Arkansas, Louisiana, New Mexico, Oklahoma, Texas);

Region VII—(Iowa, Kansas, Missouri, Nebraska).

One grant with a funding range of $226,000–$251,000 is under consideration to train nurse practitioners from the following regions:

Region VIII—(Colorado, Montana, N. Dakota, S. Dakota, Utah, Wyoming);

Region IX—(Arizona, California, Hawaii, Nevada, American Samoa, Trust Territory of the Pacific Islands,

VOL 53 ISS 78 APR 22 1988 UMI

Guam, Commonwealth of Northern Mariana Islands);

Region X—(Alaska, Idaho, Oregon, Washington).

Grants will be approved for project periods of up to three years. Grants are funded in annual increments (budget periods). Funding for all approved budget periods beyond the first year of the grant is contingent upon satisfactory progress of the project, adequate stewardship of Federal funds, and availability of funds.

Statutory and Regulatory Background

Title X of the Public Health Service Act, enacted by Pub. L. 91–572, authorizes grants for projects to provide family planning services to persons from low-income families and others. Section 1001 of the Act (as amended by Pub. L. 94–63 and 95–613) authorizes grants "to assist in the establishment and operation of family planning projects which offer a broad range of acceptable and effective family planning methods, including natural family planning methods, infertility services, and services to adolescents." Section 1003 of the Act, as amended, authorizes the Secretary to make grants to entities and individuals to provide the training for personnel to carry out the family planning service programs.

Prospective applicants should refer to the regulations in their entirety. The regulations set out at 42 CFR Part 59, Subpart C, govern grants for family planning service training.

Role and Operation of the Training Program

The purpose of short-term training, continuing education, in-service education and staff development for Title X personnel is to improve or maintain at a high level the performance of family planning service providers.

Under the regulations, "training" means job-specific skill development. Continuing education activities that are innovative or non-traditional are encouraged. The development or use of self-paced, self-instructional or mediated training materials which utilize technological advancements in the learning field are also acceptable.

Nurse practitioner training programs are focused on the preparation of registered professional nurses. The nurse practitioner is an integral part of the family planning system and performs a critical role in the delivery of high quality services.

Successful applicants will be required to work closely with a network of agencies including the Federal Central and Regional Office staff, Title X service delivery providers and regional training advisory committees. This involves review and implementation of National and regional training priorities, solicitation of advice from the regional training advisory committee, and consultation with Title X service delivery providers about training priorities, course content and curriculum.

The nurse practitioner training curriculum must include content in the national training priority areas: (1) Clinic management, (2) counseling and client education, (3) family involvement, (4) management of infertility, including adoption, (5) natural family planning (NFP), (6) program management, (7) prevention of sexually transmitted diseases (STDs), including HIV infection and AIDS, (8) adolescent abstinence from premarital sexual activity, and (9) male involvement. [NFP includes various methods and techniques which teach fertility awareness. NFP does not include methods which combine fertility awareness with the use of another contraceptive method as a backup.]

Projects will be designed to prepare family planning, obstetricgynecologic or women's health care nurses to become nurse practitioners. The nurse practitioner graduate will have acquired special knowledge and skills in health promotion and maintenance, disease prevention, psychosocial and physical assessment, and management of health-illness needs in the primary care of women. This care is provided predominantly in an ambulatory setting. The nurse practitioner will provide such care with the physician as well as with other members of the healthcare team.

The design of the nurse practitioner training program including curriculum must be consistent with national and regional priority areas, accreditation requirements, State certification requirements, and State requirements for licensure or recognition of nurse practitioners.

Successful applicants will be responsible for the overall management of a nurse practitioner training program within the geographic area for which the grant is made. This role includes:

- Developing an annual nurse practitioner training plan, reflecting national and regional priorities and the training needs of local Title X service grantees;
- Developing and implementing a high quality curriculum for a certificate nurse practitioner program specific to the education and role of the nurse practitioner;
- Developing criteria for selection of staff for training, including prerequisite qualifications. Such criteria should reflect a sensitivity to the unique needs of grantees for certain types of training priority for rural areas or Health Manpower Shortage Areas (HMSAs), or other relevant factors;
- Developing a process to review nurse practitioner training applications from Title X service grantee personnel Training grantees will make the final decision about candidates' suitability for training, applying the criteria discussed above;
- Evaluating the total nurse practitioner educational program as an integral and ongoing process including curriculum, students, faculty and graduates;
- Maintaining data on nurse practitioner training characteristics sufficient to allow evaluation by credentialing bodies;
- Developing and implementing nurse practitioner training plans and continuing professional education programs which include measurable objectives;
- Monitoring the preceptorship phase of the nurse practitioner training program based upon written criteria;
- Sharing materials developed with other training programs so as to avoid unnecessary duplication of effort. All materials developed with Title X funds should be made available at cost to other Title X projects upon request;
- Facilitating nurse practitioner trainee receipt of continuing education units where appropriate; and
- Planning an annual continuing education conference and attending at least one national training meeting annually.

Reports on the progress of the nurse practitioner training program may be requested of the grantee from time to time by the Central Office.

Application Requirements

Applications must be submitted on the forms supplied (PHS–5161–1) and in the manner prescribed in the application kits available from the Office of Grants Management. Applicants are required to submit an application signed by an individual authorized to act for the applicant agency or organization and to assume for the organization the obligations imposed by the terms and conditions of the grant award. Applicants are required to submit an original application and two copies.

Accepted applications will be subjected to a competitive review process. The results of this review will assist the Deputy Assistant Secretary for Population Affairs in considering competing applications and in making the final funding decisions.

Any public or private nonprofit organization or agency is eligible to apply for a grant. It is not required that the entities applying for a grant be physically located in these regions at the time of application.

A copy of the legislation and regulations governing this program will be sent to applicants as part of the application kit package. Applicants should use the legislation, regulations and other information included in this announcement to guide them in developing their applications. Applications should be limited to fifty (50) doubled-spaced pages, not including appendices providing curriculum vitae, curriculum, or statements of organizational capabilities. Awards will be made only to those applicants who have met all applicable requirements.

Section 1008 states that none of the funds appropriated under this title shall be used in programs where abortion is a method of family planning. In addition, the Department maintains an historical policy that grantees may not encourage or promote abortion as a method of family planning within the Title X program.

Part 700.4 of the PHS Grants Administration Manual requires each program office to make a determination as to whether the program is likely to receive a significant number of applications from advocacy organizations and develop criteria to determine the extent to which the organization's advocacy position may impact upon its performance as a grantee. As defined in the PHS Grants Manual, an advocacy organization is one which espouses a position or course of conduct that conflicts with the purposes of the grant program. In light of the specific abortion restriction of Section 1008, for the purposes of the Title X program advocacy organizations are those which advocate abortion as a method of family planning.

For purposes of the Title X program, organizations will be determined to be advocacy organizations which use a significant amount of their resources to:

- Lobby for the passage of legislation to increase in any way the availability of abortion as a method of family planning;
- Provide speakers to promote the use of abortion as a method of family planning;
- Pay dues to any group that as a significant part of its activities advocates abortion as a method of family planning;
- Use legal action to make abortion available as a method of family planning; or,
- Develop or disseminate materials which advocate abortion as a method of family planning.

If your organization is presently engaged in any of the above activities, you are required to provide a detailed description of those activities in your application (including the amount of your organization's resources devoted to those activities) and how they relate to or are separate from the proposed Title X project. It must be emphasized that advocacy organizations are not precluded from applying for or receiving support under the Title X program. However, pursuant to Part 700 of the PHS Grants Administration Manual, the Office of Population Affairs must determine whether and to what extent advocacy is likely to impact on the performance of the Title X project. The Office of Population Affairs will use the following criteria for determining any such impact:

- The existence of separable accounting records;
- The absence of abortion advocacy from the curriculum and/or educational materials of the proposed project;
- Selection methods which will insure that the selection of individual and organizational participants into the project's training programs will not be based on the individual's or organization's position on abortion; and
- The presence of institutional safeguards such as personnel policies, procedures, or instructions that are designed to insure that advocacy activities will not intrude into the Title X project.

Grant Award

Eligible competing grant applications will be reviewed and assessed against the following criteria:

1. The extent to which the proposed nurse practitioner training program will improve or increase the delivery of services to Title X clients, particularly persons from low-income families. (5 points)

2. The extent to which the proposed nurse practitioner training program has the potential to fulfill the training needs of the family planning service grantees in the areas to be served, which may include among other things:

a. Development of a capability within family planning service projects to provide in-service training to their own staffs;

b. Improvement of the family planning service delivery skills of family planning and health services personnel; and

c. Improvement in the utilization and career development of paraprofessional and paramedical manpower in family planning services. (20 points)

3. The extent to which the nurse practitioner training program proposes appropriate strategies to recruit and train nurse practitioners to provide family planning services in rural areas and HMSAs. (20 points)

4. The capacity of the applicant to make rapid and effective use of the nurse practitioner training grant. (5 points)

5. The administrative and management capability and competence of the applicant. (20 points)

6. The competence of the project staff in relation to the services to be provided. (15 points)

7. The applicant's presentation of the project's objectives, the methods for achieving project objectives, the ability to involve providers and the regional office, and the results or benefits expected. (15 points)

In making grant award decisions the Deputy Assistant Secretary for Population Affairs (DASPA) will take into consideration such factors as the following:

1. The project's objectives on achieving results in national training priority areas and probable effectiveness in furthering national goals.

2. The service providers' commitment to and involvement in the planning and implementation of the training project.

3. The usefulness to Title X service providers of the proposed training project and its potential for complementing existing training needs.

4. Where competing projects are of approximately equal quality and only one grant can be funded, priority will be given to offerors who will maintain or expand the diversity of experience and approaches of grantees within the Title X training program.

5. The reasonableness of the cost of the project to government and others.

6. The availability of funds.

Review Under Executive Order 12372

Applicants under this announcement are subject to the review requirements of Executive Order 12372, State Review of Applications for Federal Financial Assistnce, as implemented by 45 CFR Part 100. As soon as possible, the applicant should discuss the project with the State Single Point of Contact (SPOC) for each State in the area to be served. The application kit contains the currently available listing of the SPOCs

which have elected to be informed of the submission of applications. For those States not represented on the listing, further inquiries should be made by the applicant regarding the submission to the relevant SPOC. The SPOCs comment(s) should be forwarded to the Grants Management Office, Office of Population Affairs, Room 736E H.H.H. Building, 200 Independence Avenue SW. Washington, DC 20201. Such comments must be received by the Office of Population Affairs, by August 22, 1988, to be considered.

When final funding decisions have been made, each applicant will be notified by letter of the outcome of their application. The official document notifying an applicant that a project application has been approved for funding is the Notice of Grant Award, which specifies to the grantee the amount of money awarded, the purposes of the grant, and terms and conditions of the grant award.

Dated: March 15, 1988.

Nabers Cabaniss,

Deputy Assistant Secretary for Population Affairs.

[FR Doc. 88-8958 Filed 4-21-88; 8:45 am]

BILLING CODE 4160-17-M

Health Education Assistance Loan Program; Maximum Interest Rates for Quarter Ending June 30, 1988

Section 727 of the Public Health Service Act (42 U.S.C. 294) authorizes the Secretary of Health and Human Services to establish a Federal program of student loan insurance for graduate students in health professions schools.

A. Section 60.13(a)(4) of the program's implementing regulations (42 CFR Part 60, previously 45 CFR Part 126) provides that the Secretary will announce the interest rate in effect on a quarterly basis.

The Secretary announces that for the period ending June 30, 1988, three interest rates are in effect for loans executed through the Health Education Assistance Loan (HEAL) program.

1. For loans made before January 27, 1981, the variable interest rate is 9½ percent. Using the regulatory formula (45 CFR 126.13(a) (2) and (3)) in effect prior to January 27, 1981, the Secretary would normally compute the variable rate for this quarter by finding the sum of the fixed annual rate (7 percent) and a variable component calculated by subtracting 3.50 percent from the average bond equivalent rate of 91-day U.S. Treasury bills for the preceding calendar quarter (5.93 percent), and rounding the result (9.43 percent) upward to the nearest ⅛ percent (9½ percent). However, the regulatory formula also provides that the annual rate of the variable interest rate for a 3-month period shall be reduced to the highest one-eighth of 1 percent which would result in an average annual rate not in excess of 12 percent for the 12-month period concluded by those 3 months. Because the average rate of the 4 quarters ending June 30, 1988, is not in excess of 12 percent, there is no necessity for reducing the interest rate. For the previous 3 quarters the variable interest at the annual rate was as follows: 9½ percent for the quarter ending September 30, 1987; 9⅞ percent for the quarter ending December 31, 1987; and 9⅝ for the quarter ending March 31, 1988.

2. For variable rate loans executed during the period of January 27, 1981 through October 21, 1985, the interest rate is 9½ percent. Using the regulatory formula (42 CFR 60.13(a)(3)) in effect for that time period, the Secretary computes the maximum interest rate at the beginning of each calendar quarter by determining the average bond equivalent rate for the 91-day U.S. Treasury bills during the preceding quarter (5.93 percent); adding 3.50 percent (9.43 percent); and rounding that figure to the next higher one-eighth of 1 percent (9½ percent).

3. For fixed rate loans executed during the period of April 1, 1988 through June 30, 1988, and for variable rate loans executed on or after October 22, 1985, the interest rate is 9 percent. The Health Professions Training Assistance Act of 1985 (Pub. L. 99-129), enacted October 22, 1985, amended the formula for calculating the interest rate by changing 3.5 percent to 3 percent. Using the regulatory formula (42 CFR 60.13(a) (2) and (3)) with the statutory change of 3 percent (42 CFR 60.13(a)(1)), the Secretary computes the maximum interest rate at the beginning of each calendar quarter by determining the average bond equivalent rate for the 91-day U.S. Treasury bills during the preceding quarter (5.93 percent); adding 3.0 percent (8.93 percent) and rounding that figure to the next higher one-eighth of 1 percent (9 percent).

(Catalog of Federal Domestic Assistance No. 13.108, Health Education Assistance Loans)

Dated: April 18, 1988.

David N. Sundwall,

Administrator, Assistant Surgeon General.

[FR Doc. 88-8869 Filed 4-21-88; 8:45 am]

BILLING CODE 4160-15-M

DEPARTMENT OF THE INTERIOR

Bureau of Land Management

[NV-930-08-4212-11; (N-43025)]

Classification Termination; Nevada

April 14, 1988.

AGENCY: Bureau of Land Mangement, Interior.

ACTION: Notice; Classification Termination, Nevada.

SUMMARY: This notice terminates Recreation and Public Purposes classification N-43025.

FOR FURTHER INFORMATION CONTACT: Ben Collins, District Manager, 4765 Vegas Drive, P.O. Box 26569, Las Vegas, NV 89126, (702) 386-6403.

EFFECTIVE DATE: April 14, 1988.

SUPPLEMENTARY INFORMATION: Pursuant to 43 CFR 2450.6, the Bureau of Land Management hereby terminates Recreation and Public Purposes classification N-43025 which involves the following described lands:

Mount Diablo Meridian, Nevada

T. 13 S., R. 71 E.,
Sec. 9, lots 1, 11, NE¼NW¼, SW¼NW¼, N½SE¼NW¼, SW¼SE¼NW¼, N½SE¼SE¼NW¼, SW¼SE¼ SE¼NW¼, W½E½NE¼SW¼, W½NE¼SW¼, NW¼SW¼.

The area described contains 248.01 acres located within the city limits of the City of Mesquite in Clark County, Nevada.

In 1986, in response to an application by the City of Mesquite, the lands were classified as suitable for disposal under the Recreation and Public Purposes Act (43 U.S.C. 869, 869-1 to 869-4). The classification provided for segregation of the lands against all forms of appropriation under the public land laws, including location under the mining laws, but not the Recreation and Public Purposes Act or the mineral leasing laws. Subsequently, Congress enacted Pub. L. 99-548 to sell all the public lands within the city limits of Mesquite to the City of Mesquite. The City of Mesquite has withdrawn its Recreation and Public Purposes application and the classification and segregation are, therefore, no longer appropriate and are hereby terminated. The land is not available for application or entry under the public land laws; it will be sold to the City of Mesquite under the authority of Pub. L. 99-548.

Edward F. Spang,

State Director, Nevada.

[FR Doc. 88-8861 Filed 4-21-88; 8:45 am]

BILLING CODE 4310-HC-M

[ORO80 6310-12 GP8-121]

Salem District Advisory Council Meeting

ACTION: Notice of Salem District Advisory Council Meeting.

SUMMARY: Notice is hereby given in accordance with section 309 of the Federal Land Policy and Management Act of 1976 that a meeting of the Salem District Advisory Council will be held May 19, 1988, at 1:00 p.m. at the Bureau of Land Management, Salem District Office, 1717 Fabry Road SE., Salem, Oregon.

Agenda for the meeting will include:

1. Introduction of new members.
2. A review of the Advisory Council Charter.
3. Election of officers.
4. Work up a written report on the State Director's Guidance to Resource Management Planning.

The Meeting is open to the public. Anyone wishing to make an oral statement must notify the District Manager at the Salem District Office, 1717 Fabry Road SE, Salem, OR 97306 by May 16, 1988. Written comments will also be received for the concil's consideration. Summary minutes will be maintained in the District Office and will be available for public inspection and reproduced during regular business hours within 30 days following the meeting.

Dated: April 11, 1988.

Van W. Manning,

District Manager.

[FR Doc. 88-8891 Filed 4-21-88; 8:45 am]

BILLING CODE 4310-33-M

Minerals Management Service

Outer Continental Shelf Central and Western Gulf of Mexico Oil and Gas Lease Sales 118 and 122

AGENCY: Minerals Management Service, Interior.

ACTION: Correction.

On Wednesday, March 30, 1988, at 53 FR 10299, the Notice of Availability of the Draft Environmental Impact Statement for the Central and Western Gulf of Mexico Outer Continental Shelf Oil and Gas Lease Sales 118 and 122 was published in the **Federal Register.**

The date given as the end of the period during which the Minerals Management Service will accept written statements from those unable to attend the public hearings is incorrectly stated as May 16, 1988. That date should be May 27, 1988, and also applies to those wishing to submit written comments concerning the contents of the draft Environmental Impact Statement.

John B. Rigg,

Associate Director for Offshore Minerals Management.

Date: April 18, 1988.

[FR Doc. 88-8852 Filed 4-21-88; 8:45 am]

BILLING CODE 4320-MR-M

National Park Service

Intention to Extend Concession Contract, Best's Studio, Inc.

Pursuant to the provisions of section 5 of the Act of October 9, 1965, (79 Stat. 969; 16 U.S.C. 20), public notice is hereby given that sixty (60) days after the date of publication of this notice, the Department of the Interior, through the Director of the National Park Service, proposes to extend a concession contract with Best's Studio, Inc., authorizing it to continue to provide photographic and general art facilities and services for the public at Yosemite National Park, California for a period of three (3) years from October 1, 1986 through September 30, 1989.

This contract extension has been determined to be categorically excluded from the procedural provisions of the National Environmental Policy Act, and no environmental document will be prepared.

The foregoing concessioner has performed its obligations to the satisfaction of the Secretary under an existing contract which expired by limitation of time on September 30, 1986, and therefore, pursuant to the Act of October 9, 1965, as cited above, is entitled to be given preference in the renewal of the contract and in the negotiation of a new contract as defined in 36 CFR, 51.5.

The Secretary will consider and evaluate all proposals received as a result of this notice. Any proposal, including that of the existing concessioner, must be postmarked or hand delivered on or before the sixtieth (60th) day following publication of this notice to be considered and evaluated.

Interested parties should contact the Regional Director, Western Regional Office, 450 Golden Gate Avenue, San Francisco, California 94102, for information as to the requirements of the proposed contract.

Louis S. Albert,

Acting Regional Director, Western Region.

Date: April 4, 1988.

[FR Doc. 88-8875 Filed 4-21-88; 8:45 am]

BILLING CODE 4310-70-M

Intention to Negotiate Concession Contract; Charlestown Park Service

Pursuant to the provisions of section 5 of the Act of October 9, 1965 (79 Stat. 969; 16 U.S.C. 20), public notice is hereby given that the Department of the Interior, through the Director of the National Park Service, proposes to negotiate a concession contract authorizing the operation of restaurant services and facilities at the Charlestown Navy Yard, Boston National Historical Park, Massachusetts, for a period of fifteen (15) years from the date the contract is signed. The Prospectus which describes this opportunity will be released to the public in the near future and sixty days will be allowed from the date of release for responses to be received.

This proposed contract requires a construction and improvement program. The construction and improvement program required was addressed in the General Management Plan/ Environmental Assessment, dated August 1980, as amended by the Revision, dated March 26, 1987, which established a Finding of No Significant Impact for the Charlestown Navy Yard.

The Secretary will consider and evaluate all proposals received as a result of this notice. Any proposal must be postmarked or hand delivered on or before the sixtieth (60th) day following release date shown on the cover of the Prospectus to be considered and evaluated.

Interested parties should contact the Superintendent, Boston National Historical Park for information as to the requirements of the proposed contract and for application materials.

Date: April 6, 1988.

Herbert S. Cables, Jr.,

Regional Director, North Atlantic Region.

[FR Doc. 88-8876 Filed 4-21-88; 8:45 am]

BILLING CODE 4310-70-M

Intention To Extend Concession Contract; Golf Course Specialists, Inc.

Pursuant to the provisions of section 5 of the Act of October 9, 1965 (79 Stat. 969; 16 U.S.C. 20), public notice is hereby given that sixty (60) days after the date of publication of this notice, the Department of the Interior, through the Director of the National Park Service, proposes to extend a concession contract with Golf Course Specialists, Inc. authorizing it to continue to provide facilities and services for the public at National Capital Parks—East, Washington, DC, for a period of two (2)

years from April 1, 1988, through March 31, 1990.

This contract extension has been determined to be categorically excluded from the procedural provisions of the National Environmental Policy Act and no environmental document will be prepared.

The foregoing concessioner has performed its obligations to the satisfaction of the Secretary under an existing contract which expires by limitation of time on March 31, 1988, and therefore, pursuant to the Act of October 9, 1965, as cited above, is entitled to be given preference in the extension of the contract.

The Secretary will consider and evaluate all proposals received as a result of this notice. Any proposal, including that of the existing concessioner, must be postmarked or hand delivered on or before the sixtieth (60th) day following publication of this notice to be considered and evaluated.

Interested parties should contact the Regional Director, National Capital Region, Washington, DC, for information as to the requirements of the proposed contract.

Ronald N. Wrye,

Acting Regional Director, National Capital Region.

Date: March 21, 1988.

[FR Doc. 88-8895 Filed 4-21-88; 8:45 am]

BILLING CODE 4310-70-M

INTERSTATE COMMERCE COMMISSION

Intent To Engage in Compensated Intercorporate Hauling Operations

This is to provide notice as required by 49 U.S.C. 10524(b)(1) that the named corporations intend to provide or use compensated intercorporate hauling operations as authorized in 49 U.S.C. 10524(b).

1. A. Parent corporation and address of principal office: Browning-Ferris Industries, Inc., P.O. Box 3151, Houston, Texas 77253, Delaware

B. Wholly-owned subsidiaries which will participate in the operations, address of their respective offices, and states of incorporation:

1. Action Disposal System, Inc., Minnesota
2. American Sheds, Inc., California
3. Ameride Corporation, California
4. Atkinson Enterprises, Inc., Indiana
5. Azusa Land Reclamation Co., Inc., California
6. Beach Disposal, Inc., Florida
7. BFI of Ponce, Inc., Puerto Rico
8. BFI Acquisition, Inc., Delaware
9. BFI Aviation Services, Inc., Delaware
10. BFI Constructors, California
11. BFI Energy Systems, Inc., Delaware
12. BFI Energy Systems of, New Jersey
13. BFI Energy Systems of Boston, Inc., Massachusetts
14. BFI Energy Systems of Broward County, Inc., Delaware
15. BFI Energy Systems of Delaware County, Inc., Delaware
16. BFI Energy Systems of Essex County, Inc., New Jersey
17. BFI Energy Systems of Fresno, Inc., California
18. BFI Energy Systems of Hempstead, Inc., Delaware
19. BFI Energy Systems of Lehigh Valley, Inc., Delaware
20. BFI Energy Systems of Los Angeles, Inc., Delaware
21. BFI Energy Systems of Lowell, Inc., Delaware
22. BFI Energy Systems of Midstate Connecticut, Inc., Delaware
23. BFI Energy Systems of Oyster Bay, Inc., Delaware
24. BFI Energy Systems of Plymouth, Inc., Delaware
25. BFI Energy Systems of Southeastern Connecticut, Inc., Delaware
26. BFI Energy Systems of Texas, Inc., Delaware
27. BFI Modern Landfill, Inc., Illinois
28. BFI Hospital Waste Systems, Inc., Georgia
29. BFI Medical Waste Systems of Arizona, Inc., Delaware
30. BFI Medical Waste Systems of Minnesota, Inc., Minnesota
31. BFI Medical Waste Systems of Oregon, Inc., Delaware
32. BFI Medical Waste Systems of Utah, Inc., Delaware
33. BFI Medical Waste Systems of Washington, Inc., Delaware
34. BFI Medical Waste Systems (Steel), Inc., Delaware
35. BFI Medical Waste Systems (South Central), Inc., Tennessee
36. BFI Medical Waste Systems (Southeast), Inc., Delaware
37. BFI Portable Services, Inc., Delaware
38. BFI Recycling of New Jersey, Inc., New Jersey
39. BFI Suburban Michigan, Inc., Michigan
40. BFI Waste Systems, Inc., Texas
41. BFI Waste Systems of Indiana, Inc., Indiana
42. Bio-Medical Services Corp., Georgia
43. Bio-Tech Services, Inc., Missouri
44. Browning-Ferris, Inc., Delaware
45. Browning-Ferris, Inc., Maryland
46. Browning-Ferris Industries Chemical Services, Inc., Nevada
47. Browning-Ferris Industries (DC), Inc., Delaware
48. Browning-Ferris Industries Waste Control, Inc., Delaware
49. Browning-Ferris Industries Waste Systems, Inc., New Jersey
50. Browning-Ferris Industries, Inc., Massachusetts
51. Browning-Ferris Industries of Alabama, Inc., Alabama
52. Browning-Ferris Industries of Arkansas, Inc., Arkansas
53. Browning-Ferris Industries of Arizona, Inc., Delaware
54. Browning-Ferris Industries of California, Inc., California
55. Browning-Ferris Industries of Central Jersey, Inc., Delaware
56. Browning-Ferris Industries of Colorado, Inc., Colorado
57. Browning-Ferris Industries of Connecticut, Inc., Delaware
58. Browning-Ferris Industries of Eastern Pennsylvania, Inc., Pennsylvania
59. Browning-Ferris Industries of Elizabeth, N.J., Inc., New Jersey
60. Browning-Ferris Industries of Florida, Inc., Delaware
61. Browning-Ferris Industries of Georgia, Inc., Georgia
62. Browning-Ferris Industries of Hawaii, Inc., Delaware
63. Browning-Ferris Industries of Idaho, Inc., Idaho
64. Browning-Ferris Industries of Illinois, Inc., Delaware
65. Browning-Ferris Industries of Indiana, Inc., Indiana
66. Browning-Ferris Industries of Iowa, Inc., Iowa
67. Browning-Ferris Industries of Kansas, Inc., Kansas
68. Browning-Ferris Industries of Kansas City, Inc., Missouri
69. Browning-Ferris Industries of Kentucky, Inc., Delaware
70. Browning-Ferris Industries of Long Island, Inc., New York
71. Browning-Ferris Industries of Louisiana, Inc., Louisiana
72. Browning-Ferris Industries of Louisville, Inc., Indiana
73. Browning-Ferris Industries of Michigan, Inc., Michigan
74. Browning-Ferris Industries of Minnesota, Inc., Minnesota
75. Browning-Ferris Industries of Mississippi, Inc., Mississippi
76. Browning-Ferris Industries of Montana, Inc., Nevada
77. Browning-Ferris Industries of Nebraska, Inc., Nebraska
78. Browning-Ferris Industries of New Hampshire, Inc., New Hampshire
79. Browning-Ferris Industries of New Jersey, Inc., New Jersey

80. Browning-Ferris Industries of New York, Inc., New York
81. Browning-Ferris Industries of North Jersey, Inc., New Jersey
82. Browning-Ferris Industries of Ohio, Inc., Delaware
83. Browning-Ferris Industries of Ohio and Michigan, Inc., Ohio
84. Browning-Ferris Industries of Oregon, Inc., Oregon
85. Browning-Ferris Industries of Oyster Bay, Inc., Delaware
86. Browning-Ferris Industries of Paterson, N.J., Inc., New Jersey
87. Browning-Ferris Industries of Pennsylvania, Inc., Delaware
88. Browning-Ferris Industries fof Philadelphia, Inc., Pennsylvania
89. Browning-Ferris Industries of Puerto Rico, Inc., Puerto Rico
90. Browning-Ferris Industries of Quincy, Illinois, Inc., Iowa
91. Browning-Ferris Industries of Rhode Island, Inc., Delaware
92. Browning-Ferris Industries of Rochester, Inc., Minnesota
93. Browning-Ferris Industries of South Atlantic, Inc., North Carolina
94. Browning-Ferris Industries of South Jersey, Inc., New Jersey
95. Browning-Ferris Industries of Southeastern Michigan, Inc., Michigan
96. Browning-Ferris Industries of Southern Illinois, Inc., Illinois
97. Browning-Ferris Industries of Springfield, Inc., Missouri
98. Browning-Ferris Industries of St. Louis, Inc., Delaware
99. Browning-Ferris Industries of Tennessee, Inc., Tennessee
100. Browning-Ferris Industries of Utah, Inc., Utah
101. Browning-Ferris Industries of Vermont, Inc., Vermont
102. Browning-Ferris Industries of Washington, Inc., Washington
103. Browning-Ferris Industries of West Virginia, Inc., Delaware
104. Browning-Ferris Industries of Western Jersey, Inc., New Jersey
105. Browning-Ferris Industries of Wisconsin, Inc., Wisconsin
106. Browning-Ferris Industries of Wyoming, Inc., Wyoming
107. Browning-Ferris Services, Inc., Delaware
108. Captiva Disposal, Inc., Florida
109. CECOS International, Inc., New York
110. CECOS Treatment Corporation, Connecticut
111. Community Transit Services, Inc., California
112. Dave Systems, Inc., California
113. Disposal Specialists, Inc., Vermont
114. Dooley Equipment Corporation, Massachusetts
115. Empire Sweeping Company, Ohio
116. Environmental Equipment Corp., Texas
117. E & E Hauling, Inc., Illinois
118. ESI, Inc., Pennsylvania
119. Franklintown East Realty, Inc., Pennsylvania
120. George Fenske Sanitary, Minnesota
121. Hall's Ferry Investments, Inc., Missouri
122. Heavy Equipment Leasing Services Co., Inc., New York
123. Health Management, Inc., 540 River Gate Road
124. Health Management of New Orleans, Inc., Louisiana
125. Highway 36 Land Development Company, Colorado
126. Homestead Land Corp., Pennsylvania
127. HL–NIW, Inc., New York
128. Indoco, Inc., Texas
129. International Disposal Corp., Delaware
130. International Disposal Corp., Texas
131. International Disposal Corp. of California, California
132. International Disposal Corp. of Indiana, Delaware
133. International Disposal Corp. of Kansas, Kansas
134. Isler's Refuse Service, Inc., Ohio
135. Jeffco Land Reclamation Company, Colorado
136. Jefferson Pike Landfill, Inc., Tennessee
137. Jeffco Land Reclamation, Inc., Missouri
138. Joe Ball Sanitation Service, Inc., New York
139. Karas Trucking Co., Inc., Ohio
140. LaGrange Disposal Co., Inc., Illinois
141. Land Reclamation, Inc., New York
142. Landfill, Inc., Colorado
143. Landfill, Inc., Missouri
144. Louis Kmito & Son, Inc., Massachusetts
145. Lyon Development Co., Michigan
146. Merrimack Valley Medical Services Company, Inc., Massachusetts
147. Mickey McGuire Sanitation, Inc., Kentucky
148. National Disposal Service of Nebraska, Inc., Nebraska
149. Newco Waste Systems, Inc., New York
150. Newco Waste Systems of New Jersey, Inc., New Jersey
151. Niagara Landfill, Inc., New York
152. Niagara Recycling, Inc., New York
153. Niagara Sanitation Company, Inc., New York
154. Norcal Trans, Inc., California
155. Northern Disposal, Inc., Massachusetts
156. Northwest Sweepers, Inc., Texas
157. Pine Bend Landfill, Inc., Minnesota
158. RHF, Inc., Texas
159. R.R.I.E.B.S., Inc., New York
160. RWCGP, Inc., Texas
161. Residential Service, Inc., Nebraska
162. Resource Recovery Corporation, Massachusetts
163. River City Refuse Removal, Inc., Wisconsin
164. Risk Services, Inc., Delaware
165. Rot's Disposal Services, Inc., Illinois
166. Sanibel Disposal, Inc., Florida
167. Springfield Relay Systems, Inc., Missouri
168. Super Bowl Portable Toilets, Inc., Colorado
169. The Trash Men, Inc., Missouri
170. Town and Country Waste Service, Inc., Wisconsin
171. Troy Area Landfill, Inc., Wisconsin
172. United Nottingham, Inc., California
173. Warner Hill Development Company, Ohio
174. Warner Hill Improvement Company, Ohio
175. Waste Disposal, Inc., Kansas
176. West Roxbury Crushed Stone Co., Massachusetts
177. Westowns Disposal Systems, Inc., Wyoming
178. Woodlake Sanitary Service, Inc., Minnesota

2. A. Parent corporation and address of principal office: Claude Gable Co. Inc., P.O. Box 7067, 322 Fraley Road, High Point, NC 27264.

B. Wholly-owned subsidiaries which will participate in the operations, and states of incorporation: Pickett Place Furniture Co. Inc. States of incorporation: NC.

3. A. Parent corporation and address of principal office: GoodMark Foods, Inc., 4909 Windy Hill Drive, Raleigh, NC 27609.

B. Wholly-owned subsidiary which will participate in the operation and State of incorporation: Fleetwood Snacks, Incorporated in the State of Delaware.

Noreta R. McGee,

Secretary.

[FR Doc. 88-8819 Filed 4-21-88; 8:45 am]

BILLING CODE 7035-01-M

[No. MC-C-30091]

San Juan Air Services, Inc., dba Shuttle Express; Petition for Declaratory Order

AGENCY: Interstate Commerce Commission.

ACTION: Notice of filing of petition for declaratory order.

SUMMARY: San Juan Air Services, Inc., doing business as Shuttle Express (San Juan), has entered into an agreement with the Port of Seattle, in Washington State, the owner and operator of the Seattle-Tacoma International Airport (STIA), for the ground transportation by motor vehicle of passengers who have had or will have an immediate prior or subsequent movement by air to or from STIA. The operations, which are provided either on a through-ticket basis or pursuant to common arrangements between San Juan and every other airline serving STIA, are confined to a zone encompassed by a 25-mile radius of the airport and by the boundaries of the Seattle commercial zone. The Washington Utilities and Transportation Commission and King County, WA, have attempted to assert regulatory jurisdiction over these operations. San Juan seeks a declaratory order determining whether these operations are exempt from regulation pursuant to the statutory incidental-to-air exemption at 49 U.S.C. 10526(a)(8)(A), as implemented by our regulations at 49 CFR 1047.45. The Commission has instituted a declaratory order proceeding and invites comments on this issue.

DATES: Comments may be filed on or before May 23, 1988. San Juan may reply by June 13, 1988.

ADDRESSES: Send an original and, if possible, 10 copies of comments referring to No. MC-C-30091 to: Case Control Branch, Office of the Secretary, Interstate Commerce Commission, Washington, DC 20423.

Send one copy of comments to petitioner's representative: Bruce A. Wolf, Kargianis, Austin & Erickson, 701 Fifth Avenue, Seattle, WA 98104-7010.

FOR FURTHER INFORMATION CONTACT:

Samuel S. Taylor, (202) 275-7181

or

Richard B. Felder, (202) 275-7691

[TDD for hearing impaired: (202) 275-1721.]

SUPPLEMENTARY INFORMATION: Additional information is contained in the Commission's decision. To purchase a copy of the full decision, write to Dynamic Concepts, Inc., Room 2229, Interstate Commerce Commission Building, Washington, DC 20423, or call (202) 289-4357/4359 (DC Metropolitan area) (assistance for the hearing impaired is available through TDD services (202) 275-1721 or by pickup from Dynamic Concepts, Inc., in Room 2229 at Commission headquarters).

Decided: April 14, 1988.

By the Commission, Chairman Gradison, Vice Chairman Andre, Commissioners Sterrett, Simmons, and Lamboley.

Noreta R. McGee,

Secretary.

[FR Doc. 88-8854 Filed 4-21-88; 8:45 am]

BILLING CODE 7035-01-M

[Finance Docket No. 31256]

Ohio Central Railroad; Acquisition and Operation Exemption; Norfolk and Western Railway Co. and the Wheeling and Lake Erie Railroad Co.

Ohio Central Railroad (OCR), a noncarrier, has filed a notice of exemption to acquire and operate a line of railroad owned by Norfolk and Western Railway Company and The Wheeling and Lake Erie Railroad Company. The line, known as the Harmon Branch, extends from milepost CZ73.6 near Harmon, OH, to milepost CZ144.2 near Zanesville, OH, in Stark, Tuscarawas, Holmes, Coshocton, and Muskingum Counties, OH, a distance of 70.6 miles. The transaction was to be consummated on April 8, 1988. Any comments must be filed with the Commission and served on Kelvin J. Dowd, Esq., Slover & Loftus, 1224 Seventeenth Street NW., Washington, DC 20036.

OCR has certified that no properties qualifying for inclusion in the National Register of Historic Places will be affected by the transaction.

This notice is filed under 49 CFR 1150.31. If the notice contains false or misleading information, the exemption is void *ab initio*. Petitions to revoke the exemption under 49 U.S.C. 10505(d) may be filed at any time. The filing of a petition to revoke will not automatically stay the transaction.

Decided: April 14, 1988.

By the Commission, Jane F. Mackall, Director, Office of Proceedings.

Noreta R. McGee

Secretary.

[FR Doc. 88-8818 Filed 4-21-88; 8:45 am]

BILLING CODE 7035-01-M

[Finance Docket No. 31251]

Chicago West Pullman Corp.; Control Exemption

Chicago West Pullman Corporation (CWP), a noncarrier, and Chicago West Pullman Transportation Corp. (CWPT), a CWP noncarrier subsidiary, have filed a notice of exemption for the acquisition of control by CWPT from CWP of Chicago West Pullman & Southern Railway Company (CWPS, Manufacturers' Junction Railway Company (MJ), Newburgh & South Shore Railroad Company (NSR), and The Wisconsin & Calumet Railroad Company (WICT). The transaction would thus transfer control of CWPS, MJ, NSR, and WICT from CWP to CWPT.

This is a transaction within a corporate family of the type specifically exempted from prior approval under 49 CFR 1180.2d(d)(3). It will not result in adverse changes in service levels, significant operational changes, or a change in the competitive balance with carriers outside the corporate family. The proposed transaction is intended to effect operating efficiencies.

To ensure that all employees who may be affected by the transaction are given the minimum protection afforded under section 10505(g)(2) and 11347, the labor conditions set forth in *New York Dock Ry.-Control-Brooklyn Eastern Dist.*, 360 I.C.C. 60 (1979), will be imposed.

Petitions to revoke the exemption under 49 U.S.C. 10505(d) may be filed at any time. The filing of a petition to revoke will not stay the transaction. Pleadings must be filed with the Commission and served on: Edward K. Wheeler, Wheeler & Wheeler, 1729 H. St. NW., Suite 200, Washington, DC 20006.

Decided: April 19, 1988.

By the Commission, Jane F. Mackall, Director, Office of Proceedings.

Noreta R. McGee,

Secretary.

[FR Doc. 88-8994 Filed 4-21-88; 8:45 am]

BILLING CODE 7035-01-M

DEPARTMENT OF JUSTICE

Office of the Attorney General

United States Trustee Program; Certification, Ninth Circuit

The Attorney General, pursuant to section 303 of the Bankruptcy Judges, United States Trustees, and Family Farmer Act of 1986, Pub. L. No. 99-554, 100 Stat. 388 (1986), hereby certifies to

the United States Court of Appeals for the Ninth Circuit on this date that, in the region specified in paragraph 581(a)(9) of title 28, United States Code, composed of the federal judicial district for the State of Arizona, the amendments made by section 113 and subtitle A of title II of the Act and section 1930(a)(6) of title 28, United States Code, will apply 30 days after this date as to all cases commenced under chapters 7, 11, 12, or 13 of title 11, United States Code, on or after November 26, 1986. The amendments will also apply in cases commenced prior to November 26, 1986, one year after this certification, unless a final report and account of the administration of the estate required under section 704 of title 11, United States Code, has been filed, or a plan has been confirmed under section 1129, 1225, or 1325 of title 11.

These amendments implement the United States Trustee system in the region and impose quarterly fees in chapter 11 cases commenced on or after November 26, 1986 beginning on the thirtieth day after the date of this certification. The implementation of the United States Trustee system and the imposition of quarterly fees in those chapter 11 cases commenced prior to November 26, 1986, in which a plan has not been confirmed, will become effective one year after the date of this certification.

The United States Trustee, having been appointed pursuant to 28 U.S.C. 581(a), is responsible for implementing the amendments made by the Act in the region hereby certified.

Date: April 14, 1988.

Arnold I. Burns,

Acting Attorney General.

[FR Doc. 88-8860 Filed 4-21-88; 8:45 am]

BILLING CODE 4410-01-M

Information Collection(s) Under Review

Date: April 19, 1988.

The Office of Management and Budget (OMB) has been sent for review the following proposals for the collection of information under the provisions of the Paperwork Reduction Act (44 U.S.C. Chapter 35) and the Paperwork Reduction Reauthorization Act since the last list was published. Entries are grouped into submission categories. Each entry contains the following information: (1) The name and telephone number of the Department's Clearance Officer from whom a copy of the form (if any) and/or supporting documentation is available; (2) the office, board, division or bureau of the Department of Justice issuing the form or administering the collection; (3) the title of the form or collection; (4) the agency form number, if any; (5) how often the form must be filled out or the information is collected; (6) who will be asked or required to respond, as well as a brief abstract; (7) an estimate of the total number of respondents and the amount of estimated time it takes each respondent to respond; (8) an estimate of the total public burden hours associated with the collection; (9) an indication as to whether section 3504(h) of Public Law 96-511 applies; and, (10) the name and telephone number of the person or office responsible for the OMB review. Comments and/or questions regarding the item(s) contained in this notice should be directed to the OMB reviewer listed at the end of each entry AND to the Department of Justice's Clearance Officer. If you anticipate commenting on a form/collection, but find that time to prepare such comments will prevent you from prompt submission, you should so notify the OMB reviewer AND the Department of Justice's Clearance Officer of your intent as soon as possible.

The Department of Justice's Clearance Officer is Larry E. Miesse and can be reached on (202) 633-4312.

New Collection

(1) Larry E. Miesse, (202) 633-4312
(2) Drug Enforcement Administration, Department of Justice
(3) DEA/USMS/USSS Drugs of Abuse Chain of Custody Form
(4) No form number
(5) On occasion
(6) Individuals or households. Information is needed to document and control the chain of custody for drug testing an individual selected for a job vacancy prior to actual employment under E.O. 12564, in order to maintain a drug-free Federal workplace
(7) 1,200 annual responses, .083 hours per response
(8) 100 estimated public burden hours
(9) Not applicable under 3504(h)
(10) Sam Fairchild, (202) 395-7340.

(1) Larry E. Miesse, (202) 633-4312
(2) Immigration and Naturalization Service, Department of Justice
(3) National Legalization Survey
(4) No form number
(5) One time
(6) Individuals or households. Section 404, P.L. 99-603, mandates a report on legalized aliens to include demographic characteristics and general profiles
(7) 6,000 annual responses, 1 hour per response
(8) 6,000 estimated public burden hours
(9) Not applicable under 3504(h)
(10) Sam Fairchild, (202) 395-7340.

Extension of the Expiration Date of a Currently Approved Collection Without any Change in the Substance or in the Method of Collection

(1) Larry E. Miesse, (202) 633-4312
(2) Immigration and Naturalization Service, Department of Justice
(3) Application to Correct Certificate of Naturalization
(4) N-458
(5) On occasion
(6) Individuals or households. A naturalized person whose certificate contains a defect or error may apply to INS for a correction
(7) 2,400 annual reponses, .083 hours per response
(8) 199 estimated public burden hours
(9) Not applicable under 3504(h)
(10) Sam Fairchild, (202) 395-7340.

(1) Larry E. Miesse, (202) 633-4312
(2) Immigration and Naturalization Service, Department of Justice
(3) Declaration of Intending Citizen
(4) I-772
(5) On occasion
(6) Individuals or households. This form is a prerequisite for certain specified groups of aliens to assert a claim of discrimination based on citizenship status
(7) 2,500,000 annual responses, .033 hours per response
(8) 82,500 estimated public burden hours
(9) Not applicable under 3504(h)
(10) Sam Fairchild, (202) 395-7340.

(1) Larry E. Miesse, (202) 633-4312
(2) Federal Bureau of Investigation, Department of Justice
(3) VICAP Crime Analysis Report
(4) FD-676
(5) Other—when a homicide occurs
(6) State or local governments. This form collects data regarding homicides for analysis by the FBI VICAP Staff. Law enforcement agencies reporting similar pattern crimes are provided with information to initiate multi-agency investigation to expedite the identification and apprehension of criminal offenders (e.g., serial murderers)
(7) 2,500 annual responses, 2 hours per response
(8) 5,000 annual public burden hours
(9) Not applicable under 3504(h)
(10) Sam Fairchild, (202) 395-7340.

Reinstatement of a Previously Approved Collection for Which Approval Has Expired

(1) Larry E. Miesse, (202) 633-4312

(2) Bureau of Justice Statistics, Department of Justice
(3) 1988 National Jail Census
(4) CJ-3
(5) Other-quinquennial
(6) State or local governments. The National Jail Census is needed to provide current information on inmate population and jail facilities throughout the Country
(7) 3,400 annual responses, .5 hours per response
(8) 1,700 public burden hours
(9) Not applicable under 3504(h)
(10) Sam Fairchild, (202) 395-7340.

(1) Larry E. Miesse, (202) 633-4312
(2) Immigration and Naturalization Service, Department of Justice
(3) Application for a Special Certificate of Naturalization to Obtain Recognition as a Citizen of the United States by a Foreign State
(4) N-577
(5) On occasion
(6) Individuals or households. This form provides data used to determine elgibility for issuance of a special certificate to a naturalized citizen that can only be used for the purpose of obtaining recognition as a United States' citizen by a foreign state
(7) 400 annual responses, .25 hours per response
(8) 100 annual burden hours
(9) Not applicable under 3504(h)
(10) Sam Fairchild, (202) 395-7340.

(1) Larry E. Miesse, (202) 633-4312
(2) Immigration and Naturalization Service, Department of Justice
(3) Supplementary Statement for Graduate Medical Trainees
(4) I-644
(5) Annually
(6) Individuals or households. This form is used by foreign exchange visitors who are seeking extension of stay in order to complete a program of graduate education/training
(7) 5,250 responses at, .083 hours per response
(8) 446 public burden hours
(9) Not applicable under 3504(h)
(10) Sam Fairchild, (202) 395-7340.

(1) Larry E. Miesse, (202) 633-4312
(2) Immigration and Naturalization Service, Department of Justice
(3) Petition to Classify Orphan as an Immediate Relative (I-600) Application for Advance Processing of Orphan Petition (I-600A)
(4) I-600. I-600A
(5) On occasion
(6) Individuals or households. Forms used to determine eligible orphans and for advanced processing of such eligible persons.
(7) 17,000 annual responses, .5 public burden hours per response
(8) 8,500 public burden hours
(9) Not applicable under 3504(h)
(10) Sam Fairchild, (202) 395-7340.

(1) Larry E. Miesse, (202) 633-4312
(2) Immigration and Naturalization Service, Department of Justice
(3) Application for Admission to Reapply for Admission into the United States After Deportation or Removal
(4) I-212
(5) On occasion
(6) Individuals or households. This form provides information to be used in determining eligibility for a waiver for an inadmissable alien who is applying for a visa to enter the United States
(7) 5,000 annual responses, .33 hours per response
(8) 1,650 annual public burden hours
(9) Not applicable under 3504(h)
(10) Sam Fairchild, (202) 395-7340.

(1) Larry E. Miesse, (202) 633-4312
(2) Immigration and Naturalization Service, Department of Justice
(3) Nonimmigrant Checkout Letter
(4) G-146
(5) On occasion
(6) Individuals or households. Used in making inquiry of persons in the United States or abroad concerning the whereabouts of aliens and/or departure information wanted by the INS, when initial investigation to locate the alien or verify his departure has been unsuccessful.
(7) 20,000 annual responses at .166 hours per response
(8) 3,320 public burden hours
(9) Not applicable under 3504(h)
(10) Sam Fairchild, (202) 395-7340.

Larry E. Miesse,
Clearance Officer, Department of Justice.
[FR Doc. 88-8853 Filed 4-21-88; 8:45 am]
BILLING CODE 4410-10-M

Drug Enforcement Administration

Harry Michael Clements, M.D.; Revocation of Registration

On February 18, 1988, the Administrator of the Drug Enforcement Administration (DEA) issued an Order to Show Cause to Harry Michael Clements, M.D., Pittsburgh, Pennsylvania, proposing to revoke his DEA Certificates of Registration AC5000372 and BC0196508. The Order to Show Cause alleged that Dr. Clements' continued registration with DEA was inconsistent with the public interest based upon his prescribing of controlled substances outside the course of professional practice, and not for a legitimate medical purpose. Additionally, citing his preliminary finding that Dr. Clements' continued registration posed an imminent danger to the public health and safety, the Administrator ordered the immediate suspension of DEA Certificates of Registration AC5000372 and BC0196508 during the pendency of proceedings.

The Order to Show Cause and Immediate Suspension of Registration was personally served on Dr. Clements on February 22, 1988. More that thirty days have passed since the service of the Order to Show Cause, and DEA has received no response. Therefore, the Administrator concludes that Dr. Clements has waived his opportunity for a hearing on the issues raised by the Order to Show Cause and, pursuant to 21 CFR 1301.54(d) and 1301.54(e), enters this final order without a hearing and based upon the investigative file.

The Administrator finds that in early 1985 agents from the Pennsylvania Bureau of Narcotics conducted an investigation of Dr. Clements' prescribing practices. The agents noted that Dr. Clements was writing a large number of prescriptions for the Schedule II narcotic drugs Percodan and Percocet. Several individuals who obtained these prescriptions were drug abusers and narcotic addicts known to local law enforcement agencies.

A survey indicated that one pharmacy in the Pittsburgh area filled prescriptions written by Dr. Clements, totalling 20,021 dosage units of Schedule II narcotic drugs, in December 1986. The majority of these prescriptions were for Percodan and Percocet. These prescriptions represented over 80% of all prescriptions for Schedule II narcotic controlled substances filled at the pharmacy during that month.

In May 1987, DEA agents interviewed an individual who had been seeing Dr. Clements at his office for about a year and a half. This individual stated that initially a physical examination was conducted by Dr. Clements, but after a time the individual would go to Dr. Clements' office two to three times a week, and on each occasion obtain a prescription for 24 tablets of Percodan or Percocet for $25. Sometimes the individual would pay $50 for a prescription of 48 tablets of Percodan or Percocet or two prescriptions of 24 tablets each of Percodan or Percocet, one of the prescriptions being postdated. Other individuals also indicated they received postdated prescriptions for Percodan or Percocet from Dr. Clements. A local pharmacist told DEA agents that he filled numerous postdated prescriptions for Percodan from Dr. Clements along with currently dated prescriptions written for the same patient.

In January 1988, a confidential informant, monitored by DEA agents, purchased six prescriptions, each for 48 tablets of Percocet, from Dr. Clements. Two prescriptions were in the name of the confidential informant, two in the name of the informant's friend, and two in the name of the informant's mother. The friend and mother were not present. One prescription for each individual was dated on the date of the informant's visit. The others were dated four days later. The confidential informant paid Dr. Clements $300 for the prescriptions. The confidential informant returned to Dr. Clements' office on four more occasions in January and February 1988. On each occasion the informant met briefly with Dr. Clements and purchased six Percocent prescriptions for $300. As before, two prescriptions were in the name of the informant's friend and two in the name of the informant's mother. One prescription for each individual was dated on the day of the visit, the other prescription was postdated.

Based upon the previously described activities of Dr. Clements, the Administrator concludes that the doctor was prescribing controlled substances, specifically Percocet, outside the scope of his professional practice and for other than a legitimate medical purpose. Dr. Clements' prescribing of unusually large quantities of narcotic controlled substances over a period of time to individuals without conducting a medical examination, his prescribing for individuals that he did not see in his office, his assessing of charges based upon the number of prescriptions issued and his postdating of prescriptions clearly support such a conclusion. Dr. Clements has demonstrated a total disregard for the law and regulations regarding prescribing of controlled substances. His continued registration with DEA is clearly inconsistent with the public interest, and he should not remain registered with DEA.

Having concluded that Dr. Clements' DEA Certificates of Registration must be revoked, the Administrator of the Drug Enforcement Administration, pursuant to the authority vested in him by 21 U.S.C. 823 and 824 and 28 CFR 0.100(b), orders that DEA Certificates of Registration AC5000372 and BC0198508, previously issued to Harry Michael Clements, M.D., be, they hereby are, revoked. Any outstanding applications for registration submitted by Dr. Clements are hereby denied. This order is effective April 22, 1988.

When the Order to Show Cause and Immediate Suspension of Registration was served on Dr. Clements, all controlled substances possessed by the doctor under the then-suspended registrations were placed under seal and removed for safekeeping. No disposition may be made of such until all appeals have been concluded or until the time for taking an appeal has elapsed. Accordingly, these controlled substances shall remain under seal until May 23, 1988, or until any appeal of this order has been concluded. At that time all such controlled substances shall be forfeited to the United States and shall be disposed of pursuant to 21 U.S.C. 881(e).

John C. Lawn,

Administrator.

Dated: April 19, 1988.

[FR Doc. 88-8946 Filed 4-21-88; 8:45 am]

BILLING CODE 4410-09-M

Robert Hozdish d/b/a A.J. Meyer Pharmacy; Revocation of Registration and Denial of Application

On September 30, 1987, the Administrator of the Drug Enforcement Administration (DEA) issued an Order to Show Cause to Robert Hozdish, d/b/a A.J. Meyer Pharmacy, of 16361 Mack Avenue, Detroit, Michigan 4824, proposing to revoke DEA Certificate of Registration AA6195172, and to deny the application executed on May 28, 1987, for renewal of that registration as a retail pharmacy under 21 U.S.C. 823(f). The statutory predicate for the proposed action was that Robert Hozdish, pharmacist and owner of the A.J. Meyer Pharmacy, was convicted of a controlled substance-related felony on February 12, 1987, in the United States District Court for the Eastern District of Michigan.

On October 29, 1987, Mr. Hozdish's attorney waived the opportunity for a hearing and submitted a written statement in response to the Order to Show Cause. Several documents were attached to the statement, including a plea agreement, transcripts from court proceedings, and a letter from an Assistant United States Attorney. Mr. Hozdish's attorney also forwarded a copy of the Consent Order entered by the Michigan Department of Licensing and Regulation, Board of Pharmacy. The Administrator finds that Robert Hozdish, d/b/a A.J. Meyer Pharmacy, has waived his opportunity for a hearing. 21 CFR 1301.54(c). Accordingly, the Administrator enters this final order based on the record as it appears, which includes all of the aforementioned documents submitted on behalf of Mr. Hozdish. 21 CFR 1301.54(c), 1301.54(d) and 1301.54(e).

The Administrator finds that the Federal Bureau of Investigation (FBI) conducted an investigation of a sham medical clinic where doctors issued prescriptions for Schedule II and III controlled substances for no legitimate medical purpose. The investigation revealed that Robert Hozdish filled several prescriptions issued by doctors employed by the medical clinic. On January 15, 1985, an FBI Agent interviewed Robert Hozdish concerning the prescriptions he had filled. Robert Hozdish stated that at least once a day for approximately one year he filled two or more prescriptions for individuals presenting prescriptions from the medical clinic. Robert Hozdish further stated that he charged these individuals more than the going rate and filled the prescriptions because it was "easy money."

As a result of the investigation, Robert Hozdish was charged with conspiracy to distribute controlled substances in violation of 21 U.S.C. 846 and 841(a)(1). On February 12, 1987, in the United States District Court for the Eastern District of Michigan, Robert Hozdish pled *nolo contendere* to count one of the superseding information charging him with conspiracy to distribute Percodan, Demerol and Desoxyn, in violation of 21 U.S.C. 846. This is a felony offense relating to controlled substances.

The Administrator also finds that an administrative complaint was filed with the Michigan Board of Pharmacy, Department of Licensing and Regulation, on May 26, 1987, charging Robert Hozdish with several violations of the Michigan Public Health Code. A Consent Order was entered by the Board of Pharmacy on November 18, 1987, suspending Robert Hozdish's pharmacist and controlled substances licenses for a period of six months and one day commencing on December 18, 1987.

Based on the foregoing, the Administrator concludes that there is a lawful basis for the revocation of the DEA registration of A.J. Meyer Pharmacy. DEA has consistently held that the registration of a corporate registrant may be revoked upon a finding that a natural person who is an owner, officer, or key employee, or who has some responsibility for the operation of the registrant's controlled substance business, has been convicted of a felony offense relating to controlled substances. See *Ozie T. Faison, d/b/a Smith Discount Drugs*, Docket No. 85-37, 51 FR 16403 (1986); *Spoon's Pharmacy*, Docket No. 84-42, 50 FR 46520 (1985); *Daniel Levine t/a Gladstone Pharmacy*, Docket No. 84-20, 50 FR 32651 (1985).

The Administrator concludes that based on the facts and circumstances in

this matter, the registration of A.J. Meyer Pharmacy should be revoked. Robert Hozdish has shown that he cannot be trusted to handle controlled substances. He ignored his professional obligations as a pharmacist when, in order to make some "easy money," he chose to fill prescriptions which were issued for no legitimate medical purpose. The Administrator has considered the various documents submitted by counsel for Robert Hozdish in mitigation and does not find the documentation to be persuasive.

Accordingly, the Administrator of the Drug Enforcement Administration, pursuant to 21 U.S.C. 823 and 824 and 28 CFR 0.100(b), hereby orders that DEA Certificate of Registration AA6195172, previously issued to A.J. Meyer Pharmacy be, and it hereby is, revoked. The Administrator further orders that A.J. Meyer Pharmacy's application for renewal of its DEA Certificate of Registration, executed on May 28, 1987, be, and it hereby is, denied. This order is effective May 23, 1988.

Dated: April 18, 1988.

John C. Lawn,

Administrator.

[FR Doc. 88-8837 Filed 4-21-88; 8:45 am]

BILLING CODE 4410-09-M

DEPARTMENT OF LABOR

The Steering Subcommittee of the Labor Advisory Committee for Trade Negotiations and Trade Policy; Meeting

Pursuant to the provisions of the Federal Advisory Committee Act (Pub L. 92-463 as amended), notice is hereby given of a meeting of the Steering Subcommittee of the Labor Advisory Committee for Trade Negotiations and Trade Policy.

Date, time and place: May 10, 1988, 9:30 a.m., Rm. S4215 A&B Frances Perkins, Department of Labor Building, 200 Constitution Avenue, NW., Washington, DC 20210.

Purpose: To discuss trade negotiations and trade policy of the United States.

This meeting will be closed under the authority of section 10(d) of the Federal Advisory Committee Act and 5 U.S.C. 552b(c)(1). The Committee will hear and discuss sensitive and confidential matters concerning U.S. trade negotiations and trade policy.

FOR FURTHER INFORMATION CONTACT: Fernand Lavallee, Executive Secretary, Labor Advisory Committee, *Phone:* (202) 523-6565.

Signed at Washington, DC, this 6th day of April 1988.

Eugene K. Lawson,

Deputy Under Secretary, International Affairs.

[FR Doc. 88-8915 Filed 4-21-88; 8:45 am]

BILLING CODE 4510-28-M

Office of the Secretary

Agency Recordkeeping/Reporting Requirements Under Review by the Office of Management and Budget (OMB)

Background: The Department of Labor, in carrying out its responsibilities under the Paperwork Reduction Act (44 U.S.C. Chapter 35), considers comments on the reporting and recordkeeping requirements that will affect the public.

List of Recordkeeping/Reporting Requirements Under Review: As necessary, the Department of Labor will publish a list of the Agency recordkeeping/reporting requirements under review by the Office of Management and Budget (OMB) since the last list was published. The list will have all entries grouped into new collections, revisions, extensions, or reinstatements. The Departmental Clearance Officer will, upon request, be able to advise members of the public of the nature of the particular submission they are interested in.

Each entry may contain the following information:

The Agency of the Department issuing this recordkeeping/reporting requirement.

The title of the recordkeeping/reporting requirement.

The OMB and Agency identification numbers, if applicable.

How often the recordkeeping/reporting requirement is needed.

Who will be required to or asked to report or keep records.

Whether small businesses or organizations are affected.

An estimate of the total number of hours needed to comply with the recordkeeping/reporting requirements.

The number of forms in the request for approval, if applicable.

An abstract describing the need for and uses of the information collection.

Comments and Questions: Copies of the recordkeeping/reporting requirements may be obtained by calling the Departmental Clearance Officer, Paul E. Larson, telephone (202) 523-6331. Comments and questions about the items on this list should be directed to Mr. Larson, Office of Information Management, U.S. Department of Labor, 200 Constitution Avenue NW., Room N-1301, Washington, DC 20210. Comments should also be sent to the Office of Information and Regulatory Affairs, Attn: OMB Desk Officer for (BLS/DM/ESA/ETA/OLMS/MSHA/OSHA/PWBA/VETS), Office of Management and Budget, Room 3208, Washington, DC 20503 (Telephone (202) 395-6880).

Any member of the public who wants to comment on a recordkeeping/reporting requirement which has been submitted to OMB should advise Mr. Larson of this intent at the earliest possible date.

New

Assistant Secretary for Policy
(Departmental Management)
National SAS Farmworker Survey
(Seasonal Agricultural Services)
Annually
Individual or households; Farms; Businesses or other for profit; 1,000 responses; 1,000 hours

The Immigration and Nationality Act (INA) as amended by Immigration Reform and Control Act Agricultural Services (SAS) agriculture and to analyze information about wages, working conditions and recruitment practices. This survey will gather data necessary to make these estimates and carry out these analyses.

Extension

Employment and Training Administration
Income and Eligibility Verification
1205-0238; No forms
On occasion
State or local governments; Federal agencies or employees
53 respondents; 38,722 burden hours; no forms

Final rules implementing the income and eligibility verification provisions in the Deficit Reduction Act. Rules apply to State Employment Security Agencies (SESAs) and require them to disclose and obtain certain information for verifying eligibility and benefit amounts.

Signed at Washington, DC, this 19th day of April 1988.

Paul E. Larson,

Departmental Clearance Officer.

[FR Doc. 88-8916 Filed 4-21-88; 8:45 am]

BILLING CODE 4510-30-M

Employment and Training Administration

[TA-W-20,411, Kingsford, MI and TA-W-20,411A, Marquette, MI]

Lake Shore, Inc.; Amended Certification Regarding Eligibility To Apply for Worker Adjustment Assistance

In accordance with section 223 of the Trade Act of 1974, the Department of Labor issued a Certification of Eligibility to Apply for Worker Adjustment Assistance on March 21, 1988 applicable to all workers of Lake Shore, Inc., Kingsford, Michigan. The Certification was published in the **Federal Register** on April 5, 1988 (53 FR 11148).

District 33 of the United Steelworkers of America (USW) requested that the Department include Lake Shore workers at Marquette, Michigan in its Certification.

Based on new information furnished to the Department by the company, the certification is amended to include the Marquette, Michigan plant of Lake Shore, Inc. The production at Marquette was integrated with that of Kingsford and workers were transferred between plants. The production and sales data submitted by Lake Shore, Inc., include both plants.

The intent of the Certification is to cover all workers at Lake Shore, Inc., who were affected by increased imports of articles like or directly competitive with cranes and material handling equipment produced at Kingsford, Michigan and Marquette, Michigan.

The amended notice applicable to TA-W-20,411 is hereby issued as follows:

All workers of Lake Shore, Inc., Kingsford, Michigan and Marquette, Michigan, who became totally or partially separated from employment on or after January 5, 1987 are eligible to apply for adjustment assistance under Section 223 of the Trade Act of 1974.

Signed at Washington, DC, this 13th day of April, 1988.

Harold A. Bratt,

Deputy Director, Office of Program Management, UIS.

[FR Doc. 88-8928 Filed 4-21-88; 8:45 am]

BILLING CODE 4510-30-M

Employment Standards Administration, Wage and Hour Division

Minimum Wages for Federal and Federally Assisted Construction; General Wage Determination Decisions.

General wage determination decisions of the Secretary of Labor are issued in accordance with applicable law and are based on the information obtained by the Department of Labor from its study of local wage conditions and data made available from other sources. They specify the basic hourly wage rates and fringe benefits which are determined to be prevailing for the described classes of laborers and mechanics employed on construction projects of a similar character and in the localities specified therein.

The determinations in these decisions of prevailing rates and fringe benefits have been made in accordance with 29 CFR Part 1, by authority of the Secretary of Labor pursuant to the provisions of the Davis-Bacon Act of March 3, 1931, as amended (46 Stat. 1494, as amended, 40 U.S.C. 276a) and of other Federal statutes referred to in 29 CFR Part 1, Appendix, as well as such additional statutes as may from time to time be enacted containing provisions for the payment of wages determined to be prevailing by the Secretary of Labor in accordance with the Davis-Bacon Act. The prevailing rates and fringe benefits determined in these decisions shall, in accordance with the provisions of the foregoing statutes, constitute the minimum wages payable to Federal and federally assisted construction projects to laborers and mechanics of the specified classes engaged on contract work of the character and in the localities described therein.

Good cause is hereby found for not utilizing notice and public comment procedure thereon prior to the issuance of these determinations as prescribed in 5 U.S.C. 553 and not providing for delay in the effective date as prescribed in that section, because the necessity to issue current construction industry wage determinations frequently and in large volume causes procedures to be impractical and contrary to the public interest.

General wage determination decisions, and modifications and supersedeas decisions thereto, contain no expiration dates and are effective from their date of notice in the **Federal Register**, or on the date written notice is received by the agency, whichever is earlier. These decisions are to be used in accordance with the provisions of 29 CFR Parts 1 and 5. Accordingly, the applicable decision, together with any modifications issued, must be made a part of every contract for performance of the described work within the geographic area indicated as required by an applicable Federal prevailing wage law and 29 CFR Part 5. The wage rates and fringe benefits, notice of which is published herein, and which are contained in the Government Printing Office (GPO) document entitled "General Wage Determinations Issued Under the Davis-Bacon and Related Acts," shall be the minimum paid by contractors and subcontractors to laborers and mechanics.

Any person, organization, or governmental agency having an interest in the rates determined as prevailing is encouraged to submit wage rate and fringe benefit information for consideration by the Department. Further information and self-exploratory forms for the purpose of submitting this data may be obtained by writing to the U.S. Department of Labor, Employment Standards Administraton, Wage and Hour Division, Division of Wage Determinations, 200 Constitution Avenue NW., Room S-3504, Washington, DC 20210.

New General Wage Determination Decisions

The numbers of the decisions being added to the Government Printing Office document entitled "General Wage Determinations Issued Under the Davis-Bacon and Related Acts" are listed by Volume, State, and page number(s).

Volume I

Georgia:
GA88-31 ..... pp. 276a-276b.

Modifications to General Wage Determination Decisions

The numbers of the decisions listed in the Government Printing Office document entitled "General Wage Determinations Issued Under the Davis-Bacon and Related Acts" being modified are listed by Volume, State, and page number(s). Dates of publication in the **Federal Register** are in parentheses following the decisions being modified.

Volume I

Georgia:
GA88-10 (Jan. 8, 1988)..... p. 235.
New York:
NY88-7 (Jan. 8, 1988)..... pp. 738-739.
Listing by Location (index)..... pp. xxii-xxv.
Listing by Decision (index)..... p. 1i.

Volume II

Iowa:
IA88-5 (Jan. 8, 1988) ..... p. 46.
Indiana:
IN88-4 (Jan. 8, 1988) ..... pp. 276-282.
Michigan:
MI88-1 (Jan. 8, 1988) ..... pp. 416-418.
MI88-7 (Jan. 8, 1988) ..... pp. 483, 485-450.

Volume III

Arizona:
AZ88-1 (Jan.8, 1988) ..... p. 10.
AZ88-2 (Jan. 8, 1988) ..... pp. 17-22.
Colorado:
CO88-1 (Jan. 8, 1988) ..... pp. 104-112b.
CO88-2 (Jan. 8, 1988) ..... p. 114.
CO88-4 (Jan. 8, 1988) ..... p. 120.
Nevada:
NV88-2 (Jan. 8, 1988) ..... pp. 260-263.
Oregon:
OR88-1 (Jan. 8, 1988) ..... pp. 302-316b.
Utah:
UT88-3 (Jan. 8, 1988) ..... p. 349.
Washington:
WA88-1 (Jan. 8, 1988) ..... pp. 362-363.
WA88-2 (Jan. 8,1988) ..... p. 388.
WA88-3 (Jan. 8, 1988) ..... p. 398.
WA88-8 (Jan. 8, 1988) ..... p. 420.

General Wage Determination Publication

General wage determinations issued under the Davis-Bacon and related Acts, including those noted above, may be found in the Government Printing Office (GPO) document entitled "General Wage Determinations Issued Under the Davis-Bacon and Related Acts". This publication is available at each of the 50 Regional Government Depository Libraries and many of the 1,400 Government Depository Libraries across the country. Subscriptions may be purchased from: Superintendent of Documents, U.S. Government Printing Office, Washington, DC 20402, (202) 783-3238.

When ordering subscription(s), be sure to specify the State(s) of interest, since subscriptions may be ordered for any or all of the three separate volumes, arranged by State. Subscriptions include an annual edition (issued on or about January 1) which includes all current general wage determinations for the States covered by each volume. Throughout the remainder of the year, regular weekly updates will be distributed to subscribers.

Signed at Washington, DC, this 15th day of April 1988.

Alan L. Moss,

Director, Division of Wage Determinations.

[FR Doc. 88-8670 Filed 4-21-88; 8:45 am]

BILLING CODE 4510-27-M

Mine Safety and Health Administration

[Docket No. M-88-63-C]

AMAX Coal Co.; Petition for Modification of Application of Mandatory Safety Standard

AMAX Coal Company, P.O. Box 967, 251 N. Illinois Street, Indianapolis, Indiana 46206-0967 has filed a petition to modify the application of 30 CFR 75.326 (aircourses and belt haulage entries) to its Wabash Mine (I.D. No. 11-00877) located in Wabash County, Indiana. The petition is filed under section 101(c) of the Federal Mine Safety and Health Act of 1977.

A summary of the petitioner's statements follows:

1. The petition concerns the requirement that entries used as intake and return aircourses be separated from belt haulage entries, and that belt haulage entries not be used to ventilate active working places.

2. As an alternate method, petitioner proposes to use air from belt haulage entries to ventilate active working places.

3. In support of this request, petitioner proposes to install an early warning fire detection system. Carbon monoxide sensors will be installed in all belt entries used as intake or return aircourses and at each belt drive and tailpiece located in intake aircourses. A warning signal will be activated when the CO level is 10 parts per million (ppm) above ambient air and an alarm will be activated at 15 ppm above ambient air. All persons will be evacuated at 15 ppm. The alarm and signal will be activated at an attended surface location where there is two-way communication. The CO system will be capable of identifying any activated sensor and for monitoring electrical continuity to detect any malfunctions.

4. If the CO monitoring system is deenergized or malfunctions the belt conveyor will continue to operate and qualified persons will patrol and monitor the belt conveyor using hand-held CO detecting devices.

5. Each CO sensor will be visually examined at least once during each coal-producing shift. Sensors will be calibrated in accordance with Fire Warning Device Plan. Each sensor will be capable of detecting CO in air at a level of 1 ppm throughout the operating range.

6. When an alarm is activated, a record will be made of the date, time, and CO concentration at the sensor producing the signal and the reason for its activation.

7. Petitioner states that the proposed alternate method will provide the same degree of safety for the miners affected as that afforded by the standard.

Request for Comments

Persons interested in this petition may furnish written comments. These comments must be filed with the Office of Standards, Regualtions and Variances, Mine Safety and Health Administration, Room 627, 4015 Wilson Boulevard, Arlington, Virginia 22203. All comments must be postmarked or received in that office on or before May 23, 1988. Copies of the petition are available for inspection at that address.

Patricia W. Silvey,

Director, Office of Standards, Regulations and Variances.

Date: April 18, 1988.

[FR Doc. 88-8917 Filed 4-21-88; 8:45 am]

BILLING CODE 4510-43-M

[Docket No. M-88-29-C]

Bethlehem Mines Corp.; Petition for Modification of Application of Mandatory Safety Standard

Bethlehem Mines Corporation, 7012 MacCorkle Avenue, SE., Charleston, West Virginia 25304 has filed a petition to modify the application of 30 CFR 77.216-3(a) (water, sediment, or slurry impoundments and impounding structures; inspection requirements; correction of hazards; program requirements) to its Mine 41, Impoundment and Refuse Disposal Facility (I.D. No. 46-01427), (1211WV30053-00) and (1211WV30053-02) located in Marion County, West Virginia. The petition is filed under section 101(c) of the Federal Mine Safety and Health Act of 1977.

A summary of the petitioner's statements follows:

1. The petition concerns the requirement that all water, sediment, or slurry impoundments be examined by a qualified person designated by the person owning, operating or controlling the impounding structure at intervals not exceeding seven days for appearance of structural weakness and other hazardous conditions.

2. As an alternate method, petitioner proposes to inspect the facility on a monthly basis. In support of this request, petitioner states that—

(a) The facility has been idle since 1982 and is presently on inactive status;

(b) No adverse conditions have been revealed in the structure;

(c) There are no significant seepages, erosion, or other problems that would indicate a structure/stability concern;

(d) The present storm storage capacity in the structure meets the requirement of the design plan;

(e) The inspections will increase when necessary due to weather conditions; and

(f) Petitioner is in the process of updating an emergency warning and evacuation plan, which will establish the communication network for relaying weather conditons and emergency situations to the proper individuals.

3. For these reasons, petitioner requests a modification of the standard.

Request for Comments

Persons interested in this petition may furnish written comments. These comments must be filed with the Office of Standards, Regulations and Variances, Mine Safety and Health Administration, Room 627, 4015 Wilson Boulevard, Arlington, Virginia 22203. All comments must be postmarked or received in that office on or before May 23, 1988. Copies of the petition are available for inspection at that address.

Patricia W. Silvey,

Director, Office of Standards, Regulations and Variances.

Date: April 18, 1988.

[FR Doc. 88-8918 Filed 4-21-88; 8:45 am]

BILLING CODE 4510-43-M

[Docket No. M-88-4-C]

Cougar Coal Co., Inc.; Petition for Modification of Application of Mandatory Safety Standard

Cougar Coal Company, Inc., P.O. Box 301, Warfield, Kentucky 41267 has filed a petition to modify the application of 30 CFR 75.1710 (cabs and canopies) to its Mine No. 1 (I.D. No. 15-16161) located in Johnson County, Kentucky. The petition is filed under section 101(c) of the Federal Mine Safety and Health Act of 1977.

A summary of the petitioner's statements follows:

1. The petition concerns the requirement that cabs or canopies be installed on the mine's electric face equipment.

2. The mine ranges from 40 to 48 inches in height and the coal bed is very uneven with rolls and hills.

3. Petitioner states that the use of cabs or canopies on the mine's electric face equipment would result in a diminution of safety, because the cabs or canopies would hit and dislodge roof bolts, causing a roof fall. The cabs or canopies would also limit the equipment operator's visibility.

4. For these reasons, petitioner requests a modification of the standard.

Request for Comments

Persons interested in this petition may furnish written comments. These comments must be filed with the Office of Standards, Regulations and Variances, Mine Safety and Health Administration, Room 627, 4015 Wilson Boulevard, Arlington, Virginia 22203. All comments must be postmarked or received in that office on or before May 23, 1988. Copies of the petition are available for inspection at that address.

Patricia W. Silvey,

Director, Office of Standards, Regulations and Variances.

Date: April 18, 1988.

[FR Doc. 88-8919 Filed 4-21-88; 8:45 am]

BILLING CODE 4510-43-M

[Docket No. M-88-23-C]

Emmanuel Coal Co.; Petition for Modification of Application of Mandatory Safety Standard

Emmanuel Coal Company, 3 Arnold Avenue, Prestonburg, Kentucky 41653, has filed a petition to modify the application of 30 CFR 75.1710 (cabs and canopies) to its Mine No. 3 (I.D. No. 15-16252) located in Martin County, Kentucky. The petition is filed under section 101(c) of the Federal Mine Safety and Health Act of 1977.

A summary of the petitioner's statements follows:

1. The petition concerns the requirement that cabs or canopies be installed on the mine's electric face equipment.

2. The mine is in the Stockton Coal Seam, and the average mining height is 48 inches.

3. Petitioner states that when canopies are lowered on the mine's electric face equipment to a height which allows clearance throughout the mine, the canopies limit the equipment operator's vision.

4. For these reasons, petitioner requests a modification of the standard.

Request for Comments

Persons interested in this petition may furnish written comments. These comments must be filed with the Office of Standards, Regulations and Variances, Mine Safety and Health Administration, Room 627, 4015 Wilson Boulevard, Arlington, Virginia 22203. All comments must be postmarked or received in that office on or before May 23, 1988. Copies of the petition are available for inspection at that address.

Patricia W. Silvey,

Director, Office of Standards, Regulations and Variances.

Date: April 18, 1988.

[FR Doc. 88-8920 Filed 4-21-88; 8:45 am]

BILLING CODE 4510-43-M

[Docket No. M-88-48-C]

Freeman United Coal Mining Co.; Petition for Modification of Application of Mandatory Safety Standard

Freeman United Coal Mining Company, Route 37 North, West Frankfort, Illinois 62896 has filed a petition to modify the application of 30 CFR 75.1700 (oil and gas wells) to its Orient Mine No. 6. (I.D. No. 11-00599) located in Jefferson County, Illinois. The petition is filed under section 101(c) of the Federal Mine Safety and Health Act of 1977.

A summary of the petitioner's statements follows:

1. The petition concerns the requirement that barriers be established and maintained around oil and gas wells penetrating coal beds.

2. As an alternate method, petitioner proposes to clean out and plug oil and gas wells using specific techniques and specific procedures as outlined in the petition.

3. In addition, petitioner proposes to mine through the plugged oil or gas well. Prior to mining through, the petitioner would confer with the MSHA District Manager for approval of the specific mining procedures, and appropriate officials would be allowed to observe the process and all mining would be under the direct supervision of a certified official. In addition:

(a) Drivage sites would be installed; firefighting equipment, roof support and ventilated materials would be avaiable;

(b) The quantity of air would be not less than 9000 cubic feet per minute to ventilate the face;

(c) Equipment would be checked for permissibility and serviced prior to mining through the well. The working place would be free from accumulations of coal dust and coal spillages, and rock-dusted to within 20 feet of the face;

(d) Methane monitors would be calibrated prior to the shift and tests would be made during mining approximately every 10 minutes; and

(e) When the wellbore is intersected, all equipment would be deenergized and safety checks would be made before mining would continue in by the well a sufficient distance to permit adequate

ventilation around the area of the wellbore.

4. Petitioner states that the proposed alternate method will provide the same degree of safety for the miners affected as that afforded by the standard.

Request for Comments

Persons interested in this petition may furnish written comments. These comments must be filed with the Office of Standards, Regulations and Variances, Mine Safety and Health Administration, Room 627, 4015 Wilson Boulevard, Arlington, Virginia 22203. All comments must be postmarked or received in that office on or before May 23, 1988. Copies of the petition are available for inspection at that address.

Patricia W. Silvey,

Director, Office of Standards, Regulations and Variances.

Date: April 18, 1988.

[FR Doc. 88-8921 Filed 4-21-88; 8:45 am]

BILLING CODE 4510-43-M

[Docket No. M-87-253-C]

The Helen Mining Co.; Petition for Modification of Application of Mandatory Safety Standard (Amendment)

The Helen Mining Company, R.D. 2, Box 2110, Homer City, Pennsylvania 15748-0504, has filed an amendment to a petition for modification. On October 19, 1987, The Helen Mining Company, submitted a petition to modify the application of 30 CFR 75.305 (weekly examinations for hazardous conditions) to its Homer City Mine (I.D. No. 36-00926) located in Indiana County, Pennsylvania. On December 15, 1987, MSHA published notice of the petition in the **Federal Register** (52 FR 47646), allowing interested parties 30 days to submit comments. On April 7, 1988, petitioner submitted a request to amend the originally submitted petition for modification. The amendment is filed under section 101(c) of the Federal Mine Safety and Health Act of 1977.

A summary of the petitioner's statements follows:

1. The petition concerns the requirement that return air-courses be examined in their entirety on a weekly basis.

2. Due to roof falls, the Old 1st South Return; South Mains Return; South Mains Parallel Return; No. 1 Panel South Mains Return; No. 2 Intake Shaft Intake Entry; and 2nd Left Return, cannot be safely traveled and to rehabilitate these areas would expose miners to hazardous conditions.

3. As an alternate method, petitioner proposes that—

(a) When an impassable roof falls occurs in an area of the mine, utilizing a single return aircourse, an evaluation will be conducted to ensure that an adequate quantity of air is passing over the fall;

(b) The inby and outby ends of the roof fall will be supported according to the approved roof control at the mine; and

(c) The mine examiner will conduct weekly examinations of the return aircourses by traveling the aircourse and examining the inby and outby ends of the roof fall to ensure proper flow and volume. Tests for methane will be conducted.

4. Petitioner states that the proposed alternate method will provide the same degree of safety for the miners affected as that afforded by the standard.

Request for Comments

Persons interested in this petition may furnish written comments. These comments must be filed with the Office of Standards, Regulations and Variances, Mine Safety and Health Administration, Room 627, 4015 Wilson Boulevard, Arlington, Virginia 22203. All comments must be postmarked or received in that office on or before May 23, 1988. Copies of the petition are available for inspection at that address.

Patricia W. Silvey,

Director, Office of Standards, Regulations and Variances.

Date: April 18, 1988.

[FR Doc. 88-8922 Filed 4-21-88; 8:45 am]

BILLING CODE 4510-43-M

[Docket No. M-87-303-C]

Kerr/McGee Coal Corp.; Petition for Modification of Application of Mandatory Safety Standard (Amendment)

Kerr-McGee Coal Corporation, P.O. Box 727, Harrisburg, Illinois 62946 has filed an amendment to a petition for modification. On December 21, 1987, Kerr-McGee Coal Corporation submitted a petition to modify the application of 30 CFR 75.902 (low- and medium-voltage ground check monitor circuits) to its Galatia Mine 56-1, No. 5 Seam Bottom Area (I.D. No. 11-02752) located in Saline County, Illinois. On February 12, 1988, MSHA published notice of the petition in the **Federal Register** (53 FR 4241), allowing interested parties 30 days to submit comments. On March 29, 1988, petitioner submitted a request to amend the originally submitted petition for modification to include the No. 6 Seam fluids borehole area. The amendment is filed under section 101(c) of the Federal Mine Safety and Health Act of 1977.

A summary of the petitioner's statements follows:

1. The petition concerns the requirement that low- and medium-voltage resistance grounded systems include a fail-safe ground check circuit to monitor continuously the grounding circuit to assure continuity. The ground check circuit will cause the circuit breaker to open when either the ground or pilot check wire is broken.

2. As an alternate method, petitioner proposes to use 480-volt, three phase, power distribution without the need of the ground check circuit in the No. 5 Seam bottom area and the No. 6 Seam fluids borehole area. In support of this request petitioner states that—

(a) The No. 5 Seam bottom area is constructed with concrete floors with the roof and rib wire meshed and sealed with a nonhazardous pressure applied fibrous sealant, along with additional steel supports. The No. 6 Seam fluids borehold area is constructed as the No. 5 Seam bottom area, but without the additional steel supports;

(b) Galvanized rigid conduit will be used throughout both areas. The conduit will be supported by strut fastened to existing steel supports on the No. 5 Seam bottom area and to the roof in the No. 6 Seam fluids borehole area;

(c) All electrical panels, starters, boxes, will be of type NEMA 12;

(d) All stationary 480-volt, three phase equipment will be connected by galvanized rigid conduit;

(e) All equipment will be bonded to the grounding system through the conduit system and through a ground wire pulled in the conduit system;

(f) Power to the No. 5 Seam bottom area and No. 6 Seam Fluids borehole area wil be fed to NEMA 12 electrical panels from a mine duty power center by MSHA approved cables and protected at the power center by MSHA approved ground monitor, ground fault, under voltage release, thermal and magnetic overload protection; and

(g) The design and installation of this electrical system will conform to the 1987 National Electrical Code.

3. For these reasons, petitioner requests a modification of the standard.

Request for Comments

Persons interested in this petition may furnish written comments. These comments must be filed with the Office of Standards, Regulations and Variances, Mine Safety and Health Administration, Room 627, 4015 Wilson

Boulevard, Arlington, Virginia 22203. All comments must be postmarked or received in that office on or before May 23, 1988. Copies of the petition are available for inspection at that address.

Patricia W. Silvey,

Director, Office of Standards, Regulations and Variances.

Date: April 18, 1988.

[FR Doc. 88-8923 Filed 4-21-88; 8:45 am]

BILLING CODE 4510-43-M

[Docket No. M-88-22-C]

Larkk Mining Co.; Petition for Modification of Application of Mandatory Safety Standard

Larkk Mining Company, Box 964, Prestonburg, Kentucky 41653 has filed a petition to modify the application of 30 CFR 75.1710 (cabs and canopies) to its Mine No. 1 (I.D. No. 15-15054) and its Mine No. 2 (I.D. 15-16149) both located in Magoffin County, Kentucky. The petition is filed under section 101(c) of the Federal Mine Safety and Health Act of 1977.

A summary of the petitioner's statements follows:

1. The petition concerns the requirement that cabs or canopies be installed on the mine's electric face equipment.

2. The mine is in the Winiferde Coal Seam, and ranges from 44 to 46 inches in height.

3. Petitioner states that when canopies are lowered on the mine's electric face equipment to a height which allows clearance throughout the mine, the canopies limit the equipment operator's vision.

4. For these reasons, petitioner requests a modification of the standard.

Request for Comments

Persons interested in this petition may furnish written comments. These comments must be filed with the Office of Standards, Regulations and Variances, Mine Safety and Health Administration, Room 627, 4015 Wilson Boulevard, Arlington, Virginia 22203. All comments must be postmarked or received in that office on or before May 23, 1988. Copies of the petition are available for inspection at that address.

Patricia W. Silvey,

Director, Office of Standards, Regulations and Variances.

Date: April 12, 1988.

[FR Doc. 88-8924 Filed 4-21-88; 8:45 am]

BILLING CODE 4510-43-M

[Docket No. M-88-24-C]

Mullins and Sons Coal Co., Inc.; Petition for Modification of Application of Mandatory Safety Standard

Mullins and Sons Coal Company, Inc., Box 4028, Kimper, Kentucky 41539 has filed a petition to modify the application of 30 CFR 75.1710 (cabs and canopies) to its No. 6 Mine (I.D. No. 15-11855) located in Pike County, Kentucky. The petition is filed under section 101(c) of the Federal Mine Safety and Health Act of 1977.

A summary of the petitioner's statements follows:

1. The petition concerns the requirement that cabs or canopies be installed on the mine's electric face equipment.

2. The No. 6 Mine is located in the Pond Creek seam and ranges from 30 to 48 inches in height, with ascending and descending elevations. The height of the seam varies due to roof irregularities and rolls.

3. Petitioner states that the use of cabs or canopies on the mine's electric face equipment would result in a diminution of safety, because the cabs or canopies would hit and loosen roof support, impair the equipment operator's vision and seating position, resulting in cramped conditions, fatigue and reduced alertness and safety. The cabs and canopies could also disturb overhead electrical cables, causing electrical shocks.

4. Petitioner further states that, should the power go out while an operator's compartment is up against a rib, a canopy which is close to the machine frame would trap the operator inside. Should a mine fire exist, flooding, or other danger occur, the operator could not escape.

5. For these reasons, petitioner requests a modification of the standard.

Request for Comments

Persons interested in this petition may furnish written comments. These comments must be filed with the Office of Standards, Regulations and Variances, Mine Safety and Health Administration, Room 627, 4015 Wilson Boulevard, Arlington, Virginia 22203. All comments must be postmarked or received in that office on or before May 23, 1988. Copies of the petition are available for inspection at that address.

Patricia W. Silvey,

Director, Office of Standards, Regulations and Variances.

Date: April 18, 1988.

[FR Doc. 88-8925 Filed 4-21-88; 8:45 am]

BILLING CODE 4510-43-M

Pension and Welfare Benefits Administration

[Prohibited Transaction Exemption 88-26; Application No. D-7019]

Exemption for Certain Transactions Involving Alliance Capital Management Corp.

AGENCY: Pension and Welfare Benefits Administration, Labor.

ACTION: Grant of individual exemption.

SUMMARY: This exemption permits the direction of securities brokerage transactions by Alliance Capital Management Corporation (Alliance), on behalf of employee benefit plans for which it acts as investment manager and fiduciary (within the meaning of section 3(21) of the Act), to independent broker-dealers who have arrangements with an affiliate of Alliance, the Pershing Division (Pershing) of Donaldson, Lufkin and Jenrette Securities Corporation (DLJ Securities), to execute, clear and/or settle transactions for such independent broker-dealers.

FOR FURTHER INFORMATION CONTACT: Sandra Bollhoefer of the Department, telephone (202) 523-8671. (This is not a toll-free number.)

SUPPLEMENTARY INFORMATION: On November 6, 1987, notice was published in the **Federal Register** (52 FR 42740) of the pendency before the Department of Labor (the Department) of an application for exemption from the restrictions of section 406(b) of the Employee Retirement Income Security Act of 1974 (the Act) and from the taxes imposed by section 4975 (a) and (b) of the Internal Revenue Code of 1986 (the Code) by reason of section 4975(c)(1) (E) and (F) of the Code. The notice set forth a summary of the facts and representations contained in the application for exemption and referred interested persons to the application for a complete statement of the facts and representations. The application has been available for public inspection at the Department in Washington, DC.

All interested persons were invited by the notice to submit written comments on the proposed exemption and to submit a written request that a hearing be held relating to the exemption. The applicant has represented that it has complied with the requirements of the notification to interested persons as set forth in the notice of pendency. No comments or requests for a hearing were received by the Department.

The notice of pendency was issued and the exemption is being granted

solely by the Department because, effective December 31, 1978, section 102 of Reorganization Plan No. 4 of 1978 (43 FR 47713, October 17, 1978) transferred the authority of the Secretary of the Treasury to issue exemptions of the type proposed to the Secretary of Labor.

General Information

The attention of interested persons is directed to the following:

(1) The fact that a transaction is the subject of an exemption under section 408(a) of the Act and section 4975(c)(2) of the Code does not relieve a fiduciary or other party in interest or disqualified person from certain other provisions of the Act and the Code. These provisions include any prohibited transaction provisions to which the exemption does not apply and the general fiduciary responsibility provisions of section 404 of the Act, which, among other things, require a fiduciary to discharge his duties respecting the plan solely in the interest of the participants and beneficiaries of the plan and in a prudent fashion in accordance with section 404(a)(1)(B) of the Act; nor does the fact that the transaction is the subject of an exemption affect the requirement of section 401(a) of the Code that a plan must operate for the exclusive benefit of the employees of the employer maintaining the plan and their beneficiaries.

(2) This exemption is supplemental to, and not in derogation of, any other provisions of the Act and the Code, including statutory or administrative exemptions and transitional rules. Furthermore, the fact that a transaction is the subject of an administrative or statutory exemption is not dispositive of whether the transaction is in fact a prohibited transaction.

Exemption

In accordance with section 408(a) of the Act and section 4975(c)(2) of the Code and the procedures set forth in ERISA Procedure 75-1 (40 FR 18471, April 28, 1975), and based upon the entire record, the Department makes the following determinations:

(a) The exemption is administratively feasible;

(b) It is in the interests of the plans involved and of their participants and beneficiaries; and

(c) It is protective of the rights of the participants and beneficiaries of those plans.

Accordingly, the restrictions of section 406(b) of the Act and the sanctions resulting from the application of section 4975 of the Code by reason of section 4975(c)(1) (E) and (F), shall not apply to the direction of securities transactions, initiated by Alliance Capital Management Corporation (Alliance), an affiliate of Donaldson, Lufkin and Jenrette Securities Corporation (DLJ Securities), on behalf of an employee benefit plan in Alliance's capacity as a fiduciary for such plan, to a securities broker or dealer (Pershing Correspondent), who is not an affiliate of DLJ Securities and who has a correspondent relationship with the Pershing Division (Pershing) of DLJ Securities on an omnibus account basis, and where such securities transactions are executed, cleared and/or settled by Pershing, provided that the conditions set forth below are met:

(a) There is no arrangement or understanding between Alliance and the Pershing Correspondents that all or part of the execution, clearance and settlement functions relating to such transactions will be directed to Pershing.

(b) Neither Alliance nor any affiliate of Alliance is a trustee or administrator of any of the plans or an employer of any employees covered by any of the plans.

(c) Prior to transmitting plan transactions to a Pershing Correspondent and on an annual basis thereafter, Alliance will disclose to an independent fiduciary of each plan whose assets are involved in the transaction information necessary to enable the fiduciaries to judge the appropriateness of transactions effected on behalf of their plans through Pershing Correspondents and to determine whether such activities should be discontinued. These disclosures will delineate: (1) The existence of the corespondent relationships and the nature of the affiliation between Alliance and Pershing; (2) the possibility that transactions may be directed to Pershing Correspondents and that part of the commissions paid to the correspondents may be retained by Pershing as a correspondent fee; and (3) the use of brokerage commissions to pay for investment research services.

(d) Alliance will furnish a report to an independent fiduciary of each plan at least once per year. Such report will be furnished within 45 days following the end of the period to which it relates and will contain the following information: (1) The total of all transaction-related charges incurred by the plan during the period covered by the report in connection with transactions to which this proposed exemption applies; (2) the total of all transaction-related charges incurred by the plan during the period covered by the report in connection with all other brokerage transactions; (3) rates for all transaction-related charges incurred by the plan during the period covered by the report for transactions to which this exemption applies; and (4) rates for all transaction-related charges incurred by the plan for all other brokerage transactions.

The availability of this exemption is subject to the express conditions that the material facts and representations contained in the paplication are true and complete, and that the application accurately describes all material terms of the transactions to be consummated pursuant to the exemption.

Signed at Washington, DC, this 6th day of April, 1988.

Robert J. Doyle,

Acting Associate Director for Regulations and Interpretations, Pension and Welfare Benefits Administration, U.S. Department of Labor.

[FR Doc. 88-8931 Filed 4-21-88; 8:45 am]

BILLING CODE 4510-29-M

[Application No. D-7005] et al.]

Proposed Exemptions; Carpenters Pension Trust for Southern California et al.

AGENCY: Pension and Welfare Benefits Administration, Labor.

ACTION: Notice of proposed exemptions.

SUMMARY: This document contains notices of pendency before the Department of Labor (the Department) of proposed exemptions from certain of the prohibited transaction restrictions of the Employee Retirement Income Security Act of 1974 (the Act) and/or the Internal Revenue Code of 1954 (the Code).

Written Comments and Hearing Requests

All interested persons are invited to submit written comments or requests for a hearing on the pending exemptions, unless otherwise stated in the Notice of Pendency, within 45 days from the date of publication of this **Federal Register** Notice. Comments and requests for a hearing should state the reasons for the the writer's interest in the pending exemption.

ADDRESS: All written comments and requests for a hearing (at least three copies) should be sent to the Pension and Welfare Benefits Administration, Office of Regulations and Interpretations, Room N-5669, U.S. Department of Labor, 200 Constitution Avenue, NW., Washington, DC 20210. Attention: Application No. stated in each Notice of Pendency. The applications for exemption and the comments received will be available for public inspection in the Public

Documents Room of Pension and Welfare Benefit Programs, U.S. Department of Labor, Room N-4677, 200 Constitution Avenue, NW., Washington, DC 20210.

Notice to Interested Persons

Notice of the proposed exemptions will be provided to all interested persons in the manner agreed upon by the applicant and the Department within 15 days of the date of publication in the **Federal Register**. Such notice shall include a copy of the notice of pendency of the exemption as published in the **Federal Register** and shall inform interested persons of their right to comment and to request a hearing (where appropriate).

SUPPLEMENTARY INFORMATION: The proposed exemptions were requested in applications filed pursuant to section 408(a) of the Act and/or section 4975(c)(2) of the Code, and in accordance with procedures set forth in ERISA Procedure 75-1 (40 FR 18471, April 28, 1975). Effective December 31, 1978, section 102 of Reorganization Plan No. 4 of 1978 (43 FR 47713, October 17, 1978) transferred the authority of the Secretary of the Treasury to issue exemptions of the type requested to the Secretary of Labor. Therefore, these notices of pendency are issued solely by the Department.

The applications contain representations with regard to the proposed exemptions which are summarized below. Interested persons are referred to the applications on file with the Department for a complete statement of the facts and representations.

Carpenters Pension Trust for Southern California (the Trust) Located in Los Angeles, California

[Application No. D-7005]

Proposed Exemption

The Department is considering granting an exemption under the authority of section 408(a) of the Act and section 4975(c)(2) of the Code and in accordance with the procedures set forth in ERISA Procedure 75-1 (40 FR 18471, April 28, 1975). If the exemption is granted the restrictions of section 406(a) of the Act and the sanctions resulting from the application of section 4975 of the Code, by reason of section 4975(c)(1)(A) through (D) of the Code shall not apply (1) to the past and continued leasing of office space in a building (the Building) owned by the Trust to DeCarlo & Connor (the Firm), a party in interest with respect to the Trust; (2) the past and continued leasing of certain office space in the Building by the Firm from the Trust which the Firm had been previously subleasing from the Los Angeles County District Council of Carpenters (the District Council); and (3) the proposed subsequent leasing of additional office space in the Building to the Firm; provided that each leasing transaction which has taken place or will take place was and will be on terms no less favorable to the Trust than an arm's-length transaction with an unrelated party.

Effective Date: If the proposed exemption is granted, the exemption will be effective January 1, 1986.

Summary of Facts and Representations

1. The Trust is a multiemployer, jointly-trusteed, defined benefit plan, headquartered at 520 S. Virgil Avenue, Los Angeles, California. The Trust has approximately 36,000 plan participants. As of December 31, 1986, the Trust had total assets of $859,931,381.

2. The Building is a four story office building located at 500 S. Virgil Avenue in Los Angeles, California. The Trust owns the Building as well as two adjoining buildings located at 520 S. Virgil Avenue and 2999 West Sixth Street. The applicant states that the value of these three properties is approximately $7,301,000. Tenants in these buildings include various service providers to the Trust, labor organizations and non-Trust-related commercial tenants.[1] Rental income for the properties in 1986 represented slightly less than 1% of the total income of the Trust.

Moran Management Corporation (Moran) was the property manager for the Building until mid-1986. The current property manager for the Building is the Charles Dunn Company. The Board of Trustees of the Trust (the Trustees) appoints the Owner-Representative Committee (the Committee) to oversee management of the Trust's real properties, including the Building.

3. The Firm is a professional corporation providing legal services to the Trust as the Trust's co-counsel. The Firm also employes persons on whose behalf contributions are made to the Trust. Prior to January 1, 1986, John DeCarlo (Mr. DeCarlo) and Patrick Connor (Mr. Connor) were employees of the District Council. The application states that the District Council leased Suite 320 in the Building on May 1, 1985 to provide space for its "in-house" lawyers, Mr. DeCarlo and Mr. Connor.[2] The decision to enter into the lease with the District Council was made by Moran. The lease was ratified by the Committee on November 26, 1985. The lease was a month-to-month lease with a monthly rent of $1,381 per month or $1.25 per square foot per month.

The applicant states that on January 1, 1986, when Messrs. DeCarlo and Connor formed the Firm and left the employ of the District Council, they remained in Suite 320. The applicant has provided a declaration from Mr. John Nemer (Mr. Nemer), an employee of Moran, concerning the circumstances which led to the Firm occupying the space previously occupied by the District Council without a new lease being entered into between the Firm and the Trust. Mr. Nemer states that he did not initiate any action to transfer the lease to the Firm or to create a new lease with the Firm because he was satisfied with the arrangement as long as the Trust received payment of the rent. Mr. Nemer did not approach the Committee concerning the change because the Trust was still receiving fair market rent, as established by an independent appraiser. In addition, no commissions were involved for the leasing of the space, and the Trust was not asked to incur any expense to improve the space. Mr. Nemer states that he was never pressured by any person affiliated with the District Council or the Firm to lease space to them or to otherwise transact with them on any basis different than the Trust would transact with unrelated lessees. Mr. Nemer represents that at all times from May 1, 1985 until the present, the terms and conditions of the lease have been equal to or better than the terms and conditions available in similar transactions by the Trust with unrelated parties.

The applicant proposes to lease Suite 320 (the Suite 320 Lease) to the Firm for a term of three years, beginning January 1, 1986, the date on which the Firm left the employ of the District Council and began leasing the space directly from the Trust. The applicant states that the Committee will approve the Suite 320 Lease on behalf of the Trust and will monitor the lease to safeguard the interests of the Trust, including maintaining the rent at fair market value and undertaking any action necessary to protect the Trust and its participants and beneficiaries.

[1] Certain of the leases with service-providers to the Trust are covered by Prohibited Transaction Exemption 81-60, 46 FR 39248, July 31, 1981.

[2] The applicant represents that the lease of Suite 320 to the District Council satisfied the conditions necessary for relief under Prohibited Transaction Exemption (PTE) 76-1, 41 FR 12740 (March 26, 1976). In this proposed exemption, the Department expresses no opinion as to whether the lease satisfied the requirements of PTE 76-1.

5. The applicant represents that in early 1986, the Firm needed additional office space and wished to remain in the Building in order to be close to its two principal clients, the District Council and the Trust. As a result, the Firm began leasing Suite 370 (the Suite 370 Lease) from the Trust on March 15, 1986, on a month-to-month basis at a monthly rental of $1117.00 or approximately $1.25 per square foot of rentable space. The decision to lease Suite 370 to the Firm was made by Moran.

The Committee ratified the Suite 370 Lease on July 17, 1986. The applicant has provided delcarations from Trustees C.V. Holder, Robert B. Longway (Mr. Longway), John Ebert (Mr. Ebert), and James Wood, all of whom were members of the Committee and were present at the Committee's meeting which approved the Suite 370 Lease. The applicant has also provided declarations from Mr. Longway, Mr. Ebert, Curtis Conyers, Jr. (Mr. Conyers), and Walter J. Scott (Mr. Scott), the current Trustees who are members of the Committee, concerning the Committee's role in the ongoing monitoring of the Suite 370 Lease (together, the Delcarations).

The Declarations state that the decision to enter into the Suite 370 Lease was not influenced in any way by Mr. DeCarlo, Mr. Connor, or any of their personnel. The Declarations state further that the Firm did not advise the Trust with respect to the terms and conditions of the Suite 370 Lease and that no one from the Firm was present at the meeting on July 17, 1986 when the lease was approved.

6. The Committee's decision to lease Suite 370 to the Firm on a month-to-month basis was based on the recommendation of Mr. Nemer. In a separate declaration, Mr. Nemer states that he believed that a month-to-month lease was appropriate under the circumstances because the space involved had been vacant for 18 months and the rental market was weak from the landlord's perspective. Mr. Nemer states that Mr. DeCarlo was uncertain of the total amount of space that the Firm would need at that time. The applicant states further that month-to-month leases are not unusual in the Trust's buildings and has provided a list of other tenants who are currently leasing space on a month-to-month basis. The applicant has modified the Suite 370 Lease to provide for a three year term.

7. The application states that the Trust incurred expenses for leasehold improvements to Suite 370 to make the space usable by the average tenant. These improvements were approved by the Committee with the knowledge that the space involved had been vacant for some time and required reconfiguration. The space had been previously used as a conference room by another tenant in the Building. Mr. Nemer states that the improvements made were typical for offices in the Building and that the prices for the materials used were normal. The Declarations state that the fact that the Trust was going to lease Suite 370 to the Firm did not affect the degree of leasehold improvements provided by the Trust. The Suite 370 Lease provides that if the Firm vacates the space before the expiration of 60 months, the Firm will be liable for the balance of the unamortized costs of the improvements, unless the Firm relocates to another property owned by the Trust.

8. Suite 370 was appraised on April 1, 1986 by John J. Archer, ASA (Mr. Archer), an independent real estate appraiser in Pasadena, California, as having a fair market monthly rental value of $1.25 per squre foot or $1,117 per month. Mr. Archer states that consideration was given in the appraisal for improvements to Suite 370 to meet the needs of a new tenant. Mr. Archer states further that his appraisal of the rent was not influenced in any way by either Mr. DeCarlo, Mr. Connor, or any member of the firm.

9. Mr. Conyers, Mr. Ebert, Mr. Scott and Mr. Longway state in their Declarations that they will continue to monitor both the Suite 320 Lease and the Suite 370 Lease and ensure that the terms of the leases are equal to or better than the terms the Trust is offering new tenants for other space. Messrs. Conyers, Ebert, Scott and Longway state further that reappraisals of the fair market rent for the space will be made no less frequently than once every other year and that rental rates in the leases will be subject to annual adjustments. The Committee will also take whatever actions are necessary to enforce the terms of the leases and safeguard the interests of the Trust.

10. The application states that the total rental income received by the Trust from the Firm for 1986 totalled less than .02% of the Trust's total income for 1986.

11. The Trust also seeks exemptive relief which will permit it to continue to lease any additional space in the Building to the Firm to accommodate the future needs of the Firm. The applicant represents that such flexibility would be advantageous to the Trust because it would enable the Trust to deal responsively with the needs of the Firm, as a tenant, in the same manner as would any other landlord of similar properties in the area. The Trust also proposes to ensure that the Firm is not able to use its relationship with the Trust to its own advantage.

The applicant states that the Committee will, in considering further transactions with the Firm, obtain an analysis and a recommendation from their leasing agent, their property manager, and from an independent appraiser, that the terms of the proposed transaction: (1) Are equivalent to those terms which would be furnished by the Trust under its existing leases with unrelated parties; (2) are no less favorable to the Trust than the terms typically provided by other landlords in the area; and (3) are appropriate for and protective of the interests of the Trust as a landlord. In addition, the Committee will monitor the Firm's compliance with the terms and conditions of all lease obligations and will take appropriate action to protect the Trust's interests.

12. In summary, the applicant represents that the transactions satisfy the statutory criteria of section 408(a) of the Act because: (a) The Trust has received, and will continue to receive, the fair market rental value for the office space in the Building as established by an independent appraisal; (b) the decision to enter into the lease of office space to the Firm was made by an independent property manager and was ratified by the Committee, the members of which are independent fiduciaries with respect to the Trust; (c) the Committee determined that the leasing of office space to the Firm was in the best interest of the Trust; (d) the decision to enter into any future leases of additional office space to the Firm will be made by a professional property manager which is independent of the Firm and will be ratified by the Committee; (e) the Committee will monitor all such leases of office space to the Firm and will take whatever actions are necessary to safeguard the interests of the Trust; and (f) the transactions involve only a small percentage of the total assets of the Trust.

FOR FURTHER INFORMATION CONTACT: Mr. E. F. Williams of the Department, telephone (202) 523–8883. (This is not a toll-free number.)

Bell Atlantic Master Trust (the Trust) Located in Pittsburgh, Pennsylvania

[Application No. D–7067]

Proposed Exemption

(a) *General Exemption.* The restrictions of section 406(a) (1) (A) through (D) of the Act and the sanctions resulting from the application of section 4975 of the Code, by reason of section 4975(c) (1) (A) through (D) of the Code shall not apply to any transaction arising in connection with the acquisition, ownership, management,

BEST COPY AVAILABLE

development, leasing, financing, or sale of real property (including the acquisition, ownership or sale of any interest in a joint venture, partnership, trust, or separate account which invests primarily in real property) or the borrowing or lending of money in connection therewith, between a party in interest and the Trust, provided that the following conditions are satisfied:

(1) The decision to invest the assets of the Trust, directly or indirectly, in such transaction is made by Richard Ellis, Inc. (Ellis);

(2) Any such party in interest is not—

(i) Bell Atlantic, the sponsor of the Trust, any person directly or indirectly controlling, controlled by, or under common control with Bell Atlantic (Bell Atlantic Controlled Person), any officer, director, or highly-compensated (as defined in section 4975(e) (2)(H) of the Code) employee of Bell Atlantic or any Bell Atlantic Controlled Person; any corporation, partnership, trust or unincorporated enterprise in which Bell Atlantic, the Bell Atlantic Controlled Person, or any officer, director or highly compensated employee (as defined above) of Bell Atlantic or any Bell Atlantic Controlled Person owns a 5% or more interest; or any corporation, partnership, trust or unincorporated enterprise which owns a 5% or more interest in Bell Atlantic or any Bell Atlantic Controlled Person; or

(ii) Ellis, any person directly or indirectly controlling, controlled by or under common control with Ellis (Controlled Person); any officer, director, or highly compensated employee (as defined in section 4975(e) (2)(H) of the Code) of Ellis or any Controlled Person; any corporation, partnership, trust or unincorporated enterprise in which Ellis, any Controlled Person, or any officer, director or highly compensated employee (as defined above) of Ellis or any Controlled Person owns a 5% or more interest; or any corporation, partnership, trust or unincorporated enterprise which owns a 5% or more interest in Ellis or any Controlled Person; or

(iii) Any person who exercises discretionary authority, responsibility or control or who provides investment advice with respect to the investment of Trust assets involved in the particular transaction;

(iv) The term "interest", as applied in subsection (2) (i) and (ii) above means with respect to ownership of an entity—

(A) The combined voting power of all classes of stock entitled to vote or the total value of the shares of all classes of stock of the entity if the entity is a corporation.

(B) The capital interest or the profits interest of the entity if the entity is a partnership, or

(C) The beneficial interest of the entity if the entity is a trust or unincorporated enterprise; and

(v) A person is considered to own an interest held in any capacity if the person has or shares the authority—

(A) To exercise any voting rights or to direct some other person to exercise the voting rights relating to such interest or

(B) To dispose or to direct the disposition of such interest.

(3) At the time the transaction is entered into, and at the time of any subsequent renewal or modification thereof that requires the consent of Ellis, the terms of the transaction are at least as favorable to the Trust as the terms generally available in arm's-length transactions between unrelated parties.

(4) Ellis shall maintain for a period of six years from the date of each transaction mentioned above the records necessary to enable the persons described in subparagraph (5) of this section (a) to determine whether the conditions of this exemption have been met, except that (i) a prohibited transaction will not be deemed to have occurred if, due to circumstances beyond the control of Ellis, the records are lost or destroyed prior to the end of the six-year period, and (ii) no party in interest shall be subject to the civil penalty which may be assessed under section 502(i) of the Act, or to the taxes imposed by section 4975 (a) and (b) of the Code, if the records are not maintained, or are not available for examination as required by subparagraph (5) below; and

(5)(i) Except as provided in subdivision (ii) of this subparagraph (5) and notwithstanding any provisions of subsections (a)(2) and (b) of section 504 of the Act, the records referred to in subparagraph (4) of this section (a) are unconditionally available at the customary location for the maintenance and/or retention of such records, for examination during normal business hours by:

(A) Any duly authorized employee or representative of the Department or the Internal Revenue Service;

(B) Any fiduciary of a plan which is funded, in whole or part, by the Trust with respect to which Bell Atlantic is a named fiduciary or any duly authorized employee or representative of such fiduciary; and

(C) Any participant or beneficiary of any plan which is funded, in whole or part, by the Trust or any duly authorized representative of such participant or beneficiary.

(ii) None of the persons described in subdivisions (i) (B) and (C) of this subparagraph (5) shall be authorized to examine the trade secrets or commercial or financial information which is privileged, confidential or of a proprietary nature of either Bell Atlantic or Ellis.

(b) *Specific Exemption.* The restrictions of section 406(a)(1) (A) through (D) and 406(b) (1) and (2) of the Act and the sanctions resulting from the application of section 4975 of the Code, by reason of section 4975(c)(1) (A) through (E) of the Code, shall not apply to the furnishing of services, facilities and any goods incidental thereto by a place of public accommodation which is or may be considered an asset of the Trust to a party in interest with respect to the Trust if the services, facilities or incidental goods are furnished on a comparable basis to the general public, and if the requirements of subparagraphs (a) (4) and (5) of this exemption are met.

Effective Date: If this proposed exemption is granted, it will be effective February 21, 1986.

Summary of Facts and Representations

1. The Trust is a consolidated trust that funds benefits for the tax-qualified pension plans of Bell Atlantic and its affiliates. There are currently five such plans (collectively, the Plans): (1) Bell Atlantic Management Pension Plan, which has 37,604 participants; (2) Bell Atlantic Pension Plan, which has 68,566 participants; (3) Bell Atlantic Enterprises Retirement Plan, which has 738 participants; (4) Sorbus, Inc. Retirement Plan, which has 2,234 participants; and (5) Tri-Continental Lease Corporation Retirement Plan, which has 150 participants. Bell Atlantic is one of the regional holding companies created by the divestiture of AT&T. It is engaged in telecommunications through numerous subsidiaries.

2. The trustee of the Trust is Mellon Bank, N.A., in Pittsburgh, Pa. Each of the Plans provides that its named fiduciary is the Treasurer of Bell Atlantic, presently William Albertini, who reports on Trust matters directly to the finance committee of Bell Atlantic's Board of Directors on a quarterly basis. The finance committee reports on Trust matters to the Board of Directors on an annual basis.

3. In 1985, Bell Atlantic determined to allocate approximately 20% of the Trust's assets (or about $1.7 billion) to the building of a real estate portfolio consisting of commercial income-producing property. In January of 1987 the portion of Trust assets allocated to

the real estate portfolio was reduced to 15% of the Trust's assets (or about $1.3 billion). The Trust Agreement authorizes Bell Atlantic to direct the trustee to segregate assets of the Trust into one or more investment management accounts and to appoint real estate managers to manage and control the assets in these accounts. To date, eight real estate managers have been appointed, and it is contemplated that additional managers will be added. The exemption proposed herein applies only to transactions directed by one of the Trust's investment managers, Ellis.

4. Subject to general investment guidelines, each real estate manager is given complete discretion to acquire, manage and dispose of the real estate purchased through its investment account, or the real estate held by the joint venture, partnership, trust or separate account which it controls. In light of the size and complexity of both Bell Atlantic and the Trust, transactions with parties in interest may often occur with respect to Trust assets under the management and control of independent real estate managers. The number of potential parties in interest is large and in constant flux. To review lists of existing tenants before purchasing a building or acquiring an interest in a joint venture, partnership, trust or separate account which invests primarily in real property, and to screen all potential lessees or service providers for party in interest status prior to entering a typical lease in or services transaction would be expensive and time-consuming.

5. Bell Atlantic's role in the investment process is limited to the selection of the particular real estate manager which will either manage Trust assets directly or will manage Trust assets collectively with other assets through the joint venture, partnership, trust or separate account which it controls. In all cases the selection of a real estate manager and/or collective investment fund is made by the Treasurer of Bell Atlantic after consultation with the Bell Atlantic investment management division. After the real estate manager and/or collective investment fund is selected, Bell Atlantic retains no further discretion in the investment of Trust assets other than the right to terminate the real estate manager or to dispose of the Trust's interest in the collective investment fund.

6. On February 21, 1986, Bell Atlantic entered into a contract with Ellis to manage a real estate investment account. Ellis is a Delaware corporation registered as an investment adviser under the Investment Advisers Act of 1940. To the best knowledge of Bell Atlantic, Ellis does not own any stock in Bell Atlantic, or vice-versa, nor do the two companies have any common officers, directors or employees. Ellis is an affiliate of Richard Ellis, U.K. (Ellis U.K.), a British partnership founded in the 18th Century and headquartered in London. Several partners of Ellis U.K. together own approximately 50 percent of the stock of Ellis. To the best knowledge of Bell Atlantic, they do not own any stock in Bell Atlantic.

7. Ellis is an experienced, full service real estate investment adviser acquiring and managing properties throughout the world. It maintains seven offices in the United States, and through its affiliates 29 offices worldwide. It has been involved in real estate consulting and management in the United States for approximately 10 years; its worldwide affiliates have been in the field for approximately 35 years. It currently manages 60 properties worth just under $2.5 billion for both domestic and foreign institutional investors. Because many of these foreign institutional investors retain a veto power over the investment of assets, Ellis does not come within the definition of "qualified professional asset manager" contained in Prohibited Transaction Exemption 84-15 (PTE 84-14, 49 FR 9494, March 13, 1984), and the relief provided in PTE 84-14 is unavailable with respect to transactions enaged in by Ellis.

8. Under the terms of the contract with Ellis the trustee will contribute approximately $80-$100 million a year to Ellis' investment management account, to be "invested in interests in real property as soon as practicable." Subject to general investment guidelines, such as a prohibition on the purchase of residential or undeveloped property, Ellis is given complete discretion to acquire, manage and dispose of the assets in its account. Ellis identifies investments opportunities, determines whether a proposed investment should be made, and performs the management functions incident to the acquisition of the property. It inspects and appraises potential acquisitions, analyzes the current and prospective rent roll, negotiates the letter of intent and the contract of sale, reviews leases and service contracts, title, zoning, and construction matters, and performs the other due diligence tasks.

9. Once a property is acquired, Ellis is totally responsible for the management of the asset. On a yearly basis (sometimes more frequently), the current worth of each property is evaluated. Its fair market value is appraised, the current and projected cash flow is analyzed, and the project is evaluated vis-a-vis other types of real estate investments. Ellis prepares and provides to Bell Atlantic an annual operating budget for each property, as well as providing quarterly reports. Furthermore, Ellis is responsible for the upkeep of each property. Ellis hires the property managers for each building, and any transaction by a property manager involving the building, such as entering into a lease or contract, must be made in accordance with written guidelines established and administered by Ellis.

10. Ellis is also authorized to dispose of properties. It determines when a property should be sold and at what price, and implements its decisions. It generally does its own brokerage work, negotiates the letter of intent and contract of sale, and cooperates with the purchaser's due diligence efforts. In summary it is represented that Ellis exercises independent investment management authority over all aspects of the real estate holdings in its account, and performs an extensive set of tasks to ensure sound real estate investment and strong rates of return.

11. The fiduciaries or other parties in interest for which an exemption is requested are primarily those which loan money to any real estate projects in which Trust assets are committed, and those which are tenants in any such project. Various banks and financial institutions which may extend financing to the real estate projects will be parties in interest with respect to the Plans, by virtue of serving either as trustees, investment managers of portions of the Trust assets not involved in that particular project, or service providers with respect to the Plans. One or more of the tenants in the various projects in which Trust assets are invested may be fiduciaries or other parties in interest with respect to the Plans either by reason of providing services to the Plans or because of other relationships. Because of the size of the Trust and the number of parties in interest with respect to the Plans, it is possible that any building in which the Trust has an interest will have one or more parties in interest as tenants.

12. The applicant respresents that any covered transactions will be conducted on an arm's-length basis on terms not less favorable to the Trust than those available in arm's-length transactions with unrelated parties. The applicant represents that given the size and scope of the Trust and its investments, and the applicant's relationship to numerous

financial institutions, denial of the exemption would substantially inhibit the Trust from investing in many prime quality real estate projects of substantial size.

13. The Trust's contract with Ellis became effective February 21, 1986. While Bell Atlantic is unaware of any prohibited transaction which may have occurred with respect to Trust assets, it has requested that the relief proposed herein be made retroactive to February 21, 1986, in order to cover any inadvertent prohibited transactions which may have occurred after that date.

14. In summary, the applicant represents that the subject transactions meet the criteria of section 408(a) of the Act because: (1) All investments will be determined to be in the best interest of Plan participants and beneficiaries by Ellis, an independent real estate manager acting in its fiduciary capacity under the Plans, and will have been fully analyzed and approved without any participation by Bell Atlantic or any other party in interest; (2) Ellis is a qualified investment manager which has many years of experience in real estate acquisition and management, and which currently manages properties worth approximately $2.5 billion; (3) the Trust will be able to enter into transactions which, although prohibited, are necessary for the prudent conduct of the Trust's operation; and (4) all transactions will be conducted on an arm's-length basis on terms not less favorable to the Trust than those available in arm's-length basis on terms not less favorable to the Trust than those available in arm's-length transactions with unrelated parties.

FOR FURTHER INFORMATION CONTACT: Gary H. Lefkowitz of the Department, telephone (202) 523-8881. (This is not a toll-free number.)

Frank E. Irish, Inc. Profit Sharing Plan (the Plan) Located in Indianapolis, IN

[Application No. D-7151]

Proposed Exemption

The Department is considering granting an exemption under the authority of section 408(a) of the Act and section 4975(c)(2) of the Code and in accordance with the procedure set forth in ERISA Procedure 75-1 (40 FR 18471, April 28, 1975). If the exemption is granted, the restricitons of section 406(a), 406 (b)(1) and (b)(2) of the Act and the sanctions resulting from the application of section 4975 of the Code, by reason of section 4975(c)(1) (A) through (E) of the Code shall not apply to the proposed cash sale, for $141,000, of an undivided one-half interest (the Interest) in certain improved real property (the Property) by the individually-directed account (the Account) in the Plan of Mr. John T. Irish (Mr. Irish) to Mr. Irish, a party in interest with respect to the Plan, provided the amount paid for the Interest is not less than fair market value at the time the transaction is consummated.

Summary of Facts and Representations

1. The Plan, which provides for participant-directed investments, is a defined contribution plan with 13 participants and total assets of $1,050,980 as of June 30, 1986. The trustees of the Plan (the Trustees) are Mr. Irish and his brother, Mr. Jack E. Irish. The Trustees also serve as officers, directors, principal shareholders and employees of Frank E. Irish, Inc. (the Employer) as well as participants in the Plan. For the Plan year ended June 30, 1986, Mr. Irish had an account balance in the Plan of $189,234. The Employer, a mechanical contractor, maintains its principal place of business at 625 East 11th Street, Indianapolis, Indiana.

2. On August 9, 1982, Mr. Irish directed the Trustees to invest a portion of his Account in a single family condominium costing $220,000. The Property is located at 1411 South Ocean Drive, Broward County, Fort Lauderdale, Florida. The sellers of the Property, Thomas J. and Gwendolyn G. Monroe, were unrelated parties. On March 8, 1983, the Account purchased an undivided one-half interest in the Property for the cash consideration of $110,000. Mr. Irish purchased the remaining one-half interest in the Property in his individual capacity by obtaining a mortgage loan in the original principal amount of $110,000 from South Florida Savings and Loan Association of Miami, Florida, an unrelated party.[1] As of October 1987, there was an outstanding principal balance on the loan of $108,069.

3. Since the time the Property has been jointly owned by the Account and Mr. Irish, it has been exclusively to unrelated parties. Between January 1985 and June 1987, the Account has received rental income totaling $18,962 and it has never paid any real estate taxes, expenses of other costs attributable to the Property. The Trustees have determined that it would be in the best interests of the Account to dispose of the Interest by selling it to Mr. Irish. Accordingly, an administrative exemption is requested from the Department.

4. The Account will sell the Interest to Mr. Irish for the cash amount of $141,000. This is one-half of the fair market value of the Property which was valued on November 24, 1987 at $282,000 in an updated appraisal report by Mr. Lyndell G. Goodwin (Mr. Goodwin), an independent real estate broker and appraiser from Fort Lauderdale, Florida. Mr. Goodwin initially determined that the subject property had a fair market value of $277,000 as of November 20, 1986. The Account will not pay any real estate fees or commissions in connection with the proposed sale.

5. In summary, it is represented that the proposed transaction will satisfy the statutory criteria for an exemption under section 408(a) of the Act because: (a) The sale will be a one-time transaction for cash; (b) the sales price for the Interest is based on the fair market value of the Property as determined by an independent appraiser; (c) the Account will not be required to pay any real estate fees or commissions in connection therewith; and (d) the only account in the Plan that will affected by the proposed sale is that of Mr. Irish who desires that the transaction be consummated.

Notice to Interested Persons

Because Mr. J.T. Irish is the only participant in the Plan whose account will be affected by the proposed transaction, it has been determined that there is no need to distribute the notice of proposed exemption to interested persons. Therefore, all written comments and requests for a public hearing are due within 30 days from the date of publication in the Federal Register of the notice of proposed exemption.

FOR FURTHER INFORMATION CONTACT: Ms. Jan D. Broady of the Department, telephone (202) 523-8881. (This is not a toll-free number.)

The NYNEX Master Pension Trust (the Trust) Located in New York New York

[Application Nos. D-7171 and D-7172]

Proposed Exemption

The Department is considering granting an exemption under the authority of section 408(a) of the Act and section 4975(c)(2) of the Code and in accordance with the procedures set forth in ERISA Procedure 75-1 (40 FR 18471, April 28, 1975).

(a) *General Exemption.* The restrictions of section 406(a)(1) (A) through (D) of the Act and the sanctions resulting from the application of section

[1] In this proposed exemption, the Department expresses no opinion on whether the acquisiton and holding of the Property by the Account and Mr. Irish violated any provision of Part 4 of Title I of the Act.

4975 of the Code by reason of section 4975(c)(1) (A) through (D) of the Code, shall not apply to any transaction arising in connection with the acquisition, ownership, management, development, leasing or sale of real property (including the acquisition, ownership or sale of any joint venture or partnership interest in such property) and the borrowing or lending of money in connection therewith, between a party in interest with respect to the Trust and the Trust, provided that the following conditions are satisfied:

(1) The decision to invest the assets of the Trust, directly or indirectly, in such transaction is made by the NYNEX Corporation (NYNEX) or the Treasurer of NYNEX as a fiduciary of the trust;

(2) Any such party in interest is not—

(i) NYNEX, any person directly or indirectly controlling, controlled by, or under common control with NYNEX, any officer, director or employee of NYNEX or any of its subsidiary or affiliated companies, or any partnership in which NYNEX is a 10 percent or more (directly or indirectly in capital or profits) partner, or

(ii) A person who exercises discretionary authority, responsibility or control or who provides investment advice with respect to the investment of Trust assets involved in the particular transaction;

(3) At the time the transaction is entered into and at the time of any subsequent renewal or modification thereof that requires the consent of the Treasurer of NYNEX or any person to whom such responsibility has been delegated, the terms of the transaction are at least as favorable to the Trust as the terms generally available in arm's-length transactions between unreleated parties;

(4) NYNEX shall maintain for a period of six years from the date of each transaction mentioned above the records necessary to enable the persons described in subparagraph (5) of this section (a) to determine whether the conditions of this exemption have been met, except that (i) a prohibited transaction will not be deemed to have occurred if due to circumstances beyond the control of NYNEX the records are lost or destroyed prior to the end of the six year period, and (ii) no party in interest shall be subject to the civil penalty which may be assessed under section 502(i) of the Act or to the taxes imposed by section 4975(a) and (b) of the Code if the records are not maintained or are not available for examination as required by subparagraph (5) below; and

(5)(i) Except as provided in subdivision (ii) of this subparagraph (5) and notwithstanding any provisions of subsections (a)(2) and (b) of section 504 of the Act, the records referred to in subparagraph (4) of this section (a) are unconditionally available at NYNEX's headquarter's offices or, upon prior arrangement with NYNEX, at any other customary location for the maintenance and/or retention of such records, for examination during normal business hours by:

(A) Any duly authorized employee or representative of the Department of Labor or the Internal Revenue Service.

(B) Any fiduciary of a plan which is funded, in whole or part, by the Trust, or any duly authorized employee or representative of such fiduciary.

(C) Any participant or beneficiary of any plan which is funded, in whole or part, by the Trust, or any duly authorized representative of such participant or beneficiary.

(ii) None of the persons described in subdivisions (i)(B) and (i)(C) of this subparagraph (5) shall be authorized to examine NYNEX's trade secrets or commercial or financial information which is privileged, confidential or of a proprietary nature.

(b) *Specific Exemption.* The restrictions of section 406(a)(1) (A) through (D) and 406(b) (1) and (2) of the Act and the sanctions resulting from the application of section 4975 of the Code by reason of section 4975(c)(1) (A) through (E) of the Code shall not apply to:

Transactions Involving Places of Public Accommodation. The furnishing of services, facilities and any goods incidental thereto by a place of public accommodation which is or may be considered an asset of the Trust to a party in interest with respect to the Trust if the services, facilities or incidental goods are furnished on a comparable basis to the general public, and if the requirements of subparagraphs (a) (4) and (5) of this proposed exemption are met.

Effective Date: If this proposed exemption is granted, it will be effective January 1, 1986.

Summary of Facts and Representations

1. The Trust is a trust used as a medium for the holding, investment and reinvestment of the assets of the NYNEX Pension Plan and the NYNEX Management Pension Plan (the Plans). As of January 1, 1984, the date of the divestiture of NYNEX and the other regional telephone holding companies (RHC) from the American Telephone & Telegraph Company, each RHC (such as NYNEX) became independently operative and established one or more pension trusts for the investment and maintenance of assets that were allocated by the former Bell System pension plans to comparable pension plans newly established by each RHC. The assets of the Bell System Pension Trust were divided and allocated among these new RHC trusts (such as the Trust), and other successor trusts. As of January 1, 1986, the Plans covered a total of approximately 83,016 active participants and 47,234 retirees. As of October 31, 1986, the fair market value of the Trust's assets was approximately $10.4 billion.

2. Pursuant to the terms of the Trust, NYNEX has reserved authority to direct Trust investments. Such authority has been delegated by NYNEX's Board of Directors to the Treasurer of NYNEX, who discharges this responsibility with the assistance of an experienced in-house investment management staff and, under certain circumstances, a number of independent consulting firms. Under this delegation of authority, a certain portion of the real estate portfolio of the Trust is directed in-house by the Treasurer of NYNEX (with the assistance of the experienced staff of the Investment Management Division of NYNEX and, under certain circumstances, with the advice of independent professional advisors and consultants).

3. The Investment Management Staff of NYNEX is comprised of 15 management employees, whose sole function is to assist in the administration and management of the assets of NYNEX's pension and profit sharing plans. More than 99% of the time and efforts of these management employees is devoted solely to the administration, management and monitoring of Trust assets.

4. The applicant requests an exemption to permit the Trust to engage in certain real property transactions which may otherwise be prohibited under the Act. The applicant represents that due to the size and complexity of the sponsor of the Trust, NYNEX, the normal operation of the Trust may involve party in interest transactions as described in the Act. The applicant has requested that the relief proposed herein be made retroactive to January 1, 1986. The applicant represents that, to the best of its knowledge, no prohibited transaction of the type described in this notice occurred. However, the applicant is seeking retroactive relief in order to protect the Trust against any possible inadvertent violation of the prohibited transaction rules during that period, in which the Trust did acquire certain interests in real estate.

5. The applicant represents that it is possible that the investment by the Trust in places of public accommodation may result in the use of such facilities by parties in interest. Therefore, such transactions involving these places of public accommodation may constitute prohibited transactions under the Act.

6. All transactions that are the subject of this exemption request will be subject to the discretion and control of the Treasurer of NYNEX. Potential real estate investments are generally brought to the attention of NYNEX by major real estate institutional investors, banks, trust companies, brokers or investment advisors seeking to form an investment joint venture, real property financing, or consortium. Such potential real estate investments are subjected to various evaluations and analyses, including, without limitation, whether the proposed investment satisfies the fiduciary responsibility provisions of the Act and the investment objectives of the Trust. Less than 10% of the proposed investments pass this initial screening state.

7. Those potential real estate investments that pass the initial screening are reviewed further to assure that the fundamental assumptions upon which the detailed analyses were performed are reasonable; that the investment satisfies the Trust's investment objectives (including, but not limited to, diversification, asset allocation and cash flow); and that, in general, the investment is prudent and in the best interests of the Trust and of the Plans' participants and beneficiaries. Additionally, potential real estate investments are scrutinized by a representative from NYNEX's Legal Department (occasionally in consultation with NYNEX's outside employee benefits counsel and other counsel) to provide any legal guidance that may be necessary.

8. To ensure sound real estate investments with appropriate rates of return, the Treasurer of NYNEX, with the assistance of the Investment Management Staff, has established rigorous standards and procedures. These standards include, without limitation, inspections and appraisals of the property under consideration, analyses of major existing and potential tenants and evaluations of such factors as size, location, actual and potential use, cash flow projections, financing, taxes, insurance, title requirements and compliance with zoning and other applicable laws. It is only after these analyses and reviews are completed that a recommendation is made to the Treasurer of NYNEX with respect to a proposed investment. Fewer than 5% of the investments initially reviewed by the Investment Management Staff are ultimately approved for investment by the Treasurer.

9. Approximately $25,366,000, or less than .24% of the total investment portfolio of the Trust, is currently invested or committed for specific investment in real estate and real property related investments, directed or supervised in-house by the Treasurer of NYNEX. Approximately $691,378,000, or less than 6.63% of the Trust's total investment portfolio, consists of real property investments.

10. The applicant represents that any covered transactions will be on terms not less favorable to the Trust than those available in arm's-length transactions between the Trust and unrelated parties. The applicant represents that given the size and scope of the Trust and its investments, and its relationship to numerous financial institutions, denial of the exemption would substantially inhibit the Trust from investing in many prime quality real estate projects of substantial size.

11. In summary, the applicant represents that the subject transactions meet the criteria for an exemption under section 408(a) of the Act because: (1) All investments will be subject to the discretion and control of the Investment Management Division, which has extensive experience in real property investments and makes complete analyses with respect to Trust investments; (2) the Trust will be able to enter into transactions which, although prohibited, are necessary for the prudent conduct of the Trust's operation; (3) all transactions will involve parties who are completely independent from NYNEX and will have no discretion, authority or control with respect to the exercise of NYNEX's fiduciary responsibility relating to the transactions; and (4) all transactions will be conducted on an arm's-length basis on terms not less favorable to the Trust than those available in arm's-length transactions with unrelated parties.

Notice to Interested Persons: Notice will be provided to interested persons within 30 days of the date of publication of this notice in the Federal Register. Comments and hearing requests are due within 60 days of the date of publication.

FOR FURTHER INFORMATION CONTACT: Gary H. Lefkowitz of the Department, telephone (202) 523-8881. (This is not a toll-free number.)

Boise Cascade Corporation U.S. Pension Trust (the Trust) Located in Boston, Massachusetts

[Application No. D-7189]

Proposed Exemption

The Department is considering granting an exemption under the authority of section 408(a) of the Act and section 4975(c)(2) of the Code and in accordance with the procedures set forth in ERISA Procedure 75-1 (40 FR 18471, April 28, 1975). If the exemption is granted, the restrictions of sections 406(a), 406 (b)(1) and (b)(2), and 407(a) of the Act and the sanctions resulting from the application of section 4975 of the Code, by reason of section 4975(c)(1) (A) through (E) of the Code shall not apply to: (1) effective October 29, 1987, the continued leasing by the Trust of certain timberland, exclusive of the standing timber and mineral rights, located in four countries in North and South Carolina (the Property) to Boise Cascade Corporation (Boise), the sponsor of the Trust, provided that the terms of the transaction are at least as favorable to the Trust as an arm's-length transaction with an unrelated party; and (2) the proposed sales of certain parcels of the Property by the Trust to Boise, provided that the Trust receives an amount which, on a cumulative basis after each such sale, is the higher of either (i) the original average purchase price per acre of the Property, or (ii) the fair market value of the Property, or parcels thereof, on the date of sale.

Effective Date: If the proposed exemption is granted, the exemption will be effective October 29, 1987.

Summary of Facts and Representations

1. The Trust is a consolidated trust that funds benefits for the tax-qualified U.S. pension plans of Boise and its affiliates (collectively, the Plans). The Plans are all defined benefit plans which, as of December 31, 1986, had 37,142 participants and total assets of approximately $575,935,000. The trustee of the Trust is State Street Bank and Trust Company, headquartered in Boston, Massachusetts (the Trustee). The Trustee is a directed trustee.

2. In the Fall of 1982, the Retirement Funds Investment Committee for the Plans (the Committee), the members of which are all officers or directors of Boise, began investigating and discussing an investment by the Trust in Company-owned timberland. The applicant explains, in a statement prepared by George J. Harad (Mr. Harad), who is an officer of Boise and a member of the Committee, that Company-owned timberland was

considered specifically because of the readily available knowledge about such timberland and the likelihood that Boise would provide terms that would be more favorable than those obtainable from unrelated timber owners. The applicant states that all parties were aware that in the absence of a statutory or administrative exemption the transaction would be prohibited under the Act. Therefore, Boise and the Committee reviewed the requirements for a statutory exemption under section 408(e) of the Act, for transactions involving "qualifying employer real property" (QERP). These requirements were communicated to the Committee by Boise's in-house legal staff, which had consulted with Boise's outside tax counsel.[1]

Boise and the Committee considered all of the avialable Company-owned timberland in light of the requirements for QERP, as defined in section 407(d)(4) of the Act. The Property is situated in approximately 80 non-contiguous parcels, located primarily in the southeastern portion of North Carolina and the northeastern portion of South Carolina. The Committee determined that the Property was geographically dispersed both in the physical sense and the economic sense, and that the Property was suitable or adaptable for other uses. The Committee's decision was based on the opinions of Boise's own forestry experts as well as independent consultants and appraisers familiar with timberland. Boise's senior forester selected the Property for the Committee's consideration because it was believed that the Property would satisfy the statutory requirements of geographic dispersion and alternative use. The Committee also discussed these requirements with William F. Milliken (Mr. Milliken), an independent forestry consultant in Columbia, South Carolina, who personally inspected the Property in late December 1982.

Thus, the applicant represents that the Committee's conclusion that the Property was QERP was based on the advice of internal and independent counsel, Boise's expert foresters, Mr. Harad's own investigation and analysis, and the confirmation of an independent expert, Mr. Milliken. Based on all the information available, the Committee determined that the transaction would satisfy the requirements for an exemption under section 408(e) of the Act. The Trust entered into the transaction on December 29, 1982.

3. The Property was appraised by Mr. Milliken as having a fair market value of $15,589,000 as of December 29, 1982. The Trust purchased the Property from Boise for its fair market value, in accordance with Mr. Milliken's appraisal. The Trust's investment in the Property represented approximately 4.7% of the Trust's total assets of $333,541,000 as of December 31, 1982.

4. Immediately following the sale, the Property was leased by the Trust to Boise pursuant to the terms of two separate leases, one for the parcels of the Property located in North Carolina and one for the parcels of the Property located in South Carolina (together, the Leases). The Leases established a maximum term of 30 years with a rental rate providing for a fixed 14% return per year, based on the purchase price of the Property.

5. The Leases provided the Trust and Boise with certain put and call options (the Options). Boise has exercised certain of its call options on the Property, pursuant to the terms of the Leases. The Leases required that Boise submit the names of several independent appraisers to the Trustee. The Trustee then would choose the appraisers who appraised the selected parcels. In each case, Boise paid the Trust the fair market value of the parcels involved, as determined by the independent appraiser. The applicant states that the Trust has realized substantial profits from the transactions completed to date. The applicant states further that no transactions have occurred pursuant to the Options since December 10, 1986.

6. NCNB National Bank of North Carolina and the South Carolina National Bank are ancillary trustees (the Ancillary Trustees) of the Trust. The Leases refer to the Ancillary Trustees as the actual owners of the Property. The applicant states that since the Trustee could not own the Property in North and South Carolina, the transactions were structured so that title to the Property was conveyed to the Ancillary Trustees. The Ancillary Trustees were completely controlled by the Trustee, which was subject to the investment directions of the Committee.

The Trust document entered into between Boise and the Trustee authorizes Boise to designate an independent investment manager for all or part of the Trust. Pursuant to that provision, an independent fiduciary agreement (the Agreement) was entered into between Boise and the First National Bank of Atlanta (FNBA) on October 29, 1987. As a result of the Agreement, FNBA has exclusive authority with respect to the disposition, management and control of the Property for the Trust for the continuation of the transactions. The Trustee has accepted the Agreement and will follow all instructions from FNBA. The Agreement provides that the conveyance of title to the Ancillary Trustees does not affect FNBA's ability to make all decisions with respect to the Property.

7. Certain amendments were made to the Leases (the Amendments), effective as of the date of the Agreement. The Amendments specifically provide that FNBA shall establish the fair market rental value of the Property prior to January 1, 1988, and that every fifth year thereafter FNBA shall notify Boise of its determination of the fair market rental value of the Property subject to the Leases. The rental payments to be made by Boise shall be the greatest of either (i) the rental originally specified in the Leases, (ii) the latest fair market rental value determined by FNBA, or (iii) the highest fair market rental value paid during any year under the terms of the Lease.

The Amendments provide further that FNBA, on behalf of the Trust, shall have the right to require Boise to purchase up to 10% of the total acres of the Property during each of the first ten years of the Leases. Boise is also entitled to reacquire as much as 10% of the Property annually under the Leases. The Options are cumulative. As a result, FNBA may require Boise to purchase all of the Property, or Boise can reacquire all the Property, after ten years.

The Amendments require that the fair market value of the Property, or any parcels thereof, involved in the repurchase shall be determined by appraisers selected by FNBA and that any appraisers selected shall be qualified, independent appraisers experienced in appraising real property, including timer and timberlands, in the area where the Property is located. The Amendments require further that if the purchase of any of the Property by Boise would result in the Trust receiving less than the average original purchase price per acre for the Property, then the purchase price for the Property to be acquired shall be increased by an amount necessary so that, when combined with all previous transactions,

[1] In this proposed exemption, the Department is expressing no opinion as to whether the Property consititutes QERP. QERP is defined in section 407(d)(4) to mean parcels of employer real property which meet the conditions set forth in section 407(d)(4) (A), (B), and (D). These conditions are: a substantial number of the parcels are dispersed geographically; each parcel of real property and the improvements thereon are suitable (or adaptable without excessive cost) for more than one use; and the acquisition and retention of such property comply with the fiduciary responsibility provisions of Part 4, Subtitle B, of Title I of the Act (other than section 404(a)(1)(B) to the extent it requires diversification, and section 407(a)).

the amount received by the Trust is not less than the average original purchase price per acre.

In addition, Boise shall have a right of first refusal to purchase any interest in the Property subject to the Lease, prior to the sale of such interest by the Trust to a third party. The Amendments provide that before any interest in the Propoerty is sold, FNBA shall notify Boise in writing of the bona fide third party offer and shall provide Boise with the opportunity to purchase the interest in question on the same terms and conditions as offered by the third party. The Amendments provide that Boise shall have 90 days in which to determine whether to purchase the Property that is the subject of the third party offer.

Finally, the Amendments provide that FNBA shall have the discretion to choose which parcels of the Property it wishes to sell back to Boise under its put option. The Amendments state that Boiser shall not be deemed to be in breach of its obligations under the Leases to maintain a specified amount of timber on all of the Property owned by the Trust if such a breach occurs as a result of the Trust's exercise of its right to require Boise to purchase any part of the Property under its call option or by Boise's exercise of its right of first refusal.

8. Boise and the Committee engaged FNBA to independently review and consider the Leases and the Amendments to determine whether the transactions are appropriate for and in the best interest of the Trust. FNBA has extensive experience in real estate matters involving timerland property, including the sale and lease of such property. FNBA has particular experience with respect to timerland in the southeastern United States. FNBA represents that it understands and acknowledges its duties, responsibilities and liabilities as a fiduciary under the Act on behalf of the Trust. Pursuant to the Agreement, FNBA has reviewed the terms of the Leases, as amended by the Amendments, and finds that such terms are no less favorable to the Trust than the terms that would exist in similar transactions between unrelated parties.

FNBA also has examined the Leases in light of the overall investment portfolio of the Trust, and has determined that the transactions are consistent with the investment objectives and policies of the Trust, the liquidity requirements of the Trust, and the diversification of the Trust's assets. In this regard, FNBA states that the value of the Property subject to the Leases constitutes less than 5% of the total value of the Trust's assets based on the most recent valuation of all Trust assets for the plan ending December 31, 1986. FNBA states further that this percentage is appropriate for the type of investment which the Property represents for the Trust. FNBA represents that the continuation of the Leases, as amended, is in the best interests of the participants and beneficiaries of the Trust.

9. FNBA will monitor the continuation of the transactions on behalf of the Trust for the duration of the Leases to ensure compliance with all provisions of the Leases, as amended, and to take any action which may be necessary to safeguard the interests of the Trust. FNBA states that it has the authority, as the investment manager for the Property, to render all significant decisions with respect to the Property. Such decisions shall include the exercise of put options by the Trust, all rental adjustments on the Property, the possible sale of interests in the Property to a third party or to Boise under its right of first refusal, and the selection of appraisers to determine the fair market values and fair market rental values of the Property subject to the Leases and the Amendments.

In addition, FNBA will ensure that the Trust is made "whole" with respect to the past rental payments under the Leases by requiring Boise to pay to the Trust the excess, if any, of the fair market rental value of the Property for the period January 1, 1983 to January 1, 1988 over the amount actually paid during such period, together with interest on that amount at an appropriate rate as determined by FNBA. FNBA will also ensure that the Trust is made "whole" with respect to the past purchases of parcels of the Property by Boise by requiring Boise to pay to the Trust the excess, if any, of the fair market value of such parcels of the Property determined as of the date of the purchase, on a cumulative basis, over the amount actually paid for the parcels, together with interest on that amount at an appropriate rate as determined by FNBA. FNBA, in making its determinations with respect to the fair market value and fair market rental value of the Property, is authorized to rely on such independent appraisals as it may deem appropriate.

10. In summary, the applicant represents that the transactions satisfy the statutory criteria of section 408(a) of the Act because: (a) As a result of the Agreement, the interests of the Trust under the Leases are represented by FNBA, a qualified, independent fiduciary, which has determined that the continuation of the transactions is in the best interests and protective of the Trust and its participants and beneficiaries; (b) the Trust will receive for the Property the greatest of either (i) the rent originally set under the Leases, (ii) the latest fair market rental value for the Property, as determined by a qualified, independent appraiser chosen by FNBA in its sole discretion, or (iii) the highest fair market rental value paid during any year under the Lease, with appropriate rental adjustments every five years throughout the duration of the Leases; (c) the Trust will receive on the sales of any parcels of the Property, an amount which, on a cumulative basis after each such sale, is the greater of eitehr (i) the original average purchase price per acre of the Property, or (ii) the fair market value of the Property, or parcels thereof, on the date of sale, as established by a qualified, independent appraiser chosen by FNBA, in its sole discretion; and (d) FNBA will monitor the performance of Boise's obligation under the Leases and will have the authority to take all actions necessary to enforce and safeguard the interests of the Trust and to ensure Boise's compliance with the terms and conditions of the Leases.

FOR FURTHER INFORMATION CONTACT: Mr. E.F. Williams of the Department, telephone (202) 523-8883. (This is not a toll-free number.)

Wake Surgical Consultants, Inc. Money Purchase Pension Plan and Trust (the Plan) Located in Raleigh, North Carolina

[Application No. D-7316]

Proposed Exemption

The Department is considering granting an exemption under the authority of section 408(a) of the Act and section 4975(c)(2) of the Code and in accordance with the procedures set forth in ERISA Procedure 75-1 (40 FR 18471, April 28, 1975). If the exemption is granted the restrictions of section 406(a), 406 (b)(1) and (b)(2) of the Act and the sanctions resulting from the application of section 4975 of the Code, by reason of section 4975(c)(1) (A) through (E) of the Code shall not apply to the sale of an 18.3% interest (the Interest) in a joint venture, Beechnut Development Co. (Beechnut) by Dr. John P. Goodson (Dr. Goodson) to his individual account in the Plan for $167,500 in cash, provided such amount is not greater than the fair market value of the Interest on the date of the sale.

Summary of Facts and Representations

1. Wake Surgical Consultants, Inc. (the Employer) is a professional corporation engaged in the practice of surgical medicine. The Plan is a money purchase pension plan with 10 participants. The Plan is administered

by a committee of employees and directors of the Employer. Pursuant to the provisions of the Plan, each participant has the right to direct the investments under the Plan for his/her own account. In such instances, the investments are earmarked for the account of the participant directing such investments.

2. Dr. Goodson, who is an employee, director and stockholder of the Employer and a member of the Plan's administrative committee, has an individually directed account (the Account) in the Plan. As of August 13, 1987, Dr. Goodson had a total of approximately $670,000 in the Account.

3. Dr. Goodson currently has approximately an 18.3% interest in Beechnut, which is a joint venture involved in the development of real property. The remaining interests in Beechnut are owned by parties unrelated to the Employer and the Plan. Beechnut owns certain undeveloped real estate (the Property) in Cary, North Carolina, which it will either develop or sell to another developer.

4. Dr. Goodson now wishes to sell his Interest in Beechnut to the Account. Dr. Goodson believes this would be an excellent investment opportunity for the Account. The Property is located in a rapidly growing area where tracts the size of the Property are being subdivided for new residential housing. The applicant represents that this has resulted in substantial appreciation in recent years, and that he believes that the rate of appreciation will remain steady if not increase.

5. The Property has been appraised by Mr. Audie Barefoot, Jr., an independent realtor in Cary, North Carolina, as having a fair market value of $1,300,000 as of November 17, 1987. The total equity interests in Beechnut total $911,647. Mr. Thomas McKnight, an independent certified public accountant in Raleigh, North Carolina, has represented that Dr. Goodson's Interest in Beechnut was valued at $167,500 as of November 17, 1987. The Account will pay Dr. Goodson $167,500 to acquire his 18.3% Interest in Beechnut. The Account will pay no fees in connection with the transaction.

6. In summary, the applicant represents that the proposed transaction meets the criteria of section 408(a) of the Act because: (1) The transaction involves no more than 25% of the Account's assets; (2) the sale is to be for a price established by independent appraisal and valuation; (3) Dr. Goodson is the only Plan participant to be affected by the transaction; and (4) Dr. Goodson has determined that the proposed transaction is appropriate for and in the best interests of the Account, and he desires that the transaction be consummated by the Account.

Notice to Interested Persons: Because Dr. Goodson is the only participant in the Plan affected by the transaction, it has been determined that there is no need to distribute the notice of proposed exemption to interested persons. Therefore, comments and requests for a public hearing are due 30 days after the date of publication in the **Federal Register.**

FOR FURTHER INFORMATION CONTACT: Gary H. Lefkowitz of the Department, telephone (202) 523-8881. (This is not a toll-free number.)

Radiology and Imaging Services, Inc. Profit Sharing Plan and Trust (the Plan) Located in Akron, Ohio

[Application No. D-7382]

Proposed Exemption

The Department is considering granting an exemption under the authority of section 408(a) of the Act and section 4975(c)(2) of the Code and in accordance with the procedures set forth in ERISA Procedure 75-1 (40 FR 18471, April 28, 1975). If the exemption is granted the restrictions of section 306(a), 406 (b)(1) and (b)(2) of the Act and the sanctions resulting from the application of section 4975 of the Code, by reason of section 4975(c)(1) (A) through (E) of the Code shall not apply to the proposed sale for cash of certain real property (then Real Property) by the individual account in the Plan belonging to Richard D. Patterson, M.D. (Dr. Patterson) to Dr. Patterson, a participant in and party in interest with respect to the Plan, provided that the sale price be no less than the greater of the fair market value of the Real Property on the date of sale as established by an independent qualified appraiser, or the total outlay by Dr. Patterson's individual account in the Plan in connection with its acquisition and holding of the Real Property to the date of sale to Dr. Patterson.

Summary of Facts and Representations

1. The Plan is a profit sharing plan with individually directed separate accounts. As of November 30, 1986, the Plan had ten participants. As of the same date, the value of Dr. Patterson's account was $628,236. Dr. Patterson is one of four trustees of the Plan, and is an officer, director, and 11% shareholder in Radiology and Imaging Services, Inc., the Plan sponsor.

2. On December 23, 1983, Dr. Patterson directed the Plan custodian to buy for his account in the Plan the Real Property, a parcel of undeveloped land located in Harbor Springs, Michigan, from an unrelated third party, for the cash consideration of $102,000. The applicant represents that neither Dr. Patterson nor any other person or entity has used or currently uses the Real Property, and that no party in interest with respect to the Plan owns any property adjacent to the Real Property. During the time the Real Property has been held by Dr. Patterson's account, the Real Property has incurred $5,052.64 in expenses, consisting in $4,252.64 in real estate taxes and $800 in dues to the Windmere Property Owners' Association.

3. On February 12, 1987, Robert F. Antilla, an independent and qualified licensed appraiser of real property practicing in Harbor Springs, Michigan, estimated the fair market value of the Real Property to be $127,500.

4. The applicant represents that the Real Property is currently yielding no income to Dr. Patterson's account in the Plan, and that the fair market value of the Real Property has increased only 8% per year over the past three years.

5. Accordingly, the applicant proposes that Dr. Patterson's individual account in the Plan sell the Real Property to Dr. Patterson for the greater of the fair market value of the Real Property on the date of sale as established by an independent and qualified appraiser or the total outlay by Dr. Patterson's individual account in the Plan in connection with its acquisition and holding of the Real Property to the date of sale, including, but not limited to, the original price paid by Dr. Patterson's individual account in the Plan, property taxes, dues, fees, and insurance. The applicant represents that no commission will be charged with respect to the sale, and that Dr. Patterson will pay all transfer and sales costs and expenses in connection with the sale.

6. In summary, the applicant represents that the proposed transaction will satisfy the criteria of section 408(a) of the Act because: (a) The Real Property will be sold for the greater of its fair market value on the date of sale as determined by qualified and independent appraiser or for the total outlay by Dr. Patterson's individual account in the Plan in connection with its acquisition and holding of the Real Property to the date of sale; (b) the sale represents a one-time transaction for cash which can be easily verified;

(c) the sale will not require the payment of any commissions, fees, or taxes by the Plan; (d) the Plan will not suffer any loss in connection with its purchase and holding of the Real Property; and (e) Dr. Patterson, the

participant whose individual account in the Plan is affected by this proposed exemption, has determined that the proposed transaction would be in the interest of his individual account in the Plan, in his own interest, and in that of his beneficiaries.

Notice to Interested Persons: Because Dr. Patterson is the only person in the Plan to be affected by the proposed transaction, it has been determined that there is no need to distribute the notice of proposed exemption to interested persons. Comments and requests for a public hearing are due 30 days from the date of publication of this proposed exemption in the Federal Register.

FOR FURTHER INFORMATION CONTACT: Joseph L. Roberts III of the Department, telephone (202) 523-8881. (This is not a toll-free number.)

Upper Peninsula Building and Construction Industry Investment Plan (the Program) Located in Escanaba, MI

[Application No. D-7398]

Proposed Exemption

The Department is considering granting an exemption under the authority of section 408(a) of the Act and section 4975(c)(2) of the Code and in accordance with the procedures set forth in ERISA Procedure 75-1 (40 FR 18471, April 28, 1975). If the exemption is granted, the restrictions of section 406(a) of the Act and the sanctions resulting from the application of section 4975 of the Code, by reason of section 4975(c)(1) (A) through (D) of the Code shall not apply to the proposed participation by employee pension plans (the Plans) in construction loans through the Program where such loans are already committed to parties in interest with respect to such Plans, by certain lending institutions, provided that the terms of the loans are not less favorable to the Plans than those terms available in transaction with unrelated parties; and provided that the terms and conditions, as described herein are complied with during the operation of the Program.

Summary of Facts and Representations

1. The Plans are pension plans that are co-sponsored by local building and construction industry unions [1] associated with the Upper Peninsula Construction Labor-Management Council and local assocations affiliated with the Upper Peninsula Division of the Associated General Contractors Association and/or other employer associations representing building and construction industry employes in Michigan's Upper Peninsula area. The Plans are in the process of establishing the Upper Peninsula Building and Construction Industry Foundation (the Foundation). The following Plans will be part of the Foundation and participate in the Program: Upper Peninsula Plumbers and Pipefitters Pension Fund; State of Michigan Laborers' District Council Pension Plan and Trust; Michigan Carpenters Pension Plan and Trust; Operating Engineers Local No. 324 Pension Plan and Trust; Michigan Upper Peninsula IBEW Pension Plan; and Local 783 of the International Association of Bridge, Structural and Ornamental Iron Workers Pension Fund. The jurisdiction covered by the Plans is the State of Michigan.

2. The Foundation will provide a procedure and system whereby the Plans may invest in construction loans. The Foundation is to be administered by a Board of Trustees (the Trustees). Every Plan participating in the Foundation will name two trustees (one union trustee and one management trustee) to serve on its Board. The Trustees are required and directed by the Foundation Agreement to establish and administer the Program.

3. The Trustees are developing a package of documents for the operation and administration fo the Program. The Trustees are also contacting every bank, savings and loan association and insurance company, as defined in Part B of Prohibited Transaction Exemption 76-1 (PTE 76-1, 41 FR 12740, at 12743, March 6, 1976), in the jurisdiction covered by the Foundation, and requesting that such entities allow the Foundation to participate in all construction loans of $200,000 or more in which such lending institutions have made a legally enforceable commitment.[2]

4. All institutions agreeing to participate with the Foundation will agree to: (a) Notify the Trustees (or Administrative Manager) of the Foundation of all applications for construction loans which have been approved by the institution and consented to be submitted by the borrower; and (b) supply the Trustees with any requested data and information concerning the loans. The applicants represent that all lending institutions will affirmatively recommend that borrowers consent to the submission of the loan documents to the Program. In this regard, the applicants represent that the borrower refusal rate will probably constitute 10 percent to 20 percent of all transactions. Upon receipt of this information from the institutions, the Foundation will notify the trustees or other designated representatives of every participating Plan of all information received by them. The trustees of the participating Plans will then determine whether they intend to participate in a specific construction loan and, if so, the amount of their participation.

5. The Foundation will accumulate the responses received from all of the participating Plans and will then advise the lending institution of the Foundation's desire to participate in a loan and, if so, the amount of the participation. The amount of the participation will be the amount of the aggregate participation by the individual Plans. Each said loan will be deemed and construed to constitute a separate and distinct legal transaction and will be documented as a separate trust. The Foundtion will maintain its books and records of account accordingly.

6. Each participating Plan will, within 30 days of its determination and notification of its intention to participate in a specific construction loan, forward the amount of its participation to the lead lending institution. The lead lending institution will keep all such advances productively invested until advances are required to be made to the borrower. The earnings on such advances will be a part of the advance and any excess will be remitted by the institution to the participating Plans.

7. The Foundation will keep proper books and records to account for all advances from participating Plans and all returns of principal and/or interest from the lending institution making the loan. All returns of principal and/or interest by the lending institution for participation in any construction loan will be returned to the trustees of the participating Plan(s) within five days after receipt. Periodically, the Foundation will report to the trustees of the participating Plans and to the affiliated local unions and management associations on its operations. No Foundation Trustee will receive any compensation for his services to the Foundation or the Program. The Foundation may incur reasonable expenses for necessary professional services to implement and operate the Program and may obtain from the lead mortgage lenders and/or the participating Plans reimbursement for

[1] All of the local unions are local affiliates of international unions affiliated with the AFL-CIO Building and Construction Trades Department.

[2] Part B of PTE 76-1 provides, in general, exemptive relief from section 406(a) of the Act for construction loans made by a multiple employer plan to a participating employer if, among other requirements, the decision to make the loans is made on behalf of the plan by a bank, savings and loan association or insurance company as described in that exemption.

reasonable expenses actually incurred. No part of the principal or income of any investement will be received or retained by the Foundtion or its Trustees.

8. Because some construction loans may be made to parties in interest with respect to the participating Plans, such as contributing employers, the applicants seek an exemption from section 406(a) of the Act for the transactions. The applicants represent that the Progrma documents will provide that a trustee of any Plan which has an interest in the employer entity involved in a construction project to be financed by a commitment must: (a) Abstain himself from voting on a participation determination; (b) absent himself from that portion of the Plan trustees' meeting when the issue of the purchase of such participation is under discussion and consideration; and (c) represent on the record that he has not attempted to exert any influence on any trustee regarding the participation. The applicants further represent that, because the Program documents will provide that independent plan trustees or other fiduciaries will have sole and exclusive authority with regard to a plan's decision to participate in a loan, no relief from section 406(b) of the Act for Program transaction is requested.[3]

9. The applicants represent that lending institutions will have made a formal and legally binding commitment to make the construction loan before the opportunity for participation by the Plans is distributed through the Program. The applicants represent that the Foundation will receive from all cooperating lending institutions all qualified loan commitments for consideration whether or not such commitments are for local or non-local developers or construction projects or union-built or non-union built construction projects. The applicants further represent that the Foundation will not participate in a loan unless it is at or above the prevailing market rate of interest and value for comparable loans.[4] In no event will participating Plans either individually, or in the aggregate, acquire more than a 50 percent participation in any one loan.

10. The applicants represent that participating Plans will initially invest together with a lending institution and will not be purchasing participation interests from such lending institution. In addition, the applicants represent that the participating Plans will receive their pro rata share of the points charged by the lending institution to the extent such points represent a return on the loan and not compensation and/or reimbursement to the lending institution for actual expenses incurred and/or services rendered in servicing the construction loan. A Plan's pro rata share will be the ratio of the amount of the Plan's funding participation to the total amount of the loan. To the extent the above transactions, or any other transactions between the Plans and the lending institutions, constitute violations of section 406 of the Act, the Department is not proposing relief for such transactions.

11. The applicants represent that, in the event of a default by a borrower, the lead lending institution will have responsibility to enforce the rights of all of the lenders, including participation interest holders, under the loan. The applicants further represent that all of the loans subject to the Program will remain in the portfolio of the lead lending institution and thus not be transferred to other lenders.

12. The applicants represent that before a loan is made, the Foundation will receive from the lead lender a written commitment for permanent financing from a person other than a Plan which is a member of the Foundation to enable full repayment of the loan upon completion of construction. In addition, the Foundation will not accept loan participations by any Plan which would, as to any individual loan participation, exceed 10 percent of the assets of the Plan, or in the aggregate with all other construction loan participations, exceed 25 percent of the assets of the Plan. Further, the Foundation will maintain or cause to be maintained for a period of six years from the date of each loan participation such records as are necessary to enable the Department, the Internal Revenue Service, the Plans' participants and beneficiaries, any employer of Plan participants and beneficiaries, or any employee organization whose members are covered by the Plans to determine whether all conditions of the exemption have been met.

13. In summary, the applicants represent that the proposed transactions satisfy the statutory criteria of section 408(a) of the Act because: (a) The trustees of each participating Plan will have sole and exclusive authority to cause the Plan to participate in a loan; (b) the lending institutions will have made a legally enforceable commitment to make a construction loan before the Plans consider participation in a loan; and (c) no more than 10 percent of the assets of any participating plan may be invested in any individual loan participation and no more than 25 percent of a plan's assets may be invested in construction loans in the aggregate.

Notice to Interested Persons

Notice of the proposed exemption will be provided to all interested persons within 30 days of the date of publication of the notice of pendency in the **Federal Register**. Such notice will include a copy of the notice of proposed exemption as published in the **Federal Register** and a statement informing interested persons of their right to comment with respect thereto. Comments to the Department are due within 60 days of the date of publication of this notice.

FOR FURTHER INFORMATION CONTACT: Ms. Jan D. Broady of the Department,

---

[3] In this exemption, the Department expresses no opinion as to whether transactions involving construction loans to parties in interest will involve transactions as described in section 406(b) of the Act. As well, the Department is not expressing an opinion as to whether the structure, maintenance, and operation of the Program, including the participation with the lending institutions in construction loans to non-parties in interest, will violate provisions of Part 4 of Title I of the Act. The Department notes, as stated in the preamble to Part B of PTE 76-1, *supra* at 12743, that a loan made to a non-party in interest may give rise to a prohibited transaction if, for example, the loan is made in the context of an arrangement for a specific participating employer to furnish a portion of the construction and such employer has a controlling influence over the plan's decision to make the loan.

[4] The Department notes that to the extent the fiduciaries of the participating Plans restrict their consideration of investment opportunities for non-economic reasons, such conduct may involve certain violations of Part 4 of Title I of the Act which violations, if present, would not be provided relief by this exemption.

In this regard, section 404(a)(1) of the Act requires, among other things, that a fiduciary of a plan act prudently, solely in the interest of the plan's participants and beneficiaries, and for the exclusive purpose of providing benefits to participants and beneficiaries. To act prudently, a plan fiduciary must consider, among other factors, the availability, riskiness, and potential return of alternative investments for his plan. Because construction loans are investments which would be selected, if at all, in preference to alternative investments, a loan would not be prudent if it provided a plan with less return, in comparison to risk, than comparable investments available to the plan, or if it involved a greater risk to the security of plan assets than other investments offering a similar return.

The Department has construed the requirements that a fiduciary act solely in the interest of, and for the exclusive purpose of providing benefits to, participants and beneficiaries as prohibiting a fiduciary from subordinating the interests of participants and beneficiaries in their retirement income to unrelated objectives. Thus, in deciding whether and to what extent to invest in construction loans, a fiduciary must ordinarily consider only factors relating to the interest of plan participants and beneficiaries in their retirement income. For example, a decision to make a loan may not be influenced by a desire to stimulate the construction industry and generate employment, unless the loan, when judged solely on the basis of its economic value to the plan, would be equal or superior to alternative investments available to the plan. (See Advisory Opinion 81-12A, January 13, 1981.)

telephone (202) 523-8881. (This is not a toll-free number.)

Saiter, Cameron and Snowden, Orthopaedic Associates, P.A. Profit Sharing Plan and Trust (the Plan) Located in Pensacola, Florida

[Application No. D-7429]

Proposed Exemption

The Department is considering granting an exemption under the authority of section 408(a) of the Act and section 4975(c)(2) of the Code and in accordance with the procedures set forth in ERISA Procedure 75-1 (40 FR 18471, April 28, 1975). If the exemption is granted the restrictions of section 406(a), 406 (b)(1) and (b)(2) of the Act and the sanctions resulting from the application of section 4975 of the Code, by reason of section 4975(c)(1) (A) through (E) of the Code shall not apply to the proposed sale for cash by the individual account in the Plan belonging to Joseph T. Saiter, Jr., M.D. (Dr. Saiter) of certain real property to Dr. Saiter, a participant in and party in interest with respect to the Plan, provided that the sale price be no less than the fair market value of the real property on the date of sale as established by an independent qualified appraiser.

Summary of Facts and Representations

1. The Plan is a profit sharing plan with individually directed separate accounts. The Plan is sponsored by Saiter, Cameron & Snowden, Orthopaedic Associates, P.A., a professional association in the practice of medicine in Pensacola, Florida. As of September 1, 1987, the Plan had twelve participants. As of August 31, 1987, Dr. Saiter's account balance was $453,974.

2. On October 23, 1986, the Plan trustees purchased a vacant waterfront lot in the Deer Point subdivision in Gulf Breeze, Florida (the Real Property), from an unrelated third party, on behalf of Dr. Saiter's individual account in the Plan, for $145,000. The applicant represents that neither Dr. Saiter nor any other person or entity has used or currently uses the Real Property, and that no party in interest with respect to the Plan owns any property adjacent to the Real Property.

3. On August 10, 1987, Mr. Eugene Presley, M.A.I., an independent and qualified appraiser with M. Eugene Presley and Associates, of Pensacola, Florida, estimated the fair market value of the Real Property to be $129,000.

4. The applicant represents that Dr. Saiter directed the trustees of the Plan to purchase the Real Property on behalf of his individual account in the Plan with the expectation of substantial continuing appreciation in the value of the Real Property. However, as evidenced by the August 10, 1987 appraisal, the value of the Real Property has suffered a substantial decline.

5. Accordingly, the applicant proposes that Dr. Saiter's individual account in the Plan sell the Real Property to Dr. Saiter for the fair market value of the Real Property on the date of sale as established by an independent and qualified appraiser. The applicant represents that neither the Plan nor Dr. Saiter's individual account in the Plan will pay any transfer and sales costs and expenses in connection with the sale.

6. In summary, the applicant represents that the proposed transaction will satisfy the criteria of section 408(a) of the Act because: (a) The Real Property will be sold for its fair market value on the date of sale as determined by a qualified and independent appraiser; (b) the sale represents a one-time transaction for cash which can be easily verified; (c) the sale will not require the payment of any commissions, fees, or taxes by the Plan or by Dr. Saiter's individual account in the Plan; (d) Dr. Saiter, the participant whose individual account in the Plan is affected by the proposed transaction, has determined that the proposed transaction would be in the interest of his individual account in the Plan, in his own interest, and in that of his beneficiaries.

Notice to Interested Persons: Because Dr. Saiter is the only person in the Plan to be affected by the proposed transaction, it has been determined that there is no need to distribute the notice of proposed exemption to interested peresons. Comments and requests for a public hearing are due 30 days from the date of publication of this proposed exemption in the **Federal Register**.

FOR FURTHER INFORMATION CONTACT: Joseph L. Roberts III of the Department, telephone (202) 523-8881. (This is not a toll-free number.)

Williams, Taylor & Schmits Profit Sharing Plan and Williams, Taylor & Schmits Target Benefit Plan (the Plans) Located in Indianapolis, Indiana

[Application Nos. D-7449 and D-7450]

Proposed Exemption

The Department is considering granting an exemption under the authority of section 408(a) of the Act and section 4975(c)(2) of the Code and in accordance with the procedures set forth in ERISA Procedure 75-1 (40 FR 18471, April 28, 1975). If the exemption is granted the restrictions of section 406(a), 406 (b)(1) and (b)(2) of the Act and the sanctions resulting from the application of section 4975 of the Code, by reason of section 4975(c)(1) (A) through (E) of the Code shall not apply to the proposed lease (the Lease) by the individual accounts in the Plans of Jerry Williams (Mr. Williams) of a copier (the Copier) to Williams, Taylor & Schmits Professional Corporation, the Plans' sponsor (the Plans' Sponsor) and party in interest with respect to the Plans, and to the sale (the Sale) of the Copier to the Plans' Sponsor at the end of a five year period, provided that the Lease and Sale be for no less than fair market value at the time of each transaction.

Summary of Facts and Representations

1. The Plans are a profit sharing plan and a target benefit plan sponsored by Williams, Taylor & Schmits, P.C., the Plans' Sponsor, a professional corporation engaged in the practice of law in Indianapolis, Indiana. Mr. Williams is a trustee of the Plans. As of July 31, 1987, each plan had the same five participants. Individual accounts in the Plans are established and maintained by the Plans' administrator on behalf of each participant. The assets of the Plans are held by the trustees pursuant to a combined trust agreement which establishes a single trust (the Trust) covering both Plans and which provides for the aggregate investment of the combined Plans' assets. Participants may elect to self-direct the investment of their accounts. As of December 31, 1987, the portion of the Trust attributable to Mr. Williams' individual accounts in the Plans was $51,698.

2. The Trust proposes to purchase for $9,500 in cash a Savin copier, Model No. 7065, from Hoosier Photo Supplies, Inc., of Indianapolis, Indiana, an unrelated third party. The Trust will make this purchase at Mr. Williams' direction on behalf of Mr. Williams' separate accounts in the Plans. The proposed transaction involves less than 25% of Mr. Williams' accounts' balance.

3. The Trust proposes to lease the Copier to the Plans' Sponsor for use in its normal business operations for a five year period at $210 per month. All repairs and maintenance on the Copier will be paid for by the Plans' Sponsor. At the end of the five year period the Plans' Sponsor will have the option to purchase the Copier for cash from the Trust at its fair market value at that time as established by an independent and qualified appraiser. If the Plan's Sponsor does not purchase the Copier at the end of the lease, it will be sold to an unrelated third party. The terms and conditions of the Lease will be those commonly used by commercial leasing

companies and will provide for an arm's-length transaction between the Trust and the Plans' Sponsor. On October 29, 1987, Bob Harshman, of Ambassador Financial Services of Indianapolis, Indiana, a qualified and unrelated third party, stated that his firm would lease the same equipment to the Plans' Sponsor under the same terms as proposed herein.

4. In summary, the applicant represents that the proposed transactions will satisfy the criteria of section 408(a) of the Act because: (a) The Trust will receive the fair market value rental under the Lease for the Copier as established by a qualified and independent person; (b) the proposed transactions involve less than 25% of the assets in Mr. Williams' accounts in the Plans; and (c) Mr. Williams, the only participant whose accounts in the Plans are affected by the proposed transactions, has determined that the proposed transactions would be in the interest of his individual accounts in the Plans, and he desires that the transactions be consummated.

Notice to Interested Persons: Because Mr. Williams is the only person in the Plans to be affected by the proposed transactions, it has been determined that there is no need to distribute the notice of proposed exemption to interested persons. Comments and requests for a public hearing are due 30 days from the date of publication of this proposed exemption in the Federal Register.

FOR FURTHER INFORMATION CONTACT: Joseph L. Roberts III of the Department, telephone (202) 523-8881. (This is not a toll-free number.)

The AT&T Management Pension Plan (the Management Plan) and the AT&T Pension Plan (the Pension Plan; Together, the Plans) Located in New York, New York

[Application Nos. D-7463 and D-7464]

Proposed Exemption

The Department is considering granting an exemption under the authority of section 408(a) of the Act and section 4975(c)(2) of the Code and in accordance with the procedures set forth in ERISA Procedure 75-1 (40 FR 18471, April 28, 1975). If the exemption is granted the restrictions of sections 406(a), 406 (b)(1) and (b)(2) of the Act and the sanctions resulting from the application of section 4975 of the Code, by reason of sections 4975(c)(1) (A) through (E) of the Code, shall not apply to the acquisition by AT&T Communications, Inc. (AT&T) of an easement across certain real property in Oconee County, Georgia, owned by the First National Bank of Atlanta Collective Timberland Trust-II for Qualified Employee Benefit Trusts (the Timberland Trust), provided the cash amount paid is not less than the fair market value of the easement on the day of the acquisition.

Summary of Facts and Representations

1. AT&T's primary business activity is the owning and operating of long-distance telephone systems. The Plans are both defined benefit plans sponsored by AT&T. The Management Plan currently has approximately 149,305 participants, and the Pension Plan has approximately 257,285 participants. The Plans currently have assets with a total value of approximately $30.8 billion.

2. The Plans are funded in part through the AT&T Master Pension Trust (the Master Trust), the relevant assets of which are held by State Street Bank and Trust Company (State Street) as trustee. State Street has entered into an investment management agreement with the First National Bank of Atlanta (the Bank). The Bank serves as trustee of the Timberland Trust, and State Street has invested certain assets of the Plans in the Timberland Trust.

3. AT&T proposes to acquire an easement across a parcel of real property currently owned by the Timberland Trust and located in Oconee County, Georgia. The easement will be required so that AT&T can construct an underground Lightguide fiber optic telephone cable system in Oconee County, Georgia. The route that the cable will take across the property will require an easement of 1,900 feet in length and 20 feet wide. The total easement area will consist of 0.87 acre.

4. Mr. Earl D. Barrs, a consulting forester and real estate broker with Knapp-Barrs & Associates, Inc. of Macon, Georgia, has appraised the easement and associated timberland as having a fair market value of $1,645.75 as of December 7, 1987. AT&T proposes to pay this amount to the Timberland Trust in cash for the easement. Since the Timberland Trust currently has assets of approximately $28.8 million, the easement represents a very small fraction of the assets of the Timberland Trust, and of the assets of the Plans.

5. The Bank has represented that it has reviewed the proposed transaction on behalf of the Timberland Trust, and has determined that the proposed transaction is in the best interests of the participants and beneficiaries of the plans that have invested in the Timberland Trust. The Bank represents that the acquisition involves a de minimis amount of the assets of the Timberland Trust and of each plan that has invested in the Trust. Moreover, the Bank represents that the acquisition of the easement by AT&T will not diminish in any way the overall value of the land involved.

6. In summary, the applicants represent that the proposed transaction satisfies the criteria of section 408(a) of the Act because: (1) The transaction represents a very small percentage of the assets of the Plans; (2) the value of the easement and the related timberland has been determined by a qualified, independent expert; and (3) the Bank, the independent trustee of the Timberland Trust, has determined that the proposed transaction is appropriate for the Timberland Trust and in the best interests of the participants and beneficiaries of the Plans.

FOR FURTHER INFORMATION CONTACT: Gary H. Lefkowitz of the Department, telephone (202) 523-8881. (This is not a toll-free number.)

F-M Insulation Pension Plan (the Pension Plan) F-M Insulation Profit Sharing Plan (the Profit Sharing Plan) Located in Fargo, North Dakota

[Application Nos. D-7468 and D-7469]

Proposed Exemption

The Department is considering granting an exemption under the authority of section 408(a) of the Act and in accordance with the procedures set forth in ERISA Procedure 75-1 (40 FR 18471, April 28, 1975). If the exemption is granted the restrictions of section 406(b)(2) of the Act and shall not apply to the proposed cash rule of 38.354 shares in Sunbelt Commercial Associates, a limited partnership, and of 26.250 shares in Sunbelt Federal Way, another limited partnership, from the terminating Profit Sharing Plan to the continuing Pension Plan, which has the same trustees as the Profit Sharing Plan, provided the sales price of such shares (the Shares) equals their fair market value on the date of the sale as determined by an independent appraiser.

Summary of Facts and Representations

1. The Pension Plan is a defined benefit plan covering nine participants as of August 31, 1986 and having total assets of approximately $910,517 as of December 31, 1986. The Profit Sharing Plan covered the same participants as of August 31, 1986. A notice of intent to terminate the Profit Sharing Plan effective August 31, 1986 was filed October 27, 1986.

Accordingly, all assets of the Profit Sharing Plan except the Shares have

been distributed to the participants of the Profit Sharing Plan. It is represented that F-M Insulation Company (the Employer), the sponsor of both the Pension Plan and the Profit Sharing Plan (the Plans), intends to continue the Pension Plan. Mr. Gordon Hvidsten, President of the Employer, is the trustee (the Trustee) and Churchill Management Corporation (the Advisor) is investment manager/advisor of both Plans. The applicants represent that the Plans are not parties in interest with respect to each other.

2. Dakota First Trust Co. (Dakota), of Fargo, North Dakota, has agreed to serve as independent fiduciary on behalf of the Pension Plan with respect to the proposed transaction. Dakota represents that it is an independent trust company with $825 million in assets, that it works with over 400 qualified pension plans, and that it qualifies as an investment manager within the meaning of section 3(38) of the Act. Dakota acknowledges its duties, responsibilities, and liabilities under the Act in serving as a fiduciary with respect to the Pension Plan. Dakota further represents that it is a wholly owned subsidiary of a holding company, Dakota Bankshares, which also owns Dakota Bank and Trust (the Bank), which has checking, deposit and lending relationship dealings with the Employer, accounting for less than one percent of the Bank's total gross income for its most recent fiscal year. Dakota states that it does not hold checking accounts, savings accounts, or certificates of deposit for the Pension Plan and that it has not lent money to the Pension Plan trustees or their affiliates. At the Employer's request, Dakota has accepted responsibility for the proposed purchase to ensure that it takes place in accordance with acceptable fiduciary requirements and the requirements of this proposed exemption.

3. From August 1981 to December 1984, the Profit Sharing Plan purchased 38,354 Sunbelt Commercial Associates shares, representing 3.75% of the limited partnership interests in this partnership and costing the Profit Sharing Plan $38,334.68, and 26.250 Sunbelt Federal Way shares, representing 1.67% of the limited partnership interests in that partnership and costing the Profit Sharing Plan $26,250.00, at a total cost to the Profit Sharing Plan of $64,600. The applicants represent that the Profit Sharing Plan has incurred no further costs with respect to the Shares since these purchases and that the Shares have appreciated to a market value of $74,914 as of December 31, 1986. Over the same period, the Pension Plan purchased 117.104 shares of Sunbelt Commercial Association and Sunbelt Federal Way (the Partnerships) at a total cost of $117,100. According to the applicants, these shares had appreciated to a market value of $128,227 as December 31, 1986. The applicants represent that neither the general nor the limited partners of the Partnership are parties in interest with respect to either of the Plans.

4. The assets of each of the Partnerships consist of a single parcel of improved real property and some cash. (Sunbelt Federal Way owns a silo warehouse showroom, and Sunbelt Commercial Associates owns a silo store.) Independent appraisals have been made of the real properties owned by the Partnerships. The appraisal of the real property owned by Sunbelt Federal Way was made by E. Bates McKee and Keith M. Riely, MAI, of Shorett and Riley, Seattle Washington. The appraisal of the real property owned by Sunbelt Commercial Associates was made by Timothy M. Glass, R.M., and Duane J. Blevins, of Green County Appraisal Service, Tulsa, Oklahoma. All of the appraisers represent that they have no interest in the Plans. Considering these real property appraisals and the income and expenses from said real properties, the Advisor has determined that the value of the Shares as of December 31, 1986 was $74,914 (i.e.: $48,258 for the Profit Sharing Plan's shares in Sunbelt Commercial Associates + $26,656 for the Profit Sharing Plan's shares in Sunbelt Federal Way). Dakota represents that $74,914 is the fair market value of the Shares as of December 31, 1986.

5. The terminating Profit Sharing Plan has not attempted to sell the Shares because the Trustee and the Advisor consider them to be a good investment and would like to retain the Shares for the Pension Plan. Accordingly, they wish to sell the Shares to the Pension Plan.

6. It is proposed that the Profit Sharing Plan sell the Shares to the Pension Plan for cash at fair market value as of the date of the sale. The fair market value of the Shares as of the date of the sale will be determined by Shorett & Riley (see preceding paragraph), an independent appraiser. The applicants represent that the Shares will be reappraised if, and after, the proposed exemption is granted and that the proposed sale will take place on the date of the reappraisal. No commissions or transfer fees will be incurred on the proposed transaction. As the proposed transaction would enable the terminating Profit Sharing Plan to complete the distribution of its assets to all its participants, the Trustee states that this transaction would be in the best interests of the Profit Sharing Plan participants. If the proposed sale is effected, the Pension Plan would own 7.5% of Sunbelt Commercial Associates and 6.7% of Sunbelt Federal Way and approximately 22% of the Pension Plan's assets would be invested in the Partnerships.

7. Dakota has expressed the opinion that the proposed purchase of the Shares by the Pension Plan would be in the best interests of the Pension Plan and its participants for the following reasons: (a) According to Dakota, it appears that the return from income and appreciation of the Partnerships' assets has been reasonable and that improved future returns may be expected in view of the improving economic environment for the Partnerships' holdings; (b) Dakota represents that the purchase of the Shares by the Pension Plan would enable the former Profit Sharing Plan participants, all of whom are Pension Plan participants, to benefit from the improving returns from the Shares; (c) Dakota has reviewed the terms of the proposed transaction and agrees with the determination of the fair market value of the Shares as of December 31, 1986, and believes that the fair market value of the Shares as of the date of the sale will be close to the value appraised as of December 31, 1986; (d) Dakota states that the terms of the proposed purchase are similar to the terms of similar transactions between unrelated parties in that the Plans are proposing to transfer the Shares at market value established by independent appraisal; (e) Dakota represents that the Pension Plan would have several options in liquidating the Shares if the Partnerships were not liquidated before the Pension Plan wished to liquidate the Shares, and that these options include selling the Shares to other limited partners in the Partnerships or to an unrelated third party or distributing the Shares to Pension Plan participants at the election of the participant; and (f) Dakota has examined the Pension Plan's investment portfolio and has found that the proposed purchase of the Shares will not negatively affect the Pension Plan's liquidity requirements or the diversification of the Pension Plan's assets, and the proposed purchase is not inconsistent with the investment objectives of the Pension Plan.

8. In summary, the applicants represent that the proposed transaction satisfies the exemption criteria set forth in section 408(a) of the Act because (a) the proposed transfer wil be a one-time cash transaction, (b) the proposed transfer price will equal the fair market

value of the Shares on the date of the sale as determined by an independent appraiser, (c) no commissions or transfer fees will be charged to the Plan, (d) the proposed transfer will facilitate the distribution of assets from the temrinating Profit Sharing Plan to its participants, all of whom also participate in the Pension Plan, (e) Dakota, an independent fiduciary for the Pension Plan, has determined that the proposed transfer will be in the best interests of the Pension Plan and its participants and will monitor the transfer to safeguard said interests, and (f) the Trustee has determined that the proposed transfer will be in the best interests of the Profit Sharing Plan and its participants.

FOR FURTHER INFORMATION CONTACT: Mrs. Miriam Freund of the Department, telephone (202) 523-8194. (This is not a toll-free number.)

General Information

The attention of interested persons is directed to the following:

(1) The fact that a transaction is the subject of an exemption under section 408(a) of the Act and/or section 4975(c)(2) of the Code does not relieve a fiduciary or other party in interest or disqualified person from certain other provisions of the Act and/or the Code, including any prohibited transaction provisions to which the exemption does not apply and the general fiduciary responsibility provisions of section 404 of the Act, which among other things require a fiduciary to discharge his duties respecting the plan solely in the interest of the participants and beneficiaries of the plan and in a prudent fashion in accordance with section 404(a)(1)(B) of the Act; nor does it affect the requirement of section 401(a) of the Code that the plan must operate for the exclusive benefit of the employees of the employer maintaining the plan and their beneficiaries;

(2) Before an exemption may be granted under section 408(a) of the Act and/or section 4975(c)(2) of the Code, the Department must find that the exemption is administratively feasible in the interests of the plan and of its participants and beneficiaries and protective of the rights of participants and beneficiaries of the plan; and

(3) The proposed exemptions, if granted, will be supplemental to, and not in derogation of, any other provisions of the Act and/or the Code, including statutory or administrative exemptions and transitional rules. Furthermore, the fact that a transaction is subject to an administrative or statutory exemption is not dispositive of whether the transaction is in fact a prohibited transaction.

(4) The proposed exemptions, if granted, will be subject to the express condition that the material facts and representations contained in each application are true and complete, and that each application accurately describes all material terms of the transaction which is the subject of the exemption.

Signed at Washington, DC, this 19th day of April 1988.

Robert J. Doyle,

Acting Associate Director, Regulations and Interpretations, Pension and Welfare Benefits Administration, U.S. Department of Labor.

[FR Doc. 88-8930 Filed 4-21-88; 8:45 am]

BILLING CODE 4510-29-M

[Prohibited Transaction Exemption 88-27; Exemption Application No. D-6798 et al.]

Grant of Individual Exemptions; Getter Trucking, Inc. et al.

AGENCY: Pension and Welfare Benefits Administration, Labor.

ACTION: Grant of individual exemptions.

SUMMARY: This document contains exemptions issued by the Department of Labor (the Department) from certain of the prohibited transaction restrictions of the Employee Retirement Income Security Act of 1974 (the Act) and/or the Internal Revenue Code of 1954 (the Code).

Notices were published in the **Federal Register** of the pendency before the Department of proposals to grant such exemptions. The notices set forth a summary of facts and representations contained in each application for exemption and referred interested persons to the respective applications for a complete statement of the facts and representations. The applications have been available for public inspection at the Department in Washington, DC. The notices also invited interested persons to submit comments on the requested exemptions to the Department. In addition the notices stated that any interested person might submit a written request that a public hearing be held (where appropriate). The applicants have represented that they have complied with the requirements of the notification to interested persons. No public comments and no requests for a hearing, unless otherwise stated, were received by the Department.

The notices of pendency were issued and the exemptions are being granted solely by the Department because, effective December 31, 1978, section 102 of Reorganization Plan No. 4 of 1978 (43 FR 47713, October 17, 1978) transferred the authority of the Secretary of the Treasury to issue exemptions of the type proposed to the Secretary of Labor.

Statutory Findings

In accordance with section 408(a) of the Act and/or section 4975(c)(2) of the Code and the procedures set forth in ERISA Procedure 75-1 (40 FR 18471, April 28, 1975), and based upon the entire record, the Department makes the following findings:

(a) The exemptions are administratively feasible;

(b) They are in the interests of the plans and their participants and beneficiaries; and

(c) They are protective of the rights of the participants and beneficiaries of the plans.

Getter Trucking, Inc. Profit Sharing Plan (the Plan) Located in Billings, Montana

[Prohibited Transaction Exemption 88-27; Exemption Application No. D-6798]

Exemption

The restrictions of section 406(a) and 406(b)(1) and (b)(2) and 407(a) of the Act and the sanctions resulting from the application of section 4975 of the Code, by reason of section 4975(c)(1)(A) through (E) of the Code, shall not apply to the lease of certain real property by the Plan to the Getter Trucking, Inc., provided that the terms of the lease are at least as favorable to the Plan as those obtainable in an arm's-length transaction with an unrelated party.

For a more complete statement of the facts and representations supporting the Department's decision to grant this exemption refer to the notice of proposed exemption published on February 22, 1988 at 53 FR 5225.

EFFECTIVE DATE: The exemption will be effective on June 1, 1985.

FOR FURTHER INFORMATION CONTACT: Mr. C.E. Beaver of the Department, telephone (202) 525-8881. (This is not a toll-free number.)

People's Bank (People's) Located in Bridgeport, Connecticut

[Prohibited Transaction Exemption 88-28; Exemption Application No. D-7187]

Exemption

The restrictions of section 406(a) of the Act and the sanctions resulting from

the application of section 4975 of the Code, by reason of section 7975(c)(1)(A) through (D) of the Code, shall not apply to the sale by People's of its subsidiary's stock to the Keogh plans (the Keoghs) for which People's serves as custodian, as part of an initial issue of such stock, and the sanctions resulting from the application of section 4975 of the Code, by reason of section 4975(c)(1)(A) through (D) of the Code shall not apply to the sale by People's of its subsidiary's stock to the individual retirement accounts (the IRAs) for which People's serves as custodian, as part of an initial issue of such stock, provided the Keoghs and the IRAs pay no more than the fair market value of the stock on the date of the sale.[1]

For a more complete statement of the facts and representations supporting the Department's decision to grant this exemption refer to the notice of proposed exemption published on January 26, 1988 at 53 FR 2106.

For Further Information Contact: Gary H. Lefkowitz of the Department, telephone (202) 523-8881. (This is not a toll-free number.)

Brooks, Lyon and Brooks, D.O.'s, P.C. Employees Pension Plan (the Plan) Located in Ann Arbor, Michigan

[Prohibited Transaction Exemption 88-29; Exemption Application No. D-7252]

Exemption

The restrictions of section 406(a), 406(b)(1) and (b)(2) of the Act and the sanctions resulting from the application of section 4975 of the Code, by reason of section 4975(c)(1)(A) through (E) of the Code, shall not apply to the cash purchase from the Plan of certain real property by Brooks, Lyon and Brooks, a partnership which is a party in interest with respect to the Plan; provided that the terms of such transaction are not less favorable to the Plan than those which the Plan could obtain in an arm's-length transaction with an unrelated party.

For a more complete statement of the facts and representations supporting the Department's decision to grant this exemption refer to the notice of proposed exemption published on February 22, 1988 at 53 FR 5228.

[1] Because the IRAs do not meet the conditions described in 29 CFR 2510.3-2(d), there is no jurisdiction with respect to the IRAs under Title I of the Act. However, there is jurisdiction under Title II of the Act pursuant to section 4975 of the Code.

FOR FURTHER INFORMATION CONTACT: Ronald Willett of the Department, telephone (202) 523-8881. (This is not a toll-free number.)

Bezzerides Company Profit Sharing Plan (the Plan) Located in Benicia, CA

[Prohibited Transaction Exemption 88-30; Exemption Application No. D-7272]

Exemption

The restriction of section 406(a), 406(b)(1) and (b)(2) of the Act and the sanctions resulting from the application of section 4975 of the Code, by reason of section 4975(c)(1) (A) through (E) of the Code, shall not apply to the proposed loan of $82,000 by the Plan to Bezco Enterprises, a party in interest with respect to the Plan, provided that the terms of the transaction are not less favorable to the Plan than those obtainable in an arm's-length transaction with an unrelated party.

For a more complete statement of the facts and representations supporting the Department's decision to grant this exemption refer to the notice of proposed exemption published on February 22, 1988, at 53 FR 5229.

For Further Information Contact: Alan H. Levitas of the Department, telephone (202) 523-8194. (This is not a toll-free number.)

Knoxville Anesthesia Group, P.C. Money Purchase Plan (the Plan) Located in Knoxville Exemption 88-31; Exemption Application No. D-7310]

Exemption

The restriction of section 406(a), 406(b) (1) and (2) of the Act and the sanctions resulting from the application of section 4975 of the Code, by reason of section 4975(c)(1) (A) through (E) of the Code, Shall not apply to the sale of an art print from the individual account in the Plan of Robert Harris, M.D. to Robert Harris, M.D., a party in interest with respect to the Plan, provided the Plan receives no less than fair market value for the print at the time of sale and provided further that the Plan experiences no loss in connection with the acquisition and holding of the print.

For a more complete statement of the facts and representations supporting the Department's decision to grant this exemption refer to the notice of proposed exemption published on January 26, 1988, at 53 FR 2108.

For Further Information Contact: Paul Kelty of the Department, telephone (202) 523-8883. (This is not a toll-free number.)

SPNB Real Estate Debt Fund for Accounts Described in Section 401(a) of the Internal Revenue Code (the Fund) Located in Los Angeles, California

[Prohibited Transaction Exemption 88-32; Exemption Application No. D-7410]

Exemption

The restrictions of section 406(a), 406(b)(1) and (b)(2) of the Act and the sanctions resulting from the application of section 4975 of the Code, by reason of section 4975(c)(1)(A) through (E) of the Code, shall not apply to the sale by the Fund to Security Pacific Investment Managers, Inc. of four real estate loans (the Problem Loans) made by the Fund, for an amount equal to the unpaid principal balance of each loan plus accrued interest, penalties and/or late changes, if any, provided such amount is not less than the fair market value of each of the Problem Loans at the time of the sale.

For a more complete statement of the facts and representations supporting the Department's decision to grant this exemption refer to the notice of proposed exemption published on February 22, 1988 at 53 FR 5232.

For Further Information Contact: Gary H. Lefkowitz of the Department, telephone (202) 523-8881. (This is not a toll-free number.)

General Information

The attention of interested persons is directed to the following:

(1) The fact that a transaction is the subject of an exemption under section 408(a) of the Act and/or section 4975(c)(2) of the Code does not relieve a fiduciary or other party in interest or disqualified person from certain other provisions of the Act and/or the Code, including any prohibited transaction provisions to which the exemption does not apply and the general fiduciary responsibility provisions of section 404 of the Act, which among other things require a fiduciary to discharge his duties respecting the plan solely in the interest of the participants and beneficiaries of the plan and in a prudent fashion in accordance with section 404(a)(1)(B) of the Act; nor does it affect the requirement of section 401(a) of the Code that the plan must operate for the exclusive benefit of the employees of the employer maintaining the plan and their beneficiaries;

(2) These exemptions are supplemental to and not in derogation of, any other provisions of the Act and/or the Code, including statutory or administrative exemptions and transitional rules. Furthermore, the fact that a transaction is subject to an

administrative or statutory exemption is not dispositive of whether the transaction is in fact a prohibited transaction.

(3) The availability of these exemptions is subject to the express condition that the material facts and representations contained in each application accurately describes all material terms of the transaction which is the subject of the exemption.

Signed at Washington, DC, this 19th day of April, 1988.

Robert J. Doyle

Acting Associate Director for Regulations and Interpretations Pension and Welfare Benefits Administration, U.S. Department of Labor.

[FR Doc. 88-8932 Filed 4-21-88; 8:45 am]

BILLING CODE 4510-29-M

NATIONAL FOUNDATION ON THE ARTS AND THE HUMANITIES

Agency Information Collection Activities Under OMB Review

AGENCY: National Endowment for the Arts.

ACTION: Notice.

SUMMARY: The National Endowment for the Arts (NEA) has sent to the Office of management and Budget (OMB) the following proposal for the collection of information under the provisions of the Paperwork Reduction Act (44 U.S.C. Chapter 35).

DATE: Comments on this information collection must be submitted by May 23, 1988.

ADDRESSES: Send comments to Mr. Jim Houser, Office of Management and Budget, New Executive Office Building, 726 Jackson Place, NW., Room 3002, Washington, DC 20503; (202-395-7316). In addition, copies of such comments may be sent to Mr. Murray Welsh, National Endowment for the Arts, Administrative Services Division, Room 203, 1100 Pennsylvania Avenue, NW., Washington, DC 20506; (202 682-5401).

FOR FURTHER INFORMATION CONTACT: Mr. Murray Welsh, National Endowment for the Arts, Administrative Services Division, Room 203, 1100 Pennsylvania Avenue, NW., Washington, DC 20506; (202 682-5401) from whom copies of the documents are available.

SUPPLEMENTARY INFORMATION: The Endowment requests a review of the reinstatement of a previously approved collection. This entry is issued by the Endowment and contains the following information:

(1) The title of the form; (2) how often the required information must be reported; (3) who will be required or asked to report; (4) what the form will be used for; (5) an estimate of the number of responses; (6) an estimate of the total number of hours needed to prepare the form. This entry is not subject to 44 U.S.C. 3504(h).

Title: Music Professional Training/Music Recording/Centers for New Music Resources Application Guidelines FY 1989:

Frequency of Collection: One-time

Respondents: State or local governments; Non-profit institutions

Use: Guideline instructions and applications elicit relevant information from non-profit organizations and state or local arts agencies that apply for funding under specific Program categories. This information is necessary for the accurate, fair and thorough consideration of competing proposals in the peer review process.

Estimated Number of Respondents: 250

Estimated Hours for Respondents to Provide Information: 11,800

Murray R. Welsh,

Director, Administrative Services Division, National Endowment for the Arts.

[FR Doc. 88-8909 Filed 4-21-88; 8:45 am]

BILLING CODE 7537-01-M

NATIONAL SCIENCE FOUNDATION

Committee Management; Renewal; Alan T. Waterman Award Committee

The Director of the National Science Foundation has determined that the renewal of the Alan T. Waterman Award Committee for an additional 2 years is necessary and in the public interest. This determination follows consultation with the Committee Management Secretariat, General Services Administation.

M. Rebecca Winkler,

Committee Management Officer.

April 19, 1988.

[FR Doc. 88-8862 Filed 4-21-88; 8:45 am]

BILLING CODE 7555-01-M

NUCLEAR REGULATORY COMMISSION

Advisory Committee on Reactor Safeguards Babcock and Wilcox Reactor Plants; Meeting

The ACRS Subcommittee on Babcock and Wilcox Reactor Plants will hold a meeting on May 3-4, 1988, Room 1046, 1717 H Street NW., Washington, DC.

The entire meeting will be open to public attendance.

The agenda for the subject meeting shall be as follows:

Tuesday, May 3, 1988—8:30 a.m. until the conclusion of business

Wednesday, May 4, 1988—8:30 a.m. until the conclusion of business

The Subcommittee will continue its review of the long-term safety review of B&W reactors.

Oral statements may be presented by members of the public with the concurrence of the Subcommittee Chairman; written statements will be accepted and made available to the Committee. Recordings will be permitted only during those portions of the meeting when a transcript is being kept, and questions may be asked only by members of the Subcommittee, its consultants, and Staff. Persons desiring to make oral statements should notify the ACRS staff member named below as far in advance as is practicable so that appropriate arrangements can be made.

During the initial portion of the meeting, the Subcommittee, along with any of its consultants who may be present, may exchange preliminary views regarding matters to be considered during the balance of the meeting.

The Subcommittee will then hear presentations by and hold discussions with representatives of the NRC Staff, its consultants, and other interested persons regarding this review.

Further information regarding topics to be discussed, whether the meeting has been cancelled or rescheduled, the Chairman's ruling on requests for the opportunity to present oral statements and the time allotted therefor can be obtained by a prepaid telephone call to the cognizant ACRS staff member, Mr. Richard Major (telephone 202/634-1414) between 7:30 a.m. and 4:15 p.m. Persons planning to attend this meeting are urged to contact the above named individual one or two days before the scheduled meeting to be advised of any changes in schedule, etc., which may have occurred.

Date: April 18, 1988.

Thomas G. McCreless,

Assistant Executive Director for Technical Activities.

[FR Doc. 88-8885 Filed 4-21-88; 8:45 am]

BILLING CODE 7590-01-M

Advisory Committee on Reactor Safeguards, Subcommittee on Waste Management; Meeting

The ACRS Subcommittee on Waste Management will hold a meeting on

April 28, 1988, Room 1046, 1717 H Street NW., Washington, DC.

The entire meeting will be open to public attendance.

The agenda for the subject meeting shall be as follows:

Thursday, April 28, 1988—8:30 a.m. until the conclusion of business

The Subcommittee will receive a briefing from the NRC Staff on their comments on DOE's Consultive Draft of the Site Characterization Plan (SCP) for the Yucca Mountain site. The DOE staff will address these comments and provide information as to how the points raised will be disposed of before submission of the SCP.

Oral statements may be presented by members of the public with the concurrence of the Subcommittee Chairman; written statements will be accepted and made available to the Committee. Recordings will be permitted only during those portions of the meeting when a transcript is being kept, and questions may be asked only by members of the Subcommittee, its consultants, and Staff. Persons desiring to make oral statements should notify the ACRS staff member named below as far in advance as is practicable so that appropriate arrangements can be made.

During the initial portion of the meeting, the Subcommittee may exchange preliminary views regarding matters to be considered during the balance of the meeting. The Subcommittee will then hear presentations by and hold discussions with representatives of the NRC Staff and other interested persons regarding this review.

Further information regarding topics to be discussed, whether the meeting has been cancelled or rescheduled, the Chairman's ruling on requests for the opportunity to present oral statements and the time allotted therefor can be obtained by a prepaid telephone call to the cognizant ACRS staff member, Mr. Owen S. Merrill (telephone 202/634-1413) between 7:15 a.m. and 4:15 p.m. Persons planning to attend this meeting are urged to contact the above named individual one or two days before the scheduled meeting to be advised of any changes in schedule, etc., which may have occurred.

Date: April 18, 1988.

Thomas G. McCreless,

Assistant Executive Director for Technical Activities.

[FR Doc. 88-8886 Filed 4-21-88; 8:45 am]

BILLING CODE 7590-01-M

Advisory Committee on Reactor Safeguards, Subcommittee on Waste Management; Meeting

The ACRS Subcommittee on Waste Management will hold a meeting on May 4, 1988, Room 1167, 1717 H Street NW., Washington, DC.

The entire meeting will be open to public attendance.

The agenda for the subject meeting shall be as follows:

Wednesday, May 4, 1988—8:30 a.m. until the conclusion of business

The Subcommittee will receive a briefing from the NRC Staff on the questions of Below Regulatory Concern (BRC) and de minimis materials. Other agencies, such as EPA, are expected to attend and provide background information.

Oral statements may be presented by members of the public with the concurrence of the Subcommittee Chairman; written statements will be accepted and made available to the Committee. Recordings will be permitted only during those portions of the meeting when a transcript is being kept, and questions may be asked only by members of the Subcommittee, its consultants, and Staff. Persons desiring to make oral statements should notify the ACRS staff member named below as far in advance as is practicable so that appropriate arrangements can be made.

During the initial portion of the meeting, the Subcommittee may exchange preliminary views regarding matters to be considered during the balance of the meeting. The Subcomittee will then hear presentations by and hold discussions with representatives of the NRC Staff and other interested persons regarding this review.

Further information regarding topics to be discussed, whether the meeting has been cancelled or rescheduled, the Chairman's ruling on requests for the opportunity to present oral statements and the time allotted therefor can be obtained by a prepaid telephone call to the cognizant ACRS staff member, Mr. Owen S. Merrill (telephone 202/634-1413) between 7:15 a.m. and 4:15 p.m. Persons planning to attend this meeting are urged to contact the above named individual one or two days before the scheduled meeting to be advised of any changes in schedule, etc., which may have occurred.

Date: April 18, 1988.

Thomas G. McCreless,

Assistant Executive Director for Technical Activities.

[FR Doc. 88-8887 Filed 4-21-88; 8:45 am]

BILLING CODE 7590-01-M

[Docket No. 50-341]

Detroit Edison Co. and Wolverine Power Supply Cooperative, Inc. (Fermi-2); Exemption

I

Detroit Edison Company (DECo) and the Wolverine Power Supply Cooperative, Incorporated (the licensees) are the holders of Facility Operating License No. NPF-43 which authorizes the operation of the Fermi-2 facility at steady-state power levels not in excess of 3292 megawatts thermal. The license provides, among other things, that it is subject to all rules, regulations and Orders of the Nuclear Regulatory Commission (the Commission) now or hereafter in effect.

The facility is a boiling water reactor (BWR) located at the licensees' site in Monroe County, Michigan.

II

10 CFR Part 50, Appendix J, Section III.D.2, states: Type C tests. Type C tests shall be performed during each reactor shutdown for refueling but in no case at intervals greater than 2 years.

The tests would become due at Fermi-2 for the isolation valves which are the subject of this Exemption on April 28, 1988. The tests necessary to meet this section of Appendix J to 10 CFR Part 50 are required by Technical Specification 4.6.1.2.b of the Fermi-2 Technical Specifications.

III

By letter dated February 22, 1988, the licensees requested an exemption from section III.D.3 of Appendix J to 10 CFR Part 50 for certain Residual Heat Removal (RHR) shutdown cooling isolation valves. The licensees requested that the initial 24-month testing interval for three RHR shutdown cooling inboard isolation valves (E11-F009, E11-F408, E11-F608) be extended on a one-time basis until the first refueling outage which should be no later than the end of 1989.

The licensees have indicated that performing the leak testing on these three valves will require one or both of the following plant conditions:

(a) Reactor vessel head removal;

(b) Both RHR shutdown cooling loops rendered inoperable.

The licensees have currently scheduled the next reactor head removal operation to occur during the first refueling outage. To render both loops of RHR shutdown cooling inoperable, the licensees would either be required to remove the drywell and reactor heads and flood the vessel, or wait until decay

heat is reduced such that the reactor could be cooled by alternate means. No planned outages of this duration will occur until the first refueling outage.

The first refueling outage is scheduled at the end of 1989. Reactor head removal and a reactor coolant boundary leakage test will be required during this outage. Performance of the leak tests for the containment isolation valves during this outage would bring the test schedule into alignment with the fuel cycle. Thus, the licensees indicated that the time to perform the required testing has been accounted for in planning the first refueling outage.

The two-year testing intervals for containment isolation valves are intended to be often enough to prevent significant deterioration from occurring and long enough to permit LLRTs to be performed during plant outages. This provides assurance that the overall containment leakage limits will not exceed the value assumed in the accident analysis, even when accounting for possible degradation of the leakage barriers between leakage tests.

The licensees have stated that the three RHR shutdown cooling valves, which are the subject of this one-time exemption to the Appendix J testing interval, were all tested successfully on August 27, 1984, during pre-operational testing, resulting in a combined penetration leakage of 0.35 scfh, on May 28, 1985, resulting in a combined penetration leakage of 1.59 scfh, and on April 20, 1986, resulting in a combined leakage of 1.68 scfh. The total of the Type C leakage rates for these valves in the last test is not a significant portion (0.94%) of the allowable leakage limit (0.6La). These valves have not been refurbished since they were first tested and the values reported represent all the leak test data on these valves.

The RHR shutdown cooling inboard isolation valves are normally closed at power operation and any deterioration in the overall integrity of these valves is expected to be a gradual process. The licensees stated that the RHR system is monitored for leakage per the Fermi-2 Leakage Reduction Program. This program is required by plant Technical Specification 6.8.5 and requires measuring and recording any leakage from the system and its components during operation in various operating modes. Considering this and the small number of valves (three) involved, there is nothing found in the information which would indicate that the one-time interval extension of about 18 to 20 months for these RHR shutdown cooling inboard isolation valves would have a sudden detrimental effect on the overall leak rates of the valves involved.

In support of the requirements of 10 CFR 50.12 for demonstration that special circumstances exist with respect to the requested exemption, the licensees have stated that pursuant to 10 CFR 50 12(a)(2), (ii) and (iv), the following special circumstances exist:

Section 50.12(a)(2)(ii)—Application of the 10 CFR Part 50, Appendix J requirements in this situation for testing within two years would not serve the underlying purpose of the regulation, which is to ensure testing after two years in an operating environment. Since Fermi 2 did not exceed 5% power until September 1986 and 50% power until December 1987, none of the valves in question will have been exposed to a significant operating pressure environment. The core average exposure through February 22, 1988 was only 112 EFPD. This is compared to approximately 335 EFPD remaining in the cycle. The requested extension of time does not conflict with the intent of the rule and defers the testing requirement intended by 10 CFR 50, Appendix J to the first refueling outage.

Section 50.12(a)(2)(iv)—The requested exemption would result in benefit to the public health and safety that compensates for any decrease in safety that may result from the granting of the exemption. The increased benefit would be from not having to remove both loops of RHR from operation in order to perform the testing from which Detroit Edison is asking to be exempted. Removal of both RHR loops necessitates reliance solely on alternate means of reactor core cooling (decay heat removal).

The Commission's staff has reviewed the licensees' description of the special circumstances relative to this exemption request and has determined that special circumstances as required 10 CFR 50.12 fo exist.

Furthermore, the Commission's regulations in 10 CFR 50.12(a)(2)(v) state that special circumstances exist when the exemption would provide only temporary relief form the applicable regulation and that the applicant or licensee has made good faith efforts to comply with the regulation. The requested exemption is a one-time schedular exemption to delay LLRTs for three RHR shutdown cooling inboard isolation valves until the first refueling outage. The licensees will complete LLRTs of all other containment isolation valves involving several hundred valves. However, due to plant constraints it is not possible to complete testing on these remaining three valves during the LLRT outage without significantly extending the outage for the sole purpose of conducting these LLRTs. The staff has determined that the licensees have demonstrated a good faith effort to comply with the Appendix J requirement to conduct LLRTs on containment isolation valves.

IV

Accordingly, the Commission has determined that, pursuant to 10 CFR 50.12(a), the requested exemption is authorized by law, will not present an undue risk to the public health and safety, and is consistent with the common defensed and security. Further, the Commission finds that special circumstances are present in that the requested exemption is temporary in nature and the licensees have made a good faith effort to comply with the regulation. Therefore, the Commission hereby grants the following Exemption from the requirements of section III.D.3 of Appendix J to 10 CFR Part 50:

The two-year limit on the Type C testing interval for the three valves (E11–F009, E11–F408 and E11–F608) is extended on a one-time basis until prior to startup from the first refueling outage for Fermi-2 which should be no later than the end of 1989.

Pursuant to 10 CFR 51.32, the Commission has determined that granting this Exemption will have no significant impact on the environment (53 FR 12616).

For further details with respect to this action, see DECo's request dated February 22, 1988, which is available for public inspection at the Commission's Public Document Room, 1717 H Street NW., Washington, DC 20555 and at the Monroe County Library System, 3700 South Custer Road, Monroe, Michigan 48161.

This Exemption is effective upon issuance.

For the Nuclear Regulatory Commission.

Dennis M. Crutchfield,

Director Division of Reactor Projects—III, IV, V & Special Projects.

Dated at Rockville, Maryland, this 15th day of April 1988.

[FR Doc. 88–8863 Filed 4–21–88; 8:45 am]

BILLING CODE 7590-01-M

PANAMA CANAL COMMISSION

Agency Information Requests Submitted to the Office of Management and Budget for Clearance

AGENCY: Panama Canal Commission.

ACTION: Notice of information collection requests; revision.

SUMMARY: In accordance with the requirements of the Paperwork Reduction Act of 1980 (Pub. L. 96–511), as amended, the Panama Canal

Commission (PCC) hereby gives notice that it has submitted to the Office of Management and Budget (OMB) a proposal (SF-83, Request for OMB Review) to extend a currently approved collection of information contained in Subchapter C (Shipping and Navigation) of Chapter I, Title 35, Code of Federal Regulations (CFR) and a request for approval to extend the expiration date of a currently approved collection of information designated Personnel Administration Forms.

ADDRESS: Comments may be sent to Sam Fairchild, Information Desk Officer, Office of Information and Regulatory Affairs, Office of Management and Budget, Room 3228, New Executive Office Building, Washington, DC 20503.

FOR FURTHER INFORMATION CONTACT: For a complete copy of the information collection request or related information, contact Barbara Fuller, Office of the Secretary, Panama Canal Commission, telephone (202) 634-6441.

SUPPLEMENTARY INFORMATION:

• Subchapter C (Shipping and Navigation) of Chapter I, 35 CFR.

On December 24, 1981, OMB approved an information collection proposal submitted by the Panama Canal Commission in conjunction with a revision of its navigation regulations (35 CFR Chapter I, Subchapter C), and assigned it the control number 3207-0001. The forms required by those regulations, which make up the collection of information are used to collect, from vessels arriving in the Panama Canal waters, information required for assuring that the vessels are in compliance with Panama Canal Commission shipping and navigation regulations. The information collected will be used for economic analyses, traffic forecasting, identification, billing, safety and sanitation purposes.

It is estimated that the burden (which varies widely, depending upon the nature of each vessel's operations) for cargo vessels ranges from one and one-half hours to three and one-half hours and for passenger vessels, the range would be from approximately two hours to thirteen hours. The utilization of computer generated crew and passenger lists should reduce by eight to ten hours the time requried of a vessel like the QUEEN ELIZABETH 2. (The smallest "passenger" vessels carry about 13 passengers and the largest, the QUEEN ELIZABETH 2, is capable of accomodating about 1,879.) The estimated total hours of annual burden is 28,400. It would be very difficult to provide a meaningful estimate of the total burden for each vessel since some transit frequently, while others may transit only once or infrequently.

Unchanged forms which are part of the information collection request of Subchapter C, Chapter I of Title 35, Code of Federal Regulations are: PCC Form No. 4502, Ship Data Bank—SHIP ADD; PCC Form No. 4398, Ship's Information and Quarantine Declaration; PCC Form No. 1509, Crew List for Incoming Vessels; PCC Form No. 20, Passenger List.

Forms which have been modified are:

PCC Form No. 4401-48, Admeasurement Data Book (for large ships) is being revised by rearranging the items to make it easier to understand and the information easier to track. No new information is being requested and the Paperwork Reduction Act statement has been added.

PCC Form No. 4470, Bilge Keel Information, was revised to indicate that the form is required from vessels with a Tropical Fresh Water Draft of 35 feet 6 inches or greater, the same information as indicated in Title 35 Code of Federal Regulations, Chapter I, Subchapter C. The information requested on this form is needed for every transit, but is collected only once. The Paperwork Reduction Act statement has been added.

PCC Form No. 4541 was assigned to the unnumbered Ammunition and Explosives Report and a Paperwork Reduction Act Statement was added. There is no new information added to the form.

PCC Form No. 4363, Cargo Declaration was updated to include "Round-the-World" in the Voyage Type section.

PCC Form No. 4400, The Panama Canal Tonnage Certificate, was revised to show the correct legal reference to be the Code of Federal Regulations (CFR) rather than the Articles in the Rules of Admeasurement of 1938 which were rewritten in 1976 and renumbered the same as the CFR. The PCC maintains blank printed copies of the Tonage Certificate to make them available to measurement authorities of foreign countries that may request blank sample certificates, but the actual Tonnage Certificate (issued by PCC) required by vessels that transit the Canal, is generated by computer and the information corresponds in substance and form to the (prescribed) sample certificate.

The Panama Canal Commission proposed an amendment effective October 13, 1987 (52 FR 37952) to 35 CFR 103.8 concerning preferences in the transit schedule and order of transiting vessels in the Panama Canal. These changes take into account the agency's experience with the Panama Canal Transit Booking System and the needs of Canal users by revising the tie-breaking procedures, relaxing the arrival time for restricted vessels and changing the cancellation provisions of the present rules. Accordingly, the existing forms known as "Request for Transit Booking," PCC Form No. 4623, and "Transit Booking Cancellation," PCC Form No. 4633, have been modified to meet these requirements. No new information is being required.

PCC Form No. 4401-16, Admeasurement Data Book (for yachts and small craft) will be revised primarily for clarification more than anything else. Pages 1-4 will be identical to the Admeasurement Data Book for large ships. The Paperwork Reduction Act Statement will be added.

It is proposed to add PCC Form No. 4611, Vessel Requirement Facilities Report to this collection of information.

The document, List of Electronic Equipment (unnumbered), was deleted from this collection of information.

• Personnel Administration Forms.

On January 20, 1982, OMB approved an information collection proposal submitted by the Panama Canal Commission and assigned it the control number 3207-0005. It is proposed to continue using this information collection with minor revisions to the forms. Ten (10) forms no longer needed by the Central Examining Office are dleted from this collection of information, thirteen (13) forms have been revised, one initially submitted, but not translated into Spanish is now being included and the addition of two forms in the English and Spanish language are proposed. The changes are as follows:

Abolished:

11a Check list for Bookbinder, Bindery and Finish Worker, and Papercutter Operator

11b Check list for Hand Compositor, Linotype Operator, Monotype Casting Machine Operator

563 Supplementary Qualifications Form for Graduate Nurse, Examinations

584 Supplemental Experience Statement for Panama Canal Guide, Positions

590-C (English) Supplemental Application for Carpenter, Cabinetmaker, Joiner, Modelmaker, Patternmaker, Millman, Machine, Woodworker, Packer and Crater, Boatbuilder (Wood), Shipwright, Wharfbuilder, and Related Jobs

590-C (Spanish) Solicitud Adicional para Carpintero, Ebanista, Modelista, Plantillero, Aserrado, Operario de Maquina de Ebanisteria, Embalador y

Empacador, Constructor de Botes (Madera), Constructor de Buques, Constructor de Muelles, y Trabajos Relacionados

590–N Supplemental Application for Operating Engineer Jobs

590–Q Supplemental Application for Custodial Service Superintendent of Building, Engineman-Janitor (Operator), Pumping, Sewage Disposal or Filter Plant, Watertender, Fireman, and Related Jobs

590–SW Supplemental Application for Shipwright

660 Supplemental Qualifications Statement for Game Warden

Revised:

445–A Registration Information for Apprentice Examinations (Rev. 2–87)

445–B Inscripcion para los Examenes de Aprendiz Especializado (Spanish translation of Form 445–A) (rev. 2–87)

497 (English) Confidential Qualifications Inquiry (Rev. 1–88)

497 (Spanish) Consulta Confidencial Sobre Aptitudes (Rev. 1–88)

500 (English) Supplemental Qualification Statement (Rev. 7–87)

500 (Spanish) Declaration Suplementaria de Experiencia (Rev. 7–86)

513 Application Record Card (Rev. 2–87)

523 Inquiry as to Availability (Rev. 7–86)

523–A Disponibilidad para Empleo

528 Request for Change/Action-Solicitud de Cambio/Accion (Rev. 10–87)

536 Solicitud de Empleo (Rev. 10–87)

536–A Hoja de Continuacion al Formulario 536 (Spanish translation of SF–171–A) (Rev. 10–87)

540 List of College Courses-To Accompany Application for Federal Employment (Rev. 11–87)

574 Supplemental Qualifications Statement-Equal Opportunity Specialist NM–5/12 (Rev. 9–86)

Translated:

590–M (Spanish) Solicitud Suplementaria para Cocinero (Rev. 6–85)

Added:

590–T (English) Supplemental Application for Tool and Cutter Grinder, Toolmaker, Toolroom Mechanic and Related Jobs

590–T (Spanish) Solicitud Adicional para Amolador de Herramientas y Cortadoras, Fabricante de Herramientas, Mecanico de Cuarto de Herramientas y Trabajos afines

590–U (English) Supplemental Application for Electrical Equipment Repairer, Electrical Equipment Worker and Related Jobs

590–U (Spanish) Solicitud Adicional para Reparador de Equipo Electrico, Trabajador de Equipo Electrico y Trabajos afines.

The remainder of the forms in this information collection remain unchanged.

The Forms which are included in this collection of information are needed to determine the qualifications, suitability and availability of applicants for Federal employment in the Canal area so that U.S. Government agencies can be supplied with eligibles to fill vacant positions. The information is used by Central Examining Office employees performing examining duties; by subject matter experts on rating panels; and by agency officials making selections to fill vacancies.

The total time required for applicants for employment to respond to the information collection is estimated to be four (4) hours to complete a full application and one-half hour to complete forms which update an application already on file. In some cases certain positions may require an additional response time averaging one and one half (1½) hours for the completion of a supplemental statement to measure specific knowledge, skills and abilities. There are approximately 8,431 respondents who complete application forms annually, of which 5,109 complete full applications and 3,322 complete forms to update an application already on file. The total burden required annually for persons to respond to this collection of information is estimated at 22,097 hours.

Date: April 19, 1988.

Fernando Manfredo, Jr.,

Deputy Administrator Senior Official for Information Resources Management.

[FR Doc. 88–8927 Filed 4–21–88; 8:45 am]

BILLING CODE 3640-04-M

SECURITIES AND EXCHANGE COMMISSION

[Release No. 34–25601; File No. SR–NASD–88–11]

Self-Regulatory Organizations; National Association of Securities Dealers, Inc.; Proposed Rule Change for Permanent Approval of the Order Confirmation Transaction Service and a Modification in Usage Procedures

Pursuant to section 19(b)(1) of the Securities Exchange Act of 1943 ("Act"), 15 U.S.C. 78s(b)(1), notice is hereby given that April 1, 1988, the National Association of Securities Dealers, Inc. ("NASD") filed with the Securities and Exchange Commission ("Commission") the proposed rule change as described in Items I, II, and III below, which Items have been prepared by the self-regulatory organization. The Commission is publishing this notice to solicit comments on the proposed rule change from interested persons.

I. Self-Regulatory Organization's Statement of the Terms of Substance of the Proposed Rule Change

The NASD hereby files a proposed rule change, pursuant to section 19(b)(1) of the Act and Rule 19b–4 thereunder, to obtain the Commission's approval of the Order Confirmation Transaction service ("OCT") on a permanent basis and approval of a modification in established procedures for use of the OCT.

The OCT is a National Association of Securities Dealers Automated Quotation ("NASDAQ") system enhancement that provides an alternative medium for retail firm's to contact market makers, and for market makers to contact one another, in order to negotiate trades and confirm executions when market conditions impede performance of these routine functions by telephone. The access terms and operational procedures for use of the OCT were fully described in the NASD's original rule filing on this matter, File No. SR–NASD–87–54.[1] In addition to permanent status for the OCT, the instant filing proposes a modification that would allow OCT participants to enter/accept partial executions of individual orders. Presently, to consummate an execution via the OCT, a market maker must accept an order in its entirety. The proposed modification would not, however, alter a market maker's obligation to honor his current bid (offer) up to the displayed size. The allowance of entry and acceptance of partial executions is intended to facilitate usage of the OCT respecting orders that significantly exceed a market maker's displayed size.

II. Self-Regulatory Organization's Statement of the Purpose of, and Statutory Basis for, the Proposed Rule Change

In its filing with the Commission, the self-regulatory organization included statements concerning the purpose of

[1] Previously, the Commission granted approval of the OCT for three months. *See* Securities Exchange Act Release No. 25283 (January 11, 1988) approving File No. SR–NASD–87–54 on a temporary basis. On March 17, 1988, the NASD submitted File No. SR–NASD–88–10 to obtain a one-month extension of that interim approval, and such extension was approved on March 28, 1988. *See* Securities Exchange Act Release No. 25523 (March 28, 1988).

BEST COPY AVAILABLE

and basis for the proposed rule change and discussed any comments it received on the proposed rule change. The text of these statements may be examined at the places specified in Item IV below. The self-regulatory organization has prepared summaries, set forth in sections (A), (B) and (C) below, of the most significant aspects of such statements.

A. Self-Regulatory Organization's Statement of the Purpose of, and Statutory Basis for, the Proposed Rule Change

The purposes of this filing are twofold: (1) To obtain permanent approval of the OCT and (2) to implement a change in OCT procedures that will enable the entry and acceptance of partial executions on orders entered through the OCT.

Permanent Status

The OCT was designed to supplement communications facilities available to support the continuous, orderly operation of the NASDAQ market during difficult or unusual market conditions like those experienced in October of 1987. Essentially, the OCT has increased communications capacity by enabling eligible firms to enter electronic messages through NASDAQ Level 2/3 authorized terminals or NASDAQ Workstations™, in lieu of telephonic communication, to negotiate and confirm executions. Because the OCT relies upon the NASDAQ communications network and because the greatest use of OCT would likely occur during periods of high volume, the Commission staff had expressed some concern about the capacity of the NASDAQ system to accommodate a sudden surge in OCT traffic. Additionally, the Commission staff questioned the NASD's ability to monitor OCT messages to identify possible instances of market makers' failing to honor quoted markets. Given these factors, the Commission granted temporary approval of the OCT pending receipt of additional information on these issues. The NASD believes that the following information responds fully to the Commission's concerns and that permanent status is now appropriate for the OCT.

System Capacity

The OCT function operates on TANDEM processors totally separate from the 1100 NASDAQ System. It is connected to the traders through the NASDAQ network and terminals. However, that network on a daily basis processes more than 1 million transactions. Since initial implementation, average daily traffic of OCT's has been approximately 100 entries. Even if this number were to be increased by two orders of magnitude to 10,000 per day, a number which has been experienced in SOES under heavy traffic conditions, it would still be a small percentage of the total traffic handled on the network and would not degrade NASDAQ services. In any case, traffic on the NASDAQ network is monitored on a daily basis and adjustments made as necessary.

Surveillance Procedures

During the trading day, the NASD monitors OCT usage by means of an automated exception system that generates on-line alerts in hardcopy form. An alert occurs whenever an order entered through the OCT is rejected or expires.[2] Each alert is promptly reviewed to ascertain whether the preferenced market failed to honor his quoted market in the subject security.[3] The assigned analysts conduct this review by retrieving the inside quotes along with those of the affected market maker as of the time the OCT order was entered. To facilitate prompt reviews, the interrogation device is located beside the printer that generates OCT alerts. If this review indicates possible backing away, an analyst promptly contacts the market by telephone to seek an explanation and/or verification of corrective action. To date, this monitoring process has not identified any instance of a market maker failing to honor the quoted market. Most often, the OCT alerts consist of orders that were declined (or allowed to expire) because they exceeded the market maker's displayed size or were priced away from the displayed quotes. Since implementation of the OCT, the volume of alerts has remained low with a range of ten to twenty-five per day out of the total orders entered. More recently, the volume of alerts has trended downward as member firms have gained experience in using the OCT.

The NASD submits that the foregoing procedures are adequate to assure proper handling of orders entered through the OCT. Moreover, the proposed modification to accommodate partial executions of larger orders should reduce the number of alerts attributable to the "size" factor.

Partial Execution Feature

To provide greater flexibility to firms electing to use the OCT, the NASD has developed a technical enhancement to permit partial executions in accord with parameters specified by the initiating firm. For example, an order entry firm could transmit an order via the OCT to buy 5,000 shares of ABCD at 10½ (the inside offer) from a designated market maker displaying an offer of 500 shares of ABCD at 10½. Using the proposed enhancement, the initiating firm could stipulate (at the time of entry) that it will accept a minimum of 2,000 shares of ABCD at 10½. Upon receipt of the order, the designated market maker can decide whether to confirm an execution within the specified size range, *i.e.*, 2,000–5,000 shares.[4] Alternatively, the market maker could respond with a counter offer, *e.g.*, to sell 5,000 shares of ABCD at 10⅝. The order entry firm would then have the option to reject or accept the counter offer.

In essence, the partial execution feature provides greater flexibility in negotiating execution terms through the OCT. This added flexibility is achieved by an interchange of electronic messages that more closely approximates the negotiation of executions via telephone. In particular, the partial execution feature will facilitate use of the OCT to consummate transactions that would not be eligible for execution through the NASD's Small Order Execution System ("SOES"). As such, the proposed enhancement advances the central concept underlying the OCT, namely, to provide a supplemental communications medium for use when market conditions render telephonic communication infeasible.

The NASD believes that sections 11A and 15A of the Act provide the statutory bases for permanent approval of the OCT as well as the partial execution feature. Specifically, subsections (A)–(D) of section 11A(a)(1) articulate the broad findings and policy goals which the Congress intended to guide the operational enhancement of the nation's securities markets. In this context, the Congress underscored the importance of applying new data processing and communications techniques to assure (1): more efficient and effective market

[2] The firm receiving an OCT message has two minutes to respond. If the receiving firm does not respond within that period, the order is automatically cancelled, and a cancellation message is sent to the initiating firm.

[3] The hardcopy alert contains the following data: identity of initiating firm; date; branch and registered representative identifiers; buy/sell indication, size, price, and security identifier; identity of receiving firm; time and reason for alert (*i.e.*, rejected or expired order).

[4] If the market maker in this example attempted to enter an acceptance for less than 2,000 shares, the system would automatically reject that message. However, if the order entry firm had specified all-or-none as to the buy order for 5,000 shares of ABCD at 10½, the market maker could respond with a counter offer for a lesser size or higher price.

operations; (2) economically efficient execution of securities transactions; (3) broad availability of information with respect to quotations for and transactions in securities; and (4) the optimal execution of investors' orders. The design and operational features of the OCT, including the partial execution enhancement, comport fully with these Congressional directives.

The instant proposal is also supported by subsection (b)(6) of section 15A under the Act. Among other things, that provision requires that the NASD's rulemaking initiatives be designed to: (1) promote just and equitable principles of trade; (2) foster cooperation and coordination with persons engaged in regulating, clearing, settling, processing information with respect to and facilitating transactions in securities; (3) perfect the mechanism of a free and open market and a national market system; and (4) protect investors and the public interest. As fully described in File No. SR–NASD–87–54, the OCT augments the communications and order handling capacities of NASDAQ market makers. Although usage of the OCT is voluntary, the NASD views it as a vital, auxiliary communications system that will enable member firms to conduct business with one another when telephonic communications are unavailable or unfeasible due to unusual conditions. This communications capability will be enhanced by virtue of the partial execution feature previously described. The back-up capability embodied in the OCT promotes continuity in NASDAQ market operations in order to service all classes of investors. This result is fully consistent with the above-cited portions of Section 15A(b)(6) of the Act.

B. Self-Regulatory Organization's Statement on Burden on Competition

Commission approval of the OCT on a permanent basis will not result in the imposition of any competitive burden. This conclusion is supported by several factors. First, the OCT is an enhancement of the facilities that support market making in NASDAQ securities by member firms. This type of enhancement does not alter the established terms of access respecting vendors' receipt of NASDAQ market information for re-distribution to diverse groups of end-users. Second, the OCT enhancement does not pose a competitive burden upon NASDAQ market makers and other eligible members. By design, the OCT is an auxiliary mechanism that eligible firms may employ to conduct business when telephonic communication is not feasible. Accordingly, the OCT has been structured to accommodate conveyance of the same basic elements of information which firms communicate in negotiating and executing tranactions via the telephone. Third, the OCT enhancement does not impose more stringent market making obligations on participating firms. Rather, it provides an alternative, voluntary mechanism which market makers and order-entry firms can use to conduct their routine business. In this regard, the flexibility provided by the partial execution feature should increase the efficiency and utility of the OCT especially under difficult market conditions. Fourth, firms voluntarily electing to use the OCT must have clearing arrangements through a registered national clearing entity. The NASD asserts that this requirement does not constitute an undue limitation on voluntary use of the service. Moreover, the NASD believes that the potential benefits to the industry and public investors from voluntary participation in the OCT materially outweigh the clearing requirements minimal impact upon ineligible firms during periods of unusual market activity.

Based on the foregoing, it is believed that no competitive burden will result from the Commission's approval of this filing.

C. Self-Regulatory Organization's Statement on Comments On the Proposed Rule Change Received From Members, Participants, or Others

The NASD did not solicit comments from the membership prior to submission of this or the earlier Rule 19b–4 filings dealing with the OCT. After the Commission's temporary approval of OCT on January 11, 1988, the NASD issued Notice-to-Members 88–6 (January 15, 1988) which announced implementation of the OCT and outlined usage procedures. Shortly thereafter, one member firm submitted a comment letter regarding the OCT.[5] The commentator expressed concerns regarding best execution, all-or-none treatment of OCT orders, potential price manipulation, and lack of information on the procedures for scanning orders previously entered through the OCT during the trading day.

The concerns expressed in this comment letter were given active consideration in the course of NASD's monitoring of OCT usage prior to submission of this rule filing. The stated concerns about inferior execution of retail orders and potential price manipulation by entry of large orders outside the prevailing market have not been substantiated by the NASD's specialized surveillance of the OCT or by other routine surveillance procedures. Similarly, the Association has received no complaint from an order entry firm respecting the possibility of interior executions being accorded to orders consummated via the OCT. The commentator's suggestion for a partial execution feature is addressed elsewhere in this filing. Finally, the need for additional guidance on use of the OCT has been addressed by telephonic communications with member firms and the issuance of a procedural guide.

The tenor of the commentator's observations suggests a misperception of the OCT as an automated execution system for inter-dealer trades that would be comparable to the SOES for agency orders. In fact, the commentator opined that opening SOES to proprietary orders would obviate the need for the OCT. The NASD wishes to reiterate that the central purpose of OCT is to provide an auxiliary communications medium not an automated execution system. Although firms can elect to use the OCT under varying market conditions, its functional parameters require the affirmative acceptance of an order to produce a locked-in trade. In this respect, the operation of the OCT differs markedly from SOES.

III. Date of Effectiveness of the Proposed Rule Change and Timing For Commission Action

Within 35 days of the date of publication of this notice in the **Federal Register** or within such longer period (i) as the Commission may designate up to 90 days of such date if it funds such longer period to be appropriate and publishes its reasons for so finding or (ii) as to which the self-regulatory organization consents, the Commission will:

(A) By order approve such proposed rule change, or

(B) Institute proceedings to determine whether the proposed rule change should be disapproved.

IV. Solicitation of Comments

Interested persons are invited to submit written data, views and arguments concerning the foregoing. Persons making written submissions should file six copies thereof with the Secretary, Securities and Exchange Commission, 450 Fifth Street NW., Washington, DC 20549. Copies of the submission, all subsequent amendments, all written statements with respect to

[5] Letter dated January 25, 1988 from Elroy Krumholz, Executive Vice President of Wechsler & Krumholz, Inc., to John T. Wall, Executive Vice President, Member and Market Services, National Association of Securities Dealers, Inc. A copy of this letter is attached.

the proposed rule change that are filed with the Commission, and all written communications relating to the proposed rule change between the Commission and any person, other than those that may be withheld from the public in accordance with the provisions of 5 U.S.C. 552, will be available for inspection and copying in the Commission's Public Reference Room. Copies of the filing will also be available for inspection and copying at the principal office of the NASD. All submissions should refer to file number SR-NASD-88-11 and should be submitted by May 9, 1988.

For the Commission, by the Division of Market Regulation, pursuant to delegated authority, 17 CFR 200.30-3(a)(12).

Dated: April 19, 1988.

Shirley E. Hollis,

Assistant Secretary.

[FR Doc. 88-8897 Filed 4-21-88; 8:45 am]

BILLING CODE 8010-01-M

Self-Regulatory Organizations; Applications for Unlisted Trading Privileges and of Opportunity for Hearing; Midwest Stock Exchange, Inc.

April 18, 1988.

The above named national securities exchange has filed applications with the Securities and Exchange Commission pursuant to section 12(f)(1)(B) of the Securities Exchange Act of 1934 and Rule 12f-1 thereunder, for unlisted trading privileges in the following stocks:

Finevest Foods Inc.
  Common Stock, $.01 Par Value (File No. 7-3237)
Wedgestone Financial, Inc.
  Shares of Beneficial Interest, $1.00 Par Value (File No. 7-3238)
Zenith Income Fund, Inc.
  Common Stock, $.01 Par Value (File No. 7-3239)
Weingarten Realty Investors
  Common Stock, $.03 Par Value (File No. 7-3240)

These securities are listed and registered on one or more other national securities exchange and are reported in the consolidated transaction reporting system.

Interested persons are invited to submit on or before May 9, 1988, written data, views and arguments concerning the above-referenced applications. Persons desiring to make written comments should file three copies thereof with the Secretary of the Securities and Exchange Commission, 450 Fifth Street NW., Washington, DC 20549. Following this opportunity for hearing, the Commission will approve the applications if it finds, based upon all the information available to it, that the extensions of unlisted trading privileges pursuant to such applications are consistent with the maintenance of fair and orderly markets and the protection of investors.

For the Commission, by the Division of Market Regulation, pursuant to delegated authority.

Jonathan G. Katz,

Secretary.

[FR Doc. 88-8848 Filed 4-21-88; 8:45 am]

BILLING CODE 8010-01-M

Self-Regulatory Organizations; Applications for Unlisted Trading Privileges and of Opportunity for Hearing; Philadelphia Stock Exchange, Inc.

April 18, 1988.

The above named national securities exchange has filed applications with the Securities and Exchange Commission pursuant to section 12(f)(1)(B) of the Securities Exchange Act of 1934 and Rule 12f-1 thereunder, for unlisted trading privileges in the following securities:

Affiliated Publications, Inc.
  Common Stock, $0.01 Par Value (File No. 7-3234)
Kennametal, Inc.
  Capital Stock, $1.25 Par Value (File No. 7-3235)
MGM/UA Communications Co.
  Common Stock, $1.00 Par Value (File No. 7-3236)

These securities are listed and registered on one or more other national securities exchange and are reported in the consolidated transaction reporting system.

Interested persons are invited to submit on or before May 9, 1988, written data, views and arguments concerning the above-referenced application. Persons desiring to make written comments should file three copies thereof with the Secretary of the Securities and Exchange Commission, 450 Fifth Street NW., Washington, DC 20549. Following this opportunity for hearing, the Commission will approve the application if it finds, based upon all the information available to it, that the extensions of unlisted trading privileges pursuant to such applications are consistent with the maintenance of fair and orderly markets and the protection of investors.

For the Commission, by the Division of Market Regulation pursuant to delegated authority.

Jonathan G. Katz,

Secretary.

[FR Doc. 88-8849 Filed 4-21-88; 8:45 am]

BILLING CODE 8010-01-M

[Release No. 34-25595; File No. SR-NASD-88-8]

Self-Regulatory Organizations; National Association of Securities Dealers, Inc.; Order Approving Proposed Rule Change

The National Association of Securities Dealers, Inc. ("NASD") submitted on February 25, 1988, a proposed rule change pursuant to section 19(b)(1) of the Securities Exchange Act of 1934 ("Act") and Rule 19b-4 thereunder to add section 68 to the NASD Uniform Practice Code, requiring NASD member firms that are participants in a registered clearing agency for purposes of clearing over-the-counter transactions to subscribe to and reconcile all eligible transactions through the NASD's Trade Acceptance and Reconciliation Service ("TARS").

Notice of the proposed rule change together with the terms of substance of the proposed rule change was given by the issuance of a Commission release (Securities Exchange Act Release No. 25437, March 9, 1988) and by publication in the **Federal Register** (53 FR 8832, March 17, 1988). One letter of comment was received with respect to the proposed rule change, strongly supporting its approval.[1]

The Commission finds that the proposed rule change is consistent with the requirements of the Act and the rules and regulations thereunder applicable to the NASD and, in particular, the requirements of sections 15A and the rules and regulations thereunder.

It is therefore ordered, pursuant to section 19(b)(2) of the Act, that the above-mentioned proposed rule change be, and hereby is, approved.

For the Commission, by the Division of Market Regulation pursuant to delegated authority, 17 CFR 200.30-3(a)(12).

Dated: April 18, 1988.

Jonathan G. Katz,

Secretary.

[FR Doc. 88-8951 Filed 4-21-88; 8:45 am]

BILLING CODE 8010-01-M

---

[1] Letter from Herbert I. Levitt, Spear, Leeds & Kellogg, to Jonathan G. Katz, Secretary, SEC, March 25, 1988.

[Release No. 34-25599; File No. SR-NYSE-88-02]

Self-Regulatory Organization; New York Stock Exchange, Inc.; Order Approving Proposed Rule Change

Pursuant to Section 19(b)(1) of the Securities Exchange Act of 1934 ("Act")[1] and Rule 19b-4 thereunder,[2] the New York Stock Exchange, Inc. ("NYSE" or "Exchange"), on February 25, 1988, submitted to the Securities and Exchange Commission ("SEC" or "Commission") a proposal to prohibit certain index arbitrage-related stock transactions after the Dow Jones Industrial Average ("DJIA") moves 50 or more points from the previous day's close. In a March 2, 1988 letter, the NYSE requested that its proposal be approved only on a six-month pilot basis.[3]

The proposed rule change was published for comment in Securities Exchange Act Release No. 25400 (February 26, 1988), 53 FR 7273.[4] The Commission received 34 comment letters relating to the NYSE proposal.

I. Descriptioin of the Proposal

The Exchange's proposed Rule 80A would prohibit members and member organizations from entering into any NYSE automated order routing or trading system (such as the Designated Order Turnaround System, known as "DOT" or "SuperDot") any order or other trading interest involving index arbitrage once the DJIA reaches a level 50 or more points above or below the previous day's close.[5] The restrictions would apply to customer, as well as proprietary, orders, and would remain in effect for the remainder of any trading day on which they become applicable.[6]

"Index arbitrage" would be defined in Rule 80A as trading of "baskets" or groups of stock in conjunction with the trading of one or more cash-settled options or futures contracts on stock index groups, or options on any such futures contracts (collectively referred to as "derivative index products") in an attempt to profit from price discrepancies between the stocks and the derivative index products. The index arbitrage definition would require only that the purchase or sale of the basket or group of stocks and the purchase or sale of the derivative index products be related. Those trades would not have to be executed simultaneously, as some index arbitrage strategies allow for time lags between the executions of the two legs of a transaction.

The NYSE also proposes to adopt under Rule 80A an interpretation requiring the Exchange to presume (absent a contrary showing) that a member or member organization that enters orders representing the stock and derivative index product legs of a transaction contemporaneously and at a time when the value of the derivative index product is at a premium or discount in relation to the index value[7] is engaging in index arbitrage. The Exchange would be free to determine that other situations involving trading of baskets of stocks constitute index arbitrage.

The Exchange proposes to include three exceptions to Rule 80A. First, Rule 80A would not apply to market-on-close orders transmitted on expiration Fridays. This would allow the liquidation of previously-established index arbitrage positions where the final value of the derivative index product is based on closing expiration Friday prices. This exception would not apply to Thursday market-on-close orders for securities traded in conjunction with derivative index products that settle based on opening expiration Friday stock prices, because Rule 80A's restrictions would not apply to opening trades, and therefore could not interfere with liquidation orders designed to receive the opening price.

Second, Rule 80A would not prohibit the execution of an order that a member transmits before the restrictions are triggered. The order would have to be en route to the point of execution (*e.g.*, the specialist's post via SuperDot), thus not requiring any further action by the member to effect the execution.

Third, Rule 80A would allow the NYSE to waive the index arbitrage restricitons "whenever such waiver appears justified to foster or maintain the efficiency, fairness or orderliness of the market." The Exchange would be required to provide notice of any such waiver "through electronic or other means."

In support of its proposal, the NYSE argues that Rule 80A would help reduce the significant volatility that recently has characterized the securities markets. The Exchange believes that index arbitrage may exacerbate market volatility. The Exchange also asserts that any examination of index arbitrage's market impact must take into account not only the argument that index arbitrage may increase the efficiency of the securities and derivative product markets, but also the professional and public perception that index arbitrage increases market volatility. The Exchange believes its restrictions would decrease volatility by "controlling the amount of risk rebounding into the stock market as a result of activity in the derivative product market."[8] In its ruling filing, the NYSE noted the significant member organization, listed company, and investor support for index arbitrage restrictions voiced at various Exchange meetings and in letters to the Exchange.[9]

II. Comments Received

A large majority of the 34 comment letters received by the Commission[10]

---

[1] 15 U.S.C. 78s(b)(1) (1982).

[2] 17 CFR 240.19b-4 (1988).

[3] Letter from Robert J. Birnbaum, President, NYSE, to Richard Ketchum, Director, Division of Market Regulation, SEC.

[4] The release contains the full text of the Exchange's proposed rule. 53 FR at 7274.

[5] The 50-point trigger represents approximately a 2.5% movement in the DJIA as it stood at the time the NYSE's rule filing was submitted to the Commission. Rule 80A would allow the Exchange to adjust the trigger 250-point movements of the DJIA to maintain the 2.5% relationship.

[6] While Rule 80A would require the Exchange to disseminate notice to members of the applicability of the index arbitrage restrictions, members would be subject to the restrictions whether or not such notice was disseminated or received. In addition, the restricti ons would apply even if the value of the DJIA were based on the prices of less than all of the 30 constituent stocks.

[7] The Commissin assumes, for purposes of this order, that the term "index value" refers to the index's theoretical fair value.

[8] 53 FR 7275.

[9] *Id.*

[10] Letters were received from the following: Leon Pordy, Chairman and Chief Executive Officer ("CEO"), Chock full o' Nuts (March 21, 1988); William J. Alley, Chairman and CEO, American Brands, Inc. (March 22, 1988); Franklin Myers, Vice President and General Counsel, Baker Hughes, Inc. (March 22, 1988); Duane A. Patterson, Secretary, Interco, Inc. (March 22, 1988); Rand V. Araskog, Chairman and CEO, ITT Corp. (March 23, 1988) ("ITT Letter"); John M. Delich, Chairman and CEO, Mutual of Omaha Fund Management Co. (March 23, 1988) ("Mutual of Omaha Letter"); Charles H. Harff, Senior Vice President, General Counsel and Secretary, Rockwell International Corp. (March 23, 1988); D.C. Wright, Vice Presdient and Chief Financial Officer ("CFO"), Great Northern Nekoosa Corp. (March 24, 1988); Richard A. Gilleland, Chairman and CEO, Intermedics, Inc. (March 24, 1988); Jean-Paul Valles, Vice President-Finance, Pfizer, Inc. (March 24, 1988); John H. Croom, Chairman and President, Columbia Gas System, Inc. (March 24, 1988); Don O. Dulude, President and CEO, Kuhlman Corp. (March 25, 1988); Robert A. Burnett, Chairman and CEO, Meredith Corp. (March 25, 1988); E.C. Gwaltney, Chairman and CEO, Russell Corp. (March 25, 1988); Charles W. Battey, Vice Chairman and CFO, United Telecommunications, Inc. (March 25, 1988); Fred L. Hartley, Chairman and CEO, Unocal Corp. (March 25, 1988); Thomas R. Donovan, President and CEO, Chicago Board of Trade (March 28, 1988) ("CBT Letter"); John D. Jackson, Vice President and Secretary, Fairchild Industries, Inc. (March 28, 1988); S.A. Brandimore, Executive Vice President and General Counsel, Florida Progress Corp. (March 28, 1988); John W. Teets, Chairman, President and CEO, Greyhound Corp. (March 28, 1988); A.E. Goebel, Vice President, Secretary and Treasurer, Southern Indiana Gas and Electric Co. (March 28, 1988); Drew

Continued

expressed strong support for the NYSE proposal.

In particular, these commentators cited the need to contain recent market volatility and prevent a repeat of last October's market events, even if it means placing controls on the markets. Commentators stressed the importance of restoring investor confidence in the markets and preserving the capital-raising function of the securities markets. Several commentators argued that the NYSE's current, voluntary restriction on index arbitrage trading, which was instituted on January 14, 1988 and essentially mirrors the proposal described herein, has helped reduce market volatility and restore investor confidence. Commentators' views were summed up by the statement that Rule 80A would be a "reasonable . . . compromise between those who feel that index arbitrage is a necessary tool of their trade and those of us who believe that steps must be taken to reduce the volatility in our capital markets if we are to recover and maintain public confidence in the markets." [11]

The Commission received comment letters critical of the NYSE's proposal from the Commodity Futures Trading Commission ("CFTC") the Chicago Board of Trade ("CBT"), and J.P. Morgan Investment Management, Inc. ("Morgan"). The CFTC acknowledged the validity of the NYSE's concerns about volitality and investor confidence but argued that index arbitrage transactions maintain "an efficient and direct linkage between the equity and derivative markets" [12] and typically are price-neutral because they involve offsetting buy and sell orders. The CFTC cited the assertion in the *Report of the Presidential Task Force on Market Mechanisms* ("Brady Report") that disconnection of the equity and futures markets during the October market break contributed to the stock market decline and "unsatisfactory market performance." [13] Last, the CFTC urged the Commission to pursue long-term, coordinated efforts on intermarket issues through inter-agency discussions and the President's Working Group on Financial Markets.[14]

While agreeing that market volatility should be reduced, the CBT in its letter argued that there is no proof index arbitrage exacerbates volatility. Instead, the CBT asserted that index arbitrage helps maintain the efficiency, fairness, and orderliness of the markets by keeping equity and derivative product prices in line with each other. The CBT noted its concern that the NYSE proposal actually could increase market volatility by causing selling pressures to be channelled independently to the securities and futures markets. The CBT argued that the market disconnection caused by DOT restrictions would prevent the two markets from being brought back into line by index arbitrage trading. The CBT cited the Brady Report assertions that index arbitrage restrictions contributed to instability during the October market break and that regulators and exchanges should implement coordinated, intermarket "circuit breaker" mechanisms. Finally, the CBT urged the NYSE to specify the conditions under which it could waive the index arbitrage restrictions.

Morgan, in its comment letter, also cited the advantages of index arbitrage and the lack of conclusive evidence that such trading increases market volatility.[15] Morgan argued that the NYSE proposal would merely increase the costs of index arbitrage, not eliminate such trading, thereby making equity and futures market reconciliation less frequent and efficient. Because market reconciliation would be cost-efficient only when the spreads between equity and index futures prices are significant, index arbitrage trading necessarily would involve greater price moves and market volatility. Morgan urged the NYSE to increase market efficiency and decrease volatility by reducing the costs of index arbitrage trading, so that such trading can occur more often and at narrower spreads. In particular, Morgan called for enhanced DOT capacity for index arbitrage trades and the creation of posts on the NYSE floor for market basket trading. Morgan also cited Brady Report concerns about disconnecting the equity and futures markets, particularly during crisis situations, and its belief that trading restrictions could drive equity trading overseas.

III. Commission Analysis

The Commission continues to believe that the "primary focus" in responding to the events of last October "should be on expanding the capacity of the markets through operational reforms and coordination measures,"[16] including efforts to enhance liquidity and improve information availability. Indeed, the Commission notes that the markets have undertaken a variety of steps to increase their capacities and that the President's Working Group currently is considering other measures to improve the performance of market mechanisms. Moreover, the Commission also continues to believe that index arbitrage trading serves a useful function by promoting accurate price relationships between derivative instruments and stock prices, thereby enhancing efficiency and the viability of trading strategies that rely on such pricing relationships.

Nevertheless, the Commission is concerned about the extreme volatility that characterized the U.S. securities markets during the last three months of 1987 and in early 1988. As noted in the Division of Market Regulation's report entitled *The October 1987 Market Break* (February 1988) ("Staff Report") and in various Commission testimony before

---

Lewis, Chairman and CEO, Union Pacific Corp. (March 28, 1988); John W. Hetherington, Vice President and Secretary, Westvaco (March 28, 1988) ("Westvaco Letter"); Robert L. Peterson, Chairman and CEO, IBP, Inc. (March 29, 1988); Lindsay Macarthur, Executive Vice President, Manufacturers Hanover Trust Co. (March 29, 1988); John T. Fogarty, Secretary, Schering-Plough Corp. (March 29, 1988); S.L. Prendergast, Vice President and Treasurer, AT&T (March 31, 1988); Michael E. Autera, Senior Vice President and CFO, Bristol-Myers Co. (April 1, 1988); Jean A. Webb, Secretary, Commodity Futures Trading Commission (April 1, 1988) ("CFTC Letter"); Roger A. Sayler, Managing Director, J.P. Morgan Investment Management, Inc. (April 1, 1988) ("Morgan Letter"); John E. Hulse, Vice Chairman and CFO, Pacific Telesis (April 4, 1988) ("Pacific Telesis Letter"); John G. Smale, Chairman and CEO, Procter & Gamble Co. (April 6, 1988); Frank W. Luerssen, Chairman and CEO, Inland Steel Indus. (April 8, 1988); Raymond A. Paul, Jr., Treasurer, Sun Company, Inc. (April 8, 1988) ("Sun Letter").

[11] ITT Letter, *supra* note 10, at 1. Commentators also addressed the need for additional measures to reduce market volatility. One commentator stressed the need for increased options margin requirements and insider trading investigations. *See* Westvaco Letter, *supra* note 10, at 1. Another commentator argued that derivative stock instruments should be eliminated or strictly limited in terms of price moves, and that there should be a single regulator for the futures, options and equities markets. *See* Mutual of Omaha Letter, *supra* note 10, at 2. Finally, one commentator suggested that all forms and methods of "program trading" should be prohibited during excessively volatile periods and that a "disinterested body" such as the Commission should promulgate such a prohibition. *See* Sun Letter, *supra* note 10, at 1–2.

[12] CFTC Letter, *supra* note 10, at 1.

[13] *Id.* at 1–2.

[14] *See* Exec. Order No. 12631, 53 FR 9421 (1988). Concerns about the need to pursue coordinated, intermarket efforts also were expressed in the Pacific Telesis Letter, *supra* note 10, at 1.

[15] Morgan distinguished between "common" volatility, which is the "standard deviation of market moves," and "equilibrium" volatility, which is the movement of stocks and futures toward the "true value of equities" as a result of index arbitrage trading. Morgan Letter, *supra* note 10, at 1.

[16] Testimony of David S. Ruder, Chairman, SEC, "Securities and Exchange Commission Recommendations Regarding the October 1987 Market Break," before the U.S. Senate Comm. on Banking, Housing, and Urban Affairs, at 7 (February 3, 1988) ("February 3rd Testimony").

Congress,[17] the Commission believes that index-related trading, including index arbitrage, was a factor in accelerating and exacerbating the severe market movements of the October market break, particularly on October 16 and during certain critical time periods on October 19 and 20.[18] While it may not be desirable under normal conditions to limit arbitrage trading strategies, during periods of extreme market volatility index arbitrage and other index-related trading strategies may at times overwhelm even the increased stock and futures market capacities with surges of trading volume. Thus the Commission continues to believe that it is prudent to adopt narrowly-tailored temporary measures to reduce liquidity demands until further market enhancements, such as cash market basket products, can be implemented.[19] The Commission recognizes the concerns expressed in both the Brady Report and the Commission's Staff Report that reduction of arbitrage may shift selling pressure to the stock market and discourage stock buyers because of the "billboard effect" resulting from futures price discounts. The Commission is not able to conclude, however, that these indirect effects exceed the direct effect of stock selling resulting from index arbitrage and other index-related trading strategies during periods of substantial volatility.[20]

In light of this uncertain environment and the need to increase investor confidence in the stability of the markets, the Commission believes it is appropriate for the self-regulatory organizations ("SROs") to develop experimental initiatives intended to ameliorate extreme stock price volatility. The Commission believes that the SROs, through their officers and governors, as well as member committees, have an intimate and thorough understanding of the operation of the markets and have the most direct stake in the successful functioning of those markets. Accordingly, the Commission believes the SROs should, and should be encouraged to, take the initiative to implement measures intended to ameliorate extraordinary market volatility.

The Commission is concerned that, in view of the fragile nature of investor confidence, it might be especially unsettling to disapprove a perceived response to market volatility [21] because of uncertainty regarding its usefulness as a long-term or permanent answer to market volatility. In this connection, although it is not yet clear, the NYSE's proposed restrictions, which have been in effect on a voluntary basis since January 14,[22] may have had some impact on market volatility. Since January 14, the DJIA on several occasions has moved between 40 and 50 points from the previous day's close, twice crossing the 50-point level.[23]

The Commission stresses that the NYSE's proposal is being approved not on a permanent basis but only for six months.[24] During the six-month pilot period, the NYSE and market participants will be able to evaluate more effectively the actual market impact of the restrictions.[25] The Commission is confident that the NYSE's response at the end of the pilot period will be based on the hard evidence derived from such actual market impact. This should place the Commission in a position to determine whether the extension or permanent approval of those restrictions is consistent with the terms of the Act and the rules and regulations thereunder. In the interim, the Commission will actively pursue, and expects that the NYSE and market participants also will pursue, various intermarket coordination efforts, such as coordinated trading halts and openings, currently being considered by the President's Working Group and in ongoing discussions among federal agencies and with and among the securities and futures exchanges. In addition, other means of addressing market volatility, such as the creation of a system for stock basket trading,[26] can be evaluated.

The Commission finds that the proposed rule change is consistent with the requirements of the Act and the rules and regulations thereunder applicable to a national securities exchange, and, in particular, the requirements of Section 6 [27] and the rules and regulations thereunder.

It therefore is ordered, pursuant to Section 19(b)(2) of the Act, [28] that the proposed rule change is approved.

By the Commission.

April 19, 1988.

Shirley E. Hollis,

Assistant Secretary.

[FR Doc. 88-8896 Filed 4-21-88; 8:45 am]

BILLING CODE 8010-01-M

[17] *See, e.g.*, February 3rd Testimony, *supra* note 10.

[18] *See* Staff Report at 2-4 through 2-24 and 3-11 through 3-13.

[19] *See* February 3rd Testimony, *supra* note 16, at 7.

[20] In this connection, the Commission notes that the Standard & Poor's 500 future traded at a low of 201.5 on October 19 and 181 on October 20, the equivalent of the DJIA reaching 1,612 and 1,443, respectively. The Commission also notes that many portfolio insurers did not sell all of the futures that their portfolio models required on October 19.

[21] The Commission notes that several press accounts have suggested that the voluntary DOT restrictions have been helpful in reducing volatility, although such a conclusion is premature. *See, e.g.*, Wallace, Computer Trade Curb Cheers Some Investors, *N.Y. Times*, March 26, 1988, at 41.

[22] The NYSE's original request to its members was for a voluntary restraint from using the Exchange's automated systems for index arbitrage on days when the DJIA moved 75 points or more. In conjunction with its decision to file the current proposal, the NYSE on February 4 moved the voluntary limit to 50 points.

[23] On April 14, 1988, the NYSE's voluntary restrictions on use of DOT for index arbitrage became applicable at approximately 1:54 p.m., when the DJIA crossed the 50-point threshold. As a result, member firms were precluded from effecting index arbitrage transactions through DOT for the remainder of that day's trading. At the close of trading, the DJIA was 101.46 points lower than the previous day's close, due primarily to unfavorable news about the U.S. trade deficit. On April 6, 1988, the DJIA crossed the 50-point threshold at approximately 3:20 p.m. At the close of trading, the DJIA was 64.16 points higher than the previous day's close. Indications are that the market's steep rise that day was orderly and due primarily to favorable news about the U.S. dollar.

[24] The Commission expects the NYSE to adopt explicit conditions as to when it would waive its index arbitrage restrictions, and to provide prompt and effective notice to members of any such waiver.

[25] The Commission expects the NYSE to develop criteria to evaluate the pilot. The Commission also expects the NYSE to evaluate alternative measures to curb extraordinary market volatility. Finally, the Commission wishes to emphasize that the absence or existence of volatility, in itself, would not necessarily demonstrate the effectiveness of the pilot.

[26] *See* Staff Report at 3-18.

[27] 15 U.S.C. 78f (1982).

[28] 15 U.S.C. 78s(b)(2) (1982).

DEPARTMENT OF TRANSPORTATION

[Order 88-4-45]

Order Adjusting International Cargo Rate Flexibility Level

Policy statement PS-109, implemented by Regulation ER-1322 of the Civil Aeronautics Board and adopted by the Department, established geographic zones of cargo pricing flexibility within which cargo rate tariffs filed by carriers would be subject to suspension only in extraordinary circumstances.

The SFRL for a particular market is the rate in effect on April 1, 1982, adjusted for the cost experience of the carriers in the relevant ratemaking entity. The first adjustment was effective April 1, 1983. By Order 87-10-18, the Department established the currently effective SFRL adjustments.

In establishing the SFRL for the six-month period starting April 1, 1988, we have projected nonfuel costs based on the year ended December 31, 1987, data

and have determined fuel prices on the basis of the latest experienced monthly fuel cost levels as reported to the Department by the carriers.

By Order 88-4-45 cargo rates may be adjusted by the following adjustment factors over the April 1, 1982, level:

Atlantic	1.1070
Western Hemisphere	.9477
Pacific	1.2260

For further information contact: Julien Schrenk, (202) 366-2441.

By the Department of Transportation.

Matthew V. Scocozza,

Assistant Secretary for Policy and International Affairs.

Dated: April 15, 1988.

[FR Doc. 88-8821 Filed 4-21-88; 8:45 am]

BILLING CODE 4910-62-M

Federal Highway Administration

Commercial Motor Vehicle Safety Regulatory Review Panel; Public Meeting

AGENCY: Federal Highway Administration (FHWA), DOT.

ACTION: Notice of public meeting.

SUMMARY: The FHWA announces that the Commercial Motor Vehicle Safety Regulatory Review Panel (Safety Panel) will hold a meeting on May 5, 1988, beginning at 9:00 a.m., in Washington, DC, at the Department of Transportation's Headquarters Building, 400 Seventh Street SW., Washington, DC, Room 4200.

The agenda for this meeting will be a discussion of general options for achieving the uniformity directed in the Motor Carrier Safety Act of 1984, 49 U.S.C. app. section 2507 (Supp. III 1985), particularly as it may relate to the Motor Carrier Safety Assistance Program (MCSAP). The Safety Panel will also discuss the pending notification to states regarding the preliminary review of the scope and relative stringency of the laws and regulations of those states pertaining to commercial motor vehicle safety.

FOR FURTHER INFORMATION CONTACT: Mr. Joseph S. Toole, Executive Director, Commercial Motor Vehicle Safety Regulatory Review Panel, Federal Highway Administration, HOA-1, Room 4218, 400 Seventh Street SW., Washington, DC 20590, (202) 366-2238. Office hours are from 7:45 a.m. to 4:15 p.m., ET, Monday through Friday.

Issued on: April 15, 1988.

R.D. Morgan,

Executive Director, Federal Highway Administration.

[FR Doc. 88-8828 Filed 4-21-88; 8:45 am]

BILLING CODE 4910-22-M

Federal Railroad Administration

[FRA Waiver Petition Docket No. RSOR-86-5]

New Jersey Transit Rail Operations, Inc.; Public Hearing

In accordance with 49 CFR 211.41, notice is given that the Federal Railroad Administration (FRA) will hold a public hearing on the petition by New Jersey Transit Rail Operations, Inc. (NJTR) for a permanent waiver of §§ 218.25 and 218.27 of FRA's railroad operating practices regulations (49 CFR 218.25, 218.27) with respect to some of its activities at South Amboy and Hoboken, New Jersey. This proceeding is identified as FRA Waiver Petition Docket No. RSOR-86-5.

In its petition, NJTR states that it "operates passenger service in New Jersey and New York," running "529 scheduled passenger trains per weekday" with a fleet of 85 diesel locomotives and 744 passenger/multiple unit (MU) cars.

The provisions from which the railroad seeks relief establish minimum requirements for the protection of railroad employees engaged in the inspection, testing, repair, and servicing of rolling equipment, whose activities require them to work on, under, or between such equipment and subject them to the danger of personal injury posed by any movement of such equipment. Train and yard crews are excluded from such protection except when assigned to work on rolling equipment that is not part of the train or yard movement that they have been called to operate.

Section 218.25 specifies the type of protection required for workmen on main tracks. It states as follows:

When workmen are on, under, or between rolling equipment on a main track:

(a) A blue signal must be displayed at each end of the rolling equipment; and

(b) If the rolling equipment to be protected includes one or more locomotives, a blue signal must be attached to the controlling locomotive at a location where it is readily visible to the engineman or operator at the controls of that locomotive.

(c) When emergency repair work is to be done on, under, or between a locomotive or one or more cars coupled to a locomotive, and blue signals are not available, the engineman or operator must be notified and effective measures must be taken to protect the workmen making the repairs.

Section 218.27 specifies the type of protection required for workmen on other than a main track:

When workmen are on, under, or between rolling equipment on track other than main track—

(a) A blue signal must be displayed at or near each manually operated switch providing access to that track;

(b) Each manually operated switch providing access to the track on which the equipment is located must be lined against movement to that track and locked with an effective locking device; and

(c) The person in charge of the workmen must have notified the operator of any remotely controlled switch that work is to be performed and have been informed by the operator that each remotely controlled switch providing access to the track on which the equipment is located has been lined against movement to that track and locked as prescribed in § 218.30.

In addition, under § 218.27(d), if the track involved is equipped with one or more crossovers, both switches of each crossover must be lined against movement through the crossover toward the rolling equipment, and the switch of each crossover that provides access to the rolling equipment must be protected in accordance with the provisions of §§ 218.27 (a), (b), and (c). Finally, under § 218.27(e), if the rolling equipment involved includes one or more locomotives, a blue signal must be attached to the controlling locomotive at a location readily visible to the engineman or operator at the controls of that locomotive.

1. South Amboy, New Jersey

According to the petition, several NJTR trains that operate on NJTR's "North Jersey Coast Line change locomotive at South Amboy. The change of locomotive is from diesel power to electric and vice versa. The locomotive change is made on the main track within interlocking limits of Church Interlocking." Mechanical Department employees are assigned to make the locomotive change by uncoupling the locomotive from the train and disconnecting the power source cables and air brake hoses between the coaches and the locomotive.

The NJTR proposes to treat these Mechanical Department employees, while changing locomotives at South Amboy, as members of the train crew,

instead of providing them with the protections described in § 218.25.

In particular, NJTR proposes that the car inspector "will notify the engineer and conductor befor fouling the equipment." Any request for movement will be given by the car inspector to the conductor, who will stand outside and alongside the equipment between the first car and the locomotive, and give all signals to the engineer. The train will be protected by the North Jersey Coast Line dispatcher, who will place the signals at stop on the main track on which the change is being made.

Blocking devices will not be applied while the change is in process. These changes take place on main tracks 1 and 2 and are protected by certain signals. NJTR "feels that the locomotive changes can be safely made without extensive delays to the passenger trains and without providing the protection as described by (§ 218.25)."

2. Hoboken, New Jersey

The railroad also proposes to treat as a member of the train crew any Mechanical Department employee working with a hostler in the Hoboken Terminal area, instead of providing blue signal protection. The Mechanical Department employee's position is known as "locomotive cutter." The duties of the locomotive cutter are to uncouple the locomotive from the standing equipment ("cut the locomotive away from the standing equipment") so that the hostler can take the locomotive for repairs or servicing.

3. Hoboken Terminal

In its petition, NJTR states that "(i)n Hoboken Terminal there are eighteen tracks that cannot be locked up to provide protection" described in § 218.27, "without causing serious delays to the operation, since slip switches are used and they serve three or more tracks." NJTR proposes that on Tracks 1, 8, 9, 10, 11, 12, 13, 14, 15, 16, 17, 6 Main, 2 Main, 8 Hill, T, Q, N, A, and the Extension Track in Hoboken Terminal, blocking devices be applied to the signals only and not to the switches.

The Brotherhood Railway Carmen and the Railway Labor Executives' Association (RLEA) have protested NJTR's petition, and the RLEA has requested a hearing. After examining the petition, the protests and hearing request, and the available facts, FRA has determined that a public hearing is necessary before a final decision is made on this proposal.

Accordingly, a public hearing is hereby set for 10:00 a.m. on Thursday, June 9, 1988, in Room 300, Military Park Building, 60 Park Place, Newark, New Jersey.

In accordance with § 211.25 of the FRA Rules of Practice (49 CFR 211.25), the hearing will be informal and will be conducted by a representative designated by FRA. Strict rules of evidence will not apply, and cross-examination will be somewhat limited. The FRA representative will make an opening statement outlining the scope of the hearing. Then each person in attendance will be permitted to make an initial statement. After each initial statement is completed, the hearing officer, the technical panel, and the audience will be allowed to question the witness. After all the initial statements are completed, those persons who wish to make brief rebuttal statements will be given the opportunity to do so, in the same order in which they made their initial statements. In addition, written statements or other evidence may be submitted at the hearing for inclusion in the record of this proceeding. If practical, eight copies of each written statement or other document should be submitted. Additional procedures, if necessary for the conduct of the hearing, will be announced at the hearing.

Issued in Washington, DC, on April 19, 1988.

J.W. Walsh,

Associate Administrator for Safety.

[FR Doc. 88-8829 Filed 4-21-88; 8:45 am]

BILLING CODE 4910-06-M

National Highway Traffic Safety Administration

[Docket No. IP 88-03; Notice 1]

General Motors Corp.; Receipt of Petition For Determination of Inconsequential Noncompliance

General Motors Corporation, of Warren, Michigan, has petitioned to be exempted from the notification and remedy requirements of the National Traffic and Motor Vehicle Safety Act (15 U.S.C. 1381 *et seq.*) for an apparent noncompliance with 49 CFR 571.210, Federal Motor Vehicle Safety Standard No. 210, "Seat Belt Assembly Anchorages," on the basis that it is inconsequential as it relates to motor vehicle safety.

This Notice of receipt of a petition is published under section 157 of the National Traffic and Motor Vehicle Safety Act (15 U.S.C. 1417) and does not represent any agency decision or other exercise of judgment concerning the merits of the petition.

Paragraph S6(c) of Federal Motor Vehicle Safety Standard (FMVSS) No. 210, requires owner's manuals in vehichles with GVWR of 10,000 pounds or less manufactured after September 1, 1987, to have a diagram or diagrams showing the location of the shoulder belt anchorages (required by FMVSS No. 210) "for the rear outboard designated seating positions, if shoulder belts are not installed as items of original equipment by the vehicle manufacturer at those positions." General Motors reported that 20,514, 1987 and 1988 Chevrolet Caprice vehicles do not have owner's manuals containing the required seat belt anchorage location diagram.

General Motors believes that this noncompliance is inconsequential as it relates to motor vehicle safety because the owner's manuals in question have a section titled "Rear Seat Shoulder Belts (Dealer-Installed Accessory)" which explains the proper use and availability of rear seat lap shoulder belt kits. This section also includes a diagram of the rear seat shoulder belt anchorage locations. General Motors feels that this section makes people aware that shoulder belts can be installed in the rear seat; therefore, it serves the intended purpose of Paragraph S6(c) of FMVSS No. 210.

Interested persons are invited to submit written data, views and arguments on the petition of General Motors, described above. Comments should refer to the Docket Number and be submitted to: Docket Section, National Highway Traffic Safety Administration, Room 5109, 400 Seventh Street SW., Washington, DC 20590. It is requested but not required that six copies be submitted.

All comments received before the close of business on the closing date indicated below will be considered. The application and supporting materials, and all comments received after the closing date will also be filed and will be considered to the extent possible. When the petition is granted or denied, the Notice will be published in the **Federal Register** pursuant to the authority indicated below.

Comment closing date: May 23, 1988.

(Sec. 102, Pub. L. 93-492, 88 Stat. 1470 (15 U.S.C. 1417); delegations of authority at 49 CFR 1.50 and 49 CFR 501.8)

Issued on April 18, 1988.

Barry Felrice,

Associate Administrator for Rulemaking.

[FR Doc. 88-8830 Filed 4-21-88; 8:45 am]

BILLING CODE 4910-59-M

DEPARTMENT OF THE TREASURY

Public Information Collection Requirements Submitted to OMB for Review

Date: April 15, 1988.

The Department of Treasury has made revisions and resubmitted the following public information collection requirement(s) to OMB for review and clearance under the Paperwork Reduction Act of 1980, Pub. L. 96-511. Copies of the submission(s) may be obtained by calling the Treasury Bureau Clearance Officer listed. Comments regarding these information collections should be addressed to the OMB reviewer listed and to the Treasury Department Clearance Officer, Room 2224, Main Treasury Building, 15th and Pennsylvania Avenue, NW., Washington, DC 20220.

Internal Revenue Service

OMB Number: 1545-0710.
Form Number: 5500 Series.
Type of Review: Resubmission.
Title: Annual Return/Report of Employee Benefit Plan, Return/Report of Employee Benefit Plan and Associated Schedules.
Description: Forms listed in item 4 are annual information returns filed by employee benefit plans. The IRS uses this data to determine if the plan appears to be operating properly as required under the law or whether the plan should be audited.
Respondents: Businesses or other for-profit, Small businesses or organizations.
Estimated Burden: 944,683 hours.
Clearance Officer: Garrick Shear (202) 535-4297, Internal Revenue Service, Room 5571, 1111 Constitution Avenue NW., Washington, DC 20224.
OMB Reviewer: Milo Sunderhauf (202) 395-6880, Office of Management and Budget, Room 3208, New Executive Office Building, Washington, DC 20503.

Lois K. Holland,
Departmental Reports Management Officer.

[FR Doc. 88-8896 Filed 4-21-88; 8:45 am]

BILLING CODE 4810-25-M

Sunshine Act Meetings

Federal Register
Vol. 53, No. 78
Friday, April 22, 1988

This section of the FEDERAL REGISTER contains notices of meetings published under the "Government in the Sunshine Act" (Pub. L. 94-409) 5 U.S.C. 552b(e)(3).

FEDERAL DEPOSIT INSURANCE CORPORATION

Pursuant to the provisions of the "Government in the Sunshine Act" (5 U.S.C. 552b), notice is hereby given that at 4:58 p.m. on Saturday, April 16, 1988, the Board of Directors of the Federal Deposit Insurance Corporation met in closed session, by telephone conference call, to consider matters relating to an assistance agreement pursuant to section 13(c) of the Federal Deposit Insurance Act.

In calling the meeting, the Board determined, on motion of Director C.C. Hope, Jr. (Appointive), seconded by Chairman L. William Seidman, concurred in by Director Robert L. Clarke (Comptroller of the Currency), that Corporation business required its consideration of the mattrs on less than seven days' notice to the public; that no earlier notice of the meeting was practicable; that the public interest did not require consideration of the matters in a meeting open to public observation; and that the matters could be considered in a closed meeting by authority of subsections (c)(4), (c)(8), (c)(9)(A)(ii), and (c)(9)(B) of the "Government in the Sunshine Act" (5 U.S.C. 552b(c)(4), (c)(8), (c)(9)(A)(ii), and (c)(9)(B)).

Dated: April 19, 1988.

Federal Deposit Insurance Corporation.

Robert E. Feldman,

Assistant Executive Secretary (Operations).

[FR Doc. 88-8910 filed 4-19-88; 4:50 pm]

BILLING CODE 6714-01-M

FEDERAL DEPOSIT INSURANCE CORPORATION

Pursuant to the provisions of the "Government in the Sunshine Act" (5 U.S.C. 552b), notice is hereby given that at 5:02 p.m. on Sunday, April 17, 1988, the Board of Directors of the Federal Deposit Insurance Corporation met in closed session, by telephone conference call, to consider matters relating to an assistance agreement pursuant to section 13(c) of the Federal Deposit Insurance Act.

In calling the meeting, the Board determined, on motion of Director C.C. Hope, Jr. (Appointive), seconded by Director Robert L. Clarke (Comptroller of the Currency), concurred in by Chairman L. William Seidman, that Corporation business required its consideration of the matters on less than seven days' notice to the public; that no earlier notice of the meeting was practicable; that the public interest did not require consideration of the matters in a meeting open to public observation; and that the matters could be considered in a closed meeting by authority of subsections (c)(4), (c)(8), (c)(9)(A)(ii), and (c)(9)(B) of the "Government in the Sunshine Act" (5 U.S.C. 552b(c)(4), (c)(8), (c)(9)(A)(ii), and (c)(9)(B)).

Dated: April 19, 1988.

Federal Deposit Insurance Corporation.

Robert E. Feldman,

Assistant Executive Secretary (Operations).

[FR Doc. 88-8911 Filed 4-19-88; 4:50 pm]

BILLING CODE 6714-01-M

FEDERAL DEPOSIT INSURANCE CORPORATION

Pursuant to the provisions of the "Government in the Sunshine Act" (5 U.S.C. 552b), notice is hereby given that at 10:36 a.m. on Monday, April 18, 1988, the Board of Directors of the Federal Deposit Insurance Corporation met in closed session, by telephone conference call, to consider the following matters:

Application of Dedham Co-operative Bank, an operating non-FDIC insured co-operative bank located at 402 Washington Street, Dedham, Massachusetts, for Federal deposit insurnace.

Recommendation regarding the Corporation's assistance agreement with an insured bank.

Recommendation regarding the liquidation of a bank's assets acquired by the Corporation in its capacity as receiver, liquidator, or liquidating agent of those assets:

Case No 47,202
Midland Consolidated Office, Midland, Texas

Matters relating to the possible closing of certain insured banks.

In calling the meeting, the Board determined, on motion of Director C.C. Hope, Jr. (Appointive), seconded by Mr. Dean S. Marriott, acting in the place and stead of Director Robert L. Clarke (Comptroller of the Currency), concurred in by Chairman L. William Seidman, that Corporation business required its consideration of the matters on less than seven days' notice to the public; that no earlier notice of the meeting was practicable; that the public interest did not require consideration of the matters in a meeting open to public observation; and that the matters could be considered in a closed meeting by authority of subsections (c)(4), (c)(6), (c)(8), (c)(9)(A)(ii), (c)(9)(B), and (c)(10) of the "Government in the Sunshine Act" (5 U.S.C. 552b (c)(4), (c)(6), (c)(8), (c)(9)(A)(ii), (c)(9)(B), and (c)(10)).

Dated: April 19, 1988.

Federal Deposit Insurance Corporation.

Robert E. Feldman,

Assistant Executive Secretary (Operations).

[FR Doc. 88-8912 Filed 4-19-88; 4:50 pm]

BILLING CODE 6714-01-M

FEDERAL RESERVE SYSTEM BOARD OF GOVERNORS

TIME AND DATE: 10:00 a.m., Wednesday, April 27, 1988.

PLACE: Marriner S. Eccles Federal Reserve Board Building, C Street entrance between 20th and 21st Streets, NW., Washington, DC 20551.

STATUS: Closed.

MATTERS TO BE CONSIDERED:

1. Personnel actions (appointments, promotions, assignments, reassignments, and salary actions) involving individual Federal Reserve System employees.
2. Any items carried forward from a previously announced meeting.

CONTACT PERSON FOR MORE INFORMATION: Mr. Joseph R. Coyne, Assistant to the Board; (202) 452-3204. You may call (202) 452-3207, beginning at approximately 5 p.m. two business days before this meeting, for a recorded announcement of bank and bank holding company applications scheduled for the meeting.

Date: April 20, 1988.

James McAfee,

Associate Secretary of the Baord.

[FR Doc. 88-8937 Filed 4-20-88; 10:33 am]

BILLING CODE 6210-01-M

NATIONAL LABOR RELATIONS BOARD

TIME AND DATE: 9:00 a.m., Wednesday, April 27, 1988.

PLACE: Board Conference Room, Sixth Floor, 1717 Pennsylvania Avenue, NW., Washington, DC 20570.

STATUS: Open to public observation.

MATTERS TO BE CONSIDERED: To consider whether to upgrade the Hartford Subregional office. These considerations do not contemplate any change in the current boundary of Subregion 39.

CONTACT PERSON FOR MORE INFORMATION: John C. Truesdale, Executive Secretary, National Labor Relations Board, Washington, DC 20570, Telephone: (202) 254-9430.

Dated, Washington, DC, By direction of the Board.

John C. Truesdale,

Executive Secretary, National Labor Relations Board.

[FR Doc. 88-9001 Filed 4-20-88; 4:05 pm]

BILLING CODE 7545-01-M

SECURITIES AND EXCHANGE COMMISSION

Notice is hereby given, pursuant to the provisions of the Government in the Sunshine Act, Pub. L. 94-409, that the Securities and Exchange Commission will hold the following meetings during the week of April 25, 1988:

A closed meeting will be held on Tuesday, April 26, 1988, at 2:30 p.m. An open meeting will be held on Wednesday, April 27, 1988, at 10:00 a.m.

The Commissioners, Counsel to the Commissioners, the Secretary of the Commission, and recording secretaries will attend the closed meeting. Certain staff members who are responsible for the calendared matters may also be present.

The General Counsel of the Commission, or his designee, has certified that, in his opinion, one or more of the exemptions set forth in 5 U.S.C. 552b(c)(4), (8), (9)(A) and (10) and 17 CFR 200.402(a)(4), (8), (9)(i) and (10) permit consideration of the scheduled matters at a closed meeting.

Commissioner Fleischman, as duty officer, voted to consider the items listed for the closed meeting in closed session.

The subject matter of the closed meeting scheduled for Tuesday, April 26, 1988, at 2:30 p.m., will be:

Institution of injunctive actions.
Litigation matter.
Settlement of administrative proceedings of an enforcement nature.
Institution of administrative proceeding of an enforcement nature.

The subject matter of the open meeting scheduled for Wednesday, April 27, 1988, at 10:00 a.m., will be:

1. Consideration of whether to request the Congress to amend Sections 14(b) and 14(c) of the Securities Exchange Act of 1934. The amendments would require broker and bank nominees to forward proxy materials and other shareholder communications to the beneficial owners of investment company securities; require broker and bank nominees to deliver information statements to the beneficial owners of both investment company and non-investment company securities; and require registrants to transmit information statements to the record holders of investment company securities. For further information, please contact Dorothy M. Donohue at (202) 272-2107.

2. Consideration of whether to adopt amendments to Rules 14a-1, 14a-13, 14b-1, 14b-2, 14c-1, 14c-7, and 17a-3 that exclude specific employee benefit plan participants from the operation of the shareholder communication rules. For information, please contact Sarah A. Miller at (202) 272-2589.

At times changes in Commission priorities require alterations in the scheduling of meeting items. For further information and to ascertain what, if any, matters have been added, deleted or postponed, please contact: Jacqueline Higgs at (202) 272-2149.

Jonathan G. Katz,

Secretary.

April 19, 1988.

[FR Doc. 88-9002 Filed 4-20-88; 4:06 pm]

BILLING CODE 8010-01-M

Corrections

Federal Register
Vol. 53, No. 78
Friday, April 22, 1988

This section of the FEDERAL REGISTER contains editorial corrections of previously published Presidential, Rule, Proposed Rule, and Notice documents and volumes of the Code of Federal Regulations. These corrections are prepared by the Office of the Federal Register. Agency prepared corrections are issued as signed documents and appear in the appropriate document categories elsewhere in the issue.

ENVIRONMENTAL PROTECTION AGENCY

[OPP-66137; FRL-3363-5]

Chlordane/Heptachlor Termiticides; Notification of Cancellation and Amendment of Existing Stocks Determination

Correction

In notice document 88-7799 beginning on page 11798 in the issue of Friday, April 8, 1988, make the following corrections:

1. On page 11799, in the second column, in the table, in the third entry, the first column should read "Rigo Company Inc."; the second column should read "70-119"; and the last column should read "4/27/87".

2. On page 11800, in the third column, in the second complete paragraph, in the first line, "sec. 5(a)(1)" should read "sec. 6(a)(1)".

BILLING CODE 1505-01-D

FEDERAL RESERVE SYSTEM

12 CFR Part 226

[Reg. Z; Docket No. R-0545A]

Update to Official Staff Commentary

Correction

In rule document 88-7347 beginning on page 11047 in the issue of Tuesday, April 5, 1988, make the following corrections:

PART 226—Supplement I—[CORRECTED]

Section 226.17, Paragraph 17(c)(1)11.——[Corrected]

1. On page 11051, in the second column, in the first paragraph, in the sixth line, "the" should read "a".

Section 226.18, Paragraph 18(f)1.——[Corrected]

2. On the same page, in the third column, in the 22nd line from the top, the section designation should read "§ 226.18(f)(1)".

Section 226.19, Paragraph 19(B)4.——[Corrected]

3. On page 11052, in the first column, in the second line from the bottom, "when" should read "where".

Section 226.19, Paragraph 19(b)(2)(vii)——[Corrected]

4. On page 11053, in the second column, under *Paragraph 19(b)(2)(vii)*, in paragraph number 1, in the 13th line, "state of" should read "state or"; and in paragraph number 2, in the 5th line, "are" should read "is".

5. On the same page, in the third column, in paragraph number 4, in the second line, "applied" should read "applies".

Section 226.19, Paragraph (b)(2)(x)——[Corrected]

6. On page 11054, in the second column, in the second line from the top, after "loan" insert "originated".

7. On the same page, in the same column, in the 18th line from the top, after "until" insert "the fourth year because of the 2 percentage point annual rate".

8. On the same page, in the same column, in the 22nd line from the top, after "rate" insert "the most recent rate shown in the historical example should be".

Section 226.19, Paragraph (b)(2)(xiii)——[Corrected]

9. On the same page, in the same column, under *Paragraph 19(b)(2)(xiii)*, in the first line of paragraph 1, "Multiple loan programs" should be italicized; and in the ninth line, "exists" should read "exist".

Supplement I, Appendix H——[Corrected]

10. On page 11055, in the third column, in paragraph 18, "*Model H-14.*" should read "*Sample H-14.*".

BILLING CODE 1505-01-D

FEDERAL RESERVE SYSTEM

12 CFR Part 226

[Reg. Z; TIL-1]

Truth in Lending; Update to Official Staff Commentary

Correction

In rule document 88-7350 beginning on page 11055 in the issue of Tuesday, April 5, 1988, make the following corrections:

1. On page 11056, in the second column, under "Section 226.7——Periodic Statement", in the fifth line, the first section reference should read "§ 226.4(e)".

PART 226, Supplement I, Section 226.30——[Corrected]

2. On page 11059, in the third column, under "*Section 226.30——Limitation on Rates*", in paragraph number 4, in the fifth line, "increasingly" should read "increasing".

BILLING CODE 1505-01-D

DEPARTMENT OF THE INTERIOR

Fish and Wildlife Service

50 CFR Part 17

Endangered and Threatened Wildlife and Plants; Proposal To Determine Five Texas Cave Invertebrates To Be Endangered Species

Correction

In proposed rule document 88-8520 beginning on page 12787 in the issue of Tuesday, April 19, 1988, make the following correction:

On page 12787, in the first column, under "FOR FURTHER INFORMATION CONTACT", in the last line, the "FTS" number should read "474-3972"

BILLING CODE 1505-01-D

VOL
53

ISS
78

AP
22

1988

UMI

federal register

Friday
April 22, 1988

Part II

Environmental Protection Agency

40 CFR Part 261

Hazardous Waste Management System: Identification and Listing of Hazardous Waste; Technical Corrections

ENVIRONMENTAL PROTECTION AGENCY

40 CFR Part 261

[FRL-3356-7]

Hazardous Waste Management System: Identification and Listing of Hazardous Waste

AGENCY: Environmental Protection Agency.

ACTION: Technical corrections.

SUMMARY: The Environmental Protection Agency (EPA) today is amending its regulations under the Resource Conservation and Recovery Act (RCRA) to make technical corrections to the lists of commercial chemical products that are hazardous wastes when discarded (§ 261.33(e) and (f)), and to the list of hazardous constituents (Appendix VIII of Part 261). In addition, EPA is adding hazardous waste numbers to substances listed in Appendix VIII that also are listed in § 261.33 (e) or (f).

DATES: This amendment becomes effective on April 22, 1988.

ADDRESSES: The OSW docket is located in the sub-basement at the following address, and is open from 9:30 to 3:30, Monday through Friday, excluding Federal holidays: EPA RCRA Docket (S-212) (WH-562), 401 M Street SW., Washington, DC 20460.

The public must make an appointment (by calling (202) 475-9327) to review docket materials. Refer to "Docket number F-88-CCPF-FFFFF" when making appointments to review any background documentation for this rulemaking. The public may copy a maximum of 50 pages of material from any one regulatory docket at no cost; additional copies cost $0.20 per page. Copies of not easily obtainable references are available for *viewing and copying only* in the OSW docket.

FOR FURTHER INFORMATION CONTACT: The RCRA/Superfund Hotline at (800) 424-9346 or at (202) 382-3000. For technical information contact Wanda LeBleu-Biswas, Office of Solid Waste (WH-562B), U.S. Environmental Protection Agency, 401 M Street SW., Washington, DC 20460, (202) 382-7392.

SUPPLEMENTARY INFORMATION:

I. Background

Under the authority of Section 3001 of the Resource Conservation and Recovery Act of 1976, as amended (RCRA), the Agency promulgated in 40 CFR 261.33 lists of commercial chemical products or manufacturing chemical intermediates that are hazardous wastes if they are discarded or intended to be discarded. The phrase "commercial chemical product or manufacturing chemical intermediate" refers to a chemical substance which is manufactured or formulated for commercial or manufacturing use, and which consists of the commercially pure grade of the chemical, any technical grades of the chemical that are produced or marketed, and all formulations in which the chemical is the sole active ingredient. 40 CFR 261.33 also lists as hazardous off-specification variants and the residue and debris from the clean-up of spills of these chemicals, if discarded or intended to be discarded (§ 261.33 (b) and (d)). Finally, § 261.33 lists as hazardous the containers that have held those chemicals listed in § 261.33 (e), if they are discarded or intended to be discarded, unless the containers have been triple-rinsed with a solvent capable of removing the chemical, or have been decontaminated in an equivalent manner.

Chemicals are listed in Appendix VIII if they have been shown in reputable scientific studies to have toxic, carcinogenic, mutagenic, or teratogenic effects on humans or other life forms, and include such substances as those identified by the Agency's Carcinogen Assessment Group as being carcinogenic.

The Agency published on August 6, 1986 (51 *FR* 28296) a revision of Part 261 that included technical corrections to § 261.33 (e) and (f) and Appendix VIII, as well as the addition of Chemical Abstracts Service (CAS) registry numbers to all listings.

II. Reason and Basis for Today's Amendment

The Agency's on-going review of the clarity and accuracy of the existing hazardous waste lists has resulted in a number of corrections being made in today's revision. In addition, the hazardous waste numbers (from § 261.33) are being added to Appendix VIII of Part 261 as an identification aid. All chemical names in Appendix VIII and § 261.33 (e) and (f) correspond to the names in the Chemical Abstracts Service Registry Handbook—Number Section for the listed CAS number. This corresponds to the CAS Ninth Collective Index nomenclature for most compounds.

Since this notice involves only technical corrections and clarification, no public comment period will be necessary. Any correspondence regarding corrections to the appendices should be sent to Ms. Wanda LeBleu-Biswas at the address shown in the "**ADDRESSES**" section of this notice. Under 5 U.S.C. 553(b)(B), a rule is exempt from notice and public comment requirements "when the Agency for good cause finds (and incorporates the finding and a brief statement of reasons therefore in the rules issued) that notice and public procedures thereon are impractical, unnecessary, or contrary to the public interest." For the same reasons, this rule is effective immediately. See 5 U.S.C. 553(d) and 42 U.S.C. 6930(b).

III. Regulatory Impact Analysis

Under Executive Order 12291, EPA must judge whether a regulation is "major" and, therefore, subject to the requirement of a Regulatory Impact Analysis. Due to the nature of this regulation (technical correction), the amendment is not "major"; therefore, no Regulatory Impact Analysis is required.

List of Subjects in 40 CFR Part 261

Hazardous waste, Recycling.

Date: March 24, 1988.

J.W. McGraw,

Acting Assistant Administrator for Solid Waste and Emergency Response.

For the reasons set out in the preamble, Title 40 of the Code of Federal Regulations is amended as follows:

PART 261—IDENTIFICATION AND LISTING OF HAZARDOUS WASTE

1. The authority citation for Part 261 continues to read as follows:

Authority: Secs. 1006, 2002(a), 3001, 3002, and 3017 of the Solid Waste Disposal Act, as amended by the Resource Conservation and Recovery Act of 1976, as amended (42 U.S.C. 6905, 6912(a), 6921, 6922, and 6937).

2. In 40 CFR 261.33, the table in paragraph (e) is revised to read as follows:

Hazardous waste No.	Chemical abstracts No.	Substance
P023	107-20-0	Acetaldehyde, chloro-
P002	591-08-2	Acetamide, N-(aminothioxomethyl)-
P057	640-19-7	Acetamide, 2-fluoro-.
P058	62-74-8	Acetic acid, fluoro-, sodium salt
P002	591-08-2	1-Acetyl-2-thiourea
P003	107-02-8	Acrolein
P070	116-06-3	Aldicarb
P004	309-00-2	Aldrin
P005	107-18-6	Allyl alcohol
P006	20859-73-8	Aluminum phosphide (R,T)
P007	2763-96-4	5-(Aminomethyl)-3-isoxazolol
P008	504-24-5	4-Aminopyridine
P009	131-74-8	Ammonium picrate (R)
P119	7803-55-6	Ammonium vanadate
P099	506-61-6	Argentate(1-), bis(cyano-C)-, potassium
P010	7778-39-4	Arsenic acid H_3AsO_4
P012	1327-53-3	Arsenic oxide As_2O_3
P011	1303-28-2	Arsenic oxide As_2O_5
P011	1303-28-2	Arsenic pentoxide
P012	1327-53-3	Arsenic trioxide
P038	692-42-2	Arsine, diethyl-
P036	696-28-6	Arsonous dichloride, phenyl-
P054	151-56-4	Aziridine
P067	75-55-8	Aziridine, 2-methyl-
P013	542-62-1	Barium cyanide
P024	106-47-8	Benzenamine, 4-chloro-
P077	100-01-6	Benzenamine, 4-nitro-
P028	100-44-7	Benzene, (chloromethyl)-
P042	51-43-4	1,2-Benzenediol, 4-[1-hydroxy-2-(methylamino)ethyl]-, (R)-
P046	122-09-8	Benzeneethanamine, alpha,alpha-dimethyl-
P014	108-98-5	Benzenethiol
P001	[1] 81-81-2	2H-1-Benzopyran-2-one, 4-hydroxy-3-(3-oxo-1-phenylbutyl)-, & salts, when present at concentrations greater than 0.3%
P028	100-44-7	Benzyl chloride
P015	7440-41-7	Beryllium
P017	598-31-2	Bromoacetone
P018	357-57-3	Brucine
P045	39196-18-4	2-Butanone, 3,3-dimethyl-1-(methylthio)-, O-[methylamino)carbonyl] oxime
P021	592-01-8	Calcium cyanide
P021	592-01-8	Calcium cyanide $Ca(CN)_2$
P022	75-15-0	Carbon disulfide
P095	75-44-5	Carbonic dichloride
P023	107-20-0	Chloroacetaldehyde
P024	106-47-8	p-Chloroaniline
P026	5344-82-1	1-(o-Chlorophenyl)thiourea
P027	542-76-7	3-Chloropropionitrile
P029	544-92-3	Copper cyanide
P029	544-92-3	Copper cyanide Cu(CN)
P030	.....	Cyanides (soluble cyanide salts), not otherwise specified
P031	460-19-5	Cyanogen
P033	506-77-4	Cyanogen chloride
P033	506-77-4	Cyanogen chloride (CN)Cl
P034	131-89-5	2-Cyclohexyl-4,6-dinitrophenol
P016	542-88-1	Dichloromethyl ether
P036	696-28-6	Dichlorophenylarsine
P037	60-57-1	Dieldrin
P038	692-42-2	Diethylarsine
P041	311-45-5	Diethyl-p-nitrophenyl phosphate
P040	297-97-2	O,O-Diethyl O-pyrazinyl phosphorothioate
P043	55-91-4	Diisopropylfluorophosphate (DFP)
P004	309-00-2	1,4,5,8-Dimethanonaphthalene, 1,2,3,4,10,10-hexachloro-1,4,4a,5,8,8a,-hexahydro-, (1alpha,4alpha,4abeta,5alpha,8alpha,8abeta)-
P060	465-73-6	1,4,5,8-Dimethanonaphthalene, 1,2,3,4,10,10-hexachloro-1,4,4a,5,8,8a-hexahydro-, (1alpha,4alpha,4abeta,5beta,8beta,8abeta)-
P037	60-57-1	2,7:3,6-Dimethanonaphth[2,3-b]oxirene, 3,4,5,6,9,9-hexachloro-1a,2,2a,3,6,6a,7,7a-octahydro-, (1aalpha,2beta,2aalpha,3beta,6beta,6aalpha,7beta,7aalpha)-
P051	[1] 72-20-8	2,7:3,6-Dimethanonaphth [2,3-b]oxirene, 3,4,5,6,9,9-hexachloro-1a,2,2a,3,6,6a,7,7a-octahydro-, (1aalpha,2beta,2abeta,3alpha,6alpha,6abeta,7beta,7aalpha)-, & metabolites
P044	60-51-5	Dimethoate
P046	122-09-8	alpha,alpha-Dimethylphenethylamine
P047	[1] 534-52-1	4,6-Dinitro-o-cresol, & salts
P048	51-28-5	2,4-Dinitrophenol
P020	88-85-7	Dinoseb
P085	152-16-9	Diphosphoramide, octamethyl-
P111	107-49-3	Diphosphoric acid, tetraethyl ester
P039	298-04-4	Disulfoton
P049	541-53-7	Dithiobiuret
P050	115-29-7	Endosulfan
P088	145-73-3	Endothall
P051	72-20-8	Endrin
P051	72-20-8	Endrin, & metabolites
P042	51-43-4	Epinephrine
P031	460-19-5	Ethanedinitrile
P066	16752-77-5	Ethanimidothioic acid, N-[[(methylamino)carbonyl]oxy]-, methyl ester
P101	107-12-0	Ethyl cyanide
P054	151-56-4	Ethyleneimine
P097	52-85-7	Famphur
P056	7782-41-4	Fluorine
P057	640-19-7	Fluoroacetamide
P058	62-74-8	Fluoroacetic acid, sodium salt
P065	628-86-4	Fulminic acid, mercury(2+) salt (R,T)
P059	76-44-8	Heptachlor
P062	757-58-4	Hexaethyl tetraphosphate
P116	79-19-6	Hydrazinecarbothioamide
P068	60-34-4	Hydrazine, methyl-
P063	74-90-8	Hydrocyanic acid
P063	74-90-8	Hydrogen cyanide
P096	7803-51-2	Hydrogen phosphide
P060	465-73-6	Isodrin
P007	2763-96-4	3(2H)-Isoxazolone, 5-(aminomethyl)-
P092	62-38-4	Mercury, (acetato-O)phenyl-
P065	628-86-4	Mercury fulminate (R,T)
P082	62-75-9	Methanamine, N-methyl-N-nitroso-
P064	624-83-9	Methane, isocyanato-
P016	542-88-1	Methane, oxybis[chloro-
P112	509-14-8	Methane, tetranitro- (R)
P118	75-70-7	Methanethiol, trichloro-
P050	115-29-7	6,9-Methano-2,4,3-benzodioxathiepin, 6,7,8,9,10,10-hexachloro-1,5,5a,6,9,9a-hexahydro-, 3-oxide
P059	76-44-8	4,7-Methano-1H-indene, 1,4,5,6,7,8,8-heptachloro-3a,4,7,7a-tetrahydro-
P066	16752-77-5	Methomyl
P068	60-34-4	Methyl hydrazine
P064	624-83-9	Methyl isocyanate
P069	75-86-5	2-Methyllactonitrile
P071	298-00-0	Methyl parathion
P072	86-88-4	alpha-Naphthylthiourea
P073	13463-39-3	Nickel carbonyl
P073	13463-39-3	Nickel carbonyl $Ni(CO)_4$, (T-4)-
P074	557-19-7	Nickel cyanide
P074	557-19-7	Nickel cynaide $Ni(CN)_2$
P075	[1] 54-11-5	Nicotine, & salts
P076	10102-43-9	Nitric oxide
P077	100-01-6	p-Nitroaniline
P078	10102-44-0	Nitrogen dioxide
P076	10102-43-9	Nitrogen oxide NO
P078	10102-44-0	Nitrogen oxide NO_2
P081	55-63-0	Nitroglycerine (R)
P082	62-75-9	N-Nitrosodimethylamine
P084	4549-40-0	N-Nitrosomethylvinylamine
P085	152-16-9	Octamethylpyrophosphoramide
P087	20816-12-0	Osmium oxide OsO_4, (T-4)-
P087	20816-12-0	Osmium tetroxide
P088	145-73-3	7-Oxabicyclo[2.2.1]heptane-2,3-dicarboxylic acid
P089	56-38-2	Parathion
P034	131-89-5	Phenol, 2-cyclohexyl-4,6-dinitro-
P048	51-28-5	Phenol, 2,4-dinitro-
P047	[1] 534-52-1	Phenol, 2-methyl-4,6-dinitro-, & salts
P020	88-85-7	Phenol, 2-(1-methylpropyl)-4,6-dinitro-
P009	131-74-8	Phenol, 2,4,6-trinitro-, ammonium salt (R)
P092	62-38-4	Phenylmercury acetate
P093	103-85-5	Phenylthiourea
P094	298-02-2	Phorate
P095	75-44-5	Phosgene
P096	7803-51-2	Phosphine
P041	311-45-5	Phosphoric acid, diethyl 4-nitrophenyl ester

Hazardous waste No.	Chemical abstracts No.	Substance
P039	298-04-4	Phosphorodithioic acid, O,O-diethyl S-[2-(ethylthio)ethyl] ester
P094	298-02-2	Phosphorodithioic acid, O,O-diethyl S-[(ethylthio)methyl] ester
P044	60-51-5	Phosphorodithioic acid, O,O-dimethyl S-[2-(methylamino)-2-oxoethyl] ester
P043	55-91-4	Phosphorofluoridic acid, bis(1-methylethyl) ester
P089	56-38-2	Phosphorothioic acid, O,O-diethyl O-(4-nitrophenyl) ester
P040	297-97-2	Phosphorothioic acid, O,O-diethyl O-pyrazinyl ester
P097	52-85-7	Phosphorothioic acid, O-[4-[(dimethylamino)sulfonyl]phenyl] O,O-dimethyl ester
P071	298-00-0	Phosphorothioic acid, O,O,-dimethyl O-(4-nitrophenyl) ester
P110	78-00-2	Plumbane, tetraethyl-
P098	151-50-8	Potassium cyanide
P098	151-50-8	Potassium cyanide K(CN)
P099	506-61-6	Potassium silver cyanide
P070	116-06-3	Propanal, 2-methyl-2-(methylthio)-, O-[(methylamino)carbonyl]oxime
P101	107-12-0	Propanenitrile
P027	542-76-7	Propanenitrile, 3-chloro-
P069	75-86-5	Propanenitrile, 2-hydroxy-2-methyl-
P081	55-63-0	1,2,3-Propanetriol, trinitrate (R)
P017	598-31-2	2-Propanone, 1-bromo-
P102	107-19-7	Propargyl alcohol
P003	107-02-8	2-Propenal
P005	107-18-6	2-Propen-1-ol
P067	75-55-8	1,2-Propylenimine
P102	107-19-7	2-Propyn-1-ol
P008	504-24-5	4-Pyridinamine
P075	[1] 54-11-5	Pyridine, 3-(1-methyl-2-pyrrolidinyl)-, (S)-, & salts
P114	12039-52-0	Selenious acid, dithallium(1+) salt
P103	630-10-4	Selenourea
P104	506-64-9	Silver cyanide
P104	506-64-9	Silver cyanide Ag(CN)
P105	26628-22-8	Sodium azide
P106	143-33-9	Sodium cyanide
P106	143-33-9	Sodium cyanide Na(CN)
P107	1314-96-1	Strontium sulfide
P107	1314-96-1	Strontium sulfide SrS
P108	[1] 57-24-9	Strychnidin-10-one, & salts
P018	357-57-3	Strychnidin-10-one, 2,3-dimethoxy-
P108	[1] 57-24-9	Strychnine, & salts
P115	7446-18-6	Sulfuric acid, dithallium(1+) salt
P109	3689-24-5	Tetraethyldithiopyrophosphate
P110	78-00-2	Tetraethyl lead
P111	107-49-3	Tetraethyl pyrophosphate
P112	509-14-8	Tetranitromethane (R)
P062	757-58-4	Tetraphosphoric acid, hexaethyl ester
P113	1314-32-5	Thallic oxide
P113	1314-32-5	Thallium oxide Tl_2O_3
P114	12039-52-0	Thallium(I) selenite
P115	7446-18-6	Thallium(I) sulfate
P109	3689-24-5	Thiodiphosphoric acid, tetraethyl ester
P045	39196-18-4	Thiofanox
P049	541-53-7	Thioimidodicarbonic diamide $[(H_2N)C(S)]_2NH$
P014	108-98-5	Thiophenol
P116	79-19-6	Thiosemicarbazide
P026	5344-82-1	Thiourea, (2-chlorophenyl)-
P072	86-88-4	Thiourea, 1-naphthalenyl-
P093	103-85-5	Thiourea, phenyl-
P123	8001-35-2	Toxaphene
P118	75-70-7	Trichloromethanethiol
P119	7803-55-6	Vanadic acid, ammonium salt
P120	1314-62-1	Vanadium oxide V_2O_5
P120	1314-62-1	Vanadium pentoxide
P084	4549-40-0	Vinylamine, N-methyl-N-nitroso-
P001	[1] 81-81-2	Warfarin, & salts, when present at concentrations greater than 0.3%
P121	557-21-1	Zinc cyanide
P121	557-21-1	Zinc cyanide $Zn(CN)_2$
P122	1314-84-7	Zinc phosphide Zn_3P_2, when present at concentrations greater than 10% (R,T)

[1] CAS Number given for parent compound only.

3. In 40 CFR 261.33, the table in paragraph (f) is revised to read as follows:

Hazardous waste No.	Chemical abstracts No.	Substance
U001	75-07-0	Acetaldehyde (I)
U034	75-87-6	Acetaldehyde, trichloro-
U187	62-44-2	Acetamide, N-(4-ethoxyphenyl)-
U005	53-96-3	Acetamide, N-9H-fluoren-2-yl-
U240	[1] 94-75-7	Acetic acid, (2,4-dichlorophenoxy)-, salts & esters
U112	141-78-6	Acetic acid ethyl ester (I)
U144	301-04-2	Acetic acid, lead(2+) salt
U214	563-68-8	Acetic acid, thallium(1+) salt
see F027	93-76-5	Acetic acid, (2,4,5-trichlorophenoxy)-
U002	67-64-1	Acetone (I)
U003	75-05-8	Acetonitrile (I,T)
U004	98-86-2	Acetophenone
U005	53-96-3	2-Acetylaminofluorene
U006	75-36-5	Acetyl chloride (C,R,T)
U007	79-06-1	Acrylamide
U008	79-10-7	Acrylic acid (I)
U009	107-13-1	Acrylonitrile
U011	61-82-5	Amitrole
U012	62-53-3	Aniline (I,T)
U136	75-60-5	Arsinic acid, dimethyl-
U014	492-80-8	Auramine
U015	115-02-6	Azaserine
U010	50-07-7	Azirino[2',3':3,4]pyrrolo[1,2-a]indole-4,7-dione, 6-amino-8-[[(aminocarbonyl)oxy]methyl]-1,1a,2,8,8a,8b-hexahydro-8a-methoxy-5-methyl-, [1aS-(1aalpha, 8beta,8aalpha,8balpha)]-
U157	56-49-5	Benz[j]aceanthrylene, 1,2-dihydro-3-methyl-
U016	225-51-4	Benz[c]acridine
U017	98-87-3	Benzal chloride
U192	23950-58-5	Benzamide, 3,5-dichloro-N-(1,1-dimethyl-2-propynyl)-
U018	56-55-3	Benz[a]anthracene
U094	57-97-6	Benz[a]anthracene, 7,12-dimethyl-
U012	62-53-3	Benzenamine (I,T)
U014	492-80-8	Benzenamine, 4,4'-carbonimidoylbis[N,N-dimethyl-
U049	3165-93-3	Benzenamine, 4-chloro-2-methyl-, hydrochloride
U093	60-11-7	Benzenamine, N,N-dimethyl-4-(phenylazo)-
U328	95-53-4	Benzenamine, 2-methyl-
U353	106-49-0	Benzenamine, 4-methyl-
U158	101-14-4	Benzenamine, 4,4'-methylenebis[2-chloro-
U222	636-21-5	Benzenamine, 2-methyl-, hydrochloride
U181	99-55-8	Benzenamine, 2-methyl-5-nitro-
U019	71-43-2	Benzene (I,T)
U038	510-15-6	Benzeneacetic acid, 4-chloro-alpha-(4-chlorophenyl)-alpha-hydroxy-, ethyl ester
U030	101-55-3	Benzene, 1-bromo-4-phenoxy-
U035	305-03-3	Benzenebutanoic acid, 4-[bis(2-chloroethyl)amino]-
U037	108-90-7	Benzene, chloro-
U221	25376-45-8	Benzenediamine, ar-methyl-
U028	117-81-7	1,2-Benzenedicarboxylic acid, bis(2-ethylhexyl) ester
U069	84-74-2	1,2-Benzenedicarboxylic acid, dibutyl ester
U088	84-66-2	1,2-Benzenedicarboxylic acid, diethyl ester
U102	131-11-3	1,2-Benzenedicarboxylic acid, dimethyl ester
U107	117-84-0	1,2-Benzenedicarboxylic acid, dioctyl ester
U070	95-50-1	Benzene, 1,2-dichloro-
U071	541-73-1	Benzene, 1,3-dichloro-
U072	106-46-7	Benzene, 1,4-dichloro-
U060	72-54-8	Benzene, 1,1'-(2,2-dichloroethylidene)bis[4-chloro-
U017	98-87-3	Benzene, (dichloromethyl)-
U223	26471-62-5	Benzene, 1,3-diisocyanatomethyl- (R,T)
U239	1330-20-7	Benzene, dimethyl- (I,T)
U201	108-46-3	1,3-Benzenediol
U127	118-74-1	Benzene, hexachloro-
U056	110-82-7	Benzene, hexahydro- (I)
U220	108-88-3	Benzene, methyl-
U105	121-14-2	Benzene, 1-methyl-2,4-dinitro-
U106	606-20-2	Benzene, 2-methyl-1,3-dinitro-
U055	98-82-8	Benzene, (1-methylethyl)- (I)
U169	98-95-3	Benzene, nitro-
U183	608-93-5	Benzene, pentachloro-
U185	82-68-8	Benzene, pentachloronitro-
U020	98-09-9	Benzenesulfonic acid chloride (C,R)
U020	98-09-9	Benzenesulfonyl chloride (C,R)
U207	95-94-3	Benzene, 1,2,4,5-tetrachloro-
U061	50-29-3	Benzene, 1,1'-(2,2,2-trichloroethylidene)bis[4-chloro-
U247	72-43-5	Benzene, 1,1'-(2,2,2-trichloroethylidene)bis[4-methoxy-
U023	98-07-7	Benzene, (trichloromethyl)-
U234	99-35-4	Benzene, 1,3,5-trinitro-

Hazardous waste No.	Chemical abstracts No.	Substance
U021	92-87-5	Benzidine
U202	[1] 81-07-2	1,2-Benzisothiazol-3(2H)-one, 1,1-dioxide, & salts
U203	94-59-7	1,3-Benzodioxole, 5-(2-propenyl)-
U141	120-58-1	1,3-Benzodioxole, 5-(1-propenyl)-
U090	94-58-6	1,3-Benzodioxole, 5-propyl-
U064	189-55-9	Benzo[rst]pentaphene
U248	[1] 81-81-2	2H-1-Benzopyran-2-one, 4-hydroxy-3-(3-oxo-1-phenylbutyl)-, & salts, when present at concentrations of 0.3% or less
U022	50-32-8	Benzo[a]pyrene
U197	106-51-4	p-Benzoquinone
U023	98-07-7	Benzotrichloride (C,R,T)
U085	1464-53-5	2,2'-Bioxirane
U021	92-87-5	[1,1'-Biphenyl]-4,4'-diamine
U073	91-94-1	[1,1'-Biphenyl]-4,4'-diamine, 3,3'-dichloro-
U091	119-90-4	[1,1'-Biphenyl]-4,4'-diamine, 3,3'-dimethoxy-
U095	119-93-7	[1,1'-Biphenyl]-4,4'-diamine, 3,3'-dimethyl-
U225	75-25-2	Bromoform
U030	101-55-3	4-Bromophenyl phenyl ether
U128	87-68-3	1,3-Butadiene, 1,1,2,3,4,4-hexachloro-
U172	924-16-3	1-Butanamine, N-butyl-N-nitroso-
U031	71-36-3	1-Butanol (I)
U159	78-93-3	2-Butanone (I,T)
U160	1338-23-4	2-Butanone, peroxide (R,T)
U053	4170-30-3	2-Butenal
U074	764-41-0	2-Butene, 1,4-dichloro- (I,T)
U143	303-34-4	2-Butenoic acid, 2-methyl-, 7-[[2,3-dihydroxy-2-(1-methoxyethyl)-3-methyl-1-oxobutoxy]methyl]-2,3,5,7a-tetrahydro-1H-pyrrolizin-1-yl ester, [1S-[1alpha(Z),7(2S*,3R*),7aalpha]]-
U031	71-36-3	n-Butyl alcohol (I)
U136	75-60-5	Cacodylic acid
U032	13765-19-0	Calcium chromate
U238	51-79-6	Carbamic acid, ethyl ester
U178	615-53-2	Carbamic acid, methylnitroso-, ethyl ester
U097	79-44-7	Carbamic chloride, dimethyl-
U114	[1] 111-54-6	Carbamodithioic acid, 1,2-ethanediylbis-, salts & esters
U062	2303-16-4	Carbamothioic acid, bis(1-methylethyl)-, S-(2,3-dichloro-2-propenyl) ester
U215	6533-73-9	Carbonic acid, dithallium(1+) salt
U033	353-50-4	Carbonic difluoride
U156	79-22-1	Carbonochloridic acid, methyl ester (I,T)
U033	353-50-4	Carbon oxyfluoride (R,T)
U211	56-23-5	Carbon tetrachloride
U034	75-87-6	Chloral
U035	305-03-3	Chlorambucil
U036	57-74-9	Chlordane, alpha & gamma isomers
U026	494-03-1	Chlornaphazin
U037	108-90-7	Chlorobenzene
U038	510-15-6	Chlorobenzilate
U039	59-50-7	p-Chloro-m-cresol
U042	110-75-8	2-Chloroethyl vinyl ether
U044	67-66-3	Chloroform
U046	107-30-2	Chloromethyl methyl ether
U047	91-58-7	beta-Chloronaphthalene
U048	95-57-8	o-Chlorophenol
U049	3165-93-3	4-Chloro-o-toluidine, hydrochloride
U032	13765-19-0	Chromic acid H_2CrO_4, calcium salt
U050	218-01-9	Chrysene
U051	.....	Creosote
U052	1319-77-3	Cresol (Cresylic acid)
U053	4170-30-3	Crotonaldehyde
U055	98-82-8	Cumene (I)
U246	506-68-3	Cyanogen bromide (CN)Br
U197	106-51-4	2,5-Cyclohexadiene-1,4-dione
U056	110-82-7	Cyclohexane (I)
U129	58-89-9	Cyclohexane, 1,2,3,4,5,6-hexachloro-, (1alpha,2alpha,3beta,4alpha,5alpha,6beta)-
U057	108-94-1	Cyclohexanone (I)
U130	77-47-4	1,3-Cyclopentadiene, 1,2,3,4,5,5-hexachloro-
U058	50-18-0	Cyclophosphamide
U240	[1] 94-75-7	2,4-D, salts & esters
U059	20830-81-3	Daunomycin
U060	72-54-8	DDD
U061	50-29-3	DDT
U062	2303-16-4	Diallate
U063	53-70-3	Dibenz[a,h]anthracene
U064	189-55-9	Dibenzo[a,i]pyrene
U066	96-12-8	1,2-Dibromo-3-chloropropane
U069	84-74-2	Dibutyl phthalate
U070	95-50-1	o-Dichlorobenzene
U071	541-73-1	m-Dichlorobenzene
U072	106-46-7	p-Dichlorobenzene
U073	91-94-1	3,3'-Dichlorobenzidine
U074	764-41-0	1,4-Dichloro-2-butene (I,T)
U075	75-71-8	Dichlorodifluoromethane
U078	75-35-4	1,1-Dichloroethylene
U079	156-60-5	1,2-Dichloroethylene
U025	111-44-4	Dichloroethyl ether
U027	108-60-1	Dichloroisopropyl ether
U024	111-91-1	Dichloromethoxy ethane
U081	120-83-2	2,4-Dichlorophenol
U082	87-65-0	2,6-Dichlorophenol
U084	542-75-6	1,3-Dichloropropene
U085	1464-53-5	1,2:3,4-Diepoxybutane (I,T)
U108	123-91-1	1,4-Diethyleneoxide
U028	117-81-7	Diethylhexyl phthalate
U086	1615-80-1	N,N'-Diethylhydrazine
U087	3288-58-2	O,O-Diethyl S-methyl dithiophosphate
U088	84-66-2	Diethyl phthalate
U089	56-53-1	Diethylstilbesterol
U090	94-58-6	Dihydrosafrole
U091	119-90-4	3,3'-Dimethoxybenzidine
U092	124-40-3	Dimethylamine (I)
U093	60-11-7	p-Dimethylaminoazobenzene
U094	57-97-6	7,12-Dimethylbenz[a]anthracene
U095	119-93-7	3,3'-Dimethylbenzidine
U096	80-15-9	alpha,alpha-Dimethylbenzylhydroperoxide (R)
U097	79-44-7	Dimethylcarbamoyl chloride
U098	57-14-7	1,1-Dimethylhydrazine
U099	540-73-8	1,2-Dimethylhydrazine
U101	105-67-9	2,4-Dimethylphenol
U102	131-11-3	Dimethyl phthalate
U103	77-78-1	Dimethyl sulfate
U105	121-14-2	2,4-Dinitrotoluene
U106	606-20-2	2,6-Dinitrotoluene
U107	117-84-0	Di-n-octyl phthalate
U108	123-91-1	1,4-Dioxane
U109	122-66-7	1,2-Diphenylhydrazine
U110	142-84-7	Dipropylamine (I)
U111	621-64-7	Di-n-propylnitrosamine
U041	106-89-8	Epichlorohydrin
U001	75-07-0	Ethanal (I)
U174	55-18-5	Ethanamine, N-ethyl-N-nitroso-
U155	91-80-5	1,2-Ethanediamine, N,N-dimethyl-N'-2-pyridinyl-N'-(2-thienylmethyl)-
U067	106-93-4	Ethane, 1,2-dibromo-
U076	75-34-3	Ethane, 1,1-dichloro-
U077	107-06-2	Ethane, 1,2-dichloro-
U131	67-72-1	Ethane, hexachloro-
U024	111-91-1	Ethane, 1,1'-[methylenebis(oxy)]bis[2-chloro-
U117	60-29-7	Ethane, 1,1'-oxybis-(I)
U025	111-44-4	Ethane, 1,1'-oxybis[2-chloro-
U184	76-01-7	Ethane, pentachloro-
U208	630-20-6	Ethane, 1,1,1,2-tetrachloro-
U209	79-34-5	Ethane, 1,1,2,2-tetrachloro-
U218	62-55-5	Ethanethioamide
U226	71-55-6	Ethane, 1,1,1-trichloro-
U227	79-00-5	Ethane, 1,1,2-trichloro-
U359	110-80-5	Ethanol, 2-ethoxy-
U173	1116-54-7	Ethanol, 2,2'-(nitrosoimino)bis-
U004	98-86-2	Ethanone, 1-phenyl-
U043	75-01-4	Ethene, chloro-
U042	110-75-8	Ethene, (2-chloroethoxy)-
U078	75-35-4	Ethene, 1,1-dichloro-
U079	156-60-5	Ethene, 1,2-dichloro-, (E)-
U210	127-18-4	Ethene, tetrachloro-
U228	79-01-6	Ethene, trichloro-
U112	141-78-6	Ethyl acetate (I)
U113	140-88-5	Ethyl acrylate (I)
U238	51-79-6	Ethyl carbamate (urethane)
U117	60-29-7	Ethyl ether (I)
U114	[1] 111-54-6	Ethylenebisdithiocarbamic acid, salts & esters
U067	106-93-4	Ethylene dibromide
U077	107-06-2	Ethylene dichloride
U359	110-80-5	Ethylene glycol monoethyl ether
U115	75-21-8	Ethylene oxide (I,T)

Hazardous waste No.	Chemical abstracts No.	Substance
U116	96-45-7	Ethylenethiourea
U076	75-34-3	Ethylidene dichloride
U118	97-63-2	Ethyl methacrylate
U119	62-50-0	Ethyl methanesulfonate
U120	206-44-0	Fluoranthene
U122	50-00-0	Formaldehyde
U123	64-18-6	Formic acid (C,T)
U124	110-00-9	Furan (I)
U125	98-01-1	2-Furancarboxaldehyde (I)
U147	108-31-6	2,5-Furandione
U213	109-99-9	Furan, tetrahydro-(I)
U125	98-01-1	Furfural (I)
U124	110-00-9	Furfuran (I)
U206	18883-66-4	Glucopyranose, 2-deoxy-2-(3-methyl-3-nitrosoureido)-, D-
U206	18883-66-4	D-Glucose, 2-deoxy-2-[[(methylnitrosoamino)-carbonyl]amino]-
U126	765-34-4	Glycidylaldehyde
U163	70-25-7	Guanidine, N-methyl-N'-nitro-N-nitroso-
U127	118-74-1	Hexachlorobenzene
U128	87-68-3	Hexachlorobutadiene
U130	77-47-4	Hexachlorocyclopentadiene
U131	67-72-1	Hexachloroethane
U132	70-30-4	Hexachlorophene
U243	1888-71-7	Hexachloropropene
U133	302-01-2	Hydrazine (R,T)
U086	1615-80-1	Hydrazine, 1,2-diethyl-
U098	57-14-7	Hydrazine, 1,1-dimethyl-
U099	540-73-8	Hydrazine, 1,2-dimethyl-
U109	122-66-7	Hydrazine, 1,2-diphenyl-
U134	7664-39-3	Hydrofluoric acid (C,T)
U134	7664-39-3	Hydrogen fluoride (C,T)
U135	7783-06-4	Hydrogen sulfide
U135	7783-06-4	Hydrogen sulfide H_2S
U096	80-15-9	Hydroperoxide, 1-methyl-1-phenylethyl- (R)
U116	96-45-7	2-Imidazolidinethione
U137	193-39-5	Indeno[1,2,3-cd]pyrene
U139	9004-66-4	Iron dextran
U190	85-44-9	1,3-Isobenzofurandione
U140	78-83-1	Isobutyl alcohol (I,T)
U141	120-58-1	Isosafrole
U142	143-50-0	Kepone
U143	303-34-4	Lasiocarpine
U144	301-04-2	Lead acetate
U146	1335-32-6	Lead, bis(acetato-O)tetrahydroxydi-
U145	7446-27-7	Lead phosphate
U146	1335-32-6	Lead subacetate
U129	58-89-9	Lindane
U163	70-25-7	MNNG
U147	108-31-6	Maleic anhydride
U148	123-33-1	Maleic hydrazide
U149	109-77-3	Malononitrile
U150	148-82-3	Melphalan
U151	7439-97-6	Mercury
U152	126-98-7	Methacrylonitrile (I, T)
U092	124-40-3	Methanamine, N-methyl- (I)
U029	74-83-9	Methane, bromo-
U045	74-87-3	Methane, chloro- (I, T)
U046	107-30-2	Methane, chloromethoxy-
U068	74-95-3	Methane, dibromo-
U080	75-09-2	Methane, dichloro-
U075	75-71-8	Methane, dichlorodifluoro-
U138	74-88-4	Methane, iodo-
U119	62-50-0	Methanesulfonic acid, ethyl ester
U211	56-23-5	Methane, tetrachloro-
U153	74-93-1	Methanethiol (I, T)
U225	75-25-2	Methane, tribromo-
U044	67-66-3	Methane, trichloro-
U121	75-69-4	Methane, trichlorofluoro-
U036	57-74-9	4,7-Methano-1H-indene, 1,2,4,5,6,7,8,8-octachloro-2,3,3a,4,7,7a-hexahydro-
U154	67-56-1	Methanol (I)
U155	91-80-5	Methapyrilene
U142	143-50-0	1,3,4-Metheno-2H-cyclobuta[cd]pentalen-2-one, 1,1a,3,3a,4,5,5,5a,5b,6-decachloroctahydro-
U247	72-43-5	Methoxychlor
U154	67-56-1	Methyl alcohol (I)
U029	74-83-9	Methyl bromide
U186	504-60-9	1-Methylbutadiene (I)
U045	74-87-3	Methyl chloride (I,T)
U156	79-22-1	Methyl chlorocarbonate (I,T)
U226	71-55-6	Methyl chloroform
U157	56-49-5	3-Methylcholanthrene
U158	101-14-4	4,4'-Methylenebis(2-chloroaniline)
U068	74-95-3	Methylene bromide
U080	75-09-2	Methylene chloride
U159	78-93-3	Methyl ethyl ketone (MEK) (I,T)
U160	1338-23-4	Methyl ethyl ketone peroxide (R,T)
U138	74-88-4	Methyl iodide
U161	108-10-1	Methyl isobutyl ketone (I)
U162	80-62-6	Methyl methacrylate (I,T)
U161	108-10-1	4-Methyl-2-pentanone (I)
U164	56-04-2	Methylthiouracil
U010	50-07-7	Mitomycin C
U059	20830-81-3	5,12-Naphthacenedione, 8-acetyl-10-[(3-amino-2,3,6-trideoxy)-alpha-L-lyxo-hexopyranosyl)oxy]-7,8,9,10-tetrahydro-6,8,11-trihydroxy-1-methoxy-, (8S-cis)-
U167	134-32-7	1-Naphthalenamine
U168	91-59-8	2-Naphthalenamine
U026	494-03-1	Naphthalenamine, N,N'-bis(2-chloroethyl)-
U165	91-20-3	Naphthalene
U047	91-58-7	Naphthalene, 2-chloro-
U166	130-15-4	1,4-Naphthalenedione
U236	72-57-1	2,7-Naphthalenedisulfonic acid, 3,3'-[(3,3'-dimethyl[1,1'-biphenyl]-4,4'-diyl)bis(azo)bis(5-amino-4-hydroxy)]-, tetrasodium salt
U166	130-15-4	1,4-Naphthoquinone
U167	134-32-7	alpha-Naphthylamine
U168	91-59-8	beta-Naphthylamine
U217	10102-45-1	Nitric acid, thallium(1+) salt
U169	98-95-3	Nitrobenzene (I,T)
U170	100-02-7	p-Nitrophenol
U171	79-46-9	2-Nitropropane (I,T)
U172	924-16-3	N-Nitrosodi-n-butylamine
U173	1116-54-7	N-Nitrosodiethanolamine
U174	55-18-5	N-Nitrosodiethylamine
U176	759-73-9	N-Nitroso-N-ethylurea
U177	684-93-5	N-Nitroso-N-methylurea
U178	615-53-2	N-Nitroso-N-methylurethane
U179	100-75-4	N-Nitrosopiperidine
U180	930-55-2	N-Nitrosopyrrolidine
U181	99-55-8	5-Nitro-o-toluidine
U193	1120-71-4	1,2-Oxathiolane, 2,2-dioxide
U058	50-18-0	2H-1,3,2-Oxazaphosphorin-2-amine, N,N-bis(2-chloroethyl)tetrahydro-, 2-oxide
U115	75-21-8	Oxirane (I,T)
U126	765-34-4	Oxiranecarboxyaldehyde
U041	106-89-8	Oxirane, (chloromethyl)-
U182	123-63-7	Paraldehyde
U183	608-93-5	Pentachlorobenzene
U184	76-01-7	Pentachloroethane
U185	82-68-8	Pentachloronitrobenzene (PCNB)
See F027	87-86-5	Pentachlorophenol
U161	108-10-1	Pentanol, 4-methyl-
U186	504-60-9	1,3-Pentadiene (I)
U187	62-44-2	Phenacetin
U188	108-95-2	Phenol
U048	95-57-8	Phenol, 2-chloro-
U039	59-50-7	Phenol, 4-chloro-3-methyl-
U081	120-83-2	Phenol, 2,4-dichloro-
U082	87-65-0	Phenol, 2,6-dichloro-
U089	56-53-1	Phenol, 4,4'-(1,2-diethyl-1,2-ethenediyl)bis-, (E)-
U101	105-67-9	Phenol, 2,4-dimethyl-
U052	1319-77-3	Phenol, methyl-
U132	70-30-4	Phenol, 2,2'-methylenebis(3,4,6-trichloro-
U170	100-02-7	Phenol, 4-nitro-
See F027	87-86-5	Phenol, pentachloro-
See F027	58-90-2	Phenol, 2,3,4,6-tetrachloro-
See F027	95-95-4	Phenol, 2,4,5-trichloro-
See F027	88-06-2	Phenol, 2,4,6-trichloro-
U150	148-82-3	L-Phenylalanine, 4-[bis(2-chloroethyl)amino]-
U145	7446-27-7	Phosphoric acid, lead(2+) salt (2:3)
U087	3288-58-2	Phosphorodithioic acid, O,O-diethyl S-methyl ester

Hazardous waste No.	Chemical abstracts No.	Substance
U189	1314-80-3	Phosphorus sulfide (R)
U190	85-44-9	Phthalic anhydride
U191	109-06-8	2-Picoline
U179	100-75-4	Piperidine, 1-nitroso-
U192	23950-58-5	Pronamide
U194	107-10-8	1-Propanamine (I,T)
U111	621-64-7	1-Propanamine, N-nitroso-N-propyl-
U110	142-84-7	1-Propanamine, N-propyl- (I)
U066	96-12-8	Propane, 1,2-dibromo-3-chloro-
U083	78-87-5	Propane, 1,2-dichloro-
U149	109-77-3	Propanedinitrile
U171	79-46-9	Propane, 2-nitro- (I,T)
U027	108-60-1	Propane, 2,2'-oxybis[2-chloro-
U193	1120-71-4	1,3-Propane sultone
See F027	93-72-1	Propanoic acid, 2-(2,4,5-trichlorophenoxy)-
U235	126-72-7	1-Propanol, 2,3-dibromo-, phosphate (3:1)
U140	78-83-1	1-Propanol, 2-methyl- (I,T)
U002	67-64-1	2-Propanone (I)
U007	79-06-1	2-Propenamide
U084	542-75-6	1-Propene, 1,3-dichloro-
U243	1888-71-7	1-Propene, 1,1,2,3,3,3-hexachloro-
U009	107-13-1	2-Propenenitrile
U152	126-98-7	2-Propenenitrile, 2-methyl- (I,T)
U008	79-10-7	2-Propenoic acid (I)
U113	140-88-5	2-Propenoic acid, ethyl ester (I)
U118	97-63-2	2-Propenoic acid, 2-methyl-, ethyl ester
U162	80-62-6	2-Propenoic acid, 2-methyl-, methyl ester (I,T)
U194	107-10-8	n-Propylamine (I,T)
U083	78-87-5	Propylene dichloride
U148	123-33-1	3,6-Pyridazinedione, 1,2-dihydro-
U196	110-86-1	Pyridine
U191	109-06-8	Pyridine, 2-methyl-
U237	66-75-1	2,4-(1H,3H)-Pyrimidinedione, 5-[bis(2-chloroethyl)amino]-
U164	56-04-2	4(1H)-Pyrimidinone, 2,3-dihydro-6-methyl-2-thioxo-
U180	930-55-2	Pyrrolidine, 1-nitroso-
U200	50-55-5	Reserpine
U201	108-46-3	Resorcinol
U202	[1] 81-07-2	Saccharin, & salts
U203	94-59-7	Safrole
U204	7783-00-8	Selenious acid
U204	7783-00-8	Selenium dioxide
U205	7488-56-4	Selenium sulfide
U205	7488-56-4	Selenium sulfide SeS_2 (R,T)
U015	115-02-6	L-Serine, diazoacetate (ester)
See F027	93-72-1	Silvex (2,4,5-TP)
U206	18883-66-4	Streptozotocin
U103	77-78-1	Sulfuric acid, dimethyl ester
U189	1314-80-3	Sulfur phosphide (R)
See F027	93-76-5	2,4,5-T
U207	95-94-3	1,2,4,5-Tetrachlorobenzene
U208	630-20-6	1,1,1,2-Tetrachloroethane
U209	79-34-5	1,1,2,2-Tetrachloroethane
U210	127-18-4	Tetrachloroethylene
See F027	58-90-2	2,3,4,6-Tetrachlorophenol
U213	109-99-9	Tetrahydrofuran (I)
U214	563-68-8	Thallium(I) acetate
U215	6533-73-9	Thallium(I) carbonate
U216	7791-12-0	Thallium(I) chloride
U216	7791-12-0	Thallium chloride TlCl
U217	10102-45-1	Thallium(I) nitrate
U218	62-55-5	Thioacetamide
U153	74-93-1	Thiomethanol (I,T)
U244	137-26-8	Thioperoxydicarbonic diamide $((H_2N)C(S))_2S_2$, tetramethyl-
U219	62-56-6	Thiourea
U244	137-26-8	Thiram
U220	108-88-3	Toluene
U221	25376-45-8	Toluenediamine
U223	26471-62-5	Toluene diisocyanate (R,T)
U328	95-53-4	o-Toluidine
U353	106-49-0	p-Toluidine
U222	636-21-5	o-Toluidine hydrochloride
U011	61-82-5	1H-1,2,4-Triazol-3-amine
U227	79-00-5	1,1,2-Trichloroethane
U228	79-01-6	Trichloroethylene
U121	75-69-4	Trichloromonofluoromethane
See F027	95-95-4	2,4,5-Trichlorophenol
See F027	88-06-2	2,4,6-Trichlorophenol
U234	99-35-4	1,3,5-Trinitrobenzene (R,T)
U182	123-63-7	1,3,5-Trioxane, 2,4,6-trimethyl-
U235	126-72-7	Tris(2,3-dibromopropyl) phosphate
U236	72-57-1	Trypan blue
U237	66-75-1	Uracil mustard
U176	759-73-9	Urea, N-ethyl-N-nitroso-
U177	684-93-5	Urea, N-methyl-N-nitroso-
U043	75-01-4	Vinyl chloride
U248	[1] 81-81-2	Warfarin, & salts, when present at concentrations of 0.3% or less
U239	1330-20-7	Xylene (I)
U200	50-55-5	Yohimban-16-carboxylic acid, 11,17-dimethoxy-18-[(3,4,5-trimethoxybenzoyl)oxy]-, methyl ester, (3beta,16beta,17alpha,18beta,20alpha)-
U249	1314-84-7	Zinc phosphide Zn_3P_2, when present at concentrations of 10% or less

[1] CAS Number given for parent compound only.

BEST COPY AVAILABLE

4. Appendix VIII is revised to read as follows:

APPENDIX VIII—HAZARDOUS CONSTITUENTS

Common name	Chemical abstracts name	Chemical abstracts No.	Hazardous waste No.
Acetonitrile	Same	75-05-8	U003
Acetophenone	Ethanone, 1-phenyl-	98-86-2	U004
2-Acetylaminefluarone	Acetamide, N-9H-fluoren-2-yl-	53-96-3	U005
Acetyl chloride	Same	75-36-5	U006
1-Acetyl-2-thiourea	Acetamide, N-(aminothioxomethyl)-	591-08-2	P002
Acrolein	2-Propenal	107-02-8	P003
Acrylamide	2-Propenamide	79-06-1	U007
Acrylonitrile	2-Propenenitrile	107-13-1	U009
Aflatoxins	Same	1402-68-2	
Aldicarb	Propanal, 2-methyl-2-(methylthio)-, O-[(methylamino)carbonyl]oxime	116-06-3	P070
Aldrin	1,4,5,8-Dimethanonaphthalene, 1,2,3,4,10,10-10-hexachloro-1,4,4a,5,8,8a-hexahydro-, (1alpha,4alpha,4abeta,5alpha,8alpha,8abeta)-.	309-00-2	P004
Allyl alcohol	2-Propen-1-ol	107-18-6	P005
Aluminum phosphide	Same	20859-73-8	P006
4-Aminobiphenyl	[1,1'-Biphenyl]-4-amine	92-67-1	
5-(Aminomethyl)-3-isoxazolol	3(2H)-Isoxazolone, 5-(aminomethyl)-	2763-96-4	P007
4-Aminopyridine	4-Pyridinamine	504-24-5	P008
Amitrole	1H-1,2,4-Triazol-3-amine	61-82-5	U011
Ammonium vanadate	Vanadic acid, ammonium salt	7803-55-6	P119
Aniline	Benzenamine	62-53-3	U012
Antimony	Same	7440-36-0	
Antimony compounds, N.O.S.[1]			
Aramite	Sulfurous acid, 2-chloroethyl 2-[4-(1,1-dimethylethyl)phenoxy]-1-methylethyl ester	140-57-8	
Arsenic	Same	7440-38-2	
Arsenic compounds, N.O.S.[1]			
Arsenic acid	Arsenic acid H_3AsO_4	7778-39-4	P010
Arsenic pentoxide	Arsenic oxide As_2O_5	1303-28-2	P011
Arsenic trioxide	Arsenic oxide As_2O_3	1327-53-3	P012
Auramine	Benzenamine, 4,4'-carbonimidoylbis[N,N-dimethyl	492-80-8	U014
Azaserine	L-Serine, diazoacetate (ester)	115-02-6	U015
Barium	Same	7440-39-3	
Barium compounds, N.O.S.[1]			
Barium cyanide	Same	542-62-1	P013
Benz[c]acridine	Same	225-51-4	U016
Benz[a]anthracene	Same	56-55-3	U018
Benzal chloride	Benzene, (dichloromethyl)-	98-87-3	U017
Benzene	Same	71-43-2	U019
Benzenearsonic acid	Arsonic acid, phenyl-	98-05-5	
Benzidine	[1,1'-Biphenyl]-4,4'-diamine	92-87-5	U021
Benzo[b]fluoranthene	Benz[e]acephenanthrylene	205-99-2	
Benzo[j]fluoranthene	Same	205-82-3	
Benzo[a]pyrene	Same	50-32-8	U022
p-Benzoquinone	2,5-Cyclohexadiene-1,4-dione	106-51-4	U197
Benzotrichloride	Benzene, (trichloromethyl)-	98-07-7	U023
Benzyl chloride	Benzene, (chloromethyl)-	100-44-7	P028
Beryllium	Same	7440-41-7	P015
Beryllium compounds, N.O.S.[1]			
Bromoacetone	2-Propanone, 1-bromo-	598-31-2	P017
Bromoform	Methane, tribromo-	75-25-2	U225
4-Bromophenyl phenyl ether	Benzene, 1-bromo-4-phenoxy-	101-55-3	U030
Brucine	Strychnidin-10-one, 2,3-dimethoxy-	357-57-3	P018
Butyl benzyl phthalate	1,2-Benzenedicarboxylic acid, butyl phenylmethyl ester	85-68-7	
Cacodylic acid	Arsinic acid, dimethyl-	75-60-5	U136
Cadmium	Same	7440-43-9	
Cadmium compounds, N.O.S.[1]			
Calcium chromate	Chromic acid H_2CrO_4, calcium salt	13765-19-0	U032
Calcium cyanide	Calcium cyanide $Ca(CN)_2$	592-01-8	P021
Carbon disulfide	Same	75-15-0	P022
Carbon oxyfluoride	Carbonic diffluoride	353-50-4	U033
Carbon tetrachloride	Methane, tetrachloro-	56-23-5	U211
Chloral	Acetaldehyde, trichloro-	75-87-6	U034
Chlorambucil	Benzenebutanoic acid, 4-[bis(2-chloroethyl)amino]-	305-03-3	U035
Chlordane	4,7-Methano-1H-indene, 1,2,4,5,6,7,8,8-octachloro-2,3,3a,4,7,7a-hexahydro-	57-74-9	U036
Chlordane (alpha and gamma isomers)			U036
Chlorinated benzenes, N.O.S.[1]			
Chlorinated ethane, N.O.S.[1]			
Chlorinated fluorocarbons, N.O.S.[1]			
Chlorinated naphthalene, N.O.S.[1]			
Chlorinated phenol, N.O.S.[1]			
Chlornaphazin	Naphthalenamine, N,N'-bis(2-chloroethyl)-	494-03-1	U026
Chloroacetaldehyde	Acetaldehyde, chloro-	107-20-0	P023
Chloroalkyl ethers, N.O.S.[1]			
p-Chloroaniline	Benzenamine, 4-chloro-	106-47-8	P024
Chlorobenzene	Benzene, chloro-	108-90-7	U037
Chlorobenzilate	Benzeneacetic acid, 4-chloro-alpha-(4-chlorophenyl)-alpha-hydroxy-, ethyl ester	510-15-6	U038

APPENDIX VIII—HAZARDOUS CONSTITUENTS—Continued

Common name	Chemical abstracts name	Chemical abstracts No.	Hazardous waste No.
p-Chloro-m-cresol	Phenol, 4-chloro-3-methyl-	59-50-7	U039
2-Chloroethyl vinyl ether	Ethene, (2-chloroethoxy)-	110-75-8	U042
Chloroform	Methane, trichloro-	67-66-3	U044
Chloromethyl methyl ether	Methane, chloromethoxy-	107-30-2	U046
beta-Chloronaphthalene	Naphthalene, 2-chloro-	91-58-7	U047
o-Chlorophenol	Phenol, 2-chloro-	95-57-8	U048
1-(o-Chlorophenyl)thiourea	Thiourea, (2-chlorophenyl)-	5344-82-1	P026
Chloroprene	1,3-Butadiene, 2-chloro-	126-99-8	
3-Chloropropionitrile	Propanenitrile, 3-chloro-	542-76-7	P027
Chromium	Same	7440-47-3	
Chromium compounds, N.O.S.[1]			
Chrysene	Same	218-01-9	U050
Citrus red No. 2	2-Naphthalenol, 1-[(2,5-dimethoxyphenyl)azo]-	6358-53-8	
Coal tar creosote	Same	8007-45-2	
Copper cyanide	Copper cyanide CuCN	544-92-3	P029
Creosote	Same		U051
Cresol (Cresylic acid)	Phenol, methyl-	1319-77-3	U052
Crotonaldehyde	2-Butenal	4170-30-3	U053
Cyanides (soluble salts and complexes) N.O.S.[1].			P030
Cyanogen	Ethanedinitrile	460-19-5	P031
Cyanogen bromide	Cyanogen bromide (CN)Br	506-68-3	U246
Cyanogen chloride	Cyanogen chloride (CN)Cl	506-77-4	P033
Cycasin	beta-D-Glucopyranoside, (methyl-ONN-azoxy)methyl	14901-08-7	
2-Cyclohexyl-4,6-dinitrophenol	Phenol, 2-cyclohexyl-4,6-dinitro-	131-89-5	P034
Cyclophosphamide	2H-1,3,2-Oxazaphosphorin-2-amine, N,N-bis(2-chloroethyl)tetrahydro-, 2-oxide	50-18-0	U058
2,4-D	Acetic acid, (2,4-dichlorophenoxy)-	94-75-7	U240
2,4-D, salts, esters			U240
Daunomycin	5,12-Naphthacenedione, 8-acetyl-10-[(3-amino-2,3,6-trideoxy-alpha-L-lyxo-hexopyranosyl)oxy]-7,8,9,10-tetrahydro-6,8,11-trihydroxy-1-methoxy-, (8S-cis)-	20830-81-3	U059
DDD	Benzene, 1,1'-(2,2-dichloroethylidene)bis[4-chloro-	72-54-8	U060
DDE	Benzene, 1,1'-(dichloroethenylidene)bis[4-chloro-	72-55-9	
DDT	Benzene, 1,1'-(2,2,2-trichloroethylidene)bis[4-chloro-	50-29-3	U061
Diallate	Carbamothioic acid, bis(1-methylethyl)-, S-(2,3-dichloro-2-propenyl) ester	2303-16-4	U062
Dibenz[a,h]acridine	Same	226-36-8	
Dibenz[a,j]acridine	Same	224-42-0	
Dibenz[a,h]anthracene	Same	53-70-3	U063
7H-Dibenzo[c,g]carbazole	Same	194-59-2	
Dibenzo[a,e]pyrene	Naphtho[1,2,3,4-def]chrysene	192-65-4	
Dibenzo[a,h]pyrene	Dibenzo[b,def]chrysene	189-64-0	
Dibenzo[a,i]pyrene	Benzo[rst]pentaphene	189-55-9	U064
1,2-Dibromo-3-chloropropane	Propane, 1,2-dibromo-3-chloro-	96-12-8	U066
Dibutyl phthalate	1,2-Benzenedicarboxylic acid, dibutyl ester	84-74-2	U069
o-Dichlorobenzene	Benzene, 1,2-dichloro-	95-50-1	U070
m-Dichlorobenzene	Benzene, 1,3-dichloro-	541-73-1	U071
p-Dichlorobenzene	Benzene, 1,4-dichloro-	106-46-7	U072
Dichlorobenzene, N.O.S.[1]	Benzene, dichloro-	25321-22-6	
3,3'-Dichlorobenzidine	[1,1'-Biphenyl]-4,4'-diamine, 3,3'-dichloro-	91-94-1	U073
1,4-Dichloro-2-butene	2-Butene, 1,4-dichloro-	764-41-0	U074
Dichlorodifluoromethane	Methane, dichlorodifluoro-	75-71-8	U075
Dichloroethylene, N.O.S.[1]	Dichloroethylene	25323-30-2	
1,1-Dichloroethylene	Ethene, 1,1-dichloro-	75-35-4	U078
1,2-Dichloroethylene	Ethene, 1,2-dichlrol-, (E)-	156-60-5	U079
Dichloroethyl ether	Ethane, 1,1'oxybis[2-chloro-	111-44-4	U025
Dichloroisopropyl ether	Propane, 2,2'-oxybis[2-chloro-	108-60-1	U027
Dichloromethoxy ethane	Ethane, 1,1'-[methylenebis(oxy)]bis[2-chloro-	111-91-1	U024
Dichloromethyl ether	Methane, oxybis[chloro-	542-88-1	P016
2,4-Dichlorophenol	Phenol, 2,4-dichloro-	120-83-2	U081
2,6-Dichlorophenol	Phenol, 2,6-dichloro-	87-65-0	U082
Dichlorophenylarsine	Arsonous dichloride, phenyl-	696-28-6	P036
Dichloropropane, N.O.S.[1]	Propane, dichloro-	26638-19-7	
Dichloropropanol, N.O.S.[1]	Propanol, dichloro-	26545-73-3	
Dichloropropene, N.O.S.[1]	1-Propene, dichloro-	26952-23-8	
1,3-Dichloropropene	1-Propene, 1,3-dichloro-	542-75-6	U084
Dieldrin	2,7:3,6-Dimethanonaphth[2,3-b]oxirene, 3,4,5,6,9,9-hexachloro-1a,2,2a,3,6,6a,7,7a-octahydro-, (1aalpha,2beta,2aalpha,3beta,6beta,6aalpha,7beta,7aalpha)-	60-57-1	P037
1,2:3,4-Diepoxybutane	2,2'Bioxirane	1464-53-5	U085
Diethylarsine	Arsine, diethyl-	692-42-2	P038
1,4-Diethyleneoxide	1,4-Dioxane	123-91-1	U108
Diethylhexyl phthalate	1,2-Benzenedicarboxylic acid, bis(2-ethylhexyl) ester	117-81-7	U028
N,N'-Diethylhydrazine	Hydrazine, 1,2-diethyl-	1615-80-1	U086
O,O-Diethyl S-methyl dithiophosphate	Phosphorodithioic acid, O,O-diethyl S-methyl ester	3288-58-2	U087
Diethyl-p-nitrophenyl phosphate	Phosphoric acid, diethyl 4-nitrophenyl ester	311-45-5	P041
Diethyl phthalate	1,2-Benzenedicarboxylic acid, diethyl ester	84-66-2	U088
O,O-Diethyl O-pyrazinyl phosphorothioate.	Phosphorothioic acid, O,O-diethyl O-pyrazinyl ester	297-97-2	P040
Diethylstilbesterol	Phenol, 4,4'-(1,2-diethyl-1,2-ethenediyl)bis-, (E)-	56-53-1	U089
Dihydrosafrole	1,3-Benzodioxole, 5-propyl-	94-58-6	U090
Diisopropylfluorophosphate (DFP)	Phosphorofluoridic acid, bis(1-methylethyl) ester	55-91-4	P043

APPENDIX VIII—HAZARDOUS CONSTITUENTS—Continued

Common name	Chemical abstracts name	Chemical abstracts No.	Hazardous waste No.
Dimethoate	Phosphorodithioic acid, O,O-dimethyl S-[2-(methylamino)-2-oxoethyl] ester	60-51-5	P044
3,3'-Dimethoxybenzidine	[1,1'-Biphenyl]-4,4'-diamine, 3,3'-dimethoxy-	119-90-4	U091
p-Dimethylaminoazobenzene	Benzenamine, N,N-dimethyl-4-(phenylazo)-	60-11-7	U093
7,12-Dimethylbenz[a]anthracene	Benz[a]anthracene, 7,12-dimethyl-	57-97-6	U094
3,3'-Dimethylbenzidine	[1,1'-Biphenyl]-4,4'-diamine, 3,3'-dimethyl-	119-93-7	U095
Dimethylcarbamoyl chloride	Carbamic chloride, dimethyl-	79-44-7	U097
1,1-Dimethylhydrazine	Hydrazine, 1,1-dimethyl-	57-14-7	U098
1,2-Dimethylhydrazine	Hydrazine, 1,2-dimethyl-	540-73-8	U099
alpha,alpha-Dimethylphenethylamine	Benzeneethanamine, alpha,alpha-dimethyl-	122-09-8	P046
2,4-Dimethylphenol	Phenol, 2,4-dimethyl-	105-67-9	U101
Dimethyl phthalate	1,2-Benzenedicarboxylic acid, dimethyl ester	131-11-3	U102
Dimethyl sulfate	Sulfuric acid, dimethyl ester	77-78-1	U103
Dinitrobenzene, N.O.S.[1]	Benzene, dinitro-	25154-54-5	
4,6-Dinitro-o-cresol	Phenol, 2-methyl-4,6-dinitro-	534-52-1	P047
4,6-Dinitro-o-cresol salts			P047
2,4-Dinitrophenol	Phenol, 2,4-dinitro-	51-28-5	P048
2,4-Dinitrotoluene	Benzene, 1-methyl-2,4-dinitro-	121-14-2	U105
2,6-Dinitrotoluene	Benzene, 2-methyl-1,3-dinitro-	606-20-2	U106
Dinoseb	Phenol, 2-(1-methylpropyl)-4,6-dinitro-	88-85-7	P020
Di-n-octyl phthalate	1,2-Benzenedicarboxylic acid, dioctyl ester	117-84-0	U017
Diphenylamine	Benzenamine, N-phenyl-	122-39-4	
1,2-Diphenylhydrazine	Hydrazine, 1,2-diphenyl-	122-66-7	U109
Di-n-propylnitrosamine	1-Propanamine, N-nitroso-N-propyl-	621-64-7	U111
Disulfoton	Phosphorodithioic acid, O,O-diethyl S-[2-(ethylthio)ethyl] ester	298-04-4	P039
Dithiobiuret	Thioimidodicarbonic diamide [(H$_2$N)C(S)]$_2$NH	541-53-7	P049
Endosulfan	6,9-Methano-2,4,3-benzodioxathiepin, 6,7,8,9,10,10-hexachloro-1,5,5a,6,9,9a- hexahydro-, 3-oxide.	115-29-7	P050
Endothall	7-Oxabicyclo[2.2.1]heptane-2,3-dicarboxylic acid	145-73-3	P088
Endrin	2,7:3,6-Dimethanonaphth[2,3-b]oxirene, 3,4,5,6,9,9-hexachloro-1a,2,2a,3,6,6a,7,7a-octahydro-, (1aalpha,2beta,2abeta,3alpha,6alpha,6abeta,7beta,7aalpha)-.	72-20-8	P051
Endrin metabolites			P051
Epichlorohydrin	Oxirane, (chloromethyl)-	106-89-8	U041
Epinephrine	1,2-Benzenediol, 4-[1-hydroxy-2-(methylamino)ethyl]-, (R)-	51-43-4	P042
Ethyl carbamate (urethane)	Carbamic acid, ethyl ester	51-79-6	U238
Ethyl cyanide	Propanenitrile	107-12-0	P101
Ethylenebisdithiocarbamic acid	Carbamodithioic acid, 1,2-ethanediylbis-	111-54-6	U114
Ethylenebisdithiocarbamic acid, salts and esters			U114
Ethylene dibromide	Ethane, 1,2-dibromo-	106-93-4	U067
Ethylene dichloride	Ethane, 1,2-dichloro-	107-06-2	U077
Ethylene glycol monoethyl ether	Ethanol, 2-ethoxy-	110-80-5	U359
Ethyleneimine	Aziridine	151-56-4	P054
Ethylene oxide	Oxirane	75-21-8	U115
Ethylenethiourea	2-Imidazolidinethione	96-45-7	U116
Ethylidene dichloride	Ethane, 1,1-dichloro-	75-34-3	U076
Ethyl methacrylate	2-Propenoic acid, 2-methyl-, ethyl ester	97-63-2	U118
Ethyl methanesulfonate	Methanesulfonic acid, ethyl ester	62-50-0	U119
Famphur	Phosphorothioic acid, O-[4-[(dimethylamino)sulfonyl]phenyl] O,O-dimethyl ester	52-85-7	P097
Fluoranthene	Same	206-44-0	U120
Fluorine	Same	7782-41-4	P056
Fluoroacetamide	Acetamide, 2-fluoro-	640-19-7	P057
Fluoroacetic acid, sodium salt	Acetic acid, fluoro-, sodium salt	62-74-8	P058
Formaldehyde	Same	50-00-0	U122
Formic acid	Same	64-18-6	U123
Glycidylaldehyde	Oxiranecarboxyaldehyde	765-34-4	U126
Halomethanes, N.O.S.[1]			
Heptachlor	4,7-Methano-1H-indene, 1,4,5,6,7,8,8-heptachloro-3a,4,7,7a-tetrahydro-	76-44-8	P059
Heptachlor epoxide	2,5-Methano-2H-indeno[1,2-b]oxirene, 2,3,4,5,6,7,7-heptachloro-1a,1b,5,5a,6,6a-hexahydro-, (1aalpha,1bbeta,2alpha,5alpha,5abeta,6beta,6aalpha)-.	1024-57-3	
Heptachlor epoxide (alpha, beta, and gamma isomers)			
Hexachlorobenzene	Benzene, hexachloro-	118-74-1	U127
Hexachlorobutadiene	1,3-Butadiene, 1,1,2,3,4,4-hexachloro-	87-68-3	U128
Hexachlorocyclopentadiene	1,3-Cyclopentadiene, 1,2,3,4,5,5-hexachloro-	77-47-4	U130
Hexachlorodibenzo-p-dioxins			
Hexachlorodibenzofurans			
Hexachloroethane	Ethane, hexachloro-	67-72-1	U131
Hexachlorophene	Phenol, 2,2'-methylenebis[3,4,6-trichloro-	70-30-4	U132
Hexachloropropene	1-Propene, 1,1,2,3,3,3-hexachloro-	1888-71-7	U243
Hexaethyl tetraphosphate	Tetraphosphoric acid, hexaethyl ester	757-58-4	P062
Hydrazine	Same	302-01-2	U133
Hydrogen cyanide	Hydrocyanic acid	74-90-8	P063
Hydrogen fluoride	Hydrofluoric acid	7664-39-3	U134
Hydrogen sulfide	Hydrogen sulfide H$_2$S	7783-06-4	U135
Indeno[1,2,3-cd]pyrene	Same	193-39-5	U137
Iron dextran	Same	9004-66-4	U139
Isobutyl alcohol	1-Propanol, 2-methyl-	78-83-1	U140
Isodrin	1,4,5,8-Dimethanonaphthalene, 1,2,3,4,10,10-hexachloro-1,4,4a,5,8,8a-hexahydro-, (1alpha,4alpha,4abeta,5beta,8beta,8abeta)-.	465-73-6	P060

APPENDIX VIII—HAZARDOUS CONSTITUENTS—Continued

Common name	Chemical abstracts name	Chemical abstracts No.	Hazardous waste No.
Isosafrole	1,3-Benzodioxole, 5-(1-propenyl)-	120-58-1	U141
Kepone	1,3,4-Metheno-2H-cyclobuta[cd]pentalen-2-one, 1,1a,3,3a,4,5,5,5a,5b,6-decachlorooctahydro-	143-50-0	U142
Lasiocarpine	2-Butenoic acid, 2-methyl-, 7-[[2,3-dihydroxy-2-(1-methoxyethyl)-3-methyl-1-oxobutoxy]methyl]-2,3,5,7a-tetrahydro-1H-pyrrolizin-1-yl ester, [1S-[1alpha(Z),7(2S*,3R*),7aalpha]]-	303-34-1	4143
Lead	Same	7439-92-1	
Lead compounds, N.O.S.[1]			
Lead acetate	Acetic acid, lead(2+) salt	301-04-2	U144
Lead phosphate	Phosphoric acid, lead(2+) salt (2:3)	7446-27-7	U145
Lead subacetate	Lead, bis(acetato-O)tetrahydroxytri-	1335-32-6	U146
Lindane	Cyclohexane, 1,2,3,4,5,6-hexachloro-, (1alpha,2alpha,3beta,4alpha,5alpha,6beta)-	58-89-9	U129
Maleic anhydride	2,5-Furandione	108-31-6	U147
Maleic hydrazide	3,6-Pyridazinedione, 1,2-dihydro-	123-33-1	U148
Malononitrile	Propanedinitrile	109-77-3	U149
Melphalan	L-Phenylalanine, 4-[bis(2-chloroethyl)amino]-	148-82-3	U150
Mercury	Same	7439-97-6	U151
Mercury compounds, N.O.S.[1]			
Mercury fulminate	Fulminic acid, mercury(2+) salt	628-86-4	P065
Methacrylonitrile	2-Propenenitrile, 2-methyl-	126-98-7	U152
Methapyrilene	1,2-Ethanediamine, N,N-dimethyl-N'-2-pyridinyl-N'-(2-thienylmethyl)-	91-80-5	U155
Methomyl	Ethanimidothioic acid, N-[[(methylamino)carbonyl]oxy]-, methyl ester	16752-77-5	P066
Methoxychlor	Benzene, 1,1'-(2,2,2-trichloroethylidene)bis[4-methoxy-	72-43-5	U247
Methyl bromide	Methane, bromo-	74-83-9	U029
Methyl chloride	Methane, chloro-	74-87-3	U045
Methyl chlorocarbonate	Carbonochloridic acid, methyl ester	79-22-1	U156
Methyl chloroform	Ethane, 1,1,1-trichloro-	71-55-6	U226
3-Methylcholanthrene	Benz[j]aceanthrylene, 1,2-dihydro-3-methyl-	56-49-5	U157
4,4'-Methylenebis(2-chloroaniline)	Benzenamine, 4,4'-methylenebis[2-chloro-	101-14-4	U158
Methylene bromide	Methane, dibromo-	74-95-3	U068
Methylene chloride	Methane, dichloro-	75-09-2	U080
Methyl ethyl ketone (MEK)	2-Butanone	78-93-3	U159
Methyl ethyl ketone peroxide	2-Butanone, peroxide	1338-23-4	U160
Methyl hydrazine	Hydrazine, methyl-	60-34-4	P068
Methyl iodide	Methane, iodo-	74-88-4	U138
Methyl isocyanate	Methane, isocyanato-	624-83-9	P064
2-Methyllactonitrile	Propanenitrile, 2-hydroxy-2-methyl-	75-86-5	P069
Methyl methacrylate	2-Propenoic acid, 2-methyl-, methyl ester	80-62-6	U162
Methyl methanesulfonate	Methanesulfonic acid, methyl ester	66-27-3	
Methyl parathion	Phosphorothioic acid, O,O-dimethyl O-(4-nitrophenyl) ester	298-00-0	P071
Methylthiouracil	4(1H)-Pyrimidinone, 2,3-dihydro-6-methyl-2-thioxo-	56-04-2	U164
Mitomycin C	Azirino[2',3':3,4]pyrrolo[1,2-a]indole-4,7-dione, 6-amino-8-[[(aminocarbonyl)oxy]methyl]-1,1a,2,8,8a,8b-hexahydro-8a-methoxy-5-methyl-, [1aS-(1aalpha,8beta,8aalpha,8balpha)]-	50-07-7	U010
MNNG	Guanidine, N-methyl-N'-nitro-N-nitroso-	70-25-7	U163
Mustard gas	Ethane, 1,1'-thiobis[2-chloro-	505-60-2	
Naphthalene	Same	91-20-3	U165
1,4-Naphthoquinone	1,4-Naphthalenedione	130-15-4	U166
alpha-Naphthylamine	1-Naphthalenamine	134-32-7	U167
beta-Naphthylamine	2-Naphthalenamine	91-59-8	U168
alpha-Naphthylthiourea	Thiourea, 1-naphthalenyl-	86-88-4	P072
Nickel	Same	7440-02-0	
Nickel compounds, N.O.S.[1]			
Nickel carbonyl	Nickel carbonyl $Ni(CO)_4$, (T-4)-	13463-39-3	P073
Nickel cyanide	Nickel cyanide $Ni(CN)_2$	557-19-7	P074
Nicotine	Pyridine, 3-(1-methyl-2-pyrrolidinyl)-, (S)-	54-11-5	P075
Nicotine salts			P075
Nitric oxide	Nitrogen oxide NO	10102-43-9	P076
p-Nitroaniline	Benzenamine, 4-nitro-	100-01-6	P077
Nitrobenzene	Benzene, nitro-	98-95-3	U169
Nitrogen dioxide	Nitrogen oxide NO_2	10102-44-0	P078
Nitrogen mustard	Ethanamine, 2-chloro-N-(2-chloroethyl)-N-methyl-	51-75-2	
Nitrogen mustard, hydrochloride salt			
Nitrogen mustard N-oxide	Ethanamine, 2-chloro-N-(2-chloroethyl)-N-methyl-, N-oxide	126-85-2	
Nitrogen mustard, N-oxide, hydrochloride salt			
Nitroglycerin	1,2,3-Propanetriol, trinitrate	55-63-0	P081
p-Nitrophenol	Phenol, 4-nitro-	100-02-7	U170
2-Nitropropane	Propane, 2-nitro-	79-46-9	U171
Nitrosamines, N.O.S.[1]		35576-91-1D	
N-Nitrosodi-n-butylamine	1-Butanamine, N-butyl-N-nitroso-	924-16-3	U172
N-Nitrosodiethanolamine	Ethanol, 2,2'-(nitrosoimino)bis-	1116-54-7	U173
N-Nitrosodiethylamine	Ethanamine, N-ethyl-N-nitroso-	55-18-5	U174
N-Nitrosodimethylamine	Methanamine, N-methyl-N-nitroso-	62-75-9	P082
N-Nitroso-N-ethylurea	Urea, N-ethyl-N-nitroso-	759-73-9	U176
N-Nitrosomethylethylamine	Ethanamine, N-methyl-N-nitroso-	10595-95-6	
N-Nitroso-N-methylurea	Urea, N-methyl-N-nitroso-	684-93-5	U177
N-Nitroso-N-methylurethane	Carbamic acid, methylnitroso-, ethyl ester	615-53-2	U178
N-Nitrosomethylvinylamine	Vinylamine, N-methyl-N-nitroso-	4549-40-0	P084

APPENDIX VIII—HAZARDOUS CONSTITUENTS—Continued

Common name	Chemical abstracts name	Chemical abstracts No.	Hazardous waste No.
N-Nitrosomorpholine	Morpholine, 4-nitroso-	59-89-2	
N-Nitrosonornicotine	Pyridine, 3-(1-nitroso-2-pyrrolidinyl)-, (S)-	16543-55-8	
N-Nitrosopiperidine	Piperidine, 1-nitroso-	100-75-4	U179
N-Nitrosopyrrolidine	Pyrrolidine, 1-nitroso-	930-55-2	U180
N-Nitrososarcosine	Glycine, N-methyl-N-nitroso-	13256-22-9	
5-Nitro-o-toluidine	Benzenamine, 2-methyl-5-nitro-	99-55-8	U181
Octamethylpyrophosphoramide	Diphosphoramide, octamethyl-	152-16-9	P085
Osmium tetroxide	Osmium oxide OsO_4, (T-4)-	20816-12-0	P087
Paraldehyde	1,3,5-Trioxane, 2,4,6-trimethyl-	123-63-7	U182
Parathion	Phosphorothioic acid, O,O-diethyl O-(4-nitrophenyl) ester	56-38-2	P089
Pentachlorobenzene	Benzene, pentachloro-	608-93-5	U183
Pentachlorodibenzo-p-dioxins			
Pentachlorodibenzofurans			
Pentachloroethane	Ethane, pentachloro-	76-01-7	U184
Pentachloronitrobenzene (PCNB)	Benzene, pentachloronitro-	82-68-8	U185
Pentachlorophenol	Phenol, pentachloro-	87-86-5	See F027
Phenacetin	Acetamide, N-(4-ethoxyphenyl)-	62-44-2	U187
Phenol	Same	108-95-2	U188
Phenylenediamine	Benzenediamine	25265-76-3	
Phenylmercury acetate	Mercury, (acetato-O)phenyl-	62-38-4	P092
Phenylthiourea	Thiourea, phenyl-	103-85-5	P093
Phosgene	Carbonic dichloride	75-44-5	P095
Phosphine	Same	7803-51-2	P096
Phorate	Phosphorodithioic acid, O,O-diethyl S-[(ethylthio)methyl] ester	298-02-2	P094
Phthalic acid esters, N.O.S.[1]			
Phthalic anhydride	1,3-Isobenzofurandione	85-44-9	U190
2-Picoline	Pyridine, 2-methyl-	109-06-8	U191
Polychlorinated biphenyls, N.O.S.[1]			
Potassium cyanide	Potassium cyanide K(CN)	151-50-8	P098
Potassium silver cyanide	Argentate(1-), bis(cyano-C)-, potassium	506-61-6	P099
Pronamide	Benzamide, 3,5-dichloro-N-(1,1-dimethyl-2-propynyl)-	23950-58-5	U192
1,3-Propane sultone	1,2-Oxathiolane, 2,2-dioxide	1120-71-4	U193
n-Propylamine	1-Propanamine	107-10-8	U194
Propargyl alcohol	2-Propyn-1-ol	107-19-7	P102
Propylene dichloride	Propane, 1,2-dichloro-	78-87-5	U083
1,2-Propylenimine	Aziridine, 2-methyl-	75-55-8	P067
Propylthiouracil	4(1H)-Pyrimidinone, 2,3-dihydro-6-propyl-2-thioxo-	51-52-5	
Pyridine	Same	110-86-1	U196
Reserpine	Yohimban-16-carboxylic acid, 11,17-dimethoxy-18-[(3,4,5-trimethoxybenzoyl)oxy]-, methyl ester, (3beta,16beta,17alpha,18beta,20alpha)-	50-55-5	U200
Resorcinol	1,3-Benzenediol	108-46-3	U201
Saccharin	1,2-Benzisothiazol-3(2H)-one, 1,1-dioxide	81-07-2	U202
Saccharin salts			U202
Safrole	1,3-Benzodioxole, 5-(2-propenyl)-	94-59-7	U203
Selenium	Same	7782-49-2	
Selenium compounds, N.O.S.[1]			
Selenium dioxide	Selenious acid	7783-00-8	U204
Selenium sulfide	Selenium sulfide SeS_2	7488-56-4	U205
Selenourea	Same	630-10-4	P103
Silver	Same	7440-22-4	
Silver compounds, N.O.S.[1]			
Silver cyanide	Silver cyanide Ag(CN)	506-64-9	P104
Silvex (2,4,5-TP)	Propanoic acid, 2-(2,4,5-trichlorophenoxy)-	93-72-1	See F027
Sodium cyanide	Sodium cyanide Na(CN)	143-33-9	P106
Streptozotocin	D-Glucose, 2-deoxy-2-[[(methylnitrosoamino)carbonyl]amino]-	18883-66-4	U206
Strontium sulfide	Strontium sulfide SrS	1314-96-1	P107
Strychnine	Strychnidin-10-one	57-24-9	P108
Strychnine salts			P108
TCDD	Dibenzo[b,e][1,4]dioxin, 2,3,7,8-tetrachloro-	1746-01-6	
1,2,4,5-Tetrachlorobenzene	Benzene, 1,2,4,5-tetrachloro-	95-94-3	U207
Tetrachlorodibenzo-p-dioxins			
Tetrachlorodibenzofurans			
Tetrachloroethane, N.O.S.[1]	Ethane, tetrachloro-, N.O.S.	25322-20-7	
1,1,1,2-Tetrachloroethane	Ethane, 1,1,1,2-tetrachloro-	630-20-6	U208
1,1,2,2-Tetrachloroethane	Ethane, 1,1,2,2-tetrachloro-	79-34-5	U209
Tetrachloroethylene	Ethene, tetrachloro-	127-18-4	U210
2,3,4,6-Tetrachlorophenol	Phenol, 2,3,4,6-tetrachloro-	58-90-2	See F027
Tetraethyldithiopyrophosphate	Thiodiphosphoric acid, tetraethyl ester	3689-24-5	P109
Tetraethyl lead	Plumbane, tetraethyl-	78-00-2	P110
Tetraethyl pyrophosphate	Diphosphoric acid, tetraethyl ester	107-49-3	P111
Tetranitromethane	Methane, tetranitro-	509-14-8	P112
Thallium	Same	7440-28-0	
Thallium compounds, N.O.S.[1]			
Thallic oxide	Thallium oxide Tl_2O_3	1314-32-5	P113
Thallium(I) acetate	Acetic acid, thallium(1+) salt	563-68-8	U214
Thallium(I) carbonate	Carbonic acid, dithallium(1+) salt	6533-73-9	U215
Thallium(I) chloride	Thallium chloride TlCl	7791-12-0	U216
Thallium(I) nitrate	Nitric acid, thallium(1+) salt	10102-45-1	U217
Thallium selenite	Selenious acid, dithallium(1+) salt	12039-52-0	P114

APPENDIX VIII—HAZARDOUS CONSTITUENTS—Continued

Common name	Chemical abstracts name	Chemical abstracts No.	Hazardous waste No.
Thallium(I) sulfate	Sulfuric acid, dithallium(1+) salt	7446-18-6	P115
Thioacetamide	Ethanethioamide	62-55-5	U218
Thiofanox	2-Butanone, 3,3-dimethyl-1-(methylthio)-, 0-[(methylamino)carbonyl] oxime	39196-18-4	P045
Thiomethanol	Methanethiol	74-93-1	U153
Thiophenol	Benzenethiol	108-98-5	P014
Thiosemicarbazide	Hydrazinecarbothioamide	79-19-6	P116
Thiourea	Same	62-56-6	U219
Thiram	Thioperoxydicarbonic diamide $[(H_2N)C(S)]_2S_2$, tetramethyl-	137-26-8	U244
Toluene	Benzene, methyl-	108-88-3	U220
Toluenediamine	Benzenediamine, ar-methyl-	25376-45-8	U221
Toluene-2,4-diamine	1,3-Benzenediamine, 4-methyl-	95-80-7	
Toluene-2,6-diamine	1,3-Benzenediamine, 2-methyl-	823-40-5	
Toluene-3,4-diamine	1,2-Benzenediamine, 4-methyl-	496-72-0	
Toluene diisocyanate	Benzene, 1,3-diisocyanatomethyl-	26471-62-5	U223
o-Toluidine	Benzenamine, 2-methyl-	95-53-4	U328
o-Toluidine hydrochloride	Benzenamine, 2-methyl-, hydrochloride	636-21-5	U222
p-Toluidine	Benzenamine, 4-methyl-	106-49-0	U353
Toxaphene	Same	8001-35-2	P123
1,2,4-Trichlorobenzene	Benzene, 1,2,4-trichloro-	120-82-1	
1,1,2-Trichloroethane	Ethane, 1,1,2-trichloro-	79-00-5	U227
Trichloroethylene	Ethene, trichloro-	79-01-6	U228
Trichloromethanethiol	Methanethiol, trichloro-	75-70-7	P118
Trichloromonofluoromethane	Methane, trichlorofluoro-	75-69-4	U121
2,4,5-Trichlorophenol	Phenol, 2,4,5-trichloro-	95-95-4	See F027
2,4,6-Trichlorophenol	Phenol, 2,4,6-trichloro-	88-06-2	See F027
2,4,5-T	Acetic acid, (2,4,5-trichlorophenoxy)-	93-76-5	See F027
Trichloropropane, N.O.S.[1]		25735-29-9	
1,2,3-Trichloropropane	Propane, 1,2,3-trichloro-	96-18-4	
O,O,O-Triethyl phosphorothioate	Phosphorothioic acid, O,O,O-triethyl ester	126-68-1	
1,3,5-Trinitrobenzene	Benzene, 1,3,5-trinitro-	99-35-4	U234
Tris(1-aziridinyl)phosphine sulfide	Aziridine, 1,1',1''-phosphinothioylidynetris-	52-24-4	
Tris(2,3-dibromopropyl) phosphate	1-Propanol, 2,3-dibromo-, phosphate (3:1)	126-72-7	U235
Trypan blue	2,7-Naphthalenedisulfonic acid, 3,3'-[(3,3'-dimethyl[1,1'-biphenyl]-4,4'-diyl)bis(azo)]-bis[5-amino-4-hydroxy-, tetrasodium salt	72-57-1	U236
Uracil mustard	2,4-(1H,3H)-Pyrimidinedione, 5-[bis(2-chloroethyl)amino]-	66-75-1	U237
Vanadium pentoxide	Vanadium oxide V_2O_5	1314-62-1	P120
Vinyl chloride	Ethene, chloro-	75-01-4	U043
Warfarin	2H-1-Benzopyran-2-one, 4-hydroxy-3-(3-oxo-1-phenylbutyl)-, when present at concentrations less than 0.3%.	81-81-2	U248
Warfarin	2H-1-Benzopyran-2-one, 4-hydroxy-3-(3-oxo-1-phenylbutyl)-, when present at concentrations greater than 0.3%.	81-81-2	P001
Warfarin salts, when present at concentrations less than 0.3%.			U248
Warfarin salts, when present at concentrations greater than 0.3%.			P001
Zinc cyanide	Zinc cyanide $Zn(CN)_2$	557-21-1	P121
Zinc phosphide	Zinc phosphide Zn_3P_2, when present at concentrations greater than 10%	1314-84-7	P122
Zinc phosphide	Zinc phosphide Zn_3P_2, when present at concentrations of 10% or less	1314-84-7	U249

[1] The abbreviation N.O.S. (not otherwise specified) signifies those members of the general class not specifically listed by name in this appendix.

[FR Doc. 88-7170 Filed 4-21-88; 8:45 am]

BILLING CODE 6560-50-M

VOL
53
ISS
78
AP
22
1988
UMI

federal register

Friday
April 22, 1988

Part III

Department of Agriculture

Food Safety and Inspection Service

9 CFR Part 307 et al.

Fee Increase for Inspection Services; Final Rule

DEPARTMENT OF AGRICULTURE

Food Safety and Inspection Service

9 CFR Parts 307, 350, 351, 352, 354, 355, 362, and 381

[Docket No. 87-026F]

Fee Increase for Inspection Services

AGENCY: Food Safety and Inspection Service, USDA.

ACTION: Final rule.

SUMMARY: The Food Safety and Inspection Service (FSIS) is amending the Federal meat and poultry products inspection regulations to increase fees charged by FSIS to provide overtime and holiday inspection, identification, certification, or laboratory services to meat and poultry establishments. The fees reflect the increased costs of providing these services due to the increase in salaries of Federal employees allocated by Congress under the Federal Pay Comparability Act of 1970 and a change in the fee structure to include the Science program as support for the meat and poultry inspection services.

EFFECTIVE DATE: April 24, 1988.

FOR FURTHER INFORMATION CONTACT: Mr. William L. West, Director, Budget and Finance Division, Administrative Management, Food Safety and Inspection Service, U.S. Department of Agriculture, Washington, DC 20250, (202) 447-3367.

SUPPLEMENTARY INFORMATION:

Executive Order 12291

This rule is issued in conformance with Executive Order 12291 and has been determined not to be a "major rule." It will not result in an annual effect on the economy of $100 million or more; a major increase in costs or prices for consumers, individual industries, Federal, State or local government agencies, or geographic regions; or significant adverse effects on competition, employment, investment, productivity, innovation, or the ability of United States-based enterprises to compete with foreign-based enterprises in domestic or export markets. The fee increases only reflect an increase in costs to establishments that elect to utilize certain inspection services.

Effect on Small Entities

The Administrator, Food Safety and Inspection Service, has determined that this action will not have a significant economic impact on a substantial number of small entities as defined by the Regulatory Flexibility Act, Public Law 96-354 (5 U.S.C. 601), because the fees provided for in this document merely reflect a minimal increase in the costs currently borne by those entities which elect to utilize certain inspection services and a corrected calculation of program support costs.

Background

Mandatory inspection by Federal inspectors of meat and poultry slaughtered and/or processed at official establishments is provided for under the Federal Meat Inspection Act (21 U.S.C. 601 *et seq.*) and the Poultry Products Inspection Act (21 U.S.C. 451 *et seq.*). Such inspection is required to ensure the safety, wholesomeness, and proper labeling of meat and poultry products and the ordinary costs of providing it are borne by the U.S. Government. However, costs for these inspection services performed on holidays or on an overtime basis may be incurred to accommodate the business needs of particular establishments. Furthermore, there may also arise from time-to-time a need for certain laboratory services which are not covered under the base time, overtime, and/or holiday costs. For example, if a suspect product is rejected, and the establishment requests and FSIS agrees to perform additional laboratory analyses to verify that the reconditioned product is in compliance, the cost of the additional laboratory services will be borne by the particular establishment at the rate of $43.80 per hour. Any or all of these costs, which are not a part of the mandatory inspection service, are recoverable by the Federal Government.

FSIS also provides a range of voluntary inspection services, the costs of which are totally recoverable by the Government. These services are provided under the Federal Meat and Poultry Products Inspection Regulations, Subchapter B—Voluntary Inspection and Certification Service, issued pursuant to the Agricultural Marketing Act of 1946, as amended (7 U.S.C. 1621 *et seq.*), to assist in the orderly marketing of various animal products and byproducts not subject to the Federal Meat Inspection Act or the Poultry Products Inspection Act.

Each year, the fees for certain services rendered to operators of official meat and poultry establishments, importers, or exporters by FSIS are reviewed and a cost analysis is performed to determine if such fees are adequate to recover the cost of providing the services.[1] The analysis relates to fees charged in connection with overtime and holiday inspection, identification, certification, or laboratory services. The fees to be charged for these services are determined by an analysis of data on the current cost of these services, as well as anticipated costs associated with changes in operations of the program, coupled with the increase in those costs due to an increase in salaries of Federal employees allocated by Congress under the Federal Pay Comparability Act of 1970 or any other increases affecting Federal employees, such as costs for travel and benefits.

In this year's cost analysis, the Agency has reevaluated its organizational structure to identify all components that support the inspection services. This is in accordance with OMB Circular No. A-25 which states that the cost computation shall cover the direct and indirect cost to the government of carrying out the activity. In reviewing the organizational structure and their functions, the Science program, which in previous years was omitted from the cost computation, was identified as an indirect cost of carrying out the inspection activity. The Science program conducts all scientific product testing and research activities for the Agency through its field and contract laboratories. Normally, the volume of laboratory samples tested is in proportion to the volume of product inspected including that which is produced during overtime or on holidays. In addition to systematically scheduled product sampling, inspectors submit samples for analysis any time they suspect problems, including during overtime or holiday production. In the future, Science will play a more significant role in FSIS regulatory activities as the inspection system changes from the traditional organoleptic inspection to a scientific-based system to detect chemical and microbial hazards. For example, listeria, salmonella, and sulfamethazine contamination are current health issues receiving increased Agency attention.

Based on the Agency's analysis of the increased costs in providing these services, incurred as a result of a January 1988 pay raise of two percent for Federal employees, increased costs of the new retirement system in 1988, increased health insurance and travel costs, and the inclusion of Science as program support, FSIS published a proposed rule in the **Federal Register** on March 18, 1988 (53 FR 8922) to increase the fees relating to such services.

[1] The cost analysis is on file with the FSIS Hearing Clerk. Copies may be requested from that office.

Agency Response to Comments

The Agency received seven comments in response to the proposal. Two commenters from the meat and poultry industry objected to increasing the fees for the affected inspection services. They stated that they believe the fees are already too high. A third commenter was from an organization promoting industrial development in a local area who stated that this would increase the cost of processing and that cost would then be passed along to the consumer. Four commenters from meat and poultry trade associations objected to including the Science program as well as all indirect costs attributable to providing the affected services.

The ordinary day-to-day costs of providing inspection services under the requirements of the Federal Meat Inspection Act (FMIA) and the Poultry Products Inspection Act (PPIA) are borne by the Federal Government through the annual Congressional appropriations process. However, the Department is required by the FMIA (21 U.S.C. 695) and PPIA (21 U.S.C. 468) to recover the costs of overtime and holiday inspection services from those establishments which voluntarily elect to utilize such inspection services.

Executive branch departments and agencies are required by OMB Circular No. A-25, User Charges, to recover the total cost of carrying out any reimbursable activity. The OMB Circular directs agencies to charge for both direct and indirect costs. FSIS has historically included indirect cost components in its annual cost analysis made available to the public and industry. These components have been identified as program support and Agency support costs, each consisting of several Agency cost elements. For 1988, the Agency has identified the Science program as an additional indirect cost element and has included it in the program support category of the annual cost analysis as required by the OMB regulations. As stated in the background section included above, sampling of product is generated when plants are in an overtime or holiday basis based on the volume of production or suspected violations. Other Agency costs amounting to millions of dollars each year (for example, the Grants-to-States program, including its "fair share" portion of program and Agency support, and various one-time costs) are not applicable to these rates and have been excluded from the cost analysis.

The rates provided for in this document are statutorily mandated and reflect only an incremental increase in the costs currently borne by those entities electing to utilize these and certain other voluntary inspection services. Therefore, the amendments, as proposed, to the Federal Meat and Poultry Products Inspection Regulations are promulgated herein.

List of Subjects

9 CFR Part 307

Meat inspection, Reimbursable services.

9 CFR Part 350

Meat Inspection, Reimbursable services, Voluntary inspection, Certification service.

9 CFR Part 351

Meat inspection, Reimbursable services, Technical animal fats.

9 CFR Part 352

Meat inspection, Reimbursable services, Voluntary inspection.

9 CFR Part 354

Meat inspection, Reimbursable services, Voluntary inspection.

9 CFR Part 355

Meat inspection, Reimbursable services, Certified products.

9 CFR Part 362

Poultry products inspection, Reimbursable services, Voluntary poultry inspection.

9 CFR Part 381

Poultry products inspection, Reimbursable services.

Accordingly, the Federal meat and poultry products inspection regulations are amended as follows:

PART 307—[AMENDED]

1. The authority citation for Part 307 is revised to read as follows:

Authority: 7 U.S.C. 394, 21 U.S.C. 621, 695; 7 CFR 2.17(g) and (i), 2.55.

2. Section 307.5(a) is revised to read as follows:

§ 307.5 Overtime and holiday inspection service.

(a) The management of an official establishment, an importer, or an exporter shall pay the Food Safety and Inspection Service $24.68 per hour per Program employee to reimburse the Program for the cost of the inspection service furnished on any holiday as specified in paragraph (b) of this section; or for more than 8 hours on any day, or more than 40 hours in any administrative workweek Sunday through Saturday.

* * * * *

PART 350—[AMENDED]

3. The authority citation for Part 350 is revised to read as follows:

Authority: 7 U.S.C. 1622, 1624; 7 CFR 2.17 (g) and (i), 2.55.

4. Section 350.7(c) is revised to read as follows:

§ 350.7 Fees and charges.

* * * * *

(c) The fees to be charged and collected for service under the regulations in this Part shall be at the rate of $21.16 per hour for base time, $24.68 per hour for overtime including Saturdays, Sundays, and holidays, and $43.80 per hour for certain laboratory services which are not covered under the base time, overtime, and/or holiday costs. Such fees shall cover the costs of the service and shall be charged for the time required to render such service. Where appropriate, this time will include, but will not be limited to, the time required for travel of the inspector or inspectors in connection therewith during the regularly scheduled administrative workweek.

* * * * *

PART 351—[AMENDED]

5. The authority citation for Part 351 is revised to read as follows:

Authority: 7 U.S.C. 1622, 1624; 7 CFR 2.17 (g) and (i), 2.55.

6. Section 351.8 is revised to read as follows:

§ 351.8 Charges for surveys of plants.

Applicants for the certification service shall pay the Department for salary costs at the rate of $21.16 per hour for base time, $24.68 per hour for overtime, travel, and per diem allowances at rates currently allowed by the Federal Travel Regulations, and other expenses incidental to the initial survey of the rendering plants or storage facilities for which certification service is requested.

7. Section 351.9(a) is revised to read as follows:

§ 351.9 Charges for examinations.

(a) The fees to be charged and collected by the Administrator for examination shall be $21.16 per hour for base time and $24.68 per hour for overtime including Saturdays, Sundays, and holidays, as provided for in § 351.14, and $43.80 per hour for certain laboratory services which are not covered under the base time, overtime, and/or holiday costs and which are required to determine the eligibility of any technical animal fat for certification under the regulations in this Part. Such

fees shall be charged for the time required to render such service, including, but not limited to, the time required for the travel of the inspector or inspectors in connection therewith.

* * * * *

PART 352—[AMENDED]

8. The authority citation for Part 352 is revised to read as follows:

Authority: 7 U.S.C. 1622, 1624; 7 CFR 2.17 (g) and (i), 2.55.

9. Section 352.5(c) is revised to read as follows:

§ 352.5 Fees and charges.

* * * * *

(c) The fees to be charged and collected for service under the regulations in this Part shall be at the rate of $21.16 per hour for base time, $24.68 per hour for overtime including Saturdays, Sundays, and holidays, and $43.80 per hour for certain laboratory services which are not covered under the base time, overtime, and/or holiday costs. Such fees shall cover the costs of the service and shall be charged for the time required to render such service, including, but not limited to, the time required for the travel of the inspector or inspectors in connection therewith during the regularly scheduled administrative workweek.

* * * * *

PART 354—[AMENDED]

10. The authority citation for Part 354 is revised to read as follows:

Authority: 7 U.S.C. 1622, 1624; 7 CFR 2.17 (g) and (i), 2.55.

11. Section 354.101 (b) and (c) is revised to read as follows:

§ 354.101 On a fee basis.

* * * * *

(b) The charges for inspection service will be based on the time required to perform such services. The hourly rate shall be $21.16 for base time and $24.68 for overtime or holiday work.

(c) Charges for certain laboratory analysis or laboratory examination of rabbits under this Part related to inspection service shall be $43.80 per hour for that part which is not covered under the base time, overtime, and/or holiday costs.

* * * * *

PART 355—[AMENDED]

12. The authority citation for Part 355 is revised to read as follows:

Authority: 7 U.S.C. 1622, 1624; 7 CFR 2.17 (g) and (i), 2.55.

13. Section 355.12 is revised to read as follows:

§ 355.12 Charge for service.

The fees to be charged and collected by the Administrator shall be $21.16 per hour for base time, $24.68 per hour for overtime including Saturdays, Sundays, and holidays, and $43.80 per hour for certain laboratory services which are not covered under the base time, overtime, and/or holiday costs. Such fees shall reimburse the Service for the costs of the inspection service furnished.

PART 362—[AMENDED]

14. The authority citation for Part 362 is revised to read as follows:

Authority: 7 U.S.C. 1622, 1624; 7 CFR 2.17 (g) and (i), 2.55.

15. Section 362.5(c) is revised to read as follows:

§ 362.5 Fees and charges.

* * * * *

(c) The fees to be charged and collected for service under the regulations in this Part shall be at the rate of $21.16 per hour for base time, $24.68 per hour for overtime including Saturdays, Sundays, and holidays, and $43.80 per hour for certain laboratory services which are not covered under the base time, overtime, and/or holiday costs. Such fees shall cover the costs of the services and shall be charged for the time required for the travel of the inspector or inspectors in connection therewith during the regularly scheduled administrative workweek.

* * * * *

PART 381—[AMENDED]

16. The authority citation for Part 381 is revised to read as follows:

Authority: 21 U.S.C. 463, 466; 7 CFR 2.17 (g) and (i), 2.55.

17. Section 381.38(a) is revised to read as follows:

§ 381.38 Overtime and holiday inspection service.

(a) The management of an official establishment, an importer, or an exporter shall pay the Food Safety and Inspection Service $24.68 per hour per Program employee to reimburse the Program for the cost of the inspection service furnished on any holiday specified in paragraph (b) of this section; or for more than 8 hours on any day, or more than 40 hours in any administrative workweek Sunday through Saturday.

* * * * *

The Administrator has determined that good cause exists to make these amendments effective less than 30 days after publication in the **Federal Register.**

Done at Washington, DC, on April 20, 1988.

Lester M. Crawford,

Administrator, Food Safety and Inspection Service.

[FR Doc. 88-9004 Filed 4-21-88; 9:36 am]

BILLING CODE 3410-DM-M

Reader Aids

Federal Register

Vol. 53, No. 78

Friday, April 22, 1988

INFORMATION AND ASSISTANCE

Federal Register

Index, finding aids & general information	523-5227
Public inspection desk	523-5215
Corrections to published documents	523-5237
Document drafting information	523-5237
Machine readable documents	523-5237

Code of Federal Regulations

Index, finding aids & general information	523-5227
Printing schedules	523-3419

Laws

Public Laws Update Service (numbers, dates, etc.)	523-6641
Additional information	523-5230

Presidential Documents

Executive orders and proclamations	523-5230
Public Papers of the Presidents	523-5230
Weekly Compilation of Presidential Documents	523-5230

The United States Government Manual

General information	523-5230

Other Services

Data base and machine readable specifications	523-3408
Guide to Record Retention Requirements	523-3187
Legal staff	523-4534
Library	523-5240
Privacy Act Compilation	523-3187
Public Laws Update Service (PLUS)	523-6641
TDD for the deaf	523-5229

FEDERAL REGISTER PAGES AND DATES, APRIL

10519-10868	1
10869-11030	4
11031-11238	5
11239-11486	6
11487-11632	7
11633-11814	8
11815-11990	11
11991-12136	12
12137-12370	13
12371-12508	14
12509-12670	15
12671-12758	18
12759-12908	19
12909-13096	20
13097-13234	21
13235-13398	22

CFR PARTS AFFECTED DURING APRIL

At the end of each month, the Office of the Federal Register publishes separately a List of CFR Sections Affected (LSA), which lists parts and sections affected by documents published since the revision date of each title.

3 CFR

Proclamations:

5784	10519
5785	10521
5786	10523
5787	11031
5788	11489
5789	11809
5790	11811
5791	11813
5792	12365
5793	12367
5794	12369
5795	12671
5796	12673
5797	13094
5798	13235
5799	13237

Executive Orders:

12634	11041
12635	12134
12636	13239

Administrative Orders:

Memorandums:

Mar. 31, 1988	11039

Presidential Determinations:

No. 88-10 of February 29, 1988	11487

5 CFR

831	11633
842	11633
1001	13097
1633	11815

Proposed Rules:

300	13121
531	13121
1632	11864
2431	10885

7 CFR

2	11636
300	10525
301	11825, 13241
318	12909
340	12910
400	10526
426	12759
724	12675
725	12675
726	12675
907	12371
908	12371
910	10527, 11636, 12509, 12242
911	11830, 13217
917	11832
929	12373
946	11043
981	12374
1032	11637
1064	11590
1126	11638
1421	11239
1864	13098
1927	13098
1944	13243, 13244
1951	13098
1955	13098
1956	13098
1965	13244
3600	11639
3601	11639

Proposed Rules:

6	11091
11	13125
53	10545
54	10545
401	12774
449	11299
916	12687
917	11669, 12691
918	11867
946	12423
949	10887
1030	10894
1065	12424
1106	11092
1497	11474
1498	11474
1530	11098
1550	13125
1700	11511
1701	10545
1900	12695
1980	12695
3403	13048

8 CFR

Proposed Rules:

3	11300
208	11300
236	11300
242	11300
253	11300

9 CFR

77	11491, 12913
92	11043, 12640
307	13396
350	13396
351	13396
352	13396
354	13396
355	13396
362	13396
381	13396

Proposed Rules:

78	12019

10 CFR

430	10869
600	12137
1010	11240, 12497

Proposed Rules:
2 ... 11310
40 ... 13128
50 ... 11311, 12425
76 ... 13276

12 CFR
202 ... 11044
205 ... 11046
226 ... 11047, 11055, 13379
229 ... 11832
265 ... 11640, 12509
547 ... 13105
548 ... 13105
549 ... 13105
563 ... 11242, 11243, 13105
569a ... 13105
569b ... 13105
569c ... 13105
611 ... 12140
615 ... 12140
Proposed Rules:
522 ... 13282
541 ... 13282
542 ... 13282
543 ... 13282
544 ... 13282
545 ... 13282
547 ... 13282
548 ... 13282
549 ... 13282
563 ... 13131, 13133, 13282
569a ... 13282
569b ... 13282
569c ... 13282
571 ... 13133, 13282
588 ... 13133

13 CFR
308 ... 12510
309 ... 13252

14 CFR
Ch. III ... 11004
21 ... 13113
23 ... 13113
39 ... 11246, 11641–11643, 11837, 11838, 12141, 12376, 12511, 12914, 12915, 13114, 13252
71 ... 10528, 11020, 11060, 13253
73 ... 11061, 11839–11841, 12916–12918, 13115, 13116, 13253
97 ... 11062, 12377
121 ... 12358
135 ... 12358
Proposed Rules:
Ch. I ... 11868
21 ... 11869, 13283
23 ... 11869, 13283
27 ... 10826, 11162
29 ... 10826, 11162
39 ... 11674–11676, 11678, 11871, 12427, 12947, 13285, 13286
71 ... 10546, 11100, 11101, 12866, 12947, 13287
73 ... 11102
298 ... 12774

15 CFR
370 ... 12668
371 ... 12668
373 ... 12668
378 ... 12668
379 ... 12668
385 ... 12668
399 ... 12668
Proposed Rules:
7 ... 12880

16 CFR
13 ... 11247, 12379
Proposed Rules:
13 ... 12534

17 CFR
30 ... 11491
200 ... 12412, 12918
229 ... 12924
230 ... 11841, 12918
239 ... 12918
240 ... 11841, 12924
249 ... 12924
Proposed Rules:
140 ... 13288
150 ... 13290
Ch. IV ... 12428
200 ... 12429
229 ... 12948
249 ... 12948

18 CFR
37 ... 11191, 12931
154 ... 11191, 13254
157 ... 11644, 11845
389 ... 12676, 12677
Proposed Rules:
272 ... 12704
274 ... 12704

19 CFR
7 ... 12143
103 ... 12937

20 CFR
10 ... 11594
416 ... 12938, 13254
Proposed Rules:
10 ... 11596

21 CFR
179 ... 12756
184 ... 11247
193 ... 12942
340 ... 11731
349 ... 13217
369 ... 13217
444 ... 12644, 12658
452 ... 12414
510 ... 11492
520 ... 11063
522 ... 11064, 11493
524 ... 11064, 12512, 13217
540 ... 11492
558 ... 11065, 11251
561 ... 11938, 12640, 12942
610 ... 12760
640 ... 12760
660 ... 12760
800 ... 11251
803 ... 11251
807 ... 11251
808 ... 11251
809 ... 11251
812 ... 11251
813 ... 11251
820 ... 11251
860 ... 11251
861 ... 11251
862 ... 11645
864 ... 11251
866 ... 11251
876 ... 11251
895 ... 11251
1002 ... 11251
1005 ... 11251
1010 ... 11251
1020 ... 11251
1030 ... 11251
1040 ... 11251
1050 ... 11251
1308 ... 10834, 10861, 10869
Proposed Rules:
133 ... 11312
172 ... 13134
175 ... 11402
176 ... 11402
177 ... 11402
178 ... 11402
193 ... 11938
332 ... 12778
357 ... 12779
561 ... 11313
868 ... 13296

22 CFR
120 ... 11494, 12099
121 ... 11494, 12099
122 ... 11494, 12099
123 ... 11494, 12099
124 ... 11494, 12099
125 ... 11494, 12099
126 ... 11494, 12099
127 ... 11494, 12099
128 ... 11494, 12099
514 ... 10528
602 ... 10529
706 ... 11992
Proposed Rules:
204 ... 11872
602 ... 12430

23 CFR
650 ... 11065
657 ... 12766
658 ... 12145
771 ... 11065
1204 ... 11255
1205 ... 11255
Proposed Rules:
625 ... 11875
626 ... 11875
1309 ... 11679

24 CFR
50 ... 11224
200 ... 11270
201 ... 11997
203 ... 10529, 11997
221 ... 11224
234 ... 11997
236 ... 11224
241 ... 11224
248 ... 11224
Proposed Rules:
35 ... 11164
200 ... 11164, 12431
510 ... 11164
511 ... 11164
570 ... 11164
882 ... 11164
886 ... 11164
888 ... 12278
941 ... 11164
965 ... 11164
968 ... 11164

25 CFR
61 ... 11271

26 CFR
1 ... 11002, 11066, 11162, 11731, 12000, 12149, 12513, 12677, 12678
602 ... 11066, 11162, 11731, 12000
Proposed Rules:
1 ... 11103, 11876, 12433, 12534, 12705

27 CFR
Proposed Rules:
4 ... 12024
12 ... 12024

28 CFR
0 ... 10870, 10871, 11645
66 ... 12099
71 ... 11645
Proposed Rules:
16 ... 12151

29 CFR
102 ... 10872
1907 ... 12102
1910 ... 11414, 12102
2610 ... 10530
2622 ... 10530
2644 ... 10531
2676 ... 12514
Proposed Rules:
516 ... 11590, 12497
530 ... 11590, 12497
1404 ... 12952
1910 ... 11511
1915 ... 11511
1917 ... 11511
1918 ... 11511
2550 ... 11886
2580 ... 11886

30 CFR
48 ... 12415
75 ... 11395
250 ... 10596, 12227
256 ... 10596, 12227
773 ... 11606
934 ... 11500
Proposed Rules:
20 ... 12250
75 ... 12250
77 ... 12250, 12253
785 ... 11685
823 ... 11685
935 ... 11887, 12705
948 ... 11888

31 CFR
Proposed Rules:
103 ... 11513

32 CFR
199 ... 13258
388 ... 10876
706 ... 12515
Proposed Rules:
45 ... 12034

33 CFR
84 ... 10532

95 ... 13117
100 ... 11502, 12415, 13118
117 ... 10533, 10534, 12416, 12417
165 ... 12417, 12679, 13118, 13119
173 ... 13117
177 ... 13117

Proposed Rules:
100 ... 11515, 12434, 12706
110 ... 11395, 11515
117 ... 11516, 11517, 12434, 12535, 12707, 12708

34 CFR
99 ... 11942
600 ... 11208
657 ... 10820
668 ... 11208

Proposed Rules:
105 ... 10808

35 CFR
103 ... 12516

36 CFR
211 ... 13263
1202 ... 12150
1258 ... 12150

37 CFR
10 ... 13120

38 CFR
17 ... 13120
36 ... 11502

39 CFR

Proposed Rules:
111 ... 11685

40 CFR
22 ... 12256
24 ... 12256
52 ... 11068, 11273, 11655, 11847, 12417, 12896, 13121
60 ... 11590, 12008, 12009, 12498, 12517
61 ... 12517
180 ... 11071, 11274, 11938, 12151, 12418, 12640, 12943
228 ... 12944
261 ... 13282
300 ... 12680
372 ... 12748
704 ... 12522
707 ... 12522
710 ... 12522
712 ... 12522
716 ... 12522
717 ... 12522
720 ... 12522
721 ... 12522
723 ... 12522
750 ... 12522
761 ... 12522
763 ... 12522
790 ... 12522
796 ... 12522
797 ... 12522
799 ... 12522

Proposed Rules:
52 ... 11314, 11686, 11680, 12161, 12435, 12906, 12962, 13135
60 ... 12962
116 ... 11889
117 ... 11889
180 ... 10695
261 ... 12162
264 ... 11742
265 ... 11742
268 ... 11742
271 ... 11742
302 ... 11889, 11890, 12868
355 ... 12868
372 ... 12035
761 ... 11104
763 ... 10546
795 ... 12748
796 ... 11104
799 ... 12748

41 CFR
101-25 ... 11847
101-40 ... 11849
101-49 ... 12766

Proposed Rules:
201-33 ... 11518

42 CFR
405 ... 11504, 12010, 12945
406 ... 12945
409 ... 12945
410 ... 12945
413 ... 12016, 12641, 12945
416 ... 11504, 12945
418 ... 11504
421 ... 12945
434 ... 12010
435 ... 12681
436 ... 12681
442 ... 11504
482 ... 11504
489 ... 12945
498 ... 12945

Proposed Rules:
405 ... 12037, 12641
412 ... 12641
413 ... 12641
489 ... 12641

43 CFR
4 ... 13266

Proposed Rules:
3160 ... 11318

Public Land Orders:
6670 ... 10535
6671 ... 12419
6672 ... 12420
6673 ... 12420

44 CFR
64 ... 13268
67 ... 11510, 12152
80 ... 11275
82 ... 11275
83 ... 11275
205 ... 12681

Proposed Rules:
61 ... 10547
67 ... 12536

45 CFR
36 ... 11279
79 ... 11656
96 ... 11656
1611 ... 12017

Proposed Rules:
303 ... 12041
606 ... 10896
1356 ... 12436

46 CFR
26 ... 13117
35 ... 13117
78 ... 13117
97 ... 13117
109 ... 13117
185 ... 13117
197 ... 13117
502 ... 13270
572 ... 11072

Proposed Rules:
Ch. I ... 11440
502 ... 12440

47 CFR
Ch. 1 ... 13270
0 ... 11849
1 ... 11851
2 ... 10878, 11855
15 ... 11861
22 ... 11855
43 ... 12526
63 ... 12526
73 ... 11668, 11863, 12152, 12154, 12528, 12768-12770, 12946, 13272
90 ... 11849, 12154
94 ... 11855

Proposed Rules:
Ch. I ... 10549, 10550
43 ... 12546
63 ... 12546
68 ... 12546
73 ... 10905, 11690, 12167-12169, 12547-12549, 12779, 12963, 12964
97 ... 12780

48 CFR
15 ... 10828
25 ... 12128
31 ... 10828, 12128, 13274
52 ... 10828, 12128
215 ... 11073
227 ... 10780
242 ... 11073
252 ... 10780, 11073
439 ... 12748
452 ... 12748
1033 ... 12770
1801 ... 13056
1807 ... 13056
1815 ... 13056
1819 ... 13056
1822 ... 13056
1825 ... 13056
1827 ... 13056
1829 ... 13056
1832 ... 13056
1836 ... 13056
1837 ... 13056
1842 ... 13056
1849 ... 13056
1851 ... 13056
1852 ... 13056
1853 ... 13056
1870 ... 13056
2804 ... 12421, 12866
2832 ... 12421
2852 ... 12421

Proposed Rules:
43 ... 11795
47 ... 11795
52 ... 11795, 12501
916 ... 11318
931 ... 11318
952 ... 11318
1505 ... 11519
1506 ... 11519

49 CFR
387 ... 12158
533 ... 11074
541 ... 13274
571 ... 11280, 12528
1160 ... 10536

Proposed Rules:
171 ... 11320, 12442
172 ... 12442
173 ... 11320, 12442
174 ... 12442
175 ... 12442
176 ... 12442
177 ... 11618, 12442
178 ... 12442
179 ... 12442
192 ... 10906
383 ... 12504
391 ... 12504
571 ... 11105
840 ... 11520
1185 ... 12443

50 CFR
17 ... 10879, 11609, 11612
23 ... 12497
285 ... 11510
301 ... 10536
672 ... 11297
675 ... 12772

Proposed Rules:
17 ... 12787, 13220-13230, 13379
18 ... 12043
228 ... 12169
644 ... 11321
650 ... 12709
653 ... 12790
658 ... 12046
683 ... 12712

LIST OF PUBLIC LAWS

Note: No public bills which have become law were received by the Office of the Federal Register for inclusion in today's **List of Public Laws.**

Last List April 21, 1988

VOL 53 ISS 78 AP 22 1988 UMI

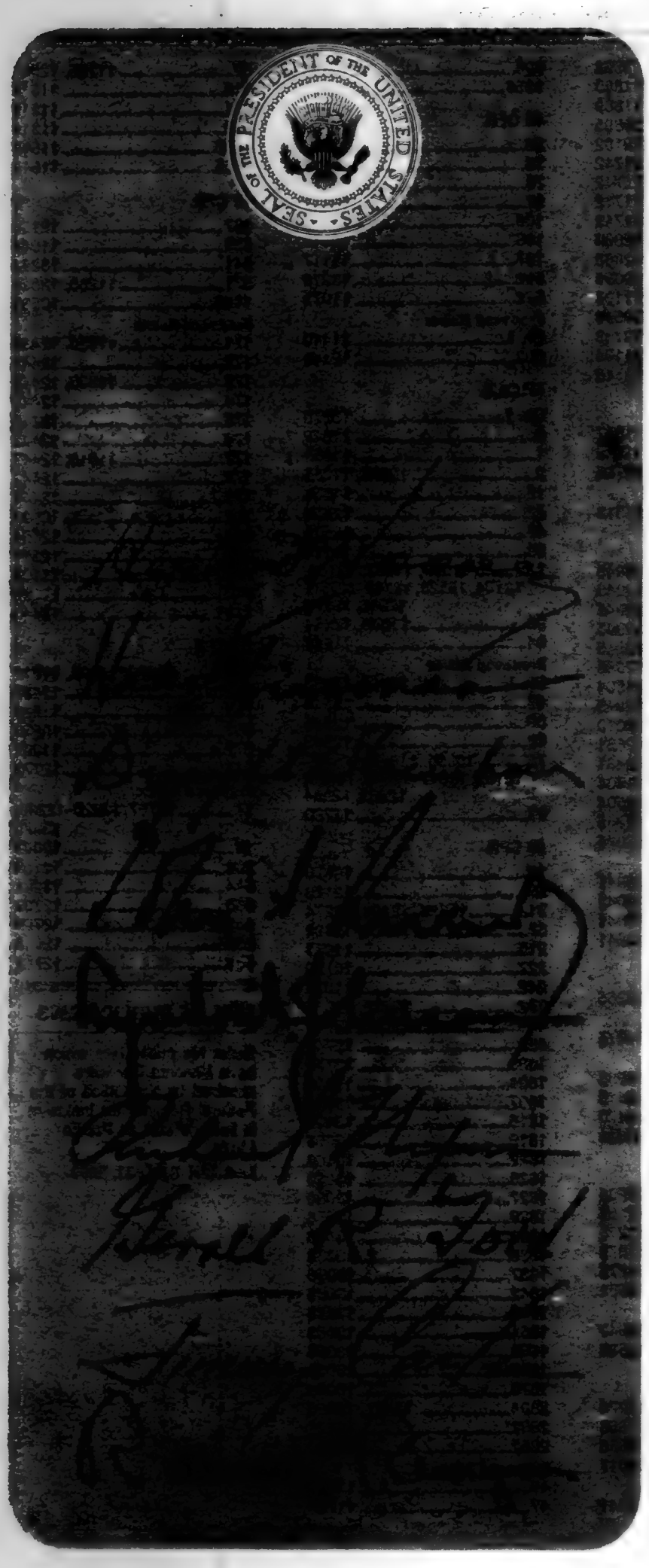

Public Papers of the Presidents of the United States

Annual volumes containing the public messages and statements, news conferences, and other selected papers released by the White House.

Volumes for the following years are available; other volumes not listed are out of print.

Herbert Hoover
1932–33 ..... $24.00

Lyndon B. Johnson
1963–64
(Book I) $21.00

Gerald R. Ford
1975
(Book I) $22.00
1975
(Book II) $22.00

Jimmy Carter
1977
(Book II) $22.00
1978
(Book I) $24.00
1979
(Book I) $24.00
1979
(Book II) $24.00
1980–81
(Book I) $21.00
1980–81
(Book II) $22.00
1980–81
(Book III) $24.00

Ronald Reagan
1981 ..... $25.00
1982
(Book II) $25.00
1983
(Book I) $31.00
1983
(Book II) $32.00
1984
(Book I) $36.00
1984
(Book II) $36.00

Published by the Office of the Federal Register, National Archives and Records Administration

Order from Superintendent of Documents, U.S. Government Printing Office, Washingon, D.C. 20402–9325.

rs

es

s

e; other

.....$21.00

.....$22.00

.....$24.00

n

.....$25.00

.....$25.00

.....$31.00

.....$32.00

.....$36.00

.....$36.00

National

0402–9325.

VOL
53
ISS
78
AP
22
1988
UMI

VOL
53

ISS
79

PT
1

AP
25

1988

UMI

4-25-85
Vol. 53

United
Govern
Printing
SUPERINT
OF DOCU
Washingto

OFFICIAL
Penalty fo

4-25-88
Vol. 53 No. 79

federal register

Monday
April 25, 1988

Book 1 of 2 Books

United States
Government
Printing Office
SUPERINTENDENT
OF DOCUMENTS
Washington, DC 20402

OFFICIAL BUSINESS
Penalty for private use, $300

**********5-DIGIT 48106

A FR SERIA3005 NOV 88 R
SERIALS PROCESSING
UNIV MICROFILMS INTL
300 N ZEEB RD
ANN ARBOR MI 48106

SECOND CLASS NEWSPAPER

Postage and Fees Paid
U.S. Government Printing Office
(ISSN 0097-6326)

VOL
53
ISS
79
PT
1
AP
25
1988
UMI

4-25-8
Vol. 53
BOOK
Pages
BOOK
Pages

4-25-88
Vol. 53 No. 79

BOOK 1:
Pages 13399-14178

BOOK 2:
Pages 14179-14772

federal register

Book 1 of 2 Books
Monday, April 25, 1988

BEST COPY AVAILABLE

FEDERAL REGISTER Published daily, Monday through Friday, (not published on Saturdays, Sundays, or on official holidays), by the Office of the Federal Register, National Archives and Records Administration, Washington, DC 20408, under the Federal Register Act (49 Stat. 500, as amended; 44 U.S.C. Ch. 15) and the regulations of the Administrative Committee of the Federal Register (1 CFR Ch. I). Distribution is made only by the Superintendent of Documents, U.S. Government Printing Office, Washington, DC 20402.

The **Federal Register** provides a uniform system for making available to the public regulations and legal notices issued by Federal agencies. These include Presidential proclamations and Executive Orders and Federal agency documents having general applicability and legal effect, documents required to be published by act of Congress and other Federal agency documents of public interest. Documents are on file for public inspection in the Office of the Federal Register the day before they are published, unless earlier filing is requested by the issuing agency.

The **Federal Register** will be furnished by mail to subscribers for $340.00 per year, or $170.00 for 6 months in paper form, or $188.00 per year, or $94.00 for six months in microfiche form, payable in advance. The charge for individual copies is $1.50 for each issue, or $1.50 for each group of pages as actually bound. Remit check or money order, made payable to the Superintendent of Documents, U.S. Government Printing Office, Washington, DC 20402, or charge to your GPO Deposit Account or VISA or Mastercard.

There are no restrictions on the republication of material appearing in the **Federal Register**.

How To Cite This Publication: Use the volume number and the page number. Example: 52 FR 12345.

SUBSCRIPTIONS AND COPIES

PUBLIC

Subscriptions:

Paper or fiche	202-783-3238
Magnetic tapes	275-3328
Problems with public subscriptions	275-3054

Single copies/back copies:

Paper or fiche	783-3238
Magnetic tapes	275-3328
Problems with public single copies	275-3050

FEDERAL AGENCIES

Subscriptions:

Paper or fiche	523-5240
Magnetic tapes	275-3328
Problems with Federal agency subscriptions	523-5240

For other telephone numbers, see the Reader Aids section at the end of this issue.

VOL 53 ISS 79 PT 1 AP 25 1988 UMI

Contents

Federal Register
Vol. 53, No. 79
Monday, April 25, 1988

ACTION
PROPOSED RULES
Regulatory agenda, 14320

Agency for International Development
RULES
Acquisition regulations, 13410
PROPOSED RULES
Regulatory agenda, 14324

Agricultural Marketing Service
PROPOSED RULES
Onions grown in South Texas, 13413
Pears, plums, and peaches grown in California, 13413

Agriculture Department
See also Agricultural Marketing Service; Animal and Plant Health Inspection Service; Forest Service
PROPOSED RULES
Regulatory agenda, 13606

Alcohol, Tobacco and Firearms Bureau
PROPOSED RULES
Regulatory agenda, 14184

Animal and Plant Health Inspection Service
NOTICES
Meetings:
Swine Health Protection Advisory Committee, 13425

Architectural and Transportation Barriers Compliance Board
PROPOSED RULES
Regulatory agenda, 14328

Army Department
NOTICES
Military traffic management:
Freight rate acquisition program; rail carrier rates and services, 13436

Arts and Humanities, National Foundation
See National Foundation on the Arts and the Humanities

Civil Rights Commission
PROPOSED RULES
Regulatory agenda, 14332
NOTICES
Meetings; State advisory committees:
Oregon, 13431

Coast Guard
RULES
Ports and waterways safety:
Mackay River, Mile 675, Atlantic Intracoastal Waterway, GA; safety zone, 13407
PROPOSED RULES
Boating safety:
State marine casualty reporting; accident report thresholds, 13417

Commerce Department
See also International Trade Administration; National Bureau of Standards; National Oceanic and Atmospheric Administration; National Technical Information Service
PROPOSED RULES
Regulatory agenda, 13662

Committee for the Implementation of Textile Agreements
NOTICES
Cotton, wool, and man-made textiles:
Bulgaria, 13435
Hungary, 13435
Sri Lanka, 13434
(2 documents)

Commodity Futures Trading Commission
PROPOSED RULES
Regulatory agenda, 14580
NOTICES
Meetings:
Financial Products Advisory Committee, 13436

Comptroller of the Currency
PROPOSED RULES
Regulatory agenda, 14192

Consumer Product Safety Commission
PROPOSED RULES
Regulatory agenda, 14584
NOTICES
Complaints issued:
P&M Enterprises, 13436
Meetings; Sunshine Act, 13461
(3 documents)

Customs Service
PROPOSED RULES
Regulatory agenda, 14198

Defense Department
See also Army Department
PROPOSED RULES
Federal Acquisition Regulation (FAR):
Regulatory agenda, 14564
Regulatory agenda, 13712

Economic Regulatory Administration
NOTICES
Natural gas exportation and importation:
DEKALB Petroleum Corp., 13438
Powerplant and industrial fuel use; new electric powerplant coal capability; compliance certifications:
Intercontinental Energy Associates, 13439

Education Department
PROPOSED RULES
Regulatory agenda, 13728

Energy Department
See also Economic Regulatory Administration; Federal Energy Regulatory Commission

PROPOSED RULES
Regulatory agenda, 13752
NOTICES
Floodplain and wetlands protection; environmental review determinations; availability, etc.:
Columbia, SC, 13437
Patent licenses, exclusive:
Roberts Pharmaceutical Corp., 13437

Environmental Protection Agency
PROPOSED RULES
Regulatory agenda, 14334

Equal Employment Opportunity Commission
PROPOSED RULES
Regulatory agenda, 14410
NOTICES
Meetings; Sunshine Act, 13463

Executive Office of the President
See Management and Budget Office

Export Administration
See International Trade Administration

Farm Credit Administration
PROPOSED RULES
Regulatory agenda, 14594
NOTICES
Meetings; Sunshine Act, 13463

Federal Communications Commission
RULES
Radio stations; table of assignments:
Iowa, 13409
Television stations; table of assignments:
New York and Massachusetts, 13409
PROPOSED RULES
Radio stations; table of assignments:
Michigan, 13419, 13420 (2 documents)
Minnesota, 13420 (2 documents)
Nebraska, 13421
New Hampshire, 13421
North Carolina, 13422
Texas, 13422
Regulatory agenda, 14604
NOTICES
Applications, hearings, determinations, etc.:
Faith Broadcasting, Inc., et al., 13445
Radio Indio Corp. et al., 13445
Surber, Janice Faye, et al., 13445
Viacom Broadcasting of Missouri, Inc., et al., 13446

Federal Deposit Insurance Corporation
PROPOSED RULES
Regulatory agenda, 14620
NOTICES
Agency information collection activities under OMB review, 13446 (2 documents)

Federal Emergency Management Agency
PROPOSED RULES
Regulatory agenda, 14416

Federal Energy Regulatory Commission
PROPOSED RULES
Regulatory agenda, 14628
NOTICES
Electric rate, small power production, and interlocking directorate filings, etc.:
Energenics/Glendon, Inc., et al., 13439
Meetings; Sunshine Act, 13461
Natural gas certificate filings:
Northern Natural Gas Co. et al., 13440
Applications, hearings, determinations, etc.:
Kentucky Public Service Commission et al., 13442
Pacific Offshore Pipeline Co., 13443
Sabine Corp., 13444
Webb-DuVal Gatherers, 13444

Federal Home Loan Bank Board
PROPOSED RULES
Regulatory agenda, 14636

Federal Maritime Commission
PROPOSED RULES
Regulatory agenda, 14648
NOTICES
Agreements filed, etc., 13447
Freight forwarder licences:
Cruz Del Sur Shipping et al., 13447
Freight forwarder licenses:
Challenge Crating & Storage Inc. et al., 13447
Meetings; Sunshine Act, 13463

Federal Mediation and Conciliation Service
PROPOSED RULES
Regulatory agenda, 14426

Federal Reserve System
PROPOSED RULES
Regulatory agenda, 14656
NOTICES
Applications, hearings, determinations, etc.:
Trustcorp, Inc.; correction, 13447

Federal Trade Commission
PROPOSED RULES
Regulatory agenda, 14668
NOTICES
Premerger notification waiting periods; early terminations, 13448

Financial Management Service
See Fiscal Service

Fiscal Service
PROPOSED RULES
Regulatory agenda, 14182

Fish and Wildlife Service
NOTICES
Endangered and threatened species permit applications, 13452
Marine mammal permit applications, 13452

Food and Drug Administration
RULES
Human drugs:
Antibiotic drugs—
Cefmenoxime hydrochloride for injection, 13400

VOL 53 ISS 79 PT 1 AP 25 1988 UMI

Forest Service
NOTICES
Mono Basin National Forest Scenic Area; guidelines, availability, 13425

General Services Administration
PROPOSED RULES
Federal Acquisition Regulation (FAR):
Regulatory agenda, 14564
Regulatory agenda, 14428

Health and Human Services Department
See also Food and Drug Administration; Human Development Services Office; National Institutes of Health; Public Health Service; Social Security Administration
PROPOSED RULES
Regulatory agenda, 13770

Health Resources and Services Administration
See Public Health Service

Housing and Urban Development Department
RULES
Low income housing:
Housing assistance payments (Section 8)—
Fair market rents for new construction and substantial rehabilitation, 13406
Mortgage and loan insurance programs:
Allegany Reservation of Seneca Nation of Indians Correction, 13404
Maximum mortgage limits for high-cost areas, 13405
PROPOSED RULES
Regulatory agenda, 13854

Human Development Services Office
NOTICES
Meetings:
Federal Council on Aging, 13449

Interior Department
See also Fish and Wildlife Service; Minerals Management Service; National Park Service; Surface Mining Reclamation and Enforcement Office
PROPOSED RULES
Regulatory agenda, 13896
Watch duty-exemption program:
Annual limitation, 13414

Internal Revenue Service
RULES
Estate and gift taxes:
Generation-skipping transfer tax; effective date rules and return requirements
Correction, 13464
Income taxes:
Itemized deductions; 2-percent floor
Correction, 13464
Trusts and estates; estimated tax payments deposits
Correction, 13464
PROPOSED RULES
Estate and gift taxes:
Generation-skipping transfer tax; effective date rules and return requirements; cross reference
Correction, 13464
Regulatory agenda, 14202

International Development Cooperation Agency
See Agency for International Development

International Trade Administration
PROPOSED RULES
Watch duty-exemption program:
Annual limitation, 13414
NOTICES
Countervailing duties:
Welded carbon steel pipe and tube products from—
Argentina, 13431

Interstate Commerce Commission
PROPOSED RULES
Regulatory agenda, 14676
NOTICES
Motor carriers:
Declaratory order petitions—
National Industrial Transportation League, 13454

Justice Department
PROPOSED RULES
Regulatory agenda, 13964

Labor Department
PROPOSED RULES
Regulatory agenda, 13982

Management and Budget Office
PROPOSED RULES
Regulatory agenda, 14470

Merit Systems Protection Board
PROPOSED RULES
Regulatory agenda, 14442

Minerals Management Service
NOTICES
Royalty management:
Onshore oil and gas production accounting, transfer of responsibility; reporting instructions for lease operators, 13452

National Aeronautics and Space Administration
PROPOSED RULES
Federal Acquisition Regulation (FAR):
Regulatory agenda, 14564
Regulatory agenda, 14446

National Archives and Records Administration
RULES
Records management:
Federal records disposition, 13407
PROPOSED RULES
Regulatory agenda, 14454
NOTICES
Environmental statements; availability, etc.:
Archival facility; construction, 13454

National Bureau of Standards
NOTICES
Labortory Accredition Program, National Voluntary:
Directory of accredited laboratories; supplement, 13432

National Credit Union Administration
PROPOSED RULES
Regulatory agenda, 14662

National Foundation on the Arts and the Humanities
PROPOSED RULES
Regulatory agenda (National Endowment for the Arts), 14460

Regulatory agenda (National Endowment for the Humanities), 14464

National Institutes of Health
NOTICES
Meetings:
National Cancer Institute, 13440, 13450 (2 documents)
National Institute of Dental Research, 13450, 13451

National Oceanic and Atmospheric Administration
RULES
Fishery conservation and management:
Foreign fishing—
Fishing definition, 13410
PROPOSED RULES
Fishery conservation and management:
Foreign fishing—
Exclusive Economic Zone of Bering Sea illegal fishing; implementation of options, 13422
NOTICES
Meetings:
Pacific Fishery Management Council, 13433

National Park Service
NOTICES
Concession contract negotiations:
Del Webb Recreational Properties, Inc., 13453
Environmental statements; availability, etc.:
Bering Land Bridge National Preserve, AK, et al., 13453

National Science Foundation
PROPOSED RULES
Regulatory agenda, 14466

National Technical Information Service
NOTICES
Inventions, Government-owned; availability for licensing, 13433

Nuclear Regulatory Commission
RULES
Environmental protection regulations for domestic licensing, etc.:
Telephone numbers for environmental inquiries; revision, 13399
PROPOSED RULES
Regulatory agenda, 14692
NOTICES
Environmental statements; availability, etc.:
Northeast Nuclear Energy Co. et al., 13454
Pennsylvania Power & Light Co., 13455
Petitions; Director's decisions:
Detroit Edison Co., 13456
Applications, hearings, determinations, etc.:
GPU Nuclear Corp. et al., 13456
Public Service Co. of Colorado, 13457

Office of Management and Budget
See Management and Budget Office

Panama Canal Commission
PROPOSED RULES
Regulatory agenda, 14494

Peace Corps
PROPOSED RULES
Regulatory agenda, 14498

Pennsylvania Avenue Development Corporation
PROPOSED RULES
Regulatory agenda, 14500

Pension Benefit Guaranty Corporation
PROPOSED RULES
Regulatory agenda, 14504

Personnel Management Office
PROPOSED RULES
Regulatory agenda, 14476

Public Health Service
See also Food and Drug Administration; National Institutes of Health
NOTICES
Meetings:
National Toxicology Program; Scientific Counselors Board, 13451

Railroad Retirement Board
PROPOSED RULES
Regulatory agenda, 14512

Regulatory Information Service Center
PROPOSED RULES
Unified agenda of Federal regulations, 13602

Securities and Exchange Commission
PROPOSED RULES
Regulatory agenda, 14714
NOTICES
Self-regulatory organizations; proposed rule changes:
Chicago Board Options Exchange, Inc., 13458

Selective Service System
PROPOSED RULES
Regulatory agenda, 14520

Small Business Administration
PROPOSED RULES
Regulatory agenda, 14522

Social Security Administration
NOTICES
Supplemental security income:
United States and West Germany; supplementary agreement, entry into force, 13451

State Department
PROPOSED RULES
Regulatory agenda, 14034

Surface Mining Reclamation and Enforcement Office
PROPOSED RULES
Initial and permanent regulatory programs:
Coal extraction incidental to extraction of other minerals; exemption, 13415

Tennessee Valley Authority
PROPOSED RULES
Regulatory agenda, 14536

Textile Agreements Implementation Committee
See Committee for the Implementation of Textile Agreements

Transportation Department
See also Coast Guard

VOL 53 ISS 79 PT 1 APR 25 1988 UMI

PROPOSED RULES
Regulatory agenda, 14040
NOTICES
Aviation proceedings:
Certificates of public convenience and necessity and foreign air carrier permits; weekly applications, 13459

Treasury Department
See also Alcohol, Tobacco and Firearms Bureau; Comptroller of the Currency; Customs Service; Fiscal Service; Internal Revenue Service
PROPOSED RULES
Regulatory agenda, 14180
NOTICES
Agency information collection activities under OMB review, 13460
(2 documents)

United States Information Agency
NOTICES
Grants; availability, etc.:
Private non-profit organizations in support of international educational and cultural activities, 13460

Veterans Administration
PROPOSED RULES
Regulatory agenda, 14540

Separate Parts In This Issue

Parts II–LVI
Unified Agenda of Federal Regulations (60 departments and agencies—Books I and II of this issue), 14602

Reader Aids
Additional information, including a list of public laws, telephone numbers, and finding aids, appears in the Reader Aids section at the end of this issue.

CFR PARTS AFFECTED IN THIS ISSUE

A cumulative list of the parts affected this month can be found in the Reader Aids section at the end of this issue.

7 CFR
Proposed Rules:
917 13413
959 13413

10 CFR
51 13399

15 CFR
Proposed Rules:
303 13414

21 CFR
430 13400
436 13400
442 13400

24 CFR
200 13404
201 13405
203 (2 documents) 13404, 13405
204 13404
213 13404
220 13404
221 13404
222 13404
226 13404
227 13404
234 13405
235 13404
237 13404
240 13404
888 13406

26 CFR
1 (2 documents) 13464
26 13464
Proposed Rules:
26 13464
26a 13464
602 13464

30 CFR
Proposed Rules:
702 13415

33 CFR
165 13407
Proposed Rules:
173 13417
174 13417

36 CFR
1228 13407

47 CFR
73 (2 documents) 13409
Proposed Rules:
73 (8 documents) 13419–13422

48 CFR
733 13410

50 CFR
611 13410
Proposed Rules:
611 13422

VOL 53 ISS 79 PT 1 AP 25 1988 UMI

Rules and Regulations

Federal Register
Vol. 53, No. 79
Monday, April 25, 1988

This section of the FEDERAL REGISTER contains regulatory documents having general applicability and legal effect, most of which are keyed to and codified in the Code of Federal Regulations, which is published under 50 titles pursuant to 44 U.S.C. 1510.
The Code of Federal Regulations is sold by the Superintendent of Documents. Prices of new books are listed in the first FEDERAL REGISTER issue of each week.

NUCLEAR REGULATORY COMMISSION

10 CFR Part 51

Revision of Telephone Numbers for Environmental Inquiries

AGENCY: Nuclear Regulatory Commission.

ACTION: Final rule.

SUMMARY: The Nuclear Regulatory Commission (NRC) is amending its regulations pertaining to environmental matters to indicate the revision of five telephone numbers that enable prospective applicants or petitioners to consult with members of the NRC's staff. These amendments are required because of the assignment of new telephone numbers in conjunction with the recent consolidation of approximately one-half of the NRC's headquarters staff to its new location in Rockville, Maryland. These amendments are being made to inform NRC licensees and members of the public of the new telephone numbers.

EFFECTIVE DATE: April 25, 1988.

FOR FURTHER INFORMATION CONTACT: Donnie H. Grimsley, Director, Division of Rules and Records, Office of Administration and Resources Management, U.S. Nuclear Regulatory Commission, Washington, DC 20555, Telephone: 301-492-7211.

SUPPLEMENTARY INFORMATION: On March 28, 1988, the Office of the Executive Director for Operations and portions of the Office of Governmental and Public Affairs (GPA)—the Director of GPA and the Public Affairs staff—relocated at the agency's new office building in Rockville, Maryland. A notice to that effect was published in the **Federal Register** on March 31, 1988 (53 FR 10449). These amendments reflect the assignment of new telephone numbers to certain relocated agency personnel.

Because these amendments deal solely with the organization and relocation of agency personnel, the notice and comment provisions of the Administrative Procedure Act do not apply under 5 U.S.C. 553(b)(A). These amendments are effective upon publication in the the **Federal Register**. Good cause exists to dispense with the usual 30-day delay in the effective date, because these amendments are of a minor and administrative nature.

Environmental Impact: Categorical Exclusion

The NRC has determined that this final rule is the type of action described in categorical exclusion 10 CFR 51.22(c)(2). Therefore, neither an environmental impact statement nor an environmental assessment has been prepared for this final rule.

Paperwork Reduction Act Statement

This final rule contains no information collection requirements and therefore is not subject to the requirements of the Paperwork Reduction Act of 1980 (44 U.S.C. 3501 *et seq.*).

List of Subjects in 10 CFR Part 51

Administrative practice and procedure, Environmental impact statement, Nuclear materials, Nuclear power plants and reactors, Reporting and recordkeeping requirements.

For the reasons set out in the preamble and under the authority of the Atomic Energy Act of 1954, as amended, the Energy Reorganization Act of 1974, as amended, and 5 U.S.C. 553, the NRC is adopting the following amendments to 10 CFR Part 51.

PART 51—LICENSING AND REGULATORY POLICY AND PROCEDURES FOR ENVIRONMENTAL PROTECTION

1. The authority citation for Part 51 continues to read as follows:

Authority: Sec. 161, 68 Stat. 948, as amended (42 U.S.C. 2201); sec. 201, 88 Stat. 1242, as amended (42 U.S.C. 5841).

2. In § 51.40, paragraph (c) is revised to read as follows:

§ 51.40 Consultation with NRC staff.

* * * * *

(c) Questions concerning environmental matters should be addressed to the following NRC staff offices as appropriate:

(1) *Utilization facilities:* Director, Office of Nuclear Reactor Regulation, U.S. Nuclear Regulatory Commission, Washington, DC 20555, Telephone: (301) 492-1270.

(2) *Production facilities:* Director, Office of Nuclear Material Safety and Safeguards, U.S. Nuclear Regulatory Commission, Washington, DC 20555, Telephone: (301) 492-3352.

(3) *Materials licenses:* Director, Office of Nuclear Material Safety and Safeguards, U.S. Nuclear Regulatory Commission, Washington, DC 20555, Telephone: (301) 492-3352.

(4) *Rulemaking:* Director, Office of Nuclear Regulatory Research, U.S. Nuclear Regulatory Commission, Washington, DC 20555, Telephone: (301) 492-3700.

(5) *General Environmental Matters:* Executive Director for Operations, U.S. Nuclear Regulatory Commission, Washington, DC 20555, Telephone: (301) 492-1700.

3. Section 51.121 is revised to read as follows:

§ 51.121 Status of NEPA actions.

Individuals or organizations desiring information on the NRC's NEPA process or on the status of specific NEPA actions should address inquiries to:

(a) *Utilization facilities:* Director, Office of Nuclear Reactor Regulation, U.S. Nuclear Regulatory Commission, Washington, DC 20555, Telephone (301) 492-1270.

(b) *Production facilities:* Director, Office of Nuclear Material Safety and Safeguards, U.S. Nuclear Regulatory Commission, Washington, DC 20555, Telephone: (301) 492-3352.

(c) *Materials licenses:* Director, Office of Nuclear Material Safety and Safeguards, U.S. Nuclear Regulatory Commission, Washington, DC 20555, Telephone: (301) 492-3352.

(d) *Rulemaking:* Director, Office of Nuclear Regulatory Research, U.S. Nuclear Regulatory Commission, Washington, DC 20555, Telephone: (301) 492-3700.

(e) *General Environmental Matters:* Executive Director for Operations, U.S. Nuclear Regulatory Commission, Washington, DC 20555, Telephone: (301) 492-1700.

Dated at Rockville, Maryland, this 13th day of April 1988.

For the Nuclear Regulatory Commission.
Victor Stello, Jr.,
Executive Director for Operations.
[FR Doc. 88-8985 Filed 4-22-88; 8:45 am]
BILLING CODE 7590-01-M

DEPARTMENT OF HEALTH AND HUMAN SERVICES

Food and Drug Administration

21 CFR Parts 430, 436, and 442

[Docket No. 88N-0047]

Antibiotic Drugs; Cefmenoxime Hydrochloride for Injection

AGENCY: Food and Drug Administration.

ACTION: Final rule.

SUMMARY: The Food and Drug Administration (FDA) is amending the antibiotic drug regulations to provide for the inclusion of accepted standards for a new antibiotic drug, cefmenoxime hydrochloride for injection. The manufacturer has supplied sufficient data and information to establish its safety and efficacy.

DATES: Effective April 25, 1988; comments, notice of participation, and request for hearing by May 25, 1988; data, information, and analyses to justify a hearing by June 24, 1988.

ADDRESS: Written comments to the Dockets Management Branch (HFA-305), Food and Drug Administration, Rm. 4-62, 5600 Fishers Lane, Rockville, MD 20857.

FOR FURTHER INFORMATION CONTACT: Peter A. Dionne, Center for Drug Evaluation and Research (HFN-815), Food and Drug Administration, 5600 Fishers Lane, Rockville, MD 20857, 301-443-4290.

SUPPLEMENTARY INFORMATION: FDA has evaluated data submitted in accordance with regulations promulgated under section 507 of the Federal Food, Drug, and Cosmetic Act (21 U.S.C. 357), as amended, with respect to a request for approval of a new antibiotic drug, cefmenoxime hydrochloride for injection. The agency has concluded that the data supplied by the manufacturer concerning this antibiotic drug are adequate to establish its safety and efficacy when used as directed in the labeling and that the regulations should be amended in 21 CFR Parts 430, 436, and 442 to provide for the inclusion of accepted standards for the product.

Environmental Impact

The agency has determined under 21 CFR 25.24(c)(6) that this action is of a type that does not individually or cumulatively have a significant effect on the human environment. Therefore, neither an environmental assessment nor an environmental impact statement is required.

Submitting Comments and Filing Objections

This final rule announces standards that FDA has accepted in a request for approval of an antibiotic drug. Because this final rule is not controversial and because when effective it provides notice of accepted standards, notice and comment procedure and delayed effective date are found to be unnecessary and not in the public interest. This final rule, therefore, is effective April 25, 1988. However, interested persons may, on or before May 25, 1988, submit written comments to the Dockets Management Branch (address above). Two copies of any comments are to be submitted, except that individuals may submit one copy. Comments are to be identified with the docket number found in brackets in the heading of this document. Received comments may be seen in the Dockets Management Branch between 9 a.m. and 4 p.m., Monday through Friday.

Any person who will be adversely affected by this final rule may file objections to it and request a hearing. Reasonable grounds for the hearing must be shown. Any person who decides to seek a hearing must file: (1) On or before May 25, 1988, a written notice of participation and request for hearing, and (2) on or before June 24, 1988, the data, information, and analyses on which the person relies to justify a hearing, as specified in 21 CFR 314.300. A request for a hearing may not rest upon mere allegations or denials, but must set forth specific facts showing that there is a genuine and substantial issue of fact that requires a hearing. If it conclusively appears from the face of the data, information, and factual analyses in the request for hearing that no genuine and substantial issue of fact precludes the action taken by this order, or if a request for hearing is not made in the required format or with the required analyses, the Commissioner of Food and Drugs will enter summary judgment against the person(s) who request(s) the hearing, making findings and conclusions and denying a hearing. All submissions must be filed in three copies, identified with the docket number appearing in the heading of this order and filed with the Dockets Management Branch.

The procedures and requirements governing this order, a notice of participation and request for hearing, a submission of data, information, and analyses to justify a hearing, other comments, and grant or denial of a hearing are contained in 21 CFR 314.300.

All submissions under this order, except for data and information prohibited from public disclosure under 21 U.S.C. 331(j) or 18 U.S.C. 1905, may be seen in the Dockets Management Branch (address above) between 9 a.m. and 4 p.m., Monday through Friday.

List of Subjects

21 CFR Part 430

Administrative practice and procedure, Antibiotics.

21 CFR Part 436

Antibiotics.

21 CFR Part 442

Antibiotics.

Therefore, under the Federal Food, Drug, and Cosmetic Act and under authority delegated to the Commissioner of Food and Drugs, Parts 430, 436, and 442 are amended as follows:

PART 430—ANTIBIOTIC DRUGS; GENERAL

1. The authority citation for 21 CFR Part 430 continues to read as follows:

Authority: Secs. 507, 701(a), 59 Stat. 463 as amended, 52 Stat. 1055 (21 U.S.C. 357, 371(a)); 21 CFR 5.10.

2. Section 430.4 is amended by adding new paragraph (a)(58) to read as follows:

§ 430.4 Definitions of antibiotic substances.

(a) * * *

(58) *Cefmenoxime.* Cefmenoxime is 5-thia-1-azabicyclo[4.2.0]oct-2-ene-2-carboxylic acid, 7-[[(2-amino-4-thiazolyl)(methoxyimino)acetyl]amino]-3-[[(1-methyl-1*H*-tetrazol-5-yl)thio]methyl]-8-oxo-, [6*R*-[6-α,7-β(Z)]]-.

3. Section 430.5 is amended by adding new paragraphs (a)(92) and (b)(94) to read as follows:

§ 430.5 Definitions of master and working standards.

(a) * * *

(92) *Cefmenoxime.* The term "cefmenoxime master standard" means a specific lot of cefmenoxime that is designated by the Commissioner as the standard of comparison in determining the potency of the cefmenoxime working standard.

(b) * * *

(94) *Cefmenoxime.* The term "cefmenoxime working standard" means a specific lot of a homogeneous preparation of cefmenoxime.

4. Section 430.6 is amended by adding new paragraph (b)(94) to read as follows:

§ 430.6 Definitions of the terms "unit" and "microgram" as applied to antibiotic substances.

* * * * *

(b) * * *

(94) *Cefmenoxime.* The term "microgram" applied to cefmenoxime means the cefmenoxime activity (potency) contained in 1.0482 micrograms of the cefmenoxime master standard.

PART 436—TESTS AND METHODS OF ASSAY OF ANTIBIOTIC AND ANTIBIOTIC-CONTAINING DRUGS

5. The authority citation for 21 CFR Part 436 continues to read as follows:

Authority: Sec. 507, 59 Stat. 463 as amended (21 U.S.C. 357); 21 CFR 5.10.

6. Section 436.20 is amended by adding new paragraph (d)(10) to read as follows:

§ 436.20 Sterility test methods and procedures.

* * * * *

(d) * * *

(10) *Diluting fluid J.* Sterilize 2.0 grams of anhydrous sodium carbonate by dry-heating at 160° C for 2 hours. Dissolve in 100 milliliters of diluting fluid A just prior to use.

* * * * *

7. Section 436.31 is amended by adding new paragraph (b)(16) to read as follows:

§ 436.31 Equipment and diluents for use in biological testing.

* * * * *

(b) * * *

(16) Diluent 16 (0.13*M* sterile pyrogen-free sodium carbonate solution). Dissolve 14.0 grams of anhydrous pyrogen-free sodium carbonate (prepared as described in paragraph (a)(5) of this section) in 1,000 milliliters pyrogen-free, distilled water. Sterilize in an autoclave at 121 °C for 20 minutes.

8. Section 436.32 is amended by adding a new paragraph (j) to read as follows:

§ 436.32 Pyrogen test.

* * * * *

(j) *Method 10.* Proceed as directed in paragraph (a) of this section, except dilute the sample with sodium carbonate solution (diluent 16).

9. Part 436 is amended by adding new §§ 436.363 and 436.364 to Subpart F to read as follows:

§ 436.363 High-performance liquid chromatographic assay for cefmenoxime.

(a) *Apparatus.* A suitable high-performance liquid chromatograph equipped with:

(1) A suitable detection system specified in the monograph for the drug being tested;

(2) A suitable recording device of at least 18-centimeter deflection;

(3) A suitable chromatographic data managing system; and

(4) An analytical column, 3 to 30 centimeters long, packed with a material as defined in the monograph for the drug being tested; and if specified in that monograph, the inlet of this column may be connected to a guard column, 3 to 5 centimeters in length, packed with the same material of 30 to 60 micrometers particle size.

(b) *Procedure.* Perform the assay and calculate the drug content using the temperature, instrumental conditions, and calculations specified in the monograph for the drug being tested with a flow rate not to exceed 2.0 milliliters per minute. Use a detector sensitivity setting that gives a peak height for the working standard that is at least 50 percent of scale with typical chart speed of not less than 2.5 millimeters per minute. Use the apparatus described in paragraph (a) of this section; and the reagents and working standard and sample solutions described in the monograph for the drug being tested. Equilibrate and condition the column by passage of 10 to 15 void volumes of mobile phase followed by 5 replicate injections of the same volume (between 10 and 20 microliters) of the working standard solution. Allow an operating time sufficiently long to obtain satisfactory separation and elution of the expected components after each injection. Record the peak responses and calculate the prescribed system suitability requirements described for the system suitability test in paragraph (c) of this section.

(c) *System suitability test.* Using the apparatus and procedure described in this section, test the chromatographic system for assay as follows:

(1) *Tailing factor.* Calculate the tailing factor (*T*), from distances measured along the horizontal line at 5 percent of the peak height above the baseline, as follows:

$$T = \frac{W_{0.05}}{2f}$$

where:

$W_{0.05}$ = Width of peak at 5 percent height; and

f = Horizontal distance from point of ascent to a point coincident with maximum peak height.

(2) *Efficiency of the column.* Calculate the number of theoretical plates (n) of the column as follows:

$$n = 5.545 \left[\frac{t_R}{w_h} \right]^2$$

where:

n = Efficiency, as number of theoretical plates for column;

t_R = Retention time of solute; and

w_h = Peak width at half-height.

(3) *Resolution.* Calculate the resolution (R) as follows:

$$R = \frac{2(t_{Rj} - t_{Ri})}{w_i + w_j}$$

where:

t_{Rj} = Retention time of a solute eluting after i (t_{Rj} is larger than t_{Ri});

t_{Ri} = Retention time of any solute;

w_i = Width of peak at baseline of any solute; and

w_j = Width of peak at baseline of any solute eluting after i.

(4) *Coefficient of variation (Relative standard deviation).*

Calculate the coefficient of variation (S_R) in percent) as follows:

$$S_R = \frac{100}{\bar{X}} \left[\frac{\sum_{i=1}^{N} (X_i - \bar{X})^2}{N-1} \right]^{\frac{1}{2}}$$

where:

X is the mean of N individual measurements of X_i. If the complete operating system meets the system suitability requirements of the monograph for the drug being tested, proceed as described in paragraph (b) of this section, using the sample solution in lieu of the working standard solution.

§ 436.364 Atomic absorption test for sodium carbonate content of cefmenoxime hydrochloride for injection.

(a) *Apparatus.* A suitable atomic absorbance spectrophotometer equipped with:

(1) A suitable sodium hollow-cathode discharge lamp;

(2) An oxidizing air-acetylene flame;

(3) A nebulizer-burner system;

(4) An optical dispersing device capable of isolating a resonance line of sodium from other wavelengths produced by the emission source; and

(5) A suitable radiation detector.

(b) *Reagents.* Ionization buffer: Dissolve 19.07 grams of potassium chloride in distilled water and dilute to 1,000 milliliters.

(c) *Preparation of reference standard and sample solutions*—(1) *Reference standard solution.* Accurately weigh approximately 140 milligrams of sodium chloride which has been previously dired for 40 to 50 minutes at a temperature of 500 to 650 °C. Dissolve and dilute with sufficient distilled water to obtain a stock solution containing 5.5 micrograms of sodium per milliliter. Mix 10 milliliters of the stock solution with 10 milliliters of ionization buffer and dilute the mixture with distilled water to obtain a solution containing 0.55 microgram of sodium per milliliter.

(2) *Sample solution.* Dilute the sample solution used in § 442.222(b)(1)(ii)(B)(*1*) of this chapter, with sufficient distilled water to obtain a stock solution containing 5.5 micrograms of sodium per milliliter (estimated). Mix 10 milliliters of the stock solution with 10 milliliters of ionization buffer and dilute the mixture with distilled water to obtain a solution containing 0.55 microgram of sodium per milliliter (estimated).

(3) *Procedure.* Determine the atomic absorbance of the reference standard and sample solutions at a wavelength of 589 nanometers, using the atomic absorbance spectrophotometer and a reagent blank prepared by diluting 10 milliliters of ionization buffer to 100 milliliters with distilled water.

(d) *Calculations.* Calculate the percent sodium carbonate as follows:

$$\text{Percent sodium carbonate} = \frac{A_u \times P_s \times 100 \times 0.9068 \times d}{A_s \times C_u}$$

where:

A_u = Absorbance of sodium in the sample solution;

A_s = Absorbance of sodium in the reference standard solution;

P_s = Milligrams of sodium chloride per milliliter of the reference standard solution;

C_u = Milligrams of sample per milliliter of sample solution; and

d = Dilution factor of the sample.

PART 442—CEPHA ANTIBIOTIC DRUGS

10. The authority citation for 21 CFR Part 442 continues to read as follows:

Authority: Sec. 507, 59 Stat. 463 as amended (21 U.S.C. 357); 21 CFR 5.10.

11. Part 442 is amended by adding new §§ 442.22a to Subpart A and 442.222 to Subpart C to read as follows:

§ 442.22a Sterile cefmenoxime hydrochloride.

(a) *Requirements for certification*—(1) *Standards of identity, strength, quality, and purity.* Cefmenoxime hydrochloride is 5-thia-1-azabicyclo[4.2.0]oct-2-ene-2-carboxylic acid, 7-[[(2-amino-4-thiazolyl)(methoxyimino)acetyl]amino]-3-[[(1-methyl-1*H*-tetrazol-5-yl)thio]methyl]-8-oxo-, hydrochloride (2:1), [6*R*-[6α,7β(*Z*)]]-. It is so purified and dried that:

(i) Its cefmenoxime content is not less than 869 and not more than 1,015 micrograms of cefmenoxime per milligram on an anhydrous basis.

(ii) It is sterile.

(iii) It is nonpyrogenic.

(iv) Its moisture content is not more than 1.5 percent.

(v) It passes the identity test.

(vi) It is crystalline.

(2) *Labeling.* It shall be labeled in accordance with the requirements of § 432.5 of this chapter.

(3) *Requests for certification; samples.* In addition to complying with the requirements of § 431.1 of this chapter, each such request shall contain:

(i) Results of tests and assays on the batch for cefmenoxime content, sterility, pyrogens, moisture, identity, and crystallinity.

(ii) Samples, if required by the Director, Center for Drug Evaluation and Research:

(A) For all tests except sterility: 10 packages, each containing approximately 500 milligrams.

(B) For sterility testing: 1 package containing approximately 6 grams of a composite sample.

(b) *Tests and methods of assay*—(1) *Cefmenoxime content.* Proceed as directed in § 436.363 of this chapter, using ambient temperature, an ultraviolet detection system operating at a wavelength of 254 nanometers, a column packed with microparticulate (3 to 10 micrometers in diameter) reversed phase packing material such as octadecyl hydrocarbon bonded silicas, a flow rate not to exceed 2.0 milliliters per minute, and a known injection volume between 10 and 20 microliters. Reagents, working standard and sample solutions, system suitability requirements, and calculations are as follows:

(i) *Reagents*—(A) *0.1M Phosphate buffer solution, pH 6.8.* Dissolve 6.4 grams of monobasic potassium phosphate and 18.9 grams of dibasic sodium phosphate in 750 milliliters of water. Adjust the pH to 6.8 with 1*N* sodium hydroxide and dilute to 1,000 milliliters.

(B) *Internal standard solution.* Dissolve and dilute 0.15 gram of phthalimide in methanol to 100 milliliters.

(C) *Mobile phase.* Mix water:acetonitrile:glacial acetic acid (50:10:1). Filter through a suitable filter capable of removing particulate matter to 0.5 micron in diameter. Degas the mobile phase just prior to its introduction into the chromatograph.

(ii) *Preparation of working standard and sample solutions*—(A) *Working standard solution.* Dissolve approximately 50 milligrams of the cefmenoxime working standard, accurately weighed, in 10 milliliters of 0.1*M* phosphate buffer solution, pH 6.8 and dilute to 50 milliliters with mobile phase. Transfer 4.0 milliliters of this solution to a 50-milliliter volumetric flask, add 20 milliliters of internal standard solution and dilute to volume with mobile phase to obtain a solution containing 80 micrograms of cefmenoxime per milliliter.

(B) *Sample solution.* Dissolve approximately 50 milligrams of cefmenoxime sample, accurately weighed, in 10 milliliters of 0.1*M* phosphate buffer solution, pH 6.8. Dilute to 50 milliliters with mobile phase. Transfer 4.0 milliliters of this solution to a 50-milliliter volumetric flask, add 20 milliliters of internal standard solution and dilute to volume with mobile phase.

(iii) *System suitability requirements*—(A) *Tailing factor.* The tailing factor (*T*) for the cefmenoxime peak is satisfactory if it is not more than 1.6 at 5 percent of peak height.

(B) *Efficiency of the column.* The efficiency of the column (*n*) is satisfactory if it is greater than 1,200 theoretical plates for the cefmenoxime peak.

(C) *Resolution.* The resolution (*R*) between the peak for cefmenoxime and phthalimide is satisfactory if it is not less than 2.3.

(D) *Coefficient of variation.* The coefficiednt of variation (S_R in percent) of 5 replicate injections is satisfactory if it is not more than 2.0 percent. If the system suitability requirements have been met, then proceed as described in § 436.363(b) of this chapter.

(iv) *Calculations.* Calculate the micrograms of cefmenoxime per milligram of sample as follows:

$$\text{Micrograms of cefmenoxime per milligram} = \frac{R_u \times P_s \times 100}{R_s \times C_u \times (100-m)}$$

where:

R_u = Area of cefmenoxime peak in the chromatogram of the sample/Area of internal standard peak;

R_s = Area of the cefmenoxime peak in the chromatogram of the cefmenoxime working standard/Area of internal standard peak;

P_s = Cefmenoxime activity in the cefmenoxime working standard solution in micrograms per milliliter;

C_u = Milligrams of sample per milliliter of sample solution; and

m = Percent moisture content of the sample.

(2) *Sterility.* Proceed as directed in § 436.20 of this chapter, using the method described in paragraph (e)(1) of that section, except in lieu of diluting fluid A use diluting fluid H.

(3) *Pyrogens.* Proceed as directed in § 436.32(i) of this chapter, using a solution containing 60 milligrams per milliliter.

(4) *Moisture.* Proceed as directed in § 436.201 of this chapter, using the sample preparation described in paragraph (d)(4) of that section and the titration procedure described in paragraph (e)(3) of that section, except:

(i) In lieu of 3 milliliters of anhydrous methanol solution, inject 20 milliliters of a formamide:methanol solution (2:1) into the container and shake to dissolve the contents (prior to use in preparation of the formamide:methanol solution, dry 500 grams of formamide over 20 grams of anhydrous sodium for 24 hours);

(ii) Rinse the syringe, needle, and immediate container with two separate 5-milliliter portions of anhydrous methanol, in lieu of one 3-milliliter portion of anhydrous methanol; and

(iii) In § 436.201(e)(3) of this chapter, add a sufficient volume of the formamide:methanol solution (2:1) to cover the electrodes in the dry titrating vessel, in lieu of 20 milliliters of solvent A before starting the titration.

(5) *Identity.* Using a 0.0025-percent solution of the sample in 0.1*M* phosphate buffer, pH 6.8 and a suitable spectrophotometer, record the ultraviolet absorption spectrum from 220 to 310 nanometers. The spectrum compares qualitatively to that of the cefmenoxime working standard similarly tested.

(6) *Crystallinity.* Proceed as directed in § 436.203(a) of this chapter.

§ 442.222 Cefmenoxime hydrochloride for injection.

(a) *Requirements for certification*—(1) *Standards of identity, strength, quality, and purity.* Cefmenoxime hydrochloride for injection is a dry mixture of cefmenoxime hydrochloride and sodium carbonate. Each milligram of cefmenoxime hydrochloride for injection contains not less than 869 and not more than 1,015 micrograms of cefmenoxime on an anhydrous and sodium carbonate-free basis. Its cefmenoxime content is satisfactory if it contains not less than 90 percent and not more than 115 percent of the number of milligrams of cefmenoxime that it is represented to contain. It is sterile. It is nonpyrogenic. Its loss on drying is not more than 1.5 percent. Its pH in an aqueous solution containing 100 milligrams per milliliter is not less than 6.4 and not more than 7.9. The cefmenoxime hydrochloride used conforms to the standards prescribed by § 442.22a(a)(1) of this chapter.

(2) *Labeling.* It shall be labeled in accordance with the requirements of § 432.5 of this chapter.

(3) *Requests for certification; samples.* In addition to complying with the requirements of § 431.1 of this chapter, each such request shall contain:

(i) Results of tests and assays on:

(A) The cefmenoxime hydrochloride used in making the batch for cefmenoxime content, moisture, identity, and crystallinity.

(B) The batch for cefmenoxime content, sterility, pyrogens, loss on drying, pH, and sodium carbonate content.

(ii) Samples, if required by the Director, Center for Drug Evaluation and Research:

(A) The cefmenoxime hydrochloride used in making the batch: 10 packages, each containing approximately 500 milligrams.

(B) The batch:

(*1*) For all tests except sterility: A minimum of 10 immediate containers.

(*2*) For sterility testing: 20 immediate containers, collected at regular intervals throughout each filling operation.

(b) *Tests and methods of assay*—(1) *Cefmenoxime content.* Proceed as directed in § 436.363 of this chapter, using ambient temperature, an ultraviolet detection system operating at a wavelength of 254 nanometers, a column packed with microparticulate (3 to 10 micrometers in diameter) reversed phase packing material such as octadecyl hydrocarbon bonded silicas, a flow rate not to exceed 2.0 milliliters per minute, and a known injection volume between 10 and 20 microliters. Reagents, working standard and sample solutions, system suitability requirements, and calculations are as follows:

(i) *Reagents*—(A) *0.1M Phosphate buffer solution, pH 6.8.* Dissolve 6.4 grams of monobasic potassium phosphate and 18.9 grams of dibasic sodium phosphate in 750 milliliters of water. Adjust the pH to 6.8 with 1*N* sodium hydroxide and dilute to 1,000 milliliters.

(B) *Internal standard solution.* Dissolve and dilute 0.15 gram of phthalimide in methanol to 100 milliliters.

(C) *Mobile phase.* Mix water:acetonitrile:glacial acetic acid (50:10:1). Filter through a suitable filter capable of removing particulate matter to 0.5 micron in diameter. Degas the mobile phase just prior to its introduction into the chromatograph.

(ii) *Preparation of working standard and sample solutions*—(A) *Working standard solution.* Dissolve approximately 50 milligrams of the cefmenoxime working standard, accurately weighed, in 10 milliliters of 0.1*M* phosphate buffer solution, pH 6.8 and dilute to 50 milliliters with mobile phase. Transfer 4.0 milliliters of this solution to a 50-milliliter volumetric flask, add 20 milliliters of internal standard solution and dilute to volume with mobile phase to obtain a solution containing 80 micrograms of cefmenoxime per milliliter.

(B) *Sample solutions.* Determine both micrograms of cefmenoxime per milligram of the sample and milligrams of cefmenoxime per container. Use separate containers for preparation of each sample solution as described in paragraphs (b)(1)(ii)(B) (*1*) and (*2*) of this section.

(*1*) *Micrograms of cefmenoxime per milligram.* Dissolve the accurately weighed dry contents of a sample with sufficient distilled water to obtain a solution containing 1 milligram of cefmenoxime per milliliter (estimated). Transfer 4.0 milliliters of this solution to a 50-milliliter volumetric flask, add 20 milliliters of internal standard solution and dilute to volume with mobile phase to obtain a solution containing 80 micrograms of cefmenoxime per milliliter (estimated).

(*2*) *Milligrams of cefmenoxime per container.* Reconstitute the sample as directed in the labeling. Then, using a suitable hypodermic needle and syringe, remove all of the withdrawable contents if it is represented as a single-dose container; or, if the labeling specifies the amount of potency in a given volume of the resultant preparation, remove an accurately measured representative portion from each container. Dilute the solution thus obtained with sufficient distilled water to obtain a solution containing 1 milligram of cefmenoxime per milliliter (estimated). Transfer 4.0 milliliters of this solution to a 50-milliliter volumetric flask, add 20 milliliters of internal standard solution and dilute to volume with mobile phase to obtain a solution containing 80 micrograms of cefmenoxime per milliliter (estimated).

(iii) *System suitability requirements*—(A) *Tailing factor.* The tailing factor (*T*) for the cefmenoxime peak is satisfactory if it is not more than 1.6 at 5 percent of peak height.

(B) *Efficiency of the column.* The efficiency of the column (*n*) is satisfactory if it is greater than 1,200 theoretical plates for the cefmenoxime peak.

(C) *Resolution.* The resolution (*R*) between the peak for cefmenoxime and phthalimide is satisfactory if it is not less than 2.3.

(D) *Coefficient of variation.* The coefficient of variation (S_R in percent) of 5 replicate injections is satisfactory if it is not more than 2.0 percent. If the system suitability requirements have been met, then proceed as described in § 436.363(b) of this chapter.

(iv) *Calculations*—(A) *Micrograms per milligram.* Calculate the micrograms of cefmenoxime per milligram as follows:

$$\text{Micrograms of cefmenoxime per milligram} = \frac{R_u \times P_s \times 100 \times d}{R_s \times C_u(100\text{-}L\text{-}S)}$$

where:

R_u = Area of the cefmenoxime peak in the chromatogram of the sample/Area of internal standard peak;

R_s = Area of the cefmenoxime peak in the chromatogram of the cefmenoxime working standard/Area of internal standard peak;

P_s = Cefmenoxime activity in the cefmenoxime working standard solution in micrograms per milliliter;

C_u = Milligrams of sample per milliliter of sample solution;

d = Dilution factor of the sample;

L = Percent loss on drying (determined as directed in paragraph (b)(4) of this section); and

S = Percent sodium carbonate (determined as directed in paragraph (b)(6) of this section).

(B) *Milligrams of cefmenoxime per vial.* Calculate the cefmenoxime content of the vial as follows:

$$\text{Milligrams of cefmenoxime per vial} = \frac{R_u \times P_s \times d}{R_s \times 1{,}000}$$

where:

R_u = Area of the cefmenoxime peak in the chromatogram of the sample/Area of internal standard peak;

R_s = Area of the cefmenoxime peak in the chromatogram of the cefmenoxime working standard/Area of internal standard peak;

P_s = Cefmenoxime activity in the cefmenoxime working standard solution in micrograms per milliliter; and

d = Dilution factor of the sample.

(2) *Sterility.* Proceed as directed in § 436.20 of this chapter, using the method described in paragraph (e)(1) of that section.

(3) *Pyrogens.* Proceed as directed in § 436.32(b) of this chapter, using a solution containing 60 milligrams of cefmenoxime per milliliter.

(4) *Loss on drying.* Proceed as directed in § 436.200(a) of this chapter.

(5) *pH.* Proceed as directed in § 436.202 of this chapter, using an aqueous solution containing 100 milligrams per milliliter.

(6) *Sodium carbonate content.* Proceed as directed in § 436.364 of this chapter.

Dated: April 15, 1988.

Daniel L. Michels,

Director, Office of Compliance, Center for Drug Evaluation and Research.

[FR Doc. 88-8936 Filed 4-22-88; 8:45 am]

BILLING CODE 4160-01-M

DEPARTMENT OF HOUSING AND URBAN DEVELOPMENT

Office of the Assistant Secretary for Housing—Federal Housing Commissioner

24 CFR Parts 200, 203, 204, 213, 220, 221, 222, 226, 227, 235, 237, and 240

[Docket No. R-88-1357; FR-2382]

Mortgage Insurance for the Allegeny Reservation of the Seneca Nation of Indians; Correction

AGENCY: Office of the Assistant Secretary for Housing—Federal Housing Commissioner, HUD.

ACTION: Interim rule; correction.

SUMMARY: On December 21, 1987 (52 FR 48197) the Department published an interim rule entitled "Mortgage Insurance for the Allegeny Reservation of the Seneca Nation of Indians" (Seneca rule). The effective date of the rule was delayed in accordance with the legislative review requirements of section 7(o)(3) of the Department of Housing and Urban Development Act (42 U.S.C. 3535(o)(3)). By Notice published on March 28, 1988 (53 FR 9869), the Department announced the effective date for the interim rule as March 28, 1988. This document makes corrections in the text of the interim rule that are necessary to reflect the fact that another HUD rule, published before the Seneca rule but not yet announced for effect, contains amendments to, or adds, some of the same sections that were amended in the December 21, 1987 Seneca rule. The delay in announcing the effectiveness of the other HUD rule requires technical adjustments in the content of the Seneca rule. These corrections will not change the effective date of the Seneca rule, nor will they affect the operations of the insurance program outlined in that rule.

EFFECTIVE DATE: April 25, 1988.

FOR FURTHER INFORMATION CONTACT: Donald B. Alexander, Chief Attorney, Home Mortgage Insurance Division, Office of the General Counsel, Department of Housing and Urban Development, Room 9258, 451 Seventh Street SW., Washington, DC 20410, telephone (202) 755-7070. (This is not a toll-free number.)

SUPPLEMENTARY INFORMATION: The Department published a final rule entitled "Temporary Mortgage Assistance Payments" on March 5, 1987 to implement a new program authorized by section 341 of the Housing and Community Development Act of 1980. Section 341 amended section 230 of the National Housing Act—the provision of the Act setting out the forms of mortgage foreclosure relief available under HUD's single family insuring authorities. While the March 5, 1987 rule (TMAP rule) was published as a final rule, its effective date has been postponed. Accordingly, a conflict has developed in the content of the later-published Seneca rule, because that rule contains amendments to certain HUD regulations that were earlier amended by, or added by, the TMAP rule. The purpose of this document is to correct the Seneca rule to permit it to be a freestanding rule setting out all necessary features of the new mortgage insurance program authorized under section 203(q) of the National Housing Act, pending the effectiveness of the TMAP rule.

Accordingly, the rule published on December 21, 1987 (52 FR 48197) (FR Doc. 87-29092) is corrected as follows:

§§ 203.640, 203.645 and 203.654 [Corrected]

1. Amendments of §§ 203.640, 203.645 and 203.654 (items 12, 13 and 14 of the published rule, 52 FR 48202-48203) are withdrawn.

§ 203.350 [Corrected]

2. In § 203.350 (item 8), the amendatory language is corrected to read: "Section 203.350 is amended by reserving paragraph (c) and adding new paragraph (d) to read as follows:".

§ 203.355 [Amended]

3. In § 203.355, the reference in the last line of the introductory text to "203.658" is revised to read "203.600".

4. Section 203.666 is revised to read as follows:

§ 203.666 Processing defaulted mortgages on property in Allegeny Reservation of Seneca Nation of Indians.

(a) *Applicability.* This section applies to mortgages authorized by section 203(q) of the National Housing Act (§ 203.43j) only if the default occurred before the mortgagor and the lessee execute a lease renewal or a new lease either with a term of not less than five years beyond the maturity date of the mortgage, or with a term established by an arbitration award.

(b) *Assignment (mandatory acceptance).* Before a mortgagee requests the Secretary to accept an assignment of a mortgage under the first sentence of § 203.350(d) where the mortgagor is in monetary default, the mortgagee must submit documents showing that the requirements of § 203.604 have been met and must provide all information in its possession concerning the mortgagor's eligibility for relief as set forth in § 203.664.

(c) *Assignment (discretionary acceptance).* Before a mortgagee requests the Secretary to exercise his or her discretion to accept an assignment of a mortgage under the second sentence of § 203.350(d) where the mortgagor is in non-monetary default, the mortgagee must provide all information in its possession concerning the mortgagor's eligibility for relief as set forth in § 203.664, except §§ 203.664(a)(1) (ii) and (iii).

(d) *Forbearance.* The Secretary may make forbearance relief on any terms and conditions which he or she in his or her discretion deems appropriate.

Dated: April 19, 1988.

Grady J. Norris,

Assistant General Counsel for Regulations.

[FR Doc. 88-8947 Filed 4-22-88; 8:45 am]

BILLING CODE 4210-27-M

---

24 CFR Parts 201, 203, and 234

[Docket No. N-88-1795; FR-2509]

Mortgage Insurance; Changes to the Maximum Mortgage Limits for Single Family Residences, Condominiums and Manufactured Homes and Lots

AGENCY: Office of the Assistant Secretary for Housing—Federal Housing Commissioner, HUD.

ACTION: Notice of revisions to FHA maximum mortgage limits for high-cost areas.

SUMMARY: This Notice amends the listing of areas eligible for "high-cost" mortgage limits under certain of HUD's insuring authorities under the National Housing Act by increasing the mortgage limits Pitt County, North Carolina; and adding "high-cost" mortgage limits for Carteret County, North Carolina and the Lafayette, Indiana MSA which is comprised of Tippecanoe County, Indiana. Mortgage limits are adjusted in an area when the Secretary determines that middle- and moderate-income persons have limited housing opportunities because of high prevailing housing sales prices.

EFFECTIVE DATE: April 25, 1988.

FOR FURTHER INFORMATION CONTACT: For single family: Morris Carter, Director, Single Family Development Division, Room 9270; telephone (202) 755-6720. For manufactured homes: Robert J. Coyle, Director, Title I Insurance Division, Room 9160; telephone (202) 755-6880; 451 Seventh Street SW., Washington, DC 20410. (These are not toll-free numbers.)

SUPPLEMENTARY INFORMATION:

Background

The National Housing Act (NHA), 12 U.S.C. (1710-1749), authorizes HUD to insure mortgages for single family residences (from one- to four-family structures), condominiums, manufactured homes, manufactured home lots, and combination manufactured home lots. The NHA, as amended by the Housing and Community Development Amendments of 1980 and the Housing and Community Development Amendments of 1981, permits HUD to increase the maximum mortgage limits under most of these programs to reflect regional differences in the cost of housing. In addition, sections 2(b) and 214 of the NHA provide for special high-cost limits for insured mortgages in Alaska, Guam and Hawaii.

On March 3, 1988 (53 FR 6922), the Department published its most recent annual complete listing of areas eligible for "high-cost" mortgage limits under certain of HUD's insuring authorities under the national Housing Act, and their applicable limits for such areas.

This Document

Today's document increases high-cost mortgage amounts for Pitt County, North Carolina; and adds high-cost mortgage limits for Carteret County, North Carolina and the Lafayette, Indiana MSA which is comprised of Tippecanoe County, Indiana.

These amendments to the high-cost areas appear in two parts. Part I explains high-cost limits for mortgages insured under Title I of the National Housing Act. Part II lists changes for single family residences insured under section 203(b) or 234(c) of the National Housing Act.

National Housing Act High Cost Mortgage Limits

I. Title I: Method of Computing Limits

A. Section 2(b)(1)(D). Combination Manufactured Home and Lot (Excluding Alaska, Guam and Hawaii)

To determine the high-cost limit for a combination manufactured home and lot loan, multiply the dollar amount in the "one family" column of Part II of this list by .80. For example, Pitt County (North Carolina) has a one-family limit of $75,050. The combination home and lot loan limit for Pitt County is $75,050×.80, or $60,040.

B. Section 2(b)(1)(E): Lot Only (Excluding Alaska, Guam and Hawaii)

To determine the high-cost limit for a lot loan, multiply the dollar amount in the "one-family" column of Part II of this list by .20. For example, Pitt County (North Carolina) has a one-family limit of $75,050. The lot-only loan limit for Pitt County is $75,050×.20, or $15,010.

C. Section 2(b)(2). Alaska, Guam and Hawaii Limits

The maximum dollar limits for Alaska, Guam and Hawaii may be 140% of the statutory loan limits set out in section 2(b)(1).

Accordingly, the dollar limits for Alaska, Guam and Hawaii are as follows:

1. For manufactured homes: $56,700. (40,500×140%).
2. For combination manufactured homes and lots: 75,600. ($54,000 × 140%).
3. For lots only: $18,900. (13,500 × 140%).

II. Title II: Updating of FHA Sections 203(b), 234(c) and 214 Area Wide Mortgage Limits

REGION IV.—HUD FIELD OFFICE—GREENSBORO OFFICE

Market area designation and local	1-family and condo unit	2-family	3-family	4-family
Carteret County	$70,300	$79,150	$96,200	$111,000
Pitt County	75,050	84,500	102,750	118,500

REGION V.—HUD FIELD OFFICE—INDIANAPOLIS OFFICE

Market area designation and local	1-family and condo unit	2-family	3-family	4-family
Lafayette, IN MSA Tippecanoe County	$76,750	$86,450	$105,000	$121,200

Date: April 18, 1988.

Thomas T. Demery,

Assistant Secretary for Housing—Federal Housing Commissioner.

[FR Doc. 88-9036 Filed 4-22-88; 8:45 am]

BILLING CODE 4210-27-M

---

24 CFR Part 888

[Docket No. N-88-1751; FR-2423]

Section 8 Housing Assistance Payments Program; Fair Market Rents for New Construction and Substantial Rehabilitation—Detroit, MI; Special Revision

AGENCY: Office of the Assistant Secretary for Housing—Federal Housing Commissioner, HUD.

ACTION: Final notice.

SUMMARY: Section 8(c)(1) of the United States Housing Act of 1937 requires the Secretary to establish Fair Market Rents (FMRs) periodically, but not less frequently than annually. This document announces the Fiscal Year 1986 Fair Market Rent Schedule to establish new Fair Market Rents for the Detroit market area in the State of Michigan. These rents are necessary to provide fair market rents more comparable to market rents for new construction in this market area.

EFFECTIVE DATE: April 25, 1988.

ADDRESS: Interested persons are invited to submit comments to the Rules Docket Clerk, Office of General Counsel, Room 10276, Department of Housing and Urban Development, 451 Seventh Street SW., Washington, DC 20410. Communications should refer to the above docket number and title. A copy of each communication submitted will be available for public inspection during regular business hours at the above address.

FOR FURTHER INFORMATION CONTACT: Edward M. Winiarski, Chief Appraiser, Valuation Branch, Technical Support Division, Office of Insured Multifamily Housing Development, 451 Seventh Street SW., Washington, DC 20410-0500. Telephone (202) 426-7624. (This is not a toll-free number.)

SUPPLEMENTARY INFORMATION:

Background

Section 8 of the United States Housing Act of 1937 (42 U.S.C. 1437f) (the Act) authorizes a system of housing assistance payments to aid lower income families in renting decent, safe, and sanitary housing. These programs, known collectively as the Section 8 Housing Assistance Payments Program, provide assistance payments for lower income families for a variety of housing options, including new construction and substantial rehabilitation.

Under these programs, HUD or public housing agencies (PHAs) make rental assistance payments on behalf of eligible families to owners. When families lease an eligible unit, the housing assistance payment is made and is based upon the difference between the total housing expense and the total family contribution. Initial contract rents, plus an allowance for utilities generally may not exceed area-wide Fair Market Rents (FMRs) established by the Department. FMRs are based primarily on the level of rentals paid for recently completed or newly constructed dwelling units of modest design within each market area as determined by HUD Field Office staff. In addition, for the Fair Market Rents most recently promulgated by the Department (see the August 7, 1986 Federal Register, 51 FR 28486), these rents reflected the Department's cost containment efforts in relation to housing assistance provided in the Section 8 New Construction and Substantial Rehabilitation Programs.

Public Comments

On December 21, 1987, the Department published a Proposed Notice at 52 FR 48278 and invited comments from the public on the proposal to adjust the Fiscal Year 1986 FMRs for Detroit, Michigan. Four public comments were received. Three of the four comments were in support of the revision of the proposed Fiscal Year 1986 FMRs for the Detroit market area. The fourth commenter claimed that the proposed rents were too low and would not support his project. This commenter, however, offered no data to support his assertions. Nevertheless, the Department reviewed a number of proposals using the proposed FRM schedule and found that these rents as proposed would permit these projects to be feasible. However, in the light of the last comment, the Department wishes to point out that since the FMRs principally reflect building costs and rentals as a whole in a given market or jurisdiction, not the costs associated with building a particular project or the rents necessary to service the debt on that proposal, the Department could not properly change the FMRs to accommodate the higher rentals that the commenter might expect.

Accordingly, the Department is adopting the same FMR schedule that was published in the Proposed Notice of December 21, 1987, as set forth below.

Other Information

HUD regulations in 24 CFR Part 50, implementing section 102(2)(c) of the National Environmental Policy Act of 1969, contain categorical exclusions from their requirements for the actions, activities and programs specified in § 50.20. Since the FMRs announced in this Notice are within the exclusion set forth in § 50.20(l), no environmental assessment is required, and no environmental finding has been prepared.

The Catalog of Federal Domestic Assistance Program number and title for the activities covered by this Notice are 14.156, Lower Income Housing Assistance Program (Section 8).

Accordingly, the following amendment to the 1986 Fair Market Rent schedule is adopted for the Detroit, Michigan market area:

Schedule A.—Fair Market Rents for New Construction and Substantial Rehabilitation (Including Housing Finance and Development Agencies' Programs)

REGION 5.—DETROIT OFFICE—MARKET: DETROIT

Structure Type	Number of Bedrooms				
	0	1	2	3	+
Detached			703	774	901
Semi-Detached/Row	434	470	576	679	777
Walkup	362	448	524	620	719
Elevator 2-4 STY	367	473	549		
Elevator 5+ STY	396	456	631		

Dated: April 18, 1988.

James E. Schoenberger,

General Deputy, Assistant Secretary for Housing—Federal Housing Commissioner.

[FR Doc. 88-9035 Filed 4-22-88; 8:45 am]

BILLING CODE 4210-27-M

DEPARTMENT OF TRANSPORTATION

Coast Guard

33 CFR Part 165

[COTP Savannah, GA, Regulation 88-01]

Safety Zone Regulations; Mackay River, Mile 675 Atlantic Intracoastal Waterway

AGENCY: Coast Guard, DOT.

ACTION: Emergency rule.

SUMMARY: The Coast Guard is establishing a safety zone around Mackay River Bridge, Mile 675, ICW. The zone is needed to protect the bridge from a possible hazard associated with damage to the fender system from a recent collision. Entry into this zone is prohibited except as authorized by the captain of the port. The COTP has authorized transit of the Mackay River Bridge navigation span by tug and barge traffic during daylight hours only. All other vessels are authorized to transit at any time.

EFFECTIVE DATES: This regulation becomes effective on 14 April 1988. It terminates upon completion of damage assessment unless sooner canceled or extended.

FOR FURTHER INFORMATION CONTACT: LT R.M. Gaudiosi, Coast Guard Marine Safety Office, Savannah, GA, Phone (912) 944-4353.

SUPPLEMENTARY INFORMATION: In accordance with 5 U.S.C. 553, a notice of proposed rulemaking was not published for this regulation and good cause exists for making it effective in less than 30 days after Federal Register publication. Publishing an NPRM and delaying its effective date would be contrary to the public interest since immediate action is needed to prevent further damage to the bridge or vessels transitting the span.

Drafting Information

The drafters of this regulation are LT R.M. Gaudiosi, project officer for the captain of the port, and LCDR S.T. Fuger, project attorney, Seventh Coast Guard District Legal Office.

Discussion of Regulation

The circumstances requiring this regulation resulted from a collision which carried away or severely damaged the existing fender system rendering the bridge vulnerable to further impact.

This regulation is issued pursuant to 33 U.S.C. 1225 and 1231 as set out in the authority citation for all of Part 165.

List of Subjects in 33 CFR Part 165

Harbors, Marine safety, Navigation (water), Security measures, Vessels, Waterways.

Regulation

In consideration of the foregoing, Subpart C of Part 165 of Title 33 Code of Federal Regulations, is amended as follows:

1. The authority citation for Part 165 continues to read as follows:

Authority: 33 U.S.C. 1225 and 1231; 50 U.S.C. 191; 49 CFR 1.46 and 33 CFR 1.05-1(G), 6.04-1, 6.04-1, 6.04-6, and 160.5.

2. A new § 165.T07-01 is added to read as follows:

§ 165.T07-01 Safety Zone: Mackay River Bridge, Mile 675 Atlantic Intracoastal Waterway.

(a) *Location.* The following area is a safety zone: The navigation span of the Mackay River Bridge at Mile 675 Atlantic Intracoastal Waterway.

(b) *Effective date.* This regulation becomes effective on 14 April 1988. It terminates on completion of damage assessment unless sooner canceled or extended.

(c) *Regulations:* (1) In accordance with the general regulations in § 165.23 of this part, entry into this zone is prohibited unless authorized by the captain of the port.

(2) The COTP has authorized transit of the Mackay River Bridge navigation span by tug and barge traffic during daylight hours only. All other vessels are authorized to transit at any time.

Dated: April 14, 1988.

J.E. Shkor,

Captain, U.S. Coast Guard, Captain of the Port.

[FR Doc. 88-9016 Filed 4-22-88; 8:45 am]

BILLING CODE 4910-14-M

NATIONAL ARCHIVES AND RECORDS ADMINISTRATION

36 CFR Part 1228

Disposition of Federal Records

AGENCY: National Archives and Records Administration (NARA).

ACTION: Final rule.

SUMMARY: The National Archives and Records Administration is revising § 1228.154 and § 1228.162 to incorporate procedures for Federal civilian employee medical records which were outlined in NARA Bulletin No. 87-4 of January 13, 1987. These procedures were develop as a result of regulations established by the Office of Personnel Management for the Employee Medical File System. 5 CFR Part 293, Subpart E, Employee Medical File System Records, requires the use of an Employee Medical Folder (Standard Form 66-D) for maintenance of occupational medical records. Like the official personnel

folder (OPF), the employee medical folder (EMF) will accompany the employee during his/her Federal career. When the employee is separated from Federal service, the EMF will be transferred along with the OPF to the National Personnel Records Center. A new reference request form, Standard Form 184, Request for Employee Medical Folder (Separated Employee), has been developed by NARA for use by Federal agencies in requesting medical records from the National Personnel Records Center.

NARA also is amending § 1228.162(a) to identify the National Personnel Records Center as a point of contact for members of the public and for non-governmental organizations seeking copies of Standard Form 180, Request Pertaining to Military Records. Subsection (a) was revised on June 30, 1986 (51 FR 23538), to remove the reference to purchasing Standard Form 180 from the Superintendent of Documents. In order to make the form more accessible to members of the public and to non-governmental organizations, NARA has designated the national Personnel Records Center as a point of contact.

EFFECTIVE DATE: April 25, 1988.

FOR FURTHER INFORMATION CONTACT: Adrienne C. Thomas or Nancy Allard at 202-523-3214 (FTS 523-3214).

SUPPLEMENTARY INFORMATION: The Administrative Procedures Act's notice and comment rulemaking procedures, 5 U.S.C. 553, do not apply to this amendment of 36 CFR Part 1228 because the matters addressed by this final rule are matters "relating to agency management or personnel or to public property." The retirement and reference service procedures for Federal civilian employee medical records prescribed in § 1228.154 and § 1228.162(b) of this final rule were announced in NARA Bulletin No. 87-4 of January 13, 1987. The new reference request form recently developed by NARA for medical files stored at the National Personnel Records Center was coordinated with officials of the Office of Personnel Management and with several agency medical records officers. Section 1228.162(a) is only being amended to identify an additional source for copies of Standard Form 180.

This rule is not a major rule for the purposes of Executive Order 12291 of February 17, 1981. As required by the Regulatory Flexibility Act, it is hereby certified that this rule will not have a significant impact on small business entities.

List of Subjects in 36 CFR Part 1228

Archives and records.

For the reasons set forth in the preamble, Chapter XII of Title 36 of the Code of Federal Regulations is amended as follows:

PART 1228—DISPOSITION OF FEDERAL RECORDS

1. The authority citation for Part 1228 continues to read as follows:

Authority: 44 U.S.C. 2907.

2. Section 1228.154 is revised to read as follows:

§ 1228.154 Transfers to the National Personnel Records Center (NPRC).

General Records Schedules 1 and 2 specify that certain Federal civilian personnel, medical, and pay records must be centrally stored at the National Personnel Records Center (Civilian Personnel Records), 111 Winnebago Street, St. Louis, Missouri 63118.

(a) The following four types of records are so specified:

(1) Official personnel folders of separated Federal civilian employees;

(2) Service record cards of employees who separated or transferred on or before December 31, 1947;

(3) Audited individual earnings and pay cards and comprehensive payrolls; and

(4) Employee medical folders of separated Federal civilian employees.

(b) The official personnel folder (OPF) and the employee medical folder (EMF) must be forwarded to the National Personnel Records Center at the same time. Only x rays that will easily fit inside the EMF without folding will be accepted by the Center. X rays over 11¾"×10" in size that are required for long-term retention must be retained by the agency. The agency must place a notice in the EMF indicating how a subsequent Federal employer may obtain the oversized x rays. The OPF and the EMF must be labeled in the upper right corner to identify the employee by name (last name first), date of birth, and social security number only. Temporary records must be removed from the folders before transmittal. Agencies must make every effort to locate all long-term documents required to be part of the folders and to file them before the folders are transferred. Small quantities of folders (OPF's and EMF's) must be mailed in a sealed envelope. Larger quantities must be mailed in a carton. No advance notification of transmittal or SF 135, Records Transmittal and Receipt, is required from the transferring agency, and no receipt will be furnished by the Center.

(c) A cover letter must accompany loose personnel or medical documents forwarded for interfiling in an OPF or EMF previously sent to the Center. Only those documents required for long-term retention may be forwarded for interfiling. Each document must contain the former employee's current name and name under which formerly employed, if different; date of birth; social security number; and date of separation. Letters accompanying loose personnel documents must clearly identify the agency personnel office and address. Letters accompanying loose medical documents must include the name and address of the agency's designated medical records manager (i.e., medical, health, safety, or personnel officer or other designee). Medical documents required to be part of the EMF may not be sent for interfiling in agency accessions retired prior to September 1, 1984. Such documents must be placed in an EMF and sent to the National Personnel Records Center in accordance with the instructions in paragraph (b) of this section if the employee has left Federal service.

(d) Transfer of fiscal records must be in accordance with the procedures outlined in § 1228.152.

(e) Standard Form 127, Request for Official Personnel Folder (Separated Employee), must be used by agencies when requesting transmission of personnel folders of separated employees. Standard Form 184, Request for Employee Medical Folder (Separated Employee), must be used when requesting medical folders. The name and address of the agency's designated medical records manager must be shown on the request form. Use of the appropriate request form will help ensure prompt transmission of the desired folder. Each request must be submitted in duplicate.

(f) Occupational medical records of separated Federal civilian employees who were not in positions subject to civil service rules and regulations may be retired if the records are properly scheduled and if access procedures are furnished for use by the Center.

(1) It is recommended that a folder similar to the SF 66-D, Employee Medical Folder, but different in color, be used for medical records of non-civil-service employees.

(2) If the records are not scheduled, an exception may be obtained by submitting a request to the Assistant Archivist for Federal Records Centers, National Archives and Records Administration (NC), Washington, DC

VOL 53 ISS 79 PT 1 AP 25 1988 UMI

20408. The request must identify the location(s) of records and the volume proposed for transfer. The request will be considered only if an SF 115, Request for Records Disposition Authority, has been received by NARA's Records Appraisal and Disposition Division (NIR).

(g) Medical records of non-Federal employees (e.g., contractor employees and student volunteers) must be disposed of in accordance with the approved agency disposition schedule.

3. Section 1228.162 is amended by revising paragraphs (a) and (b) to read as follows:

§ 1228.162 Use of records in Federal Records Centers.

* * * * *

(a) Standard Form 180, Request Pertaining to Military Records, must be used by Federal agencies to obtain information from military service records in the National Personnel Records Center (Military Personnel Records). Agencies may furnish copies of that form to the public to aid in inquiries. Members of the public and non-governmental organizations also may obtain copies of Standard Form 180 by submitting a written request to the National Personnel Records Center (Military Personnel Records), 9700 Page Boulevard, St. Louis, Missouri 63132.

(b) Requests for Federal civilian personnel files and medical files from the National Personnel Records Center must be made in accordance with § 1228.154. Requests for medical records retired to other Federal Records Centers prior to September 1, 1984, must be made on Optional Form 11, Reference Request—Federal Records Centers. The request must include the name and address of the agency's designated medical records manager.

* * * * *

Dated: March 17, 1988.

Don W. Wilson,

Archivist of the United States.

[FR Doc. 88-8969 Filed 4-22-88; 8:45 am]

BILLING CODE 7515-01-M

FEDERAL COMMUNICATIONS COMMISSION

47 CFR Part 73

[MM Docket No. 87-418; RM-5769]

Radio Broadcasting Services; Sioux Rapids, IA

AGENCY: Federal Communications Commission.

ACTION: Final rule.

SUMMARY: The Commission, at the request of Donald A. Swanson, allocates Channel 275C2 to Sioux City, Iowa, as the community's first local FM service. Channel 275C2 can be allocated to Sioux Rapids, Iowa, in compliance with the Commission's minimum distance separation requirements without the imposition of a site restriction. The coordinates are North Latitude 42-53-18 and West Longitude 95-08-54. With this action, this proceeding is terminated.

DATES: Effective June 1, 1988. The window period for filing applications will be open on June 2, 1988, and close on July 2, 1988.

FOR FURTHER INFORMATION CONTACT: Leslie K. Shapiro, Mass Media Bureau, (202) 634-6530.

SUPPLEMENTARY INFORMATION: This is a summary of the Commission's Report and Order, MM Docket No. 87-418, adopted March 28, 1988, and released April 15, 1988. The full text of this Commission decision is available for inspection and copying during normal business hours in the FCC Dockets Branch (Room 230), 1919 M Street NW., Washington, DC. The complete text of this decision may also be purchased from the Commission's copy contractor, International Transcription Service, (202) 857-3800, 2100 M Street NW., Suite 140, Washington, DC 20037.

List of Subjects in 47 CFR Part 73

Radio broadcasting.

PART 73—[AMENDED]

1. The authority citation for Part 73 continues to read as follows:

Authority: 47 U.S.C. 154, 303.

§ 73.202 [Amended]

2. Section 73.202(b), the FM Table of Allotments for Iowa is amended by adding an entry for Sioux Rapids, Channel 275C2.

Federal Communications Commission.

Steve Kaminer,

Deputy Chief, Policy and Rules Division, Mass Media Bureau.

[FR Doc. 88-9028 Filed 4-22-88; 8:45 am]

BILLING CODE 6712-01-M

---

47 CFR Part 73

[MM Docket No. 86-326; RM-5323; RM-5568; RM-5592]

Television Broadcasting Services; Albany, Buffalo, Ilion and Utica, NY, and Boston, MA

AGENCY: Federal Communications Commission.

ACTION: Final rule.

SUMMARY: The Commission, at the request of Frederick W. Bowen and Sherril W. Taylor, allocates VHF TV Channel 4- to Utica, New York, as the community's fourth local commercial television service, and at the request of Mohawk Valley Broadcasting, Inc. allocates UHF TV Channel 67- to Ilion, New York, as the community's first local television service. In addition, the offset designations for Station WIVB-TV, Channel 4-, Buffalo, New York, and Station WBZ-TV, Channel 4-, Boston, Massachusetts, are changed to zero and plus, respectively. Channel 4- can be allocated to Utica in compliance with the Commission's minimum distance separation requirements with a site restriction of 13.4 miles east to avoid a short-spacing to Station WSTM-TV, Channel 3, Syracuse, New York. Channel 67- can be allocated to Ilion, New York, in compliance with the Commission's minimum distance separation requirements with a site restriction of 8.6 miles southeast to avoid a short-spacing to unoccupied and unapplied for Channel *59 at Utica, New York. Canadian concurrence in these allotments has been received. With this action, this proceeding is terminated.

EFFECTIVE DATE: June 2, 1988.

FOR FURTHER INFORMATION CONTACT: Leslie K. Shapiro, Mass Media Bureau, (202) 634-6530.

SUPPLEMENTARY INFORMATION: This is a summary of the Commission's Report and Order, MM Docket No. 86-326, adopted March 14, 1988, and released April 18, 1988. The full text of this Commission decision is available for inspection and copying during normal business hours in the FCC Dockets Branch (Room 230), 1919 M Street NW., Washington, DC. The complete text of this decision may also be purchased from the Commission's copy contractor, International Transcription Service, (202) 857-3800, 2100 M Street NW., Suite 140, Washington, DC 20037.

List of Subjects in 47 CFR Part 73

Television broadcasting.

PART 73—[AMENDED]

1. The authority citation for Part 73 continues to read as follows:

Authority: 47 U.S.C. 154, 303.

§ 73.606 [Amended]

2. Section 73.606(b), the TV Table of Allotments for Massachusetts is amended by amending the entry for Boston by removing Channel 4- and adding Channel 4+. The TV Table of Allotments for New York is amended by adding Ilion, Channel 67-, by amending

the entry for Buffalo by removing Channel 4- and adding Channel 4, and by amending the entry for Utica by adding Channel 4-.

Federal Communications Commission.

Steve Kaminer,

Deputy Chief, Policy and Rules Division, Mass Media Bureau.

[FR Doc. 88-9017 Filed 4-22-88; 8:45 am]

BILLING CODE 6712-01-M

INTERNATIONAL DEVELOPMENT COOPERATION AGENCY

Agency for International Development

48 CFR Part 733

[AIDAR Notice 88-4]

Procedures for Protests

AGENCY: Agency for International Development, IDCA.

ACTION: Final rule.

SUMMARY: The A.I.D. Acquisition Regulation (AIDAR) is being amended by removing the requirement that protests to the Agency be filed with the Head of the Contracting Activity, instead specifying that protests to the Agency be filed with the Contracting Officer.

EFFECTIVE DATE: April 25, 1988.

FOR FURTHER INFORMATION CONTACT: M/SER/PPE, Mr. James M. Kelly, Room 1600I, SA-14, Agency for International Development, Washington, DC 20523. Telephone (703) 875-1534.

SUPPLEMENTARY INFORMATION: Following publication of A.I.D. procedures for submission of protests to the Agency in the February 19, 1988 **Federal Register** (53 FR 4979), the Office of Federal Procurement Policy pointed out that the A.I.D. requirement that protests be filed with the Head of the Contracting Activity, established by the new AIDAR subsections 733.7002(d) and 733.7003(b), conflicted with FAR 52.233-2, "Service of Protest," which specified that protests be filed with the Contracting Officer. OFPP recommended that the A.I.D. Acquisition Regulation be corrected to remove this conflict.

The changes being made by this Notice are not considered significant rules subject to FAR 1.301 or Subpart 1.5. This Notice is exempted from the requirements of Executive Order 12291 by OMB Circular 85-7. This Notice will not have impact on a substantial number of small entities, nor does it establish any information collection as contemplated by the Regulatory Flexibility Act and Paperwork Reduction Act.

List of Subjects in 48 CFR Part 733

Government procurement.

For the reasons set out in the Preamble, Chapter 7 of Title 48 of the Code of Federal Regulations is amended as follows:

PART 733—PROTESTS, DISPUTES AND APPEALS

1. The authority citation in Part 733 continues to read as follows:

Authority: Sec. 621, Pub. L. 87-195, 75 Stat. 445 (22 U.S.C. 2381), as amended; E.O. 12163, Sept. 29, 1979 44 FR 56673, 3 CFR 1979 Comp., p. 435.

Subpart 733.70—A.I.D. Procedures for Protests

733.7002 [Amended]

2. Paragraph (d) of section 733.7002, Definitions, is amended by removing "HCA," replacing it with "Contracting Officer."

733.7003 [Amended]

3. Paragraph (b) of section 733.7003, Filing of protest, is amended by removing "HCA," replacing it with "Contracting Officer."

Date: April 13, 1988.

John F. Owens,

Procurement Executive.

[FR Doc. 88-8988 Filed 4-22-88; 8:45 am]

BILLING CODE 6116-01-M

DEPARTMENT OF COMMERCE

National Oceanic and Atmospheric Administration

50 CFR Part 611

[Docket No. 80472-8072]

Foreign Fishing

AGENCY: National Marine Fisheries Service (NMFS), NOAA, Commerce.

ACTION: Emergency final rule.

SUMMARY: NOAA issues an emergency rule to change the definition of "fishing" to include processing, transfer, and supply activities supporting the harvest of fish outside the U.S. Exclusive Economic Zone (EEZ). The change will improve enforcement of the Magnuson Fishery Conservation and Management Act (Magnuson Act), and will allow NOAA to monitor more closely harvests in the entire Bering Sea ecosystem.

EFFECTIVE DATE: Effective April 25, 1988. Comments will be accepted on or before May 25, 1988.

ADDRESS: Send written comments to Alfred J. Bilik, Fees and Permits Branch, F/TS21, National Marine Fisheries Service, 1825 Connecticut Avenue NW., Washington, DC 20235. Telex 467856 US COM FISH CI.

FOR FURTHER INFORMATION CONTACT: Alfred J. Bilik, (202) 673-5319.

SUPPLEMENTARY INFORMATION: Under the Magnuson Act, the United States claims exclusive rights to conserve and manage all fish within the EEZ and all U.S.-origin anadromous species and Continental Shelf fishery resources beyond the EEZ that are not within the EEZ of another nation. In the past, however, NOAA has by regulation narrowed this assertion of management authority by defining "fishing" to include only activities supporting the harvest of "fish over which the United States exercises exclusive fishery management authority." This definition is narrower than the definition of "fishing" in the Magnuson Act, which does not so qualify "fish." The result of this regulatory definition is that activities such as processing and transfers of fish harvested outside the EEZ are beyond the scope of the permitting, recordkeeping, and reporting requirements of the foreign fishing regulations.

In the last major revision to these regulations, NOAA proposed (at 49 FR 50510, December 28, 1984) to broaden the definition by dropping the restrictive phrase. In the final rulemaking (at 50 FR 34964, August 28, 1985), however, the narrower definition was retained with the explanation that "[t]he United States asserts jurisdiction over support activities in the FCZ [fishery conservation zone] only if the supported harvest activity involves fish under U.S. management authority."

At the time, it was thought that enforcement problems, particularly with transfers from harvesting to transport vessels, could be adequately addressed by adding a rebuttable presumption at 50 CFR 611.3(a)(1)(ii). The discovery of illegal fishing and the suspicion of extensive poaching in the EEZ, along with growing concern that resources in an area of the central Bering Sea are jeopardized by unrestrained harvests, necessitate an assertion of additional management authority and a revision in the definition.

The problems that NOAA must address are explained more fully in an Advance Notice of Proposed Rulemaking (ANPR), published in today's **Federal Register**. Foreign fishing vessels (FFVs) accustomed to operating in the EEZ are being replaced by American fleets. Some of these displaced FFVs are relocating their efforts to the "donut hole," a portion of

the central Bering Sea entirely surrounded by the EEZs of the U.S. and the U.S.S.R. Others may be fishing illegally within U.S. waters, but reporting their catch as having been harvested in the "donut hole." There are indications that some FFVs have been abusing the right to fish within the central Bering Sea to the detriment of the interests of the U.S., whose waters provide many of the spawning grounds for the resources beyond.

In the past year, the Coast Guard has documented aerial sightings of FFVs in the Bering Sea EEZ, but either could not identify the vessels or could not prove they were engaged in harvesting activities. A Mexican shark vessel was boarded in the EEZ off San Diego, but could not be seized until it was later observed harvesting sharks.

Then on January 13, 1988, as many as seven trawler-processors of Japanese registry—some with markings concealed—were videotaped fishing without valid permits on Bowers Ridge, 35 miles inside the U.S. EEZ, despite the fact that foreign nations have received no allocations of Alaskan groundfish in 1988. Some of these vessels were found two weeks later in the "donut hole;" and claimed they had been there all along. U.S. enforcement officials are concerned that unregulated fisheries in the "donut hole" provide an opportunity for FFVs fishing illegally within the U.S. EEZ to avoid detection by enforcement patrols.

The reported catch from the "donut hole" has increased dramatically from about 15,000 metric tons in 1980 to about 993,000 metric tons in 1986. There is considerable doubt as to whether the resource base in the central Bering Sea is productive enough to support the level of reported harvests. If the harvest in the "donut hole" is actually as high as reported, U.S. scientists are concerned that this level of fishing could adversely affect the entire Bering Sea ecosystem.

On the other hand, some of the reported catch from the "donut hole" may actually have been illegally taken in the EEZ. To deter poaching by FFVs crossing the EEZ boundary from the "donut hole," NOAA must have more control over and more information about these vessels' activities. The ANPR presents several options: requiring an FFV carrying an observer within the U.S. EEZ to continue carrying that observer on any voyage to the "donut hole"; prohibiting processing and other support activities in the EEZ unless the fish were harvested in U.S. waters; and requiring check-in/check-out inspections for FFVs conducting "fishing" operations in the EEZ.

Until NOAA chooses among the regulatory options and publishes a final rulemaking, and unless NOAA opts for restricting support operations to EEZ-harvested fish, the definition of "fishing" must be revised to eliminate the existing loophole. Fishing operations in the EEZ supporting the harvest of "donut hole" fish should not be exempt from the permit, reporting, and recordkeeping requirements of the foreign fishing regulations.

NOAA therefore amends the definition of "fish" (when used as a verb) and "fishing" in § 611.2 by deleting the qualifying phrase, "fish over which the United States exercises exclusive fishery management authority." "Fishing" or "to fish" now means any activity, other than scientific research, which does, is intended to, or can reasonably be expected to result in catching fish or removing fish from the water. Fishing also includes the acts of scouting, processing, and support. This means that FFVs conducting certain operations in the U.S. EEZ—processing or transferring fish or supplying other FFVs—must have a foreign fishing permit applied for and issued under § 611.3, even though the fish may have been harvested outside U.S. waters. Moreover, FFVs conducting these operations must make reports and maintain the logs required by §§ 611.4 and 611.9 of the foreign fishing regulations.

Vessels anticipating transfer operations in the EEZ will be required under § 611.4 to send BEGIN and TRANSFER messages to the Coast Guard and NMFS on entering the EEZ. Messages will contain the date, time, position, and area of the anticipated transfer, as well as the quantity of all fish and fish products on board. The TRANSFER message must identify the vessel from which the fish will be transferred. OFFLOADED and RECEIVED messages must be sent within 12 hours after completion of the transfer, accounting for all fish and fish products transferred between vessels. CEASE messages must be delivered to the Coast Guard at least 24 hours before the vessel leaves the EEZ.

All vessels taking part in such transfers must also maintain communications and transfer logs required by § 611.9. The logs must be kept available for inspection by authorized officers.

Not wishing unnecessarily to burden freedom of navigation on the high seas, NOAA redefines "support" to encompass all transfer and supply operations in the EEZ, but to include transport operations only if they support harvest operations in the EEZ. Vessels with fishery products aboard are entitled to freedom of passage through the EEZ, so long as they conduct no support operations in the zone.

These revisions will allow NOAA to monitor more closely the activities of these vessels in the EEZ and in the "donut hole." Conforming amendments are also made to § 611.1(a), to remove the same qualifying phrase that is deleted from the definition of "fishing," and to § 611.3(a)(1), to remove the rebuttable definition previously used in connection with transfers.

Classification

The Assistant Administrator for Fisheries, NOAA, has determined that this rule is necessary to respond to an emergency situation and is consistent with the Magnuson Act and other applicable law. Because of the suspected magnitude of ongoing illegal fishing in the U.S. EEZ and possibly intense harvests in the "donut hole," the Assistant Administrator also finds it impracticable and contrary to the public interest to provide notice and an opportunity for public comment.

NOAA Directive 02-10, published at 45 FR 49312 (July 24, 1980), adopts internal procedures to implement the National Environmental Policy Act (NEPA), 42 U.S.C. 4321 *et seq.* Under those procedures, programmatic functions with no potential for significant environmental impacts are generally excluded from NEPA requirements. This emergency rule is not expected to have direct impacts on fishery resources in the EEZ. It is intended to improve enforcement of U.S. fishery regulations and to collect additional information on "donut hole" harvests, and thus indirectly to benefit U.S. fishery resources.

The Assistant Administrator has also determined that this rule will have no impact on the Coastal Zone Management Program of any State.

This emergency rule is exempt from the normal review procedures of Executive Order 12291 as provided in section 8(a)(1) of that order. This rule is being reported to the Director, Office of Management and Budget, with an explanation of why it is not possible to follow the procedures of that order.

This rule is exempt from the procedures of the Regulatory Flexibility Act because the rule is issued without opportunity for prior public comment.

This rule contains a collection of information requirement previously approved by OMB and given OMB control number 0648-0075.

The rule does not contain policies with federalism implications sufficient to warrant preparation of a federalism

BEST COPY AVAILABLE

assessment under Executive Order 12612.

List of Subjects in 50 CFR Part 611

Fish, Fisheries, Foreign relations, Recordkeeping and reporting requirements.

Dated: April 20, 1988.

James E. Douglas, Jr.,

Acting Assistant Administrator for Fisheries, National Marine Fisheries Service.

For the reasons set out in the preamble, 50 CFR Part 611 is amended as follows:

PART 611—FOREIGN FISHING

1. The authority citation for 50 CFR Part 611 continues to read as follows:

Authority: 16 U.S.C. 1801 *et seq.*

2. In § 611.1, paragraph (a) is revised to read as follows:

§ 611.1 [Amended]

(a) This part governs all foreign fishing under the Magnuson Fishery Conservation and Management Act. Foreign vessels which are not operated for profit and are conducting recreational fishing only must comply with the provisions of this section, § 611.2, § 611.6(a)(1), applicable portions of § 611.7, and § 611.15.

* * * * *

3. In § 611.2, the definition of "*Fishing* or *to fish*" and the definition of "*support*" are revised to read as follows:

§ 611.2 [Amended]

* * * * *

Fishing or *to fish* means any activity, other than scientific research, which does, is intended to, or can reasonably be expected to result in catching fish or removing fish from the water. Fishing also includes the acts of scouting, processing and support.

* * * * *

Support means any operation by a vessel assisting fishing by foreign or U.S. fishing vessels, including—

(a) Transferring fish or fish products;

(b) Transporting fish over which the United States exercises exclusive fishery management authority, or fish products made from such fish; or

(c) Supplying water, fuel, provisions, fishing equipment, fish processing equipment, or other supplies to a fishing vessel.

* * * * *

4. In § 611.3, paragraph (a)(1) is revised to read as follows:

§ 611.3 [Amended]

(a) *General.* (1) Each FFV fishing under the Magnuson Act must have on board a completed permit form for a permit issued under this section, unless it is engaged only in recreational fishing.

* * * * *

[FR Doc. 88-9081 Filed 4-21-88; 11:52 am]

BILLING CODE 3510-06-M

Proposed Rules

Federal Register
Vol. 53, No. 79
Monday, April 25, 1988

This section of the FEDERAL REGISTER contains notices to the public of the proposed issuance of rules and regulations. The purpose of these notices is to give interested persons an opportunity to participate in the rule making prior to the adoption of the final rules.

DEPARTMENT OF AGRICULTURE

Agricultural Marketing Service

7 CFR Part 917

Fresh Pears, Plums, and Peaches Grown in the State of California; Extension of Comment Period on Proposal to Increase Size Requirements and to Clarify Maturity Regulations for Plums

AGENCY: Agricultural Marketing Service, USDA.

ACTION: Proposed rule; extension of comment period.

SUMMARY: Notice is hereby given that the time period for filing written comments on the proposed size and maturity requirement changes for plums is being extended from April 25 to May 2, 1988. The extension will give interested persons additional time to analyze and prepare comments on the proposed changes. The proposed rule was published in the **Federal Register** on April 8, 1988.

DATE: Comments must be received by May 2, 1988.

ADDRESS: Comments should be sent to the Docket Clerk, Fruit and Vegetable Division, AMS, USDA, P.O. Box 96456, Room 2085–S, Washington, DC 20090–6456. Three copies of all written material shall be submitted , and they will be available for public inspection in the office of the Docket Clerk during regular business hours.

FOR FURTHER INFORMATION CONTACT: Jerry N. Brown, Marketing Order Administration Branch, Fruit and Vegetable Division, AMS, USDA, P.O. Box 96456, Room 2525–S, Washington, DC 20090–6456; telephone 202–475–5464.

SUPPLEMENTARY INFORMATION: The proposed rule was issued under Marketing Order No. 917 [7 CFR Part 917], regulating the handling of fresh pears, plums, and peaches grown in California. This order is effective under the Agricultural Marketing Agreement Act of 1937, as amended [7 U.S.C. 601–674].

The proposal was issued April 5, 1988, and published in the **Federal Register** on April 8, 1988 [53 FR 11669]. Comments were due on April 25, 1988.

The proposal includes changes in the variety-specific size requirements for numerous plum varieties, adds seven new varieties of plums to the variety-specific list, and removes one from that list. The proposal also specifies the current maturity requirements in greater detail and simplifies the maturity determination system currently used by the plum industry.

The Department received a request from an interested person to extend the comment period to provide additional time to analyze the proposed changes and to prepare written comments. After reviewing this requests, the Department has determined that the comment period should be extended until May 2, 1988. This will provide interested persons with an additional seven days for analyzing the proposal, and preparing and submitting any written comments they desire.

List of Subjects in 7 CFR Part 917

Marketing agreements and orders, Pears, Plums, Peaches, California.

1. The authority citation for 7 CFR Part 917 continues to read as follows:

Authority: Secs. 1–19, 48 Stat. 31, as amended; 7 U.S.C. 601–674.

Dated: April 21, 1988.

Robert C. Keeney,

Deputy Director, Fruit and Vegetable Division, Agricultural Marketing Service.

[FR Doc. 88–9059 Filed 4–22–88; 8:45 am]

BILLING CODE 3410-02-M

7 CFR Part 959

South Texas Onions; Increase in Assessment Rate

AGENCY: Agricultural Marketing Service, USDA.

ACTION: Proposed rule.

SUMMARY: This proposed rule would increase the assessment rate under Marketing Order 959 for the 1987–88 fiscal period. Funds to administer this program are derived from assessments on handlers.

DATE: Comments must be received by May 5, 1988.

ADDRESS: Interested persons are invited to submit written comments concerning this proposal. Comments must be sent in triplicate to the Docket Clerk, Fruit and Vegetable Division, AMS, USDA, P.O. Box 96456, Room 2085–S, Washington, DC 20090–6456. Comments should reference the date and page number of this issue of the **Federal Register** and will be available for public inspection in the Office of the Docket Clerk during regular business hours.

FOR FURTHER INFORMATION CONTACT: Robert F. Matthews, Marketing Order Administration Branch, Fruit and Vegetable Division, AMS, USDA, P.O. Box 96456, Room 2525–S, Washington, DC 20090–6456, telephone 202–447–2431.

SUPPLEMENTARY INFORMATION: This rule is proposed under Marketing Order No. 959 (7 CFR Part 959) regulating the handling of onions grown in South Texas. This order is effective under the Agricultural Marketing Agreement Act of 1937, as amended (7 U.S.C. 601–674), hereinafter referred to as the Act.

This proposed rule has been reviewed under Executive Order 12291 and Departmental Regulation 1512–1 and has been determined to be a "non-major" rule under criteria contained therein.

Pursuant to requirements set forth in the Regulatory Flexibility Act (RFA), the Administrator of the Agricultural Marketing Service (AMS) has considered the economic impact of this proposed rule on small entities.

The purpose of the RFA is to fit regulatory actions to the scale of business subject to such actions in order that small businesses will not be unduly or disproportionately burdened. Marketing orders issued pursuant to the Act, and rules issued thereunder, are unique in that they are brought about through group action of essentially small entities acting on their own behalf. Thus, both statutes have small entity orientation and compatibility.

There are approximately 40 handlers of Texas onions under this marketing order, and approximately 160 Texas onion producers. Small agricultural producers have been defined by the Small Business Administration (13 CFR 121.2) as those having annual gross revenues for the last three years of less than $500,000, and small agricultural service firms are defined as those whose

gross annual receipts are less than $3,500,000. The majority of the handlers and producers may be classified as small entities.

The marketing order requires that the assessment rate for a particular fiscal year shall apply to all assessable onions handled from the beginning of such year. An annual budget of expenses is prepared by the committee and submitted to the Department of Agriculture for approval. The members of the committee are handlers and producers of onions. They are familiar with the committee's needs and with the costs for goods, services, and personnel in their local area and are thus in a position to formulate an appropriate budget. The budget was formulated and discussed in a public meeting. Thus, all directly affected persons have had an opportunity to participate and provide input.

The assessment rate recommended by the committee is derived by dividing anticipated expenses by expected shipments of onions. Because that rate is applied to actual shipments, it must be established at a rate which will produce sufficient income to pay the committee's expected expenses. A recommended budget and rate of assessment is usually acted upon by the committee before the season starts, and expenses are incurred on a continuous basis. Therefore, budget and assessment rate approval must be expedited so that the committee will have funds to pay its expenses.

On December 31, 1987, expenses of $312,380 by the South Texas Onion Committee were approved and an assessment rate of 5½ cents per 50-pound container was established for the fiscal period ending July 31, 1988. The South Texas Onion Committee conducted a telephone poll on April 7, 1988, and unanimously recommended increasing the established assessment rate from 5½ cents to 7 cents per 50-pound container. The reason for the assessment increase is production for this season will be less than anticipated. Cool, wet weather has contributed to a large number of seed stems. While shipments for the 1988 season were projected to be 5.76 million 50-pound bags, the estimate has been reduced to 4.50 to 4.75 million bags. The original assessment rate would have yielded $316,800 in assessment income if the level of expected fresh market shipments was achieved. With the reduced estimate, such income will fall about $69,000 short of the amount anticipated. The committee would therefore be required to reduce its reserve by about $65,000 to meet its budgeted expenses. Increasing the assessment rate would prevent a depletion in reserve which is needed to fund operations at the beginning of the new fiscal period. In accordance with the marketing order requirements, this 1½ cent increase would be retroactive.

While this proposed action would impose some additional costs on handlers, the costs are in the form of uniform assessments on all handlers. Some of the additional costs may be passed on to producers. However, these costs would be significantly offset by the benefits derived from the operation of the marketing order. Therefore, the Administrator of AMS has determined that this action would not have a significant economic impact on a substantial number of small entities.

Based on the foregoing, it is found and determined that a comment period of less than 30 days is appropriate because the 1988 shipping season has begun and therefore the assessment rate approval needs to be expedited. The committee needs to have sufficient funds to pay its expenses which are incurred on a continuous basis.

List of Subjects in 7 CFR Part 959

Marketing agreements and orders, Onions (Texas).

For the reasons set forth in the preamble, it is proposed that 7 CFR Part 959 be amended to read as follows:

PART 959—[AMENDED]

1. The authority citation for 7 CFR Part 959 continues to read as follows:

Authority: Secs. 1–19, 48 Stat. 31, as amended; 7 U.S.C. 601–674.

2. Section 959.228 is revised to read as follows:

§ 959.228 Expenses and assessment rate.

Expenses of $312,380 by the South Texas Onion Committee are authorized, and an assessment rate of $0.07 per 50-pound container or equivalent quantity of onions is established for the fiscal period ending July 30, 1988. Unexpended funds may be carried over as a reserve.

Dated: April 20, 1988.

Robert C. Keeney,

Deputy Director, Fruit and Vegetable Division, Agricultural Marketing Service.

[FR Doc. 88-8862 Filed 4-22-88; 8:45 am]

BILLING CODE 3410-02-M

DEPARTMENT OF COMMERCE

International Trade Administration

DEPARTMENT OF THE INTERIOR

Office of Territorial and International Affairs

15 CFR Part 303

[Docket No. 80103-8003]

Proposed Limit on Duty-Free Insular Watches in Calendar Year 1988

AGENCIES: Import Administration, International Trade Administration, Department of Commerce; Office of Territorial and International Affairs, Department of the Interior.

ACTION: Proposed rule and request for comments.

SUMMARY: This action invites the comments of interested persons on a proposal to establish the total quantity of duty-free insular watches and watch movements for 1988 at 6,700,000 units and to divide this amount among the three insular possessions of the United States and the Northern Mariana Islands. We propose to do this by amending § 303.14(e), which now permits a total of 6,000,000 units distributed among the three insular possessions and the Northern Mariana Islands.

DATE: Comments must be received on or before May 5, 1988.

ADDRESS: Address written comments to Frank Creel, Director, Statutory Import Programs Staff, Room 1523, U.S. Department of Commerce, Pennsylvania Avenue and 14th Street NW, Washington, DC 20230.

FOR FURTHER INFORMATION CONTACT: Faye Robinson, (202) 377-1660, same address as above.

SUPPLEMENTARY INFORMATION: The insular possessions watch industry provision in section 110 of Pub. L. 97-446 (96 Stat. 2331) (1983) (19 U.S.C. 1202 note) requires the Secretary of Commerce and the Secretary of the Interior, acting jointly, to establish a limit on the quantity of watches and watch movements which may be entered free of duty during each calendar year. The law also requires the Secretaries to establish the shares of this limited quantity which may be entered from the Virgin Islands, Guam, American Samoa and the Northern Mariana Islands. Regulations on the establishment of these quantities and

shares are contained in §§ 303.3 and 303.4 of Title 15, Code of Federal Regulations (15 CFR 303.3 and 303.4).

The Departments propose to establish for calendar year 1988 a total quantity and respective territorial shares as shown in the following table:

Virgin Islands	4,700,000
Guam	1,000,000
American Samoa	500,000
Northern Mariana Islands	500,000
Total	6,700,000

Compared with the total quantity established for 1987 (52 FR 3794; Feb. 6, 1987), this amount would be a increase of 700,000 units. The proposed Virgin Islands territorial shares would be increased by 700,000 units. The proposed shares for Guam, American Samoa, and the Northern Mariana Islands would not change.

Our reasons for proposing these amounts are as follows:

1. There are no producers in American Samoa and the Northern Mariana Islands. This proposal would establish these territories' shares at the minimum required by the statute.

2. There is only one producer in Guam, and the amount we propose is consistent with the needs of the existing producer and with the existing set-aside of 500,000 units for possible allocation to the new firms in Guam.

3. We expect total Virgin Islands shipments in 1988 to exceed 4 million units. The amount we propose is consistent with the anticipated needs of the existing producers along with a set-aside of 500,000 units for possible allocation to new firms in the Virgin Islands.

Classification

Executive Order 12291.

In accordance with Executive Order 12291 (46 FR 13193, February 19, 1981), the Departments of Commerce and the Interior have determined that this rule does not constitute a "major rule" as defined by section 1(b) of the Order. It is not likely to result in:

(1) An annual effect on the economy of $100 million or more;

(2) A major increase in costs or prices for consumers, individual industries, Federal, State, or local government agencies, or geographic regions; or

(3) Significant adverse effects on competition, employment, investment, productivity, innovation, or on the ability of United States-based enterprises to compete with foreign-based enterprises in domestic or export markets.

Therefore, preparation of a Regulatory Impact Analysis is not required.

This regulation was submitted to the Office of Management and Budget for review, as required by Executive Order 12291.

Regulatory Flexibility Act.

In accordance with the Regulatory Flexibility Act, 5 U.S.C. 601 *et seq.*, the General Counsel of the Department of Commerce has certified that this action will not have a significant economic impact on a substantial number of small entities. Fewer than ten entities are directly affected by this action. The commercial benefits of the program governed by these regulations, for entities both directly and indirectly affected, are less than $10 million per year.

Paperwork Reduction Act.

This rule does not contain information collection requirements subject to the Paperwork Reduction Act of 1980, 44 U.S.C. 3501 *et seq.*

List of Subjects in 15 CFR Part 303

Imports, Customs duties and inspection, Watches and jewelry, Marketing quotas, Administrative practice and procedure, Reporting and recordkeeping requirements, American Samoa, Guam, Virgin Islands, Northern Mariana Islands.

PART 303—[AMENDED]

For reasons set forth above, we propose to amend Part 303 as follows:

1. The authority citation for Part 303 continues to read as follows:

Authority: Pub. L. 97-446, 96 Stat. 2329, 2331 (19 U.S.C. 1202 note); Pub. L. 94-241, 90 Stat. 263 (48 U.S.C. 1681, note).

2. Section 303.14 is amended by revising paragraph (e) to read as follows:

§ 303.14 Allocation factors and miscellaneous provisions.

* * * * *

(e) *Territorial shares.* The shares of the total duty exemption are 4,700,000 for the Virgin Islands, 1,000,000 for Guam, 500,000 for American Samoa, and 500,000 for the Northern Mariana Islands.

Joseph A. Spetrini,

Deputy to the Deputy Assistant Secretary for Import Administration.

Mark Hayward,

Deputy Assistant Secretary for Territorial and International Affairs.

[FR Doc. 88-9007 Filed 4-22-88; 8:45 am]

BILLING CODE 3510 DS-M and 4310-93-M

DEPARTMENT OF THE INTERIOR

Office of Surface Mining Reclamation and Enforcement

30 CFR Part 702

Surface Coal Mining and Reclamation Operations; Exemption for Coal Extraction Incidental to the Extraction of Other Minerals

AGENCY: Office of Surface Mining Reclamation and Enforcement, Interior.

ACTION: Proposed rule; notice of reopening of public comment period.

SUMMARY: The Office of Surface Mining Reclamation and Enforcement (OSMRE) of the United States Department of the Interior published a proposed rule on June 1, 1987. The proposed rule would establish regulations relating to the exemption contained in section 701(28) of the Surface Mining Control and Reclamation Act of 1977 (SMCRA) concerning the extraction of coal incidental to the extraction of other minerals. The proposed rule was amended and the comment period reopened on February 24, 1988. Subsequently, the comment period was extended to April 4, 1988.

By this notice, OSMRE is reopening the comment period on all issues associated with the proposed rule. In addition the notice describes and requests comments on additional modifications to the proposed rule concerning the requirement that operators would also have to demonstrate compliance with either a revenue or an economic viability test to establish the coal extraction is incidental to the extraction of other minerals in accordance with section 701(28) of SMCRA.

DATES: Written Comments: OSMRE will accept written comments on the proposed rule until 5 p.m., Eastern time on May 25, 1988.

ADDRESSES: Written Comments: Hand-deliver to the Office of Surface Mining Reclamation and Enforcement, Administrative Record, Room 5131, 1100 L Street NW., Washington, DC, or mail to the Office of Surface Mining Reclamation and Enforcement, Administrative Record, Room 5131-L, 1951 Constitution Avenue NW., Washington, DC 20240.

FOR FURTHER INFORMATION CONTACT: James Fary, Division of Abandoned Mine Land Reclamation, Office of Surface Mining Reclamation and Enforcement, U.S. Department of the Interior, 1951 Constitution Avenue NW.,

Washington, DC 20240; Telephone: 202-343-5819 (Commercial or FTS).

SUPPLEMENTARY INFORMATION:

I. Public Comment Procedures
II. Regulatory Text of Proposed Modifications
III. Discussion of Proposed Modifications

I. Public Comment Procedures

Commenters (including the House of Representatives Committee on Interior and Insular Affairs, see letter of March 21, 1988, Administrative Record) have suggested that OSMRE consider an economic viability test such as provided below as part of the requirements for the exemption in section 701(28) of SMCRA. In addition, these commenters suggest the replacement of the use of the life of mine exemption standard with an annual value (revenue) and production rate test, as well as the elimination of the proposed market tests and the "good faith" standard. Moreover, these commenters urge OSMRE to modify the information requirements to include: The average unit price received or expected for the coal and non-coal materials, and the gross value of the coal and non-coal materials sold or used for the report period. OSMRE specifically seeks public comment on these and all other issues on the incidential exemption.

As an alternative way of determining if coal extraction is incidental to the extraction of other minerals, comments are also solicited on applying an economic viability concept as recently discussed in an Interior Board of Land Appeals (IBLA) decision (*McNabb Coal Co. Inc. vs. OSMRE*, 101 IBLA 282, March 15, 1988). Although this specific decision involved the current regulations, the IBLA found that extration of coal is not incidental to the extraction of other minerals where the mining of coal is essential to the economic viability of the mine. The IBLA found on the particular facts of the case that: (1) The coal was the deepest strata mined for commercial use or sale, (2) the acreage of the shallower deposits extracted for commercial use or sale was less that 50 percent of the coal deposit extracted, (3) the acreage of the mineral deposit immediately above the coal was less than 5 percent of the acreage of coal extracted, and (4) the decision to mine the deposit immediately above the coal was based on the decision to mine the coal, in ruling that the extraction of coal by the operator could not be considered "incidental." OSMRE solicits comments on the economic viability concept in comparison to the revenue test. OSMRE is particularly interested in receiving comments on the methodology for determining economic viability and the impact such a test would have on existing operations.

The comments should be specific, confined to issues pertinent to the June 1, 1987 (52 FR 20546) proposed rules, the modifications contained in the February 24, 1988 notice (53 FR 5430), and the modifications in this notice, and should explain the reasons for any recommended change. Where practical, commenters should submit three copies of their comments (see "ADDRESSES"). Comments received after the close of the comment period (see "DATES") may not necessarily be considered or included in the Administrative Record for the final rule.

II. Regulatory Text of Proposed Modifications

The proposed revenue test which OSMRE is considering is provided below. A discussion describing the proposed changes follows the regualtory text. Where no replacement language is proposed by this notice, the June 1, 1987 notice, as modified on February 24, 1988, continues to be the agency's proposal. To provide greater clarity, the italicized sections of the proposed rules below refer to the new language proposed by this notice. It should be noted that the proposed rule uses a 50 percent revenue test. This would establish a threshold over which coal revenues for the life of the mining area could not exceed. A final decision on whether a revenue or economic viability test will be used or if used, what the threshold level would be or how it would be administered, will only be made after evaulation of comments on the subject.

Section 702.12 Contents of application for exemption.

An application for exemption shall include at a minimum:

* * * * *

(b) A list of the minerals sought to be extracted and estimates of the annual and life-of-the-mine production to include;

(1) Tonnages of other minerals to be extracted for commerical use or sale and coal to be produced within each mining area,

(2) The basis for all tonnage, *revenue, and fair market value estimates,*

(3) *Estimated revenues to be derived from bona fide sales of the other minerals to be removed and coal to be extracted within the mining area, and*

(4) *Where coal or the other minerals are to be used rather than sold, fair market values at the time of projected use of the coal to be extracted and other minerals to be removed from the mining area.*

* * * * *

Section 702.14 Requirements for exemption.

Activities are exempt from the requirements of the Act if all of the following conditions are satisfied:

* * * * *

(d) *The revenue derived from the coal extracted from the mining area will not exceed 50 percent of the total revenue derived from the coal and other minerals removed for purposes of bona fide sale or reasonable commercial use over the life of the mining operation. If the coal extracted or the minerals removed are used by the operator or transferred to a related entity for use instead of being sold in a bona fide sale, then the fair market value of the coal or other minerals shall be determined at the time of use or transfer and shall be considered rather than revenue.*

Section 702.18 Reporting requirements.

(a) At the conclusion of each 12-month period following approval of the exemption, a person conducting activities covered by this part shall file a written report with the regulatory authority containing the information required by paragraphs (b) and (c) of this section with respect to:

(1) The preceding twelve-month period; and

(2) The entire life period of active operations at the mining area.

(b) The report shall be filed no later than 30 days following the end of such twelve-month period. Information in the report shall be separately identified for each mining area covered by the exemption.

(c) For each period and mining area covered by the report, the report shall specify:

(1) The number of tons of extracted coal sold in bona fide sales *and total revenue derived from such sales;*

(2) The number of tons of coal extracted and used by the operator or related entity *and the estimated total fair market value of such coal;*

(3) The number of tons of other commercially valuable minerals removed and sold in bona fide sales *and total revenue derived from such sales; and*

(4) The number of tons of other commercially valuable minerals removed and used by the operator or related entity *and the estimated total fair market value of such minerals.*

VOL 53 ISS 79 PT 1 AP 25 1988 UMI

III. Discussion of Proposed Modifications

OSMRE is proposing to adopt a revenue test to determine whether the coal removal is "incidental" to the other mining activities. The House of Representatives Committee on Interior and Insular Affairs and other commenters have recommended that a revenue or an economic viability test is appropriate to meet the "incidental" part of the requirement for the exemption. OSMRE has decided to request comments on the merits of the proposal.

Section 702.12 Contents of application for exemption.

Proposed § 702.12(b) would be modified to reflect the revenue test which OSMRE is proposing in § 702.14(d), discussed below. As previously proposed, the application was required to contain an estimate of the annual and life-of-mine tonnages for the coal and other minerals to be removed from the mining area. To provide a basis for the regulatory authority to evaluate whether the applicant would be able to meet the revenue test, the application would also have to include estimates of the annual and life-of-the-mine revenues to be derived from bona fide sales of the other minerals to be removed and coal to be extracted within the mining area.

OSMRE recognizes that a revenue test would not be appropriate when the coal extracted or the other minerals removed are used by the operator or a related entity instead of being sold. In such situations, no "revenue" is obtained from the material used. The appropriate revenue factor to consider in such instances is the fair market value at the time of projected use of the coal to be extracted and other minerals to be removed. Proposed § 702.12(b) would require the application to include annual and life-of-mine estimates of the fair market values of the coal and other minerals to be used by the operator and related entities. The application would also have to provide the basis for revenue and fair market value estimates.

Section 702.14 Requirements for exemption.

Revenue Test

OSMRE is proposing to adopt § 702.14(d) which would establish a revenue test to determine whether the coal removal is "incidental" to the other mining activities.

Under proposed paragraph (d), the extraction of coal would qualify for the exemption only if the revenue derived from the coal extracted from the mining area would not exceed, for example, 50 percent of the total revenue derived from the coal and other minerals removed for purposes of bona fide sale or reasonable commercial use over the life of the mining operation. The proposal would provide further that if the coal extracted or the minerals removed are used by the operator or transferred to a related entity for use instead of being sold in a bona fide sale, then the fair market value of the coal used or other mineral used at the time of the use shall be considered rather than revenue. OSMRE is considering excluding the value of stockpiled minerals in calculating the revenue test and specifically requests comments with regard to this issue. Specific comments are also requested on how the revenue test would be applicable to existing operations.

Section 702.18 Reporting requirements.

Proposed § 702.18 would impose an annual reporting requirement relating to the proposed tonnage and revenue tests. The regulatory authority would not have to reapply the tonnage and revenue tests every year and each operator would not have to demonstrate that it satisfies these tests for every 12 month period. OSMRE recognizes that in certain instances, the tonnage of the coal extracted may exceed 16⅔ percent for a particular period or the revenue derived from the coal extracted may exceed, for example, 50 percent for a particular period, but would be less than those figures over the life of the mine. Such circumstances would depend upon the mining sequence and location of the coal relative to the other minerals in the mining area and would have been projected in the exemption application. The annual report would provide a basis for monitoring to assure that the operation is proceeding as contemplated in the approved application.

Under proposed § 702.18, each person conducting activities covered by Part 702 would be required annually to file a report with the regulatory authority. Under the proposal, information in the report would have to be separately identified for each mining area covered by the exemption. Such information would cover two periods. It would cover the 12 consecutive month period following approval of the exemption and it would also cumulatively cover the life of active operations at the mining area.

For each period and mining area covered by the report, the report would have to specify: (1) The number of tons of extracted coal sold in bona fide sales and total revenue derived from such sales; (2) The number of tons of coal extracted and used by the operator or related entity and the estimated total fair market value of such coal; (3) The number of tons of other commercially valuable minerals removed and sold in bona fide sales and total revenue derived from such sales; and (4) The number of tons of other commercially valuable minerals removed and used by the operator or related entity and the estimated total fair market value of such minerals. Having this information would enable the regulatory authority to monitor the progress of the operation.

List of Subjects in 30 CFR Part 702

Administrative practice and procedures, Surface mining, Underground mining.

Robert H. Gentile,

Director, Office of Surface Mining Reclamation and Enforcement.

Date: April 19, 1988.

[FR Doc. 88-8954 Filed 4-22-88; 8:45 am]

BILLING CODE 4310-05-M

DEPARTMENT OF TRANSPORTATION

Coast Guard

33 CFR Parts 173 and 174

[CGD 82-015]

State Marine Casualty Reporting; Accident Report Thresholds

AGENCY: Coast Guard, DOT.

ACTION: Notice of proposed rulemaking.

SUMMARY: The Coast Guard proposes to raise the reporting requirement threshold to $400 for vessel accidents involving only property damage. Because of inflation since 1979, the existing $200 threshold has resulted in the submission of increasing numbers of accident reports for minor incidents. These reports tend to distort the statistical base for the Boating Safety Program. These additional accident reports, which were not required to be submitted in 1979, have also increased the administrative burden on the Coast Guard and the reporting burden on the boating public. Raising the accident reporting threshold to $400 will compensate for the effects of inflation, provide for a consistent statistical base and reduce the administrative burden on the Coast Guard and the reporting burden on the boating public. State casualty reporting systems may continue to require submission of accident reports at a lower threshold than that required by the Coast Guard.

DATES: Comments must be received on or before June 24, 1988.

ADDRESSES: Comments should be submitted to Commandant (G–CMC/21), [CGD 82–015], U.S. Coast Guard, Washington, DC 20593–0001. Comments may be delivered to and will be available for examination and copying at the Marine Safety Council (G–CMC/21), Room 2110, U.S. Coast Guard Headquarters, 2100 Second Street SW., Washington, DC 20593–0001, between 8 a.m. and 3 p.m., Monday through Friday, except holidays.

FOR FURTHER INFORMATION CONTACT: Carlton Perry, Office of Boating, Public, and Consumer Affairs (202) 267–0979.

SUPPLEMENTARY INFORMATION: Interested persons are invited to submit written views, data or arguments on these proposed rules. Persons submitting comments should include their names and addresses, identify this Notice (CGD 82–015) and give the reasons for the comment. Persons desiring acknowledgment that their comments have been received should include a stamped, self-addressed postcard or envelope. The proposal may be changed in light of comments received. All comments received by the expiration of the comment period will be considered before final rule action is taken on this proposal. No public hearing has been scheduled, but one may be held at a time and place to be set in a later notice in the **Federal Register**, if requested by persons raising a genuine issue and it is determined that the rulemaking will benefit from oral presentations.

Drafting Information

The principal persons involved in drafting this proposed rule are Carlton Perry, Project Manager and Christena Green, Project Attorney.

Discussion of the Proposed Amendment

Sections 173.55 and 174.101 of Title 33 Code of Federal Regulations, require the submission of a casualty or accident report for accidents involving fatalities, injuries requiring medical treatment beyond first aid, or property damage more than $200 or complete loss of vessel. The casualty reporting system has helped to achieve uniform reporting of boating accident information and has provided a statistical base to evaluate the need for safety standards and to help analyze program effectiveness.

In 1972 the original reporting threshold for vessel accidents resulting in only property damage was $100. The reports required under this criterion provided an adequate statistical base for boating safety analyses. However, the effects of inflation on the reporting system necessitated an increase in the reporting threshold to $200 in 1979, both to reduce the number of reports required to be filed and to correct the distortion on the year to year data in the statistical base. The reporting threshold again needs to be adjusted to compensate for the effects of inflation.

Any fixed figure selected as the reporting threshold amount will, over time, become outdated. The Coast Guard plans to review the reporting threshold amount annually, applying the Gross National Product (GNP) deflator, published by the Department of Commerce. When appropriate, the Coast Guard will raise the threshold in $100 increments.

Using this method on the original $100 threshold set in 1972 results in accident reporting threshold of $400 for the year 1985 and $500 for the year 1990. In 1972, the GNP deflator was 46.5, on a 1982 base. In 1978, the GNP deflator was 72.2., on a 1982 base. Multiplying $100 by 72.2 and dividing by 46.5 yields an equivalent of $155.27. Rounding to the nearest hundred dollars yields and equivalent figure of $200 for 1978 (final rule raising the threshold to $200 effective 1979). Applying the formula to subsequent years yields equivalent figures of $300 for 1981, $400 for 1985 and $500 for 1990.

Determining the Appropriate Level for the Reporting Threshold

The proposed rule will simply adjust the reporting threshold to compensate for inflation and to maintain a statistical data base comparable to previous years. The Coast Guard is also interested, however, in receiving comments on the desirability of establishing a reporting threshold between $500 and $1,000. A reporting threshold between $500 and $1,000 would not only reduce the number of reports required to be submitted, but it would also reduce the amount of information received by eliminating the reporting requirement for lower levels of property damage historically contained in our statistical data base. The Coast Guard publishes these statistics in an annual report, *Boating Statistics*, and distributes it to about 4,000 entities interested in recreational boating safety, including the news media, State, local and private organizations, and individuals.

The following table represents the effects that various accident reporting threshold levels between $400 and $1,000 would have had on the property damage accident reports actually received during Calendar Year 1986, when the reporting threshold was $200.

Reporting Threshold Effects on CY 1986 Property Damage Reports

Reporting threshold amount	Number of reports received	Cumulative percent reduction of reports required	Incremental percent reduction of reports required
$1,000	2,124	40.6	2.2
900	2,201	38.4	3.3
800	2,321	35.1	2.7
700	2,418	32.4	3.5
600	2,543	28.9	8.9
500	2,859	20.0	4.4
400	3,016	15.6	.....
200	3,573	.....	.....

The Coast Guard specifically seeks public comment on the following questions, as they relate to the information contained in the above table.

Questions

1. Should the reporting threshold be raised to $400 now for CY 1989, to preserve a comparable data base, and be raised to $500 for CY 1990 to maintain the data base, if still supported by the indexing formula?
2. Should the reporting threshold be raised to $500 now for CY 1989, to avoid repeating the regulatory process for CY 1990?
3. Should the reporting threshold be set at some higher level between $600 and $1,000, establishing a new data base on which to apply the indexing formula?
4. Should the reporting dollar threshold be replaced by the specific types of damage which should be reported, regardless of dollar value of the property damage?
5. For what purposes are the Coast Guard statistics on recreational boating property damage used?
6. What impacts, if any, would result from the loss of information, if a reporting threshold above $400 were established?

Improving Compliance with Requirements for Reporting Property Damage

Coast Guard and State officials recognize that failure of recreational boaters to report boating accidents is a continuing concern. The Coast Guard is working with the States to increase the boating community's awareness and compliance with accident reporting requirements. The Coast Guard is interested in improving this effort. Therefore, public comment is requested on any measures that could be taken to improve boaters' compliance with requirements for reporting property damage. Your participation will assist the Coast Guard in the development of

appropriate data affecting recreational boating safety. If regulatory action is indicated, it will be subject to a separate notice of proposed rule making.

The National Boating Safety Advisory Council and the National Association of State Boating Law Administrators have been consulted and their opinions and advice have been considered in the formulation of this proposed rule. The transcripts of the proceedings of the National Boating Safety Advisory Council at which this proposed rule was discussed are available for examination in Room 4306, U.S. Coast Guard Headquarters, 2100 Second Street SW., Washington, DC 20593-0001. The minutes of the meetings are available from the Executive Director, National Boating Safety Advisory Council, c/o Commandant (G-BBS), U.S. Coast Guard, 2100 Second Street SW., Washington, DC 20593-0001.

Regulatory Evaluation

This proposed regulation is considered non-major under Executive Order No. 12291 and nonsignificant under Department of Transportation regulatory policies and procedures (44 FR 11034; February 26, 1979). This amendment is being proposed to make an adjustment to an accident reporting criterion and does not reflect interpretations of statutory language. The Coast Guard collects and analyzes accident data on a calendar year basis and the intent of this proposed amendment is to keep accident data comparable from year to year. The effect of the proposed amendment is to reduce the number of reports being submitted for accidents of decreasing seriousness due to economic inflation. Raising the reporting criteria from "more than $200" to "more than $400" will reduce the number of reports presently required because minor cosmetic damage repair costs exceed the reporting threshold. Applying the proposed $400 threshold to the reporting burden for accidents involving only property damage in 1986, reduces the 1,787 hours of reporting burden by 356 hours. The adequacy of this alternative and method of annual application of GNP deflators to the reporting threshold will be reconsidered during a review of all Coast Guard recreational boating safety regulations scheduled for May 1991. For these reasons, the economic impact of the proposal has been found to be so minimal that further evaluation is unnecessary. Since the impact of the proposal is expected to be minimal, the agency certifies that it will not have a significant economic impact on a substantial number of small entities.

List of Subjects in 33 CFR Parts 173 and 174

Marine safety, Reporting requirements.

In consideration of the foregoing, the Coast Guard proposes to amend Parts 173 and 174 of Title 33, Code of Federal Regulations to read as follows:

PART 173—[AMENDED]

1. The authority for Part 173 is revised to read as follows:

Authority: 46 U.S.C. 6101, 12302; 49 CFR 1.46.

2. Section 173.55 is amended by revising paragraph (a)(3) to read as follows:

§ 173.55 Report of casualty or accident.

(a) * * *

(3) Damage to the vessel and other property totals more than $400 or there is a complete loss of the vessel; or

* * * * *

PART 174—[AMENDED]

3. The authority for Part 174 is revised to read as follows:

Authority: 46 U.S.C. 6101, 12302; 49 CFR 1.46.

4. Section 174.101 is amended by revising paragraph (b) to read as follows:

§ 174.101 Applicability of State casualty reporting system.

* * * * *

(b) The State casualty reporting system may also require vessel casualty or accident reports for property damage in amounts less than that required under § 173.55 of this chapter.

* * * * *

Dated: April 20, 1988.

M.E. Gilbert,

Rear Admiral, U.S. Coast Guard, Chief, Office of Boating, Public and Consumer Affairs.

[FR Doc. 88-9015 Filed 4-22-88; 8:45 am]

BILLING CODE 4910-14-M

FEDERAL COMMUNICATIONS COMMISSION

47 CFR Part 73

[MM Docket No. 88-157, RM-6150]

Radio Broadcasting Services; Arcadia, MI

AGENCY: Federal Communications Commission.

ACTION: Proposed rule.

SUMMARY: This document requests comments on a petition filed by Kenneth J. Burch, proposing the allocation of FM Channel 300A to Arcadia, Michigan, as that community's first FM broadcast service. Concurrence of the Canadian government will be requested since Arcadia is located within 320 kilometers (200 miles) of the common U.S.-Canadian border. The coordinates for this proposal are 44-29-36 and 86-14-12.

DATES: Comments must be filed on or before June 9, 1988, and reply comments on or before June 24, 1988.

ADDRESS: Federal Communications Commission, Washington, DC 20554. In addition to filing comments with the FCC, interested parties should serve the petitioner, or its counsel or consultant, as follows: Kenneth J. Burch, P.O. Box 92037, Warren, Michigan 48092-0037.

FOR FURTHER INFORMATION CONTACT: Kathleen Scheuerle, Mass Media Bureau, (202) 634-6530.

SUPPLEMENTARY INFORMATION: This is a summary of the Commission's Notice of Proposed Rule Making, MM Docket No. 88-157, adopted March 18, 1988, and released April 18, 1988. The full text of this Commission decision is available for inspection and copying during normal business hours in the FCC Dockets Branch (Room 230), 1919 M Street NW., Washington, DC. The complete text of this decision may also be purchased from the Commission's copy contractors, International Transcription Service, (202) 857-3800, 2100 M Street NW., Suite 140, Washington, DC 20037.

Provisions of the Regulatory Flexibility Act of 1980 do not apply to this proceeding.

Members of the public should note that from the time a Notice of Proposed Rule Making is issued until the matter is no longer subject to Commission consideration or court review, all *ex parte* contacts are prohibited in Commission proceedings, such as this one, which involve channel allotments. See 47 CFR 1.1231 for rules governing permissible *ex parte* contact.

For information regarding proper filing procedures for comments, See 47 CFR 1.415 and 1.420.

List of Subjects in 47 CFR Part 73

Radio broadcasting.

Federal Communications Commission.

Steve Kaminer,

Deputy Chief, Policy and Rules Division, Mass Media Bureau.

[FR Doc. 88-9020 Filed 4-22-88; 8:45 am]

BILLING CODE 6712-01-M

VOL 53 ISS 79 PT 1 AP 25 1988 UMI

47 CFR Part 73

[MM Docket No. 88-155, RM-6149]

Radio Broadcasting Services; Pentwater, MI

AGENCY: Federal Communications Commission.

ACTION: Proposed rule.

SUMMARY: This document requests comments on a petition filed by James J. McCluskey proposing the allocation of FM Channel 231A to Pentwater, Michigan, as that community's second FM broadcast service. Concurrence of the Canadian government is required for the allocation of Channel 231A at Pentwater. The coordinates used for this proposal are 43-46-30 and 86-26-24.

DATES: Comments must be filed on or before June 9, 1988, and reply comments on or before June 24, 1988.

ADDRESS: Federal Communications Commission, Washington, DC 20554. In addition to filing comments with the FCC, interested parties should serve the petitioner, or its counsel or consultant, as follows: James J. McCluskey, 220½ South Michigan, Big Rapids, Michigan 49307.

FOR FURTHER INFORMATION CONTACT: Kathleen Scheuerle, Mass Media Bureau, (202) 634-6530.

SUPPLEMENTARY INFORMATION: This is a summary of the Commission's Notice of Proposed Rule Making, MM Docket No. 88-155, adopted March 18, 1988, and released April 18, 1988. The full text of this Commission decision is available for inspection and copying during normal business hours in the FCC Dockets Branch (Room 230), 1919 M Street NW., Washington, DC. The complete text of this decision may also be purchased from the Commission's copy contractors, International Transcription Service, (202) 857-3800, 2100 M Street NW., Suite 140, Washington, DC 20037.

Provisions of the Regulatory Flexibility Act of 1980 do not apply to this proceeding.

Members of the public should note that from the time a Notice of Proposed Rule Making is issued until the matter is no longer subject to Commission consideration or court review, all *ex parte* contacts are prohibited in Commission proceedings, such as this one, which involve channel allotments. See 47 CFR 1.1231 for rules governing permissible *ex parte* contact.

For information regarding proper filing procedures for comments, See 47 CFR 1.415 and 1.420.

List of Subjects in 47 CFR Part 73

Radio broadcasting.

Federal Communications Commission.

Steve Kaminer,

Deputy Chief, Policy and Rules Division, Mass Media Bureau.

[FR Doc. 88-9022 Filed 4-22-88; 8:45 am]

BILLING CODE 6712-01-M

---

47 CFR Part 73

[MM Docket No. 88-156, RM-6018]

Radio Broadcasting Services; Mora and Nisswa, MN

AGENCY: Federal Communications Commission.

ACTION: Proposed rule.

SUMMARY: This document requests comments on a petition filed by John Godfrey, requesting the allocation of FM Channel 227C1 to Mora, Minnesota, as that community's second FM broadcast service. Petitioner also requests the deletion of FM Channel 227C at Nisswa, Minnesota, to accommodate the new channel at Mora. There is a site restriction 12.8 kilometers north imposed on Channel 227C1 at Mora. The coordinates for Channel 227C1 at Mora are 45-59-50 and 93-17-54. Canadian concurrence is required for the allotment of the channel at Mora.

DATES: Comments must be filed on or before June 9, 1988, and reply comments on or before June 24, 1988.

ADDRESS: Federal Communications Commission, Washington, DC 20554. In addition to filing comments with the FCC, interested parties should serve the petitioner, or its counsel or consultant, as follows: John Godfrey, 1100 Sixth Street NE., Minneapolis, Minnesota 55413.

FOR FURTHER INFORMATION CONTACT: Kathleen Scheuerle, Mass Media Bureau, (202) 634-6530.

SUPPLEMENTARY INFORMATION: This is a summary of the Commission's Notice of Proposed Rule Making, MM Docket No. 88-156, adopted March 18, 1988, and released April 18, 1988. The full text of this Commission decision is available for inspection and copying during normal business hours in the FCC Dockets Branch (Room 230), 1919 M Street NW., Washington, DC. The complete text of this decision may also be purchased from the Commission's copy contractors, International Transcription Service, (202) 857-3800, 2100 M Street NW., Suite 140, Washington, DC 20037.

Provisions of the Regulatory Flexibility Act of 1980 do not apply to this proceeding.

Members of the public should note that from the time a Notice of Proposed Rule Making is issued until the matter is no longer subject to Commission consideration or court review, all *ex parte* contacts are prohibited in Commission proceedings, such as this one, which involve channel allotments. See 47 CFR 1.1231 for rules governing permissible *ex parte* contact.

For information regarding proper filing procedures for comments, See 47 CFR 1.415 and 1.420.

List of Subjects in 47 CFR Part 73

Radio broadcasting.

Federal Communications Commission.

Steve Kaminer,

Deputy Chief, Policy and Rules Division, Mass Media Bureau.

[FR Doc. 88-9018 Filed 4-22-88; 8:45 am]

BILLING CODE 6712-01-M

---

47 CFR Part 73

[MM Docket No. 88-149, RM-6128]

Radio Broadcasting Services; Wabasha, MN

AGENCY: Federal Communications Commission.

ACTION: Proposed rule.

SUMMARY: This document requests comments on a petition filed by Interstate Communications, Inc., proposing the allocation of FM Channel 273A to Wabasha, Minnesota, as that community's first FM broadcast service. There is a site restriction 4.6 kilometers (2.9 miles) west of the community. The restricted site coordinates are 44-23-06, 92-05-12.

DATES: Comments must be filed on or before June 9, 1988, and reply comments on or before June 24, 1988.

ADDRESS: Federal Communications Commission, Washington DC 20554. In addition to filing comments with the FCC, interested parties should serve the petitioner, or its counsel or consultant, as follows:

Mark E. Fields, Miller & Fields, P.C., P.O. Box 33003, Washington, DC 20033 (Counsel for the petitioner);

Interstate Communications, Inc., Box 46, Wabasha, Minnesota 55981.

FOR FURTHER INFORMATION CONTACT: Kathleen Scheuerle, Mass Media Bureau (202) 634-6530.

SUPPLEMENTARY INFORMATION: This is a summary of the Commission's Notice of Proposed Rule Making, MM Docket No.

88-149, adopted March 16, 1988, and release April 18, 1988. The full text of this Commission decision is available for inspection and copying normal business hours in the FCC Dockets Branch (Room 230), 1919 M Street NW., Washington, DC. The complete text of this decision may also be purchased from the Commission's copy contractors, International Transcription Service, (202) 857-3800, 2100 M Street, NW., Suite 140, Washington, DC 20037.

Provisions of the Regulatory Flexibility Act of 1980 do not apply to this proceeding.

Members of the public should note that from the time a Notice of Proposed Rule Making is issued until the matter is no longer subject to Commission consideration or court review, all *ex parte* contacts are prohibited in Commission proceedings, such as this one, which involve channel allotments. See 47 CFR 1.1231 for rules governing permissible *ex parte* contact.

For information regarding proper filing procedures for comments, See 47 CFR 1.415 and 1.420.

List of Subjects in 47 CFR Part 73

Radio broadcasting.

Federal Communications Commission.

Steve Kaminer,

Chief, Policy and Rules Division, Mass Media Bureau.

[FR Doc. 88-9025 Filed 4-22-88; 8:45 am]

BILLING CODE 6712-01-M

---

47 CFR Part 73

[MM Docket No. 88-160, RM-6202]

Radio Broadcasting Services; Bayard, NE

AGENCY: Federal Communications Commission.

ACTION: Proposed rule.

SUMMARY: The Commission requests comments on a petition by Charles Ellis seeking the allocation of Channel 280C to Bayard, Nebraska, as the community's first local FM service. Channel 280C can be allocated to Bayard in compliance with the Commission's minimum distance separation requirements without the imposition of a site restriction. The coordinates for 280C at Bayard are: North Latitude 41-45-24; West Longitude 103-19-30.

DATES: Comments must be filed on or before June 9, 1988, and reply comments on or before June 24, 1988.

ADDRESS: Federal Communications Commission, Washington, DC 20554. In addition to filing comments with the FCC, interested parties should serve the petitioner, or its counsel or consultant, as follows: Daniel F. Van Horn, Esq., Arent, Fox, Kintner, Plotkin & Kahn, 1050 Connecticut Avenue NW., Washington, DC 20036-5339.

FOR FURTHER INFORMATION CONTACT: Leslie K. Shapiro, Mass Media Bureau, (202) 634-6530.

SUPPLEMENTARY INFORMATION: This is a summary of the Commission's Notice of Proposed Rule Making, MM Docket No. 88-160, adopted March 23, 1988, and released April 18, 1988. The full text of this Commission decision is available for inspection and copying during normal business hours in the FCC Dockets Branch (Room 230), 1919 M Street NW., Washington, DC. The complete text of this decision may also be purchased from the Commission's copy contractor, International Transcription Service, (202) 857-3800, 2100 M Street NW., Suite 140, Washington, DC 20037.

Provisions of the Regulatory Flexibility Act of 1980 do not apply to this proceeding.

Members of the public should note that from the time a Notice of Proposed Rule Making is issued until the matter is no longer subject to Commission consideration or court review, all *ex parte* contacts are prohibited in Commission proceedings, such as this one, which involve channel allotments. See 47 CFR 1.1231 for rules governing permissible *ex parte* contact.

For information regarding proper filing procedures for comments, see 47 CFR 1.415 and 1.420.

List of Subjects in 47 CFR Part 73

Radio broadcasting.

Federal Communications Commission.

Steve Kaminer,

Deputy Chief, Policy and Rules Division, Mass Media Bureau.

[FR Doc. 88-9023 Filed 4-22-88; 8:45 am]

BILLING CODE 6712-01-M

---

47 CFR Part 73

[MM Docket No. 88-159, RM-6204]

Radio Broadcasting Services; New London, NH

AGENCY: Federal Communications Commission.

ACTION: Proposed rule.

SUMMARY: The Commission requests comments on a petition by Kevin O'Kane to allocate of Channel 259A to New London, New Hampshire, as the community's first local FM service. Channel 259A can be allocated to New London in compliance with the Commission's minimum distance separation requirements without a site restriction. Canadian concurrence is required. The coordinates for 259A at New London are: North Latitude 43-24-50; West Longitude 71-59-08.

DATES: Comments must be filed on or before June 9, 1988, and reply comments on or before June 24, 1988.

ADDRESS: Federal Communications Commission, Washington, DC 20554. In addition to filing comments with the FCC, interested parties should serve the petitioner, or its counsel or consultant, as follows: Kevin O'Kane, RR 2, Box 73, Munnsville, New York 13409 (Petitioner).

FOR FURTHER INFORMATION CONTACT: Leslie K. Shapiro, Mass Media Bureau, (202) 634-6530.

SUPPLEMENTARY INFORMATION: This is a summary of the Commission's Notice of Proposed Rule Making, MM Docket No. 88-159, adopted March 23, 1988, and released April 18, 1988. The full text of this Commission decision is available for inspection and copying during normal business hours in the FCC Dockets Branch (Room 230), 1919 M Street, NW., Washington, DC. The complete text of this decision may also be purchased from the Commission's copy contractor, International Transcription Service, (202) 857-3800, 2100 M Street NW., Suite 140, Washington, DC 20037.

Provisions of the Regulatory Flexibility Act of 1980 do not apply to this proceeding.

Members of the public should note that from the time a Notice of Proposed Rule Making is issued until the matter is no longer subject to Commission consideration or court review, all *ex parte* contacts are prohibited in Commission proceedings, such as this one, which involve channel allotments See 47 CFR 1.1231 for rules governing permissible *ex parte* contact.

For information regarding proper filing procedures for comments, see 47 CFR 1.415 and 1.420.

List of Subjects in 47 CFR Part 73

Radio broadcasting.

Federal Communications Commission.

Steve Kaminer,

Deputy Chief, Policy and Rules Division, Mass Media Bureau.

[FR Doc. 88-9019 Filed 4-22-88; 8:45 am]

BILLING CODE 6712-01-M

47 CFR Part 73

[MM Docket No. 88-158, RM-6203]

Radio Broadcasting Services; Lenoir, NC

AGENCY: Federal Communications Commission.

ACTION: Proposed rule.

SUMMARY: The Commission requests comments on a petition by Foothills Broadcasting of Lenoir to allocation of Channel 277A to Lenoir, North Carolina, as the community's first local FM service. Channel 277A can be allocated to Lenoir in compliance with the Commission's minimum distance separation requirements with a site restriction of 6.9 kilometers (4.3 miles) northwest to avoid a short-spacing to Station WSOC-FM, Channel 279C, Charlotte, North Carolina, and to the construction permit of Station WRLX, Channel 275C1, Hickory, North Carolina. The restricted site coordinates are: North Latitude 35-58-38; West Longitude 81-33-57. This site restriction does not negate the short-spacing to the licensed site of Station WRLX at Hickory. Therefore, final action herein is contingent upon the licensing of Station WRLX at the site specified in its construction permit (BMPH-870112IB).

DATES: Comments must be filed on or before June 9, 1988, and reply comments on or before June 24, 1988.

ADDRESS: Federal Communications Commission, Washington, DC 20554. In addition to filing comments with the FCC, interested parties should serve the petitioner, or its counsel or consultant, as follows: Lawrence J. Bernard, Jr., Ward & Mendelsohn, P.C., 1100-17th Street, NW., Suite 900, Washington, DC 20036 (Counsel to petitioner).

FOR FURTHER INFORMATION CONTACT: Leslie K. Shapiro, Mass Media Bureau, (202) 634-6530.

SUPPLEMENTARY INFORMATION: This is a summary of the Commission's Notice of Proposed Rule Making, MM Docket No. 88-158, adopted March 23, 1988, and released April 18, 1988. The full text of this Commission decision is available for inspection and copying during normal business hours in the FCC Dockets Branch (Room 230), 1919 M Street, NW., Washington, DC. The complete text of this decision may also be purchased from the Commission's copy contractor, International Transcription Service, (202) 857-3800, 2100 M Street NW., Suite 140, Washington, DC 20037.

Provisions of the Regulatory Flexibility Act of 1980 do not apply to this proceeding.

Members of the public should note that from the time a Notice of Proposed Rule Making is issued until the matter is no longer subject to Commission consideration or court review, all *ex parte* contacts are prohibited in Commission proceedings, such as this one, which involve channel allotments. See 47 CFR 1.1231 for rules governing permissible *ex parte* contact.

For information regarding proper filing procedures for comments, see 47 CFR 1.415 and 1.420.

List of Subjects in 47 CFR Part 73

Radio broadcasting.

Federal Communications Commission.

Steve Kaminer,

Deputy Chief, Policy and Rules Division, Mass Media Bureau.

[FR Doc. 88-9021 Filed 4-22-88; 8:45 am]

BILLING CODE 6712-01-M

---

47 CFR Part 73

[MM Docket No. 88-152, RM-6291]

Radio Broadcasting Services; Denison, TX

AGENCY: Federal Communications Commission.

ACTION: Proposed rule.

SUMMARY: This document requests comments on a petition by Sunbelt Wireless Company, licensee of Station KMKT-FM, Channel 285A Denison, Texas, proposing the substitution of Class C2 Channel 285 for Channel 285A and modification of the station license accordingly. A site restriction of 21.0 kilometers (13.0 miles) east of Denison is required. The coordinates for the proposal are 33-45-22 and 96-46-22.

DATE: Comments must be filed on or before June 9, 1988, and reply comments on or before June 24, 1988.

ADDRESS: Federal Communications Commission, Washington, DC 20554. In addition to filing comments with the FCC, interested parties should serve the petitioners, or their counsel or consultant, as follows: Herbert D. Miller, Jr., Esquire, Koteen & Naftalin, 1150 Connecticut Avenue, NW., Washington, DC 20036 (Counsel for petitioner).

FOR FURTHER INFORMATION CONTACT: Patricia Rawlings, (202) 634-6530.

SUPPLEMENTARY INFORMATION: This is a summary of the Commission's Notice of Proposed Rule Making, MM Docket No. 88-152, adopted March 24, 1988, and released April 18, 1988. The full text of this Commission decision is available for inspection and copying during normal business hours in the FCC Dockets Branch (Room 230), 1919 M Street, NW., Washington, DC. The complete text of this decision may also be purchased from the Commission's copy contractors, International Transcription Service, (202) 857-3800, 2100 M Street, NW., Suite 140, Washington, DC 20037.

Provisions of the Regulatory Flexibility Act of 1980 do not apply to this proceeding.

Members of the public should note that from the time a Notice of Proposed Rule Making is issued until the matter is no longer subject to Commission consideration or court review, all *ex parte* contacts are prohibited in Commission proceedings, such as this one, which involve channel allotments. This is restricted notice and comment rule making proceeding. See 47 CFR 1,1208. See 1.1204(b) for rules governing permissible *ex parte* contact.

For information regarding proper filing procedures for comments, See 47 CFR 1.415 and 1.420.

List of Subjects in 47 CFR Part 73

Radio broadcasting.

Federal Communications Commission.

Steve Kaminer,

Deputy Chief, Policy and Rules Division, Mass Media Bureau.

[FR Doc. 88-9024 Filed 4-22-88; 8:45 am]

BILLING CODE 6712-01-M

DEPARTMENT OF COMMERCE

National Oceanic and Atmospheric Administration

50 CFR Part 611

[Docket No. 80472-8073]

Foreign Fishing

AGENCY: National Marine Fisheries Service (NMFS), NOAA, Commerce.

ACTION: Advance notice of proposed rulemaking.

SUMMARY: NOAA seeks comments on regulatory and other options to respond to illegal fishing in the U.S. Exclusive Economic Zone (EEZ) of the Bering Sea, and to the possibility of harvests in an adjacent area that threaten U.S. stocks. The options include: (1) Requiring foreign fishing vessels (FFVs) carrying U.S. observers within the EEZ to continue carrying them on any voyage beyond the EEZ in the Bering Sea; (2) allowing processing and support activities in the EEZ only for fish harvested inside U.S. waters; and (3) requiring inspection of FFVs entering and leaving the EEZ in the Bering Sea. Implementation of one or more of these

options would allow NOAA to monitor more closely harvests in the Bering Sea and to combat illegal fishing within the EEZ.

DATES: Comments must be filed on or before May 25, 1988.

ADDRESS: Send written comments to Alfred J. Bilik, Fees and Permits Branch, F/TS21, National Marine Fisheries Service, 1825 Connecticut Avenue, NW., Washington, DC 20235. Telex 467858 US COM FISH CI

FOR FURTHER INFORMATION CONTACT: Alfred J. Bilik, (202) 673-5319.

SUPPLEMENTARY INFORMATION: The remote Bering Sea, despite hostile weather and sea conditions, is the world's most productive fishing ground. The Bering Sea's primary production areas that support a wide variety of fish and shellfish are located almost entirely within the U.S. EEZ and the U.S.S.R. economic zone (EZ). A small portion of the central Bering Sea, entirely surrounded by the two zones and referred to as the "donut hole," supports fisheries based on pelagic resources such as Alaska pollock and several species of anadromous Pacific salmon and steelhead.

The United States has implemented fishery conservation, management, and development policies, consistent with international law, that are rapidly displacing foreign fishing fleets from the EEZ. In the EEZ off Alaska, the phase-out of foreign fishing has ended foreign directed fishing, at least for the first part of 1988, and is reducing the dependence of the U.S. harvesting sector on foreign fish processing vessels.

As a result, displaced FFVs are either relocating their efforts to the "donut hole," or may be fishing illegally within U.S. waters but may be reporting their catch as having been harvested in the "donut hole." There are indications that some FFVs have been abusing the right to fish within the central Bering Sea to the detriment of the interests of the U.S., whose waters provide many of the spawning grounds for the resources beyond.

The Coast Guard has documented numerous aerial sightings of FFVs in the Bering Sea EEZ, but either could not identify the vessels or could not prove they were engaged in harvesting activities. Then on January 13, 1988, as many as seven modern trawler-processors of Japanese registry were videotaped from a privately chartered airplane as they were fishing on Bowers Ridge, 35 miles inside the U.S. EEZ, despite the fact that no foreign nation has received an allocation for Alaska groundfish in 1988. Several of the vessels had concealed their identification numbers. There is little doubt that these vessels entered the EEZ from or on their way to the "donut hole." U.S. enforcement officials are concerned that unregulated fisheries in the "donut hole" provide an opportunity for FFVs to fish illegally within the U.S. EEZ and avoid detection by enforcement patrols.

In addition to providing a sanctuary for FFVs poaching in the EEZ, the "donut hole" may be a "last frontier" for foreign fishing vessels. During certain times of the year, Alaska pollock form large spawning aggregations subject to deepwater trawling in the "donut hole." Vessels from Japan, the Republic of Korea, Poland, the People's Republic of China, and possibly from North Korea and Taiwan have recently fished there. The reported catch from the "donut hole" has increased dramatically from about 15,000 metric tons in 1980 to about 993,000 metric tons in 1986. The "donut hole" is the only area in the Bering Sea ecosystem where FFVs can take significant amounts of fish free of even the mildest conservation limitations. If the harvest in the "donut hole" is actually as high as reported, U.S. scientists are concerned that this level of fishing could adversely affect the entire Bering Sea ecosystem. Continued unrestrained fishing in the "donut hole" may ultimately adversely affect the conservation efforts of the United States in the EEZ.

NOAA is responding to these problems by implementing an Emergency Final Rule, published in today's Federal Register to change the definition of "fishing" to improve enforcement and to gather additional information on Bering Sea harvests. NOAA is considering other options that, individually or in combination, would address the situation.

Option 1—Observers

Late last year, the North Pacific Fishery Management Council (Council) recommended that NOAA condition foreign fishing permit authorizations for vessels which support U.S. fishing vessels in the Bering Sea and Aleutian Islands groundfish fishery, and which also conduct directed fishing operations in the adjacent waters beyond the EEZ. The condition was that the flag nation be required to agree that such vessels would carry U.S. observers while fishing in the "donut hole."

NOAA replied that it could not implement the recommendation until adequate preparations were completed. Permit authorizations were approved for 1988 without the recommended condition, but applicant nations were notified that the Council's recommendation was under consideration and that the permit authorizations might be amended later. Such an amendment can be made under the provisions of 50 CFR 611.3(l); no rulemaking is required.

This notice is published in compliance with §611.3(l)(3) as a proposed "additional restriction." NOAA proposes to implement an "extended" observer program by amending the 1988 foreign fishing permit authorizations that allow vessels to receive Alaska groundfish from U.S. vessels under the Bering Sea and Aleutian Islands Groundfish Fishery Management Plan. Appropriate authorizations would be amended by adding an item (c) to the section entitled "Other Activities Authorized and Additional Conditions and Restrictions Applicable to Permits":

(c) If requested by the Regional Director, Alaska Region, the named vessels must carry a U.S. observer aboard when conducting fishing operations in waters of the Bering Sea beyond the seaward boundary of the EEZ of any nation.

This observer program would further conservation and management of Bering Sea groundfish because of the probable relation between removals from the "donut hole" and stocks in the EEZ. A bilateral arrangement between a foreign nation and the U.S. for an observer program in the "donut hole" would be an acceptable substitute for compliance with the observer condition.

Comments on this option will be considered in any decision to amend existing permit authorizations.

Option 2—Support Limitations

It is extremely rare for FFVs to be caught conducting unauthorized harvesting operations in the EEZ, as Japanese trawlers were observed doing January 13. The unusual circumstances of this discovery lead to the conclusion that such illegal fishing may be commonplace. We suspect most such activities occur at night, during bad weather, or by monitoring the whereabouts of U.S. enforcement patrols. FFVs encountered merely processing or transferring fish in the Bering Sea EEZ have been effectively exempt from the foreign fishing regulations, because of our inability to disprove that the fish involved were taken outside the EEZ.

Today's emergency rulemaking revises the definition of "fishing" so that all processing and transfer activities in the EEZ will be subject to U.S. permitting and reporting requirements. But, since a permitted support vessel would still have a legitimate reason for being in the Bering Sea EEZ, enforcement officials would have

difficulty in distinguishing whether any fish aboard came from the EEZ or from outside waters. (FFV logs usually do not implicate the vessel as having fished illegally in the EEZ.)

One approach to this enforcement problem is to limit processing and transfer operations in the Bering Sea EEZ to activities involving only fish that is harvested in U.S. waters. This could be accomplished by amending § 611.93, either (1) by directly prohibiting in the EEZ any activities supporting the harvest of fish taken seaward of the Bering Sea management area (BSMA), as defined in § 611.93(a)(1); or (2) by requiring FFVs entering the BSMA to conduct joint ventures with U.S. fishing vessels to enter with empty holds. Mere transit of the BSMA with non-EEZ fish aboard would be allowed. Either alternative could be combined with Option 3, described below.

Option 2 essentially would require vessels engaged in "donut hole" fishing to remain outside the EEZ, or to conduct processing operations in Alaskan internal waters, if allowed by the Governor of Alaska. "Donut hole" operations and fishing in U.S. waters would be separated in time and space. The only way an FFV could hide "donut" fish or fish illegally taken in the EEZ would be by underlogging, which is subject to detection by observers or by enforcement boardings.

While Option 2 is attractive from an enforcement viewpoint, it sacrifices opportunities to gain information on Bering Sea harvests. FFVs operating only in the "donut hole" would have no need for U.S. permits, and thus would not be subject to reporting, inspection, or observer requirements. It would also place burdens on foreign fishing fleets, which prefer the calmer waters of loading zones inside the EEZ for transfer operations.

Option 3—Inspections

It has been suggested that all FFVs entering the Bering Sea EEZ with the intent of conducting support operations should be required to make a port call in Alaska to be inspected; exit inspections of such vessels would also be mandatory. This could be accomplished by amending the regulations governing foreign fishing in the Bering Sea and North Pacific Ocean (§ 611.90(f)).

This proposal could not be carried out under the present budget of the National Marine Fisheries Service (NMFS). During 1987, there were 4,364 foreign fishing vessel entries to and exits from the EEZ off Alaska. The NMFS Enforcement Office in Alaska estimates a cost of $95,000 per month, plus salaries, to ensure full inspection of each FFV entering and exiting the EEZ. Without assistance from a private or other governmental source, this option is not viable.

Option 3A, a variation on 100 percent inspection, would be to inspect in port only some of the FFVs entering and exiting the Bering Sea management area (BSMA), as defined in § 611.93(a)(1). Section 611.90(f) would be revised to add an inspection opportunity before the FFV leaves the BSMA and to clarify that entry and exit inspections may occur at sea or in port. Within the 24 hours following a BEGIN or SHIFT (into a BSMA area) message, NOAA would send notice to the FFV that it must come to port to be inspected before it could begin any "fishing" operation (as redefined in today's emergency rulemaking). Within the 24 hours following a CEASE message, NOAA would send notice to come to port before leaving the BSMA. If no notice were received, the FFV would be free to begin fishing or to leave the area. The cost of Option 4A would obviously depend on the number of FFVs called into port.

Either option would facilitate inspection of fish, fish products, and fishing gear aboard vessels that conduct fishery support operations in the Bering Sea management area. BEGIN messages, which must include the amount of fish and fish products on board upon entry into the EEZ, could be verified. The capacity of vessels arriving with empty holds could be measured, to be compared with cargoes upon exit. Inspection would provide some cross-checking with reports on transfers within the BSMA. And, since some FFVs would be entering the BSMA after harvesting fish in the "donut hole," some information pertinent to that fishery could be gathered.

On the other hand, the proposal would impose substantial costs in lost fishing time, fuel, and pilotage fees on foreign vessels. More important in enforcement terms, one-point inspection would not stop all illegal poaching. An FFV could still proceed to the "donut hole" but re-enter the EEZ at night, during bad weather, or by monitoring U.S. enforcement activities. After loading up with fish, the FFV could check in, ascribe its load to harvest in the "donut," and conduct transfer or joint venture operations in the BSMA. On its way out, the FFV would reverse the strategy, poaching after being inspected in port.

NOAA is allowing only 30 days for comments on these proposals due to the urgency of the situation. We recognize that the two purposes of the rulemaking—improving enforcement and collecting information—cannot each be accomplished to the maximum extent by any of the proposed options; we are seeking an appropriate balance. NOAA also welcomes suggestions for additional measures.

Date: April 20, 1988.

James E. Douglas, Jr.,

Acting Assistant Administrator For Fisheries, National Marine Fisheries Service.

[FR Doc. 88-9082 Filed 4-21-88; 11:52 am]

BILLING CODE 3510-22-M

Notices

Federal Register
Vol. 53, No. 79
Monday, April 25, 1988

This section of the FEDERAL REGISTER contains documents other than rules or proposed rules that are applicable to the public. Notices of hearings and investigations, committee meetings, agency decisions and rulings, delegations of authority, filing of petitions and applications and agency statements of organization and functions are examples of documents appearing in this section.

DEPARTMENT OF AGRICULTURE

Animal and Plant Health Inspection Service

[Docket No. 88-045]

Secretary's Advisory Committee for Swine Health Protection; Meeting

AGENCY: Animal and Plant Health Inspection Service, USDA.

ACTION: Notice of meeting.

SUMMARY: We are giving notice of a meeting of the Secretary's Advisory Committee for Swine Health Protection.

Place, Dates, and Time of Meeting: The meeting will be held in Room 244W of the Administration Building, U.S. Department of Agriculture, 14th Street and Independence Avenue SW., Washington, DC, on May 19, 1988, from 8:15 a.m. to 4:30 p.m.

FOR FURTHER INFORMATION CONTACT: Dr. R.R. Ormiston, Senior Staff Veterinarian, Program Planning Staff, VS, APHIS, USDA, Room 848, Federal Building, 6505 Belcrest Road, Hyattsville, MD 20782, (301) 436-5961.

SUPPLEMENTARY INFORMATION: The purpose of the Secretary's Advisory Committee for Swine Health Protection (Committee) is to advise the Secretary of Agriculture concerning matters within the scope of the Swine Health Protection Act. We anticipate that, during the meeting, members of the Committee and the public will provide valuable information, opinions, and recommendations concerning the policies and procedures of the Swine Health Protection Program.

The meeting will be open to the public. Anyone interested in the Swine Health Protection Program should send their written statements concerning the program to Dr. R.R. Ormiston at the address listed in this document, or present them at the time of the meeting. Please refer to Docket Number 88-045 when submitting your statements.

Done in Washington, DC, this 20th day of April, 1988.

James W. Glosser,

Acting Administrator, Animal and Plant Health Inspection Service.

[FR Doc. 88-9011 Filed 4-22-88; 8:45 am]

BILLING CODE 3410-34-M

Forest Service

Mono Basin National Forest Scenic Area; Private Property Development Guidelines

AGENCY: Forest Service, USDA.

ACTION: Adoption of final guidelines.

SUMMARY: The Forest Service hereby establishes a set of guidelines for the development of private property within the boundaries of the Mono Basin National Forest Scenic Area. The guidelines are written to comply with directions set forth in the California Wilderness Act of 1984 (16 U.S.C. 478, 511), which established the Scenic Area. Application of these guidelines will determine if proposed private property development is compatible with the purposes of the Scenic Area. Properties determined to be incompatible with the guidelines must be brought into compliance or will be subject to acquisition by the Federal Government.

EFFECTIVE DATE: These guidelines are effective April 25, 1988.

FOR FURTHER INFORMATION CONTACT: Marcus Petty, Recreation Staff, Washington, DC, (202) 447-2311 or Nancy Upham, Scenic Area Manager, Lee Vining, CA, (619) 647-6525.

SUPPLEMENTARY INFORMATION: In accordance with the provisions of the California Wilderness Act (16 U.S.C. 478, 511) establishing the Mono Basin National Forest Scenic Area, the Forest Service hereby adopts guidelines that provide the basis for determinations of detrimental or incompatible uses of private land within the Scenic Area. The guidelines assist the Forest Service and landowners in meeting the statutory management objectives to protect the natural, scenic, ecologic, geologic and cultural resources of the area.

Under section 303(a) of the California Wilderness Act, the Secretary is authorized to acquire all lands and interest therein within the boundary of the Scenic Area by donation, exchange, or purchase with donated or appropriated funds, except that:

1. Any lands or interests therein within the boundary of the Scenic Area which are owned by the State of California or political subdivision thereof (including the city of Los Angeles) may be acquired only by donation or exchange; and

2. Lands or interests therein within the boundary of the Scenic Area which are not owned by the State of California or any political subdivision thereof (including the city of Los Angeles) may be acquired only with the consent of the owner unless the Secretary determines, after written notice to the owner and after opportunity for comment, that the property is being developed, or proposed to be developed, in a manner which is detrimental to the integrity of the Scenic Area or which is otherwise incompatible with the purpose of the act.

These guidelines being adopted provide a process for determining compatibility of private land uses with the intent of the Act. Lands which are being used in a compatible manner will be certified by the Forest Service. Certification protects the owner from land acquisition by the Federal Government without the owner's consent. Certification of private property within the Scenic Area, or decertification with subsequent Federal land acquisition, is based on these guidelines.

These guidelines were developed after meetings were held with Scenic Area landowners and persons from the local community of Lee Vining. The Mono County Planning Department advised the Forest Service on how to design the guidelines to be consistent with County zoning ordinances in terminology and some specific land use requirements. The Scenic Area Advisory Board was consulted and their input incorporated.

A notice of proposed private property development guidelines was published in the Federal Register on June 27, 1986 (51 FR 23449). Comments were invited for the period ending July 27, 1986, analyzed and are summarized below.

Public Comments and Responses

Comments were received from 12 parties: Landowners within the Scenic Area (9), attorneys representing landowners within the Scenic Area (2), and a local business owner (1). Major

comments and responses are summarized below.

Comment: Several comments were received which noted that there existed a disparity between land use categories. Landowners in the developed land use category were prohibited from constructing detached structures. Only attached structural additions would be allowed. The recommendation was that all properties should be allowed detached structures not to exceed 100% of the square footage of existing buildings.

Response: The final guidelines allow for the construction of detached structures in lieu of attached structural additions for properties in all three land use categories. Detached structures may be built in lieu of attached structural additions as long as the Forest Service determines that the visual impact of a detached structure would be no greater than the visual impact of an attached structural addition.

Comment: Several comments were received which recommended that more flexibility be built into the guidelines, allowing the Forest Service to address each situation on a case-by-case basis, rather than absolute regulations applying to all situations.

Response: The Forest Service believes that it has built in as much flexibility as possible while still remaining within the intent of the Scenic Area legislation.

Comment: Two comments were received which requested that the Forest Service adopt the Mono County building codes in lieu of new development guidelines which further restrict what landowners can do with their property.

Response: The Mono County Planning Department advised the Agency on how to design the guidelines to be consistent with County zoning ordinances and land use requirements. However, langauge in the Scenic Area legislation required further restrictions by referring to anything "significantly different from, or a significant expansion of development existing as of June 1, 1984", as being detrimental to the integrity of the Scenic Area. Therefore, to meet the intent of the law, the guidelines of necessity are more stringent than the Mono County zoning ordinances and land use requirements.

Comment: Two comments were received which requested that commercial property be treated with leniency and on a case-by-case basis so that businesses could expand and/or change as local economics dictate. They stated that it could be difficult to maintain a business under new restrictions placed on them by the guidelines.

Response: The proposed guidelines allowed only new *recreational* or *interpretive* facilities to be constructed in compatibility with the Scenic Area. The final guidelines are less restrictive and allow for new commercial businesses deemed compatible with the Scenic Area in the Comprehensive Management Plan as follows: In the Natural Land Use Category, new commercial developments may serve recreational, interpretive or research purposes; in the Developed Land Use Category, new commercial developments may be for any purpose as long as they are deemed compatible in the Comprehensive Management Plan; and in the Relicted Land Use Category, facilities may be constructed that are needed for uses and developments identified in the Comprehensive Management Plan.

Comment: One reviewer suggested the implementation of a "grace" period of ten years under which landowners could develop their land to protect their investments.

Response: The Scenic Area legislation established a benchmark date of June 1, 1984 by which to measure any proposals for new development and/or expansion of existing development. As this date precedes the date of enactment, it is clear that Congress did not intend to allow a "grace" period for new construction and development, prior to the implementation of new restrictions on development.

Comment: One reviewer stated that landowners owning property of 100 acres or more on the west side of U.S. 395 between Lee Vining and Lundy Lake Road, should be allowed to parcel their property into no more than three parcels of no less than 20 acres each.

Response: A subdivision at the location described would result in a situation that is "significantly different from that which existed June 1, 1984", and would thereby render it detrimental to the integrity of the Scenic Area. Therefore, such subdivisions cannot be allowed.

Comment: One respondent stated that the section on land disturbance under general compatibility standards is not nearly restrictive enough. A simple prohibition against any new land disturbance was recommended.

Response: In the final guidelines the language of the land disturbance section has been strengthened to say that any new land disturbance, regardless of size, must not substantially impair or detract from natural, scenic, ecologic, geologic, and cultural values.

Comment: One respondent stated that there should be no expansion of the present mining activity.

Response: The Forest Service believes that the restrictions on mining operations outlined in the guidelines are sufficient to ensure that mining activity will not be detrimental to the integrity of the Scenic Area. Landowners are required to submit to the District Ranger a plan of operations by which a mining proposal can be screened for potential impairment of protected Scenic Area values, compliance with the general compatibility standards of these guidelines and State and Federal air and water quality standards, as well as planned mitigation. A proposal that did not meet these standards would not be certified.

Comment: One respondent stated that unimproved property in the developed land use category should be classified under the natural land use category. Development of that property should not be allowed.

Response: The Forest Service believes that, under the restrictions outlined in the guidelines, development of the six unimproved properties in the developed land use category would not be detrimental to the integrity of the Scenic Area. The developed land use category was so named because of the relative density of development in comparison to other places in the Scenic Area. Therefore, we believe that development of the unimproved property would not be significantly different from or a significant expansion of development existing June 1, 1984.

Comment: One respondent suggested that buildings with historical significance should be saved and landowners should be allowed the full square footage to construct another structure on the same property.

Response: The final guidelines allow for a variance to the compatibility standards for the preservation of historically significant structures as set forth in the National Historic Preservation Act (80 Stat. 915, 16 U.S.C. 470 *et seq.*). Significance would be determined by eligibility criteria for the National Register of Historic Places.

Comment: One respondent stated that the Forest Service should have the authority to require private property owners to divest their property of litter in the form of abandoned junk cars and trucks, vehicle parts, wheels, tires, etc.

Response: The agency has added a clause to section 4(b) of the guidelines on general compatibility standards applicable to all private property to ensure that private landowners protect scenic and aesthetic values by not accumulating debris, junk automobiles, and unused or unusable equipment on their properties.

VOL 53 ISS 79 PT 1 AP 25 1988 UMI

Comment: One reviewer said that there should be a provision for amendments to the guidelines when in the future changes might be beneficial and/or necessary.

Response: A clause was added to section 1 of the guidelines to provide for amendments to these guidelines. Proposed amendments will be published in the **Federal Register**, with final adoption after interested persons have been given an opportunity to participate through submission of comments.

Comment: One reviewer said that landowners should be advised in writing when certification is denied or rescinded.

Response: A clause was added to section 3 of the guidelines that requires the District Ranger to notify an affected landowner in writing of the basis for denial or rescission of certification. The new language also states that the District Ranger may set a deadline by which the landowner may correct the non-conforming use.

Comment: One respondent stated that once the District Ranger determines that a proposal is non-detrimental and compatible with the purposes of the Scenic Area, it should be so certified.

Response: This is the intent of the certification process. We have added a clause to section 3 on new uses and developments that states that, once a determination of proposal compatibility has been made, it shall be so certified in writing.

Comment: One respondent asked for clarification concerning the definition of "guest housing" and its application to residential structures or structures designed for transient occupancy, such as motel units.

Response: The definitions of "guest housing" and "secondary housing" were both modified to clarify that the terms do not include structures designed for authorized transient occupancy, such as certified motel units.

Comment: One reviewer asked if private landowers can subdivide their property for the purposes of sale, leasing or financing new construction or reconstruction.

Response: Under the general compatibility standards, the section on subdivision was clarified to allow subdivision of property by private landowners only when subdivision is intended to facilitate sale to the government to benefit the Scenic Area.

Comment: One reviewer asked if the requirement for placing utilities underground is from the nearest utility pole, or the like, owned by the applicable public utility and not offsite public utilities.

Response: The requirement for placing utilities underground in Section 4(b) applies only to modifications, expansion, replacement, or new utilities, to the nearest utility pole or the like, and does not affect any offsite public utilities. The original wording in the proposed guidelines is clear and therefore was not changed.

Comment: One repondent asked if both the reconstruction of an existing building and additions may not exceed 100% of the original building authorized.

Response: Both reconstruction and additions not to exceed 100% of the original building are considered compatible and will be certified. The word "and" was added to section 4(a)(2)(A) between the two authorizing clauses to clarify this point.

Comment: One reviewer asked if approval for new construction has to wait until the comprehensive management plan is completed.

Response: The only decisions on new development or construction proposals that will be delayed until the management plan is completed are those for new commercial businesses. A screening process will be designed in the management plan for making decisions on the compatibility of commerical proposals. This is referred to in section 5, parts (a), (b), and (c).

Comment: One respondent asked if livestock grazing constitutes a vegetative removal land disturbance.

Response: Grazing of livestock does not constitute a vegetative removal land disturbance as defined in section 4(b)(5) of the general compatibility standards. Grazing that existed as of June 1, 1984 is protected as a compatible use under the Scenic Area legislation. No wording changes were made in the guidelines.

In addition, the provision related to appeals of denials of certification has been revised to accommodate any future changes the Agency may make to its appeal regulations. This change will eliminate the necessity to revise guidelines for what would essentially be a technical matter.

Having considered the comments received in response to the proposed guidelines, the Forest Service hereby adopts the guidelines with the changes noted. These guidelines will be appended to the comprehensive management plan being developed for the Area. The text of the final guidelines appears at the end of this notice.

George M. Leonard,

Associate Chief.

April 7, 1988.

Guidelines for the Development of Private Lands Within the Mono Basin National Forest Scenic Area

Section 1—General

(a) *Introduction.* These guidelines shall provide standards for the use and development of private lands within the Mono Basin National Forest Scenic Area (hereafter "Scenic Area") as provided by the California Wilderness Act (Pub. L. 98–425; 98 Stat. 1632) hereafter, "Act". Private property meeting these standards shall be deemed compatible with the purposes of the Scenic Area.

(b) *Purposes of the Scenic Area.* Congress has directed the Secretary of Agriculture to manage the Scenic Area to protect its geologic, ecologic, cultural, natural, and scenic resources.

(c) *Amendments.* Amendments to these guidelines shall be made by publishing proposed changes in the **Federal Register**, with final adoption after interested persons have been given an opportunity to participate through submission of comments.

(d) *Definitions.*

(1) "Accessory building" means a subordinate building incidental to main building on the same lot, which is not for habitation.

(2) "Attached" as applied to structural additions means structures which share at least one wall with the original structure and the height does not exceed that of the original.

(3) "Certified or certification" means a determination by the Forest Service that development or use of a property is compatible with the purposes of the Scenic Area.

(4) "Continuous use" means any building or structure used full time or seasonally (at least 3 months of the year) prior to June 1, 1984.

(5) "Existing use" means a use, including development or practice, that was occurring as of June 1, 1984 (or if seasonal, within the twelve (12) months prior to June 1, 1984) by, or with the consent of, the landowner, consistent with applicable laws and regulations; including, but not limited to local zoning and State and local pollution abatement requirements. An exception to this definition is found in section 3(b).

(6) "Expansion" means an increase in the square footage of a structure or an increase in the size, area, or effect (visual, noise, etc.) of any improvement or disturbance.

(7) "Guest housing" means a second structure on a lot designed for habitation. This does not include structures designed for authorized transient occupancy, such as certified motel units.

(8) "Improved property" means a parcel containing any improvements requiring a building permit (residence, accessory building, fence or other non-earth development, etc). An exception to this definition is found in section 3(b).

(9) "Improvements" means any manmade structure of a permanent or semi-permanent nature without regard to size.

(10) "Private property" means all land owned by other than the Federal Government, the State of California, or any subdivision thereof (including the City of Los Angeles).

(11) "Reconstruction" means remodeling (including replacement of worn or damaged items) including roofing, siding, and other structural replacement up to and including total building removal and reconstruction.

(12) "Secondary housing" or guest housing means a second structure on a lot designed for habitation. This does not include structures designed for authorized transient occupancy, such as certified motel units.

(13) "Secretary" means the Secretary of Agriculture acting by or through the Forest Service, Mono Lake Ranger District, Inyo National Forest.

(14) "Serviceable" means the condition of a building or structure which renders it ready for its designed use (i.e., habitation, storage, etc.) for the present and in the future.

(15) "Significant geologic features" includes, but is not limited to, craters, volcanic domes, fissures, hot water and steam vents, the eastern Sierra escarpment as a whole, and all tufa within the Scenic Area.

(16) "Structure" means an improvement in such condition that it is available for its designed use.

(17) "Unimproved property" means a parcel without improvements. Minor earthwork which does not require a county grading permit does not render property improved.

(18) "Use" means an activity or development, associated with a parcel of land.

(19) "Use and development plan" includes all documents required by Mono County and all specific details the District Ranger deems necessary.

Section 2—Land Use Classifications

(a) *General.* For purposes of managing the Scenic Area and achieving the statutory objectives for the area, the Forest Service shall classify the lands within the Scenic Area in one of three land use categories: Natural, Developed, and Relicted as shown on the Land Use Category Map dated May 7, 1985, on file and available for public inspection in the office of the District Ranger, Mono Lake Ranger District on the Inyo National Forest, Lee Vining, CA.

(b) *Relicted Land Use Category.* This category consists of all lands below elevation 6,417 feet.

This land use category includes exposed lake bottom containing open vistas, outstanding geologic features and wildlife habitat. Only isolated development exists and is essentially limited to scattered interpretive facilities, boat access, range and wildlife improvements and a few residence. Management emphasis on lands in this category is to protect and interpret the natural ecosystems, cultural values and outstanding geologic features of the area.

(c) *Developed Land Use Category.* This category consists of lands north of Lee Vining in a strip approximately one mile each side of US 395 and above elevation 6,417 feet.

This area is characterized by a predominantly rural and natural appearing landscape with some developments and structures. Private parcels in this area have historically been used for commercial, residential and community purposes. Management emphasis on lands in this category is to maintain the rural and natural appearing landscape while allowing and providing for recreational and interpretive developments where appropriate. Limited further development and continued use of privately owned land compatible with the purposes of the Scenic Area are consistent with the management emphasis for this portion of the Scenic Area.

(d) *Natural Land Use Category.* This category includes all lands within the Scenic Area not included in the Relicted and Developed Land Use Categories.

These lands are predominately natural in appearance, containing essentially uninterrupted vistas, outstanding geologic features and extensive rangeland and grazing with no significant impacts on wildlife habitats, ecologic processes and dispersed recreational uses. Management of lands in the natural category emphasizes protection of the natural character, ecosystems, cultural values and outstanding geologic features; and providing recreational and interpretive facilities and opportunities consistent with the purposes and values for which the Scenic Area was established. Management of lands in this category also recognizes compatible development and resource uses.

Section 3—Certification

(a) *General.* Private lands used in a manner consistent with the land use standards of these guidelines are deemed compatible with the purposes of the Scenic Area. The District Ranger certifies that the land use is consistent with the management standards. Uses will be recorded by diagrams, written descriptions and photographs, which will provide accurate base line data from which new construction, reconstruction, or expansion will be reviewed. Landowners who have not been certified shall apply to the Forest Service for certification prior to any change in use or development of their property. Certification of uses will not be affected by a change in ownership, for that reason only. The Secetary will not acquire by condemnation certified property within the Scenic Area.

The certification of any structure or use located on relicted lands is not deemed a waiver of any claim by the U.S. Government to title of lands in the relicted area.

(b) *Pre-existing uses.* All land uses and developments existing on June 1, 1984, shall be depicted on maps and in records at the District Ranger's office, shall be deemed compatible with the purposes of the scenic area, and shall be certified by letter to the landowner. Developments occurring after June 1, 1984, shall be certified as though they existed on June 1, 1984, if the landowner was issued a valid Mono County building permit between June 1, 1984, and May 22, 1985.

(c) *New Uses and Developments.* All new uses and developments are subject to certification, including changes from uses existing on June 1, 1984. All new uses after that date shall be certified, if they are confined to locations where they may be conducted without detracting from the purposes and objectives of the Scenic Area. Any landowner who proposes to change uses or develop property shall submit to the District Ranger a use and development plan setting forth the manner in which the property is proposed to be developed and proposed uses of the property. If the District Ranger determines that the development and use plan conforms to the applicable standards established for the land use category in which the property is located, the District Ranger will declare the proposal non-detrimental and compatible with the purposes of the Scenic Area, and it shall be so certified in writing.

Landowners may develop new recreation and interpretative facilities in locations deemed appropriate through the Comprehensive Management Plan. Such facilities must be certified.

(d) *Historically Significant Structures.* A variance to the compatibility

standards may be allowed for the preservation of historically significant structures as set forth in the National Historic Preservation Act, 36 CFR Part 800, and determined by eligibility criteria for the National Register of Historic Places, 36 CFR 60.4.

(e) *Coordination with County Zoning Ordinances.* If the County enacts zoning regulations consistent with these guidelines, the District Ranger may coordinate compatibility determinations with the County approval process in order to reduce duplication of review and facilitate approvals. In such an event, the Forest Service would effectively be providing staff input to the County process, and would certify compatible uses, upon approval by the County.

Should the County grant a zoning variance in conflict with these guidelines, the Secretary may acquire the property without consent of the owner if the property use is otherwise deemed incompatible.

(f) *Denial or Rescission of Certification.* The District Ranger shall deny or rescind certification when a change in use or developments results in non-conformance with applicable standards. The District Ranger shall notify an affected landowner in writing of the basis for such denial or rescission and may provide a period of time for correction of the non-conforming use.

(g) *Appeals.* In giving written notice of a decision to deny certification to a land owner, the District Ranger shall specifically advise the landowner of any available opportunity to appeal the decision and include the name and address of the officer with whom an appeal may be filed.

Section 4—Compatibility Standards

(a) *Existing Improvements.* As required by section 303(b)(2) of the Act, the District Ranger shall certify the following uses as compatible with the purposes of the Scenic Area:

(1) Development and uses existing as of June 1, 1984.

(2) Reconstruction and expansion of buildings, support systems and facilities existing on June 1, 1984, and new construction of support systems and facilities as follows:

(A) Reconstruction of an existing building, and

(B) Construction of attached structural additions, not to exceed 100 percentum of the square footage of the original building, and

(C) Construction of reasonable support development such as roads, parking, water and sewage systems.

(b) *General Compatibililty Standards.* Landowners must conform to the following standards for their continued land uses to be compatible and remain certified:

(1) *Disposal of Wastes.* Landowners provide for disposal of solid and liquid waste originating on or resulting from use of their properties, consistent with State and County law.

(2) *Utilities.* Landowners place underground all utility modifications, expansion, replacement, or new utilities, (including cable TV). Any utility structures required to be above ground (e.g. satellite dishes, windmills, etc.) are painted in earth tones and properly placed to be screened by vegetation and/or topography.

(3) *Discharge of Pollutants.* Landowners obtain required permits for discharging pollutants, as defined by State law.

(4) *Use of Recreation Vehicles.* Landowners use or store recreation vehicles, including but not limited to, motor homes, camper trucks and travel trailers, on private property within the Scenic Area as follows:

(A) For no more than 60 days recreational use,

(B) For one year during construction of a residence.

(C) For storage by an owner, at the owner's residence.

(5) *Land Disturbance* Landowners obtain approval of the District Ranger for any new land disturbance (movement of 200 cubic yards of soil or more, or clearing land 10,000 square feet or more) and/or vegetative removal on other than a building site (e.g. tree farm, alfalfa field, mining roads, etc.). Any new land disturbance, regardless of size, must not substantially impair or detract from natural, scenic, ecologic, geologic and cultural values.

(6) *Mobile Homes.* Landowners provide the following conditions for new placement and use of mobile homes (manufactured housing):

(A) Mobile home is on permanent foundation,

(B) Mobile home has a pitched roof,

(C) Mobile home is paneled with wood siding, which is painted or stained an earth tone color that harmonizes with the natural surroundings.

(7) *Commercial Signs.* Landowners use commercial signs as follows:

(A) Signs are located on the site on which the use occurs,

(B) Signs do not exceed 40 square feet in size with a maximum length of 8 feet and maximum height from the ground of 15 feet,

(C) Signs do not feature flashing or neon devises, and

(D) Signs are of colors that harmonize with the natural surroundings.

(8) *Subdivision.* Landowners subdivide their property only when subdivision is intended to facilitate sale to the government to benefit the Scenic Area.

(9) *Secondary Housing.* Landowners do not construct or provide secondary or guest housing.

(10) *Damage to a Certified Structure.* Landowners reconstruct or remove structures damaged by fire, flood, or other catastrophe in conformance with the applicable standards. A landowner does not need new certification for reconstruction unless the damage reduces the value of the structure by 50% or more.

(11) *Storage.* Landowners do not utilize cargo containers, semi-trailers, train cars, or other trailers for storage or other incompatible uses.

(12) *Maintenance.* Landowners maintain buildings, structures, and grounds, including fences, in an equal or upgraded condition to that noted in the original certification, or they remove said buildings and structures.

(13) *Home Industry.* Landowners establish only those home industries deemed compatible with the purposes of the Scenic Area. Home industries must be certified by the District Ranger.

(14) *Grazing.* Landowners maintain or reduce the level of grazing that existed June 1, 1984. Increased levels of grazing must be certified by the District Ranger.

(15) *Scenic and Aesthetic Values.* Landowners protect scenic and aesthetic values by not accumulating debris, junk automobiles, and unused or unusable equipment on their properties.

(16) *Conformance with Other Standards.* When appropriate, landowners adopt all applicable and practicable guidelines for unimproved residential property in the Developed Land Use Category, section 5(b)(1)(A).

(17) *Conformance with Other Regulations.* Landowners use and develop their property in conformance with applicable Federal, State and local laws, regulations and ordinances.

(c) *Mining.* The standards set forth in this paragraph shall apply to private property in any land use category which is used for mineral operations. To aid in determining whether a planned mineral operation will conform to these guidelines, the landowner shall submit to the District Ranger a proposed plan of operations in compliance with agency regulations at 36 CFR 228.8.

All existing mining operations as of June 1, 1984, will be certified. The District Ranger will certify all other operations in the Scenic Area if the following conditions are met:

(1) Landowners confine operations to locations where they may be conducted without substantially impairing or detracting from the natural, scenic, ecologic, geologic and cultural values of the area.

(2) Operators meet the general compatibility standards set forth in paragraphs (b)(1)-(17) of this section.

(3) Landowners describe in their operating plans how the operations will:

(A) Comply with Federal and State air and water quality waste disposal standards.

(B) Minimize adverse impacts on scenic values.

(C) Provide for prompt stabilization and restoration of areas disturbed by the operations.

(4) Operators meet all pertinent provisions of the rules governing mining set forth in 36 CFR Part 228.

Section 5—Standards for New Development

New use and development of private lands will be deemed compatible and will be certified if landowners comply with the standards in section 4, paragraphs (b)(1)-(17) and the following additional specific land use category standards:

(a) *Natural Land Use Category.*

(1) *Unimproved Property.* Landowners may construct and provide only those new commercial developments which serve recreational, interpretive, or research purposes and which are deemed compatible with the Scenic Area in the Comprehensive Management Plan.

(2) *Improved Property.*

(A) Landowners may construct and provide only those new commercial developments which serve recreational, interpretive, or research purposes and which are deemed compatible with the Scenic Area in the Comprehensive Management Plan.

(B) Landowners may construct up to two new detached structures in lieu of an attached structural addition as long as (1) the total of all new detached structures does not exceed 100 percentum of the square footage of existing buildings and (2) the Forest Service determines that the visual impact of the detached structures would not be any greater than the visual impact of attached additions. New detached structures may not be used for habitation.

(i) Parcels with certified development resulting from an original building permit issued between June 1, 1984, and May 22, 1985, shall be considered "unimproved" as of June 1, 1984, but exceptions will be made to allow the completion of improvements authorized by such building permits. However, provisions of 4(a)(2) and 5(a)(2)(B) shall not apply to these parcels. Construction or expansion in addition to that authorized by the original building permit shall not be allowed.

(b) *Developed Land Use Category.* (1) Unimproved Property. (A) Residential. (i) Landowners must submit a proposed use and development plan which includes a preliminary landscape plan indicating visual screening of structures from main travel routes and public use areas. Such visual screening may be achieved by a combination of vegetative screening, topography, structure design and site development.

(ii) Landowners must submit a proposed grading and earth movement plan with the use and development plan, which minimizes all excavation or topographic changes that may be required for buildings, roads, and utilities.

(iii) Landowners may construct no more than one single family dwelling on each separately owned parcel as recorded in the records of Mono County as of June 1, 1984. Dwelling size may not exceed 2,000 square feet of floor space (excluding below ground basement).

(iv) Landowners may construct up to two accessory buildings, including a detached garage or a garage attached to the residence. Such accessory buildings are not to be used for habitation and may not exceed 900 square feet total (both buildings and/or attached garage).

(v) Landowners may construct buildings that are single story structures and do not exceed 18 feet from the ground to the highest point of the roof.

(vi) Landowners must utilize building architecture that is compatible with the rural environment, location, and scale; visually unobtrusive to passing motorists; rustic in nature; and uses harmonious earth tone colors and non-reflective roofing and sidings. Any fence is clearly necessary, made of natural materials (such as split rail), and compatible with the building architecture.

(vii) Landowners may construct structural improvements that cover up to 40% of the parcel.

(viii) Landowners may remove live trees and other vegetation only when necessary to accommodate buildings and roads and to allow installation of utilities. All mature trees and vegetation stands that are proposed to be removed must be identified in the proposed use and development plan.

(ix) Landowners minimize adverse aesthetic impacts and soil erosion in the design, location and construction of roads.

(x) Landowners place identification signs only on the site. Signs may not exceed two (2) square feet in size. Sale and rental signs may be located only on the site and do not exceed four (4) square feet in size.

(B) Commercial. Landowners may construct and provide only those new commercial developments deemed compatible with the Scenic Area in the Comprehensive Management Plan.

(2) Improved Property. (A) Residential. Landowners may reconstruct and expand residential property as specified in (i) or (ii) below, whichever is larger:

(i) Landowners may construct up to two new detached structures in lieu of an attached structural addition as long as (1) the total of all new detached structures does not exceed 100 percentum of the square footage of existing buildings and (2) the Forest Service determines that the visual impact of the detached structures would not be any greater than the visual impact of attached additions. New detached structures may not be used for habitation.

(ii) Landowners may reconstruct or expand their single family dwellings up to 2000 square feet of floor space (excluding below ground basement); and up to 900 square feet of accessory buildings (total square footage of old and new structures), including a detached garage or a garage attached to the residence.

No new accessory buildings may be used for habitation; only those existing buildings certified as guest housing may be used as such. No more than two new accessory buildings, including a detached garage, may be constructed.

(B) Commercial. (i) Landowners may reconstruct and expand commerical development by the standards for residential property [section 5(b)(2)(A)].

(ii) Commerical use and development is compatible when the purpose and intent of a commerical business is the same as that existing June 1, 1984 or found not to be detrimental to the integrity of the Scenic Area in the Comprehensive Management Plan.

(c) *Relicted Land Use Category.* For any private lands within the relicted land use category, the following will apply:

(1) Unimproved Property. Landowners, and/or Federal, State, or local units of government upon receipt of an easement, may construct reasonable roads, utilities, parking or other facilities that are needed for existing uses or developments, or uses and developments identified in the Comprehensive Management Plan.

(2) Improved Property. (A) Landowners may construct up to two detached structures in lieu of attached structural additions as long as (1) the total of all new detached structures does not exceed 100 percentum of the square footage of existing buildings and (2) the Forest Service determines that the visual impact of the detached structures would not be any greater than the visual impact of attached additions. New detached structures may not be used for habitation.

(B) Landowners, and/or Federal, State, or local units of government upon receipt of an easement, may construct reasonable roads, utilities, parking or other facilities that are needed for existing uses or developments, or uses and developments identified in the Comprehensive Management Plan.

[FR Doc. 88-8961 Filed 4-22-88; 8:45 am]

BILLING CODE 3410-11-M

COMMISSION ON CIVIL RIGHTS

Oregon Advisory Committee; Meeting Change

Notice is hereby given, pursuant to the provisions of the Rules and Regulations of the U.S. Commission on Civil Rights, that a meeting of the Oregon Advisory Committee to the Commission previously scheduled for April 21, 1988, convening at 1:30 p.m. and adjourning at 6:00 p.m. at the Hilton Hotel, 921 Southwest Sixth Avenue, Portland, Oregon 97204 (FR Doc. Vol. 53, No. 57, March 24, 1988) has a new meeting date.

The meeting convening and adjourning times and location will remain the same. The meeting date will change to May 26, 1988.

Dated at Washington, DC, April 15, 1988.

Susan J. Prado,

Acting Staff Director.

[FR Doc. 88-8982 Filed 4-22-88; 8:45 am]

BILLING CODE 6335-01-M

DEPARTMENT OF COMMERCE

International Trade Administration

[C-357-801]

Initiation of Countervailing Duty Investigations; Certain Welded Carbon Steel Pipe and Tube Products From Argentina

AGENCY: Import Administration, International Trade Administration, Commerce.

ACTION: Notice.

SUMMARY: On the basis of a petition filed in proper form with the U.S. Department of Commerce, we are initiating countervailing duty investigations to determine whether manufacturers, producers, or exporters in Argentina of certain welded carbon steep pipe and tube products as described in the "Scope of Investigations" section of this notice, receive benefits which constitute bounties or grants within the meaning of the countervailing duty law. If these investigations proceed normally, we will make our preliminary determinations on or before June 23, 1988.

EFFECTIVE DATE: April 25, 1988.

FOR FURTHER INFORMATION CONTACT: Barbara Tillman, Import Administration, International Trade Administration, U.S. Department of Commerce, 14th Street and Constitution Avenue NW., Washington, DC 20230; telephone: (202) 377-2438.

SUPPLEMENTARY INFORMATION:

The Petition

On March 30, 1988, we received a petition in proper form filed on behalf of the U.S. industry producing certain welded carbon steel pipe and tube products from the Standard Pipe, Line Pipe, Structural Tubing and Mechanical Tubing Subcommittees of the Committee on Pipe and Tube Imports and the individual manufacturers which are members of the aforementioned subcommittees. In compliance with the filing requirements of § 355.26 of the Commerce Regulations (19 CFR 355.26), the petition alleges that manufacturers, producers, or exporters in Argentina of certain welded carbon steel pipe and tube products receive bounties or grants within the meaning of section 303 of the Tariff Act of 1930, as amended ("the Act").

Argentina is not a "country under the Agreement" within the meaning of section 701(b) of the Act, and the merchandise being investigated is dutiable. Therefore, sections 303(a)(1) and (b) of the Act apply to these investigations. Accordingly, petitioners are not required to allege that, and the U.S. International Trade Commission is not required to determine whether, imports of the subject merchandise materially injure, or threaten material injury to, a U.S. industry.

Initiation of Investigations

Under section 702(c) of the Act, we must determine, within 20 days after a petition is filed, whether the petition sets forth the allegations necessary for the initiation of a countervailing duty investigation, and whether it contains information reasonably available to the petitioners supporting the allegations. We have examined the petition on certain welded carbon steel pipe and tube products from Argentina and have found that it meets the requirements of section 702(b) of the Act. Therefore, we are initiating countervailing duty investigations to determine whether manufacturers, producers, or exporters in Argentina of certain welded carbon steel pipe and tube products as described in the "Scope of Investigations" section of this notice, receive benefits which constitute bounties or grants within the meaning of the Act. If our investigations proceed normally, we will make our preliminary determinations on or before June 23, 1988.

Scope of Investigations

The United States has developed a system of tariff classification based on the international harmonized system of customs nomenclature. Congress is considering legislation to convert the United States to this Harmonized System ("HS"). In view of this, we will be providing both the appropriate Tariff Schedules of the United States Annotated ("TSUSA") item numbers and the appropriate HS item numbers with our product descriptions on a test basis, pending Congressional approval. As with the TSUSA, the HS item numbers are provided for convenience and Customs purposes. The written description remains dispositive.

We are requesting petitioners to include the appropriate HS item number(s) as well as the TSUSA item number(s) in all new petitions filed with the Department. A reference copy of the proposed Harmonized System is available for consultation at the Central Records Unit, Room B-099, U.S. Department of Commerce, 14th Street and Constitution Avenue NW., Washington, DC 20230. Additionally, all Customs offices have reference copies, and petitioners may contact the Import Specialist at their local Customs office to consult the schedule.

We have determined for purpose of this initiation that the products covered by these investigations constitute four separate "class or kind" categories; we thus will conduct four separate investigations with these products.

The four separate "class or kind" categories are as follows:

(1) Certain circular welded carbon steel pipes and tubes, 0.375 inch or more but not over 16 inches in outside diameter, generally known in the industry as standard pipe. This is a general-purpose commodity used in such

BEST COPY AVAILABLE

applications as plumbing pipe, sprinkler systems, and fence posts. Standard pipe may be supplied with an oil coating (black pipe) or may be galvanized, and is sold in plain ends, threaded, threaded and coupled, or beveled. These products are generally produced to ASTM specifications A-120, A-53, or A-135. Imports of these products are classified under TSUSA categories 610.3231, 610.3234, 610.3241, 610.3442, 610.3243, 610.3252, 610.3254, 610.3256, 610.3258, and 610.4925, and are classified under HS categories 7306.1000, 7306.30.5025, 7306.30.5030, 7306.30.5040, 7306.30.5045, 7306.30.5050, 7306.30.5060, 7306.30.5065, and 7306.30.5075. Oil country tubular goods entering under TSUSA categories 610.3242, 610.3243, 610.3252, 610.3254, and 610.3258 are already covered by a countervailing duty order and are not covered by this investigation.

(2) Certain welded carbon steel American Petroleum Institute (API) line pipe, 0.375 inch or more but not over 16 inches in outside diamenter known in the industry as line pipe. Line pipe generally is produced to API specification 5L. Line pipe is used for the transportation of gas, oil, or water, generally in pipeline or utility distribution systems. API line pipe not over 16 inches in outside diameter is classified under TSUSA categories 610.3209 and 610.3208, and will be classified under HS categories 7306.10.1010 and 7306.10.1050.

(3) Certain heavy-walled carbon steel rectangular tubing having a wall thickness of 0.156 inch or greater, which is generally used for support members for construction or load-bearing purposes in construction, transportation, farm, and material-handling equipment. The product is generally produced to ASTM specification A-500, Grade B. Imports of heavy-walled rectangular tubing are classified under TSUSA category 610.3955, and are classified under HS category 7306.60.1000.

(4) Certain light-walled carbon steel rectangular tubing having a wall thickness of less than 0.156 inch, which is generally employed in a variety of end uses not involving the conveyance of liquid or gas, such as agricultural equipment frames and parts, and furniture parts. The product is generally produced to ASTM specification A-513 or A-500, Grade A. Imports of light-walled rectangular tubing are classified under TSUSA category 610.4928, and are classified under HS category 7306.60.5000.

Allegation of Bounties or Grants

The petition lists a number of practices by the Government of Argentina which allegedly confer bounties or grants on manufacturers, producers, or exporters in Argentina of certain pipe and tube products. We are initiating investigations on the following alleged programs:

- Reembolso
- Pre-Export Financing
- Post-Export Financing

Although not specifically alleged by petitioners, we are also investigating whether the Argentina pipe and tube industry receives countervailable benefits under the following programs, which we have found to be either countervailable or not used in previous Argentina investigations.

- Corrientes Regional Tax Incentives
- Industrial Parks
- Low Cost Loans for Projects Outside Buenos Aires
- Discounts of Foreign Currency Accounts Receivable Under Circular RF-21
- Exemption from Stamp Tax Under Decree 186/76
- Government Trade Promotion Programs

We are not initiating investigations on the following three programs: (1) Incentives for Exports from Southern Ports, (2) Tax Reductions for Investors, and (3) Refund on Patagonian Exports. These programs were found to be either countervailable or not used in previous Argentina investigations. Eligibility for these programs is contingent upon location in the Patagonian region of Argentina. Petitioners have indicated that the producers and exporters of certain welded carbon steel pipe and tube products are not located in the Patagonian region and therefore, are not eligible for the three aforementioned programs. Thus, we are not initiating investigations on these programs.

This notice is published pursuant to section 702(c)(2) of the Act.

Date: April 19, 1988.

Joseph A. Spetrini,

Acting Assistant Secretary for Import Administration.

[FR Doc. 88-9008 Filed 4-22-88; 8:45 am]

BILLING CODE 3510-DS-M

National Bureau of Standards

[Docket No. 80470-8070]

National Voluntary Laboratory Accreditation Program; Publication of Directory Supplement

AGENCY: National Bureau of Standards, Commerce.

ACTION: Publication of NVLAP Directory Supplement.

SUMMARY: The National Bureau of Standards (NBS) announces laboratory accreditation actions taken during the first quarter of 1988.

FOR FURTHER INFORMATION CONTACT: Harvey W. Berger, Manager, Laboratory Accreditation, ADMIN A531, National Bureau of Standards, Gaithersburg, MD 20899, (301) 975-4016.

SUPPLEMENTARY INFORMATION: This supplement to the 1987-88 NVLAP Directory of Accredited Laboratories (NBSIR 88-3718) is published pursuant to § 7.6(b) of the National Voluntary Laboratory Accreditation Program (NVLAP) Procedures (15 CFR 7.6(b)).

The following table summarizes NVLAP accreditation actions for the period January 1, 1988 through March 31, 1988.

	TIM	CTS	CAR	STO	ACO	CPL	DOS	ECT	Total
Initial		1					7		8
Suspended							−2		−2
Terminate		−2					−2		−2
Balance	36	22	22	4	9	8	56	17	174

The laboratories awarded initial accreditation are:

CTS: PHR&E Material Laboratory, Chantilly, VA, John Kent, 703-263-0400
DOS: Arkansas Power & Light, Russellville, AR, Robert E. Green, 501-964-3226; Long Island Lighting, Wading, Wading River, NY, Roger Thompson, 516-929-8300; USAF Occupational & Environmental Health Lab, Brooks AFB, Edward F. Maher, 512-536-2376; General Dynamics/Elect. Boat Div., Groton, CT, Robert B. Lavimoniere, 203-446-2371; Naval Nuclear Propulsion Program, Washington, DC, J.J. Mangenor, 202-692-8712; Newport News Shipbuilding, Newport News, VA, C.T. Hill, 804-380-2369; Pennsylvania Power & Light, Allentown, PA, Stephen Ingram, 215-770-7892

The laboratories whose accreditation was suspended are:

DOS: Gulf Nuclear, Webster, TX
Mallinckrodt Diagnostics, Maryland Heights, MO

The laboratories whose accreditation was terminated are:

CTS: Garco Testing Laboratories, Salt Lake City, UT
Architectural Testing, York, PA
TIM—Insulation LAP
CTS—Construction Testing Services LAP (formerly Concrete LAP)
CAR—Carpet LAP
ACO—Acoustical Testing Services LAP
STO—Stove LAP
CPL—Commercial Products LAP (Paint, Paper, Seals and Sealants)
DOS—Dosimetry LAP
SEA—Seals and Sealants LAP
ECT—Electromagnetic Compatibility and Telecommunications

Ernest Ambler,

Director.

Date: April 19, 1988.

[FR Doc. 88-8950 Filed 4-22-88; 8:45 am]

BILLING CODE 3510-13-M

National Oceanic and Atmospheric Administration

Pacific Fishery Management Council; Public Meeting

AGENCY: National Marine Fisheries Service, NOAA, Commerce.

The Pacific Fishery Management Council's Offshore Processing Committee will convene a public meeting, May 10, 1988, at 11 a.m., at the Council's office (address below), to develop a policy on management of vessels which process fish at sea. The Committee will evaluate different management approaches including, but not limited to: (1) Amending the groundfish fishery management plan (FMP) to include shrimp; (2) developing a generic policy on offshore processing and (3) adopting a shrimp FMP. The Committee has been directed to report its progress at the July 1988 Council meeting in Portland, OR.

For further information contact Mr. Lawrence D. Six, Executive Director, Pacific Fishery Management Council, Metro Center, Suite 420, 2000 SW. First Avenue, Portland, OR 97201; telephone: (503) 221-6352.

Date: April 20, 1988.

Richard H. Schaefer,

Director, Office of Fisheries Conservation and Management, National Marine Fisheries Service.

[FR Doc. 88-9010 Filed 4-22-88; 8:45 am]

BILLING CODE 3510-22-M

National Technical Information Service

Government-Owned Inventions; Availability for Licensing; Department of Agriculture et al

The inventions listed below are owned by agencies of the U.S. Government and are available for licensing in the U.S. in accordance with 35 U.S.C. 207 to achieve expeditious commercialization of results of federally funded research and development. Foreign patents are filed on selected inventions to extend market coverage for U.S. companies and may also be available for licensing.

Technical and licensing information on specific inventions may be obtained by writing to: Office of Federal Patent Licensing, U.S. Department of Commerce, P.O. Box 1423, Springfield, Virginia 22151.

Pleast cite the number and title of inventions of interest.

Douglas J. Campion,

Associate Director, Office of Federal Patent Licensing, National Technical Information Service, U.S. Department of Commerce.

Department of Agriculture

SN 6-713,733 (4,724,147)
Preparation of Pellets Containing Fungi for Control of Soilborne Diseases
SN 6-860,351 (4,721,727)
Control of Pests with Annonaceous Acetogenins
SN 7-128,836
Avian Herpesvirus Amplicon as a Eucaryotic Expression Vector
SN 7-130,484
Use of Auxins to Reduce Accumulation of Limonoate A-Ring Lactone in Fruit-Bearing Plants of the Genus Citrus or Fortunella or Hybrids Thereof
SN 7-139,599
Cellulolytic, N2-Fixing Bacteria and Use Thereof

Department of Health and Human Services

SN 6-872,508
Cell Lines Secreting Anti-Insulin Antibodies and Test Kits
SN 7-107,994
New Anti-Receptor Peptides and Therapeutic Agents
SN 7-122,163
Alteration of Biological Properties of Vaccinia Virus by Insertion of Lymphokine Genes
SN 7-137,796
Cloned DNA for Synthesizing Unique Glucocerebrosidase
SN 7-140,269
Pyrimindine and Purine 1, 2-Butadinene-4 Ols as Anti-Retroviral Agents
SN 7-146,249
Plaque Transfer Assay for Detecting Retrovirus and Measuring Neutralizing Antibodies
SN 7-148,692
A Snytehtic Antigen Evoking Anti-HIV Response
SN 7-153,933
Novel Technique for Isolating New Retroviruses
SN 7-155,799
Polysaccharide-Protein Conjugates
SN 7-156,579
A Method for High Efficiency Transformation of Mammalian Cells
SN 7-166,824
Novel Carbamates Related to (−)-Physostigmine as Cholinergic Agents
SN 7-166,825
Novel Carbamates Related to (+)-Physostigmine as Cholinergic Agents
SN 7-167,252
Portable Light Dosage System
SN 7-168,493
Assay for Human Immunodeficiency Virus

Department of the Air Force

SN 6-158,418 (4,701,125)
Thermal Method for Destruction of Microfilm Products
SN 6-716,863 (4,698,587)
Method of Characterizing Critical Timing Paths and Analyzing Timing Related Failure Modes in Very Large Scale Integrated Circuits
SN 6-755,394 (4,702,438)
Adaptive Landing Gear
SN 6-784,128 (4,700,763)
Remotely Controlled Aircraft Tire Inflation/Deflation Valve
SN 6-788,189 (4,699,335)
Aircraft Window Clamping Device
SN 6-792,098 (4,700,122)
Power Supply Filtering with

Rechargeable Battery Element
SN 6-936,680 (4,700,099)
Stored Energy Thermionics Modular Power System
SN 7-084,239 (4,700,190)
Missile Decoy Radar Cross Section Enhancer

Department of the Army

SN 7-135,404
Parallel Neural Network for a Full Binary Adder
SN 7-152,128
A Solid State Gamma Ray Dosimeter Which Measures Radiation in Terms of Absorption in a Material Different From the Detector Material
SN 7-152,206
Millimeter Wave Microstrip Phase Shifter
SN 7-156,124
Method of Etching Titanium Diboride

Tennessee Valley Authority

SN 6-902,721 (4,702,896)
Thermal Treatment of Phosphate Rock.

[FR Doc. 88-8983 Filed 4-22-88; 8:45 am]
BILLING CODE 3510-04-M

COMMITTEE FOR THE IMPLEMENTATION OF TEXTILE AGREEMENTS

Adjustment of Import Limits for Certain Cotton Textile Products Produced or Manufactured in Sri Lanka

April 19, 1988.

AGENCY: Committee for the Implementation of Textile Agreements (CITA).

ACTION: Issuing directives to the Commissioner of Customs adjusting limits.

EFFECTIVE DATE: April 19, 1988.

Authority: Executive Order 11651 of March 3, 1972, as amended; Section 204 of the Agricultural Act of 1956, as amended (7 U.S.C. 1854)

FOR FURTHER INFORMATION CONTACT: Kimbang Pham, International Trade Specialist, Office of Textiles and Apparel, U.S. Department of Commerce, (202) 377-4212. For information on the quota status of the current limit, refer to the Quota Status Reports posted on the bulletin boards of each Customs port or call (202) 343-6580. For information on embargoes and quota re-openings, call (202) 377-3715.

SUPPLEMENTARY INFORMATION: The current limit for Category 369-S is being increased for carryover from the June 1, 1987 through December 31, 1987 period. The limit for the June 1, 1987 through December 31, 1987 period is being adjusted in a separate directive.

A description of textile categories in terms of T.S.U.S.A. numbers is available in the CORRELATION: Textile and Apparel Categories with Tariff Schedules of the United States Annotated (see **Federal Register** notice 52 FR 47745, dated December 11, 1987). Also see 52 FR 18413, published on May 15, 1987 and 53 FR 52 and 53 FR 53, published on January 4, 1988.

The letters to the Commissioner of Customs and the actions taken pursuant to them are not designed to implement all of the provisions of the bilateral agreement, but are designed to assist only in the implementation of certain of its provisions.

James H. Babb,

Chairman, Committee for the Implementation of Textile Agreements.

Committee for the Implementation of Textile Agreements

April 19, 1988.

Commissioner of Customs,
Department of the Treasury, Washington, DC 20229

Dear Mr. Commissioner: This directive amends, but does not cancel, the directive issued to you on December 30, 1987 by the Chairman, Committee for the Implementation of Textile Agreements, concerning imports into the United States of certain cotton, wool, man-made fiber, silk blend and other vegetable fiber textiles and textile products, produced or manufactured in Sri Lanka and exported during the period which began on January 1, 1988 and extends through May 31, 1988.

Effective on April 19, 1988, the directive of December 30, 1987 is hereby amended to adjust the limit for Category 369-S [1] to 687,134 pounds,[2] as provided under the terms of the bilateral agreement of May 10, 1983, as amended.

The Committee for the Implementation of Textile Agreements has determined that this action falls within the foreign affairs exception to the rulemaking provisions of 5 U.S.C. 553(a)(1).

Sincerely,

James H. Babb,

Chairman, Committee for the Implementation of Textile Agreements.

[FR Doc. 88-8944 Filed 4-22-88; 8:45 am]
BILLING CODE 3510-DR-M

[1] In Category 369-S, only TSUSA number 366.2840.

[2] The limit has not been adjusted to account for any imports exported after December 31, 1987.

Adustment of Import Limits for Certain Cotton, Man-Made Fiber, Silk Blend and Other Vegetable Fiber Textiles and Textile Products Produced or Manufactured in Sri Lanka

April 19, 1988.

AGENCY: Committee for the Implementation of Textile Agreements (CITA).

ACTION: Issuing directives to the Commissioner of Customs adjusting limits.

EFFECTIVE DATE: April 19, 1988.

Authority: Executive Order 11651 of March 3, 1972, as amended; Section 204 of the Agricultural Act of 1956, as amended (7 U.S.C. 1854).

FOR FURTHER INFORMATION CONTACT: Kimbang Pham, International Trade Specialist, Office of Textiles and Apparel, U.S. Department of Commerce, (202) 377-4212. For information on the quota status of these limits, refer to the Quota Status Reports posted on the bulletin boards of each Customs port or call (202) 343-6580. For information on embargoes and quota re-openings, call (202) 377-3715.

SUPPLEMENTARY INFORMATION: The current limits for Categories 347 and 642/842 are being increased for swing. The current limits for Categories 334 and 636/836 are being reduced to account for the swing applied to Categories 347 and 642/842.

A description of textile categories in terms of T.S.U.S.A. numbers is available in the CORRELATION: Textile and Apparel Categories with Tariff Schedules of the United States Annotated (see **Federal Register** notice 52 FR 47745, dated December 11, 1987). Also see 52 FR 18413, published on May 15, 1987 and 53 FR 52 and 53 FR 53, published on January 4, 1988.

The letter to the Commissioner of Customs and the actions taken pursuant to it is not designed to implement all of the provisions of the bilateral agreement, but are designed to assist only in the implementation of certain of its provisions.

James H. Babb,

Chairman, Committee for the Implementation of Textile Agreements.

Committee for the Implementation of Textile Agreements

April 19, 1988.

Commissioner of Customs,
Department of the Treasury, Washington, DC 20229

Dear Mr. Commissioner: This directive amends, but does not cancel, the directive issued to you on December 30, 1987 by the Chairman, Committee for the Implementation of Textile Agreements, concerning imports

into the United States of certain cotton, wool, man-made fiber, silk blend and other vegetable fiber textiles and textile products, produced or manufactured in Sri Lanka and exported during the period which began on January 1, 1988 and extends through May 31, 1988.

Effective on April 19, 1988, the directive of December 30, 1987 is hereby amended to adjust the restraint limits for the following categories, as provided under the terms of the current bilateral agreement between the Governments of the United States and Sri Lanka.

Category	Adjusted 5-month limit dozen[1]
334	123,484
347	207,096
636/836	92,518
642/842	72,529

[1] The limits have not been adjusted to account for any imports exported after December 31, 1987.

The Committee for the Implementation of Textile Agreements has determined that this action falls within the foreign affairs exception to the rulemaking provisions of 5 U.S.C. 553(a)(1).

Sincerely,

James H. Babb,

Chairman, Committee for the Implementation of Textile Agreements.

[FR Doc. 88-8945 Filed 4-22-88; 8:45 am]

BILLING CODE 3510-DR-M

Announcement of an Import Limit for Certain Wool Textile Products Produced or Manufactured in the People's Republic of Bulgaria

April 20, 1988.

AGENCY: Committee for the Implementation of Textile Agreements (CITA).

ACTION: Issuing a directive to the Commissioner of Customs establishing a limit for the new agreement year.

EFFECTIVE DATE: May 1, 1988.

Authority: E.O. 11651 of March 3, 1972, as amended; sec. 204 of the Agricultural Act of 1956, as amended (7 U.S.C. 1854).

FOR FURTHER INFORMATION CONTACT: Jerome Turtola, International Trade Specialist, Office of Textiles and Apparel, U.S. Department of Commerce, (202) 377-4212. For information on the quota status of this limit, refer to the Quota Status Reports posted on the bulletin boards of each Customs port. For information on embargoes and quota re-openings, call (202) 377-3715.

SUPPLEMENTARY INFORMATION: A copy of the current Bilateral Textile Agreement between the Governments of the United States and the People's Republic of Bulgaria is available from the Textiles Division, Economic Bureau, U.S. Department of State, (202) 647-1998.

A description of the textile categories in terms of T.S.U.S.A. numbers is available in the CORRELATION: Textile and Apparel Categories with Tariff Schedules of the United States Annotated (see **Federal Register** notice 52 FR 47745, dated December 11, 1987).

The letter to the Commissioner of Customs and the action taken pursuant to it are not designed to implement all of the provisions of the bilateral agreement, but are designed to assist only in the implementation of certain of its provisions.

James H. Babb,

Chairman, Committee for the Implementation of Textile Agreements.

Committee for the Implementation of Textile Agreements

April 20, 1988.

Commissioner of Customs,
Department of the Treasury,
Washington, D.C. 20229

Dear Mr. Commissioner: Under the terms of Section 204 of the Agricultural Act of 1956, as amended (7 U.S.C. 1854); pursuant to the Bilateral Textile Agreement of June 20, 1986 and November 27, 1986; and in accordance with the provisions of Executive Order 11651 of March 3, 1972, as amended, you are directed to prohibit, effective on May 1, 1988, entry into the United States for consumption and withdrawal from warehouse for consumption of wool textile products in Category 435, produced or manufactured in Bulgaria and exported during the twelve-month period which begins on May 1, 1988 and extends through April 30, 1989, in excess of 11,731 dozen.

Trade falling into the category limit for the period May 1, 1987 through April 30, 1988 shall be charged against that level of restraint to the extent of any unfilled balance. In the event the limit established for that period has been exhausted by previous entries, such goods shall be subject to the level set forth in this directive.

The restraint limit set forth above is subject to adjustment in the future under the provisions of the current bilateral agreement between the Governments of the United States and the People's Republic of Bulgaria.

In carrying out the above directions, the Commissioner of Customs should construe entry into the United States for consumption to include entry for consumption into the Commonwealth of Puerto Rico.

The Committee for the Implementation of Textile Agreements has determined that this action falls within the foreign affairs exception to the rulemaking provisions of 5 U.S.C. 553(a)(1).

Sincerely,

James H. Babb,

Chairman, Committee for the Implementation of Textile Agreements.

[FR Doc. 88-8990 Filed 4-22-88; 8:45 am]

BILLING CODE 3510-DR-M

Adjustment of Import Limits for Certain Wool and Man-Made Fiber Textile Products Produced or Manufactured in the Hungarian People's Republic

April 20, 1988.

AGENCY: Committee for the Implementation of Textile Agreements (CITA).

ACTION: Issuing a directive to the Commissioner of Customs adjusting limits.

EFFECTIVE DATE: April 26, 1988.

Authority: E.O. 11651 of March 3, 1972, as amended; sec. 204 of Agricultural Act of 1956, as amended (7 U.S.C. 1854).

FOR FURTHER INFORMATION CONTACT: Jerome Turtola, International Trade Specialist, Office of Textiles and Apparel, U.S. Department of Commerce, (202) 377-4212. For information on the quota status of these limits, refer to the Quota Status Reports posted on the bulletin boards of each Customs port. For information on embargoes and quota re-openings, call (202) 377-3715.

SUPPLEMENTARY INFORMATION: The current limits for Categories 434 and 645/646 are being reduced for carryforward used during the 1987 agreement year.

A description of textile categories in terms of T.S.U.S.A. numbers is available in the CORRELATION: Textile and Apparel Categories with Tariff Schedules of the United States Annotated (see **Federal Register** notice 52 FR 47745, dated December 11, 1987). Also see 53 FR 50, published in the **Federal Register** on January 4, 1988.

The letter to the Commissioner of Customs and the actions taken pursuant to it are not designed to implement all of the provisions of the bilateral agreement, but are designed to assist only in the implementation of certain of its provisions.

James H. Babb,

Chairman, Committee for the Implementation of Textile Agreements.

Committee for the Implementations of Textile Agreements

April 20, 1988.

Commissioner of Customs,
Department of the Treasury, Washington, DC 20229

Dear Mr. Commissioner: This directive amends, but does not cancel, the directive issued to you on December 30, 1987, by the Chairman, Committee for the Implementation of Textile Agreements, concerning imports into the United States of certain wool and man-made fiber textile products, produced or manufactured in the Hungarian People's Republic and exported during the period

which began on January 1, 1988, and extends through December 31, 1988.

Effective on April 26, 1988, the directive of December 30, 1987, is hereby amended to adjust the limits for wool and man-made fiber textile products in the following categories, as provided under the terms of the current bilateral agreement:

Category	Adjusted limit (dozen) [1]
434	6,975
645/646	88,997

[1] The limits have not been adjusted to account for any imports exported after December 31, 1987.

The Committee for the Implementation of Textile Agreements has determined that these actions fall within the foreign affairs exception to the rulemaking provisions of 5 U.S.C. 553(a)(1).

Sincerely,

James H. Babb,

Chairman, Committee for the Implementation of Textile Agreements.

[FR Doc. 88-8991 Filed 4-22-88; 8:45 am]

BILLING CODE 3510-DR-M

COMMODITY FUTURES TRADING COMMISSION

Financial Products Advisory Committee Meeting

This is to give notice pursuant to section 10(a) of the Federal Advisory Committee Act, 5 U.S.C. App. 1, 10(a) and 41 CFR 101-6.1015(b), that the Commodity Futures Trading Commission's Financial Products Advisory Committee will conduct a public meeting on Monday, May 9, 1988, at the Longworth House Office Building, Independence Avenue, between C Street and South Capitol Street, SE. in Washington, DC. The meeting will be held between 10:00 a.m. and 3:30 p.m. in the U.S. House of Representatives Committee on Agriculture's Hearing Room 1301 of the Longworth Building. The agenda will consist of:

1. Discussion of analyses, reports and recommendations concerning the October 1987 stock market decline.

2. Discussion of the efficacy of intermarket cashflow during volatile market situations, including discussions of:

a. Bank daylight overdraft and credit mechanisms.

b. Information sharing to improve oversight of financial condition.

c. The advantages of a more coordinated clearing system.

4. Discussion of proposals to distinguish control from ownership when aggregating positions for speculative limit purposes.

5. Other Committee business:

a. Discussion of agenda items and scheduling for future Committee meetings; and

b. Any other business that may properly come before the Committee.

The purpose of this meeting is to solicit the views of the Committee on the above-listed agenda matters. The Advisory Committee was created by the Commodity Futures Trading Commission for the purpose of receiving advice and recommendations on financial products issues. The purposes and objectives of the Advisory Committee are more fully set forth at 52 FR 17313 (May 7, 1987).

The meeting is open to the public. The Chairman of the Advisory Committee, Commissioner Robert R. Davis, is empowered to conduct the meeting in a fashion that will, in his judgment, facilitate the orderly conduct of business.

Any member of the public who wishes to file a written statement with the Advisory Committee should mail a copy of the statement to the attention of: The Commodity Futures Trading Commission Financial Products Advisory Committee, c/o Maureen Donley-Hoopes, Commodity Futures Trading Commission, 2033 K Street NW., Washington, DC 20581, to be received prior to the date of the meeting. Members of the public who wish to make oral statements also should inform Ms. Donley-Hoopes in writing at the above address at least three days prior to the meeting. Provision will be made, if time permits for an oral presentation of reasonable duration.

Issued in Washington, DC the 20th day of April, by the Commission.

Jean A. Webb,

Secretary to the Commission.

[FR Doc. 88-8933 Filed 4-22-88; 8:45 am]

BILLING CODE 6351-01-M

CONSUMER PRODUCT SAFETY COMMISSION

[CPSC Docket No. 88-1]

P&M Enterprises; Prehearing Conference

AGENCY: Consumer Product Safety Commission.

ACTION: Notice of prehearing conference.

DATE: This notice announces a prehearing conference to be held in the matter of Philip A. Dye and Marilyn J. Dye, d/b/a P&M Enterprises, on May 10, 1988, at 9:30 a.m.

ADDRESS: The prehearing conference will be in Room 1211, Interstate Commerce Commission, 12th Street NW. and Constitution Avenue, Washington, DC. For additional information contact: Sheldon D. Butts, Deputy Secretary, Consumer Product Safety Commission, Washington, DC 20207, telephone (301) 492-6800.

Notice of Prehearing Conference

Please take notice that the Presiding Officer will be Administrative Law Judge Paul J. Clerman; that the Presiding Officer has determined that for good and sufficient cause appearing the time period prescribed under 16 CFR 1025.21(a) for the holding of a prehearing conference should be extended for an additional fifteen (15) days; and that a prehearing conference in this proceeding will be held at 9:30 a.m., on May 10, 1988, in Room 1211, at the Interstate Commerce Commission, 12th Street NW. and Constitution Avenue, Washington, DC, for the purposes outlined in 16 CFR 1025.21(a).

The following issues will be addressed:

1. Setting a time limit for any discovery not completed by the date of the conference.

2. Setting a date, time and place for the hearing.

3. And such other matters as may aid in the efficient presentation of disposition of the proceedings.

Date: April 20, 1988.

Sheldon D. Butts,

Deputy Secretary.

[FR Doc. 88-8963 Filed 4-22-88; 8:45 am]

BILLING CODE 6355-01-M

DEPARTMENT OF DEFENSE

Department of the Army

Military Traffic Management Command, Directorate of Inland Traffic; Rules and Accessorial Services Governing the Movement of Department of Defense Freight Traffic by Rail Carrier

AGENCY: Military Traffic Management Command (MTMC), Department of the Army, Department of Defense (DOD).

ACTION: Procedural changes in DOD freight rate acquisition programs; final action.

SUMMARY: On June 4, 1987 (52 FR 107), MTMC, on behalf of the DOD, published notice of intent to modify the procedures used to acquire rates and charges from

the commercial carrier industry for the movement of its freight traffic. This modification is the issuance of a rules publication designed to standardize and simplify the procurement of all rail carrier rates and services under 49 U.S.C. 10721. This publication, MTMC Freight Traffic Rules Publication No. 10, is now final. Copies of the publication may be obtained by writing to: HQ Military Traffic Management Command, ATTN: MT-INN-G, 5611 Columbia Pike, Falls Church, Virginia 22041-5050.

EFFECTIVE DATE: July 1, 1988.

FOR FURTHER INFORMATION CONTACT: Mr. Allen W. Kirby or Mr. David H. Hannaford, HQ, Military Traffic Management Command, ATTN: MT-INN-G, 5611 Columbia Pike, Falls Church, Virginia 22041-5050, or telephone (202) 756-1585.

SUPPLEMENTARY INFORMATION: The transportation regulatory reform legislation enacted over the past several years has deregulated both Trailer/Container on Flatcar (TOFC/COFC) and Boxcar shipments resulting in a corresponding proliferation of exempt rate publications, and a great diversity in the manner in which carriers' rates, rules, and services are expressed within those publications. As a result, the standardization and automation of rail carriers' rates and charges are essential to the formulation of a successful and manageable rate comparison program. Automation is feasible, of course, only if carriers' rates and charges are expressed in a uniform manner compatible with electronic data processing.

MTMC Freight Traffic Rules Publication No. 10 (MFTRP No. 10): This publication contains both rules and accessorial service requirements to govern the rates and services of rail carriers doing business with the DOD. It will govern the movement of all DOD shipments by rail EXCEPT for those rates and services concerning the movement of Foreign Military Sales shipments which are regulated by the Interstate Commerce Commission.

This publication is designed to be used with the new DOD Standard Tender of Freight Services, MT Form 364-R, and will apply from, to, or between points in the continental United States, Alaska, and/or Canada which are specified in carriers' individual tenders filed with HQMTMC. Tenders or carriers subject to these publications may not refer to any other publication for application of rates and charges therein.

Although the publication becomes effective, July 1, 1988, affected carriers are not subject to the publications until such time as they individually file the DOD tender referring to this governing publication. An implementation schedule for the DOD tender will be announced through a series of letters directed to the rail carrier industry and to all applicable carriers having the present tender, Form OP 280, on file. MFTRP No. 10 is for carrier reference and will not be submitted to MTMC with or as part of individual carrier tender filings.

John O. Roach II,

Army Liaison Officer with the Federal Register.

[FR Doc. 88-8935 Filed 4-22-88; 8:45 am]

BILLING CODE 3710-08-M

DEPARTMENT OF ENERGY

Floodplain/Wetland Involvement Determination for the University of South Carolina John E. Swearingen Center for Engineering Phase II Building Project

ACTION: Floodplain/wetland involvement and opportunity for comment.

SUMMARY: The University of South Carolina, through a construction grant from the Department of Energy, proposes to convert and renovate a portion of an existing complex of buildings to serve as an engineering research facility for the Mechanical and Civil Engineering Departments. The University of South Carolina is located in Columbia, South Carolina.

DATES: Comments are due on or before May 10, 1988.

ADDRESS: Send written comments or suggestions to Linda Freeman, Environment, Safety, and Health Division, U.S. Department of Energy, 9800 S. Cass Avenue, Argonne, Illinois 60349, (312) 972-2240.

SUPPLEMENTARY INFORMATION: The University of South Carolina proposes to convert and renovate a portion of an existing complex of buildings in Columbia, South Carolina to serve as an engineering research facility whose purpose is to stimulate research and training in higher education. The conversion consists of demolition of an existing wing of the existing complex and construction of a new wing. The proposed facility will partially replace the existing engineering building and relieve the currently congested and unsafe conditions found in the existing building. The proposed John E. Swearingen Center for Engineering Phase II will house the specially designed laboratoreis and classrooms in which to conduct the research and instructional activities of the Mechanical and Civil Engineering Departments.

Pursuant to DOE's "Complaince with Floodplain/Wetlands Environmental Review Requirements" (10 CFR Part 1022), DOE has determined that this project would involve activities within a floodplain/wetland area. The site of the proposed project is lcoated within a 100 year Flood Boundary which extends on either side of the Rocky Branch River. Planned work activities within the floodplain will include construction and renovation as described above. The DOE will prepare a floodplain/wetland assessment.

Further information on this project is available from the address listed above.

Hilary J. Rauch,

Manager.

[FR Doc. 88-8966 Filed 4-22-88; 8:45 am]

BILLING CODE 6450-01-M

Office of General Counsel

Intent To Grant Exclusive Patent License; Roberts Pharmaceutical Corp.

Notice is hereby given of an intent to grant to Roberts Pharmaceutical Corp. of Eatontown, NJ., an exclusive license to practice in the United States the inventions described in U.S. Patent No. 4,698,431 entitled "Hydroxypyridonate Chelating Agents" and related U.S. patent application S.N. 067,077, directed to a method of synthesis thereof. The inventions are owned by the United States of America, as represented by the Department of Energy (DOE).

The proposed exclusive license will be subject to a license and other rights retained by the U.S. Government, and will be subject to a negotiated royalty provision. DOE intends to grant the license, upon a final determination in accordance with 35 U.S.C. 209(c), unless within 60 days of this notice the Assistant General Counsel for Patents, Department of Energy, Washington, DC 20585, receives in writing any of the following, together with supporting documents:

(i) A statement from any person setting forth reasons why it would not be in the best interests of the United States to grant the proposed license; or

(ii) An application for a nonexclusive license to either of the inventions in the United States, in which applicant states that he has already brought either of the inventions to practical application or is likely to bring either invention to practical application expeditiously.

The Department will review all written responses to this notice, and will

grant the license if, after expiration of the 60-day notice period, and after consideration of written responses to this notice, a determination is made, in accordance with 35 U.S.C. 209(c), that the license grant is in the public interest.

Issued in Washington, DC on April 7, 1988.

Eric J. Fygi,

Acting General Counsel.

[FR Doc. 88-8088 Filed 4-22-88; 8:45 am]

BILLING CODE 6450-01-M

Economic Regulatory Administration

[ERA Docket No. 88-15-NG]

DEKALB Petroleum Corp.; Application To Import Natural Gas From Canada

AGENCY: Economic Regulatory Administration, DOE.

ACTION: Notice of application for blanket authorization to import natural gas.

SUMMARY: The Economic Regulatory Administration (ERA) of the Department of Energy (DOE) gives notice of receipt on March 22, 1988, of an application filed by DEKALB Petroleum Corporation (DEKALB) for blanket authorization to import up to 100 MMcf of natural gas per day and a maximum of 73 Bcf over a two-year term beginning on the date of first delivery. DEKALB would import the gas on a short-term or spot basis for its own account as well as for the accounts of its Canadian suppliers and U.S. purchasers, including pipelines, local distribution companies and commercial and industrial end-users.

The application is filed with the ERA pursuant to section 3 of the Natural Gas Act and DOE Delegation Order No. 0204-111. Protests, motions to intervene, notices of intervention and written comments are invited.

DATE: Protests, motions to intervene or notices of intervention, as applicable, requests for additional procedures and written comments are to be filed no later than May 25, 1988.

FOR FURTHER INFORMATION CONTACT:

Larine Moore, Natural Gas Division, Economic Regulatory Administration, Forrestal Building, Room GA-076, 1000 Independence Avenue SW., Washington, DC 20585, (202) 586-9478

Diane Stubbs, Natural Gas and Mineral Leasing, Office of General Counsel, U.S. Department of Energy, Forrestal Building, Room 6E-042, 1000 Independence Avenue SW., Washington, DC 20585, (202) 586-6667.

SUPPLEMENTARY INFORMATION: DEKALB is a Canadian corporation with its principal place of business in Calgary, Alberta. No contracts have been executed and therefore the application does not identify the suppliers, buyers, or prices; however, DEKALB asserts that the specific terms of each import and sale would be based on competition in the marketplace. DEKALB intends to utilize existing pipeline facilities for transportation of the volumes imported and proposes to submit quarterly reports detailing each transaction.

DEKALB has requested that the ERA consider its requested authorization on an expedited basis. An ERA decision on Dekalb's request for expedited treatment, particularly with respect to whether additional written comments or other procedures will be necessary in this case, will not be made until all responses to this notice have been received and evaluated.

The decision on this application will be made consistent with the DOE's gas import policy guidelines, under which the competitiveness of an import arrangement in the markets served is the primary consideration in determining whether it is in the public interest (49 FR 6684, February 22, 1984). Parties that may oppose this application should comment in their responses on the issue of competitiveness as set forth in the policy guidelines. The applicant asserts that this import arrangement is competitive. Parties opposing the arrangement bear the burden of overcoming this assertion.

All parties should be aware that if the ERA approves this requested blanket import, it may designate a total amount of authorized volumes for the term rather than the daily or annual limit, in order to provide the applicant with maximum operating flexibility.

Public Comment Procedures

In response to this notice, any person may file a protest, motion to intervene or notice of intervention, as applicable, and written comments. Any person wishing to become a party to the proceeding and to have the written comments considered as the basis for any decision on the applicant must, however, file a motion to intervene or notice of intervention, as applicable. The filing of a protest with respect to this application will not serve to make the protestant a party to the proceeding, although protests and comments received from persons who are not parties will be considered in determining the appropriate action to be taken on the application. All protests, motions to intervene, notices of intervention, and written comments must meet the requirements that are specified by the regulation in 10 CFR Part 590.

Protests, motions to intervene, notices of intervention, requests for additional procedures, and written comments should be filed with the Natural Gas Division, Office of Fuels Programs, Economic Regulatory Administration, Room GA-076, RG-23, Forrestal Building, 1000 Independence Avenue SW., Washington, DC 20585, (202) 586-9478. They must be filed no later than 4:30 p.m. e.d.t., May 25, 1988.

The Administrator intends to develop a decision record on the application through responses to this notice by parties, including the parties' written comments and replies thereto. Additional procedures will be used as necessary to achieve a complete understanding of the facts and issues. A party seeking intervention may request that additional procedures be provided, such as additional written comments, an oral presentation, a conference, or trial-type hearing. Any request to file additional written comments should explain why they are necessary. Any request for an oral presentation should identify the substantial question of fact, law, or policy at issue, show that it is material and relevent to a decision in the proceeding, and demonstrate why an oral presentation is needed. Any request for a conference should demonstrate why the conference would materially advance the proceeding. Any request for a trial-type hearing must show that there are factual issues genuinely in dispute that are relevant and material to a decision and that a trial-type hearing is necessary for a full and true disclosure of the facts.

If an additional procedure is scheduled, the ERA will provide notice to all parties. If no party requests additional procedures, a final opinion and order may be issued based on the official record, including the application and responses filed by parties pursuant to this notice, in accordance with 10 CFR 590.316.

A copy of DEKALB's application is available for inspection and copying in the Natural Gas Division Docket Room, GA-076 at the above address. The docket room is open between the hours of 8:00 a.m. and 4:30 p.m., Monday through Friday, except Federal holidays.

Issued in Washington, DC, April 12, 1988.

Constance L. Buckley,

Director, Natural Gas Division, Office of Fuels Programs, Economic Regulatory Administration.

[FR Doc. 88-8087 Filed 4-22-88; 8:45 am]

BILLING CODE 6450-01-M

[Docket No. ERA C&E 88-10; Certification Notice—15]

Filing of Certification of Compliance; Coal Capability of New Electric Powerplants Pursuant to Provisions of the Powerplant and Industrial Fuel Use Act, as Amended

AGENCY: Economic Regulatory Administration, DOE.

ACTION: Notice of filing.

SUMMARY: Title II of the Powerplant and Industrial Fuel Use Act of 1978, as amended ("FUA" or "the Act") (42 U.S.C. 8301 *et seq.*) provides that no new electric powerplant may be constructed or operated as a base load powerplant without the capability to use coal or another alternate fuel as a primary energy source (section 201(a)). In order to meet the requirement of coal capability, the owner or operator of any new electric powerplant to be operated as a base load powerplant proposing to use natural gas or petroleum as its primary energy source may certify, pursuant to section 201(d) to the Secretary of Energy prior to construction, or prior to operation as a base load powerplant, that such powerplant has capability to use coal or another alternate fuel. Such certification establishes compliance with section 201(a) as of the date it is filed with the Secretary. The Secretary is required to publish in the **Federal Register** a notice reciting that the certification has been filed. One owner and operator of a proposed new electric base load powerplant has filed a self certification in accordance with section 201(d). Further information is provided in the **SUPPLEMENTARY INFORMATION** section below.

SUPPLEMENTARY INFORMATION:

The following company filed a self certification:

Name	Date received	Type facility	Megawatt capacity	Location
Intercontinental Energy Associates, Cohasset, MA	3-30-88	Powerplant Combined Cycle	726	Boswell, VA.

Amendments to FUA on May 22, 1987 (Pub. L. 100-42) altered the general prohibitions to include only new electric baseload powerplants and to provide for the self certification procedure.

Issued in Washington, DC, on April 18, 1988.

Robert L. Davies,

Director, Office of Fuels Programs, Economic Regulatory Administration.

[FR Doc. 88-8993 Filed 4-22-88; 8:45 am]

BILLING CODE 6450-01-M

Federal Energy Regulatory Commission

[Docket Nos. QF87-165-001 et al.]

Energenics/Glendon, Inc., et al.; Electric Rate, Small Power Production, and Interlocking Directorate Filings

April 20, 1988.

Take notice that the following filings have been made with the Commission:

1. Energenics/Glendon, Inc.

[Docket No. QF87-165-001]

On April 5, 1988, Glendon Energy Company (Applicant), of 711 Lehigh Street, Easton, Pennsylvania 18042 submitted for filing an application for recertification of a facility as a qualifying small power production facility pursuant to § 292.207 of the Commission's regulations. No determination has been made that the submittal constitutes a complete filing.

The small power production facility will be located in the Borough of Glendon, Northampton County, Pennsylvania. The facility will consist of a 500 ton per day mass burn solid waste facility with a design point of 5200 Btu per pound HHV. The net electric power production capacity will be approximately 12 to 12.5 MW. This contrasts with the 11 MW net electric power production in the original application.

Comment date: Thirty days from publication in the **Federal Register**, in accordance with Standard Paragraph E at the end of this notice.

2. O'Brien California Cogen Limited a California Limited Partnership

[Docket No. QF85-563-001]

On March 31, 1988, O'Brien California Cogen Limited a California limited partnership (Applicant) of 225 South Eighth Street, Philadelphia, Pennsylvania 19106 submitted for filing an application for recertification of a facility as a qualifying cogeneration facility pursuant to § 292.207 of the Commission's regulations. No determination has been made that the submittal constitutes a complete filing.

The topping-cycle cogeneration facility located in Artesia, California. The facility consists of a combustion turbine generator, a heat recovery steam generator, and an extraction condensing turbine generator. The primary energy source is natural gas. The electric power production capacity is approximately 27 MW.

By Order issued September 18, 1985, the Commission granted certification of the facility as a cogeneration facility (32 FERC ¶ 62,607).

The recertification is requested due to change of ownership from O'Brien Energy Systems Inc. to O'Brien California Cogen Limited a California limited partnership. All other facility's characteristics remain the same.

Comment date: Thirty days from publication in the **Federal Register**, in accordance with Standard Paragraph E at the end of this notice.

3. The New York Hospital Cornell Medical Center, Westchester Division

[Docket No. QF88-329-000]

On April 6, 1988, The New York Hospital Cornell Medical Center, Westchester Division, of 21 Bloomingdale Road, White Plains, New York 10605, submitted for filing an application for recertification of a facility as a qualifying cogeneration facility pursuant to § 292.207 of the Commission's regulations. No determination has been made that the submittal constitutes a complete filing.

The topping-cycle cogeneration facility located in White Plains, New York. The facility consists of 2 dual fuel engine-generators, 2 waste heat recovery steam generators, and necessary heat transfer equipment. Thermal energy recovered from the facility will be used for space heating and for hot water production. The maximum electric power production capacity of the facility will be 2100 kW. The primary source of energy will be natural gas. Construction of the facility is planned to commence on July 1, 1988.

Comment date: Thirty days from publication in the **Federal Register**, in accordance with Standard Paragraph E at the end of this notice.

Androscoggin Reservoir Company and Aziscohos Hydro Company, Inc.

[Docket No. QF88-321-000]

On March 28, 1988, Androscoggin Reservoir Company and Aziscohos Hydro Company, Inc. (Applicant), of 150

Main Street, Lewiston, Maine 04240 and Two Greenwich Plaza, Greenwich Plaza, Greenwich, Connecticut 06830, respectively, submitted for filing an application for certification of a facility as a qualifying small power production facility pursuant to § 292.207 of the Commission's regulations. No determination has been made that the submittal constitutes a complete filing.

The 5.2 MW hydroelectric facility (FERC P.4026) will be located on the Magalloway River in Oxford County, Maine.

A separate application is required for a hydroelectric project license, preliminary permit or exemption from licensing. Comments on such applications are requested by separate public notice. Qualifying status serves only to establish eligibility for benefits provided by PURPA, as implemented by the Commission's regulations, 18 CFR Part 292. It does not relieve a facility of any other requirements of local, State or Federal law, including those regarding siting, construction, operation, licensing and pollution abatement.

Comment date: Thirty days from publication in the **Federal Register**, in accordance with Standard Paragraph E at the end of this notice.

5. Olin Corporation

[Docket No. QF88-330-000]

On April 7, 1988, Olin Corporation (Applicant), of P.O. Box 28, McIntosh, Alabama 36553 submitted for filing an application for certification of a facility as a qualifying cogeneration facility pursuant to § 292.207 of the Commission's regulations. No determination has been made that the submittal constitutes a complete filing.

The topping cycle cogeneration facility will be located in Washington County, Alabama. The major equipment will include two combustion turbine-generators, two waste heat recovery boilers, and an extracting steam condensing turbine-generator. The facility will provide useful thermal energy to two industrial processes. The net electric power production capacity will be approximately 203 megawatts. The primary energy source will be natural gas.

Comment date: Thirty days from publication in the **Federal Register**, in accordance with Standard Paragraph E at the end of this notice.

Standard Paragraph

E. Any person desiring to be heard or to protest said filing should file a motion to intervene or protest with the Federal Energy Regulatory Commission, 825 North Capitol Street NE., Washington, DC 20426, in accordance with Rules 211 and 214 of the Commission's Rules of Practice and Procedure (18 CFR 385.211 and 385.214). All such motions or protests should be filed on or before the comment date. Protests will be considered by the Commission in determining the appropriate action to be taken, but will not serve to make protestants parties to the proceeding. Any person wishing to become a party must file a motion to intervene. Copies of this filing are on file with the Commission and are available for public inspection.

Lois D. Cashell,

Acting Secretary.

[FR Doc. 88-8973 Filed 4-22-88; 8:45 am]

BILLING CODE 6717-01-M

[Docket Nos. CP88-331-000 et al.]

Northern Natural Gas Company et al., Division of Enron Corp.; Natural Gas Certificate Filings

April 20, 1988.

Take notice that the following filings have been made with the Commission:

1. Northern Natural Gas Company, Division of Enron Corp.

[Docket No. CP88-331-000]

Take notice that on April 11, 1988, Northern Natural Gas Company, Division of Enron Corp. (Northern), 2223 Dodge Street, Omaha, Nebraska 68102, filed in Docket No. CP88-331-000 a request, pursuant to §§ 157.205 and 284.223 of the Commission's Regulations under the Natural Gas Act for authority to transport natural gas on behalf of Pogo Producing Company, a producer of natural gas, under the certificate issued in Docket No. CP86-435-000 on December 22, 1986, pursuant to section 7(c) of the Natural Gas Act, all as more fully set forth in the request on file with the Commission and open to public inspection.

Pursuant to a gas transportation agreement dated March 8, 1988, Northern states it would transport on an interruptible basis, up to 10,000 Mcf of natural gas per day for Pogo Producing Company from on point of receipt, East Cameron Block 104, in offshore Louisiana to one point of delivery, East Cameron Block 97, in offshore Louisiana. Construction of facilities will not be required to provide the proposed service.

Northern further states that the peak day, average day, and annual quantities would be 10,000 Mcf, 7,500 Mcf, and 3,650,000 Mcf, respectively. Applicant indicates that service under § 284.223(a) of the Commission's Regulations was reported in Docket No. ST88-2754.

Comment date: June 6, 1988, in accordance with Standard Paragraph G at the end of this notice.

2. Northern Natural Gas Company, Division of Enron Corp.

[Docket No. CP88-335-000]

Take notice that on April 11, 1988, Northern Natural Gas Company, Division of Enron Corp. (Northern), 2223 Dodge Street, Omaha, Nebraska 68102, filed in Docket No. CP88-335-000, an application pursuant to §§ 157.205 and 284.223 of the Commission's Regulations for authority to transport natural gas, on behalf of Phoenix Chemical Company, an end-user of natural gas, all as more fully set forth in the application which is on file with the Commission and open to public inspection.

Pursuant to Gas Transportation Agreement date March 1, 1988, Northern will transport up to 35,000 MMBtu/day for Phoenix Chemical Company from forty-six (46) points of receipt in Oklahoma, Kansas, Texas, Wisconsin, North Dakota, Iowa, Minnesota and New Mexico to three (3) points of delivery in North Dakota, Iowa and Illinois. Construction of facilities will not be required to provide the proposed service.

Comment date: June 6, 1988, in accordance with Standard Paragraph G at the end of this notice.

3. Arkla Energy Resources, a Division of Arkla, Inc.

[Docket No. CP88-318-000]

Take notice that on March 29, 1988, Arkla Energy Resources, a division of Arkla, Inc. (AER), P.O. Box 21734, Shreveport, Louisiana 71151, filed in Docket No. CP88-318-000 a request pursuant to § 157.205 of the Regulations under the Natural Gas Act and AER's blanket certificate issued in Docket Nos. CP82-384-000 and CP82-384-001 for authorization to construct and operate a tap and related jurisdictional facilities necessary to deliver gas from its jurisdictional system for resale by Arkansas Louisiana Gas Company, a division of Arkla, Inc. (ALG), all as more fully set forth in the request which is on file with the Commission and open to public inspection.

AER specifically proposes to construct and operate a sales tap on its Line 8-C in Greer County, Oklahoma, to deliver gas to ALG for service to W.C. Bowman, a domestic customer who would use approximately 140 Mcf per year. The proposed jurisdictional facilities would cost approximately $1,350 to install.

AER states that the gas would be delivered from its general system

supply, which it states is adequate to provide the service.

Comment date: June 6, 1988, in accordance with Standard Paragraph G at the end of this notice.

4. Greeley Gas Co. and Commercial Pipeline Co., Inc.

[Docket No. CP88-324-000]

Take notice that on March 31, 1988, Greeley Gas Company (Greeley), 1301 Pennsylvania Street, Suite 800, Denver Colorado 80203-5015, and Commercial Pipeline Company, Inc. (Commercial), 120 South Market, Wichita, Kansas 67202, filed in Docket No. CP88-324-000, a joint application pursuant to sections 7(c) and 7(b) of the Natural Gas Act, respectively, for (1) a certificate of public convenience and necessity authorizing Greeley to acquire and operate all of the gas pipeline facilities owned by Commercial and (2) an order permitting and approving Commercial to abandon such facilities, all as more fully set forth in the application which is on file with the Commission and open to public inspection.

Greeley and Commercial state that they entered into a Purchase Agreement on September 28, 1987, as amended, wherein Commercial agreed to sell its pipeline facilities to Greeley, subject to receipt of the appropriate regulatory authorization. It is stated that the facilities are located in Bourbon and Linn Counties, Kansas, and in Bates County, Missouri. As a part of that Purchase Agreement, it is further stated that Greeley also acquired the property and assets of Commercial's three distribution customers: Mound City Gas Company, Inc. (Mound City), Pleasanton Gas Company, Inc. (Pleasanton), and Rich Hill-Hume Gas Company, Inc. (Rich Hill-Hume). Greeley advises that the Mound City and Pleasanton acquisitions were approved by the Kansas Corporation Commission (KCC) and that the Rich Hill-Hume acquisition was approved by the Missouri Public Service Commission. (Missouri PSC).

Greeley proposes to operate the system of Commercial, and the acquired systems of Mound City, Pleasanton, and Rich Hill-Hume, as a single system in a manner so that there would be no change in the markets served, except that the sales for resale presently made by Commercial would be eliminated, with all sales by Greeley being regulated by either the KCC or the Missouri PSC.

Consequently, Commercial requests that the Commission cancel its FERC Gas Tariff, which includes FERC Rate Schedule F-1 covering its sales for resale. Greeley desires that the Commission waive the reporting requirements under the NGA that would result from approval of the application. Finally, it is requested that the Commission expedite its consideration of the application in order that approval might be received prior to July 31, 1988, the date by which the transaction could be closed without modifying the Purchase Agreement.

Comment date: May 11, 1988, in accordance with Standard Paragraph F at the end of this notice.

5. Alabama-Tennessee Natural Gas Company

[Docket No. CP88-325-000]

Take notice that on March 31, 1988, Alabama-Tennessee Natural Gas Company (Applicant), P.O. Box 918, Florence, Alabama 35631, filed in Docket No. CP88-325-000 an application pursuant to section 7(c) of the Natural Gas Act for a certificate of public convenience and necessity to transport natural gas on behalf of Amoco Chemical Company (Amoco), all as more fully set forth in the application which is on file with the Commission and open to public inspection.

Applicant requests authorization to transport on behalf of Amoco, on an interruptible basis for a term of one year, up to 14,000 dth of gas per day. Applicant, it is said, would receive such gas at the existing point of interconnection between the facilities of Applicant and Tennessee Gas Pipeline Company in Alcorn County, Mississippi or Colbert County, Alabama, and/or Columbia Gulf Transmission Company located in Alcorn County, Mississippi, and or Tennessee River Intrastate Gas Company located in Colbert County, Alabama.

Applicant states further that it would redeliver equivalent quantities of gas to Amoco at existing points of interconnection between the facilities of Applicant and Amoco as set forth in Exhibit F of the application.

For this transportation service, applicant represents that it would charge Amoco a transportation rate based on Sheet No. 4 of Applicant's FERC Gas Tariff, First Revised Volume No. 1.

Applicant avers that the transportation agreement would remain in force for a primary term of 1 year from the date of initial deliveries, and year to year thereafter unless and until terminated by either party giving proper notice.

Comment date: May 11, 1988, in accordance with Standard Paragraph F at the end of this notice.

Standard Paragraph

F. Any peson desiring to be heard or make any protest with reference to said filing should on or before the comment date file with the Federal Energy Regulatory Commission, 825 North Capitol Street NE., Washington, DC 20426, a motion to intervene or a protest in accordance with the requirements of the Commission's Rules of Practice and Procedure (18 CFR 385.211 and 385.214) and the Regulations under the Natural Gas Act (18 CFR 157.10). All protests filed with the Commission will be considered by it in determining the appropriate action to be taken but will not serve to make the protestants parties to the proceeding. Any peson wishing to become a party to a proceeding or to participate as a party in any hearing therein must file a motion to intervene in accordance with the Commission's Rules.

Take further notice that, pursuant to the authority contained in and subject to jurisdiction conferred upon the Federal Energy Regulatory Commission by sections 7 and 15 of the Natural Gas Act and the Commission's Rules of Practice and Procedure, a hearing will be held without further notice before the Commission or its designee on this filing if no motion to intervene is filed within the time required herein, if the Commission on its own review of the matter finds that a grant of the certificate is required by the public convenience and necessity. If a motion for leave to intervene is timely filed, or if the Commission on its own motion believes that a formal hearing is required, further notice of such hearing will be duly given.

Under the procedure herein provided for, unless otherwise advised, it will be unnecessary for the applicant to appear or be represented at the hearing.

G. Any person or the Commission's staff may, within 45 days after the issuance of the instant notice by the Commission, file pursuant to Rule 214 of the Commission's Procedural Rules (18 CFR 385.214) a motion to intervene or notice of intervention and pursuant to § 157.205 of the Regulations under the Natural Gas Act (18 CFR § 157.205) a protest to the request. If no protest is filed within the time allowed therefor, the proposed activity shall be deemed to be authorized effective the day after the time allowed for filing a protest. If a protest is filed and not withdrawn within 30 days after the time allowed for filing a protest, the instant request shall be treated as an application for

authorization pursuant to section 7 of the Natural Gas Act.

Lois D. Cashell,

Acting Secretary.

[FR Doc. 88-8972 Filed 4-22-88; 8:45 am]

BILLING CODE 6717-01-M

[Docket No. GP88-14-000]

State of Kentucky, Public Service Commission, Blackjog #5 Well et al., JD81-43949 et al. Preliminary Finding That Jurisdictional Agency Determinations Are Not Supported By Substantial Evidence

Issued April 20, 1988.

On various dates between 1981 and 1985, the Public Service Commission of the State of Kentucky (Kentucky) notified the Commission of 22 well category determinations made pursuant to section 503 of the Natural Gas Policy Act of 1978 (NGPA). Absent Commission action, the notices would have become final after 45 days pursuant to § 275.202(a) of the Commission's regulations. [1] In each instance the Commission advised Kentucky within 45 days that the notices were deficient, lacking either sufficient explanation of the basis for each determination or sufficient information to complete the applications. Consequently, none of the determinations has become final.

[1] 18 CFR 275.202(a) (1987).

Despite repeated requests for necessary additional information, none of the requisite information has been provided by Kentucky or the applicants. The Appendix to this order summarizes each determination and its deficiency.

Under section 503(a) of the NGPA, when a jurisdictional state or federal agency makes a determination that natural gas qualifies under one of the pricing categories found in NGPA sections 102, 103, 107, or 108, the jurisdictional agency must provide the Commission with notice of the determination. Section 503(c)(3) authorizes the Commission to prescribe the form and content of filings made with jurisdictional agencies in connection with such determinations. Section 503(b) provides that the Commission shall reverse any jurisdictional agency determination if the Commission finds that the determination is unsupported by substantial evidence in the record upon which the determination was made.

The filing requirements for applications for determination are set forth in Subpart B of Part 274 of the Commission's regulations. These regulations specify the minimum information an applicant must file with a jurisdictional agency to support an affirmative determination. Also, these regulations specify the information a jurisdictional agency must file with this Commission to support a notice of determination. A notice of determination must include a copy of the application, all information required by §§ 274.201-208 of the Commission's regulations to be filed with the jurisdictional agency, and an explanatory statement sufficient to enable a person examining the notice to ascertain the basis for the determination without reference to information or data not contained in the notice.

The Commission's procedures for reviewing a notice of determination are set forth in Part 275 of the Commission's regulations. Under § 2754.202(a), the Commission may, before any determination becomes final, make a preliminary finding that the determination is not supported by substantial evidence. Any state or federal agency or any other person may, within 30 days after issuance of a notice of a preliminary finding, submit written comments and may request an informal conference with the Commission's staff. A final order must be issued within 120 days after issuance of the premilinary finding.

Based on the foregoing facts and circumstances, particularly because the notices of determinations have been deficient for a significant period, the Commission hereby gives notice of its preliminary finding that the subject well category determinations submitted by Kentucky are not supported by substantial evidence in the record upon which the determination were made.

By direction of the Commission.

Lois D. Cashell,

Acting Secretary.

APPENDIX

Applicant	Well name	NGPA section	FERC No.	KY APP NGPA No.	Initial FERC Ltr	Deficiency in Record	Purchaser
Alert Oil & Gas Company, Inc.	Blacklog #95	107	JD81-43949	16-15950029	9-17-81	Indicates over 5% non-shale footage.	Columbia Gas Transmission Corp.
Texas International Petroleum Corp.	Walter McClain #1	107	JD81-45208	16-175-502310	9-24-81	Well log not marked	(Unknown)
Do	Lowell Hopkins #1	107	JD81-45209	16-175-502311	9-24-81	do	(Unknown)
Reef Petroleum Corp. of Indiana.	Alberta Corum #1	102	JD83-02622	16-107-502789	11-24-82	Lacks required Behind-the-Pipe Exclusion economic test.	(Unknown)
Bow Valley Petroleum, Inc.	KRCC #120	107	JD84-02903	16-133-505210	12-2-83	Lacks gamma ray log	Columbia Gas Transmission Corp
Do	KRCC #16	107	JD84-02904	16-133-505211	12-2-83	do	Do
Do	Kentucky River Coal #107.	107	JD84-02905	16-193-505212	12-2-83	do	Do
Do	Kentucky River Coal #104.	107	JD84-02906	16-193-505213	12-2-83	do	Do
Do	Kentucky River Coal #103.	107	JD84-02907	16-193-505214	12-2-83	do	Do
Do	KRCC #156	107	JD84-02908	16-193-505215	12-2-83	do	Do
Do	Kentucky River Coal #117.	107	JD84-02909	16-133-505216	12-2-83	do	Do
Do	Kentucky River Coal #102.	107	JD84-02910	16-193-505217	12-2-83	do	Do
Do	KRCC #146	107	JD84-02911	16-193-505218	12-2-83	do	Do
Do	Harden Campbell #150.	107	JD84-02912	16-133-505219	12-2-83	do	Do
Do	Kentucky River Coal #105.	107	JD84-02913	16-133-505220	12-2-83	do	Do
Do	KRCC #115	107	JD84-02914	16-133-505221	12-2-83	do	Do
Do	Kenneth Loudy #157	107	JD84-02915	16-193-505222	12-2-83	do	Do
William P. Brown and Ralph Maertz.	Clifton Zentmyer #1	107	JD84-20592	16-047-506552	3-29-84	Well log not marked	Western Kentucky Gas Co.
Cobra Oil and Gas, Inc	Carpenter Heirs (Earl Spurlock #1).	103	JD84-28392	16-153-506922	5-21-84	Lacks location plat	Columbia Gas Co. of Kentucky, Inc.
Welch Bros. Oil & Gas Inc.	Harold Prewitt #1	103	JD84-28443	16-235-506973	5-21-84	Lacks Original spud date	(Unknown)
Bowling Green Petroleum Corp.	Earl & Sarah Pyle #1A.	103	JD85-33842	16-169-507383	7-17-85	do	Atlantic Resources, Inc.
Bow Valley Petroleum, Inc.	Kentucky River Coal #105.	107	JD85-34188	16-193-507498	7-25-85	Well log not correctly marked	Columbia Gas Transmission Corp.

FR Doc. 88-8974 Filed 4-22-88; 8:45 am]

BILLING CODE 6717-01-M

[Docket No. RP88-42-000]

Pacific Offshore Pipeline Co.; Informal Settlement Conference

April 20, 1988.

Take notice that an informal settlement conference will be convened in the above proceeding on May 5, 1988, at 10:00 a.m. at the offices of the Federal Energy Regulatory Commission, 825 North Capitol Street NE., Washington, DC 20426.

Any party, as defined by 18 CFR 385.102(c), is invited to attend. Persons wishing to become a party must move to intervene and receive intervenor status pursuant to the Commission's regulations (18 CFR 385.214).

For additional information, contact John C. Walley (202) 357-8458 or Anja M. Clark (202) 357-5740.

Lois D. Cashell,

Acting Secretary.

[FR Doc. 88-8969 Filed 4-22-88; 8:45 am]

BILLING CODE 6717-01-M

[Docket No. CI88-367-000]

Sabine Corp.; Application Requesting Retroactive Abandonment

April 20, 1988.

Take notice that on March 18, 1988, as supplemented on April 13, 1988, Sabine Corporation (Sabine), 1000 LTV Center, 2001 Ross Avenue, Dallas, Texas 75201, filed an application pursuant to section 7(b) of the Natural Gas Act and § 157.30 of the Commission's Regulations requesting retroactive permanent abandonment to be effective in November 1971 for sales of gas dedicated to Natural Gas Pipeline Company of America (NGPL) from the Hoyt No. 1-2 well located in Section 2, T17N-R17W, Dewey County, Oklahoma. Sabine states that it has executed a settlement agreement with NGPL whereby Samine agreed to pay amounts owed to NGPL and NGPL agreed to release the gas upon issuance of abandonment authorization by the Commission.

In support of its application, Sabine states that pursuant to a contract dated December 17, 1962, as amended on July 28, 1967, Sarkeys, Inc. (Sarkeys), Sabine's predecessor-in-interest,[1] sold gas to NGPL from the Hoyt No. 1-2 well. Sabine states that in 1971 Sarkeys sought release of the Hoyt No. 1-2 well from the contract with NGPL because the pressure from the well could not buck NGPL's line pressure. Sabine avers that although NGPL prepared a release agreement in 1971, NGPL never formally executed the release. Sabine states that begining in 1971 Sarkeys sold gas from the Hoyt No. 1-2 well to Mobil Oil Corporation (predecessor-in-interest to Signal Oil and Gas Company) which processed the gas, and in turn sold the residue gas attributable thereto to Panhandle Eastern Pipe Line Company (Panhandle) under a percentage-of-proceeds contract.

Sabine states that Sarkeys did not obtain abandonment authorization when it ceased selling gas from the Hoyt No. 1-2 well to NGPL. Sabine states that it and NGPL have determined that through April 1, 1986, Sabine sold to other purchasers 63,444 Mcf of gas which was dedicated to NGPL. Sabine states that the Hoyt No. 1-2 well is effectively shut-in because the gathering system has corroded and cannot transport the gas.

Sabine and NGPL entered into a settlement agreement dated August 22, 1984. The settlement provides that upon (1) receipt of abandonment authorization from the Commission, (2) determination of the volume of gas delivered to other purchasers from November 1971 until the date the Commission's approval of abandonment authorization becomes final, and (3) payment by Sabine to NGPL of an amount equal to NGPL's weighted average cost of gas over the relevant period less the price per Mcf NGPL would have paid under the December 17, 1962, contract, plus interest computed according to 18 CFR 154.102(d), NGPL will release Sabine from any claim of breach of contract arising from the delivery of gas from the Hoyt No. 1-2 well and will release the acreage attributable to the Hoyt No. 1-2 well as of November 1971.

Any person desiring to be heard or to make any protest with reference to said application should on or before May 11, 1988, file with the Federal Energy Regulatory Commission, Washington, DC 20426, a petition to intevene or a protest in accordance with the requirements of the Commission's Rules of Practice and Procedure (18 CFR 385.211, 385.214). All protests files with the Commission will be considered by it in determining the appropriate action to be taken but will not serve to make the protestants parties to the proceeding. Any person wishing to become a party to the proceeding herein must file a petition to intervene in accordance with the Commission's rules.

Under the procedure herein provided for, unless otherwise advised, it will be unnecessary for Sabine to appear or to be represented at the hearing.

Lois D. Cashell,

Acting Secretary.

[FR Doc. 88-8971 Filed 4-22-88; 8:45 am]

BILLING CODE 6717-01-M

[1] By order issued February 4, 1980, Sarkey's small producer certificate in Docket No. CS71-999 was amended by substituting Sabine as the certificate holder. Sarkeys lost its status as a small producer effective April 1, 1978. The small producer certificate in Docket No. CS71-999 therefore does not cover sales under contracts dated on or after April 1, 1978.

[Docket No. SA88-7-000]

Webb-Duval Gatherers; Petition for Adjustment

April 20, 1988.

Take notice that on February 1, 1988, Webb-Duval Gatherers (Webb-Duval) filed a petition under section 502(c) of the Natural Gas Policy Act of 1978 (NGPA) requesting the Commission to grant an adjustment from § 284.123(b)(1)(ii) of the Commission's regulations so that it may use intrastate transportation rates it has on file with the Texas Railroad Commission (TRC) as the applicable rates for transportation under section 311(a)(2) of the NGPA.

Webb-Duval states it is a gas utility and intrastate pipeline company providing gathering and intrastate transportation service in Texas and that its gathering and transportation rates, filed with the TRC in the form of tariffs, are subject to regulation by the TRC. Webb-Duval intends to transport gas on behalf of various interstate pipeline companies and local distribution companies served by interstate pipelines under negotiated transportation agreements pursuant to NGPA section 311(a)(2).

Section 284.123(b)(1)(ii) of the Commission's regulations provides that under section 311 of the NGPA, an intrastate pipeline may elect to charge rates contained in rate schedules for intrastate service on file with the appropriate state regulatory agency, as long as the services are comparable. The Commission has interpreted comparable to mean city-gate service. Because Webb-Duval has no city-gate sales or city-gate rate, it cannot satisfy the requirement of § 284.123(b)(1)(ii) and seeks the adjustment in order to be permitted to base its rates on its tariff on file with TRC. Webb-Duval states that upon issuance of an adjustment it would, within a reasonable time, not to exceed 30 days, make a filing with

supporting documents necessary for the TRC to make a determination that its rate proposed for section 311(a) service is cost-based and fair and equitable. It agrees to use for its section 311(a) services rates not in excess of the rate found by the TRC to be cost-based and fair and equitable. Webb-Duval states that the adjustment it seeks is necessary, in view of the circumstances, to prevent special hardship and inequity that would otherwise result from forcing it to submit a § 284.123(b)(2) filing and would avoid unnecessary dual agency review.

The procedures applicable to the conduct of this adjustment proceeding are found in Subpart K of the Commission's Rules of Practice and Procedure. Any person desiring to participate in this adjustment proceeding must file a motion to intervene in accordance with the provisions of Subpart K. All motions to intervene must be filed within 15 days after publication of this notice in the **Federal Register**. The petition is on file with the Commission and is available for public inspection.

Lois D. Cashell,

Acting Secretary.

[FR Doc. 88-8970 Filed 4-22-88; 8:45 am]

BILLING CODE 6717-01-M

FEDERAL COMMUNICATIONS COMMISSION

[MM Docket No. 88-171]

Applications for Consolidated Hearing; Faith Broadcasting, Inc., and Daryl M. Kasper

1. The Commission has before it the following mutually exclusive applications for a new FM station:

Applicant, city and state	File No.	MM Docket No.
A. Faith Broadcasting, Inc.; Minot, ND.	BPH-870224MB	88-171
B. Daryl M. Kasper; Minot, ND.	BPH-870224MR	.....

2. Pursuant to section 309(e) of the Communications Act of 1934, as amended, the above applications have been designated for hearing in a consolidated proceeding upon the issues whose headings are set forth below. The text of each of these issues has been standardized and is set forth in its entirety under the corresponding headings at 51 FR 19347 (May 29, 1986). The letter shown before each applicant's name, above, is used below to signify whether the issue in question applies to that particular applicant.

Issue Heading and Applicants

1. Air Hazard, A, B
2. Comparative, A, B
3. Ultimate, A, B

3. If there is any non-standardized issue in this proceeding, the full text of the issue and the applicants to which it applies are set forth in an Appendix to this Notice. A copy of the complete HDO in this proceeding is available for inspection and copying during normal business hours in the FCC Dockets Branch (Room 230), 1919 M Street NW., Washington, DC. The complete text may also be purchased from the Commission's duplicating contractor, International Transcription Services, Inc., 2100 M Street NW., Washington, DC 20037. (Telephone (202) 857-3800).

W. Jan Gay,

Assistant Chief, Audio Services Division, Mass Media Bureau.

[FR Doc. 88-9027 Filed 4-22-88; 8:45 am]

BILLING CODE 6712-01-M

[MM Docket No. 88-150]

Applications for Consolidated Hearing; Radio Indio Corp. et al.

1. The Commission has before it the following mutually exclusive applications for a new FM station:

Applicant, city and State	File No.	MM Docket No.
A. Radio Indio Corporation, Indio, CA.	BPH-851030MK	88-150
B. Ty Stevens Broadcasting Limited, Indio, CA.	BPH-851030MV	
C. M. Christine Ottinger, LaQuinta (Indio), CA.	BPH-851025ML [1]	
D. Ronald Payne, Indio, CA.	BPH-851029MY [1]	

[1] Previously dismissed.

2. Pursuant to section 309(e) of the Communications Act of 1934, as amended, the above applications have been designed for hearing in a consolidated proceeding upon the issues whose headings are set forth below. The test of each of these issues has been standardized and is set forth in its entirety under the corresponding headings at 51 FR 19347 (May 29, 1986). The letter shown before each applicant's name, above, is used below to signify whether the issue in question applies to that particular applicant.

Issue Heading and Applicants

1. Environmental Impact, A, B
2. Comparative, A, B
3. Ultimate, A, B

3. If there are any non-standardized issues in this proceeding, the full text of the issue and the applicants to which it applies are set forth in an Appendix to this Notice. A copy of the complete HDO in this proceeding is available for inspection and copying during normal business hours in the FCC Dockets Branch (Room 230), 1919 M Street NW., Washington, DC. The complete text may also be purchased from the Commission's duplicating contractor, International Transcription Services, Inc., 2100 M Street NW., Washington, DC 20037. (Telephone (202) 857-3800).

W. Jan Gay,

Assistant Chief, Audio Services Division, Mass Media Bureau.

[FR Doc. 88-9028 Filed 4-22-88; 8:45 am]

BILLING CODE 6712-01-M

[MM Docket No. 88-172]

Applications for Consolidated Hearing; Janice Faye Surber et al.

1. The commission has before it the following mutually exclusive applications for a new FM station:

Applicant, city and state	File No.	MM Docket No.
A. Janice Faye Surber, Jellico, TN.	BPH-870313NB....	88-172
B. Fate Lamont McAnally, Jellico, TN.	BPH-870313NE....	.....

2. Pursuant to section 309(e) of the Communications Act of 1934, as amended, the above applications have been designed for hearing in a consolidated proceeding upon the issues whose headings are set forth below. The text of each of these issues has been standardized and is set forth in its entirety under the corresponding headings at 51 FR 19347, May 29, 1986. The letter shown before each applicant's name, above, is used below to signify whether the issue in question applies to that particular applicant.

Issue Heading and Applicant(s)

1. Comparative, All
2. Ultimate, All

3. If there is any non-standardized issue(s) in this proceeding, the full text of the issue and the applicant(s) to which it applies are set forth in an Appendix to the Notice. A copy of the complete HDO in this proceeding is available for inspection and copying during normal business hours in the FCC

Dockets Branch (Room 230), 1919 M Street NW., Washington, DC. The complete text may also be purchased from the Commission's duplicating contractor, International Transcription Services, Inc., 2100 M Street NW., Washington, DC 20037. (Telephone (202) 857–3800).

W. Jan Gay,

Assistant Chief, Audio Services Division, Mass Media Bureau.

[FR Doc. 88–9029 Filed 4–22–88; 8:45 am]

BILLING CODE 6712–01–M

[MM Docket No. 88–170]

Applications for Consolidated Hearing; Viacom Broadcasting of Missouri, Inc., et al.

1. The commission has before it the following mutually exclusive applications for a new FM station:

Applicant, city and state	File No.	MM Docket No.
A. Viacom Broadcasting of Missouri, Inc. (KMOV (TV)); St. Louis, MO.	BRCT–871001KG	88–170
B. Mark L. Wodlinger; St. Louis, MO.	BPCT–871231KE	

2. Pursuant to section 309(e) of the Communications Act of 1934, as amended, the above applications have been designated for hearing in a consolidated proceeding upon the issues whose headings are set forth below. The text of each of these issues has been standardized and is set forth in its entirety under the corresponding headings at 51 FR 19347, May 29, 1986. The letter shown before each applicant's name, above, is used below to signify whether the issue in question applies to that particular applicant.

Issue Heading and Applicant(s)

Comparative, A, B
Ultimate, A, B

3. If there is any non-standardized issue(s) in this proceeding, the full text of the issue and the applicant(s) to which it applies are set forth in an Appendix to this Notice. A copy of the complete HDO in this proceeding is available for inspection and copying during normal business hours in the FCC Dockets Branch (Room 230), 1919 M Street, NW., Washington, DC. The complete text may also be purchased from the Commission's duplicating contractor, International Transcription Services, Inc., 2100 M Street NW., Washington, DC 20037. (Telephone No. (202) 857–3800).

Roy J. Stewart,

Chief, Video Services Division, Mass Media Bureau.

[FR Doc. 88–9030 Filed 4–22–88; 8:45 am]

BILLING CODE 6712–01–M

FEDERAL DEPOSIT INSURANCE CORPORATION

Information Collection Submitted to OMB for Review

AGENCY: Federal Deposit Insurance Corporation.

ACTION: Notice of information collection submitted to OMB for review and approval under the Paperwork Reduction Act of 1980.

Title of Information Collection: Consolidated Reports of Income and Condition (Insured State-Chartered Savings Banks) (OMB No. 3064–0054).

Background: In accordance with requirements of the Paperwork Reduction Act of 1980 (44 U.S.C. Chapter 35), the FDIC hereby gives notice that it has submitted to the Office of Management and Budget a request for the review and approval of the information collection system identified above.

ADDRESSES: Written comments regarding the submission should be addressed to Robert Neal, Office of Information and Regulatory Affairs, Office of Management and Budget, Washington, DC 20503, and to John Keiper, Assistant Executive Secretary, Federal Deposit Insurance Corporation, Washington, DC 20429.

Comments: Comments on this collection of information should be submitted on or before May 25, 1988.

FOR FURTHER INFORMATION CONTACT: Requests for a copy of the submission should be sent to John Keiper, Assistant Executive Secretary (Administration), Federal Deposit Insurance Corporation, Washington, DC 20429, telephone (202) 898–3810.

SUMMARY: The FDIC has requested OMB approval to add a memorandum item to the balance sheet of the report of condition prepared by Insured State-Chartered Savings Banks as part of the Call Report submission for June 30, 1988. The item will have banks indicate, by choosing the appropriate numerical code, the statement that best describes the most comprehensive level of auditing work performed for the bank by independent external auditors as of any date during 1987. In the future, this memorandum item will appear annually on the balance sheet of the March 31 Call Report. The addition of the item would not change the annual reporting burden on FDIC-supervised savings banks which is currently estimated as 57,590 hours, collectively.

Dated: April 19, 1988.

Federal Deposit Insurance Corporation.

Hoyle L. Robinson,

Executive Secretary.

[FR Doc. 88–9003 Filed 4–22–88; 8:45 am]

BILLING CODE 6714–01–M

Information Collection Submitted to OMB For Review

AGENCY: Federal Deposit Insurance Corporation.

ACTION: Notice of information collection submitted to OMB for review and approval under the Paperwork Reduction Act of 1980.

Title of Information Collection: Consolidated Reports of Condition and Income (Insured State Nonmember Commercial Banks) (OMB No. 3064–0052).

Background: In accordance with requirements of the Paperwork Reduction Act of 1980 (44 U.S.C. Chapter 35), the FDIC hereby gives notice that it has submitted to the Office of Management and Budget a request for the review and approval of the information collection system identified above.

ADDRESS: Written comments regarding the submission should be addressed to Robert Neal, Office of Information and Regulatory Affairs, Office of Management and Budget, Washington, DC 20503 and to John Keiper, Assistant Executive Secretary, Federal Deposit Insurance Corporation, Washington, DC 20429.

Comments: Comments on this collection of information should be submitted on or before May 25, 1988.

SUMMARY: The FDIC is requesting OMB approval to add a memorandum item to the balance sheet of the report of condition prepared by insured state nonmember commercial banks as part of the Call Report submission for June 30, 1988. The item will have banks indicate, by choosing the appropriate numerical code, the statement that best describes the most comprehensive level of auditing work performed for the bank by independent external auditors as of any date during 1987. In the future, this memorandum item will appear annually on the balance sheet of the March 31 Call Report. The addition of the item would not change the annual reporting burden on FDIC-supervised commercial

banks which is currently estimated as 655,411 hours, collectively.

Dated: April 19, 1988.

Federal Deposit Insurance Corporation.

Hoyle L. Robinson,

Executive Secretary.

[FR Doc. 88-9014 Filed 4-22-88; 8:45 am]

BILLING CODE 6714-01-M

FEDERAL MARITIME COMMISSION

Agreement(s) Filed

The Federal Maritime Commission hereby gives notice of the filing of the following agreement(s) pursuant to section 5 of the Shipping Act of 1984.

Interested parties may inspect and obtain a copy of each agreement at the Washington, DC Office of the Federal Maritime Commission, 1100 L Street NW., Room 10325. Interested parties may submit comments on each agreement to the Secretary, Federal Maritime Commission, Washington, DC 20573, within 10 days after the date of the **Federal Register** in which this notice appears. The requirements for comments are found in § 572.603 of Title 46 of the Code of Federal Regulations. Interested persons should consult this section before communicating with the Commission regarding a pending agreement.

Agreement No: 224-200108

Title: Manchester Terminal Corporation Terminal Handling Agreement

Parties:

Manchester Terminal Corporation (MTC)

Southern Stevedoring Company, Inc. (SSC)

Synopsis: The proposed agreement assigns SSC the right to load, unload and render other terminal services to cargo and containers moving through MTC's facilities.

Agreement No: 224-200109

Title: Long Beach Terminal Agreement

Parties:

City of Long Beach

Cooper/T. Smith Stevedoring Co., Inc. (Cooper)

Synopsis: The agreement grants Cooper a non-exclusive preferential assignment of Berth 62 and Berths 3 and 4, Pier A in the Harbor District of the City of Long Beach. The agreement amends and restates the agreements between the parties as a result of substitution of terminal facilities covered under a previous agreement.

By Order of the Federal Maritime Commission.

Joseph C. Polking,

Secretary.

Dated: April 20, 1988.

[FR Doc. 88-8996 Filed 4-22-88; 8:45 am]

BILLING CODE 6730-01-M

Ocean Freight Forwarder License; Applicants; Challenge Crating and Storage, Inc., et al.

Notice is given that the following applicants have filed with the Federal Maritime Commission applications for licenses as ocean freight forwarders pursuant to section 19 of the Shipping Act of 1984 (46 U.S.C. app. 1718 and 46 CFR Part 510).

Persons knowing of any reason why any of the following applicants should not receive a license are requested to contact the Office of Freight Forwarder and Passenger Vessel Operations, Federal Maritime Commission, Washington, DC 20573.

Challenge Crating and Storage Inc., 950 Eller Dr., P.O. Box 350582, Ft. Lauderdale, FL 33335, Officers: Ian Elder, President/Director; James Elder, V. Pres./Director; Irvine Smyth, Director

Techno Express Inc., 182-30 150th Rd. 2nd Floor, Jamaica, N.Y. 11434, Officer: Pierre Gawi, President

Alliance International Forwarders, Inc., 9009 Glesby #125, Houston, TX 77029, Officer: Wolfgang Anderson, President

Professional Export Services, Inc., 302 6th Avenue North, Hopkins, Minnesota 55343, Officers: John T. Andrusko, President; Elizabeth A. Thompson, Vice President

International Freight Transport, 365 Coral Circle, El Segundo, CA 90245, Officer: Paul S. Cohen, President

Transcontinental Transportation Systems Inc., 161-15 Rockaway Boulevard, Jamaica, New York 11434, Officers: George H. Hundeshagen, President; Josephine A. Hundeshagen, Exec. V. Pres.

Morgan & Brother Manhattan Storage Co. Inc., 1411 Third Avenue, New York, New York 10028, Officers: Jeffrey S. Morgan, President; Hillary A. Morgan, Vice President.

By the Federal Maritime Commission.

Joseph C. Polking,

Secretary.

Dated: April 20, 1988.

[FR Doc. 88-8998 Filed 4-22-88; 8:45 am]

BILLING CODE 6730-01-M

Ocean Freight Forwarder License; Revocations; Oscar Shipping, Inc., et al.

Notice is hereby given that the following ocean freight forwarder licenses have been revoked by the Federal Maritime Commission pursuant to section 19 of the Shipping Act of 1984 (46 U.S.C. app. 1718) and the regulations of the Commission pertaining to the licensing of ocean freight forwarders, 46 CFR Part 510.

License Number: 2671

Name: Oscar Shipping, Inc. dba Cruz Del Sur Shipping

Address: 1040 Elizabeth Ave., Elizabeth, NJ 07201

Date Revoked: March 29, 1988

Reason: Failed to maintain a valid surety bond

License Number: 2877

Name: International Pursuits, Ltd.

Address: 1408 Northland Drive, Suite 306, Mendota Heights, MN 55120

Date Revoked: April 6, 1988

Reason: Failed to maintain a valid surety bond

License Number: 3082

Name: Marina Perez and Edgar Machuca dba Air Ocean International

Address: 139 Mitchell Ave., So. San Francisco, CA 94080

Date Revoked: April 8, 1988

Reason: Failed to maintain a valid surety bond

Robert G. Drew,

Director, Bureau of Domestic Regulation.

[FR Doc. 88-8997 Filed 4-22-88; 8:45 am]

BILLING CODE 6730-01-M

FEDERAL RESERVE SYSTEM

Trustcorp, Inc.; Formation of Acquisition by, or Merger of Bank Holding Companies; and Acquisition of Nonbanking Company; Correction

This notice corrects a previous **Federal Register** notice (FR Doc. 88-4814) published at page 7237 of the issue for Monday, March 7, 1988.

Under the Federal Reserve Bank of Cleveland, the entry for Trustcorp, Inc. is revised to read as follows:

A. **Federal Reserve Bank of Cleveland** (John J. Wixted, Jr., Vice President) 1455 East Sixth Street, Cleveland, Ohio 44101:

1. *TrustCorp, Inc.*, Toledo, Ohio; to acquire 100 perent of the voting shares of Summcorp, Fort Wayne, Indiana, and thereby indirectly acquire Summit Bank of Johnson County, Edinburg, Indiana; Summit Bank, Fort Wayne, Indiana; Summit Bank of Clinton County,

Frankfort, Indiana; Summit Bank of Kendallville, Kendallville, Indiana; Summit Bank of Marion, Marion, Indiana; Industrial Trust & Savings Bank, Muncie, Indiana; Summit Bank of Hamilton County, Sheridan, Indiana; Summit Bank of South Bend, South Bend, Indiana; and Decatur Financial, Inc., Decatur, Indiana, and thereby indirectly acquire Decatur Bank & Trust Co., Decatur, Indiana.

Summit Bank, Fort Wayne, Indiana, provides property and casualty insurance agency services and engages directly in insurance agency activities permissible for Indian banks pursuant to § 28-1-11-2 of the Indiana Code. This activity is conducted directly by and through Summit Bank, and this activity has been provided since 1973.

Summit Bank also has a wholly-owned subsidiary, Inbanc Insurance Company, which is a reinsurance corporation that underwrites credit life, accident, and health insurance.

In connection with this application, TrustCorp of Indiana, Inc., Fort Wayne, Indiana, has applied to become a bank holding company by acquiring 100 percent of the voting shares of SummCorp.

TrustCorp, Inc. and TrustCorp of Indiana, Inc., have also applied to acquire Summcorp Financial Services, Inc., Fort Wayne, Indiana, and thereby engage in discount brokerage activities pursuant to § 225.25(b)(15) of the Board's Regulation Y.

Comments on this application must be received by May 11, 1988.

Board of Governors of the Federal Reserve System, April 19, 1988.

James McAffee,

Associate Secretary of the Board.

[FR Doc. 88-8943 Filed 4-22-88; 8:45 am]

BILLING CODE 6210-01-M

FEDERAL TRADE COMMISSION

Granting of Request for Early Termination of the Waiting Period Under the Premerger Notification Rules

Section 7A of the Clayton Act, 15 U.S.C. 18a, as added by Title II of the Hart-Scott-Rodino Antitrust Improvements Act of 1976, requires persons contemplating certain mergers or acquisitions to give the Federal Trade Commission and the Assistant Attorney General advance notice and to wait designated periods before consummation of such plans. Section 7A(b)(2) of the Act permits the agencies, in individual cases, to terminate this waiting period prior to its expiration and requires that notice of this action be published in the **Federal Register**.

The following transactions were granted early termination of the waiting period provided by law and the premerger notification rules. The grants were made by the Federal Trade Commission and the Assistant Attorney General for the Antitrust Division of the Department of Justice. Neither agency intends to take any action with respect to these proposed acquisitions during the applicable waiting period:

TRANSACTIONS GRANTED EARLY TERMINATION BETWEEN: 040488 AND 041588

Name of acquiring person, name of acquired person, name of acquired entity	PMN No.	Date terminated
MCA Inc., Winterland Concessions Company, Winterland Concessions Company	88-1153	04/04/88
Royal Dutch Petroleum Company, Peter Anest, (88-1190) and Bill Anest (88-1191), S&S Petroleum Products	88-1190	04/04/88
Royal Dutch Petroleum Company, Bill Anest, S&S Petroleum Products	88-1191	04/04/88
Christopher C. Skase, HRI Group, Inc., HRI Group, Inc	88-1206	04/04/88
Gordon P. Getty, c/o P.A.J.W. Corp., DeltaUS Corporation, DeltaUS Corporation	88-1216	04/04/88
Smithkline Beckman Corporation, International Clinical Laboratories, Inc., International Clinical Laboratories, Inc	88-1225	04/04/88
Pacific Enterprises, Sabine Corporation, Sabine Corporation	88-1246	04/04/88
Pacific Enterprises, Sabine Corporation, Sabine Corporation	88-1247	04/04/88
Mr. J. Leibovitz, Dinner Bell Foods, Inc., Dinner Bell Foods, Inc	88-1054	04/06/88
Caroline Hunt Trust Estate, First Executive Corporation, First Executive Corporation	88-1167	04/06/88
Safeguard Scientifics, Inc., Bell Atlantic Corporation, CompuShop Incorporated	88-1179	04/06/88
Bunzl plc, Carl J. Dennis, DJ Wholesale Bldg. Materials, Inc., & P'ship Assets	88-1209	04/06/88
General Electric Company, Mobil Corporation, Montgomery Ward & Co., Incorporated	88-1164	04/07/88
Plaza Securities Company, Centel Corporation, Centel Corporation	88-1195	04/07/88
Sears, Roebuck and Co., Western Auto Supply Company, Western Auto Supply Company	88-1207	04/07/88
Tele-Communications, Inc., Eastgate Theatre, Inc., Eastgate Theatre, Inc	88-1212	04/07/88
TPR Investment Partners, Nine West Corporation, Nine West Corporation	88-1183	04/08/88
Tandy Corporation, GRiD Systems Corporation, GRiD Systems Corporation	88-1194	04/08/88
Thomas C. Foley, J.P. Stevens & Co., J.P. Stevens & Co	88-1226	04/08/88
West Point-Pepperell, Inc., J.P. Stevens & Co., Inc., J.P. Stevens & Co., Inc	88-1227	04/08/88
Peter R. Morris, American Finance Group, Inc., American Finance Group, Inc	88-1241	04/08/88
E.I. duPont de Nemours and Company, Clyde E. Miller, Victory, Inc. of Michigan, et. al	88-1245	04/09/88
E.I. duPont de Nemours and Company, C. John Miller, Miller Energy Inc., et. al	88-1249	04/08/88
Conrad Cafritz, BV Holdings Corporation, Big V Supermarkets, Inc	88-1266	04/08/88
Michael C. Cameron, Trust under Will of Benjamin L. Green, B. Green & Company, Inc. & Venture BG	88-1268	04/08/88
Bruno's, Inc., RFS Equity Partners, PWS Holding Corporation	88-1271	04/08/88
United Insurance Companies, Inc., Home Life Insurance Company, Orange State Life & Home Life Financial Assurance Corp.	88-1275	04/08/88
S. & W. Berisford PLC, Tejon Ranch Co., W-L Research, Inc	88-1302	04/08/88
Trusthouse Forte PLC, Kennedy Brookes PLC, Kennedy Brookes PLC	88-1230	04/09/88
Varity Corporation, TRW, Inc., TRW, INc.	88-1213	04/11/88
Lear Siegler Holdings Corp., FL Industries Holdings, Inc., The Jennings Division of FL Industries, Inc	88-1251	04/11/88
Total Compagnie Francaise des Petroles, Mid-Plains Petroleum Co., Inc., Mid-Plains Petroleum Co., Inc	88-1260	04/11/88
Kirschner Medical Corporation, Kenbar Industries, Inc., Professional Medical Products, Inc	88-1294	04/11/88
General Motors Corporation, MCorp, MTech Corp	88-1140	04/12/88
Morgan Stanley Group Inc., Colt Holdings Inc., Colt Holding Inc	88-1171	04/12/88
The Morgan Stanley Levereaged Equity Fund II, L.P., Colt Industries, Inc., Colt Industries, Inc	88-1172	04/12/88
The Morgan Stanley Leveraged Equity Fund II, L.P., Colt Holding, Inc., Colt Holding, Inc	88-1173	04/12/88
The Atlantic Group, Inc., Fairfield Communities, Inc., Fairfield Communities, Inc	88-1177	04/12/88
Robert L. Kaminski, The Philp Co. Trust, The Southland Corporation	88-1215	04/12/88
Bardon Group PLC, The Guyott Company, The Guyott Company	88-1224	04/12/88
Tele-Communications, Inc., Tele-Communications, Inc., TCI of Brainerd, Inc. and TCI of Duluth, Inc	88-1263	04/12/88

TRANSACTIONS GRANTED EARLY TERMINATION BETWEEN: 040488 AND 041588—Continued

Name of acquiring person, name of acquired person, name of acquired entity	PMN No.	Date terminated
The Pullman Company, Alta Acquisition Corp., The Regal Stamping Company Division	88-1270	04/12/88
Emhart Corporation, Price Pfister, Inc., Price Pfister, Inc	88-1279	04/12/88
David H. Murdock, Flexi-Van Corporation, Flexi-Van Corporation	88-1291	04/12/88
Doskocil Companies Incorporated, Wilson Foods Corporation, Wilson Foods Corporation	88-1223	04/13/88
Smithfield Foods, Inc., B. Hubert Beale, H. P. Beale & Sons, Inc	88-1267	04/13/88
International Life Corp., CIGNA Corporation, INA Life Insurance Company, INA Security Corporation	88-1199	04/15/88
International Business Machines Corporation, Pacific Telesis Group, PacTel Communications Companies	88-1204	04/15/88
Roundy's Inc., Cardinal Distribution Inc., Cardinal Foods, Inc	88-1229	04/15/88
Brierley Investments Limited, CalMat Co., CalMat Co	88-1255	04/15/88
Unione Italiana di Riassicura-zione S.p.A., Baltica Holding A/S, Baltica-Skandinavia Reinsurance Co. of America, Inc	88-1261	04/15/88
Control Data Corporation, Silicon Graphics, Inc., Silicon Graphics, Inc	88-1265	04/15/88
Medco Containment Services, Inc., National Data Corporation, National Data Corporation	88-1277	04/15/88
Transamerica Corporation, Kaufman and Broad, Inc., Anchor National Life Insurance Co	88-1283	04/15/88
United Meridian Corporation, Ensource Inc., Ensource Inc	88-1296	04/15/88
Longview Fibre Company, Boise Cascade Corporation, Boise Cascade Corporation	88-1300	04/15/88
Boise Cascade Corporation, Longview Fibre Company, Longview Fibre Company	88-1301	04/15/88
Harrisons & Crosfield PLC, Michael G. Woodbury, Diamond Paint Lumber Co., & Woodbury Interestate	88-1306	04/15/88
Harrisons & Crosfield PLC, Ralph B. Woodbury, Diamond Point Lumber Co., Inc. & Woodbury Interstate	88-1307	04/15/88
British & Commonwealth Holdings PLC, British & Commonwealth Holdings PLC, Fundamental Brokers Institutional Associates, A Limited	88-1308	04/15/88
Data Technology Corporation, Compagnie Generale d'Electricite, Qume Corporation	88-1309	04/15/88
Royal Dutch Petroleum Company, Atlantic Richfield Company, Atlantic Richfield Company	88-1312	04/15/88
Lend Lease Corporation Limited, International Income Property, inc., International Income Property, Inc	88-1313	04/15/88
The Thos. D. Murphy Co., Tele-Communications, Inc., Shaw-Barton, Inc	88-1352	04/15/88
Kizo Matsumoto, The Prudential Insurance Company of America, Kuilima Development Company	88-1353	04/15/88
Toufic Aboukhater, The Henley Group, Inc., Henley Manufacturing Corp	88-1361	04/15/88

FOR FURTHER INFORMATION CONTACT: Sandra M. Peay, Contact Representative, Premerger Notification Office, Bureau of Competition, Room 301, Federal Trade Commission, Washington, DC 20580, (202) 326-3100.

By direction of the Commission.

Emily H. Rock,

Secretary.

[FR Doc. 88-8950 Filed 4-22-88; 8:45 am]

BILLING CODE 6750-01-M

DEPARTMENT OF HEALTH AND HUMAN SERVICES

Office of Human Development Services

Federal Council on the Aging; Meeting

Agency Holding the Meeting: Federal Council on the Aging.

Time and Date: Meeting begins at 9:00 a.m. and ends at 5:00 p.m. on Wednesday, May 18, 1988; and begins at 9:00 a.m. and ends at 3:00 p.m. on Thur day, May 19, 1988.

Place: On Wednesday, May 18, The Apollo, Holiday Inn-Capitol, 550 C Street, SW., from 9:00 a.m. to 12 Noon, and Thursday, May 19, The Lewis, Holiday Inn-Capitol, 550 C Street, SW., from 9:00–4:00 p.m., Washington, DC 20024. See below for May 18, p.m. Forum.

Status: Meeting is open to the public.

Contact Persons: Pete Conroy, Room 4545, Wilbur Cohen Federal Building, 245-2451.

The Federal Council on the Aging was established by the 1973 Amendments to the Older Americans Act of 1965 (Pub. L. 93029, 42 U.S.C. 3015) for the purpose of advising the President, the Secretary of Health and Human Services, the Commissioner on Aging and the Congress on matters relating to the special needs of older Americans.

Notice is hereby given pursuant to the Federal Advisory Committee Act (Pub. L. 92-453, 5 U.S.C. App. 1, Sec. 10, 1976) that the Council will hold its May quarterly meeting on May 18 and 19 from 9:00 a.m.–4:00 p.m. and from 9:00 a.m.–3:00 p.m. respectively. On May 18, the morning session will be an Executive Session, and the regular open meeting in the afternoon in the Apollo Meeting Room of the Holiday Inn-Capitol Hotel, 550 C Street, SW., Washington, DC 20024. On May 19, the Council will meet in the Lewis Meeting Room of the Holiday Inn-Capitol Hotel, 550 C Street, SW., Washington, DC 20024.

The agenda for a *Forum on Guardianship* to be held in the Stonehenge, Room 600, Hubert Humphrey Building, 200 Independence Avenue, SW., May 18 at 2 p.m., is as follows: Witnesses before the Council will include: Carol Fraser Fisk, Commissioner, Administration on Aging; Nancy Coleman, American Bar Association; Penny Hommel, The Center for Social Gerontology; Dan Quirk, National Association of State Units on Aging; Sandy Markwood or Local official, National Association of Counties; Representative from National Conference of State Legislatures.

The rest of the two-day meeting will include discussion of Current Projects, Committee Reports, Agenda Projects and Budget for 1988–89, the 1987 Annual Report to the President and Recommendations included therein—location of 1988 meetings, and briefing on 1991 White House Conference on the Aging project.

Dated: April 19, 1988.

Ingrid Azvedo,

Chairperson, Federal Council on the Aging.

[FR Doc. 88-8964 Filed 4-22-88; 8:45 am]

BILLING CODE 4130-01-M

National Institutes of Health

National Cancer Institute; Cancer Biology-Immunology Contracts Review Committee; Meeting

Pursuant to Pub. L. 92-463, notice is hereby given of the meeting of the Cancer Biology-Immunology Contracts Review Committee, National Cancer Institute, National Institutes of Health, June 3, 1988, Guest Quarters, Montgomery I Conference Room, 7335 Wisconsin Avenue, Bethesda, Maryland 20814.

This meeting will be open to the public on June 3 from 9 a.m. to 9:30 a.m. to discuss administrative details. Attendance by the public will be limited to space available.

In accordance with provisions set forth in secs. 552b(c)(4) and 552b(c)(6), Title 5, U.S.C. and sec. 10(d) of Pub. L.

92-463, the meeting will be closed to the public on June 3 from 9:30 a.m. to adjournment for the review, discussion and evaluation of individual contract proposals. These proposals and the discussions could reveal confidential trade secrets or commercial property such as patentable material and personal information concerning individuals associated with the proposals, disclosure of which would constitute a clearly unwarranted invasion of personal privacy.

Mrs. Winifred Lumsden, the Committee Management Officer, National Cancer Institute, Building 31, Room 10A06, National Institutes of Health, Bethesda, Maryland 20892 (301/496-5708) will provide summaries of the meeting and rosters of committee members upon request.

Dr. Wilna A. Woods, Executive Secretary, Cancer Biology-Immunology Contracts Review Committee, 5333 Westbard Avenue, Room 807, Bethesda, Maryland 20892 (301/496-7153) will furnish substantive program information.

Dated: April 12, 1988.

Betty J. Beveridge,

Committee Management Officer, NIH.

[FR Doc. 88-8976 Filed 4-22-88; 8:45 am]

BILLING CODE 4140-01-M

National Cancer Institute; Meetings of the National Cancer Advisory Board Subcommittees

Pursuant to Pub. L. 92-463, notice is hereby given of the meeting of the National Cancer Advisory Board, National Cancer Institute, May 9-11, 1988, Building 31C, Conference Room 6, 6th Floor, National Institutes of Health, 9000 Rockville Pike, Bethesda, Maryland 20892. Meetings of the Subcommittees of the Board will be held at the times and places listed below. Portions of the Board meeting and its Subcommittees will be open to the public to discuss issues relating to committee business as indicated in the notice. Attendance by the public will be limited to space available.

Portions of the meeting will be closed to the public as indicated below in accordance with the provisions set forth in secs. 552b(c)(4) and 552b(c)(6), Title 5, U.S.C. and sec. 10(d) of Pub. L. 92-463, for the review, discussion and evaluation of individual grant applications. These applications and the discussions could reveal confidential trade secrets or commercial property such as patentable material, and personal information disclosure of which would constitute a clearly unwarranted invasion of personal privacy.

Mrs. Winifred J. Lumsden, Committee Management Officer, National Cancer Institute, 9000 Rockville Pike, Building 31, Room 10A06, National Institutes of Health, Bethesda, Maryland 20892 (301/496-5708) will provide a summary of the meeting and rosters of the Board members, upon request.

Name of Committee: Subcommittee on Cancer Centers.

Executive Secretary: Ms. Judith Whalen, Building 31, Room 11A19, Bethesda, MD 20892 (301/496-5515).

Date of Meeting: May 8.

Place of Meeting: Building 31C, Conference Room 7.

Open: 6 p.m.—adjournment.

Agenda: To discuss the summer workshop on cancer centers and continue discussion of the review of the cancer program.

Name of Committee: Subcommittee on Environmental Carcinogenesis.

Executive Secretary: Dr. Richard Adamson, Building 31, Room 11A03, Bethesda, MD 20892 (301/496-6618).

Date of Meeting: May 9.

Place of Meeting: Building 31A, Conference Room 2.

Open: 6 p.m. to adjournment.

Agenda: An overview of the Epidemiology and Biostatistics Program and the Radiation Effects Branch.

Name of Committee: Subcommittee on Cancer Control for the Year 2000.

Executive Secretary: Dr. Peter Greenwald, Building 31, Room 10A52, Bethesda, MD 20892 (301/496-6616).

Date of Meeting: May 9.

Place of Meeting: Building 31C, Conference Room 8.

Open: 6:15 p.m. to adjournment.

Agenda: Discussion of issues on cancer control.

Name of Committee: AIDS Subcommittee.

Executive Secretary: Dr. Maryann Roper, Building 31, Room 11A48, Bethesda, MD 20892 (301/496-1927).

Date of Meeting: May 9.

Place of Meeting: Building 31C, Conference Room 7.

Open: 7:30 p.m. to adjournment.

Agenda: Update of NCI activities pertaining to AIDS.

Name of Committee: Subcommittee on Special Actions for Grants.

Executive Secretary: Mrs. Barbara S. Bynum, Building 31, Room 10A03, Bethesda, MD 20892 (301/496-5147).

Date of Meeting: May 10.

Place of Meeting: Building 31C, Conference Room 6.

Open: 8:30 a.m. to adjournment.

Agenda: Review and discussion of individual grant applications.

Name of Committee: Subcommittee for Review of Contracts and Budget for the Office of the Director.

Executive Secretary: Mr. James Prather, Building 31, Room 11A29, Bethesda, MD 20892 (301/496-5801).

Date of Meeting: May 10.

Place of Meeting: Building 31C, Conference Room 8.

Open: Immediately following adjournment of the Subcommittee on Special Actions for Grants.

Agenda: To discuss contracts for the Office of the Director, NCI.

Name of Committee: Subcommittee on Planning and Budget.

Executive Secretary: Ms. Judith Whalen, Building 31, Room 11A19, Bethesda, MD 20892 (301/496-5515).

Date of Meeting: May 10.

Place of Meeting: Building 31C, Conference Room 7.

Open: 5:30 p.m.—adjournment.

Agenda: Discussion of Budget matters and the Biennial Report.

Name of Committee: National Cancer Advisory Board.

Executive Secretary: Mrs. Barbara Bynum, Building 31, Room 10A03, Bethesda, MD 20893 (301/496-5147).

Date of Meeting: May 9 and 11, 1988.

Place of Meeting: Building 31C, Conference Room 6.

Open: May 9, 8:30 a.m. to recess; May 11, 8 a.m. to adjournment.

Agenda: Reports on activities of the President's Cancer Panel; the Director's Report on the National Cancer Institute; Subcommittee Reports; and New Business.

Dated: April 12, 1988.

Betty J. Beveridge,

Committee Management Officer, NIH.

(Catalog of Federal Domestic Assistant Program Nos.: (13.392, Project grants in cancer construction; 13.393, Project grants in cancer cause and prevention; 13.394, Project grants in cancer detection and diagnosis; 13.395, Project grants in cancer treatment; 13.396, Project grants in cancer biology; 13.397 Project grants in cancer centers support; 13.398, Project grants in cancer research manpower and 13.399; Project grants and contracts in cancer control.)

[FR Doc. 88-8978 Filed 4-22-88; 8:45 am]

BILLING CODE 4140-01-M

National Institute of Dental Research; National Advisory Dental Research Council; Meeting

Pursuant to Pub. L. 92-463, notice is hereby given of a meeting of the National Advisory Dental Research Council, National Institute of Dental Research, on May 25-26, 1988, H. Trendley Dean Conference Room,

(Room 117) Building 30, National Institutes of Health, Bethesda, Maryland. This meeting will be open to the public from 9 a.m. to recess on May 25 for program presentation and dedication of the H. Trendley Dean Conference Room. Attendance by the public will be limited to space available.

In accordance with the provisions set forth in secs. 552b(c)(4) and 552b(c)(6), Title 5, U.S.C. and sec. 10(d) of Pub. L. 92-463, the meeting of the Council will be closed to the public on May 26 from 9 a.m. to 2:30 p.m. for the review, discussion and evaluation of individual grant applications. These applications and the discussions could reveal confidential trade secrets or commercial property such as patentable material, and personal information concerning individuals associated with the applications, the disclosure of which would constitue a clearly unwarranted invasion of personal privacy.

In accordance with the provisions set forth in section 552b(c)(9)(B), Title 5, U.S. Code, the Council meeting will be closed to the public from 2:30 p.m. to adjournment on May 26 for discussion and preparation of comments Council wishes to submit to the Director, NIH, for inclusion in the biennial report to Congress.

Dr. Preston A. Littleton, Jr., Executive Secretary, National Advisory Dental Research Council, and Deputy Director, National Institute of Dental Research, National Institutes of Health, Building 31, Room 2C39, Bethesda, Maryland 29892, (telephone 301-496-9469) will furnish a roster of committee members, a summary of the meeting, and other information pertaining to the meeting.

(Catalog of Federal Domestic assistance Program Nos. 13.121—Diseases of the Teeth and Support Tissues; Caries and Restorative Materials; Periodontal and Soft Tissue Diseases; 13.122—Disorders of Stucture, Function, and Behavior: Craniofacial Anomalies, Pain Control, and Behavioral Studies; 13.845—Dental Research Institute; National Institutes of Health)

Dated: April 12, 1988.

Betty J. Beveridge,

Committee Management Officer, NIH

[FR Doc. 88-8977 Filed 4-22-88; 8:45 am]

BILLING CODE 4140-01-M

National Institute of Dental Research; Special Grants Review Committee; Meeting

Pursuant to Pub. L. 92-463, notice is hereby given of the meeting of the Special Grants Review Committee, National Institute of Dental Research, June 7-8, 1988, in the Holiday Inn Chevy Chase, 5520 Wisconsin Avenue, Chevy Chase, Maryland 20815. The Committee will be open to the public from 9 a.m. to 9:30 a.m. on June 7 for general discussions. Attendance by the public is limited to space available.

In accordance with provisions set forth in secs. 552b(c)(4) and 552b(c)(6), Title 5, U.S.C. and sec. 10(d) of Pub. L. 92-463, the meeting will be closed to the public on June 7 from 9:30 a.m. to recess and on June 8 from 9 a.m. to adjournment for the review, discussion and evaluation of individual grant applications. The applications and the discussions could reveal confidential trade secrets or commercial property, such as patentable material, and personal information concerning individuals associated with the applications, the disclosure of which would constitute a clearly unwarranted invasion of personal privacy.

Dr. Rose Marie Petrucelli, Executive Secretary, NIDR Special Grants Review Committee, NIH, Westwood Building, Room 519, Bethesda, MD 20892, (telephone 301/496-7658) will provide a summary of the meeting, roster of committee members and substantive program information upon request.

(Catalog of Federal Domestic Assistance Program Nos. 13.121—Diseases of the Teeth and Supporting Tissues: Caries and Restorative Materials; Periodontal and Soft Tissue Diseases; 13-122—Disorders of Structure, Function, and Behavior: Craniofacial Anomalies, Pain Control, and Behavioral Studies; 13-845—Dental Research Institute; National Institutes of Health)

Dated: April 12, 1988.

Betty J. Beveridge,

Committee Management Officer, NIH.

[FR Doc. 88-8975 Filed 4-22-88; 8:45 am]

BILLING CODE 4140-01-M

Public Health Service

National Toxicology Program, Board of Scientific Counselors' Meeting

Pursuant to Pub. L. 92-463, notice is hereby given of a meeting of the National Toxicology Program (NTP) Board of Scientific Counselors, U.S. Public Health Service, in the Conference Center, Building 101, South Campus, National Institute of Environmental Health Sciences, Research Triangle Park, North Carolina on May 17, 1988.

The meeting will be open to the public from 8:30 a.m. until adjournment. The *preliminary* agenda topics with *approximate* times are as follows:

8:30 a.m.-8:45 a.m.—Report of the Director, NTP.

8:45 a.m.-9:45 a.m.—Review of Chemcials Nominated for NTP Studies.

Six chemicals will be reviewed. The chemicals were evaluated by the NTP Chemcial Evaluation Commitee on December 9, 1987, and are (with CAS Nos. in parentheses): (1) Anthraquinone (84-65-1); (2) Camphor (76-22-2); (3) Chloro-2-bromoethane (107-04-0); (4) Glyoxal (107-22-2); (5) Lead (II) Oxide (1317-36-8); and (6) Lead (II) Sulfide.

9:45 a.m.-10:15 a.m.—Overview of the NIEHS Extramural Program.

10:30 a.m.-11:00 a.m.—NTP Proposed Plans for Toxicological Evaluation of Ozone.

11:00 a.m.-11:30 a.m.—Rodent Model Validation Using Known Human Carcinogens.

11:30 a.m.-12:00 noon—Proposed Selective Reduction in Sex/Species Groups for Long-Term Carcinogenesis Studies.

12:00 noon-12:15 p.m.—Prechronic Technical Reports and Peer Review.

1:00 p.m.-2:30 p.m.—Disposition of Studies Conducted at Gulf South Research Institute.

2:30 p.m.-3:00 p.m.—Toxicology of Chemical Mixtures:

I. NAS Report on Complex Mixtures.

II. ATSDR/NTP Initiative and Ongoing Experiments.

3:00 p.m.-4:30 p.m.—Concept Reviews—NIEHS Cellular and Genetic Toxicology Branch:

I. Characterizing and Developing Detection Methods for Nonelectrophilic Carcinogens.

II. DNA Adducts in Rodent and Human Tissues.

III. Chemcially Induced DNA Modifications.

The Executive Secreatary, Dr. Larry G. Hart, National Toxicology Program, P.O. Box 12233, Research Triangle Park, North Carolina 27609, telephone (919) 541-3971; FTS 629-3971, will have available a roster of Board members and expert consultants and other program information prior to the meeting, and summary minutes subsequent to the meeting.

Dated: April 19, 1988.

David P. Rall,

Director, National Toxicology Program.

[FR Doc. 88-9037 Filed 4-22-88; 8:45 am]

BILLING CODE 88-9037-M

Social Security Administration

Supplementary Agreement on Social Security Between the United States and the Federal Republic of Germany; Entry Into Force

The Commissioner of Social Security gives notice that on March 1, 1988, a supplementary agreement entered into

BEST COPY AVAILABLE

force which amends the social security agreement between the United States and the Federal Republic of Germany that has been in effect since December 1, 1979. The supplementary agreement, which was signed on October 2, 1986, was concluded pursuant to section 233 of the Social Security Act. It updates several provisions of the original agreement to take account of changes in U.S. and German law that have occurred since the original agreement was implemented. The supplementary agreement also simplifies the original agreement, primarily by introducing a new method of computing U.S. Social Security benefit amounts when entitlement for the benefits is based on combined U.S. and German social security coverage.

Persons who wish to obtain copies of the agreement or want more information about its provisions may write to the Social Security Administration, Office of International Policy, Room 1104, West High Rise Building, 6401 Security Boulevard, Baltimore, MD 21235.

Dated: April 14, 1988.

Dorcas R. Hardy,

Commissioner of Social Security.

[FR Doc. 88-8946 Filed 4-22-88; 8:45 am]

BILLING CODE 4190-11-M

DEPARTMENT OF THE INTERIOR

Fish and Wildlife Service

Endangered Species Permit Issued for the Months of January, February, and March 1988

Notice is hereby given that the U.S. Fish and Wildlife Service has taken the following action with regard to permit applications duly received according to section 10 of the Endangered Species Act of 1973, as amended, 16 U.S.C. 1539. Each permit listed as issued was granted only after it was determined that it was applied for in good faith, that by granting the permit it will not be to the disadvantage of the endangered species; and that it will be consistent with the purposes and policy set forth in the Endangered Species Act of 1973, as amended.

Additional information on these permit actions may be requested by contacting the Office of Management Authority, P.O. Box 27329, Washington, DC, 20038-7329, telephone (202/343-4955) between the hours of 7:45 a.m. to 4:15 p.m. weekdays.

Correction

Honolulu Zoo was withdrawn December 3, 1987.

January		
Jumbolair Inc.	722670	01-05-88
Rickards, Ginger Va.	723138	01-05-88
Hawthorn Circus Corporation	723369	01-11-88
Adelman, Eugene Alan	723368	01-15-88
Schwartz, William E.	723607	01-15-88
Duke University Primate Ctr.	724599	01-20-88
Duke University Primate Ctr.	724600	01-20-88
Baglino, Ralph A.	723390	01-21-88
International Animal Exchange	723465	01-26-88
Grannis, Vance B.	723848	01-28-88
Potter-Thomas, Lisa	723053	01-28-88
February		
Herbst, Stevens C.	723373	02-02-88
International Animal Exchange	722277	02-04-88
Beissinger, Steven R.	704278	02-09-88
Hales, Randy	720915	02-17-88
Staten Island Zoological Soc.	723755	02-17-88
Biedenham, Robert M.	723926	02-18-88
Clark, Bob	723928	02-19-88
National Zoological Park	708225	02-23-88
Animal Park Inc.	723752	02-23-88
McCaw, Bruce R.	723091	02-28-88
March		
San Diego Zoo	724305	03-02-88
Nuccitelli, John F.	724123	03-13-88
New York Zoological Society	724548	03-13-88
Los Angeles Zoo	724500	03-14-88
Cincinnati Zoo	724390	03-15-88
Holdsworth, Earl T.	723068	03-21-88
Smith, Gary S.	724040	03-21-88
Archie Carr Ctr. for Sea Turtles	724540	03-23-88
Cincinnati Zoo	722430	03-29-88
Riverbanks Zoological Park	723940	03-31-88

Date: April 20, 1988.

Larry LaRochelle,

Acting Chief, Branch of Permits, Office of Management Authority.

[FR Doc. 88-9038 Filed 4-22-88; 8:45 am]

BILLING CODE 4310-55-M

Receipt of Application for Permit

The public is invited to comment on the following application for permit to conduct certain activities with marine mammals. The application was submitted to satisfy requirements of the Marine Mammal Protection Act of 1972, *as amended* (16 U.S.C. 1361 *et seq.*) and the regulations governing marine mammals (50 CFR Part 18).

Applicant

Name: U.S. Fish and Wildlife Service, 1011 E. Tudor Road, Anchorage, Alaska 99503. File No. PRT-708155.

Type of Permit: Scientific Research.

Name of Animals: Alaskan sea otter (Enhydra lutris lutris)—280.

Summary of Activity to be Authorized: The applicant proposes to take (capture, drug, measure, extract a tooth, tag, radio-tag, tattoo, blood sample and hold for food analysis studies) these animals for scientific research to:

(1) Determine if the quality and quantity of available prey influence the size and weight of independent sea otters; (2) determine if the quality and quantity of available prey influence sea otter growth rates;

(3) determine if sea otters are vulnerable to paralytic shellfish poison and if sea otters alter their feeding behavior in response to toxins in their prey; and (4) identify factors that determine infaunal prey and patch choice by sea otters.

Source of Marine Mammals for Research: Waters around the Kodiak Archipelago in southcentral Alaska, specifically northern Kodiak Island, southern Afognak Island, northern Afognak Island, and Shuyak Island.

Period of Activity: May 1, 1988 to December 1990.

Concurrent with the publication of this notice in the **Federal Register**, the Office of Management Authority is forwarding copies of this application to the Marine Mammal Commission and the Committee of Scientific Advisors for their review.

Written data or comments, requests for copies of the complete application, or requests for a public hearing on this application should be submitted to the Director, U.S. Fish and Wildlife Service (OMA), P.O. Box 27329, Washington, DC 20038-7329, within 30 days of the publication of this notice. Anyone requesting a hearing should give specific reasons why a hearing would be appropriate. The holding of such hearing is at the discretion of the Director.

Documents submitted in connections with the above application are available for review during normal business hours (7:45 am to 4:15 pm) in Room 400, 1375 "K" Street, NW., Washington, DC.

Dated: April 20, 1988.

Larry LaRochelle,

Acting Chief, Branch of Permits, Office of Management Authority.

[FR Doc. 88-9039 Filed 4-22-88; 8:45 am]

BILLING CODE 4310-55-M

Minerals Management Service

Onshore Oil and Gas Production Accounting; Transfer of Responsibility

AGENCY: Minerals Management Service (MMS), Interior.

ACTION: Notice to lease operators to report onshore production data.

SUMMARY: On January 15, 1988, the Minerals Management Service (MMS) published a Notice of Proposed Rulemaking in the **Federal Register** (53 FR 1039) to amend its regulations to provide for lease operators to report onshore production data to MMS, as a result of the transfer of accounting responsibility from the Bureau of Land

Management (BLM). A final rule, with consideration to comments received regarding the proposed rulemaking, will be published in the **Federal Register** by May 31, 1988.

As stated in the proposed rule, MMS is following a phased conversion schedule to accomplish the transfer. The purpose of this notice is to inform operators of onshore leases/agreements who are scheduled in phase 1b of the conversion to begin reporting production data to MMS for the August 1988 production month, the report for which is due to MMS by October 15, 1988.

Operators of phase 1b leases/agreements were informed of this conversion date in a letter dated April 8, 1988.

Conversion Date: Phase 1b operators should begin reporting onshore production data to MMS for the August 1988 production month, the report for which is due to MMS by October 15, 1988.

FOR FURTHER INFORMATION CONTACT: Mike Miller, Production Accounting Division, (303) 231-3520.

SUPPLEMENTARY INFORMATION: Phase 1a of the conversion schedule tranferred leases/agreements under the jurisdiction of the Rawlins, Wyoming, BLM District Office. Phase 1b converts of leases/agreements under the jurisdiction of the Colorado, Montana, and Utah BLM State Offices and the remaining leases/agreements under the jurisdiction of the Wyoming BLM State Office.

Prior to the conversion date, MMS will provide affected operators with information regarding various aspects of the conversion. This information will include a listing of all leases, agreements, and well reference data in MMS's data base for purposes of comparison and reconciliation prior to conversion.

Affected operators will be assigned a unique five-digit operator number which is required to be reported on the Monthly Report of Operations, Form MMS-3160.

The MMS will also provide operators with reporting instructions and training sessions to facilitate an orderly transfer of production reporting from BLM.

Dated: April 18, 1988.

Jerry D. Hill,

Associate Director for Royalty Management.

[FR Doc. 88-9052 Filed 4-22-88; 8:45 am]

BILLING CODE 4310-MR-M

National Park Service

[Contract No. CC-GLCA005-87]

Intention to Negotiate Concession Contract; Del Webb Recreational Properties, Inc.

Pursuant to the provisions of section 5 of the Act of October 9, 1965 (79 Stat. 969; 16 U.S.C. 20), public notice is hereby given that sixty (60) days after the date of publication of this notice, the Department of the Interior, through the Director of the National Park Service, proposes to negotiate a concession contract with Del Webb Recreational Properties, Inc., authorizing it to continue to provide marina facilities and services for the public at Glen Canyon National Recreation Area, Utah for a period of twenty (20) years from January 1, 1987, through December 31, 2006.

This proposed contract requires a construction and improvement program. The construction and improvement program required was previously addressed in the National Environmental Policy Act Environmental Assessments that were prepared in conjunction with the Development Concept Plans dated June, 1985, and November 1982, for Bullfrog Basin, Halls Crossing and Hite developed areas in Glen Canyon National Recreation Area.

The foregoing concessioner has performed its obligations to the satisfaction of the Secretary under an existing contract which expired by limitation of time on December 31, 1986, and therefore, pursuant to the Act of October 9, 1965, as cited above, is entitled to be given preference in the renewal of the contract and in the negotiation of a new contract as defined in 36 CFR 51.5.

The Secretary will consider and evaluate all proposals received as a result of this notice. Any proposal, including that of the existing concessioner, must be postmarked or hand delivered on or before the sixtieth (60th) day following publication of this notice to be considered and evaluated.

Interested parties should contact the Regional Director, Rocky Mountain Region, Denver, Colorado, for information as to the requirements of the proposed contract.

Lorraine Mintzmyer,

Regional Director, Rocky Mountain Region.

Date: April 4, 1988.

[FR Doc. 88-9031 Filed 4-22-88; 8:45 am]

BILLING CODE 4310-70-M

[DES 88-10, DES 88-12, DES 88-13]

Draft Environmental Impact Statements; Wilderness Recommendations Analyses; Bering Land Bridge National Preserve et al; Public Hearing

ACTION: Notice of the reconvening of a public hearing on the Draft Environmental Impact Statements and section 810 Analyses regarding Wilderness Recommendations for Bering Land Bridge National Preserve, Kenai Fjords National Park, and Yukon-Charley Rivers National Preserve, Alaska.

Four alternatives were examined for Bering Land Bridge National Preserve ranging from no action, which means no wilderness designation to the designation of all suitable lands as wilderness. Alternative 2, the proposed action, excludes 89 percent of the lands suitable from wilderness designation.

Four alternatives were examined for Kenai Fjords National Park. They range from no action, which means no wilderness designation, to the designation of all lands in the study area as wilderness. Alternative 2, the proposed action excludes 12 percent of the study area from wilderness.

For Yukon-Charley Rivers National Preserve three alternatives were examined ranging from no action, which means no wilderness designation, to the designation of all suitable lands as wilderness. Alternative 2, the proposed action, excludes 51 percent of the land suitable from wilderness status.

DATES AND ADDRESSES: The public hearing will reconvene on May 24, 1988 at the Department of the Interior, 18th and C Streets NW., Washington, DC, in room 3119, between the hours of 1:00 and 4:00. Interested individuals, representatives of organizations and public officials are invited to express their views in person or in writing at the aforementioned public hearing, provided they make an appointment with the Hearing Officer, in care of Cynthia deFranceaux, 202-343-4279, by May 20, 1988.

FOR FURTHER INFORMATION CONTACT: Cynthia deFranceaux, Planning and Special Studies, National Park Service, P.O. Box 37127, Washington, DC 20013-7127: 202-343-4279.

Dated: April 21, 1988.

Approved.

James W. Stewart,

Acting Associate Director, Planning and Development.

[FR Doc. 88-9104 Filed 4-22-88; 8:45 am]

BILLING CODE 4310-70-M

INTERSTATE COMMERCE COMMISSION

[No. MC-C-30090]

National Industrial Transportation League; Petition for Declaratory Order on Negotiated Motor Common Carrier Rates

AGENCY: Interstate Commerce Commission.

ACTION: Notice of institution of declaratory order proceeding and request for comments.

SUMMARY: On February 5, 1988, the National Industrial Transportation League (NITL) filed a petition with the Commission seeking issuance of a declaratory order finding that it is an unreasonable practice and thus a violation of the Interstate Commerce Act for a motor common carrier to conduct business on the basis of a negotiated and agree-to-rate while failing to publish the rate in an effective tariff on file at the Commission. NITL points out that the problem addressed by the Commission's policy statement in *NITL—Pet. to Inst. Rule on Negotiated Motor Car.*, 3 I.C.C. 2d 99 (1986), and the number of undercharge claims, continues to grow. NITL asserts that, while the Commission made available to shippers a defense in undercharge suits if they could show that it would be an unreasonable practice to collect on specific claims, it required a case-by-case referral to, and determination by the Commission, on the question of the reasonableness of the assailed practice, imposing an undue burden on shippers and the Commission. Additionally, NITL claims that the policy statement is being misconstrued by some courts, thus raising uncertainty and a dispute as to whether the relief intended by the Commission is proper. NITL believes that issuance of a declaratory order would establish the principle that the assailed practice is unreasonable as a matter of law and would allow the courts to apply such general finding to the facts of the cases before them, without the need of a referral in each case for separate determination by the Commission. The Commission is instituting this proceeding to allow the public to comment on the matter, particularly with respect to the appropriateness and effectiveness of the relief sought.

DATE: Comments are due by June 9, 1988.

ADDRESSES: Send an original and 10 copies of comments to: No. MC-C-30090, Room 1324, Case Control Branch, Interstate Commerce Commission, Washington, DC 20423.

Send one copy of comments to petitioner's representative: James E. Bartley, Executive Vice President, The National Industrial Transportation League, 1090 Vermont Avenue, NW., Suite 410, Washington, DC 20005.

FOR FURTHER INFORMATION CONTACT: Andrew J. Nosacek (202) 275-1712; or Richard Felder (202) 275-7291 [TDD—(202) 275-1721].

SUPPLEMENTARY INFORMATION: Additional information is contained in the Commission's decision. To obtain a copy of the full decision, write to Office of the Secretary, Room 2215, Interstate Commerce Commission Building, Washington, DC 20423, or call (202) 275-7428 (D.C. Metropolitan area), (assistance for the hearing impaired is available through TDD services (202) 275-1721 or by pickup from Dynamic Concepts, Inc., in Room 2229 at Commission headquarters).

This action does not appear to affect significantly the quality of the human environment or the conservation of energy resources.

This notice is issued under the authority of 49 U.S.C. 10321, 10701, and 10704; and 5 U.S.C. 554(e).

Decided: April 14, 1988.

By the Commission, Chairman Gradison, Vice Chairman Andre, Commissioners Sterrett, Simmons, and Lamboley. Commissioner Lamboley concurred in the result with a separate expression.

Noreta R. McGee,

Secretary.

[FR Doc. 88-8965 Filed 4-22-88; 8:45 am]

BILLING CODE 7035-01-M

NATIONAL ARCHIVES AND RECORDS ADMINISTRATION

Environmental Assessment on Construction of a New Archival Facility

Action: Notice of intent to prepare an environmental assessment on construction of a new archival facility.

Description of Action and Alternatives: The General Services Administration will prepare an environmental assessment on construction of an archival facility to provide storage for the Nation's records of enduring value which are currently stored in Government-owned and leased facilities in the Washington metropolitan area. The initial action proposed is construction of a 1.7 million square foot facility in College Park, Maryland. This facility would store Government records in the form of textual records, photographs, films, maps, architectural drawings, and machine-readable records. Researchers and archival personnel will be the principal users of the new facility.

Scoping Process: The General Services Administration and the National Archives and Records Administration have initiated the scoping process. Local and state officials have met with agency representatives to discuss project issues and community concerns. A description of the proposed project has been presented to a civic group in the area affected by the facility. Written questions and observations will be solicited throughout the scoping process.

Dates: A public meeting is scheduled for Wednesday, May 25, 1988, at 7:30 p.m. The meeting will be held at the College Park Municipal Offices, 4500 Knox Road, College Park, MD 20740. The public is invited to participate in the meeting.

Addresses: Written comments or questions about the proposed action may be sent to: Marvin Shenkler, Project Manager, Capitol Improvement Division, General Services Administration, 7th and D Streets SW., Washington, DC 20407.

Dated: April 20, 1988.

Don W. Wilson,

Archivist of the United States.

[FR Doc. 88-8995 Filed 4-22-88; 8:45 am]

BILLING CODE 7515-01-M

NUCLEAR REGULATORY COMMISSION

[Docket No. 50-336]

Northeast Nuclear Energy Co. et al., Millstone Nuclear Power Station, Unit No. 2; Environmental Assessment and Finding of No Significant Impact

The U.S. Nuclear Regulatory Commission (the Commission) is considering issuance of an exemption from the requirements of Appendix R to 10 CFR Part 50 to Northeast Nuclear Energy Company et al. (the licensee), for the Millstone Nuclear Power Station, Unit No. 2, located in New London County, Connecticut.

Environmental Assessment

Identification of Proposed Action

The exemption would grant relief from the requirements of Appendix R, Section III.G.(2)(b) as these requirements relate to the separation of Auxiliary Feedwater Isolation Valves 2-FW-43A and B. Section III.G(2)(b) of Appendix R would require the subject valves to be separated by 20 feet, free of intervening

combustibles, since these valves are in redundant trains of equipment required for post-fire, safe shutdown, of the reactor.

The exemption is responsive to the licensee's application for exemption dated February 29, 1988.

The Need for the Proposed Action

The proposed exemption is needed because the features described in the licensee's request regarding the existing and proposed fire protection at the plant for this item are the most practical method for meeting the intent of Appendix R and literal compliance would not significantly enhance the fire protection capability.

Environmental Impacts of the Proposed Action

The proposed exemption will provide a degree of fire protection such that there is no increase in the risk of fires at this facility. Consequently, the probability of fires has not been increased and the potential post-fire radiological releases will not be greater than previously determined nor does the proposed exemption otherwise affect radiological plant effluents. Therefore, the Commission concludes that there are no significant radiological environmental impacts associated with the proposed exemption.

With regard to potential nonradiological impacts, the proposed exemption involves features located entirely within the restricted area as defined in 10 CFR Part 20. It does not affect nonradiological plant effluents and has no other environmental impact. Therefore, the Commission concludes that there are no significant nonradiological environmental impacts associated with the proposed exemption.

Alternative to the Proposed Action

It has been concluded that there is no measurable impact associated with the proposed exemption and associated license amendment; any alternatives to the exemption will have either no environmental impact or greater environmental impact.

Alternative Use of Resources

This action involves no use of resources not previously considered in the Final Environmental Statements for the Millstone Nuclear Power Station, Unit No. 2.

Agencies and Persons Consulted

The NRC staff reviewed the licensee's request and did not consult other agencies or persons.

Finding of No Significant Impact

The Commission has determined not to prepare an environmental impact statement for the proposed exemption.

Based upon the foregoing environmental assessment, we conclude that the proposed action will not have a significant effect on the quality of the human environment.

For further details with respect to this action, see the application for amendment dated February 29, 1988 which is available for public inspection at the Commission's Public Document Room, 1717 H Street NW., Washington, DC and at the Waterford Public Library, 49 Rope Ferry Road, Waterford, Connecticut 06385.

Dated at Rockville, Maryland, this 8th day of April 1988.

For the Nuclear Regulatory Commission.

John F. Stolz,

Director, Project Directorate I-4, Division of Reactor Projects I/II, Office of Nuclear Reactor Regulation.

[FR Doc. 88-8966 Filed 4-22-88; 8:45 am]

BILLING CODE 7590-01-M

[Docket Nos. 50-387 and 50-388]

Pennsylvania Power & Light Co.; Environmental Assessment and Finding of No Significant Impact

The U.S. Nuclear Regulatory Commission (the Commission) is considering issuance of amendments to Facility Operating License Nos. NPF-14 and NPF-22, issued to Pennsylvania Power & Light Company (the licensee), for operation of the Susquehanna Steam Electric Station, Units 1 and 2, located in Luzerne County, Pennsylvania.

Environmental Assessment

Identification of Proposed Action

The proposed amendment would revise the provisions in the Technical Specifications (TS) relating to the load profiles for 125V dc batteries.

The proposed action is in accordance with the licensee's application for amendment dated January 8, 1988.

The Need for the Proposed Action

The proposed change to the TS is required in order to accommodate installation of ATWS Alternate Rod Injection solenoid valves, and to recognize increased loads associated with emergency lighting.

Environmental Impacts of the Proposed Action

The Commission has completed its evaluation of the proposed revision to Technical Specifications. The proposed revisions would allow the licensee to revise specification 4.8.2.1.d.2.b to reflect new load profiles for the 125V dc batteries and to delete redundant material in the Unit 2 Technical Specifications. The changes are necessary to accommodate the installation of ATWS Alternate Rod Injection to account for increased loads due to emergency lighting, and to delete some redundant information. The staff has determined that the revised load profiles will be within the design capacity of the affected batteries, and the deletion of redundant information is an editorial change. Therefore, the proposed changes do not increase the probability or consequences of accidents, no changes are being made in the types of any effluents that may be released offsite, and there is no significant increase in the allowable individual or cumulative occupational radiation exposure. Accordingly, the Commission concludes that this proposed action would result in no significant radiological environmental impact.

With regard to potential non-radiological impacts, the proposed change to the TS involves systems located within the restricted area as defined in 10 CFR Part 20. It does not affect non-radiological plant effluents and has no other environmental impact. Therefore, the Commission concludes that there are no significant non-radiological environmental impacts associated with the proposed amendment.

The Notice of Consideration of Issuance of Amendment and Opportunity for Hearing in connection with this action was published in the **Federal Register** on March 22, 1988 (53 FR 9387). No request for hearing or petition for leave to intervene was filed following this notice.

Alternative to the Proposed Action

Since the Commission concluded that there are no significant environmental effects that would result from the proposed action, any alternatives with equal or greater environmental impacts need not be evaluated.

The principal alternative would be to deny the requested amendment. This would not reduce environmental impacts of plant operation and would result in reduced operational flexibility.

Alternative Use of Resources

This action does not involve the use of any resources not previously considered in the Final Environmental Statements for the Susquehanna Steam Electric Station, Units 1 and 2, dated June 1981.

Agencies and Persons Consulted

The NRC staff reviewed the licensee's request and did not consult other agencies or persons.

Finding of No Significant Impact

The Commission has determined not to prepare an environmental impact statement for the proposed license amendment.

Based upon the foregoing environmental assessment, we conclude that the proposed action will not have a significant effect on the quality of the human environment.

For further details with respect to this action, see the application for amendment dated January 8, 1988, which is available for public inspection at the Commission's Public Document Room, 1717 H Street NW., Washington, DC and at the Osterhout Free Library, Reference Department, 71 South Franklin Street, Wilkes-Barre, Pennsylvania 18701.

Dated at Rockville, Maryland, this 18th day of April 1988.

For the Nuclear Regulatory Commission.

Walter Butler,

Director, Project Directorate I-2, Division of Reactor Projects I/II, Office of Nuclear Reactor Regulation.

[FR Doc. 88-8987 Filed 4-22-88; 8:45 am]

BILLING CODE 7590-01-M

[Docket No. 50-341]

Detroit Edison Co.; Receipt of Petition for Director's Decision

Notice is hereby given that the Honorable James Caldwell, the Honorable Steven Langdon, the Honorable Herb Gray, and the Honorable Howard McCurdy, members of the Canadian Parliament, have requested that the Nuclear Regulatory Commission revoke the operating license of Fermi-2 until such time that the plant is safe to operate. The alleged bases for their request are certain deficiencies at the plant, which were revealed in several NRC documents. Petitioners claim that the plant should not be allowed to operate because of certain alleged deficiencies in the plant's design and several past attempts by Detroit Edison to withhold information regarding the plant.

This petition is being handled as a request for action pursuant to 10 CFR 2.206 of the Commission's regulations, and accordingly, appropriate action will be taken on the request within a reasonable time. Copies of the petition are available for inspection in the Commission's Public Document Room, 1717 H Street NW., Washington, DC 20555, and at the Local Public Document Room for Fermi-2 at the Monroe County Library System, 3700 South Custer Road, Monroe, Michigan 48161.

Dated at Rockville, Maryland, this 16 day of March, 1988.

For the Nuclear Regulatory Commission.

Thomas E. Murley,

Director, Office of Nuclear Reactor Regulation.

[FR Doc. 88-8984 Filed 4-22-88; 8:45 am]

BILLING CODE 7590-01-M

[Docket No. 50-289]

GPU Nuclear Corp. et al.; Consideration of Issuance of Amendment to Facility Operating License and Opportunity for Hearing

The U.S. Nuclear Regulatory Commission (the Commission) is considering issuance of an amendment to Facility Operating License No. DPR-50, issued to GPU Nuclear Corporation (the licensee), for operation of the Three Mile Island Nuclear Station, Unit 1 (TMI-1) located in Dauphin County, Pennsylvania.

The amendment would revise the TMI-1 Technical Specifications (TSs) to support core reload for Cycle 7 of operation. The core design changes for Cycle 7 includes a slight increase in core lifetime from approximately 425 effective full power days (EFPD) to approximately 445 EFPD. The fresh fuel has a slightly higher U-235 enrichment than previous fuel. The proposed TS changes are needed to accommodate changes in power peaking and control rod worths as well as DNB margins provided by use of the LYNXT crossflow thermal-hydraulics model. As with previous fuel cycles, the proposed TS changes are supported by a Cycle 7 reload analysis (BAW-2015).

Prior to issuance of the proposed license amendment, the Commission will have made findings required by the Atomic Energy Act of 1954, as amended (the Act) and the Commission's regulations.

By May 25, 1988, the licensee may file a request for a hearing with respect to issuance of the amendment to the subject facility operating license and any person whose interest may be affected by this proceeding and who wishes to participate as a party in the proceeding must file a written request for hearing and a petition for leave to intervene. Requests for a hearing and petitions for leave to intervene shall be filed in accordance with the Commission's "Rules of Practice for Domestic Licensing Proceedings" in 10 CFR Part 2. If a request for a hearing or petition for leave to intervene is filed by the above date, the Commission or an Atomic Safety and Licensing Board, designated by the Commission or by the Chairman of the Atomic Safety and Licensing Board Panel, will rule on the request and/or petition; and the Secretary or the designated Atomic Safety and Licensing Board will issue a notice of hearing or an appropriate order.

As required by 10 CFR 2.714, a petition for leave to intervene shall set forth with particularity the interest of the petitioner in the proceeding, and how that interest may be affected by the results of the proceeding. The petition should specifically explain the reasons why intervention should be permitted with particular reference to the following factos: (1) The nature of the petitioner's right under the Act to be made a party to the proceeding; (2) the nature and extent of the petitioner's property, financial, or other interest in the proceeding; and (3) the possible effect of any order which may be entered in the proceeding on the petitioner's interest. The petitioner should also identify the specific aspect(s) of the subject matter of the proceeding as to which petitioner wishes to intervene. Any person who has filed a petition for leave to intervene or who has been admitted as a party may amend the petition without requesting leave of the Board up to fifteen (15) days prior to the first pre-hearing conference scheduled in the proceeding, but such an amended petition must satisfy the specificity requirements described above.

Not later than fifteen (15) days prior to the first prehearing conference scheduled in the proceeding, a petitioner shall file a supplement to the petition to intervene, which must include a list of the contentions that are sought to be litigated in the matter, and the bases for each contention set forth with reasonable specificity. Contentions shall be limited to matters within the scope of the amendment under consideration. A petitioner who fails to file such a supplement which satisfies these requirements with respect to at least one contention will not be permitted to participate as a party.

Those permitted to intervene become parties to the proceeding, subject to any limitations in the order granting leave to intervene, and have the opportunity to participate fully in the conduct of the hearing, including the opportunity to present evidence and cross-examine witnesses.

A request for a hearing or a petition for leave to intervene must be filed with

the Secretary of the Commission, U.S. Nuclear Regulatory Commission, Washington, DC 20555, Attention: Docketing and Service Branch, or may be delivered to the Commission's Public Document Room, 1717 H Street NW., Washington, DC, by the above date. Where petitions are filed during the last ten (10) days of the notice period, it is requested that the petitioner promptly so inform the Commission by a toll-free telephone call to Western Union at 1-800-325-6000 (in Missouri 1-800-342-6700). The Western Union operator should be given Datagram Identification Number 3737 and the following message addressed to John F. Stolz: Petitioner's name and telephone number; date petition was mailed; plant name; and publication date and page number of this **Federal Register** notice. A copy of the petition should also be sent to the Office of the General Counsel, U.S. Nuclear Regulatory Commission, Washington, DC 20555, and to Ernst L. Blake, Jr., Esquire, Shaw, Pittman, Potts and Trowbridge, 2300 N Street NW., Washington, DC 20037.

Nontimely filings of petitions for leave to intervene, amended petitions, supplemental petitions and/or requests for hearing will not be entertained absent a determination by the Commission, the presiding officer or the presiding Atomic Safety and Licensing Board that the petition and/or request should be granted based upon a balancing of the factors specified in 10 CFR 2.714(a)(1)(i)-(v) and 2.714(d).

If a request for hearing is received, the Commission's staff may issue the amendment after it completes its technical review and prior to the completion of any required hearing if it publishes a further notice for public comment of its proposed finding of no significant hazards consideration in accordance with 10 CFR 50.91 and 50.92.

For further details with respect to this action, see the application for amendment dated April 5, 1988, which is available for public inspection at the Commission's Public Document Room, 1717 H Street NW., Washington, DC 20555, and at the Local Public Document Room, Government Publications Section, State Library of Pennsylvania, Walnut Street and Commonwealth Avenue, Box 1601, Harrisburg, Pennsylvania 17105.

Dated at Rockville, Maryland, this 8th day of April, 1988.

For the Nuclear Regulatory Commission.

John F. Stolz,

Director, Project Directorate I-4, Division of Reactor Projects I/II, Office of Nuclear Reactor Regulation.

[FR Doc. 88-8980 Filed 4-22-88; 8:45 am]

BILLING CODE 7590-01-M

[Docket No. 50-267]

Public Service Co. of Colorado; Consideration of Issuance of Amendment to Facility Operating License and Opportunity for Hearing

The United States Nuclear Regulatory Commission (the Commission) is considering issuance of an amendment to Facility Operating License No. DPR-34, issued to Public Service Company of Colorado (the licensee), for operation of the Fort St. Vrain Nuclear Generating Station located in Weld County, Colorado.

The amendment would revise the provisions in the Technical Specifications relating to radiological effluents. In particular, this proposed amendment changes ELCO 8.1.1, ESR 8.1.1 and ESR 8.1.2. These changes are related to the design of the effluent monitor hand switches and the time allowed to report an inoperable noble gas monitor. Other changes are being made for clarification in accordance with the licensee's application for amendment dated October 1, 1987 (P-87348).

Prior to issuance of the proposed license amendment, the Commission will have made findings required by the Atomic Energy Act of 1954, as amended (the Act) and the Commission's regulations.

By May 25, 1988, the licensee may file a request for a hearing with respect to issuance of the amendment to the subject facility operating license and any person whose interest may be affected by this proceeding and who wishes to participate as a party in the proceeding must file a written request for a hearing and a petition for leave to intervene. Requests for a hearing and petitions for leave to intervene shall be filed in accordance with the Commission's "Rules of Practice for Domestic Licensing Proceedings" in 10 CFR Part 2. If a request for a hearing or petition for leave to intervene is filed by the above date, the Commission or an Atomic Safety and Licensing Board, designated by the Commission or by the Chairman of the Atomic Safety and Licensing Board Panel, will rule on the request and/or petition, and the Secretary or the designated Atomic Safety and Licensing Board will issue a notice of hearing or an appropriate order.

As required by 10 CFR 2.714, a petition for leave to intervene shall set forth with particularity the interest of the petitioner in the proceeding, and how that interest may be affected by the results of the proceeding. The petition should specifically explain the reasons why intervention should be permitted with particular reference to the following factors: (1) The nature of the petitioner's right under the Act to be made a party to the proceeding; (2) the nature and extent of the petitioner's property, financial, or other interest in the proceeding; and (3) the possible effect of any order which may be entered in the proceeding on the petitioner's interest. The petition should also identify the specific aspect(s) of the subject matter of the proceeding as to which petitioner wishes to intervene. Any person who has filed a petition for leave to intervene or who has been admitted as a party may amend the petition without requesting leave of the Board up to fifteen (15) days prior to the first prehearing conference scheduled in the proceedings, but such an amended petition must satisfy the specificity requirements described above.

Not later than fifteen (15) days prior to the first prehearing conference scheduled in the proceeding, a petitioner shall file a supplement to the petition to intervene which must include a list of the contentions which are sought to be litigated in the matter, and the bases for each contention set forth with reasonable specificity. Contentions shall be limited to matters within the scope of the amendment under consideration. A petitioner who fails to file such a supplement which satisfies these requirements with respect to at least one contention will not be permitted to participate as a party.

Those permitted to intervene become parties to the proceeding, subject to any limitations in the order granting leave to intervene, and have the opportunity to participate fully in the conduct of the hearing, including the opportunity to present evidence and cross-examine witnesses.

A request for a hearing or a petition for leave to intervene shall be filed with the Secretary of the Commission, United States Nuclear Regulatory Commission, Washington, DC 20555, Attention: Docketing and Service Branch, or may

be delivered to the Commission's Public Document Room, 1717 H Street NW., Washington, DC by the above date. Where petitions are filed during the last ten (10) days of the notice period, it is requested that the petitioner or representative for the petitioner promptly so inform the Commission by a toll-free telephone call to Western Union at 1-800-325-6000 (in Missouri 1-800-342-6700). The Western Union operator should be given Datagram identification Number 3737 and the following message addressed to Jose A. Calvo: Petitioner's name and telephone number; date Petition was mailed; plant name; and publication date and page number of this **Federal Register** notice. A copy of the petition should also be sent to the Office of the General Counsel, U.S. Nuclear Regulatory Commission, Washington, DC 20555, and to Kelly, Stansfield, and O'Donnell, Room 900, 550 15th Street, Denver, Colorado 80202, attorney for the licensee.

Nontimely filings of petitions for leave to intervene, amended petitions, supplemental petitions and/or requests for hearing will not be entertained absent a determination by the Commission, the presiding officer or the presiding Atomic Safety and Licensing Board, that the petition and/or request should be granted based upon a balancing of the factors specified in 10 CFR 2.714(a)(1)(i)-(v) and 2.714(d).

If a request for hearing is received, the Commission's staff may issue the amendment after it completes its technical review and prior to the completion of any required hearing if it publishes a further notice for public comment of its proposed finding of no significant hazards consideration in accordance with 10 CFR 50.91 and 50.92.

For further details with respect to this action, see the application for amendment dated October 1, 1987, which is available for public inspection at the Commission's Public Document Room, 1717 H Street NW., Washington, DC and at the Greely Public Library, City Complex, Greely, Colorado.

Dated at Rockville, Maryland, this 18th day of April 1988.

For the Nuclear Regulatory Commission.

Jose A. Calvo,

Director, Project Directorate—IV, Division of Reactor Projects—III, IV, V and Special Projects, Office of Nuclear Reactor Regulation.

[FR Doc. 88-8981 Filed 4-22-88; 8:45 am]

BILLING CODE 7590-01-M

SECURITIES AND EXCHANGE COMMISSION

[Release No. 34-25600; File No. SR-CBOE-88-07]

Self-Regulatory Organizations; Chicago Board Options Exchange, Inc.; Filing and Order Granting Accelerated Approval to Proposed Rule Change

Pursuant to section 19(b)(1) of the Securities Exchange Act of 1934, 15 U.S.C. 78s(b)(1) ("Act"), notice is hereby given that on April 14, 1988, the Chicago Board Options Exchange, Inc. ("CBOE" or "Exchange") filed with the Securities and Exchange Commission ("Commission") the proposed rule change as described in Items I, II, and III below, which Items have been prepared by the self-regulatory organization. The Commission is publishing this notice to solicit comments on the proposed rule change from interested persons.

I. Text of the Proposed Rule Change

Additions are italicized.

Rule 24.7. Trading Halts or Suspensions. No change

Interpretations and Policies:

.01 Unusual conditions or circumstanses that may be considered pursuant to paragraph (iii) include but are not limited to the activation of daily price limits in stock index futures on one or more futures exchanges or, during the one and one half hours after opening rotation, delay in opening or halt in trading of underlying stocks representing more than 50% of the index values.

Rule 24.13. Trading Rotations. No change

Interpretations and Policies:

01. No change

.02 (See SR-CBOE-88-05) No change

.03 The commencement of the opening rotation in an index option may be delayed for one or more fifteen (15) minute intervals whenever in the judgment of two Floor Officials unusual conditions or circumstances in other markets and/or an influx of orders have adversely affected the ability of the Order Book Official and/or Market-Makers to provide and to maintain fair and orderly markets. The Floor Officials declaring the delayed opening shall reevaluate market conditions during the delay interval and shall determine whether (i) to commence the rotation as soon as the interval has been completed or to (ii) declare a further delay. An unusual condition in another market which may be the basis for declaring a delayed opening is activation of opening price limits in stock index futures on one or more futures exchanges. Unusual conditions in other markets that could be the basis for a further delay in opening stock index options include activation of daily price limits in stock index futures on one or more futures exchanges, a delay in opening or halt in trading of underlying stocks representing more than 50% of the index value and/or circumstances such as those which would result in the declaration of a fast market under Rule 6.6.

II. Self-Regulatory Organization's Statement of the Purpose of, and Statutory Basis for, the Proposed Rule Change

In its filing with the Commission, the self-regulatory organization included statements concerning the purpose of and basis for the proposed rule change and discussed any comments it received on the proposed rule change. The text of these statements may be examined at the places specified in Item IV below and is set forth in sections (A), (B), and (C) below.

(A) Self-Regulatory Organization's Statement of the Purpose of, and the Statutory Basis for, the Proposed Rule Change

The proposed rule changes provide for halting trading and delaying the commencement of an opening rotation in index options when unusual conditions in the Exchange's market or in other securities or futures markets could affect the maintenance and initiation of a fair and orderly market for index options. The interdependence of stock, option, and futures markets has been recognized by many commentators since the October market break. The increased aggregate volatility of the markets in the past six months also has been noted. In response to concern for investors in securities and futures, self-regulatory organizations have proposed and adopted policies and procedures to temporarily break and to attempt to control excessive volatility. These "circuit breaker" mechanisms include price limits and coordinated trading halts.

The price limit circuit breakers approved by the futures markets could have an impact on stock index option trading, for example, by temporarily limiting the ability of options Market-Makers to hedge their stock index option positions in one or more of the futures markets. While the positions could be hedged in the underlying stock market with stocks or baskets or in the index options market, the absence of a future hedge limits hedging opportunities and puts additional

pressures on the other markets. Delayed openings and trading halts in underlying stocks could similarly limit hedging opportunities and affect pricing mechanisms. Other factors such as order imbalances and an influx of orders could also affect a fair and orderly opening rotation in the index option.

The Exchange believes that the proposed rules for halting trading and delaying the opening rotation for stated time intervals are consistent with the provisions of the Act, in particular section 6(b)(5) thereof, in that the rules are designed to promote just and equitable principles of trade and, in general, to protect investors and the public interest.

(B) Self-Regulatory Organization's Statement on Burden on Competition

The Exchange does not believe that this proposed rule change will impose any burden on competition.

(C) Self-Regulatory Organization's Statement on Comments on the Proposed Rule Change Received from Members, Participants or Others

Comments were neither solicited nor received.

III. Date of Effectiveness of the Proposed Rule Change and Timing for Commission Action

The CBOE has requested that the proposed rule changes be given accelerated effectiveness pursuant to section 19(b)(2) of the Act in order to ensure that procedures for delaying the opening rotation of index options are available when new circuit breaker policies in other markets are implemented.

The Commission finds good cause for approving the proposed rule changes prior to the thirtieth day after the date of publication of the proposal in the **Federal Register**. The Commission believes that coordinated circuit breaker mechanisms among the equity, options, and futures markets will contribute to market stability and increased investor confidence. In response to increased market volatility, the futures exchanges have implemented price limits for stock index futures contracts.[1] In addition, the securities and futures markets are considering other circuit breakers.[2] CBOE's proposed rules to allow the Exchange to halt trading or delay the opening rotation in index options under the additional circumstances should reduce the problems associated with market volatility by providing for options market "circuit breaker" mechanisms that are coordinated with procedures that have been implemented in the futures market. In addition, the proposed rule change will allow the CBOE to halt or delay opening rotations or halt trading in an index option during the first hour and a half if securities representing 50 percent of an index valuation is not trading. This provision is consistent with the recommendation contained in *The October 1987 Market Break Report* by the Commission staff, that options and futures exchanges should reexamine their rules governing trading in index products when a large percentage of an index's component securities are not trading.[3]

IV. Solicitation of Comments

Interested persons are invited to submit written data, views and arguments concerning the foregoing. Persons making written submissions should file six copies thereof with the Secretary, Securities and Exchange Commission, 450 Fifth Street, Washington, DC. Copies of the submission, all subsequent amendments, all written statements with respect to the proposed rule change tha are filed with the Commission, and all written communications relating to the proposed rule change between the Commission and any person, other than those that may be withheld from the public in accordance with the provisions of 5 U.S.C. 552, will be available for inspection and copying in the Commission's Public Reference Section, 450 Fifth Street, NW., Washington, DC. Copies of such filing will also be available for inspection and copying at the principal office of the above-mentioned self-regulatory organization. All submissions should refer to the file number in the caption above and should be submitted by May 16, 1988.

It is therefore ordered, pursuant to section 19(b)(2) of the Act,[4] that the proposed rule change is approved.

For the Commission, by the Division of Market Regulation, pursuant to delegated authority.[5]

Dated: April 19, 1988.

Jonathan G. Katz,

Secretary.

[FR Doc. 88-9006 Filed 4-22-88; 8:45 am]

BILLING CODE 8010-01-M

[1] *See, e.g.*, Chicago Merc Places Limit on Opening Price of S&P, *Wall St.J.*, April 7, 1988, at 46; McMurray, Chicago Board Places Price Limits on Index Futures, *Wall St.J.*, January 14, 1988, at 39.

[2] *See* Smith, Big Board Mulls New Trade Bans If Market Swings, *Wall St.J.*, April 13, 1988, at 3; and SR-NYSE-88-02.

[3] *The October 1987 Market Break* at 8-22.

[4] 15 U.S.C. 78s(b)(2) (1982).

[5] 17 CFR 200.30-3(a)(12) (1987).

DEPARTMENT OF TRANSPORTATION

Applications for Certificates of Public Convenience and Necessity and Foreign Air Carrier Permits Filed During the Week Ending April 15, 1988

The following applications for certificates of public convenience and necessity and foreign air carrier permits were filed under Subpart Q of the Department of Transportation's Procedural Regulations (See 14 CFR 302.1701 *et seq.*). The due date for answers, conforming application, or motion to modify scope are set forth below for each application. Following the answer period DOT may process the application by expedited procedures. Such procedures may consist of the adoption of a show-cause order, a tentative order, or in appropriate cases a final order without further proceedings.

Docket No. 45575

Date Filed: April 11, 1988.

Due Date for Answers, Conforming Applications, or Motion to Modify Scope: May 9, 1988.

Description: Application of Silver Air Corporation pursuant to section 401(d)(1) of the Act and Subpart Q of the Regulations requests a certificate of public convenience and necessity authorizing interstate and overseas scheduled air transportation.

Docket No. 45580

Date Filed: April 12, 1988.

Due Date for Answers, Conforming Applications, or Motion to Modify Scope: May 10, 1988.

Description: Application of Delta Air Lines, Inc. pursuant to section 401 of the Act and Subpart Q of the Regulations requests renewal of its certificate of public convenience and necessity for Route 404, so that it can continue providing service over the Los Angeles-Salt Lake City-Calgary/Edmonton route.

Phyllis T. Kaylor,

Chief, Documentary Services Division.

[FR Doc. 88-9000 Filed 4-22-88; 8:45 am]

BILLING CODE 4910-62-M

DEPARTMENT OF THE TREASURY

Public Information Collection Requirements Submitted to OMB for Review

Date: April 19, 1988.

The Department of Treasury has submitted the following public information collection requirement(s) to OMB for review and clearance under the Paperwork Reduction Act of 1980, Pub. L. 96–511. Copies of the submission(s) may be obtained by calling the Treasury Bureau Clearance Officer listed. Comments to the OMB reviewer listed and to the Treasury Department Clearance Officer, Department of the Treasury, Room 2224, 15th and Pennsylvania Avenue NW., Washington, DC 20220.

Internal Revenue Service

OMB Number: 1545–0094.
Form Number: 1041–A.
Type of Review: Extension.
Title: U.S. Information Return—Trust Accumulation of Charitable Amounts.
Description: Form 1041–A is used to report the information required in 26 USC 6034 concerning accumulation and distribution of charitable amounts. The data is used to verify that amounts for which a charitable deduction was allowed are used for charitable purposes.
Respondents: Individuals or households, Businesses or other for-profit.
Estimated Burden: 24,881 hours.
Clearance Officer: Garrick Shear, (202) 535–4297, Internal Revenue Service, Room 5571, 1111 Constitution Avenue NW., Washington, DC 20224.
OMB Reviewer: Milo Sunderhauf (202) 395–6880, Office of Management and Budget, Room 3208, New Executive Office Building, Washington, DC 20503.

Lois K. Holland,
Departmental Reports Management Officer.

[FR Doc. 88–9012 Filed 4–22–88; 8:45 am]
BILLING CODE 4810-25-M

Public Information Collection Requirements Submitted to OMB for Review

Date: April 18, 1988.

The Department of Treasury has submitted the following public information collection requirement(s) to OMB for review and clearance under the Paperwork Reduction Act of 1980, Pub. L. 96–511. Copies of the submission(s) may be obtained by calling the Treasury Bureau Clearance Officer listed. Comments to the OMB reviewer listed and to the Treasury Department Clearance Officer, Department of the Treasury, Room 2224, 15th and Pennsylvania Avenue NW., Washington, DC 20220.

U.S. Customs Service

OMB Number: 1515–0077.
Form Number: CF 7514.
Type of Review: Reinstatement.
Title: Drawback Notice (Lading/Foreign Trade Zone Transfer).
Description: The form is used by drawback liquidators to determine that a drawback claimant has received supplies (normally oil) for use in operating the vessel or aircraft and therefore is entitled to drawback of these supplies or that articles were properly transferred to a foreign trade zone rather than being exported.
Respondents: Businesses or other for-profit, Small businesses or organizations.
Estimated Burden: 10,335 hours.
Clearance Officer: Dennis Dore (202) 566–7529, U.S. Customs Service, Room 6426, 1301 Constitution Avenue NW., Washington, DC 20229.
OMB Reviewer: Milo Sunderhauf (202) 395–6880, Office of Management and Budget, Room 3208, New Executive Office Building, Washington, DC 20503.

Lois K. Holland,
Departmental Reports Management Officer.

[FR Doc. 88–9013 Filed 4–22–88; 8:45 am]
BILLING CODE 4810-25-M

UNITED STATES INFORMATION AGENCY

Grants Program for Private Not-for-Profit Organizations in Support of International Educational and Cultural Activities

The United States Information Agency (USIA) announces a program of selective assistance and limited grant support to non-profit activities of United States institutions and organizations in the Private Sector. The program is designed to increase mutual understanding between the people of the U.S. and other countries and to strengthen the ties which unite our societies. The information collection involved in this solicitation is covered by OMB Clearance Number 3116–0175, entitled "A Grants Program for Private, Non-Profit Organization in Support of International Educational and Cultural Activities," announced in the **Federal Register** June 3, 1987.

Private Sector Organizations interested in working cooperatively with USIA on the following concept are encouraged to so indicate:

The U.S. Presidential Elections: A Thai Parliamentarians' International Exchange Program

The Office of Private Sector Programs, Initiative Grants and Bilateral Accords Division will assist in supporting a three-week international exchange program on the United States Presidential and Congressional Elections in August or September 1988 for members of the Parliament of Thailand. For the first half of this program, participants will visit two regions of the United States where they will evaluate various facets of the U.S. election process. The remainder of this exchange will take place in Washington, D.C. where the members of the Thai Parliament will examine issues of mutual interest (particularly bilateral economic concerns) and the probable impact of the 1988 U.S. elections on American domestic and international affairs. The Thai participants will be selected by USIA representatives abroad. A U.S. not-for-profit institution with knowledge of Thai social, political and economic issues as well as considerable expertise on the American political system and access to American political and economic leaders, will design and execute this project.

USIA is most interested in working with organizations that show promise for innovative and cost-effective programming; and with organizations that have potential for obtaining private-sector funding in addition to USIA support. Organizations must have the substantive expertise and logistical capability needed to successfully develop and conduct the above project and should also demonstrate a potential for designing programs which will have lasting impact on their participants.

Interested organizations should submit a request for complete application materials—postmarked no later than fifteen days from the date of this notice—to the address listed below. The Office of Private Sector Programs will then forward a set of materials, including proposal guidelines. Please refer to this specific program by name in your letter of interest. Office of Private Sector Programs, Bureau of Educational and Cultural Affairs (ATTN: Initiatives—Thai Parliament Project), United States Information Agency, 301 4th Street SW, Washington, DC 20547.

Robert Francis Smith,
Director, Office of Private Sector Programs.

Date: April 18, 1988.

[FR Doc. 88–9999 Filed 4–22–88; 8:45 am]
BILLING CODE 8230-01-M

Sunshine Act Meetings

Federal Register
Vol. 53, No. 79
Monday, April 25, 1988

This section of the FEDERAL REGISTER contains notices of meetings published under the "Government in the Sunshine Act" (Pub. L. 94-409) 5 U.S.C. 552b(e)(3).

CONSUMER PRODUCT SAFETY COMMISSION

Agenda [1]

TIME AND DATE: 2:30 p.m., Tuesday, April 19, 1988.

LOCATION: Room 440, Westwood Towers, 5401 Westbard Avenue, Bethesda, Maryland.

STATUS: Closed to the public.

MATTERS TO BE CONSIDERED:

Enforcement Matter OS#4045

The staff will brief the Commission on matters related to enforcement matter OS#4045.

FOR A RECORDED MESSAGE CONTAINING THE LATEST AGENDA INFORMATION, CALL: 301-492-5709.

CONTACT PERSON FOR ADDITIONAL INFORMATION: Sheldon D. Butts, Office of the Secretary, 5401 Westbard Ave., Bethesda, MD. 20207, 301-492-6800.

Sheldon D. Butts,
Deputy Secretary.
April 19, 1988.

[FR Doc. 88-9115 Filed 4-21-88; 1:12 pm]

BILLING CODE 6355-01-M

CONSUMER PRODUCT SAFETY

"FEDERAL REGISTER" CITATION OF PREVIOUS ANNOUNCEMENT: Monday, April 18, 1988; page 12745.

PREVIOUSLY ANNOUNCED TIME AND DATE OF THE MEETING: 10:00 a.m., April 21, 1988.

CHANGES IN THE MEETING: Agenda revised by adding items 3 and 4. See complete agenda as revised below.

Commission Meeting: Thursday, April 21, 1988, Room 556, Westwood Towers, 5401 Westbard Avenue, Bethesda, Maryland

10:00 a.m.

Open to the Public

1. Request for Exception to 16 CFR 1031.5

The Commission will consider two requests for exceptions to Commission regulations concerning staff membership and participation in councils or committees of voluntary standards organizations.

Closed to the Public

2. Compliance Status Report

The staff will brief the Commission of the status of various compliance matters.

3. Enforcement Matter OS #5509

The staff will brief the Commission on enforcement matter OS #5509.

4:00 p.m.

4. Enforcement Matter OS #5509

The Commission will consider enforcement matter OS #5509.

Date: April 20, 1988.

Sheldon D. Butts,
Deputy Secretary.
[FR Doc. 88-9116 Filed 4-21-88; 1:12 pm]

BILLING CODE 6355-01-M

CONSUMER PRODUCT SAFETY COMMISSION

TIME AND DATE: 10:00 a.m., Wednesday, April 27, 1988.

LOCATION: Room 556, Westwood Towers, 5401 Westbard Avenue, Bethesda, Maryland.

STATUS: Open to the public.

MATTERS TO BE CONSIDERED:

Fiscal Year 1989 Budget Adjustment

The Commission will consider options for making adjustments to the budget for Fiscal Year 1989.

FOR A RECORDED MESSAGE CONTAINING THE LATEST AGENDA INFORMATION, CALL: (301) 492-5709.

CONTACT PERSON FOR ADDITIONAL INFORMATION: Sheldon D. Butts, Office of the Secretary, 5401 Westbard Ave., Bethesda, Md. 20207 (301) 492-6800.

Sheldon D. Butts,
Deputy Secretary.
April 20, 1988.

[FR Doc. 88-9117 Filed 4-21-88; 1:12 pm]

BILLING CODE 6355-01-M

FEDERAL ENERGY REGULATORY COMMISSION

April 20, 1988.

The following notice of meeting is published pursuant to section 3(a) of the Government in the Sunshine Act (Pub. L. 94-409), 5 U.S.C. 552B:

TIME AND DATE: April 27, 1988, 10:00 a.m.

PLACE: 825 North Capitol Street NE., Room 9306, Washington, DC 20426.

STATUS: Open.

MATTERS TO BE CONSIDERED: Agenda.

* **Note.**—Items listed on the agenda may be deleted without further notice.

CONTACT PERSON FOR MORE INFORMATION: Lois D. Cashell, Acting Secretary, Telephone (202) 357-8400.

This is a list of matters to be considered by the Commission. It does not include a listing of all papers relevant to the items on the agenda; however, all public documents may be examined in the Public Reference Room.

Consent Power Agenda, 876th Meeting—April 27, 1988, Regular Meeting (10:00 a.m.)

CAP-1.
Project No. 7211-008, Vernon J. and Betty J. Herzinger

CAP-2.
Project No. 8971-004, Big Wood Canal Company

CAP-3.
Project No. 6015-018, Charles D. Howard

CAP-4.
Project Nos. 10145-002, 10146-002, 10148-002, 10149-002, 10150-002, 10151-002, 10152-002, 10185-002, 10187-002, 10197-002, 10210-002, 10211-002, 10212-002, 10213-002, 10214-002, 10215-002, 10216-002, 10217-002, 10183-003, 10390-002, 10398-002, 10191-002, Skykomish River Hydro
Project Nos. 10188-002 and 10192-002, Stillaguamish River Hydro
Project Nos. 10356-002, 10359-002, 10360-002, 10361-002, Snoqualmie River Hydro
Project Nos. 10421-001, 10184-002, 10297-001, 10311-001, 10313-001, Skagit River Hydro
Project Nos. 10100—001, 10099-002, 10101-001, 10258—001, 10286-001, 10274-001 and 10288-001, Cascade River Hydro
Project Nos. 10181-001, 10186-001, 10190-001, 10193-001, 10194-001, 10195-001, 10392-002, 10142-002, Sauk River Hydro
Project Nos. 10257-001, 10269-001, 10270-001, 10272-001, 10273-001, 10292-001, 10305-001, 10307-001, 10308-001, 10321-001 and 10416-002, Washington Hydro Development Company
Project No. 10432-001, Energy Alternatives
Project No. 10425-001, Steven J. Wight
Project No. 10097-001, Kingdom Energy Productions, Inc.
Project Nos. 10299-001 and 10317-001, Nooksack River Hydro
Project No. 10371-002, CPS Products, Inc.
Project No. 10129-001, Cranberry Creek Hydro
Project No. 10141-001, William C. Porter
Project No. 10166-001, Francis A. Smith
Project Nos. 10275-001 and 10279-001, Suiattle River Hydro
Project No. 10002-002, American Power Producers, Inc.

CAP-5.
Docket No. EL86-44-001, Island Power Company, Inc.

---

[1] The Commission decided that agency business required holding this meeting without usual advance notice.

CAP-6.
Project Nos. 1417-003 and 004, The Central Nebraska Public Power and Irrigation District
Project Nos. 1835-015, 016 AND 017, Nebraska Public Power District
CAP-7.
Project Nos. 6568-003, 006 AND 008, Delmar Wagner
CAP-8.
Project No. 2305-007, Sabine River Authority of Louisiana and Sabine River Authority of Texas
CAP-9.
Project No. 9250-002, Montana Natural Energy, Inc.
CAP-10.
Docket No. ER88-279-000, Potomac Electric Power Company
CAP-11.
Docket No. ER88-202-001, Maine Yankee Atomic Power Company
CAP-12.
Docket Nos. ER78-338-004, ER79-478-005 and ER80-313-005, Public Service Company of New Mexico
CAP-13.
Docket Nos. EER84-604-009 AND ER85-477-002, Southwestern Public Service Company
CAP-14.
Docket Nos. ER86-145-001 and ER86-146-001, Bangor Hydro-Electric Company
CAP-15.
Docket No. ER88-209-001, Metropolitan Edison Company and Pennsylvania Electric Company
CAP-16.
Docket Nos. ER86-368-017, ER86-368-005, ER86-638-001, ER86-638-002, and ER86-709-002, El Paso Electric Company
CAP-17.
Docket No. EL87-21-002, Yankee Atomic Electric Company
Docket No. EL87-22-002, Vermont Yankee Nuclear Power Corporation
Docket No. EL87-23-002, Connecticut Yankee Atomic Power Company
CAP-18.
Docket No. ER83-297-005, Arkansas Power & Light Company
CAP-19.
Docket No. ES88-27-000, UtiliCorp United Inc.
CAP-20.
Docket No. QF86-171-001, Hydro Corporation of Pennsylvania
CAP-21.
Docket No. QF87-320-000, Overland Energy Corporation
CAP-22.
Omitted
CAP-23.
Project No. 8468-001, Clearwater Hydro Limited Partnership
CAP-24.
Docket No. EC88-5-001, Public Service Company of Indiana, Inc.

Consent Miscellaneous Agenda

CAM-1.
Omitted
CAM-2.
Docket No. RM87-36-001, Interpretation of Comprehensive Plans Under section 3 of the Electric Consumers Protection Act
CAM-3.
Docket No. FA86-19-001, System Energy Resources, Inc.
CAM-4.
Docket No. RM87-34-056, Regulation of Natural Gas Pipelines After Partial Wellhead Decontrol
CAM-5.
Docket No. GP87-47-000, Amoco Production Company
CAM-6.
Docket No. SA87-52-001, Beren Corporation
CAM-7.
Docket No. IN86-5-007, Mobil Exploration and Producing North America, Inc.

Consent Gas Agenda

CAG-1.
Docket No. RP88-88-000, Panhandle Eastern Pipe Line Company
CAG-2.
Docket No. RP88-92-000, United Gas Pipe Line Company
CAG-3.
Docket No. RP88-93-000 and RP88-40-000, Questar Pipeline Company
CAG-4.
Docket No. RP88-95-000, Canyon Creek Compression Company
CAG-5.
Docket No. RP88-94-000, Natural Gas Pipeline Company of America
CAG-6.
Docket No. RP88-96-000, Southern Natural Gas Company
CAG-7.
Docket No. TA88-4-29-000, Transcontinental Gas Pipe Line Corporation
CAG-8.
Omitted
CAG-9.
Docket No. TA88-3-49-001, Williston Basin Interstate Pipeline Company
CAG-10.
Docket No. TA88-3-48-000, ANR Pipeline Company
CAG-11.
Docket No. TA88-3-43-000, Williams Natural Gas Company
CAG-12.
Docket No. TA88-5-51-000, Great Lakes Gas Transmission Company
CAG-13.
Docket Nos. RP85-169-034 and RP88-10-005, Consolidated Gas Transmission Corporation
CAG-14.
Docket No. RP88-17-006, Southern Natural Gas Company
CAG-15.
Docket No. RP88-14-001, South Carolina Pipeline Corporation v. Southern Natural Gas Company
Docket Nos. TA86-1-7-002 and RP87-108-004, Southern Natural Gas Company
CAG-16.
Docket No. RP88-56-002, Columbia Gas Transmission Corporation
CAG-17.
Docket No. RP85-125-009, Distrigas of Massachuestts Corporation
CAG-18.
Docket No. RP88-27-003, United Gas Pipe Line Company
CAG-19.
Docket No. RP83-109-006, Tennessee Gas Pipeline Company
CAG-20.
Docket No. RP86-57-004, Northwest Pipeline Corporation
CAG-21.
Docket Nos. RP86-63-010 and RP86-114-005, Southern Natural Gas Company
CAG-22.
Docket No. RP87-32-001, Transcontinental Gas Pipe Line Corporation
CAG-23.
Docket Nos. TA86-3-29-002, CP84-223-003 CP84-146-005, CP84-335-021 and CP84-336-003, Transcontinental Gas Pipe Line Corporation
CAG-24.
Docket No. TA88-2-26-002, Natural Gas Pipeline Company of America
CAG-25.
Docket No. TA88-2-25-001, Mississippi River Transmission Corporation
CAG-26.
Docket No. TA88-1-33-001, El Paso Natural Gas Company
CAG-27.
Docket Nos. ST85-2-001, ST85-468-001, ST85-471-001, ST85-475-001, ST85-647-001, ST85-621-001, ST85-1145-001, ST85-513-001, ST85-624-001 and ST85-708-001, Gulf South Pipeline Company
CAG-28.
Docket Nos. ST85-956-000, ST85-1572-000, and ST86-6-000, Acadian Gas Pipeline System
CAG-29.
Docket No. ST88-3010-000, Katy Interchange Service
CAG-30.
Docket No. RP88-17-005, Southern Natural Gas Company
CAG-31.
Docket Nos. RP82-55-037 and RP87-7-031, Transcontinental Gas Pipe Line Corporation
CAG-32.
Docket No. RP85-125-006, RP85-125-008 and RP85-125-010, Distrigas of Massachusetts Corporation
CAG-33.
Docket No. RP87-26-025, Tennessee Gas Pipeline Company
CAG-34.
Docket No. RP88-98-000, National Fuel Gas Supply Corporation
CAG-35.
Docket No. TA88-2-25-002, Mississippi River Transmission Corporation
CAG-36.
Docket No. RP88-61-000, Granite State Gas Transmission, Inc.
CAG-37.
Docket No. RP88-100-000, Commercial Pipeline Company, Inc.
CAG-38.
Docket Nos. TA88-3-37-000 and RP88-36-000, Northwest Pipeline Corporation
CAG-39.
Docket No. TA88-2-8-000, South Georgia Natural Gas Company
CAG-40.
Docket No. TA88-1-2-005, East Tennessee Natural Gas Company

CAG–41.
Docket Nos. RP86–32–006, RP86–68–000, RP86–155–005, RP87–33–000, TA87–3–43–002, and TA88–1–43–002, Williams Natural Gas Company
CAG–42.
Omitted.
CAG–43.
Docket No. CP86–247–000, Williams Natural Gas Company
CAG–44.
Docket No. CI86–675–001, Sun Exploration and Production Company
Docket No. CI86–252–000, Exxon Corporation
Docket No. CI86–259–000, Marathon Oil Company
CAG–45.
Docket Nos. CI73–334–000 and CI73–476–000, Mobil Exploration and Producing North America, Inc. (formerly The Superior Oil Co.)
Docket Nos. CI74–610–000 and CI80–133–001, Mobil Oil Exploration and Producing Southeast, Inc.
CAG–46.
Docket Nos. CI86–440–000, CI86–441–000, CI86–446–000, and CI86–507–000, United Gas Pipe Line Company
CAG–47.
Docket No. CP84–441–024, Tennessee Gas Pipeline Company
CAG–48.
Docket No. IN86–6–002, Ozark Gas Transmission Company
CAG–49.
Docket No. CP87–49–003, Distrigas of Massachusetts Corporation
Docket No. CP87–50–003, Cabot Energy Supply Corporation
CAG–50.
Docket No. CP88–229–002, Williams Natural Gas Company
CAG–51.
Docket No. CP88–2–001, Northern Natural Gas Company, Division of Enron Corporation
CAG–52.
Docket No. TC88–6–002, United Gas Pipe Line Company
CAG–53.
Docket Nos. CP83–254–301, CP83–335–218, CP83–254–302, CP83–335–219, Williston Basin Interstate Pipeline Company
CAG–54.
Docket No. CP86–689–000, Pacific Interstate Transmission Company
CAG–55.
Docket No. CP88–76–000, Transcontinental Gas Pipe Line Corporation
CAG–56.
Docket No. CP88–12–000, Columbia Gas Transmission Corporation
CAG–57.
Docket No. CP88–146–000, Placid Oil Company

I. Licensed Project Matters

P–1.
Project Nos. 2545–005, 009, 011 and 012, The Washington Water Power Company. Order on remand concerning question of "reservation" under section 3(2) of the Federal Power Act.

II. Electric Rate Matters

ER–1.
Docket Nos. ER85–204–007 and ER85–603–005, South Carolina Generating Company, Inc. Opinion and order on rehearing concerning just and reasonable rates.
ER–2.
Docket No. EL84–6–000, The Attorney General of the Commonwealth of Massachusetts, *et al.* v. New England Power Company. Opinion and order on initial decision concerning cost of power purchased due to Brayton No. 1 outage.

Miscellaneous

M–1.
[Reserved]
M–2.
[Reserved]
M–3.
Docket No. RM87–5–000, Inquiry Into Alleged Anticompetitive Practices Related to Marketing Affiliates of Interstate Pipelines. Final Rule.

I. Pipeline Rate Matters

RP–1.
[Reserved]

II. Producer Matters

CI–1
[Reserved]

III. Pipeline Certificate Matters

CP–1.
[Reserved]

Lois D. Cashell,
Acting Secretary.

[FR Doc. 88–9087 Filed 4–21–88; 11:13 am]
BILLING CODE 6717–01–M

EQUAL EMPLOYMENT OPPORTUNITY COMMISSION

"FEDERAL REGISTER" CITATION OF PREVIOUS ANNOUNCEMENT: 53 FR 12584, Tuesday, April 18, 1988.

PREVIOUSLY ANNOUNCED TIME AND DATE OF MEETING: 9:30 a.m. (eastern time) Tuesday, April 26, 1988.

CHANGE IN THE MEETING: The meeting has been cancelled.

CONTACT PERSON FOR MORE INFORMATION: Hilda D. Rodriquez, Executive Officer (Acting), Executive Secretariat, (202) 634–6748.

This notice dated and issued April 20, 1988.

Hilda D. Rodriquez,
Executive Officer (Acting), Executive Secretariat.

[FR Doc. 88–9086 Filed 4–21–88; 11:12 am]
BILLING CODE 6750–06–M

FARM CREDIT ADMINISTRATION

Farm Credit Administration Board; Special Meeting

SUMMARY: Notice is hereby given, pursuant to the Government in the Sunshine Act (5 U.S.C. 552b(e)(3)), of the forthcoming special meeting of the Farm Credit Administration Board (Board).

DATE AND TIME: The meeting is scheduled to be held at the offices of the Farm Credit Administration in McLean, Virginia, on April 19, 1988, from 12:30 p.m. until such time as the Board may conclude its business.

FOR FURTHER INFORMATION CONTACT: David A. Hill, Secretary to the Farm Credit Administration Board, 1501 Farm Credit Drive, McLean, Virginia 22102–5090, (703) 883–4003, TDD (703) 883–4444.

ADDRESS: Farm Credit Administration, 1501 Farm Credit Drive, McLean, Virginia 22102–5090.

SUPPLEMENTARY INFORMATION: This meeting of the Board will be closed to the public. The matter to be considered at the meeting is:

Closed Session [1]

1. Agency comments, under the expedited review provisions of the Agricultural Credit Act of 1987, section 413(a)(2)(B), Pub. L. 100–233, on the voluntary merger of the Banks for Cooperatives.

Dated: April 20, 1988.

David A. Hill,
Secretary, Farm Credit Administration Board.

[FR Doc. 88–9005 Filed 4–20–88; 4:27 pm]
BILLING CODE 6705–01–M

FEDERAL MARITIME COMMISSION

TIME AND DATE: 10:00 a.m., April 26, 1988.

PLACE: Room 12126, 1100 L Street NW., Washington, DC 20573.

STATUS: Closed.

MATTERS TO BE CONSIDERED:

1. Agreement No. 202–010636–039—Modification to the U.S. Atlantic-North Europe Conference (ANEC)/North Atlantic Amnesty Agreement.
2. Trans-Pacific Trades Malpractices Briefing.

CONTACT PERSON FOR MORE INFORMATION: Joseph C. Polking, Secretary, (202) 523–5725.

Joseph C. Polking,
Secretary.

[FR Doc. 88–9063 Filed 4–21–88; 10:20 am]
BILLING CODE 6730–01–M

---

[1] Session closed to the public—exempt pursuant to 5 U.S.C. 552b(c) (4) and (9).

Corrections

Federal Register
Vol. 53, No. 79
Monday, April 25, 1988

This section of the FEDERAL REGISTER contains editorial corrections of previously published Presidential, Rule, Proposed Rule, and Notice documents and volumes of the Code of Federal Regulations. These corrections are prepared by the Office of the Federal Register. Agency prepared corrections are issued as signed documents and appear in the appropriate document categories elsewhere in the issue.

DEPARTMENT OF THE TREASURY

Internal Revenue Service

26 CFR Part 1

[T.D. 8192]

Income Taxes; Deposits of Estimated Tax Payments of Certain Trusts

Correction

In rule document 88-8035 beginning on page 12006 in the issue of Tuesday, April 12, 1988, make the following correction:

§ 1.6302-3 [Corrected]

On page 12008, in the first column, in § 1.6302-3(a), in the 9th line, and in § 1.6302-3(b), in the 10th line, "6654(1)" should read "6654(l)".

BILLING CODE 1505-01-D

DEPARTMENT OF THE TREASURY

Internal Revenue Service

26 CFR Part 1

[T.D. 8189]

Income Taxes; 2-percent Floor on Miscellaneous Itemized Deductions

Correction

In rule document 88-6471 beginning on page 9870 in the issue of Monday, March 28, 1988, make the following correction:

§ 1.67-2T [Corrected]

On page 9881, in the second column, in § 1.67-2T(o)(3), in the first line, after "Such" insert "other".

BILLING CODE 1505-01-D

DEPARTMENT OF THE TREASURY

Internal Revenue Service

26 CFR Part 26

[T.D. 8187]

Estate and Gift Taxes; Effective Date Rules and Return Requirements Relating to the Generation-Skipping Transfer Tax; and OMB Control Numbers Under the Paperwork Reduction Act

Correction

In rule document 88-5501 beginning on page 8441 in the issue of Tuesday, March 15, 1988, make the following corrections:

§ 26.2601-1 [Corrected]

1. On page 8443, in the second column, in § 26.2601-1(a)(2)(ii), in the 19th line, "(b)(iv)(B)" should read "(b)(1)(iv)(B)".

§ 26.2662-1 [Corrected]

2. On page 8450, in the first column, in § 26.2662-1(c)(2)(iii), in the second line, "director" should read "direct"; in the same paragraph, in the eighth line, after "decedent's" insert "death".

3. On the same page, in the second column, in § 26.2662-1(c)(2)(iii)(B), in the second line, "involved" was misspelled.

4. On the same page, in the same column, in § 26.2662-1(c)(2)(iv), *Example (2)*, in the 16th line, "rile" should read "file".

BILLING CODE 1505-01-D

DEPARTMENT OF THE TREASURY

Internal Revenue Service

26 CFR Parts 26, 26a, and 602

[LR-128-86]

Generation-Skipping Transfer Tax Regulations Under Chapter 13 of the Internal Revenue Code

Correction

In proposed rule document 88-5502 appearing on page 8469 in the issue of Tuesday, March 15, 1988, make the following correction:

In the first column, under **SUMMARY**, in the 12th line, "services" should read "serves".

BILLING CODE 1505-01-D

VOL 53 ISS 79 PT 1 AP 25 1988 UMI

federal register

Monday
April 25, 1988

Unified Agenda of Federal Regulations

13602	Part II—Regulatory Information Service Center
13606	Part III—Department of Agriculture
13652	Part IV—Department of Commerce
13712	Part V—Department of Defense
13728	Part VI—Department of Education
13752	Part VII—Department of Energy
13770	Part VIII—Department of Health and Human Services
13854	Part IX—Department of Housing and Urban Development
13896	Part X—Department of the Interior
13964	Part XI—Department of Justice
13982	Part XII—Department of Labor
14034	Part XIII—Department of State
14040	Part XIV—Department of Transportation
14160	Part XV—Department of the Treasury
14320	Part XVI—ACTION
14324	Part XVII—Agency for International Development
14328	Part XVIII—Architectural and Transportation Barriers Compliance Board
14332	Part XIX—Commission on Civil Rights
14334	Part XX—Environmental Protection Agency
14410	Part XXI—Equal Employment Opportunity Commission
14416	Part XXII—Federal Emergency Management Agency
14425	Part XXIII—Federal Mediation and Conciliation Service
14428	Part XXIV—General Services Administration
14442	Part XXV—Merit Systems Protection Board
14446	Part XXVI—National Aeronautics and Space Administration
14454	Part XXVII—National Archives and Records Administration

14460 Part XXVIII—National Foundation on the Arts and the Humanities/National Endowment for the Arts

14464 Part XXIX—National Foundation on the Arts and the Humanities/National Endowment for the Humanities

14466 Part XXX—National Science Foundation

14470 Part XXXI—Office of Management and Budget

14476 Part XXXII—Office of Personnel Management

14494 Part XXXIII—Panama Canal Commission

14498 Part XXXIV—Peace Corps

14500 Part XXXV—Pennsylvania Avenue Development Corporation

14504 Part XXXVI—Pension Benefit Guaranty Corporation

14512 Part XXXVII—Railroad Retirement Board

14520 Part XXXVIII—Selective Service System

14522 Part XXXIX—Small Business Administration

14536 Part XL—Tennessee Valley Authority

14540 Part XLI—Veterans Administration

14564 Part XLII—Department of Defense/General Services Administration/National Aeronautics and Space Administration

14580 Part XLIII—Commodity Futures Trading Commission

14584 Part XLIV—Consumer Product Safety Commission

14594 Part XLV—Farm Credit Administration

14604 Part XLVI—Federal Communications Commission

14620 Part XLVII—Federal Deposit Insurance Corporation

14628 Part XLVIII—Federal Energy Regulatory Commission, DOE

14636 Part XLIX—Federal Home Loan Bank Board

14648 Part L—Federal Maritime Commission

14656 Part LI—Federal Reserve System

14668 Part LII—Federal Trade Commission

14676 Part LIII—Interstate Commerce Commission

14682 Part LIV—National Credit Union Administration

14692 Part LV—Nuclear Regulatory Commission

14714 Part LVI—Securities and Exchange Commission

14733 Index

VOL 53 ISS 79 PT 1 AP 25 1988 UMI

Federal Register

Monday
April 25, 1988

Part II

Regulatory Information Service Center

Introduction to the Unified Agenda of Federal Regulations

REGULATORY INFORMATION SERVICE CENTER

Unified Agenda of Federal Regulations

AGENCY: Regulatory Information Service Center.

ACTION: Introduction to the Unified Agenda of Federal Regulations.

SUMMARY: The Regulatory Flexibility Act (5 USC 602) requires that agencies publish semiannual regulatory agendas describing regulatory actions they are developing. Executive Order 12291 and OMB Bulletins implementing section 5 of the Executive order establish minimum standards for executive agencies' agendas, including specific types of information for each entry, and publication in a uniform format. All Federal regulatory agencies have chosen to publish their regulatory agendas as part of this **Unified Agenda of Federal Regulations.**

The following separate parts in this issue of the **Federal Register** are the agency agendas, which together comprise the April 1988 edition of the semiannaul **Unified Agenda of Federal Regulations.**

ADDRESS: Regulatory Information Service Center, Room 5216, New Executive Office Building, 726 Jackson Place, NW., Washington, DC 20503.

FOR FURTHER INFORMATION CONTACT: For further information about specific regulatory actions, please refer to the Agency Contact listed for each entry. To provide comment on or to obtain further information about the **Unified Agenda of Federal Regulations**, contact: Mark G. Schoenberg, Executive Director, Regulatory Information Service Center, Room 5216, New Executive Office Building, 726 Jackson Place, NW., Washington, DC 20503, (202) 395-6993.

SUPPLEMENTARY INFORMATION:

TABLE OF CONTENTS

Page

INTRODUCTION TO THE UNIFIED AGENDA OF FEDERAL REGULATIONS

About the Unified Agenda 13602
How to Use the Unified Agenda 13603
Data Limitations 13604
List of Abbreviations 13604
Information About Additional Copies 13604

TABLE OF CONTENTS—Continued

Page

AGENCY DESCRIPTIONS OF REGULATORY ACTIVITIES

Cabinet Departments

Department of Agriculture 13606
Department of Commerce 13662
Department of Defense 13712
Department of Education 13728
Department of Energy 13752
Department of Health and Human Services 13770
Department of Housing and Urban Development 13854
Department of the Interior 13896
Department of Justice 13964
Department of Labor 13982
Department of State 14034
Department of Transportation 14040
Department of the Treasury 14180

Other Executive Agencies

ACTION 14320
Agency for International Development 14324
Architectural and Transportation Barriers Compliance Board 14328
Commission on Civil Rights 14332
Environmental Protection Agency 14334
Equal Employment Opportunity Commission 14410
Federal Emergency Management Agency 14416
Federal Mediation and Conciliation Service 14426
General Services Administration 14428
Merit Systems Protection Board 14442
National Aeronautics and Space Administration 14446
National Archives and Records Administration 14454
National Endowment for the Arts 14460
National Endowment for the Humanities 14464
National Science Foundation 14466
Office of Management and Budget 14470
Office of Personnel Management 14476
Panama Canal Commission 14494
Peace Corps 14498
Pennsylvania Avenue Development Corporation 14500
Pension Benefit Guaranty Corporation 14504
Railroad Retirement Board 14512
Selective Service System 14520
Small Business Administration 14522
Tennessee Valley Authority 14536
Veterans Administration 14540

Joint Authority

Department of Defense/General Services Administration/National Aeronautics and Space Administration (Federal Acquisition Regulation) 14564

Independent Agencies

Commodity Futures Trading Commission 14580

TABLE OF CONTENTS—Continued

Page

Consumer Product Safety Commission 14584
Farm Credit Administration 14594
Federal Communications Commission 14604
Federal Deposit Insurance Corporation 14620
Federal Energy Regulatory Commission 14628
Federal Home Loan Bank Board 14636
Federal Maritime Commission 14648
Federal Reserve System 14656
Federal Trade Commission 14668
Interstate Commerce Commission 14676
National Credit Union Administration 14682
Nuclear Regulatory Commission 14692
Securities and Exchange Commission 14714

SUBJECT INDEX TO THE UNIFIED AGENDA OF FEDERAL REGULATIONS 14733

INTRODUCTION TO THE UNIFIED AGENDA OF FEDERAL REGULATIONS

About the Unified Agenda

The Regulatory Information Service Center compiles the **Unified Agenda of Federal Regulations** for the Office of Information and Regulatory Affairs, Office of Management and Budget. The Center provides information about Federal regulatory activity to the President and his Executive Office, the Congress, agency managers, and the public.

The Office of Information and Regulatory Affairs is responsible for overseeing the Federal Government's regulatory, paperwork, and information-management activities and for implementing President Reagan's Executive Orders 12291 (Federal Regulation) (46 FR 13193; 3 CFR 1981 Comp., p. 127) and 12498 (Regulatory Planning Process) (50 FR 1036; 3 CFR 1985 Comp., p. 323). Under EO 12498, OMB publishes the **Regulatory Program of the United States Government** each year.

The Regulatory Program is a policy document and a management tool that sets forth the priorities of the agency head and of the President regarding the Significant Regulatory Actions (SRAs) that will be conducted during the program year to which it pertains.

The Regulatory Program and the Unified Agenda differ in several ways. The Unified Agenda includes more regulatory actions because it covers all Federal agencies that issue regulations and includes almost all the rulemakings they have under development. This

year's Regulatory Program covers only 26 of the major Federal regulatory agencies, and includes only the most significant of all the regulatory actions that each agency plans to undertake. The Regulatory Program, however, describes each entry more thoroughly than the Unified Agenda.

Most of the regulatory actions described in the **Regulatory Program of the United States Government** are included in this Agenda. In general, the Regulation Identifier Number (RIN) for the action is the same for both publications; however, occasionally, several Agenda entries are combined into one Program entry, and a new RIN is assigned to that entry in the Program.

The Unified Agenda provides uniform reporting of data on regulatory activities under development throughout the Federal Government. This edition of the Unified Agenda includes 54 regulatory agendas from all Federal departments, agencies, and commissions that publish agendas. The Advisory Council on Historic Preservation, Council on Environmental Quality, and the National Capitol Planning Commission usually publish a regulatory agenda, but have nothing to report for this edition of the Unified Agenda. Agencies of the United States Congress are not included.

The Unified Agenda is produced through a computer system designed and maintained by the Center with the advice and assistance of the Government Printing Office. The system was designed to save agencies time and money by automating the preparation and printing of their agendas in a uniform format and to make the Agenda easier to use. In order to further facilitate producing the Agenda, many agencies currently use computer terminals at their offices to enter agenda information into the Center's computer system.

The Agenda contains a Subject Index to help readers locate entries from various agencies that may affect a particular area of interest. The numbers in the index refer to the sequence numbers that appear before the title of each entry in the Agenda. All entries are numbered sequentially from the beginning to the end of the Agenda.

For those agencies that requested it, we provided a computer-produced Table of Contents that appears after the preamble of the agency's agenda. The agency Tables of Contents help readers locate quickly those entries within an agency that may be of most interest to them.

All agendas contain uniform data elements -- regulation title, significance, legal authority, CFR citation, abstract, legal deadline, timetable, small business effects, and agency contact. Agencies also include any additional information they consider important. If any of the data elements is not included, the agency either did not report the information or may provide an explanation in its preamble. For further information, please contact the individual agency.

The **Unified Agenda of Federal Regulations** is published in April and October of each year. We welcome comments on this edition and suggestions for improving future ones.

Dated: April 1, 1988.

Mark G. Schoenberg,

Executive Director.

How to Use the Unified Agenda

Each agency agenda appears as a separate part in this edition of the **Federal Register**. The parts are organized alphabetically in four groups: Cabinet departments, other executive agencies, joint authorities, and independent agencies. Departments are divided into agencies, which may in turn be divided into subagencies.

Each agency begins its agenda with a preamble providing information specific to its agenda. Each agency was asked to list its rules in four groups:

1. Prerule Stage -- actions agencies will undertake in the next 12 months to determine whether or how to initiate rulemaking. Such actions occur prior to a Notice of Proposed Rulemaking and may include Advance Notices of Proposed Rulemaking and reviews of existing regulations.

2. Proposed Rule Stage -- actions for which agencies plan to publish a Notice of Proposed Rulemaking as the next step in their rulemaking process.

3. Final Rule Stage -- actions for which agencies plan to publish a final rule or an interim final rule, or to take other final action as the next step in their rulemaking process.

4. Completed Actions -- actions or reviews the agency completed or withdrew since publishing its last agenda. This section also includes items that were begun and completed between issues of the Unified Agenda.

An agency may use a subheading to identify regulations that it has grouped according to a particular topic. When these subheadings are used, they appear above the title of the first regulation in the group.

A bullet (●) preceding an entry indicates that the entry appears in the Agenda for the first time.

The Agenda Sequence Number preceding the title of each entry identifies the location of the entry in this edition of the Agenda. The same number is used in the index to enable readers to find entries on specific subjects. Those agencies that chose to provide a Table of Contents at the beginning of their agendas also use the sequence number in their Table of Contents. Sequence numbers should help readers easily locate items of most interest to them, either by agency or by subject.

The regulatory activities included in the agency agendas are those currently planned for the next 12 months. The agendas do not include regulations excluded from review under EO 12291 such as military regulations and regulations related to internal agency management.

Entries describing regulations in the Agenda should contain, at a minimum, the following information:

- Title of the Regulation.
- Significance -- an indication of the significance of the entry that appears when:
  - a. The action was included in the **Regulatory Program of the United States Government** for the 1987 program year, or
  - b. The agency otherwise considers the action a priority.

The Significance heading appears only if the entry is a significant action.

- Legal Authority -- the section(s) of the United States Code (USC) or Public Law (PL) or the Executive order (EO) that authorize(s) the regulatory action (agencies may provide common name references to laws in addition to USC or PL references).
- CFR Citation -- the section(s) of the Code of Federal Regulations that affect or will be affected by the action.
- Abstract -- a description of the problem the regulation will address; the need for a Federal solution; and, to the extent available, the alternatives that the agency is considering to address the problem and the potential costs and benefits of the action.

VOL 53 ISS 79 PT 1 AP 25 1988 UMI

- Legal Deadline -- an indication of whether the rule is subject to a statutory or judicial deadline and, if so, the date of that deadline.
- Timetable -- the dates and citations (if available) for all past stages and at least the next future stage of rulemaking. If a date appears in this section as 00/00/00, it means the date of the action is presently undetermined. Similarly, 10/00/88 means the agency can predict the month and year the action will take place, but not the date it will occur.
- Effects on Small Businesses and Other Small Entities -- indicates whether the rule is expected to have a significant economic impact on a substantial number of "small entities" as defined by the Regulatory Flexibility Act (5 USC 601(6)).
- Agency Contact -- the name, title, address, and phone number of a person in the agency who is knowledgeable about the regulation.

Some agencies have provided other optional information at their discretion.

Data Limitations

Agencies prepared entries for this edition of the Unified Agenda to give the public notice of their plans to review, propose, and issue regulations. They have tried to predict their activities over the next 12 months as accurately as possible, but dates and schedules are subject to change. Agencies may withdraw some of the regulations now under development, and they may issue or propose other regulations not included in their agendas. Agency actions in the rulemaking process may occur before or after the dates they have listed. The Agenda does not create a legal obligation on agencies to adhere to schedules within it or to confine their regulatory activities to those regulations that appear in it. The information in this edition is accurate as of February 26, 1988, in the judgment of the submitting agencies, except as otherwise noted in individual agency preambles.

List of Abbreviations

The following abbreviations appear throughout this edition of the Agenda:

ANPRM -- An Advance Notice of Proposed Rulemaking is a preliminary notice that an agency is considering a regulatory action. The agency issues an ANPRM before it develops a detailed proposed rule. The ANPRM describes the general area that may be subject to regulation and usually asks for public comment on the issues and options being discussed. An ANPRM is issued only when an agency believes it needs gather more information before proceeding to a notice of proposed rulemaking.

CFR -- The Code of Federal Regulations is an annual codification of the general and permanent regulations published in the **Federal Register** by the departments and agencies of the Federal Government. The Code is divided into 50 titles and each title covers a broad area subject to Federal regulation. The CFR is keyed to and kept up-to-date by the daily issues of the **Federal Register**.

EO -- An Executive order is a directive from the President to an executive agency, issued under constitutional or statutory authority. Executive orders are published in the **Federal Register** and in Title 3 of the Code of Federal Regulations.

FR -- The **Federal Register** is a daily Federal Government publication that provides a uniform system for publishing Presidential documents, all proposed and final regulations, notices of meetings, and other official documents issued by Federal departments and agencies.

FY -- The Federal fiscal year runs from October 1 to September 30.

NPRM -- A Notice of Proposed Rulemaking is the document an agency issues and publishes in the **Federal Register** that describes and solicits public comments on a proposed regulatory action. Under the Administrative Procedure Act, an NPRM must include, at a minimum:

- A statement of the time, place, and nature of the public rulemaking proceeding;
- A reference to the legal authority under which the rule is proposed; and
- Either the terms or substance of the proposed rule or a description of the subjects and issues involved.

PL -- A Public Law is a law passed by Congress and signed by the President or enacted over his veto. It has general applicability, as opposed to a private law that applies only to those persons or entities specifically designated. Public laws are numbered in sequence throughout the two-year life of each Congress; for example, PL 97-17 would be the 17th public law of the 97th Congress.

RFA -- A Regulatory Flexibility Analysis (RFA) describes the impact of a proposed rule on small entities, as required by the Regulatory Flexibility Act (5 USC 601). An RFA describes why the agency is considering the action; the objectives of and legal basis for the proposed rule; an estimate of the number of small entities that could be affected and the compliance requirements they would have to fulfill; any other duplicative, overlapping, or conflicting Federal rules; and alternatives to the proposed action. When required, an initial RFA accompanies an NPRM and a final RFA accompanies a final rule.

RIA -- A Regulatory Impact Analysis is required by EO 12291 for all major rules and other regulations designated by the Office of Management and Budget. An RIA is prepared to determine whether a proposed regulatory action meets the requirements of section 2 of EO 12291, namely that it:

- Be based on adequate information concerning the need for and consequences of the action;
- Not be undertaken unless the potential benefits outweigh the potential costs to society;
- Maximize net benefits to society;
- Entail the least net cost to society of the alternatives considered; and
- Take into account the condition of particular affected industries, the national economy, and contemplated future regulatory actions.

RIN -- The Regulation Identifier Number is assigned by the Regulatory Information Service Center to identify each regulatory action listed in the Agenda.

USC -- The United States Code is a consolidation and codification of all general and permanent laws of the United States. The USC is divided into 50 titles and each title covers a broad area of Federal law.

Information About Additional Copies

Additional copies of this edition of the **Federal Register** are available from the Superintendent of Documents, U.S. Government Printing Office, Washington, DC 20402, (202) 783-3238.

Copies of individual agency agendas may be available directly from the agency. Please contact the particular agency for further information.

[FR Doc. 88-7958 Filed 04-22-88; 8:45 am]

BILLING CODE 3194-01-T

federal register

Monday
April 25, 1988

Part III

Department of Agriculture

Semiannual Regulatory Agenda

BEST COPY AVAILABLE

DEPARTMENT OF AGRICULTURE (USDA)

DEPARTMENT OF AGRICULTURE

Office of the Secretary

7 CFR Subtitle A, Chs. I-VII, IX-XII, XIV-XVIII, XXI, XXIV-XXIX

9 CFR Chs. I-IV

36 CFR Ch. II

41 CFR Ch. 4

Semiannual Regulatory Agenda; Spring 1988

AGENCY: Office of the Secretary, USDA.

ACTION: Semiannual regulatory agenda.

SUMMARY: This agenda provides summary descriptions of major and non-major regulations being developed in agencies of the U.S. Department of Agriculture in conformance with Executive Order 12291, Federal Regulation. The agenda also describes regulations affecting small entities as required by section 602 of the Regulatory Flexibility Act, Pub. L. 96-354.

USDA has attempted to list all regulations and regulatory reviews pending at the time of publication except for minor and routine or repetitive actions; but some may have been inadvertently missed. There is no legal significance to the omission of an item from this listing. Also, the dates shown for the steps of each action are estimated and are not commitments to act on or by the date shown.

FOR FURTHER INFORMATION CONTACT: For further information on any specific entry shown in this agenda, please contact the person listed for that action.

ADDRESSES: Requests for copies of the Agenda should include a self-addressed. stamped envelope and be directed to: Regulatory Agenda, OBPA, Office of the Secretary, Room 147-E, U.S. Department of Agriculture, Washington, DC 20250, (202) 382-1272.

Dated: February 26, 1988.

Jacquelyn C. Patterson,

Acting Chief, Regulatory & Legislative Staff.

Agricultural Marketing Service—Proposed Rule Stage

Sequence Number	Title	Regulation Identifier Number
1	Fees for Service for Voluntary and Mandatory Programs	0581-AA19

Agricultural Stabilization and Conservation Service—Prerule Stage

Sequence Number	Title	Regulation Identifier Number
2	1988-Crop Honey Price Support Program	0560-AB04
3	1988 Wool and Mohair Program	0560-AB05
4	1989 Wheat Program	0560-AB14
5	Common Program Provisions for the 1989 Wheat, Feed Grain, Cotton and Rice Programs	0560-AB17
6	CCC Cotton Loan Program Regulations–Settlement, Fraud, and Conversion Provisions	0560-AB22

Agricultural Stabilization and Conservation Service—Proposed Rule Stage

Sequence Number	Title	Regulation Identifier Number
7	Commodity Credit Corporation (CCC) Claims Regulations	0560-AA36
8	National Average Loan Rates for 1987-Crop Quota and Additional Peanuts	0560-AA61
9	1988 Price Support Levels for Five Kinds of Tobacco	0560-AB12
10	1989-Crop Peanuts National Poundage Quota	0560-AB13
11	1989 Feed Grain Program	0560-AB15
12	1989 Upland Cotton Program	0560-AB16
13	1988 Soybean Loan Program	0560-AB18
14	1989 Extra Long Staple (ELS) Cotton Program	0560-AB25
15	1989 Price Support Levels for Six Kinds of Tobacco	0560-AB32
16	1989-Crop National Average Price Support Level for Quota Peanuts	0560-AB36
17	1989-Crop Honey Price Support Program	0560-AB37
18	Common Program Provisions for the 1990 Wheat, Feed Grain, Cotton and Rice Programs	0560-AB38
19	1989 Rice Program	0560-AB39
20	1990 Wheat Program	0560-AB41

VOL 53 ISS 79 PT 1 APR 25 1988 UMI

USDA

Agricultural Stabilization and Conservation Service—Final Rule Stage

Sequence Number	Title	Regulation Identifier Number
21	Price Support Loan Program for 1986 Through 1990-Crops Sugar Beets and Sugarcane	0560-AA74
22	1987-Crop Peanuts National Poundage Quota	0560-AA79
23	Common Program Provisions for the 1988 Wheat, Feed Grains, Cotton and Rice Programs	0560-AA89
24	1988 Rice Program	0560-AA90
25	1988 Wheat Program	0560-AA91
26	1988 Feed Grain Program	0560-AA92
27	1988 Upland Cotton Program	0560-AA93
28	1988-Crop Flue-Cured Tobacco Marketing Quotas	0560-AA98
29	1988 Extra Long Staple (ELS) Cotton Program	0560-AA99
30	1988-Crop Burley Tobacco Marketing Quotas and Price Support Level	0560-AB06
31	1988-Crop Marketing Quotas and Acreage Allotments for Five Kinds of Tobacco	0560-AB07
32	1988-Crop Peanut Price Support Program Differentials	0560-AB08
33	1988-Crop Sugar Beet and Sugarcane Price Support Loan Rates	0560-AB19
34	1989 Wool and Mohair Program	0560-AB20
35	1988 CCC Cotton Loan Program Regulations--Bale Packaging Materials	0560-AB21
36	General Regulations Governing Price Support of 1986 and Subsequent Crops of Grain	0560-AB23
37	Waiver of Standards for Approved Warehouses	0560-AB24
38	Dairy Indemnity Payment Program--January 1, 1988 - September 30, 1990	0560-AB30
39	1989-Crop Peanut Price Support Program Differentials	0560-AB31
40	1989-Crop National Average Loan Rate and Minimum CCC Export Edible Sales Price for Additional Peanuts	0560-AB33
41	1989-Crop Burley Tobacco Marketing Quotas and Price Support Level	0560-AB34
42	1989-Crop Flue-cured Tobacco Marketing Quota and Price Support Level	0560-AB35
43	Milk Price Support Level, Calendar Year 1989	0560-AB40
44	Burley Tobacco Price Support Restrictions for Nonbaled Tobacco and Nonstandard Containers	0560-AB42

Agricultural Stabilization and Conservation Service—Completed Actions

Sequence Number	Title	Regulation Identifier Number
45	1987 Feed Grain Program	0560-AA59
46	1987 Extra Long Staple (ELS) Cotton Program	0560-AA60
47	1987 Upland Cotton Program	0560-AA64
48	1987 Rice Program	0560-AA72
49	1987-Crop Honey Price Support Program	0560-AA73
50	1987 Wheat Program	0560-AA82
51	Highly Erodible Land and Wetland Conservation Programs	0560-AA88
52	Common Program Provisions for the 1987 Wheat, Feed Grains, Cotton and Rice Programs	0560-AA94
53	1987 Soybean Loan Program	0560-AA95
54	1987 Price Support Levels for Six Kinds of Tobacco	0560-AA97
55	1987-Crop Sugar Beets and Sugarcane Price Support Loan Rates	0560-AB01
56	Milk Price Support Level, Calendar Year 1988	0560-AB02
57	Milk Price Support Level, October 1, 1987, through December 31, 1990	0560-AB03

Animal and Plant Health Inspection Service—Proposed Rule Stage

Sequence Number	Title	Regulation Identifier Number
58	Importation of Fruits and Vegetables Under Assured Certification Agreements	0579-AA17
59	Swine Identification	0579-AA19
60	Animal Welfare Regulations; Standards	0579-AA20

USDA

Animal and Plant Health Inspection Service—Final Rule Stage

Sequence Number	Title	Regulation Identifier Number
61	Animal Welfare; Definition of Terms and Regulations	0579-AA18

Cooperative State Research Service—Proposed Rule Stage

Sequence Number	Title	Regulation Identifier Number
62	Guidelines for Biotechnology Research in Agricultural Field Plots	0524-AA00

Farmers Home Administration—Prerule Stage

Sequence Number	Title	Regulation Identifier Number
63	Planning and Performing Construction and Other Development	0575-AA36
64	Security Servicing for Multiple Housing Loans	0575-AA38
65	Analyzing Credit Needs and Graduation of Borrowers	0575-AA40
66	Complaints and Compensation for Construction Defects	0575-AA41
67	Rural Development Loan Fund Relending Program	0575-AA43
68	Supplemental Requirements for Making Section 502 RH Loans for Manufactured Homes	0575-AA46

Farmers Home Administration—Proposed Rule Stage

Sequence Number	Title	Regulation Identifier Number
69	Suspension and Debarment Regulations	0575-AA02
70	Recapture of Section 502 Rural Housing Subsidy	0575-AA29
71	Self-Help Technical Assistance Grants	0575-AA34
72	Section 502 Rural Housing Loan Policies, Procedures, and Authorizations	0575-AA35
73	Section 504 Rural Housing Loans and Grants	0575-AA37
74	Management and Collection of Nonprogram (NP) Loans	0575-AA39
75	Rural Housing Program Loans	0575-AA48
76	Management and Supervision of Multiple Family Housing Borrowers and Grant Recipients	0575-AA49
77	Real Property Insurance	0575-AA53
78	Security servicing for Single Family Rural Housing Loans	0575-AA54
79	Borrower Supervision Servicing and Collection of Single Family Housing Loan Accounts	0575-AA55
80	Changes to the Farmers Home Administration (FmHA) Farmer Program Loan Making, Supervision and Servicing Regulations to Implement Applicable Provisions of "The Agricultural Credit Act of 1987"	0575-AA56

Farmers Home Administration—Final Rule Stage

Sequence Number	Title	Regulation Identifier Number
81	Changes to the FmHA Farmer Program Loan Making, Supervision and Servicing Regulations to Implement the Applicable Provisions of the "Food Security Act of 1985"	0575-AA23
82	Rural Rental Housing Policies, Procedures and Authorizations	0575-AA28
83	Borrower Supervision Servicing and Collection of Single Family Housing Loan Accounts	0575-AA42
84	Debt Settlement - Community and Business Programs	0575-AA44
85	Management and Supervision of Multiple Family Housing Borrowers and Grant Recipients	0575-AA50
86	Security Servicing for Multiple Housing Loans	0575-AA51

VOL 53 ISS 79 PT 1 APR 25 1988 UMI

USDA

Farmers Home Administration—Final Rule Stage—Continued

Sequence Number	Title	Regulation Identifier Number
87	Predetermined Amortization Schedule System (PASS) Account Servicing	0575-AA52

Farmers Home Administration—Completed Actions

Sequence Number	Title	Regulation Identifier Number
88	Restricting Insured and Guaranteed Farm Ownership and Operating Loans when Surplus Items Exist	0575-AA12
89	FmHA Guarantees of Commercial Lender's Farm Ownership (FO) and Operating Loans (OL) with Accompanying Lender Principal Write Down and/or Interest Rate Reduction	0575-AA22
90	Section 502 Rural Housing Loan Policies, Procedures, and Authorizations	0575-AA24
91	General Revision of Farmer Program Regulations	0575-AA27
92	Distressed Former Continuation Amendments to FmHA Farmer Program Loan Making, Supervision and Servicing Regulations	0575-AA45

Food and Nutrition Service—Proposed Rule Stage

Sequence Number	Title	Regulation Identifier Number
93	Waiver Simplification: Food Stamp Program	0584-AA02

Food and Nutrition Service—Final Rule Stage

Sequence Number	Title	Regulation Identifier Number
94	Issuance Loss Liability: Food Stamp Program	0584-AA05
95	Food Distribution Program - Part 250	0584-AA07
96	Food Distribution Program on Indian Reservations	0584-AA09
97	Emergency Food Assistance for Victims of Disasters	0584-AA24
98	Conformance with Aid to Families with Dependent Children (AFDC) Rules: Food Stamp Program	0584-AA52
99	Simplified Application and Standardized Benefits: Food Stamp Program	0584-AA62
100	Administration/Management: Food Stamp Program	0584-AA63

Food and Nutrition Service—Completed Actions

Sequence Number	Title	Regulation Identifier Number
101	Quality Control Arbitration Procedures: Food Stamp Program	0584-AA46
102	Special Supplemental Food Program for Women, Infants and Children: Administrative Funding Formula	0584-AA70

Food Safety and Inspection Service—Prerule Stage

Sequence Number	Title	Regulation Identifier Number
103	Administrative Regulations	0583-AA02
104	Transportation	0583-AA19

USDA

Food Safety and Inspection Service—Prerule Stage—Continued

Sequence Number	Title	Regulation Identifier Number
105	Eligibility of Foreign Countries for Importation of Products into the United States	0583-AA55

Food Safety and Inspection Service—Proposed Rule Stage

Sequence Number	Title	Regulation Identifier Number
106	Swine Identification at Official Slaughtering Establishments	0583-AA25
107	Various Amendments to Accommodate Inspection of Meat Food Products Under Title IV of the Futures Trading Act of 1986	0583-AA26
108	Requirements for Partially Defatted Products	0583-AA27
109	Control of Salmonella and Other Enteric Bacteria in Meat and Poultry Processing	0583-AA28
110	Verified Production Control Program	0583-AA29
111	Sulfonamides in Swine	0583-AA31
112	Use and Labeling of Blood Components as Ingredients in Meat Food Products	0583-AA42
113	Use of Lactic Acid and Acetic Acid as Anti-Microbial Agents on Meat and Poultry Carcasses	0583-AA43
114	Glucono Delta Lactone as an Acidifier in Meat and Poultry Products	0583-AA46
115	Requirements for Foreign Country Import Certification and Live Animal Importation	0583-AA47
116	Trichina Control Requirements for Dry-Cured Ham	0583-AA49
117	Movement of Imported Product Prior to Reinspection	0583-AA53
118	Use and Protection of Approved Water Systems	0583-AA54
119	Sulfonamide and Antibiotic Residues in Young Veal Calves; Certification Requirements	0583-AA58
120	Requirements for Foreign Country Certification and Live Animal Importation	0583-AA59
121	Voluntary Inspection of Exotic Animals	0583-AA60
122	Implementation of Pork Irradiation	0583-AA61
123	Certain Products with Meat Ingredients – Exemptions From Definition of a "Meat Food Product"	0583-AA62
124	Use of Certain Binders in Meat and Poultry Products and Transfer of Binders in Text to the Tables of Approved Substances	0583-AA64
125	Immersion Cured and Dry Cured Bacon	0583-AA65
126	Control of Added Substances and Labeling Requirements for Turkey Ham Products	0583-AA66
127	Additional Trichina Detection Methods	0583-AA67
128	Net Weight	0583-AA69
129	Additional Trichina Detection Methods	0583-AA70
130	Labeling of Meat Food Products That Contain Mechanically Separated (Species) Under Certain Circumstances	0583-AA71

Food Safety and Inspection Service—Final Rule Stage

Sequence Number	Title	Regulation Identifier Number
131	Standard for Frankfurters and Similar Cooked Sausages	0583-AA21
132	Determination of Added Water in Cooked Sausages	0583-AA30
133	Cattle Post - Mortem Inspection Procedures and Staffing Procedures	0583-AA32
134	Disposal of Livestock Carcasses and Parts Condemned for Biological Residues	0583-AA33
135	Binder Consisting of Sodium Alginate, Calcium Carbonate, Lactic Acid, and Calcium Lactate	0583-AA34
136	Elimination of Sealing Requirement for Rendered Edible Animal Fat	0583-AA36
137	Random Weight Packages; Statement of Net Weight Decimal Places	0583-AA37
138	Streamlined Inspection System for Broilers and Cornish Game Hens	0583-AA38
139	Ascorbic Acid, Erythorbic Acid, Citric Acid, Sodium Ascorbic, and Sodium Citrate in Fresh Pork Cuts	0583-AA40
140	Determination of "Added Water" in Cooked Sausages	0583-AA41
141	Ingredients that may be Identified as Flavors or Natural Flavors when used in Meat and Poultry Products	0583-AA44
142	Safety and Sanitation Requirements for Electrical Stimulating Equipment	0583-AA45
143	Use of Air for Carcass Hide Removal	0583-AA48
144	Antioxidants in Fabricated Steaks	0583-AA50
145	Notice of Proceedings	0583-AA51
146	Requirements for Imported Poultry Products	0583-AA52
147	Total Quality Control for Labeling	0583-AA63
148	Sulfonamide and Antibiotic Residues in Young Veal Calves; Reduced Testing	0583-AA68

VOL 53 ISS 79 PT 1 AP 25 1988 UMI

USDA

Food Safety and Inspection Service—Completed Actions

Sequence Number	Title	Regulation Identifier Number
149	Identification Service for Poultry	0583-AA35
150	Swine Identification and Record Keeping at Markets and at Official Slaughtering Establishments	0583-AA39
151	Facility and Equipment Requirements for the Streamlined Inspection System for Broilers and Cornish Game Hens	0583-AA56

Foreign Agricultural Service—Proposed Rule Stage

Sequence Number	Title	Regulation Identifier Number
152	Determination of the Market Stabilization Price for Sugar for FY 1988	0551-AA20
153	Determination of Import Quotas on Sugar for Fiscal Year 1988	0551-AA21
154	Types and Quantities of Agricultural Commodities Available for Donation Overseas Under Section 416(b) of the Agricultural Act of 1949 for Each Fiscal Year	0551-AA23

Forest Service—Prerule Stage

Sequence Number	Title	Regulation Identifier Number
155	Part 219 Planning	0596-AA50
156	Official Forest Service Insignia	0596-AA59
157	36 CFR 262 Law Enforcement Support Activities	0596-AA65
158	36 CFR 271 - Use of "Smokey Bear" Symbol	0596-AA66
159	Whiskeytown-Shasta-Trinity National Recreation Area	0596-AA68
160	36 CFR 261 Prohibitions	0596-AA75
161	Use of "Woodsy Owl" Symbol	0596-AA76
162	36 CFR 241 Wildlife: Cooperation in Wildlife Protection, Wildlife Management and Federal Refuge Regulations	0596-AA81
163	Isolated Cabin Authorizations	0596-AA85

Forest Service—Proposed Rule Stage

Sequence Number	Title	Regulation Identifier Number
164	Access to Non-Federal Lands	0596-AA31
165	Grazing and Livestock Use and Management of Wild, Free-Roaming Horses and Burros	0596-AA35
166	Collection of Reimbursable Costs for Processing Special-Use Applications and Administration of Special-Use Authorizations	0596-AA36
167	Modify the General Prohibition Against Use of Vehicles in Excess of 40 Inches in Width on Trails	0596-AA38
168	Revise the Definition of "Mechanical Transport" at 36 CFR 293.6(a)	0596-AA39
169	Conservation of Fish, Wildlife, and their Habitats on the Copper/River Addition and Copper River-Bering River Portion, Chugach National Forest, Alaska	0596-AA41
170	Land Exchanges	0596-AA42
171	Definition of Common Variety Mineral Materials	0596-AA44
172	Revision of Timber Sale Contract Forms FS-2400-6 and FS-2400-6T	0596-AA45
173	Leasable Mineral Regulations	0596-AA46
174	Application Procedures and Fees for Hydroelectric Uses on National Forest System Lands	0596-AA47
175	Locatable Minerals	0596-AA49
176	Appeal of Decisions of Forest Officers	0596-AA51
177	Grazing Fees; Eastern and Southern Regions	0596-AA55
178	Ski Area Term Permits	0596-AA57
179	Free Use to Alaskan Settlers, Miners, Residents and Prospectors	0596-AA69
180	Increase in Minimum Rates Charged for Timber	0596-AA73
181	Sale of Timber where Total Public Benefits May not Meet or May Exceed Total Costs	0596-AA74
182	Administration of Easements for Water Conveyance Systems	0596-AA78
183	Revise Small Tracts Act Regulations	0596-AA79

USDA

Forest Service—Proposed Rule Stage—Continued

Sequence Number	Title	Regulation Identifier Number
184	Oil and Gas Resources Regulations	0596-AA82
185	Modification of Timber Sale Downpayment Requirements	0596-AA83
186	Lumber Price Index Trends	0596-AA86
187	Timber Sale Financial Security	0596-AA87

Forest Service—Final Rule Stage

Sequence Number	Title	Regulation Identifier Number
188	Entrance into Petersburg Watershed	0596-AA23
189	Land Status and Title Records	0596-AA24
190	Periodic Payments, Downpayments, and Market Related Contract Additions	0596-AA33
191	Use Restrictions of National Forest Lands for the Protection of Municipal Water Supplies	0596-AA34
192	Control of Skewed Bidding on National Forest Timber Sales	0596-AA37
193	Small Business Timber Sale Set Aside Program	0596-AA43
194	Indian Allotments on National Forest System Lands	0596-AA52
195	Prohibitions; Fossil Collecting	0596-AA56
196	Non-Competitive Disposal of Mineral Materials	0596-AA60
197	Increased Downpayments From Timber Sale Purchasers with a History of Defaults; and Determination of Purchaser Responsibility	0596-AA70
198	Revise 36 CFR 223.178 Regarding Release of Claims Against the Government on Sales Offered for Government Buyout	0596-AA71
199	Review of Decisions to Terminate Recreation Residence Permits	0596-AA72
200	Revise rules governing special uses of National Forest System lands and resources at 36 CFR 251, Subpart B to remove ambiguities regarding first amendment rights	0596-AA80
201	Appeal of Decisions to Reoffer Returned or Defaulted Timber Sales on National Forests	0596-AA84

Forest Service—Completed Actions

Sequence Number	Title	Regulation Identifier Number
202	Suspension and Debarment of Timber Sale Contractors	0596-AA09
203	Create a New Subpart C to 36 CFR 264 Entitled National Scenic and Historic Trail Symbols	0596-AA54
204	36 CFR Part 222, Subpart C - Grazing Fees	0596-AA77

Packers and Stockyards Administration—Proposed Rule Stage

Sequence Number	Title	Regulation Identifier Number
205	Annual Reports	0590-AA04
206	Scales; Accurate Weights, Repairs, Adjustments or Replacements after Inspection	0590-AA05

Soil Conservation Service—Proposed Rule Stage

Sequence Number	Title	Regulation Identifier Number
207	Snow Surveys and Water Supply Forecasts	0578-AA01
208	Relocation Assistance	0578-AA12

VOL 53 ISS 79 PT 1 APR 25 1988 UMI

USDA

Soil Conservation Service—Proposed Rule Stage—Continued

Sequence Number	Title	Regulation Identifier Number
209	Procedures for the Protection of Archeological and Historical Properties Encountered in SCS-Assisted Programs	0578-AA13

Soil Conservation Service—Final Rule Stage

Sequence Number	Title	Regulation Identifier Number
210	Soil Surveys	0578-AA00
211	Prime and Unique Farmlands	0578-AA10
212	Farmland Protection Policy Act	0578-AA14

DEPARTMENT OF AGRICULTURE (USDA)
Agricultural Marketing Service (AMS)

Proposed Rule Stage

1. FEES FOR SERVICE FOR VOLUNTARY AND MANDATORY PROGRAMS

Legal Authority: 7 USC 1621 to 1627; Agricultural Marketing Act of 1946; 21 USC 1031 to 1056; Egg Products Inspection Act; 7 USC 51 et seq Cotton Standards Act

CFR Citation: 7 CFR 26 to 209

Legal Deadline: None.

Abstract: Fees for the voluntary inspection, grading and classing of agricultural commodities and certain mandatory inspection rates are reviewed periodically and changes are made to reflect cost of providing the service. (AMS 84-008)

Timetable:

Action	Date	FR Cite
NPRM	12/00/88	

Small Entity: No

Agency Contact: Tilli Fox, Reg. Review Staff, MRD, Department of Agriculture, Agricultural Marketing Service, Room 3525-S, Washington, DC 20250, 202 447-2704

RIN: 0581-AA19

DEPARTMENT OF AGRICULTURE (USDA)
Agricultural Stabilization and Conservation Service (ASCS)

Prerule Stage

2. 1988-CROP HONEY PRICE SUPPORT PROGRAM

Significance: Agency Priority

Legal Authority: 7 USC 1446(b); The Agricultural Act of 1949, as amended, Sec. 201(b)

CFR Citation: 7 CFR 1434.26; 7 CFR 1434.27

Legal Deadline: None.

Abstract: Legislation requires that 1988-crop honey be supported at 95 percent of the 1987 level, or $0.5985 per pound. It also provides the Secretary the discretion to allow loan repayment at a lower rate. The objective of a lower repayment rate is to (1) minimize loan forfeitures, (2) avoid excessive stocks, (3) reduce Federal storage costs, and (4) maintain the competitiveness of honey in domestic and export markets. Alternatives to be considered are: the type of support to offer, whether loans, purchases, or loans and purchases, and whether to implement the lower repayment provision. Government costs under the lower repayment provision would be expected to be under $60 million.

Timetable:

Action	Date	FR Cite
Next Action Undetermined		

Small Entity: Not Applicable

Agency Contact: Tom Witzig, Chief Regulatory Impact and Progam Analysis Branch, Department of Agriculture, Agricultural Stabilization and Conservation Service, Room 3726-S, P.O. Box 2415, Washington, DC 20013, 202 475-4636

RIN: 0560-AB04

3. 1988 WOOL AND MOHAIR PROGRAM

Significance: Agency Priority

Legal Authority: 7 USC 1782 et seq; National Wool Act of 1954, as amended by; PL 99-198, Sec 201 The Food Security Act of 1985

CFR Citation: 7 CFR 1468; 7 CFR 1472

Legal Deadline: None.

Abstract: This action will encourage the continued domestic production of wool at prices fair to both producers and consumers in a manner that will ensure a viable domestic wool industry,

by supporting the prices of wool and mohair by means of loans, purchases, payments, or other operations. The support level for wool is determined by statutory formula. The support level for mohair must be set at a level not more than 15 percent above, or below the comparable percentage of parity at which shorn wool is supported. The expected cost to Government will be between $100 and $200 million.

Timetable:

Action	Date	FR Cite
Next Action Undetermined		

Small Entity: Not Applicable

Agency Contact: Tom Witzig, Chief Regulatory Impact and Program Analysis Branch, Department of Agriculture, Agricultural Stabilization and Conservation Service, Room 3726-S, P.O. Box 2415, Washington, DC 20013, 202 475-4636

RIN: 0560-AB05

4. 1989 WHEAT PROGRAM

Significance: Agency Priority

Legal Authority: 7 USC 1445b-3; 7 USC 1710; The Agricultural Adjustment Act of 1949, Sec 107D and 110

CFR Citation: 7 CFR 707; 7 CFR 709; 7 CFR 713; 7 CFR 719; 7 CFR 770; 7 CFR 792; 7 CFR 794 to 796

Legal Deadline: Statutory, June 1, 1988. (For announcement of acreage adjustment levels)

Abstract: To provide an adequate wheat supply for domestic and foreign utilization, increase the competitiveness of U.S. exports, support farm income, combat inflation, hold down Federal costs, conserve natural resources, and comply with statutory requirements.

Determinations are to be made on (1) loan and purchase rate--minimum probable range of $2.06 to $2.57 per bushel, (2) target price--at least $4.16 per bushel, and (3) acreage adjustment--not less than 20% nor more than 30%, if carryin exceeds 1 billion bushels; no more than 20% if carryin is below 1 billion bushels. Decisions also to be made on whether to implement (1) a marketing loan program and related programs, (2) a paid land diversion, and (3) incentives for farmers to participate in the FOR. The expected cost is $2.0-$5.0 billion. (ASCS 87-021)

Timetable:

Action	Date	FR Cite
Next Action Undetermined		

Small Entity: Not Applicable

Agency Contact: Tom Witzig, Chief, Regulatory Impact and Program Analysis Branch, Department of Agriculture, Agricultural Stabilization and Conservation Service, Room 3726-S, PO Box 2415, Washington, DC 20013, 202 475-4636

RIN: 0560-AB14

5. COMMON PROGRAM PROVISIONS FOR THE 1989 WHEAT, FEED GRAIN, COTTON AND RICE PROGRAMS

Significance: Agency Priority

Legal Authority: 7 USC 1421 et seq; The Agricultural Act of 1949, as amended, Sec 107d

CFR Citation: 7 CFR 713; 7 CFR 1421; 7 CFR 1427

Legal Deadline: None.

Abstract: To make and implement determinations that are common to each of the 1989 Wheat, Feed Grain, Cotton and Rice Programs. Determinations are to be made on (1) production of approved non-program crops on underplanted program crop permitted acreage (50/92 provision), (2) production of alternative crops on reduced acreage, (3) haying and grazing of 50/92 and ACR conservation use acreage, (4) offsetting and cross compliance, (5) an advance recourse loan program, (6) multi-year set-asides, (7) the shift of 10 percent of a farm's acreage base between program commodity acreage bases, (8) consideration of actual 1989-crop yields in establishing a subsequent year's program payment yield, (9) advance deficiency and diversion payments, (10) interest certificate payments, and (11) provisions for commodity payment certificates. (ASCS 87-024)

Timetable:

Action	Date	FR Cite
Next Action Undetermined		

Small Entity: Not Applicable

Agency Contact: Tom Witzig, Chief, Regulatory Impact and Program Analysis Branch, Department of Agriculture, Agricultural Stabilization and Conservation Service, Room 3726-S, PO Box 2415, Washington, DC 20013, 202 475-4636

RIN: 0560-AB17

6. CCC COTTON LOAN PROGRAM REGULATIONS--SETTLEMENT, FRAUD, AND CONVERSION PROVISIONS

Legal Authority: 15 USC 714b to c; Commodity Credit Corporation Charter Act, Sec 4 and 5

CFR Citation: 7 CFR 1427

Legal Deadline: None.

Abstract: This action will update regulations to (1) clarify settlement provisions and (2) incorporate fraud or conversion language in order to make the regulations for cotton consistent with those for grain. No cost to Government is expected. (ASCS 87-015)

Timetable:

Action	Date	FR Cite
Next Action Undetermined		

Small Entity: Not Applicable

Agency Contact: Tom Witzig, Chief, Regulatory Impact and Program Analysis Branch, Department of Agriculture, Agricultural Stabilization and Conservation Service, Room 3726-S, PO Box 2415, Washington, DC 20013, 202 475-4636

RIN: 0560-AB22

DEPARTMENT OF AGRICULTURE (USDA)

Proposed Rule Stage

Agricultural Stabilization and Conservation Service (ASCS)

7. COMMODITY CREDIT CORPORATION (CCC) CLAIMS REGULATIONS

Legal Authority: 15 USC 714(k) Commodity Credit Corporation Charter Act

CFR Citation: 7 CFR 1403

Legal Deadline: None.

Abstract: Regulations will revise policy, authorities, procedures, and responsibilities for settling claims by and against CCC. (ASCS 84-034)

Timetable:

Action	Date	FR Cite
Next Action Undetermined		

Small Entity: Not Applicable

Agency Contact: Tom Witzig, Department of Agriculture, Agricultural Stabilization and Conservation Service, Room 3726-S, P.O. Box 2415, Washington, DC 20013, 202 475-4636

RIN: 0560-AA38

8. NATIONAL AVERAGE LOAN RATES FOR 1987-CROP QUOTA AND ADDITIONAL PEANUTS

Significance: Agency Priority

Legal Authority: 7 USC 1445c-2; 7 USC 1423; Ag Act of 1949, Sec. 108B

CFR Citation: Not applicable

Legal Deadline: Statutory, February 15, 1987.

Abstract: This action is required by legislation, which provides a formula for computing the quota support level and guidelines for determining the additional support level. The objective is to support farm income and stabilize prices. (ASCS 86-031)

Timetable:

Action	Date	FR Cite
NPRM	01/26/87	52 FR 2796
Announcement	02/13/87	
Next Action Undetermined		

Small Entity: Not Applicable

Agency Contact: Tom Witzig, Department of Agriculture, Agricultural Stabilization and Conservation Service, Room 3726-S, P.O. Box 2415, Washington, DC 20013, 202 475-4636

RIN: 0560-AA61

9. 1988 PRICE SUPPORT LEVELS FOR FIVE KINDS OF TOBACCO

Legal Authority: 7 USC 1445; The Agricultural Act of 1949, as amended, Sec 106

CFR Citation: 00 CFR none

Legal Deadline: None.

Abstract: To stabilize tobacco prices and comply with statutory requirements, price support levels are set by statutory formula, based on a prices paid index. The Secretary may lower price support at the request of producer associations. Increases may be limited to 65% of the increase otherwise established. A net receipt of $3.6 million is expected. (ASCS 87-019)

Timetable:

Action	Date	FR Cite
NPRM	05/13/88	
Final Action	09/01/88	

Small Entity: Not Applicable

Agency Contact: Tom Witzig, Chief, Regulatory Impact and Program Analysis Branch, Department of Agriculture, Agricultural Stabilization and Conservation Service, Room 3726-S, PO Box 2415, Washington, DC 20013, 202 475-4636

RIN: 0560-AB12

10. 1989-CROP PEANUTS NATIONAL POUNDAGE QUOTA

Significance: Agency Priority

Legal Authority: 7 USC 1358; The Agricultural Act of 1938, as amended, Sec 358

CFR Citation: 00 CFR None

Legal Deadline: Statutory, December 15, 1988. (For announcement of national poundage quota only)

Abstract: To balance supply with demand at levels that assure stable supplies for domestic use and assure producers a reasonable income.

This action is required by legislation, which provides a formula for computing the national poundage quota. The quota must equal the amount estimated to be devoted to domestic edible, seed, and related uses and may not be less than 1.1 million tons. The expected cost is $1 million. (ASCS 87-020)

Timetable:

Action	Date	FR Cite
NPRM	09/14/88	
Final Action	12/15/88	

Small Entity: Not Applicable

Agency Contact: Tom Witzig, Chief, Regulatory Impact and Program Analysis Branch, Department of Agriculture, Agricultural Stabilization and Conservation Service, Room 3726-S, PO Box 2415, Washington, DC 20013, 202 475-4636

RIN: 0560-AB13

11. 1989 FEED GRAIN PROGRAM

Significance: Agency Priority

Legal Authority: 7 USC 1444e; 7 USC 1421; The Agricultural Act of 1949, as amended, Sec 105c; 7 USC 1710; The Agricultural Adjustment Act of 1949, as amended, Sec 110

CFR Citation: 7 CFR 707; 7 CFR 709; 7 CFR 713; 7 CFR 718 to 719; 7 CFR 792; 7 CFR 794 to 796; 7 CFR 1421.720 to 1421.734

Legal Deadline: Statutory, September 30, 1988. (For announcement of acreage adjustment levels)

Abstract: To provide an adequate feed grain supply for domestic and foreign utilization, support farm income, combat inflation, hold down Federal costs, conserve natural resources, and comply with statutory requirements.

Primary determinations to be made are (1) loan and purchase rates--probable range of $1.65 - $2.06/bu. for corn, with rates for other feed grains set in relation to that for corn, (2) target prices--not less than $2.88 per bushel for corn, with rates for other feed grains set in relation to that for corn, and (3) acreage adjustment--not less than 12.5% nor more than 20%, if corn carryin exceeds 2 billion bushels; no more than 12.5% if corn carryin is less than 2 billion bushels. Decisions also to be made on whether to implement (1) a paid land diversion, (2) a marketing loan, (3) a half-compliance program, (4) incentives for farmers to participate in the FOR, and (5) price support for corn silage. The expected cost is $8.0 to $12.0 billion. (ASCS 87-022)

Timetable:

Action	Date	FR Cite
NPRM	07/15/88	
Final Action	09/30/88	

Small Entity: Not Applicable

Agency Contact: Tom Witzig, Chief, Regulatory Impact and Program Analysis Branch, Department of Agriculture, Agricultural Stabilization and Conservation Service, Room 3726-S,

PO Box 2415, Washington, DC 20013, 202 475-4636

RIN: 0560-AB15

12. 1989 UPLAND COTTON PROGRAM

Significance: Agency Priority

Legal Authority: 7 USC 1444-1; The Agricultural Adjustment Act of 1949, as amended, Sec 103A

CFR Citation: 7 CFR 707; 7 CFR 709; 7 CFR 713; 7 CFR 719; 7 CFR 770; 7 CFR 792; 7 CFR 794 to 796; 7 CFR 1427

Legal Deadline: Statutory, November 1, 1988. (For announcement of loan rate, acreage adjustment level, and national program acreage)

Abstract: To assure sufficient supplies of upland cotton for domestic and export use, maintain adequate carryover stocks, support farm income, combat inflation, hold down Federal costs, and comply with statutory requirements.

Determinations must be made on (1) the loan rate--not less than 50.00 cents/lb, (2) the target price--not less than 74.5 cents/lb, (3) the loan repayment rate--if the world price is below the loan rate, repayment rate may be set by 1 of 2 options: (Plan A or Plan B, Sec. 103A (a(5))), (4) acreage limitation--no greater than 25%, (5) the national program acreage--not less than 10 million acres, (6) other provisions: whether or not to implement voluntary paid land diversion, loan deficiency payment, inventory reduction, or seed cotton loan programs. The expected cost is $250 - $500 million. (ASCS 87-023)

Timetable:

Action	Date	FR Cite
NPRM	08/01/88	
Final Action	10/31/88	

Small Entity: Not Applicable

Agency Contact: Tom Witzig, Chief, Regulatory Impact and Program Analysis Branch, Department of Agriculture, Agricultural Stabilization and Conservation Service, Room 3726-S, PO Box 2415, Washington, DC 20013, 202 475-4636

RIN: 0560-AB16

13. 1988 SOYBEAN LOAN PROGRAM

Significance: Agency Priority

Legal Authority: 7 USC 1446; The Agricultural Act of 1949, as amended, Sec 201

CFR Citation: 7 CFR 1421

Legal Deadline: Statutory, October 1, 1988. (For announcement of loan rate)

Abstract: To assure sufficient supplies for domestic and export use, support farm income, combat inflation, hold down Federal costs, and comply with statutory requirements.

Determinations are to be made on the loan and purchase rate, with a probable range of $4.77 to $4.53/bu., and on whether to implement a marketing loan program. The expected cost is $0.1 - $0.6 billion. (ASCS 87-025)

Timetable:

Action	Date	FR Cite
NPRM	08/01/88	
Final Action	09/30/88	

Small Entity: Not Applicable

Agency Contact: Tom Witzig, Chief, Regulatory Impact and Program Analysis Branch, Department of Agriculture, Agricultural Stabilization and Conservation Service, Room 3726-S, PO Box 2415, Washington, DC 20013, 202 475-4636

RIN: 0560-AB18

14. 1989 EXTRA LONG STAPLE (ELS) COTTON PROGRAM

Legal Authority: 7 USC 1444(h); The Agricultural Adjustment Act of 1949, as amended, Sec 103h

CFR Citation: 7 CFR 1427

Legal Deadline: Statutory, December 1, 1988. (12/1/88 for announcement of loan rate only)

Abstract: To assure sufficient supplies of ELS cotton for domestic and export use, maintain adequate carryover stocks, support farm income, combat inflation, conserve natural resources, hold down Federal costs, and comply with statutory requirements.

Determinations are to be made on (1) the loan rate -- not less than 85% of the average market price over the previous 5 years, excluding the highest and lowest years, (2) the target price -- 120% of the loan level, (3) acreage limitation -- to be set at such level as to assure that total supplies will not be excessive, (4) the national program acreage -- not less than 60 thousand acres, (5) other provisions -- whether or not to make land diversion payments, and the loan level for seed cotton. The expected cost is $0.5 - $1.0 million. (ASCS 87-018)

Timetable:

Action	Date	FR Cite
NPRM	09/01/88	
Final Action	12/01/88	

Small Entity: Not Applicable

Agency Contact: Tom Witzig, Chief, Regulatory Impact and Program Analysis Branch, Department of Agriculture, Agricultural Stabilization and Conservation Service, Room 3726-S, P.O. Box 2415, Washington, DC 20013, 202 475-4636

RIN: 0560-AB25

15. ● 1989 PRICE SUPPORT LEVELS FOR SIX KINDS OF TOBACCO

Significance: Agency Priority

Legal Authority: 7 USC 1445; The Agricultural Act of 1949, as amended, Sec 106

CFR Citation: 00 CFR None

Legal Deadline: None.

Abstract: To stabilize tobacco prices and comply with statutory requirements, price support levels are set by statutory formula, based on a prices paid index. The Secretary may lower price support at the request of producer associations. Increases may be limited to 65% of the increase otherwise established. A net receipt of $9 million is expected.

Timetable:

Action	Date	FR Cite
NPRM	05/01/89	
Final Action	09/01/89	

Small Entity: Not Applicable

Agency Contact: Tom Witzig, Chief, Regulatory Impact & Program Analysis Branch, Department of Agriculture, Agricultural Stabilization and Conservation Service, Room 3726-S, PO Box 2415, Washington, DC 20013, 202 475-4636

RIN: 0560-AB32

16. ● 1989-CROP NATIONAL AVERAGE PRICE SUPPORT LEVEL FOR QUOTA PEANUTS

Significance: Agency Priority

Legal Authority: 7 USC 1445c-2; Agricultural Act of 1949, Sec 108B

CFR Citation: 00 CFR None

Legal Deadline: Statutory, February 15, 1989.

Abstract: This action is required by legislation, which provides a formula for computing the quota support level. The objective is to support farm income and stabilize prices.

Timetable:

Action	Date	FR Cite
NPRM	12/01/88	
Final Action	02/15/89	

Small Entity: Not Applicable

Agency Contact: Tom Witzig, Chief, Regulatory Impact & Program Analysis Branch, Department of Agriculture, Agricultural Stabilization and Conservation Service, Room 3726-S, PO Box 2415, Washington, DC 20013, 202 475-4536

RIN: 0560-AB36

17. ● 1989-CROP HONEY PRICE SUPPORT PROGRAM

Significance: Agency Priority

Legal Authority: 7 USC 1446(b); The Agricultural Act of 1949, as amended, Sec 201(b)

CFR Citation: 7 CFR 1434.26; 7 CFR 1434.27

Legal Deadline: None.

Abstract: Legislation requires that 1989-crop honey be supported at 95 percent of the 1988 level, or $0.5636 per pound. It also provides the Secretary the discretion to allow loan repayment at a lower rate. The objective of a lower repayment rate is to (1) minimize loan forfeitures, (2) avoid excessive stocks, (3) reduce Federal storage costs, and (4) maintain the competitiveness of honey in domestic and export markets. Alternatives to be considered are: the type of support to offer, whether loans purchases, or loans and purchases, and whether to implement the lower repayment provision. Government costs under the lower repayment provision would be expected to be under $60 million.

Timetable:

Action	Date	FR Cite
NPRM	01/18/89	
Final Action	04/01/89	

Small Entity: Not Applicable

Agency Contact: Tom Witzig, Chief, Regulatory Impact & Program Analysis Branch, Department of Agriculture, Agricultural Stabilization and Conservation Service, Room 3726-S, PO Box 2415, Washington, DC 20013, 202 475-4636

RIN: 0560-AB37

18. ● COMMON PROGRAM PROVISIONS FOR THE 1990 WHEAT, FEED GRAIN, COTTON AND RICE PROGRAMS

Significance: Regulatory Program

Legal Authority: 7 USC 1421 et seq; The Agricultural Act of 1949, as amended, Sec 107d

CFR Citation: 7 CFR 713; 7 CFR 1421; 7 CFR 1427

Legal Deadline: None.

Abstract: To make and implement determinations that are common to each of the 1989 Wheat, Feed Grain, Cotton and Rice Programs. Determinations are to be made on (1) production of approved non-program crops on underplanted program crop permitted acreage, (2) production of alternative crops on reduced acreage, (3) haying and grazing of underplanted program crop permitted acreage and ACR conservation use acreage, (4) offsetting and cross compliance, (5) an advance recourse loan program, (6) multi-year set-asides, (7) the shift of 10 percent of a farm's acreage base between program commodity acreage bases, (8) consideration of actual 1990-crop yields in establishing a subsequent year's program payment yield, (9) advance deficiency and diversion payments, (10) interest certificate payments, (11) provisions for commodity payment certificates, and (12) the enrollment period.

Timetable:

Action	Date	FR Cite
NPRM	03/08/89	
NPRM Comment Period End	05/08/89	
Final Action	06/01/89	

Small Entity: Not Applicable

Agency Contact: Tom Witzig, Chief, Regulatory Impact & Program Analysis Branch, Department of Agriculture, Agricultural Stabilization and Conservation Service, Room 3726-S, PO Box 2415, Washington, DC 20013, 202 475-4636

RIN: 0560-AB38

19. ● 1989 RICE PROGRAM

Significance: Regulatory Program

Legal Authority: 7 USC 1441; Agricultural Act of 1949, Sec 101, as amended

CFR Citation: 7 CFR 707; 7 CFR 709; 7 CFR 713; 7 CFR 719; 7 CFR 720; 7 CFR 794 to 796; 7 CFR 1421

Legal Deadline: Statutory, January 31, 1989. (For announcing loan, target, and acreage limitation levels.)

Abstract: To provide an adequate supply of rice for domestic and foreign utilization, support farm income, combat inflation, hold down Federal costs, conserve resources, and comply with statutory requirements.

Primary determinations to be made are (1) loan and purchase rates -- 85% of the previous 5-year average, excluding the high and low years, but cannot be reduced more than 5% from the previous year's level nor be lower than $6.50/cwt., (2) target price -- no lower than $10.80 cwt., (3) acreage limitation -- no more than 35%, with a target carryover level of 30 million cwt. Determinations are also to be made on (1) a land diversion program, (2) advance deficiency/diversion payments, (3) purchase of marketing certificates under the marketing loan, (4) loan deficiency payments, (5) inventory reduction program (half-ARP), and (6) loan rate adjustments (loan differentials). The expected cost to Government is $600 million.

Timetable:

Action	Date	FR Cite
NPRM	09/30/88	
Final Action	12/31/88	

Small Entity: Not Applicable

Agency Contact: Tom Witzig, Chief, Regulatory Impact & Program Analysis Branch, Department of Agriculture, Agricultural Stabilization and Conservation Service, Room 3726-S, PO Box 2415, Washington, DC 20013, 202 475-4636

RIN: 0560-AB39

20. ● 1990 WHEAT PROGRAM

Significance: Regulatory Program

Legal Authority: 7 USC 1445b-3; 7 USC 1710; The Agricultural Adjustment Act of 1949, Sec 107D and 110

CFR Citation: 7 CFR 707; 7 CFR 709; 7 CFR 713; 7 CFR 719; 7 CFR 770; 7 CFR 792; 7 CFR 794 to 796

Legal Deadline: Statutory, June 1, 1989. (For announcement of acreage adjustment levels)

Abstract: To provide an adequate wheat supply for domestic and foreign utilization, increase the competitiveness of U.S. exports, support farm income, combat inflation, hold down Federal costs, conserve natural resources, and comply with statutory requirements.

Primary determinations to be made are (1) loan and purchase rate – minimum probable range of $1.95 to $2.44 per bushel, (2) target price – at least $4.00 per bushel, and (3) acreage adjustment – not less than 20% nor more than 30%, if carryin exceeds 1 billion bushels; no more than 20% if carryin is below 1 billion bushels. Decisions also to be made on whether to implement (1) a marketing loan program and related programs, (2) a paid land diversion, (3) advance deficiency/diversion payments, (4) generic certificate program, and (5) incentives for farmers to participate in the FOR. The expected cost is $2.0-$4.0 billion.

Timetable:

Action	Date	FR Cite
NPRM	03/08/89	
NPRM Comment Period End	05/08/89	
Final Action	06/01/89	

Small Entity: Not Applicable

Agency Contact: Tom Witzig, Chief, Regulatory Impact & Program Analysis Branch, Department of Agriculture, Agricultural Stabilization and Conservation Service, Room 3726-S, PO Box 2415, Washington, DC 20013, 202 475-4636

RIN: 0560-AB41

DEPARTMENT OF AGRICULTURE (USDA)

Agricultural Stabilization and Conservation Service (ASCS)

Final Rule Stage

21. PRICE SUPPORT LOAN PROGRAM FOR 1986 THROUGH 1990-CROPS SUGAR BEETS AND SUGARCANE

Significance: Regulatory Program

Legal Authority: 7 USC 1446; Ag Act of 1949, as amended, Sec 201

CFR Citation: 7 CFR 1435

Legal Deadline: Statutory, October 1, 1986.

Abstract: The 1949 Act, as amended by the Food Security Act of 1985, requires the Secretary to support the price of domestically grown sugarcane and sugar beets through a nonrecourse loan program effective for the 1986 through 1990 crops. The object of this action is to develop program and operation provisions for administering a sugar price support program. (ASCS 86-048)

Timetable:

Action	Date	FR Cite
Announcement	10/01/86	
Interim Final Rule	10/29/86	51 FR 39507

Next Action Undetermined

Small Entity: Not Applicable

Agency Contact: Tom Witzig, Department of Agriculture, Agricultural Stabilization and Conservation Service, Room 3726-S, P.O. Box 2415, Washington, DC 20013, 202 475-4636

RIN: 0560-AA74

22. 1987-CROP PEANUTS NATIONAL POUNDAGE QUOTA

Significance: Agency Priority

Legal Authority: 7 USC 1358; Ag Act of 1938, Sec 358

CFR Citation: Not applicable

Legal Deadline: Statutory, December 15, 1986.

Abstract: This action is required by legislation, which provides a formula for computing the National quota. The quota must equal the amount devoted to domestic edible, seed, and related uses and may not be less than 1.1 million tons. The objective is to balance supply with demand at levels that assure stable supplies for domestic use and assure producers a reasonable income. (ASCS 86-033)

Timetable:

Action	Date	FR Cite
NPRM	11/20/86	51 FR 41990
Announcement	12/12/86	

Next Action Undetermined

Small Entity: Not Applicable

Agency Contact: Tom Witzig, Department of Agriculture, Agricultural Stabilization and Conservation Service, Room 3726-S, P.O. Box 2415, Washington, DC 20013, 202 475-4636

RIN: 0560-AA79

23. COMMON PROGRAM PROVISIONS FOR THE 1988 WHEAT, FEED GRAINS, COTTON AND RICE PROGRAMS

Significance: Regulatory Program

Legal Authority: 7 USC 1441-1; 7 USC 1444-1; 7 USC 1444-b; 7 USC 1445b-3; 7 USC 1461 to 1469; Agricultural Act of 1949, as amended

CFR Citation: 7 CFR 713; 7 CFR 1421; 7 CFR 1427

Legal Deadline: Statutory, June 1, 1987. (Acreage Reduction Percentage for Wheat Only)

Abstract: To make and implement determinations that are common to each of the 1988 wheat, feed grains, cotton and rice programs.

Determinations are to be made on (1) the enrollment period (universal or staggered for each program), (2) production of approved non-program crops on underplanted program crop permitted acreage, (3) production of alternative crops on reduced acreage, (4) offsetting and cross compliance, (5) an advance recourse loan program, (6) multi-year set-asides, (7) the shift of ten percent of a farm's acreage base between program commodity base acreage, (8) consideration of actual 1988-crop yields in establishing a subsequent year's program payment yield, (9) procedure for crediting prevented planting and failed acreage, and (10) advance deficiency and diversion payments. (ASCS 86-057)

Timetable:

Action	Date	FR Cite
NPRM	04/28/87	52 FR 15362
Announcement	07/02/87	
Announcement	01/21/88	
Final Action	04/01/88	

Small Entity: Not Applicable

Agency Contact: Tom Witzig, Department of Agriculture, Agricultural Stabilization and Conservation Service, Room 3726-S, P.O. Box 2415, Washington, DC 20013, 202 475-4636

RIN: 0560-AA89

USDA—ASCS **Final Rule Stage**

24. 1988 RICE PROGRAM

Significance: Regulatory Program

Legal Authority: 7 USC 1441; The Agricultural Act of 1949, as amended Sec 101

CFR Citation: 7 CFR 707; 7 CFR 709; 7 CFR 713; 7 CFR 719; 7 CFR 770; 7 CFR 794 to 796; 7 CFR 1421

Legal Deadline: Statutory, January 31, 1988.

Abstract: To provide an adequate rice supply for domestic and foreign utilization, and comply with statutory requirements. (ASCS 86-058)

Timetable:

Action	Date	FR Cite
NPRM	10/02/87	52 FR 38806
Announcement	01/22/88	
Announcement	01/25/88	
Final Action	04/01/88	

Small Entity: No

Agency Contact: Tom Witzig, Department of Agriculture, Agricultural Stabilization and Conservation Service, Room 3726-S, P.O. Box 2415, Washington, DC 20013, 202 475-4636

RIN: 0560-AA90

25. 1988 WHEAT PROGRAM

Significance: Regulatory Program

Legal Authority: 7 USC 1445b-3; The Agricultural Act of 1949, as amended, Sec 107D

CFR Citation: 7 CFR 707; 7 CFR 709; 7 CFR 713; 7 CFR 719; 7 CFR 770; 7 CFR 794 to 796; 7 CFR 1421.1 to 1421.29; 7 CFR 1421.460 to 1421.471; 7 CFR 1421.700 to 1421.714

Legal Deadline: Statutory, June 1, 1987. (Acreage Reduction Percentage Only)

Abstract: To provide an adequate wheat supply for domestic and foreign utilization, increase the competitiveness of U.S. exports, and comply with statutory requirements. (ASCS 86-059)

Timetable:

Action	Date	FR Cite
NPRM	04/28/87	52 FR 15358
Announcement	07/02/87	
Announcement	01/21/88	
Final Action	04/01/88	

Small Entity: Not Applicable

Agency Contact: Tom Witzig, Department of Agriculture, Agricultural Stabilization and Conservation Service, Room 3726-S, P.O. Box 2415, Washington, DC 20013, 202 475-4636

RIN: 0560-AA91

26. 1988 FEED GRAIN PROGRAM

Significance: Regulatory Program

Legal Authority: 7 USC 1444e; The Agricultural Act of 1949, as amended, Sec 105C and 110

CFR Citation: 7 CFR 707; 7 CFR 709; 7 CFR 713; 7 CFR 718; 7 CFR 719; 7 CFR 792; 7 CFR 794 to 796; 7 CFR 1421.1 to 1421.29; 7 CFR 1421.90 to 1421.100; 7 CFR 1421.720 to 1421.734

Legal Deadline: Statutory, September 30, 1987. (Acreage Reduction Percentage Only)

Abstract: To provide an adequate feed grain supply for domestic and foreign utilization, and comply with statutory requirements. (ASCS 86-060)

Timetable:

Action	Date	FR Cite
NPRM	07/16/87	52 FR 26707
Announcement	09/29/87	
Announcement	01/21/88	
Final Action	04/01/88	

Small Entity: Not Applicable

Agency Contact: Tom Witzig, Department of Agriculture, Agricultural Stabilization and Conservation Service, Room 3726-S, P.O. Box 2415, Washington, DC 20013, 202 475-4636

RIN: 0560-AA92

27. 1988 UPLAND COTTON PROGRAM

Significance: Regulatory Program

Legal Authority: 7 USC 1444-1, Ag Act of 1949, as amended Sec. 103A

CFR Citation: 7 CFR 707; 7 CFR 709; 7 CFR 713; 7 CFR 719; 7 CFR 770; 7 CFR 792; 7 CFR 794 to 796; 7 CFR 1427

Legal Deadline: Statutory, November 1, 1987.

Abstract: To assure sufficient supplies of upland cotton for domestic and export use, maintain adequate carryover stocks, and comply with statutory requirements. (ASCS 86-061)

Timetable:

Action	Date	FR Cite
NPRM	07/17/87	52 FR 27032
Announcement	10/29/87	
Announcement	01/21/88	
Final Action	04/01/88	

Small Entity: Not Applicable

Agency Contact: Tom Witzig, Department of Agriculture, Agricultural Stabilization and Conservation Service, Room 3726-S, P.O. Box 2415, Washington, DC 20013, 202 475-4636

RIN: 0560-AA93

28. 1988-CROP FLUE-CURED TOBACCO MARKETING QUOTAS

Significance: Agency Priority

Legal Authority: 7 USC 1311 to 1313; Agricultural Adjustment Act of 1938, as amended; Sec 311 to 313

CFR Citation: 7 CFR 725

Legal Deadline: Statutory, December 15, 1987.

Abstract: Marketing quotas are required by legislation. Their objective is to balance supply with demand at levels assuring stable supplies for domestic and export use. (ASCS 86-064)

Timetable:

Action	Date	FR Cite
Next Action Undetermined		

Small Entity: Not Applicable

Agency Contact: Tom Witzig, Department of Agriculture, Agricultural Stabilization and Conservation Service, Room 3726-S, P.O. Box 2415, Washington, DC 20013, 202 475-4636

RIN: 0560-AA98

29. 1988 EXTRA LONG STAPLE (ELS) COTTON PROGRAM

Significance: Agency Priority

Legal Authority: 7 USC 1444(h); The Agricultural Act of 1949, as amended, Sec 103(h)

CFR Citation: 7 CFR 1427

Legal Deadline: Statutory, December 1, 1987.

Abstract: To assure sufficient supplies of extra long staple cotton for domestic and export use, maintain adequate carryover stocks, and comply with statutory requirements. (ASCS 86-065)

Timetable:

Action	Date	FR Cite
NPRM	09/10/87	52 FR 34262
Final Action	04/01/88	

Small Entity: Not Applicable

Agency Contact: Tom Witzig, Department of Agriculture, Agricultural Stabilization and Conservation Service,

Room 3726-S, P.O. Box 2415, Washington, DC 20013, 202 475-4636

RIN: 0560-AA99

30. 1988-CROP BURLEY TOBACCO MARKETING QUOTAS AND PRICE SUPPORT LEVEL

Significance: Agency Priority

Legal Authority: 7 USC 1312; The Agricultural Act of 1938, as amended, Sec 312 to 313; 7 USC 1445; The Agricultural Adjustment Act of 1949, as amended, Sec 106

CFR Citation: 7 CFR 724

Legal Deadline: Statutory, February 1, 1988.

Abstract: Marketing quotas and price support are required by legislation. Their objectives are to balance supply with demand at levels assuring stable supplies for domestic and export use at prices fair to producers.

Timetable:

Action	Date	FR Cite
Next Action Undetermined		

Small Entity: No

Agency Contact: Tom Witzig, Chief, Regulatory Impact and Program Analysis Branch, Department of Agriculture, Agricultural Stabilization and Conservation Service, Room 3726-S P.O. Box 2415, Washington, DC 20013, 202 475-4636

RIN: 0560-AB06

31. 1988-CROP MARKETING QUOTAS AND ACREAGE ALLOTMENTS FOR FIVE KINDS OF TOBACCO

Significance: Agency Priority

Legal Authority: 7 USC 1312(a) et seq; The Agricultural Act of 1938, as amended, Sec 312-313

CFR Citation: 7 CFR 724

Legal Deadline: Statutory, March 1, 1988.

Abstract: Marketing quotas and acreage allotments are required by legislation. Their objective is to balance supply with demand at levels that ensure stable supplies for domestic and export use. This action is expected to result in a net receipt to the Government of approximately $8 million.

Timetable:

Action	Date	FR Cite
NPRM	01/11/88	53 FR 630
Final Action	05/01/88	

Small Entity: Not Applicable

Agency Contact: Tom Witzig, Chief, Regulatory Impact and Program Analysis Branch, Department of Agriculture, Agricultural Stabilization and Conservation Service, Room 3726-S, P.O. Box 2415, Washington, DC 20013, 202 475-4636

RIN: 0560-AB07

32. 1988-CROP PEANUT PRICE SUPPORT PROGRAM DIFFERENTIALS

Legal Authority: 7 USC 1423; Agricultural Act of 1949, Sec. 403; 15 USC 714c; Commodity Credit Corporation Charter Act, Sec. 5

CFR Citation: Not applicable

Legal Deadline: None.

Abstract: The Secretary of Agriculture is authorized to make appropriate adjustments in the support price for peanuts for differences in grade, type, quality, location, and other factors to ensure that price support levels are representative of the market values of the various types. The average of the price support levels must, as far as is practicable, equal the national average price support level as determined by legislation. No alternatives are considered and the cost to Government will be negligible.

Timetable:

Action	Date	FR Cite
Next Action Undetermined		

Small Entity: No

Agency Contact: Tom Witzig, Chief, Regulatory Impact and Program Analysis Branch, Department of Agriculture, Agricultural Stabilization and Conservation Service, Room 3726-S, P.O. Box 2415, Washington, DC 20013, 202 475-4636

RIN: 0560-AB08

33. 1988-CROP SUGAR BEET AND SUGARCANE PRICE SUPPORT LOAN RATES

Significance: Agency Priority

Legal Authority: 7 USC 1421; 7 USC 1446; The Agricultural Adjustment Act of 1949, as amended, Sec 201; and 401

CFR Citation: 7 CFR 1435

Legal Deadline: None.

Abstract: To set forth (1) loan rates applicable to 1988-crop sugar beets and sugarcane, and (2) the 1988-crop minimum price support levels processors are required to pay their growers. The minimum national average loan rate is set by statute at $0.18/lb. for sugarcane, with the rate for sugar beets set at such level as the Secretary determines is fair and reasonable in relation to that for sugarcane. No impact on Government outlays is expected. However, the cost to consumers and other users of sugar will likely exceed $2 billion. (87-026)

Timetable:

Action	Date	FR Cite
Final Action	09/15/88	

Small Entity: Not Applicable

Agency Contact: Tom Witzig, Chief, Regulatory Impact and Program Analysis Branch, Department of Agriculture, Agricultural Stabilization and Conservation Service, Room 3726-S, PO Box 2415, Washington, DC 20013, 202 475-4636

RIN: 0560-AB19

34. 1989 WOOL AND MOHAIR PROGRAM

Significance: Agency Priority

Legal Authority: 7 USC 1782 et seq; National Wool Act of 1954, as amended, Sec 703

CFR Citation: 7 CFR 1468; 7 CFR 1472

Legal Deadline: None.

Abstract: To encourage the continued domestic production of wool at prices fair to both producers and consumers, in a manner which will assure a viable domestic wool industry in the future, by supporting the prices of wool and mohair by means of loans, purchases, payments, or other operations. The support level for wool is set by statutory formula. The support price for mohair must be set at a level not more than 15 percent above or below the comparable percentage of parity at which shorn wool is supported. The expected cost is $100 to $200 million. (ASCS 87-027)

Timetable:

Action	Date	FR Cite
Final Action	12/30/88	

Small Entity: Not Applicable

VOL 53 ISS 79 PT 1 AP 25 1988 UMI

Agency Contact: Tom Witzig, Chief, Regulatory Impact and Program Analysis Branch, Department of Agriculture, Agricultural Stabilization and Conservation Service, Room 3726-S, PO Box 2415, Washington, DC 20013, 202 475-4636

RIN: 0560-AB20

35. 1988 CCC COTTON LOAN PROGRAM REGULATIONS—BALE PACKAGING MATERIALS

Legal Authority: 15 USC 714b to c; Commodity Credit Corporation Charter Act, Sec 4 and 5

CFR Citation: 7 CFR 1427

Legal Deadline: None.

Abstract: To incorporate by reference the specifications for bale packaging materials used in wrapping cotton for 1988 that were approved by the Joint Cotton Industry Bale Packaging Committee and that are acceptable to CCC. No cost to Government is expected. (ASCS 87-014)

Timetable:

Action	Date	FR Cite
Final Action	07/01/88	

Small Entity: Not Applicable

Agency Contact: Tom Witzig, Chief, Regulatory Impact and Program Analysis Branch, Department of Agriculture, Agricultural Stabilization and Conservation Service, Room 3726-S, PO Box 2415, Washington, DC 20013, 202 475-4636

RIN: 0560-AB21

36. GENERAL REGULATIONS GOVERNING PRICE SUPPORT OF 1986 AND SUBSEQUENT CROPS OF GRAIN

Legal Authority: 15 USC 714b to c; Commodity Credit Corporation Charter Act, Sec 4 and 5

CFR Citation: 7 CFR 1421

Legal Deadline: None.

Abstract: To correct and update program regulations. Specifically, this amendment will incorporate substitution provisions, clarify settlement of high moisture grain delivered to CCC, and revise warehouse-stored loan grade requirements. No cost to Government is expected. (ASCS 87-016)

Timetable:

Action	Date	FR Cite
NPRM	11/24/87	52 FR 44989

Next Action Undetermined

Small Entity: Not Applicable

Agency Contact: Tom Witzig, Chief, Regulatory Impact and Program Analysis Branch, Department of Agriculture, Agricultural Stabilization and Conservation Service, Room 3726-S, PO Box 2415, Washington, DC 20013, 202 475-4636

RIN: 0560-AB23

37. WAIVER OF STANDARDS FOR APPROVED WAREHOUSES

Legal Authority: 15 USC 714c; Commodity Credit Corporation Charter Act, Sec 5

CFR Citation: 7 CFR 1421

Legal Deadline: None.

Abstract: Due to the large carryover of grain stocks and a bumper harvest expected this summer and fall, the need for storage space for CCC-owned and loan grain may become critical in several areas of the country. This amendment will permit CCC to approve warehouses that are temporarily unable to meet all of the Standards of Approval, in order to provide adequate storage space. There is no expected cost to Government of this action. (ASCS 87-017)

Timetable:

Action	Date	FR Cite
NPRM	08/17/87	52 FR 30889
Final Action	01/04/88	

Next Action Undetermined

Small Entity: Not Applicable

Agency Contact: Tom Witzig, Chief, Regulatory Impact and Program Analysis Branch, Department of Agriculture, Agricultural Stabilization and Conservation Service, Room 3726-S, PO Box 2415, Washington, DC 20013, 202 475-4636

RIN: 0560-AB24

38. ● DAIRY INDEMNITY PAYMENT PROGRAM—JANUARY 1, 1988 - SEPTEMBER 30, 1990

Legal Authority: PL 90-484, Sec 1 to 3, as amended; PL 91-524, Sec 204, as amended; PL 93-86, Sec 5; PL 95-113, Sec 205; 7 USC 450 j, k, and 1

CFR Citation: 7 CFR 760.1 to 760.34

Legal Deadline: None.

Abstract: This action will extend the program through September 30, 1990. The purpose of the program is to indemnify dairy farmers for milk dumped because of contamination that is not the fault of the producer and dairy manufacturers for dairy products removed from the market through no fault of the manufacturers. The alternative is to discontinue the program. The cost to the Government for FY 1988 through FY 1990 is estimated to be about $500,000.

Timetable:

Action	Date	FR Cite
Final Action	07/01/88	

Small Entity: Not Applicable

Agency Contact: Tom Witzig, Chief, Regulatory Impact & Program Analysis Branch, Department of Agriculture, Agricultural Stabilization and Conservation Service, Room 3726-S, PO Box 2415, Washington, DC 20013, 202 475-4636

RIN: 0560-AB30

39. ● 1989-CROP PEANUT PRICE SUPPORT PROGRAM DIFFERENTIALS

Legal Authority: 7 USC 1423; Agricultural Act of 1949, Sec 403; 15 USC 714c; Commodity Credit Corporation Charter Act, Sec 5

CFR Citation: 00 CFR N/A

Legal Deadline: None.

Abstract: The Secretary of Agriculture is authorized to make appropriate adjustments in the support price for peanuts for differences in grade, type, quality, location, and other factors to ensure that price support levels are representative of the market values of the various types. The average of the price support levels must, as far as is practicable, equal the national average price support level as determined by legislation. No alternatives are considered and the cost to Government will be negligible.

Timetable:

Action	Date	FR Cite
Final Action	03/31/89	

Small Entity: Not Applicable

Agency Contact: Tom Witzig, Chief, Regulatory Impact & Program Analysis Branch, Department of Agriculture, Agricultural Stabilization and Conservation Service, Room 3726-S, PO

Box 2415, Washington, DC 20013, 202 475-4636

RIN: 0560-AB31

40. ● 1989-CROP NATIONAL AVERAGE LOAN RATE AND MINIMUM CCC EXPORT EDIBLE SALES PRICE FOR ADDITIONAL PEANUTS

Significance: Agency Priority

Legal Authority: 7 USC 1445C-2; Agricultural Act of 1949, Sec 108B

CFR Citation: 00 CFR None

Legal Deadline: Statutory, February 15, 1989.

Abstract: This action is required by legislation, which provides guidelines for the establishment of the additional support level. The objective is to support farm income and stabilize prices.

Timetable:

Action	Date	FR Cite
Final Action	02/15/89	

Small Entity: Not Applicable

Agency Contact: Tom Witzig, Chief, Regulatory Impact & Program Analysis Branch, Department of Agriculture, Agricultural Stabilization and Conservation Service, Room 3726-S, PO Box 2415, Washington, DC 20013, 202 475-4636

RIN: 0560-AB33

41. ● 1989-CROP BURLEY TOBACCO MARKETING QUOTAS AND PRICE SUPPORT LEVEL

Significance: Agency Priority

Legal Authority: 7 USC 1312; The Agricultural Act of 1938, as amended, Sec 312 to 313; 7 USC 1445; The Agricultural Adjustment Act of 1949, as amended, Sec 106

CFR Citation: 7 CFR 724

Legal Deadline: Statutory, February 1, 1989.

Abstract: Marketing quotas and price support are required by legislation. Their objectives are to balance supply with demand at levels assuring stable supplies for domestic and export use at prices fair to producers. Quota is based on manufacturers' intentions, 3-year average exports, an adjustment to maintain loan stocks, and a discretionary adjustment of plus or minus 3 percent. Price support is based on a formula that is 2/3 weight average market prices and 1/3 weight cost index, plus discretion to limit any increase to 65 percent. A net receipt of $131 million is expected

Timetable:

Action	Date	FR Cite
Final Action	02/01/89	

Small Entity: Not Applicable

Agency Contact: Tom Witzig, Chief, Regulatory Impact & Program Analysis Branch, Department of Agriculture, Agricultural Stabilization and Conservation Service, Room 3726-S, PO Box 2415, Washington, DC 20013, 202 475-4636

RIN: 0560-AB34

42. ● 1989-CROP FLUE-CURED TOBACCO MARKETING QUOTA AND PRICE SUPPORT LEVEL

Significance: Agency Priority

Legal Authority: 7 USC 1311 to 1313; Agricultural Adjustment Act of 1938, Sec 311 to 313, as amended; 7 USC 1445; Agricultural Act of 1949, Sec 106, as amended

CFR Citation: 00 CFR None

Legal Deadline: Statutory, December 15, 1988. (For announcement of price support level)

Abstract: Marketing quotas and price support are required by legislation. Their objectives are to balance supply with demand at levels assuring stable supplies for domestic and export use at prices fair to producers. The quota is based on manufacturers' intentions, 3-year average exports, an adjustment to maintain loan stocks and a discretionary adjustment of plus or minus 3 percent. The price support level is based on a formula that is 2/3 weight average market prices and 1/3 weight a cost index, with discretion to limit any increase to 65 percent. A net receipt of $153 million is expected.

Timetable:

Action	Date	FR Cite
Final Action	12/15/88	

Small Entity: Not Applicable

Agency Contact: Tom Witzig, Chief, Regulatory Impact & Program Analysis Branch, Department of Agriculture, Agricultural Stabilization and Conservation Service, Room 3726-S, PO Box 2415, Washington, DC 20013, 202 475-4636

RIN: 0560-AB35

43. ● MILK PRICE SUPPORT LEVEL, CALENDAR YEAR 1989

Significance: Regulatory Program

Legal Authority: 7 USC 1446(d); The Agricultural Act of 1949, as amended, Sec 201(d)(1)(E)

CFR Citation: 7 CFR 1430

Legal Deadline: Statutory, January 1, 1989.

Abstract: Legislation requires that if estimated price support purchases for 1989 exceed 5 billion pounds (milk equivalent, fat basis), the Secretary shall reduce the support price by $0.50 per hundredweight (cwt), and if estimated purchases do not exceed 2.5 billion pounds, shall increase the support price by $0.50/cwt. The cost to Government is expected to be approximately $1 billion.

Timetable:

Action	Date	FR Cite
Final Action	12/31/88	
Final Action Effective	01/01/89	

Small Entity: Not Applicable

Agency Contact: Tom Witzig, Chief, Regulatory Impact & Program Analysis Branch, Department of Agriculture, Agricultural Stabilization and Conservation Service, Room 3726-S, PO Box 2415, Washington, DC 20013, 202 475-4636

RIN: 0560-AB40

44. ● BURLEY TOBACCO PRICE SUPPORT RESTRICTIONS FOR NONBALED TOBACCO AND NONSTANDARD CONTAINERS

Legal Authority: 7 USC 1445; Agricultural Act of 1949, as amended

CFR Citation: 7 CFR 1464

Legal Deadline: None.

Abstract: This action would encourage the marketing of burley tobacco in baled form by providing a reduced price support level of 5 to 15 cents per pound for nonbaled tobacco effective for the 1988 crop. Approximately 85 percent of all burley tobacco sold at auction is in baled form. The industry preference for baled tobacco could result in all nonbaled tobacco being placed under loan.

This action would also require that effective for the 1989 crop, all loan tobacco be delivered on a standard container (slip sheet), in order to

establish a uniform tare for all lots of tobacco and eliminate errors resulting from the separate weighing of nonstandard containers (pallets).

No cost to Government is expected. Cost to producers would be equal to the reduction in price support for nonbaled tobacco. Cost to warehousemen due to a shift to standard containers would be minimal.

Timetable:

Action	Date	FR Cite
NPRM	03/01/88	
Final Action	05/16/88	

Small Entity: Not Applicable

Agency Contact: Tom Witzig, Chief, Regulatory Impact & Program Analysis Branch, Department of Agriculture, Agricultural Stabilization and Conservation Service, Room 3726-S, PO Box 2415, Washington, DC 20013, 202 475-4636

RIN: 0560-AB42

DEPARTMENT OF AGRICULTURE (USDA)

Agricultural Stabilization and Conservation Service (ASCS)

Completed Actions

45. 1987 FEED GRAIN PROGRAM

Significance: Regulatory Program

CFR Citation: 7 CFR 707; 7 CFR 709; 7 CFR 713; 7 CFR 718; 7 CFR 719; 7 CFR 792; 7 CFR 794 to 796; 7 CFR 1421.720 to 1421.734

Completed:

Reason	Date	FR Cite
Final Action	12/03/87	52 FR 45977

Small Entity: Not Applicable

Agency Contact: Tom Witzig 202 475-4636

RIN: 0560-AA59

46. 1987 EXTRA LONG STAPLE (ELS) COTTON PROGRAM

Significance: Agency Priority

CFR Citation: 7 CFR 1427

Completed:

Reason	Date	FR Cite
Final Action	12/03/87	52 FR 45977

Small Entity: Not Applicable

Agency Contact: Tom Witzig 202 475-4636

RIN: 0560-AA60

47. 1987 UPLAND COTTON PROGRAM

Significance: Regulatory Program

CFR Citation: 7 CFR 707; 7 CFR 709; 7 CFR 713; 7 CFR 719; 7 CFR 770; 7 CFR 792; 7 CFR 794 to 796; 7 CFR 1427

Completed:

Reason	Date	FR Cite
Final Action	12/03/87	52 FR 45977

Small Entity: Not Applicable

Agency Contact: Tom Witzig 202 475-4636

RIN: 0560-AA64

48. 1987 RICE PROGRAM

Significance: Regulatory Program

CFR Citation: 7 CFR 707; 7 CFR 709; 7 CFR 713; 7 CFR 719; 7 CFR 770; 7 CFR 794 to 796; 7 CFR 1421

Completed:

Reason	Date	FR Cite
Final Action	12/03/87	52 FR 45977

Small Entity: Not Applicable

Agency Contact: Tom Witzig 202 475-4636

RIN: 0560-AA72

49. 1987-CROP HONEY PRICE SUPPORT PROGRAM

Significance: Agency Priority

CFR Citation: 7 CFR 1434.26; 7 CFR 1434.27

Completed:

Reason	Date	FR Cite
Announcement	04/07/87	

Small Entity: Not Applicable

Agency Contact: Tom Witzig 202 475-4636

RIN: 0560-AA73

50. 1987 WHEAT PROGRAM

Significance: Regulatory Program

CFR Citation: 7 CFR 707; 7 CFR 709; 7 CFR 713; 7 CFR 719; 7 CFR 770; 7 CFR 792; 7 CFR 794 to 796; 7 CFR 1421.485 to 1421.490

Completed:

Reason	Date	FR Cite
Final Action	12/03/87	52 FR 45977

Small Entity: Not Applicable

Agency Contact: Tom Witzig 202 475-4636

RIN: 0560-AA82

51. HIGHLY ERODIBLE LAND AND WETLAND CONSERVATION PROGRAMS

Significance: Agency Priority

CFR Citation: 7 CFR 703, (New)

Completed:

Reason	Date	FR Cite
Final Action	09/17/87	52 FR 35194

Small Entity: Not Applicable

Agency Contact: Tom Witzig 202 447-4636

RIN: 0560-AA88

52. COMMON PROGRAM PROVISIONS FOR THE 1987 WHEAT, FEED GRAINS, COTTON AND RICE PROGRAMS

Significance: Agency Priority

CFR Citation: 00 CFR not yet determined

Completed:

Reason	Date	FR Cite
Final Action	12/03/87	52 FR 45977

Small Entity: Not Applicable

Agency Contact: Tom Witzig 202 475-4636

RIN: 0560-AA94

53. 1987 SOYBEAN LOAN PROGRAM

Significance: Regulatory Program

CFR Citation: 7 CFR 1421.1 to 1421.29; 7 CFR 1421.365 to 1421.374

Completed:

Reason	Date	FR Cite
Final Action	10/05/87	52 FR 37191

Small Entity: Not Applicable

VOL 53 ISS 79 PT 1 APR 25 1988 UMI

USDA—ASCS **Completed Actions**

Agency Contact: Tom Witzig 202 475-4636

RIN: 0560-AA95

54. 1987 PRICE SUPPORT LEVELS FOR SIX KINDS OF TOBACCO

Significance: Agency Priority

CFR Citation: 7 CFR 1464

Completed:

Reason	Date	FR Cite
Final Action	01/21/88	53 FR 1652

Small Entity: Not Applicable

Agency Contact: Tom Witzig 202 475-4636

RIN: 0560-AA97

55. 1987-CROP SUGAR BEETS AND SUGARCANE PRICE SUPPORT LOAN RATES

Significance: Regulatory Program

CFR Citation: 7 CFR 1435

Completed:

Reason	Date	FR Cite
Final Action	11/12/87	52 FR 43376

Small Entity: Not Applicable

Agency Contact: Tom Witzig 202 475-4636

RIN: 0560-AB01

56. MILK PRICE SUPPORT LEVEL, CALENDAR YEAR 1988

Significance: Regulatory Program

CFR Citation: 7 CFR 1430

Completed:

Reason	Date	FR Cite
Final Action	01/08/88	53 FR 543

Small Entity: No

Agency Contact: Tom Witzig 202 475-4636

RIN: 0560-AB02

57. MILK PRICE SUPPORT LEVEL, OCTOBER 1, 1987, THROUGH DECEMBER 31, 1990

Significance: Regulatory Program

CFR Citation: 7 CFR 1430

Completed:

Reason	Date	FR Cite
Final Action	10/01/87	52 FR 36805

Small Entity: Not Applicable

Agency Contact: Tom Witzig 202 475-4636

RIN: 0560-AB03

DEPARTMENT OF AGRICULTURE (USDA) **Proposed Rule Stage**

Animal and Plant Health Inspection Service (APHIS)

58. IMPORTATION OF FRUITS AND VEGETABLES UNDER ASSURED CERTIFICATION AGREEMENTS

Significance: Regulatory Program

Legal Authority: 7 USC 150dd to 150ff; 7 USC 151 to 167

CFR Citation: 7 CFR 319.56

Legal Deadline: None.

Abstract: To prevent the introduction of plant pests and diseases, Plant Protection and Quarantine (PPQ) inspects shipments of foreign fruits and vegetables upon their arrival at United States ports. PPQ is developing regulations that will allow inspections to be performed in the exporting countries, rather than upon arrival in the United States, using methods and standards approved and monitored by PPQ. This procedure should speed the movement of commodities moved under this "assured certification" alternative, and will allow PPQ to employ its personnel and resources more effectively.

Timetable:

Action	Date	FR Cite
ANPRM	01/20/87	52 FR 2114
ANPRM Comment Period End	03/23/87	
NPRM	04/00/88	
NPRM Comment Period End	06/00/88	
Final Action	08/00/88	

Small Entity: Undetermined

Agency Contact: Mr. Frank Cooper, Staff Officer, Regulatory Services Staff, Department of Agriculture, Animal and Plant Health Inspection Service, Federal Building, Room 637, 6505 Belcrest Road, Hyattsville, MD 20782, 301 436-8248

RIN: 0579-AA17

59. SWINE IDENTIFICATION

Significance: Regulatory Program

Legal Authority: 21 USC 111 to 113; 21 USC 601 et seq; 21 USC 114a; 21 USC 1149-1; 21 USC 115 to 117; 21 USC 120 to 126; 21 USC 134b; 21 USC 134f

CFR Citation: 9 CFR 71; 9 CFR 78; 9 CFR 85; 9 CFR 309; 9 CFR 310; 9 CFR 320

Legal Deadline: None.

Abstract: Swine in interstate commerce may be adulterated with drug and other chemical residue levels higher than the allowed tolerance and may be spreading diseases. The Department is proposing to require that all swine in interstate commerce be individually identified and records of identification be maintained. Mandatory identification of swine in interstate commerce would allow APHIS to more easily locate sources of infection in order to eradicate and contain disease and would allow the Food Safety Inspection Service (FSIS) to more easily determine the source of adulterated meat and prevent its consumption.

Timetable:

Action	Date	FR Cite
NPRM	04/00/88	
NPRM Comment Period End	06/00/88	
Final Action	12/00/88	
Final Action Effective	01/00/89	

Small Entity: No

Government Levels Affected: Local, State, Federal

Agency Contact: Steven B. Farbman, Assistant Director, Regulatory Coordination, Department of

USDA—APHIS **Proposed Rule Stage**

Agriculture, Animal and Plant Health Inspection Service, Room 728, 6505 Belcrest Road, Hyattsville, MD 20782, 301 436-5533

RIN: 0579-AA19

60. ANIMAL WELFARE REGULATIONS; STANDARDS

Significance: Regulatory Program

Legal Authority: 7 USC 2142; 7 USC 2143

CFR Citation: 9 CFR 3.1 to 3.17, (Revision); 9 CFR 3.25 to 3.41, (Revision); 9 CFR 3.75 to 3.91, (Revision)

Legal Deadline: None.

Abstract: In 1985 Congress amended the Animal Welfare Act, 7 USC 2131 et seq., and required the Secretary of Agriculture to promulgate regulations and standards governing the humane handling, housing, care, treatment, and transportation of certain animals by dealers, research facilities, operators of auction sales, carriers, and intermediate handlers. The standards and regulations will provide minimum requirements with respect to handling, housing, feeding, sanitation, veterinary care, and other related matters. APHIS is proposing to amend, revise, and expand the "Standards" relating to dogs and cats, guinea pigs and hamsters, and nonhuman primates, and will include provisions for exercise of dogs and for promoting the psychological well-being of primates.

Timetable:

Action	Date	FR Cite
NPRM	04/00/88	
NPRM Comment Period End	06/00/88	
Final Action	12/00/88	

Small Entity: Undetermined

Agency Contact: Dr. R. L. Crawford, Senior Staff Veterinarian, Animal Care Staff, Department of Agriculture, Animal and Plant Health Inspection Service, Federal Building, Room 756, 6505 Belcrest Road, Hyattsville, MD 20782, 301 436-7833

RIN: 0579-AA20

DEPARTMENT OF AGRICULTURE (USDA) **Final Rule Stage**

Animal and Plant Health Inspection Service (APHIS)

61. ANIMAL WELFARE; DEFINITION OF TERMS AND REGULATIONS

Significance: Regulatory Program

Legal Authority: 7 USC 2133; 7 USC 2135; 7 USC 2136; 7 USC 2140; 7 USC 2141; 7 USC 2142; 7 USC 2143; 7 USC 2144; 7 USC 2146; 7 USC 2147; 7 USC 2151

CFR Citation: 9 CFR 1, (Revision); 9 CFR 2, (Revision)

Legal Deadline: None.

Abstract: In 1985 Congress amended the Animal Welfare Act, 7 USC 2131, et seq., and required the Secretary of Agriculture to promulgate regulations and standards governing the humane handling, housing, care, treatment, and transportation of certain animals by dealers, research facilities, operators of auction sales, carriers, and intermediate handlers. The standards and regulations will provide minimum requirements with respect to handling, housing, feeding, sanitation, veterinary care, and other related matters. The Agency has proposed definitions to provide proper guidance to the public, licensees, and registrants in their responsibilities under the Act. The Agency has also proposed to amend, revise, and expand the "Regulations" contained in 9 CFR 2.1 through 2.132, pertaining to licensing and registration of facilities, recordkeeping and identification of animal holding periods and facilities, inspections, Institutional Animal Care and Use Committees, adequate veterinary care, and other areas relating to humane animal care matters.

Timetable:

Action	Date	FR Cite
NPRM	03/31/87	52 FR 10298
Notice of Extension of comment period	05/22/87	52 FR 19359
Extension and Reopening of comment period	08/12/87	52 FR 29865
NPRM Comment Period End	08/27/87	
Final Action	04/00/88	

Small Entity: No

Government Levels Affected: Local, State, Federal

Agency Contact: Dr. R. L. Crawford, Senior Staff Veterinarian, Animal Care Staff, VS, Department of Agriculture, Animal and Plant Health Inspection Service, Room 756, 6505 Belcrest Road, Hyattsville, MD 20782, 301 436-7833

RIN: 0579-AA18

DEPARTMENT OF AGRICULTURE (USDA) **Proposed Rule Stage**

Cooperative State Research Service (CSRS)

62. GUIDELINES FOR BIOTECHNOLOGY RESEARCH IN AGRICULTURAL FIELD PLOTS

Legal Authority: PL 99-198 Food Security Act of 1985

CFR Citation: Not applicable

Legal Deadline: None.

Abstract: The purpose of these guidelines is to specify necessary agricultural practices for the safe field testing of plants, animals, and other organisms involved in agricultural biotechnology research. The National Institutes of Health (NIH) has proposed changes in the Guidelines for Research Involving Recombinant DNA Molecules (52 FR 29800, August 11, 1987). These proposed changes address chiefly biosafety levels for research involving whole plants and animals under various conditions of laboratory containment.

A significant portion of agricultural research is performed in field plots outside a laboratory. Therefore, USDA guidelines for biotechnology research in field plots are necessary to assure the

BEST COPY AVAILABLE

biosafety of agricultural ecosystems in which genetically engineered organisms may be tested outside the laboratory. Compliance with the USDA biotechnology research guidelines will be obligatory for all entities which receive support from USDA and it will be voluntary for other entities. The guidelines are promulgated under the authority of the National Agricultural Research, Education, and Teaching Policy Act Amendments (CONT)

Timetable:

Action	Date	FR Cite
ANPRM	06/26/86	51 FR 23367
ANPRM Comment Period End	09/26/86	
NPRM	06/00/88	

Small Entity: No

Additional Information: ADDITIONAL ABSTRACT: of 1985 (Public Law 99-198, Section 1404(12) and the USDA Delegation of Authority Pertaining to Biotechnology (50 FR 29367, July 19, 1985, codified at 7 CFR 2.30).

Agency Contact: William S. Smith, Regulatory Coordinator, Department of Agriculture, Cooperative State Research Service, Room 017 Justin Smith Morrill Bldg., Washington, DC 20251-0900, 202 475-4964

RIN: 0524-AA00

DEPARTMENT OF AGRICULTURE (USDA)

Farmers Home Administration (FmHA) — Prerule Stage

63. PLANNING AND PERFORMING CONSTRUCTION AND OTHER DEVELOPMENT

Significance: Agency Priority

Legal Authority: 7 USC 1989; 42 USC 1480; 5 USC 301; 7 CFR 2.23; 7 CFR 2.70

CFR Citation: 7 CFR 1924, Subpart A

Legal Deadline: None.

Abstract: Revision to the Certification requirement for drawings and specifications. No costs associated. Benefits will be reduced costs to obtain certifications.

Timetable:

Action	Date	FR Cite
ANPRM	04/00/88	
Final Action	06/00/88	
Final Action Effective	09/30/88	

Small Entity: Yes

Government Levels Affected: Local, State

Agency Contact: Chris Goettelmann, Regulatory Coordinator, Department of Agriculture, Farmers Home Administration, Room 6348, South Building, Washington, DC 20250, 202 382-9744

RIN: 0575-AA36

64. SECURITY SERVICING FOR MULTIPLE HOUSING LOANS

Legal Authority: 42 USC 1480

CFR Citation: 07 CFR 1930; 07 CFR 1944; 07 CFR 1965

Legal Deadline: None.

Abstract: This regulation is being revised to provide clarification on the processing differences between membership changes and transfers, to broaden the ability to consolidate and reamortize loans, to clarify actions to be taken during a bankruptcy, and to clarify and discuss the classification of problem loans and their resolution, along with other minor revisions. These revisions are needed so as to provide more complete guidance to field staff and borrowers on the topics discussed above. Potential costs consist of administrative time involved with Agency personnel drafting and completing regulation. No alternatives were identified as being appropriate to address the several problems being corrected with this regulation.

Timetable:

Action	Date	FR Cite
ANPRM	08/30/88	
ANPRM Comment Period End	10/30/88	
Interim Final Rule	00/00/00	
Final Action	00/00/00	

Small Entity: Yes

Agency Contact: Chris Goettelmann, Regulatory Coordinator, Department of Agriculture, Farmers Home Administration, Room 6348 South Building, Washington, DC 20250, 202 382-9744

RIN: 0575-AA38

65. ANALYZING CREDIT NEEDS AND GRADUATION OF BORROWERS

Significance: Agency Priority

Legal Authority: 42 USC 1472

CFR Citation: 7 CFR 1951-F

Legal Deadline: None.

Abstract: Provide for Contracting for Borrower Graduation by a private contractor and certain other changes.

Timetable:

Action	Date	FR Cite
ANPRM	03/03/88	
ANPRM Comment Period End	05/03/88	
Final Action	07/03/88	
Final Action Effective	08/03/88	

Small Entity: Undetermined

Agency Contact: Chris Goettelmann, Regulatory Coordinator, Department of Agriculture, Farmers Home Administration, Room 6348 South Building, Washington, DC 20250, 202 382-9744

RIN: 0575-AA40

66. COMPLAINTS AND COMPENSATION FOR CONSTRUCTION DEFECTS

Legal Authority: 42 USC 1479

CFR Citation: 7 CFR 1924 F

Legal Deadline: None.

Abstract: Provide for handling construction defects on manufactured homes.

Timetable:

Action	Date	FR Cite
ANPRM	03/01/88	
ANPRM Comment Period End	05/01/88	
NPRM	08/07/88	
NPRM Comment Period End	10/03/88	
Final Action	03/01/89	

USDA—FmHA **Prerule Stage**

Action	Date	FR Cite
Final Action Effective	04/01/89	

Small Entity: Undetermined

Agency Contact: Chris Goettelmann, Regulatory Coordinator, Department of Agriculture, Farmers Home Administration, Room 6348 South Building, Washington, DC 20250, 202 382-9744

RIN: 0575-AA41

67. RURAL DEVELOPMENT LOAN FUND RELENDING PROGRAM

Significance: Agency Priority

Legal Authority: 42 USC 9812a; 7 USC 1932 note

CFR Citation: 7 CFR 1948-C

Legal Deadline: Statutory, June 22, 1988.

Abstract: This action is necessary to implement the provisions of Section 407 of the Health and Human Services Act of 1986 which amended Section 1323 of the Food Security Act of 1985 by stating that all funds in, repaid to, or appropriated to the Rural Development Loan Fund shall be used by the Secretary of Agriculture to make loans to entities for the purpose of and subject to the terms and conditions specified in the first, second and last sentences of section 623 (a) of the Community Economic Development Act of 1981 (42 U.S.C. 981 (a)).

Timetable:

Action	Date	FR Cite
ANPRM	04/20/88	00 FR 0000

Small Entity: Undetermined

Government Levels Affected: State, Federal

Agency Contact: Chris Goettelmann, Regulatory Coordinator, Department of Agriculture, Farmers Home Administration, 14th & Independence Avenue, SW, Room 6348 South Building, Washington, DC 20250, 202 382-9744

RIN: 0575-AA43

68. SUPPLEMENTAL REQUIREMENTS FOR MAKING SECTION 502 RH LOANS FOR MANUFACTURED HOMES

Legal Authority: 42 USC 1480; 7 CFR 2.23; 7 CFR 2.70

CFR Citation: 7 CFR 1944A, Exhibit F

Legal Deadline: None.

Abstract: The Department of Energy report required in PL 98-181 will be considered in determining the need to revise FmHA thermal standards for manufactured housing.

Timetable:

Action	Date	FR Cite
Next Action Undetermined		

Small Entity: Undetermined

Agency Contact: Chris Goettelmann, Regulatory Coordinator, Department of Agriculture, Farmers Home Administration, Room 6347, South Building, Washington, DC 20250, 202 382-9744

RIN: 0575-AA46

DEPARTMENT OF AGRICULTURE (USDA)
Farmers Home Administration (FmHA)

Proposed Rule Stage

69. SUSPENSION AND DEBARMENT REGULATIONS

Legal Authority: 7 USC 1989; 42 USC 1480(k)

CFR Citation: 7 CFR 1924, Subpart E

Legal Deadline: None.

Abstract: This regulatory activity will improve FmHA's suspension and debarment system by establishing regulations that are compatible with other federal agency regulations. (FmHA 82-004)

Timetable:

Action	Date	FR Cite
NPRM	04/00/88	
Final Action	06/00/88	

Small Entity: No

Additional Information: Agency action deferred until we review the USDA draft of the new regulation which could well become FmHA's as OMB would like to see a common regulation for all agencies.

Agency Contact: Chris Goettelmann, Regulatory Coordinator, Department of Agriculture, Farmers Home Administration, Room 6348-S, Washington, DC 20250, 202 382-9744

RIN: 0575-AA02

70. RECAPTURE OF SECTION 502 RURAL HOUSING SUBSIDY

Significance: Agency Priority

Legal Authority: 42 USC 1480; 5 USC 301; 7 CFR 2.23; 7 CFR 2.70

CFR Citation: 7 CFR 1951

Legal Deadline: None.

Abstract: FmHA proposes to revise regulations regarding the recapture of subsidy granted on Section 502 rural housing loans. This action is necessary as current FmHA regulations pertaining to same are confusing to the general public and our borrowers. The intended effect of this action is to shorten and simplify the method of calculating recapture.

Timetable:

Action	Date	FR Cite
NPRM	06/01/88	
NPRM Comment Period End	08/01/88	
Final Action	12/01/88	
Final Action Effective	01/02/89	

Small Entity: No

Agency Contact: Chris Goettelmann, Regulatory Coordinator, Department of Agriculture, Farmers Home Administration, 202 382-9744

RIN: 0575-AA29

71. SELF-HELP TECHNICAL ASSISTANCE GRANTS

Legal Authority: 7 USC 1989; 42 USC 1480; 7 CFR 2.23; 7 CFR 2.70

CFR Citation: 7 CFR 1933-I

Legal Deadline: None.

Abstract: Complete revision to improve grantee's accounting responsibilities. No costs associated with action. Benefits reduce possibility of program fraud and

abuse. Increase borrowers labor contribution.

Timetable:

Action	Date	FR Cite
Next Action Undetermined		

Small Entity: Undetermined

Agency Contact: Chris Goettelmann, Regulatory Coordinator, Department of Agriculture, Farmers Home Administration, Room 6348, South Building, Washington, DC 20250, 202 382-9744

RIN: 0575-AA34

72. SECTION 502 RURAL HOUSING LOAN POLICIES, PROCEDURES, AND AUTHORIZATIONS

Significance: Agency Priority

Legal Authority: 42 USC 1480; 7 CFR 2.23; 7 CFR 2.70

CFR Citation: 7 CFR 1944-A

Legal Deadline: None.

Abstract: Application processing priority system. No costs associated with action. Benefits should be faster processing times and quicker response to requests for assistance.

Timetable:

Action	Date	FR Cite
NPRM	06/00/88	
Final Action	08/00/88	
Final Action Effective	09/00/88	

Small Entity: No

Agency Contact: Chris Goettelmann, Regulatory Coordinator, Department of Agriculture, Farmers Home Administration, Room 6348, South Building, Washington, DC 20250, 202 382-9744

RIN: 0575-AA35

73. SECTION 504 RURAL HOUSING LOANS AND GRANTS

Legal Authority: 42 USC 1480; 7 CFR 2.23; 7 CFR 2.70

CFR Citation: 7 CFR 1944, Subpart J (Revision)

Legal Deadline: None.

Abstract: Incorporates revisions to Agency's authorizing statutes made by the 1983 Housing amendments. Expands loan purposes, increases the total amount of assistance available. No cost increase. Will benefit more homeowners.

Timetable:

Action	Date	FR Cite
Next Action Undetermined		

Small Entity: No

Agency Contact: Chris Goettelmann, Regulatory Coordinator, Department of Agriculture, Farmers Home Administration, Room 6348, South Building, Washington, DC 20250, 202 382-9744

RIN: 0575-AA37

74. MANAGEMENT AND COLLECTION OF NONPROGRAM (NP) LOANS

Significance: Agency Priority

Legal Authority: 42 USC 1480

CFR Citation: 7 CFR 1951, Subpart J

Legal Deadline: None.

Abstract: A new instruction to provide policy and guidance for FmHA field office personnel to make, manage, collect and liquidate non-program (NP) loans.

Timetable:

Action	Date	FR Cite
ANPRM	01/01/88	
ANPRM Comment Period End	03/01/88	
NPRM	07/01/88	
NPRM Comment Period End	09/01/88	
Final Action	12/01/88	
Final Action Effective	01/02/89	

Small Entity: Undetermined

Agency Contact: Chris Goettelmann, Regulatory Coordinator, Department of Agriculture, Farmers Home Administration, Room 6348 South Building, Washington, DC 20250, 202 382-9744

RIN: 0575-AA39

75. ● RURAL HOUSING PROGRAM LOANS

Legal Authority: 42 USC 1480

CFR Citation: 7 CFR 1980, Subpart A; 7 CFR 1980, Subpart D

Legal Deadline: None.

Abstract: Update and revise existing Guaranteed Loan Regulations to incorporate revisions made to existing Rural Housing 502 Insured Loan Regulations and to remove obstacles in loan making for lenders. This action is being done to carry out the objectives of the Housing Act of 1987.

Timetable:

Action	Date	FR Cite
NPRM	00/00/00	

Small Entity: No

Agency Contact: Chris Goettelmann, Regulatory Coordinator, Department of Agriculture, Farmers Home Administration, Room 6347 South Building, Washington, DC 20250, 202 382-9744

RIN: 0575-AA48

76. ● MANAGEMENT AND SUPERVISION OF MULTIPLE FAMILY HOUSING BORROWERS AND GRANT RECIPIENTS

Legal Authority: 42 USC 1480

CFR Citation: 7 CFR 1930, Subpart C; 7 CFR 1944, Subpart E

Legal Deadline: None.

Abstract: General revision to keep the regulations current with policy clarification and incorporate changes to comply with recent legislative changes. Alternatives were to not revise or only incorporate some changes.

Timetable:

Action	Date	FR Cite
NPRM	07/01/88	
NPRM Comment Period End	09/01/88	
Final Action	11/00/88	
Final Action Effective	12/00/88	

Small Entity: No

Agency Contact: Chris Goettelmann, Regulatory Coordinator, Department of Agriculture, Farmers Home Administration, Room 6348 South Building, Washington, DC 20250, 202 382-9744

RIN: 0575-AA49

77. ● REAL PROPERTY INSURANCE

Significance: Agency Priority

Legal Authority: 42 USC 1471

CFR Citation: 7 CFR 1806, Subpart A

Legal Deadline: None.

Abstract: Provide for the continuation of insurance for borrowers on escrow.

VOL 53 ISS 79 PT 1 APR 25 1988 UMI

USDA—FmHA **Proposed Rule Stage**

Timetable:

Action	Date	FR Cite
NPRM	08/01/88	
NPRM Comment Period End	10/01/88	
Final Action	02/01/89	
Final Action Effective	03/01/89	

Small Entity: Yes

Agency Contact: Chris Goettelmann, Regulatory Coordinator, Department of Agriculture, Farmers Home Administration, Room 6348, South Building, Washington, DC 20250, 202 382-9744

RIN: 0575-AA53

78. ● SECURITY SERVICING FOR SINGLE FAMILY RURAL HOUSING LOANS

Significance: Agency Priority

Legal Authority: 42 USC 1480

CFR Citation: 7 CFR 1965, Subpart C

Legal Deadline: None.

Abstract: Provide for the disposition of escrow funds in servicing loan accounts.

Timetable:

Action	Date	FR Cite
NPRM	08/01/88	
NPRM Comment Period End	10/01/88	
Final Action	02/01/89	
Final Action Effective	03/01/89	

Small Entity: Undetermined

Agency Contact: Chris Goettelmann, Regulatory Coordinator, Department of Agriculture, Farmers Home Administration, Room 6348, South Building, Washington, DC 20250, 202 382-9744

RIN: 0575-AA54

79. ● BORROWER SUPERVISION SERVICING AND COLLECTION OF SINGLE FAMILY HOUSING LOAN ACCOUNTS

Significance: Agency Priority

Legal Authority: PL 100-71

CFR Citation: 7 CFR 1951, Subpart G

Legal Deadline: None.

Abstract: Provide for escrowing and the application of payments.

Timetable:

Action	Date	FR Cite
NPRM	08/01/88	
NPRM Comment Period End	10/01/88	
Final Action	02/01/89	
Final Action Effective	03/01/89	

Small Entity: Undetermined

Agency Contact: Chris Goettelmann, Regulatory Coordinator, Department of Agriculture, Farmers Home Administration, Room 6348, South Building, Washington, DC 20250, 202 382-9744

RIN: 0575-AA55

80. ● CHANGES TO THE FARMERS HOME ADMINISTRATION (FMHA) FARMER PROGRAM LOAN MAKING, SUPERVISION AND SERVICING REGULATIONS TO IMPLEMENT APPLICABLE PROVISIONS OF "THE AGRICULTURAL CREDIT ACT OF 1987"

Significance: Regulatory Program

Legal Authority: PL 100-233, Sec 601

CFR Citation: 7 CFR 1910, Subpart A; 7 CFR 1924, Subpart A; 7 CFR 1924, Subpart B; 7 CFR 1941, Subpart A; 7 CFR 1941, Subpart B; 7 CFR 1943, Subpart A; 7 CFR 1943, Subpart B; 7 CFR 1943, Subpart C; 7 CFR 1945, Subpart A; 7 CFR 1945, Subpart C; 7 CFR 1945, Subpart D; 7 CFR 1946, Subpart A (new); 7 CFR 1951, Subpart A; 7 CFR 1951, Subpart L; 7 CFR 1951, Subpart S (new); ...

Legal Deadline: Statutory, June 3, 1988.

Abstract: To implement the provisions of Public Law 100-233, The Agricultural Credit Act of 1987, to reduce losses to the Secretary, help rural communities and help financially distressed farmers to continue farming.

Timetable:

Action	Date	FR Cite
NPRM	03/01/88	
NPRM Comment Period End	04/01/88	
Final Action Effective	06/01/88	

Small Entity: Undetermined

Government Levels Affected: Local, State, Federal

Agency Contact: Chris Goettelmann, Regulatory Coordinator, Department of Agriculture, Farmers Home Administration, Room 6348 South Building, 14th & Independence Avenue, Washington, DC 20250, 202 382-9744

RIN: 0575-AA56

DEPARTMENT OF AGRICULTURE (USDA)

Farmers Home Administration (FmHA) **Final Rule Stage**

81. CHANGES TO THE FMHA FARMER PROGRAM LOAN MAKING, SUPERVISION AND SERVICING REGULATIONS TO IMPLEMENT THE APPLICABLE PROVISIONS OF THE "FOOD SECURITY ACT OF 1985"

Legal Authority: 7 USC 1989

CFR Citation: 7 CFR 1900; 7 CFR 1910; 7 CFR 1924; 7 CFR 1941; 7 CFR 1943; 7 CFR 1945; 7 CFR 1955; 7 CFR 1980

Legal Deadline: Statutory, March 31, 1986. For Interim Final Rule published 4/21/86.

Abstract: Most of the provisions of the Food Security Act of 1985 are mandated by the Act. The major effects will be to insure that the agency provides prompt service to applicants and borrowers, reduce the need and size of the emergency loan program, provide for additional ways that borrowers may continue farming, provide a home during the transition from farming to other employment, preserve the family farm, protect the national food supply, and provide for conservation of less productive land. (FmHA 86-001)

Timetable:

Action	Date	FR Cite
Interim Final Rule	03/18/86	51 FR 9174
Interim Final Rule	04/21/86	51 FR 13437
Final Action	09/00/88	

Small Entity: No

Agency Contact: Chris Goettelmann, Regulatory Coordinator, Department of Agriculture, Farmers Home Administration, Room 6348-S, Washington, DC 20250, 202 382-9744

RIN: 0575-AA23

82. RURAL RENTAL HOUSING POLICIES, PROCEDURES AND AUTHORIZATIONS

Legal Authority: 42 USC 1480(j)

CFR Citation: 7 CFR 1944

Legal Deadline: None.

Abstract: The objectives are to address the following: (1) A congressional concern that the Agency is to provide prompt services for processing applications and loan management. Prompt services can be provided by utilizing the commercial services of technicians and specialists outside of the Agency, with the Agency providing oversight and monitoring. (2) An Agency need to reduce the impact of technical services on the District and State staff resources. The State Director has been given the authority to use qualified contractors from outside the Agency under the requirements and limitations of a service contract and FmHA Regulations. To use contractors an established contract monitoring system must be established in the State. (FmHA 86-012)

Timetable:

Action	Date	FR Cite
NPRM	06/04/87	52 FR 21069
NPRM Comment Period End	08/03/87	52 FR 21069
Final Action	04/00/88	

Small Entity: No

Agency Contact: Chris Goettelmann, Regulatory Coordinator, Department of Agriculture, Farmers Home Administration, Room 6348-South Bldg., Washington, DC 20250, 202 382-9744

RIN: 0575-AA28

83. BORROWER SUPERVISION SERVICING AND COLLECTION OF SINGLE FAMILY HOUSING LOAN ACCOUNTS

Legal Authority: PL 100-71

CFR Citation: 7 CFR 1951-G

Legal Deadline: None.

Abstract: Provide for change in definition of delinquent account and certain other changes.

Timetable:

Action	Date	FR Cite
ANPRM	01/01/88	
ANPRM Comment Period End	03/01/88	
Final Action	06/01/88	
Final Action Effective	07/01/88	

Small Entity: Undetermined

Agency Contact: Chris Goettelmann, Regulatory Coordinator, Department of Agriculture, Farmers Home Administration, Room 6348 South Building, Washington, DC 20250, 202 382-9744

RIN: 0575-AA42

84. DEBT SETTLEMENT - COMMUNITY AND BUSINESS PROGRAMS

Significance: Agency Priority

Legal Authority: PL 99-198

CFR Citation: 7 CFR 1956-C, (New)

Legal Deadline: None.

Abstract: Debt settlement of Community and Business Programs is governed by the Consolidated Farm and Rural Development Act (CONACT) (7 USC (1921-1996)). The major reason for removing debt settlement actions appropriate to Community and Business Programs from the present regulation (FmHA Instruction 456.1) to a new regulation (FmHA Instruction 1956-C) is to comply with section 1309 of the Food Security Act of 1985 (Pub. L. 99-198). Public Law 99-198 provides the Secretary with greater flexibility in administering the debt settlement claims for Community and Business Programs, including compromise, adjustment, cancellation, and chargeoff actions. The changes will result in more efficient service to the public, while continuing protection of the Government's interest.

Timetable:

Action	Date	FR Cite
NPRM	11/20/87	52 FR 44600
NPRM Comment Period End	12/21/87	52 FR 44600
Final Action	05/01/88	

Small Entity: No

Agency Contact: Chris Goettelmann, Regulatory Coordinator, Department of Agriculture, Farmers Home Administration, Room 6348 South Building, Washington, DC 20250, 202 382-9744

RIN: 0575-AA44

85. ● MANAGEMENT AND SUPERVISION OF MULTIPLE FAMILY HOUSING BORROWERS AND GRANT RECIPIENTS

Significance: Agency Priority

Legal Authority: 42 USC 1480

CFR Citation: 7 CFR 1930, Subpart C

Legal Deadline: None.

Abstract: Revision, responding to provision of the Housing and Community Development Act of 1987, allows tenant selection to correspond to tax credit eligibility criteria for affected multiple family housing borrowers. Since this revision as mandated by legislation, alternatives were limited.

Timetable:

Action	Date	FR Cite
Interim Final Rule	04/05/88	

Small Entity: No

Agency Contact: Chris Goettelmann, Regulatory Coordinator, Department of Agriculture, Farmers Home Administration, Room 6348 South Building, Washington, DC 20250, 202 382-9744

RIN: 0575-AA50

86. ● SECURITY SERVICING FOR MULTIPLE HOUSING LOANS

Significance: Agency Priority

Legal Authority: 42 USC 1480

CFR Citation: 7 CFR 1965, Subpart B

Legal Deadline: Statutory, April 5, 1988.

Abstract: This revision implements Subtitle C, "Rural Rental Housing Displacement Prevention," of the Housing and Community Development Act of 1987. Since this revision is mandated by legislation, alternatives were limited.

Timetable:

Action	Date	FR Cite
Interim Final Rule	04/05/88	

Small Entity: No

USDA—FmHA

Final Rule Stage

Agency Contact: Chris Goettelmann, Regulatory Coordinator, Department of Agriculture, Farmers Home Administration, Room 6348 South Building, Washington, DC 20250, 202 382-9744

RIN: 0575-AA51

87. ● PREDETERMINED AMORTIZATION SCHEDULE SYSTEM (PASS) ACCOUNT SERVICING

Legal Authority: 42 USC 1480

CFR Citation: 7 CFR 1951, Subpart K; 7 CFR 1951, Subpart A; 7 CFR 1930, Subpart C; 7 CFR 1944, Subpart E

Legal Deadline: None.

Abstract: Revision reincorporates automated billing provisions removed from an April 18, 1984, prior rule pending the development of computer capacity and combines multiple family housing account servicing under one regulation. Alternative is to remain under current burdensome process.

Timetable:

Action	Date	FR Cite
Interim Final Rule	10/01/88	
Final Action	11/01/88	

Small Entity: No

Agency Contact: Chris Goettelmann, Regulatory Coordinator, Department of Agriculture, Farmers Home Administration, Room 6348 South Building, Washington, DC 20250, 202 382-9744

RIN: 0575-AA52

DEPARTMENT OF AGRICULTURE (USDA)
Farmers Home Administration (FmHA)

Completed Actions

88. RESTRICTING INSURED AND GUARANTEED FARM OWNERSHIP AND OPERATING LOANS WHEN SURPLUS ITEMS EXIST

Significance: Regulatory Program

CFR Citation: 7 CFR 1941; 7 CFR 1943; 7 CFR 1980

Completed:

Reason	Date	FR Cite
Withdrawn Obsoleted by Agriculture Credit Act of 1987	04/01/88	

Small Entity: No

Agency Contact: Chris Goettelmann 202 382-9744

RIN: 0575-AA12

89. FMHA GUARANTEES OF COMMERCIAL LENDER'S FARM OWNERSHIP (FO) AND OPERATING LOANS (OL) WITH ACCOMPANYING LENDER PRINCIPAL WRITE DOWN AND/OR INTEREST RATE REDUCTION

CFR Citation: 7 CFR 1980

Completed:

Reason	Date	FR Cite
Withdrawn Obsoleted policy	04/00/88	

Small Entity: No

Agency Contact: Chris Goettelmann 202 382-9744

RIN: 0575-AA22

90. SECTION 502 RURAL HOUSING LOAN POLICIES, PROCEDURES, AND AUTHORIZATIONS

CFR Citation: 7 CFR 1944; 7 CFR 1922; 7 CFR 1951

Completed:

Reason	Date	FR Cite
Final Action	01/26/88	53 FR 2150
Final Action Effective	02/25/88	53 FR 2150

Small Entity: No

Agency Contact: Chris Goettelmann 202 382-9744

RIN: 0575-AA24

91. GENERAL REVISION OF FARMER PROGRAM REGULATIONS

CFR Citation: 7 CFR 1910; 7 CFR 1924; 7 CFR 1941; 7 CFR 1943; 7 CFR 1945; 7 CFR 1951; 7 CFR 1965; 7 CFR 1980

Completed:

Reason	Date	FR Cite
Withdrawn Due to adverse comments received on Proposed Rule	04/01/88	

Small Entity: No

Agency Contact: Chris Goettelmann 202 382-9744

RIN: 0575-AA27

92. DISTRESSED FORMER CONTINUATION AMENDMENTS TO FMHA FARMER PROGRAM LOAN MAKING, SUPERVISION AND SERVICING REGULATIONS

CFR Citation: 7 CFR 1924; 7 CFR 1941; 7 CFR 1962; 7 CFR 1965

Completed:

Reason	Date	FR Cite
Final Action	03/16/88	53 FR 8738

Small Entity: No

Agency Contact: Chris Goettelmann 202 382-9744

RIN: 0575-AA45

DEPARTMENT OF AGRICULTURE (USDA)
Food and Nutrition Service (FNS)

Proposed Rule Stage

93. WAIVER SIMPLIFICATION: FOOD STAMP PROGRAM

Legal Authority: 7 USC 2014(b)

CFR Citation: 7 CFR 273; 7 CFR 273.21

Legal Deadline: None.

Abstract: This rule modifies Food Stamp regulations to reflect concerns raised about the effect of the numerous waiver requests by State agencies. In particular, Monthly Reporting and Retrospective Budgeting is reviewed to eliminate numerous waivers through incorporation of different or broader principles. (FNS 85-001)

Timetable:

Action	Date	FR Cite
NPRM	09/30/88	
Final Action	03/31/89	

Small Entity: No

Agency Contact: Irene Lankford, Department of Agriculture, Food and Nutrition Service, Room 1107, Park Office Center, 3101 Park Center Dr., Alexandria, VA 22302, 703 756-3064

RIN: 0584-AA02

DEPARTMENT OF AGRICULTURE (USDA)
Food and Nutrition Service (FNS)

Final Rule Stage

94. ISSUANCE LOSS LIABILITY: FOOD STAMP PROGRAM

Legal Authority: 7 USC 2016; 7 USC 2020(e)(20)

CFR Citation: 7 CFR 274; 7 CFR 276

Legal Deadline: None.

Abstract: These rules govern the issuance of food stamps to Food Stamp Program participants. They also establish the system for accounting for the food stamps and establish liabilities for losses during the issuance process. (FNS 84-002)

Timetable:

Action	Date	FR Cite
Interim Final Rule	10/29/82	47 FR 49010
NPRM	04/09/86	51 FR 12268
Final Action	06/30/88	

Small Entity: No

Agency Contact: Irene Lankford, Department of Agriculture, Food and Nutrition Service, Room 1107, Park Office Center, 3101 Park Center Dr., Alexandria, VA 22302, 703 756-3064

RIN: 0584-AA05

95. FOOD DISTRIBUTION PROGRAM - PART 250

Significance: Agency Priority

Legal Authority: 7 USC 612c; 15 USC 713c; 42 USC 1755; 42 USC 1758; 7 USC 1431; 22 USC 1922; 7 USC 1859; 7 USC 1431b; 7 USC 1431 Note; 7 USC 1446a-1; 42 USC 1761; 42 USC 5179; 42 USC 5180; 42 USC 1762a; 42 USC 1766; ...

CFR Citation: 7 CFR 250

Legal Deadline: None.

Abstract: The rule reorganizes existing regulatory provisions for clarity and ease of reference. This rule outlines the responsibilities of the Food and Nutrition Service and State agencies concerning the distribution of USDA-donated foods acquired under various legislative authorities. The rule prescribes the terms and conditions under which donated foods may be obtained through distributing agencies for use in schools, child care institutions, nonprofit summer camps for children, charitable institutions, nutrition programs for the elderly, and otherwise in the assistance of needy persons. A number of provisions to strengthen and improve the State Processing Program were separated and published in a final rule July 1, 1986. (51 FR 23719) (FNS 84-513)

Timetable:

Action	Date	FR Cite
NPRM	08/19/85	50 FR 33470
Interim Final Rule	06/30/88	
Final Action	03/31/89	

Small Entity: No

Additional Information: ADDITIONAL LEGAL AUTHORITIES: 7 USC 612c Note; 42 USC 3030a; 42 USC 1760; 5 USC 301; 7 USC 1431e; 42 USC 1779

Agency Contact: Irene Lankford, Department of Agriculture, Food and Nutrition Service, Room 1107, Park Office Center, 3101 Park Center Dr., Alexandria, VA 22302, 703 756-3064

RIN: 0584-AA07

96. FOOD DISTRIBUTION PROGRAM ON INDIAN RESERVATIONS

Significance: Agency Priority

Legal Authority: 7 USC 2013(b)

CFR Citation: 7 CFR 253

Legal Deadline: None.

Abstract: The rule reorganizes existing regulatory provisions for clarity and ease of reference. This rule describes the terms and conditions under which (1) USDA-donated foods (available under 7 CFR 250) may be distributed to households on or near Indian reservations; (2) the program may be administered by capable Indian tribal organizations; and (3) funds may be obtained from USDA for the costs incurred in administering the program. The rule also provides for the concurrent operation of the Food Distribution Program and the Food Stamp Program on Indian reservations when such concurrent operation is requested by an Indian tribal organization. (FNS 84-514)

Timetable:

Action	Date	FR Cite
NPRM	10/20/87	
Final Action	05/30/88	

Small Entity: No

Agency Contact: Irene Lankford, Department of Agriculture, Food and Nutrition Service, Room 1107, Park Office Center, 3101 Park Center Dr., Alexandria, VA 22302, 703 756-3064

RIN: 0584-AA09

97. EMERGENCY FOOD ASSISTANCE FOR VICTIMS OF DISASTERS

Legal Authority: 7 USC 2013(b); 7 USC 2014(h)

CFR Citation: 7 CFR 273; 7 CFR 280

Legal Deadline: None.

Abstract: This rule would define special eligibility and issuance

VOL 53 ISS 79 PT 1 APR 25 1988 UMI

USDA—FNS **Final Rule Stage**

procedures during declared disasters. (84-001)

Timetable:

Action	Date	FR Cite
Interim Final Rule	06/30/88	
Final Action	03/30/89	

Small Entity: No

Agency Contact: Irene Lankford, Department of Agriculture, Food and Nutrition Service, Room 1107, Park Office Center, 3101 Park Center Dr., Alexandria, VA 22302, 703 756-3064

RIN: 0584-AA24

98. CONFORMANCE WITH AID TO FAMILIES WITH DEPENDENT CHILDREN (AFDC) RULES: FOOD STAMP PROGRAM

Significance: Regulatory Program

Legal Authority: 7 USC 2014(f)

CFR Citation: 7 CFR 273

Legal Deadline: None.

Abstract: This rule reviews Food Stamp and Aid to Families with Dependent Children regulations for inconsistencies and proposes conformance by altering either or both program's rules. (FNS 85-002)

Timetable:

Action	Date	FR Cite
ANPRM	02/19/85	50 FR 6970
NPRM	09/29/87	52 FR 36546
NPRM Comment Period End	11/30/87	
Final Action	11/30/88	

Small Entity: No

Agency Contact: Irene Lankford, Department of Agriculture, Food and Nutrition Service, Room 1107, Park Office Center, 3101 Park Center Dr., Alexandria, VA 22302, 703 756-3064

RIN: 0584-AA52

99. SIMPLIFIED APPLICATION AND STANDARDIZED BENEFITS: FOOD STAMP PROGRAM

Legal Authority: PL 99-198; 7 USC 2011 to 2027; 91 Stat 958

CFR Citation: 7 CFR 282.19

Legal Deadline: None.

Abstract: This rule addresses the simplified application and standardized benefit provisions contained in the Food Security Act of 1985. These provisions should result in reductions in administrative costs and depending on the benefit standardization procedures used, significant reductions in error rates. (FNS 86-010)

Timetable:

Action	Date	FR Cite
NPRM	04/23/87	52 FR 13450
Final Action	05/31/88	

Small Entity: No

Agency Contact: Irene Lankford, Department of Agriculture, Food and Nutrition Service, Room 1107, Park Office Center, 3101 Park Center Dr., Alexandria, VA 22302, 703 756-3064

RIN: 0584-AA62

100. ADMINISTRATION/MANAGEMENT: FOOD STAMP PROGRAM

Legal Authority: PL 99-198, Secs 1524, 1530, 1526, 1535, 1539

CFR Citation: 7 CFR 272.4; 7 CFR 272.3; 7 CFR 273.18; 7 CFR 275.15

Legal Deadline: Statutory, April 1, 1987.

Abstract: This regulation implements the following five provisions of the Food Security Act of 1985: (1) sets standards for the periodic review of food stamp offices' hours of operation; (2) requires State agencies to encourage participation in the Expanded Food and Nutrition Education Program (EFNEP); (3) requires project areas with 5,000 or more households to establish units to detect fraud; (4) allows State agencies to enter into agreements with State agencies administering Unemployment Compensation laws so that food stamp State agencies can collect outstanding claims by withholding unemployment benefits and/or other methods of collecting claims when recoupment is not an available method; (5) requires the Department to require State agencies to change the certification procedures used in project areas where it is determined that payment error rates are impairing the integrity of the program. (FNS 86-011)

Timetable:

Action	Date	FR Cite
NPRM	03/09/87	52 FR 7158
Final Action	04/30/88	

Small Entity: No

Agency Contact: Irene Lankford, Department of Agriculture, Food and Nutrition Service, Room 1107, Park Office Center, 3101 Park Center Dr., Alexandria, VA 22302, 703 756-3064

RIN: 0584-AA63

DEPARTMENT OF AGRICULTURE (USDA)
Food and Nutrition Service (FNS)

Completed Actions

101. QUALITY CONTROL ARBITRATION PROCEDURES: FOOD STAMP PROGRAM

CFR Citation: 7 CFR 276.7

Completed:

Reason	Date	FR Cite
Final Action	01/21/88	53 FR 1603

Small Entity: No

Agency Contact: Irene Lankford 703 756-3064

RIN: 0584-AA46

102. SPECIAL SUPPLEMENTAL FOOD PROGRAM FOR WOMEN, INFANTS AND CHILDREN: ADMINISTRATIVE FUNDING FORMULA

Significance: Agency Priority.

CFR Citation: 7 CFR 246.16(c)

Completed:

Reason	Date	FR Cite
Final Action	01/27/88	53 FR 2213

Small Entity: No

Agency Contact: Irene Lankford 703 756-3065

RIN: 0584-AA70

DEPARTMENT OF AGRICULTURE (USDA)
Food Safety and Inspection Service (FSIS)

Prerule Stage

103. ADMINISTRATIVE REGULATIONS

Legal Authority: 21 USC 601 et seq; 21 USC 451 et seq; 44 USC 3501 et seq; 5 USC 601 et seq; 7 CFR 1; EO 12291

CFR Citation: 9 CFR 304; 9 CFR 305; 9 CFR 306; 9 CFR 307; 9 CFR 329; 9 CFR 331; 9 CFR 335; 9 CFR 381

Legal Deadline: None.

Abstract: The Agency will review administrative requirements for applying for, granting, refusing, inaugurating, and withdrawing inspection; detaining, seizing, and condemning meat and poultry products; assigning program employees; designating States and territories and providing reimbursable services; scheduling of operations, and for overtime and holiday services.

Would also determine adequacy of current regulations as they relate to petitioning the Agency for regulatory change and informing interested persons of Agency procedures for appeal in the event of adverse determinations. (FSIS 83-009)

Timetable:

Action	Date	FR Cite
Begin Review	01/00/86	
End Review	12/31/88	

Small Entity: No

Agency Contact: G. E. McEvoy, Director, Planning Office, Department of Agriculture, Food Safety and Inspection Service, Room 105, Annex Bldg., Washington, DC 20250, 202 447-3317

RIN: 0583-AA02

104. TRANSPORTATION

Legal Authority: 21 USC 451 et seq; 21 USC 601 et seq; 5 USC 601 et seq; EO 12291

CFR Citation: 9 CFR 325; 9 CFR 381, Subpart S

Legal Deadline: None.

Abstract: The Agency will review Parts 325 and 381 Subpart S, of Title 9 of the Code of Federal Regulations relating to requirements on the movement of product between inspected facilities to determine if they reflect current Agency practice and whether they impose unnecessary burdens on industry. (FSIS 85-003)

Timetable:

Action	Date	FR Cite
Begin Review	12/01/86	
End Review	06/30/88	

Small Entity: No

Agency Contact: G. E. McEvoy, Director, Planning Office, Department of Agriculture, Food Safety and Inspection Service, Room 105, Annex Bldg., Washington, DC 20250, 202 447-3317

RIN: 0583-AA19

105. ELIGIBILITY OF FOREIGN COUNTRIES FOR IMPORTATION OF PRODUCTS INTO THE UNITED STATES

Legal Authority: 21 USC 601 et seq; 21 USC 451 et seq

CFR Citation: 9 CFR 327; 9 CFR 381

Legal Deadline: None.

Abstract: FSIS will review the import eligibility provisions of regulations promulgated under the Federal Meat Inspection Act and Poultry Products Inspection Act.

Timetable:

Action	Date	FR Cite
Begin Review	10/01/87	
End Review	10/31/88	

Small Entity: No

Agency Contact: G. E. McEvoy, Director, Planning Office, PP, Department of Agriculture, Food Safety and Inspection Service, Room 105-Annex Bldg., Washington, DC 20250, 202 447-3317

RIN: 0583-AA55

DEPARTMENT OF AGRICULTURE (USDA)
Food Safety and Inspection Service (FSIS)

Proposed Rule Stage

106. SWINE IDENTIFICATION AT OFFICIAL SLAUGHTERING ESTABLISHMENTS

Significance: Regulatory Program

Legal Authority: 21 USC 601 et seq

CFR Citation: 9 CFR 309; 9 CFR 310; 9 CFR 320

Legal Deadline: None.

Abstract: FSIS, possibly in conjunction with APHIS and/or other agencies, is proposing a swine identification program to provide a means for USDA and other public agencies to determine the origin of trichinae-infected or otherwise diseased swine, and of pork found to be contaminated with harmful chemical residues, and thereby permit the causes of such conditions to be found and recurrences to be prevented to the benefit of all concerned. (FSIS 86-004)

Timetable:

Action	Date	FR Cite
NPRM	00/00/00	

Small Entity: No

Agency Contact: Douglas Berndt, Director, Slaughter Inspection Standards & Procedures, Department of Agriculture, Food Safety and Inspection Service, Room 4444-South Bldg., Washington, DC 20250, 202 447-3219

RIN: 0583-AA25

107. VARIOUS AMENDMENTS TO ACCOMMODATE INSPECTION OF MEAT FOOD PRODUCTS UNDER TITLE IV OF THE FUTURES TRADING ACT OF 1986

Significance: Regulatory Program

Legal Authority: PL 99-641, Title IV

CFR Citation: 9 CFR 301 to 335

Legal Deadline: None.

Abstract: In November, 1986, PL 99-641 amended the Federal Meat Inspection Act to permit the Department to vary the manner and frequency by which it conducts inspection in establishments producing meat food products. All existing inspection regulations are based upon and reflect the previous statutory requirement that Federal inspectors be continuously present in

VOL 53 ISS 79 PT 1 APR 25 1988 UMI

such establishments. FSIS must develop new inspection procedures to allocate inspection resources among such establishments based on a variety of factors, including (1) the nature and frequency of the processing operations, (2) the adequacy and reliability of the processing control and sanitary procedures, and (3) the establishment's history of compliance with inspection requirements. The meat inspection procedures will touch upon virtually all existing meat regulations concerning inspection of meat food products. Details of these new procedures and the specific proposed regulatory amendments will be developed upon the conduct in 1987 of a pilot program to test alternative procedures in selected plants.

Timetable:

Action	Date	FR Cite
NPRM	01/30/88	
NPRM Comment Period End	05/30/88	
Final Action	07/30/88	

Small Entity: Undetermined

Agency Contact: Judith Segal, Director, Policy and Planning Staff, Department of Agriculture, Food Safety and Inspection Service, 14th & Independence Ave., SW, Room 327-E, Administration Building, Washington, DC 20250, 202 447-6525

RIN: 0583-AA26

108. REQUIREMENTS FOR PARTIALLY DEFATTED PRODUCTS

Significance: Regulatory Program

Legal Authority: 21 USC 601 et seq

CFR Citation: 9 CFR 318; 9 CFR 319

Legal Deadline: None.

Abstract: Would establish a standard of identity and composition, and would provide temperature and handling requirements for partially defatted meat products. Would also allow for use of these products in a greater number of meat food products at higher use levels.

Current regulation is not adequate to assure accurate labeling or to prevent commercial misrepresentation of such products.

Timetable:

Action	Date	FR Cite
ANPRM	08/23/85	50 FR 34157
ANPRM Comment Period End	01/21/86	
NPRM	04/01/88	
NPRM Comment Period End	06/01/88	
Final Action	07/15/88	
Final Action Effective	08/15/88	

Small Entity: Undetermined

Agency Contact: Margaret O'K. Glavin, Director, Standards and Labeling Division, Department of Agriculture, Food Safety and Inspection Service, Room 311-Cotton Annex, Washington, DC 20250, 202 447-6042

RIN: 0583-AA27

109. CONTROL OF SALMONELLA AND OTHER ENTERIC BACTERIA IN MEAT AND POULTRY PROCESSING

Significance: Regulatory Program

Legal Authority: 21 USC 601 et seq; 21 USC 451 et seq

CFR Citation: 9 CFR 318; 9 CFR 381

Legal Deadline: None.

Abstract: Would permit an official meat or poultry establishment that has voluntarily developed effective microbiological controls for fresh packaged meat or poultry products to submit plans and records of such control systems to FSIS for approval. If the Administrator determines a control system to be adequate for the purpose of minimizing naturally occurring microbiological contaminations, he will approve the system, and the establishment will be permitted to use special labeling that acknowledges the use of an approved control system.

Timetable:

Action	Date	FR Cite
Next Action Undetermined		

Small Entity: Undetermined

Agency Contact: W. H. Dubbert, Assistant Deputy Administrator, Science Program, FSIS, Department of Agriculture, Food Safety and Inspection Service, Room 401- Cotton Annex, Washington, DC 20250, 202 447-2326

RIN: 0583-AA28

110. VERIFIED PRODUCTION CONTROL PROGRAM

Significance: Regulatory Program

Legal Authority: 21 USC 451 et seq; 21 USC 601 et seq

CFR Citation: 9 CFR 317; 9 CFR 323; 9 CFR 381

Legal Deadline: None.

Abstract: Would create a voluntary program available to all establishments which would permit label claims concerning how an animal was raised to appear on meat and poultry products subject to USDA's ability to verify such claims.

Timetable:

Action	Date	FR Cite
Next Action Undetermined		

Small Entity: Undetermined

Agency Contact: Dr. W. R. Miller, Director, Residue Evaluation and Planning Division, Science Division, Department of Agriculture, Food Safety and Inspection Service, Room 603-Cotton Annex, Washington, DC 20250, 202 447-2326

RIN: 0583-AA29

111. SULFONAMIDES IN SWINE

Significance: Regulatory Program

Legal Authority: 21 USC 601 et seq

CFR Citation: 9 CFR 309; 9 CFR 310

Legal Deadline: None.

Abstract: Would establish an in-plant testing program to monitor violative levels of sulfonamide residues in swine. Such program would be designed to encourage producers to market and packers to purchase only healthy animals that will produce safe and wholesome meat.

Timetable:

Action	Date	FR Cite
ANPRM	05/20/85	50 FR 20796
ANPRM Comment Period End	08/30/85	
NPRM	09/01/88	
NPRM Comment Period End	11/01/88	
Final Action	04/01/89	
Final Action Effective	05/01/89	

Small Entity: Undetermined

Agency Contact: W. R. Miller, Director, Residue Evaluation and Planning Division, Department of Agriculture, Food Safety and Inspection Service, Washington, DC 20250, 202 447-2807

RIN: 0583-AA31

112. USE AND LABELING OF BLOOD COMPONENTS AS INGREDIENTS IN MEAT FOOD PRODUCTS

Legal Authority: 21 USC 601 et seq

CFR Citation: 9 CFR 318; 9 CFR 317

Legal Deadline: None.

Abstract: This proposed rule would amend the Federal meat inspection regulations to provide regulatory authority for the use of blood components in meat food products and to define labeling requirements for products containing blood components. At the present time, the regulations only address the use of whole blood in meat food products and labeling for products containing whole blood. The proposed rule would amend these sections and establish uniform standards for both whole blood and blood components.

Timetable:

Action	Date	FR Cite
NPRM	03/31/88	
NPRM Comment Period End	06/01/88	

Small Entity: No

Agency Contact: Margaret O'K. Glavin, Director, Standards and Labeling Division, MPITS, Department of Agriculture, Food Safety and Inspection Service, Rm 311-Annex Bldg., Washington, DC 20250, 202 447-4293

RIN: 0583-AA42

113. USE OF LACTIC ACID AND ACETIC ACID AS ANTI-MICROBIAL AGENTS ON MEAT AND POULTRY CARCASSES

Legal Authority: 21 USC 601 et seq; 21 USC 451 et seq

CFR Citation: 9 CFR 318; 9 CFR 381

Legal Deadline: None.

Abstract: This proposed rule would amend Federal meat and poultry products inspection regulations by allowing lactic acid and acetic acid to be applied to meat and poultry carcasses for the purpose of reducing microbial contamination.

Timetable:

Action	Date	FR Cite
NPRM	04/01/88	

Small Entity: No

Agency Contact: Margaret O'K. Glavin, Director, Standards and Labeling Division, MPITS, Department of Agriculture, Food Safety and Inspection Service, Rm 311-Annex Bldg., Washington, DC 20250, 202 447-4293

RIN: 0583-AA43

114. GLUCONO DELTA LACTONE AS AN ACIDIFIER IN MEAT AND POULTRY PRODUCTS

Legal Authority: 21 USC 601 et seq; 21 USC 451 et seq

CFR Citation: 9 CFR 318; 9 CFR 381

Legal Deadline: None.

Abstract: This final rule will respond to a petition submitted by Finnsugar Biochemicals, Inc., for approval for the use of glucono-delta-lactone (GDL) as the "acidulant" in a process for manufacturing "restructured meat products." The petitioner wants to use GDL as the acidifier in a USDA-approved binder matrix for restructured meat products which currently employs sodium alginate, calcium carbonate, encapsulated lactic acid, and calcium lactate. GDL would replace lactic acid as the acidifier for this use.

Timetable:

Action	Date	FR Cite
NPRM	05/01/88	

Small Entity: No

Agency Contact: Margaret O'K. Glavin, Director, Standards and Labeling Division, MPITS, Department of Agriculture, Food Safety and Inspection Service, Rm 311-Annex Bldg., Washington, DC 20250, 202 447-4293

RIN: 0583-AA46

115. REQUIREMENTS FOR FOREIGN COUNTRY IMPORT CERTIFICATION AND LIVE ANIMAL IMPORTATION

Legal Authority: PL 99-198

CFR Citation: 9 CFR 327; 9 CFR 381

Legal Deadline: None.

Abstract: This proposed rule would respond to amendments made to the Federal Meat Inspection Act by the Food Security Act of 1985. The amendments require that FSIS periodically certify residue control programs submitted by foreign countries desiring to export meat products to the United States. The amendments also provide the Secretary with the authority to issue an order prohibiting the importation of livestock for immediate slaughter that have been administered a drug or antibiotic banned for use in the United States.

Timetable:

Action	Date	FR Cite
NPRM	06/01/88	
NPRM Comment Period End	08/01/88	
Final Action	02/01/89	
Final Action Effective	03/01/89	

Small Entity: No

Agency Contact: William Havlik, Assistant Deputy Administrator, International Programs, Department of Agriculture, Food Safety and Inspection Service, Room - 341 E, Administration Bldg., 14th & Independence Ave., SW, Washington, DC 20250, 202 447-2644

RIN: 0583-AA47

116. TRICHINA CONTROL REQUIREMENTS FOR DRY-CURED HAM

Legal Authority: 21 USC 601 et seq

CFR Citation: 9 CFR 318

Legal Deadline: None.

Abstract: This proposed rule would amend the Federal meat inspection regulations by incorporating the dry-cured ham research study findings. This study evaluated the efficiency of present procedures in the commercial production of dry-cured hams and determined the combinations of curing time, temperature, salt concentration, and water activity necessary to inactivate t. spiralis.

Timetable:

Action	Date	FR Cite
NPRM	01/30/88	
NPRM Comment Period End	04/30/88	
Final Action	12/15/88	

Small Entity: No

Agency Contact: Bill F. Dennis, Director, Processed Products Inspection Division, MPITS, Department of Agriculture, Food Safety and Inspection

Service, Rm 2158-South Bldg., Washington, DC 20250, 202 447-3840

RIN: 0583-AA49

117. MOVEMENT OF IMPORTED PRODUCT PRIOR TO REINSPECTION

Legal Authority: 21 USC 601 et seq; 21 USC 451 et seq

CFR Citation: 9 CFR 327; 9 CFR 381

Legal Deadline: None.

Abstract: This proposed rule would prohibit any transportation of imported meat and poultry products from the port of first arrival until reinspected by FSIS. Responds to 1987 Office of Inspector General (OIG) report that noted physical and administrative control problems over product shipped to other locations after entering the United States before it had received reinspection. Based on the above, OIG recommended that FSIS take action to require that all imported products be reinspected at the port of first arrival rather than at its final destination.

Timetable:

Action	Date	FR Cite
NPRM	05/01/88	
NPRM Comment Period End	07/01/88	
Final Action	01/01/89	
Final Action Effective	02/01/89	

Small Entity: Undetermined

Agency Contact: Mark Manis, Director, Import Inspection Division, International Programs, FSIS, Department of Agriculture, Food Safety and Inspection Service, Rm. 4332-South Bldg., 14th & Independence Ave., SW, Washington, DC 20250, 202 447-2952

RIN: 0583-AA53

118. USE AND PROTECTION OF APPROVED WATER SYSTEMS

Legal Authority: 21 USC 601 et seq; 21 USC 451 et seq; 42 USC 3007 et seq

CFR Citation: 9 CFR 308; 9 CFR 381

Legal Deadline: None.

Abstract: This proposed rule would prescribe acceptable conditions for the reuse of water in official establishments. This rule would outline methods protecting the potable water supply and describe conditions of use of fresh water. In addition, the rule would also consolidate and make uniform pre-existing policies for the use and reuse of water and brine.

Timetable:

Action	Date	FR Cite
NPRM	06/01/88	
NPRM Comment Period End	08/01/88	
Final Action	02/01/89	
Final Action Effective	03/01/89	

Small Entity: No

Agency Contact: Karen Wesson, Director, Facilities, Equipment, and Sanitation Div., Department of Agriculture, Food Safety and Inspection Service, Room 1140 South Bldg., Washington, DC 20250, 202 447-3885

RIN: 0583-AA54

119. ● SULFONAMIDE AND ANTIBIOTIC RESIDUES IN YOUNG VEAL CALVES; CERTIFICATION REQUIREMENTS

Legal Authority: 21 USC 601 et seq

CFR Citation: 9 CFR 309; 9 CFR 310

Legal Deadline: None.

Abstract: This proposed rule would be amended to require specific certification language, advise certifying parties of the consequences of false statements, and include custodians as well as producers as parties to certification. These changes will improve the effectiveness of the voluntary certifications by providing uniformity to certifications and warnings about false statements. Because of increasing high levels of antibiotic and sulfonamide residues found in young veal calves, the Food Safety and Inspection Service in 1984 initiated intensified inplant testing procedures to prevent adulterated meat from entering consumer channels. These procedures provide for a voluntary written certification program that allows for less intense testing of calves certified as not having been treated with drugs, or if so, that prescribed label directions were followed. More recently the Office of the Inspector General recommended that the Agency develop a standard form for the certified calf program.

Timetable:

Action	Date	FR Cite
NPRM	00/00/00	

Small Entity: No

Agency Contact: W. R. Miller, Director, Residue Evaluation and Planning Division, Department of Agriculture, Food Safety and Inspection Service, Washington, DC 20250, 202 447-2307

RIN: 0583-AA58

120. ● REQUIREMENTS FOR FOREIGN COUNTRY CERTIFICATION AND LIVE ANIMAL IMPORTATION

Significance: Agency Priority

Legal Authority: 21 USC 601 et seq; PL 99-198

CFR Citation: 9 CFR 327

Legal Deadline: None.

Abstract: This proposed rule responds to provisions of the 1985 Farm Bill which would amend the Federal meat and poultry products inspection regulations to require an annual certification of foreign country residue control programs by FSIS and would prescribe terms and conditions for the importation of live animals that have been administered a drug banned for use in the U.S.

Timetable:

Action	Date	FR Cite
NPRM	00/00/00	

Small Entity: No

Agency Contact: Patricia Stolfa, Deputy Administrator, International Programs, Department of Agriculture, Food Safety and Inspection Service, 14th & Independence Ave., SW, Washington, DC 20250, 202 447-3473

RIN: 0583-AA59

121. ● VOLUNTARY INSPECTION OF EXOTIC ANIMALS

Legal Authority: 7 USC 1622; 21 USC 601 et seq

CFR Citation: 9 CFR 350; 9 CFR 352

Legal Deadline: None.

Abstract: This proposed rule would provide for the voluntary inspection of certain exotic animals under Food Safety and Inspection Service's voluntary inspection program and would provide for ante-mortem and post-mortem inspection on a fee-for-service basis of elk, deer, antelope, reindeer and water buffalo in the manner as is presently performed for American bison.

Timetable:

Action	Date	FR Cite
NPRM	00/00/00	

Small Entity: No

Agency Contact: Douglas L. Berndt, Director, Slaughter Inspection Stds. and Proc. Branch, Department of Agriculture, Food Safety and Inspection Service, Room 4444 South Bldg., Washington, DC 20250, 202 447-3219

RIN: 0583-AA60

122. ● IMPLEMENTATION OF PORK IRRADIATION

Significance: Regulatory Program

Legal Authority: 21 USC 601 et seq; 21 USC 451 et seq

CFR Citation: 9 CFR 317; 9 CFR 318; 9 CFR 319; 9 CFR 327; 9 CFR 331; 9 CFR 381

Legal Deadline: None.

Abstract: This proposed rule would amend the Federal meat inspection regulations by adding new provisions addressing: labeling requirements for irradiated pork and products containing irradiated ingredients; the use of irradiation as an accepted method for the destruction of Trichinella spiralis; and the designation that establishment numbers for official irradiation facilities will bear the prefix "R." The proposed rule also makes several technical amendments necessitated by the primary changes mentioned above.

Timetable:

Action	Date	FR Cite
NPRM	00/00/00	

Small Entity: No

Agency Contact: Margaret O'K. Glavin, Director, Standards and Labeling Division, Department of Agriculture, Food Safety and Inspection Service, Room 311 Annex Building, Washington, DC 20250, 202 447-7617

RIN: 0583-AA61

123. ● CERTAIN PRODUCTS WITH MEAT INGREDIENTS – EXEMPTIONS FROM DEFINITION OF A "MEAT FOOD PRODUCT"

Legal Authority: 21 USC 601 et seq

CFR Citation: 9 CFR 301; 9 CFR 303

Legal Deadline: None.

Abstract: This proposed rule would amend the Federal meat inspection regulations to exclude specific products and classes of products containing meat, meat byproducts, and/or meat food products from the definition "meat food product" and thereby would exempt these products from Federal inspection. The proposal identifies two broad conditions for exemption: (1) products containing 3 percent or less of raw meat or other portion of any carcass, or less than 2 percent of cooked meat or other portion of any carcass, and (2) products that historically have not been considered by consumers as products of the meat food industry. This proposal would replace current informal standards for exemptions with formal, codified exemptions.

Timetable:

Action	Date	FR Cite
NPRM	00/00/00	

Small Entity: No

Agency Contact: Margaret O'K. Glavin, Standards and Labeling Division, Department of Agriculture, Food Safety and Inspection Service, Washington, DC 20250, 202 447-4293

RIN: 0583-AA62

124. ● USE OF CERTAIN BINDERS IN MEAT AND POULTRY PRODUCTS AND TRANSFER OF BINDERS IN TEXT TO THE TABLES OF APPROVED SUBSTANCES

Legal Authority: 21 USC 601 et seq; 21 USC 451 et seq

CFR Citation: 9 CFR 318; 9 CFR 319; 9 CFR 381

Legal Deadline: None.

Abstract: This rule would permit the use of wheat gluten, tapioca dextrin, whey protein concentrate, and sodium caseinate as binders in various meat and poultry products. This action responds to petitions submitted by several companies requesting that the Food Safety and Inspection Service permit these substances in various meat and poultry products to improve the texture of the products.

Timetable:

Action	Date	FR Cite
ANPRM	03/28/88	
NPRM	00/00/00	

Small Entity: No

Agency Contact: Margaret O'K. Glavin, Director, Standards and Labeling Division, Department of Agriculture, Food Safety and Inspection Service, Washington, DC 20250, 202 447-4293

RIN: 0583-AA64

125. ● IMMERSION CURED AND DRY CURED BACON

Legal Authority: 21 USC 601 et seq

CFR Citation: 9 CFR 318

Legal Deadline: None.

Abstract: This proposed rule would limit nitrate to 120 parts per million (ppm) going into immersion cured bacon bellies and to 200 ppm going into dry cured bacon bellies. The principal effect of this proposed rule would be to reduce the formation of nitrosamines in bacon by prohibiting the use of nitrate in the production of immersion cured and dry cured bacon.

Timetable:

Action	Date	FR Cite
NPRM	00/00/00	

Small Entity: No

Agency Contact: Bill F. Dennis, Director, Processed Products Inspection Division, Department of Agriculture, Food Safety and Inspection Service, Rm. 2158 South Bldg., Washington, DC 20250, 202 447-3840

RIN: 0583-AA65

126. ● CONTROL OF ADDED SUBSTANCES AND LABELING REQUIREMENTS FOR TURKEY HAM PRODUCTS

Legal Authority: 21 USC 451 et seq

CFR Citation: 9 CFR 381

Legal Deadline: None.

Abstract: This proposed rule would amend the definition and standard and labeling requirements for turkey ham products. The current provision limits the amount of added water and other substances contained in turkey ham products by requiring the weight of the finished product to be no more than the original weight of the turkey thigh meat used prior to curing. This provision would be replaced by provisions specifying a minimum meat protein content on a fat free basis (PFF) in various turkey ham products. Compliance procedures to assure conformance with the proposed standards would be based on

VOL 53 ISS 79 PT 1 AP 25 1988 UMI

contemporary statistical science applied to current processing.

Timetable:

Action	Date	FR Cite
NPRM	00/00/00	

Small Entity: No

Agency Contact: Margaret O'K. Glavin, Director, Standards and Labeling Division, Department of Agriculture, Food Safety and Inspection Service, Room 311 Annex Building, Washington, DC 20250, 202 447-4293

RIN: 0583-AA66

127. ● ADDITIONAL TRICHINA DETECTION METHODS

Legal Authority: 21 USC 601 et seq

CFR Citation: 9 CFR 318

Legal Deadline: None.

Abstract: This proposed rule would amend the regulations to permit use of an approved method for examining swine for evidence of trichinosis. The Food Safety and Inspection Service (FSIS) has been petitioned by a manufacturer of serological tests to amend the Federal meat inspection regulations to approve the use of immunoassays for the examination of swine for evidence of trichinosis infection. FSIS has reviewed the performance of the petitioner's assay in a laboratory where sera prepared by the Agency were tested by a precisely defined procedure and has concluded that immunoassays can effectively detect evidence of trichinosis in swine.

Timetable:

Action	Date	FR Cite
NPRM	00/00/00	

Small Entity: No

Agency Contact: Margaret O'K. Glavin, Director, Standards and Labeling Division, Department of Agriculture, Food Safety and Inspection Service, Rm. 2159 South Bldg., Washington, DC 20250, 202 447-4293

RIN: 0583-AA67

128. ● NET WEIGHT

Significance: Regulatory Program

Legal Authority: 21 USC 601 et seq; 21 USC 451 et seq

CFR Citation: 9 CFR 317; 9 CFR 381

Legal Deadline: None.

Abstract: This proposed rule would make Federal and State weights and measures procedures and techniques more consistent, objective and equitable. Under the proposed rule, USDA would adopt the National Bureau of Standards Handbooks 133 and 44 as its standards. The proposed amendment would recognize a fixed amount of acceptable moisture loss by product. This will replace the term "reasonable variation." Moreover the amendment will grant concurrent jurisdiction to State and local authorities to enforce net weight labeling of federally inspected meat and poultry products within their geographic area. The amendment will promote uniform treatment of moisture loss and weights and measures standards as well as encourage and enable greater State and local participation.

Timetable:

Action	Date	FR Cite
NPRM	08/01/88	
NPRM Comment Period End	10/01/88	

Small Entity: No

Agency Contact: John McCutcheon, Deputy Administrator, Meat & Poultry Inspection Technical Services, Department of Agriculture, Food Safety and Inspection Service, Rm. 350-E, Administration Bldg., Washington, DC 20250, 202 447-3521

RIN: 0583-AA69

129. ● ADDITIONAL TRICHINA DETECTION METHODS

Legal Authority: 21 USC 601 et seq

CFR Citation: 9 CFR 318

Legal Deadline: None.

Abstract: This proposed rule would amend the regulations to permit use of an approved method for examining swine for evidence of trichinosis. The Food Safety and Inspection Service (FSIS) has been petitioned by a manufacturer of serological tests to amend the Federal meat inspection regulations to approve the use of immunoassays for the examination of swine for evidence of trichinosis infection. FSIS has reviewed the performance of the petitioner's assay in a laboratory where sera prepared by the Agency were tested by a precisely defined procedure and has concluded that immunoassays can effectively detect evidence of trichinosis in swine.

Timetable:

Action	Date	FR Cite
Next Action Undetermined		

Small Entity: No

Agency Contact: Margaret O'K. Glavin, Director, Standards and Labeling Division, Department of Agriculture, Food Safety and Inspection Service, Rm. 2159 South Bldg., Washington, DC 20250, 202 447-4293

RIN: 0583-AA70

130. ● LABELING OF MEAT FOOD PRODUCTS THAT CONTAIN MECHANICALLY SEPARATED (SPECIES) UNDER CERTAIN CIRCUMSTANCES

Significance: Agency Priority

Legal Authority: 21 USC 601 et seq

CFR Citation: 9 CFR 317

Legal Deadline: None.

Abstract: This proposed rule would add a new exception to the requirement that the list of ingredients on the labels of meat food products shall show the common or usual names of the ingredients. The exception would apply to the use of Mechanically Separated (Species) (MS(S)); at levels no greater than ten percent of the livestock and poultry product portion of a meat food product, providing that the labeling of such product bear a calcium content declaration in accordance with section 317.2(j)(13)(ii) of the Federal meat inspection regulations (9 CFR 317.2(j)(13) (ii)). This action is the result of a petition submitted to the Food Safety and Inspection Service by several members of the meat industry to amend the labeling requirements for meat food products containing MS(S).

Timetable:

Action	Date	FR Cite
NPRM	00/00/00	

Small Entity: No

Agency Contact: Margaret O'K. Glavin, Director, Standards and Labeling Division, Department of Agriculture, Food Safety and Inspection Service, Washington, DC 20250, 202 447-4293

RIN: 0583-AA71

VOL 53 ISS 79 PT 1 AP 25 1988 UMI

DEPARTMENT OF AGRICULTURE (USDA) **Final Rule Stage**

Food Safety and Inspection Service (FSIS)

131. STANDARD FOR FRANKFURTERS AND SIMILAR COOKED SAUSAGES

Significance: Regulatory Program

Legal Authority: 21 USC 601 et seq

CFR Citation: 9 CFR 319

Legal Deadline: None.

Abstract: USDA has been petitioned by the American Meat Institute (AMI) "to promulgate a standard of identity and composition for 'lite' sausage." The current cooked sausage standard includes various processed meat food products, such as frankfurters, hot dogs, weiners, viennas, bolognas, and knockwurst. The AMI petition requests a new standard for lower-fat "lite" sausage that would require not more than 22.5 percent fat and not less than 11.5 percent protein, as compared with 30 percent fat and 10 percent added water maximums in the existing cooked-sausage standard. FSIS proposed rule provides additional flexibility to enable industry to market lower fat products. The rule allows a combination of up to 40 percent added water and fat, with a 30 percent ceiling on fat content. The Agency also seeks comment on the option of deleting entirely the standard for cooked sausages. (FSIS 86-002)

Timetable:

Action	Date	FR Cite
NPRM	11/24/86	51 FR 42239
NPRM Comment Period End	03/23/87	

Next Action Undetermined

Small Entity: No

Agency Contact: Margaret O'K. Glavin, Director, Department of Agriculture, Food Safety and Inspection Service, Standards and Labeling Division, MPITS, Washington, DC 20250, 202 447-6042

RIN: 0583-AA21

132. DETERMINATION OF ADDED WATER IN COOKED SAUSAGES

Significance: Regulatory Program

Legal Authority: 21 USC 601 et seq

CFR Citation: 9 CFR 317; 9 CFR 318

Legal Deadline: None.

Abstract: Would publish protocols for determining compliance of meat food products with current added water standards. Would differentiate in such products protein derived from meat and meat byproducts from protein derived from other sources. Would ensure that similar, competing ingredients for cooked sausages are treated consistently.

Timetable:

Action	Date	FR Cite
NPRM	08/18/87	
NPRM Comment Period End	10/19/87	
Final Action	04/15/88	
Final Action Effective	05/15/88	

Small Entity: No

Agency Contact: Margaret O'K. Glavin, Director, Standards and Labeling Division, Department of Agriculture, Food Safety and Inspection Service, Room 311-Cotton Annex, Washington, DC 20250, 202 447-6042

RIN: 0583-AA30

133. CATTLE POST - MORTEM INSPECTION PROCEDURES AND STAFFING PROCEDURES

Significance: Regulatory Program

Legal Authority: 21 USC 601 et seq

CFR Citation: 9 CFR 307; 9 CFR 310

Legal Deadline: None.

Abstract: This proposed rule would improve post-mortem inspection procedures for cattle which will result in maximum inspection efficiency and increased productivity. By modernizing cattle inspection procedures, FSIS would increase its inspection productivity while assuring that only wholesome meat enters domestic commerce.

It is anticipated that the meat industry will experience a net gain if this system of inspection is implemented in spite of the initial costs of facility modifications which may be necessary in some establishments. Savings to the industry as a whole should occur because of increased productivity and reduced overtime.

Timetable:

Action	Date	FR Cite
NPRM	09/30/87	
NPRM Comment Period End	11/30/87	
Final Action	04/01/88	

Small Entity: No

Agency Contact: Douglas Berndt, Director, Slaughter Inspection Standards & Procedures, Department of Agriculture, Food Safety and Inspection Service, Room 4444 South Bldg., Washington, DC 20250, 202 447-3219

RIN: 0583-AA32

134. DISPOSAL OF LIVESTOCK CARCASSES AND PARTS CONDEMNED FOR BIOLOGICAL RESIDUES

Legal Authority: 21 USC 601 et seq

CFR Citation: 9 CFR 309; 9 CFR 310; 9 CFR 314

Legal Deadline: None.

Abstract: This proposed rule would amend the Federal meat inspection regulations governing methods of handling and disposing of livestock carcasses and parts condemned because they bear or contain biological residues. Current regulations do not require methods of disposal that preclude use of such carcasses or parts in nonhuman food such as animal feed. FSIS believes that such condemned articles must be destroyed by incineration or burial. This would make disposition of livestock carcasses and parts condemned for biological residues consistent with regulations which govern the disposition of poultry carcasses and parts condemned for biological residues.

Timetable:

Action	Date	FR Cite
NPRM	06/08/87	52 FR 21561
NPRM Comment Period End	08/07/87	
Final Action	06/01/88	
Final Action Effective	07/01/88	

Small Entity: No

Agency Contact: Douglas L. Berndt, Director, Slaughter Inspection Standards and Procedures, MPITS, Department of Agriculture, Food Safety and Inspection Service, Rm 4444-South Bldg., Washington, DC 20250, 202 447-3219

RIN: 0583-AA33

135. BINDER CONSISTING OF SODIUM ALGINATE, CALCIUM CARBONATE, LACTIC ACID, AND CALCIUM LACTATE

Legal Authority: 21 USC 601 et seq

CFR Citation: 9 CFR 318

Legal Deadline: None.

Abstract: This final rule will permit the use of a binder complex approved for use in restructured meat products to be used in restructured poultry products in which binders are permitted, and will result in superior binding of chopped/ground/sectioned and formed poultry products.

Timetable:

Action	Date	FR Cite
Final Action	06/01/88	
Final Action Effective	07/01/88	

Small Entity: No

Agency Contact: Margaret O'K. Glavin, Director, Standards and Labeling Division, MPITS, Department of Agriculture, Food Safety and Inspection Service, Rm 311-Annex Bldg., Washington, DC 20250, 202 447-4293

RIN: 0583-AA34

136. ELIMINATION OF SEALING REQUIREMENT FOR RENDERED EDIBLE ANIMAL FAT

Legal Authority: 21 USC 601 et seq

CFR Citation: 9 CFR 316; 9 CFR 317; 9 CFR 350

Legal Deadline: None.

Abstract: This proposed rule would amend the Federal meat inspection regulations to allow inspected and passed rendered edible animal fat transported in properly labeled tank cars or trucks to move in commerce without an official seal. Currently, establishments which process and then transport edible animal fat to another establishment must have the means of conveyance sealed with an official seal by a program employee. Establishments receiving the officially sealed product must have the seal broken by a program employee. This action would remove a restrictive sealing requirement that no longer appears to be necessary.

Timetable:

Action	Date	FR Cite
NPRM	12/01/87	52 FR 45639
NPRM Comment Period End	02/01/88	
Final Action	08/01/88	
Final Action Effective	09/01/88	

Small Entity: No

Agency Contact: Bill F. Dennis, Director, Processed Products Inspection Div, MPITS, Department of Agriculture, Food Safety and Inspection Service, Rm 2158 South Bldg., Washington, DC 20250, 202 447-3840

RIN: 0583-AA36

137. RANDOM WEIGHT PACKAGES; STATEMENT OF NET WEIGHT DECIMAL PLACES

Legal Authority: 21 USC 601 et seq; 21 USC 451 et seq

CFR Citation: 9 CFR 317; 9 CFR 381

Legal Deadline: None.

Abstract: This final rule will allow net weight statements on random weight packages of meat and poultry products to be expressed in terms of three or more decimal places. Currently, these statements are limited to two decimal places. The rule would facilitate the use of modern weighing equipment and permit the statement of net weight on packages to be expressed in accordance with the weighing equipment's capabilities.

Timetable:

Action	Date	FR Cite
NPRM	06/30/87	52 FR 24475
NPRM Comment Period End	08/31/87	
Final Action	06/01/88	
Final Action Effective	07/01/88	

Small Entity: No

Agency Contact: Bill F. Dennis, Director, Processed Products Inspection Division, MPITS, Department of Agriculture, Food Safety and Inspection Service, Rm 2158-South Bldg., Washington, DC 20250, 202 447-3840

RIN: 0583-AA37

138. STREAMLINED INSPECTION SYSTEM FOR BROILERS AND CORNISH GAME HENS

Significance: Agency Priority

Legal Authority: 21 USC 451 et seq

CFR Citation: 9 CFR 381

Legal Deadline: None.

Abstract: This final rule will establish a new inspection system for broilers and cornish game hens in response to increased demands on Agency resources. The "streamlined inspection system" allows increased efficiency in the use of FSIS resources and those of the poultry industry while still providing consumers with wholesome, unadulterated products.

Certain changes in plant facilities are required but should result only in minor expenditures. The industry will realize gains through reduced charges for overtime, reduced workspace requirements, and increased productivity.

Timetable:

Action	Date	FR Cite
Interim Final Rule	01/29/86	51 FR 3569
Final Action	06/01/88	
Final Action Effective	07/01/88	

Small Entity: No

Agency Contact: Douglas L. Berndt, Director, Slaughter Inspection Standards and Procedures, Department of Agriculture, Food Safety and Inspection Service, Room 4444 South Bldg., Washington, DC 20250, 202 447-3219

RIN: 0583-AA38

139. ASCORBIC ACID, ERYTHORBIC ACID, CITRIC ACID, SODIUM ASCORBIC, AND SODIUM CITRATE IN FRESH PORK CUTS

Legal Authority: 21 USC 601 et seq

CFR Citation: 9 CFR 317; 9 CFR 318

Legal Deadline: None.

Abstract: This final rule will permit the use of ascorbic acid, citric acid, erythorbic acid, sodium ascorbate, and sodium citrate, singly or in combination to maintain the color of fresh pork cuts. Fresh pork cuts which have been treated to maintain color by the addition of these substances will be required to be labeled with a qualifying phrase, contiguous to the product name, which indicates that they have been treated to maintain color. Use of these substances will result in maintenance of color for a period of time equivalent to the microbiological shelf life of fresh pork cuts. This will permit extended distribution of pork cuts prepared and packaged in federally inspected establishments. The petitioner has supplied FSIS with sufficient information to satisfy the requirements of 9 CFR 318.7(a)(2) which provide for the issuance of a final rule. However, due to the potential significance of

color maintenance through the use of added substances, this rule was published as an interim final rule with request for comments so that commercial and public comment can be obtained and considered prior to confirmation of the rule as final.

Timetable:

Action	Date	FR Cite
Interim Final Rule	08/22/86	51 FR 30052
ANPRM Comment Period End	12/22/86	
Final Action	06/15/88	

Small Entity: No

Agency Contact: Margaret O'K. Glavin, Director, Standards and Labeling Division, MPITS, Department of Agriculture, Food Safety and Inspection Service, Room 311-Annex Bldg., Washington, DC 20250, 202 447-6042

RIN: 0583-AA40

140. DETERMINATION OF "ADDED WATER" IN COOKED SAUSAGES

Significance: Agency Priority

Legal Authority: 21 USC 601 et seq

CFR Citation: 9 CFR 318

Legal Deadline: None.

Abstract: This proposed rule would amend the Federal meat inspection regulations to define the method by which the Agency determines the quantity of added water in cooked sausages. Added water means any water not directly attributable to the meat, meat byproducts, mechanically separated (species), or poultry ingredients. The Federal meat inspection regulations limit the amount of added water to a maximum of 10 percent of the finished weight in cooked sausages. The amount of added water is determined by laboratory analysis and appropriate calculations. Discrepancies in the calculation of meat protein currently exist primarily due to the non-deduction from the total protein content of protein derived from certain non-meat protein sources. If the amount of protein derived from non-meat sources is not subtracted from the total protein content, it is possible that added water in excess of the 10 percent permitted by regulations would be present in the product. The proposed rule would correct this discrepancy.

Timetable:

Action	Date	FR Cite
NPRM	08/18/87	52 FR 30925
Final Action	09/01/88	
Effective		

Small Entity: No

Agency Contact: Margaret O'K. Glavin, Director, Standards and Labeling Division, MPITS, Department of Agriculture, Food Safety and Inspection Service, Rm 311-Annex Bldg., Washington, DC 20250, 202 447-6042

RIN: 0583-AA41

141. INGREDIENTS THAT MAY BE IDENTIFIED AS FLAVORS OR NATURAL FLAVORS WHEN USED IN MEAT AND POULTRY PRODUCTS

Legal Authority: 21 USC 601 et seq; 21 USC 451 et seq

CFR Citation: 9 CFR 317; 9 CFR 381

Legal Deadline: None.

Abstract: This proposed rule would amend the Federal meat and poultry products inspection regulations to better define which substances should be permitted to be labeled as "flavors," "natural flavors," or "spices" on packages of meat and poultry products. The proposed rule addresses the use of substances which are often added to products for the purpose of serving as flavor enhancers, emulsifiers, stabilizers, binders, extenders, and as nutrients. Most of the substances that would be affected by the proposed rule are proteinaceous materials, having nutritional value, and which may be considered foods, in their own right. The proposed rule would require that these substances be identified by their common or usual names, thereby informing consumers of the origin of these materials including the species and specific animal tissues from which they are derived, if animal in origin. The proposed rule is designed in part to address the personal, cultural, and religious concerns of consumers, as well as the allergies or sensitivities some consumers may have to some of the substances.

Timetable:

Action	Date	FR Cite
NPRM	08/18/87	52 FR 30922
Final Action	07/01/88	
Effective	08/01/88	

Small Entity: No

Agency Contact: Margaret O'K. Glavin, Director, Standards and Labeling Division, MPITS, Department of Agriculture, Food Safety and Inspection Service, Rm 311-Annex Bldg., Washington, DC 20250, 202 447-6042

RIN: 0583-AA44

142. SAFETY AND SANITATION REQUIREMENTS FOR ELECTRICAL STIMULATING EQUIPMENT

Legal Authority: 21 USC 601 et seq

CFR Citation: 9 CFR 307; 9 CFR 308

Legal Deadline: None.

Abstract: This final rule will amend the Federal meat inspection regulations to specify safety and sanitation requirements for electrical stimulating (EST) equipment. Federally inspected establishments may use EST equipment to accelerate rigor mortis in slaughtered meat animals (cattle, sheep, swine, goats, horses, mules, or other equines). The safety requirements would protect inspection personnel working near that equipment from the hazard of potentially lethal electric shock or other injury. The sanitation requirements would prevent adulteration of the carcasses.

Timetable:

Action	Date	FR Cite
NPRM	04/16/87	52 FR 12422
NPRM Comment Period End	06/12/87	
Final Action	06/01/88	
Final Action Effective	07/01/88	

Small Entity: No

Agency Contact: Karen Wesson, Director, Sanitation Division, Department of Agriculture, Food Safety and Inspection Service, Rm 1140-South Bldg., Washington, DC 20250, 202 447-3885

RIN: 0583-AA45

143. USE OF AIR FOR CARCASS HIDE REMOVAL

Legal Authority: 21 USC 601 et seq

CFR Citation: 9 CFR 310

Legal Deadline: None.

Abstract: This proposed rule would amend the Federal meat inspection regulations to allow the use of air to facilitate hide removal. Any

establishment interested in using air for such purpose would be required to submit proposed procedures to FSIS for approval prior to its use.

Timetable:

Action	Date	FR Cite
NPRM	11/01/87	
NPRM Comment Period End	01/01/88	
Final Action	03/01/88	
Final Action Effective	04/01/88	

Small Entity: No

Agency Contact: Douglas L. Berndt, Director, Slaughter Inspection Standards, and Procedures, MPITS, Department of Agriculture, Food Safety and Inspection Service, Rm 4444-South Bldg., Washington, DC 20250, 202 447-3219

RIN: 0583-AA48

144. ANTIOXIDANTS IN FABRICATED STEAKS

Legal Authority: 21 USC 601 et seq

CFR Citation: 9 CFR 318

Legal Deadline: None.

Abstract: This final rule will allow for the use of certain approved antioxidants in fabricated steaks for the purpose of retarding rancidity. Thus, cooked and raw fabricated steaks will be added to the list of meat products in which butylated hydroxyanisole (BHA), butylated hydroxytoluene (BHT), propyl gallate and tertiary butylhydroquinone (TBHQ) may be used.

Timetable:

Action	Date	FR Cite
Final Action	03/01/88	
Final Action Effective	04/01/88	

Small Entity: No

Agency Contact: Margaret O'K. Glavin, Director, Standards and Labeling Division, MPITS, Department of Agriculture, Food Safety and Inspection Service, Rm 311-Annex Bldg., Washington, DC 20250, 202 447-4293

RIN: 0583-AA50

145. NOTICE OF PROCEEDINGS

Significance: Agency Priority

Legal Authority: PL 99-641, Sec 403 (c)(2)

CFR Citation: 9 CFR 335

Legal Deadline: None.

Abstract: This final rule will respond to change made in FMIA by Processed Products Improvement Act of 1986 which provides for prior notice and an opportunity to present views before a violation of FMIA is reported for criminal prosecution, except in cases where excepted by regulation. This rulemaking establishes exceptions to notice and opportunity to present views.

Timetable:

Action	Date	FR Cite
Interim Final Rule	04/27/87	52 FR 13827
Final Action	06/01/88	

Small Entity: No

Agency Contact: Robert W. Gonter, Assistant Deputy Administrator, Compliance Program MPIO, FSIS, Department of Agriculture, Food Safety and Inspection Service, Room 2933 - South Bldg., 14th & Independence Ave., SW, Washington, DC 20250, 202 447-7745

RIN: 0583-AA51

146. REQUIREMENTS FOR IMPORTED POULTRY PRODUCTS

Significance: Agency Priority

Legal Authority: PL 99-198

CFR Citation: 9 CFR 381

Legal Deadline: None.

Abstract: This proposed rule would respond to an amendment made to the Poultry Products Inspection Act by Food Security Act of 1985. Amendment requires that all poultry or poultry products intended for export to the United States be subject to the same standards as domestic poultry products; it also requires that foreign countries implement species and residue testing programs at the point of slaughter for poultry and poultry products intended for export to the United States.

Timetable:

Action	Date	FR Cite
NPRM	05/01/87	52 FR 15960
NPRM Comment Period End	08/30/87	
Final Action	07/01/88	
Final Action Effective	08/01/88	

Small Entity: No

Agency Contact: William Havlik, Assistant Deputy Administrator, International Programs, FSIS, Department of Agriculture, Food Safety and Inspection Service, Rm. 341-E Administration Bldg., 14th & Independence Ave., SW, Washington, DC 20250, 202 447-2644

RIN: 0583-AA52

147. ● TOTAL QUALITY CONTROL FOR LABELING

Legal Authority: 21 USC 601 et seq; 21 USC 451 et seq

CFR Citation: 9 CFR 317; 9 CFR 381

Legal Deadline: None.

Abstract: This rule will expand the concept of generically approved labeling for meat and poultry products by those establishments operating a USDA-approved Total Quality Control System that could develop an acceptable plan for controlling the labeling of their products.

Timetable:

Action	Date	FR Cite
NPRM	09/25/85	50 FR 38824
NPRM Comment Period End	04/17/86	51 FR 7283
Final Action	06/00/88	

Small Entity: No

Agency Contact: Margaret O'K. Glavin, Director, Standards and Labeling Division, Department of Agriculture, Food Safety and Inspection Service, Room 311 Annex Building, Washington, DC 20250, 202 447-4293

RIN: 0583-AA63

148. ● SULFONAMIDE AND ANTIBIOTIC RESIDUES IN YOUNG VEAL CALVES; REDUCED TESTING

Significance: Agency Priority

Legal Authority: 21 USC 601 et seq

CFR Citation: 9 CFR 309; 9 CFR 310

Legal Deadline: None.

Abstract: This rule would amend the Federal meat inspection regulations to modify the testing frequency of young veal calves under certain conditions for residues of sulfonamides and antibiotics.

Timetable:

Action	Date	FR Cite
Interim Final Rule	01/20/87	52 FR 2101

VOL 53 ISS 79 PT 1 APR 25 1988 UMI

USDA—FSIS **Final Rule Stage**

Action	Date	FR Cite
Final Action	00/00/00	

Small Entity: No

Agency Contact: W. R. Miller, Director, Residue Evaluation and Planning Division, Department of Agriculture, Food Safety and Inspection Service, 14th & Independence Ave., SW, Washington, DC 20250, 202 447-2807

RIN: 0583-AA68

DEPARTMENT OF AGRICULTURE (USDA)
Food Safety and Inspection Service (FSIS)

Completed Actions

149. IDENTIFICATION SERVICE FOR POULTRY

CFR Citation: 9 CFR 362

Completed:

Reason	Date	FR Cite
Final Action	02/03/88	53 FR 3146

Small Entity: No

Agency Contact: Mr. Bill F. Dennis 202 447-3840

RIN: 0583-AA35

150. SWINE IDENTIFICATION AND RECORD KEEPING AT MARKETS AND AT OFFICIAL SLAUGHTERING ESTABLISHMENTS

Significance: Agency Priority

CFR Citation: 9 CFR 86; 9 CFR 309; 9 CFR 310; 9 CFR 320

Completed:

Reason	Date	FR Cite
Transferred to APHIS	09/01/87	

Small Entity: No

Agency Contact: Douglas L. Berndt 202 447-3219

RIN: 0583-AA39

151. FACILITY AND EQUIPMENT REQUIREMENTS FOR THE STREAMLINED INSPECTION SYSTEM FOR BROILERS AND CORNISH GAME HENS

Significance: Agency Priority

CFR Citation: 9 CFR 381

Completed:

Reason	Date	FR Cite
Final Action	10/21/87	52 FR 39207
Final Action Effective	12/21/87	

Small Entity: No

Agency Contact: Douglas L. Berndt 202 447-3219

RIN: 0583-AA56

DEPARTMENT OF AGRICULTURE (USDA)
Foreign Agricultural Service (FAS)

Proposed Rule Stage

152. DETERMINATION OF THE MARKET STABILIZATION PRICE FOR SUGAR FOR FY 1988

Legal Authority: Presidential Proclamation 5002; dated November 30, 1982

CFR Citation: 7 CFR 6.300 to 6.302

Legal Deadline: None.

Abstract: This notice sets forth the market stabilization price for sugar for the period October 1, 1987 - September 30, 1988. The Market Stabilization Price is used to determine bond requirements and maximum liabilities under certain programs authorized by Presidential Proclamation No. 5002 of November 30, 1982 (47 FR 54269). The calculation of the Market Stabilization Price is provided for in 7 CFR 6.300-6.302 (50 FR 36040). (FAS 86-003)

Timetable:

Action	Date	FR Cite
NPRM	00/00/00	

Small Entity: No

Agency Contact: Richard J. Finkbeiner, Regulatory Coordinator, Department of Agriculture, Foreign Agricultural Service, Room 4961-South Bldg., Washington, DC 20250, 202 447-6713

RIN: 0551-AA20

153. DETERMINATION OF IMPORT QUOTAS ON SUGAR FOR FISCAL YEAR 1988

Legal Authority: Presidential Proclamation 4941; dated May 5, 1982

CFR Citation: Not applicable

Legal Deadline: Statutory. Import quotas on sugar for fiscal year 1987 must be announced (filed in Federal Register) no later than the 15th day of the month immediately preceding the calendar quarter during which such determination shall be in effect.

Abstract: Presidential Proclamation 4941 dated May 5, 1982 amended headnote 3 of the Subpart A, Part 10, Schedule 1 of the Tariff Schedules of the United States (TSUS) (Headnote 3) to establish a system of quotas for U.S. sugar imports. (FAS 86-004)

Timetable:

Action	Date	FR Cite
NPRM	00/00/00	

Small Entity: No

Agency Contact: Richard J. Finkbeiner, Regulatory Coordinator, Department of Agriculture, Foreign Agricultural Service, Room 4961-South Bldg., Washington, DC 20250, 202 447-6713

RIN: 0551-AA21

154. TYPES AND QUANTITIES OF AGRICULTURAL COMMODITIES AVAILABLE FOR DONATION OVERSEAS UNDER SECTION 416(B) OF THE AGRICULTURAL ACT OF 1949 FOR EACH FISCAL YEAR

Legal Authority: for future FY's: Food Security Act of 1985

CFR Citation: Not applicable

Legal Deadline: None.

Abstract: For FY 1986: The "Food Security Improvements Act of 1986" amends the Food Security Act of 1985, as amended, to require an estimate of

USDA—FAS **Proposed Rule Stage**

Commodity Credit Corporation stocks to be made available under Section 416(b) in FY 1986 by kind of commodity and quantity of each kind of commodity. The Food Security Act, as amended requires that this estimate be published in the Federal Register.

For future FY's: The Food Security Act of 1985, as amended, requires the above estimate be made and published in the Federal Register before the beginning of each fiscal year. (FAS 86-009)

Timetable:

Action	Date	FR Cite
NPRM	00/00/00	

Small Entity: No

Agency Contact: Richard Finkbeiner, Regulatory Coordinator, Department of Agriculture, Foreign Agricultural Service, Room 4961-South Bldg., Washington, DC 20250, 202 447-6713

RIN: 0551-AA23

DEPARTMENT OF AGRICULTURE (USDA) — Prerule Stage

Forest Service (FS)

155. PART 219 PLANNING

Significance: Agency Priority

Legal Authority: 16 USC 1604; 16 USC 1613; 5 USC 301

CFR Citation: 36 CFR 219

Legal Deadline: None.

Abstract: The rules at 36 CFR 219 set forth the procedures and resource standards that guide development and approval of National Forest land and resource management plans as required by the National Forest Management Act of 1976.

Timetable:

Action	Date	FR Cite
Begin Review	04/00/89	
End Review	10/00/89	

Small Entity: No

Additional Information: Review of these planning regulations is being rescheduled to allow completion of all forest plans. It is essential to orderly planning for National Forest System lands and resources that the planning process remain stable until all plans are completed. Review of 36 CFR 219 is therefore rescheduled to begin April 1989.

Agency Contact: Marian P. Connolly, Regulatory Coordinator, Department of Agriculture, Forest Service, P.O. Box 96090, Washington, DC 20013-6090, 202 235-1488

RIN: 0596-AA50

156. OFFICIAL FOREST SERVICE INSIGNIA

Legal Authority: 5 USC 301; 18 USC 701

CFR Citation: 36 CFR 264; 36 CFR 264.1; 36 CFR 264.2; 36 CFR 264.3; 36 CFR 264.4; 36 CFR 264.5

Legal Deadline: None.

Abstract: Since 1905 the Forest Service emblem, a fir-like tree in the center of a shield, has served to identify the Federal Agency responsible for protecting, managing, and developing the National Forests. Forest users and the public recognize it as a symbol of the organization. The Chief may authorize other uses of the insignia, i.e., public service, educational, and commercial purposes through the issuance of licenses. Rules governing the external use of the official insignia are set forth at 36 CFR Part 264. The rule authorizes commercial use for which a royalty is paid and for public use for which no royalty is paid. Review of the existing regulation will determine the need for licensed royalty payment and the need for changing reporting requirements from quarterly to annually. Current licensees will participate in the review process.

Timetable:

Action	Date	FR Cite
Begin Review	04/15/87	
End Review	06/30/88	

Small Entity: No

Agency Contact: Marian P. Connolly, Regulatory Coordinator, Department of Agriculture, Forest Service, P.O. Box 96090, Washington, DC 20013-6090, 202 235-1488

RIN: 0596-AA59

157. 36 CFR 262 LAW ENFORCEMENT SUPPORT ACTIVITIES

Legal Authority: 16 USC 472; 16 USC 551; 16 USC 683; 7 USC 1011(f); 16 USC 1246(e); 16 USC 1133(c) to (d)(1); 16 USC 559(a)

CFR Citation: 36 CFR 262

Legal Deadline: None.

Abstract: These rules describe awards the Forest Service is authorized to make for information leading to arrest and convictions of persons who start fires or otherwise destroy property on National Forests. Subpart B sets forth rules governing impoundment or removal of unauthorized personal property from National Forest System lands.

Review will focus on the adequacy of the rules for administration of the National Forests and whether changes in law or circumstances reveal the need for revision.

Timetable:

Action	Date	FR Cite
Begin Review	10/01/87	
End Review	09/30/88	

Small Entity: Not Applicable

Government Levels Affected: Federal

Agency Contact: Marian P. Connolly, Regulatory Coordinator, Department of Agriculture, Forest Service, P.O. Box 96090, Washington, DC 20090-6090, 202 235-1488

RIN: 0596-AA65

158. 36 CFR 271 - USE OF "SMOKEY BEAR" SYMBOL

Legal Authority: 18 USC 711

CFR Citation: 36 CFR 271

Legal Deadline: None.

Abstract: The regulations govern how the name or image of "Smokey Bear" may be used, who may authorize the use of "Smokey Bear," and the use of official campaign materials, commercial licensing, and the association with the State Foresters and the Advertising Council. This review will focus on licensing and especially exclusive licenses and will consider counterpart regulations in Part 272-Use of "Woodsy Owl" Symbol as a possible approach

BEST COPY AVAILABLE

Timetable:

Action	Date	FR Cite
Begin Review	10/01/87	
End Review	09/30/88	

Small Entity: No

Agency Contact: Marian P. Connolly, Regulatory Coordinator, Department of Agriculture, Forest Service, P.O. Box 96090, Washington, DC 20090-6090, 202 235-1488

RIN: 0596-AA66

159. WHISKEYTOWN-SHASTA-TRINITY NATIONAL RECREATION AREA

Legal Authority: 16 USC 472; 16 USC 551

CFR Citation: 36 CFR 292, Subpart B

Legal Deadline: None.

Abstract: The rules at 36 CFR 292, Subpart B govern joint administration of the Shasta and Clair Engle-Lewiston units of the National Recreation Area by the Forest Service and the Bureau of Reclamation. The rules also set forth standards for defining compatible private land uses within the National Recreation Area to govern decisions by local zoning authorities, or in the absence of such authorities, decisions on land uses by the Secretary of Agriculture. The review will focus on experience under the rules and whether they still serve the public interest in ensuring that development and management of the NRA meet congressional intent.

Timetable:

Action	Date	FR Cite
Begin Review	03/00/88	
End Review	01/00/89	

Small Entity: No

Agency Contact: Marian P. Connolly, Regulatory Coordinator, Department of Agriculture, Forest Service, P.O. Box 96090, Washington, DC 20090-6090, 202 235-1488

RIN: 0596-AA68

160. 36 CFR 261 PROHIBITIONS

Legal Authority: 16 USC 472; 16 USC 551; 16 USC 683; 7 USC 1011(f); 16 USC 1246(e); 16 USC 1133(c) to (d)(1); 16 USC 559(a)

CFR Citation: 36 CFR 261, Prohibitions

Legal Deadline: None.

Abstract: These rules declare the range of unacceptable public behavior when visiting or using National Forest System lands. Among topics covered are prohibitions on setting campfires in certain areas, unlawful cutting of trees, and other unlawful uses of resources and property of the National Forest System. Violations of these prohibitions carry legal penalties.

Review will examine the adequacy of the rules for administration of the National Forest System and whether changes in conditions, laws, or other factors require revision.

Timetable:

Action	Date	FR Cite
Begin Review	10/01/87	
End Review	09/30/88	

Small Entity: Not Applicable

Government Levels Affected: Federal

Agency Contact: Marian P. Connolly, Regulatory Coordinator, Department of Agriculture, Forest Service, P. O. Box 96090, Washington, DC 20090-6090, 202 235-1488

RIN: 0596-AA75

161. USE OF "WOODSY OWL" SYMBOL

Legal Authority: 7 USC 2201; 16 USC 528; 16 USC 529; 16 USC 530; 16 USC 531

CFR Citation: 36 CFR 272; 36 CFR 272.1; 36 CFR 272.2; 36 CFR 272.3; 36 CFR 272.4; 36 CFR 272.5; 36 CFR 272.6

Legal Deadline: None.

Abstract: Woodsy Owl was originated in the early 1970s by the Forest Service, the Federal Agency responsible for protecting, managing, and developing the National Forest. The symbol represents a fanciful owl who wears forest green colored slacks, a brown colored belt, a Robin Hood style forest green colored hat with a red colored feather and furthers the slogan "Give a Hoot, Don't Pollute." The Chief of the Forest Service may authorize the use of Woodsy Owl through the issuance of licenses for commercial use, under certain specified conditions, and for non-commercial educational purposes, at no charge, when use is public service and will contribute to public information and education concerning wise use of the environment and programs which foster maintenance and improvement of environmental quality. Rules concerning the external use of the Woodsy Owl symbol are set forth at 36 CFR Part 272. The rule authorizes commercial use for which a royalty is paid and for public use for which no royalty is paid. Review of the existing regulation will determine the need for licensed royalty payment and the need for changing reporting requirements from quarterly to annually. (cont)

Timetable:

Action	Date	FR Cite
Begin Review	04/15/88	
End Review	10/31/88	

Small Entity: No

Additional Information: ABSTRACT CONT: Current licensees will participate in the review process.

Agency Contact: Marian P. Connolly, Regulatory Coordinator, Department of Agriculture, Forest Service, P.O. Box 96090, Washington, DC 20090-6090, 202 235-1488

RIN: 0596-AA76

162. ● 36 CFR 241 WILDLIFE: COOPERATION IN WILDLIFE PROTECTION, WILDLIFE MANAGEMENT AND FEDERAL REFUGE REGULATIONS

Legal Authority: Sec 1, 30 Stat 35; Sec 1, 33 Stat 628; Sec 1, 39 Stat 476; 16 USC 472, 551, 683

CFR Citation: 36 CFR 241

Legal Deadline: None.

Abstract: The rule is being reviewed as required by E.O. 12291 which requires the review of existing rules on a five year cycle. The Forest Service does not anticipate substantial public comment to 36 CFR 241 as it has been successfully applied.

36 CFR 241.1 describes Forest Service cooperation with State, County and Federal officials in the enforcement of all laws and regulations for the protection of wildlife through lawful appointments of Forest Service employees to deputy game wardens with full power to enforce state laws and regulations.

36 CFR 241.2 describes how Forest Service cooperates with states in developing plans for securing and maintaining desirable populations of wildlife species including entry into cooperative agreements for such purposes.

USDA—FS **Prerule Stage**

36 CFR 241.3 regulates hunting of game or non-game animals on Forest Service lands not managed cooperatively with states by requiring persons desiring to hunt to procure a permit from the Forest Supervisor. Forest Service will cooperate with persons, firms, corporations and county and state officials in the management of animals on national forest lands not having (CONT)

Timetable:

Action	Date	FR Cite
Begin Review	02/01/88	
End Review	09/02/88	

Small Entity: No

Additional Information: ABSTRACT CONT: cooperative agreements for wildlife management with states. The Forest Service may sell or exchange or accept donations of animals in promoting conservation of wildlife.

Government Levels Affected: Local, State, Federal

Agency Contact: Marian P. Connolly, Regulatory Coordinator, Department of Agriculture, Forest Service, P.O. Box 96090, Washington, DC 20090-6090, 202 235-1488

RIN: 0596-AA81

163. ● ISOLATED CABIN AUTHORIZATIONS

Significance: Agency Priority

Legal Authority: 16 USC 551; 16 USC 497

CFR Citation: 36 CFR 251

Legal Deadline: None.

Abstract: Agency policy is to terminate isolated cabin authorizations on National Forest System land that were constructed without advance authorization and subsequently authorized by special use permit. These cabins are used for part- or full-time occupancy. These cabins differ from recreation residences which were established in tracts specific for this purpose and built with Agency approval and supervision. Isolated cabins originated in several ways, including encroachment and mining claims. They restrict management of the surrounding National Forest land and deprive the public from the use and enjoyment of the land actually occupied and the surrounding area. The action proposed is to seek input from the public as to whether the present policy should be continued, or whether it should be revised so as to examine each isolated occupancy and determine whether, in the interests of fairness and equity, the cabin should be converted to a recreation residence. (CONT)

Timetable:

Action	Date	FR Cite
ANPRM	07/01/88	
ANPRM Comment Period End	09/30/88	

Small Entity: No

Additional Information: ABSTRACT CONT: This proposal to revise current policy, originally included in proposed policy on recreation residences (52 FR 206-208). Public comments and continuing discussions with recreation residence permittees on that policy revealed widely divergent views on the Agency's policy, strongly suggesting that isolated cabins be treated separately from recreation residences. Therefore, so as to not further delay implementation of final policy on recreation residences, a decision has been made to seek additional public comment on the isolated cabin policy before a decision is made to revise the policy.

Agency Contact: Marian P. Connolly, Regulatory Coordinator, Department of Agriculture, Forest Service, P.O. Box 96090, Washington, DC 20090-6090, 202 235-1488

RIN: 0596-AA85

DEPARTMENT OF AGRICULTURE (USDA) — Proposed Rule Stage

Forest Service (FS)

164. ACCESS TO NON-FEDERAL LANDS

Legal Authority: PL 96-487, Sec 1323(a); 16 USC 3210(a)

CFR Citation: 36 CFR 251.53; 36 CFR 251.80

Legal Deadline: None.

Abstract: The proposed regulation will tie the granting of special-use authorizations for ingress and egress under the Alaska National Interest Lands and Conservation Act (ANILCA) to the existing authorities for granting authorizations to use or occupy National Forest lands and remove the discretionary aspects of those laws and regulations when applied to parties qualifying for access under ANILCA. (FS 85-001)

Timetable:

Action	Date	FR Cite
NPRM	03/00/88	
NPRM Comment Period End	04/00/88	
Final Action	08/00/88	
Final Action Effective	06/00/88	

Small Entity: No

Agency Contact: Marian P. Connolly, Regulatory Coordinator, Department of Agriculture, Forest Service, PO Box 96090, Washington, DC 20013-6090, 703 235-1488

RIN: 0596-AA31

165. GRAZING AND LIVESTOCK USE AND MANAGEMENT OF WILD, FREE-ROAMING HORSES AND BURROS

Legal Authority: 43 USC 1901; 16 USC 1331 to 1340; 16 USC 551; 7 USC 1011; 31 USC 9701

CFR Citation: 36 CFR 222, Subpart A; 36 CFR 222, Subpart B

Legal Deadline: None.

Abstract: Minor amendments to 36 CFR 222, Subparts A and B are under consideration to (1) delete the portion pertaining to Grazing Advisory Boards since the authority for these Boards under FLMA expired 12/31/85, (2) refine the procedures for placing wild horses and burros in private maintenance and care, (3) clarify the notification allowed before cancelling a permit when lands grazed are to be devoted to another public purpose

including disposal, and (4) delete the reference to the Granger-Thye Act concerning range improvements, and (5) authorize the Chief of the Forest Service to assess a service charge to recover the cost of processing grazing permit applications and permit waivers, and issuing grazing permits. (FS 86-004)

Timetable:

Action	Date	FR Cite
Review of Subpart B - notice of completion of review; no change in rules required	08/14/87	52 FR 30359

Subpart A

NPRM 04/00/88
NPRM Comment Period End 06/00/88
Final Action 01/00/89
Final Action Effective 02/00/89

Small Entity: No

Additional Information: The dates projected are for proposed and final rules revising 36 CFR 222, Subpart A-grazing and livestock use. No further rulemaking activity is planned on Subpart B. The review of Subpart B pursuant to E.O. 12291 concluded that there is no need to revise these rules (See Timetable).

Agency Contact: Marian P. Connolly, Regulatory Coordinator, Department of Agriculture, Forest Service, PO Box 96090, Washington, DC 20013-6090, 703 235-1488

RIN: 0596-AA35

166. COLLECTION OF REIMBURSABLE COSTS FOR PROCESSING SPECIAL-USE APPLICATIONS AND ADMINISTRATION OF SPECIAL-USE AUTHORIZATIONS

Significance: Regulatory Program

Legal Authority: 43 USC 1764; 31 USC 483a; 30 USC 181 (Mineral Leasing Act)

CFR Citation: 36 CFR 251.58

Legal Deadline: None.

Abstract: The objective of the rulemaking is to establish the policy, procedures, and guidelines for recovering costs incurred by the Forest Service in the administration of special uses on National Forest System Lands. In addition, the rulemaking will propose minor clarifying amendments resulting from conclusion of review of the existing regulation. (RIN 0596-AA20) (FS 86-005)

Timetable:

Action	Date	FR Cite
NPRM	06/30/88	
NPRM Comment Period End	08/30/88	
Final Action	12/30/88	
Final Action Effective	01/29/89	

Small Entity: No

Additional Information: This rulemaking will incorporate actions under 0596-AA20.

Agency Contact: Marian P. Connolly, Regulatory Coordinator, Department of Agriculture, Forest Service, PO Box 96090, Washington, DC 20013-6090, 703 235-1488

RIN: 0596-AA36

167. MODIFY THE GENERAL PROHIBITION AGAINST USE OF VEHICLES IN EXCESS OF 40 INCHES IN WIDTH ON TRAILS

Legal Authority: 16 USC 551

CFR Citation: 36 CFR 261.12(e)

Legal Deadline: None.

Abstract: The objective of this action is to permit forest officers more discretion for controlling off-road vehicle use. Three factors have created the need to modify this regulation: (1) the general prohibition at 36 CFR 261.12(e) controls trail use by width of vehicle. Originally developed to control four wheel-drive vehicles on trails, this method uses a fairly arbitrary device (width) to control use; (2) off-road vehicle plans (36 CFR 295) use vehicle types to prescribe the vehicles that are permitted to use forest trails; (3) some recent models of trail vehicles (all terrain vehicles and snowmobiles) exceed the forty inch rule by one to five inches. The combination of the two methods of control with the larger model sizes has created confusion among users about ORV plan direction and created law enforcement difficulties. The proposed action would clarify the regulations and still maintain the tools necessary to control off-road vehicle use. (FS 86-007)

Timetable:

Action	Date	FR Cite
NPRM	03/00/88	
NPRM Comment Period End	05/00/88	
Final Action	06/00/88	
Final Action Effective	08/00/88	

Small Entity: No

Agency Contact: Marian P. Connolly, Regulatory Coordinator, Department of Agriculture, Forest Service, PO Box 96090, Washington, DC 20013-6090, 703 235-1488

RIN: 0596-AA38

168. REVISE THE DEFINITION OF "MECHANICAL TRANSPORT" AT 36 CFR 293.6(A)

Legal Authority: 16 USC 113 to 136; 16 USC 528 to 531; 16 USC 577 to 577c; 16 USC 1133

CFR Citation: 36 CFR 293.6(a)

Legal Deadline: None.

Abstract: The objective of this action is to clarify the definition of mechanical transport in 36 CFR 293.6(a). Except where specifically provided for, the Wilderness Act (16 USC 1133) prohibits both motorized equipment and mechanical transport. Mechanical transport includes devices such as bicycles, hang gliders, wheeled carts, and other items designed to carry people or supplies and powered by either "non living" or "living" power sources. (FS 86-009)

Timetable:

Action	Date	FR Cite
NPRM	07/00/88	
NPRM Comment Period End	09/00/88	
Final Action	02/00/89	
Final Action Effective	02/00/89	

Small Entity: No

Agency Contact: Marian P. Connolly, Regulatory Coordinator, Department of Agriculture, Forest Service, P.O. Box 2417, Washington, DC 20013, 703 235-1488

RIN: 0596-AA39

169. CONSERVATION OF FISH, WILDLIFE, AND THEIR HABITATS ON THE COPPER/RIVER ADDITION AND COPPER RIVER-BERING RIVER PORTION, CHUGACH NATIONAL FOREST, ALASKA

Legal Authority: PL 96-487, Title V

CFR Citation: Not yet determined

Legal Deadline: None.

Abstract: December 2, 1980, the Alaska National Interest Lands Conservation Act was signed into law. Section 501 (b) of the law requires that the Secretary of Agriculture promulgate regulations for the conservation of fish and wildlife and their habitats on the Chugach National Forest. The general National Forest System regulations and other existing laws governing management of National Forest System lands are applicable except as supplemental by these regulations or amended by the ANILCA, August 17, 1984. The new Chugach National Forest land management plan was appealed by 17 appellants. The settlement agreement specifies that subject to valid existing rights, the Forest Service will not allow timber harvest, road construction, surface occupancy for mineral leasing prior to publication of final regulations or completion of management area analysis for the Copper River Management Area. There are no alternatives to development of these regulations.

Timetable:

Action	Date	FR Cite
NPRM	04/00/88	
Final Action	10/00/88	

Small Entity: Undetermined

Agency Contact: Marian P. Connolly, Regulatory Coordinator, Department of Agriculture, Forest Service, P.O. Box 96090, Washington, DC 20013-6090, 202 235-1488

RIN: 0596-AA41

170. LAND EXCHANGES

Significance: Agency Priority

Legal Authority: 16 USC 485; 16 USC 486; 16 USC 516; 7 USC 1011; 16 USC 555a; 43 USC 1715; 43 USC 1716

CFR Citation: 36 CFR 254.1, (Revision); 36 CFR 254.15, (Revision)

Legal Deadline: None.

Abstract: Changes in existing regulations are needed to correct errors, delete obsolete portions, update to reflect current authorities, clarify ambiguities, and supplement by incorporating new requirements on negotiation and resolution of disputes.

Timetable:

Action	Date	FR Cite
NPRM	06/30/88	
NPRM Comment Period End	08/30/88	
Final Action	12/31/88	

Small Entity: No

Agency Contact: Marian P. Connolly, Regulatory Coordinator, Department of Agriculture, Forest Service, P.O. Box 96090, Washington, DC 20013-6090, 202 235-1488

RIN: 0596-AA42

171. DEFINITION OF COMMON VARIETY MINERAL MATERIALS

Legal Authority: 30 USC 601 et seq; 30 USC 603 to 604; 30 USC 601; 30 USC 603; 30 USC 602; 16 USC 477; 16 USC 520; 7 USC 1010; 30 USC 192c, Section 3; 16 USC 508b; Section 3, 66 Stat. 285; 16 USC 521a; 75 Stat. 205; 23 USC 101 et seq; 16 USC 539a, Section 502

CFR Citation: 36 CFR 228, Subpart C

Legal Deadline: None.

Abstract: Whether a mineral deposit is a "common variety" determines whether or not it can be disposed of or sold by the Government under the 1947 Mineral Materials Act. Judicial and administrative interpretations defining common variety characterization determinations can only be made in court. Rulings in common variety cases are generally unpredictable, and the costs to both the Government and miner are high.

After a review of the legislative history of the 1955 surface Resources Act, which defined common varieties, we believe that Congress did not intend for certain minerals to be locatable under the Mining Laws; however, a failure to explicitly define the "common variety" term has led to misinterpretation and actions contrary to the original intent of the law. It is proposed that 36 CFR 228 Subpart C be amended to clarify this confusing classification situation. We believe PL 167 expressly provides for this action as it allows the Secretary of Agriculture to dispose of mineral materials "under such rules and regulations as he may prescribe."

Timetable:

Action	Date	FR Cite
NPRM	03/00/88	
NPRM Comment Period End	05/00/88	
Final Action	09/00/88	
Final Action Effective	10/00/88	

Small Entity: No

Agency Contact: Marian P. Connolly, Regulatory Coordinator, Department of Agriculture, Forest Service, P.O. Box 96090, Washington, DC 20013-6090, 202 235-1488

RIN: 0596-AA44

172. REVISION OF TIMBER SALE CONTRACT FORMS FS-2400-6 AND FS-2400-6T

Significance: Regulatory Program

Legal Authority: 16 USC 535; 16 USC 551; 16 USC 472a; 16 USC 607A; 16 USC 618; 42 USC 4461

CFR Citation: 00 CFR none

Legal Deadline: None.

Abstract: The present timber sale contract Form FS-2400-6 was developed in September 1973, and the Form FS-2400-6T was developed in October 1973. Since these dates several Acts, Laws, and policy changes have necessitated deletion of existing provisions and inserting supplemental provisions. The need to revise these documents has been recognized since the late 1970's. The revision will provide for clarification of provisions to reduce the potential for disputes between purchasers and the Forest Service. There will be no changes in the basic contract concepts except those dictated by law, regulation, and related policy. Comments from interested individuals and organizations will be utilized, as appropriate, in the formulation of the provision language.

Timetable:

Action	Date	FR Cite
Proposed Policy	05/01/88	

Small Entity: No

Agency Contact: Marian P. Connolly, Regulatory Coordinator, Department of Agriculture, Forest Service, P.O. Box 96090, Washington, DC 20013-6090, 202 235-1488

RIN: 0596-AA45

173. LEASABLE MINERAL REGULATIONS

Significance: Regulatory Program

Legal Authority: 16 USC 473 to 475; 16 USC 477 to 482; 16 USC 551; 16 USC 528 to 531; 90 Stat. 2949 as amended

CFR Citation: 36 CFR 228, Subpart F to H

Legal Deadline: None.

Abstract: These subparts will set forth the rules by which the Forest Service will process and respond to proposal received from the Department of the Interior (DOI) for the issuance of mineral licenses, prospecting permits and leases, and for the approval of operating plans. The Forest Service has no regulations at this time which has resulted in inconsistent and untimely responses to the DOI. The only other alternative considered is not to promulgate regulations. Public costs are insignificant but public benefits could be substantial in that proposals should be processed more efficiently.

Timetable:

Action	Date	FR Cite
NPRM	03/00/88	
NPRM Comment Period End	05/00/88	
Final Action	08/00/88	

Small Entity: No

Agency Contact: Marian P. Connolly, Regulatory Coordinator, Department of Agriculture, Forest Service, P.O. Box 96090, Washington, DC 20013-6090, 202 235-1488

RIN: 0596-AA46

---

174. APPLICATION PROCEDURES AND FEES FOR HYDROELECTRIC USES ON NATIONAL FOREST SYSTEM LANDS

Legal Authority: 16 USC 551; 43 USC 1761

CFR Citation: 36 CFR 251.54; 36 CFR 251.57

Legal Deadline: None.

Abstract: Regulations are needed to reduce confusion regarding the role of the Forest Service and its special-use authorization in permitting hydroelectric uses on National Forest System lands. The regulations objective will be to establish procedures, compatible with the procedures of the Federal Energy Regulatory Commission (FERC) for obtaining various approvals and involvement of the Forest Service in a timely manner.

Title V, Section 501 of the Federal Land Policy and Management Act of 1976 (FLPMA) requires that fees be paid for the use of NFS land; regulations have not yet been established to put these fees in effect. The objective is to establish a fee system for hydroelectric uses. A Notice of Proposed Policy was published 6/8/84 and comments were received. The proposed rule would take those comments into account.

Timetable:

Action	Date	FR Cite
NPRM	05/31/88	
NPRM Comment Period End	07/30/88	
Final Action	11/01/88	
Final Action Effective	12/01/88	

Small Entity: Undetermined

Public Compliance Cost: Initial Cost: $0; Yearly Recurring Cost: $2,033,000; Base Year for Dollar Estimates: 1986

Agency Contact: Marian P. Connolly, Regulatory Coordinator, Department of Agriculture, Forest Service, P.O. Box 96090, Washington, DC 20013-6090, 202 235-1488

RIN: 0596-AA47

---

175. LOCATABLE MINERALS

Significance: Agency Priority

Legal Authority: 16 USC 478; 16 USC 551

CFR Citation: 36 CFR 228, Subpart A

Legal Deadline: None.

Abstract: To facilitate the orderly development of locatable minerals on the National Forest System public domain in an environmentally sound manner. Since the regulations were promulgated in 1974, certain legal requirements have changed due to the provisions of the Wilderness Act and recent court decisions; some sections of the regulations no longer apply and revisions and updating are necessary. Major changes proposed will specifically address the requirements for wilderness operations and, secondly, will clarify the mechanism for administering locatable mineral activities not conducted on mining claims but which are nevertheless authorized by the 1872 mining law.

Timetable:

Action	Date	FR Cite
NPRM	07/01/88	
NPRM Comment Period End	09/01/88	
Final Action	03/01/89	
Final Action Effective	04/01/89	

Small Entity: No

Agency Contact: Marian P. Connolly, Regulatory Coordinator, Department of Agriculture, Forest Service, P.O. Box 96090, Washington, DC 20013-6090, 202 235-1488

RIN: 0596-AA49

---

176. APPEAL OF DECISIONS OF FOREST OFFICERS

Significance: Agency Priority

Legal Authority: 30 Stat 35 as amended sec 1; 16 USC 551cc, 472, 33 Stat 628

CFR Citation: 36 CFR 211.18

Legal Deadline: None.

Abstract: Forest Service rules at 36 CFR 211.18 establish the process and procedures by which the public may appeal a National Forest System management decision. The regulation is being reviewed as required by EO 12291. The Forest Service recognizes the administrative appeal process as useful and worthwhile, and considers it to be a valuable tool in conducting business. However, there are opportunities to make the process more efficient and less burdensome on the public while maintaining a useful forum within which to administratively resolve conflict.

Timetable:

Action	Date	FR Cite
Begin Review	03/10/87	
ANPRM	06/11/87	52 FR 22348
ANPRM Comment Period End	07/13/87	
End Review	09/00/87	
NPRM	04/15/88	
NPRM Comment Period End	06/15/88	
Final Action	10/15/88	
Final Action Effective	10/15/88	

Small Entity: No

Agency Contact: Marian P. Connolly, Regulatory Coordinator, Department of Agriculture, Forest Service, P.O. Box 96090, Washington, DC 20013-6090, 202 235-1488

RIN: 0596-AA51

VOL 53 ISS 79 PT 1 AP 25 1988 UMI

177. GRAZING FEES; EASTERN AND SOUTHERN REGIONS

Significance: Regulatory Program

Legal Authority: 16 USC 551; 31 USC 483a; 43 USC 1901

CFR Citation: 36 CFR 222.53

Legal Deadline: None.

Abstract: Different grazing fee systems are used in the Eastern and Southern Regions of the Forest Service. The current system in the Eastern Region is market driven. The system in the Southern Region is based on a cost of livestock production/ability to pay methodology which currently results in below market fees. Two alternatives are being considered. The first would continue the two different fee systems in the eastern U.S. The second alternative would implement a uniform market driven fee system in both Regions. The advantages of this alternative over the first are:

(1) Competitive bidding with a minimum bid price would be fair and equitable to all parties, the livestock owners and the government.

(2) The fee system would be cost effective and economic to administer.

(3) The fee system would provide for investments in cost effective range improvements on National Forest System lands in the eastern states.

Timetable:

Action	Date	FR Cite
NPRM	06/00/88	
NPRM Comment Period End	08/00/88	
Final Action	01/00/89	
Final Action Effective	03/01/89	

Small Entity: Undetermined

Agency Contact: Marian P. Connolly, Regulatory Coordinator, Department of Agriculture, Forest Service, P.O. Box 96090, Washington, DC 20013-6090, 202 235-1488

RIN: 0596-AA55

178. SKI AREA TERM PERMITS

Significance: Agency Priority

Legal Authority: PL 99-522, Sec 3(c)

CFR Citation: 36 CFR 251.50, (Revision)

Legal Deadline: Statutory, October 22, 1987. A one-year deadline is specified in the law.

Abstract: P.L. 99-522 provides new authority and direction for granting permits authorizing ski development and operation. It requires promulgation of rules within one year of enactment. Current direction for issuing special use permits including ski areas is contained in 36 CFR 251.50 through 251.64. While most of the current direction will continue to apply, revisions will be necessary to respond to the special provisions of the law relating to permit duration and acreage to be authorized.

The law has the effect of eliminating the current need and practice to issue two permits to authorize a single resort to use more than 80 acres. Further, it authorizes the issuance of 40 year permits instead of 30 which has been the maximum in the past.

Timetable:

Action	Date	FR Cite
NPRM	06/00/88	
NPRM Comment Period End	08/00/88	
Final Action	02/00/89	
Final Action Effective	02/00/89	

Small Entity: No

Agency Contact: Marian P. Connolly, Regulatory Coordinator, Department of Agriculture, Forest Service, P.O. Box 96090, Washington, DC 20013-6090, 202 235-1488

RIN: 0596-AA57

179. FREE USE TO ALASKAN SETTLERS, MINERS, RESIDENTS AND PROSPECTORS

Legal Authority: 16 USC 477; 16 USC 492; 16 USC 551; 16 USC 607a; 16 USC 612

CFR Citation: 36 CFR 223.10

Legal Deadline: None.

Abstract: The Forest Service provides free use timber to persons in Alaska with few restrictions. Increased urbanization of existing towns, changing ownership patterns, and creation of new communities have made it more difficult to manage this program. The Forest Service proposes to limit the free use amounts to households rather than to individuals.

Timetable:

Action	Date	FR Cite
NPRM	04/01/88	
NPRM Comment Period End	05/01/88	
Final Action	08/01/88	
Final Action Effective	09/01/88	

Small Entity: Not Applicable

Public Compliance Cost: Initial Cost: $0; Yearly Recurring Cost: $0

Government Levels Affected: Federal

Agency Contact: Marian P. Connolly, Regulatory Coordinator, Department of Agriculture, Forest Service, P. O. Box 96090, Washington, DC 20090-6090, 202 235-1488

RIN: 0596-AA69

180. INCREASE IN MINIMUM RATES CHARGED FOR TIMBER

Legal Authority: 16 USC 472a

CFR Citation: 00 CFR None

Legal Deadline: None.

Abstract: Minimum rates charged for timber have not been changed since 1979. The increased costs of preparing timber sales and the general increases in costs of logging and the price of timber have resulted in minimum rates that are disproportionately low. The action being considered is to increase minimum rates to account for inflationary increases since the rates were last changed.

Timetable:

Action	Date	FR Cite
NPRM	07/01/88	
NPRM Comment Period End	08/01/88	
Final Action	10/01/88	
Final Action Effective	11/01/88	

Small Entity: No

Public Compliance Cost: Initial Cost: $0; Yearly Recurring Cost: $0; Base Year for Dollar Estimates: 1987

Government Levels Affected: Local, Federal

Agency Contact: Marian P. Connolly, Regulatory Coordinator, Department of Agriculture, Forest Service, P. O. Box 96090, Washington, DC 20090-6090, 202 235-1488

RIN: 0596-AA73

181. SALE OF TIMBER WHERE TOTAL PUBLIC BENEFITS MAY NOT MEET OR MAY EXCEED TOTAL COSTS

Legal Authority: 16 USC 472a; 16 USC 475; 16 USC 616; 16 USC 1604; 16 USC 1613

CFR Citation: 00 CFR None

Legal Deadline: None.

Abstract: The Forest Service has been developing an accounting system to accurately track the total public benefits and total cost of the timber sale program on each national forest. The new system is to be installed on all forests before the start of FY 1989. The data generated by this effort will provide a basis for monitoring the implementation of Forest Plans. This proposal would establish additional procedures for evaluation of the accounting data when projected costs appear to exceed the total public benefits of the program. Under the proposal, unless there are other overriding public values, the timber sale program would be adjusted to a point where the total public benefits equal the total cost of the sales program.

Timetable:

Action	Date	FR Cite
NPRM	05/01/88	
NPRM Comment Period End	06/15/88	
Final Action	08/15/88	
Final Action Effective	09/15/88	

Small Entity: Undetermined

Public Compliance Cost: Initial Cost: $0; Yearly Recurring Cost: $0; Base Year for Dollar Estimates: 1987

Government Levels Affected: Local, Federal

Agency Contact: Marian P. Connolly, Regulatory Coordinator, Department of Agriculture, Forest Service, P. O. Box 96090, Washington, DC 20090-6090, 202 235-1488

RIN: 0596-AA74

182. ● ADMINISTRATION OF EASEMENTS FOR WATER CONVEYANCE SYSTEMS

Significance: Agency Priority

Legal Authority: PL 99-545, Sec 1(c); 16 USC 524; 30 USC 51; 43 USC 661; 43 USC 1761; 43 USC 946 to 949

CFR Citation: 00 CFR None

Legal Deadline: None.

Abstract: Section 1(c) of Public Law 99-545 amended Section 501 of the Federal Land Policy and Management Act (43 USC 1761) to transfer from the Secretary, USDI to Secretary, USDA all responsibility for administering all rights-of-way on Federal lands administered by the Secretary, USDA. This transfer concerns grants and easements for rights-of-ways issued under several previous Acts, most of which have been repealed. The principal Statutes involved are the Act of July 16, 1866 and the Act of March 3, 1891. The authorizations primarily involve use of the Federal lands for water conveyance systems (irrigation ditches). The regulations will set forth direction and procedures to enable field personnel to administer the individual authorizations. Regulations are needed as the Act requires that the grants/easements be administered under the statutory provisions and regulations in effect at the time the authorizations were issued. Failure to promulgate regulations (no action alternative) would leave field personnel without guidance and create the possibility of actions by rights-of-way holders contrary to established land management procedures (CONT)

Timetable:

Action	Date	FR Cite
NPRM	06/01/88	
NPRM Comment Period End	07/31/88	
Final Action	10/31/88	
Final Action Effective	11/30/88	

Small Entity: No

Additional Information: and damage to Federal land resources.

Affected Sectors: None

Government Levels Affected: Federal

Agency Contact: Marian P. Connolly, Regulatory Coordinator, Department of Agriculture, Forest Service, P.O. Box 96090, Washington, DC 20090-6090, 202 235-1488

RIN: 0596-AA78

183. ● REVISE SMALL TRACTS ACT REGULATIONS

Significance: Agency Priority

Legal Authority: 16 USC 521c-i

CFR Citation: 36 CFR 254.35 (revision); 36 CFR 254.41 (revision)

Legal Deadline: None.

Abstract: Application of the Act of January 12, 1983 (Small Tracts Act) has revealed an inadvertent inconsistency between the regulations at 36 CFR 254.35(f) and 254.41(a) and the legislative history of the Act. The regulations imply that the disposal of mineral fractions by sale can only be made in response to an application from an abutting landowner, thus discouraging the conveyance by sale to the public. The Act clearly authorizes sale of mineral fractions to the public through public sale, as well as individual applications, provided that certain conditions are met. The revisions will clarify the application of the Act to ensure that both individual applications and public sale are permissible means of disposing of qualifying tracts.

Timetable:

Action	Date	FR Cite
NPRM	06/30/88	
NPRM Comment Period End	08/30/88	
Final Action	12/01/88	
Final Action Effective	01/01/89	

Small Entity: No

Agency Contact: Marian P. Connolly, Regulatory Coordinator, Department of Agriculture, Forest Service, P.O. Box 96090, Washington, DC 20090-6090, 202 235-1488

RIN: 0596-AA79

184. ● OIL AND GAS RESOURCES REGULATIONS

Legal Authority: 16 USC 473 to 475; 16 USC 477 to 482; 16 USC 551; 16 USC 528 to 531; 90 Stat. 2949 as amended

CFR Citation: 36 CFR 228 Subpart E

Legal Deadline: None.

Abstract: This subpart will set forth the rules by which the Forest Service will process and respond to the proposals received from the Department of the Interior for the issuance of mineral leases and approval of operations. These rules will describe how the Forest Service will consent to or not object to lease issuance, administer oil and gas operations, determine if a lessee or assignee may obtain future leases or assignments, and establish standards for reclamation and bonding, as required in the Federal Onshore Oil and Gas Leasing Reform Act of 1987. The Forest Service has no regulations

at this time which could result in inconsistent administration. The only other alternative considered is not to promulgate regulations. Public costs are insignificant but public benefits could be substantial in that proposals should be processed more efficiently.

Timetable:

Action	Date	FR Cite
NPRM	03/12/88	
NPRM Comment Period End	04/12/88	
Interim Final Rule	06/15/88	
Final Action	07/15/88	

Small Entity: No

Agency Contact: Marian P. Connolly, Regulatory Coordinator, Department of Agriculture, Forest Service, P.O. Box 96090, Washington, DC 20090-6090, 202 235-1488

RIN: 0596-AA82

185. ● MODIFICATION OF TIMBER SALE DOWNPAYMENT REQUIREMENTS

Legal Authority: 16 USC 472a; 16 USC 618

CFR Citation: 36 CFR 223

Legal Deadline: None.

Abstract: There is a need to provide stronger incentives for purchasers of National Forest timber to complete their contracts on time. To help provide this incentive, the Department of Agriculture is proposing that the amount a purchaser deposits as downpayment on a timber sale not be available for credit to other uses until the last timber in the contract is harvested.

Timetable:

Action	Date	FR Cite
NPRM	04/01/88	
NPRM Comment Period End	05/01/88	
Final Action	07/01/88	
Final Action Effective	08/01/88	

Small Entity: No

Agency Contact: Marian P. Connolly, Regulatory Coordinator, Department of Agriculture, Forest Service, P.O. Box 96090, Washington, DC 20090-6090, 202 235-1488

RIN: 0596-AA83

186. ● LUMBER PRICE INDEX TRENDS

Significance: Agency Priority

Legal Authority: 16 USC 476

CFR Citation: 36 CFR 223.64

Legal Deadline: None.

Abstract: Each month Western Wood Products Association (WWPA) publishes a Lumber Price Trends Index for eight Western Inland species or species combinations and two Pacific Northwest Coast species. These data are used by government agencies to appraise public timber offered for sale and to adjust prices billed for timber already under contract. This proposal makes public an intent to replace nine current WWPA index logs with new index logs based upon 1985-86 grade recovery studies. It is proposed to replace Pacific Northwest Hem-fir, and Douglas Fir and Idaho White Pine, Dry Douglas Fir--Larch, White Fir, Rocky Mountain Ponderosa Pine, Coast Inland North Ponderosa Pine, Sugar Pine, and White Woods current indexes with new indexes based upon a 1985-1986 recovery study.

Timetable:

Action	Date	FR Cite
NPRM	03/01/88	
NPRM Comment Period End	04/01/88	
Final Action	05/01/88	
Final Action Effective	06/01/88	

Small Entity: No

Agency Contact: Marian P. Connolly, Regulatory Coordinator, Department of Agriculture, Forest Service, P.O. Box 96090, Washington, DC 20090-6090, 202 235-1488

RIN: 0596-AA86

187. ● TIMBER SALE FINANCIAL SECURITY

Legal Authority: 16 USC 472a; 16 USC 618

CFR Citation: 36 CFR 223.49

Legal Deadline: None.

Abstract: Recent analysis of agency policies and procedures for ensuring the financial security of timber sale contracts have convinced the Forest Service that additional measures are needed. To assure more effective resource management and to better protect the public's financial interests in the sale of national forest timber, the agency is proposing to revise its policies and procedures as set forth in Chapter 2430 and 2450 of the Forest Service Manual. Specifically, the agency proposes to (1) eliminate the current ceiling on the required performance bond guarantee; (2) strengthen performance bond requirements by identifying (a) which actions are covered by the bond, (b) the extent of sureties liabilities, (c) when surety is liable; (3) increase the bid guarantee to 10% of the advertised value; (4) assess damages in the amount of the bid guarantee or the difference between bid value and resale value; (5) establish the guidelines for determining purchaser's financial ability to operate the sale; (6) specify shorter contract periods; and (7) modify the basis for determination of default damages (cont)

Timetable:

Action	Date	FR Cite
NPRM	05/01/88	
NPRM Comment Period End	06/01/88	
Final Action	08/01/88	
Final Action Effective	09/01/88	

Small Entity: No

Additional Information: ABSTRACT CONT: by using timber sale appraisal procedures.

Agency Contact: Marian P. Connolly, Regulatory Coordinator, Department of Agriculture, Forest Service, P.O. Box 96090, Washington, DC 20090-6090, 202 235-1488

RIN: 0596-AA87

DEPARTMENT OF AGRICULTURE (USDA)
Forest Service (FS)

Final Rule Stage

188. ENTRANCE INTO PETERSBURG WATERSHED

Legal Authority: 16 USC 551; 16 USC 472; 43 USC 1761 to 1771

CFR Citation: 36 CFR 251.35

Legal Deadline: None.

Abstract: Rule restricts entry into watershed without approval of authorized officials of Petersburg, Alaska. Review of this rule has been completed and reveals a need to update the rule to comply with legislative changes enacted since promulgation of this rule, and to streamline administrative entry into the watershed, and permit recreation access to a certain portion of the watershed without written authorization. (FS 84-017)

Timetable:

Action	Date	FR Cite
Begin Review	04/21/86	51 FR 13835
End Review	08/01/86	
NPRM	09/08/87	52 FR 33829
Final Action	05/00/88	
Final Action Effective	05/00/88	

Small Entity: No

Agency Contact: Marian P. Connolly, Regulatory Coordinator, Department of Agriculture, Forest Service, PO Box 96090, Washington, DC 20013-6090, 703 235-1488

RIN: 0596-AA23

189. LAND STATUS AND TITLE RECORDS

Legal Authority: 16 USC 472; 16 USC 551; 16 USC 1603

CFR Citation: 36 CFR 200.12, (New)

Legal Deadline: None.

Abstract: Objective is to establish that the Land Status Record as the official record of title for National Forest System lands and to set forth the authorities, policies, and procedures for recording, custody, maintenance, and use of title documents and title status reports. (FS 85-012)

Timetable:

Action	Date	FR Cite
Final Action	04/00/88	
NPRM	05/30/88	
Final Action Effective	05/00/88	
NPRM Comment Period End	06/15/88	

Small Entity: No

Agency Contact: Marian P. Connolly, Regulatory Coordinator, Department of Agriculture, Forest Service, PO Box 96090, Washington, DC 20013-6090, 703 235-1488

RIN: 0596-AA24

190. PERIODIC PAYMENTS, DOWNPAYMENTS, AND MARKET RELATED CONTRACT ADDITIONS

Legal Authority: 16 USC 472a; 16 USC 618

CFR Citation: 36 CFR 223.52; 36 CFR 223.50

Legal Deadline: None.

Abstract: The Federal Timber Sale Contract Payment Modification Act directs the Forest Service to require purchasers to make downpayments and periodic payments on timber sales. The objective of these requirements is to discourage speculative bidding on National Forest System timber sales. A rule published 10/11/85 at 50 FR 41498 requires cash downpayments and a midpoint payment. However, to fully comply with the Act, additional rules are required. This rule will clarify how downpayments are determined, identify the requirements for periodic payments, permit the pooling of periodic payments, and establish a method for permitting market related contract term additions. The proposed rule is a requirement of the Act (FS 85-014).

Timetable:

Action	Date	FR Cite
NPRM	01/17/85	50 FR 2591
NPRM	11/06/87	52 FR 43020
NPRM Comment Period End	02/19/88	53 FR 544
Final Action	04/00/88	
Final Action Effective	05/00/88	

Small Entity: No

Agency Contact: Marian P. Connolly, Regulatory Coordinator, Department of Agriculture, Forest Service, PO Box 96090, Washington, DC 20013-6090, 703 235-1488

RIN: 0596-AA33

191. USE RESTRICTIONS OF NATIONAL FOREST LANDS FOR THE PROTECTION OF MUNICIPAL WATER SUPPLIES

Legal Authority: 16 USC 475; 16 USC 552; 16 USC 551; 16 USC 1600 to 1610; 16 USC 1701

CFR Citation: 36 CFR 251.9

Legal Deadline: None.

Abstract: This action amends the regulation providing protection of municipal watersheds to conform to recent legislation, principally the National Forest Management Act (NFMA) and the Federal Land Policy and Management Act (FLPMA). (FS 86-003)

Timetable:

Action	Date	FR Cite
End Review	08/01/86	
NPRM	09/08/87	52 FR 33837
NPRM Comment Period End	11/09/87	
Final Action	04/00/88	
Final Action Effective	04/00/88	

Small Entity: No

Agency Contact: Marian P. Connolly, Regulatory Coordinator, Department of Agriculture, Forest Service, PO Box 96090, Washington, DC 20013-6090, 703 235-1488

RIN: 0596-AA34

192. CONTROL OF SKEWED BIDDING ON NATIONAL FOREST TIMBER SALES

Legal Authority: 16 USC 472a

CFR Citation: 36 CFR 223.89

Legal Deadline: None.

Abstract: Timber may not be sold at less than appraised value. Skewed bidding enables bidders to tailor their bids to their competitive strengths. While skewed bidding can be advantageous to purchasers, it can also reduce Government receipts and increase Forest Service timber sale administration costs. These results were documented by the General Accounting Office (GAO/RCED-83-37). This proposal is made in partial response to the recommendations in that review. (FS 86-006)

USDA—FS **Final Rule Stage**

Timetable:

Action	Date	FR Cite
NPRM	07/01/83	48 FR 30417
NPRM	07/16/84	49 FR 28748
NPRM	01/30/87	52 FR 3027
Withdrawal of NPRM	05/15/87	52 FR 18399
NPRM	11/06/87	52 FR 42700
NPRM Comment Period End	02/19/88	53 FR 544
Final Action	04/00/88	
Final Action Effective	05/00/88	

Small Entity: No

Additional Information: Note: The dates projected for proposed policy publication are not firm. This document has been under OMB Regulatory Review, with no clearance yet received, since September 29, 1986.

Agency Contact: Marian P. Connolly, Regulatory Coordinator, Department of Agriculture, Forest Service, PO Box 96090, Washington, DC 20013-6090, 703 235-1488

RIN: 0596-AA37

193. SMALL BUSINESS TIMBER SALE SET ASIDE PROGRAM

Significance: Regulatory Program

Legal Authority: 15 USC 631

CFR Citation: Not applicable

Legal Deadline: None.

Abstract: The policy is designed to ensure that small business purchasers have the opportunity to purchase a fair proportion of National Forest Timber. The proposed policy is consistent with the current standards and establishes procedures for determining what share of timber volume small business will have the opportunity to bid on without competition from large business.

Timetable:

Action	Date	FR Cite
NPRM	11/21/84	49 FR 45889
NPRM Comment Period End	11/21/84	49 FR 45889
Final Policy	06/13/85	50 FR 24788
Request Comments on Final Policy	02/03/86	51 FR 4264
Revised Proposed Policy	09/25/87	52 FR 36075
Proposed Policy Public Comment Period End	11/00/87	
Final Action	04/00/88	
Final Action Effective	04/00/88	

Small Entity: No

Agency Contact: Marian P. Connolly, Regulatory Coordinator, Department of Agriculture, Forest Service, P.O. Box 96090, Washington, DC 20013-6090, 202 235-1488

RIN: 0596-AA43

194. INDIAN ALLOTMENTS ON NATIONAL FOREST SYSTEM LANDS

Significance: Agency Priority

Legal Authority: 16 USC 472; 16 USC 551; 16 USC 1603; 43 USC 1740; 25 USC 337

CFR Citation: 36 CFR 254, Subpart D (new)

Legal Deadline: None.

Abstract: Objectives are to set forth Forest Service procedures and role in the regulation of Indian allotments on National Forest System land. The Indian Allotment Act of 2/8/87, as by Section 31, Act of 6/25/10 authorizes the Secretary of the Interior to make allotments of National Forest System Lands to Indians for homesteading and agricultural and grazing purposes. The Forest Service has relied upon USDI rules and procedures at 43 CFR 2533 to govern its involvement in Indian allotment cases. Recent litigation and a decision by the Interior Board of Land Appeals indicate the need for the Forest Service to set forth its own regulations when the Forest Service determines that lands are not chiefly valuable for agricultural and grazing purposes. The only alternative is not to issue regulations. This is unacceptable since it leaves the Agency vulnerable to future IBLA appeals cases as well as future litigation.

Timetable:

Action	Date	FR Cite
NPRM	06/22/87	52 FR 23473
NPRM Comment Period End	07/22/87	52 FR 23473
Final Action	06/01/88	
Final Action Effective	07/01/88	

Small Entity: No

Affected Sectors: None

Agency Contact: Marian P. Connolly, Regulatory Coordinator, Department of Agriculture, Forest Service, P. O. Box 96090, Washington, DC 20013-6090, 202 235-1408

RIN: 0596-AA52

195. PROHIBITIONS; FOSSIL COLLECTING

Legal Authority: 16 USC 551

CFR Citation: 36 CFR 261

Legal Deadline: None.

Abstract: In response to comments from the scientific and academic communities and in keeping with the recommendations of the National Academy of Sciences "Report on Guidelines for Paleontological Collecting," the Forest Service is clarifying its regulations concerning fossil collecting on National Forest System lands. The language on "paleontological resources" is being moved to a separate paragraph and the requirement for permits is being limited specifically to quarrying for fossils and for commercial activities. The no-action alternative would be to leave the regulation of paleontological resources the same as for archeological resources, with permits needed for all activities. Since there is no evidence of widespread problems, the permit process imposes unnecessary burdens on the casual collector and creates added paperwork for the Forest officer to manage.

Timetable:

Action	Date	FR Cite
Interim Final Rule	08/26/86	51 FR 30355
Final Action	06/01/88	
Final Action Effective	06/01/88	

Small Entity: No

Additional Information: The change in dates for final rule is necessitated by decision to await final report from National Academy of Sciences on "Guidelines for Paleontological Collecting." Report now received.

Agency Contact: Marian P. Connolly, Regulatory Coordinator, Department of Agriculture, Forest Service, P.O. Box 96090, Washington, DC 20013-6090, 202 235-1488

RIN: 0596-AA56

196. NON-COMPETITIVE DISPOSAL OF MINERAL MATERIALS

Legal Authority: 30 USC 601 et seq; 30 USC 603 to 604; 30 USC 601; 30 USC 603; 30 USC 602; 16 USC 477; 16 USC 520; 7 USC 1010; 30 USC 192c, Sec 3; 16 USC 508b; Section 3, 66 Stat. 285; 16 USC 521a; 75 Stat. 205; 23 USC 101 et seq; 16 USC 539a, Sec 502

CFR Citation: 36 CFR 228, Subpart C

Legal Deadline: None.

Abstract: Existing regulations allow noncompetitive sale of mineral materials not in excess of 100,000 cubic yards in any individual sale or 200,000 cubic yards in any one State for the benefit of any entity in any period of twelve consecutive calendar months. The proposal would give the Forest Service flexibility in meeting requests for noncompetitive sales of large amounts of mineral materials when public property, health, and safety are threatened or when competition is impractical. The proposal is similar to rules governing mineral material sales by the Bureau of Land Management. Interim rulemaking is sought to resolve a situation in California where the volume restriction for noncompetitive sales may interfere with a mining claimant's statutory rights regarding locatable minerals.

Timetable:

Action	Date	FR Cite
Interim Final Rule	04/02/87	52 FR 10564
Begin Review	07/01/87	
Final Action	04/00/88	
Final Action Effective	05/00/88	

Small Entity: Yes

Agency Contact: Marian P. Connolly, Regulatory Coordinator, Department of Agriculture, Forest Service, P.O. Box 96090, Washington, DC 20013-6090, 202 235-1488

RIN: 0596-AA60

197. INCREASED DOWNPAYMENTS FROM TIMBER SALE PURCHASERS WITH A HISTORY OF DEFAULTS; AND DETERMINATION OF PURCHASER RESPONSIBILITY

Legal Authority: 16 USC 472a; 16 USC 618

CFR Citation: 36 CFR 223.49, (Revised)

Legal Deadline: None.

Abstract: The Forest Service proposes to increase the downpayment that purchasers who have defaulted on past contracts must pay on new sales. In addition, the proposal identifies elements of performance to be used in determination of purchasers' responsibility before awarding contracts.

Timetable:

Action	Date	FR Cite
NPRM	05/20/87	52 FR 18926
NPRM Comment Period End	07/06/87	52 FR 18926
Final Action	03/00/88	
Final Action Effective	04/00/88	

Small Entity: No

Public Compliance Cost: Initial Cost: $0; Yearly Recurring Cost: $0; Base Year for Dollar Estimates: 1987

Government Levels Affected: Federal

Agency Contact: Marian P. Connolly, Regulatory Coordinator, Department of Agriculture, Forest Service, P. O. Box 96090, Washington, DC 20090-6090, 202 235-1488

RIN: 0596-AA70

198. REVISE 36 CFR 223.178 REGARDING RELEASE OF CLAIMS AGAINST THE GOVERNMENT ON SALES OFFERED FOR GOVERNMENT BUYOUT

Legal Authority: 16 USC 472a; 16 USC 618

CFR Citation: 36 CFR 223.178

Legal Deadline: None.

Abstract: The Forest Service proposes to reconsider the requirement for release of a purchaser from further obligations under a contract selected for return to the government, and to clarify the requirements for completion of the buyout process authorized by the Federal Timber Contract Payment Modification Act.

Timetable:

Action	Date	FR Cite
NPRM	06/11/87	52 FR 22348
NPRM Comment Period End	08/12/87	52 FR 22348
Final Action	06/00/88	
Final Action Effective	07/00/88	

Small Entity: No

Public Compliance Cost: Initial Cost: $0; Yearly Recurring Cost: $0; Base Year for Dollar Estimates: 1987

Government Levels Affected: Federal

Agency Contact: Marian P. Connolly, Regulatory Coordinator, Department of Agriculture, Forest Service, P. O. Box 96090, Washington, DC 20090-6090, 202 235-1488

RIN: 0596-AA71

199. REVIEW OF DECISIONS TO TERMINATE RECREATION RESIDENCE PERMITS

Legal Authority: 16 USC 551

CFR Citation: 36 CFR 211.18(b)

Legal Deadline: None.

Abstract: Certain recreation residence permits on National Forest land are on termination notice. The decision to terminate was made 10 or more years ago. The Forest Service has agreed to review those decisions to determine if they are still valid. The rule will facilitate conducting these reviews by excluding their outcome from the Agency's administrative appeal process. Since most of the earlier decisions were appealed, this action will prevent duplicative appeals that would delay needed land management activities.

Timetable:

Action	Date	FR Cite
Interim Final Rule	07/22/87	52 FR 27547
Final Action	06/00/88	
Final Action Effective	07/00/88	

Small Entity: No

Agency Contact: Marian P. Connolly, Regulatory Coordinator, Department of Agriculture, Forest Service, P. O. Box 96090, Washington, DC 20090-6090, 202 235-1488

RIN: 0596-AA72

200. ● REVISE RULES GOVERNING SPECIAL USES OF NATIONAL FOREST SYSTEM LANDS AND RESOURCES AT 36 CFR 251, SUBPART B TO REMOVE AMBIGUITIES REGARDING FIRST AMENDMENT RIGHTS

Significance: Agency Priority

Legal Authority: 16 USC 472, 551, 1134, 3210; 30 USC 185; 43 USC 1740, 1761 to 1771

USDA—FS **Final Rule Stage**

CFR Citation: 36 CFR 251.50; 36 CFR 251.51; 36 CFR 251.53; 36 CFR 251.54

Legal Deadline: None.

Abstract: A Federal District Court recently ruled that existing regulations discriminate against groups who wish to gather on National Forests to exercise their first amendment rights to free speech. The proposed rule will remove ambiguities regarding first amendment rights of assembly and free speech on National Forests.

Alternatives considered were: (1) no changes; (2) termination of all regulations concerning special use authorizations for large groups on the National Forests.

There will be no additional costs as a result of the proposed rule change. The benefit will be that the Forest Service will be able to regulate large group use on the National Forests, which in turn will protect the public health and safety, and protect National Forest resources.

Timetable:

Action	Date	FR Cite
Interim Final Rule	04/00/88	
Final Action	09/00/88	
Final Action Effective	09/00/88	

Small Entity: No

Agency Contact: Marian P. Connolly, Regulatory Coordinator, Department of Agriculture, Forest Service, P.O. Box 96090, Washington, DC 20090-6090, 202 235-1488

RIN: 0596-AA80

201. ● APPEAL OF DECISIONS TO REOFFER RETURNED OR DEFAULTED TIMBER SALES ON NATIONAL FORESTS

Legal Authority: 30 Stat. 35, as amended, sec 1; 33 Stat. 628 16 USC 551, 472

CFR Citation: 36 CFR 211.17

Legal Deadline: None.

Abstract: This rule provides procedures by which individuals or groups may appeal Forest Service officials decisions to reoffer returned or defaulted timber sales on National Forests. The rule results from a recent 9th Circuit Court of Appeals decision. In order to respond quickly to that Court ruling and preserve the opportunity for a meaningful appeal for potential appellants, it is necessary to make this rule effective upon publication. However, the agency has invited public comment on the interim rule, which it will consider in promulgating a final rule.

Timetable:

Action	Date	FR Cite
Interim Final Rule	01/28/88	53 FR 2490
ANPRM Comment Period End	03/26/88	53 FR 2490
Final Action	05/01/88	

Small Entity: No

Agency Contact: Marian P. Connolly, Regulatory Coordinator, Department of Agriculture, Forest Service, P.O. Box 96090, Washington, DC 20090-6090, 202 235-1488

RIN: 0596-AA84

DEPARTMENT OF AGRICULTURE (USDA)
Forest Service (FS)

Completed Actions

202. SUSPENSION AND DEBARMENT OF TIMBER SALE CONTRACTORS

CFR Citation: 36 CFR 223, Subpart C

Completed:

Reason	Date	FR Cite
Final Action	11/12/87	52 FR 43324
Final Action Effective	11/12/87	52 FR 43324

Small Entity: No

Agency Contact: Marian P. Connolly 703 235-1488

RIN: 0596-AA09

203. CREATE A NEW SUBPART C TO 36 CFR 264 ENTITLED NATIONAL SCENIC AND HISTORIC TRAIL SYMBOLS

CFR Citation: 36 CFR 264

Completed:

Reason	Date	FR Cite
Withdrawn	02/17/88	

Small Entity: No

Agency Contact: Marian P. Connolly 202 235-1488

RIN: 0596-AA54

204. 36 CFR PART 222, SUBPART C - GRAZING FEES

Significance: Agency Priority

CFR Citation: 36 CFR 222.50 to .51

Completed:

Reason	Date	FR Cite
Final Action	02/02/88	53 FR 2978
Final Action Effective	03/01/88	

Small Entity: No

Agency Contact: Marian P. Connolly 202 235-1488

RIN: 0596-AA77

DEPARTMENT OF AGRICULTURE (USDA)
Packers and Stockyards Administration (P&SA)

Proposed Rule Stage

205. ● ANNUAL REPORTS

Significance: Agency Priority

Legal Authority: PL 100-173; 7 USC 228

CFR Citation: 9 CFR 201.97

Legal Deadline: None.

Abstract: The law provides for a live poultry dealer trust for the benefit of all unpaid cash sellers or poultry growers and requires prompt payment for the sale or delivery of poultry. Administrative enforcement authority is provided for the poultry trust and prompt payment provisions. Amendment to present regulations will be required to implement the new provisions of the law.

USDA—P&SA **Proposed Rule Stage**

Timetable:

Action	Date	FR Cite
NPRM	07/00/88	
NPRM Comment Period End	10/00/88	

Small Entity: No

Agency Contact: Calvin W. Watkins, Deputy Administrator, Department of Agriculture, Packers and Stockyards Administration, Room 3039, South Building, Washington, DC 20250-2800, 202 447-7063

RIN: 0590-AA04

206. ● SCALES; ACCURATE WEIGHTS, REPAIRS, ADJUSTMENTS OR REPLACEMENTS AFTER INSPECTION

Significance: Agency Priority

Legal Authority: 7 USC 228

CFR Citation: 9 CFR 201.71(a)

Legal Deadline: None.

Abstract: This action is necessary to incorporate the 1988 edition of National Bureau of Standards (NBS) Handbook 44, "Specifications, Tolerances and Other Technical Requirements for Weighing and Measuring Devices," which contains a new scale code adopted by the National Conference on Weights and Measures. This change will make the requirements of the Packers and Stockyards Administration uniform with those applied by State and local weights and measures jurisdictions. The current regulation incorporates the 1983 edition of Handbook 44.

Timetable:

Action	Date	FR Cite
NPRM	05/00/88	
NPRM Comment Period End	07/00/88	

Small Entity: No

Agency Contact: Calvin W. Watkins, Deputy Administrator, Department of Agriculture, Packers and Stockyards Administration, Room 3039, South Building, Washington, DC 20250-2800, 202 447-7063

RIN: 0590-AA05

DEPARTMENT OF AGRICULTURE (USDA)

Proposed Rule Stage

Soil Conservation Service (SCS)

207. SNOW SURVEYS AND WATER SUPPLY FORECASTS

Legal Authority: 26 Stat. 653, Sec. 8; Reorg. No. IV of 1940

CFR Citation: 7 CFR 612.1 to 612.7

Legal Deadline: None.

Abstract: Sets forth policy and procedures for the administration of a cooperative snow survey and water supply forecast program, including the steps involved in carrying out the program. Sets out data collected and forecasts made, and eligible users of the data. (SCS 83-005)

Timetable:

Action	Date	FR Cite
Next Action Undetermined		

Small Entity: No

Additional Information: (Future) FINAL ACTION - Not needed at this time

(Future) END REVIEW - Not needed at this time

Agency Contact: Wayne Maresch, Regulatory Coordinator, Department of Agriculture, Soil Conservation Service, Room 6004-South Bldg., Washington, DC 20013, 202 447-4811

RIN: 0578-AA01

208. RELOCATION ASSISTANCE

Legal Authority: 42 USC 4601 et seq; PL 91-646

CFR Citation: 7 CFR 652

Legal Deadline: None.

Abstract: Prescribes the policies and procedures for the implementation of the Uniform Relocation Assistance and Real Property Acquisition Policies Act (42 USC 4601 et seq.) pertaining to the treatment of persons displaced from their homes, businesses, or farms because of federal financially assisted projects. (SCS 85-001)

Timetable:

Action	Date	FR Cite
End Review	01/31/86	
Next Action Undetermined		

Small Entity: No

Agency Contact: Wayne Maresch, Regulatory Coordinator, Department of Agriculture, Soil Conservation Service, Room 6004-South Bldg., Washington, DC 20013, 202 447-4811

RIN: 0578-AA12

209. PROCEDURES FOR THE PROTECTION OF ARCHEOLOGICAL AND HISTORICAL PROPERTIES ENCOUNTERED IN SCS-ASSISTED PROGRAMS

Significance: Agency Priority

Legal Authority: 16 USC 470f; 16 USC 469

CFR Citation: 7 CFR 656, (Revision)

Legal Deadline: None.

Abstract: The regulations address legal requirements set forth by the Advisory Council on Historic Preservation regulations, Protection of Historic Properties (36 CFR 800). The action is to remove and reserve six sections from the regulation to be more consistent with revised 36 CFR 800 and reduce requirements.

Timetable:

Action	Date	FR Cite
NPRM	00/00/00	

Small Entity: No

Agency Contact: Wayne F. Maresch, Director, Administrative Services Division, Department of Agriculture, Soil Conservation Service, P.O. Box 2890, Washington, DC 20013, 202 447-4811

RIN: 0578-AA13

VOL 53 ISS 79 PT 1 AP 25 1988 UMI

DEPARTMENT OF AGRICULTURE (USDA)
Soil Conservation Service (SCS)

Final Rule Stage

210. SOIL SURVEYS

Legal Authority: Part of Agriculture Appropriation Act of 1986; PL 74-46 The Soil Conservation and Domestic Allotment Act; PL 89-560 Soil Surveys for Resource Planning and Development; 42 USC 3271; 42 USC 3274

CFR Citation: 7 CFR 611

Legal Deadline: None.

Abstract: Prescribes the policy on soil survey operations including cooperative relationships with state agencies, standards, guidelines and plans on survey operations, distribution of soil survey information, and cartographic operations services furnished. (SCS 83-006)

Timetable:

Action	Date	FR Cite
End Review	12/31/86	

Next Action Undetermined

Small Entity: No

Agency Contact: Wayne Maresch, Regulatory Coordinator, Department of Agriculture, Soil Conservation Service, Room 6004-South Bldg., Washington, DC 20013, 202 447-4811

RIN: 0578-AA00

211. PRIME AND UNIQUE FARMLANDS

Legal Authority: 16 USC 590(a to f); 42 USC 4321 et seq; PL 95-87

CFR Citation: 7 CFR 657.1 to 657.5

Legal Deadline: None.

Abstract: Prescribes SCS policy on the development and maintenance of an inventory of prime and unique farmland of the Nation including the criteria and characteristics used in the identification of such lands. (SCS 83-007)

Timetable:

Action	Date	FR Cite
End Review	02/00/87	

Next Action Undetermined

Small Entity: No

Agency Contact: Wayne Maresch, Regulatory Coordinator, Department of Agriculture, Soil Conservation Service, Room 6004-South Bldg., Washington, DC 20013, 202 447-4811

RIN: 0578-AA10

212. FARMLAND PROTECTION POLICY ACT

Significance: Agency Priority

Legal Authority: 7 USC 4201

CFR Citation: 7 CFR 658

Legal Deadline: Statutory. 180 days after enactment of Food Security Act of 1985

Abstract: The United States Department of Agriculture amends its rule for implementing the Farmland Protection Policy Act to require progress reports, enable governors to bring action to enforce the requirements of the Act, include a section omitted by clerical error, revise how Federal agencies apply the Act, and revise the definition of farmland. These amendments are necessary in order to comply with amendments to the Farmland Protection Policy Act (FPPA) made by Title XII of the Food Security Act of 1985, Pub. L. 99-198, December 23, 1985, and to clarify several provisions of the existing rule. This rule will revise Part 658 of Title 7 of the Code of Federal Regulations.

Timetable:

Action	Date	FR Cite
Final Action	05/15/88	

Small Entity: No

Public Compliance Cost: Initial Cost: $0; Yearly Recurring Cost: $0; Base Year for Dollar Estimates: 1987

Affected Sectors: None

Agency Contact: Wayne F. Maresch, Director, Administrative Services Division, Department of Agriculture, Soil Conservation Service, PO Box 2890, Washington, DC 20013, 202 447-4811

RIN: 0578-AA14

[FR Doc. 88-5078 Filed 04-22-88; 8:45 am]

BILLING CODE 3410-01-T

VOL
53

ISS
79

PT
1

AP
25

1988

UMI

federal register

Monday
April 25, 1988

Part IV

Department of Commerce

Semiannual Regulatory Agenda

DEPARTMENT OF COMMERCE (DOC)

DEPARTMENT OF COMMERCE

Office of the Secretary

13 CFR Ch. III

15 CFR Subtitle A; Subtitle B, Chs. I, III, IV, VIII, IX; Subtitle D, Ch. XXIII

19 CFR Ch. III

37 CFR Ch. I, IV

48 CFR Ch. 13

50 CFR Chs. I, II, III, VI

Semiannual Agenda of Regulations

AGENCY: Office of the Secretary, Commerce.

ACTION: April 1988 regulatory agenda.

SUMMARY: In compliance with Executive Order (E.O.) 12291, entitled "Federal Regulation," and the Regulatory Flexibility Act (Pub. L. 96-354), the Department of Commerce in April and October of each year publishes in the **Federal Register** an agenda of the rulemaking actions covered by section 1 of E.O. 12291 that the Department plans to conduct or review over the next twelve months. Rulemaking actions are grouped according to prerulemaking, proposed rules, final rules, and rulemaking actions completed since the October 1987 agenda. The purpose of the agenda is to provide information to the public on regulations currently under review, being proposed, or issued by the Department. The agenda is intended to facilitate comments and views by interested members of the public.

The Department's April 1988 regulatory agenda includes regulatory activities that are expected to be conducted during the period April 1, 1988 through March 31, 1989.

FOR FURTHER INFORMATION CONTACT:

Specific: For additional information about a specific regulatory action listed in the agenda, contact the individual identified as the contact person.

General: Comments or inquiries of a general nature about the agenda should be directed to Michael A. Levitt, Assistant General Counsel for Legislation and Regulation, U.S. Department of Commerce, Washington, DC 20230, Telephone: (202) 377-8843.

SUPPLEMENTARY INFORMATION: On February 17, 1981, President Reagan signed E.O. 12291. The E.O. requires all executive agencies to publish semiannually an agenda of those regulations that are under consideration pursuant to this Order. Office of Management and Budget (OMB) Bulletin No. 88-1, issued October 7, 1987 establishes guidelines and procedures for the preparation and publication of the April 1988 Unified Agenda of Federal Regulations for all Federal departments and agencies. E.O. 12291 and the OMB Bulletin require that each agenda report the following information on non-exempt regulatory activities being conducted or planned to be conducted by the agency during the twelve-month period succeeding publication: The title of the regulation; the name, title, address and phone number of an agency person who is knowledgeable about the regulation; whether the regulation has or is expected to have a significant economic impact on a substantial number of small entities; the section(s) of the Code of Federal Regulations which will affect or be affected by the action; the section of the United States Code, Public Law or Executive Order that authorizes the action; an indication of whether or not the entry is a significant regulatory action included in the Administration's Regulatory Program and if the agency considers it a priority action; an abstract describing the problem the regulation addresses, alternatives to the regulation being considered, and potential costs and benefits of the action; legal deadline, if any; and a timetable of dates and, if available, **Federal Register** citations for past stages of the action.

The Regulatory Flexibility Act requires agencies to prepare a regulatory flexibility analysis where there is a positive finding that a rule will have a significant economic impact on a substantial number of small entities. E.O. 12291 requires agencies to prepare a regulatory impact analysis for any regulation considered to be a "major rule" as defined in the Order.

Explanation of Information Contained in the Agenda

Within the Department, the Office of the Secretary and various operating units may issue regulations. Operating units such as the National Oceanic and Atmospheric Administration (NOAA), the Economic Development Administration, the International Trade Administration, the National Bureau of Standards, and the Patent and Trademark Office issue the greatest share of the Department's regulations.

A large number of regulatory actions reported in the agenda are proposed or final Federal Information Processing Standards (FIPS), issued by the National Bureau of Standards (NBS) under Pub. L. 89-306. FIPS consist of standards and guidelines to improve Federal Government use and management of computers and information technology. The standards, while often of great use to industry and the public, apply only to the Federal Government. In developing the standards and guidelines, and in providing technical guidance and coordination to Federal agencies, NBS works closely with private industry standard-setting organizations.

Another large number of regulatory actions reported in the agenda deal with fishery management programs of NOAA's National Marine Fisheries Service (NMFS). To avoid repetition of programs and definitions, as well as to provide some understanding of the technical and institutional elements of the NMFS programs, a section on "Explanation of Information Contained in NMFS Regulatory Entries" is provided below.

Explanation of Information Contained in NMFS Regulatory Entries

The Magnuson Fishery Conservation and Management Act of 1976 (16 U.S.C. 1801 *et seq.*) (Act) governs the management of fisheries within the Exclusive Economic Zone (EEZ). The EEZ refers to those waters from the outer edge of the United States territorial sea to a distance of 200 miles. Fishery Management Plans (FMPs) are to be prepared for fisheries which require conservation and management measures. These FMPs regulate domestic and foreign fishing where permitted. Foreign fishing can be conducted in a fishery for which there is no FMP only if a preliminary fishing management plan has been issued to govern that foreign fishing. Under the Act, eight Regional Fishery Management Councils (Councils) prepare FMPs, or amendments to FMPs, for fisheries within their respective areas. In the development of such plans or amendments and their implementing regulations, the Councils are required by law to conduct public hearings on the

DOC

draft plans and to consider the use of alternative means of regulating.

The Council process for developing FMPs and amendments makes it difficult for NMFS to determine the significance of some regulatory actions under consideration at the time the semiannual regulatory agenda is published. Frequently NMFS does not have specific plan objectives or alternatives for management since the Councils may not have approved or submitted plans to the Secretary of Commerce for review, adoption, and implementation.

The DOC April 1988 regulatory agenda follows.

Robert H. Brumley,
Deputy General Counsel.

Office of the Secretary—Prerule Stage

Sequence Number	Title	Regulation Identifier Number
213	Privacy Act	0690-AA16

Office of the Secretary—Proposed Rule Stage

Sequence Number	Title	Regulation Identifier Number
214	Contract Clauses and Solicitation Provisions for the Commerce Automated Solicitation System	0690-AA08
215	Source Evaluation Procedures and Miscellaneous Revisions to the Commerce Acquisition Regulation	0690-AA13
216	Program Fraud Civil Remedies	0690-AA14

Office of the Secretary—Final Rule Stage

Sequence Number	Title	Regulation Identifier Number
217	Enforcement of Nondiscrimination on the Basis of Handicap in Department of Commerce Programs	0690-AA06
218	Public Information	0690-AA15

Bureau of Economic Analysis—Proposed Rule Stage

Sequence Number	Title	Regulation Identifier Number
219	Implementation of Annual Survey of Selected Services Transactions with Unaffiliated Foreign Persons	0691-AA10
220	Increase in Exemption Levels for Quarterly Foreign Direct Investment Surveys Conducted by BEA – Forms BE-605 and 606B	0691-AA12
221	Change in Exemption for Foreign Ocean Carriers' Expenses Survey Conducted by BEA – Annual Report Form BE-29	0691-AA13
222	Increase in Exemption Level of Annual Survey of Foreign Direct Investment in the United States (Form BE-15) conducted by BEA	0691-AA14

Bureau of Economic Analysis—Completed Actions

Sequence Number	Title	Regulation Identifier Number
223	Benchmark Survey of Foreign Direct Investment in the United States – 1987	0691-AA08
224	Revisions in Reporting Requirements for Surveys of U.S. Trade in Services with Foreign Persons	0691-AA09
225	Rule to Change Reporting Criteria for Minority-Owned Foreign Affiliates on Form BE-11C of the Annual Survey of U.S. Direct Investment Abroad	0691-AA11

DOC

Bureau of the Census—Proposed Rule Stage

Sequence Number	Title	Regulation Identifier Number
226	Foreign Trade Statistics Regulations	0607-AA10

Bureau of the Census—Completed Actions

Sequence Number	Title	Regulation Identifier Number
227	Shipper's Export Declaration -- Foreign Trade Statistics	0607-AA09

Economic Development Administration—Final Rule Stage

Sequence Number	Title	Regulation Identifier Number
228	General Requirements for Financial Assistance -- Design, Construction of Buildings to Accommodate the Physically Handicapped	0610-AA05
229	Economic Development Administration: Property Management Standards	0610-AA07
230	Property Management Standards -- Mortgages	0610-AA12
231	General Requirements for Financial Assistance -- Flood Insurance Program; and Environmental Requirements	0610-AA16
232	General Requirements for Financial Assistance: Employment of Expediters or Administrative Employees; Compensation of Persons Engaged by or on Behalf of Applicants	0610-AA18
233	Overall Economic Development Program Public Works and Development Facilities Program	0610-AA19
234	Designation of Areas; Designation of PWIP Areas	0610-AA21
235	General Requirements for Financial Assistance; Unfair Competition	0610-AA22
236	Sale of Loans and Loan Guarantees to the Private Sector	0610-AA31
237	General Requirements for Financial Assistance -- Nonrelocation	0610-AA32
238	General Requirements for Financial Assistance - Project Modification	0610-AA33
239	Protection of EDA's Interest in Facilities Acquired, Built, or Improved with EDA Grant Funds	0610-AA35
240	Liability for Hazardous Substances Associated with EDA Loans and Loan Guarantees	0610-AA36
241	Adjustment Grants - Revolving Loan Funds	0610-AA37

General Administration—Final Rule Stage

Sequence Number	Title	Regulation Identifier Number
242	Nonprocurement Debarment and Suspension	0605-AA02

General Administration—Completed Actions

Sequence Number	Title	Regulation Identifier Number
243	Uniform Administrative Requirements for Grants and Cooperative Agreements to State and Local Governments	0605-AA03

VOL 53 ISS 79 PT 1 AP 25 1988 UMI

DOC

International Trade Administration—Proposed Rule Stage

Sequence Number	Title	Regulation Identifier Number
244	General Regulations Governing Foreign Trade Zones in the United States, with Rules of Procedures	0625-AA04
245	Annual Watch Quota Allocations	0625-AA25
246	Antidumping and Countervailing Duties; Modifications	0625-AA26
247	Export Trade Certificates of Review	0625-AA27
248	Defense Priorities and Allocations System (DPAS)	0625-AA28

International Trade Administration—Final Rule Stage

Sequence Number	Title	Regulation Identifier Number
249	Adjustment Assistance for Firms and Industries	0625-AA05
250	Antidumping Duties; Countervailing Duties	0625-AA08
251	Revisions to Short Supply Regulations	0625-AA21
252	Sanctions for Violation of Antidumping and Countervailing Duty Protective Orders	0625-AA24

International Trade Administration—Completed Actions

Sequence Number	Title	Regulation Identifier Number
253	Effect of Imported Articles on the National Security	0625-AA15

National Bureau of Standards—Proposed Rule Stage

Sequence Number	Title	Regulation Identifier Number
254	FIPS for Information Resource Dictionary System (IRDS)	0693-AA39
255	FIPS for Codes for the Identification of Aquifer Names and Geologic Units	0693-AA44
256	FIPS for C Programming Language	0693-AA48
257	FIPS for Recorded Magnetic Tape Cartridge for Information Interchange; 4-Track, Serial, 0.250 in (6.30 mm), 6400 bpi (252 bpmm) Inverted Modified Frequency Modulation Encoded	0693-AA51
258	FIPS for Serial Recorded Magnetic Tape Cartridge for Information Interchange; Four and Five Track, 0.250 in (6.30 mm) 8000 bpi (315 bpmm) Streaming Mode Group Code Recording	0693-AA52
259	FIPS for One-Half Inch Magnetic Tape Interchange Using a Self Loading Cartridge	0693-AA53
260	FIPS for Recorded Formats for One and Two-Sided 5.25 Inch (130 mm) and 3.5 in (90 mm) Flexible Disk Cartridges	0693-AA54
261	FIPS for Recorded Magnetic Tape and Cartridge for Information Interchange; 18 track, Parallel, 12.65 mm (1/2 in), 1491 cpmm (37871 cpi) Group-Coded Recording	0693-AA55
262	FIPS for Device Level Interface for Streaming Cartridge and Cassette Tape Drives	0693-AA57
263	FIPS for Electronic Business Data Exchange	0693-AA62
264	Extensions to FIPS 127, Database Language SQL	0693-AA63
265	FIPS for Programmer's Hierarchical Interactive Graphics System (PHIGS)	0693-AA64

National Bureau of Standards—Final Rule Stage

Sequence Number	Title	Regulation Identifier Number
266	Revision to FIPS 100, Interface Between Data Terminal Equipment (DTE) and Data Circuit-Terminating Equipment (DCE) for Operation with Packet-Switched Data Communications Networks	0693-AA29
267	FIPS for Portable Operating System Environments (POSIX**)	0693-AA49
268	FIPS for Standard Generalized Markup Language (SGML)	0693-AA50

BEST COPY AVAILABLE

DOC

National Bureau of Standards—Final Rule Stage—Continued

Sequence Number	Title	Regulation Identifier Number
269	Revisions to FIPS 60, 61, 62, 63, 97, and 111, Computer System Input/Output (I/O) Interface Standards	0693-AA59
270	FIPS for Government Open Systems Interconnection Profile	0693-AA61

National Bureau of Standards—Completed Actions

Sequence Number	Title	Regulation Identifier Number
271	FIPS PUB 68-2, BASIC	0693-AA35
272	FIPS PUB 29-2, Interpretation Procedures for Federal Information Processing Standards for Software	0693-AA47
273	FIPS for Interfaces Between Flexible Disk Cartridge Drives and Their Host Controllers	0693-AA58
274	Review of FIPS 46, Data Encryption Standard	0693-AA60

National Oceanic and Atmospheric Administration—Prerule Stage

Sequence Number	Title	Regulation Identifier Number
275	Marine Fishery User Fees	0648-AB93
276	Taking of Marine Mammals Incidental to Underwater Tests by the Department of the Navy	0648-AC08
277	Amendment 1 Gulf of Mexico Reef Fish Fishery Management Plan	0648-AC16
278	Amendment 8 to the Fishery Management Plan for the Atlantic Surf Clam and Ocean Quahog Fisheries	0648-AC19
279	Amendment 2 to the Northeast Multispecies Fishery Management Plan	0648-AC26
280	Amendment 4 to the Pacific Coast Groundfish Fishery Management Plan	0648-AC43
281	Amendment 1 to the Fishery Management Plan for the Snapper- Grouper Fishery of the South Atlantic	0648-AC50
282	Bluefish Fishery Management Plan	0648-AC51
283	Federal Consistency with Approved Coastal Zone Management Programs	0648-AA34

National Oceanic and Atmospheric Administration—Proposed Rule Stage

Sequence Number	Title	Regulation Identifier Number
284	Processed Fishery Products, Processed Products Thereof & Certain Other Processed Food Products: U.S. Standards for Grades of Frozen Fish Blocks & Products Made Therefrom ETC	0648-AA46
285	Implementation of PL 59-659 and Other Recommendations To Improve the Fishery Management System	0648-AB09
286	Development of a Fishery Management Plan for Summer Flounder	0648-AB30
287	Endangered Fish or Wildlife; Permits for the Incidental Taking of Endangered Marine Species	0648-AB47
288	Groundfish of the Gulf of Alaska and High Seas Salmon Fishery off Alaska; Regulatory Amendment	0648-AB51
289	Amendment 2 to the Fishery Management Plan for Atlantic Sea Scallops	0648-AB83
290	Resubmitted Portion of Amendment 1 to the American Lobster Fishery Management Plan	0648-AB89
291	Amendment 1 to the Swordfish FMP	0648-AB92
292	Safety of United States Observers Aboard Foreign Fishing Vessels	0648-AB94
293	Amendment 3 to the High Seas Salmon Fishery Off the Coast of Alaska East of 175 E. Longitude	0648-AC00
294	Amendment 2 to the Fishery Management Plan for the Bottomfish and Seamount Groundfish Fisheries of the Western Pacific Region	0648-AC10
295	Amendment 3 to the Fishery Management Plan for the Coastal Migratory Pelagic Resources	0648-AC15
296	Fishery Management Plan for Atlantic Billfishes	0648-AC24
297	Proposed Rule to Establish Product Specific Seafood Marketing Councils Under the Fish and Seafood Promotion Act of 1986 (FSPA)	0648-AC27
298	Regulatory Amendment Revising the Final Regulations Implementing the American Lobster Fishery Management Plan	0648-AC28
299	Amendment 2 to the Spiny Lobster Fishery Management Plan of the Gulf of Mexico and South Atlantic	0648-AC29
300	Foreign Fishing Poundage and Permit Fees, 1989	0648-AC30
301	Regulatory Amendment to Require Reporting of Pacific Coast Groundfish Landing to States	0648-AC31
302	Amendment 12 to the FMP for Groundfish of the Bering Sea and Aleutian Islands area	0648-AC32

VOL 53 ISS 79 PT 1 AP 25 1988 UMI

DOC

National Oceanic and Atmospheric Administration—Proposed Rule Stage—Continued

Sequence Number	Title	Regulation Identifier Number
303	Amendment 1 to the Fishery Management Plan for the Precious Coral Fishery of the Western Pacific Region	0648-AC33
304	Fishery Management Plan for King and Tanner Crab in the Bering Sea and Aleutian Islands	0648-AC34
305	Amendment 2 to the Red Drum Fishery Management Plan for the Gulf of Mexico	0648-AC38
306	Reporting Requirements Governing Salmon Taken Off Alaska and Delivered or Landed Outside Alaska	0648-AC39
307	Atlantic Tuna Fisheries - Regulatory Amendment	0648-AC40
308	Regulatory Amendment to the Fishery Management Plan for the Atlantic Swordfish Fishery	0648-AC41
309	Amendment 17 to the FMP for Groundfish of the Gulf of Alaska	0648-AC42
310	Amendment 3 to the Fishery Management Plan for Atlantic Sea Scallops	0648-AC44
311	Policy to Require Observers to be Carried on Domestic Fishing Vessels	0648-AC45
312	Regulatory Amendment Modifying the Boundary of the Texas Seasonal Closure of the Shrimp Fishery of the Gulf of Mexico for 1988	0648-AC46
313	Regulatory Amendment Revising the Final Regulations Implementing the Fishery Management Plan for the Coastal Migratory Pelagic Resources	0648-AC47
314	Regulatory Amendment to Designate Special Fishing Areas in the Snapper-grouper Fishery of the South Atlantic	0648-AC48
315	Amendment 9 to the Fishery Management Plan for Commercial and Recreational Salmon fisheries off the Coasts of Washington, Oregon, and California	0648-AC49
316	Proposed Regulations for the Key Largo National Marine Sanctuary	0648-AA33
317	Draft Regulations for the Proposed Flower Garden Banks National Marine Sanctuary	0648-AB49
318	Proposed Regulations for the Looe Key National Marine Sanctuary	0648-AB64
319	Proposed Regulations for the National Estuarine Reserve Research Program	0648-AB68
320	Rulemaking to Implement 1985 Reauthorization of the Coastal Zone Management Act (CZMA)	0648-AC02
321	Proposed Regulations for the Channel Islands National Marine Sanctuary	0648-AC03
322	Proposed Regulations for the Point Reyes-Farallon Islands National Marine Sanctuary	0648-AC05

National Oceanic and Atmospheric Administration—Final Rule Stage

Sequence Number	Title	Regulation Identifier Number
323	Fishery Conservation and Management: Confidentiality of Statistics	0648-AA38
324	U.S. General Standards for Grades of Shrimp	0648-AA47
325	Foreign Fishing - Scientific Research	0648-AB23
326	Regulations Governing the Taking and Importing of Marine Mammals; Importation of Yellowfin Tuna	0648-AB46
327	Endangered Fish and Wildlife; Approaching Humpback Whales in Hawaiian Waters	0648-AB79
328	Groundfish of the Gulf of Alaska - Amendment 16 and Groundfish of the Bering Sea and Aleutian Islands Area - Amendment 11a	0648-AB98
329	U.S. Standards for Grades of Fish Fillets	0648-AC12
330	Amendment to Regulation Providing for Allocation of Pacific Halibut Among Domestic Fishermen	0648-AC20
331	Implementation of Conditionally Approved Measures Under Amendment 1 to the Spiny and Slipper Lobster FMP in the Gulf of Mexico and South Atlantic - Permits and Bag Limits	0648-AC25
332	Regulatory Amendment to Prohibit Landings of Undersize Red Snapper in the Reef Fish Fishery of the Gulf of Mexico	0648-AC36
333	Implementation of Conditionally Approved Measures Under Amendment to the Spiny and Slipper Lobster FMP in the Gulf of Mexico and South Atlantic - Trap Removal	0648-AC37
334	Interjurisdictional Fisheries	0648-AC52
335	Proposed Regulations for the National Marine Sanctuary Program	0648-AA31
336	Draft Regulations for the Proposed Cordell Bank National Marine Sanctuary	0648-AB50
337	Deep Seabed Mining Regulations for Commercial Recovery	0648-AA36

National Oceanic and Atmospheric Administration—Completed Actions

Sequence Number	Title	Regulation Identifier Number
338	Marking Requirements for the Importation, Exportation, & Interstate Transportation of Fish or Wildlife	0648-AA53
339	U.S. Standards for Grades of Fresh or Frozen North American Freshwater Catfish and Products Made Therefrom	0648-AA73
340	Amendment No. 5 to the Fishery Management Plan for the Spiny Lobster Fisheries of the Western Pacific Region	0648-AB81
341	Amendment 1 to the Red Drum Fishery Management Plan for the Gulf of Mexico	0648-AB91
342	Groundfish of the Bering Sea and Aleutian Islands - Amendment 11	0648-AB96

DOC

National Oceanic and Atmospheric Administration—Completed Actions—Continued

Sequence Number	Title	Regulation Identifier Number
343	Amendment 2 to the American Lobster Fishery Management Plan	0648-AB97
344	Amendment 8 to the Fishery Management Plan for Commercial and Recreational Salmon Fisheries Off the Coasts of Washington, Oregon, and California	0648-AB99
345	Foreign Fishing Poundage and Permit Fees, 1988	0648-AC01
346	Amendment 1 to the Northeast Multispecies Fishery Management Plan	0648-AC04
347	Performance Standards for Tuna Skippers	0648-AC07
348	Amendment 1 for the Fishery Management Plan for the Bottomfish and Seamount Groundfish Fisheries of the Western Pacific Region	0648-AC11
349	Amendment to the Regulations Implementing the Atlantic Sea Scallop FMP - Revise the Expiration Date of Fishing Permits	0648-AC13
350	Amendment to Regulations for Groundfish of the Gulf of Alaska, Bering Sea and Aleutian Islands Area - Reporting Requirements	0648-AC14
351	Amendment 4 to the Fishery Management Plan for the Shrimp Fishery of the Gulf of Mexico	0648-AC17
352	Amendment 3 to the Pacific Coast Groundfish Fishery Management Plan	0648-AC18
353	Regulatory Amendment to the Fishery Management Plan for the Atlantic Swordfish Fishery - Extension of The Plan	0648-AC21
354	Regulatory amendment to the FMP for Groundfish of the Gulf of Alaska Groundfish, other Than Sablefish	0648-AC35
355	Regulatory Amendment Revising the Final Regulations Implementing the American Lobster Fishery Management Plan	0648-AC09

National Telecommunications and Information Administration—Completed Actions

Sequence Number	Title	Regulation Identifier Number
356	Public Telecommunications Facilities Program: Report and Order (Final Rules), Funding Priorities and Policy Statement	0660-AA01

Office of Productivity, Technology and Innovation—Prerule Stage

Sequence Number	Title	Regulation Identifier Number
357	Administration of a Uniform Patent Policy with Respect to Domestic Rights in Inventions Made by Government Employees	0692-AA05

Office of Productivity, Technology and Innovation—Proposed Rule Stage

Sequence Number	Title	Regulation Identifier Number
358	Licensing of Government-Owned Inventions	0692-AA04

Patent and Trademark Office—Proposed Rule Stage

Sequence Number	Title	Regulation Identifier Number
359	Requests for Identifiable Records	0651-AA04
360	Deposit of Biological Materials for Patent Purposes	0651-AA13
361	Trademark Applications Pursuant to 15 U.S.C. 1126	0651-AA23
362	Duty of Disclosure - Information Disclosure Statement	0651-AA27
363	Requests for Presidential Proclamations under the Semiconductor Chip Protection Act	0651-AA29
364	Revision of Patent Fees	0651-AA30

VOL 53 ISS 79 PT 1 APR 25 1988 UMI

DOC

Patent and Trademark Office—Proposed Rule Stage—Continued

Sequence Number	Title	Regulation Identifier Number
365	Practice Before the Patent and Trademark Office	0651-AA31
366	Miscellaneous Changes in Patent Practice	0651-AA32

Patent and Trademark Office—Final Rule Stage

Sequence Number	Title	Regulation Identifier Number
367	Variety Denomination Requirements for Plant Patent Applications	0651-AA12
368	Trademark Automated Search System Fees	0651-AA18
369	Miscellaneous Amendments of Patent Rules	0651-AA25

United States Travel and Tourism Administration—Prerule Stage

Sequence Number	Title	Regulation Identifier Number
370	Travel Promotion Fee	0644-AA00

DEPARTMENT OF COMMERCE (DOC)

Office of the Secretary (OS) — **Prerule Stage**

213. ● PRIVACY ACT

Legal Authority: 5 USC 552a

CFR Citation: 15 CFR 4b

Legal Deadline: None.

Abstract: The existing regulations implementing the Privacy Act are being revised to reflect the centralization of the administrative appeals process. Current regulations assign final decisionmaking authority within the same component making the initial decision. Centralization within the Office of General Counsel would promote enhanced objectivity in the Department's final administrative decisions on Privacy Act requests.

Timetable:

Action	Date	FR Cite
ANPRM	04/00/88	
ANPRM Comment Period End	05/00/88	

Small Entity: Yes

Affected Sectors: Multiple

Government Levels Affected: Local, State, Federal

Agency Contact: Geraldine P. LeBoo, Management Analyst, Department of Commerce, Office of the Secretary, Washington, DC 20230, 202 377-3630

RIN: 0690-AA16

DEPARTMENT OF COMMERCE (DOC)

Office of the Secretary (OS) — **Proposed Rule Stage**

214. CONTRACT CLAUSES AND SOLICITATION PROVISIONS FOR THE COMMERCE AUTOMATED SOLICITATION SYSTEM

Legal Authority: 41 USC 251 et seq; PL 98-369; PL 98-577

CFR Citation: 48 CFR 1 to 53

Legal Deadline: None.

Abstract: The Department of Commerce is currently reviewing standardized contract clauses and solicitation provisions for inclusion in a planned Departmentwide automated solicitation system. A proposed amendment to the Commerce Acquisition Regulation (CAR) would illustrate and incorporate these standardized clauses and provisions. This should ultimately be less burdensome to Department contractors and potential contractors, since the clauses and provisions would be used uniformly throughout the Department.

Timetable:

Action	Date	FR Cite
Next Action Undetermined		

Small Entity: Undetermined

Agency Contact: Robert A. Welch, Deputy Director for Procurement, Department of Commerce, Office of the Secretary, Office of Procurement and Administrative Ser, 14th Street & Constitution Avenue, NW, Washington, DC 20230, 202 377-2773

RIN: 0690-AA08

215. SOURCE EVALUATION PROCEDURES AND MISCELLANEOUS REVISIONS TO THE COMMERCE ACQUISITION REGULATION

Legal Authority: 41 USC 251 et seq

CFR Citation: 48 CFR 1 to 53

Legal Deadline: None.

Abstract: The Department of Commerce has no formal uniform source evaluation procedures applicable to its procurement activities. Standardization of source evaluation procedures will alleviate potential inconsistencies among procurement professionals as well as potential Department Contractors relative to evaluation of proposals.

Timetable:

Action	Date	FR Cite
Next Action Undetermined		

Small Entity: Undetermined

Agency Contact: Robert A. Welch, Deputy Director for Procurement, Department of Commerce, Office of the Secretary, Office of Procurement and Administrative Ser, 14th Street and Constitution Ave., NW, Washington, DC 20230, 202 377-2773

RIN: 0690-AA13

216. PROGRAM FRAUD CIVIL REMEDIES

Legal Authority: 31 USC 3809

CFR Citation: 15 CFR 25

Legal Deadline: None.

Abstract: This rule, if promulgated, would implement the Program Fraud Civil Remedies Act of 1986 which authorizes the Department of Commerce (and certain other Federal agencies) to impose through administrative adjudication civil penalties and assessments against persons making false claims or statements to it.

Timetable:

Action	Date	FR Cite
NPRM	04/00/88	

Small Entity: No

Agency Contact: Jerry Walz, Chief, Contract Law Division, Room 5893, Department of Commerce, Office of the Secretary, Washington, DC 20230, 202 377-1122

RIN: 0690-AA14

DEPARTMENT OF COMMERCE (DOC)
Office of the Secretary (OS)

Final Rule Stage

217. ENFORCEMENT OF NONDISCRIMINATION ON THE BASIS OF HANDICAP IN DEPARTMENT OF COMMERCE PROGRAMS

Legal Authority: 29 USC 794; EO 12250

CFR Citation: 15 CFR 8c

Legal Deadline: None.

Abstract: Regulations will be proposed providing for the enforcement of Section 504 of the Rehabilitation Act of 1973, as amended. These regulations will ensure programmatic and physical accessibility for handicapped individuals in Department of Commerce activities.

Timetable:

Action	Date	FR Cite
NPRM	11/24/84	49 FR 45861
NPRM Comment Period End	03/21/85	49 FR 45861
Final Action	04/00/88	

Small Entity: No

Affected Sectors: None

Government Levels Affected: Federal

Agency Contact: Richard Stearns, Chief, EEO Division, Department of Commerce, Office of the Secretary, Office of Civil Rights, 14th and Constitution Avenue, NW, Washington, DC 20230, 202 377-5691

RIN: 0690-AA06

218. PUBLIC INFORMATION

Legal Authority: 5 USC 552

CFR Citation: 15 CFR 4

Legal Deadline: None.

Abstract: The existing regulations implementing the Freedom of Information Act are being revised to incorporate changes in the Department's policies and procedures affecting FOIA administration. Additionally, the revision adopts the provisions of E.O. 12600, Predisclosure Notification Procedures for Confidential Information, dated June 23, 1987. Section 4.9 of the regulations was completed on July 17, 1987, 52 FR 26951, to comply with the Freedom of Information Reform Act of 1986.

Timetable:

Action	Date	FR Cite
NPRM	04/28/87	52 FR 15327
NPRM Comment Period End	06/12/87	52 FR 15327
Final Action Effective	04/01/88	

Small Entity: No

Affected Sectors: All

Government Levels Affected: Local, State, Federal

Agency Contact: Geraldine P. LeBoo, Management Analyst, Department of Commerce, Office of the Secretary, US Department of Commerce, Washington, DC 20230, 202 377-3630

RIN: 0690-AA15

DEPARTMENT OF COMMERCE (DOC) **Proposed Rule Stage**

Bureau of Economic Analysis (BEA)

219. IMPLEMENTATION OF ANNUAL SURVEY OF SELECTED SERVICES TRANSACTIONS WITH UNAFFILIATED FOREIGN PERSONS

Significance: Agency Priority

Legal Authority: 22 USC 3101 to 3108 Int'l Investment & Trade in Svcs Survey Act

CFR Citation: 15 CFR 801

Legal Deadline: None.

Abstract: This action will amend 15 CFR 801 by adding rules to implement a new annual follow-on survey to the BE-20 Benchmark Survey of Selected Services Transactions with Unaffiliated Foreign Persons--1986. The scope and coverage of the annual survey are expected to be more limited than that of the benchmark survey, with exact scope and coverage to be determined after analysis of preliminary results of the 1986 BE-20. Data from the annual survey will be used to derive universe estimates of covered services transactions in nonbenchmark years, thus updating the data collected in the benchmark survey. The first year of coverage will be 1987; the survey will not be taken for a year covered by the benchmark survey.

Timetable:

Action	Date	FR Cite
NPRM	06/00/88	
NPRM Comment Period End	08/00/88	
Final Action	09/00/88	
Final Action Effective	10/00/88	

Small Entity: No

Public Compliance Cost: Initial Cost: $1,600,000; Yearly Recurring Cost: $1,600,000; Base Year for Dollar Estimates: 1988

Agency Contact: Betty L. Barker, Acting Chief, International Investment Div., Department of Commerce, Bureau of Economic Analysis, 1401 K Street, NW, Room 607, Tower Building, Washington, DC 20230, 202 523-0659

RIN: 0691-AA10

220. INCREASE IN EXEMPTION LEVELS FOR QUARTERLY FOREIGN DIRECT INVESTMENT SURVEYS CONDUCTED BY BEA -- FORMS BE-605 AND 606B

Legal Authority: 22 USC 3101 to 3108 Int'l Investment & Trade in Svcs Survey Act

CFR Citation: 15 CFR 806

Legal Deadline: None.

Abstract: This action will raise the exemption levels for quarterly report Forms BE-605 (Transactions of U.S. Affiliates, Except an Unincorporated Bank, with Foreign Parent) and BE-606B (Transactions of U.S. Banking Branch or Agency with Foreign Parent) from $15 million to $20 million. The purpose of the action is to bring the exemption levels into conformance with those for Form BE-12 (LF) of the Benchmark Survey of Foreign Direct Investment in the United States -- 1987. As a result of the action, the number of reports filed by U.S. companies will be significantly reduced, thereby reducing both reporting and processing burden.

Timetable:

Action	Date	FR Cite
NPRM	02/16/88	53 FR 04420
NPRM Comment Period End	04/01/88	
Final Action	05/00/88	
Final Action Effective	06/00/88	

Small Entity: No

Agency Contact: Betty L. Barker, Acting Chief, International Investment Division, Department of Commerce, Bureau of Economic Analysis, 1401 K Street, NW, Room 607, Tower Building, Washington, DC 20230, 202 523-0659

RIN: 0691-AA12

221. ● CHANGE IN EXEMPTION FOR FOREIGN OCEAN CARRIERS' EXPENSES SURVEY CONDUCTED BY BEA -- ANNUAL REPORT FORM BE-29

Legal Authority: 22 USC 3101 to 3108 Int'l Investment & Trade in Svcs Survey Act

CFR Citation: 15 CFR 806

Legal Deadline: None.

Abstract: This action will change the exemption for annual report Form BE-29 (Foreign Ocean Carriers' Expenses in the United States). An exemption based on number of calls by foreign carriers will be added and the exemption level based on the value of reportable transactions will be lowered. The change will more accurately identify persons with significant reportable transactions. This action will also place a limit on the number of reports required for certain kinds of carriers. As a result of this action, the number of reporters and number of reports filed by respondents will be reduced, thereby reducing both reporting and processing burdens.

Timetable:

Action	Date	FR Cite
NPRM	07/00/88	
NPRM Comment Period End	08/00/88	
Final Action	09/00/88	
Final Action Effective	10/00/88	

Small Entity: No

Agency Contact: Anthony J. DiLullo, Assistant Chief, Department of Commerce, Bureau of Economic Analysis, Balance of Payments Division, Bureau of Economic Analysis BE-58, Washington, DC 20230, 202 523-0621

RIN: 0691-AA13

222. ● INCREASE IN EXEMPTION LEVEL OF ANNUAL SURVEY OF FOREIGN DIRECT INVESTMENT IN THE UNITED STATES (FORM BE-15) CONDUCTED BY BEA

Legal Authority: 22 USC 3101 to 3108 Int'l Investment & Trade in Svcs Survey Act

CFR Citation: 15 CFR 806

Legal Deadline: None.

Abstract: This action will raise the exemption level for Form BE-15 (Annual Survey of Foreign Direct Investment in the United States) from $10 million to $20 million. The purpose of the action is to bring the exemption level into conformance with that for Form BE-12 (LF) of the Benchmark Survey of Foreign Direct Investment in the United States-1987. As a result of the action, the number of reports filed by U.S. companies will be significantly reduced, thereby reducing both reporting and processing burden.

Timetable:

Action	Date	FR Cite
NPRM	09/00/88	
NPRM Comment Period End	11/00/88	
Final Action	02/00/89	
Final Action Effective	03/00/89	

Small Entity: No

Agency Contact: Betty L. Barker, Acting Chief, International Investment Division, Department of Commerce, Bureau of Economic Analysis, 1401 K Street, NW, Room 607, Tower Building, Washington, DC 20230, 202 523-0659

RIN: 0691-AA14

DEPARTMENT OF COMMERCE (DOC) **Completed Actions**

Bureau of Economic Analysis (BEA)

223. BENCHMARK SURVEY OF FOREIGN DIRECT INVESTMENT IN THE UNITED STATES – 1987

Legal Authority: 22 USC 3101 to 3108 Int'l Investment & Trade in Svcs Survey Act

CFR Citation: 15 CFR 806.15; 15 CFR 806.17

Legal Deadline: Statutory. The survey must cover the year 1987.

Abstract: This action will amend existing rule 15 CFR Part 806.17 to provide for the conduct of the BE-12, Benchmark Survey of Foreign Direct Investment in the United States -- 1987, as required by the International Investment and Trade in Services Act, 22 USC 3101 to 3108 (see especially Sec 4(b) of the Act). The existing rule covers a similar survey for 1980, which has been completed and which the new survey will update.

Timetable:

Action	Date	FR Cite
NPRM	11/05/87	52 FR 42447
NPRM Comment Period End	12/21/87	
Final Action	01/15/88	53 FR 01015
Final Action Effective	02/16/88	

Small Entity: No

Agency Contact: Betty L. Barker, Acting Chief, International Investment Division, Department of Commerce, Bureau of Economic Analysis, 1401 K Street, NW, Room 607, Tower Building, Washington, DC 20230, 202 523-0659

RIN: 0691-AA08

224. REVISIONS IN REPORTING REQUIREMENTS FOR SURVEYS OF U.S. TRADE IN SERVICES WITH FOREIGN PERSONS

Legal Authority: 22 USC 3101 to 3108 Int'l Investment & Trade in Svcs Survey Act

CFR Citation: 15 CFR 801

Legal Deadline: None.

Abstract: This action will amend 15 CFR 801 to bring three existing BEA services surveys into conformance with the new BE-20 Benchmark Survey of Selected Services Transactions with Unaffiliated Foreign Persons -- 1986 and with its anticipated annual follow-on survey. Specifically, it will: (1) change the titles of the three surveys to clarify coverage. The title of the BE-47 survey will change to "Annual Survey of Construction, Engineering, Architectural, and Mining Services Provided by U.S. Firms to Unaffiliated Foreign Persons." The title of the BE-48 survey will change to "Annual Survey of Reinsurance and Other Insurance Transactions by U.S. Insurance Companies With Foreign Persons." The title of the BE-93 survey will change to "Annual Survey of Royalties, License Fees, and Other Receipts and Payments for Intangible Rights Between U.S. and Unaffiliated Foreign Persons." (2) Amend 15 CFR 801.9(b) (4) to expand coverage of the BE-48 survey to include direct insurance as well as reinsurance transactions. In designing the BE-20 survey, it was decided to include direct insurance on the existing BE-48 survey rather than on the BE-20. (CONT.)

Timetable:

Action	Date	FR Cite
NPRM	09/30/87	52 FR 36587
NPRM Comment Period End	11/16/87	
Final Action	12/09/87	52 FR 46587
Final Action Effective	01/08/88	52 FR 46588

Small Entity: No

Additional Information: ABSTRACT CONT: Heretofore, no data on direct insurance transactions with foreign persons have been collected. (3) Amend 15 CFR 801 to revise the description of "Who must report" in the three surveys for clarification purposes; no substantive changes are intended. (4) Amend 15 CFR 801 to apply existing exemption levels for the BE-47 and 48 surveys to newly added items. No change in the exemption levels themselves is planned. For the BE-47 survey, the current exemption level will be applied to the gross book value of new contracts received. For the BE-48 survey, the current exemption level will be applied to primary insurance premiums received and primary insurance losses paid.

Agency Contact: Betty L. Barker, Acting Chief, International Investment Division, Department of Commerce, Bureau of Economic Analysis, 1401 K Street, NW, Room 607, Tower Building, Washington, DC 20230, 202 523-0659

RIN: 0691-AA09

225. RULE TO CHANGE REPORTING CRITERIA FOR MINORITY-OWNED FOREIGN AFFILIATES ON FORM BE-11C OF THE ANNUAL SURVEY OF U.S. DIRECT INVESTMENT ABROAD

Legal Authority: 22 USC 3101 to 3108 Int'l Investment & Trade in Svcs Survey Act

CFR Citation: 15 CFR 806.14(f)(3)(iii), (Revision)

Legal Deadline: None.

Abstract: This action will revise 15 CFR 806.14(f) (3) (iii) by lowering the percentage of ownership above which a minority-owned foreign affiliate must be reported on Form BE-11C of BEA's Annual Survey of U.S. Direct Investment Abroad. The ownership cutoff now used on the BE-11c is 25 percent. However, foreign business enterprises owned between 10 and 25 percent by a U.S. person are, by definition, also considered foreign affiliates and are thus part of the universe of U.S. direct investment abroad. Experience has shown that some of these affiliates with low ownership interests are, nevertheless, very large. Without the type of information collected on the form, data for such affiliates and, thus, for the universe as a whole, cannot be accurately estimated. For affiliates owned at least 20 percent, but less than 25 percent, by the U.S. Reporter and for which total assets, sales or net income exceed $10 million, this action would require reporting of all 7 data items on the form. For affiliates owned at least 10 percent, but less than 20 percent, by the U.S. Reporter and for which total assets, sales, or net income exceed (cont)

Timetable:

Action	Date	FR Cite
NPRM	09/14/87	52 FR 34685
NPRM Comment Period End	10/14/87	
Final Action	11/04/87	52 FR 42275
Final Action Effective	12/04/87	52 FR 42275

Small Entity: No

Additional Information: ABSTRACT CONT: $100 million, this action would require reporting of only 3 data items--assets, sales, and net income--and only for fiscal year 1987.

Agency Contact: Patricia Walker, Chief, Direct Investment Abroad Branch, Department of Commerce, Bureau of Economic Analysis, 1401 K

Street, NW, Room 603, Tower Building, Washington, DC 20230, 202 523-0661

RIN: 0691-AA11

DEPARTMENT OF COMMERCE (DOC)
Bureau of the Census (CENSUS)

Proposed Rule Stage

226. FOREIGN TRADE STATISTICS REGULATIONS

Significance: Regulatory Program

Legal Authority: 13 USC 301 to 307

CFR Citation: 15 CFR 30.1 to 30.92

Legal Deadline: None. Deadline is contingent upon legislation not yet passed.

Abstract: Review of CFR 30 for changes to conform with the new statistical classification (harmonized) system for imports and exports. This review will combine elements of housekeeping changes, updating obsolete information, clarification, bringing the system into line with harmonization (including metric measurements) and conformance of reporting with current practices.

There should be no added burden or cost placed on the public because no additional information is required, nor new reporting requirements.

The benefits of these changes will be: allowing direct comparisons between U.S. imports and exports, enabling comparisons between the trade balances of the U.S. and of our major trading partners.

Once the legislation is passed, there is no alternative to making these changes in order to implement the legislation. Additionally, Section 30.24 will be revised to be consistent with Customs Regulations by eliminating the "four day rule" regarding submission of "Shipper's Export Declarations."

Timetable:

Action	Date	FR Cite
NPRM	00/00/00	
Final Action	00/00/00	

Small Entity: No

Affected Sectors: All

Government Levels Affected: Federal

Agency Contact: Don L. Adams, Chief, Foreign Trade Division, Department of Commerce, Bureau of the Census, Washington, DC 20233, 301 763-5342

RIN: 0607-AA10

DEPARTMENT OF COMMERCE (DOC)
Bureau of the Census (CENSUS)

Completed Actions

227. SHIPPER'S EXPORT DECLARATION -- FOREIGN TRADE STATISTICS

Legal Authority: 13 USC 301 to 307; 5 USC 301

CFR Citation: 15 CFR 30; 15 CFR 30.55(h)

Legal Deadline: None.

Abstract: It is proposed to amend the Foreign Trade Statistics Regulations to raise the present exemption for filing shipper's Export Declarations (except for shipments requiring a validated export license) from $1000 to $1500. The exemption for shipments through the U.S. Postal Service will remain at $500.

Timetable:

Action	Date	FR Cite
NPRM	04/24/87	52 FR 13714
NPRM Comment Period End	06/23/87	
Final Action	08/31/87	52 FR 32782
Final Action Effective	10/01/87	

Small Entity: No

Agency Contact: Don L. Adams, Chief, Foreign Trade Division, Department of Commerce, Bureau of the Census, Washington, DC 20233, 301 763-5342

RIN: 0607-AA09

DEPARTMENT OF COMMERCE (DOC)
Economic Development Administration (EDA)

Final Rule Stage

228. GENERAL REQUIREMENTS FOR FINANCIAL ASSISTANCE -- DESIGN, CONSTRUCTION OF BUILDINGS TO ACCOMMODATE THE PHYSICALLY HANDICAPPED

Legal Authority: 42 USC 4151 to 4156; 42 USC 3211; DOC Organization Order 10-4, as amended

CFR Citation: 13 CFR 309.14

Legal Deadline: None.

Abstract: Existing regulations will be amended if necessary to reflect the most recent (1980) standards of the American National Standards Institute (ANSI) for handicap accessibility as well as the "Minimum Guidelines and Requirements for Accessible Design" published by the Architectural and Transportation Barriers Compliance Board (47 FR 33862, August 14, 1982) and the proposed "Uniform Federal Accessibility Standards" published by GSA (comments due by August 22, 1983).

Timetable:

Action	Date	FR Cite
Next Action Undetermined		

Small Entity: No

Affected Sectors: Multiple

Government Levels Affected: Local, State

Agency Contact: James F. Marten, Deputy Chief Counsel, Department of Commerce, Economic Development

Administration, Operations and Administration, 14th & Constitution Ave., NW, Room 7001, Washington, DC 20230, 202 377-5441

RIN: 0610-AA05

229. ECONOMIC DEVELOPMENT ADMINISTRATION: PROPERTY MANAGEMENT STANDARDS

Legal Authority: 40 USC 3211; DOC Organization Order 10-4, as amended

CFR Citation: 13 CFR 314

Legal Deadline: None.

Abstract: EDA's regulations regarding the use and disposition of real property acquired or improved with federal funds is being revised to clarify EDA policy regarding the authorized use and disposition of grant property (real property) and in particular requirements regarding the lease and/or sale of such property. As revised the change will clarify present requirements for property determining the appropriate amount of compensation due the Federal Government upon the sale of real property acquired or improved with grant funds.

Timetable:

Action	Date	FR Cite
Next Action Undetermined		

Small Entity: No

Affected Sectors: Multiple

Government Levels Affected: Local, State

Agency Contact: James F. Marten, Deputy Chief Counsel, Department of Commerce, Economic Development Administration, Operations and Administration, 14th & Constitution Ave., NW, Room 7001, Washington, DC 20230, 202 377-5441

RIN: 0610-AA07

230. PROPERTY MANAGEMENT STANDARDS – MORTGAGES

Legal Authority: 42 USC 3211; DOC Organization Order 10-4, as amended

CFR Citation: 13 CFR 314.5

Legal Deadline: None.

Abstract: These amendments allow the Assistant Secretary to waive the prohibition against placing mortgages on property which has been financed by an EDA public works grant, if an additional condition is met. This additional condition for waiver is that all proceeds from a loan which is secured by a mortgage or lien on property which has been financed by an EDA public works grant shall be available only to the grantee and such proceeds shall be used on the project which secures such loans, or for working capital purposes relating to that project.

Timetable:

Action	Date	FR Cite
Interim Final Rule	05/30/84	49 FR 22463
Final Action	06/00/88	

Small Entity: No

Affected Sectors: Multiple

Government Levels Affected: Local, State

Agency Contact: James F. Marten, Deputy Chief Counsel, Department of Commerce, Economic Development Administration, Operations and Administration, 14th & Constitution Ave., NW, Room 7001, Washington, DC 20230, 202 377-5441

RIN: 0610-AA12

231. GENERAL REQUIREMENTS FOR FINANCIAL ASSISTANCE – FLOOD INSURANCE PROGRAM; AND ENVIRONMENTAL REQUIREMENTS

Legal Authority: 42 USC 3211; DOC Organization Order 10-4, as amended

CFR Citation: 13 CFR 309.15; 13 CFR 309.18

Legal Deadline: None.

Abstract: This rule amends EDA's regulation at 13 CFR 309.15 on Flood Hazard to reflect a shift in the administration of the Flood Insurance Program from the Department of Housing and Urban Development (HUD) to the Federal Emergency Management Agency (FEMA). It also updates environmental regulations at 13 CFR 309.18.

Timetable:

Action	Date	FR Cite
Interim Final Rule	06/25/86	51 FR 23042
Final Action	05/00/88	

Small Entity: No

Affected Sectors: Multiple

Government Levels Affected: Local, State

Agency Contact: Walter Archibald, Director, Office of Compliance Review, Department of Commerce, Economic Development Administration, Herbert C. Hoover Bldg., 14th & Constitution Avenue, NW, Room 7215, Washington, DC 20230, 202 377-2710

RIN: 0610-AA16

232. GENERAL REQUIREMENTS FOR FINANCIAL ASSISTANCE: EMPLOYMENT OF EXPEDITERS OR ADMINISTRATIVE EMPLOYEES; COMPENSATION OF PERSONS ENGAGED BY OR ON BEHALF OF APPLICANTS

Legal Authority: 42 USC 3211; DOC Organization Order 10-4, as amended

CFR Citation: 13 CFR 309

Legal Deadline: None.

Abstract: This rule amends EDA's general requirements regulation – employment of expediters or administrative employees – concerning EDA positions involving discretion, to conform to the reorganization of EDA pursuant to Department of Commerce Organization Order 45-1. Old positions which are no longer in existence are deleted. New comparable positions are listed in the amended regulations.

Timetable:

Action	Date	FR Cite
Interim Final Rule	05/20/85	50 FR 97
Final Action	06/00/88	

Small Entity: No

Affected Sectors: Multiple

Government Levels Affected: Local, State

Agency Contact: James F. Marten, Deputy Chief Counsel for Economic Development and Administration, Department of Commerce, Economic Development Administration, Herbert C. Hoover Bldg., 14th St. between Penn. & Const. Ave., NW, Washington, DC 20230, 202 377-5441

RIN: 0610-AA18

233. OVERALL ECONOMIC DEVELOPMENT PROGRAM PUBLIC WORKS AND DEVELOPMENT FACILITIES PROGRAM

Legal Authority: 42 USC 3211; DOC Organization Order 10-4, as amended

CFR Citation: 13 CFR 302; 13 CFR 304; 13 CFR 305

VOL 53 ISS 79 PT 1 APR 25 1988 UMI

Legal Deadline: None.

Abstract: This rule amends EDA's rules by updating provisions concerning Public Works Impact Areas and Special Impact Areas, specifically as to Designation Requirements; Overall Economic Development Program Requirements; and Supplementary Grant Rates.

Timetable:

Action	Date	FR Cite
Interim Final Rule	07/07/86	51 FR 24512
Final Action	06/00/88	

Small Entity: Not Applicable

Affected Sectors: Multiple

Government Levels Affected: Local, State

Agency Contact: Walter Archibald, Director, Office of Compliance Review, Department of Commerce, Economic Development Administration, Herbert C. Hoover Bldg., 14th & Constitution Avenue NW, Room 7215, Washington, DC 20230, 202 377-2710

RIN: 0610-AA19

234. DESIGNATION OF AREAS; DESIGNATION OF PWIP AREAS

Legal Authority: 42 USC 3211; Department of Commerce Organization Order 10-4, as amended

CFR Citation: 13 CFR 302

Legal Deadline: None.

Abstract: 13 CFR Part 302 at Section 302.7 entitled "Designation of Public Works Impact Program Areas" is amended at paragraph (a)(4) to delete reference to submission of an Overall Economic Development Program (OEDP) since under EDA's authorizing legislation, Public Works Impact Program (PWIP) projects need not meet OEDP requirements; and to add that although there are no boundary constraints for PWIPs under the Act, program considerations dictate that for an area to be given PWIP designation, it must be capable of analysis in light of available data establishing eligibility for designation.

Timetable:

Action	Date	FR Cite
Interim Final Rule	07/03/86	51 FR 24302
Final Action	05/00/88	

Small Entity: No

Affected Sectors: Multiple

Government Levels Affected: Local, State

Agency Contact: Walter Archibald, Director, Office of Compliance Review, Department of Commerce, Economic Development Administration, Herbert C. Hoover Bldg., 14th St. between Penn. and Const. Ave., NW, Room 7215, Washington, DC 20230, 202 377-2710

RIN: 0610-AA21

235. GENERAL REQUIREMENTS FOR FINANCIAL ASSISTANCE; UNFAIR COMPETITION

Legal Authority: 42 USC 3211; Dept. of Commerce Organization Order 10-4, as amended

CFR Citation: 13 CFR 309

Legal Deadline: None.

Abstract: 13 CFR 309 at Sec 309.2 entitled "Unfair Competition" has been amended to change conditions under which EDA will conduct a study (verification and evaluation) called a "702 Study" of the capacity and demand for particular goods, materials, commodities, services or facilities. The amendment will narrow the unfair competition requirements for a "702 Study" by raising the threshold amount of projects from $10,000 to $25,000. Also, the unfair competition exceptions have been expanded to apply to all EDA financial assistance programs. Certain projects are exempt from "702 Study" requirements and the definition of retention of capacity and employment has been changed by deleting the word "existing."

Timetable:

Action	Date	FR Cite
Interim Final Rule	05/02/86	51 FR 16292
Final Action	04/00/88	

Small Entity: Not Applicable

Affected Sectors: Multiple

Government Levels Affected: Local, State

Agency Contact: Walter Archibald, Director, Office of Compliance Review, Department of Commerce, Economic Development Administration, Herbert C. Hoover Bldg., 14th St. between Penn. and Const. Ave., NW, Room 7215, Washington, DC 20230, 202 377-2710

RIN: 0610-AA22

236. SALE OF LOANS AND LOAN GUARANTEES TO THE PRIVATE SECTOR

Significance: Regulatory Program

Legal Authority: 42 USC 3211; Department of Commerce Organization Order 10-4, as amended

CFR Citation: 13 CFR Chapter III

Legal Deadline: None.

Abstract: EDA seeks to repeal the limitation in the Commerce Appropriation Act ("McDade Amendment") whereby funds cannot be used to sell any loan to private interests, except with the consent of the borrower.

Timetable:

Action	Date	FR Cite
Next Action Undetermined		

Small Entity: Not Applicable

Affected Sectors: Multiple

Government Levels Affected: Local, State

Agency Contact: Joseph Levine, Chief Counsel, Department of Commerce, Economic Development Administration, 14th Street between Pennsylvania & Constitution Avenues, NW, Washington, DC 20230, 202 377-4678

RIN: 0610-AA31

237. GENERAL REQUIREMENTS FOR FINANCIAL ASSISTANCE – NONRELOCATION

Legal Authority: 42 USC 3211; Department of Commerce Organization Order 10-4, as amended

CFR Citation: 13 CFR 309.3

Legal Deadline: None.

Abstract: This rule will amend EDA's nonrelocation rule by changing the rate of interest to be charged when failure to abide by the nonrelocation rule results in termination of financial assistance provided by EDA. Interest will be at the rate used in Federal debt collection and discount evaluation under the Debt Collection Act. The rule will also state that the 48 month period for compliance by covered grantees is retroactive if the violation occurs after September 15, 1986.

Timetable:

Action	Date	FR Cite
Interim Final Rule	06/10/87	52 FR 21932
Final Action	05/00/88	

Small Entity: Not Applicable

Affected Sectors: Multiple

Government Levels Affected: Local, State

Agency Contact: Joseph Levine, Chief Counsel, Department of Commerce, Economic Development Administration, 14th Street between Pennsylvania & Constitution Avenues, NW, Washington, DC 20230, 202 377-4687

RIN: 0610-AA32

---

238. GENERAL REQUIREMENTS FOR FINANCIAL ASSISTANCE - PROJECT MODIFICATION

Legal Authority: 42 USC 3211; Department of Commerce Organization Order 10-4, as amended

CFR Citation: 13 CFR 309.26

Legal Deadline: None.

Abstract: The purpose of this amendment is to conform the statement of EDA's policy on project modification to guidelines established by the General Accounting Office on change of scope, by putting into regulatory language, that which has been actual EDA practice. The rule change provides standards and states that EDA will not allow project modification which would constitute a change of scope.

Timetable:

Action	Date	FR Cite
Interim Final Rule	10/20/87	51 FR 37175
Final Action	04/00/88	

Small Entity: Not Applicable

Affected Sectors: Multiple

Government Levels Affected: Local, State

Agency Contact: Joseph Levine, Chief Counsel, Department of Commerce, Economic Development Administration, 14th Street between Pennsylvania & Constitution Avenues, NW, Washington, DC 20230, 202 377-4687

RIN: 0610-AA33

---

239. PROTECTION OF EDA'S INTEREST IN FACILITIES ACQUIRED, BUILT, OR IMPROVED WITH EDA GRANT FUNDS

Significance: Regulatory Program

Legal Authority: 42 USC 3211; Department of Commerce Organization Order 10-4, as amended

CFR Citation: 13 CFR 314

Legal Deadline: None.

Abstract: EDA intends to initiate regulatory action to protect its interests by: (1) enabling EDA to acquire liens in property purchased or improved with EDA grant funds; and (2) once EDA has such ownership rights in property, by enabling EDA to expend funds to protect and care for such property, including liquidation, litigation or any other necessary action. The latter regulatory action is contingent upon legislation being enacted which authorizes EDA to expend funds and take other actions to protect its ownership rights in property purchased or improved with EDA grant funds. The Department of Commerce Legislative Program for the Second Session of the 100th Congress includes the submission of appropriate legislation to the Congress.

Timetable:

Action	Date	FR Cite
Interim Final Rule	04/00/88	
Final Action	07/00/88	
Final Action Effective	07/00/88	
Proposed Legislation	00/00/00	

Small Entity: Not Applicable

Affected Sectors: Multiple

Government Levels Affected: Local, State

Agency Contact: Joseph Levine, Chief Counsel, Department of Commerce, Economic Development Administration, 14th Street between Pennsylvania & Constitution Avenues, NW, Washington, DC 20230, 202 377-4687

RIN: 0610-AA35

---

240. LIABILITY FOR HAZARDOUS SUBSTANCES ASSOCIATED WITH EDA LOANS AND LOAN GUARANTEES

Significance: Regulatory Program

Legal Authority: 42 USC 3211; Department of Commerce Organization Order 10-4, as amended

CFR Citation: 13 CFR Chapter III

Legal Deadline: None.

Abstract: EDA will undertake some action to enable it to minimize financial losses resulting from hazardous substances on property it has acquired as a result of defaulted business loans and loan guarantees.

Timetable:

Action	Date	FR Cite
Interim Final Rule	05/00/88	
Final Action	08/00/88	
Final Action Effective	08/00/88	

Small Entity: Not Applicable

Affected Sectors: Multiple

Government Levels Affected: Local, State

Agency Contact: Joseph Levine, Chief Counsel, Department of Commerce, Economic Development Administration, 14th Street between Pennsylvania & Constitution Avenues, NW, Washington, DC 20230, 202 377-4687

RIN: 0610-AA36

---

241. ● ADJUSTMENT GRANTS - REVOLVING LOAN FUNDS

Legal Authority: 42 USC 3211; DOC Organization Order 10-4, as amended

CFR Citation: 13 CFR 308

Legal Deadline: None.

Abstract: This would amend EDA's rule on adjustment grants to provide that revolving loan fund (RLF) grants are held in trust by the grantee as trustee for the benefit of borrowers and potential borrowers.

Timetable:

Action	Date	FR Cite
Interim Final Rule	04/00/88	

Small Entity: No

Affected Sectors: Multiple

Government Levels Affected: Local, State

Agency Contact: James F. Marten, Acting Chief Counsel, Department of Commerce, Economic Development Administration, Herbert C. Hoover Bldg., Room 7001, 14th St. &

DOC—EDA **Final Rule Stage**

Constitution Ave., NW, Washington, DC 20230, 202 377-4667

RIN: 0610-AA37

DEPARTMENT OF COMMERCE (DOC) — Final Rule Stage
General Administration (ADMIN)

242. NONPROCUREMENT DEBARMENT AND SUSPENSION

Legal Authority: EO 12549, Debarment and Suspension

CFR Citation: 15 CFR 26

Legal Deadline: None.

Abstract: To eliminate duplicative and inconsistent debarment and suspension actions across the government. Private actions or actions by other levels of government would lack broad enough jurisdiction. This regulation will benefit the U.S. by eliminating duplicative and costly actions. Benefits have not been quantified at this time.

Timetable:

Action	Date	FR Cite
NPRM Comment Period End	12/21/87	52 FR 39021
Final Action	05/00/88	

Small Entity: Undetermined

Government Levels Affected: Local, State, Federal

Agency Contact: Robert McNamara, Grants/Cooperative Agreement Specialist, Department of Commerce, General Administration, 14th & Constitution Avenue, NW, Washington, DC 20230, 202 377-5817

RIN: 0605-AA02

DEPARTMENT OF COMMERCE (DOC) — Completed Actions
General Administration (ADMIN)

243. UNIFORM ADMINISTRATIVE REQUIREMENTS FOR GRANTS AND COOPERATIVE AGREEMENTS TO STATE AND LOCAL GOVERNMENTS

Legal Authority: 5 USC 301

CFR Citation: 15 CFR 24

Legal Deadline: None.

Abstract: This action states the fiscal and administrative conditions governing grants to State and local governments and subrecipients which are State and local governments. It is intended to simplify and standardize the Federal grant process and eliminate redundant and inconsistent administrative requirements.

Timetable:

Action	Date	FR Cite
NPRM	06/09/87	52 FR 21820
NPRM Comment Period End	08/10/87	
Final Action	03/11/88	53 FR 8034
Final Action Effective	10/01/88	

Small Entity: No

Government Levels Affected: Local, State

Agency Contact: Robert M. McNamara, Grants/Cooperative Agreement Specialist, Department of Commerce, General Administration, Room H6204, 14th Street and Constitution Ave., NW, Washington, DC 20230, 202 377-5817

RIN: 0605-AA03

DEPARTMENT OF COMMERCE (DOC) — Proposed Rule Stage
International Trade Administration (ITA)

244. GENERAL REGULATIONS GOVERNING FOREIGN TRADE ZONES IN THE UNITED STATES, WITH RULES OF PROCEDURES

Legal Authority: 19 USC 81a et seq Foreign-Trade Zones Act of 1934

CFR Citation: 15 CFR 400

Legal Deadline: None.

Abstract: Revision of the regulation is needed to administer the Foreign-Trade Zones Act of 1934, as amended, to provide for the establishment, operation, and maintenance of foreign-trade zones in ports of entry of the United States. At the time the ANPRM was published the emphasis was on changing the rules to provide improved guidance to the public on procedures and criteria followed in making decisions concerning special-purpose subzones and operations detrimental to the public interest. Since that time, it has been decided to propose revisions to the entire 15 CFR 400 in order to update the language and conform it to current CFR format.

Timetable:

Action	Date	FR Cite
ANPRM	10/14/80	45 FR 67681
ANPRM Comment Period End	12/15/80	
NPRM	02/18/83	48 FR 7151
NPRM Comment Period End	04/19/83	48 FR 7188

Next Action Undetermined

Small Entity: No

Affected Sectors: Multiple

Government Levels Affected: Local, State

Agency Contact: William D. Hunter, Acting Deputy Chief Counsel for Import Administration, Department of Commerce, International Trade Administration, Room 3622,

Pennsylvania Ave. and 14th St., NW, Washington, DC 20230, **202 377-1411**

RIN: 0625-AA04

245. ANNUAL WATCH QUOTA ALLOCATIONS

Legal Authority: PL 97-466, Sec 110 (1983); 19 USC 1202 general headnote 3(a)

CFR Citation: 15 CFR 303

Legal Deadline: None.

Abstract: The regulation allocates watch quotas on an annual basis, in compliance with the requirements of the statute and regulations. Program issues allocations no later than March 1 of each year, under section 303.6(b) of the regulations.

Timetable:

Action	Date	FR Cite
Proposed allocation of watches	04/00/88	

Small Entity: No

Agency Contact: Frank Creel, Director, Statutory Import Programs Staff, Department of Commerce, International Trade Administration, 14th and Pennsylvania Ave., NW, Rm. 1523, Washington, DC 20230, **202 377-1660**

RIN: 0625-AA25

246. ANTIDUMPING AND COUNTERVAILING DUTIES; MODIFICATIONS

Legal Authority: 19 USC 1303; 19 USC 1516a; 19 USC 1671 et seq

CFR Citation: 19 CFR 353; 19 CFR 355

Legal Deadline: None.

Abstract: As appropriate, the ITA will amend the current regulations in effect at the time of enactment of modifications in the statutory authority for imposing antidumping and countervailing duties, if such legislation is enacted in 1988 or 1989.

Timetable:

Action	Date	FR Cite

Next Action Undetermined

Small Entity: No

Agency Contact: William D. Hunter, Acting Deputy Chief Counsel for Import Administration, Department of Commerce, International Trade Administration, 14th and Pennsylvania Ave., NW, Washington, DC 20230, **202 377-1411**

RIN: 0625-AA26

247. EXPORT TRADE CERTIFICATES OF REVIEW

Significance: Agency Priority

Legal Authority: 15 USC 4020

CFR Citation: 15 CFR 325

Legal Deadline: None.

Abstract: Changes in 15 CFR Part 325 may become necessary as a result of pending trade legislation.

Timetable:

Action	Date	FR Cite
NPRM	12/21/82	47 FR 56972
Interim Final Rule	03/11/83	48 FR 10596
Final Action	01/08/85	50 FR 1804

Next Action Undetermined

Small Entity: No

Public Compliance Cost: Initial Cost: $0; Yearly Recurring Cost: $0

Government Levels Affected: Local, State, Federal

Agency Contact: George Muller, Deputy Director, Office of Export Trading Company Affairs, Department of Commerce, International Trade Administration, **202 377-5131**

RIN: 0625-AA27

248. ● DEFENSE PRIORITIES AND ALLOCATIONS SYSTEM (DPAS)

Legal Authority: 50 USC 2061 et seq; EO 10480

CFR Citation: 15 CFR 350

Legal Deadline: None.

Abstract: The Defense Priorities and Allocations System (DPAS) implements the priorities and allocations authority of Title I of the Defense Production Act of 1950, as amended. The DPAS was published as a final rule on July 30, 1984. Based on the findings and recommendations of an interagency sponsored study concerning the controlled materials program, and comments from both defense agency and industry users, this proposed rule would amend the DPAS to remove the controlled materials provisions and make certain revisions to its procedural requirements. These amendments will have no costs associated with them, would reduce the regulatory and information reporting burden on industry and make the DPAS more effective and efficient, and would result in cost savings for defense contractors.

Timetable:

Action	Date	FR Cite
NPRM	07/00/88	

Small Entity: Yes

Affected Sectors: Multiple

Government Levels Affected: Federal

Agency Contact: Richard V. Meyers, DPAS Program Manager, Department of Commerce, International Trade Administration, Office of Industrial Resources Admin., National Security Preparedness Div., Room 3878, Washington, DC 20230, **202 377-3634**

RIN: 0625-AA28

DEPARTMENT OF COMMERCE (DOC)

International Trade Administration (ITA)

Final Rule Stage

249. ADJUSTMENT ASSISTANCE FOR FIRMS AND INDUSTRIES

Legal Authority: 19 USC 2341 et seq

CFR Citation: 15 CFR 320

Legal Deadline: None.

Abstract: This regulation will implement the responsibilities transferred from EDA to ITA concerning the provision of adjustment assistance to firms and industries adversely affected by imports. The proposed rule will reflect amendments to the authorizing legislation and make procedural changes required because of the transfer of the program to ITA. Proposed rules were published in the Federal Register (November 1984).

DOC—ITA **Final Rule Stage**

Timetable:

Action	Date	FR Cite
NPRM	11/13/84	49 FR 44903
NPRM Comment Period End	12/13/84	

Next Action Undetermined

Small Entity: Not Applicable

Additional Information: Further action on this regulation is under study by the Department.

Affected Sectors: Multiple

Government Levels Affected: Federal

Agency Contact: John F. Mizroch, Deputy Assistant Secretary, Department of Commerce, International Trade Administration, Office of Trade Adjustment Assistance, Washington, DC 20230, 202 377-0150

RIN: 0625-AA05

250. ANTIDUMPING DUTIES; COUNTERVAILING DUTIES

Significance: Regulatory Program

Legal Authority: 19 USC 1303; 19 USC 1671 et seq

CFR Citation: 19 CFR 353; 19 CFR 355

Legal Deadline: None.

Abstract: Current antidumping and countervailing duty regulations will be revised to reflect recent statutory changes and current administrative practices and to improve the clarity of the regulations. The revisions will improve administrative efficiency in enforcement of the antidumping and countervailing duty laws. The revisions will replace the entire text of 19 CFR Parts 353 and 355.

Timetable:

Action	Date	FR Cite
NPRM CVD Regulations	06/10/85	50 FR 29225
NPRM Comment Period End CVD Regulations	09/09/85	50 FR 32088
NPRM AD Regulations	08/13/86	51 FR 29046
NPRM Comment Period End AD Regulations	09/30/86	
Final Action AD Regulations	06/30/88	
Final Action CVD Regulations	06/30/88	

Small Entity: No

Affected Sectors: Multiple

Agency Contact: William D. Hunter, Acting Deputy Chief Counsel for Import Administration, Department of Commerce, International Trade Administration, Room 3622, Pennsylvania Ave. & 14th St., NW, Washington, DC 20230, 202 377-1411

RIN: 0625-AA08

251. REVISIONS TO SHORT SUPPLY REGULATIONS

Legal Authority: 50 USC app 2401 et seq; PL 99-64; 42 USC app 2401 et seq; 10 USC 7420 et seq; 43 USC 1354; 30 USC 185; EO 11912; EO 12214; EO 12002

CFR Citation: 15 CFR 371; 15 CFR 377; 15 CFR 399

Legal Deadline: None.

Abstract: On July 12, 1985, the Export Administration Amendments Act of 1985 (PL 99-64) extended and amended the Export Administration Act of 1979 (50 USC app 2401, et seq.)(EAA). Certain changes were made to the Short Supply provisions of Section 7 of the EAA. Accordingly, revision of the Short Supply provisions (15 CFR 377) and related licensing requirements (15 CFR 371 and 399) of the Export Administration Regulations (15 CFR 368-399) is necessary. An interim final rule was issued which included (1) elimination of the validated licensing requirement for exports of refined petroleum products so as to permit their export with certain restrictions under a general license; (2) a new definition of "crude oil" for purposes of the regulation; and (3) certain technical and housekeeping changes. There are no costs associated with this action which would promote the export of decontrolled products.

Timetable:

Action	Date	FR Cite
Interim Final Rule	10/09/85	50 FR 41131
Final Action	12/00/88	

Small Entity: Yes

Agency Contact: Rodney A. Joseph, Short Supply Program Manager, Department of Commerce, Export Administration, Office of Technology and Policy Analysis, Room 1634, Washington, DC 20230, 202 377-3205

RIN: 0625-AA21

252. SANCTIONS FOR VIOLATION OF ANTIDUMPING AND COUNTERVAILING DUTY PROTECTIVE ORDERS

Significance: Regulatory Program

Legal Authority: 19 USC 1677

CFR Citation: 19 CFR 353; 19 CFR 354, (added); 19 CFR 355

Legal Deadline: None.

Abstract: The ITA will add a new part 354 to the antidumping (part 353) and countervailing duty (part 355) regulations that establishes procedures for imposing sanctions against an individual, firm or other entity that violates the terms of an administrative protective order issued under 19 U.S.C. 1677. We will make conforming changes in parts 353 and 355.

Timetable:

Action	Date	FR Cite
NPRM	07/06/87	52 FR 25246
NPRM Comment Period End	09/04/87	
Final Action	04/30/88	

Small Entity: No

Agency Contact: William D. Hunter, Acting Deputy Chief Counsel for Import Administration, Department of Commerce, International Trade Administration, 14th and Pennsylvania Ave., NW, Room 3622, Washington, DC 20230, 202 377-1411

RIN: 0625-AA24

DEPARTMENT OF COMMERCE (DOC)
International Trade Administration (ITA)

Completed Actions

253. EFFECT OF IMPORTED ARTICLES ON THE NATIONAL SECURITY

Legal Authority: 19 USC 1862 Trade Expansion Act of 1962, as amended; 5 USC App. Reorganization Plan No. 3 of 1979; EO 12188

CFR Citation: 15 CFR 359

Legal Deadline: None.

Abstract: Section 359.10(a) of the existing regulation requires that a report of an investigation be organized into several sections containing classified and unclassified information. Paragraph (c) of that section requires that the report (excluding confidential material) be published in the Federal Register. Paragraph (a) will be amended to delete the report organization requirement and paragraph (b) will be amended to permit publication of either the full report or a summary thereof. It is impractical, time consuming, and not cost effective to organize the report, and publish the full report, as now required by the regulation. Section 359.10(c) will also be amended to provide that a copy of the report will be available to the public from the Publications Distribution Office of the Department rather than at ITA's Freedom of Information Records Inspection Facility.

Timetable:

Action	Date	FR Cite
Withdrawn	01/13/88	

Small Entity: Not Applicable

Additional Information: No revision of the regulation is required at this time.

Affected Sectors: None

Agency Contact: Edward Levy, 232 Program Manager, Department of Commerce, International Trade Administration, Strategic Analysis Division, Washington, DC 20230, 202 377-2322

RIN: 0625-AA15

DEPARTMENT OF COMMERCE (DOC)
National Bureau of Standards (NBS)

Proposed Rule Stage

254. FIPS FOR INFORMATION RESOURCE DICTIONARY SYSTEM (IRDS)

Legal Authority: 40 USC 759(f); EO 11717

CFR Citation: 00 CFR None

Legal Deadline: None.

Abstract: This standard will adopt an American National Standard (now draft proposed) which will promote portability of information resources. The Information Resource Dictionary System is a software system for recording, storing, and processing descriptions of an organization's significant data. Use of the standard will improve identification of data that can be shared within an organization, reduce unnecessary development of computer programs, and increase portability of staff skills and training.

Timetable:

Action	Date	FR Cite
NPRM	08/13/85	50 FR 32610
NPRM Comment Period End	11/12/85	50 FR 32610

Next Action Undetermined

Small Entity: No

Affected Sectors: 357 Computer and Office Equipment

Government Levels Affected: Federal

Agency Contact: Shirley Radack, Program Analyst, Department of Commerce, National Bureau of Standards, B151 Technology, Gaithersburg, MD 20899, 301 975-2833

RIN: 0693-AA38

255. FIPS FOR CODES FOR THE IDENTIFICATION OF AQUIFER NAMES AND GEOLOGIC UNITS

Legal Authority: 40 USC 759(f); EO 11717

CFR Citation: 15 CFR 6

Legal Deadline: None.

Abstract: This standard will adopt for Federal government use codes for aquifer names and geologic units developed by the Department of the Interior under its Memorandum of Understanding with NBS to develop and maintain earth science data element and representation standards. The standard will facilitate the interchange of information among Federal departments and agencies.

Timetable:

Action	Date	FR Cite

Next Action Undetermined

Small Entity: No

Affected Sectors: 357 Computer and Office Equipment

Government Levels Affected: Federal

Agency Contact: Shirley Radack, Program Analyst, Department of Commerce, National Bureau of Standards, B151 Technology, Gaithersburg, MD 20899, 301 975-2833

RIN: 0693-AA44

256. FIPS FOR C PROGRAMMING LANGUAGE

Legal Authority: 40 USC 759(f); EO 11717

CFR Citation: 00 CFR None

Legal Deadline: None.

Abstract: This standard will adopt an American National Standard (currently draft proposed standard) which defines the syntax of the C programming language and the semantics for its interpretation. The standard will be used by implementors as the reference authority in developing compilers, interpreters or forms of high level language processors and by other computer professionals who need to know the precise syntactic and semantic rules of the standard. Use of this standard will promote the portability of programs between different systems, and will enable organizations to more fully utilize staff training and skills.

Timetable:

Action	Date	FR Cite
NPRM	01/09/87	52 FR 851
NPRM Comment Period End	04/09/87	52 FR 851

Next Action Undetermined

Small Entity: No

Affected Sectors: 357 Computer and Office Equipment

Government Levels Affected: Federal

Agency Contact: Shirley Radack, Program Analyst, Department of Commerce, National Bureau of Standards, B151 Technology, Gaithersburg, MD 20899, 301 975-2833

RIN: 0693-AA46

---

257. FIPS FOR RECORDED MAGNETIC TAPE CARTRIDGE FOR INFORMATION INTERCHANGE; 4-TRACK, SERIAL, 0.250 IN (6.30 MM), 6400 BPI (252 BPMM) INVERTED MODIFIED FREQUENCY MODULATION ENCODED

Legal Authority: 40 USC 759(f); EO 11717

CFR Citation: 00 CFR none

Legal Deadline: None.

Abstract: This standard will adopt an American National Standard (currently draft proposed) that provides the format and recording requirements for magnetic tape cartridges. The standard defines the requirements and supporting test methods needed to ensure data interchange between information systems, communications systems, and associated equipment.

Timetable:

Action	Date	FR Cite
Next Action Undetermined		

Small Entity: No

Affected Sectors: 357 Computer and Office Equipment

Government Levels Affected: Federal

Agency Contact: Shirley Radack, Program Analyst, Department of Commerce, National Bureau of Standards, B151 Technology, Gaithersburg, MD 20899, 301 975-2833

RIN: 0693-AA51

---

258. FIPS FOR SERIAL RECORDED MAGNETIC TAPE CARTRIDGE FOR INFORMATION INTERCHANGE; FOUR AND FIVE TRACK, 0.250 IN (6.30 MM) 8000 BPI (315 BPMM) STREAMING MODE GROUP CODE RECORDING

Legal Authority: 40 USC 759(f); EO 11717

CFR Citation: 00 CFR none

Legal Deadline: None.

Abstract: This standard will adopt an American National Standard (currently draft proposed) that provides the format and recording requirements for magnetic tape cartridges. The standard defines the requirements and supporting test methods needed to ensure data interchange between information systems, communications systems, and associated equipment.

Timetable:

Action	Date	FR Cite
Next Action Undetermined		

Small Entity: No

Affected Sectors: 357 Computer and Office Equipment

Government Levels Affected: Federal

Agency Contact: Shirley Radack, Program Analyst, Department of Commerce, National Bureau of Standards, B151 Technology, Gaithersburg, MD 20899, 301 975-2833

RIN: 0693-AA52

---

259. FIPS FOR ONE-HALF INCH MAGNETIC TAPE INTERCHANGE USING A SELF LOADING CARTRIDGE

Legal Authority: 40 USC 759(f); EO 11717

CFR Citation: 00 CFR none

Legal Deadline: None.

Abstract: This standard will adopt an American National Standard (ANSI X3.85-1981) which provides the requirements and test methods necessary to ensure physical interchange of a self loading cartridge to be used with 1/2 inch wide magnetic tape.

Timetable:

Action	Date	FR Cite
Next Action Undetermined		

Small Entity: No

Affected Sectors: 357 Computer and Office Equipment

Government Levels Affected: Federal

Agency Contact: Shirley Radack, Program Analyst, Department of Commerce, National Bureau of Standards, B151 Technology, Gaithersburg, MD 20899, 301 975-2833

RIN: 0693-AA53

---

260. FIPS FOR RECORDED FORMATS FOR ONE AND TWO-SIDED 5.25 INCH (130 MM) AND 3.5 IN (90 MM) FLEXIBLE DISK CARTRIDGES

Legal Authority: 40 USC 759(f); EO 11717

CFR Citation: 00 CFR none

Legal Deadline: None.

Abstract: This standard will adopt an American National Standard (currently draft proposed) that specifies the track layout, track format, and other characteristics of the recorded signal. This is one part of a set of functional specifications needed to ensure interchangeability of data between information processing systems by use of a physically removable medium.

Timetable:

Action	Date	FR Cite
Next Action Undetermined		

Small Entity: No

Affected Sectors: 357 Computer and Office Equipment

Government Levels Affected: Federal

Agency Contact: Shirley Radack, Program Analyst, Department of Commerce, National Bureau of Standards, B151 Technology, Gaithersburg, MD 20899, 301 975-2833

RIN: 0693-AA54

---

261. FIPS FOR RECORDED MAGNETIC TAPE AND CARTRIDGE FOR INFORMATION INTERCHANGE; 18 TRACK, PARALLEL, 12.65 MM (1/2 IN), 1491 CPMM (37871 CPI) GROUP-CODED RECORDING

Legal Authority: 40 USC 759(f); EO 11717

CFR Citation: 00 CFR none

Legal Deadline: None.

Abstract: This standard will adopt an American National Standard (currently draft proposed) that provides requirements for a tape cartridge to be used for information interchange among information processing systems, communications systems, and associated equipment. Used with associated standards for unrecorded media, tape labels and file structures, this standard will support data interchange between different systems.

Timetable:

Action	Date	FR Cite
Next Action Undetermined		

Small Entity: No

Affected Sectors: 357 Computer and Office Equipment

Government Levels Affected: Federal

Agency Contact: Shirley Radack, Program Analyst, Department of Commerce, National Bureau of Standards, B151 Technology, Gaithersburg, MD 20899, 301 975-2833

RIN: 0693-AA55

---

262. FIPS FOR DEVICE LEVEL INTERFACE FOR STREAMING CARTRIDGE AND CASSETTE TAPE DRIVES

Legal Authority: 40 USC 759(f); EO 11717

CFR Citation: 00 CFR None

Legal Deadline: None.

Abstract: This standard will adopt an American National Standard (ANSI X3.146-1986) that specifies the interface between streaming cartridge and cassette tape drives, and small computer systems. This standard will facilitate the acquisition of cartridge and cassette tape drives made by different manufacturers, expand the Federal Government's sources of supply, and reduce costs of acquisition.

Timetable:

Action	Date	FR Cite
Next Action Undetermined		

Small Entity: Undetermined

Affected Sectors: 357 Computer and Office Equipment

Government Levels Affected: Federal

Agency Contact: Shirley Radack, Program Analyst, Department of Commerce, National Bureau of Standards, B151 Technology, Gaithersburg, MD 20899, 301 975-2833

RIN: 0693-AA57

---

263. FIPS FOR ELECTRONIC BUSINESS DATA EXCHANGE

Legal Authority: 40 USC 759(f); EO 11717

CFR Citation: 00 CFR None

Legal Deadline: None.

Abstract: A group of voluntary industry standards that will facilitate computer-to-computer interchange of procurement data will be adopted as FIPS. Developed by Accredited Standards Committee X12, the standards will provide standard data elements, formats, and contents of electronic messages containing procurement-related information. These standards will reduce paperwork, improve productivity, and enable more effective information and inventory management.

Timetable:

Action	Date	FR Cite
Next Action Undetermined		

Small Entity: No

Affected Sectors: 357 Computer and Office Equipment

Government Levels Affected: Federal

Agency Contact: Shirley Radack, Program Analyst, Department of Commerce, National Bureau of Standards, B151 Technology, Gaithersburg, MD 20899, 301 975-2833

RIN: 0693-AA62

---

264. ● EXTENSIONS TO FIPS 127, DATABASE LANGUAGE SQL

Legal Authority: 40 USC 759(f); EO 11717

CFR Citation: 00 CFR None

Legal Deadline: None.

Abstract: The proposed extensions will adopt American National Standards (both currently draft standards) to the SQL language for relational databases. One proposal (Draft Addendum ISO 9075/DAD 1) provides features for assuring the correctness of data that is organized in SQL databases. The other proposal specifies interfaces between SQL and other programming languages including Ada, C, COBOL, FORTRAN, PASCAL, and PL/I. Use of these extensions will promote the portability of programs between different systems, and will enable organizations to more fully utilize staff skills and training.

Timetable:

Action	Date	FR Cite
NPRM	09/00/88	

Small Entity: No

Affected Sectors: 357 Computer and Office Equipment

Government Levels Affected: Federal

Agency Contact: Shirley Radack, Program Analyst, Department of Commerce, National Bureau of Standards, B151 Technology, Gaithersburg, MD 20899, 301 975-2833

RIN: 0693-AA63

---

265. ● FIPS FOR PROGRAMMER'S HIERARCHICAL INTERACTIVE GRAPHICS SYSTEM (PHIGS)

Legal Authority: 40 USC 759(f); EO 11717

CFR Citation: 00 CFR None

Legal Deadline: None.

Abstract: This FIPS will adopt the American National Standard Programmer's Hierarchical Interactive Graphics System (ANSI X3.144-198X). This standard will improve the portability of graphics application programs among different manufacturers' computer systems and will help agencies make more effective use of staff skills and training.

Timetable:

Action	Date	FR Cite
NPRM	04/00/88	

Small Entity: No

Affected Sectors: 357 Computer and Office Equipment

Government Levels Affected: Federal

Agency Contact: Shirley Radack, Program Analyst, Department of Commerce, National Bureau of Standards, B151 Technology, Gaithersburg, MD 20899, 301 975-2833

RIN: 0693-AA64

DEPARTMENT OF COMMERCE (DOC)
National Bureau of Standards (NBS)

Final Rule Stage

266. REVISION TO FIPS 100, INTERFACE BETWEEN DATA TERMINAL EQUIPMENT (DTE) AND DATA CIRCUIT-TERMINATING EQUIPMENT (DCE) FOR OPERATION WITH PACKET-SWITCHED DATA COMMUNICATIONS NETWORKS

Legal Authority: 40 USC 759(f); EO 11717

CFR Citation: 00 CFR None

Legal Deadline: None.

Abstract: This revision will make the standard consistent with minor changes that were made to Recommendation X.25 by the Consultative Committee for International Telegraph and Telephone in 1984. This is an international standard for data processing equipment, services and telecommunications equipment using public packet switched data communications networks.

Timetable:

Action	Date	FR Cite
NPRM	07/10/86	51 FR 25088
NPRM Comment Period End	10/08/86	51 FR 25088
Final Action	06/00/88	

Small Entity: No

Affected Sectors: 357 Computer and Office Equipment

Government Levels Affected: Federal

Agency Contact: Shirley Radack, Program Analyst, Department of Commerce, National Bureau of Standards, B151 Technology, Gaithersburg, MD 20899, 301 975-2833

RIN: 0693-AA39

267. FIPS FOR PORTABLE OPERATING SYSTEM ENVIRONMENTS (POSIX**)

Legal Authority: 40 USC 759(f); EO 11717

CFR Citation: 00 CFR none

Legal Deadline: None.

Abstract: This standard will adopt the Institute of Electrical and Electronics Engineers (IEEE) Standard for Portable Operating System for Computer Environments (IEEE 1003.1/POSIX**). This standard will facilitate the interchange of computer programs between UNIX operating system derived environments and make it possible to increase the productivity of staff members who develop and document computer programs for these systems.

* UNIX is a registered trademark of AT&T.

**POSIX is a trademark of the IEEE.

Timetable:

Action	Date	FR Cite
NPRM	08/29/86	51 FR 30896
NPRM Comment Period End	11/28/86	51 FR 30896
Final Action	06/00/88	

Small Entity: No

Affected Sectors: 357 Computer and Office Equipment

Government Levels Affected: Federal

Agency Contact: Shirley Radack, Program Analyst, Department of Commerce, National Bureau of Standards, B151 Technology, Gaithersburg, MD 20899, 301 975-2833

RIN: 0693-AA49

268. FIPS FOR STANDARD GENERALIZED MARKUP LANGUAGE (SGML)

Legal Authority: 40 USC 759(f); EO 11717

CFR Citation: 00 CFR none

Legal Deadline: None.

Abstract: This standard will adopt an International Standard ISO/DIS 8879 (currently a draft standard) which standardizes the application of generic coding and generalized markup concepts for documents that are processed by text processing and word processing systems. It provides a coherent and unambiguous syntax for describing what a user chooses to identify within a document. Use of this standard will facilitate the interchange of documents among systems with differing text processing languages and the processing of documents by more than one application, when applications use the same text processing language.

Timetable:

Action	Date	FR Cite
NPRM	10/29/87	52 FR 41609
NPRM Comment Period End	01/27/88	52 FR 41609
Final Action	09/00/88	

Small Entity: No

Affected Sectors: 357 Computer and Office Equipment

Government Levels Affected: Federal

Agency Contact: Shirley Radack, Program Analyst, Department of Commerce, National Bureau of Standards, B151 Technology, Gaithersburg, MD 20899, 301 975-2833

RIN: 0693-AA50

269. REVISIONS TO FIPS 60, 61, 62, 63, 97, AND 111, COMPUTER SYSTEM INPUT/OUTPUT (I/O) INTERFACE STANDARDS

Legal Authority: 40 USC 759(f); EO 11717

CFR Citation: 00 CFR None

Legal Deadline: None.

Abstract: Revisions to the family of input/output (I/O) interface standards will be proposed to reflect changes in computer technology and to facilitate the interconnection of peripherals to personal and minicomputers. New applicability, implementation and waiver provisions will be proposed to existing interface standards to be effective after January 1, 1990. A transition plan to cover the period from January 1988 to January 1990 will also be proposed.

Timetable:

Action	Date	FR Cite
NPRM	11/19/87	52 FR 44462
NPRM Comment Period End	02/17/88	52 FR 44462
Final Action	12/00/88	

Small Entity: Undetermined

Affected Sectors: 357 Computer and Office Equipment

Government Levels Affected: Federal

Agency Contact: Shirley Radack, Program Analyst, Department of Commerce, National Bureau of Standards, B151 Technology, Gaithersburg, MD 20899, 301 975-2833

RIN: 0693-AA59

270. FIPS FOR GOVERNMENT OPEN SYSTEMS INTERCONNECTION PROFILE

Legal Authority: 40 USC 759(f); EO 11717

CFR Citation: 00 CFR None

Legal Deadline: None.

Abstract: This standard will adopt a procurement specification developed by the Government Open Systems Interconnection Users Group. The specification will enable the Federal government to acquire computer network systems that conform to

national and international standards for OSI. The specification addresses needs to acquire multivendor systems using available or soon-to-be-available standard products.

Timetable:

Action	Date	FR Cite
NPRM	10/28/87	52 FR 41488
NPRM Comment Period End	01/26/88	52 FR 41488
Final Action	06/00/88	

Small Entity: Undetermined

Affected Sectors: 357 Computer and Office Equipment

Government Levels Affected: Federal

Agency Contact: Shirley Radack, Program Analyst, Department of Commerce, National Bureau of Standards, B151 Technology, Gaithersburg, MD 20899, 301 975-2833

RIN: 0693-AA61

DEPARTMENT OF COMMERCE (DOC)
National Bureau of Standards (NBS)

Completed Actions

271. FIPS PUB 68-2, BASIC

Legal Authority: 40 USC 759(f); EO 11717

CFR Citation: 00 CFR None

Legal Deadline: None.

Abstract: This standard adopts American National Standard (ANSI X3.113-1987) which defines the syntax of the BASIC programming language and the semantics for its interpretation. The standard will be used by implementors as the reference authority in developing compilers, interpreters or forms of high level language processors and by other computer professionals who need to know the precise syntactic and semantic rules of the standard. Use of this standard will promote the portability of programs between different systems, and will enable organizations to more fully utilize staff training and skills.

Timetable:

Action	Date	FR Cite
NPRM	01/13/86	51 FR 1418
NPRM Comment Period End	04/14/86	51 FR 1418
Final Action	06/26/87	52 FR 32578
Final Action Effective	03/01/88	52 FR 32578

Small Entity: No

Affected Sectors: 357 Computer and Office Equipment

Government Levels Affected: Federal

Agency Contact: Shirley Radack, Program Analyst, Department of Commerce, National Bureau of Standards, B151 Technology, Gaithersburg, MD 20899, 301 975-2833

RIN: 0693-AA35

272. FIPS PUB 29-2, INTERPRETATION PROCEDURES FOR FEDERAL INFORMATION PROCESSING STANDARDS FOR SOFTWARE

Legal Authority: 40 USC 759(f); EO 11717

CFR Citation: 00 CFR None

Legal Deadline: None.

Abstract: This revision to the interpretation procedures for Federal Information Processing Standard programming languages will provide for more flexibility and more timely response to requests for interpretations by adding to the methods that are available for developing interpretations.

Timetable:

Action	Date	FR Cite
NPRM	12/10/86	51 FR 44505
NPRM Comment Period End	03/10/87	51 FR 44505
Final Action	09/14/87	52 FR 34696
Final Action Effective	09/14/87	52 FR 34696

Small Entity: No

Affected Sectors: 357 Computer and Office Equipment

Government Levels Affected: Federal

Agency Contact: Shirley Radack, Program Analyst, Department of Commerce, National Bureau of Standards, B151 Technology, Gaithersburg, MD 20899, 301 975-2833

RIN: 0693-AA47

273. FIPS FOR INTERFACES BETWEEN FLEXIBLE DISK CARTRIDGE DRIVES AND THEIR HOST CONTROLLERS

Legal Authority: 40 USC 759(f); EO 11717

CFR Citation: 00 CFR None

Legal Deadline: None.

Abstract: This standard will adopt an American National Standard (ANSI X3.80-1981) that specifies the interface between flexible disk drives and the host system. This standard will facilitate the acquisition of flexible disk drives made by different manufacturers, expand the Federal government's sources of supply, and reduce costs of acquisition.

Timetable:

Action	Date	FR Cite
Withdrawn -not needed to meet government requirements.	02/26/88	

Small Entity: Undetermined

Affected Sectors: 357 Computer and Office Equipment

Government Levels Affected: Federal

Agency Contact: Shirley Radack, Program Analyst, Department of Commerce, National Bureau of Standards, B151 Technology, Gaithersburg, MD 20899, 301 975-2833

RIN: 0693-AA58

274. REVIEW OF FIPS 46, DATA ENCRYPTION STANDARD

Legal Authority: 40 USC 759(f); EO 11717

CFR Citation: 00 CFR None

Legal Deadline: None.

Abstract: FIPS 46, Data Encryption Standard (DES), will be reviewed to assess its adequacy in protecting unclassified computer information. FIPS 46 was approved for Federal government use in 1977 and reaffirmed in 1983. The DES specifies an algorithm to be implemented in electronic

hardware devices and used for the cryptographic protection of computer data.

Timetable:

Action	Date	FR Cite
NPRM	03/06/87	52 FR 7006
NPRM Comment Period End	06/04/87	52 FR 7006
Final Action	01/22/88	53 FR 01813

Small Entity: No

Affected Sectors: 357 Computer and Office Equipment

Government Levels Affected: Federal

Agency Contact: Shirley Radack, Program Analyst, Department of Commerce, National Bureau of Standards, B151 Technology, Gaithersburg, MD 20899, 301 975-2833

RIN: 0693-AA60

DEPARTMENT OF COMMERCE (DOC)

National Oceanic and Atmospheric Administration (NOAA)

Prerule Stage

NATIONAL MARINE FISHERIES SERVICE

275. MARINE FISHERY USER FEES

Significance: Regulatory Program

Legal Authority: Not Yet Determined

CFR Citation: Not yet determined

Legal Deadline: None.

Abstract: A marine fishery user fee system will provide a substantial and stable source of revenue to partially offset Federal fishery expenditures and information needed for effective fishery management. Fees would be collected from the sale of marine fish conservation permits and stamps, and from an assessment on landing or delivery of fish for commercial purposes. Revenues would be shared with the states for marine fishery conservation activities. Administration costs are estimated to be $7,500,000 annually, with net Federal revenues of approximately $40 million.

Timetable:

Action	Date	FR Cite
Next steps depend on Congressional action	00/00/00	

Small Entity: Undetermined

Public Compliance Cost: Initial Cost: $7,500,000; Yearly Recurring Cost: $7,500,000; Base Year for Dollar Estimates: 1986

Affected Sectors: 203 Canned, Frozen, and Preserved Fruits, Vegetables, and Food Specialties

Government Levels Affected: State, Federal

Agency Contact: John T. Everett, Chief, Program Evaluation and Coordination Division, Department of Commerce, National Oceanic and Atmospheric Administration, Management and Budget Staff, NMFS, Washington, DC 20235, 202 673-5464

RIN: 0648-AB93

276. TAKING OF MARINE MAMMALS INCIDENTAL TO UNDERWATER TESTS BY THE DEPARTMENT OF THE NAVY

Legal Authority: 16 USC 1361 to 1497 Marine Mammal Protection Act of 1972

CFR Citation: 50 CFR 228

Legal Deadline: None.

Abstract: Based on a request from the Department of the Navy, NMFS is considering regulations that would allow a small number of harbor seals and California sea lions to be taken incidental to underwater explosive tests in San Francisco Bay. Section 101(a)(5) of the Marine Mammal Protection Act allows the taking of small numbers of Marine mammals incidental to specified activities provided that certain findings can be made and regulations are established that set forth permissible methods of taking and requirements for monitoring and reporting.

Timetable:

Action	Date	FR Cite
ANPRM	08/01/88	

Small Entity: No

Agency Contact: Nancy Foster, Director, Office of Protected Resources, and Habitat Programs, NMFS, Department of Commerce, National Oceanic and Atmospheric Administration, 1825 Connecticut Ave., NW, Washington, DC 20235, 202 673-5350

RIN: 0648-AC08

277. AMENDMENT 1 GULF OF MEXICO REEF FISH FISHERY MANAGEMENT PLAN

Legal Authority: 16 USC 1801 et seq Magnuson Fishery Conservation & Mgmt Act

CFR Citation: 50 CFR 641

Legal Deadline: Statutory, 110 days after submission of the Amendment by the Fishery Management Council

Abstract: The regulations will attempt to rebuild declining reef fish stocks. It will propose to (1) prohibit use of fish traps, roller trawls, and powerheads within inshore stressed areas, (2) establish construction requirements, maximum size and numerical limits for fish traps, (3) require a permit for fish trap operators, and (4) establish a minimum size limit of 13 inches.

Timetable:

Action	Date	FR Cite
ANPRM	09/16/88	
NPRM	10/01/88	
NPRM Comment Period End	11/14/88	
Final Action	01/03/89	
Final Action Effective	02/02/89	

Small Entity: Undetermined

Affected Sectors: 091 Commercial Fishing

Government Levels Affected: Federal

Agency Contact: Craig O'Connor, Acting Director, Southeast Region, Department of Commerce, National Oceanic and Atmospheric Administration, 9450 Koger Blvd., St. Petersburg, FL 33702, 813 893-3141

RIN: 0648-AC16

BEST COPY AVAILABLE

278. AMENDMENT 8 TO THE FISHERY MANAGEMENT PLAN FOR THE ATLANTIC SURF CLAM AND OCEAN QUAHOG FISHERIES

Significance: Regulatory Program

Legal Authority: 16 USC 1801 et seq; Magnuson Fishery Conservation and Management Act

CFR Citation: 50 CFR 652

Legal Deadline: Statutory. 110 days after the Amendment is submitted by the Mid-Atlantic Fishery Management Council.

Abstract: Amendment 8 would address current regulatory restraints on industry designed to conserve the resource. The FMP objectives would be modified to promote economic stability, simplify regulations, and to allow more operational flexibility for the industry. Long-term management alternatives to be considered include an Individual Transferable Quota System and other limited effort vessel allocation schemes.

Timetable:

Action	Date	FR Cite
ANPRM	08/04/88	
NPRM	08/18/88	
NPRM Comment Period End	10/03/88	
Final Action	11/22/88	
Final Action Effective	12/22/88	

Small Entity: Yes

Affected Sectors: 091 Commercial Fishing

Government Levels Affected: Federal

Agency Contact: Richard B. Roe, Director, Northeast Region, Department of Commerce, National Oceanic and Atmospheric Administration, National Marine Fisheries Service, 14 Elm Street, Gloucester, MA 01930-3799, 617 281-3600

RIN: 0648-AC19

279. ● AMENDMENT 2 TO THE NORTHEAST MULTISPECIES FISHERY MANAGEMENT PLAN

Significance: Regulatory Program

Legal Authority: 16 USC 1801 et seq Magnuson Fishery Conservation & Mgmt. Act

CFR Citation: 50 CFR 651

Legal Deadline: Statutory. 110 days after the amendment is submitted by the Fishery Management Council.

Abstract: Amendment 2 will provide additional protection to groundfish resources in the North Atlantic beyond that provided by the FMP. The amendment is aimed at reducing fishing pressure on ten valuable fish species and rebuilding their stocks (cod; haddock; yellowtail, winter, windowpane, and witch flounders; pollock; redfish; American plaice; and white hake).

Timetable:

Action	Date	FR Cite
ANPRM	10/15/88	
NPRM	11/01/88	
NPRM Comment Period End	12/15/88	
Final Action	02/20/89	
Final Action Effective	03/20/89	

Small Entity: Yes

Affected Sectors: 091 Commercial Fishing

Government Levels Affected: Federal

Agency Contact: Richard B. Roe, Director, Northeast Region, Department of Commerce, National Oceanic and Atmospheric Administration, 14 Elm Street, Gloucester, MA 01930-3799, 617 281-3600

RIN: 0648-AC26

280. ● AMENDMENT 4 TO THE PACIFIC COAST GROUNDFISH FISHERY MANAGEMENT PLAN

Legal Authority: 16 USC 1801 et seq Magnuson Fishery Conservation & Mgmt. Act

CFR Citation: 50 CFR 663; 50 CFR 611.70

Legal Deadline: Statutory. 110 days after the amendment is submitted by the Pacific Fishery Management Council.

Abstract: Amendment 4 will make many technical and format changes to the FMP to make it a more useful and up-to-date document. Amendment 4 may consider the following: broader framework authority to take timely inseason actions for social-economic reasons; long-term sablefish management, including possible allocation to user groups; procedures for establishing allowable incidental catch levels in other fisheries; a framework for reviewing and conforming Federal management measures to changes in California State management of the set net fishery south of 38 degrees N. latitude; the recreational bag limit for lingcod; the definitions and application of ABC and OY; effort limitation in the joint venture fishery for Pacific whiting; revision of procedures regarding experimental fishing permits. The Amendment still is in the planning stage and may not include all these issues, or may add others.

Timetable:

Action	Date	FR Cite
ANPRM	10/01/88	
NPRM	10/15/88	
NPRM Comment Period End	11/29/88	
Final Action	01/18/89	
Final Action Effective	02/17/89	

Small Entity: Undetermined

Affected Sectors: 091 Commercial Fishing

Government Levels Affected: Federal

Agency Contact: Rolland A. Schmitten, Director, Northwest Region, Department of Commerce, National Oceanic and Atmospheric Administration, 7600 Sand Point Way NE, Bldg 1, Seattle, WA 98115, 206 526-6150

RIN: 0648-AC43

281. ● AMENDMENT 1 TO THE FISHERY MANAGEMENT PLAN FOR THE SNAPPER- GROUPER FISHERY OF THE SOUTH ATLANTIC

Legal Authority: 16 USC 1801 et seq Magnuson Fishery Conservation & Mgmt. Act

CFR Citation: 50 CFR 646

Legal Deadline: Statutory. 110 days after the amendment is submitted by the South Atlantic Fishery Management Council.

Abstract: Amendment 1 would prohibit the use of trawl gear in the directed fishery for snapper-groupers. The ban would apply from Cape Hatteras south through the Atlantic coast of Florida. More than 25 percent of the catch by trawls in this area is from the snapper-grouper complex. The prohibition is aimed primarily at fishing with roller trawls which destroy sessile organisms, including sponges and sea fans.

Timetable:

Action	Date	FR Cite
ANPRM	06/16/88	
NPRM	07/01/88	
NPRM Comment Period End	08/15/88	
Final Action	10/05/88	
Final Action Effective	11/04/88	

Small Entity: Undetermined

Affected Sectors: 091 Commercial Fishing

Government Levels Affected: Federal

Agency Contact: Craig O'Connor, Acting Regional Director, Department of Commerce, National Oceanic and Atmospheric Administration, 9450 Koger Blvd., St. Petersburg, FL 33702, 813 893-3141

RIN: 0648-AC50

282. ● BLUEFISH FISHERY MANAGEMENT PLAN

Legal Authority: 16 USC 1801 et seq Magnuson Fishery Conservation & Mgmt. Act

CFR Citation: Not yet determined

Legal Deadline: Statutory. 110 days after submission by the Fishery Management Council.

Abstract: The FMP would control the growth of the recreational and commercial fisheries in the EEZ. The Atlantic States Marine Fisheries Commission is developing a plan simultaneously with the Council and will coordinate state management with federal management of bluefish throughout its range.

Timetable:

Action	Date	FR Cite
ANPRM	11/01/88	
NPRM	11/16/88	
NPRM Comment Period End	01/01/89	
Final Action	02/22/89	
Final Action Effective	03/04/89	

Small Entity: Undetermined

Affected Sectors: 091 Commercial Fishing

Government Levels Affected: Federal

Agency Contact: Richard Roe, Director, Northeast Region, Department of Commerce, National Oceanic and Atmospheric Administration, 14 Elm Street, Gloucester, MA 01930-3799, 617 281-3600

RIN: 0648-AC51

NATIONAL OCEAN SURVEY/OFFICE OF COASTAL RESOURCES MANAGEMENT

283. FEDERAL CONSISTENCY WITH APPROVED COASTAL ZONE MANAGEMENT PROGRAMS

Significance: Regulatory Program

Legal Authority: 16 USC 1456 Coastal Zone Management Act of 1972

CFR Citation: 15 CFR 930

Legal Deadline: None.

Abstract: On January 11, 1984, the U.S. Supreme Court issued its decision in Secretary of the Interior et al. v. California et al. No. 82-1326. The Court held that the sale of Outer Continental Shelf (OCS) oil and gas leases is not an activity "directly affecting" the Coastal Zone Management Act of 1972, as amended (CZMA), and therefore, that a consistency determination is not required under that section before such sales may be made. Section 307 (c)(1) required that Federal agencies conducting or supporting activities "directly affecting the coastal zone" must conduct or support those activities in a manner which is consistent to the maximum extent practicable with federally-approved state coastal zone management programs. NOAA engaged in rulemaking to revise certain CZMA regulations as a result of the Supreme Court decision. NOAA removed those references which identify OCS lease sales as activities covered by the Section 307(c)(1) requirements.

Timetable:

Action	Date	FR Cite
ANPRM	06/01/84	49 FR 22825
ANPRM Comment Period End	08/31/84	49 FR 22825
NPRM	01/28/85	50 FR 3798
NPRM Comment Period End	03/01/85	50 FR 3798
Final Action	08/30/85	50 FR 35210
Decision whether to proceed with rulemaking	04/15/88	

Small Entity: No

Additional Information: NOAA issued a final rule August 31, 1985 making the changes required by the Supreme Court Decision, and decided to undertake a comprehensive study of the Federal consistency process. The Draft Study issued April 1985 will assist NOAA in evaluating the need for and consequences of further revision of the Federal consistency regulations. Further revision has been deferred pending review of public comment on the April study, and amendments to the CZMA enacted in 1986, and the outcome of pending litigation.

Affected Sectors: Multiple

Government Levels Affected: State, Federal

Agency Contact: James P. Blizzard, Deputy Director, Office of Ocean and Coastal Resource Mgmt., Department of Commerce, National Oceanic and Atmospheric Administration, 1825 Connecticut Avenue, NW, Washington, DC 20235, 202 673-5111

RIN: 0648-AA34

DEPARTMENT OF COMMERCE (DOC)
National Oceanic and Atmospheric Administration (NOAA)

Proposed Rule Stage

NATIONAL MARINE FISHERIES SERVICE

284. PROCESSED FISHERY PRODUCTS, PROCESSED PRODUCTS THEREOF & CERTAIN OTHER PROCESSED FOOD PRODUCTS: U.S. STANDARDS FOR GRADES OF FROZEN FISH BLOCKS & PRODUCTS MADE THEREFROM ETC

Legal Authority: 7 USC 1621 to 1630 Agricultural Marketing Act of 1946

CFR Citation: 50 CFR 264A; 50 CFR 264B; 50 CFR 264C; 50 CFR 264D; 50 CFR 264E; 50 CFR 264F; 50 CFR 264G

Legal Deadline: None.

Abstract: The revised rule will expand the coverage of established voluntary standards for grades of fishery products to include new products made from fish blocks. The standards will take into account new technology and equipment. These standards will be used in a voluntary program of fishery products inspection and certification by the NMFS. Industry has shown a high level of interest and support for the revisions. The timetable for this action is very tentative. Further research will be needed before the rule is published.

Timetable:

Action	Date	FR Cite
Next Action Undetermined		

Small Entity: No

Additional Information: Neither an RIA nor an RFA is required or will be prepared.

Affected Sectors: 091 Commercial Fishing; 209 Miscellaneous Food Preparations and Kindred Products

Government Levels Affected: State, Federal

Analysis: See Additional Information

Agency Contact: Rita A. Creitz, Program Analyst, Department of Commerce, National Oceanic and Atmospheric Administration, Office of Trade and Industry Services, Inspection Services Division, Washington, DC 20235, 202 673-5875

RIN: 0648-AA46

285. IMPLEMENTATION OF PL 59-659 AND OTHER RECOMMENDATIONS TO IMPROVE THE FISHERY MANAGEMENT SYSTEM

Significance: Regulatory Program

Legal Authority: 16 USC 1801 et seq Magnuson Fishery Conser and Management Act

CFR Citation: 50 CFR 601

Legal Deadline: None.

Abstract: Revision of regulatory guidance with regard to the operations of the Regional Fishery Management Councils is being considered to conform with new legislation and administration regulatory policy. These guidelines will not have a direct regulatory impact on the fishing industry or entities participating in the industry.

Timetable:

Action	Date	FR Cite
NPRM	04/00/88	
NPRM Comment Period End	05/00/88	
Final Action	06/00/88	
Final Action Effective	07/00/88	

Small Entity: No

Additional Information: Neither an RIA nor an RFA is required or will be prepared.

Affected Sectors: None

Government Levels Affected: State, Federal

Agency Contact: Richard H. Schaefer, Acting Director, Office of Fisheries, Conservation and Management, Department of Commerce, National Oceanic and Atmospheric Administration, Washington, DC 20235, 202 673-5263

RIN: 0648-AB09

286. DEVELOPMENT OF A FISHERY MANAGEMENT PLAN FOR SUMMER FLOUNDER

Legal Authority: 16 USC 1801 et seq Magnuson Fishery Conser and Management Act

CFR Citation: 50 CFR 653, (Reserved)

Legal Deadline: Statutory. 110 days after the amendment is submitted by the Fishery Management Council.

Abstract: Summer flounder is seasonably vulnerable to very large and varied commercial and recreational fisheries. Landings have declined in recent years and there is concern that overfishing may occur. The summer flounder crosses Council and Regional boundaries necessitating close coordination between the constituent agencies. The long-term benefits of higher production and revenue to the fishermen and processors are expected to outweigh any short-term limitations on catches in order to rebuild the stocks. Rebuilding the stocks to the maximum level, the efficiency of the fleet will improve as catches per unit of effort will correspondingly rise.

Timetable:

Action	Date	FR Cite
NPRM	03/03/88	
NPRM Comment Period End	05/15/88	
Final Action	07/31/88	
Final Action Effective	08/30/88	

Small Entity: Undetermined

Affected Sectors: 091 Commercial Fishing

Government Levels Affected: Federal

Agency Contact: Richard B. Roe, Director, Northeast Region, Department of Commerce, National Oceanic and Atmospheric Administration, National Marine Fisheries Service, 14 Elm St. FNER, Gloucester, MA 01930, 617 281-3600

RIN: 0648-AB30

287. ENDANGERED FISH OR WILDLIFE; PERMITS FOR THE INCIDENTAL TAKING OF ENDANGERED MARINE SPECIES

Legal Authority: 16 USC 1531 et seq Endangered Species Act of 1973

CFR Citation: 50 CFR 222

Legal Deadline: None.

Abstract: The proposed regulations implement Section 10(a)(1)(B) of the Endangered Species Act, as amended (ESA). The proposal provides, under limited circumstances, for issuance of permits allowing the incidental taking of endangered species. The proposal applies to certain Federal permit or license holders and to private entities or State or local governments whose actions are not otherwise subject to Federal involvement or control. Prior to the 1982 amendments to the ESA, the taking of endangered species was prohibited except for scientific research or to enhance the propagation or survival of the species. Permits issued under the proposed regulations would allow permit holders to conduct their activities without risk of prosecution for the incidental take of species authorized by such permits.

Timetable:

Action	Date	FR Cite
NPRM	04/00/88	
NPRM Comment Period End	06/00/88	

Small Entity: Undetermined

Additional Information: Potential cost to applicants is estimated at $420. Cost per applicant is estimated at $210. Each applicant will be required to submit a conservation plan as part of the permit process. NEPA, E.O. 12291 and RFA determinations have not been undertaken.

Affected Sectors: 091 Commercial Fishing

Government Levels Affected: Local, State, Federal

Agency Contact: Patricia A. Carter, Fishery Biologist, Department of Commerce, National Oceanic and Atmospheric Administration, Office of

Protected Resources and Habitat Programs, NMFS, Washington, DC 20235, 202 673-5351

RIN: 0648-AB47

288. GROUNDFISH OF THE GULF OF ALASKA AND HIGH SEAS SALMON FISHERY OFF ALASKA; REGULATORY AMENDMENT

Legal Authority: 16 USC 1801 et seq Magnuson Fishery Conser and Management Act

CFR Citation: 50 CFR 672; 50 CFR 674; 50 CFR 611.92

Legal Deadline: None.

Abstract: As required under P.L. 98-623, NOAA issues a regulatory amendment to codify the fishery management boundaries of southeastern Alaska established by that law.

Timetable:

Action	Date	FR Cite
NPRM	06/00/88	
NPRM Comment Period End	07/00/88	
Final Action	09/00/88	
Final Action Effective	10/00/88	

Small Entity: Undetermined

Affected Sectors: 091 Commercial Fishing

Government Levels Affected: State, Federal

Agency Contact: Jonathan Pollard, Attorney-Advisor, Department of Commerce, National Oceanic and Atmospheric Administration, NOAA Office of General Counsel-GCAK, P.O. Box 21668, Juneau, AK 99801, 907 568-7414

RIN: 0648-AB51

289. AMENDMENT 2 TO THE FISHERY MANAGEMENT PLAN FOR ATLANTIC SEA SCALLOPS

Legal Authority: 16 USC 1801 et seq Magnuson Fishery Conservation & Mgmt Act

CFR Citation: 50 CFR 650

Legal Deadline: Statutory. 110 days after the amendment is submitted by the Fishery Management Council.

Abstract: This amendment will revise the management program by modifying the meat count measure to include a provision for seasonal changes reflecting fluctuations in the size of scallops.

Timetable:

Action	Date	FR Cite
NPRM	03/00/88	
NPRM Comment Period End	05/00/88	
Final Action	06/00/88	
Final Action Effective	07/00/88	

Small Entity: Undetermined

Affected Sectors: 091 Commercial Fishing

Government Levels Affected: Federal

Agency Contact: Richard B. Roe, Director, Northeast Region, Department of Commerce, National Oceanic and Atmospheric Administration, National Marine Fisheries Service, 14 Elm Street, Gloucester, MA 01930, 617 281-3600

RIN: 0648-AB83

290. RESUBMITTED PORTION OF AMENDMENT 1 TO THE AMERICAN LOBSTER FISHERY MANAGEMENT PLAN

Legal Authority: 16 USC 1801 et seq Magnuson Fishery Conservation & Mgmt Act

CFR Citation: 50 CFR 649

Legal Deadline: Statutory. 110 days after the amendment is submitted by the fishery management council.

Abstract: The revised portion of the amendment will exempt Mid-Atlantic black sea bass fishing gear from the escape vent requirement in a specified fishing area east and south of Barnegat, New Jersey.

Timetable:

Action	Date	FR Cite
NPRM	04/14/88	
NPRM Comment Period End	04/25/88	
Final Action	06/14/88	
Final Action Effective	07/14/88	

Small Entity: Undetermined

Affected Sectors: 091 Commercial Fishing

Government Levels Affected: Federal

Agency Contact: Richard Roe, Director, Northeast Region, Department of Commerce, National Oceanic and Atmospheric Administration, F/NER, 14 Elm Street, Federal Bldg., Gloucester, MA 01930, 617 281-3600

RIN: 0648-AB89

291. AMENDMENT 1 TO THE SWORDFISH FMP

Significance: Regulatory Program

Legal Authority: 16 USC 1801 et seq Magnuson Fishery Conservation & Mgmt Act

CFR Citation: 50 CFR 630

Legal Deadline: Statutory. 110 days after the amendment is submitted by the fishery management council.

Abstract: Amendment 1 will reflect concern for status of swordfish stocks based on recent stock assessments (Oct. 1987 and Jan. 1988). U.S. longline fishery now targets tunas and small swordfish in nearshore waters and seeks larger, more valuable swordfish in more distant waters. The Council will consider size limits, area closure, and quota management in Amendment 1 in an attempt to reduce the fishing mortality of small billfish in the exclusive economic zone.

Timetable:

Action	Date	FR Cite
NPRM	12/00/88	
NPRM Comment Period End	01/00/89	
Final Action	03/00/89	
Final Action Effective	04/00/89	

Small Entity: Undetermined

Affected Sectors: 091 Commercial Fishing

Government Levels Affected: Federal

Agency Contact: Craig O'Connor, Acting Regional Director, Southeast Region, Department of Commerce, National Oceanic and Atmospheric Administration, 9450 Koger Blvd., St. Petersburg, FL 33702, 813 893-3141

RIN: 0648-AB92

292. SAFETY OF UNITED STATES OBSERVERS ABOARD FOREIGN FISHING VESSELS

Significance: Regulatory Program

Legal Authority: PL 99-659

CFR Citation: 50 CFR 611.8

Legal Deadline: None.

Abstract: United States observers are required aboard foreign vessels permitted to fish in the U.S. Exclusive Economic Zone (EEZ). Conditions aboard these vessels can be hazardous to the safety of observers. To prevent injury to observers, the Department of Commerce intends to publish minimum

safety standards that must be maintained aboard foreign fishing vessels before they will be permitted to fish in the U.S. EEZ.

The alternative to establishing U.S. standards is to accept flag-state standards as adequate. This solution will probably not be feasible because there is a wide variation in foreign safety standards and differing degrees of compliance with standards. In some cases, foreign fishing vessels meeting existing flag-state standards would not be suitable for U.S. observers.

Costs of this action will be borne by the owners of foreign fishing vessels. This action is beneficial in that it may prevent serious injury, including death, to observers during the performance of their duty.

Timetable:

Action	Date	FR Cite
NPRM	05/00/88	
NPRM Comment Period End	06/00/88	

Small Entity: Undetermined

Agency Contact: Gary A. Wood, Special Agent, Department of Commerce, National Oceanic and Atmospheric Administration, 1825 Connecticut Avenue, NW, Washington, DC 20235, 202 673-5299

RIN: 0648-AB94

---

293. AMENDMENT 3 TO THE HIGH SEAS SALMON FISHERY OFF THE COAST OF ALASKA EAST OF 175 E. LONGITUDE

Legal Authority: 16 USC 1801 et seq Magnuson Fishery Conservation & Mgmt Act

CFR Citation: 50 CFR 674

Legal Deadline: Statutory. 110 days after the amendment is submitted by the fishery management council.

Abstract: This Amendment will (1) update the scientific data and other information used as a basis for management actions, (2) enhance the framework aspect of annual and inseason rulemaking under the fishery management plan (FMP), and (3) ensure conformity of the FMP with the Pacific Salmon Treaty.

Timetable:

Action	Date	FR Cite
NPRM	10/00/88	
NPRM Comment Period End	11/00/88	
Final Action	01/00/89	
Final Action Effective	01/00/89	

Small Entity: Undetermined

Affected Sectors: 091 Commercial Fishing

Government Levels Affected: Federal

Agency Contact: Robert W. McVey, Director, Alaska Region, Department of Commerce, National Oceanic and Atmospheric Administration, National Marine Fisheries Service, P.O. Box 1668, Juneau, AK 99802, 907 586-7221

RIN: 0648-AC00

---

294. AMENDMENT 2 TO THE FISHERY MANAGEMENT PLAN FOR THE BOTTOMFISH AND SEAMOUNT GROUNDFISH FISHERIES OF THE WESTERN PACIFIC REGION

Significance: Regulatory Program

Legal Authority: 16 USC 1801 et seq; Magnuson Fishery Conservation and Management Act

CFR Citation: 50 CFR 683

Legal Deadline: Statutory. 110 days after the Amendment is submitted by the Fishery Management Council

Abstract: The amendment will establish a limited access system in the bottomfish fisheries of the Western Pacific.

Timetable:

Action	Date	FR Cite
NPRM	11/01/88	
NPRM Comment Period End	12/15/88	
Final Action	02/20/89	
Final Action Effective	03/19/89	

Small Entity: Undetermined

Affected Sectors: 091 Commercial Fishing

Government Levels Affected: Federal

Agency Contact: E. Charles Fullerton, Director, Southwest Region, Department of Commerce, National Oceanic and Atmospheric Administration, F/SWR, 300 S. Ferry Street, Terminal Island, California 90731, 213 514-6600

RIN: 0648-AC10

---

295. AMENDMENT 3 TO THE FISHERY MANAGEMENT PLAN FOR THE COASTAL MIGRATORY PELAGIC RESOURCES

Significance: Regulatory Program

Legal Authority: 16 USC 1801 et seq Magnuson Fishery Conservation and; Management Act

CFR Citation: 50 CFR 642

Legal Deadline: Statutory. 110 days after submission of the Amendment by the Fishery Management Council.

Abstract: This amendment will revise the mackerel allocations between commercial and recreational fishermen.

Timetable:

Action	Date	FR Cite
NPRM	01/06/89	
NPRM Comment Period End	02/21/89	
Final Action	04/14/89	
Final Action Effective	05/13/89	

Small Entity: Undetermined

Affected Sectors: 091 Commercial Fishing

Government Levels Affected: Federal

Agency Contact: Craig O'Connor, Director, Southeast Region, Department of Commerce, National Oceanic and Atmospheric Administration, F/SER, 9450 Koger Boulevard, St. Petersburg, FL 33702, 813 983-3141

RIN: 0648-AC15

---

296. ● FISHERY MANAGEMENT PLAN FOR ATLANTIC BILLFISHES

Significance: Regulatory Program

Legal Authority: 16 USC 1801 et seq Magnuson Fishery Conservation & Mgmt. Act

CFR Citation: 50 CFR 644

Legal Deadline: Statutory. 110 days after the plan is submitted by the Fishery Management Council.

Abstract: The plan was prepared jointly by the South Atlantic, New England, Mid-Atlantic, Gulf and Caribbean Fishery Management Councils. It would establish a management regime for sailfish, white and blue marlin, and longbill spearfish in the Atlantic, Gulf, and Caribbean exclusive economic zone. The plan's objectives are to maintain the highest availability of billfishes to the recreational fishery, to optimize social and economic benefits by reserving

VOL 53 ISS 79 PT 1 AP 25 1988 UMI

billfish for its traditional use, and to improve the understanding of the condition of billfish stocks and the fishery. Proposed management measures include (1) prohibition on the sale of billfish caught from the management unit, (2) possession prohibition aboard pelagic longline and drift gill net vessels, (3) recreational minimum size limits, (4) mandatory tournament reporting, and (5) limited exemptions for a Puerto Rico handline fishery.

Timetable:

Action	Date	FR Cite
NPRM	04/00/88	
NPRM Comment Period End	05/00/88	
Final Action	06/00/88	

Small Entity: Undetermined

Affected Sectors: 091 Commercial Fishing

Government Levels Affected: Federal

Agency Contact: Craig O'Connor, Director, Southeast Region, Department of Commerce, National Oceanic and Atmospheric Administration, 9450 Koger Boulevard, St. Petersburg, FL 33702, 813 893-3141

RIN: 0648-AC24

---

297. ● PROPOSED RULE TO ESTABLISH PRODUCT SPECIFIC SEAFOOD MARKETING COUNCILS UNDER THE FISH AND SEAFOOD PROMOTION ACT OF 1986 (FSPA)

Significance: Regulatory Program

Legal Authority: 16 USC 4001 to 4017 Fish & Seafood Promotion Act of 1986 (FSPA)

CFR Citation: 50 CFR 7 (New)

Legal Deadline: None.

Abstract: The U.S. fishing industry has not exhibited significant economic growth in the past 5 years. Some segments of the industry have suffered because the catches have been flat despite increasing demand. This is mainly due to high value stocks being fully exploited while there is a lack of markets for low value species. Therefore, significant quantities of lower-valued fish have gone unharvested, have been allocated to foreign countries, or sold to foreign processing vessels in joint ventures. The seafood marketing councils, established by the FSPA, will be the focus of coordinated industry marketing activities to promote the full utilization of all U.S. fisheries. This agency will oversee establishment and operations of these councils, enforcing provisions of the FSPA. Costs to the Federal Government have not been calculated but are expected to be minimal since the councils will be funded through assessments on industry participants represented on the councils. The long term potential benefit to the U.S. fishing industry may be substantial.

Timetable:

Action	Date	FR Cite
NPRM	03/00/88	
Internal DOC/NOAA Review ends	03/00/88	
NPRM Comment Period End	05/00/88	
Final Action	06/00/88	
Final Action Effective	06/00/88	

Small Entity: Undetermined

Additional Information: The proposed rule is being drafted in NOAA and will be available for internal review in January 1988. The anticipated date of publication in the Federal Register is March 1988. Since each council will be funded by segments of the industry represented on the council, with certain parameters regarding volume, income, etc., and each council determines these parameters, it is difficult to predict which segments of the industry may bear the economic burden--i.e., small businesses versus large businesses. These issues are being explored at this time.

We should be able to provide additional information when this information is updated.

Affected Sectors: Multiple

Government Levels Affected: Federal

Agency Contact: Carmen J. Blondin, Director, Off. of Trade & Industry Services, Department of Commerce, National Oceanic and Atmospheric Administration, Washington, DC 20235, 202 673-5260

RIN: 0648-AC27

---

298. ● REGULATORY AMENDMENT REVISING THE FINAL REGULATIONS IMPLEMENTING THE AMERICAN LOBSTER FISHERY MANAGEMENT PLAN

Legal Authority: 16 USC 1801 et seq Magnuson Fishery Conservation & Mgmt. Act

CFR Citation: 50 CFR 649

Legal Deadline: None.

Abstract: This action will require all escape vents in traps to be compatible with a minimum carapace length of 3 5/16 inches.

Timetable:

Action	Date	FR Cite
NPRM	07/12/88	
NPRM Comment Period End	07/27/88	
Final Action	12/01/88	
Final Action Effective	12/31/88	

Small Entity: No

Affected Sectors: 091 Commercial Fishing

Government Levels Affected: Federal

Agency Contact: Richard B. Roe, Director, Northeast Region, Department of Commerce, National Oceanic and Atmospheric Administration, 14 Elm Street, Gloucester, MA 01930, 617 281-3600

RIN: 0648-AC28

---

299. ● AMENDMENT 2 TO THE SPINY LOBSTER FISHERY MANAGEMENT PLAN OF THE GULF OF MEXICO AND SOUTH ATLANTIC

Significance: Regulatory Program

Legal Authority: 16 USC 1801 et seq Magnuson Fishery Conservation & Mgmt. Act

CFR Citation: 50 CFR 640

Legal Deadline: Statutory. 110 days after submission by the Fishery Management Council.

Abstract: This rule would propose a limited entry system for the fishery.

Timetable:

Action	Date	FR Cite
NPRM	12/16/88	
NPRM Comment Period End	01/31/89	
Final Action	03/24/89	
Final Action Effective	04/24/89	

Small Entity: Undetermined

Affected Sectors: 091 Commercial Fishing

Government Levels Affected: Federal

Agency Contact: Craig O'Connor, Acting Director, Southeast Region, Department of Commerce, National Oceanic and Atmospheric

Administration, 9450 Koger Blvd., St. Petersburg, FL 33708, 813 893-3141

RIN: 0648-AC29

300. ● FOREIGN FISHING POUNDAGE AND PERMIT FEES, 1989

Legal Authority: 16 USC 1801 et seq Magnuson Fishery Conservation and Mgmt. Act

CFR Citation: 50 CFR 611.22

Legal Deadline: Statutory. 110 days after submission from the Fishery Management Council.

Abstract: This rule will set poundage and permit fees for foreign fishing in 1989.

Timetable:

Action	Date	FR Cite
NPRM	09/30/88	
NPRM Comment Period End	10/30/88	
Final Action	12/15/88	
Final Action Effective	01/01/89	

Small Entity: Undetermined

Affected Sectors: 091 Commercial Fishing

Government Levels Affected: Federal

Agency Contact: Alfred J. Bilik, Fishery Management Office, Department of Commerce, National Oceanic and Atmospheric Administration, 1825 Connecticut Avenue, NW, Washington, DC 20235, 202 673-5315

RIN: 0648-AC30

301. ● REGULATORY AMENDMENT TO REQUIRE REPORTING OF PACIFIC COAST GROUNDFISH LANDING TO STATES

Legal Authority: 16 USC 1801 et seq Magnuson Fishery Conservation & Mgmt. Act

CFR Citation: 50 CFR 663

Legal Deadline: None.

Abstract: The regulatory amendment would make it a Federal requirement that all landings of groundfish be reported to the appropriate states in compliance with state laws.

Timetable:

Action	Date	FR Cite
NPRM	03/01/88	
NPRM Comment Period End	04/15/88	
Final Action	07/01/88	
Final Action Effective	08/01/88	

Small Entity: Undetermined

Affected Sectors: 091 Commercial Fishing

Government Levels Affected: State, Federal

Agency Contact: Rolland A. Schmitten, Director, Northwest Region, Department of Commerce, National Oceanic and Atmospheric Administration, F/NWR, 7600 Sand Point Way NE, Bldg. 1, Seattle, WA 98115, 206 526-6150

RIN: 0648-AC31

302. ● AMENDMENT 12 TO THE FMP FOR GROUNDFISH OF THE BERING SEA AND ALEUTIAN ISLANDS AREA

Legal Authority: 16 USC 1801 et seq Magnuson Fishery Conservation & Mgmt. Act

CFR Citation: 50 CFR 675; 50 CFR 611

Legal Deadline: Statutory. 110 days after submission by the fishery Management Council.

Abstract: The amendment would provide for (1) increasing the maximum annual optimum yield for all species from 2 million mt. up to 2.4 million mt. to provide for greater economic benefits, (2) delaying the start of the joint venture fishery on post-spawning pollock from April 15 to June 15 to assure an improved quality product, (3) conserving crab and halibut taken as incidental catch in the groundfish fisheries, (4) determining the retainable incidental catch in multispecies longline fisheries, and (5) revising the weekly reporting requirement for catches transferred at sea to improve reporting times.

Timetable:

Action	Date	FR Cite
NPRM	10/17/88	
NPRM Comment Period End	11/30/88	
Final Action	01/11/89	
Final Action Effective	02/10/89	

Small Entity: Yes

Affected Sectors: 091 Commercial Fishing

Government Levels Affected: Federal

Agency Contact: Robert W. McVey, Director, Alaska Region, Department of Commerce, National Oceanic and Atmospheric Administration, P O Box 1668, Juneau, AK 99802, 907 586-7221

RIN: 0648-AC32

303. ● AMENDMENT 1 TO THE FISHERY MANAGEMENT PLAN FOR THE PRECIOUS CORAL FISHERY OF THE WESTERN PACIFIC REGION

Legal Authority: 16 USC 1801 et seq Magnuson Fishery Conservation and Mgmt. Act

CFR Citation: 50 CFR 680

Legal Deadline: Statutory. 110 days after the Amendment is submitted by the Fishery Management Council.

Abstract: The amendment will include measures to encourage local fishermen to increase effort to harvest precious coral.

Timetable:

Action	Date	FR Cite
NPRM	03/01/88	
NPRM Comment Period End	05/16/88	
Final Action	07/06/88	
Final Action Effective	08/05/88	

Small Entity: Undetermined

Affected Sectors: 091 Commercial Fishing

Government Levels Affected: Federal

Agency Contact: E. Charles Fullerton, Director, Southeast Region, Department of Commerce, National Oceanic and Atmospheric Administration, 300 South Ferry Street, Terminal Island, CA 90731, 213 514-6660

RIN: 0648-AC33

304. ● FISHERY MANAGEMENT PLAN FOR KING AND TANNER CRAB IN THE BERING SEA AND ALEUTIAN ISLANDS

Significance: Regulatory Program

Legal Authority: 16 USC 1801 et seq Magnuson Fishery Conservation & Mgmt. Act

CFR Citation: 50 CFR 671

Legal Deadline: Statutory. 110 days after submission by the Fishery Management Council.

Abstract: The FMP would govern fishing for king and tanner crab in the EEZ by minimum sizes, annual guideline harvest levels, definition of legal gear, restriction on harvest of female crabs, registration areas, and provision for inseason adjustments. The

State of Alaska would adopt measures for reporting requirements, fishing seasons, gear placement, gear storage, gear restrictions, and vessel tank inspections. A person may appeal to the Secretary if he believes a State action does not comply with the FMP, the Magnuson Act, or other applicable law.

Timetable:

Action	Date	FR Cite
NPRM	05/12/88	
NPRM Comment Period End	06/26/88	
Final Action	08/31/88	
Final Action Effective	09/30/89	

Small Entity: Yes

Affected Sectors: 091 Commercial Fishing

Government Levels Affected: State, Federal

Agency Contact: Robert W. McVey, Director, Alaska Region, Department of Commerce, National Oceanic and Atmospheric Administration, P O Box 1668, Juneau, AK 99802, 907 586-7221

RIN: 0648-AC34

305. ● AMENDMENT 2 TO THE RED DRUM FISHERY MANAGEMENT PLAN FOR THE GULF OF MEXICO

Legal Authority: 16 USC 1801 et seq Magnuson Fishery Conservation & Mgmt. Act

CFR Citation: 50 CFR 653

Legal Deadline: Statutory. 110 days after submission from the Fishery Management Council.

Abstract: This amendment will continue the closure of the primary management area in the Gulf of Mexico exclusive economic zone (EEZ) to the harvest of red drum. This action would follow an emergency rule which achieved the same fishery closure for 180 days under emergency authority. This action would reduce to zero previous commercial incidental and recreational catches totalling 625,000 pounds per year. The action is based upon new biological information indicating significant problems with the condition of the adult brood stock and recommendations of science advisors to take immediate protective measures for the brood stock and to increase the escapement of juveniles from the inshore areas to the offshore brood stock.

Timetable:

Action	Date	FR Cite
NPRM	04/00/88	
Final Action	05/30/88	
Final Action Effective	06/30/88	

Small Entity: Undetermined

Affected Sectors: 091 Commercial Fishing

Government Levels Affected: Federal

Agency Contact: Craig O'Connor, Acting Director, Southeast Region, Department of Commerce, National Oceanic and Atmospheric Administration, 9450 Koger Blvd, St. Petersburg, FL 33702, 813 893-3141

RIN: 0648-AC38

306. ● REPORTING REQUIREMENTS GOVERNING SALMON TAKEN OFF ALASKA AND DELIVERED OR LANDED OUTSIDE ALASKA

Legal Authority: 16 USC 1801 et seq Magnuson Fishery Conservation & Mgmt. Act

CFR Citation: 50 CFR 674

Legal Deadline: Statutory. 110 days after submission by the Fishery Management Council.

Abstract: A mandatory reporting requirement for fishing vessel operators who harvest salmon in the EEZ off Alaska and who sell, transport, or deliver salmon in the EEZ or to a U.S. port outside Alaska. The operator must submit a fish ticket to the Alaska Department of Fish and Game after each sale, transfer or delivery. Receipt of this ticket is necessary to obtain timely data on salmon catches.

Timetable:

Action	Date	FR Cite
NPRM	03/15/88	
NPRM Comment Period End	04/30/88	
Final Action	05/29/88	
Final Action Effective	06/29/88	

Small Entity: Undetermined

Affected Sectors: 091 Commercial Fishing

Government Levels Affected: Federal

Agency Contact: Robert W. McVey, Director, Alaska Region, Department of Commerce, National Oceanic and Atmospheric Administration, P O Box 1668, Juneau, AK 99802, 907 586-7221

RIN: 0648-AC39

307. ● ATLANTIC TUNA FISHERIES - REGULATORY AMENDMENT

Legal Authority: 16 USC 971 et seq

CFR Citation: 50 CFR 285

Legal Deadline: None.

Abstract: Regulatory Amendment to clarify intent of existing regulation through international agreements that no directed fishing is allowed on Atlantic bluefin tuna in the Gulf of Mexico. The existing regulation has a category for incidental catch of bluefin in the domestic longline fishery for other species. The intent of the existing regulation is no fishing in the Gulf of Mexico for bluefin tuna under any other category of fishing. This amendment will clarify that point.

Timetable:

Action	Date	FR Cite
NPRM	04/00/88	
NPRM Comment Period End	05/00/88	
Final Action	06/00/88	
Final Action Effective	07/00/88	

Small Entity: Undetermined

Affected Sectors: 091 Commercial Fishing

Government Levels Affected: Federal

Agency Contact: Richard Roe, Director, Northeast Region, Department of Commerce, National Oceanic and Atmospheric Administration, 14 Elm Street, Federal Bldg., Gloucester, MA 01930, 617 281-3600

RIN: 0648-AC40

308. ● REGULATORY AMENDMENT TO THE FISHERY MANAGEMENT PLAN FOR THE ATLANTIC SWORDFISH FISHERY

Legal Authority: 16 USC 1801 et seq Magnuson Fishery Conservation & Mgmt. Act

CFR Citation: 50 CFR 630

Legal Deadline: None.

Abstract: This regulatory amendment will modify the present data collection system to require 100 percent mandatory dealer reporting of swordfish landing. This information is required to determine total fishery landings, fishing effort, and biological

data (e.g., size of population, age, classes) for stocks assessment purposes.

Timetable:

Action	Date	FR Cite
NPRM	04/00/88	
NPRM Comment Period End	05/00/88	
Final Action	06/00/88	
Final Action Effective	07/00/88	

Small Entity: Undetermined

Affected Sectors: 091 Commercial Fishing

Government Levels Affected: Federal

Agency Contact: Craig O'Connor, Acting Director, Southeast Region, Department of Commerce, National Oceanic and Atmospheric Administration, 9450 Koger Blvd., St. Petersburg, FL 33702, 813 893-3141

RIN: 0648-AC41

---

309. ● AMENDMENT 17 TO THE FMP FOR GROUNDFISH OF THE GULF OF ALASKA

Significance: Regulatory Program

Legal Authority: 16 USC 1801 et seq Magnuson Fishery Conservation & Mgmt. Act

CFR Citation: 50 CFR 672; 50 CFR 611

Legal Deadline: Statutory. 110 days after submission by the Fishery Management Council.

Abstract: The amendment would provide (1) a framework for comprehensive management of incidental catches, (2) a framework for setting fishing season on an annual basis, and (3) a minimum size limit on sablefish.

Timetable:

Action	Date	FR Cite
NPRM	11/01/88	
NPRM Comment Period End	12/17/88	
Final Action	02/20/89	
Final Action Effective	03/22/89	

Small Entity: Undetermined

Affected Sectors: 091 Commercial Fishing

Government Levels Affected: Federal

Agency Contact: Robert W. McVey, Director, Alaska Region, Department of Commerce, National Oceanic and Atmospheric Administration, P O Box 1668, Juneau, AK 99802, 907 586-7221

RIN: 0648-AC42

---

310. ● AMENDMENT 3 TO THE FISHERY MANAGEMENT PLAN FOR ATLANTIC SEA SCALLOPS

Significance: Regulatory Program

Legal Authority: 16 USC 1801 et seq Magnuson Fishery Conservation & Mgmt. Act

CFR Citation: 50 CFR 650

Legal Deadline: Statutory. 110 days after the submission by the Fishery Management Council.

Abstract: This amendment will involve a major revision of the management plan with the purpose of replacing a management program based on a meat count standard measure with some other management approach of equal or greater effectiveness in meeting the plan's objectives.

Timetable:

Action	Date	FR Cite
NPRM	07/00/88	
NPRM Comment Period End	08/00/88	
Final Action	10/00/88	
Final Action Effective	11/00/88	

Small Entity: Undetermined

Affected Sectors: 091 Commercial Fishing

Government Levels Affected: Federal

Agency Contact: Richard B. Roe, Director, Northeast Region, Department of Commerce, National Oceanic and Atmospheric Administration, 14 Elm Street, Gloucester, MA 01930, 617 281-3600

RIN: 0648-AC44

---

311. ● POLICY TO REQUIRE OBSERVERS TO BE CARRIED ON DOMESTIC FISHING VESSELS

Significance: Regulatory Program

Legal Authority: 16 USC 1801 et seq Magnuson Fishery Conservation & Mgmt. Act

CFR Citation: 50 CFR 620

Legal Deadline: None.

Abstract: The policy would establish guidelines for the use of observers in the domestic fisheries managed under the Magnuson Act. The observers collect catch and effort data on fishing operations, and biological information on fish stocks and the marine ecosystem.

Timetable:

Action	Date	FR Cite
NPRM	05/15/88	
NPRM Comment Period End	06/30/88	
Final Action	10/01/88	
Final Action Effective	10/01/88	

Small Entity: Undetermined

Affected Sectors: 091 Commercial Fishing

Government Levels Affected: Federal

Agency Contact: Dr. Peter H. Fricke, Department of Commerce, National Oceanic and Atmospheric Administration, Office of Fisheries Cons. and Mgt., 1825 Connecticut Ave., NW, Washington, DC 20235, 202 673-5263

RIN: 0648-AC45

---

312. ● REGULATORY AMENDMENT MODIFYING THE BOUNDARY OF THE TEXAS SEASONAL CLOSURE OF THE SHRIMP FISHERY OF THE GULF OF MEXICO FOR 1988

Legal Authority: 16 USC 1801 et seq Magnuson Fishery Conservation & Mgmt. Act

CFR Citation: 50 CFR 658

Legal Deadline: None.

Abstract: This action will change the seaward boundary of the 1988 Texas closure from 200 nautical miles off the Texas coast to 15 nautical miles. This modification will allow fishermen to harvest marketable-sized shrimp from the previously closed area, and will allow NMFS to collect current data on fishing effort and patterns to evaluate the impact of the seasonal closure.

Timetable:

Action	Date	FR Cite
NPRM	03/11/88	
NPRM Comment Period End	04/10/88	
Final Action	05/23/88	
Final Action Effective	05/23/88	

Small Entity: Undetermined

Affected Sectors: 091 Commercial Fishing

Government Levels Affected: Federal

Agency Contact: Craig O'Connor, Acting Director, Southeast Region,

VOL 53 ISS 79 PT 1 AP 25 1988 UMI

Department of Commerce, National Oceanic and Atmospheric Administration, F/SER, 9450 Koger Boulevard, St. Petersburg, FL 33702, 813 893-3141

RIN: 0648-AC46

313. ● REGULATORY AMENDMENT REVISING THE FINAL REGULATIONS IMPLEMENTING THE FISHERY MANAGEMENT PLAN FOR THE COASTAL MIGRATORY PELAGIC RESOURCES

Legal Authority: 16 USC 1801 et seq Magnuson Fishery Conservation & Mgmt. Act

CFR Citation: 50 CFR 642

Legal Deadline: None.

Abstract: This amendment will ban drift gillnets in the king mackerel fishery.

Timetable:

Action	Date	FR Cite
NPRM	03/16/88	
NPRM Comment Period End	04/15/88	
Final Action	06/24/88	
Final Action Effective	07/01/88	

Small Entity: Undetermined

Affected Sectors: 091 Commercial Fishing

Government Levels Affected: Federal

Agency Contact: Craig O'Connor, Acting Director, Southeast Region, Department of Commerce, National Oceanic and Atmospheric Administration, F/SER, 9450 Koger Blvd., St. Petersburg, FL 33702, 813 893-3141

RIN: 0648-AC47

314. ● REGULATORY AMENDMENT TO DESIGNATE SPECIAL FISHING AREAS IN THE SNAPPER-GROUPER FISHERY OF THE SOUTH ATLANTIC

Legal Authority: 16 USC 1801 et seq Magnuson Fishery Conservation & Mgmt. Act

CFR Citation: 50 CFR 646

Legal Deadline: None.

Abstract: The regulatory amendment would establish two special management zones around artificial reefs that were requested by the Ft. Pierce Sport Fishing Club and approved by the South Atlantic Fishery Management Council. Within the fishery management plan for the snapper-grouper fishery, use of fish traps, bottom longlines, hydraulic and electric reels unless mounted on a hand-held rod would be prohibited. In addition, spear fishing on the inshore site is prohibited and possession or harvest of jewfish would be prohibited.

Timetable:

Action	Date	FR Cite
NPRM	03/01/88	
NPRM Comment Period End	04/01/88	
Final Action	06/01/88	
Final Action Effective	07/01/88	

Small Entity: Undetermined

Affected Sectors: 091 Commercial Fishing

Government Levels Affected: Federal

Agency Contact: Craig O'Connor, Acting Regional Director, Department of Commerce, National Oceanic and Atmospheric Administration, 9450 Koger Blvd., St. Petersburg, FL 33702, 813 893-3149

RIN: 0648-AC48

315. ● AMENDMENT 9 TO THE FISHERY MANAGEMENT PLAN FOR COMMERCIAL AND RECREATIONAL SALMON FISHERIES OFF THE COASTS OF WASHINGTON, OREGON, AND CALIFORNIA

Significance: Regulatory Program

Legal Authority: 16 USC 1801 et seq Magnuson Fishery Conservation & Mgmt. Act

CFR Citation: 50 CFR 661

Legal Deadline: Statutory. 110 days after the amendment is submitted by the Fishery Management Council.

Abstract: This Amendment will address: (1) allocation of chinook and coho salmon north of Cape Falcon between commercial and recreational fisheries, (2) the ocean escapement goal for Klamath River fall chinook, (3) allocation of chinook salmon between commercial and recreational fisheries between Cape Blanco, Oregon and Point Delgada, California, and (4) shoreside sorting of prohibited species caught in midwater trawls.

Timetable:

Action	Date	FR Cite
NPRM	07/01/88	
NPRM Comment Period End	08/15/88	
Final Action	10/20/88	
Final Action Effective	11/20/88	

Small Entity: Undetermined

Affected Sectors: 091 Commercial Fishing

Government Levels Affected: Federal

Agency Contact: Rolland A. Schmitten, Director, Northwest Region, Department of Commerce, National Oceanic and Atmospheric Administration, 7600 Sand Point Way, NE, Building 1, Seattle, Washington, 98115, 206 526-6150

RIN: 0648-AC49

NATIONAL OCEAN SURVEY/OFFICE OF COASTAL RESOURCES MANAGEMENT

316. PROPOSED REGULATIONS FOR THE KEY LARGO NATIONAL MARINE SANCTUARY

Legal Authority: 16 USC 1431 to 1434

CFR Citation: 15 CFR 929

Legal Deadline: None.

Abstract: These regulations are being revised to update enforcement provisions and to change research permit requirements.

Timetable:

Action	Date	FR Cite
NPRM	12/00/88	
NPRM Comment Period End	02/00/89	
Final Action	06/00/89	
Final Action Effective	07/00/89	

Small Entity: No

Additional Information: Neither an RIA nor an RFA is required or will be prepared.

Agency Contact: Joseph A. Uravitch, Chief, Marine and Estuarine Management Division, Department of Commerce, National Oceanic and Atmospheric Administration, 1825 Connecticut Avenue, NW, Suite 714, Washington, DC 20235, 202 673-5126

RIN: 0648-AA33

317. DRAFT REGULATIONS FOR THE PROPOSED FLOWER GARDEN BANKS NATIONAL MARINE SANCTUARY

Legal Authority: 16 USC 1431 to 1434

CFR Citation: 15 CFR 943

Legal Deadline: None.

Abstract: These regulations will protect the ecological and biological reef communities of the East and West Flower Garden Banks offshore Texas and Louisiana, if the area is designated as a national marine sanctuary.

Timetable:

Action	Date	FR Cite
NPRM	07/00/88	
NPRM Comment Period End	09/00/88	
Final Action	04/00/89	
Final Action Effective	06/00/89	

Small Entity: No

Agency Contact: Joseph A. Uravitch, Chief, Marine and Estuarine Management Division, Department of Commerce, National Oceanic and Atmospheric Administration, Office of Ocean and Coastal Resource Mgt., 1825 Connecticut Avenue, NW, Suite 714, Washington, DC 20235, 202 673-5126

RIN: 0648-AB49

318. PROPOSED REGULATIONS FOR THE LOOE KEY NATIONAL MARINE SANCTUARY

Legal Authority: 16 USC 1431 to 1434

CFR Citation: 15 CFR 937

Legal Deadline: None.

Abstract: These regulations are being revised to update enforcement provisions and to change research permit requirements.

Timetable:

Action	Date	FR Cite
NPRM	09/00/88	
NPRM Comment Period End	11/00/88	
Final Action	03/00/89	
Final Action Effective	04/00/89	

Small Entity: No

Additional Information: Neither an RIA nor an RFA is required or will be prepared.

Agency Contact: Joseph A. Uravitch, Chief, Marine and Estuarine Management Division, Department of Commerce, National Oceanic and Atmospheric Administration, 1825 Connecticut Avenue, NW, Suite 714, Washington, DC 20235, 202 673-5126

RIN: 0648-AB64

319. PROPOSED REGULATIONS FOR THE NATIONAL ESTUARINE RESERVE RESEARCH PROGRAM

Legal Authority: 16 USC 1461

CFR Citation: 15 CFR 921

Legal Deadline: None.

Abstract: When the Coastal Zone Management Reauthorization Act of 1985 becomes effective, the existing regulations for the National Estuarine Sanctuary Program will need to be updated to reflect the changes that will occur in the program--(1) a stronger emphasis for conducting, promoting and coordinating research within the system; (2) changes the name of the program to "National Estuarine Reserve Research System"; (3) the amount of Federal financial assistance is increased to $4,000,000 per site; and (4) submission of an annual report to Congress beginning with fiscal year 1986.

Timetable:

Action	Date	FR Cite
NPRM	04/00/88	
NPRM Comment Period End	06/00/88	
Final Action	10/00/88	

Small Entity: No

Agency Contact: Joseph A. Uravitch, Chief, Marine and Estuarine Management Division, Department of Commerce, National Oceanic and Atmospheric Administration, 1825 Connecticut Avenue, NW, Suite 714, Washington, DC 20235, 202 673-5126

RIN: 0648-AB68

320. RULEMAKING TO IMPLEMENT 1985 REAUTHORIZATION OF THE COASTAL ZONE MANAGEMENT ACT (CZMA)

Legal Authority: 16 USC 1456; PL 99-272, Subtitle D

CFR Citation: 15 CFR 923

Legal Deadline: None.

Abstract: PL 99-272, the Coastal Zone Management Reauthorization Act of 1985, amended Sec 306(g) of the Coastal Zone Management Act (16 USC 1456) dealing with submission and approval of changes to federally-approved state coastal zone management programs. NOAA/OCRM intends to issue regulations to implement these provisions and to correct problems NOAA/OCRM and the states have experienced in processing program change requests.

Timetable:

Action	Date	FR Cite
Issue paper distributed	09/12/86	
NPRM	03/21/88	
NPRM Comment Period End	04/22/88	
Final Action	10/02/88	
Final Action Effective	12/02/88	

Small Entity: No

Public Compliance Cost: Initial Cost: $0; Yearly Recurring Cost: $0

Affected Sectors: None

Government Levels Affected: State

Agency Contact: Mark Stanga, Associate Director, OCRM, Department of Commerce, National Oceanic and Atmospheric Administration, 1825 Connecticut Ave., NW, Room 701, Washington, DC 20235, 202 673-5100

RIN: 0648-AC02

321. PROPOSED REGULATIONS FOR THE CHANNEL ISLANDS NATIONAL MARINE SANCTUARY

Legal Authority: 16 USC 1431 to 1439

CFR Citation: 15 CFR 935

Legal Deadline: None.

Abstract: These regulations are being revised to update enforcement provisions and permit requirements.

Timetable:

Action	Date	FR Cite
Next Action Undetermined		

Small Entity: No

Agency Contact: Joseph A. Uravitch, Chief, Marine and Estuarine Management Division, Department of Commerce, National Oceanic and Atmospheric Administration, 1825 Connecticut Ave., NW, Suite 714, Washington, DC 20235, 202 673-5126

RIN: 0648-AC03

322. PROPOSED REGULATIONS FOR THE POINT REYES-FARALLON ISLANDS NATIONAL MARINE SANCTUARY

Legal Authority: 16 USC 1431 to 1439

CFR Citation: 15 CFR 936

Legal Deadline: None.

DOC—NOAA **Proposed Rule Stage**

Abstract: These regulations are being revised to update enforcement provisions and permit requirements.

Timetable:

Action	Date	FR Cite
Next Action Undetermined		

Small Entity: No

Agency Contact: Joseph A. Uravitch, Chief, Marine and Estuarine Management Division, Department of Commerce, National Oceanic and Atmospheric Administration, 1825 Connecticut Ave., NW, Suite 714, Washington, DC 20235, 202 673-5126

RIN: 0648-AC05

DEPARTMENT OF COMMERCE (DOC)
National Oceanic and Atmospheric Administration (NOAA)

Final Rule Stage

NATIONAL MARINE FISHERIES SERVICE

323. FISHERY CONSERVATION AND MANAGEMENT: CONFIDENTIALITY OF STATISTICS

Legal Authority: 16 USC 1801 et seq Magnuson Fishery Conservation and Mgmt. Act

CFR Citation: 50 CFR 603

Legal Deadline: None.

Abstract: The regulations provide internal procedures to protect statistics collected from the public under the Magnuson Fishery Conservation and Management Act from disclosure.

Timetable:

Action	Date	FR Cite
NPRM	01/09/78	43 FR 1460
Interim Final Rule	12/07/79	44 FR 237
Interim Final Rule	07/16/87	52 FR 26685
Final Action	06/00/88	

Small Entity: No

Additional Information: Neither an RIA nor an RFA is required or will be prepared. The Regulatory Flexibility Act does not apply because the regulations affect only internal operations of an agency.

Affected Sectors: 091 Commercial Fishing

Government Levels Affected: Local, State, Federal

Analysis: See Additional Information

Agency Contact: Mark Holliday, Acting Chief, Fisheries Statistics Division, Department of Commerce, National Oceanic and Atmospheric Administration, Off. of Research and Environmental Informat., NMFS, Washington, DC 20235, 202 673-5335

RIN: 0648-AA38

324. U.S. GENERAL STANDARDS FOR GRADES OF SHRIMP

Legal Authority: 7 USC 1621 to 1630 Agricultural Marketing Act of 1946

CFR Citation: 50 CFR 265A

Legal Deadline: None.

Abstract: The final rule will establish general quality grading standards for all non-breaded forms of fresh or frozen shrimp. These grading standards will provide for the systematic differentiation of the quality of shrimp into four categories -- U.S. Grades A, B, C and Substandard. The proposed standards will be applied to all commercial species of fresh or frozen shrimp in raw or cooked states in all non-breaded market forms. The adoption of grading standards is expected to facilitate trade in shrimp of all commercial species, as consumers will be able to select shrimp on the basis of identified quality. Industry has shown great interest in and support for the standards. Timetable for next action is very tentative. Public comments received indicate a need for further research before the rule is published.

Timetable:

Action	Date	FR Cite
NPRM	05/20/82	47 FR 21840
NPRM Comment Period End	08/18/82	47 FR 21840
Interim Final Rule	12/30/88	

Small Entity: No

Additional Information: Neither an RIA nor an RFA is required or will be prepared.

Affected Sectors: 091 Commercial Fishing; 209 Miscellaneous Food Preparations and Kindred Products

Government Levels Affected: State, Federal

Analysis: See Additional Information

Agency Contact: Rita A. Creitz, Program Analyst, Department of Commerce, National Oceanic and Atmospheric Administration, Office of Trade and Industry Services, Inspection Services Division, Washington, DC 20235, 202 673-5875

RIN: 0648-AA47

325. FOREIGN FISHING - SCIENTIFIC RESEARCH

Legal Authority: 16 USC 1801 et seq Magnuson Fishery Conser & Management Act

CFR Citation: 50 CFR 611.14

Legal Deadline: None.

Abstract: The action would revise the scientific research provisions of the foreign fishing regulations. The action is necessary to bring the regulations into compliance with current policy on scientific research and clarify what foreign vessels may be considered scientific research vessels while conducting activities which might otherwise be considered fishing.

Timetable:

Action	Date	FR Cite
NPRM	05/01/84	49 FR 50498
NPRM Comment Period End	06/14/84	49 FR 50498
Final Action	08/02/88	
Final Action Effective	09/01/88	

Small Entity: No

Additional Information: This action is related to RIN 0648-AA40 General and Recreational Foreign Fishing.

Affected Sectors: None

Government Levels Affected: State, Federal

Agency Contact: Alfred J. Bilik, Fishery Management Officer, Department of Commerce, National Oceanic and Atmospheric Administration, National Marine

Fisheries Service, 1825 Connecticut Avenue, NW, Washington, DC 20235, 202 673-5319

RIN: 0648-AB23

326. REGULATIONS GOVERNING THE TAKING AND IMPORTING OF MARINE MAMMALS; IMPORTATION OF YELLOWFIN TUNA

Significance: Regulatory Program

Legal Authority: 16 USC 1361 et seq Marine Mammal Protection Act of 1972

CFR Citation: 50 CFR 216.24

Legal Deadline: None.

Abstract: U.S. tuna purse seine fishermen operating in the eastern tropical Pacific have been subject to certain restrictions relating to the take of marine mammals, whereas other nations fishing in a similar manner that export tuna to the U.S. often do not impose similar constraints on their own industry. Therefore, the Marine Mammal Protection Act of 1972 was amended to require all such nations, prior to being allowed to import tuna, to provide documentary evidence that they have adopted a program governing the incidental taking of marine mammals that is comparable to that of the U.S. and that the average rate of incidental take in the fishery is comparable to the U.S. These regulations will implement this requirement.

Timetable:

Action	Date	FR Cite
ANPRM	11/29/84	49 FR 46921
NPRM	08/13/86	51 FR 28963
NPRM Comment Period End	11/14/86	51 FR 36568
Interim Final Rule	03/00/88	
Final Action	04/00/88	
Final Action Effective	04/00/88	
Begin Review	09/00/88	
End Review	01/00/89	

Small Entity: No

Additional Information: This action will require restrictions on foreign nations that export tuna to the U.S. similar to those imposed on U.S. tuna fishermen. These regulations will have no impact domestically in terms of bringing more U.S. nationals under Federal regulations.

Public Compliance Cost: Initial Cost: $9,825; Yearly Recurring Cost: $9,825; Base Year for Dollar Estimates: 1985

Affected Sectors: 091 Commercial Fishing

Government Levels Affected: Federal

Agency Contact: Kenneth R. Hollingshead, Marine Resource Management Specialist, Department of Commerce, National Oceanic and Atmospheric Administration, Office of Protected Resources & Habitat, Programs, NMFS, Washington, DC 20235, 202 673-5351

RIN: 0648-AB46

327. ENDANGERED FISH AND WILDLIFE; APPROACHING HUMPBACK WHALES IN HAWAIIAN WATERS

Legal Authority: 16 USC 1382(a); 16 USC 1540(f)

CFR Citation: 50 CFR 222.31

Legal Deadline: None.

Abstract: This rule will establish as regulation a previously published Notice of Interpretation regarding minimum distances that should be maintained in the presence of humpback whales in Hawaii. Establishing a 100 yard perimeter around any of the whales while in the Hawaiian Exclusive Zone as a regulation is considered necessary given a large increase in vessel traffic and other water use activities in areas where this species historically occurs. In response to comments received in the public record, NOAA is defining two specific sites as cow/calf areas in which an approach closer than 300 yds is prohibited. This addition creates a new subsection to the rule.

Timetable:

Action	Date	FR Cite
NPRM	11/24/86	51 FR 42271
NPRM Comment Period End	12/24/86	51 FR 42271
Interim Final Rule	11/23/87	52 FR 44912
Final Action	04/01/88	
Final Action Effective	05/01/88	

Small Entity: Undetermined

Affected Sectors: 091 Commercial Fishing

Government Levels Affected: Federal

Agency Contact: E. Charles Fullerton, Director, Southwest Region, Department of Commerce, National Oceanic and Atmospheric Administration, 300 South Ferry Street, Terminal Island, CA 90731, 213 514-6201

RIN: 0648-AB79

328. GROUNDFISH OF THE GULF OF ALASKA - AMENDMENT 16 AND GROUNDFISH OF THE BERING SEA AND ALEUTIAN ISLANDS AREA - AMENDMENT 11A

Legal Authority: 16 USC 1801 et seq Magnuson Fishery Conservation & Mgmt Act

CFR Citation: 50 CFR 672; 50 CFR 675

Legal Deadline: Statutory. 110 days after the amendment is submitted by the fishery management council.

Abstract: The regulation addresses the revision of the definition of "prohibited species" and requires catcher/processor vessels operating in the Gulf of Alaska or the Bering Sea and Aleutian Islands area to keep records on groundfish production and transfers of groundfish products.

Timetable:

Action	Date	FR Cite
NPRM	12/21/87	52 FR 48303
NPRM Comment Period End	01/30/88	
Final Action	03/07/88	
Final Action Effective	04/06/88	

Small Entity: Yes

Affected Sectors: 091 Commercial Fishing

Government Levels Affected: Federal

Analysis: Regulatory Flexibility Analysis

Agency Contact: Robert W. McVey, Director, Alaska Region, Department of Commerce, National Oceanic and Atmospheric Administration, P.O. Box 1668, Juneau, AK 99802, 907 586-7221

RIN: 0648-AB98

329. U.S. STANDARDS FOR GRADES OF FISH FILLETS

Significance: Agency Priority

Legal Authority: 7 USC 1621 to 1630 Agricultural Marketing Act of 1946

CFR Citation: 50 CFR 263A; 50 CFR 263B; 50 CFR 363C; 50 CFR 263D; 50 CFR 263E

Legal Deadline: None.

Abstract: This revised rule will expand the coverage of established voluntary standards for grades of fish fillets to include a new market form or style of fillet whereby the pin-bones, the bones radiating laterally from the spinal column, are not removed. This style of fillet has become more familiar in the marketplace, resulting in the industry requesting the amendment. Responses to a previous request for comments indicate a national interest in this style of presentation. The amendment will allow this market form, bearing FDA's recommended labeling, to be inspected and reflect the U.S. Grade A mark.

Timetable:

Action	Date	FR Cite
Interim Final Rule	06/30/88	

Small Entity: No

Government Levels Affected: State, Federal

Agency Contact: Rita A. Creitz, Program Analyst, Department of Commerce, National Oceanic and Atmospheric Administration, Office of Trade and Industry Services, Inspection Services Division, Washington, DC 20235, 202 673-5875

RIN: 0648-AC12

---

330. AMENDMENT TO REGULATION PROVIDING FOR ALLOCATION OF PACIFIC HALIBUT AMONG DOMESTIC FISHERMEN

Legal Authority: North Pacific Halibut Act of 1982

CFR Citation: 50 CFR 301

Legal Deadline: None.

Abstract: The amendment addresses the allocation among domestic fishermen of the U.S. quota of Pacific halibut as determined by the International Pacific Halibut Commission.

Timetable:

Action	Date	FR Cite
Final Action	04/29/88	
Final Action Effective	04/29/88	

Small Entity: Undetermined

Affected Sectors: 091 Commercial Fishing

Government Levels Affected: Federal

Agency Contact: Robert McVey, Director, Alaska Region, Department of Commerce, National Oceanic and Atmospheric Administration, National Marine Fisheries Service, PO Box 1668, Juneau, AK 99802, 907 586-7221

RIN: 0648-AC20

---

331. ● IMPLEMENTATION OF CONDITIONALLY APPROVED MEASURES UNDER AMENDMENT 1 TO THE SPINY AND SLIPPER LOBSTER FMP IN THE GULF OF MEXICO AND SOUTH ATLANTIC - PERMITS AND BAG LIMITS

Legal Authority: 16 USC 1801 et seq Magnuson Fishery Conservation & Mgmt. Act

CFR Citation: 50 CFR 640

Legal Deadline: None.

Abstract: This rule will require commercial and tail separation permits and establish a recreational bag limit during the regular season.

Timetable:

Action	Date	FR Cite
NPRM	03/18/87	52 FR 8485
NPRM Comment Period End	04/18/87	52 FR 8485
Final Action	03/30/88	
Final Action Effective	04/29/88	

Small Entity: No

Affected Sectors: 091 Commercial Fishing

Government Levels Affected: Federal

Agency Contact: Craig O'Connor, Acting Director, Southeast Region, Department of Commerce, National Oceanic and Atmospheric Administration, 9450 Koger Blvd., St. Petersburg, FL 33702, 813 893-3141

RIN: 0648-AC25

---

332. ● REGULATORY AMENDMENT TO PROHIBIT LANDINGS OF UNDERSIZE RED SNAPPER IN THE REEF FISH FISHERY OF THE GULF OF MEXICO

Legal Authority: 16 USC 1801 et seq Magnuson Fishery Conservation & Mgmt. Act

CFR Citation: 50 CFR 641

Legal Deadline: None.

Abstract: The regulatory amendment would close a loophole that fishermen are using to land undersized red snapper in the Gulf of Mexico reef fish fishery. Currently, persons lawfully fishing with trawls from domestic vessels are exempt from the minimum size limit for red snapper. The regulatory amendment would only allow retention of trawl-caught red snapper if fishing for species other than red snapper, provided the total weight of red snapper does not exceed five percent of all other species aboard.

Timetable:

Action	Date	FR Cite
NPRM	03/00/88	
Final Action	04/15/88	
Final Action Effective	05/16/88	

Small Entity: Undetermined

Affected Sectors: 091 Commercial Fishing

Government Levels Affected: Federal

Agency Contact: Craig O'Connor, Acting Director, Southeast Region, Department of Commerce, National Oceanic and Atmospheric Administration, 9450 Koger Blvd, St. Petersburg, FL 33702, 813 893-3141

RIN: 0648-AC36

---

333. ● IMPLEMENTATION OF CONDITIONALLY APPROVED MEASURES UNDER AMENDMENT TO THE SPINY AND SLIPPER LOBSTER FMP IN THE GULF OF MEXICO AND SOUTH ATLANTIC - TRAP REMOVAL

Legal Authority: 16 USC 1801 et seq Magnuson Fishery Conservation & Mgmt. Act

CFR Citation: 50 CFR 640

Legal Deadline: None.

Abstract: This rule will (1) change the two-day recreational season to the first full weekend preceding August 1, and the opening date of the regular season to August 6, (2) establish a daily bag of six lobsters per person during the special two-day recreational season, and (3) provide for a 10-day extension of the April 1-5 trap removal period for individuals with a documented hardship or emergency.

Timetable:

Action	Date	FR Cite
NPRM	03/18/87	52 FR 8485
NPRM Comment Period End	04/18/87	52 FR 8485
Final Action	04/00/88	

Small Entity: No

Affected Sectors: 091 Commercial Fishing

Government Levels Affected: Federal

Agency Contact: Craig O'Connor, Acting Director, Southeast Region, Department of Commerce, National Oceanic and Atmospheric Administration, 9450 Koger Blvd., St. Petersburg, FL 33702, 813 893-3141

RIN: 0648-AC37

334. ● INTERJURISDICTIONAL FISHERIES

Legal Authority: 16 USC 4100 et seq; PL 99-659, Title III, Interjurisdictional Fisheries Act of; 1986

CFR Citation: 50 CFR 253

Legal Deadline: None.

Abstract: Provides State agencies guidance in receiving grants under the interjurisdictional Act of 1986. The Act allows the Secretary of Commerce to distribute funds to the States to conduct projects on interjurisdictional species and to enter into agreements with the states for enforcement of state and federal fishery regulations.

Timetable:

Action	Date	FR Cite
NPRM	11/23/87	52 FR 44922
NPRM Comment Period End	12/23/87	52 FR 44922
Final Action	04/00/88	
Final Action Effective	05/00/88	

Small Entity: No

Government Levels Affected: State, Federal

Agency Contact: Austin R. Magill, Acting Chief, Division of Recreational and Interjurisdictional Fisheries, Department of Commerce, National Oceanic and Atmospheric Administration, 1825 Connecticut Ave., NW, Washington, DC 20235, 202 673-5272

RIN: 0648-AC52

NATIONAL OCEAN SURVEY/OFFICE OF COASTAL RESOURCES MANAGEMENT

335. PROPOSED REGULATIONS FOR THE NATIONAL MARINE SANCTUARY PROGRAM

Legal Authority: 16 USC 1431 to 1434

CFR Citation: 15 CFR 922

Legal Deadline: None.

Abstract: As a result of the Marine Protection, Research and Sanctuaries Act reauthorization signed by the President on October 19, 1984, the regulations are being revised to incorporate modifications from the new legislation regarding the sanctuary designation process and site selection criteria.

Timetable:

Action	Date	FR Cite
NPRM	06/12/86	51 FR 21369
Final Action	04/00/88	

Small Entity: No

Additional Information: Neither an RIA nor an RFA is required or will be prepared.

Agency Contact: Joseph A. Uravitch, Chief, Marine and Estuarine Management Division, Department of Commerce, National Oceanic and Atmospheric Administration, 1825 Connecticut Avenue, NW, Suite 714, Washington, DC 20235, 202 673-5126

RIN: 0648-AA31

336. DRAFT REGULATIONS FOR THE PROPOSED CORDELL BANK NATIONAL MARINE SANCTUARY

Legal Authority: 16 USC 1431 to 1434

CFR Citation: 15 CFR 942

Legal Deadline: None.

Abstract: These regulations will protect the ecological, recreational, and esthetic resources of the waters surrounding Cordell Bank, if the area is designated as a national marine sanctuary.

Timetable:

Action	Date	FR Cite
Final Action	05/00/88	
Final Action Effective	07/00/88	

Small Entity: No

Agency Contact: Joseph A. Uravitch, Chief, Marine and Estuarine Management Division, Department of Commerce, National Oceanic and Atmospheric Administration, Office of Ocean and Coastal Resource Mgt., 1825 Connecticut Avenue, NW, Suite 714, Washington, DC 20235, 202 673-5126

RIN: 0648-AB50

NATIONAL OCEAN SURVEY/OFFICE OF MINERAL ENERGY

337. DEEP SEABED MINING REGULATIONS FOR COMMERCIAL RECOVERY

Significance: Regulatory Program

Legal Authority: 30 USC 1401 et seq Deep Seabed Hard Mineral Resources Act

CFR Citation: 15 CFR 970, (Exploration Regulations); 15 CFR 971

Legal Deadline: None.

Abstract: Under 15 CFR 970, prospective deep seabed miners may apply to NOAA for the exploration license needed to explore the deep seabed for manganese nodules. Under the new regulations (15 CFR 971), prospective miners will be able to apply to NOAA for a permit to commercially recover and process nodules to obtain strategic metals (nickel, copper, cobalt, manganese). These permits would provide security of tenure for applicants with respect to other U.S. citizens and other nations' permittees in accordance with applicable international agreements. Fees for securing and maintaining a permit will be based on the Government's processing costs. These fees would be an inconsequential portion of the cost of a commercial recovery operation. The cost of a commercial recovery operation is expected to exceed one billion dollars. Alternatives to the regulation would require amending the Deep Seabed Hard Mineral Resources Act, which would be considered in the context of the U.S. law of the sea policy.

Timetable:

Action	Date	FR Cite
ANPRM	12/28/82	47 FR 57903
NPRM	07/25/86	51 FR 26794
Public Hearings, 08/26/86, 09/11/86	09/09/86	51 FR 26794
NPRM Comment Period End	11/24/86	
NPRM	09/14/87	52 FR 34748
Final Action	06/00/88	
Final Action Effective	07/00/88	

Small Entity: No

Additional Information: A preliminary RIA & RFA have been prepared for the commercial regulations to cover new issues raised by the commercial recovery permit regulations. It is expected that small entities will not be permittees. Rather some small entities are expected to be contractors or subcontractors to permittees. The

preliminary RIA and RFA are available as is the programmatic environmental impact statement and the supplemental environmental assessment. After considering public comments on the proposed major rule, NOAA determined that certain issues were significantly different than the proposed rules. These limited issues are being reproposed for further public comment prior to NOAA's issuing the final regulations.

Affected Sectors: 102 Copper Ores; 106 Ferroalloy Ores, Except Vanadium; 108 Metal Mining Services; 331 Steel Works, Blast Furnaces, and Rolling and Finishing Mills; 333 Primary Smelting and Refining of Nonferrous Metals; 951 Administration of Environmental Quality Programs

Government Levels Affected: Local, State, Federal

Analysis: Regulatory Impact Analysis; Regulatory Flexibility Analysis; See Additional Information

Agency Contact: James P. Lawless, Chief, Oceans Minerals and Energy Division, Department of Commerce, National Oceanic and Atmospheric Administration, Office of Ocean Minerals and Energy, 1825 Connecticut Ave., NW, Suite 710, Washington, DC 20235, 202 673-5121

RIN: 0648-AA36

DEPARTMENT OF COMMERCE (DOC)

National Oceanic and Atmospheric Administration (NOAA)

Completed Actions

338. MARKING REQUIREMENTS FOR THE IMPORTATION, EXPORTATION, & INTERSTATE TRANSPORTATION OF FISH OR WILDLIFE

Significance: Regulatory Program

Legal Authority: 16 USC 3371 to 3375 Lacey Act Amendments of 1981

CFR Citation: 50 CFR 14.81 to 14.83; 50 CFR 246.1 to 246.3

Legal Deadline: None.

Abstract: These regulations will enable NOAA to monitor interstate and foreign commerce in fish and fishery products, for the purpose of detecting violations of Federal, state and foreign laws. The regulations will conform to current industry practices.

Timetable:

Action	Date	FR Cite
NPRM	07/07/86	51 FR 24559
NPRM Comment Period End	09/05/86	
Final Action	11/27/87	52 FR 45339
Final Action Effective	12/28/87	52 FR 45339

Small Entity: No

Additional Information: The regulations will be issued jointly with the Department of the Interior. Neither an RIA nor an RFA is required.

Affected Sectors: 091 Commercial Fishing; 209 Miscellaneous Food Preparations and Kindred Products

Government Levels Affected: Local, State, Federal

Analysis: See Additional Information

Agency Contact: Steven C. Springer, Special Agent In Charge, Department of Commerce, National Oceanic and Atmospheric Administration, Enforcement Div., NMFS, Washington, DC 20235, 202 673-5299

RIN: 0648-AA53

339. U.S. STANDARDS FOR GRADES OF FRESH OR FROZEN NORTH AMERICAN FRESHWATER CATFISH AND PRODUCTS MADE THEREFROM

Legal Authority: 7 USC 1621 to 1630 Agricultural Marketing Act of 1946

CFR Citation: 50 CFR 267, (New)

Legal Deadline: None.

Abstract: This final standard will establish a voluntary standards system to identify various products made from North American Freshwater Catfish and to grade these products A, B, C and Substandard. The objective of the standard is to facilitate trade in these products thereby benefiting the consumer. The standard will be used by NMFS in the voluntary program of fishery products inspection and certification. Industry has expressed strong support for these voluntary standards.

Timetable:

Action	Date	FR Cite
Interim Final Rule	07/05/84	49 FR 27514
Final Action	10/05/87	52 FR 37155
Final Action Effective	11/04/87	52 FR 37155

Small Entity: No

Additional Information: Neither an RIA nor an RFA is required or will be prepared.

Affected Sectors: 027 Animal Specialties; 209 Miscellaneous Food Preparations and Kindred Products

Government Levels Affected: State, Federal

Analysis: See Additional Information

Agency Contact: Rita A. Creitz, Program Analyst, Department of Commerce, National Oceanic and Atmospheric Administration, Office of Trade and Industry Services, Inspection Services Division, Washington, DC 20235, 202 673-5875

RIN: 0648-AA73

340. AMENDMENT NO. 5 TO THE FISHERY MANAGEMENT PLAN FOR THE SPINY LOBSTER FISHERIES OF THE WESTERN PACIFIC REGION

Legal Authority: 16 USC 1801 et seq Magnuson Fishery Conservation & Mgmt Act

CFR Citation: 50 CFR 681

Legal Deadline: Statutory. 110 days after the amendment is submitted by the Fishery Management Council.

Abstract: This Amendment will (1) incorporate management measures for Slipper Lobster, (2) require the use of escape vents in Lobster pots, (3) require release of egg-bearing females, (4) revise the daily catch report, (5) revise the permit application form, (6) eliminate the annual processor report, (7) revise the trip processing report, and (8) change the name to the crustacean FMP.

Timetable:

Action	Date	FR Cite
NPRM	07/27/87	52 FR 28028
NPRM Comment Period End	09/04/87	
Final Action	12/15/87	52 FR 47572
Final Action Effective	01/11/88	52 FR 47572

Small Entity: No

Affected Sectors: 091 Commercial Fishing

Government Levels Affected: Federal

Agency Contact: E. Charles Fullerton, Director, Southwest Region, Department of Commerce, National Oceanic and Atmospheric Administration, 300 S. Ferry Street, Terminal Island, CA 90731, 213 514-6196

RIN: 0648-AB81

341. AMENDMENT 1 TO THE RED DRUM FISHERY MANAGEMENT PLAN FOR THE GULF OF MEXICO

Legal Authority: 16 USC 1801 et seq Magnuson Fishery Conservation & Mgmt Act

CFR Citation: 50 CFR 604; 50 CFR 653

Legal Deadline: Statutory. 110 days after the amendment is submitted by the fishery management council.

Abstract: The Amendment (1) divides the Gulf of Mexico EEZ into primary (waters off Louisiana, Mississippi, and Alabama) and secondary (waters off Texas and Florida) management areas; (2) prohibits the harvest or possession of red drum from the secondary areas; and (3) establishes an annual total allowable catch (TAC) in the primary area. Under the TAC, the annual quota for directed commercial fishing is zero, while incidental catch quotas are established for the shrimp and other commercial fisheries. Also, a recreational catch quota is established with an associated daily bag limit. The intended effect of the management program is to protect and rebuild the red drum resource throughout its range through cooperative State/Federal management.

Timetable:

Action	Date	FR Cite
NPRM	06/16/87	52 FR 22822
NPRM Comment Period End	07/23/87	
Final Action	09/16/87	52 FR 34918
Final Action Effective	10/16/87	52 FR 34918

Small Entity: No

Affected Sectors: 091 Commercial Fishing

Government Levels Affected: Federal

Agency Contact: Craig O'Connor, Acting Regional Director, Southeast Region, Department of Commerce, National Oceanic and Atmospheric Administration, 9450 Koger Blvd., St. Petersburg, FL 33702, 813 893-3141

RIN: 0648-AB91

342. GROUNDFISH OF THE BERING SEA AND ALEUTIAN ISLANDS - AMENDMENT 11

Legal Authority: 16 USC 1801 et seq Magnuson Fishery Conservation & Mgmt Act

CFR Citation: 50 CFR 675

Legal Deadline: Statutory. 110 days after the amendment is submitted by the fishery management council.

Abstract: The regulation will address the revision of the definition of "prohibited species and acceptable biological catch" and seasonal apportionment of the harvest of pollock by the joint venture fleet.

Timetable:

Action	Date	FR Cite
NPRM	09/01/87	52 FR 32942
NPRM Comment Period End	10/15/87	
Final Action	12/03/87	52 FR 45966
Final Action Effective	01/04/88	52 FR 45966

Small Entity: Yes

Affected Sectors: 091 Commercial Fishing

Government Levels Affected: Federal

Analysis: Regulatory Flexibility Analysis

Agency Contact: Robert W. McVey, Director, Alaska Region, Department of Commerce, National Oceanic and Atmospheric Administration, P.O. Box 1668 F/AKR, Juneau, AK 99802, 907 586-7221

RIN: 0648-AB96

343. AMENDMENT 2 TO THE AMERICAN LOBSTER FISHERY MANAGEMENT PLAN

Legal Authority: 16 USC et seq Magnuson Fishery Conservation & Mgmt Act

CFR Citation: 50 CFR 649

Legal Deadline: Statutory. 110 days after the amendment is submitted by the fishery management council.

Abstract: Amendment 2 will increase the minimum carapace length for lobsters, prohibit the possession of V-notched female American lobsters, and establish a uniform national standard prohibiting the possession of undersized V-notched female or egg-bearing lobsters within the U.S. that are caught under the authority of the Magnuson Act.

Timetable:

Action	Date	FR Cite
NPRM	08/03/87	52 FR 28732
NPRM Comment Period End	09/10/87	
Final Action Effective	11/30/87	52 FR 46088
Final Action	12/04/87	52 FR 46088

Small Entity: No

Affected Sectors: 091 Commercial Fishing

Government Levels Affected: Federal

Agency Contact: Richard Roe, Director, Northeast Region, Department of Commerce, National Oceanic and Atmospheric Administration, 14 Elm Street, Federal Bldg., Gloucester, MA 01930, 617 281-3600

RIN: 0648-AB97

344. AMENDMENT 8 TO THE FISHERY MANAGEMENT PLAN FOR COMMERCIAL AND RECREATIONAL SALMON FISHERIES OFF THE COASTS OF WASHINGTON, OREGON, AND CALIFORNIA

Legal Authority: 16 USC 1801 et seq Magnuson Fishery Conservation & Mgmt Act

CFR Citation: 50 CFR 661

Legal Deadline: Statutory. 110 days after the amendment is submitted by the fishery management council.

Abstract: This Amendment is expected to address a variety of subjects including: (1) inclusion of habitat considerations; and (2) inclusion of vessel safety consideration.

Timetable:

Action	Date	FR Cite
Withdrawn -no regulatory changes are proposed as a result of this amendment	02/26/88	

Small Entity: Undetermined

Affected Sectors: 091 Commercial Fishing

Government Levels Affected: Federal

Agency Contact: Rolland A. Schmitten, Director, Northwest Region, Department of Commerce, National Oceanic and Atmospheric Administration, 7600 Sand Point Way NE, Building 1, Seattle, WA 98115, 206 526-6150

RIN: 0648-AB99

345. FOREIGN FISHING POUNDAGE AND PERMIT FEES, 1988

Legal Authority: 16 USC 1801 et seq Magnuson Fishery Conservation & Mgmt Act

CFR Citation: 50 CFR 611.22

Legal Deadline: Statutory, January 1, 1988.

Abstract: This rule will set poundage and permit fees for foreign fishing in 1988.

Timetable:

Action	Date	FR Cite
NPRM	11/04/87	52 FR 42408
NPRM Comment Period End	12/04/87	52 FR 42408
Final Action Effective	01/01/88	
Final Action	01/05/88	53 FR 134

Small Entity: No

Additional Information: An RIA is not required. A regulatory impact review will be prepared.

Affected Sectors: None

Government Levels Affected: Federal

Agency Contact: Alfred J. Bilik, Fishery Management Officer, Department of Commerce, National Oceanic and Atmospheric Administration, 1825 Connecticut Ave., NW, Washington, DC 20235, 202 673-5315

RIN: 0648-AC01

346. AMENDMENT 1 TO THE NORTHEAST MULTISPECIES FISHERY MANAGEMENT PLAN

Significance: Regulatory Program

Legal Authority: 16 USC 1801 et seq Magnuson Fishery Conservation & Mgmt Act

CFR Citation: 50 CFR 651

Legal Deadline: Statutory. 110 days after the plan is submitted by the fishery management council.

Abstract: Amendment 1 will provide additional protection to groundfish resources in the North Atlantic beyond that provided by the FMP. Proposed management measures include increased minimum fish size, expanded minimum mesh requirements, and changes in restricted fishery areas. The amendment is aimed at reducing fishing pressure on ten valuable fish species and rebuilding their stocks (cod, haddock, yellowtail, winter windowpane, witch flounder, pollock, redfish or ocean perch, American plaice, and white bake).

Timetable:

Action	Date	FR Cite
ANPRM	05/27/87	52 FR 20124
NPRM	06/17/87	52 FR 23570
NPRM Comment Period End	07/31/87	52 FR 23570
Final Action	09/14/87	52 FR 35093
Final Action Effective	10/01/87	52 FR 35093

Small Entity: No

Affected Sectors: 091 Commercial Fishing

Government Levels Affected: Federal

Analysis: Regulatory Impact Review 06/23/87 (52 FR 23570)

Agency Contact: Richard Roe, Director, Northeast Region, Department of Commerce, National Oceanic and Atmospheric Administration, FNER - NMFS, State Fish Pier, Gloucester, MA 01930, 617 281-3600

RIN: 0648-AC04

347. PERFORMANCE STANDARDS FOR TUNA SKIPPERS

Legal Authority: 16 USC 1361 to 1407 Marine Mammal Protection Act of 1972

CFR Citation: 50 CFR 216.24

Legal Deadline: None.

Abstract: During 1986 the overall annual quota for allowable incidental mortality of porpoise in the eastern tropical Pacific was reached in October and the U.S. tuna purse seine fleet was prohibited from fishing for tuna associated with porpoise. Industry representatives asserted that the quota was reached because a small fraction of vessel operators had exceptionally high kills. The industry representatives requested NMFS to develop sanctions to use against the certificates held by the offending operators to prevent their actions from penalizing the entire industry.

The NMFS does not now have porpoise mortality standards to serve as the basis for any permit action. The purpose of the proposed rule will be to establish appropriate standards which will improve the U.S. fleet's overall porpoise safety performance and identify individual poor performers for remedial action or, if necessary, elimination from the fishery.

Timetable:

Action	Date	FR Cite
Withdrawn Withdrawn from active consideration at request of tuna industry.	02/26/88	

Small Entity: Undetermined

Agency Contact: Kenneth R. Hollingshead, Marine Resource Management Specialist, Department of Commerce, National Oceanic and Atmospheric Administration, Office of Protected Resources and, Habitat Programs, NMFS, Washington, DC 20235, 202 673-5350

RIN: 0648-AC07

348. AMENDMENT 1 FOR THE FISHERY MANAGEMENT PLAN FOR THE BOTTOMFISH AND SEAMOUNT GROUNDFISH FISHERIES OF THE WESTERN PACIFIC REGION

Legal Authority: 16 USC 1801 et seq; Magnuson Fishery Conservation and Management Act

CFR Citation: 50 CFR 683

Legal Deadline: Statutory. 110 days after the Amendment is submitted by the Fishery Management Council.

Abstract: This allows the Council to consider limited entry for bottomfish in the U.S. EEZ surrounding American Samoa and Guam within the "framework" approach of the FMP and extend the due date of the Annual Report for the bottomfish Fisheries of the Western Pacific Region from March 31 to June 30 of each year.

Timetable:

Action	Date	FR Cite
NPRM	07/24/87	52 FR 27838
NPRM Comment Period End	09/02/87	
Final Action	10/14/87	52 FR 38102
Final Action Effective	11/11/87	52 FR 38102

Small Entity: No

Affected Sectors: 091 Commercial Fishing

Government Levels Affected: Federal

Agency Contact: E. Charles Fullerton, Director, Southwest Region, Department of Commerce, National Oceanic and Atmospheric Administration, F/SWR,

300 S. Ferry Street, Terminal Island, California 90731, 213 514-6660

RIN: 0648-AC11

349. AMENDMENT TO THE REGULATIONS IMPLEMENTING THE ATLANTIC SEA SCALLOP FMP - REVISE THE EXPIRATION DATE OF FISHING PERMITS

Legal Authority: 16 USC 1801 et seq Magnuson Fishery Conservation and; Management Act

CFR Citation: 50 CFR 650

Legal Deadline: Statutory. 110 days after the Amendment is submitted by the Fishery Management Council

Abstract: The rule will require permits, which currently remain in effect until the owner or name of a vessel changes, to be renewed annually. The intended effect is to provide consistency with annual permitting procedures recently adopted by the NMFS Northeast region.

Timetable:

Action	Date	FR Cite
NPRM	07/02/87	52 FR 25041
NPRM Comment Period End	08/03/87	
Final Action	12/08/87	52 FR 46485
Final Action Effective	12/31/87	52 FR 46485

Small Entity: No

Affected Sectors: 091 Commercial Fishing

Government Levels Affected: Federal

Agency Contact: Richard Roe, Director, Northeast Region, Department of Commerce, National Oceanic and Atmospheric Administration, National Marine Fisheries Service, 14 Elm Street, Gloucester, MA 01930, 617 281-3600

RIN: 0648-AC13

350. AMENDMENT TO REGULATIONS FOR GROUNDFISH OF THE GULF OF ALASKA, BERING SEA AND ALEUTIAN ISLANDS AREA - REPORTING REQUIREMENTS

Legal Authority: 16 USC 1801 et seq Magnuson Fishery Conservation & Mgmt Act

CFR Citation: 50 CFR 672; 50 CFR 675

Legal Deadline: Statutory. 110 days after the Amendment is submitted by the Fishery Management Council.

Abstract: The amendment addresses the improvement of reporting of commercial groundfish harvests off Alaska by requiring that domestic fishermen comply with existing State of Alaska reporting on state fish tickets.

Timetable:

Action	Date	FR Cite
NPRM	06/16/87	52 FR 22829
NPRM Comment Period End	07/15/87	
Final Action	12/29/87	52 FR 49021
Final Action Effective	01/28/88	

Small Entity: No

Affected Sectors: 091 Commercial Fishing

Government Levels Affected: Federal

Agency Contact: Robert W. McVey, Director, Alaska Region, Department of Commerce, National Oceanic and Atmospheric Administration, National Marine Fisheries Service, FAKR, P.O. Box 1668, Juneau, AK 99802, 907 586-7221

RIN: 0648-AC14

351. AMENDMENT 4 TO THE FISHERY MANAGEMENT PLAN FOR THE SHRIMP FISHERY OF THE GULF OF MEXICO

Legal Authority: 16 USC 1801 et seq Magnuson Fishery Conservation & Mgmt Act

CFR Citation: 50 CFR 658

Legal Deadline: Statutory. 110 days after the Amendment is submitted by the Fishery Management Council

Abstract: The amendment will simplify the annual review process for the Tortugas Sanctuary, extend the Council/Regional Director closure review to February 1, set minimum size limit of 100 whole shrimp per pound for white shrimp, and expand the sea turtle education and headstart program.

Timetable:

Action	Date	FR Cite
Withdrawn	01/06/88	53 FR 00266

Small Entity: Undetermined

Affected Sectors: 091 Commercial Fishing

Government Levels Affected: Federal

Agency Contact: Craig O'Connor, Director, Southeast Region, Department of Commerce, National Oceanic and Atmospheric Administration, F/SER, 9450 Koger Boulevard, St. Petersburg, FL 33702, 813 893-3141

RIN: 0648-AC17

352. AMENDMENT 3 TO THE PACIFIC COAST GROUNDFISH FISHERY MANAGEMENT PLAN

Legal Authority: 16 USC 1801 et seq Magnuson Fishery Conservation and; Management Act

CFR Citation: 50 CFR 663

Legal Deadline: Statutory. 110 days after the Amendment is submitted by the Pacific Fishery Management Council.

Abstract: Amendment 3 incorporates habitat considerations into the FMP by adding descriptive information and establishing policy. It also would establish formal procedures for temporary adjustments regarding vessel access to the fishery for vessels otherwise prevented from harvesting because of weather or other ocean conditions affecting the safety of vessels.

Timetable:

Action	Date	FR Cite
Withdrawn -no regulatory changes are proposed as a result of this amendment	02/26/88	

Small Entity: Undetermined

Affected Sectors: 091 Commercial Fishing

Government Levels Affected: Federal

Agency Contact: Rolland A. Schmitten, Director, Northwest Region, Department of Commerce, National Oceanic and Atmospheric Administration, National Marine Fisheries Service, F/NWR, 7600 Sand Point Way, Seattle, WA 98115, 206 526-6150

RIN: 0648-AC18

353. REGULATORY AMENDMENT TO THE FISHERY MANAGEMENT PLAN FOR THE ATLANTIC SWORDFISH FISHERY - EXTENSION OF THE PLAN

Legal Authority: 16 USC 1801 et seq; Magnuson Fishery Conservation and Management Act

CFR Citation: 50 CFR 630

Legal Deadline: Statutory. 110 days after submission by the Fishery Management Council

Abstract: The rule implementing the Plan has an expiration date of December 31, 1987. Data collection (logbooks) was approved through October 31, 1987. The South Atlantic Council is submitting a regulatory amendment to extend the Plan and data collection. Vital data on the swordfish fishery is still needed for the stock assessment and management decisions.

Timetable:

Action	Date	FR Cite
Final Action	09/30/87	52 FR 36578
Final Action Effective	09/30/87	52 FR 36578

Small Entity: No

Affected Sectors: 091 Commercial Fishing

Government Levels Affected: Federal

Agency Contact: Craig O'Connor, Acting Director, Southeast Region, Department of Commerce, National Oceanic and Atmospheric Administration, 9450 Koger Blvd., St. Petersburg, FL 33702, 813 983-3141

RIN: 0648-AC21

354. ● REGULATORY AMENDMENT TO THE FMP FOR GROUNDFISH OF THE GULF OF ALASKA GROUNDFISH, OTHER THAN SABLEFISH

Legal Authority: 16 USC 1801 et seq Magnuson Fishery Conservation & Mgmt. Act

CFR Citation: 50 CFR 672

Legal Deadline: None.

Abstract: Current regulations restrict the use of pot gear for fishing for all species of groundfish. The action would relieve a burdensome restriction by allowing pot gear to be used for groundfish, other than sablefish, a species allocated to hook-and-line and trawl fishermen in the Gulf of Alaska.

Timetable:

Action	Date	FR Cite
NPRM	01/11/88	53 FR 00627
NPRM Comment Period End	01/26/88	53 FR 00627
Final Action Effective	02/26/88	
Final Action	03/02/88	53 FR 6649

Small Entity: No

Affected Sectors: 091 Commercial Fishing

Government Levels Affected: Federal

Agency Contact: Robert W. McVey, Director, Alaska Region, Department of Commerce, National Oceanic and Atmospheric Administration, P O Box 1668, F/AKR, Juneau, Alaska 99802, 907 586-7221

RIN: 0648-AC35

355. REGULATORY AMENDMENT REVISING THE FINAL REGULATIONS IMPLEMENTING THE AMERICAN LOBSTER FISHERY MANAGEMENT PLAN

Legal Authority: 16 USC 1801 et seq; Magnuson Fishery Conservation and Management Act

CFR Citation: 50 CFR 649

Legal Deadline: Statutory. 110 days after the Amendment is submitted by the Fishery Management Council.

Abstract: This action revises (1) the expiration date of fishing permits and (2) numbering system used to identify lobster gear. The intended effects are to provide consistency with annual permitting procedures recently adopted in the Northeast Region, and to relieve Federal Fishery Permit holders from the burden of renumbering lobster gear when their Federal Fishery Permit Number changes.

Timetable:

Action	Date	FR Cite
NPRM	07/22/87	52 FR 27564
NPRM Comment Period End	08/06/87	52 FR 27564
Final Action	12/04/87	52 FR 46088
Final Action Effective	12/31/87	52 FR 46088

Small Entity: No

Government Levels Affected: Federal

Agency Contact: Richard B. Roe, Director, Northeast Region, Department of Commerce, National Oceanic and Atmospheric Administration, F/NER, 14 Elm Street, Federal Bldg., Gloucester, MA 01930, 617 281-3600

RIN: 0648-AC09

DEPARTMENT OF COMMERCE (DOC)

National Telecommunications and Information Administration (NTIA)

Completed Actions

356. PUBLIC TELECOMMUNICATIONS FACILITIES PROGRAM: REPORT AND ORDER (FINAL RULES), FUNDING PRIORITIES AND POLICY STATEMENT

Legal Authority: 47 USC 390 to 394; 47 USC 397 to 399b

CFR Citation: 15 CFR 2301

Legal Deadline: None.

Abstract: NTIA has administered the Public Telecommunications Facilities Program (PTFP) for two years under an interim revision of rules. These final rules are designed to reduce applicant burdens and simplify applications requirements. Deletions from prior rules include: local public notice and submission of site leases with initial applications. Grant recipients within the past ten years need not submit full eligibility documentation. Equipment inventories need only include the type(s) of equipment requested. NTIA seeks information on applicants' non-Federal financial support and capital replacement policies, and encourages applicants with the ability to increase their share of project costs. NTIA states its policy to prefer applicants requesting 50% or less PTFP funding for broadcast equipment replacements.

Timetable:

Action	Date	FR Cite
Interim Final Rule	09/18/84	49 FR 36600
NPRM	12/04/86	51 FR 43804
NPRM Comment Period End	01/05/87	
Final Action	08/20/87	52 FR 31496
Final Action Effective	10/01/87	52 FR 31496

Small Entity: Undetermined

Government Levels Affected: Local, State

Agency Contact: John P. Fernandez, Attorney-Adviser, Department of Commerce, National Telecommunications and Information Administration, 14th & Constitution

BEST COPY AVAILABLE

Avenue NW, Suite 4717, Washington, DC 20230, 202 377-1616

RIN: 0660-AA01

DEPARTMENT OF COMMERCE (DOC) — Prerule Stage
Office of Productivity, Technology and Innovation (OPTI)

357. ADMINISTRATION OF A UNIFORM PATENT POLICY WITH RESPECT TO DOMESTIC RIGHTS IN INVENTIONS MADE BY GOVERNMENT EMPLOYEES

Significance: Agency Priority

Legal Authority: EO 10096; EO 10930; 35 USC 207 to 208; 15 USC 3701 et seq

CFR Citation: 37 CFR 100

Legal Deadline: None.

Abstract: PL 99-502 amended the Stevenson-Wydler Innovation Act of 1980 by establishing a number of procedures to encourage the development of technologies by laboratories owned or operated by the Federal government, to facilitate the transfer of such technologies to the public, and to promote cooperation between these laboratories and the private sector.

Executive Order 10096 would be amended with regard to the government's rights to ownership of inventions created in laboratories owned or operated by the Federal government. A revised version of the executive order might be prepared and regulations would be developed to implement the amendments effected by P.L. 99-502.

This action will not increase Federal costs. In the short run it will encourage private sector collaboration to assist work done in Federal laboratories by appropriated funds, and in the long run increased commercialization of patents and inventions will increase tax revenues.

Timetable:

Action	Date	FR Cite
Next Action Undetermined		

Small Entity: Yes

Affected Sectors: None

Government Levels Affected: Federal

Agency Contact: Joseph P. Allen, Acting Director, Federal Technology, Management Policy Division, Department of Commerce, Office of Productivity, Technology and Innovation, Room H 4837, Washington, DC 20230, 202 377-0659

RIN: 0692-AA05

DEPARTMENT OF COMMERCE (DOC) — Proposed Rule Stage
Office of Productivity, Technology and Innovation (OPTI)

358. LICENSING OF GOVERNMENT-OWNED INVENTIONS

Legal Authority: 35 USC 208

CFR Citation: 37 CFR 404

Legal Deadline: None.

Abstract: This action will revise 37 CFR 404 to simplify the process by which US industry can obtain license to patented inventions owned by the Government. P.L. 99-502 is expected to increase industry interest in licensing inventions from Federal laboratories. The existing regulation was written by GSA on the basis of 1980 legislation. It may be possible to remove some of the difficulties that potential licensees must overcome.

Timetable:

Action	Date	FR Cite
Next Action Undetermined		

Small Entity: No

Affected Sectors: All

Government Levels Affected: Federal

Agency Contact: Joseph P. Allen, Acting Director, Federal Technology, Management Policy Division, Department of Commerce, Office of Productivity, Technology and Innovation, Room H4837, Washington, DC 20230, 202 377-0659

RIN: 0692-AA04

DEPARTMENT OF COMMERCE (DOC) — Proposed Rule Stage
Patent and Trademark Office (PTO)

359. REQUESTS FOR IDENTIFIABLE RECORDS

Legal Authority: 35 USC 6

CFR Citation: 37 CFR 1.15

Legal Deadline: None.

Abstract: The existing regulations govern requests for records not disclosed to the public as part of PTO's informational activities. The regulations need to be revised to eliminate obsolete provisions.

Timetable:

Action	Date	FR Cite
NPRM	04/00/88	
NPRM Comment Period End	07/00/88	

Small Entity: No

Additional Information: Neither an RIA nor an RFA is required or will be prepared.

Affected Sectors: Multiple

Government Levels Affected: Local, State, Federal

Analysis: See Additional Information

VOL 53 ISS 79 PT 1 AP 25 1988 UMI

Agency Contact: John W. Dewhirst, Department of Commerce, Patent and Trademark Office, Ofc. of the Solicitor, Washington, DC 20231, 703 557-4035

RIN: 0651-AA04

360. DEPOSIT OF BIOLOGICAL MATERIALS FOR PATENT PURPOSES

Significance: Regulatory Program

Legal Authority: 35 USC 6

CFR Citation: 37 CFR 1.71

Legal Deadline: None.

Abstract: PTO will propose amendment of its rules of practice in patent cases to govern the deposit of biological materials for patent purposes.

Timetable:

Action	Date	FR Cite
ANPRM	09/09/87	52 FR 34080
ANPRM Comment Period End	11/30/87	
NPRM	06/00/88	

Small Entity: No

Additional Information: Neither an RIA nor an RFA is required or will be prepared.

Affected Sectors: Multiple

Government Levels Affected: Local, State, Federal

Agency Contact: Michael K. Kirk, Assistant Commissioner for External Affairs, Department of Commerce, Patent and Trademark Office, Washington, DC 20231, 703 557-3065

RIN: 0651-AA13

361. TRADEMARK APPLICATIONS PURSUANT TO 15 U.S.C. 1126

Significance: Regulatory Program

Legal Authority: 15 USC 1123; Crocker National Bank v. Canadian Imperial Bank of Commerce; 223 USPQ 909 (TTAB 1984); In re International Barrier Corp., 231 USPQ 310 (TTAB 1986); In re ETA Systems, Inc., 2 USPQ 2d 1367 (TTAB 1987)

CFR Citation: 37 CFR 2.21; 37 CFR 2.33; 37 CFR 2.39; 37 CFR 2.56; 37 CFR 2.57; 37 CFR 2.58

Legal Deadline: None.

Abstract: PTO plans to propose amendment of its rules of practice in trademark cases to revise the use and specimen requirements in trademark applications filed pursuant to Section 44 of the Trademark Act, 15 USC 1126. The revision would conform the use and specimen requirements with the decisions of the Trademark Trial and Appeal Board in Crocker National Bank v. Canadian Imperial Bank of Commerce, 223 USPQ 909 (1984), in re International Barrier Corp., 231 USPQ 310 (1986) and in re ETA Systems, Inc., 2 USPQ 2d 1367 (1987).

Timetable:

Action	Date	FR Cite
NPRM	07/00/88	

Small Entity: No

Additional Information: Neither an RIA nor an RFA is required or will be prepared.

Affected Sectors: Multiple

Government Levels Affected: Local, State, Federal

Analysis: See Additional Information

Agency Contact: Ms. Carlisle Walters, Department of Commerce, Patent and Trademark Office, Washington, DC 20231, 703 557-3061

RIN: 0651-AA23

362. DUTY OF DISCLOSURE - INFORMATION DISCLOSURE STATEMENT

Significance: Agency Priority

Legal Authority: 35 USC 6

CFR Citation: 37 CFR 1.56; 37 CFR 1.97; 37 CFR 1.98; 37 CFR 1.99

Legal Deadline: None.

Abstract: 37 CFR 1.56 and 1.97-1.99, which relate to the duty of patent applicants and owners to disclose information material to the examination of patent applications or to reexaminations, will be amended to specify more clearly the requirements to be met in making disclosures.

Timetable:

Action	Date	FR Cite
NPRM	04/00/88	

Small Entity: No

Affected Sectors: Multiple

Government Levels Affected: Local, State, Federal

Agency Contact: R. Franklin Burnett, Special Assistant, Department of Commerce, Patent and Trademark Office, Washington, DC 20231, 703 557-3054

RIN: 0651-AA27

363. REQUESTS FOR PRESIDENTIAL PROCLAMATIONS UNDER THE SEMICONDUCTOR CHIP PROTECTION ACT

Significance: Regulatory Program

Legal Authority: 35 USC 6; 17 USC 901; EO 12504

CFR Citation: 37 CFR 150.1; 37 CFR 150.2; 37 CFR 150.3; 37 CFR 150.4; 37 CFR 150.5; 37 CFR 150.6

Legal Deadline: None.

Abstract: PTO proposes to amend its rules of practice to provide procedures implementing the provision in the Semiconductor Chip Protection Act of 1984 for the issuance of Presidential Proclamations to protect semiconductor chip products against unauthorized duplication.

Timetable:

Action	Date	FR Cite
NPRM	05/00/88	

Small Entity: No

Affected Sectors: Multiple

Government Levels Affected: Federal

Agency Contact: Michael K. Kirk, Assistant Commissioner for External Affairs, Department of Commerce, Patent and Trademark Office, Commissioner of Patents and Trademarks, Box 4, Washington, DC 20231, 703 557-3065

RIN: 0651-AA29

364. ● REVISION OF PATENT FEES

Significance: Agency Priority

Legal Authority: 35 USC 6; 35 USC 41; 35 USC 376

CFR Citation: 37 CFR 1.16; 37 CFR 1.17; 37 CFR 1.18; 37 CFR 1.19; 37 CFR 1.20; 37 CFR 1.21; 37 CFR 1.24; 37 CFR 1.26; 37 CFR 1.297; 37 CFR 1.445; 37 CFR 1.482

Legal Deadline: None.

Abstract: PTO plans to propose amendments of its rules of practice in patent cases to adjust patent fees effective October 1, 1988, to reflect the fluctuations in the Consumer Price Index during the previous three years.

VOL 53 ISS 79 PT 1 AP 25 1988 UMI

DOC—PTO **Proposed Rule Stage**

Timetable:

Action	Date	FR Cite
NPRM	04/00/88	

Small Entity: No

Affected Sectors: Multiple

Government Levels Affected: Local, State, Federal

Agency Contact: Frances Michalkewicz, Department of Commerce, Patent and Trademark Office, Commissioner of Patents and Trademarks, Washington, DC 20231, 703 557-1610

RIN: 0651-AA30

365. ● PRACTICE BEFORE THE PATENT AND TRADEMARK OFFICE

Significance: Agency Priority

Legal Authority: 35 USC 6; 35 USC 31; 35 USC 32; 5 USC 500; 15 USC 1123

CFR Citation: 37 CFR 10.5; 37 CFR 10.6; 37 CFR 10.23

Legal Deadline: None.

Abstract: PTO proposes to amend its rules governing the admission of officers and employees of the United States to the register of attorneys and agents authorized to practice before the PTO in patent cases, and the practice of former PTO employees before the Office. The amendment would eliminate a restriction excluding federal employees from registration which has been held invalid on judicial review. Provisions affected by the elimination of that restriction would also be amended.

Timetable:

Action	Date	FR Cite
NPRM	04/00/88	

Small Entity: No

Affected Sectors: Multiple

Government Levels Affected: Federal

Agency Contact: Nancy C. Slutter, Assistant Solicitor, Department of Commerce, Patent and Trademark Office, Commissioner of Patents and Trademarks, Washington, DC 20231, 703 557-4035

RIN: 0651-AA31

366. ● MISCELLANEOUS CHANGES IN PATENT PRACTICE

Significance: Agency Priority

Legal Authority: 35 USC 6; 15 USC 1113; 15 USC 1123

CFR Citation: 37 CFR 1.4; 37 CFR 1.5; 37 CFR 1.53; 37 CFR 1.56; 37 CFR 1.81; 37 CFR 1.84; 37 CFR 1.85; 37 CFR 1.152; 37 CFR 1.378; 37 CFR 1.421; 37 CFR 1.480

Legal Deadline: None.

Abstract: PTO proposes to amend its regulations to make miscellaneous changes in patent practice.

Timetable:

Action	Date	FR Cite
NPRM	04/00/88	

Small Entity: No

Affected Sectors: Multiple

Government Levels Affected: Federal

Agency Contact: Louis O. Maassel, Editor, MPEP, Department of Commerce, Patent and Trademark Office, Commissioner of Patents and Trademarks, Washington, DC 20231, 703 557-3079

RIN: 0651-AA32

DEPARTMENT OF COMMERCE (DOC) **Final Rule Stage**
Patent and Trademark Office (PTO)

367. VARIETY DENOMINATION REQUIREMENTS FOR PLANT PATENT APPLICATIONS

Legal Authority: 35 USC 41; 35 USC 6

CFR Citation: 37 CFR 1.17; 37 CFR 1.72; 37 CFR 1.168

Legal Deadline: None.

Abstract: PTO will propose amendment of its rules of practice in patent cases to implement the International Convention for the Protection of New Varieties of Plants. The International Convention requires registration of a plant variety name at the time a patent on a plant variety is issued. Compliance with the registration requirements of the Convention would be determined in the process of examining plant patent applications.

Timetable:

Action	Date	FR Cite
NPRM	08/16/85	50 FR 33062
NPRM Comment Period End	10/31/85	
Notice	12/27/85	50 FR 52963
NPRM	11/02/87	52 FR 42016
Final Action	05/00/88	

Small Entity: No

Additional Information: Neither an RIA nor an RFA is required or will be prepared.

Affected Sectors: Multiple

Government Levels Affected: Local, State, Federal

Agency Contact: Michael K. Kirk, Assistant Commissioner for External Affairs, Department of Commerce, Patent and Trademark Office, Washington, DC 20231, 703 557-3065

RIN: 0651-AA12

368. TRADEMARK AUTOMATED SEARCH SYSTEM FEES

Legal Authority: 15 USC 1113; 15 USC 1123; PL 96-517; PL 97-247

CFR Citation: 37 CFR 2.6

Legal Deadline: None.

Abstract: PTO proposes to amend its rules to establish user fees for members of the public desiring to conduct trademark searches of the computerized data bases in the PTO's automated trademark search system.

Timetable:

Action	Date	FR Cite
NPRM	08/07/84	49 FR 31460
NPRM Comment Period End	09/05/84	
NPRM Comment Period Extended to	09/25/84	49 FR 35527
Final Action	04/00/88	
Final Action Effective	06/00/88	

Small Entity: No

Additional Information: Neither an RIA nor an RFA is required or will be prepared.

Affected Sectors: Multiple

Government Levels Affected: Local, State, Federal

Analysis: See Additional Information

DOC—PTO

Final Rule Stage

Agency Contact: Bradford R. Huther, Asst. Commissioner for Finance & Planning, Department of Commerce, Patent and Trademark Office, Washington, DC 20231, 703 557-1572

RIN: 0651-AA18

369. MISCELLANEOUS AMENDMENTS OF PATENT RULES

Legal Authority: 35 USC 6; 35 USC 135

CFR Citation: 37 CFR 1.14; 37 CFR 1.131; 37 CFR 1.192; 37 CFR 1.194; 37 CFR 1.196; 37 CFR 1.604; 37 CFR 1.607; 37 CFR 1.612; 37 CFR 1.637; 37 CFR 1.658; 37 CFR 1.662; 37 CFR 5.3

Legal Deadline: None.

Abstract: PTO plans to amend its rules of practice to clarify the procedure in patent interference cases, to make ex parte practice in patent cases consistent with the procedure in patent interference cases, and to expedite the disposition of appeals in ex parte cases.

Timetable:

Action	Date	FR Cite
NPRM	09/30/87	52 FR 36736
NPRM Comment Period End	12/01/87	
Final Action	04/00/88	

Small Entity: No

Affected Sectors: Multiple

Government Levels Affected: Local, State, Federal

Agency Contact: Saul I. Serota, Department of Commerce, Patent and Trademark Office, Washington, DC 20231, 703 557-4072

RIN: 0651-AA25

DEPARTMENT OF COMMERCE (DOC)

Prerule Stage

United States Travel and Tourism Administration (USTTA)

370. TRAVEL PROMOTION FEE

Significance: Regulatory Program

Legal Authority: Not yet enacted

CFR Citation: Not yet determined

Legal Deadline: None.

Abstract: USTTA has primary federal responsibility for stimulating travel to the United States by residents of foreign countries. Promotion and facilitation services are currently offered without charge to those who derive a direct benefit from the government's activities. A travel promotion fee would recover the costs of these services. The Department of Commerce will submit draft legislation which would impose a fee on airlines and passenger ship lines which travel to the United States and directly benefit from USTTA promotional activities overseas. Airlines and passenger ship lines would be required to pay a fee for each passenger who arrives in the United States. Upon enactment of the legislation, USTTA will issue implementing regulations.

Timetable:

Action	Date	FR Cite
Next Action Undetermined		

Small Entity: Undetermined

Agency Contact: Jerry Manolatos, Director, Office of Management and Administration, Department of Commerce, United States Travel and Tourism Administration, Room 1524, Washington, DC 20230, 202 377-3812

RIN: 0644-AA00

[FR Doc. 88-5079 Filed 04-22-88; 8:45 am]

BILLING CODE 3510-BW-T

VOL
53

ISS
79

PT
1

AP
25

1988

UMI

federal register

Monday
April 25, 1988

Part V

Department of Defense

Semiannual Regulatory Agenda

DEPARTMENT OF DEFENSE (DOD)

DEPARTMENT OF DEFENSE

Office of the Secretary

32 CFR Chs. I, V, VI, and VII

33 CFR Ch. II

36 CFR Ch. III

Improving Government Regulations; Semiannual Agenda of Regulations

AGENCY: Office of the Secretary, DoD.

ACTION: Publication of the consolidated semiannual agenda of DoD regulatory documents.

SUMMARY: The Department of Defense is publishing this consolidated semiannual agenda of regulatory documents for public information and comments under E.O. 12291, "Federal Regulation." This agenda incorporates the objective and criteria, when applicable, of the regulatory reform program under E.O. 12291, and other regulatory programs. It contains DoD issuances initiated by DoD Components that may have economic and environmental impact on state, local, public or private interests under the criteria of E.O. 12291. Although most DoD issuances listed in the agenda are of negligible public impact, their nature may be of public interest and, therefore, are published to provide notice of rulemaking and an opportunity for public participation in the internal DoD rulemaking process.

This agenda updates the report published on October 26, 1987, and includes regulations expected to be issued and under review over the next 12 months. The next agenda is scheduled to be published in October 1988. In addition to this agenda, DoD Components also publish rulemaking notices pertaining to their specific statutory administration requirements as required.

FOR FURTHER INFORMATION CONTACT: For information concerning the overall DoD regulatory improvement program and for general semiannual agenda information, contact Ms. Pearl Rascoe-Harrison, telephone 202-746-0933 or write to Directorate for Information Operations and Reports, Washington Headquarters Services, 1215 Jefferson Davis Highway, Suite 1204, Arlington, Virginia 22202-4302.

For questions of a legal nature concerning the agenda and its statutory requirements or obligations, contact the Office of the General Counsel, DoD, Washington, DC 20301, or call 202-697-2714.

For specific agenda items, contact the appropriate individual indicated in each DoD Component report.

SUPPLEMENTARY INFORMATION: This consolidated agenda is composed of the regulatory status reports from the Office of the Secretary of Defense and the Departments of the Army, Navy, and Air Force. Included also in this agenda is the regulatory report from the U.S. Army Corps of Engineers, whose civil works functions fall under the reporting requirements of E.O. 12291. Their agenda will reflect these requirements, with follow-on reporting actions taken, as necessary.

DoD issuances range from DoD Directives (reflecting departmental policy) to implementing instructions and regulations (largely internal and used to implement Directives). The OSD agenda section contains the primary Directives under which DoD Components promulgate their implementing regulations.

To ease identification and to clarify the differences among the variety of issuances reported, they are identified by their DoD internal numbering system, which denotes Component level of authority and type of issuance in addition to the required CFR number.

In addition, this agenda, although published under the reporting requirements of E.O. 12291, will continue to be the DoD single source reporting vehicle which will identify issuances that are currently applicable under the various regulatory reform programs in progress. Therefore, when applicable, DoD Components will identify those rules which come under the criteria of the:

a. Regulatory Flexibility Act;

b. Paperwork Reduction Act; and

c. GATT International Trade Agreement.

These DoD issuances which are directly applicable under these statutes will be identified in the agenda and their action status indicated. Generally, the reports in this agenda will contain three sections: (1) Current and projected rulemaking; (2) review of existing regulations; and (3) completed actions.

Although not a regulatory agency, the Department of Defense will continue to participate in regulatory initiatives designed to reduce the economic costs and unnecessary environmental burdens upon the public. Comments and recommendations are invited on the rules reported and should be addressed to the DoD Component representatives identified in each section.

Although sensitive to the needs of the public and regulatory reform, the Department of Defense reserves the right to exercise the exemptions and flexibility permitted in its rulemaking process in order to proceed with its overall defense-oriented mission.

Note: The publishing of this agenda does not waive the applicability of the military affairs exemption in title 5, section 553 and section 1 of E.O. 12291.

D. O. Cooke,

Deputy Assistant Secretary of Defense (Administration).

AGENCY: Office of the Secretary, DoD.

ACTION: This agenda updates the report published on October 26, 1987, and includes regulations expected to be issued and under review over the next 12 months.

SUMMARY: The regulatory material listed below is in 4 parts: (1) Prerule stage; (2) proposed rule stage; (3) final rule stage; and (4) completed actions.

FOR FURTHER INFORMATION CONTACT: The Agency contact names and telephone numbers appear after each agenda entry. For other information on the agenda, contact Mrs. Patricia H. Means, Directives Division, Correspondence and Directives Directorate, Washington Headquarters Services, telephone 202-697-4111.

SUPPLEMENTARY INFORMATION:

E.O. 12291: None of the regulatory documents listed below is a "major rule" and no major rules are presently under development.

Regulatory Flexibility Action, section 610: The Office of the Secretary of Defense has screened its existing regulatory documents and has concluded that none of its regulatory documents cause significant impact on a substantial number of small entities.

DOD

Paperwork Reduction Act, Pub. L. 96-511: None of the DoD regulatory documents listed in the agenda require information collection reports affecting the public sector under the criteria of Pub. L. 96-511.

GATT Agreement: None of the DoD regulatory documents listed in this agenda impact upon foreign trade under the GATT Agreement.

The OSD agenda follows.

Office of the Secretary—Final Rule Stage

Sequence Number	Title	Regulation Identifier Number
371	Civilian Health and Medical Program of the Uniformed Services (CHAMPUS); Implementation of Section 504 of Pub. L. 93-112, the Rehabilitation Act of 1973 (DoD 6010.8-R)	0790-AA71
372	Commercial Activities Program; Procedures (DOD Instruction 4100.33)	0790-AA73
373	Implementation of the Program Fraud Civil Remedies Act (DoD Directive 5505.xx)	0790-AA82
374	Department of Defense (DoD) Program Fraud Civil Remedies Regulation (DoD Directive 5505.xx)	0790-AA83
375	Defense Industrial Personnel Security Clearance Review Program (DoD Directive 5220.6)	0790-AA84
376	Civilian Health and Medical Program of the Uniformed Services (CHAMPUS); Modification of Payment Limitation for Multiple Surgical Procedures (DoD 6010.8-R)	0790-AA89

Office of the Secretary—Completed Actions

Sequence Number	Title	Regulation Identifier Number
377	Presentation of DoD-Sponsored Scientific and Technical Papers at Meetings (DoD Instruction 5230.27)	0790-AA59
378	Coordination of Benefits (DoD Instruction 6010.15)	0790-AA66
379	Civilian Health and Medical Program of the Uniformed Services (CHAMPUS); Implementation of a CHAMPUS DRG-Based Payment System (DoD 6010.8-R)	0790-AA80
380	Civilian Health and Medical Program of the Uniformed Services (CHAMPUS); Active Duty Dependents Dental Program (DoD 6010.8-R)	0790-AA85
381	Shelter for the Homeless Program; Proposed Implementation (DoD Instruction 4165.65)	0790-AA86
382	Provision of Free Public Education for Eligible Dependent Children (DoD Directive 1342.16)	0790-AA87
383	Function of the Department of Defense and Its Major Components (DoD Directive 5100.1)	0790-AA90
384	DoD Metrication Program (DoD Directive 4120.18)	0790-AA91
385	Voluntary Military Pay Allotments (DoD Directive 7330.1)	0790-AA92
386	Suspension and Debarment of Nonappropriated Fund Contractors (DoD Directive 4105.66)	0790-AA93
387	UnderSecretary of Defense For Research and Engineering (DoD Directive 5129.1)	0790-AA94
388	Defense Investigative Service (DIS) (DoD Directive 5105.42)	0790-AA95
389	Civilian Health and Medical Program of the Uniformed Services (CHAMPUS); Demonstration Program (DoD 6010.8-R)	0790-AA96
390	Defense Hotline Program (DoD Directive 7050.1)	0790-AA97
391	Defense Nuclear Agency (DNA) (DoD Directive 5105.31)	0790-AA98
392	Offshore Military Activities Program (DoD Directive 3100.5)	0790-AA99
393	Sale of Government-Furnished Equipment or Material and Services to U.S. Companies (DoD Directive 4175.1)	0790-AB00
394	Uniform Reserve, Training and Retirement Categories (DoD Directive 1215.6)	0790-AB01
395	Under Secretary of Defense (Acquisition)(DoD Directive 5134.1)	0790-AB02
396	Voluntary Private Health Insurance Conversion Program (DoD Directive 6000.3)	0790-AB03
397	American Forces Information Service (AFIS) (DoD Directive 5122.10)	0790-AB04

Department of the Army—Prerule Stage

Sequence Number	Title	Regulation Identifier Number
398	The Army General Counsel's Honors Programs	0702-AA00
399	Airfield Certification and Use of Army Airfields by Other than US Department of Defense Aircraft	0702-AA02

DOD

Department of the Army—Completed Actions

Sequence Number	Title	Regulation Identifier Number
400	Regulations Affecting Military Reservations; Firearms and Weapons	0702-AA16

U.S. Army Corps of Engineers—Proposed Rule Stage

Sequence Number	Title	Regulation Identifier Number
401	Regulatory Programs of the Corps of Engineers, Part 325, Appendix D--Endangered Species Counterpart Regulations	0710-AA17
402	Regulatory Program of the Corps of Engineers, Nationwide Permits	0710-AA20

U.S. Army Corps of Engineers—Final Rule Stage

Sequence Number	Title	Regulation Identifier Number
403	Regulatory Programs of the Corps of Engineers Part 325, App. C, Historic Properties	0710-AA12

U.S. Army Corps of Engineers—Completed Actions

Sequence Number	Title	Regulation Identifier Number
404	Environmental Quality, Procedures for Implementing the National Environmental Policy Act (NEPA)	0710-AA11

Department of the Navy—Completed Actions

Sequence Number	Title	Regulation Identifier Number
405	Rules Governing Public Access; Kahoolawe Island and Kaulo Under Cognizance of Commander Naval Base, Pearl Harbor, HI	0703-AA27
406	Nonnaval Medical and Dental Care	0703-AA28
407	Medical and Dental Care for Eligible Persons at Navy Medical Department Facilities	0703-AA29

Department of the Air Force—Prerule Stage

Sequence Number	Title	Regulation Identifier Number
408	Air Force Supplement to the Federal Acquisition Regulation (FAR)	0701-AA14
409	Environmental Impact Analysis Process (ANGR 19-02)	0701-AA22

DOD

Department of the Air Force—Proposed Rule Stage

Sequence Number	Title	Regulation Identifier Number
410	Public Affairs Policies and Procedures (AFR 190-1)	0701-AA18
411	Claims and Tort Litigation (AFR 112-1)	0701-AA19
412	Delivery of Air Force Personnel to U.S. Civilian Authorities for Trial (AFR 111-11)	0701-AA20
413	Personal Financial Responsibility (AFR 35-18)	0701-AA23
414	Leasing USAF Aircraft and Related Equipment to Nongovernment Organizations	0701-AA26

Department of the Air Force—Completed Actions

Sequence Number	Title	Regulation Identifier Number
415	Issuing Certificates in Lieu of Lost or Destroyed Certificates of Separation (AFR 35-96)	0701-AA21
416	Air Force Visual Information Systems (AFR 700-32)	0701-AA25

DEPARTMENT OF DEFENSE (DOD)

Final Rule Stage

Office of the Secretary (OS)

371. CIVILIAN HEALTH AND MEDICAL PROGRAM OF THE UNIFORMED SERVICES (CHAMPUS); IMPLEMENTATION OF SECTION 504 OF PUB. L. 93-112, THE REHABILITATION ACT OF 1973 (DOD 6010.8-R)

Legal Authority: 10 USC 1079; 10 USC 1086; 5 USC 301; 29 USC 794

CFR Citation: 32 CFR 199

Legal Deadline: None.

Abstract: The purpose of this rule is to revise the DoD Regulation 6010.8-R (32 CFR Part 199) to meet the intent of section 504 of the Rehabilitation Act of 1973, as amended.

Timetable:

Action	Date	FR Cite
NPRM	10/31/86	51 FR 39757
NPRM Comment Period End	12/01/86	51 FR 39757
Final Action	12/31/88	
Final Action Effective	12/31/88	

Small Entity: No

Agency Contact: T. Shahid, Department of Defense, Office of the Secretary, 303 361-3587

RIN: 0790-AA71

372. COMMERCIAL ACTIVITIES PROGRAM; PROCEDURES (DOD INSTRUCTION 4100.33)

Legal Authority: 5 USC 301; 5 USC 552; PL 93-400

CFR Citation: 32 CFR 169; 32 CFR 169a; 32 CFR 171

Legal Deadline: None.

Abstract: This part establishes DoD policies to implement OMB Circular No. A-76, which are currently included in 32 CFR Part 169. It establishes procedures and criteria for use by the Department of Defense to determine whether DoD commercial activities should be performed by DoD personnel in-house or by contract with commercial sources. 32 CFR Part 169, "Commercial Activities Program" and 32 CFR Part 169a, "Commercial Activities Program Procedures" are proposed to be removed in their entirety.

Timetable:

Action	Date	FR Cite
NPRM	12/03/86	51 FR 43619
NPRM Comment Period End	01/02/87	51 FR 43620
Final Action	12/31/88	
Final Action Effective	12/31/88	

Small Entity: No

Agency Contact: D. Hansen, Department of Defense, Office of the Secretary, 202 325-0537

RIN: 0790-AA73

373. IMPLEMENTATION OF THE PROGRAM FRAUD CIVIL REMEDIES ACT (DOD DIRECTIVE 5505.XX)

Legal Authority: 31 USC 3807; PL 99-509

CFR Citation: 32 CFR 276

Legal Deadline: None.

Abstract: This part implements Program Fraud Civil Remedies Act by establishing an administrative process within the Departments of the Army, Navy, and Air Force for the adjudication of fraudulent claims of less than $150,000 or false statements.

Timetable:

Action	Date	FR Cite
NPRM	07/16/87	52 FR 26692
NPRM Comment Period End	08/17/87	52 FR 26692
Final Action	12/31/88	
Final Action Effective	12/31/88	

Small Entity: No

Agency Contact: E. Shapiro, Department of Defense, Office of the Secretary, 202 697-2714

RIN: 0790-AA82

374. DEPARTMENT OF DEFENSE (DOD) PROGRAM FRAUD CIVIL REMEDIES REGULATION (DOD DIRECTIVE 5505.XX)

Legal Authority: 31 USC 3807; PL 99-509

CFR Citation: 32 CFR 277

Legal Deadline: None.

Abstract: This part establishes administrative procedures for imposing civil penalties and assessments against persons who make, submit, or present, or cause to be made, submitted, or presented, false, fictitious or fraudulent claims or written statements to authorities or to their agents. It also specifies the hearing and appeal rights of persons subject to allegations of liability for such penalties and assessments.

Timetable:

Action	Date	FR Cite
NPRM	07/16/87	52 FR 26693
NPRM Comment Period End	08/17/87	52 FR 26693
Final Action	12/31/88	
Final Action Effective	12/31/88	

Small Entity: No

Agency Contact: E. Shapiro, Department of Defense, Office of the Secretary, 202 697-2714

RIN: 0790-AA83

375. DEFENSE INDUSTRIAL PERSONNEL SECURITY CLEARANCE REVIEW PROGRAM (DOD DIRECTIVE 5220.6)

Legal Authority: 5 USC 504; EO 10865

CFR Citation: 32 CFR 155

Legal Deadline: None.

Abstract: This part is being revised and reissued to establish a standard for determining petitions for reimbursement for loss of earnings, incorporate the revised DoD Adjudication Policies for security clearance determinations under this rule, and revise procedures for cases not requiring a hearing, and procedures for considering issues raised on appeal.

Timetable:

Action	Date	FR Cite
NPRM	05/06/87	52 FR 16864
NPRM Comment Period End	06/05/87	52 FR 16864
Final Action	12/31/88	
Final Action Effective	12/31/88	

Small Entity: No

Agency Contact: J. Brown, Department of Defense, Office of the Secretary, 202 695-4599

RIN: 0790-AA84

376. CIVILIAN HEALTH AND MEDICAL PROGRAM OF THE UNIFORMED SERVICES (CHAMPUS); MODIFICATION OF PAYMENT LIMITATION FOR MULTIPLE SURGICAL PROCEDURES (DOD 6010.8-R)

Legal Authority: 10 USC 1079; 10 USC 1086; 5 USC 301

CFR Citation: 32 CFR 199

Legal Deadline: None.

Abstract: This proposed amendment revises the comprehensive CHAMPUS regulation pertaining to payment for multiple surgical procedures performed during the same operative session. This proposed amendment allows payment for second and subsequent surgical procedures at fifty percent of the CHAMPUS-determined allowable charge, whether or not the second and subsequent procedures are related i.e., performed through the same surgical opening to the first procedure.

Timetable:

Action	Date	FR Cite
NPRM	03/11/87	52 FR 7453
NPRM Comment Period End	04/10/87	52 FR 7453
Final Action	12/31/88	
Final Action Effective	12/31/88	

Small Entity: No

Agency Contact: S. Isaacson, Department of Defense, Office of the Secretary, 303 362-4005

RIN: 0790-AA89

DEPARTMENT OF DEFENSE (DOD)
Office of the Secretary (OS)

Completed Actions

377. PRESENTATION OF DOD-SPONSORED SCIENTIFIC AND TECHNICAL PAPERS AT MEETINGS (DOD INSTRUCTION 5230.27)

Legal Authority: 10 USC 130

CFR Citation: 32 CFR 249

Legal Deadline: None.

Abstract: This part provides policy and procedural guidance for considering national security in the dissemination of DoD-sponsored scientific and technical information at meetings, whether such meetings are conducted by the U.S. Government or private organizations.

Timetable:

Action	Date	FR Cite
NPRM	02/12/86	51 FR 5210
NPRM Comment Period End	03/14/86	51 FR 5210
Final Action Effective	10/06/87	52 FR 41707
Final Action	10/30/87	52 FR 41707

Small Entity: No

Agency Contact: F. Sobieszcyk, Department of Defense, Office of the Secretary, 202 694-0205

RIN: 0790-AA59

378. COORDINATION OF BENEFITS (DOD INSTRUCTION 6010.15)

Legal Authority: PL 99-272; 10 USC Chapter 55

CFR Citation: 32 CFR 220

Legal Deadline: None.

Abstract: This part establishes Department of Defense policies under PL 99-272. It also assigns responsibility for implementing the authority for collection by the United States of inpatient hospital costs incurred by retirees and dependents.

Timetable:

Action	Date	FR Cite
NPRM	10/08/86	51 FR 36023
NPRM Comment Period End	11/07/86	51 FR 36023
Final Action	09/25/87	52 FR 36028
Final Action Effective	10/01/87	52 FR 36028

Small Entity: No

Agency Contact: J. Maddy, Department of Defense, Office of the Secretary, 202 694-3242

RIN: 0790-AA68

379. CIVILIAN HEALTH AND MEDICAL PROGRAM OF THE UNIFORMED SERVICES (CHAMPUS); IMPLEMENTATION OF A CHAMPUS DRG-BASED PAYMENT SYSTEM (DOD 6010.8-R)

Legal Authority: 10 USC 1079; 10 USC 1086; 5 USC 301

CFR Citation: 32 CFR 199

Legal Deadline: None.

Abstract: This final rule amends the comprehensive CHAMPUS regulations, DoD 6010.8-R (32 CFR Part 199), pertaining to payment for inpatient hospital services and implements a DRG-based payment system which is modeled on the Medicare Prospective Payment System. It also revises the cost-sharing requirements for beneficiaries other than dependents of active duty members.

Timetable:

Action	Date	FR Cite
NPRM	06/03/87	52 FR 20731
NPRM Comment Period End	07/06/87	52 FR 20731
Final Action	09/01/87	52 FR 32992
Final Action Effective	10/01/87	52 FR 32992

Small Entity: No

Agency Contact: S. Isaacson, Department of Defense, Office of the Secretary, 303 361-4005

RIN: 0790-AA80

380. CIVILIAN HEALTH AND MEDICAL PROGRAM OF THE UNIFORMED SERVICES (CHAMPUS); ACTIVE DUTY DEPENDENTS DENTAL PROGRAM (DOD 6010.8-R)

Legal Authority: 10 USC 1076a; 10 USC 1079; 10 USC 1086; 5 USC 301

CFR Citation: 32 CFR 199

Legal Deadline: None.

Abstract: This final rule amends Part 199 by adding a new section to implement Chapter 55, Title 10, Section 1076a, USC, which authorizes the Active Duty Dependents Dental Plan. It also defines the benefits and eligibility requirements, provides for insurance or prepayment contracting for benefit administration and payment, provides for Government and Uniformed Services member sharing in the cost of premiums for the insurance or prepayment contract, defines authorized providers, provides for benefit communications and implementation, establishes alternative delivery systems criteria and requirements, and provides an appeals procedure.

Timetable:

Action	Date	FR Cite
NPRM	05/29/87	52 FR 20096
NPRM Comment Period End	07/13/87	52 FR 20096
Final Action	01/26/88	53 FR 2018
Final Action Effective	08/01/88	53 FR 2018

Small Entity: No

Agency Contact: J. Rhea, Department of Defense, Office of the Secretary, 303 361-3278

RIN: 0790-AA85

381. SHELTER FOR THE HOMELESS PROGRAM; PROPOSED IMPLEMENTATION (DOD INSTRUCTION 4165.65)

Legal Authority: 10 USC 2546

CFR Citation: 32 CFR 226

Legal Deadline: None.

Abstract: This final rule provides specific guidance to the Heads of Department of Defense Components and Installation Commanders as to the actions they may take to provide shelter and incidental services to persons without adequate shelter.

Timetable:

Action	Date	FR Cite
NPRM	05/11/87	52 FR 17605
NPRM Comment Period End	06/10/87	52 FR 17605
Final Action Effective	10/30/87	52 FR 42636
Final Action	11/06/87	52 FR 42636

Small Entity: No

Agency Contact: S. Kleiman, Department of Defense, Office of the Secretary, 202 697-7475

RIN: 0790-AA86

382. PROVISION OF FREE PUBLIC EDUCATION FOR ELIGIBLE DEPENDENT CHILDREN (DOD DIRECTIVE 1342.16)

Legal Authority: 20 USC 241

CFR Citation: 32 CFR 66

Legal Deadline: None.

Abstract: This final rule implements PL 81-874, as amended, and Section 505(c) of PL 97-35. Section 6 authorizes the establishment of "arrangements" for the education of certain federally-connected children when prescribed conditions are met.

Timetable:

Action	Date	FR Cite
NPRM	05/22/87	52 FR 19361
NPRM Comment Period End	06/22/87	52 FR 19361
Final Action Effective	10/16/87	52 FR 44389
Final Action	11/19/87	52 FR 44389

Small Entity: No

Agency Contact: H. Navarez, Department of Defense, Office of the Secretary, 202 697-0481

RIN: 0790-AA87

383. ● FUNCTION OF THE DEPARTMENT OF DEFENSE AND ITS MAJOR COMPONENTS (DOD DIRECTIVE 5100.1)

Legal Authority: 50 USC 401; 10 USC 125

CFR Citation: 32 CFR 368

Legal Deadline: None.

Abstract: This part revises 32 CFR Part 368 to incorporate changes within the Department of Defense mandated by the Goldwater Nichols Department of Defense Reorganization Act of 1986 and other changes recommended by the President's Blue Ribbon Commission on Defense Management.

Timetable:

Action	Date	FR Cite
Final Action Effective	04/03/87	52 FR 35417
Final Action	09/21/87	52 FR 35417

Small Entity: No

Agency Contact: R. Furtner, Department of Defense, Office of the Secretary, 202 695-4281

RIN: 0790-AA90

384. ● DOD METRICATION PROGRAM (DOD DIRECTIVE 4120.18)

Legal Authority: 15 USC 205a to k; PL 94-168

CFR Citation: 32 CFR 209

Legal Deadline: None.

Abstract: This rule revises 32 CFR Part 209, requires that the nonuse of the metric system in new designs be specifically approved, and directs Department of Defense Components to prepare needed metric specifications.

Timetable:

Action	Date	FR Cite
Final Action Effective	09/16/87	52 FR 47390
Final Action	12/14/87	52 FR 47389

Small Entity: No

Agency Contact: T. Mansperger, Department of Defense, Office of the Secretary, 202 695-7915

RIN: 0790-AA91

385. ● VOLUNTARY MILITARY PAY ALLOTMENTS (DOD DIRECTIVE 7330.1)

Legal Authority: 37 USC 13

CFR Citation: 32 CFR 59

Legal Deadline: None.

Abstract: This rule updates guidance on voluntary military pay allotments from the pay allowances of active duty and retired service members.

Timetable:

Action	Date	FR Cite
Final Action Effective	09/03/87	52 FR 34215
Final Action	09/10/87	52 FR 34215

Small Entity: No

Agency Contact: J. Jasinski, Department of Defense, Office of the Secretary, 202 697-0536

RIN: 0790-AA82

386. ● SUSPENSION AND DEBARMENT OF NONAPPROPRIATED FUND CONTRACTORS (DOD DIRECTIVE 4105.66)

Legal Authority: 5 USC 301

CFR Citation: 32 CFR 165

Legal Deadline: None.

Abstract: This rule removes Part 165 in its entirety.

Timetable:

Action	Date	FR Cite
Withdrawn	09/14/87	52 FR 34639

Small Entity: No

Additional Information: 32 CFR Part 165 is no longer valid because it does not support current Department of Defense policy emphasizing central monitoring and coordination of contract fraud investigators and remedies.

Agency Contact: C. Moelk, Department of Defense, Office of the Secretary, 202 697-7197

RIN: 0790-AA93

387. ● UNDERSECRETARY OF DEFENSE FOR RESEARCH AND ENGINEERING (DOD DIRECTIVE 5129.1)

Legal Authority: 10 USC Chapter 4

CFR Citation: 32 CFR 351

Legal Deadline: None.

Abstract: This rule removes Part 351 in its entirety.

Timetable:

Action	Date	FR Cite
Withdrawn	10/06/87	52 FR 37290

Small Entity: No

Additional Information: 32 CFR Part 351 is removed and replaced by 32 CFR Part 382 because of a reorganization.

Agency Contact: H. Becker, Department of Defense, Office of the Secretary, 202 697-0709

RIN: 0790-AA94

388. ● DEFENSE INVESTIGATIVE SERVICE (DIS) (DOD DIRECTIVE 5105.42)

Legal Authority: 10 USC Chapter 4

CFR Citation: 32 CFR 361

Legal Deadline: None.

Abstract: This part revises 32 CFR Part 361 and prescribes the organization and management, functions, responsibilities, relationships, and authorities of the Defense Investigative Service.

Timetable:

Action	Date	FR Cite
Final Action Effective	06/14/87	52 FR 41993
Final Action	11/02/87	52 FR 41993

Small Entity: No

Agency Contact: W. Bell, Department of Defense, Office of the Secretary, 202 697-3969

RIN: 0790-AA95

389. ● CIVILIAN HEALTH AND MEDICAL PROGRAM OF THE UNIFORMED SERVICES (CHAMPUS); DEMONSTRATION PROGRAM (DOD 6010.8-R)

Legal Authority: 10 USC 1079; 10 USC 1086; 5 USC 301

CFR Citation: 32 CFR 199

Legal Deadline: None.

Abstract: This part is intended to expedite the administrative processing associated with initiating health care demonstration projects.

Timetable:

Action	Date	FR Cite
Final Action	10/19/87	52 FR 38753
Final Action Effective	10/19/87	52 FR 38753

Small Entity: No

Agency Contact: D. Fant, Department of Defense, Office of the Secretary, 202 697-8975

RIN: 0790-AA96

390. ● DEFENSE HOTLINE PROGRAM (DOD DIRECTIVE 7050.1)

Legal Authority: 5 USC 301; 5 USC 552

CFR Citation: 32 CFR 98

Legal Deadline: None.

Abstract: This part provides the authority for establishment of the Defense Hotline, clarifies terminology, prescribes operating procedures, assigns responsibilities and requirements of the Inspector General, DoD, and the DoD Components in implementing the programs, and establishes standards for conducting and reporting the results of the examination of Hotline complaints.

Timetable:

Action	Date	FR Cite
Final Action Effective	03/02/87	52 FR 44863
Final Action	11/23/87	52 FR 44863

Small Entity: No

Agency Contact: B. Simon, Department of Defense, Office of the Secretary, 202 694-9068

RIN: 0790-AA97

391. ● DEFENSE NUCLEAR AGENCY (DNA) (DOD DIRECTIVE 5105.31)

Legal Authority: 10 USC Chapter 4

CFR Citation: 32 CFR 381

Legal Deadline: None.

Abstract: This part is issued to update the responsibilities, functions, relationships, and authority of the Defense Nuclear Agency.

Timetable:

Action	Date	FR Cite
Final Action Effective	03/18/87	52 FR 36405
Final Action	09/29/87	52 FR 36405

Small Entity: No

Agency Contact: R. Furtner, Department of Defense, Office of the Secretary, 202 695-4281

RIN: 0790-AA98

392. ● OFFSHORE MILITARY ACTIVITIES PROGRAM (DOD DIRECTIVE 3100.5)

Legal Authority: 5 USC 301

CFR Citation: 32 CFR 252

Legal Deadline: None.

Abstract: This part reissues 32 CFR Part 252 to update policies and procedures for the use of offshore areas by the Department of Defense and shall serve as the basis for a comprehensive Offshore Military Activities Program.

Timetable:

Action	Date	FR Cite
Final Action Effective	03/16/87	52 FR 39222
Final Action	10/21/87	52 FR 39222

Small Entity: No

Agency Contact: C. Ramsey, Department of Defense, Office of the Secretary, 202 695-7820

RIN: 0790-AA99

393. ● SALE OF GOVERNMENT-FURNISHED EQUIPMENT OR MATERIAL AND SERVICES TO U.S. COMPANIES (DOD DIRECTIVE 4175.1)

Legal Authority: Pt. 96-525; Pt. 97-392; 10 USC 2208(j); 22 USC 2770; 96 Stat 1962

CFR Citation: 32 CFR 251

Legal Deadline: None.

Abstract: This part is revised to comply with the authority provided by Public Law 96-525 which liberalized some of the provisions of the original part that pertains to certain Army working capital funded arsenals.

Timetable:

Action	Date	FR Cite
Final Action Effective	02/18/87	52 FR 36030
Final Action	09/25/87	52 FR 36030

Small Entity: No

Agency Contact: R. Wise, Department of Defense, Office of the Secretary, 202 697-6108

RIN: 0790-AB00

394. ● UNIFORM RESERVE, TRAINING AND RETIREMENT CATEGORIES (DOD DIRECTIVE 1215.6)

Legal Authority: 80 Stat 379; 5 USC 301

CFR Citation: 32 CFR 102

Legal Deadline: None.

Abstract: This rule revises 32 CFR Part 102 and establishes new policies and procedures consistent with recent changes in law and development of revised Defense Department policy on the roles and missions of the Reserve Components.

Timetable:

Action	Date	FR Cite
Final Action Effective	09/22/87	52 FR 48998
Final Action	12/29/87	52 FR 48998

Small Entity: No

Agency Contact: D. Smith, Department of Defense, Office of the Secretary, 202 695-7306

RIN: 0790-AB01

395. ● UNDER SECRETARY OF DEFENSE (ACQUISITION)(DOD DIRECTIVE 5134.1)

Legal Authority: 10 USC 133

CFR Citation: 32 CFR 382

Legal Deadline: None.

Abstract: This part assigns responsibilities, functions, relationships, and authority to the Under Secretary of Defense for Acquisition because of an agency reorganization.

Timetable:

Action	Date	FR Cite
Final Action Effective	02/10/87	52 FR 37290
Final Action	10/06/87	52 FR 37290

Small Entity: No

Agency Contact: H. Becker, Department of Defense, Office of the Secretary, 202 697-0709

RIN: 0790-AB02

396. ● VOLUNTARY PRIVATE HEALTH INSURANCE CONVERSION PROGRAM (DOD DIRECTIVE 6000.3)

Legal Authority: 80 Stat 379; 5 USC 301

CFR Citation: 32 CFR 104

Legal Deadline: None.

Abstract: This part reissues Part 104 to update policy, prescribe procedures, and assign responsibilities on voluntary health insurance conversion program.

Timetable:

Action	Date	FR Cite
Final Action Effective	01/05/88	52 FR 1343
Final Action	01/19/88	52 FR 1343

Small Entity: No

Agency Contact: C. Galaty, Department of Defense, Office of the Secretary, 202 694-4685

RIN: 0790-AB03

397. ● AMERICAN FORCES INFORMATION SERVICE (AFIS) (DOD DIRECTIVE 5122.10)

Legal Authority: 10 USC 191

CFR Citation: 32 CFR 372

Legal Deadline: None.

Abstract: This part updates the mission, functions, authorities, and relationships of the American Forces Information Service, provides authority for the internal information program.

and reestablishes the Armed Forces Information Council.

Timetable:

Action	Date	FR Cite
Final Action Effective	07/23/87	52 FR 36402
Final Action	09/29/87	52 FR 36402

Small Entity: No

Agency Contact: H. Becker, Department of Defense, Office of the Secretary, 202 697-0709

RIN: 0790-AB04

DEPARTMENT OF DEFENSE (DOD)
Department of the Army (DOA)

AGENCY: Department of the Army, DoD.

ACTION: Semiannual agenda of regulatory information under review or development by the Department of the Army which updates the report published on October 26, 1987, and includes regulations expected to be issued and under review over the next 12 months.

SUMMARY: The regulations contained in this agenda do not meet the criteria of the Regulatory Flexibility Act (5 U.S.C. 601 *et seq.*); does not have priority status; and is not a major rule under the standards of E.O. 12291. The regulation "Airfield Certification and Use of Army Airfields by other than US Department of Defense Aircraft" contains OMB approval reporting requirements as specified under "The Paperwork Reduction Act," of the regulations contained in this agenda. None comes under the GATT International Trade Agreement.

FOR FURTHER INFORMATION CONTACT: Where a contact official is indicated, please contact the specific individual. For general information, contact Mr. John O. Roach, telephone 202-325-6255 or write to HQDA, SFIS-APP, Room 1010, Hoffman I, Alexandria, Virginia 22331-0302.

DEPARTMENT OF DEFENSE (DOD)
Department of the Army (DOA)

Prerule Stage

398. THE ARMY GENERAL COUNSEL'S HONORS PROGRAMS

Legal Authority: 10 USC 302; 10 USC 3005

CFR Citation: 32 CFR 585

Legal Deadline: None.

Abstract: Army General Counsel's Honors Program. To recruit highly qualified attorneys to fill vacancies in the Army General Counsel's Office. Comment period completed. The document explains the methods of application and the requirements and procedures for the appointment to that office.

Timetable:

Action	Date	FR Cite
Next Action Undetermined		

Small Entity: No

Additional Information: Paperwork Reduction Act Impact - None.

International Trade Impact - None.

Agency Contact: Mr. John Pavlick, Department of Defense, Department of the Army, Office of the Army General Counsel, 202 695-0562

RIN: 0702-AA00

399. AIRFIELD CERTIFICATION AND USE OF ARMY AIRFIELDS BY OTHER THAN US DEPARTMENT OF DEFENSE AIRCRAFT

Legal Authority: PL 85-726; PL 97-248; PL 91-258

CFR Citation: Not yet determined

Legal Deadline: None.

Abstract: Prescribes responsibilities and procedures with regard to use of US Army airfields by other than DoD.

Timetable:

Action	Date	FR Cite
End Review	04/00/88	

Small Entity: No

Additional Information: Paperwork Reduction Act Impact - None.

International Trade Impact - None.

Agency Contact: Mr. Robert C. Cole, Department of Defense, Department of the Army, US Army Air Traffic Control Activity, Aeronautical Service Office, 703 272-7796

RIN: 0702-AA02

DEPARTMENT OF DEFENSE (DOD)
Department of the Army (DOA)

Completed Actions

400. REGULATIONS AFFECTING MILITARY RESERVATIONS; FIREARMS AND WEAPONS

Legal Authority: 10 USC 3012; 15 USC 1601; 18 USC 1382; 31 USC 72; 40 USC 258a; 41 USC 14; 50 USC 797

CFR Citation: 32 CFR 552

Legal Deadline: None.

Abstract: This regulation establishes the criteria for possessing, carrying, concealing, and transporting firearms and/or other deadly or dangerous weapons on the Fort Stewart/Hunter Army Airfield installation. This regulation provides guidance on prohibited items and the requirements for possessing, use, and storage under certain conditions for anyone (military or civilian) employed or visiting, or traveling through on the above installation.

Timetable:

Action	Date	FR Cite
NPRM	12/16/86	51 FR 4497
NPRM Comment Period End	02/16/87	
Final Action	01/22/88	53 FR 1752
Final Action Effective	01/22/88	

Small Entity: Not Applicable

Government Levels Affected: Local, State, Federal

Agency Contact: Cpt Richard Luebke, Principal Attorney, Department of Defense, Department of the Army, Commander, 24th Infantry Div (Mech) & Ft. Stewart, ATT: AFZP-JAA, Ft. Stewart, GA 31314, 912 767-2953

RIN: 0702-AA16

DEPARTMENT OF DEFENSE (DOD)
U.S. Army Corps of Engineers (COE)

Proposed Rule Stage

401. REGULATORY PROGRAMS OF THE CORPS OF ENGINEERS, PART 325, APPENDIX D—ENDANGERED SPECIES COUNTERPART REGULATIONS

Legal Authority: 33 USC 401; 33 USC 403; 33 USC 1344; 33 USC 1413

CFR Citation: 33 CFR 325, Appendix D

Legal Deadline: None.

Abstract: Procedures for the protection of endangered species in the regulatory program of the Corps of Engineers. Because of the increased emphasis being placed on endangered species by the Federal and state resource agencies, the Corps identified a need to provide more definitive guidance on implementing the Endangered Species Act (ESA) in its regulatory program. The Corps is now developing counterpart regulations with the Department of Interior. The regulations will basically bring together various guidance used in the past by both the Corps and DOI. The regulations will include guidance on how the ESA Amendments impact applicants for Federal permits.

Timetable:

Action	Date	FR Cite
NPRM	05/00/88	
NPRM Comment Period End	07/00/88	
Final Action	09/00/88	

Small Entity: No

Government Levels Affected: Local, State, Federal

Agency Contact: Sam Collinson, Chief, Regulation Section, Department of Defense, U.S. Army Corps of Engineers, Washington, DC 20314-1000, ATTN: CECW-OR, 202 272-0199

RIN: 0710-AA17

402. REGULATORY PROGRAM OF THE CORPS OF ENGINEERS, NATIONWIDE PERMITS

Significance: Regulatory Program

Legal Authority: 33 USC 401; 33 USC 403; 33 USC 1344; 33 USC 1413

CFR Citation: 33 CFR 330

Legal Deadline: None.

Abstract: The Corps intends to propose revisions to 33 CFR 330. The intent of the proposed revisions will be to simplify and clarify the nationwide permit program of the Corps. The nationwide permit program is designed to authorize projects that have minimal impacts with little or no paperwork or delay. Section 330 of the regulation has become so complex that this goal is no longer being met.

Timetable:

Action	Date	FR Cite
NPRM	05/16/88	
Final Action	11/07/88	

Small Entity: No

Government Levels Affected: Local, State, Federal

Agency Contact: Bernie Goode, Chief, Regulatory Branch, Department of Defense, U.S. Army Corps of Engineers, Washington, DC 20314-1000, CECW-OR, 202 272-0199

RIN: 0710-AA20

DEPARTMENT OF DEFENSE (DOD)
U.S. Army Corps of Engineers (COE)

Final Rule Stage

403. REGULATORY PROGRAMS OF THE CORPS OF ENGINEERS PART 325, APP. C, HISTORIC PROPERTIES

Legal Authority: 33 USC 401; 33 USC 1344; 33 USC 1413

CFR Citation: 33 CFR 325, Appendix C

Legal Deadline: None.

Abstract: Procedure for protection of historic properties and compliance with Sections 106 and 110(f) of the National Historic Preservation Act.

Timetable:

Action	Date	FR Cite
NPRM	05/04/84	49 FR 19036
NPRM Comment Period End	06/04/84	49 FR 19036
Final Action	04/00/88	

DOD—COE **Final Rule Stage**

Action	Date	FR Cite
Final Action Effective	04/00/88	

Small Entity: No

Additional Information: Paperwork Reduction Act Impact - The paperwork, reports, studies, etc., required of government at all levels, business and citizens will be reduced by the revised procedures.

Small Business Impact - By streamlining the procedures for obtaining a Corps permit, the regulatory burden on small businesses will be reduced.

GATT Impact - None.

Affected Sectors: None

Government Levels Affected: Local, State, Federal

Agency Contact: Sam Collinson, Department of Defense, U.S. Army Corps of Engineers, Washington, DC 20314-1000, ATTN: CECW-OR, 202 272-0199

RIN: 0710-AA12

DEPARTMENT OF DEFENSE (DOD)
U.S. Army Corps of Engineers (COE)

Completed Actions

404. ENVIRONMENTAL QUALITY, PROCEDURES FOR IMPLEMENTING THE NATIONAL ENVIRONMENTAL POLICY ACT (NEPA)

Significance: Regulatory Program

Legal Authority: 42 USC 4321

CFR Citation: 33 CFR 230

Legal Deadline: None.

Abstract: Revisions will streamline Corps NEPA procedures consistent with improved management techniques and reduce unnecessary regulatory burdens on applicants who seek Department of the Army permits.

Timetable:

Action	Date	FR Cite
NPRM	01/11/84	49 FR 1387
Final Action	02/03/88	53 FR 3120

Small Entity: No

Additional Information: Additional agency contact: Ms. Janet O'Neill (202) 272-0201

Paperwork Reduction Act Impact - None.

GATT Impact - None.

Agency Contact: Mr. Richard L. Makinen, Department of Defense, U.S. Army Corps of Engineers, Washington, DC 20314-1000, ATTN: CECW-RE, 202 272-0166

RIN: 0710-AA11

DEPARTMENT OF DEFENSE (DOD)
Department of the Navy (NAVY)

AGENCY: Department of the Navy, DoD.

ACTION: This agenda updates the report published on October 26, 1987, and includes regulations expected to be issued and under review over the next 12 months.

SUMMARY: None of the regulations contained in this agenda meets the criteria of the Regulatory Flexibility Act (Pub. L. 96-354), has priority status, is a major rule under E.O. 12291, or contains reporting requirements under "The Paperwork Reduction Act." Further, none of the regulations comes under the GATT International Trade Agreement.

FOR FURTHER INFORMATION CONTACT: Where a contact official is indicated, please contact the specified individual. For general information, contact Ms. Alcinda P. Wenberg, telephone 202-697-7216 or write to Department of the Navy, Information Resources Management, IRM/C, Washington, DC 20350-1000.

DEPARTMENT OF DEFENSE (DOD)
Department of the Navy (NAVY)

Completed Actions

405. ● RULES GOVERNING PUBLIC ACCESS; KAHOOLAWE ISLAND AND KAULO UNDER COGNIZANCE OF COMMANDER NAVAL BASE, PEARL HARBOR, HI

Legal Authority: 50 USC 797; 5 USC 301; 10 USC 6011; 32 CFR 700.702; 32 CFR 700.714; 32 CFR 1949-1953 Comp. p 930

CFR Citation: 32 CFR 763

Legal Deadline: None.

Abstract: To reflect safety regulations for the island of Kahoolawe.

Timetable:

Action	Date	FR Cite
Final Action	11/30/87	52 FR 45454
Final Action Effective	11/30/87	

Small Entity: No

Agency Contact: Staff Judge Advocate, Department of Defense, Department of the Navy, Commander Naval Base, Pearl Harbor, HI 96860-5020, 808 471-0284

RIN: 0703-AA27

406. ● NONNAVAL MEDICAL AND DENTAL CARE

Legal Authority: 5 USC 301; 10 USC 1071 to 1085; 10 USC 5031; 10 USC 6148; 10 USC 6201 to 6203; 10 USC 8140; 32 CFR 700.1202

CFR Citation: 32 CFR 732

Legal Deadline: None.

Abstract: To describe and publish policies and procedures for obtaining inpatient and outpatient maternity, medical, and dental care from nonnaval sources worldwide for active duty Navy and Marine Corps members and

reservists: outpatient care in the United States for active duty naval members of North Atlantic Treaty Organization (NATO) nations other than Canada; and inpatient and outpatient care for Canadian Navy and Marine Corps personnel who receive care in the United States on or after 3 November 1986.

Timetable:

Action	Date	FR Cite
Final Action	08/27/87	52 FR 32296
Final Action Effective	08/27/87	

Small Entity: No

Agency Contact: Herbert L. Pelham, Department of Defense, Department of the Navy, Naval Medical Command, Washington, DC 20372-5120, 202 653-1179

RIN: 0703-AA28

407. ● MEDICAL AND DENTAL CARE FOR ELIGIBLE PERSONS AT NAVY MEDICAL DEPARTMENT FACILITIES

Legal Authority: 5 USC 301 and 8101; 10 USC 1071 to 1095; 10 USC 1201 to 1221; 10 USC 2104; 10 USC 2107; 10 USC 2109; 10 USC 2110; 10 USC 5031; 10 USC 5537; 10 USC 6011; 10 USC 6201 to 6203; 22 USC 1158; 22 USC 2357; 22 USC 2504; 22 USC 2505

CFR Citation: 32 CFR 728

Legal Deadline: None.

Abstract: To describe and publish the policies and procedures for providing medical and dental care to eligible persons at Navy Medical Department facilities.

Timetable:

Action	Date	FR Cite
Final Action	09/04/87	52 FR 33718
Final Action Effective	09/04/87	

Small Entity: No

Agency Contact: Herbert L. Pelham, Department of Defense, Department of the Navy, Naval Medical Command, Washington, DC 20372-5120, 202 653-1179

RIN: 0703-AA29

DEPARTMENT OF DEFENSE (DOD)
Department of the Air Force (AF)

AGENCY: Department of the Air Force, DoD.

ACTION: This agenda updates the report published on October 26, 1987, and includes regulations expected to be issued and under review over the next 12 months.

SUMMARY: The regulations listed on the agenda are existing or proposed regulations under internal review for revision or development and only apply to those regulations affecting the public. The Department of the Air Force has no "major rules" under development or review as defined by E.O. 12291. Also, it has determined that the relevant provisions of the Regulatory Flexibility Act (Pub. L. 96-354) do not apply to these rules. These rules do not contain reporting or recordkeeping requirements under the criteria of "The Paperwork Reduction Act." These rules do not have an impact on international trade and, therefore, the provisions of the GATT International Trade Agreement do not apply.

FOR FURTHER INFORMATION CONTACT: Where a contact official is indicated, please contact the specified individual. For general information, contact Ms. Patsy J. Conner, telephone 202-694-3527 or write to Department of the Air Force, SAF/AADAQD, Pentagon, Washington, DC 20330-1000.

DEPARTMENT OF DEFENSE (DOD)
Department of the Air Force (AF)

Prerule Stage

408. AIR FORCE SUPPLEMENT TO THE FEDERAL ACQUISITION REGULATION (FAR)

Legal Authority: PL 93-400; PL 96-83

CFR Citation: 48 CFR (New)

Legal Deadline: None.

Abstract: Air Force FAR Supplement establishes for the Air Force uniform policy and procedures implementing and supplementing the FAR, the DOD FAR Supplement, and other DOD publications concerning contracting.

Timetable:

Action	Date	FR Cite
48 CFR Ch 53, AFLC FARS; Surplus Material Acquisition	10/30/86	51 FR 39676
48 CFR 5315, AF FARS; Price Negotiation	03/04/87	52 FR 6590
48 CFR Ch 53, AFSC FARS; Contracting by Negotiation	09/14/87	52 FR 34692
End Review	06/00/88	

Small Entity: No

Agency Contact: Col. Halberstadt, Special Assistant for FAR, Department of Defense, Department of the Air Force, SAF/AQCF, 202 695-3858

RIN: 0701-AA14

409. ENVIRONMENTAL IMPACT ANALYSIS PROCESS (ANGR 19-02)

Legal Authority: 10 USC 8013

CFR Citation: 00 CFR None

Legal Deadline: None.

Abstract: Identifies Air National Guard's policies and procedures for the Environmental Impact Analysis Process (EIAP).

Timetable:

Action	Date	FR Cite
End Review	06/00/88	

Small Entity: No

DOD—AF **Prerule Stage**

Agency Contact: Mr. Householder, Environmental Engineer, Department of Defense, Department of the Air Force, ANGSC/DEV, Andrews AFB, MD 20331-6008, 301 981-4048

RIN: 0701-AA22

DEPARTMENT OF DEFENSE (DOD)
Department of the Air Force (AF)

Proposed Rule Stage

410. PUBLIC AFFAIRS POLICIES AND PROCEDURES (AFR 190-1)

Legal Authority: 10 USC 8013

CFR Citation: 32 CFR 837

Legal Deadline: None.

Abstract: Describes Air Force Public Affairs program and how public affairs resources are to be managed to effectively reach public affairs goals.

Timetable:

Action	Date	FR Cite
NPRM	06/00/88	

Small Entity: No

Agency Contact: Lt Col Hessenflow, Department of Defense, Department of the Air Force, HQ USAF (SAF/PAR), Washington, DC 20330, 202 697-4100

RIN: 0701-AA18

411. CLAIMS AND TORT LITIGATION (AFR 112-1)

Legal Authority: 10 USC 8013

CFR Citation: 32 CFR 842

Legal Deadline: None.

Abstract: Establishes standard policies and procedures to administratively process claims and tort litigation involving the Air Force.

Timetable:

Action	Date	FR Cite
Begin Review	02/26/86	
End Review	01/31/88	
NPRM	04/00/88	

Small Entity: No

Agency Contact: Lt Col Kilroy, Department of Defense, Department of the Air Force, HQ USAF/JACC, Bldg. 5683, Bolling AFB, DC 20332-6128, 202 767-1575

RIN: 0701-AA19

412. DELIVERY OF AIR FORCE PERSONNEL TO U.S. CIVILIAN AUTHORITIES FOR TRIAL (AFR 111-11)

Legal Authority: 10 USC 8013; 10 USC 814

CFR Citation: 32 CFR 884

Legal Deadline: None.

Abstract: Regulation sets forth the authority, policy and procedures for delivery of Air Force personnel to United States civil authorities for trial.

Timetable:

Action	Date	FR Cite
NPRM	06/00/88	

Small Entity: No

Agency Contact: Major James, Department of Defense, Department of the Air Force, HQ USAF/JAJM, Bldg 5683, Bolling AFB, DC 20332-6128, 202 767-1539

RIN: 0701-AA20

413. PERSONAL FINANCIAL RESPONSIBILITY (AFR 35-18)

Legal Authority: 10 USC 8013

CFR Citation: 32 CFR 818

Legal Deadline: None.

Abstract: Establishes Air Force policy governing delinquent financial obligations and sets forth procedures for processing any claims of this nature. It is designed to ensure that Air Force members pay their just financial obligations in a proper and timely manner.

Timetable:

Action	Date	FR Cite
NPRM	04/00/88	

Small Entity: No

Agency Contact: Mr. Taylor, Department of Defense, Department of the Air Force, HQ AFMPC/DPMASC2, Randolph AFB, TX 78150-6001, 512 652-3578

RIN: 0701-AA23

414. ● LEASING USAF AIRCRAFT AND RELATED EQUIPMENT TO NONGOVERNMENT ORGANIZATIONS

Legal Authority: 10 USC 2667

CFR Citation: 00 CFR None

Legal Deadline: None.

Abstract: This regulation outlines USAF policies and procedures for the provision of USAF aircraft and related equipment to nongovernment organizations.

Timetable:

Action	Date	FR Cite
NPRM	06/00/88	

Small Entity: No

Agency Contact: Mr. Eric Kattner, Procurement Analyst, Department of Defense, Department of the Air Force, SAF/AQCM, Washington, DC 20330-1000, 202 695-4982

RIN: 0701-AA26

VOL 53 ISS 79 PT 1 AP 25 1988 UMI

DEPARTMENT OF DEFENSE (DOD)
Department of the Air Force (AF)

Completed Actions

415. ISSUING CERTIFICATES IN LIEU OF LOST OR DESTROYED CERTIFICATES OF SEPARATION (AFR 35-96)

Legal Authority: 10 USC 8013; 10 USC 1041

CFR Citation: 32 CFR 887

Legal Deadline: None.

Abstract: Regulation tells who may apply for a certificate in lieu of a lost or destroyed certificate of separation and where and how to apply. Revision includes examples on how to prepare certificates to ensure the three agencies authorized to issue the certificates follow the same format.

Timetable:

Action	Date	FR Cite
NPRM	09/24/87	52 FR 35927
NPRM Comment Period End	10/26/87	52 FR 35927
Final Action	01/14/88	53 FR 876
Final Action Effective	02/16/88	53 FR 876

Small Entity: No

Agency Contact: Mr. Garcia, Military Personnel Management Specialist, Department of Defense, Department of the Air Force, HQ AFMPC/DPMDOP, Randolph AFB, TX 78150-6001, 512 652-2089

RIN: 0701-AA21

416. AIR FORCE VISUAL INFORMATION SYSTEMS (AFR 700-32)

Legal Authority: 10 USC 8013

CFR Citation: 32 CFR 811; 32 CFR 811a

Legal Deadline: None.

Abstract: Establishes policy for the management of the Air Force visual information documentation program. Establishes policy on the release, dissemination and sale of Air Force visual information materials.

Timetable:

Action	Date	FR Cite
NPRM	10/08/87	52 FR 37631
NPRM Comment Period End	11/09/87	52 FR 37631
Final Action	12/24/87	52 FR 48675
Final Action Effective	01/25/88	52 FR 48675

Small Entity: No

Agency Contact: Maj. Cultice, Department of Defense, Department of the Air Force, HQ USAF/SCV, Washington, DC 20330, 202 695-9610

RIN: 0701-AA25

[FR Doc. 88-5080 Filed 04-22-88; 8:45 am]

BILLING CODE 3910-01-T

BEST COPY AVAILABLE

VOL
53

ISS
79

PT
1

AP
25

1988

UMI

federal register

Monday
April 25, 1988

Part VI

Department of Education

Semiannual Regulatory Agenda

DEPARTMENT OF EDUCATION (ED)

DEPARTMENT OF EDUCATION

Office of the Secretary

34 CFR Subtitles A and B

Unified Agenda of Federal Regulations

AGENCY: Department of Education.

ACTION: Publication of the semiannual agenda of Federal regulations.

SUMMARY: The Secretary of Education publishes a Semiannual Agenda of Federal Regulations as required by Office of Management and Budget (OMB) Bulletin 88-1 issued under the authority of section 6(b) of Executive Order 12291 (Federal Regulations). The purpose of the agenda is to encourage more effective public participation in the regulatory process by giving the public early information about pending regulatory activities.

FOR FURTHER INFORMATION CONTACT: Questions or comments related to specific regulations listed in this agenda should be directed to the contact person listed for that set of regulations. Questions or comments on the overall agenda should be directed to A. Neal Shedd, Director, Division of Regulations Management, Office of the General Counsel, Department of Education, Room 2131, FOB-6, 400 Maryland Avenue, SW., Washington, DC 20202. Telephone: (202) 732-2887.

SUPPLEMENTARY INFORMATION: Executive Order 12291, dated February 17, 1981, and the Regulatory Flexibility Act, Pub. L. 96-354, enacted September 19, 1980, require the Department of Education to publish, in October and April of each year, (1) an agenda of regulations that the Department expects to issue, and (2) currently effective regulations that are under review. The agenda includes both notices of proposed rulemaking (NPRMs) currently being drafted and pending final regulations.

Under the authority of Executive Order 12291, the Director of OMB has issued OMB Bulletin No. 88-1, dated October 7, 1987, prescribing the content and structure of the Unified Agenda of Federal Regulations. The Unified Agenda will be issued semiannually and will cover the succeeding 12 months from the date of publication.

For each set of regulations listed, the Agenda provides the title of the document, the type of document, a citation of any rulemaking or other action taken since publication of the most recent Agenda, and planned dates of future rulemaking. In addition, the Agenda provides the following information:

- An abstract, which includes a description of the problem to be addressed, any principal alternatives being considered, and potential costs and benefits of the action.
- An indication of whether the planned action is likely to have a significant economic impact on a substantial number of small entities as defined by the Regulatory Flexibility Act (5 U.S.C. 601(b)).
- A reference to where a reader can find the current regulations in the Code of Federal Regulations.
- A citation of legal authority.
- The name, address, and telephone number of the contact person at the Department from whom a reader can obtain additional information regarding the planned action.
- An indication if the action is priority and the criteria used in determining the priority status.

If the "Abstract" section of an entry refers readers to the preamble, it means that amendments to those particular regulations would be designed (1) to effect regulatory relief, including reducing paperwork and compliance burdens, improving cost effectiveness and, to the extent possible, vesting greater discretion in State and local agencies, and (2) if necessary, to clarify and simplify requirements governing that program.

This publication in the **Federal Register** does not impose any binding obligation on the Department with regard to any specific item on the agenda. Regulatory action in addition to the items listed is not precluded. Dates of future regulatory action are subject to revision in subsequent agendas.

Dated: February 19, 1988.

Charles E. M. Kolb,

Acting General Counsel.

Departmental Management—Prerule Stage

Sequence Number	Title	Regulation Identifier Number
417	U.S. Exchange Visitor Program - Request for Waiver of the Two- year Foreign Residence Requirement	1880-AA29

Departmental Management—Proposed Rule Stage

Sequence Number	Title	Regulation Identifier Number
418	Disposal and Utilization of Surplus Real Property For Educational Purposes	1880-AA27
419	Education Department General Administrative Regulations -- Amendments II	1880-AA24

ED

Departmental Management—Final Rule Stage

Sequence Number	Title	Regulation Identifier Number
420	Debt Collection; Interest on Outstanding Debts	1880-AA03
421	Debt Collection	1880-AA09
422	Audit Requirements for State and Local Governments	1880-AA26
423	Debarment and Suspension (Nonprocurement)	1880-AA25
424	Family Educational Rights and Privacy Act	1880-AA08
425	Education Department Acquisition Regulation (EDAR)	1880-AA16

Departmental Management—Completed Actions

Sequence Number	Title	Regulation Identifier Number
426	Education Department General Administrative Regulations – Definitions That Apply to Department Regulations	1880-AA31
427	Uniform Administrative Requirements for Grants to State and Local Governments	1880-AA15

Office of Bilingual Education and Minority Languages Affairs—Final Rule Stage

Sequence Number	Title	Regulation Identifier Number
428	Transition Program for Refugee Children	1885-AA10

Office for Civil Rights—Proposed Rule Stage

Sequence Number	Title	Regulation Identifier Number
429	Nondiscrimination on the Basis of Handicap in Federally Conducted Programs	1870-AA08
430	Nondiscrimination on the Basis of Sex in Education Programs and Activities Receiving or Benefiting from Federal Financial Assistance	1870-AA06

Office for Civil Rights—Final Rule Stage

Sequence Number	Title	Regulation Identifier Number
431	Nondiscrimination on the Basis of Age in Programs or Activities Receiving Federal Financial Assistance	1870-AA05

Office of Educational Research and Improvement—Proposed Rule Stage

Sequence Number	Title	Regulation Identifier Number
432	Partnerships in Education for Mathematics, Science, and Engineering	1850-AA15
433	Star Schools Program	1850-AA32
434	College Library Resources Program	1850-AA21
435	National Assessment of Educational Progress	1850-AA31

ED

Office of Educational Research and Improvement—Final Rule Stage

Sequence Number	Title	Regulation Identifier Number
436	Educational Research Grant Program	1850-AA23
437	Regional Educational Laboratories and Research and Development Centers Program: General Provisions; Regional Educational Laboratories; and Research and Development Centers	1850-AA28
438	Library Career Training Program	1850-AA24
439	Strengthening Research Library Resources Program	1850-AA22
440	College Library Technology and Cooperation Grants	1850-AA26
441	Territorial Teacher Training Assistance Program	1850-AA10

Office of Educational Research and Improvement—Completed Actions

Sequence Number	Title	Regulation Identifier Number
442	Library Research and Demonstration Program	1850-AA25

Office of Elementary and Secondary Education—Proposed Rule Stage

Sequence Number	Title	Regulation Identifier Number
443	Assist. for LEAs in Areas Affected by Fed. Acts. and Arrangements for Ed. of Children Where LEAs Cannot Provide Suitable Free Pub. Ed.--Heavily Impacted District; Avg. Daily Attendance/Membership	1810-AA20

Office of Elementary and Secondary Education—Final Rule Stage

Sequence Number	Title	Regulation Identifier Number
444	Indian Education Act - Formula Grants to LEAs and Tribal Schools Amendments (Certification of Eligibility)	1810-AA28
445	Indian Education: Formula Grants to LEAs and Tribal Schools; Indian-Controlled Schools Enrichment; Indian Fellowship Program (Amendments)	1810-AA36

Office of Elementary and Secondary Education—Completed Actions

Sequence Number	Title	Regulation Identifier Number
446	Follow Through Program	1810-AA25
447	Assistance for LEAs in Areas Affected by Federal Activities and Arrangements for Ed. of Children Where LEAs Cannot Provide Suitable Free Public Ed.--Sec. 2, Fed. Acquisition/Real Property	1810-AA22

Office of Planning and Budget and Evaluation—Completed Actions

Sequence Number	Title	Regulation Identifier Number
448	Availability of Information to the Public Pursuant to Public Law 90-23	1875-AA03
449	Release of Adverse Information to News Media - Official Seal	1875-AA04
450	Privacy Act Regulations	1875-AA02

VOL 53 ISS 79 PT 1 APR 25 1988 UMI

ED

Office of Postsecondary Education—Proposed Rule Stage

Sequence Number	Title	Regulation Identifier Number
451	Eligibility of Foreign Postsecondary Educational Institutions Under the Guaranteed Student Loan Program	1840-AB20
452	Training Program for Special Program Staff and Leadership Personnel	1840-AB01
453	Talent Search Program	1840-AB12
454	Educational Opportunity Centers Program	1840-AB13
455	Paul Douglas Teacher Scholarship Program and Guaranteed Student Loan and PLUS Programs	1840-AB03
456	Robert C. Byrd Honors Scholarship Program	1840-AB05
457	Foreign Language and Area Studies Fellowships Program, Part II	1840-AA66
458	Student Assistance General Provisions - Verification 1989-90	1840-AB07
459	Student Assistance General Provisions - Subparts A,B and G	1840-AB18
460	Student Assistance General Provisions - Subparts B and C	1840-AB19
461	Guaranteed Student Loan/Supplemental Loans for Students Program - Default Reduction	1840-AB21
462	Summer Intensive Language Institutes	1840-AA68
463	Perkins Loan Program, College Work-Study, and Supplemental Educational Opportunity Grant Programs (Campus-Based Programs)	1840-AB22
464	Disclosure of Foreign Gifts	1840-AA75
465	Guaranteed Student Loan/PLUS/Supplemental Loan/Consolidation Loan Programs	1840-AA96

Office of Postsecondary Education—Final Rule Stage

Sequence Number	Title	Regulation Identifier Number
466	Secretary's Procedures and Criteria for Recognition of Accrediting Agencies	1840-AA57
467	Drug Prevention Programs in Higher Education	1840-AB11
468	National Resource Centers Program for Foreign Language and Area Studies or Foreign Language and International Studies	1840-AA65
469	Student Assistance General Provisions - Subpart A	1840-AB23
470	Language Resource Centers Program	1840-AA67
471	Foreign Periodicals Program	1840-AA69
472	Income Contingent Loan Program - Due Diligence	1840-AB04
473	Treatment of Territories and Territorial Student Assistance	1840-AA74

Office of Postsecondary Education—Completed Actions

Sequence Number	Title	Regulation Identifier Number
474	Institutional Eligibility Under the Higher Education Act of 1965, as amended	1840-AA32
475	Secretary's Recognition Procedures for National Accrediting Bodies and Agencies	1840-AB15
476	Federal-State Relationship Agreements	1840-AB09
477	Financial Assistance for Construction, Reconstruction, or Renovation of Higher Education Facilities	1840-AB10
478	Minority Science Improvement Program	1840-AA89
479	Paul Douglas Teacher Scholarships -- Interest Rates	1840-AB02
480	Paul Douglas Teacher Scholarship Program	1840-AB14
481	National Resource Centers Program for Foreign Language and Area Studies or Foreign Language and International Studies	1840-AA64
482	Student Assistance General Provisions - Subparts A, B, C	1840-AA79
483	Perkins Loan Program (formerly the National Direct Student Loan Program) Subpart C - Due Diligence	1840-AA02
484	Perkins Loan Program, College Work-Study, and Supplemental Educational Opportunity Grant Programs (Campus-based programs)	1840-AA03
485	Pell Grant Program	1840-AA97
486	State Student Incentive Grant Program	1840-AA59

ED

Office of Special Education and Rehabilitative Services—Prerule Stage

Sequence Number	Title	Regulation Identifier Number
487	The State Vocational Rehabilitation Services Program - Deregulation	1820-AA47

Office of Special Education and Rehabilitative Services—Proposed Rule Stage

Sequence Number	Title	Regulation Identifier Number
488	Services for Deaf-Blind Children and Youth Program	1820-AA53
489	Training Personnel for the Education of the Handicapped - Parent Training and Information Centers; Special Projects; and General	1820-AA68
490	Rehabilitation Services Administration General Deregulation Review	1820-AA45
491	The State Independent Living Rehabilitation Services Program	1820-AA37
492	Centers for Independent Living - Standards and Evaluation Indicators	1820-AA81
493	Vocational Rehabilitation Services to Individuals with Severe Handicaps/Special Projects and Demonstrations for Providing Supported Employment Serv. to Indiv. with Severe Handicaps	1820-AA76
494	Projects with Industry - Standards and Evaluation Indicators	1820-AA82

Office of Special Education and Rehabilitative Services—Final Rule Stage

Sequence Number	Title	Regulation Identifier Number
495	Assistance to States for Education of Handicapped Children	1820-AA71
496	Preschool Grants for Handicapped Children's Program	1820-AA48
497	Grants for Infants and Toddlers with Handicaps	1820-AA49
498	Handicapped Special Studies Program	1820-AA72
499	Captioned Films Loan Service for the Deaf Program and Educational Media Loan Service for the Handicapped Program	1820-AA61
500	Field Initiated Research	1820-AA80
501	NIDRR - Research Training and Career Development Program	1820-AA77
502	The State Vocational Rehabilitation Services Program	1820-AA40
503	Miscellaneous Technical Amendments to the Rehabilitation Services Regulations	1820-AA39
504	Independent Living Services for Older Blind Individuals	1820-AA41

Office of Special Education and Rehabilitative Services—Completed Actions

Sequence Number	Title	Regulation Identifier Number
505	Removal of Architectural Barriers to the Handicapped Program	1820-AA51
506	Regional Resource and Federal Centers Program	1820-AA52
507	Training Programs for Teachers of Handicapped Children in Areas with a Shortage	1820-AA75
508	Research in Education of the Handicapped Program	1820-AA69
509	Technology, Educational Media, and Materials for the Handicapped	1820-AA63
510	Handicapped Research: Research Fellowship Program	1820-AA66

Office of Intergovernmental and Interagency Affairs—Proposed Rule Stage

Sequence Number	Title	Regulation Identifier Number
511	Intergovernmental Review of Department of Education Programs and Activities -- List of Programs	1860-AA00

VOL 53 ISS 79 PT 1 APR 25 1988 UMI

ED

Office of the General Counsel—Proposed Rule Stage

Sequence Number	Title	Regulation Identifier Number
512	Equal Access to Justice	1801-AA01
513	Due Process Regulations	1801-AA02

Office of the General Counsel—Final Rule Stage

Sequence Number	Title	Regulation Identifier Number
514	Program Fraud Civil Remedies	1801-AA05

Office of the General Counsel—Completed Actions

Sequence Number	Title	Regulation Identifier Number
515	Inventions and Patents -- General	1801-AA04

DEPARTMENT OF EDUCATION (ED)
Departmental Management (EDMAN)

Prerule Stage

417. U.S. EXCHANGE VISITOR PROGRAM - REQUEST FOR WAIVER OF THE TWO- YEAR FOREIGN RESIDENCE REQUIREMENT

Legal Authority: 8 USC 1182(e); 22 USC 2451

CFR Citation: 34 CFR 50

Legal Deadline: None.

Abstract: See Preamble.

Timetable:

Action	Date	FR Cite
Begin Review	05/00/88	
End Review	07/00/88	

Small Entity: Undetermined

Agency Contact: Kathleen Hunter, Special Assistant to the Director, Interagency Operations, Department of Education, Departmental Management, Intergovernmental and Interagency Affairs, 400 Maryland Ave., SW (Rm. 3023, FOB-6), Washington, DC 20202, 202 472-5812

RIN: 1880-AA29

DEPARTMENT OF EDUCATION (ED)
Departmental Management (EDMAN)

Proposed Rule Stage

418. DISPOSAL AND UTILIZATION OF SURPLUS REAL PROPERTY FOR EDUCATIONAL PURPOSES

Legal Authority: 40 USC 484

CFR Citation: 34 CFR 12

Legal Deadline: None.

Abstract: See Preamble.

Timetable:

Action	Date	FR Cite
NPRM	05/00/88	
Final Action	10/00/88	

Small Entity: No

Agency Contact: David B. Hakola, Staff Assistant, Administrator for Management Services, Department of Education, Departmental Management, 400 Maryland Ave., SW (Rm. 1175, FOB-6, Washington, DC 20202, 202 245-0306

RIN: 1880-AA27

419. EDUCATION DEPARTMENT GENERAL ADMINISTRATIVE REGULATIONS -- AMENDMENTS II

Legal Authority: 20 USC 1221e-3(a)(1)

CFR Citation: 34 CFR 75; 34 CFR 76

Legal Deadline: None.

Abstract: See Preamble. The Department is considering miscellaneous amendments to update and improve the regulations in 34 CFR Parts 75 and 76 of the Education

Department General Administrative Regulations (EDGAR).

Timetable:

Action	Date	FR Cite
NPRM	05/00/88	
Final Action	11/00/88	

Small Entity: Undetermined

Agency Contact: Hazel Fiers, Office of Management, Department of Education, Departmental Management, 400 Maryland Ave., SW (Rm. 3021, FOB-6), Washington, DC 20202, 202 472-5123

RIN: 1880-AA24

DEPARTMENT OF EDUCATION (ED)
Departmental Management (EDMAN)

Final Rule Stage

420. DEBT COLLECTION; INTEREST ON OUTSTANDING DEBTS

Legal Authority: 20 USC 1221e-3(a)(1); 20 USC 3474(a); 31 USC 3717

CFR Citation: 34 CFR 030

Legal Deadline: None.

Abstract: These regulations would establish Departmental policies for assessing interest on outstanding debts and implementing the interest assessment provisions of the Debt Collection Act of 1982.

Timetable:

Action	Date	FR Cite
NPRM	07/11/84	49 FR 28264
NPRM Comment Period End	08/27/84	
Final Action	00/00/00	

Small Entity: No

Agency Contact: Frank Stidman, Director, Financial Assistance, Department of Education, Departmental Management, 400 Maryland Ave., SW (Rm. 3109, FOB-6), Washington, DC 20202, 202 245-2964

RIN: 1880-AA03

421. DEBT COLLECTION

Significance: Regulatory Program

Legal Authority: 31 USC 3701 to 3720a

CFR Citation: 34 CFR 030

Legal Deadline: None.

Abstract: These proposed regulations would implement requirements of the Debt Collection Act of 1982, the Federal Claims Collection Standards, and OMB Circular A-50 regarding establishment of a debt collection program. The proposed regulations would improve management and accountability of Federal funds and are designed to establish an efficient, equitable, and effective program for the collection of debts owed to the Department of Education.

Timetable:

Action	Date	FR Cite
NPRM	02/19/88	53 FR 5136
Final Action	09/00/88	

Small Entity: No

Agency Contact: James Neilson, Special Assistant, Department of Education, Departmental Management, 400 Maryland Ave, SW, (Rm. 3034 FOB-6), Washington, DC 20202, 202 472-6032

RIN: 1880-AA09

422. AUDIT REQUIREMENTS FOR STATE AND LOCAL GOVERNMENTS

Legal Authority: 5 USC 301; 31 USC 7505(a)

CFR Citation: 34 CFR 74

Legal Deadline: None.

Abstract: These regulations would implement the Single Audit Act of 1984 and the Office of Management and Budget Circular No. A-128.

Timetable:

Action	Date	FR Cite
Interim Final Rule	09/13/85	50 FR 37356
Final Action Effective	10/28/85	
Final Action	05/00/88	

Small Entity: Undetermined

Agency Contact: Guido Piacesi, Auditor, Office of the Inspector General, Department of Education, Departmental Management, 400 Maryland Ave., SW (Rm. 4200, Switzer), Washington, DC 20202, 202 245-0271

RIN: 1880-AA26

423. DEBARMENT AND SUSPENSION (NONPROCUREMENT)

Legal Authority: EO 12549; 20 USC 1221e-3(a)(1)

CFR Citation: 34 CFR 85

Legal Deadline: None.

Abstract: These regulations would contain criteria and minimum due process procedures for suspension and debarment of ED assistance recipients.

Timetable:

Action	Date	FR Cite
Final Action	05/00/88	

Small Entity: Undetermined

Agency Contact: Mary Jane Kane, Office of Management, Department of Education, Departmental Management, 400 Maryland Ave., SW (Rm. 3637, ROB-3), Washington, DC 20202, 202 732-7400

RIN: 1880-AA25

424. FAMILY EDUCATIONAL RIGHTS AND PRIVACY ACT

Significance: Regulatory Program

Legal Authority: 20 USC 1232g

CFR Citation: 34 CFR 099

Legal Deadline: None.

Abstract: See Preamble.

Timetable:

Action	Date	FR Cite
NPRM	06/10/87	52 FR 2250
Final Action	05/00/88	

Small Entity: No

Agency Contact: Ellen Campbell, Student and Family Education Rights, and Privacy Office, Department of Education, Departmental Management, 400 Maryland Ave., SW, (Rm. 3021, FOB-6), Washington, DC 20202, 202 732-2057

RIN: 1880-AA08

425. EDUCATION DEPARTMENT ACQUISITION REGULATION (EDAR)

Legal Authority: 5 USC 301; 40 USC 486(c)

CFR Citation: 48 CFR Chapter 34

Legal Deadline: None.

ED—EDMAN **Final Rule Stage**

Abstract: These regulations implement the Federal Acquisition Regulation within the Department of Education, and include additional policies, procedures, solicitation provisions, and contract clauses.

Timetable:

Action	Date	FR Cite
Final Action	05/00/88	

Small Entity: No

Agency Contact: Richard Galloway, Chief, Acquisition Policy Branch, Department of Education, Departmental Management, 400 Maryland Ave, SW, (Rm. 3519, ROB-3), Washington, DC 20202, 202 732-2525

RIN: 1880-AA16

DEPARTMENT OF EDUCATION (ED)
Departmental Management (EDMAN)

Completed Actions

426. EDUCATION DEPARTMENT GENERAL ADMINISTRATIVE REGULATIONS – DEFINITIONS THAT APPLY TO DEPARTMENT REGULATIONS

CFR Citation: 34 CFR 077

Completed:

Reason	Date	FR Cite
End Review	12/16/87	

Small Entity: Not Applicable

Agency Contact: Hazel Fiers 202 472-5123

RIN: 1880-AA31

427. UNIFORM ADMINISTRATIVE REQUIREMENTS FOR GRANTS TO STATE AND LOCAL GOVERNMENTS

CFR Citation: 34 CFR 80; 34 CFR 74

Completed:

Reason	Date	FR Cite
Final Action	03/11/88	53 FR 8070
Final Action Effective	10/01/88	

Small Entity: Undetermined

Agency Contact: Hazel Fiers 202 472-5123

RIN: 1880-AA15

DEPARTMENT OF EDUCATION (ED)
Office of Bilingual Education and Minority Languages Affairs (BEMLA)

Final Rule Stage

428. TRANSITION PROGRAM FOR REFUGEE CHILDREN

Significance: Regulatory Program

Legal Authority: 8 USC 1522(d)

CFR Citation: 34 CFR 538

Legal Deadline: None.

Abstract: See Preamble

Timetable:

Action	Date	FR Cite
NPRM	02/26/88	53 FR 5956
Final Action	08/00/88	

Small Entity: Undetermined

Agency Contact: Fayetta McAlear, Acting Executive Officer, Department of Education, Office of Bilingual Education and Minority Languages Affairs, 400 Maryland Ave, SW (Rm. 421 Rptrs. Bldg.), Washington, DC 20202, 202 732-5070

RIN: 1885-AA10

DEPARTMENT OF EDUCATION (ED)
Office for Civil Rights (OCR)

Proposed Rule Stage

429. NONDISCRIMINATION ON THE BASIS OF HANDICAP IN FEDERALLY CONDUCTED PROGRAMS

Legal Authority: 29 USC 794

CFR Citation: 34 CFR 105

Legal Deadline: None.

Abstract: This regulation would specify the applicability of Sec. 504 of the Rehabilitation Act of 1973 to the federally conducted pro- grams of the Department of Education. Sec. 504 prohibits discrimination on the basis of an individual's handicap.

Timetable:

Action	Date	FR Cite
NPRM	04/01/88	53 FR 10808
Final Action	09/00/88	

Small Entity: Undetermined

Agency Contact: Hazel Fiers, Special Advisor, Management, Department of Education, Office for Civil Rights, Department of Education, 400 Md. Ave., SW, Rm. 3021, FOB-6, Washington, D.C. 20202, 202 732-2057

RIN: 1870-AA08

430. NONDISCRIMINATION ON THE BASIS OF SEX IN EDUCATION PROGRAMS AND ACTIVITIES RECEIVING OR BENEFITING FROM FEDERAL FINANCIAL ASSISTANCE

Legal Authority: 20 USC 1681; 20 USC 1682

CFR Citation: 34 CFR 106

Legal Deadline: None.

Abstract: These proposed regulations would amend the fringe benefits provision of the regulations implementing Title IX of the Education Amendments of 1972. The regulations would require employers offering employees a fringe benefit plan to have both equal pay-in and equal pay-out provisions, regardless of the sex of the employee.

Timetable:

Action	Date	FR Cite
NPRM	00/00/00	
Final Action	00/00/00	

Small Entity: Undetermined

Agency Contact: Terence J. Pell, Acting Deputy Assistant Secretary, for Policy, Department of Education, Office for

Civil Rights, 400 Maryland Ave, SW, Rm 5050, Switzer Bldg., Washington, DC 20202, 202 732-1635

RIN: 1870-AA06

DEPARTMENT OF EDUCATION (ED)
Office for Civil Rights (OCR)

Final Rule Stage

431. NONDISCRIMINATION ON THE BASIS OF AGE IN PROGRAMS OR ACTIVITIES RECEIVING FEDERAL FINANCIAL ASSISTANCE

Legal Authority: 42 USC 6101 et seq

CFR Citation: 34 CFR 110

Legal Deadline: None.

Abstract: These agency-specific final regulations would provide appropriate investigative, conciliation, and enforcement procedures consistent with the general Age Discrimination Act regulations issued by DHEW, now the Department of Health and Human Services.

Timetable:

Action	Date	FR Cite
Final Action	00/00/00	

Small Entity: Undetermined

Agency Contact: Terence J. Pell, Acting Deputy Assistant Secretary, for Policy, Department of Education, Office for Civil Rights, 400 Maryland Ave, SW, Room 5050, Switzer Bldg., Washington, DC 20202, 202 732-1635

RIN: 1870-AA05

DEPARTMENT OF EDUCATION (ED)
Office of Educational Research and Improvement (OERI)

Proposed Rule Stage

432. PARTNERSHIPS IN EDUCATION FOR MATHEMATICS, SCIENCE, AND ENGINEERING

Legal Authority: PL 99-159

CFR Citation: Not yet determined

Legal Deadline: None.

Abstract: These proposed regulations would implement certain provisions in the Education for Economic Security Act, as amended by the National Science, Engineering, and Mathematics Authorization Act of 1986 (P.L. 99-159).

Timetable:

Action	Date	FR Cite
NPRM	06/00/88	
Final Action	10/00/88	

Small Entity: Undetermined

Agency Contact: Patricia Alexander, Senior Associate, Department of Education, Office of Educational Research and Improvement, 400 Maryland Avenue, SW, Room 4132, FOB-6, Washington, DC 20202, 202 732-3566

RIN: 1850-AA15

433. ● STAR SCHOOLS PROGRAM

Legal Authority: PL 100-202

CFR Citation: 34 CFR 000

Legal Deadline: None.

Abstract: These regulations would implement certain provisions of the Permanent Continuing Appropriations Act for Fiscal Year 1988.

Timetable:

Action	Date	FR Cite
NPRM	05/00/88	
Final Action	08/00/88	

Small Entity: Undetermined

Agency Contact: Gordon McAndrew, Senior Associate, PIP Networks Division, Department of Education, Office of Educational Research and Improvement, 400 Md. Ave., SW, Rm. 502H, Capitol Place Bldg., Washington, DC 20202, 202 357-6126

RIN: 1850-AA32

434. COLLEGE LIBRARY RESOURCES PROGRAM

Legal Authority: 20 USC 1021 to 1047

CFR Citation: 34 CFR 773

Legal Deadline: None.

Abstract: These regulations would implement certain provisions of Title II of the Higher Education Act of 1965, as amended by the Higher Education Amendments of 1986 (PL 99-498).

Timetable:

Action	Date	FR Cite
NPRM	05/00/88	
Final Action	10/00/88	

Small Entity: Undetermined

Agency Contact: Louise V. Sutherland, Administrative Librarian, Department of Education, Office of Educational Research and Improvement, 400 Maryland Ave., SW - Rm 402, Capitol Place Bldg. Washington, DC 20202, 202 357-6315

RIN: 1850-AA21

435. NATIONAL ASSESSMENT OF EDUCATIONAL PROGRESS

Legal Authority: PL 99-498

CFR Citation: 34 CFR 796

Legal Deadline: None.

Abstract: These proposed regulations would implement certain provisions of Sec. 405 of the General Education Provisions Act, as amended by Title XIV of the Higher Education Amendments of 1986 (PL 99-498).

Timetable:

Action	Date	FR Cite
NPRM	05/00/88	
Final Action	10/00/88	

Small Entity: Undetermined

Agency Contact: Maureen Treacy, Education Program Analyst, Department of Education, Office of Educational Research and Improvement, Office of Educational Research and Improv., 400 Md. Ave., SW, Rm. 517, Cap. Pl. Bldg., Washington, D.C. 20202, 202 357-6734

RIN: 1850-AA31

VOL 53 ISS 79 PT 1 AP 25 1988 UMI

DEPARTMENT OF EDUCATION (ED) — **Final Rule Stage**

Office of Educational Research and Improvement (OERI)

436. EDUCATIONAL RESEARCH GRANT PROGRAM

Legal Authority: 20 USC 1221e

CFR Citation: 34 CFR 700

Legal Deadline: None.

Abstract: These regulations would implement certain provisions of section 405 of the General Education Provisions Act, as amended by Title XIV of the Higher Education Amendments of 1986 (PL 99-498).

Timetable:

Action	Date	FR Cite
NPRM	03/18/88	53 FR 9088
Final Action	09/00/88	

Small Entity: Undetermined

Agency Contact: Lawrence Bussey, Senior Management Analyst, Department of Education, Office of Educational Research and Improvement, 400 Md. Ave., SW, (Rm. 610 - Cap. Pl. Bldg.), Washington, DC 20202, 202 357-6239

RIN: 1850-AA23

437. REGIONAL EDUCATIONAL LABORATORIES AND RESEARCH AND DEVELOPMENT CENTERS PROGRAM: GENERAL PROVISIONS; REGIONAL EDUCATIONAL LABORATORIES; AND RESEARCH AND DEVELOPMENT CENTERS

Legal Authority: 20 USC 1221e

CFR Citation: 34 CFR 706; 34 CFR 707; 34 CFR 708

Legal Deadline: None.

Abstract: These regulations would implement certain provisions of section 405 of the General Education Provisions Act, as amended by Title XIV of the Higher Education Amendments of 1986 (PL 99-498).

Timetable:

Action	Date	FR Cite
NPRM	03/22/88	53 FR 9408
Final Action	11/00/88	

Small Entity: Undetermined

Agency Contact: Lawrence Bussey, Senior Management Analyst, Department of Education, Office of Educational Research and Improvement, 400 Md. Ave., SW, Rm. 610 Cap. Pl. Bldg., Washington, DC 20202, 202 357-6239

RIN: 1850-AA26

438. LIBRARY CAREER TRAINING PROGRAM

Legal Authority: 20 USC 1021 to 1047

CFR Citation: 34 CFR 776

Legal Deadline: None.

Abstract: These regulations would implement certain provisions of Title II of the Higher Education Act of 1965, as amended by the Higher Education Amendments of 1986 (PL 99-498).

Timetable:

Action	Date	FR Cite
NPRM	12/14/87	52 FR 47538
Final Action	05/00/88	

Small Entity: Undetermined

Agency Contact: Louise V. Sutherland, Administrative Librarian, Department of Education, Office of Educational Research and Improvement, 400 Md. Ave., SW - Rm 402Cap. Pl. Bldg., Washington, DC 20202, 202 357-6315

RIN: 1850-AA24

439. STRENGTHENING RESEARCH LIBRARY RESOURCES PROGRAM

Legal Authority: 20 USC 1021 to 1047

CFR Citation: 34 CFR 778

Legal Deadline: None.

Abstract: These regulations would implement certain provisions of Title II of the Higher Education Act of 1965, as amended by the Higher Education Amendments of 1986 (PL 99-498).

Timetable:

Action	Date	FR Cite
NPRM	10/14/87	52 FR 38192
Final Action	05/00/88	

Small Entity: Undetermined

Agency Contact: Louise V. Sutherland, Administrative Librarian, Department of Education, Office of Educational Research and Improvement, 400 Maryland Ave., SW - Rm 402, Capitol Place Bldg. - Washington, DC 20202, 202 357-6315

RIN: 1850-AA22

440. COLLEGE LIBRARY TECHNOLOGY AND COOPERATION GRANTS

Legal Authority: 20 USC 1021 to 1047

CFR Citation: 34 CFR 779

Legal Deadline: None.

Abstract: These regulations would implement certain provisions of Title II of the Higher Education Act of 1965, as amended by the Higher Education Amendments of 1986 (PL 99-498).

Timetable:

Action	Date	FR Cite
NPRM	03/21/88	53 FR 9246
Final Action	10/00/88	

Small Entity: Undetermined

Agency Contact: Louise V. Sutherland, Administrative Librarian, Department of Education, Office of Educational Research and Improvement, 400 Md. Ave., SW, Rm. 402 Cap. Pl. Bldg., Washington, DC 20202, 202 357-6315

RIN: 1850-AA26

441. TERRITORIAL TEACHER TRAINING ASSISTANCE PROGRAM

Legal Authority: PL 95-561

CFR Citation: 34 CFR 790

Legal Deadline: None.

Abstract: These regulations amend 34 CFR 790.2 (Eligible Parties) to promote increased participation in the Territorial Teacher Training Program on the part of the institutions of higher education in each respective territory.

Timetable:

Action	Date	FR Cite
NPRM	12/10/87	52 FR 46785
Final Action	05/00/88	

Small Entity: No

Agency Contact: Haroldie Spriggs, Project Officer, Programs for the Improvement of Practices, Department of Education, Office of Educational Research and Improvement, 400 Maryland Ave., SW, Rm. 508, Capitol Place Bldg., Washington, DC 20202, 202 357-6149

RIN: 1850-AA10

DEPARTMENT OF EDUCATION (ED)
Office of Educational Research and Improvement (OERI)

Completed Actions

442. LIBRARY RESEARCH AND DEMONSTRATION PROGRAM

CFR Citation: 34 CFR 777

Completed:

Reason	Date	FR Cite
Final Action	02/03/88	53 FR 3020
Final Action Effective	03/23/88	

Small Entity: Undetermined

Agency Contact: Louise V. Sutherland 202 357-6315

RIN: 1850-AA25

DEPARTMENT OF EDUCATION (ED)
Office of Elementary and Secondary Education (OESE)

Proposed Rule Stage

443. ASSIST. FOR LEAS IN AREAS AFFECTED BY FED. ACTS. AND ARRANGEMENTS FOR ED. OF CHILDREN WHERE LEAS CANNOT PROVIDE SUITABLE FREE PUB. ED.–HEAVILY IMPACTED DISTRICT; AVG. DAILY ATTENDANCE/MEMBERSHIP

Legal Authority: 20 USC 236; 20 USC 238; 20 USC 240; 20 USC 242; 20 USC 244

CFR Citation: 34 CFR 222

Legal Deadline: None.

Abstract: These proposed regulations would implement section 3(d)(2)(B) of the Impact Aid law, P.L. 81-874, which authorizes supplemental payments enabling LEAs that are heavily impacted by federally connected children to provide a level of education that is equivalent to that maintained in comparable school districts. These regulations would also establish definitions and procedures for calculating payments for LEAs in States that do not collect average daily attendance data. These regulations would also establish standards for determining when an SEA can apply as an LEA.

Timetable:

Action	Date	FR Cite
NPRM	04/00/88	
Final Action	09/00/88	

Small Entity: Undetermined

Agency Contact: W. Stanley Kruger, Acting Director, Division of Impact Aid, Department of Education, Office of Elementary and Secondary Education, 400 Maryland Ave., SW, Room 2117, Washington, DC 20202, 202 732-3637

RIN: 1810-AA20

DEPARTMENT OF EDUCATION (ED)
Office of Elementary and Secondary Education (OESE)

Final Rule Stage

444. INDIAN EDUCATION ACT - FORMULA GRANTS TO LEAS AND TRIBAL SCHOOLS AMENDMENTS (CERTIFICATION OF ELIGIBILITY)

Legal Authority: 20 USC 241aa to 241h; 20 USC 1221h(a)

CFR Citation: 34 CFR 251

Legal Deadline: None.

Abstract: These amendments would amend the regulations to govern the eligibility of children to be counted as "Indian" or "Alaska Native" under the formula grants program of the Indian Education Act, Title IV-A of P.L. 92-318. These regulations would clarify what documentation is necessary to establish that eligibility and what effect failure to collect and maintain that documentation has on the grantee.

Timetable:

Action	Date	FR Cite
NPRM	10/05/87	52 FR 37260
Final Action	05/00/88	

Small Entity: No

Agency Contact: Ervin Keith, Acting Deputy Director, Indian Education Programs, Department of Education, Office of Elementary and Secondary Education, Department of Education, 400 Maryland Ave., SW (Rm. 2177, FOB-6), Washington, DC 20202, 202 732-1887

RIN: 1810-AA28

445. INDIAN EDUCATION: FORMULA GRANTS TO LEAS AND TRIBAL SCHOOLS; INDIAN-CONTROLLED SCHOOLS ENRICHMENT; INDIAN FELLOWSHIP PROGRAM (AMENDMENTS)

Legal Authority: 20 USC 241aa to 241ff; 20 USC 3385b

CFR Citation: 34 CFR 251; 34 CFR 253; 34 CFR 263

Legal Deadline: None.

Abstract: These technical amendments would implement Section 4133 of the Drug-Free Schools and Communities Act of 1986, Subtitle B of Title IV of PL 99-570.

Timetable:

Action	Date	FR Cite
Final Action	05/00/88	

Small Entity: No

Agency Contact: Ervin Keith, Deputy Director, Department of Education, Office of Elementary and Secondary Education, Office of Elementary and Secondary Ed., 400 Maryland Ave, SW, (Room 2177), Washington, DC 20202, 202 732-1887

RIN: 1810-AA36

DEPARTMENT OF EDUCATION (ED)
Office of Elementary and Secondary Education (OESE)

Completed Actions

446. FOLLOW THROUGH PROGRAM

CFR Citation: 34 CFR 215

Completed:

Reason	Date	FR Cite
Final Action	10/19/87	53 FR 38852
Final Action Effective	12/03/87	

Small Entity: No

Agency Contact: James M. Spillane 202 732-4694

RIN: 1810-AA25

447. ASSISTANCE FOR LEAS IN AREAS AFFECTED BY FEDERAL ACTIVITIES AND ARRANGEMENTS FOR ED. OF CHILDREN WHERE LEAS CANNOT PROVIDE SUITABLE FREE PUBLIC ED.--SEC. 2, FED. ACQUISITION/REAL PROPERTY

CFR Citation: 34 CFR 222

Completed:

Reason	Date	FR Cite
Final Action	02/24/88	53 FR 5552
Final Action Effective	04/20/88	

Small Entity: No

Agency Contact: W. Stanley Kruger 202 732-3637

RIN: 1810-AA22

DEPARTMENT OF EDUCATION (ED)
Office of Planning and Budget and Evaluation (OPBE)

Completed Actions

448. AVAILABILITY OF INFORMATION TO THE PUBLIC PURSUANT TO PUBLIC LAW 90-23

CFR Citation: 34 CFR 5

Completed:

Reason	Date	FR Cite
End Review	12/16/87	

Small Entity: Undetermined

Agency Contact: Alexia Roberts 202 732-4568

RIN: 1875-AA03

449. RELEASE OF ADVERSE INFORMATION TO NEWS MEDIA - OFFICIAL SEAL

CFR Citation: 34 CFR 17; 34 CFR 3

Completed:

Reason	Date	FR Cite
Final Action	02/17/88	53 FR 4619
Final Action Effective	02/17/88	

Small Entity: Undetermined

Agency Contact: Mahlon Anderson 202 732-4564

RIN: 1875-AA04

450. PRIVACY ACT REGULATIONS

CFR Citation: 34 CFR 5b

Completed:

Reason	Date	FR Cite
End Review	12/16/87	

Small Entity: Undetermined

Agency Contact: Chiquitta Thomas 202 732-4313

RIN: 1875-AA02

DEPARTMENT OF EDUCATION (ED)
Office of Postsecondary Education (OPE)

Proposed Rule Stage

451. ● ELIGIBILITY OF FOREIGN POSTSECONDARY EDUCATIONAL INSTITUTIONS UNDER THE GUARANTEED STUDENT LOAN PROGRAM

Legal Authority: 20 USC 1071 to 1087-2

CFR Citation: 34 CFR 601

Legal Deadline: None.

Abstract: These regulations would establish procedures and criteria the Secretary would use to determine the eligibility of institutions located outside the United States for participation in student loan programs authorized under Titles IV, Part B of the Higher Education Act of 1965, as amended.

Timetable:

Action	Date	FR Cite
NPRM	05/00/88	
Final Action	10/00/88	

Small Entity: Undetermined

Agency Contact: Virginia Re, Division of Eligibility, and Certification, Department of Education, Office of Postsecondary Education, 400 Maryland Avenue, SW, Room 3030 - ROB-3, Washington,DC 20202, 202 732-4906

RIN: 1840-AB20

452. TRAINING PROGRAM FOR SPECIAL PROGRAM STAFF AND LEADERSHIP PERSONNEL

Legal Authority: PL 99-498

CFR Citation: 34 CFR 642

Legal Deadline: None.

Abstract: These regulations would implement certain provisions of the Higher Education Act of 1965, as amended by the Higher Education Amendments of 1986 (PL 99-498).

Timetable:

Action	Date	FR Cite
NPRM	05/00/88	
Final Action	09/00/88	

Small Entity: Undetermined

Agency Contact: Daniel Davis, Director, Division of Student Services, Department of Education, Office of Postsecondary Education, 400 Maryland Ave., SW, (Rm. 3012 ROB-3), Washington, DC 20202, 202 732-4922

RIN: 1840-AB01

453. TALENT SEARCH PROGRAM

Legal Authority: 20 USC 1070d-1

CFR Citation: 34 CFR 643

Legal Deadline: None.

Abstract: These proposed regulations would revise the criteria that the Secretary would use to evaluate applications for funds under this program.

Timetable:

Action	Date	FR Cite
NPRM	05/00/88	
Final Action	08/00/88	

Small Entity: No

Agency Contact: Daniel Davis, Director, Division of Student Services, Department of Education, Office of Postsecondary Education, 400 Maryland Ave., S.W., (Rm. 3012 - ROB-3), Washington, DC 20202, 202 732-4922

RIN: 1840-AB12

454. EDUCATIONAL OPPORTUNITY CENTERS PROGRAM

Legal Authority: 20 USC 1070d; 20 USC 1070d-1c

CFR Citation: 34 CFR 644

Legal Deadline: None.

Abstract: These proposed regulations would revise the criteria that the Secretary would use to evaluate applications for funds under this program.

Timetable:

Action	Date	FR Cite
NPRM	05/00/88	
Final Action	08/00/88	

Small Entity: No

Agency Contact: Daniel Davis, Director, Division of Student Services, Department of Education, Office of Postsecondary Education, 400 Maryland Ave., S.W., (Rm. 3012 - ROB-3), Washington, DC 20202, 202 732-4922

RIN: 1840-AB13

455. PAUL DOUGLAS TEACHER SCHOLARSHIP PROGRAM AND GUARANTEED STUDENT LOAN AND PLUS PROGRAMS

Legal Authority: 20 USC 1111b

CFR Citation: 34 CFR 653; 34 CFR 682

Legal Deadline: None.

Abstract: These regulations would implement certain provisions of the Higher Education Act of 1965, as amended by the Higher Education Technical Amendments Act of 1987 (PL 100-50).

Timetable:

Action	Date	FR Cite
NPRM	05/00/88	
Final Action	09/00/88	

Small Entity: No

Agency Contact: Pamela Moran, Chief, Policy Section, Guaranteed Student Loan Branch, Department of Education, Office of Postsecondary Education, 400 Md. Ave., S.W. (Rm. 4310 - ROB-3), Washington, DC 20202, 202 732-4242

RIN: 1840-AB03

456. ROBERT C. BYRD HONORS SCHOLARSHIP PROGRAM

Legal Authority: 20 USC 1070d-31 to 1070d-41

CFR Citation: 34 CFR 654

Legal Deadline: None.

Abstract: These regulations would implement certain provisions of the Higher Education Act of 1965, as amended by the Higher Education Amendments of 1986 (PL 99-498).

Timetable:

Action	Date	FR Cite
NPRM	06/00/88	
Final Action	12/00/88	

Small Entity: Undetermined

Agency Contact: Neil C. Nelson, Chief, State Student Incentive, Grant Program, Department of Education, Office of Postsecondary Education, 400 Md. Ave., (Rm. 4018, ROB-3), Washington, D.C. 20202, 202 732-4507

RIN: 1840-AB06

457. FOREIGN LANGUAGE AND AREA STUDIES FELLOWSHIPS PROGRAM, PART II

Legal Authority: PL 99-498

CFR Citation: 34 CFR 657

Legal Deadline: None.

Abstract: These regulations would implement certain provisions of the Higher Education Act of 1965, as amended by the Higher Education Amendments of 1986 (PL 99-498).

Timetable:

Action	Date	FR Cite
NPRM	05/00/88	
Final Action	09/00/88	

Small Entity: Undetermined

Agency Contact: Joseph Belmonte, Acting Deputy Director, Center for International Education, Department of Education, Office of Postsecondary Education, 400 Maryland Ave., SW, (Rm. 3054 ROB-3), Washington, DC 20202W, (Rm. 3054 ROB-3), 202 732-3304

RIN: 1840-AA66

458. STUDENT ASSISTANCE GENERAL PROVISIONS - VERIFICATION 1989-90

Legal Authority: 20 USC 1085; 20 USC 1088; 20 USC 1091; 20 USC 1094; 20 USC 1141

CFR Citation: 34 CFR 668

Legal Deadline: None.

Abstract: These regulations would implement certain provisions of the Higher Education Act of 1965, as amended by the Higher Education Amendments of 1986 (PL 99-498), Tax Reform Act of 1986, and the Compact of Free Association.

Timetable:

Action	Date	FR Cite
NPRM	05/00/88	
Final Action	12/00/88	

Small Entity: Undetermined

Agency Contact: Lorraine Kennedy, Student Verification Branch, Division of Policy and Program Development, Department of Education, Office of Postsecondary Education, 400 Maryland Ave., S.W., (Room 4613 - ROB-3), Washington, DC 20202, 202 245-2724

RIN: 1840-AB07

459. ● STUDENT ASSISTANCE GENERAL PROVISIONS - SUBPARTS A,B AND G

Legal Authority: 20 USC 1085; 20 USC 1088; 20 USC 1091; 20 USC 1092; 20 USC 1094; 20 USC 1141

CFR Citation: 34 CFR 668

Legal Deadline: None.

Abstract: These regulations would be designed to help achieve better accountability in the student financial aid programs.

Timetable:

Action	Date	FR Cite
NPRM	06/00/88	
Final Action	12/00/88	

Small Entity: Undetermined

Agency Contact: John DeCleene, Policy Director, Pell Program, Department of Education, Office of Postsecondary Education, 400 Maryland Avenue, SW, Room 4318, ROB-3, Washington, DC 20202, 202 732-4888

RIN: 1840-AB18

460. ● STUDENT ASSISTANCE GENERAL PROVISIONS - SUBPARTS B AND C

Legal Authority: 20 USC 1085; 20 USC 1088; 20 USC 1091; 20 USC 1092; 20 USC 1094; 20 USC 1141

CFR Citation: 34 CFR 668

Legal Deadline: None.

Abstract: These regulations would amend the provisions related to selective service requirements and make other miscellaneous changes in the student assistance general provisions.

Timetable:

Action	Date	FR Cite
NPRM	06/00/88	
Final Action	12/00/88	

Small Entity: Undetermined

Agency Contact: Fred Sellers, Chief, Policy Section, Pell Grant Program, Department of Education, Office of Postsecondary Education, 400 Maryland Avenue, SW, Room 4318 - ROB-3, Washington, DC 20202, 202 732-4888

RIN: 1840-AB19

461. ● GUARANTEED STUDENT LOAN/SUPPLEMENTAL LOANS FOR STUDENTS PROGRAM - DEFAULT REDUCTION

Significance: Regulatory Program

Legal Authority: 20 USC 1071 to 1087-2

CFR Citation: 34 CFR 668; 34 CFR 682

Legal Deadline: None.

Abstract: These regulations would establish procedures to increase institutional responsibilities in the administration of these programs, as well as provide procedures that the Secretary would use to implement the Default Reduction Initiative Program.

Timetable:

Action	Date	FR Cite
NPRM	05/00/88	
Final Action	08/00/88	

Small Entity: Undetermined

Agency Contact: Pamela Moran, Chief, Policy Section, Guaranteed Student Loan Branch, Department of Education, Office of Postsecondary Education, 400 Maryland Avenue, SW, Room 4310 - ROB-3, Washington, DC 20202, 202 732-4242

RIN: 1840-AB21

462. SUMMER INTENSIVE LANGUAGE INSTITUTES

Legal Authority: 20 USC 1124a

CFR Citation: 34 CFR 670

Legal Deadline: None.

Abstract: These regulations would implement certain provisions of the Higher Education Act of 1965, as amended by the Higher Education Amendments of 1986 (PL 99-498).

Timetable:

Action	Date	FR Cite
NPRM	06/00/88	
Final Action	10/00/88	

Small Entity: Undetermined

Agency Contact: Joseph Belmonte, Acting Deputy Director, Center for International Education, Department of Education, Office of Postsecondary Education, 400 Maryland Ave., SW, (Rm. 3054 ROB-3), Washington, DC 20202, 202 732-3304

RIN: 1840-AA68

463. ● PERKINS LOAN PROGRAM, COLLEGE WORK-STUDY, AND SUPPLEMENTAL EDUCATIONAL OPPORTUNITY GRANT PROGRAMS (CAMPUS-BASED PROGRAMS)

Legal Authority: 20 USC 1087aa to 1087hh

CFR Citation: 34 CFR 674; 34 CFR 675; 34 CFR 676

Legal Deadline: None.

Abstract: These proposed regulations would further implement provisions of the Higher Education Amendments of 1986. The regulations would also propose procedures that would make the Supplemental Educational Opportunity Grant Program consistent with the Pell Grant program with respect to collection of outstanding overpayments.

Timetable:

Action	Date	FR Cite
NPRM	05/00/88	
Final Action	11/00/88	

Small Entity: Undetermined

Agency Contact: Margaret Henry, Chief, Policy Section, Campus & State Grant Branch, Department of Education, Office of Postsecondary Education, 400 Maryland Avenue, SW, Room 4018 - ROB-3, Washington, DC 20202, 202 732-4190

RIN: 1840-AB22

464. DISCLOSURE OF FOREIGN GIFTS

Legal Authority: PL 99-498

CFR Citation: 34 CFR 680

Legal Deadline: None.

Abstract: These regulations would implement certain provisions of the Higher Education Act of 1965, as amended by the Higher Education Amendments of 1986, (PL 99-498).

Timetable:

Action	Date	FR Cite
NPRM	07/00/88	
Final Action	11/00/88	

Small Entity: Undetermined

Agency Contact: Joan E. Duval, Division of Eligibility and Certification, Department of Education, Office of Postsecondary Education, 400 Maryland Ave., SW, (Rm. 3030 ROB-3), Washington, DC 20202, 202 245-9703

RIN: 1840-AA75

465. GUARANTEED STUDENT LOAN/PLUS/SUPPLEMENTAL LOAN/CONSOLIDATION LOAN PROGRAMS

Legal Authority: 20 USC 1071 et seq

CFR Citation: 34 CFR 682; 34 CFR 683

Legal Deadline: None.

Abstract: These regulations would implement certain provisions of the Higher Education Act of 1965, as amended by the Higher Education Amendments of 1986 (PL 99-498).

Timetable:

Action	Date	FR Cite
NPRM	05/00/88	
Final Action	10/00/88	

Small Entity: Undetermined

Agency Contact: Pamela Moran, Chief, Policy Section, Guaranteed Student Loan Branch, Department of Education, Office of Postsecondary Education, 400 Maryland Ave., SW, (Rm. 4310 ROB-3), Washington, DC 20202, 202 732-4242

RIN: 1840-AA96

DEPARTMENT OF EDUCATION (ED)

Office of Postsecondary Education (OPE)

Final Rule Stage

466. SECRETARY'S PROCEDURES AND CRITERIA FOR RECOGNITION OF ACCREDITING AGENCIES

Significance: Regulatory Program

Legal Authority: 20 USC 1058; 20 USC 1061; 20 USC 1085; 20 USC 1088; 20 USC 1141; 20 USC 1401

CFR Citation: 34 CFR 602; 34 CFR 603

Legal Deadline: None.

Abstract: An accrediting body must conform to certain criteria to be recognized by the Secretary. A work group of the National Advisory Committee on Accreditation and Institutional Eligibility reviewed the criteria and recommended changes to the Secretary for improvement. These regulations would implement these changes.

Timetable:

Action	Date	FR Cite
NPRM	09/08/87	52 FR 33908
Final Action	05/00/88	

Small Entity: Undetermined

Agency Contact: James B. Williams, Special Assistant to the Deputy Assistant, Secretary for Higher Education Programs, Department of Education, Office of Postsecondary Education, 400 Maryland Ave (Room 3082 ROB-3), Washington, DC 20202, 202 245-9758

RIN: 1840-AA57

467. DRUG PREVENTION PROGRAMS IN HIGHER EDUCATION

Legal Authority: PL 99-570

CFR Citation: 34 CFR 630

Legal Deadline: None.

Abstract: These regulations would establish procedures and criteria for selection of recipients for awards under this program.

Timetable:

Action	Date	FR Cite
NPRM	03/07/88	53 FR 7312
Final Action	07/00/88	

Small Entity: No

Agency Contact: Ronald Bucknam, Fund for the Improvement of Postsecondary, Education, Department of Education, Office of Postsecondary Education, 400 Md. Ave., S.W., (Room 3100 - ROB-3), Washington, DC 20202, 202 245-8100

RIN: 1840-AB11

468. NATIONAL RESOURCE CENTERS PROGRAM FOR FOREIGN LANGUAGE AND AREA STUDIES OR FOREIGN LANGUAGE AND INTERNATIONAL STUDIES

Legal Authority: PL 99-498

CFR Citation: 34 CFR 657

Legal Deadline: None.

Abstract: These regulations would implement certain provisions of the Higher Education Act of 1965, as amended by the Higher Education Amendments of 1986 (PL 99-498).

Timetable:

Action	Date	FR Cite
NPRM	10/02/87	52 FR 37068
Final Action	05/00/88	

Small Entity: Undetermined

Agency Contact: Joseph Belmonte, Acting Deputy Director, Center for International Education, Department of Education, Office of Postsecondary Education, 400 Maryland Ave., SW, (Rm. 3054 ROB-3), Washington, DC 20202, 202 732-3304

RIN: 1840-AA65

469. ● STUDENT ASSISTANCE GENERAL PROVISIONS - SUBPART A

Legal Authority: 20 USC 1085; 20 USC 1088; 20 USC 1091; 20 USC 1092; 20 USC 1094; 20 USC 1141

CFR Citation: 34 CFR 668

Legal Deadline: Statutory, June 1, 1988.

Abstract: These regulations would propose modifications to the statutorily mandated need analysis methodologies (Pell Grant Family Contribution Schedule and Title IV, Part F).

Timetable:

Action	Date	FR Cite
NPRM	02/29/88	53 FR 6108
Final Action	06/01/88	

Small Entity: Undetermined

Agency Contact: Fred Sellers, Chief, Policy Section, Pell Grant Program, Department of Education, Office of Postsecondary Education, 400 Maryland Avenue, SW, Room 4318 - ROB-3, Washington, DC 20202, 202 732-4888

RIN: 1840-AB23

470. LANGUAGE RESOURCE CENTERS PROGRAM

Legal Authority: 20 USC 1123

CFR Citation: 34 CFR 669

Legal Deadline: None.

Abstract: These regulations would implement certain provisions of the Higher Education Act of 1965, as amended by the Higher Education Amendments of 1986 (PL 99-498).

Timetable:

Action	Date	FR Cite
NPRM	02/02/88	53 FR 2918
Final Action	09/00/88	

Small Entity: Undetermined

Agency Contact: Joseph Belmonte, Acting Deputy Director, Center for International Education, Department of Education, Office of Postsecondary Education, 400 Maryland Ave., SW, (Rm. 3045 ROB-3), Washington, DC 20202, 202 732-3304

RIN: 1840-AA67

471. FOREIGN PERIODICALS PROGRAM

Legal Authority: 20 USC 1125a

CFR Citation: 34 CFR 671

Legal Deadline: None.

Abstract: These regulations would implement certain provisions of the

Higher Education Act of 1965, as amended by the Higher Education Amendments of 1986 (PL 99-498).

Timetable:

Action	Date	FR Cite
NPRM	12/29/87	52 FR 49122
Final Action	10/00/88	

Small Entity: Undetermined

Agency Contact: Joseph Delmonte, Acting Deputy Director, Center for International Education, Department of Education, Office of Postsecondary Education, 400 Maryland Ave., SW, (Rm. 3054 ROB-3), Washington, DC 20202, 202 732-3304

RIN: 1840-AA69

472. INCOME CONTINGENT LOAN PROGRAM - DUE DILIGENCE

Legal Authority: 20 USC 1087a to 1087e

CFR Citation: 34 CFR 673

Legal Deadline: None.

Abstract: These regulations would implement certain provisions of the Higher Education Act of 1965, as amended by the Higher Education Amendments Act of 1986 (99-498).

Timetable:

Action	Date	FR Cite
NPRM	11/25/87	52 FR 45576
Final Action	05/00/88	

Small Entity: Undetermined

Agency Contact: Carney McCullough, Division of Policy and Program, Development, Department of Education, Office of Postsecondary Education, 400 Md. Ave.,SW, (Rm. 4318, ROB-3), Washington, DC 20202, 202 732-4568

RIN: 1840-AB04

473. TREATMENT OF TERRITORIES AND TERRITORIAL STUDENT ASSISTANCE

Legal Authority: 20 USC 1144a

CFR Citation: 34 CFR 696

Legal Deadline: None.

Abstract: These regulations would implement certain provisions of the Higher Education Act of 1965, as amended by the Higher Education Amendments of 1986, (PL 99-498).

Timetable:

Action	Date	FR Cite
NPRM	10/22/87	52 FR 39896
Final Action	09/00/88	

Small Entity: Undetermined

Agency Contact: Leo Pasckiewicz, Office of Policy Development, Department of Education, Office of Postsecondary Education, 400 Maryland Ave., SW, (Rm. 4060 ROB-3), Washington, DC 20202, 202 732-3551

RIN: 1840-AA74

DEPARTMENT OF EDUCATION (ED)
Office of Postsecondary Education (OPE)

Completed Actions

474. INSTITUTIONAL ELIGIBILITY UNDER THE HIGHER EDUCATION ACT OF 1965, AS AMENDED

Significance: Regulatory Program

CFR Citation: 34 CFR 600

Completed:

Reason	Date	FR Cite
Final Action	04/05/88	53 FR 11208
Final Action Effective	05/20/88	

Small Entity: Undetermined

Agency Contact: Joan E. Duval 202 732-4206

RIN: 1840-AA32

475. SECRETARY'S RECOGNITION PROCEDURES FOR NATIONAL ACCREDITING BODIES AND AGENCIES

CFR Citation: 34 CFR 602

Completed:

Reason	Date	FR Cite
End Review	12/16/87	

Small Entity: Undetermined

Agency Contact: James B. Williams 202 245-9758

RIN: 1840-AB15

476. FEDERAL-STATE RELATIONSHIP AGREEMENTS

CFR Citation: 34 CFR 604

Completed:

Reason	Date	FR Cite
End Review	12/16/87	

Small Entity: No

Agency Contact: Leo Pasckiewicz 202 732-3551

RIN: 1840-AB09

477. FINANCIAL ASSISTANCE FOR CONSTRUCTION, RECONSTRUCTION, OR RENOVATION OF HIGHER EDUCATION FACILITIES

CFR Citation: 34 CFR 617

Completed:

Reason	Date	FR Cite
End Review	12/16/87	

Small Entity: Undetermined

Agency Contact: Leo Pasckiewicz 202 732-3551

RIN: 1840-AB10

478. MINORITY SCIENCE IMPROVEMENT PROGRAM

CFR Citation: 34 CFR 637

Completed:

Reason	Date	FR Cite
Final Action	11/12/87	52 FR 43544
Final Action Effective	02/03/88	

Small Entity: Undetermined

Agency Contact: Charles Griffith 202 732-4389

RIN: 1840-AA69

479. PAUL DOUGLAS TEACHER SCHOLARSHIPS — INTEREST RATES

CFR Citation: 34 CFR 659

Completed:

Reason	Date	FR Cite
Withdrawn	03/14/88	53 FR 8397

Small Entity: Undetermined

VOL 53 ISS 79 PT 1 APR 25 1988 UMI

ED—OPE **Completed Actions**

Agency Contact: Neil C. Nelson 202 732-4507

RIN: 1840-AB02

480. PAUL DOUGLAS TEACHER SCHOLARSHIP PROGRAM

CFR Citation: 34 CFR 653

Completed:

Reason	Date	FR Cite
Final Action	11/25/87	52 FR 45284
Final Action Effective	02/03/88	

Small Entity: Undetermined

Agency Contact: Neil C. Nelson 202 732-4507

RIN: 1840-AB14

481. NATIONAL RESOURCE CENTERS PROGRAM FOR FOREIGN LANGUAGE AND AREA STUDIES OR FOREIGN LANGUAGE AND INTERNATIONAL STUDIES

CFR Citation: 34 CFR 656

Completed:

Reason	Date	FR Cite
Final Action	04/01/88	53 FR 10820
Final Action Effective	06/15/88	

Small Entity: Undetermined

Agency Contact: Joseph Belmonte 202 732-3304

RIN: 1840-AA64

482. STUDENT ASSISTANCE GENERAL PROVISIONS - SUBPARTS A, B, C

CFR Citation: 34 CFR 668

Completed:

Reason	Date	FR Cite
Final Action	12/01/87	52 FR 45712
Final Action Effective	02/03/88	

Small Entity: Undetermined

Agency Contact: Fred Sellers 202 732-4888

RIN: 1840-AA79

483. PERKINS LOAN PROGRAM (FORMERLY THE NATIONAL DIRECT STUDENT LOAN PROGRAM) SUBPART C - DUE DILIGENCE

Significance: Regulatory Program

CFR Citation: 34 CFR 674

Completed:

Reason	Date	FR Cite
Final Action	11/30/87	52 FR 45552
Final Action Effective	02/03/88	

Small Entity: No

Agency Contact: Margaret Henry 202 732-4490

RIN: 1840-AA02

484. PERKINS LOAN PROGRAM, COLLEGE WORK-STUDY, AND SUPPLEMENTAL EDUCATIONAL OPPORTUNITY GRANT PROGRAMS (CAMPUS-BASED PROGRAMS)

CFR Citation: 34 CFR 674; 34 CFR 675; 34 CFR 676

Completed:

Reason	Date	FR Cite
Final Action	12/01/87	52 FR 45738
Final Action Effective	02/03/88	

Small Entity: No

Agency Contact: Margaret Henry 202 732-4490

RIN: 1840-AA03

485. PELL GRANT PROGRAM

CFR Citation: 34 CFR 690

Completed:

Reason	Date	FR Cite
Final Action	10/14/87	52 FR 38206
Final Action Effective	12/09/87	

Small Entity: Undetermined

Agency Contact: Fred Sellers 202 732-4888

RIN: 1840-AA97

486. STATE STUDENT INCENTIVE GRANT PROGRAM

CFR Citation: 34 CFR 692

Completed:

Reason	Date	FR Cite
Final Action	11/27/87	52 FR 45432
Final Action Effective	02/03/88	

Small Entity: Undetermined

Agency Contact: Neil C. Nelson 202 732-4507

RIN: 1840-AA59

DEPARTMENT OF EDUCATION (ED)

Prerule Stage

Office of Special Education and Rehabilitative Services (OSERS)

487. THE STATE VOCATIONAL REHABILITATION SERVICES PROGRAM - DEREGULATION

Legal Authority: 29 USC 701 to 731

CFR Citation: 34 CFR 361

Legal Deadline: None.

Abstract: See Preamble

Timetable:

Action	Date	FR Cite
Begin Review	01/26/88	
End Review	05/00/88	

Small Entity: Undetermined

Agency Contact: Albert Rotundo, Director, Planning and Policy Staff, Department of Education, Office of Special Education and Rehabilitative Services, Rehabilitation Services Administration, Room 3220, Switzer Building, Washington, DC 20202, 202 732-1299

RIN: 1820-AA47

DEPARTMENT OF EDUCATION (ED)

Proposed Rule Stage

Office of Special Education and Rehabilitative Services (OSERS)

488. SERVICES FOR DEAF-BLIND CHILDREN AND YOUTH PROGRAM

Legal Authority: 20 USC 1422

CFR Citation: 34 CFR 307

Legal Deadline: None.

Abstract: These regulations are needed to implement certain provisions of the Education of the Handicapped Act Amendments of 1986, PL 99-457.

Timetable:

Action	Date	FR Cite
NPRM	05/00/88	
Final Action	08/00/88	

Small Entity: Undetermined

Agency Contact: Paul Thompson, Acting Division Director, Division of Educational Services, Department of Education, Office of Special Education and Rehabilitative Services, Department of Education, 400 Md. Ave., (Rm. 4605 - Switzer Bldg.), Washington, DC 20202, 202 732-1161

RIN: 1820-AA53

489. TRAINING PERSONNEL FOR THE EDUCATION OF THE HANDICAPPED - PARENT TRAINING AND INFORMATION CENTERS; SPECIAL PROJECTS; AND GENERAL

Legal Authority: 20 USC 1431; 20 USC 1434

CFR Citation: 34 CFR 316; 34 CFR 318

Legal Deadline: None.

Abstract: These regulations are needed to clarify certain provisions of the Education of the Handicapped Act Amendments of 1986, PL 99-457.

Timetable:

Action	Date	FR Cite
NPRM	05/00/88	
Final Action	08/00/88	

Small Entity: No

Agency Contact: Angele Thomas, Acting Division Director, Division of Personnel Preparation, Department of Education, Office of Special Education and Rehabilitative Services, 400 Md. Ave., SW, (Rm. 3904 - Switzer Bldg), Washington, DC 20202, 202 732-1100

RIN: 1820-AA58

490. REHABILITATION SERVICES ADMINISTRATION GENERAL DEREGULATION REVIEW

Legal Authority: 29 USC 701 et seq

CFR Citation: 34 CFR 362; 34 CFR 366; 34 CFR 369; 34 CFR 371; 34 CFR 372; 34 CFR 374; 34 CFR 375; 34 CFR 378; 34 CFR 379; 34 CFR 385; 34 CFR 386; 34 CFR 387; 34 CFR 388; 34 CFR 389; 34 CFR 390; ...

Legal Deadline: None.

Abstract: See Preamble

Timetable:

Action	Date	FR Cite
NPRM	07/00/88	
Final Action	12/00/88	

Small Entity: Undetermined

Additional Information: ADDITIONAL CFR CITATION: 34 CFR 395.

Agency Contact: Albert Rotundo, Director, Planning and Policy Staff, Department of Education, Office of Special Education and Rehabilitative Services, Rehabilitation Services Administration, Room 3220, Switzer Building, Washington, DC 20202, 202 732-1299

RIN: 1820-AA45

491. THE STATE INDEPENDENT LIVING REHABILITATION SERVICES PROGRAM

Legal Authority: 29 USC 796 to 796d

CFR Citation: 34 CFR 365

Legal Deadline: None.

Abstract: See Preamble

Timetable:

Action	Date	FR Cite
Notice of intent	05/00/88	
NPRM	09/00/88	
Final Action	01/00/89	

Small Entity: Undetermined

Agency Contact: Francis Corrigan, Deputy Commissioner, Department of Education, Office of Special Education and Rehabilitative Services, Rehabilitation Services Administration, (Rm. 3030, Switzer Building), Washington, DC 20202, 202 732-1287

RIN: 1820-AA37

492. ● CENTERS FOR INDEPENDENT LIVING - STANDARDS AND EVALUATION INDICATORS

Legal Authority: PL 99-506

CFR Citation: 34 CFR 366

Legal Deadline: None.

Abstract: These proposed regulations would implement the changes to the Rehabilitation Act of 1973, as amended by the Rehabilitation Act Amendments of 1986.

Timetable:

Action	Date	FR Cite
NPRM	07/00/88	
Final Action	10/00/88	

Small Entity: Undetermined

Agency Contact: Albert Rotundo, Director, Planning and Policy Staff, Department of Education, Office of Special Education and Rehabilitative Services, 400 Maryland Avenue, SW, Room 3220 - Switzer Bldg., Washington, DC 20202, 202 732-1299

RIN: 1820-AA81

493. VOCATIONAL REHABILITATION SERVICES TO INDIVIDUALS WITH SEVERE HANDICAPS/SPECIAL PROJECTS AND DEMONSTRATIONS FOR PROVIDING SUPPORTED EMPLOYMENT SERV. TO INDIV. WITH SEVERE HANDICAPS

Legal Authority: 20 USC 777a(a)(1) and 777a(d)

CFR Citation: 34 CFR 373; 34 CFR 380

Legal Deadline: None.

Abstract: These regulations would implement certain changes to the Rehabilitation Act of 1973, made by the Rehabilitation Act Amendments of 1986. (PL 99-506)

Timetable:

Action	Date	FR Cite
NPRM	05/00/88	
Final Action	08/00/88	

Small Entity: Undetermined

Agency Contact: Albert Rotundo, Director, Planning and Policy Staff, Department of Education, Office of Special Education and Rehabilitative Services, Department of Education, Room 3220, Switzer Bldg., Washington, DC 20202, 202 732-1299

RIN: 1820-AA76

494. ● PROJECTS WITH INDUSTRY - STANDARDS AND EVALUATION INDICATORS

Legal Authority: PL 99-506

CFR Citation: 34 CFR 379

Legal Deadline: None.

Abstract: These proposed regulations would implement the changes to the

BEST COPY AVAILABLE

Rehabilitation Act of 1973, as amended by the Rehabilitation Act Amendments of 1986.

Timetable:

Action	Date	FR Cite
NPRM	07/00/88	
Final Action	10/00/88	

Small Entity: Undetermined

Agency Contact: Albert Rotundo, Director, Planning and Policy Staff, Department of Education, Office of Special Education and Rehabilitative Services, 400 Maryland Avenue, SW, Room 3220 - Switzer Bldg., Washington, DC 20202, 202 732-1299

RIN: 1820-AA82

DEPARTMENT OF EDUCATION (ED) — Final Rule Stage

Office of Special Education and Rehabilitative Services (OSERS)

495. ASSISTANCE TO STATES FOR EDUCATION OF HANDICAPPED CHILDREN

Legal Authority: 20 USC 1401; 20 USC 1412; 20 USC 1413

CFR Citation: 34 CFR 300

Legal Deadline: None.

Abstract: These regulations are needed to implement certain provisions of the Education of the Handicapped Act Amendments of 1986, PL 99-457.

Timetable:

Action	Date	FR Cite
NPRM	03/14/88	53 FR 8390
Final Action	06/00/88	

Small Entity: No

Agency Contact: Paul Chassy, Acting Branch Chief, Program Administrative Branch, Department of Education, Office of Special Education and Rehabilitative Services, 400 Md. Ave., SW, (Rm. 3613 - Switzer Bldg), Washington, DC 20202, 202 732-1079

RIN: 1820-AA71

496. PRESCHOOL GRANTS FOR HANDICAPPED CHILDREN'S PROGRAM

Legal Authority: 20 USC 1419

CFR Citation: 34 CFR 301

Legal Deadline: None.

Abstract: These regulations are needed to implement certain provisions of the Education of the Handicapped Act Amendments of 1986, PL 99-457.

Timetable:

Action	Date	FR Cite
NPRM	11/18/87	52 FR 44346
Final Action	06/00/88	

Small Entity: No

Agency Contact: Nancy Treusch, Educational Program Specialist, Division of Educational Services, Department of Education, Office of Special Education and Rehabilitative Services, Department of Education, 400 Md. Ave., SW, Switzer Bldg. (Rm. 4094), Washington, DC 20202, 202 732-1097

RIN: 1820-AA48

497. GRANTS FOR INFANTS AND TODDLERS WITH HANDICAPS

Legal Authority: 20 USC 1471 to 1485

CFR Citation: 34 CFR 303

Legal Deadline: None.

Abstract: These regulations are needed to implement certain provisions of Education of the Handicapped Act Amendments of 1986, PL 99-457.

Timetable:

Action	Date	FR Cite
NPRM	11/18/87	52 FR 44352
Final Action	06/00/88	

Small Entity: No

Agency Contact: Thomas B. Irvin, Deputy Director, Division of Program Analysis and Planning, Department of Education, Office of Special Education and Rehabilitative Services, Department of Education, 400 Md. Ave., SW, (Rm. 3092 - Switzer Bldg.), Washington, DC 20202, 202 732-1012

RIN: 1820-AA49

498. HANDICAPPED SPECIAL STUDIES PROGRAM

Legal Authority: 20 USC 1418

CFR Citation: 34 CFR 327

Legal Deadline: None.

Abstract: These regulations are needed to implement certain provisions of the Education of the Handicapped Act Amendments of 1986, PL 99-457.

Timetable:

Action	Date	FR Cite
NPRM	02/12/88	53 FR 4185
Final Action	06/00/88	

Small Entity: No

Agency Contact: Linda Glidewell, Educational Program Specialist, Division of Innovation and Development, Department of Education, Office of Special Education and Rehabilitative Services, 400 Md. Ave., SW, (Rm. 3094 - Switzer Bldg), Washington, DC 20202, 202 732-1099

RIN: 1820-AA72

499. CAPTIONED FILMS LOAN SERVICE FOR THE DEAF PROGRAM AND EDUCATIONAL MEDIA LOAN SERVICE FOR THE HANDICAPPED PROGRAM

Legal Authority: PL 99-457

CFR Citation: 34 CFR 330; 34 CFR 331

Legal Deadline: None.

Abstract: See preamble. These regulations are also needed to implement certain provisions the Education of the Handicapped Act Amendments of 1986, PL 99-457.

Timetable:

Action	Date	FR Cite
NPRM	03/15/88	53 FR 8608
Final Action	06/00/88	

Small Entity: Undetermined

Agency Contact: Malcolm J. Norwood, Branch Chief, Division of Educational Services, Department of Education, Office of Special Education and Rehabilitative Services, Department of Education, 400 Md. Ave., SW, (Rm. 3511 - Switzer Bldg.), Washington, DC 20202, 202 732-1172

RIN: 1820-AA61

VOL 53 ISS 79 PT 1 APR 25 1988 UMI

ED—OSERS **Final Rule Stage**

500. FIELD INITIATED RESEARCH

Legal Authority: 29 USC 760 to 762

CFR Citation: 34 CFR 350; 34 CFR 357

Legal Deadline: None.

Abstract: These regulations are needed to redefine the scope of the program and to revise the selection criteria.

Timetable:

Action	Date	FR Cite
NPRM	03/03/88	53 FR 6958
Final Action	07/00/88	

Small Entity: Undetermined

Agency Contact: Betty Jo Berland, Planning and Evaluation Officer, Department of Education, Office of Special Education and Rehabilitative Services, 400 Maryland Ave., S.W., Rm. 3070 - Switzer Bldg., Washington, DC 20202, 202 732-1139

RIN: 1820-AA80

501. NIDRR - RESEARCH TRAINING AND CAREER DEVELOPMENT PROGRAM

Legal Authority: 29 USC 760 to 762

CFR Citation: 34 CFR 360

Legal Deadline: None.

Abstract: These regulations are needed to implement certain provisions of the Rehabilitation Amendments of 1986, P.L. 99-506.

Timetable:

Action	Date	FR Cite
NPRM	02/09/88	53 FR 3832
Final Action	07/00/88	

Small Entity: Undetermined

Agency Contact: Betty Jo Berland, Planning and Evaluation Officer, Department of Education, Office of Special Education and Rehabilitative Services, Department of Education, 400 Md. Ave., S.W., (Rm. 3070 Switzer), Washington, D.C. 20202, 202 732-1139

RIN: 1820-AA77

502. THE STATE VOCATIONAL REHABILITATION SERVICES PROGRAM

Legal Authority: 29 USC 701 to 731

CFR Citation: 34 CFR 361

Legal Deadline: None.

Abstract: These regulations would implement certain changes to the Rehabilitation Act of 1973, made by the Rehabilitation Act Amendments of 1986. (PL 99-506)

Timetable:

Action	Date	FR Cite
NPRM	11/18/87	52 FR 44366
Final Action	05/00/88	

Small Entity: Undetermined

Agency Contact: Albert Rotundo, Director, Planning and Policy Staff, Department of Education, Office of Special Education and Rehabilitative Services, Rehabilitation Services Administration, Room 3220, Switzer Building, Washington, DC 20202, 202 732-1299

RIN: 1820-AA40

503. MISCELLANEOUS TECHNICAL AMENDMENTS TO THE REHABILITATION SERVICES REGULATIONS

Legal Authority: 29 USC 711(c); 29 USC 796(e); 29 USC 732; 29 USC 774; 29 USC 777b; 29 USC 777j; 29 USC 795g

CFR Citation: 34 CFR 366; 34 CFR 369; 34 CFR 370; 34 CFR 375; 34 CFR 378; 34 CFR 379; 34 CFR 385; 34 CFR 387; 34 CFR 388; 34 CFR 389; 34 CFR 390

Legal Deadline: None.

Abstract: These regulations would implement certain changes to the Rehabilitation Act of 1973, made by the Rehabilitation Act Amendments of 1986. (PL 99-506)

Timetable:

Action	Date	FR Cite
Final Action	05/00/88	

Small Entity: Undetermined

Agency Contact: Albert Rotundo, Director, Planning and Policy Staff, Department of Education, Office of Special Education and Rehabilitative Services, Rehabilitation Services Administration, Room 3220, Switzer Building, Washington, DC 20202, 202 732-1299

RIN: 1820-AA39

504. INDEPENDENT LIVING SERVICES FOR OLDER BLIND INDIVIDUALS

Legal Authority: 29 USC 796j

CFR Citation: 34 CFR 367

Legal Deadline: None.

Abstract: These regulations would implement certain changes to the Rehabilitation Act of 1973, made by the Rehabilitation Act Amendments of 1986. (PL 99-506)

Timetable:

Action	Date	FR Cite
NPRM	01/29/88	53 FR 2702
Final Action	08/00/88	

Small Entity: Undetermined

Agency Contact: Albert Rotundo, Director, Planning and Policy Staff, Department of Education, Office of Special Education and Rehabilitative Services, Rehabilitation Services Administration, Room 3220, Switzer Building, Washington, DC 20202, 202 732-1299

RIN: 1820-AA41

DEPARTMENT OF EDUCATION (ED)

Completed Actions

Office of Special Education and Rehabilitative Services (OSERS)

505. REMOVAL OF ARCHITECTURAL BARRIERS TO THE HANDICAPPED PROGRAM

CFR Citation: 34 CFR 304

Completed:

Reason	Date	FR Cite
Final Action	03/03/88	53 FR 6944
Final Action Effective	04/20/88	

Small Entity: No

Agency Contact: Sandra Brotman 202 732-1031

RIN: 1820-AA51

506. REGIONAL RESOURCE AND FEDERAL CENTERS PROGRAM

CFR Citation: 34 CFR 305

Completed:

Reason	Date	FR Cite
Final Action	02/05/88	53 FR 3524
Final Action Effective	03/23/88	

Small Entity: Undetermined

Agency Contact: Jeffrey Champagne 202 732-1056

RIN: 1820-AA52

507. TRAINING PROGRAMS FOR TEACHERS OF HANDICAPPED CHILDREN IN AREAS WITH A SHORTAGE

CFR Citation: 34 CFR 322

Completed:

Reason	Date	FR Cite
Final Action	02/17/88	53 FR 4619
Final Action Effective	02/17/88	

Small Entity: Undetermined

Agency Contact: Angele Thomas 202 732-1100

RIN: 1820-AA75

508. RESEARCH IN EDUCATION OF THE HANDICAPPED PROGRAM

CFR Citation: 34 CFR 324

Completed:

Reason	Date	FR Cite
Final Action	11/12/87	52 FR 43832
Final Action Effective	02/03/88	

Small Entity: Undetermined

Agency Contact: Linda Glidewell 202 732-1099

RIN: 1820-AA69

509. TECHNOLOGY, EDUCATIONAL MEDIA, AND MATERIALS FOR THE HANDICAPPED

CFR Citation: 34 CFR 333

Completed:

Reason	Date	FR Cite
Final Action	03/03/88	53 FR 6952
Final Action Effective	04/20/88	

Small Entity: Undetermined

Agency Contact: Linda Glidewell 202 732-1099

RIN: 1820-AA63

510. HANDICAPPED RESEARCH: RESEARCH FELLOWSHIP PROGRAM

CFR Citation: 34 CFR 356

Completed:

Reason	Date	FR Cite
Withdrawn	01/07/88	

Small Entity: Undetermined

Agency Contact: Betty Jo Berland 202 732-1139

RIN: 1820-AA66

DEPARTMENT OF EDUCATION (ED) — Proposed Rule Stage

Office of Intergovernmental and Interagency Affairs (EDSI)

511. INTERGOVERNMENTAL REVIEW OF DEPARTMENT OF EDUCATION PROGRAMS AND ACTIVITIES -- LIST OF PROGRAMS

Legal Authority: EO 12372; 31 USC 6506; 42 USC 3334

CFR Citation: 34 CFR 79

Legal Deadline: None.

Abstract: This regulatory action would propose those ED programs to be included and those ED programs to be excluded under EO 12372 and ED's implementing regulations in 34 CFR Part 79. The public will be given an opportunity to comment on the listing.

Timetable:

Action	Date	FR Cite
NPRM	04/00/88	
Final Action	07/00/88	

Small Entity: No

Agency Contact: Leroy Walser, Executive Director, Federal Interagency Committee on Education, Department of Education, Office of Intergovernmental and Interagency Affairs, Room 503 Rpters. Bldg., Washington, DC 20202, 202 732-3669

RIN: 1860-AA00

DEPARTMENT OF EDUCATION (ED) — Proposed Rule Stage

Office of the General Counsel (EDOGC)

512. EQUAL ACCESS TO JUSTICE

Legal Authority: 5 USC 504

CFR Citation: 34 CFR 21

Legal Deadline: None.

Abstract: These regulations would amend the procedures for the award of fees and other expenses to applicants who prevail in adversary adjudications before the Department of Education. The current regulations must be amended to reflect recent amendments to the Equal Access to Justice Act made by P.L. 99-80.

Timetable:

Action	Date	FR Cite
NPRM	05/00/88	
Final Action	11/00/88	

Small Entity: Undetermined

Agency Contact: JoAnne Frey, General Attorney, Office of the General Counsel, Department of Education, Office of the General Counsel, 400 Maryland Ave., SW, Room 4122, Washington, DC 20202, 202 732-2580

RIN: 1801-AA01

513. DUE PROCESS REGULATIONS

Legal Authority: 20 USC 1234; 20 USC 3872; 20 USC 1411 to 1420

CFR Citation: 34 CFR 78; 34 CFR 204; 34 CFR 300

Legal Deadline: None.

Abstract: The Department plans to revise and consolidate due process regulations governing notice and hearings.

VOL 53 ISS 79 PT 1 APR 25 1988 UMI

ED—EDOGC **Proposed Rule Stage**

Timetable:

Action	Date	FR Cite
NPRM	05/00/88	
Final Action	10/00/88	

Small Entity: Undetermined

Agency Contact: Sarah Kemble, Attorney, Office of the General Counsel, Department of Education, Office of the General Counsel, 400 Maryland Avenue, SW, Room 4121, FOB-6, Washington, DC 20202, 202 732-2730

RIN: 1801-AA02

DEPARTMENT OF EDUCATION (ED) **Final Rule Stage**
Office of the General Counsel (EDOGC)

514. PROGRAM FRAUD CIVIL REMEDIES

Legal Authority: 31 USC 3801 to 3812

CFR Citation: 34 CFR 33

Legal Deadline: None.

Abstract: These regulations would implement the Program Fraud Civil Remedies Act of 1986.

Timetable:

Action	Date	FR Cite
NPRM	07/22/87	52 FR 27650
NPRM Comment Period End	08/21/87	
Final Action	05/00/88	

Small Entity: Undetermined

Agency Contact: Sarah L. Kemble, Attorney, Department of Education, Office of the General Counsel, Office of the General Counsel, 400 Md. Ave., SW, Rm. 4121, FOB-6, Washington, D.C. 20202, 202 732-2730

RIN: 1801-AA05

DEPARTMENT OF EDUCATION (ED) **Completed Actions**
Office of the General Counsel (EDOGC)

515. INVENTIONS AND PATENTS – GENERAL

CFR Citation: 34 CFR 6

Completed:

Reason	Date	FR Cite
End Review	12/16/87	

Small Entity: Undetermined

Agency Contact: Richard Galloway 202 732-2525

RIN: 1801-AA04

[FR Doc. 88-5081 Filed 04-22-88; 8:45 am]

BILLING CODE 4000-01-T

VOL
53

ISS
79

PT
1

AP
25

1988

UMI

federal register

Monday
April 25, 1988

Part VII

Department of Energy

Semiannual Regulatory Agenda

DEPARTMENT OF ENERGY (DOE)

DEPARTMENT OF ENERGY

10 CFR Chs. II, III, and X

41 CFR Chs. 9 and 109

48 CFR Ch. 9

Regulatory Agenda

AGENCY: Department of Energy.

ACTION: April 1988 regulatory agenda.

SUMMARY: In furtherance of this Administration's commitment to make government more responsive to the citizens of the United States and to assist in fulfilling the President's mandate to lessen regulatory burdens, the Department of Energy (DOE) is publishing this agenda of regulatory activities that DOE has in progress, as well as proposed rulemakings that DOE foreseeably may issue in the next year. This agenda provides the Administration with an effective tool for monitoring and controlling the promulgation of regulations. It includes (1) all rules expected to be issued as proposed or final rules before April 1989, (2) all rules being reviewed within the Department to determine whether to propose modifications through rulemaking, and (3) all rulemakings and rule reviews for which action has been completed since the October 1987 Regulatory Agenda. In addition, the agenda meets requirements under the Regulatory Flexibility Act for information on any rulemakings which are "likely to have a significant economic impact on a substantial number of small entities." The agenda may not include all routine regulations or those that relate to internal agency management.

FOR FURTHER INFORMATION CONTACT:

General: For further information on the agenda in general, contact: Robert E. Morey, Department of Energy, Room 6B-128, Forrestal Building, 1000 Independence Avenue, SW., Washington, DC 20585, (202) 586-9507.

Specific: For further information about any particular item on the agenda, contact the individual listed under that item.

SUPPLEMENTARY INFORMATION:

Under Executive Order 12291, 46 FR 13193, February 19, 1981, each covered agency publishes, in April and October of each year, an agenda of all rulemakings in progress or expected to be commenced within the next year, and currently effective rules that are under agency review. The Executive Order authorizes the Office of Management and Budget (OMB) to set forth standards and procedures for the preparation of these agendas. The April 1988 Regulatory Agenda has been prepared in accordance with OMB Bulletin No. 88-1.

There are important reasons for preparing this agenda. It is vital in this Administration's efforts to reduce the burdens of existing and future regulations, to increase agency accountability for regulatory actions, to provide for Presidential oversight of the regulatory process, to minimize duplication and conflict of regulations, and to insure well-reasoned regulations. This Administration has made considerable progress in these efforts.

Executive Order 12291 provides that the regulatory agenda may be incorporated with the "regulatory flexibility agenda" required under the Regulatory Flexibility Act, 5 U.S.C. 602 *et seq.* The regulatory flexibility agenda must contain: (1) A brief description of the subject area and a summary of the nature of any rule which the agency expects to propose or promulgate which is "likely to have a significant economic impact on a substantial number of small entities;" (2) the objectives and legal basis for the issuance of the rule and an approximate schedule for completing action on any rule for which the agency has issued a general notice of proposed rulemaking; and (3) the name and telephone number of an agency official knowledgeable about each rule. The regulatory flexibility agenda required under 5 U.S.C. 602(a) is incorporated in today's notice.

Entries appended to this notice reflect the status of regulatory activities as of approximately February 15, 1988. Regulatory activities have been divided among categories according to their next stage: Prerulemaking action, proposed rule, final rule, or completed action.

Regulations designated as "significant" are those which are also included in the Regulatory Program of the United States Government, prepared pursuant to Executive Order 12498, 50 FR 1036, January 8, 1985. Significant regulations also include those which, while not of Government-wide interest or importance, nevertheless are priorities of the Department.

Each item contains the following information: (1) DOE office or administration (that is, the DOE organizational unit responsible for the regulation); (2) RIN number (that is, the Regulation Identifier Number assigned by OMB/OIRA); (3) title; (4) significance; (5) agency contact (that is, the name, title, address and telephone number of a person who is knowledgeable about the regulation); (6) effects on small businesses and other entities (that is, whether the action is likely to have a significant economic impact on a substantial number of "small entities" as defined by the Regulatory Flexibility Act); (7) CFR citation (that is, the section of the Code of Federal Regulations that will be affected); (8) legal authority (that is, a citation to the section of the United States Code (U.S.C.), Public Law (P.L.) or the Executive Order (E.O.) that authorizes the regulatory action); (9) abstract (that is, a description of the problem the regulation will address, the regulatory approach under consideration, the alternatives being considered for addressing the problem, and the potential costs and benefits of the action); (10) legal deadline (that is, the statutory or judicial deadline, if any); and (11) timetable (that is, the dates, and citations if applicable, for all past stages and at least the next stage of the rulemaking). In addition, each item regarding completed actions (that is, regulations completed or withdrawn and reviews completed since the preceding agenda) states the date, and citation if appropriate.

A draft of this agenda has been transmitted to the Chief Counsel for Advocacy of the Small Business Administration for comment, if any, to fulfill the requirements of 5 U.S.C. 602(b).

DOE's next agenda will be published in October 1988.

Issued in Washington, DC on March 3, 1988.

Eric J. Fygi,

Acting General Counsel.

DOE

Conservation and Renewable Energy—Prerule Stage

Sequence Number	Title	Regulation Identifier Number
516	Energy-Efficiency Standards for Dishwashers, Clothes Washers and Clothes Dryers	1904-AA37

Conservation and Renewable Energy—Proposed Rule Stage

Sequence Number	Title	Regulation Identifier Number
517	Federal Energy Management & Planning Programs Methodology & Procedures for Life Cycle Costing Analyses	1904-AA06
518	Energy-Efficiency Standards for Refrigerators and Related Products, Small Gas Furnace and Television Sets	1904-AA28
519	Regulations Implementing National Appliance Energy Conservation Act; Certification and Enforcement, Waiver of Federal Preemption and Small Manufacturer Exemptions	1904-AA32
520	Energy Conservation Performance Standards for New Buildings; Subpart B-Voluntary Performance Standards for New Non-Federal Residential Buildings	1904-AA34
521	Energy-Efficiency Test Procedures for Refrigerator-Freezers and Freezers	1904-AA35
522	Energy Conservation Standards for Water Heaters; Technical Amendments	1904-AA36

Conservation and Renewable Energy—Final Rule Stage

Sequence Number	Title	Regulation Identifier Number
523	Energy Conservation Performance Standards for New Buildings; Subpart A-Commercial and Multi-Family High Rise Residential Buildings	1904-AA08
524	Energy Efficiency Test Procedures for Water Heaters	1904-AA12
525	Energy Conservation Performance Standards for New Buildings; Subpart C-Mandatory Performance Standards for New Federal Residential Buildings	1904-AA27
526	State Energy Conservation Program (SECP) -- Use of Oil Overcharge Funds for Building Energy Conservation Materials and Equipment	1904-AA30

Conservation and Renewable Energy—Completed Actions

Sequence Number	Title	Regulation Identifier Number
527	Energy Efficiency Test Procedures for Central Air Conditioners	1904-AA23
528	Amendments to the Residential Conservation Service and the Commercial and Apartment Conservation Service	1904-AA31
529	Energy-Efficiency Test Procedures for Dishwashers	1904-AA33

Defense Programs—Proposed Rule Stage

Sequence Number	Title	Regulation Identifier Number
530	Criteria and Procedures for Establishment of Human Reliability Program (HRP) and Determination of Individual's Eligibility for Access to an HRP Position	1992-AA11

DOE

Defense Programs—Completed Actions

Sequence Number	Title	Regulation Identifier Number
531	Restrictions on Aircraft Landing and Air Delivery at Department of Energy Nuclear Sites	1992-AA12

Departmental and Others—Proposed Rule Stage

Sequence Number	Title	Regulation Identifier Number
532	Part 605 Special Research Grants Program; Proposed Rule	1901-AA07
533	Annotation of Land Records and Documentation of Property Owner Refusals to Participate in the Uranium Mill Tailings Remedial Action Program	1901-AA12
534	Model Federal Policy for Protection of Human Research Subjects	1901-AA13

Departmental and Others—Final Rule Stage

Sequence Number	Title	Regulation Identifier Number
535	Petitions Requesting Disposal Capacity for Unusual or Unexpected Volumes of Low-Level Radioactive Waste; Submission and Evaluation Requirements	1901-AA15

Departmental and Others—Completed Actions

Sequence Number	Title	Regulation Identifier Number
536	Standard Contract for Disposal of Spent Nuclear Fuel and/or High-Level Radioactive Waste; Amendments	1901-AA11

Economic Regulatory Administration—Proposed Rule Stage

Sequence Number	Title	Regulation Identifier Number
537	Proposed Rule Establishing New Administrative Procedures with Respect to Short-Term Imports and Exports of Natural Gas	1903-AA07

Management and Administration—Prerule Stage

Sequence Number	Title	Regulation Identifier Number
538	Proposed Rule on DOE Contractor Drug Free Workplace Policy	1991-AA39

VOL 53 ISS 79 PT 1 APR 25 1988 UMI

DOE

Management and Administration—Proposed Rule Stage

Sequence Number	Title	Regulation Identifier Number
539	Department of Energy Acquisition Regulation Revisions; Patent Policy	1991-AA23
540	Department of Energy Property Management Regulation; Official Use of Motor Vehicles	1991-AA28
541	Department of Energy Acquisition Regulation; Miscellaneous Changes on Acquisition of Personal Property	1991-AA32
542	Department of Energy Financial Assistance Rules; Merit Review	1991-AA41
543	Contracting for Basic and Applied Research	1991-AA42
544	Department of Energy Acquisition Regulation; Legislative Lobbying	1991-AA45

Management and Administration—Final Rule Stage

Sequence Number	Title	Regulation Identifier Number
545	Department of Energy Acquisition Regulation; Management and Operating Contractor Purchasing Systems	1991-AA25
546	Department of Energy Financial Assistance Rules; Restriction of Eligibility	1991-AA35
547	Department of Energy Acquisition Regulation; Use of Contract Carriers by Cost Reimbursable Contractors	1991-AA37
548	Debarment and Suspension (Non-Procurement)	1991-AA40
549	Resolution of Disputes Between Subcontractors and DOE Management and Operating Contractors	1991-AA44
550	Collection of Claims Owed the United States	1991-AA47
551	Freedom of Information Regulations: Revisions to Fee Schedules and Procedures	1991-AA48

Management and Administration—Completed Actions

Sequence Number	Title	Regulation Identifier Number
552	Financial Assistance Regulations; Cooperative Agreements	1991-AA03
553	Department of Energy Acquisition Regulation; Miscellaneous Changes to Conform to Federal Acquisition Regulation Changes and Revised Internal Procedures	1991-AA33
554	10 CFR 600, Subpart E Uniform Administrative Requirements for Grants and Cooperative Agreements to State and Local Governments	1991-AA43
555	Uniform Relocation Assistance and Real Property Acquisition Regulation for Federal and Federally Assisted Programs	1991-AA46

Office of General Counsel—Proposed Rule Stage

Sequence Number	Title	Regulation Identifier Number
556	Amendments to Department of Energy Conduct of Employees Regulations	1990-AA00
557	Patent Waiver Regulation	1990-AA02
558	Foreign Gifts and Decorations	1990-AA04
559	Class Patent Waivers	1990-AA07

Office of General Counsel—Final Rule Stage

Sequence Number	Title	Regulation Identifier Number
560	Cooperation with the Inspector General	1990-AA08
561	Implementation of the Program Fraud Civil Remedies Act of 1986	1990-AA06

VOL 53 ISS 79 PT 1 AP 25 1988 UMI

DEPARTMENT OF ENERGY (DOE)

Prerule Stage

Conservation and Renewable Energy (CE)

516. ● ENERGY-EFFICIENCY STANDARDS FOR DISHWASHERS, CLOTHES WASHERS AND CLOTHES DRYERS

Significance: Regulatory Program

Legal Authority: 42 USC 6295

CFR Citation: 10 CFR 430.32

Legal Deadline: Statutory. The NAECA requires DOE determinations on need to amend Federal appliance standards in a period from 7/1/89 to 1/1/94. The statute requires completion of a second reanalysis of all then-extant standards in a period from 7/1/94 to 12/31/2006. The NAECA requires a final determination on these three products by

Abstract: The National Appliance Energy Conservation Act of 1987 (NAECA) was enacted March 17, 1987. The NAECA extensively amends the Department's statutory authorities and responsibilities regarding energy efficiency standards for major household appliances. The NAECA establishes initial energy-efficiency standard levels for most types of major appliances and generally requires DOE to undergo two subsequent rulemakings, at specified times, to determine whether the extant standard for a covered product should be amended. These products are: refrigerators, refrigerator-freezers, and freezers; room air conditioners; central air conditioners and central air conditioning heat pumps; water heaters; pool heaters; direct heating equipment; furnaces; dishwashers; clothes washers; clothes dryers; and kitchen ranges and ovens. Other appliances, including television sets, may be regulated by the Department essentially as provided for in prior law. This rulemaking will review the statutory standards for dishwashers, clothes washers and clothes dryers to determine whether those levels need to be amended.

Timetable:

Action	Date	FR Cite
ANPRM	05/00/88	
ANPRM Comment Period End	07/00/88	
NPRM	01/00/89	
NPRM Comment Period End	03/00/89	
Final Action	01/00/90	

Small Entity: Undetermined

Additional Information: LEGAL DEADLINE CONT: 01/01/90.

Agency Contact: Michael J. McCabe, Supervisory Mechanical Engineer, Department of Energy, Conservation and Renewable Energy, Department of Energy, 1000 Independence Avenue, SW, Washington, DC 20585, 202 586-9127

RIN: 1904-AA37

DEPARTMENT OF ENERGY (DOE)

Proposed Rule Stage

Conservation and Renewable Energy (CE)

517. FEDERAL ENERGY MANAGEMENT & PLANNING PROGRAMS METHODOLOGY & PROCEDURES FOR LIFE CYCLE COSTING ANALYSES

Legal Authority: 42 USC 8255; PL 95-619, Sec 545; PL 99-509, Sec 3301; EO 11912; EO 12003; PL 99-509

CFR Citation: 10 CFR 436

Legal Deadline: None.

Abstract: Under the National Energy Conservation Policy Act, DOE has promulgated regulations establishing a methodology for estimating and comparing the life cycle costs of Federal buildings and for determining life cycle cost effectiveness. The Energy Security Act required that the regulations provide for the use of marginal energy costs in the life cycle cost analyses. DOE sought legislative revisions to authorize use of average energy costs rather than marginal costs. Appropriate legislative relief came with the Omnibus Budget Reconciliation Act of 1986. The current rulemaking would update base year prices and energy cost escalation rates based on current average energy cost projections. It would also eliminate the need for Federal Register publication of future annual updates so long as there is no significant change in the method for making average energy cost projections.

Timetable:

Action	Date	FR Cite
NPRM	00/00/00	

Small Entity: No

Agency Contact: K. Dean DeVine, Federal Energy Management Program, Department of Energy, Conservation and Renewable Energy, 1000 Independence Avenue, SW, Washington, DC 20585, 202 586-6784

RIN: 1904-AA06

518. ENERGY-EFFICIENCY STANDARDS FOR REFRIGERATORS AND RELATED PRODUCTS, SMALL GAS FURNACE AND TELEVISION SETS

Significance: Regulatory Program

Legal Authority: 42 USC 6295

CFR Citation: 10 CFR 430.32

Legal Deadline: Statutory, December 31, 1906. The NAECA requires DOE determinations to amend Federal appliance standards in a period from 7/1/89 to 1/1/94. The Statute requires completion of a second reanalysis of all then-extant standards in a period from 7/1/94 to 12/31/2006. Also statutory deadlines for a proposal on standards for (cont)

Abstract: The National Appliance Energy Conservation Act of 1987 (NAECA) was enacted March 17, 1987. The NAECA extensively amends the Department's statutory authorities and responsibilities regarding energy efficiency standards for major household appliances. The NAECA establishes initial statutory energy-efficiency standard levels for most types of major appliances and generally requires the Department to undergo two subsequent rulemakings, at specified times, to determine whether the extant standard for a covered product should be amended. These products are: refrigerators, refrigerator-freezers, and freezers; room air conditioners; central air conditioners and central air conditioning heat pumps; water heaters; pool heaters; direct heating equipment; furnaces; dishwashers; clothes washers; clothes dryers; and kitchen ranges and ovens. Other appliances, including television sets, may be regulated by the

Department essentially as provided for in prior law. This rulemaking will review the statutory standard levels for refrigerators, refrigerator-freezers, and freezers to determine whether those levels need to be (cont)

Timetable:

Action	Date	FR Cite
ANPRM	12/07/87	52 FR 46367
ANPRM Comment Period End	02/05/88	52 FR 46367
NPRM	07/00/88	
NPRM Comment Period End	09/00/88	
Final Action	01/00/89	

Small Entity: Undetermined

Additional Information: ABSTRACT CONT: amended; for small gas furnaces, will set an initial standard within the statutory range; and will determine whether any standard for television sets is warranted.

LEGAL DEADLINE CONT: refrigerators and related products (7/1/88) and establishment of the small gas furnace standards level (1/1/89), the earliest NAECA deadline for a final action.

Agency Contact: Michael J. McCabe, Supervisory Engineer, Department of Energy, Conservation and Renewable Energy, 1000 Independence Avenue, SW, Washington, DC 20585, 202 586-9127

RIN: 1904-AA28

---

519. REGULATIONS IMPLEMENTING NATIONAL APPLIANCE ENERGY CONSERVATION ACT; CERTIFICATION AND ENFORCEMENT, WAIVER OF FEDERAL PREEMPTION AND SMALL MANUFACTURER EXEMPTIONS

Significance: Regulatory Program

Legal Authority: 42 USC 6291 to 6309

CFR Citation: 10 CFR 430.1; 10 CFR 430.2; 10 CFR 430.22; 10 CFR 430.40; 10 CFR 430.50; 10 CFR 430.60; 10 CFR 430.70

Legal Deadline: None.

Abstract: The National Appliance Energy Conservation Act of 1987 (NAECA) extensively amended the Department's statutory authorities and responsibilities regarding energy efficiency standards for major household appliances. The NAECA establishes initial statutory energy-efficiency standard levels for most types of major appliances. These products are: refrigerators, refrigerator-freezers, and freezers; room air conditioners; central air conditioners and central air conditioning heat pumps; water heaters; pool heaters; direct heating equipment; furnaces; dishwashers; clothes washers; clothes dryers; and kitchen ranges and ovens. Other appliances, including television sets, may be regulated by the Department essentially as provided for in prior law. Although the standards prescribed by the NAECA generally supersede all State and local standards for these products, the Act allows States to petition for and DOE to grant exemption from Federal preemption and allows small manufacturers to apply for temporary exemption from the standards. This rulemaking will establish procedures for these preemption and exemption provisions, and for certification (cont)

Timetable:

Action	Date	FR Cite
NPRM	03/04/88	53 FR 7110
NPRM Comment Period End	04/00/88	
Final Action	00/00/00	

Small Entity: Undetermined

Additional Information: ABSTRACT CONT: and enforcement aspects of the program.

Government Levels Affected: State

Agency Contact: Michael J. McCabe, Supervisory Engineer, Department of Energy, Conservation and Renewable Energy, CE-132, 1000 Independence Avenue, SW, Washington, DC 20585, 202 586-9127

RIN: 1904-AA32

---

520. ● ENERGY CONSERVATION PERFORMANCE STANDARDS FOR NEW BUILDINGS; SUBPART B-VOLUNTARY PERFORMANCE STANDARDS FOR NEW NON-FEDERAL RESIDENTIAL BUILDINGS

Legal Authority: 42 USC 6831 et seq

CFR Citation: 10 CFR 435

Legal Deadline: Statutory, October 1983. Deadline for Final Rule

Abstract: Title III of the Energy Conservation and Production Act, as amended, requires the development and promulgation of energy performance standards for new buildings. In order to comply with this requirement, DOE currently is developing voluntary guidelines for the private sector. Subpart B develops voluntary standards for new non-Federal residential buildings.

Timetable:

Action	Date	FR Cite
NPRM	00/00/00	

Small Entity: No

Government Levels Affected: Local, State

Agency Contact: James A. Smith, Director, Building Systems Division, Conservation and Renewable Energy, Department of Energy, Conservation and Renewable Energy, Department of Energy, 1000 Independence Avenue, SW, Washington, DC 20585, 202 586-9445

RIN: 1904-AA34

---

521. ● ENERGY-EFFICIENCY TEST PROCEDURES FOR REFRIGERATOR-FREEZERS AND FREEZERS

Legal Authority: 42 USC 6293

CFR Citation: 10 CFR 430.22

Legal Deadline: None.

Abstract: The regulation will amend existing test procedures for refrigerator-freezers and freezers to alleviate the requirement for waivers for units equipped with variable defrost controls. It will also address refrigerator-freezers equipped with two compressors. The amendments will eliminate the need for the test procedure waivers granted Whirlpool and White Consolidated Industries, Inc., for their variable defrost control refrigerator-freezers.

Timetable:

Action	Date	FR Cite
NPRM	05/00/88	
NPRM Comment Period End	07/00/88	

Small Entity: No

Government Levels Affected: Federal

Agency Contact: Michael J. McCabe, Supervisory Mechanical Engineer, Department of Energy, Conservation and Renewable Energy, Department of Energy, 1000 Independence Avenue, SW, Washington, DC 20585, 202 586-9127

RIN: 1904-AA35

522. ● ENERGY CONSERVATION STANDARDS FOR WATER HEATERS; TECHNICAL AMENDMENTS

Legal Authority: 42 USC 6292

CFR Citation: 10 CFR 430.32

Legal Deadline: None.

Abstract: This action would be a technical amendment, based on water heater test procedure changes in progress (see 1904 - AA12), of the statutory standard for water heaters contained in the National Appliance Energy Conservation Act of 1987 (NAECA) enacted March 17, 1987. This amendment could change the way the standard level is measured, but would not change the level of the minimum energy conservation standard itself. NAECA requires amendment of the applicable standard if the Secretary determines that an amended test procedure will alter the measured efficiency of the standard. This technical amendment of the standard is to be completed concurrently with the rulemaking with respect to the amended test procedure.

Timetable:

Action	Date	FR Cite
NPRM	06/00/88	
NPRM Comment Period End	08/00/88	
Final Action	03/00/89	
Final Action Effective	04/00/89	

Small Entity: Undetermined

Agency Contact: Michael J. McCabe, Supervisory Mechanical Engineer, Department of Energy, Conservation and Renewable Energy, Department of Energy, 1000 Independence Avenue, SW, Washington, DC 20585, 202 586-9127

RIN: 1904–AA36

DEPARTMENT OF ENERGY (DOE)

Conservation and Renewable Energy (CE)

Final Rule Stage

523. ENERGY CONSERVATION PERFORMANCE STANDARDS FOR NEW BUILDINGS; SUBPART A-COMMERCIAL AND MULTI-FAMILY HIGH RISE RESIDENTIAL BUILDINGS

Legal Authority: 42 USC 6831 et seq

CFR Citation: 10 CFR 435

Legal Deadline: Statutory, October 1983. Deadline for Final Rule.

Abstract: Title III of the Energy Conservation and Production Act, as amended, requires the development and promulgation of energy performance standards for new buildings. In order to comply with this requirement, DOE currently is developing voluntary standards for the non-federal sector and mandatory standards for the federal government. Subpart A develops standards for both federal and non-federal commercial buildings and multi-family high rise buildings.

Timetable:

Action	Date	FR Cite
NPRM	05/06/87	87 FR 5476
NPRM Comment Period End	08/04/87	
Interim Final Rule	09/02/88	

Small Entity: No

Government Levels Affected: Federal

Agency Contact: James A. Smith, Director, Buildings Systems Division, Department of Energy, Conservation and Renewable Energy, 1000 Independence Avenue, SW, Washington, DC 20585, 202 586-9445

RIN: 1904–AA08

524. ENERGY EFFICIENCY TEST PROCEDURES FOR WATER HEATERS

Legal Authority: 42 USC 6293

CFR Citation: 10 CFR 430.22

Legal Deadline: None.

Abstract: Final test procedures for 13 types of appliances were established during 1978. The test procedures form the basis of manufacturers' representations on the Federal Trade Commission's EnergyGuide label. In February 1984, DOE proposed to establish test procedures for heat pump water heaters and to eliminate the need for the test procedure waiver granted to A.O. Smith for its water heater with a thermal compensatory dip tube. Based on the comments received pursuant to the February 8, 1984 NPRM, the Department prepared a new NPRM published March 13, 1987. This NPRM proposed a single test procedure to cover gas, oil and electric water heaters as well as heat pump water heaters, and extended the test procedures to cover instantaneous type water heaters. In addition to the A.O. Smith matter, the rulemaking would eliminate the need for the test procedure waivers granted Bock Corp., Ford Products and Lockinvar Corp. for their high mass oil-fired water heaters.

Timetable:

Action	Date	FR Cite
NPRM	02/06/84	49 FR 4870
NPRM Comment Period End	05/21/84	49 FR 4870
NPRM Test Procedures for Water Heaters	03/13/87	49 FR 7972
Final Action	03/00/89	
Final Action Effective	04/00/89	

Small Entity: No

Additional Information: Under a separate rulemaking (RIN=1904-AA--), the Secretary will determine whether the test procedure amendment alters the measured water heater efficiency and, if so, will establish corrective technical amendments to the energy conservation standard.

Agency Contact: Michael J. McCabe, Supervisory Mechanical Engineer, Department of Energy, Conservation and Renewable Energy, 1000 Independence Avenue, SW, Washington, DC 20585, 202 586-9127

RIN: 1904–AA12

525. ENERGY CONSERVATION PERFORMANCE STANDARDS FOR NEW BUILDINGS; SUBPART C-MANDATORY PERFORMANCE STANDARDS FOR NEW FEDERAL RESIDENTIAL BUILDINGS

Legal Authority: 42 USC 6831 et seq

CFR Citation: 10 CFR 435

DOE—CE **Final Rule Stage**

Legal Deadline: Statutory, October 1983. Deadline for Final Rule.

Abstract: Title III of the Energy Conservation and Production Act, as amended, requires the development and promulgation of energy performance standards for new buildings. In order to comply with this requirement, DOE currently is developing voluntary standards for the non-federal sector and mandatory standards for the federal government. Subpart C develops mandatory standards for new federal residential buildings.

Timetable:

Action	Date	FR Cite
NPRM	08/20/86	51 FR 29754
Extension of Comment Period	11/18/86	51 FR 222
NPRM Comment Period End	01/16/87	51 FR 222
Interim Final Rule	05/10/88	

Small Entity: No

Agency Contact: James A. Smith, Director, Building Systems Division, Department of Energy, Conservation and Renewable Energy, 1000 Independence Ave., SW, Washington, DC 20585, 202 586-9445

RIN: 1904-AA27

526. STATE ENERGY CONSERVATION PROGRAM (SECP) – USE OF OIL OVERCHARGE FUNDS FOR BUILDING ENERGY CONSERVATION MATERIALS AND EQUIPMENT

Legal Authority: 42 USC 6321 to 6327

CFR Citation: 10 CFR 420, (Revision)

Legal Deadline: None.

Abstract: This rulemaking would modify the prohibition in the State Energy Conservation Program (SECP) regulations on most purchases or installation of equipment and materials for energy conservation building retrofits and weatherization. The prohibition would be relaxed only with respect to whatever so-called eligible petroleum violation escrow (PVE) funds the State elects to spend through the SECP. These PVE funds redress injuries which States' citizens suffered from violations of former Federal petroleum price and allocation regulations. As with all State SECP activities, PVE-funded building retrofits and weatherization would have to be included in an approved program plan.

Timetable:

Action	Date	FR Cite
NPRM	10/22/87	52 FR 39604
Final Action	06/00/88	

Small Entity: No

Agency Contact: Sandra Monje, Energy Conservation Program Specialist, Department of Energy, Conservation and Renewable Energy, Energy Management and Extension, Office of State and Local Assistance, Washington, DC 20585, 202 586-0295

RIN: 1904-AA30

DEPARTMENT OF ENERGY (DOE)
Conservation and Renewable Energy (CE)

Completed Actions

527. ENERGY EFFICIENCY TEST PROCEDURES FOR CENTRAL AIR CONDITIONERS

Legal Authority: 42 USC 6293

CFR Citation: 10 CFR 430.22

Legal Deadline: None.

Abstract: Final test procedures for 13 types of appliances were established during 1978. The test procedures form the basis of manufacturers' representations on the Federal Trade Commission's Energy Guide label. The purpose of the rulemaking is to establish test procedures for water-source heat pumps and multi-evaporator heat pumps; to eliminate the test procedure waivers granted to Borg-Warner Central Environmental Systems and United Technologies, Carrier Corporation for their variable speed heat pumps; and to incorporate, by reference, three industry standards, the American Society of Heating, Refrigerating, and Air-Conditioning Engineers (ASHRAE) Standard 116-83, the Air-Conditioning and Refrigeration Institute (ARI) Standard 210/240-84 and Air-Conditioning and Refrigeration Institute Standard 325-85, into the test procedures.

Timetable:

Action	Date	FR Cite
Notice of Inquiry	04/02/85	50 FR 13042
NPRM	10/07/86	51 FR 35736
Extension of Comment Period	11/07/86	51 FR 40442
NPRM Comment Period End	01/30/87	51 FR 40442
Final Action	03/14/88	53 FR 8304
Final Action Effective	07/00/88	

Small Entity: No

Additional Information: A Notice of Inquiry was published in the Federal Register on April 2, 1985 to request comments on a rating procedure to determine the energy performance of a central air conditioner combination (condensing unit and indoor coil) without conducting the full laboratory procedure prescribed by the DOE test procedures. DOE proposed such a rating method in the proposed rulemaking.

Agency Contact: Michael J. McCabe, Supervisory Mechanical Engineer, Department of Energy, Conservation and Renewable Energy, 1000 Independence Avenue, SW, Washington, DC 20585, 202 586-9127

RIN: 1904-AA23

528. AMENDMENTS TO THE RESIDENTIAL CONSERVATION SERVICE AND THE COMMERCIAL AND APARTMENT CONSERVATION SERVICE

Significance: Regulatory Program

Legal Authority: 42 USC 8211 et seq; 42 USC 8281 et seq; PL 99-412 Conservation Service Reform Act of 1986

CFR Citation: 10 CFR 456, (Revision); 10 CFR 458, (Deletion)

Legal Deadline: Statutory, August 28, 1986. Rules promulgated under section 212 of the National Energy Conservation Policy Act must be amended within the one hundred and eighty day period after the August 28, 1986, enactment of the Conservation Service Reform Act.

Abstract: The Conservation Service Reform Act of 1986 (Act) Requires changes to the Residential Conservation Service (RCS) and repeals the Commercial and Apartment Conservation Service (CACS) except for CACS plans approved before August 1,

1984. RCS and CACS required large electric and natural gas utilities to perform energy audits of their eligible customers upon request, and to provide other services. Required changes in the RCS program include deletion of some required services, program termination on June 30, 1989, provisions for alternative State plans, and for utilities to obtain waiver of plan requirements. Except for alternative State plans, these changes were made in a notice of interim final rulemaking because the rule reflects non-discretionary requirements which are explicitly set forth in the Act. Procedures for processing complaints about adequacy of implementation of alternative State plans, and for annual reports on any CACS State plan excepted from the general repeal of CACS were published in a final rulemaking. Consistent with departmental policy, these procedures are designed to minimize the expense or other burdens of complying.

Timetable:

Action	Date	FR Cite
NPRM	03/04/87	52 FR 6710
Public Hearing	04/21/87	52 FR 6710
NPRM Comment Period End	05/04/87	
Final Action	09/04/87	52 FR 34138
Interim Final Rule	09/09/87	52 FR 34138
Interim Final Rule	03/04/88	

Small Entity: No

Agency Contact: Edna Jones, Energy Conservation Specialist, Department of Energy, Conservation and Renewable Energy, Residential and Commercial Conservation, Office of State and Local Assistance, Washington, DC 20585, 202 586-8224

RIN: 1904-AA31

529. ENERGY-EFFICIENCY TEST PROCEDURES FOR DISHWASHERS

Legal Authority: 42 USC 6293

CFR Citation: 10 CFR 430.23

Legal Deadline: None.

Abstract: The ANDI-CO Appliances Inc., an agent for a foreign appliance manufacturer, received a temporary waiver to exclude a foreign appliance manufacturer's dishwasher from the prescribed DOE test procedures. The waiver was granted because DOE's test procedure requirements for measurement of energy consumption do not apply to dishwashers designed to operate with cold inlet water. Consistent with program rules, this rulemaking would examine changes to the dishwasher test procedures which would make this waiver no longer necessary.

Timetable:

Action	Date	FR Cite
Grant of Temporary Waiver	05/08/85	50 FR 21488
NPRM	04/15/87	52 FR 12342
NPRM Comment Period End	06/15/87	52 FR 12342
Final Action	12/15/87	52 FR 47549
Final Action Effective	02/16/88	52 FR 47549

Small Entity: Undetermined

Agency Contact: Michael J. McCabe, Supervisory Engineer, Department of Energy, Conservation and Renewable Energy, CE-132, 1000 Independence Ave., SW, Washington, DC 20585, 202 586-9127

RIN: 1904-AA33

DEPARTMENT OF ENERGY (DOE) — Proposed Rule Stage

Defense Programs (DP)

530. CRITERIA AND PROCEDURES FOR ESTABLISHMENT OF HUMAN RELIABILITY PROGRAM (HRP) AND DETERMINATION OF INDIVIDUAL'S ELIGIBILITY FOR ACCESS TO AN HRP POSITION

Significance: Agency Priority

Legal Authority: 42 USC 2014aa Atomic Energy Act of 1954, Sec. 11aa; 42 USC 2201 Atomic Energy Act of 1954, Sec. 161; 10 CFR 710

CFR Citation: 10 CFR 710

Legal Deadline: None.

Abstract: The Department of Energy, because of its mission involving nuclear weapons and special nuclear materials, requires a reliable and drug-free work-force. At present, thousands of people within the DOE-contractor work-force are in daily close proximity to nuclear weapons, weapons components, or special nuclear material without the benefit of a human reliability program (HRP). This action would establish a Q(R) access authorization for individuals applying for or currently holding a position identified as an HRP position. The security clearance determination would integrate management and medical screening information into the existing access authorization investigation and adjudication process.

Timetable:

Action	Date	FR Cite
NPRM	04/18/88	
NPRM Comment Period End	05/18/88	

Small Entity: No

Agency Contact: Martin Hershkowitz, Program Manager, Human Reliability Program, Department of Energy, Defense Programs, Office of Safeguards & Security, DP-343, Washington, DC 20585, 301 353-5671

RIN: 1992-AA11

DEPARTMENT OF ENERGY (DOE)
Defense Programs (DP)

Completed Actions

531. RESTRICTIONS ON AIRCRAFT LANDING AND AIR DELIVERY AT DEPARTMENT OF ENERGY NUCLEAR SITES

Significance: Agency Priority

Legal Authority: 42 USC 2201; 42 USC 2278.a

CFR Citation: 10 CFR 862

Legal Deadline: None.

Abstract: Regulation would enhance security at DOE nuclear sites by restricting unofficial aircraft landing and unofficial air delivery of persons or cargo. Exceptions are granted for emergencies with prior notification to DOE if possible. Impact on public would be minimal since activities restricted by regulations are not condoned by DOE currently.

Timetable:

Action	Date	FR Cite
NPRM	10/06/86	51 FR 35518
NPRM Comment Period End	11/20/86	
Final Action	08/12/87	52 FR 29836
Final Action Effective	09/11/87	

Small Entity: No

Public Compliance Cost: Initial Cost: $0

Government Levels Affected: Local, State, Federal

Agency Contact: John Hnatio, Security Specialist, Office of Safeguards and Security, Department of Energy, Defense Programs, Room E-335, Germantown, MD 20545, 301 353-2478

RIN: 1992-AA12

DEPARTMENT OF ENERGY (DOE)
Departmental and Others (ENDEP)

Proposed Rule Stage

532. PART 605 SPECIAL RESEARCH GRANTS PROGRAM; PROPOSED RULE

Legal Authority: 42 USC 2051; 42 USC 5817; 42 USC 5901; 42 USC 7254; 42 USC 7256; 31 USC 6301 et seq

CFR Citation: 10 CFR 605

Legal Deadline: None.

Abstract: This action would revise administrative guidelines in order to clarify and streamline DOE-OER pre and post award policies and procedures.

Timetable:

Action	Date	FR Cite
NPRM	09/00/88	

Small Entity: Not Applicable

Agency Contact: Robert Zich, Director, Acquisition and Assistance, Management Division (ER-64), Department of Energy, Departmental and Others, (ER64) Office of Energy Research, Washington, DC 20545, 301 353-5544

RIN: 1901-AA07

533. ANNOTATION OF LAND RECORDS AND DOCUMENTATION OF PROPERTY OWNER REFUSALS TO PARTICIPATE IN THE URANIUM MILL TAILINGS REMEDIAL ACTION PROGRAM

Significance: Agency Priority

Legal Authority: 42 USC 7901 Uranium Mill Tailings Radiation Control Act of 1978

CFR Citation: Not yet determined

Legal Deadline: Statutory, March 31, 1990. DOE will propose to extend UMTRA authorization period to 9/30/94.

Abstract: PL 95-604 assigned the Department of Energy the authority to conduct remedial actions at 24 processing sites and associated vicinity properties. Section 104(d) states that the Department shall issue appropriate rules and regulations concerning annotation of land records where residual radioactive materials were located and when remedial action took place. The Department will begin rulemaking proceedings during FY 1988.

Timetable:

Action	Date	FR Cite
NPRM	00/00/00	

Small Entity: Undetermined

Agency Contact: James A. Turi, Director, Uranium Mill Tailings Project Division, NE-22, Department of Energy, Departmental and Others, Office of Nuclear Energy, Washington, DC 20545, 301 353-2585

RIN: 1901-AA12

534. MODEL FEDERAL POLICY FOR PROTECTION OF HUMAN RESEARCH SUBJECTS

Significance: Agency Priority

Legal Authority: PL 95-622; PL 93-438, Sec 105A

CFR Citation: 10 CFR 745, (Revision)

Legal Deadline: None.

Abstract: In response to the First Biennial Report of the President's Commission for the Study of Ethical Problems in Medicine and Biomedical and Behavioral Research, DOE along with all other affected Federal departments and agencies following the lead of DHHS will adopt and implement a uniform code of regulations for the protection of human subjects in Federal research projects. This will replace the prior regulations adopted by DOE in 1976 and make DOE requirements uniform with the DHHS policies.

Timetable:

Action	Date	FR Cite
Proposed Model Policy for Protection of Human Subjects	06/03/86	51 FR 106
NPRM	00/00/00	

Small Entity: No

Agency Contact: Susan L. Rose, Health Scientist, Department of Energy, Departmental and Others, Office of Energy Research, Human Health and Assessments Division(ER-73), Washington, DC 20545, 301 353-4731

RIN: 1901-AA13

DEPARTMENT OF ENERGY (DOE)
Departmental and Others (ENDEP)

Final Rule Stage

535. ● PETITIONS REQUESTING DISPOSAL CAPACITY FOR UNUSUAL OR UNEXPECTED VOLUMES OF LOW-LEVEL RADIOACTIVE WASTE; SUBMISSION AND EVALUATION REQUIREMENTS

Significance: Agency Priority

Legal Authority: PL 99-240, Sec 5(c)(5); 42 USC 2021(e)

CFR Citation: 10 CFR 730, (New)

Legal Deadline: None.

Abstract: These rules are proposed in order to allow DOE to implement its responsibilities under section 5(c)(5) of the Low-Level Radioactive Waste Policy Amendments Act of 1985 (P.L. 99-240) (the Act). This section authorizes DOE to grant to commercial nuclear power reactors allocations of disposal capacity in order to permit the disposal of low-level waste generated by unusual or unexpected activities. The program estimates that up to five petitions each year through 1992 will be prepared by utilities, at an estimated 80 burden-hours per petition. The rules will benefit utilities by ensuring that disposal capacity set aside for unusual or unexpected activities will be disbursed equitably and evenly over the 7-year "interim access period."

Timetable:

Action	Date	FR Cite
NPRM	01/20/88	53 FR 1594
NPRM Comment Period End	03/21/88	53 FR 1594
Final Action	07/01/88	

Small Entity: No

Agency Contact: Jeffrey L. Smiley, Manager, Low-Level Waste Management Program, Office of Nuclear Energy, Department of Energy, Departmental and Others, NE-24, U.S. Department of Energy, Washington, DC 20545, 301 353-4216

RIN: 1901-AA15

DEPARTMENT OF ENERGY (DOE)
Departmental and Others (ENDEP)

Completed Actions

536. STANDARD CONTRACT FOR DISPOSAL OF SPENT NUCLEAR FUEL AND/OR HIGH-LEVEL RADIOACTIVE WASTE; AMENDMENTS

Significance: Agency Priority

Legal Authority: 42 USC 10222

CFR Citation: 10 CFR 961, (Revision)

Legal Deadline: None.

Abstract: On April 18, 1983, the Department of Energy (DOE) published a rule which established the Standard Contract for Disposal of Spent Nuclear Fuel and/or High-Level Radioactive Waste (standard disposal contract) to be used by the DOE in furnishing disposal services to the owners or generators of spent nuclear fuel and/or high-level radioactive waste (48 FR 16590). On December 6, 1985, the U.S. Court of Appeals for the District of Columbia Circuit ruled that the ongoing 1.0 mill per kilowatt hour (1M/KWH) fee in DOE's standard disposal contract should be based on net generation of electricity rather than gross generation of electricity as adopted in the final rule (Wisconsin Electric Power Co. et al. v. Hodel, Nos. 83-1086 and 84-8571). This rule would amend the standard disposal contract to be consistent with the court's ruling. This amendment is expected to reduce revenues from the ongoing fee up to 5%.

Timetable:

Action	Date	FR Cite
Final Action Effective	04/07/83	
NPRM	11/07/86	51 FR 40684
NPRM Comment Period End	12/08/86	51 FR 40684
Final Action	09/18/87	52 FR 35356

Small Entity: No

Government Levels Affected: Federal

Agency Contact: Alan Brownstein, Utility Contracts Manager, Department of Energy, Departmental and Others, Forrestal Building, GB-270, 1000 Independence Avenue, SW, Washington, DC 20585, 202 586-4973

RIN: 1901-AA11

DEPARTMENT OF ENERGY (DOE)
Economic Regulatory Administration (ERA)

Proposed Rule Stage

537. PROPOSED RULE ESTABLISHING NEW ADMINISTRATIVE PROCEDURES WITH RESPECT TO SHORT-TERM IMPORTS AND EXPORTS OF NATURAL GAS

Significance: Agency Priority

Legal Authority: 15 USC 717b; 42 USC 7101 et seq; EO 12009

CFR Citation: 10 CFR 590

Legal Deadline: None.

Abstract: The proposed rule would amend the administrative procedure regulations contained in 10 CFR 590, by establishing a new Subpart F to provide alternative, expedited procedures regarding applications to import and export natural gas on a short-term basis. The purpose of the proposed rule is to reduce the regulatory burden on parties wishing to import or export natural gas on a short-term or spot market basis by streamlining our licensing process, thus facilitating the operation of the market.

Timetable:

Action	Date	FR Cite
NPRM	00/00/00	

Small Entity: No

Agency Contact: Constance L. Buckley, Director, Natural Gas Division, Department of Energy, Economic Regulatory Administration, 1000 Independence Avenue, SW, Washington, DC 20585, 202 586-9482

RIN: 1903-AA07

VOL 53 ISS 79 PT 1 APR 25 1988 UMI

DEPARTMENT OF ENERGY (DOE)
Management and Administration (MA)

Prerule Stage

538. PROPOSED RULE ON DOE CONTRACTOR DRUG FREE WORKPLACE POLICY

Significance: Agency Priority

Legal Authority: 42 USC 2011 et seq (Atomic Energy Act)

CFR Citation: Not yet determined

Legal Deadline: None.

Abstract: Will establish comprehensive drug abuse prevention policy and program at DOE-owned or -leased operations consistent with DOE responsibility to protect public health and safety and national security. Regulation will address drug testing requirements, educational and training programs, drug counseling and rehabilitation, confidentiality and protection of privacy of employees. Costs incurred will affect cost reimbursement type contracts for managing, operating, constructing, and servicing DOE facilities. Benefits will be in establishing reasonable level of consistency among contractor programs and resultant cost to the government and in reducing risk of unacceptable damage to security environment, health and safety of employees and the public.

Timetable:

Action	Date	FR Cite
ANPRM	00/00/00	
Comment Period End		
NPRM	00/00/00	

Small Entity: Not Applicable

Agency Contact: Juanita E. Smith, Director, Employee Relations, Office of Industrial Relations, Department of Energy, Management and Administration, 1000 Independence Avenue, SW, Washington, DC 20585, 202 586-9033

RIN: 1991-AA39

DEPARTMENT OF ENERGY (DOE)
Management and Administration (MA)

Proposed Rule Stage

539. DEPARTMENT OF ENERGY ACQUISITION REGULATION REVISIONS; PATENT POLICY

Legal Authority: 41 USC 401 et seq The Office of Federal Procurement Policy Act; 42 USC 7101 et seq The Department of Energy Organization Act; EO 12352 Procurement Reforms

CFR Citation: 48 CFR 927; 48 CFR 970

Legal Deadline: None.

Abstract: The Department of Energy Acquisition Regulation, promulgated March 29, 1984, at 49 FR 11922, supplements and implements the Federal Acquisition Regulation. A more recent Federal Acquisition Circular has been issued to establish a FAR Part 27 concerning Patents. It will be necessary to revise Part 927 of the DEAR to supplement and implement the FAR and to explain how DOE patent policy will differ due to our statutory requirements.

Timetable:

Action	Date	FR Cite
NPRM	06/00/88	
NPRM Comment Period End	08/00/88	
Final Action	11/00/88	
Final Action Effective	12/00/88	

Small Entity: No

Agency Contact: Ellen L. Feinsilber, Director, Procurement Policy Division, Department of Energy, Management and Administration, 1000 Independence Ave., SW, Washington, DC 20585, 202 586-8264

RIN: 1991-AA23

540. DEPARTMENT OF ENERGY PROPERTY MANAGEMENT REGULATION; OFFICIAL USE OF MOTOR VEHICLES

Legal Authority: 42 USC 7254

CFR Citation: 41 CFR 109

Legal Deadline: None.

Abstract: To update the Property Management Regulations regarding official use of motor vehicles. The rule would also make various other minor upgrading changes.

Timetable:

Action	Date	FR Cite
NPRM	06/30/88	
NPRM Comment Period End	07/31/88	
Final Action	11/30/88	
Final Action Effective	12/31/88	

Small Entity: No

Agency Contact: Robert Wilson, Supply Management Representative, Department of Energy, Management and Administration, 1000 Independence Ave., SW, Washington, DC 20585, 202 586-8260

RIN: 1991-AA28

541. DEPARTMENT OF ENERGY ACQUISITION REGULATION; MISCELLANEOUS CHANGES ON ACQUISITION OF PERSONAL PROPERTY

Legal Authority: 42 USC 7254

CFR Citation: 48 CFR 908; 48 CFR 970; 48 CFR 907; 48 CFR 944; 48 CFR 945; 48 CFR 951; 48 CFR 952

Legal Deadline: None.

Abstract: To provide additional policy guidance on the acquisition of personal property in the areas concerning acquisition plans, Government supply sources, consideration for subcontracts, Government property, and updating solicitation provisions and contract clauses.

Timetable:

Action	Date	FR Cite
NPRM	06/30/88	
NPRM Comment Period End	07/31/88	
Final Action	11/30/88	
Final Action Effective	12/31/88	

Small Entity: No

Agency Contact: Robert Wilson, Supply Management Representative, Department of Energy, Management and Administration, 1000 Independence Ave., SW, Washington, DC 20585, 202 586-8260

RIN: 1991-AA32

VOL 53 ISS 79 PT 1 AP 25 1988 UMI

DEPARTMENT OF ENERGY (DOE)
Departmental and Others (ENDEP)

Final Rule Stage

535. ● PETITIONS REQUESTING DISPOSAL CAPACITY FOR UNUSUAL OR UNEXPECTED VOLUMES OF LOW-LEVEL RADIOACTIVE WASTE; SUBMISSION AND EVALUATION REQUIREMENTS

Significance: Agency Priority

Legal Authority: PL 99-240, Sec 5(c)(5); 42 USC 2021(e)

CFR Citation: 10 CFR 730, (New)

Legal Deadline: None.

Abstract: These rules are proposed in order to allow DOE to implement its responsibilities under section 5(c)(5) of the Low-Level Radioactive Waste Policy Amendments Act of 1985 (P.L. 99-240) (the Act). This section authorizes DOE to grant to commercial nuclear power reactors allocations of disposal capacity in order to permit the disposal of low-level waste generated by unusual or unexpected activities. The program estimates that up to five petitions each year through 1992 will be prepared by utilities, at an estimated 80 burden-hours per petition. The rules will benefit utilities by ensuring that disposal capacity set aside for unusual or unexpected activities will be disbursed equitably and evenly over the 7-year "interim access period."

Timetable:

Action	Date	FR Cite
NPRM	01/20/88	53 FR 1594
NPRM Comment Period End	03/21/88	53 FR 1594
Final Action	07/01/88	

Small Entity: No

Agency Contact: Jeffrey L. Smiley, Manager, Low-Level Waste Management Program, Office of Nuclear Energy, Department of Energy, Departmental and Others, NE-24, U.S. Department of Energy, Washington, DC 20545, 301 353-4216

RIN: 1901-AA15

DEPARTMENT OF ENERGY (DOE)
Departmental and Others (ENDEP)

Completed Actions

536. STANDARD CONTRACT FOR DISPOSAL OF SPENT NUCLEAR FUEL AND/OR HIGH-LEVEL RADIOACTIVE WASTE; AMENDMENTS

Significance: Agency Priority

Legal Authority: 42 USC 10222

CFR Citation: 10 CFR 961, (Revision)

Legal Deadline: None.

Abstract: On April 18, 1983, the Department of Energy (DOE) published a rule which established the Standard Contract for Disposal of Spent Nuclear Fuel and/or High-Level Radioactive Waste (standard disposal contract) to be used by the DOE in furnishing disposal services to the owners or generators of spent nuclear fuel and/or high-level radioactive waste (48 FR 16590). On December 6, 1985, the U.S. Court of Appeals for the District of Columbia Circuit ruled that the ongoing 1.0 mill per kilowatt hour (1M/KWH) fee in DOE's standard disposal contract should be based on net generation of electricity rather than gross generation of electricity as adopted in the final rule (Wisconsin Electric Power Co. et al. v. Hodel, Nos. 83-1066 and 84-8571). This rule would amend the standard disposal contract to be consistent with the court's ruling. This amendment is expected to reduce revenues from the ongoing fee up to 5%.

Timetable:

Action	Date	FR Cite
Final Action Effective	04/07/83	
NPRM	11/07/86	51 FR 40684
NPRM Comment Period End	12/08/86	51 FR 40684
Final Action	09/18/87	52 FR 35356

Small Entity: No

Government Levels Affected: Federal

Agency Contact: Alan Brownstein, Utility Contracts Manager, Department of Energy, Departmental and Others, Forrestal Building, GB-270, 1000 Independence Avenue, SW, Washington, DC 20585, 202 586-4973

RIN: 1901-AA11

DEPARTMENT OF ENERGY (DOE)
Economic Regulatory Administration (ERA)

Proposed Rule Stage

537. PROPOSED RULE ESTABLISHING NEW ADMINISTRATIVE PROCEDURES WITH RESPECT TO SHORT-TERM IMPORTS AND EXPORTS OF NATURAL GAS

Significance: Agency Priority

Legal Authority: 15 USC 717b; 42 USC 7101 et seq; EO 12009

CFR Citation: 10 CFR 590

Legal Deadline: None.

Abstract: The proposed rule would amend the administrative procedure regulations contained in 10 CFR 590, by establishing a new Subpart F to provide alternative, expedited procedures regarding applications to import and export natural gas on a short-term basis. The purpose of the proposed rule is to reduce the regulatory burden on parties wishing to import or export natural gas on a short-term or spot market basis by streamlining our licensing process, thus facilitating the operation of the market.

Timetable:

Action	Date	FR Cite
NPRM	00/00/00	

Small Entity: No

Agency Contact: Constance L. Buckley, Director, Natural Gas Division, Department of Energy, Economic Regulatory Administration, 1000 Independence Avenue, SW, Washington, DC 20585, 202 586-9482

RIN: 1903-AA07

DEPARTMENT OF ENERGY (DOE)
Management and Administration (MA)

Prerule Stage

538. PROPOSED RULE ON DOE CONTRACTOR DRUG FREE WORKPLACE POLICY

Significance: Agency Priority

Legal Authority: 42 USC 2011 et seq (Atomic Energy Act)

CFR Citation: Not yet determined

Legal Deadline: None.

Abstract: Will establish comprehensive drug abuse prevention policy and program at DOE-owned or -leased operations consistent with DOE responsibility to protect public health and safety and national security. Regulation will address drug testing requirements, educational and training programs, drug counseling and rehabilitation, confidentiality and protection of privacy of employees. Costs incurred will affect cost reimbursement type contracts for managing, operating, constructing, and servicing DOE facilities. Benefits will be in establishing reasonable level of consistency among contractor programs and resultant cost to the government and in reducing risk of unacceptable damage to security environment, health and safety of employees and the public.

Timetable:

Action	Date	FR Cite
ANPRM	00/00/00	
Comment Period End		
NPRM	00/00/00	

Small Entity: Not Applicable

Agency Contact: Juanita E. Smith, Director, Employee Relations, Office of Industrial Relations, Department of Energy, Management and Administration, 1000 Independence Avenue, SW, Washington, DC 20585, 202 586-9033

RIN: 1991-AA39

DEPARTMENT OF ENERGY (DOE)
Management and Administration (MA)

Proposed Rule Stage

539. DEPARTMENT OF ENERGY ACQUISITION REGULATION REVISIONS; PATENT POLICY

Legal Authority: 41 USC 401 et seq The Office of Federal Procurement Policy Act; 42 USC 7101 et seq The Department of Energy Organization Act; EO 12352 Procurement Reforms

CFR Citation: 48 CFR 927; 48 CFR 970

Legal Deadline: None.

Abstract: The Department of Energy Acquisition Regulation, promulgated March 29, 1984, at 49 FR 11922, supplements and implements the Federal Acquisition Regulation. A more recent Federal Acquisition Circular has been issued to establish a FAR Part 27 concerning Patents. It will be necessary to revise Part 927 of the DEAR to supplement and implement the FAR and to explain how DOE patent policy will differ due to our statutory requirements.

Timetable:

Action	Date	FR Cite
NPRM	06/00/88	
NPRM Comment Period End	08/00/88	
Final Action	11/00/88	
Final Action Effective	12/00/88	

Small Entity: No

Agency Contact: Ellen L. Feinsilber, Director, Procurement Policy Division, Department of Energy, Management and Administration, 1000 Independence Ave., SW, Washington, DC 20585, 202 586-8264

RIN: 1991-AA23

540. DEPARTMENT OF ENERGY PROPERTY MANAGEMENT REGULATION; OFFICIAL USE OF MOTOR VEHICLES

Legal Authority: 42 USC 7254

CFR Citation: 41 CFR 109

Legal Deadline: None.

Abstract: To update the Property Management Regulations regarding official use of motor vehicles. The rule would also make various other minor upgrading changes.

Timetable:

Action	Date	FR Cite
NPRM	06/30/88	
NPRM Comment Period End	07/31/88	
Final Action	11/30/88	
Final Action Effective	12/31/88	

Small Entity: No

Agency Contact: Robert Wilson, Supply Management Representative, Department of Energy, Management and Administration, 1000 Independence Ave., SW, Washington, DC 20585, 202 586-8260

RIN: 1991-AA28

541. DEPARTMENT OF ENERGY ACQUISITION REGULATION; MISCELLANEOUS CHANGES ON ACQUISITION OF PERSONAL PROPERTY

Legal Authority: 42 USC 7254

CFR Citation: 48 CFR 906; 48 CFR 970; 48 CFR 907; 48 CFR 944; 48 CFR 945; 48 CFR 951; 48 CFR 952

Legal Deadline: None.

Abstract: To provide additional policy guidance on the acquisition of personal property in the areas concerning acquisition plans, Government supply sources, consideration for subcontracts, Government property, and updating solicitation provisions and contract clauses.

Timetable:

Action	Date	FR Cite
NPRM	06/30/88	
NPRM Comment Period End	07/31/88	
Final Action	11/30/88	
Final Action Effective	12/31/88	

Small Entity: No

Agency Contact: Robert Wilson, Supply Management Representative, Department of Energy, Management and Administration, 1000 Independence Ave., SW, Washington, DC 20585, 202 586-8260

RIN: 1991-AA32

VOL 53 ISS 79 PT 1 APR 25 1988 UMI

DOE—MA

Proposed Rule Stage

542. DEPARTMENT OF ENERGY FINANCIAL ASSISTANCE RULES; MERIT REVIEW

Legal Authority: 42 USC 7254; 42 USC 7256; 31 USC 6301 et seq

CFR Citation: 10 CFR 600.3; 10 CFR 600.9; 10 CFR 600.16; 10 CFR 600.103; 10 CFR 600.106

Legal Deadline: None.

Abstract: This regulatory revision to the DOE Financial Assistance Rules would establish procedures for the merit review of applications for financial assistance.

Timetable:

Action	Date	FR Cite
NPRM	00/00/00	

Small Entity: No

Agency Contact: James J. Cavanagh, Director, Business and Financial Policy Division, Department of Energy, Management and Administration, 1000 Independence Avenue, SW, Washington, DC 20585, 202 586-8174

RIN: 1991-AA41

543. CONTRACTING FOR BASIC AND APPLIED RESEARCH

Legal Authority: 42 USC 7254 et seq

CFR Citation: 48 CFR 935

Legal Deadline: None.

Abstract: The purpose of this action is to amend the Acquisition Regulations (DEAR) to implement policies and procedures concerning the use of broad agency announcements, a form of competitive solicitation, as allowed by FAR 35.016.

Timetable:

Action	Date	FR Cite
NPRM	05/00/88	
NPRM Comment Period End	07/00/88	
Final Action	10/00/88	
Final Action Effective	11/00/88	

Small Entity: No

Agency Contact: Edward Simpson, Procurement Analyst, Department of Energy, Management and Administration, MA 421, 1000 Independence Avenue, SW, Washington, DC 20585, 202 586-8246

RIN: 1991-AA42

544. ● DEPARTMENT OF ENERGY ACQUISITION REGULATION; LEGISLATIVE LOBBYING

Legal Authority: PL 99-145, Sec 1534; PL 100-180, Sec 3131; PL 100-202, Sec 305(a)

CFR Citation: 48 CFR 970

Legal Deadline: Statutory, March 4, 1988.

Abstract: This action would implement recent statutory amendments to Section 1534(a)(2) of the DOD Authorization Act of 1986, by adding to the DEAR a contract clause applicable to DOE's management and operating contractors, providing that the cost of engaging in legislative liaison activities solely on their own behalf may not be charged to DOE contracts. However, the cost of providing information in response to a request from Congress shall continue to be allowable and reimbursable, as specified in the statutes.

Timetable:

Action	Date	FR Cite
NPRM	04/04/88	

Small Entity: No

Agency Contact: S. Mournighan, Director, Office of Policy, Procurement and Assistance Management Dir., Department of Energy, Management and Administration, 1000 Independence Avenue, SW, Washington, DC 20585, 202 586-8182

RIN: 1991-AA45

DEPARTMENT OF ENERGY (DOE)
Management and Administration (MA)

Final Rule Stage

545. DEPARTMENT OF ENERGY ACQUISITION REGULATION; MANAGEMENT AND OPERATING CONTRACTOR PURCHASING SYSTEMS

Legal Authority: 42 USC 2011 et seq; 42 USC 7154

CFR Citation: 48 CFR 970

Legal Deadline: None.

Abstract: This action would update and consolidate in one place virtually all provisions applicable to the subcontracting practices of DOE management and operating contractors. Elsewhere in the Agenda, there is also a rulemaking involving subcontractor access to the Board of Contract Appeals and another issue.

Timetable:

Action	Date	FR Cite
NPRM	08/18/87	
NPRM Comment Period End	10/01/87	
Final Action	05/00/88	
Final Action Effective	06/00/88	

Small Entity: No

Agency Contact: Robert M. Webb, Procurement Analyst, Department of Energy, Management and Administration, 1000 Independence Ave., SW, Washington, DC 20585, 202 586-8247

RIN: 1991-AA25

546. DEPARTMENT OF ENERGY FINANCIAL ASSISTANCE RULES; RESTRICTION OF ELIGIBILITY

Legal Authority: 42 USC 7254; 42 USC 7256; 31 USC 6301 et seq

CFR Citation: 10 CFR 600.6; 10 CFR 600.7; 10 CFR 600.14; 10 CFR 600.106

Legal Deadline: None.

Abstract: This regulatory revision of DOE Financial Assistance Rules (FAR) would establish more detailed documentation procedures and clarify the restricted eligibility requirements governing financial assistance awards on a non-competitive basis.

Timetable:

Action	Date	FR Cite
NPRM	09/17/87	52 FR 35111
NPRM Comment Period End	10/19/87	52 FR 35111

Action	Date	FR Cite
Final Action	05/00/88	

Small Entity: No

Additional Information: Related to 1991-AA21.

Agency Contact: James J. Cavanagh, Chief, Business & Financial Policy Branch, Department of Energy, Management and Administration, 1000 Independence Avenue, SW, Washington, DC 20585, 202 586-6173

RIN: 1991-AA35

547. DEPARTMENT OF ENERGY ACQUISITION REGULATION; USE OF CONTRACT CARRIERS BY COST REIMBURSABLE CONTRACTORS

Legal Authority: PL 95-91

CFR Citation: 48 CFR 952

Legal Deadline: None.

Abstract: Amend Procurement Regulations (DEAR) in order to implement GSA Bulletin FPMR A-90 and FPMR Temporary Regulation 30. Use of Government contractor airlines, hotels/motels and car rental agencies by cost reimbursable contractor employees.

Timetable:

Action	Date	FR Cite
NPRM	12/29/86	51 FR 46884
NPRM Comment Period End	01/28/87	51 FR 46884
Final Action Effective	05/31/88	
Begin Review	06/30/88	

Small Entity: No

Additional Information: DOE is awaiting action by the DAR Council and the CAA Council which published a similar proposed rule on 3/24/87. Publication of their final rule for the FAR will override the need for a final rule to be published for the DEAR.

Public Compliance Cost: Initial Cost: $0; Yearly Recurring Cost: $0

Affected Sectors: None

Government Levels Affected: Federal

Agency Contact: William Stevenson, Procurement Analyst, Department of Energy, Management and Administration, 1000 Independence Avenue, SW, Washington, DC 20585, 202 586-8193

RIN: 1991-AA37

548. DEBARMENT AND SUSPENSION (NON-PROCUREMENT)

Legal Authority: EO 12549

CFR Citation: 10 CFR 1035; 10 CFR 1036

Legal Deadline: None. OMB requests draft agency regulations be submitted by September 29, 1987.

Abstract: This regulation will implement EO 12549 and OMB Guidelines for nonprocurement debarment and suspension.

Timetable:

Action	Date	FR Cite
NPRM	12/24/87	52 FR 48693
NPRM Comment Period End	02/22/88	
Final Action	05/00/88	
Final Action Effective	06/00/88	

Small Entity: Undetermined

Government Levels Affected: Local, State, Federal

Agency Contact: Thomas E. Brown, Procurement Analyst, Department of Energy, Management and Administration, 202 586-9075

RIN: 1991-AA40

549. ● RESOLUTION OF DISPUTES BETWEEN SUBCONTRACTORS AND DOE MANAGEMENT AND OPERATING CONTRACTORS

Legal Authority: 42 USC 7254; 40 USC 486(c)

CFR Citation: 48 CFR 970

Legal Deadline: None.

Abstract: Establishes a system, by regulation, to allow subcontractors under DOE Management and Operating contracts access to the Energy Board of Contract Appeals in resolution of disputes with the contractor. Also clarifies DOE Contracting Officers lack authority to designate Management and Operating contractors as purchasing agents for DOE absent special authorization.

Timetable:

Action	Date	FR Cite
NPRM	01/16/86	
NPRM Comment Period End	03/02/88	
Final Action	04/30/88	
Final Action Effective	05/31/88	

Small Entity: No

Additional Information: See also 1991-AA25.

Agency Contact: Robert M. Webb, Procurement Analyst, Department of Energy, Management and Administration, 1000 Independence Avenue, SW, Washington, DC 20585, 202 586-8247

RIN: 1991-AA44

550. ● COLLECTION OF CLAIMS OWED THE UNITED STATES

Legal Authority: 31 USC 3701 to 3719; PL 97-365

CFR Citation: 10 CFR 1015

Legal Deadline: None.

Abstract: This rule establishes the overall regulations under which the Department of Energy will collect claims owed to the United States. These regulations implement the Federal Claims Collection Act (31 USC 3701-3719) as amended by the Debt Collection Act of 1982 (PL 97-365) and incorporate the Federal Claims Collections Standards (4 CFR 101-105) published jointly by the Department of Justice and the General Accounting Office. The preamble to the Federal Claims Collection Standards states that each Federal agency is required to develop its own implementing regulations based on and consistent with these Standards. Furthermore, the Debt Collection Act specifies that each agency must prescribe regulations on certain aspects of the debt collection process. We do not consider that there is any alternative to issuance of these regulations that would address this need.

Timetable:

Action	Date	FR Cite
ANPRM	11/09/87	52 FR 43168
ANPRM Comment Period End	12/09/87	52 FR 43168
Final Action	04/29/88	

Small Entity: No

Agency Contact: Helen O. Sherman, Deputy Director, Office of Financial Policy, Department of Energy, Management and Administration, 1000 Independence Avenue, SW, Washington, DC 20585, 202 586-4860

RIN: 1991-AA47

BEST COPY AVAILABLE

VOL 53 ISS 79 PT 1 AP 25 1988 UMI

DOE—MA **Final Rule Stage**

551. ● FREEDOM OF INFORMATION REGULATIONS: REVISIONS TO FEE SCHEDULES AND PROCEDURES

Legal Authority: PL 99-570, Sec 1803

CFR Citation: 10 CFR 1004

Legal Deadline: None.

Abstract: The Freedom of Information Reform Act (FOIRA) of 1986, PL 99-570, requires that each agency promulgate regulations to establish a fee schedule to process requests for information and to establish procedures and guidelines to determine when such fees should be waived or reduced. The DOE fee schedule and procedures conform to the guidelines issued by the Office of Management and Budget (OMB) for agencies to follow in implementing these regulations. The rule revises existing DOE fee schedules and procedures in accordance with the Reform Act and makes other technical and editorial changes to the DOE regulations that implement the FOIA.

Timetable:

Action	Date	FR Cite
NPRM	06/17/87	52 FR 23156
NPRM Comment Period End	07/17/87	52 FR 23156
Final Action	00/00/00	

Small Entity: No

Agency Contact: John H. Carter, Chief, FOI and Privacy Acts Branch, Department of Energy, Management and Administration, 1000 Independence Avenue, SW, Washington, DC 20585, 202 586-5955

RIN: 1991-AA48

DEPARTMENT OF ENERGY (DOE)
Management and Administration (MA)

Completed Actions

552. FINANCIAL ASSISTANCE REGULATIONS; COOPERATIVE AGREEMENTS

Legal Authority: 42 USC 7254; 42 USC 7256; 31 USC 6301 et seq

CFR Citation: 10 CFR 600C

Legal Deadline: None.

Abstract: This revision would conform DOE rules on cooperative agreement award and administration with DOE and government-wide financial assistance policy (the latter contained in OMB circulars A-102 and A-110) and would reflect DOE experience under the existing rule.

Timetable:

Action	Date	FR Cite
NPRM	08/18/87	52 FR 31016
NPRM Comment Period End	10/19/87	
Final Action	02/22/88	53 FR 5260
Final Action Effective	02/22/88	53 FR 5260

Small Entity: No

Agency Contact: Cherlyn Seckinger, Business and Financial Policy Branch, Department of Energy, Management and Administration, MA-422, 1000 Independence Avenue, SW, Washington, DC 20585, 202 586-9737

RIN: 1991-AA03

553. DEPARTMENT OF ENERGY ACQUISITION REGULATION; MISCELLANEOUS CHANGES TO CONFORM TO FEDERAL ACQUISITION REGULATION CHANGES AND REVISED INTERNAL PROCEDURES

Legal Authority: 42 USC 7254 Department of Energy Organization Act

CFR Citation: 48 CFR 902; 48 CFR 904; 48 CFR 913; 48 CFR 915; 48 CFR 917; 48 CFR 919; 48 CFR 925; 48 CFR 952; 48 CFR 970

Legal Deadline: None.

Abstract: This action is for the purpose of updating the Acquisition Regulation as a result of changes in the Federal Acquisition Regulation and internal procedures. It discontinues the use of DOE Small Purchase Forms as GSA has issued forms for that purpose. It increases the threshold for formal source evaluation boards from $5 to $10 million. It adds a new solicitation provision entitled "Buy America Act - Construction Materials." It also provides new guidance on Small Business Subcontract Plans Under Management Contracts.

Timetable:

Action	Date	FR Cite
NPRM	08/26/85	50 FR 34656
NPRM Comment Period End	11/27/86	50 FR 43589
Final Action	10/16/87	52 FR 38419
Final Action Effective	11/16/87	

Small Entity: No

Agency Contact: Ellen L. Feinsilber, Director, Procurement Policy Division, Office of Policy, Department of Energy, Management and Administration, 1000 Independence Ave., SW, Washington, DC 20585, 202 586-8264

RIN: 1991-AA33

554. ● 10 CFR 600, SUBPART E UNIFORM ADMINISTRATIVE REQUIREMENTS FOR GRANTS AND COOPERATIVE AGREEMENTS TO STATE AND LOCAL GOVERNMENTS

Significance: Regulatory Program

Legal Authority: PL 95-91, Sec 644; PL 95-91, Sec 646; PL 97-258

CFR Citation: 10 CFR 600, Subpart E

Legal Deadline: None. Executive Memorandum Deadline March 11, 1988

Abstract: Provides Government-wide Administrative Requirements for Financial Assistance to State and Local Governments.

Timetable:

Action	Date	FR Cite
NPRM	06/09/87	52 FR 21820
NPRM Comment Period End	08/08/87	
Final Action	03/11/88	53 FR 8044
Final Action Effective	10/01/88	

Small Entity: Not Applicable

Government Levels Affected: Local, State

Agency Contact: Cherlyn Seckinger, Procurement Analyst, Department of Energy, Management and Administration, Procurement and

Assistance Management Dir., 1000 Independence Avenue, SW, Washington, DC 20585, 202 586-9737

RIN: 1991-AA43

555. ● UNIFORM RELOCATION ASSISTANCE AND REAL PROPERTY ACQUISITION REGULATION FOR FEDERAL AND FEDERALLY ASSISTED PROGRAMS

Legal Authority: 42 USC 4601

CFR Citation: 10 CFR 1039

Legal Deadline: Statutory, April 2, 1989.

Abstract: Incorporates certain statutory amendments to the Uniform Relocation Assistance and Real Property Acquisition Policies Act of 1970 (The Uniform Act) occasioned by passage of Title IV of the Surface Transportation and Uniform Relocation Assistance Act of 1987 (1987 Amendments), Pub. L. 100-17, 101 Stat. 246. Under the 1987 Amendment, the Department of Transportation is the designated lead agency in coordination with the other Federal agencies, to issue rules, establish procedures, and make interpretations to implement provisions of the Uniform Act (See United Agenda, DOT, RIN: 2125-AB85). This regulatory action by DOE achieves its implementation of the common rule.

Timetable:

Action	Date	FR Cite
Final Action	12/17/87	52 FR 48017
Final Action Effective	04/02/89	52 FR 48017

Small Entity: Yes

Additional Information: In the period after 01/19/88 and until 04/02/89, certain grandfathered actions will be governed by the previous DOE rules.

Government Levels Affected: Local, State, Federal

Agency Contact: Donald G. Trost, MA-222, Chief, Real Property Branch, Department of Energy, Management and Administration, United States Department of Energy, 1000 Independence Ave., SW, Washington, DC 20585, 202 586-1191

RIN: 1991-AA46

DEPARTMENT OF ENERGY (DOE)
Office of General Counsel (OGC)

Proposed Rule Stage

556. AMENDMENTS TO DEPARTMENT OF ENERGY CONDUCT OF EMPLOYEES REGULATIONS

Legal Authority: 18 USC 201 to 209; 42 USC 7211 to 7218; EO 11222

CFR Citation: 10 CFR 1010

Legal Deadline: None.

Abstract: The regulations need to be revised to reflect the provisions and requirements of the Ethics in Government Act. In addition, it is anticipated that certain sections of the regulations will be clarified and/or revised to reflect current Office of General Counsel policy and interpretations.

Timetable:

Action	Date	FR Cite
NPRM	12/00/89	

Small Entity: No

Additional Information: As part of the revision of the Department of Energy Conduct of Employees Regulations, we have proposed to amend Appendix I of the Regulations, regarding employee financial disclosure requirements. 52 FR 17765 (May 12, 1987). We expect final action on this amendment of the Regulations to be completed by April 1988.

Agency Contact: Susan Fonner, Deputy AGC for General Law, Department of Energy, Office of General Counsel, 1000 Independence Avenue, SW, Washington, DC 20585, 202 586-1522

RIN: 1990-AA00

557. PATENT WAIVER REGULATION

Legal Authority: 42 USC 2182; 42 USC 5908; PL 99-661

CFR Citation: 10 CFR 784; 41 CFR 9-9.109-6

Legal Deadline: None.

Abstract: The regulation provides procedures and standards for obtaining a waiver of the Government's rights in inventions made under DOE research and development contracts with entities that are not small businesses or nonprofit institutions, and terms and conditions of such waivers. Currently, DOE waiver policy is provided in DOE Procurement Regulations (41 CFR 9-9.109-6). The proposed regulation places DOE patent waiver policy in a separate regulation, and also provides updates, revisions and clarifications to waiver policy as contained in 41 CFR 9-9.109-6.

Timetable:

Action	Date	FR Cite
NPRM	04/00/88	
NPRM Comment Period End	06/00/88	

Small Entity: Undetermined

Agency Contact: Richard E. Constant, Assistant General Counsel for Patents, Department of Energy, Office of General Counsel, 1000 Independence Avenue, SW, Washington, DC 20585, 202 586-3802

RIN: 1990-AA02

558. FOREIGN GIFTS AND DECORATIONS

Legal Authority: 5 USC 7342; 41 CFR 101-49.001-5

CFR Citation: 10 CFR 1050

Legal Deadline: None.

Abstract: The regulations need to be amended to reflect the increase in the dollar amount of "minimal value." (Whether a gift is of minimal value is a factor as to whether the regulations apply.) The dollar amount of minimal value is determined by the General Services Administration, by GSA regulation. Accordingly, the DOE regulations will reference the GSA regulation.

Timetable:

Action	Date	FR Cite
NPRM	04/00/88	

Small Entity: No

Agency Contact: Susan Fonner, Deputy AGC for General Law, Department of Energy, Office of General Counsel, 1000

VOL 53 ISS 79 PT 1 AP 25 1988 UMI

DOE—OGC **Proposed Rule Stage**

Independence Avenue, SW, Washington, DC 20585, 202 586-1522

RIN: 1990-AA04

559. CLASS PATENT WAIVERS

Legal Authority: 42 USC 2182; 42 USC 5908

CFR Citation: 10 CFR 785

Legal Deadline: None.

Abstract: The proposed regulation would provide for certain class waivers, serving to streamline and simplify procedures for DOE contractors to seek rights in inventions made under DOE research and development contracts.

Timetable:

Action	Date	FR Cite
NPRM	04/00/88	
NPRM Comment Period End	06/00/88	

Small Entity: No

Agency Contact: Richard Constant, Assistant General Counsel for Patents, Department of Energy, Office of General Counsel, 1000 Independence Avenue, SW, Washington, DC 20585, 202 586-2802

RIN: 1990-AA07

DEPARTMENT OF ENERGY (DOE)
Office of General Counsel (OGC) **Final Rule Stage**

560. COOPERATION WITH THE INSPECTOR GENERAL

Legal Authority: 42 USC 7138; 42 USC 7211 to 7218; 42 USC 7254; 42 USC 6392; 42 USC 5816a; 5 USC 301; 5 USC 303(a); 5 USC (app.4) 207(a); 18 USC 201 to 209; EO 11222, as amended by EO 12565

CFR Citation: 10 CFR 1010.217, (new)

Legal Deadline: None.

Abstract: This regulation will codify existing Department of Energy policy and clarify the authority provided by existing statutes and Federal case law with respect to the obligations of Department employees to cooperate with the Office of Inspector General in official investigations.

Timetable:

Action	Date	FR Cite
NPRM	10/19/87	52 FR 38770
NPRM Comment Period End	11/18/87	52 FR 38770
Final Action	06/00/88	

Small Entity: No

Agency Contact: Susan Fonner, Deputy AGC for General Law, Office of General Counsel, GC-43, Department of Energy, Office of General Counsel, 1000 Independence Avenue, SW, Washington, DC 20585, 202 586-1522

RIN: 1990-AA06

561. ● IMPLEMENTATION OF THE PROGRAM FRAUD CIVIL REMEDIES ACT OF 1986

Legal Authority: 31 USC 3801 to 3812

CFR Citation: 10 CFR 1013

Legal Deadline: Statutory, May 1, 1987.

Abstract: These regulations establish administrative procedures for imposing the statutorily authorized civil penalties and assessments against any person who makes, submits, or presents a false, fictitious, or fraudulent claim or written statement to the Department of Energy. No other alternatives are being considered, since these are Congressional mandated regulations.

Timetable:

Action	Date	FR Cite
NPRM	06/01/87	52 FR 20403
NPRM Comment Period End	07/31/87	52 FR 20403
Final Action	05/00/88	
Final Action Effective	05/00/88	

Small Entity: No

Agency Contact: Jack M. Kress, Deputy General Counsel for Legal Services, Department of Energy, Office of General Counsel, 1000 Independence Ave., SW, Washington, DC 20585, 202 586-5246

RIN: 1990-AA08

[FR Doc. 88-5795 Filed 04-22-88; 8:45 am]

BILLING CODE 6450-01-T

federal register

Monday
April 25, 1988

Part VIII

Department of Health and Human Services

Semiannual Regulatory Agenda

DEPARTMENT OF HEALTH AND HUMAN SERVICES (HHS)

DEPARTMENT OF HEALTH AND HUMAN SERVICES

Office of the Secretary

20 CFR Ch. III

21 CFR Ch. I

42 CFR Chs. I-V

45 CFR Subtitle A, Chs. II, III, and XIII

Unified Agenda of Regulations

AGENCY: Department of Health and Human Services.

ACTION: Publication of unified agenda of regulations.

SUMMARY: The President's February 17, 1981, Executive Order (12291) and the Regulatory Flexibility Act of 1980 require the Department to publish an agenda of significant regulations being developed and an indication of those regulatory actions that are being analyzed for their effect on small businesses. The Department published its last agenda on October 26, 1987.

FOR FURTHER INFORMATION CONTACT: For further inquiries or comments related to specific regulations listed in the agenda, the public is encouraged to contact the appropriate responsible individual. Questions or comments on the overall agenda should be sent to: Glenn Kamber, Deputy Executive Secretary, Office of the Secretary, Department of Health and Human Services, 200 Independence Avenue, SW., Washington, DC 20201, Telephone: (202) 245-7699.

Aletha R. Owens,

Executive Secretary to the Department.

Office of the Secretary—Prerule Stage

Sequence Number	Title	Regulation Identifier Number
562	Privacy Act Regulation	0991-AA11

Office of the Secretary—Proposed Rule Stage

Sequence Number	Title	Regulation Identifier Number
563	Principles for Determining Costs and Cost Allocation Procedures Applicable to Grants, Contracts, and Other Agreements for Work Performed by Hospitals	0991-AA12
564	Enforcement of Nondiscrimination on the Basis of Handicap in the Department of Health and Human Services	0991-AA17
565	Civil Money Penalties for Failure to Report Medical Malpractice Payments and for Breaching the Confidentiality of Information	0991-AA40
566	Civil Money Penalties for Health Maintenance Organizations and Competitive Medical Plans	0991-AA44
567	Prohibition on Use of Physician Incentive Plans	0991-AA45
568	New Civil Money Penalties and Exclusions Authorities Resulting from OBRA 1986 and OBRA 1987	0991-AA46
569	Amendments to OIG Exclusion and CMP Authorities Resulting from PL 100-93	0991-AA47
570	OIG Anti-Kickback Provisions	0991-AA49
571	PRO Rural Practitioners Amendments	0991-AA51

Office of the Secretary—Final Rule Stage

Sequence Number	Title	Regulation Identifier Number
572	Nondiscrimination Requirements (Including on the Basis of Sex or Religion) Applicable to Block Grants and Standard Nondiscrimination Procedures Applicable to Certain Other Programs	0991-AA02
573	Freedom of Information Act Regulation	0991-AA07
574	Equal Opportunity in Employment: Public Broadcasting, Public Radio and Public Telecommunications Entities Receiving Federal Funds from the Corporation for Public Broadcasting	0991-AA22
575	Audits of Non-governmental Grantees	0991-AA29
576	Automatic Data Processing Equipment and Services; Conditions for Federal Financial Participation II	0991-AA34
577	Civil Money Penalties and Exclusions for Assistants at Cataract Surgery	0991-AA37
578	Block Grant Programs	0991-AA38
579	Program Fraud Civil Remedies	0991-AA41
580	Targeting of, and Tolerances for, Income and Eligibility Verification System Data	0991-AA42
581	Governmentwide Debarment and Suspension (Nonprocurement)	0991-AA43
582	Program Fraud Civil Remedies	0991-AA50

VOL 53 ISS 79 PT 1 APR 25 1988 UMI

HHS

Office of the Secretary—Completed Actions

Sequence Number	Title	Regulation Identifier Number
583	Revision to OIG's Sanction Authorities	0991-AA21
584	Block Grant Programs	0991-AA25
585	Administration of Grants - Implementation of OMB Circular A-102	0991-AA27
586	Administration of Grants-Single Audit Act of 1984	0991-AA30
587	Withholding of Medicaid Payments for Fraud or Willful Misrepresentation	0991-AA36
588	PPS FRAUD AND ABUSE SANCTION AND PRO REVISIONS	0991-AA39

Departmental Management—Final Rule Stage

Sequence Number	Title	Regulation Identifier Number
589	Implementation of the Equal Access to Justice Act in Agency Proceedings	0990-AA02
590	Testimony by Employees and the Production of Documents in Proceedings Where the United States is not a Party	0990-AA03

Departmental Management—Completed Actions

Sequence Number	Title	Regulation Identifier Number
591	Testimony by Employees and the Production of Documents in Proceedings Where the United States is not a Party	0990-AA04

Office of Human Development Services—Proposed Rule Stage

Sequence Number	Title	Regulation Identifier Number
592	Foster Care, Adoption Assistance, and Child Welfare Services	0980-AA08
593	Runaway and Homeless Youth Program	0980-AA11
594	Head Start Criteria for Selection of New Grantees	0980-AA17
595	Head Start Staff and Program Options Requirements	0980-AA18
596	Head Start Appeals Process	0980-AA20
597	Head Start Performance Standards for Services to Handicapped Children	0980-AA21
598	Nonrecurring Costs of Adoption	0980-AA24
599	Head Start Recruitment Selection and Enrollment of Children	0980-AA27
600	Limits on Costs of Development and Administration	0980-AA32
601	Head Start Performance Standards for Infants and Toddlers	0980-AA33
602	Grants for State and Community Programs on Aging; Grants to Indian Tribes; and Grants to Organizations Serving Older Hawaiians for Supportive and Nutrition Services	0980-AA34
603	Adoption and Foster Care Information	0980-AA35
604	Developmental Disabilities Program	0980-AA36
605	Native Hawaiian Loan Fund Demonstration Project	0980-AA37

Office of Human Development Services—Final Rule Stage

Sequence Number	Title	Regulation Identifier Number
606	Head Start Personnel Policies	0980-AA10

HHS

Office of Human Development Services—Completed Actions

Sequence Number	Title	Regulation Identifier Number
607	Developmental Disabilities Program	0980-AA12
608	Consolidation of Grants to the Insular Areas – Final Rule with Comment Period	0980-AA22

Social Security Administration—Proposed Rule Stage

Sequence Number	Title	Regulation Identifier Number
609	Old-Age, Survivors, and Disability Insurance Program; Treatment of OASDI Lump Sum and Monthly Payments in the Aid to Families with Dependent Children Program	0960-AA90
610	Old-Age, Survivors, and Disability Insurance Program; Revised Medical Criteria for Determination of Disability; Cardiovascular System	0960-AA99
611	Old-Age, Survivors, and Disability Insurance Program; Revised Medical Criteria for Determination of Disability; Respiratory System	0960-AB00
612	Old-Age, Survivors, and Disability Insurance Program; Revised Medical Criteria for Determination of Disability; Musculoskeletal System	0960-AB01
613	Old-Age, Survivors, and Disability Insurance and Supplemental Security Income Programs; Adjustments in SSI Benefits on Account of Retroactive Benefits Under Title II	0960-AB36
614	Supplemental Security Income Program; Limitation on Recoupment Rate in Case of Overpayment	0960-AB40
615	Old-Age, Survivors, Disability Insurance and Supplemental Security Income Programs: Evaluation of Symptoms, Including Pain	0960-AB41
616	Old-Age, Survivors, and Disability Insurance and Supplemental Security Income Programs; Evaluation Guides for Determining Substantial Gainful Activity (SGA)	0960-AB73
617	OASDI & SSI Programs; Definition of Overpayment and Liability for Repayment of an Overpayment	0960-AB78
618	Supplemental Security Income Program; Treatment of Property Held in Trust or Other Similar Legal Devices When the Property is Available for a Beneficiary's Support and Maintenance	0960-AB79
619	Old-Age, Survivors and Disability Insurance; Black Lung; and Supplemental Security Income Programs; and Organization and Procedures; Application of Circuit Court Law	0960-AB85
620	Supplemental Security Income Program; Exclusions from Income and Resources of Indian Judgement Funds and Per Capita Distributions	0960-AB86
621	Old-Age, Survivors, and Disability Insurance Program; Reduction Because of Entitlement to Other Benefits	0960-AB87
622	Old-Age, Survivors, and Disability Insurance Program; Determining Disability and Blindness, Medical-Vocational Guidelines, Illiteracy and Inability to Communicate in English	0960-AB94
623	Old-Age, Survivors, and Disability Insurance Program; Revised Medical Criteria for Determination of Disability; Mental Disorders-Childhood	0960-AB96
624	Old-Age, Survivors, and Disability Insurance Program; Medical Evaluation Criteria for Acquired Immune Deficiency Syndrome (AIDS)	0960-AC06
625	Old-Age Survivors and Disability Insurance and Supplemental Security Income Programs; Appeals Council Review Authority	0960-AC15
626	Supplemental Security Income Program; Employment Opportunities for the Disabled	0960-AC22
627	Supplemental Security Income Program; Permanent Residence in the United States Under Color of Law - Additional Category	0960-AC26
628	Old-Age, Survivors, and Disability Insurance Program; Wages-- Deferred Compensation	0960-AC27
629	Supplemental Security Income Program; Payment of Benefits Due Deceased Recipients	0960-AC28
630	Old-Age, Survivors, and Disability Insurance and Supplemental Security Income Programs; Consideration of Vocational Factors	0960-AC31
631	Organization and Procedures, and OASDI Programs; Evidence Required for Original or Duplicate Social Security Number Card	0960-AC32
632	Organization and Procedures, and Old-Age, Survivors, and Disability Insurance Programs; Social Security Number Cards for Aliens	0960-AC34
633	Old-Age Survivors and Disability Insurance and Supplemental Security Income Programs; Past Work Experience and Adjustment to Other Work	0960-AC39
634	Old-Age Survivors and Disability Insurance and Supplemental Security Income Programs; Cancelled Consultative Examinations	0960-AC40
635	Old-Age Survivors and Disability Insurance and Supplemental Security Income Programs; Determining Disability and Blindness; Fee Limitation Policy for Purchase of Laboratory Tests	0960-AC41

VOL 53 ISS 79 PT 1 AP 25 1988 UMI

HHS

Social Security Administration—Final Rule Stage

Sequence Number	Title	Regulation Identifier Number
636	Old-Age, Survivors, and Disability Insurance Program; Coverage of Employees of State and Local Governments	0960-AA13
637	Supplemental Security Income Program; Reductions, Suspensions and Terminations	0960-AA22
638	Old-Age, Survivors, and Disability Insurance Program; Provision for Inferring a Person Is Dead	0960-AA54
639	Supplemental Security Income Program; Reopening and Revising Supplemental Security Income Determinations and Decisions Within Four Years of the Notice of the Initial Determination	0960-AA59
640	Old-Age, Survivors, and Disability Insurance Program; Coverage of Certain Federal Employees; Coverage of Earnings of Federal Judges	0960-AA69
641	Old Age Survivors Disability Insurance and Supplemental Security Income Programs; Standards for Consultative Examinations; Existing Medical Evidence	0960-AB22
642	Supplemental Security Income Programs; Assignment of Rights to Third-Party Medical Payments to State	0960-AB28
643	Supplemental Security Income Program; How We Count Unearned Income--Funds Used to Pay Indebtedness	0960-AB29
644	Old-Age, Survivors, and Disability Insurance and Supplemental Security Income Programs; Continued Payment of Benefits During Appeal	0960-AB30
645	Supplemental Security Income Program; Treatment of Overpayments When Recipient's Countable Assets Exceed Limits in Certain Cases	0960-AB32
646	Old Age Survivors Disability Insurance and Supplemental Security Income Programs; Determinations of Disability-Compliance, and Other Changes	0960-AB36
647	Old Age Survivors Disability Insurance and Supplemental Security Income Programs; Payment of Costs of Rehabilitation Services	0960-AB37
648	Old Age, Survivors, Disability Insurance and Supplemental Security Income Programs; Determining Disability and Blindness; Multiple Impairments	0960-AB39
649	Supplemental Security Income Program; Spousal Deeming Computation Involving State Supplementation	0960-AB95
650	Old-Age, Survivors, and Disability Insurance and Supplemental Security Income Programs; Decisions by Administrative Law Judges in Cases Remanded by Courts	0960-AC07
651	Supplemental Security Income Program; Prohibition on Direct Payment of Fees to Representatives	0960-AC08
652	Supplemental Security Income Program; Define Out of Resources for One Month Certain Cash Payments for Medical/Social Services	0960-AC11
653	Supplemental Security Income Program: Federal Administration of Optional State Supplementation	0960-AC13
654	Old-Age, Survivors, and Disability Insurance and Supplemental Security Income Programs; Against Equity and Good Conscience: Defined	0960-AC33
655	Old-Age, Survivors, and Disability Insurance Program; Addition of Down Syndrome to the Listing of Impairments	0960-AC35

Social Security Administration—Completed Actions

Sequence Number	Title	Regulation Identifier Number
656	Supplemental Security Income Program; Mandatory Pass Through Under State Supplementation Provisions	0960-AA05
657	Old-Age, Survivors, and Disability Insurance, Supplemental Security Income, and Black Lung Programs; Representation of Claimants	0960-AA64
658	Old-Age, Survivors, and Disability Insurance; Effect of Pension from Noncovered Employment	0960-AA65
659	Supplemental Security Income Program; Resource Limits for Conditional SSI Payments	0960-AA75
660	Supplemental Security Income Program; Presumptive Disability and Presumptive Blindness; Categories of Impairments-AIDS	0960-AA79
661	Old Age Survivors Disability Insurance and Supplemental Security Income Programs; Qualifications of Medical Professionals Evaluating Mental Impairments	0960-AB31
662	Disclosure of Personal Information to Law Enforcement Agencies and Courts (Prerulemaking Activity)	0960-AB66
663	Old-Age, Survivors, and Disability Insurance and Supplemental Security Income Programs; Use of Work Evaluations to Evaluate Individuals with Mental Impairments	0960-AB92
664	Old-Age, Survivors, and Disability Insurance, Black Lung, and Supplemental Security Income Programs; Appointing ALJ's to Hear and Decide Cases	0960-AB97
665	Old-Age, Survivors, and Disability Insurance and Supplemental Security Income Programs; Application of Dependency Test to Adopted Great-Grandchildren; Demonstration Projects	0960-AC23

Public Health Service—Office of Assistant Secretary for Health (OASH)—Completed Actions

Sequence Number	Title	Regulation Identifier Number
666	Statutory prohibition on use of appropriated funds in programs where abortion is a method of family planning	0905-AC64

Public Health Service—Centers for Disease Control (CDC)—Final Rule Stage

Sequence Number	Title	Regulation Identifier Number
667	Project Grants for Health Programs for Refugees	0905-AB43
668	NIOSH Revision of Tests and Requirements of Certification of Permissibility of Respiratory Protective Devices Used in Mines and Mining	0905-AB58

Public Health Service—Food and Drug Administration (FDA)—Prerule Stage

Sequence Number	Title	Regulation Identifier Number
669	Drug Exports	0905-AC44

Public Health Service—Food and Drug Administration (FDA)—Proposed Rule Stage

Sequence Number	Title	Regulation Identifier Number
670	Over-the-Counter (OTC) Drug Review	0905-AA06
671	Current Good Manufacturing Practice for Finished Pharmaceuticals; Retrospective Review	0905-AA73
672	Current Good Manufacturing Practice (CGMP) for Blood and Blood Components; Retrospective Review	0905-AA75
673	New Animal Drug Approval Process	0905-AA96
674	Policies Concerning Uses of Sulfiting Agents	0905-AB52
675	Requirements for Adverse Experience Reporting for Licensed Biological Products	0905-AB53
676	Proposed Rule to Implement the Orphan Drug Amendments to the Federal Food, Drug, and Cosmetic Act	0905-AB55
677	Implementation of Title I of the "Drug Price Competition and Patent Term Restoration Act of 1984" (Title I)	0905-AB63
678	Abbreviated New Animal Drug Applications for Post-1962 Animal Drugs	0905-AB72
679	Infant Formula Act	0905-AC46
680	Protection of Human Subjects; Informed Consent; Standards for Institutional Review Boards for Clinical Investigations	0905-AC52
681	Menstrual Tampons; Proposed User Labeling	0905-AC58
682	Grants for Faculty Training Projects on Geriatric Medicine and Dentistry	0905-AC71

Public Health Service—Food and Drug Administration (FDA)—Final Rule Stage

Sequence Number	Title	Regulation Identifier Number
683	Availability of Bulk New Animal Drug Substances for Use By Licensed Veterinarians	0905-AB01
684	Proposed User Charge; New Drug Applications, Abbreviated New Drug Applications, New Device Applications, and Antibiotic Applications Review	0905-AB56
685	Provisionally Listed Color Additives	0905-AB60
686	Patent Term Restoration for Certain Regulated Products (Title II of "Drug Price Competition and Patent Term Restoration Act of 1984")	0905-AB65
687	Food Labeling Information Regarding Good Nutrition and Health	0905-AB67
688	Food Labeling: Definitions of Cholesterol Free, Low Cholesterol, and Reduced Cholesterol	0905-AB68
689	Methylene Chloride	0905-AC00
690	Common or Usual Name for Diluted Fruit or Vegetable Juice Beverages Other than Diluted Orange Juice Beverages	0905-AC48

VOL 53 ISS 79 PT 1 AP 25 1988 UMI

HHS

Public Health Service—Food and Drug Administration (FDA)—Final Rule Stage—Continued

Sequence Number	Title	Regulation Identifier Number
691	Tamper-Resistant Packaging Requirements for Over-the-Counter (OTC) Drugs	0905-AC70

Public Health Service—Food and Drug Administration (FDA)—Completed Actions

Sequence Number	Title	Regulation Identifier Number
692	Good Laboratory Practice for Nonclinical Laboratory Studies	0905-AA84
693	Animal Drug Safety Policy	0905-AB04
694	General Biological Products Standards; Additional Standards for Human Blood and Blood Products; Test for Antibody to Human Immunodeficiency Virus (HIV)	0905-AB62

Public Health Service—Health Resources and Services Administration (HRSA)—Proposed Rule Stage

Sequence Number	Title	Regulation Identifier Number
695	Grants for Residency Training and Faculty Development in General Internal Medicine and/or General Pediatrics	0905-AB50
696	Health Education Assistance Loan (HEAL) Program: Implementation of Pub. L. 99-129	0905-AC28
697	Grants for Nurse Practitioner and Nurse Midwifery Traineeship Programs	0905-AC30
698	Grants for Health Professions Projects in Geriatrics	0905-AC33
699	Post-Baccalaureate Faculty Fellowship Program	0905-AC34
700	Grants for Community Health Services Criteria and Procedure for Determining Medically Underserved Populations (MUP)	0905-AC35
701	Implementation of Health Care Quality Improvement Act of 1986 (Title IV, Public Law 99-660)	0905-AC51
702	National Health Service Corps Loan Repayment Program And Special Repayment Provisions Provisions Program	0905-AC65
703	Area Health Education Center (AHEC) Program	0905-AC67
704	Designation of Mental Health Manpower Shortage Areas	0905-AC68
705	Health Education Assistance Loan (HEAL) Program	0905-AC69

Public Health Service—Health Resources and Services Administration (HRSA)—Final Rule Stage

Sequence Number	Title	Regulation Identifier Number
706	Grants for Nurse Anesthetist Traineeships	0905-AB33
707	Health Professions Student Loan (HPSL) Program: Deferment Revisions	0905-AC06
708	Health Education Assistance Loan (HEAL) Program: Deferment Revisions	0905-AC07
709	Nursing Special Project Grants	0905-AC18
710	Area Health Education Centers (AHEC)	0905-AC22
711	Nursing Student Loan (NSL) Program: Implementation of the Law (Pub. L. 99-92)	0905-AC31
712	Health Professions Student Loan (HPSL) Program: Implementation of the Law (Pub. L. 99-129)	0905-AC32
713	Health Manpower Shortage Area Designation Criteria	0905-AC50
714	Grants For Construction of Teaching Facilities, Educational Improvements, Scholarships, and Student Loans	0905-AC66

Public Health Service—Health Resources and Services Administration (HRSA)—Completed Actions

Sequence Number	Title	Regulation Identifier Number
715	Indian Health Service, 42 CFR Part 36 Subpart I, Contracts Under the Indian Self-Determination Act: Amendments	0905-AB31
716	Reasonable Volume of Uncompensated Services to Persons Unable to Pay (Hill-Burton)	0905-AB35
717	General Review and Revision of Public Law 93-638 Program and Contracting Regulations	0905-AB98

HHS

Public Health Service—Health Resources and Services Administration (HRSA)—Completed Actions—Continued

Sequence Number	Title	Regulation Identifier Number
718	Changes in Public Law 93-638. Regulations to Revise the Declination Appeals Process and Clarify its Scope	0905-AB99

Public Health Service—National Institutes of Health (NIH)—Proposed Rule Stage

Sequence Number	Title	Regulation Identifier Number
719	Misconduct in Science	0905-AB91
720	Changes in NIH Program Regulations due to P.L. 99-158,P.L. 99-499 and Title X of P.L. 99-660	0905-AC02
721	National Institutes of Health Center Grants 42 CFR Part 52a	0905-AC27

Public Health Service—National Institutes of Health (NIH)—Final Rule Stage

Sequence Number	Title	Regulation Identifier Number
722	National Library of Medicine Programs. Revision of General Rules for the National Library of Medicine and National Library of Medicine Grants	0905-AA66

Health Care Financing Administration—Prerule Stage

Sequence Number	Title	Regulation Identifier Number
723	Discontinuation of Prevailing Charge Differentials for Specialists	0938-AD26

Health Care Financing Administration—Proposed Rule Stage

Sequence Number	Title	Regulation Identifier Number
724	Amending Cost Reports and Reopening Intermediary Payment Determinations and Administrative Review Decisions	0938-AA33
725	Medicaid Eligibility	0938-AA58
726	MMIS: Definition of "Mechanized Claims Processing and Information Retrieval System"	0938-AA63
727	Deduction of Incurred Medical Expenses (Spenddown)	0938-AB07
728	Payment for Clinical Diagnostic Laboratory Services	0938-AB50
729	Physician Certification and Plan of Care Requirements and Inspection of Care Reviews	0938-AB55
730	Medicare: Health Maintenance Organizations and Competitive Medical Plans: Coordinated Open Enrollment	0938-AB57
731	Payment for the Services of Physicians Furnished in Teaching Settings and Other Providers	0938-AB61
732	Review of Current Rules Affecting Clinical Laboratories	0938-AB96
733	Medicare Secondary Payor and Medicare Recovery Against Third Parties	0938-AC05
734	Changes in Payment Policy for Direct Graduate Medical Education Costs	0938-AC27
735	Effect of Appeals on Hospital-Specific Portion of the Prospective Payment Rate	0938-AC40
736	Use of the HCFA Hospital Wage Index for Determining Payment to Hospices	0938-AC49
737	Hospice/Case Management	0938-AC52
738	Home and Community-Based Services and Respiratory Care for Ventilator-Dependent Individuals	0938-AC55
739	Billing and Verification Add-On Relating to Home Health Agencies Cost Per Visit Limits for Cost Reporting Periods Beginning July 1, 1986 and July 1, 1987	0938-AC56
740	Participation in CHAMPUS and CHAMPVA, Hospital Admissions for Veterans, Discharge Rights Notice, and Hospital Responsibility for Emergency Care	0938-AC58
741	Payment for Kidneys Sent to Foreign Countries or Transplanted in Non-Medicare Beneficiaries	0938-AC59
742	Medicare Beneficiary Appeals	0938-AC81
743	Medicaid Eligibility for Qualified Severely Impaired Individuals	0938-AC82

VOL 53 ISS 79 PT 1 AP 25 1988 UMI

HHS

Health Care Financing Administration—Proposed Rule Stage—Continued

Sequence Number	Title	Regulation Identifier Number
744	Denial of Payment for Substandard Quality Care, Review of Beneficiary Complaints	0938-AC84
745	Revised Effective Date of Medicare/Medicaid Provider Agreement and Supplier Participation	0938-AC88
746	Recognition of College of American Pathologists Laboratory Accreditation Program	0938-AC89
747	PRO Review of Surgical Procedures and Requirements for Second Opinions	0938-AC90
748	Payment for the Cost of Malpractice Insurance for Hospitals Excluded from the Prospective Payment System	0938-AC97
749	Changes Concerning Determination of Allowable Interest Expense and Suspension of Payments	0938-AC99
750	Changes Concerning the Definition of Accrual Basis of Accounting	0938-AD01
751	Optional Payment System for Low Medicare Volume Skilled Nursing Facilities	0938-AD02
752	Criteria and Procedures for Medical Services Coverage Decisions	0938-AD07
753	Revisions to Conditions of Participation for Hospitals and Conditions for Coverage of Services of Independent Laboratories and Suppliers of ESRD Services	0938-AD11
754	Recognition of Joint Commission on Accreditation of Healthcare Organizations' Home Care Program Standards and the National League for Nursing's Standards for Home Health Agencies	0938-AD13
755	Explanation of Rights and Other HMO/CMP Provisions	0938-AD14
756	Eligibility of Aliens for Medicaid	0938-AD15
757	Medicaid: Eligibility Groups Extended Coverage of Services, and Conditions of Eligibility: COBRA and TEFRA	0938-AD16
758	Medicaid Eligibility of Poverty Level Groups and Extended Coverage of Services	0938-AD17
759	Transfer of Assets	0938-AD18
760	Payment for Services of Certified Registered Nurse Anesthetists	0938-AD25
761	Withdrawal of Coverage of Single Photon Absorptiometry	0938-AD26
762	Modification of Certain Requirements for Health Insuring Organizations	0938-AD31
763	Occupational Therapy, Physician Assistants	0938-AD32
764	Prohibition on Unbundling of Hospital Outpatient Services	0938-AD33
765	Physician Liability on Non-Assigned Claims	0938-AD34
766	Source of State Share of Financial Participation	0938-AD36
767	Changes to Peer Review Organization Regulations	0938-AD38
768	Administrative Sanctions for Circumventing the Prospective Payment System and PRO Disclosure to Licensing and Certification Bodies	0938-AD42
769	Revision of the Medicare Economic Index	0938-AD43
770	Update of Ambulatory Surgical Center Payment Rates for July 1, 1988	0938-AD44
771	Miscellaneous Changes Affecting Payment for Inpatient Hospital Services	0938-AD46
772	Schedule of Limits for Skilled Nursing Facility Inpatient Routine Service Costs for Reporting Periods Beginning On or After October 1, 1988	0938-AD48
773	Changes to the Inpatient Hospital Prospective Payment System and Fiscal Year 1989 Rates	0938-AD49
774	Application of the Comparable Services Limitation in Determining Reasonable Charges	0938-AD50
775	Protocol for the Reuse of Dialysis Bloodlines	0938-AD52
776	Fees for Appeals	0938-AD54
777	Home and Community-Based Services for the Elderly	0938-AD55
778	Revisions to Medicaid Eligibility Quality Control Program Requirements Based on Findings of COBRA Studies	0938-AD56
779	Procedures for Terminating Program Participation of Providers and Suppliers	0938-AD57
780	Part B Premium for 12-Month Period Beginning January 1, 1989	0938-AD58
781	Revisions to the Freedom of Information Regulations	0938-AD60
782	Miscellaneous Amendments to the HMO and CMP Requirements	0938-AD61
783	Payment for Radiologist Services	0938-AD62
784	Relative Value Guide for Physician Anesthesia Services	0938-AD63
785	Revised Medicare Economic Index for 1988 and Establishment of the 1989 Medicare Economic Index	0938-AD64
786	Proposed Fee Schedule for Durable Medical Equipment Effective for Items and Services Provided On or After January 1, 1989	0938-AD65
787	Items and Services Not Chargeable to Patient Personal Funds	0938-AD66
788	Criteria for Standard and Extended Home Health Agency Surveys	0938-AD67
789	Inpatient Hospital Deductible and Coinsurance Amounts and Part A Premium for the Uninsured Aged for 1989	0938-AD68

Health Care Financing Administration—Final Rule Stage

Sequence Number	Title	Regulation Identifier Number
790	Payments to Institutions	0938-AB00
791	Miscellaneous Medicare and Medicaid Amendments	0938-AB05
792	Changes to the Lesser of Costs or Charges Provisions	0938-AB29
793	Revisions in Reporting and Recordkeeping Requirements	0938-AB46

Health Care Financing Administration—Final Rule Stage—Continued

Sequence Number	Title	Regulation Identifier Number
794	Waiver of Certain Membership Requirements for Certain Health Maintenance Organizations (HMOs) and State Option for Disenrollment Restrictions for Certain HMOs Under Medicaid	0938-AB54
795	Indirect Part B Payment Procedure	0938-AB59
796	Hospital Insurance Entitlement and Supplementary Medical Insurance Enrollment and Entitlement	0938-AB60
797	Treatment of Social Security Cost of Living Increases for Individuals Who Lose SSI Eligibility	0938-AB62
798	Medicare/Medicaid Revaluation of Assets	0938-AB64
799	OMB Review of Information Collection and Recordkeeping Requirements for Home Health Agencies, Independent Laboratories, and Providers of Outpatient, Physical Therapy and/or (cont)	0938-AB68
800	Clarification of Policy on Adjusting the Hospital-Specific Portion of the Prospective Payment Rate	0938-AB71
801	Conditions for Intermediate Care Facilities for the Mentally Retarded	0938-AB76
802	Revision of Medicaid Eligibility Quality Control (MEQC) Program Requirements	0938-AB85
803	Medicare Coverage of Hepatitis B Vaccine for High and Intermediate Risk Individuals, Hemophilia Clotting and Certain X-Ray Services	0938-AC07
804	Reasonable Charge Limitations	0938-AC08
805	Assignment and Reassignment of Provider-Based Home Health Agencies and Hospices to Designated Regional Intermediaries	0938-AC20
806	Fire Safety Standards for Hospitals, Skilled Nursing Facilities, Hospices, Intermediate Care Facilities and Ambulatory Surgical Centers	0938-AC28
807	Medicaid: Eligibility Determinations Based on Disability	0938-AC31
808	Additions to and Deletions From Current List of Covered Surgical Procedures for Ambulatory Surgical Centers	0938-AC45
809	Employers Contribution to Health Maintenance Organizations Option	0938-AC48
810	Reimbursement for Physician's Outpatient Maintenance Dialysis Services	0938-AC57
811	State Plan Requirements and Other Provisions Relating to State Third-Party Liability Programs	0938-AC64
812	Alternate Sanctions for ESRD Facilities	0938-AC68
813	Refunding of Federal Share of Overpayments Made to Medicaid Providers	0938-AC83
814	Medicare Coverage of Immunosuppressive Drugs	0938-AD09
815	Conditions of Participation for Long Term Care Facilities	0938-AD12
816	Medicare, Medicaid, and Clinical Laboratories Improvement Act (CLIA) Patient Confidentiality Rules	0938-AD40
817	Long Term Care Survey	0938-AD41
818	Home Health Agencies: Home Health Aide Training and Patient Rights	0938-AD45
819	Schedules of Limits on Home Health Agency Costs Per Visit for Cost Reporting Periods Beginning On or After July 1, 1988	0938-AD47

Health Care Financing Administration—Completed Actions

Sequence Number	Title	Regulation Identifier Number
820	Survey and Certification Procedures	0938-AA38
821	Relations with Other Agencies, Miscellaneous Medicaid Definitions and Third Party Liability Quality Control	0938-AB21
822	FFP for Services of Long Term Care Facilities	0938-AB42
823	Medicaid Program; Coverage of Qualified Pregnant Women and Children and Newborn Children	0938-AC02
824	Correction and Reduction Plans for Intermediate Care Facilities for the Mentally Retarded	0938-AC51
825	Schedule of Limits for Skilled Nursing Facility Inpatient Routine Service Costs for Cost Reporting Periods Beginning on or after October 1, 1987	0938-AC54
826	Reasonable Charge Payment Limits for Enteral Products and Supplies	0938-AC67
827	Entities Performing Quality of Care Review of Services Provided by Risk-Basis Health Maintenance Organizations and Competitive Medical Plans	0938-AC85
828	End Stage Renal Disease Program: Responsibilities of Network Organizations	0938-AC86
829	End Stage Renal Disease Program: Revised Network Area Designations	0938-AC87
830	Medicare Economic Index for Reasonable Charges (Effective 01/01/88)	0938-AC91
831	Part B Premium for 12-Month Period Beginning 01/01/88	0938-AC92
832	Inpatient Hospital Deductible and Coinsurance Amounts and Part A Premium for the Uninsured Aged for 1988	0938-AC94
833	Periodic Interim Payments for Hospitals	0938-AC96
834	Payment for Facility Services Related to Ambulatory Surgical Procedures Performed in Hospitals on an Outpatient Basis	0938-AD00
835	Standards for the Reuse of Dialysis Filters and Other Dialysis Supplies	0938-AD10
836	Supplementary Medical Insurance Premiums	0938-AD19
837	Organ Procurement Organizations and Organ Procurement Protocols	0938-AD20
838	Discontinuation of Bad Debt Payment for Hospitals Subject to the Prospective Payment System	0938-AD27
839	Home Health Agencies Aide Training and Discharge Planning, and Conforming Changes to the Hospice Program	0938-AD29

VOL 53 ISS 79 PT 1 APR 25 1988 UMI

HHS

Health Care Financing Administration—Completed Actions—Continued

Sequence Number	Title	Regulation Identifier Number
840	Alien Eligibility, Immigration Status Verification and Waiver Procedures For AFDC State Administered Adult Assistance and Medicaid Programs	0938-AD35
841	Targeting Information for Income and Eligibility Verification	0938-AD37

Family Support Administration—Proposed Rule Stage

Sequence Number	Title	Regulation Identifier Number
842	Scope of Payments	0970-AA00
843	Aid to Families with Dependent Children Program; Administrative Improvement in the AFDC Program	0970-AA09
844	Standards for Child Support Enforcement Program Operations	0970-AA16
845	Child Support Enforcement Audit Regulations	0970-AA17
846	Distribution of Child Support Collections	0970-AA18
847	Alien Verification Procedures for AFDC; State Administered Adult Assistance and Medicaid Programs; Notice of Proposed Rulemaking	0970-AA41
848	Exclusion of Indian Trust Funds and Alaska Native Claims Settlement Act Distributions (ANCSA)	0970-AA47
849	Cooperation in Third Party Health Coverage	0970-AA49
850	cooperative agreements	0970-AA50
851	FY 1988 Scoring System for Performance Indicators	0970-AA51
852	Federal Tax Refund Offset Process - Pre-Offset Notice Fee	0970-AA52
853	Omnibus Budget Reconciliation Act of 1987	0970-AA56

Family Support Administration—Final Rule Stage

Sequence Number	Title	Regulation Identifier Number
854	Refugee Cash and Medical Assistance	0970-AA01
855	Retroactive Modification of Child Support Arrearages	0970-AA03
856	Aid to Families With Dependent Children; Definition of Permissible State Practice-Quality Control	0970-AA04
857	Aid to Families with Dependent Children; Treatment of Utility Payments By Applicant or Recipients Living in Certain Federally Assistance Housing	0970-AA05
858	Aid to Families With Dependent Children Program; Implementation of the Deficit Reduction Act of 1984	0970-AA06
859	Aid to Families With Dependent Children Program; Extension of Medicaid Eligibility When Support Collections Result in Termination of AFDC Eligibility	0970-AA07
860	Consistency for the Food Stamp Program, AFDC Program, and the Adult Assistance Programs	0970-AA08
861	Refugee Resettlement Program; Refugee Cash and Assistance; Requirements for Job Search, Employment Services, and Employment; Refugee Medical Assistance; and Refugee Social Services	0970-AA10
862	Aid to Families with Dependent Children Program; General Administration – Public Assistance Program – Quality Control System	0970-AA11
863	Medical Support Enforcement #2	0970-AA13
864	Disregard of Child Support Payments; Regulations Implementing the Deficit Reduction Act of 1984	0970-AA15
865	Grants to States for Public Assistance Programs, Treatment of Replacement Checks	0970-AA19
866	Essential Persons	0970-AA44
867	Alien Legalization	0970-AA48

Family Support Administration—Completed Actions

Sequence Number	Title	Regulation Identifier Number
868	Child Support Enforcement Program; Quarterly Reporting Requirements	0970-AA02
869	Provision of Services in Interstate IV-D Cases	0970-AA23
870	Case Closure	0970-AA24

HHS

Family Support Administration—Completed Actions—Continued

Sequence Number	Title	Regulation Identifier Number
871	State Legalization Impact Assistance Grants	0970-AA40

DEPARTMENT OF HEALTH AND HUMAN SERVICES (HHS)
Office of the Secretary (OS)

Prerule Stage

562. PRIVACY ACT REGULATION

Legal Authority: 5 USC 552a

CFR Citation: 45 CFR 5b

Legal Deadline: None.

Abstract: This will be the first complete update since 1975 of the Department's Privacy Act Regulation implementing the Privacy Act of 1974. It will facilitate individuals' access to information and records that the Department maintains about them in more than 400 designated Privacy Act Systems of Records, clarifying and promulgating at one time all the subparts of the regulation. It will also help Departmental personnel processing Privacy Act requests by providing them with an integrated regulation that is compatible with current procedures for processing such requests. The only alternative to this complete update is to continue to operate with a regulation that in the past has been revised on a piecemeal basis.

Timetable:

Action	Date	FR Cite
ANPRM	10/15/86	

Small Entity: No

Agency Contact: Russell M. Roberts, Director, FOI/Priv Div, Department of Health and Human Services, Office of the Secretary, Off of Pub Affairs, Rm 645-F, HHH Bldg, 200 Independence Avenue, SW, Washington, DC 20201, 202 472-7453

RIN: 0991-AA11

DEPARTMENT OF HEALTH AND HUMAN SERVICES (HHS)
Office of the Secretary (OS)

Proposed Rule Stage

563. PRINCIPLES FOR DETERMINING COSTS AND COST ALLOCATION PROCEDURES APPLICABLE TO GRANTS, CONTRACTS, AND OTHER AGREEMENTS FOR WORK PERFORMED BY HOSPITALS

Legal Authority: 5 USC 301

CFR Citation: 45 CFR 74, Appendix E; 45 CFR 76

Legal Deadline: None.

Abstract: This action will revise the Department's current cost principles for research and development activities under grants and contracts with hospitals to make them clearer, more specific, and compatible with cost principles issued by OMB for educational institutions and nonprofit organizations. The revision will also broaden the coverage of the principles to include all grants, contracts and other agreements with hospitals (except the Medicare & Medicaid programs).

Timetable:

Action	Date	FR Cite
Next Action Undetermined		

Small Entity: No

Additional Information: OMB is considering revisions to Circular A-21 and A-122 as a result of the Defense Procurement Improvement Act of 1985 (P.L. 99-145) and the Civilian Employee and Contractor Travel Expenses Act of 1985 (P.L. 99-234). This action should conform to those revisions also.

Agency Contact: Henry G. Kirschenmann, Jr., Deputy Assistant Secretary, Department of Health and Human Services, Office of the Secretary, Office of Procurement, Assist & Logistics, Rm 513D, HHH Bldg, 200 Independence Ave. SW, Washington, DC 20201, 202 245-8670

RIN: 0991-AA12

564. ENFORCEMENT OF NONDISCRIMINATION ON THE BASIS OF HANDICAP IN THE DEPARTMENT OF HEALTH AND HUMAN SERVICES

Significance: Agency Priority

Legal Authority: 29 USC 794

CFR Citation: 45 CFR 85.1-62

Legal Deadline: None.

Abstract: Implements the amendment made to Sec. 504 of the Rehabilitation Act of 1973 by Pub.L. 95-602 in 1978, which extended Sec. 504 to the Federal sector. The proposed Part 85 is modeled on Part 84 which implements Sec. 504 with respect to recipients of Federal financial assistance.

Timetable:

Action	Date	FR Cite
NPRM	02/16/88	53 FR 4425
NPRM Comment Period End	04/18/88	53 FR 4425
Final Action	07/00/88	

Small Entity: Not Applicable

VOL 53 ISS 79 PT 1 AP 25 1988 UMI

Public Compliance Cost: Initial Cost: $0; Yearly Recurring Cost: $0

Government Levels Affected: Federal

Agency Contact: Frank E.G. Weil, Chief, Policy Branch, Department of Health and Human Services, Office of the Secretary, Office for Civil Rights, 330 Independence Avenue SW, Room 5411, Washington, DC 20201, 202 245-6700

RIN: 0991-AA17

565. CIVIL MONEY PENALTIES FOR FAILURE TO REPORT MEDICAL MALPRACTICE PAYMENTS AND FOR BREACHING THE CONFIDENTIALITY OF INFORMATION

Legal Authority: PL 99-660, Sec 421(c) and 427(b)

CFR Citation: 42 CFR 1003

Legal Deadline: None.

Abstract: This proposed rule would establish civil money penalties against any individual or entity that fails to report information on medical malpractice payments in accordance with the Health Care Quality Improvement Act of 1986, and against any individual who breaches the confidentiality of information reported to the data bank established to collect and disseminate required information in accordance with that Act.

Timetable:

Action	Date	FR Cite
NPRM	03/21/88	53 FR 9260
NPRM Comment Period End	05/20/88	
Final Action	10/00/88	

Small Entity: No

Agency Contact: James Patton, Director, Health Care Admin. Sanctions Div., Office of Investigations, Department of Health and Human Services, Office of the Secretary, Office of Inspector General, 6325 Security Boulevard, 301timore, MD 21207, 301 594-3957

RIN: 0991-AA40

566. CIVIL MONEY PENALTIES FOR HEALTH MAINTENANCE ORGANIZATIONS AND COMPETITIVE MEDICAL PLANS

Legal Authority: PL 99-501, Sec 9312; PL 99-501, Sec 9434; PL 100-203, Sec 4014

CFR Citation: 42 CFR 1003

Legal Deadline: None.

Abstract: This proposed rule provides for civil money penalties for each violation against any risk-sharing organization that: (1) fails substantially to provide medically necessary items and services that are required under the contract; (2) imposes premiums on enrolled individuals in excess of premiums permitted; (3) acts to expel or refuse, or to re-enroll an individual; (4) misrepresents or falsifies information; (5) engages in any practice that would reasonably be expected to have the effect of denying or discouraging enrollment; or, (6) fails to provide for prompt payment of claims for services provided to enrollees.

Timetable:

Action	Date	FR Cite
NPRM	11/00/88	
Final Action	12/00/88	
NPRM Comment Period End	01/00/89	

Small Entity: Undetermined

Additional Information: This proposed rule is being revised as a result of broaden CMP and sanction authorities contained in P.L. 100-203.

Agency Contact: James Patton, Director, Health Care Admin. Sanctions Div., Office of Investigations, Department of Health and Human Services, Office of the Secretary, Office of Inspector General, 6325 Security Boulevard, Baltimore, Maryland 21207, 301 594-3957

RIN: 0991-AA44

567. PROHIBITION ON USE OF PHYSICIAN INCENTIVE PLANS

Legal Authority: PL 99-501, Sec 9313

CFR Citation: 42 CFR 1001; 42 CFR 1003

Legal Deadline: None.

Abstract: This proposed rule would prohibit a hospital from knowingly making incentive payments to a physician as an inducement to that physician to reduce or limit services provided to program beneficiaries who are under the direct care of that physician.

Timetable:

Action	Date	FR Cite
NPRM	07/00/88	
NPRM Comment Period End	09/00/88	
Final Action	12/00/88	

Small Entity: Undetermined

Additional Information: The effective date for implementing regulations addressing physician incentive plans by risk-sharing HMOs and competitive medical plans has been delayed to 4/1/90 by P.L. 100-203, Sec 4016. This provision will be addressed through separate rulemaking at a later date.

Agency Contact: James Patton, Director, health Care Admin. Sanctions Div., Office of Investigations, Department of Health and Human Services, Office of the Secretary, Office of Inspector General, 6325 Security Boulevard, Baltimore, Maryland 21207, 301 594-3957

RIN: 0991-AA45

568. NEW CIVIL MONEY PENALTIES AND EXCLUSIONS AUTHORITIES RESULTING FROM OBRA 1986 AND OBRA 1987

Legal Authority: PL 99-501, Sec 9320; PL 99-501, Sec 9331; PL 99-501, Sec 9332; PL 99-501, Sec 9334; PL 99-501, Sec 9338; PL 100-203, Sec 4022; PL 100-203, Sec 4023; PL 100-203, Sec 4039; PL 100-203, Sec 4045; PL 100-203, Sec 4049; PL 100-203, Sec 4051; PL 100-203, Sec 4062; PL 100-203, Sec 4064; PL 100-203, Sec 4085; PL 100-203, Sec 4118; ...

CFR Citation: 42 CFR 1001; 42 CFR 1003

Legal Deadline: None.

Abstract: This proposed rule provides for civil money penalties and exclusions for various program violations resulting from OBRA 1986 and OBRA 1987. Penalties and sanctions may be imposed against among other things: (1) those who bill Medicare beneficiaries on a non-assigned basis for services of a certified nurse anesthetist or a physician assistant; (2) non participating physicians billing for actual charges above permitted charges; (3) nursing homes; (4) home health care providers; (5) unassigned lab services; (6) DME rental providers; and (7) providers of laboratory tests.

Timetable:

Action	Date	FR Cite
NPRM	04/00/89	
NPRM Comment Period End	06/00/89	
Final Action	12/00/89	

Small Entity: Undetermined

Additional Information: This proposed rule is being revised as a result of

broadened CMP and sanction authorities contained in P.L. 100-203.

Agency Contact: James Patton, Director, Health Care Admin. Sanctions Div., Office of Investigations, Department of Health and Human Services, Office of the Secretary, Office of Inspector General, 6325 Security Boulevard, Baltimore, Maryland 21207, 301 594-3957

RIN: 0991-AA46

569. AMENDMENTS TO OIG EXCLUSION AND CMP AUTHORITIES RESULTING FROM PL 100-93

Significance: Agency Priority

Legal Authority: PL 100-93

CFR Citation: 42 CFR 1001; 42 CFR 1002; 42 CFR 1003

Legal Deadline: Statutory, September 1989. Statutory deadline applies only to "kick-back" provision.

Abstract: These regulations are designed to protect program beneficiaries from unfit health care practitioners, and otherwise to improve the anti-fraud provisions relating to Titles 5, 11, 18, 19, and 20.

Timetable:

Action	Date	FR Cite
NPRM	10/00/88	
NPRM Comment Period End	12/00/88	

Small Entity: Undetermined

Additional Information: This proposed rule incorporates two previous items of proposed rulemaking (0991-AA21 and 0991-AAA39) as a result of the passage of PL 100-93.

Agency Contact: James Patton, Director, Health Care Admin. Sanctions Div., Office of Investigations, Department of Health and Human Services, Office of the Secretary, Office of Inspector General, 6325 Security Boulevard, Baltimore, Maryland 21207, 301 594-3957

RIN: 0991-AA47

570. ● OIG ANTI-KICKBACK PROVISIONS

Legal Authority: PL 100-93, Sec 4; PL 100-93, Sec 14

CFR Citation: 42 CFR 1001; 42 CFR 1002

Legal Deadline: Statutory, August 18, 1988.

Abstract: This proposed rule will specify payment practices which, although potentially capable of inducing referrals of business under Medicare, are not to be considered kickbacks for purposes of criminal or civil remedies.

Timetable:

Action	Date	FR Cite
ANPRM	10/19/87	52 FR 38794
ANPRM Comment Period End	12/18/87	
NPRM	08/18/88	

Small Entity: Undetermined

Additional Information: Proposed regulations addressing PL 100-93, Sec 14 are being addressed in this separate rulemaking and have been split out from RIN 0991-AA47.

Agency Contact: Joel Schaer, Regulations Officer, Office of Inspector General, AO, Department of Health and Human Services, Office of the Secretary, 330 Independence Avenue, SW, Washington, D.C. 20201, 202 472-5270

RIN: 0991-AA49

571. ● PRO RURAL PRACTITIONERS AMENDMENTS

Legal Authority: PL 100-203, Sec 4095

CFR Citation: 42 CFR 1004

Legal Deadline: None.

Abstract: This proposed rule would permit a hearing before an Administrative Law Judge of a provider in a rural health manpower shortage area, or in a county with a population of less than 70,000 before a program exclusion of that provider took place.

Timetable:

Action	Date	FR Cite
NPRM	12/00/88	

Small Entity: Undetermined

Agency Contact: James Patton, Director, Health Care Admin. Sanctions Div., Office of Inspector General, Department of Health and Human Services, Office of the Secretary, Office of Investigations, 6325 Security Boulevard, Baltimore, MD 21207, 301 594-3957

RIN: 0991-AA51

DEPARTMENT OF HEALTH AND HUMAN SERVICES (HHS) — Final Rule Stage

Office of the Secretary (OS)

572. NONDISCRIMINATION REQUIREMENTS (INCLUDING ON THE BASIS OF SEX OR RELIGION) APPLICABLE TO BLOCK GRANTS AND STANDARD NONDISCRIMINATION PROCEDURES APPLICABLE TO CERTAIN OTHER PROGRAMS

Legal Authority: 42 USC 9906; 42 USC 300x-7; 42 USC 728; 42 USC 8625; 42 USC 9821; 42 USC 9849

CFR Citation: 45 CFR 92

Legal Deadline: None.

Abstract: To implement the nondiscrimination requirements applicable to block grants authorized by the Omnibus Budget Reconciliation Act of 1981, P.L. 97-35.

Timetable:

Action	Date	FR Cite
NPRM	01/21/86	51 FR 2806
NPRM Comment Period End	03/24/86	51 FR 2806
Interim Final Rule	09/00/88	

Small Entity: No

Additional Information: New CFR Subpart to be assigned.

Agency Contact: Marcella Haynes, Director, Policy and Special Projects Staff, Department of Health and Human Services, Office of the Secretary, Policy and Special Staff, OCR, Room 5032, HHS North Bldg, 330 Independence Ave, SW, Washington, DC 20201, 202 245-6671

RIN: 0991-AA02

573. FREEDOM OF INFORMATION ACT REGULATION

Legal Authority: 5 USC 552; 3' USC 9701; 42 USC 1306a; EO 12600

CFR Citation: 45 CFR 5

Legal Deadline: None.

Abstract: This will be the first complete update since August 1974 of the Department's Public Information Regulation implementing the Freedom of Information Act. It will facilitate public access to information by making necessary revisions, clarifying, and promulgating at one time all the subparts of the regulation. It will also help Departmental personnel processing FOIA requests by providing them with an integrated regulation that is compatible with current procedures for processing FOIA requests and assessing search and copy fees that reflect the increased cost of such services. The only alternative to this complete update is to continue to operate with a regulation that in the past has been revised on a piecemeal basis.

Timetable:

Action	Date	FR Cite
NPRM	04/08/86	51 FR 13250
NPRM Comment Period End	06/17/87	51 FR 13250
Interim Final Rule	11/13/87	52 FR 43575
Interim Final Rule Public Comment Period Ends	12/14/87	52 FR 43575
Final Action	06/00/88	

Small Entity: No

Agency Contact: Russell M. Roberts, Director, FOI/Priv Div, Department of Health and Human Services, Office of the Secretary, Off of Pub Affairs, Rm 645-F, Humphrey Bldg, 200 Independence Ave, SW, Washington, DC 20201, 202 472-7453

RIN: 0991-AA07

574. EQUAL OPPORTUNITY IN EMPLOYMENT: PUBLIC BROADCASTING, PUBLIC RADIO AND PUBLIC TELECOMMUNICATIONS ENTITIES RECEIVING FEDERAL FUNDS FROM THE CORPORATION FOR PUBLIC BROADCASTING

Legal Authority: 47 USC 2405

CFR Citation: 45 CFR 87.1-40

Legal Deadline: None.

Abstract: Implements the Equal Opportunity in Employment Provisions of the Public Telecommunications Financing Act of 1978, PUB. L. 95-267, 47 U.S.C. 398(b)(1). This provision requires that equal opportunity in employment be afforded to all persons and that no person shall be subjected to discrimination in employment on the grounds of race, color, religion, national origin, or sex by the Public Broadcasting Service, National Public Radio, and public telecommunications entities receiving Federal funds from the Corporation for Public Broadcasting.

Timetable:

Action	Date	FR Cite
ANPRM	03/13/79	
NPRM	12/21/79	44 FR 75676
Final Action	06/00/88	

Small Entity: No

Public Compliance Cost: Yearly Recurring Cost: $6,000

Government Levels Affected: Local, State

Agency Contact: Frank E. G. Weil, Chief, Policy Branch, Department of Health and Human Services, Office of the Secretary, Office for Civil Rights, 330 Independence Avenue, SW, Room 5411, Washington, DC 20201, 202 245-6700

RIN: 0991-AA22

575. AUDITS OF NON-GOVERNMENTAL GRANTEES

Significance: Agency Priority

Legal Authority: 5 USC 301

CFR Citation: 45 CFR 74.62(b), (Revised)

Legal Deadline: None.

Abstract: This action will implement revised OMB Circular A-88 which is expected to be issued sometime this year. The Circular will provide governmentwide standards for non-Federal audits of college and university recipients of Federal grants and contracts. The Circular and these amendments will replace the audit requirements currently contained in OMB Circular A-110.

Timetable:

Action	Date	FR Cite
Final Action	00/00/00	

Small Entity: No

Additional Information: It is expected that OMB will publish a draft of its Circular in the Federal Register and obtain public comments. The specific form and nature of our action is expected to be mandated by OMB.

Agency Contact: Gary Houseknecht, Acting Director, Office of Assistance, and Cost Policy, Department of Health and Human Services, Office of the Secretary, Room 513D, Hubert H. Humphrey Bldg., 200 Independence Ave., SW, Washington, DC 20201, 202 245-7585

RIN: 0991-AA29

576. AUTOMATIC DATA PROCESSING EQUIPMENT AND SERVICES; CONDITIONS FOR FEDERAL FINANCIAL PARTICIPATION II

Significance: Agency Priority

Legal Authority: 5 USC 301

CFR Citation: 45 CFR 95.601; 45 CFR 95.605; 45 CFR 95.611; 45 CFR 95.612; 45 CFR 95.613; 45 CFR 95.615; 45 CFR 95.617; 45 CFR 95.619; 45 CFR 95.621; 45 CFR 95.623; 45 CFR 95.624; 45 CFR 95.625; 45 CFR 95.631; 45 CFR 95.633; 45 CFR 95.641

Legal Deadline: None.

Abstract: This NPRM will propose new regulations of 45 CFR 95.600, et seq., to reduce the amount of time necessary to review and respond to State and local agency requests for FFP. The reduction in process time will be accomplished by streamlining the review process and requiring fewer points of prior approval for smaller expenditures by the Department.

Timetable:

Action	Date	FR Cite
NPRM	09/30/87	
NPRM Comment Period End	11/30/87	
Final Action	04/30/88	
Final Action Effective	07/30/88	

Small Entity: No

Government Levels Affected: Local, State, Federal

Agency Contact: Ron Lentz, Division of State Data Systems, Department of Health and Human Services, Office of the Secretary, Room 542F HHH Bldg., 200 Independence Ave., SW, Washington, DC 20201, 202 245-7354

RIN: 0991-AA34

577. CIVIL MONEY PENALTIES AND EXCLUSIONS FOR ASSISTANTS AT CATARACT SURGERY

Significance: Agency Priority

Legal Authority: PL 99-272, Sec 9307; PL 99-514, Sec 1895(b)(16)

CFR Citation: 42 CFR 1001; 42 CFR 1003

Legal Deadline: None.

Abstract: These final regulations provide for the imposition of civil money penalties and exclusions against physicians billing the Medicare program or program beneficiaries for services of an assistant at surgery for cataract operations where prior approval has not been granted. This rule specifically responds to various comments raised as a result of the interim final, and makes a number of technical corrections to those final regulations.

Timetable:

Action	Date	FR Cite
Interim Final Rule	04/10/87	52 FR 11649
Final Action	04/00/88	

Small Entity: No

Agency Contact: James Patton, Director, health Care Admin. Sanctions Div., Office of Investigations, Department of Health and Human Services, Office of the Secretary, Office of Inspector General, 6325 Security Boulevard, Baltimore, MD 21207, 301 594-3957

RIN: 0991-AA37

578. BLOCK GRANT PROGRAMS

Significance: Agency Priority

Legal Authority: PL 99-425

CFR Citation: 45 CFR 96

Legal Deadline: Statutory, November 29, 1986.

Abstract: The regulation provides procedures by which the Secretary may exempt states from the statutory time limits that they must meet in responding to requests for crisis assistance under the low income house energy assistance program.

Timetable:

Action	Date	FR Cite
Final Action	04/20/88	
Final Action Effective	05/20/88	

Small Entity: No

Public Compliance Cost: Initial Cost: $0; Yearly Recurring Cost: $0

Government Levels Affected: State

Agency Contact: Robert C. Raymond, Director, Intergovernmental Policy, Department of Health and Human Services, Office of the Secretary, 447D, Humphrey Building, 200 Independence Ave., SW, Washington, DC 20201, 202 245-7316

RIN: 0991-AA38

579. PROGRAM FRAUD CIVIL REMEDIES

Significance: Agency Priority

Legal Authority: PL 99-501, Sec 6103

CFR Citation: 45 CFR 79

Legal Deadline: Statutory, April 21, 1987. While final rule was due on this date, a note of proposed rulemaking was promulgated prior to the issuance of final regulations.

Abstract: This rule establishes a $5,000 civil money penalty and an assessment of double damages against any person who, with knowledge or reason to know, submits a false, fictitious or fraudulent claim or statement to the Department of Health and Human Services.

Timetable:

Action	Date	FR Cite
NPRM	07/21/87	52 FR 27423
NPRM Comment Period End	09/19/87	
Final Action	04/00/88	

Small Entity: Not Applicable

Agency Contact: D. McCarty Thornton, Supervisory Trial Attorney, Office of the General Counsel/IG Division, Department of Health and Human Services, Office of the Secretary, 330 Independence Avenue, SW, Washington, DC 20201, 202 245-6306

RIN: 0991-AA41

580. TARGETING OF, AND TOLERANCES FOR, INCOME AND ELIGIBILITY VERIFICATION SYSTEM DATA

Significance: Agency Priority

Legal Authority: PL 99-509, Sec 9101 Omnibus Budget Reconciliation Act of 1986

CFR Citation: 42 CFR 453.952; 45 CFR 205.56

Legal Deadline: None.

Abstract: These rules make revisions to the regulations designed to incorporate changes made by Section 9101 of PL 99-509, which amended Section 1137 of the Social Security Act to allow States flexibility in targeting uses of data through the Income and Eligibility Verification System,. States will not be required to verify and act on all data. This changes earlier regulations which required 100% verification and allows the States the option to target their uses to those identified in the State Plan as most likely to be productive.

Timetable:

Action	Date	FR Cite
Interim Final Rule	07/11/88	

Small Entity: No

Additional Information: These regulations are planned to be issued at the same time regulations being issued by the Department of Agriculture to provide consistency of implementation with the Federally assisted benefit program at that department.

Government Levels Affected: State, Federal

Agency Contact: Sheldon Shalit, Director, Division of Payment Integrity, Department of Health and Human Services, Office of the Secretary, OAPSR, ASMB, 530G HHH, 200 Independence Ave., SW, Washington, DC 20201, 202 245-0384

RIN: 0991-AA42

581. GOVERNMENTWIDE DEBARMENT AND SUSPENSION (NONPROCUREMENT)

Legal Authority: 5 USC 301

CFR Citation: 45 CFR 76

Legal Deadline: None.

Abstract: This action will implement Executive Order 12549 and OMB guidelines for nonprocurement debarment and suspension, which establish a governmentwide system primarily covering assistance programs.

Timetable:

Action	Date	FR Cite
NPRM	10/20/87	
NPRM Comment Period End	12/21/87	52 FR 39048
Interim Final Rule	05/26/88	

Small Entity: No

Government Levels Affected: Local, State

Agency Contact: Gary Houseknecht, Acting Director, Office of Assistance, and Cost Policy, Department of Health and Human Services, Office of the Secretary, -Room 13-D HHH 200

Independence Avenue, SW, Washington, D.C. 20201, 202 245-7565

RIN: 0991-AA43

582. ● PROGRAM FRAUD CIVIL REMEDIES

Legal Authority: PL 99-509, Sec 6103; PL 99-509, Sec 6104

CFR Citation: 45 CFR 79

Legal Deadline: Statutory, April 1987.

Abstract: This final rule implements the Program Fraud Civil Remedies Act of 1986 by establishing procedures for the investigation, review, litigation, adjudication and appeal of cases where individuals make claims of written statements to the Department knowing, or with reason to know, that such submissions are false, fictitious or fraudulent.

Timetable:

Action	Date	FR Cite
NPRM	07/21/87	52 FR 27423
NPRM Comment Period End	08/20/87	
Final Action	04/00/88	

Small Entity: No

Agency Contact: Joel Schaer, Regulations Officer, Office of Inspector General, AO, Department of Health and Human Services, Office of the Secretary, 330 Independence Avenue, SW, Washington, D.C. 20201, 202 472-5270

RIN: 0991-AA50

DEPARTMENT OF HEALTH AND HUMAN SERVICES (HHS)

Office of the Secretary (OS)

Completed Actions

583. REVISION TO OIG'S SANCTION AUTHORITIES

Significance: Agency Priority

CFR Citation: 42 CFR 1001; 42 CFR 1002

Completed:

Reason	Date	FR Cite
Merged with RIN 0991-AA47 Item incorporated into new entry.	02/09/88	

Small Entity: Yes

Agency Contact: James Patton 301 594-3957

RIN: 0991-AA21

584. BLOCK GRANT PROGRAMS

Significance: Regulatory Program

CFR Citation: 45 CFR 96

Completed:

Reason	Date	FR Cite
Final Action	10/13/87	52 FR 37957
Final Action Effective	11/12/87	52 FR 37957

Small Entity: No

Agency Contact: Robert C. Raymond 202 245-7316

RIN: 0991-AA25

585. ADMINISTRATION OF GRANTS - IMPLEMENTATION OF OMB CIRCULAR A-102

CFR Citation: 45 CFR 74; 45 CFR 92

Completed:

Reason	Date	FR Cite
Final Action	03/11/88	53 FR 8034
Final Action Effective	10/01/88	

Small Entity: No

Agency Contact: Gary Houseknecht 202 245-7565

RIN: 0991-AA27

586. ADMINISTRATION OF GRANTS-SINGLE AUDIT ACT OF 1984

Significance: Agency Priority

CFR Citation: 45 CFR 74.62(a), (Revised); 45 CFR 74, Appendix I; 45 CFR 74, Appendix J

Completed:

Reason	Date	FR Cite
Final Action	03/11/88	53 FR 8078

Small Entity: No

Agency Contact: Gary Houseknecht 202 245-7565

RIN: 0991-AA30

587. WITHHOLDING OF MEDICAID PAYMENTS FOR FRAUD OR WILLFUL MISREPRESENTATION

CFR Citation: 42 CFR 455

Completed:

Reason	Date	FR Cite
Final Action	12/28/87	52 FR 48814
Final Action Effective	12/28/87	52 FR 48814

Small Entity: No

Agency Contact: James Patton 301 594-3957

RIN: 0991-AA36

588. PPS FRAUD AND ABUSE SANCTION AND PRO REVISIONS

CFR Citation: 42 CFR 400; 42 CFR 405; 42 CFR 412; 42 CFR 476; 42 CFR 498; 42 CFR 1001; 42 CFR 1004

Completed:

Reason	Date	FR Cite
Merged with RIN 0991-AA47 Item incorporated into new entry.	02/09/88	

Small Entity: Undetermined

Agency Contact: Bill Libercci 301 594-5035

RIN: 0991-AA39

BEST COPY AVAILABLE

DEPARTMENT OF HEALTH AND HUMAN SERVICES (HHS)
Departmental Management (HHSDM)

Final Rule Stage

589. IMPLEMENTATION OF THE EQUAL ACCESS TO JUSTICE ACT IN AGENCY PROCEEDINGS

Legal Authority: 5 USC 504(c)(1)

CFR Citation: 45 CFR 13

Legal Deadline: None.

Abstract: The Equal Access to Justice Act requires agencies to pay attorney fees to parties prevailing against the Government in certain types of administrative proceedings. It requires each agency to issue rules implementing the Act as it applies to these proceedings. As originally enacted, the Act had a sunset clause. A recent statutory amendment eliminated the sunset provision and made other changes in the Act. The instant regulation would amend 45 CFR Part 13 (HHS's regulation implementing the Act) to eliminate the corresponding sunset provision and to make other changes conforming with the statutory changes.

Timetable:

Action	Date	FR Cite
Final Action Effective	10/01/84	
NPRM	06/19/87	52 FR 23311
NPRM Comment Period End	08/17/87	
Final Action	04/00/88	

Small Entity: No

Agency Contact: Darrel J. Grinstead, Associate General Counsel, Business and Administrative Law Division, Department of Health and Human Services, Departmental Management, Room 5362, HHS North Building, 330 Independence Avenue, SW, Washington, DC 20201, 202 475-0150

RIN: 0990-AA02

590. ● TESTIMONY BY EMPLOYEES AND THE PRODUCTION OF DOCUMENTS IN PROCEEDINGS WHERE THE UNITED STATES IS NOT A PARTY

Significance: Agency Priority

Legal Authority: 5 USC 301; 5 USC 552

CFR Citation: 45 CFR 2

Legal Deadline: None.

Abstract: Part 2 of Title 45, CFC, governs the testifying of HHS employees as part of their official duties in litigation where neither the United States nor other Federal agencies are parties. This rule will amend Part 2 to clarify it and to resolve minor technical problems.

Timetable:

Action	Date	FR Cite
Final Action	06/00/88	

Small Entity: No

Agency Contact: Darrel J. Grinstead, Associate General Counsel, Business and Administrative Law Division, Department of Health and Human Services, Departmental Management, Room 5362, Wilbur J. Cohen Building, 330 Independence Avenue, SW, Washington, D.C. 20201, 202 475-0150

RIN: 0990-AA03

DEPARTMENT OF HEALTH AND HUMAN SERVICES (HHS)
Departmental Management (HHSDM)

Completed Actions

591. ● TESTIMONY BY EMPLOYEES AND THE PRODUCTION OF DOCUMENTS IN PROCEEDINGS WHERE THE UNITED STATES IS NOT A PARTY

Significance: Agency Priority

Legal Authority: 5 USC 301; 5 USC 552

CFR Citation: 45 CFR 2

Legal Deadline: None.

Abstract: This rule adds a new Part 2 to Title 45, CFR. It generally provides that HHS employees may not give testimony as part of their official duties without the approval of the head of their agency in litigation where the United States or other Federal agencies are not parties. The rule also provides procedures for processing written requests for documents.

Timetable:

Action	Date	FR Cite
Final Action	10/05/87	52 FR 37145

Small Entity: No

Agency Contact: Darrel J. Grinstead, Associate General Counsel, Business and Administration Law Division, Department of Health and Human Services, Departmental Management, Room 5362 Wilbur J. Cohen Building, 330 Independence Avenue, SW, Washington, D.C. 20201, 202 745-0150

RIN: 0990-AA04

DEPARTMENT OF HEALTH AND HUMAN SERVICES (HHS)
Office of Human Development Services (HDSO)

Proposed Rule Stage

592. FOSTER CARE, ADOPTION ASSISTANCE, AND CHILD WELFARE SERVICES

Legal Authority: 42 USC 670 et seq; Federal Payment for Foster Care and Adoption Assistance; 42 USC 620 et seq Child Welfare Services; 42 USC 1302 Rules and Regulations

CFR Citation: 45 CFR 1356; 45 CFR 1357

Legal Deadline: None.

Abstract: This NPRM will propose criteria the Department will use to verify that a State has met statutory requirements and is eligible to receive additional funds under Section 427 of the Social Security Act as amended by the Adoption Assistance and Child Welfare Act of 1980 (Pub. L. 96-272). The proposed rule will contain the specific criteria by which State performance in meeting the requirements of Section 427 is determined, the percentage levels and other standards for case record compliance, and procedures for conducting compliance reviews.

VOL 53 ISS 79 PT 1 APR 25 1988 UMI

Timetable:

Action	Date	FR Cite
Next Action Undetermined		

Small Entity: No

Agency Contact: Betty Stewart, Associate Commissioner, Children's Bureau, ACYF, Department of Health and Human Services, Office of Human Development Services, P.O. Box 1182, Washington, DC 20201, 202 755-7600

RIN: 0980-AA08

593. RUNAWAY AND HOMELESS YOUTH PROGRAM

Legal Authority: 42 USC 5701 Note The Runaway and Homeless Youth Act, as amended

CFR Citation: 45 CFR 1351

Legal Deadline: None.

Abstract: These rules will make technical changes to modify 45 CFR 1351 to conform to changes in legislation that: (1) provide for making grants to any eligible entity and no longer restrict grants to nonprofit entities; and (2) refer to "family" or "families" in place of "parent," "parents," and/or "legal guardian(s)."

Timetable:

Action	Date	FR Cite
NPRM	08/30/88	

Small Entity: No

Agency Contact: Paget W. Hinch, Associate Commissioner, ACYF/HDS, Department of Health and Human Services, Office of Human Development Services, Family and Youth Services Bureau, ACYF/HDS, PO Box 1182, Washington, DC 20013, 202 472-4426

RIN: 0980-AA11

594. HEAD START CRITERIA FOR SELECTION OF NEW GRANTEES

Legal Authority: 42 USC 9831 et seq Head Start Act

CFR Citation: 42 CFR 1302

Legal Deadline: None.

Abstract: The NPRM will propose additional new criteria that, if adopted, will be used in the selection of new Head Start grantees.

Timetable:

Action	Date	FR Cite
NPRM	12/30/88	

Small Entity: No

Agency Contact: Doug Klafehn, Chief, Program Management and Operations Branch, Head Start Bureau ACYF/OHDS, Department of Health and Human Services, Office of Human Development Services, P. O. Box 1182, Washington, DC 20013, 202 755-0590

RIN: 0980-AA17

595. HEAD START STAFF AND PROGRAM OPTIONS REQUIREMENTS

Significance: Agency Priority

Legal Authority: 42 USC 9831 et seq Head Start Act

CFR Citation: 45 CFR 1304; 45 CFR 1306

Legal Deadline: None.

Abstract: The NPRM will propose changes in existing regulations related to program design including class size, hours of operation, and program options such as center-based and home-based Head Start services. The NPRM will also propose, in a new Part, the requirements for home-based Head Start services.

Timetable:

Action	Date	FR Cite
NPRM	12/30/88	

Small Entity: No

Agency Contact: Doug Klafehn, Chief, Program Management and Operations Branch Head Start Bureau, ACYF/OHDS, Department of Health and Human Services, Office of Human Development Services, P. O. Box 1182, Washington, DC 20013, 202 755-0590

RIN: 0980-AA18

596. HEAD START APPEALS PROCESS

Legal Authority: 42 USC 9831 et seq Head Start Act

CFR Citation: 45 CFR 1303

Legal Deadline: None.

Abstract: The NPRM will propose revisions to current procedures for appeals from Head Start grantees and delegate agencies to improve the effectiveness and efficiency of the appeals process.

Timetable:

Action	Date	FR Cite
NPRM	01/01/89	

Small Entity: No

Agency Contact: Doug Klafehn, Chief, Program Management and Operations Branch, Head Start Bureau, ACYF/OHDS, Department of Health and Human Services, Office of Human Development Services, P. O. Box 1182, Washington, DC 20013, 202 755-0590

RIN: 0980-AA20

597. HEAD START PERFORMANCE STANDARDS FOR SERVICES TO HANDICAPPED CHILDREN

Legal Authority: 42 USC 9839

CFR Citation: 45 CFR 1308

Legal Deadline: None.

Abstract: The NPRM will propose to establish a new part 1308 setting forth proposed performance standards that must be used in providing Head Start services to handicapped children.

Timetable:

Action	Date	FR Cite
NPRM	09/30/88	

Small Entity: No

Agency Contact: Jane DeWeerd, Child Development Specialist, Department of Health and Human Services, Office of Human Development Services, Administration for Children, Youth and Families, PO Box 1182, Washington, DC 20013, 202 755-7944

RIN: 0980-AA21

598. NONRECURRING COSTS OF ADOPTION

Legal Authority: 42 USC 673

CFR Citation: 45 CFR 1356

Legal Deadline: None.

Abstract: This rule will implement new statutory requirements for States to establish a program to reimburse parent(s) who adopt a child with special needs for their nonrecurring costs of adoption.

Timetable:

Action	Date	FR Cite
NPRM	04/30/88	

Small Entity: No

Agency Contact: Beverly Stubbee, Department of Health and Human Services, Office of Human Development Services, Children's Bureau, P.O. Box

1182, Washington, D.C. 20201, 202 755-7447

RIN: 0980-AA24

599. HEAD START RECRUITMENT SELECTION AND ENROLLMENT OF CHILDREN

Legal Authority: 45 USC 9831 et seq

CFR Citation: 45 CFR 1305

Legal Deadline: None.

Abstract: In this NPRM, the Head Start Bureau will propose amendments to existing regulations governing recruitment, selection, and enrollment of children.

Timetable:

Action	Date	FR Cite
NPRM	09/30/88	

Small Entity: No

Agency Contact: Doug Klafehn, Department of Health and Human Services, Office of Human Development Services, Head Start Bureau, Box 1182, Washington, D.C. 20013, 202 755-0590

RIN: 0980-AA27

600. ● LIMITS ON COSTS OF DEVELOPMENT AND ADMINISTRATION

Legal Authority: 42 USC 9839

CFR Citation: 45 CFR 1301

Legal Deadline: None.

Abstract: 45 CFR 1301.32 is being amended to provide additional clarification to Head Start programs in meeting the requirement that the costs of developing and administering a Head Start program not exceed 15 percent of total costs.

Timetable:

Action	Date	FR Cite
NPRM	03/31/89	

Small Entity: No

Agency Contact: Douglas Klafehn, Chief, Program Management and Operations Branch, Head Start Bureau, Department of Health and Human Services, Office of Human Development Services, Room 5851, 400 6th Street, S.W., Washington, DC 20213, 202 755-0590

RIN: 0980-AA32

601. ● HEAD START PERFORMANCE STANDARDS FOR INFANTS AND TODDLERS

Legal Authority: 42 USC 9831 et seq

CFR Citation: 45 CFR 1307

Legal Deadline: None.

Abstract: The NPRM will propose to establish a new Part 1307 setting forth performance standards that must be used in providing Head Start services to infants and toddlers.

Timetable:

Action	Date	FR Cite
NPRM	12/30/88	

Small Entity: No

Agency Contact: Douglas Klafehn, Chief, Program Management and Operations Branch, Head Start Bureau, Department of Health and Human Services, Office of Human Development Services, Room 5851, 400 6th Street, S.W., Washington, D.C. 20213, 202 755-0590

RIN: 0980-AA33

602. ● GRANTS FOR STATE AND COMMUNITY PROGRAMS ON AGING; GRANTS TO INDIAN TRIBES; AND GRANTS TO ORGANIZATIONS SERVING OLDER HAWAIIANS FOR SUPPORTIVE AND NUTRITION SERVICES

Legal Authority: 42 USC 3001 et seq

CFR Citation: 45 CFR 1321; 45 CFR 1326; 45 CFR 1328

Legal Deadline: Statutory, March 29, 1988.

Abstract: The Administration on Aging will propose new and revised regulations to implement statutory changes made by passage of the Older Americans Act Amendments of 1987. The NPRM will affect State and community programs on aging, grants to Indian Tribes, and propose rules for new program of grants to Native Hawaiian organizations.

Timetable:

Action	Date	FR Cite
NPRM	03/29/88	
NPRM Comment Period End	05/29/88	

Small Entity: No

Agency Contact: Frederick Luhmann, Director, Division of Program Management Administration on Aging, Department of Health and Human Services, Office of Human Development Services, Room 4747, 330 Independence Ave., S.W., Washington, DC 20201, 202 245-2618

RIN: 0980-AA34

603. ● ADOPTION AND FOSTER CARE INFORMATION

Legal Authority: 42 USC 679

CFR Citation: 45 CFR 1355; 45 CFR 1356; 45 CFR 1357

Legal Deadline: Statutory, December 31, 1988.

Abstract: Section 479 of the Social Security Act requires the Secretary to publish regulations to collect data relating to foster care and adoption in the United States.

Timetable:

Action	Date	FR Cite
NPRM	12/31/88	

Small Entity: No

Agency Contact: Joseph Mottola, Deputy Commissioner, Administration for Children, Youth and Families, Department of Health and Human Services, Office of Human Development Services, Room 5030, 400 6th Street, S.W., Washington, DC 20213, 202 755-7773

RIN: 0980-AA35

604. ● DEVELOPMENTAL DISABILITIES PROGRAM

Legal Authority: 42 USC 6000 et seq

CFR Citation: 45 CFR 1385; 45 CFR 1386; 45 CFR 1387; 45 CFR 1388

Legal Deadline: Statutory, April 30, 1988.

Abstract: This proposed rule will amend current regulations to implement statutory changes made by passage of Public Law 100-146, the Developmental Disabilities Assistance and Bill of Rights Act of 1987. The NPRM will include proposals to establish a peer review process for the University Affiliated Facilities program, set forth standards to assure that States supplement and do not supplant program resources, and revise paper work and reporting requirements.

Timetable:

Action	Date	FR Cite
NPRM	04/30/88	

Small Entity: No

VOL 53 ISS 79 PT 1 AP 25 1988 UMI

HHS—HDSO

Proposed Rule Stage

Agency Contact: James J. Colarusso, Director, Management Services, Administration on Developmental Disabilities, Department of Health and Human Services, Office of Human Development Services, Room 351-D, 200 Independence Ave., S.W., Washington, DC 20201, 202 245-2890

RIN: 0980-AA36

605. ● NATIVE HAWAIIAN LOAN FUND DEMONSTRATION PROJECT

Legal Authority: 42 USC 2991 et seq

CFR Citation: 45 CFR 1336

Legal Deadline: Statutory, March 29, 1988.

Abstract: This rule will amend regulations that implement recent statutory changes in the Native American Programs Act to set forth the procedures and criteria to be used in making a demonstration grant to operate a revolving loan fund for the purpose of economic and social self-sufficiency of Native Hawaiians.

Timetable:

Action	Date	FR Cite
NPRM	03/29/88	
NPRM Comment Period End	05/29/88	

Small Entity: No

Agency Contact: Jan Phalen, Program Analyst, Administration for Native Americans, Department of Health and Human Services, Office of Human Development Services, Room 5300, 330 Independence Ave., S.W., Washington, DC 20201, 202 245-7714

RIN: 0980-AA37

DEPARTMENT OF HEALTH AND HUMAN SERVICES (HHS)
Office of Human Development Services (HDSO)

Final Rule Stage

606. HEAD START PERSONNEL POLICIES

Significance: Regulatory Program

Legal Authority: 42 USC 9831 et seq Head Start Act

CFR Citation: 45 CFR 1301

Legal Deadline: None.

Abstract: This rule would amend existing regulations governing the recruitment and selection of Head Start staff. The rule would emphasize the importance of careful screening of employees in Head Start programs by requiring that Head Start programs have formal personnel policies and procedures in place that will provide safeguards against the possibility of abuse and neglect, including sexual abuse, occurring in the Head Start program.

Timetable:

Action	Date	FR Cite
NPRM	04/03/85	50 FR 13253
NPRM Comment Period End	06/03/85	50 FR 13253
Final Action	04/01/88	

Small Entity: No

Agency Contact: Doug Klafehn, Department of Health and Human Services, Office of Human Development Services, Head Start Bureau, Administration for, Children, Youth and Families, PO Box 1182, Washington, DC 20013, 202 755-0590

RIN: 0980-AA10

DEPARTMENT OF HEALTH AND HUMAN SERVICES (HHS)
Office of Human Development Services (HDSO)

Completed Actions

607. DEVELOPMENTAL DISABILITIES PROGRAM

CFR Citation: 45 CFR 1385; 45 CFR 1386; 45 CFR 1387; 45 CFR 1388

Completed:

Reason	Date	FR Cite
Final Action	11/20/87	52 FR 44840
Final Action Effective	11/20/87	52 FR 44840

Small Entity: No

Agency Contact: James Colarusso 202 245-2890

RIN: 0980-AA12

608. CONSOLIDATION OF GRANTS TO THE INSULAR AREAS – FINAL RULE WITH COMMENT PERIOD

CFR Citation: 45 CFR 97

Completed:

Reason	Date	FR Cite
Final Action	10/28/87	52 FR 41431
Final Action Effective	03/25/87	52 FR 41431

Small Entity: No

Agency Contact: Howard A. Foard, Jr. 202 245-6036

RIN: 0980-AA22

DEPARTMENT OF HEALTH AND HUMAN SERVICES (HHS)

Proposed Rule Stage

Social Security Administration (SSA)

609. OLD-AGE, SURVIVORS, AND DISABILITY INSURANCE PROGRAM; TREATMENT OF OASDI LUMP SUM AND MONTHLY PAYMENTS IN THE AID TO FAMILIES WITH DEPENDENT CHILDREN PROGRAM

Legal Authority: 42 USC 405; 42 USC 407; 42 USC 602; 42 USC 1302; 42 USC 1383(a)

CFR Citation: 20 CFR 404, Subpart U; 20 CFR 416, Subpart F

Legal Deadline: None.

Abstract: These proposed rules would revise 20 CFR 404.2040, which stipulates the use of benefit payments by a representative payee, explaining that retroactive and monthly title II benefits received by a representative payee may be used for other members of the AFDC Unit. Potential costs and benefits are not available at this time. We are also proposing direct payment to a beneficiary under age 18 if the beneficiary is within 7 months of attaining age 18 and is initially filing an application for benefits. This proposed revision represents a policy change and is an extension of the 4-month period in our current regulations.

Timetable:

Action	Date	FR Cite
NPRM	00/00/00	

Small Entity: No

Agency Contact: Phil Berge, Legal Assistant, Department of Health and Human Services, Social Security Administration, Office of Regulations, 6401 Security Boulevard, Baltimore, Maryland 21235, 301 965-1769

RIN: 0960-AA90

610. OLD-AGE, SURVIVORS, AND DISABILITY INSURANCE PROGRAM; REVISED MEDICAL CRITERIA FOR DETERMINATION OF DISABILITY; CARDIOVASCULAR SYSTEM

Legal Authority: 42 USC 1302; 42 USC 1383; 42 USC 405

CFR Citation: 20 CFR 404.1500ff Appendix 1, Part A

Legal Deadline: None.

Abstract: Section 4.00 of Appendix 1 of the Disability regulations (404.1501 through 404.1599) describes cardiovascular impairments considered severe enough to prevent an individual from doing any gainful activity. We are reviewing this section of the Listing of Impairments and are anticipating the need for revising the criteria to bring them more up to date with current medical technologies and practice in this area of medicine which is advancing rapidly. The Supplemental Security Income program incorporates by reference and uses the same medical criteria as the Old-Age, Survivors, and Disability Insurance program.

Timetable:

Action	Date	FR Cite
NPRM	00/00/00	

Small Entity: No

Agency Contact: Harry Short, Legal Assistant, Department of Health and Human Services, Social Security Administration, Office of Regulations, 6401 Security Blvd., Baltimore, MD 21235, 301 965-1757

RIN: 0960-AA99

611. OLD-AGE, SURVIVORS, AND DISABILITY INSURANCE PROGRAM; REVISED MEDICAL CRITERIA FOR DETERMINATION OF DISABILITY; RESPIRATORY SYSTEM

Legal Authority: 42 USC 1302; 42 USC 1383; 42 USC 405

CFR Citation: 20 CFR 404.1500ff, Appendix 1, Part A

Legal Deadline: None.

Abstract: Section 3.00 of Appendix 1 to the Disability Regulations (404.1501 through 404.1599) describes those respiratory impairments which are considered severe enough to prevent a person from engaging in any gainful activity. We are proposing comprehensive revision to that section to require consideration of the nature and clinical manifestations of respiratory disorders, as well as consideration of the degree of limitations such disorders may impose on an individual's ability to work. The Supplemental Security Income program incorporates by reference and uses the same medical criteria as the Old-Age, Survivors, and Disability Insurance programs.

Timetable:

Action	Date	FR Cite
NPRM	00/00/00	

Small Entity: No

Agency Contact: Harry Short, Legal Assistant, Department of Health and Human Services, Social Security Administration, Office of Regulations, 6401 Security Blvd., Baltimore, MD 21235, 301 965-1757

RIN: 0960-AB00

612. OLD-AGE, SURVIVORS, AND DISABILITY INSURANCE PROGRAM; REVISED MEDICAL CRITERIA FOR DETERMINATION OF DISABILITY; MUSCULOSKELETAL SYSTEM

Legal Authority: 42 USC 1302; 42 USC 405; 42 USC 1383

CFR Citation: 20 CFR 404.1500ff, Appendix 1, Part A

Legal Deadline: None.

Abstract: Section 1.00 of Appendix 1 to the Disability Regulations 404.1501 through 404.1599 describes those musculoskeletal impairments which are considered severe enough to prevent a person from doing any gainful activity. We are proposing comprehensive revisions to that section to ensure that the medical evaluation criteria are up to date and consistent with the latest advances in medicine. The Supplemental Security Income program incorporates by reference and uses the same medical criteria as the Old-Age Survivors, and Disability Insurance program. The budgetary impact is unknown at this time.

Timetable:

Action	Date	FR Cite
NPRM	00/00/00	

Small Entity: No

Agency Contact: Henry Lerner, Legal Assistant, Department of Health and Human Services, Social Security Administration, Office of Regulations, 6401 Security Blvd., Baltimore, MD 21235, 301 965-1756

RIN: 0960-AB01

613. OLD-AGE, SURVIVORS, AND DISABILITY INSURANCE AND SUPPLEMENTAL SECURITY INCOME PROGRAMS; ADJUSTMENTS IN SSI BENEFITS ON ACCOUNT OF RETROACTIVE BENEFITS UNDER TITLE II

Significance: Regulatory Program

Legal Authority: 42 USC 405; 42 USC 1320a-6; 42 USC 1302; 42 USC 1383; PL 98-369, Sec 2615; 42 USC 1383b; 42 USC 1327

CFR Citation: 20 CFR 404.408b; 20 CFR 416.1123; 20 CFR 416.1402(m); 20 CFR 416.1123a, (New); 20 CFR 404.902

Legal Deadline: None.

Abstract: Sec. 2615 of Pub. L. 98-369 amended sec. 1127 of the Social Security Act to eliminate loopholes that permitted some people who were paid Old-Age, Survivors and Disability Insurance (OASDI) and Supplemental Security Income (SSI) benefits retroactively to receive more in total benefits for the same period than if they had been paid the benefits when regularly due. The two main changes are: (1) SSI benefits will be reduced where retroactive OASDI benefits have been paid before the SSI benefits. Under prior law, reductions could be made only in retroactive OASDI benefits and only when the retroactive SSI had been paid first. (2) OASDI or SSI benefits payable upon reinstatement following a period of suspension or termination will be reduced by the amount of SSI benefits that would not have been paid if the OASDI benefits had been paid when regularly due. We will amend our regulations to conform to the statutory changes. The program savings to SSA are estimated as $5 million a year.

Timetable:

Action	Date	FR Cite
NPRM	06/00/88	
Final Action	00/00/00	

Small Entity: No

Agency Contact: Jack Schanberger, Legal Assistant, Department of Health and Human Services, Social Security Administration, Office of Regulations, 6401 Security Boulevard, Baltimore, Maryland 21235, 301 965-8471

RIN: 0960-AB38

614. SUPPLEMENTAL SECURITY INCOME PROGRAM; LIMITATION ON RECOUPMENT RATE IN CASE OF OVERPAYMENT

Legal Authority: 42 USC 1302; 42 USC 1381; 42 USC 1381a; 42 USC 1382; 42 USC 1382c; 42 USC 1383; 42 USC 1383b

CFR Citation: 20 CFR 416, Subpart E

Legal Deadline: None.

Abstract: These proposed rules which implement section 2612 of Pub. L. 98-369 will limit the rate at which an overpayment may be recovered from an individual still receiving benefits (SSI or federally administered supplementary payments, or both) to 10 percent of the recipient's total income (countable income plus SSI and State supplementary payments) or the recipient's payment for the month, whichever is less. They will apply the 10 percent requirement only to recipients in current payment status. The 10 percent limit will not apply in situations involving conditional disposition of resources agreements, misuse of burial funds, recovery by refund, cross program adjustment for individuals not in SSI current pay or where it is determined that the overpayment occurred because of recipient fraud, willful misrepresentation, or concealment. They will, in negotiated cases, set a rate of withholding that is appropriate for the financial condition of the overpaid person after (continued)

Timetable:

Action	Date	FR Cite
NPRM	04/00/88	

Small Entity: No

Additional Information: ABSTRACT CONT: factual evaluation. Such cases will also be considered initial determinations for which the recipient has appeal rights. Estimated costs are FY 1986--$2 million, FY 1987- -$2 million, FY 1988--$2 million, FY 1989--$2 million.

Agency Contact: Larry Dudar, Legal Assistant, Department of Health and Human Services, Social Security Administration, Office of Regulations, 6401 Security Boulevard, Baltimore, MD 21235, 301 965-1795

RIN: 0960-AB40

615. OLD-AGE, SURVIVORS, DISABILITY INSURANCE AND SUPPLEMENTAL SECURITY INCOME PROGRAMS: EVALUATION OF SYMPTOMS, INCLUDING PAIN

Legal Authority: 42 USC 405; 42 USC 423; 42 USC 1382c; 42 USC 1383; 42 USC 1302

CFR Citation: 20 CFR 404, Subpart P; 20 CFR 416, Subpart I

Legal Deadline: None.

Abstract: These proposed regulations expand the existing regulations pertaining to the evaluation of cases involving pain or other symptoms to provide a more detailed explanation of SSA's current policy for evaluating symptoms, including pain.

Timetable:

Action	Date	FR Cite
NPRM	00/00/00	

Small Entity: No

Agency Contact: William Ziegler, Legal Assistant, Department of Health and Human Services, Social Security Administration, Office of Regulations, 6401 Security Blvd., Baltimore, Maryland 21235, 301 965-1759

RIN: 0960-AB41

616. OLD-AGE, SURVIVORS, AND DISABILITY INSURANCE AND SUPPLEMENTAL SECURITY INCOME PROGRAMS; EVALUATION GUIDES FOR DETERMINING SUBSTANTIAL GAINFUL ACTIVITY (SGA)

Legal Authority: PL 98-460, Sec 10

CFR Citation: 20 CFR 404; 20 CFR 416

Legal Deadline: None.

Abstract: These proposed changes will incorporate into regulations of the Social Security Administration a number of policies relating to the evaluation of a person's work activity that are now in Social Security Rulings published in 1983 and 1984.

Timetable:

Action	Date	FR Cite
NPRM	09/00/88	

Small Entity: No

Agency Contact: Harry Short, Legal Assistant, Department of Health and Human Services, Social Security Administration, Office of Regulations, 6401 Security Boulevard, Baltimore, MD 21235, 301 965-1757

RIN: 0960-AB73

617. OASDI & SSI PROGRAMS; DEFINITION OF OVERPAYMENT AND LIABILITY FOR REPAYMENT OF AN OVERPAYMENT

Legal Authority: 42 USC 404; 42 USC 405; 42 USC 1302

CFR Citation: 20 CFR 404.501; 20 CFR 404.502; 20 CFR 416.537; 20 CFR 404.501a, (New)

Legal Deadline: None.

Abstract: These proposed rules implement section 12113 of Pub. L. 99-272 (Consolidated Omnibus Budget Reconciliation Act of 1985) enacted April 7, 1986. That legislation establishes a Social Security benefit overpayment or a Supplemental Security Income benefit overpayment to a joint account owner in certain cases in which the beneficiary is deceased

and payment is made after death. Also, we propose to add clarifying changes to the title II and title XVI regulations to explain the procedures used to collect benefit overpayments.

Timetable:

Action	Date	FR Cite
NPRM	07/00/88	

Small Entity: No

Agency Contact: Duane Heaton, Legal Assistant, Department of Health and Human Services, Social Security Administration, Office of Regulations, 6401 Security Blvd., Baltimore, MD 21235, 301 965-8470

RIN: 0960-AB78

618. SUPPLEMENTAL SECURITY INCOME PROGRAM; TREATMENT OF PROPERTY HELD IN TRUST OR OTHER SIMILAR LEGAL DEVICES WHEN THE PROPERTY IS AVAILABLE FOR A BENEFICIARY'S SUPPORT AND MAINTENANCE

Legal Authority: 42 USC 1302; 42 USC 1381; 42 USC 1381a; 42 USC 1382; 42 USC 1382a; 42 USC 1382b; 42 USC 1382c(f); 42 USC 1383

CFR Citation: 20 CFR 416.1201

Legal Deadline: None.

Abstract: This proposed regulation provides that assets held in any revocable or irrevocable trust or any other similar legal device including but not limited to gifts made in accordance with the Uniform Gifts to Minors Act, if available for the beneficiary's support and maintenance, will be a countable resource. It would include as a resource trust assets that could be but are not disbursed to the beneficiary either at the discretion of the trustees or at the direction of the trustor because such disbursement would adversely affect the beneficiary's eligibility for Supplemental Security Income benefits.

Timetable:

Action	Date	FR Cite
Next Action Undetermined		

Small Entity: No

Agency Contact: Henry D. Lerner, Legal Assistant, Department of Health and Human Services, Social Security Administration, Office of Regulations, 6401 Security Blvd., Baltimore, MD 21235, 301 965-1756

RIN: 0960-AB79

619. OLD-AGE, SURVIVORS AND DISABILITY INSURANCE; BLACK LUNG; AND SUPPLEMENTAL SECURITY INCOME PROGRAMS; AND ORGANIZATION AND PROCEDURES; APPLICATION OF CIRCUIT COURT LAW

Legal Authority: 42 USC 405; 42 USC 1302; 42 USC 1395; 42 USC 1395(a)(2); 42 USC 1395hh; 5 USC 552

CFR Citation: 20 CFR 422E; 20 CFR 404J; 20 CFR 410F; 20 CFR 416N

Legal Deadline: None.

Abstract: The proposed regulations describe a new type of Social Security Ruling which is available to the public and which is issued when the decision of a United States Court of Appeals conflicts with Social Security Administration policy. The Ruling states how the decision is applied to claims of persons living in the particular circuit.

Timetable:

Action	Date	FR Cite
Prior Notice of Proposed Rulemaking	01/23/87	52 FR 02557
NPRM	04/00/88	

Small Entity: No

Agency Contact: Phil Berge, Legal Assistant, Department of Health and Human Services, Social Security Administration, Office of Regulations, 6401 Security Blvd., Baltimore, MD 21235, 301 965-1769

RIN: 0960-AB85

620. SUPPLEMENTAL SECURITY INCOME PROGRAM; EXCLUSIONS FROM INCOME AND RESOURCES OF INDIAN JUDGEMENT FUNDS AND PER CAPITA DISTRIBUTIONS

Legal Authority: 25 USC 1407; 25 USC 1172; 25 USC 1176; 43 USC 1601ff

CFR Citation: 20 CFR 416, Subpart K, Appendix; 20 CFR 416.1236; 20 CFR 1234

Legal Deadline: None.

Abstract: Proposed changes will update the regulations to reflect the provisions of Pub.L. 97-458 and Pub.L 98-64, concerning exclusions from income and resources provided for Native Americans and clarify SSI treatment of funds and land distributed to Alaskan natives under Pub.L. 92-203, as amended. The regulatory change will result in Federal program savings of less than $1 million annually and administrative costs that would not be significant.

Timetable:

Action	Date	FR Cite
Next Action Undetermined		

Small Entity: No

Agency Contact: Irv Darrow, Legal Assistant, Department of Health and Human Services, Social Security Administration, Office of Regulations, 6401 Security Blvd., Baltimore, MD 21235, 301 965-1755

RIN: 0960-AB86

621. OLD-AGE, SURVIVORS, AND DISABILITY INSURANCE PROGRAM; REDUCTION BECAUSE OF ENTITLEMENT TO OTHER BENEFITS

Legal Authority: 42 USC 405; 42 USC 407; 42 USC 1302; 42 USC 402

CFR Citation: 20 CFR 404.407, (Revision); 20 CFR 404.612

Legal Deadline: None.

Abstract: Section 202(k)(4) of the Social Security Act discusses simultaneous entitlement to retirement and disability insurance benefits (RIB/DIB) and provides that SSA will pay the higher benefit unless the claimant elects to be paid the lower. Section 223(a)(1) explains that an application for DIB may be filed by someone other than the insured individual within 3 months after the month of the insured individual's death. We are proposing to change CFR 404.407(c) to clarify that the person described in section 404.612(d) may make the election discussed in section 202(k)(4).

Timetable:

Action	Date	FR Cite
NPRM	06/00/88	

Small Entity: No

Additional Information: We foresee minimal costs from this change since the number of potentially affected beneficiaries is small and the period of time during which they will receive the higher family maximum amount (based on the RIB) will only be for the months during which the deceased NH is simultaneously entitled to DIB. Also,

VOL 53 ISS 79 PT 1 APR 25 1988 UMI

this cost will be offset by administrative savings since overpayments will not be created and have to be recovered in situations where individuals are able to elect the lower family maximum (based on DIB) on behalf of the deceased NH.

Agency Contact: Lawrence V. Dudar, Legal Assistant, Department of Health and Human Services, Social Security Administration, Office of Regulations, 6401 Security Blvd., Baltimore, MD 21235, 301 965-1795

RIN: 0960-AB87

---

622. OLD-AGE, SURVIVORS, AND DISABILITY INSURANCE PROGRAM; DETERMINING DISABILITY AND BLINDNESS, MEDICAL-VOCATIONAL GUIDELINES, ILLITERACY AND INABILITY TO COMMUNICATE IN ENGLISH

Legal Authority: 42 USC 405

CFR Citation: 20 CFR 404P, Appendix 2; 20 CFR 416

Legal Deadline: None.

Abstract: The proposed changes will clarify the meaning of the terms "illiteracy" and "inability to communicate in English" as they are used in the disability determination regulations. The Supplemental Security Income program incorporates by reference and uses the same medical-vocational criteria as the Old-Age, Survivors, and Disability Insurance program.

Timetable:

Action	Date	FR Cite
NPRM	00/00/00	

Small Entity: No

Agency Contact: Harry Short, Legal Assistant, Department of Health and Human Services, Social Security Administration, Office of Regulations, 6401 Security Blvd., Baltimore, MD 21235, 301 965-1757

RIN: 0960-AB94

---

623. OLD-AGE, SURVIVORS, AND DISABILITY INSURANCE PROGRAM; REVISED MEDICAL CRITERIA FOR DETERMINATION OF DISABILITY; MENTAL DISORDERS-CHILDHOOD

Significance: Regulatory Program

Legal Authority: 42 USC 405; 42 USC 1302; 42 USC 1383

CFR Citation: 20 CFR 404P, Appendix 1, Part B

Legal Deadline: None.

Abstract: Section 112.00 of Appendix 1 to the Old-Age, Survivors, and Disability Insurance Disability Regulations 404.1501 through 404.1599 describe the medical criteria that apply only to the evaluation of mental impairments of persons under age 18. We are proposing comprehensive revisions to that section to ensure that the medical criteria are up to date and consistent with the latest advances in medicine. The Supplemental Security Income program incorporates by reference and uses the same medical criteria as the Old-Age, Survivors, and Disability Insurance program.

Timetable:

Action	Date	FR Cite
NPRM	07/00/88	
Final Action	00/00/00	

Small Entity: No

Agency Contact: William Ziegler, Legal Assistant, Department of Health and Human Services, Social Security Administration, Office of Regulations, 6401 Security Blvd., Baltimore, MD 21235, 301 965-1758

RIN: 0960-AB96

---

624. OLD-AGE, SURVIVORS, AND DISABILITY INSURANCE PROGRAM; MEDICAL EVALUATION CRITERIA FOR ACQUIRED IMMUNE DEFICIENCY SYNDROME (AIDS)

Legal Authority: 42 USC 405; 42 USC 1302

CFR Citation: 20 CFR 404P, Appendix 1

Legal Deadline: None.

Abstract: Section 10.00 of Appendix 1 to the Disability Regulations (404.1501 through 404.1599) describes multiple body system impairments which are severe enough to prevent a person from doing any gainful activity. We are proposing to add the criteria for evaluation of AIDS to this section. The Supplemental Security Income program incorporates by reference and uses the same medical criteria as the Old-Age, Survivors, and Disability Insurance program. The budgetary impact is unknown at this time.

Timetable:

Action	Date	FR Cite
NPRM	00/00/00	

Small Entity: No

Agency Contact: William Ziegler, Legal Assistant, Department of Health and Human Services, Social Security Administration, Office of Regulations, 6401 Security Blvd., Baltimore, MD 21235, 301 695-1759

RIN: 0960-AC06

---

625. OLD-AGE SURVIVORS AND DISABILITY INSURANCE AND SUPPLEMENTAL SECURITY INCOME PROGRAMS; APPEALS COUNCIL REVIEW AUTHORITY

Legal Authority: 42 USC 405; 42 USC 1302; 42 USC 1383; 42 USC 401; 42 USC 404

CFR Citation: 20 CFR 404.970; 20 CFR 404.968a, (New); 20 CFR 416.1470; 20 CFR 416.1468a, (New); 20 CFR 404.900; 20 CFR 404.907; 20 CFR 404.920; 20 CFR 404.929; 20 CFR 404.938; 20 CFR 404.939; 20 CFR 404.944; 20 CFR 404.961

Legal Deadline: None.

Abstract: These regulations propose changes in the policies and procedures to be followed by, and the structure of, SSA's Appeals Council which conducts the last step in the administrative review process; clarify certain issues with respect to the scope of that review; and make changes in other parts of the process related thereto. The regulations will also propose changes in the regulations concerning SSA's authority to reopen and revise determinations and decisions which have become final.

Timetable:

Action	Date	FR Cite
Next Action Undetermined		

Small Entity: No

Agency Contact: Philip Berge, Legal Assistant, Department of Health and Human Services, Social Security Administration, Office of Regulations, 6401 Security Boulevard, Baltimore, MD 21235, 301 965-1769

RIN: 0960-AC15

---

626. SUPPLEMENTAL SECURITY INCOME PROGRAM; EMPLOYMENT OPPORTUNITIES FOR THE DISABLED

Legal Authority: PL 99-643, Sec 2; PL 99-643, Sec 3; PL 99-643, Sec 4; PL 99-643, Sec 5

CFR Citation: 20 CFR 416.260; 20 CFR 416.261; 20 CFR 416.262; 20 CFR 416.263; 20 CFR 416.264; 20 CFR 416.265; 20 CFR 416.266; 20 CFR 416.267; 20 CFR 416.268; 20 CFR 416.269; 20 CFR 416.211; 20 CFR 416.414; 20 CFR 416.640; 20 CFR 416.901; 20 CFR 416.990; ...

Legal Deadline: None.

Abstract: These proposed regulations will implement statutory changes contained in sections 2, 3, 4, and 5 of P.L. 99-643. These provisions: (1) make section 1619 of the Social Security Act permanent; (2) allow certain blind and disabled beneficiaries to receive up to 2 months of SSI benefits during temporary periods when they are in certain institutions; (3) simplify the transitions among regular SSI status, special benefit status, and special Medicaid status; and (4) require that SSI recipients be appropriately informed of the availability of section 1619 benefits.

Timetable:

Action	Date	FR Cite
NPRM	11/00/88	

Small Entity: Undetermined

Agency Contact: Harry Short, Legal Assistant, Department of Health and Human Services, Social Security Administration, Office of Regulations, 6401 Security Blvd., Baltimore, MD 21235, 301 965-1757

RIN: 0960-AC22

---

627. SUPPLEMENTAL SECURITY INCOME PROGRAM; PERMANENT RESIDENCE IN THE UNITED STATES UNDER COLOR OF LAW - ADDITIONAL CATEGORY

Significance: Agency Priority

Legal Authority: 42 USC 1382c; PL 99-603

CFR Citation: 20 CFR 416.1618; 20 CFR 416.1615

Legal Deadline: None.

Abstract: This proposed regulation will add the specific categories of aliens legalized by P. L. 99-603 to be considered permanently residing in the United States under color of law or lawfully admitted for permanent residence in the United States.

Timetable:

Action	Date	FR Cite
NPRM	08/00/88	

Small Entity: No

Agency Contact: David Smith, Legal Assistant, Department of Health and Human Services, Social Security Administration, Office of Regulations, 6401 Security Blvd., Baltimore, MD 21235, 301 965-1758

RIN: 0960-AC26

---

628. OLD-AGE, SURVIVORS, AND DISABILITY INSURANCE PROGRAM; WAGES-- DEFERRED COMPENSATION

Legal Authority: PL 98-21; PL 99-514; PL 98-369

CFR Citation: 20 CFR 404.1041; 20 CFR 404.1042; 20 CFR 404.1068; 20 CFR 404.1049; 20 CFR 404.1050; 20 CFR 404.1001; 20 CFR 404.1026; 20 CFR 404.1046; 20 CFR 404.1048; 20 CFR 404.1051; 20 CFR 404.1052; 20 CFR 404.1053; 20 CFR 404.1054; 20 CFR 404.1058; 20 CFR 404.1070; ...

Legal Deadline: None.

Abstract: P. L. 98-21, the Social Security Amendments of 1983, changed the timing of crediting deferred compensation for Social Security purposes. It also changed the treatment of retirement pay depending upon whether it is paid under a qualified deferred compensation plan. Further, it excluded from coverage various fringe benefits and payments under a Simplified Employee Pension Plan (SEP). Finally, the amendments codify certain provisions pertaining to meals and lodging and tax-sheltered annuities. P.L. 98-369 amended the wage exclusion for qualified bond purchase plans. P.L. 99-514 excluded from coverage payments under a cafeteria plan as described in section 125 of the Internal Revenue Code. Section 1882 of P.L. 99-514 amends the law for determining self-employment income when an individual works for a church or church-controlled organization which has elected not to pay social security taxes. Section 1704 of P.L. 99-514 amends the law for receiving an exemption from social security coverage for members of religious orders, ministers, and Christian Science practitioners. The regulations will be updated to reflect and implement these statutory provisions.

Timetable:

Action	Date	FR Cite
NPRM	06/00/88	

Small Entity: Undetermined

Additional Information: Since the new rules are mandated by legislation, any costs or effects upon small entities are a result of the legislation and not a result of the proposed regulations.

Agency Contact: Charles Campbell, Legal Assistant, Department of Health and Human Services, Social Security Administration, Office of Regulations, 6401 Security Blvd., Baltimore, MD 21235, 301 965-1794

RIN: 0960-AC27

---

629. SUPPLEMENTAL SECURITY INCOME PROGRAM; PAYMENT OF BENEFITS DUE DECEASED RECIPIENTS

Legal Authority: 42 USC 1383(b)(1)(A)

CFR Citation: 20 CFR 416.340; 20 CFR 416.345; 20 CFR 416.536; 20 CFR 416.542; 20 CFR 416.543; 20 CFR 416.1457(c)(4)

Legal Deadline: None.

Abstract: Section 8 of Pub. L. 99-643 provides that effective for benefits payable for months after May 1986, an underpayment shall be paid to any surviving spouse of a deceased SSI recipient whether or not the spouse was eligible for SSI, if such spouse was living in the same household with the recipient at the time of death, or within the 6 months immediately preceding the month of death, or to the parent(s) of a deceased disabled or blind child who was an SSI recipient if the child was living with the parent(s) at the time of death or within the 6 months immediately preceding the month of death. We are changing our regulations to conform to the statutory provision. Annual cost is not expected to exceed $1 million.

Timetable:

Action	Date	FR Cite
NPRM	08/00/88	

Small Entity: No

Agency Contact: Larry Dudar, Legal Assistant, Department of Health and Human Services, Social Security Administration, Office of Regulations, 6401 Security Blvd., Baltimore, MD 21235, 301 965-1795

RIN: 0960-AC28

VOL 53 ISS 79 PT 1 AP 25 1988 UMI

630. OLD-AGE, SURVIVORS, AND DISABILITY INSURANCE AND SUPPLEMENTAL SECURITY INCOME PROGRAMS; CONSIDERATION OF VOCATIONAL FACTORS

Legal Authority: 42 USC 421; 42 USC 423; 42 USC 1302; 42 USC 1382c; 42 USC 405; 42 USC 1383

CFR Citation: 20 CFR 404.1560; 20 CFR 416.960

Legal Deadline: None.

Abstract: These proposed regulations reflect longstanding policies followed by the Social Security Administration in making disability determinations and remove an ambiguity which exists in the present regulations regarding the factors that are considered when it is determined that a claimant is not disabled because he or she is able to do his or her past work. These proposed regulations do not reflect a substantive change in policy and are intended only to clarify what has always been agency policy.

Timetable:

Action	Date	FR Cite
NPRM	04/00/88	

Small Entity: No

Agency Contact: William J. Ziegler, Legal Assistant, Department of Health and Human Services, Social Security Administration, Office of Regulations, 6401 Security Boulevard, Baltimore, MD 21235, 301 965-1759

RIN: 0960-AC31

631. ORGANIZATION AND PROCEDURES, AND OASDI PROGRAMS; EVIDENCE REQUIRED FOR ORIGINAL OR DUPLICATE SOCIAL SECURITY NUMBER CARD

Legal Authority: 42 USC 405; 42 USC 1302

CFR Citation: 20 CFR 422B

Legal Deadline: None.

Abstract: The proposed regulations will allow the Social Security Administration (SSA) to test procedures that will provide an exception to the current requirement that an applicant for a duplicate card must submit corroborative evidence of identity. This will enable us to test procedures that would allow us to conduct much of our business in processing applications for duplicate Social Security number cards by telephone.

Timetable:

Action	Date	FR Cite
Next Action Undetermined		

Small Entity: No

Agency Contact: Jack Schanberger, Legal Assistant, Department of Health and Human Services, Social Security Administration, Office of Regulations, 6401 Security Boulevard, Baltimore, MD 21235, 301 965-8471

RIN: 0960-AC32

632. ORGANIZATION AND PROCEDURES, AND OLD-AGE, SURVIVORS, AND DISABILITY INSURANCE PROGRAMS; SOCIAL SECURITY NUMBER CARDS FOR ALIENS

Legal Authority: 42 USC 405; 42 USC 1302

CFR Citation: 20 CFR 422B

Legal Deadline: None.

Abstract: The proposed regulation will reflect the role of the Immigration and Naturalization Service in obtaining applications for Social Security numbers from aliens when they apply for temporary legal resident status. Rules on evidence needed to support an application are being updated and revised. The proposed regulations will also reflect the role of the States in obtaining applications for Social Security numbers from welfare claimants and recipients. Savings for the Federal government are estimated to be $5.9 million for FY 1988 and $6.3 million for subsequent years.

Timetable:

Action	Date	FR Cite
NPRM	07/00/88	

Small Entity: No

Agency Contact: Jack Schanberger, Legal Assistant, Department of Health and Human Services, Social Security Administration, Office of Regulations, 6401 Security Boulevard, Baltimore, MD 21235, 301 965-8471

RIN: 0960-AC34

633. ● OLD-AGE SURVIVORS AND DISABILITY INSURANCE AND SUPPLEMENTAL SECURITY INCOME PROGRAMS; PAST WORK EXPERIENCE AND ADJUSTMENT TO OTHER WORK

Legal Authority: 42 USC 405; 42 USC 1302; 42 USC 1383

CFR Citation: 20 CFR 404.1562; 20 CFR 404.1565; 20 CFR 416.962; 20 CFR 416.965

Legal Deadline: None.

Abstract: We are proposing to include in our regulations vocational evaluation standards used in determining disability under titles II and XVI of the Social Security Act (the Act). The guidelines apply to assessing past work as a vocational factor and evaluating medical-vocational circumstances demonstrating an inability to make an adjustment to other work. These standards are presently contained in Social Security Rulings (SSR's) and the Program Operating Manual System (POMS).

Timetable:

Action	Date	FR Cite
NPRM	10/00/88	

Small Entity: No

Agency Contact: William J. Ziegler, Legal Assistant, Department of Health and Human Services, Social Security Administration, Office of Regulations, 6401 Security Boulevard, Baltimore, MD 21235, 301 965-1759

RIN: 0960-AC39

634. ● OLD-AGE SURVIVORS AND DISABILITY INSURANCE AND SUPPLEMENTAL SECURITY INCOME PROGRAMS; CANCELLED CONSULTATIVE EXAMINATIONS

Legal Authority: 42 USC 405; 42 USC 1302; 42 USC 1383

CFR Citation: 20 CFR 404.1624; 20 CFR 416.1024

Legal Deadline: None.

Abstract: We are proposing to no longer pay for consultative examinations when services are not rendered because the scheduled appointment was broken or otherwise not kept. Presently, the States decide whether to pay for these canceled examinations and such payments have already been abolished in 22 States. The total elimination of these payments will establish a uniform national policy

and result in considerable Trust Fund savings.

Timetable:

Action	Date	FR Cite
NPRM	09/00/88	

Small Entity: No

Agency Contact: William J. Ziegler, Legal Assistant, Department of Health and Human Services, Social Security Administration, Office of Regulations, 6401 Security Boulevard, Baltimore, MD 21235, 301 965-1759

RIN: 0960-AC40

635. ● OLD-AGE SURVIVORS AND DISABILITY INSURANCE AND SUPPLEMENTAL SECURITY INCOME PROGRAMS; DETERMINING DISABILITY AND BLINDNESS; FEE LIMITATION POLICY FOR PURCHASE OF LABORATORY TESTS

Legal Authority: 42 USC 1302; 42 USC 1383b

CFR Citation: 20 CFR 404.1624; 20 CFR 416.1024

Legal Deadline: None.

Abstract: These proposed regulations will place a limitation on the rates of payment a State may pay for laboratory tests purchased by the disability determination services (DDS). Under these proposed regulations a DDS will be required to limit the amounts it pays for laboratory tests to the maximum payment level contained in the Health Care Financing Administration's (HCFA) Medicare Limitation Amounts for Laboratory Fee Schedules. Currently the only payment requirement is that the rates of payment not exceed the highest rates paid by Federal or other agencies in the State for the same or similar types of services.

Timetable:

Action	Date	FR Cite
NPRM	10/00/88	

Small Entity: Undetermined

Agency Contact: Harry J. Short, Legal Assistant, Department of Health and Human Services, Social Security Administration, Office of Regulations, 6401 Security Boulevard, Baltimore, MD 21235, 301 965-1757

RIN: 0960-AC41

DEPARTMENT OF HEALTH AND HUMAN SERVICES (HHS) — Final Rule Stage

Social Security Administration (SSA)

636. OLD-AGE, SURVIVORS, AND DISABILITY INSURANCE PROGRAM; COVERAGE OF EMPLOYEES OF STATE AND LOCAL GOVERNMENTS

Legal Authority: 42 USC 418; 42 USC 1302; PL 98-21, Sec 103; PL 98-21, Sec 342; PL 99-272, Sec 12110; PL 99-509, Sec 9002

CFR Citation: 20 CFR 404, Subpart M

Legal Deadline: None.

Abstract: This proposed regulation reflects policies and procedures concerning agreements between States and the Secretary for Social Security coverage of State and local employees, payment of Social Security contributions, filing of wage reports by States, charging interest for late payments, etc. The current rules need to be organized into a logical sequence and to be updated to reflect many policies which SSA has followed for many years. In preparing this regulation, we reviewed all policies to assess their impact on the trust funds and to reduce recordkeeping burdens. We also added the provisions of section 103 of Pub. L. 98-21. Sec. 103 prohibits termination of existing coverage under the States' agreements. When the regulations are published in final form, we will also add language to implement Pub. L. 99-272 sec. 12110, which provides a uniform effective date for coverage agreements and modifications of agreements, and a provision of sec. 10002 of the Omnibus Budget Reconciliation Act of 1986 which transfers from SSA to IRS all responsibility for the contributions and reporting for covered State and local wages paid after 1986.

Timetable:

Action	Date	FR Cite
Notice of Decision to Develop Regs	09/26/79	44 FR 55899
Notice of Available Working Draft	09/26/80	45 FR 63868
NPRM	05/29/86	51 FR 19468
NPRM Comment Period End	09/26/86	
Final Action	05/00/88	

Small Entity: No

Agency Contact: Duane Heaton, Legal Assistant, Department of Health and Human Services, Social Security Administration, Office of Regulations, 6401 Security Boulevard, Baltimore, MD 21235, 301 965-8470

RIN: 0960-AA13

637. SUPPLEMENTAL SECURITY INCOME PROGRAM; REDUCTIONS, SUSPENSIONS AND TERMINATIONS

Legal Authority: 42 USC 1302; 42 USC 1382; 42 USC 1382a; 42 USC 1382b; 42 USC 1382c; 42 USC 1382d; 42 USC 1383

CFR Citation: 20 CFR 416, Subpart M

Legal Deadline: None.

Abstract: This regulation reorganizes, revises, and clarifies the rules on withholding, reducing, suspending, and terminating an SSI beneficiary's benefits. These regulations include changes in the present rules that are required by recent statutory enactments and, additionally, make the rules easier to read and understand. This regulation will have no impact on SSA programs and administrative costs.

Timetable:

Action	Date	FR Cite
Notice of Decision to Develop Regs	06/19/79	44 FR 35241
NPRM	05/08/86	51 FR 17057
NPRM Comment Period End	07/07/86	
Final Action	07/00/88	

Small Entity: No

Agency Contact: Charles H. Campbell, Legal Assistant, Department of Health and Human Services, Social Security Administration, Office of Regulations, 6401 Security Boulevard, Baltimore, MD 21235, 301 965-1794

RIN: 0960-AA22

638. OLD-AGE, SURVIVORS, AND DISABILITY INSURANCE PROGRAM; PROVISION FOR INFERRING A PERSON IS DEAD

Legal Authority: 42 USC 405; 42 USC 1302; 30 USC 923

CFR Citation: 20 CFR 404, Subpart H

Legal Deadline: None.

Abstract: These regulations would clarify our rules on evidence that is needed to presume that a person is dead in order for a claimant to collect the lump-sum death payment or survivors benefits under the Old-Age, Survivors, and Disability Insurance program.

Timetable:

Action	Date	FR Cite
NPRM	02/29/84	49 FR 07405
NPRM Comment Period End	04/30/84	

Next Action Undetermined

Small Entity: No

Agency Contact: Phil Berge, Legal Assistant, Department of Health and Human Services, Social Security Administration, Office of Regulations, 6401 Security Boulevard, Baltimore, Maryland 21235, 301 965-1769

RIN: 0960-AA54

639. SUPPLEMENTAL SECURITY INCOME PROGRAM; REOPENING AND REVISING SUPPLEMENTAL SECURITY INCOME DETERMINATIONS AND DECISIONS WITHIN FOUR YEARS OF THE NOTICE OF THE INITIAL DETERMINATION

Legal Authority: 42 USC 1302; 42 USC 1383; 42 USC 1383b

CFR Citation: 20 CFR 416.1488

Legal Deadline: None.

Abstract: The proposed rules would provide for the reopening and revising of Supplemental Security Income determinations within four years of the notice of the initial determination if we discovered an error affecting a claimant's eligibility or benefit amount during this period through the use of information exchange and data gathering involving either our records or our records and those of other Federal or State agencies.

Timetable:

Action	Date	FR Cite
NPRM	08/27/86	51 FR 30499
NPRM Comment Period End	10/27/86	

Next Action Undetermined

Small Entity: No

Agency Contact: Philip Berge, Legal Assistant, Department of Health and Human Services, Social Security Administration, Office of Regulations, 6401 Security Boulevard, Baltimore, Maryland 21235, 301 965-1769

RIN: 0960-AA59

640. OLD-AGE, SURVIVORS, AND DISABILITY INSURANCE PROGRAM; COVERAGE OF CERTAIN FEDERAL EMPLOYEES; COVERAGE OF EARNINGS OF FEDERAL JUDGES

Legal Authority: PL 98-21, Sec 101; PL 98-118, Sec 4; PL 99-272, Sec 12112; PL 99-335, Sec 301; PL 97-248, Sec 278; PL 98-369, Sec 2601; PL 99-221, Sec 3

CFR Citation: 20 CFR 404.1018

Legal Deadline: None.

Abstract: The proposed regulations would codify section 101 of Pub. L. 98-21, as amended by sec. 4 of Pub. L. 98-118, which generally provides Social Security coverage for certain Federal employees and covers certain payments to retired Federal judges after 1985. Estimated increased revenues (resulting from this legislation) for 1984-1989 are $9.4 billion. Long-range savings are estimated at .28 percent of taxable payroll. Also, the proposed regulations would codify section 12112 of Pub. L. 99-272 which provides exemption from Social Security coverage for retired Federal judges on active duty. In addition, the proposed regulations would provide: 1) that Federal employees not otherwise subject to the Social Security tax are nevertheless subject to the Health Insurance portion of the tax under Pub. L. 97-248, 2) that individuals covered by the Civil Service Retirement System may elect during a limited time to be covered under the Federal Employees Retirement System, which includes Social Security coverage under Pub. L. 99-335, and 3) that certain periods are excluded in determining continuous Federal service under Pub. L. 98-369 and Pub. L. 99-221.

Timetable:

Action	Date	FR Cite
Final Action	05/00/88	

Small Entity: No

Agency Contact: Duane Heaton, Legal Assistant, Department of Health and Human Services, Social Security Administration, Office of Regulations, 6401 Security Boulevard, Baltimore, MD 21235, 301 965-0470

RIN: 0960-AA89

641. OLD AGE SURVIVORS DISABILITY INSURANCE AND SUPPLEMENTAL SECURITY INCOME PROGRAMS; STANDARDS FOR CONSULTATIVE EXAMINATIONS; EXISTING MEDICAL EVIDENCE

Significance: Regulatory Program

Legal Authority: PL 98-460, Sec 9; 42 USC 405; 42 USC 421; 42 USC 423; 42 USC 1302; 42 USC 1382c; 42 USC 1383

CFR Citation: 20 CFR 404.1512; 20 CFR 416.912; 20 CFR 404.1519; 20 CFR 416.919; 20 CFR 404.1502; 20 CFR 416.920; 20 CFR 404.1593; 20 CFR 416.993; 20 CFR 416.902; 20 CFR 404.1513; 20 CFR 416.913; 20 CFR 404.1520; 20 CFR 404.1545; 20 CFR 416.945; 20 CFR 404.1546; ...

Legal Deadline: Statutory, April 7, 1985.

Abstract: The proposed regulations include standards for obtaining consultative examinations, the types of consultative examination referrals to be made, and monitoring procedures for consultative examinations and the referral process. The proposed regulations also provide for evaluating all medical evidence of record and developing a 12-month medical history. References to "medical assessments" will be replaced by references to medical source statements as to what a person can still do despite his or her impairment(s). The regulations also set forth the standards to be used in evaluating the medical opinions of treating and other medical sources. The changes will not have any significant impact on either administrative or program costs.

Timetable:

Action	Date	FR Cite
NPRM	04/20/87	52 FR 13014
NPRM Comment Period End	06/19/87	
Final Action	09/00/88	

Small Entity: No

Agency Contact: William Ziegler, Legal Assistant, Department of Health and Human Services, Social Security Administration, Office of Regulations, 6401 Security Blvd., Baltimore, MD 21235, 301 965-1759

RIN: 0960-AB22

642. SUPPLEMENTAL SECURITY INCOME PROGRAMS; ASSIGNMENT OF RIGHTS TO THIRD-PARTY MEDICAL PAYMENTS TO STATE

Legal Authority: 42 USC 1383c; 42 USC 1396k; 31 USC 0505; 42 USC 1396a; 42 USC 1302; 42 USC 1383

CFR Citation: 20 CFR 416.2101 to 416.2176

Legal Deadline: None.

Abstract: Our current regulations implementing section 1634 of the Social Security Act provide that SSA will make determinations for the State on whether aged, blind, or disabled people are eligible for Medicaid if the State's Medicaid requirements for these people are the same as SSI eligibility requirements. Sec. 2367 of Pub. L. 98-369 mandates that States require, as a condition of Medicaid eligibility, that a person assign to the State his or her rights (as well as the rights of any other Medicaid eligible person on whose behalf he or she has the legal authority to execute such an assignment of rights) to any medical care and support available under an order of a court or an administrative agency and any third-party payments for medical care (except Medicare). This is a Medicaid requirement that is different from SSI requirements. We plan to amend our regulations to provide that in making the Medicaid eligibility determination under a section 1634 agreement, SSA will also determine that the new assignment requirement has been met. The regulations will similarly allow for any other non-SSI Medicaid requirement mandated by Federal law, such as that added by sec. (cont.)

Timetable:

Action	Date	FR Cite
NPRM	05/09/86	51 FR 17200
NPRM Comment Period End	07/08/86	
Final Action	05/00/88	

Small Entity: No

Additional Information: ABSTRACT CONT: 9503 of Pub. L. 99-272 (concerning the provision of third party liability data). The resulting cost for SSA is estimated as less than $1 million a year, of which States would pay half. We are also rewriting and reorganizing our regulations for making Medicaid determinations.

Agency Contact: C. H. Campbell, Legal Assistant, Department of Health and Human Services, Social Security Administration, Office of Regulations, 6401 Security Boulevard, Baltimore, Maryland 21235, 301 965-1794

RIN: 0960-AB28

643. SUPPLEMENTAL SECURITY INCOME PROGRAM; HOW WE COUNT UNEARNED INCOME--FUNDS USED TO PAY INDEBTEDNESS

Legal Authority: 42 USC 1302; 42 USC 1382a

CFR Citation: 20 CFR 416.1123(b)

Legal Deadline: None.

Abstract: The issue is whether amounts otherwise due an individual assigned to repay a legal obligation should continue to be included in income under the Supplemental Security Income (SSI) program. The proposed regulation will clarify that we count such amounts as income. Because this clarification only will reflect current operating policy, no costs/savings are anticipated.

Timetable:

Action	Date	FR Cite
NPRM	09/15/87	52 FR 34813
NPRM Comment Period End	11/16/87	
Final Action	11/00/88	

Small Entity: Not Applicable

Agency Contact: Irving Darrow, Legal Assistant, Department of Health and Human Services, Social Security Administration, Office of Regulations, 6401 Security Blvd., Baltimore, Maryland 21235, 301 965-1755

RIN: 0960-AB29

644. OLD-AGE, SURVIVORS, AND DISABILITY INSURANCE AND SUPPLEMENTAL SECURITY INCOME PROGRAMS; CONTINUED PAYMENT OF BENEFITS DURING APPEAL

Legal Authority: 42 USC 405; 42 USC 423; 42 USC 1302; 42 USC 1382c; 42 USC 1383; PL 97-455, Sec 2; PL 98-118, Sec 2; PL 98-460, Sec 7; PL 100-203, Sec 9009

CFR Citation: 20 CFR 404.1597; 20 CFR 404.1597a; 20 CFR 416.995; 20 CFR 416.996

Legal Deadline: None.

Abstract: These proposed rules which implement section 2 of Pub. L. 97-455, section 2 of Pub. L. 98-118, section 7 of Pub. L. 98-460and section 9009 of Pub. L 100-203 provide the following groups with the option to elect to continue receiving disability/blindness benefits and/or Medicare coverage pending reconsideration and/or a hearing before an administrative law judge on a medical cessation determination; recipients of disability insurance; adult child's, disabled widow's, disabled widower's, mother's and father's, or spouse's benefits based on having in care a disabled adult child; recipients of benefits based on having in care, a child under age 18 but over age 15, who is disabled and receiving child's benefits; recipients of SSI benefits based on disability or blindness. Any continued payments are subject to recovery as overpayments, subject to the same waiver provisions now in current law and regulations where the medical cessation decision is upheld on appeal.

Timetable:

Action	Date	FR Cite
NPRM	05/21/86	51 FR 18611
NPRM Comment Period End	07/21/86	
Final Action	06/00/88	

Small Entity: No

Agency Contact: Larry Dudar, Legal Assistant, Department of Health and Human Services, Social Security Administration, Office of Regulations, 6401 Security Boulevard, Baltimore, MD 21235, 301 965-1795

RIN: 0960-AB30

645. SUPPLEMENTAL SECURITY INCOME PROGRAM; TREATMENT OF OVERPAYMENTS WHEN RECIPIENT'S COUNTABLE ASSETS EXCEED LIMITS IN CERTAIN CASES

Legal Authority: 42 USC 1383(b)(4)

CFR Citation: 20 CFR 416

Legal Deadline: None.

Abstract: This proposed regulation reflects the provisions of section 2613 of P.L. 98-369 which provides for waiving recovery of an overpayment that is attributable solely to excess resources if the amount of the excess is $50 or less unless the overpaid recipient (and spouse if any) knowingly and willfully

failed to report the value of his/her resources accurately and timely.

Timetable:

Action	Date	FR Cite
NPRM	07/18/86	51 FR 26026
NPRM Comment Period End	09/16/86	
Final Action	04/00/88	

Small Entity: No

Agency Contact: Larry Dudar, Legal Assistant, Department of Health and Human Services, Social Security Administration, Office of Regulations, 6401 Security Boulevard, Baltimore, Maryland 21235, 301 965-1795

RIN: 0960-AB32

646. OLD AGE SURVIVORS DISABILITY INSURANCE AND SUPPLEMENTAL SECURITY INCOME PROGRAMS; DETERMINATIONS OF DISABILITY-COMPLIANCE, AND OTHER CHANGES

Legal Authority: 42 USC 405; 42 USC 421; 42 USC 1302; PL 98-460, Sec 17; 42 USC 1383

CFR Citation: 20 CFR 404.1601; 20 CFR 416.1001; 20 CFR 404.1602; 20 CFR 416.1002; 20 CFR 404.1615; 20 CFR 416.1015; 20 CFR 404.1620; 20 CFR 416.1020; 20 CFR 404.1632; 20 CFR 416.1023; 20 CFR 404.1626; 20 CFR 416.1026; 20 CFR 404.1627; 20 CFR 416.1027; 20 CFR 404.1633; ...

Legal Deadline: None.

Abstract: The regulations deal with the operation of State agencies which make disability determinations for the Social Security Disability program and the Supplemental Security Income for the Aged, Blind, and Disabled program under regulations and other written SSA guidelines. The regulations implement would have implemented a now expired provision of P.L. 98-460 which requires the Secretary to take definitive steps within specific time frames to assure the compliance of State agencies with SSA regulations and other written guidelines or proceed to terminate their participation in the SSA administered programs. The regulations also make other changes to improve the disability determination process and to clarify and update other administrative requirements. Cost/savings cannot be estimated at this time.

Timetable:

Action	Date	FR Cite
NPRM	04/25/86	51 FR 15638
NPRM Comment Period End	06/24/86	
Final Action	00/00/00	

Small Entity: No

Agency Contact: Irving Darrow, Legal Assistant, Department of Health and Human Services, Social Security Administration, Office of Regulations, 6401 Security Blvd., Baltimore, MD 21235, 301 965-1755

RIN: 0960-AB36

647. OLD AGE SURVIVORS DISABILITY INSURANCE AND SUPPLEMENTAL SECURITY INCOME PROGRAMS; PAYMENT OF COSTS OF REHABILITATION SERVICES

Legal Authority: PL 98-460, Sec 11; 42 USC 405; 42 USC 422; 42 USC 1302; 42 USC 1382d; 42 USC 1383

CFR Citation: 20 CFR 404, Subpart V; 20 CFR 416, Subpart V

Legal Deadline: None.

Abstract: Public Law 98-460 created 2 new provisions under which SSA will pay vocational rehabilitation (VR) agencies for the costs of services provided to disabled or blind social security beneficiaries or SSI recipients. Under the first new provision, SSA will allow payment to VRA's for the costs of VR services provided to individuals continuing to receive payment because they are participating in a VR program after their period of disability has ceased due to their medical recovery. The second new provision allows payment to VRA's for the costs of VR services provided to beneficiaries/recipients who refuse without good cause to continue or to cooperate in a VR program in such a way as to preclude their successful rehabilitation with such refusal resulting in the nonpayment of their disability or blindness payments. It is estimated that the first year costs of this program will be less than 1 million dollars.

Timetable:

Action	Date	FR Cite
NPRM	10/10/86	51 FR 36510
NPRM Comment Period End	12/09/86	
Final Action	05/00/88	

Small Entity: No

Agency Contact: Dave Smith, Legal Assistant, Department of Health and Human Services, Social Security Administration, Office of Regulations, 6401 Security Blvd., Baltimore, MD 21235, 301 965-1758

RIN: 0960-AB37

648. OLD AGE, SURVIVORS, DISABILITY INSURANCE AND SUPPLEMENTAL SECURITY INCOME PROGRAMS; DETERMINING DISABILITY AND BLINDNESS; MULTIPLE IMPAIRMENTS

Legal Authority: PL 98-460, Sec 4; 42 USC 405; 42 USC 423; 42 USC 1302; 42 USC 1382c

CFR Citation: 20 CFR 404.1520; 20 CFR 404.1521; 20 CFR 404.1522; 20 CFR 404.1523; 20 CFR 416.920; 20 CFR 416.921; 20 CFR 416.922; 20 CFR 416.923

Legal Deadline: None.

Abstract: This provision of the law requires us to consider the combined effect of all of a person's impairments in determining disability regardless of whether any single impairment, if considered separately, would be of sufficient severity. If we do find a medically severe combination of impairments, the combined impact of the impairments must be considered throughout the disability determination process. We are revising regulations to reflect that we will now consider the combined effect of impairments to determine severity. When the combined effect is found to be severe, the person's impairments are evaluated throughout the full sequential evaluation process.

Timetable:

Action	Date	FR Cite
Interim Final Rule	03/05/85	50 FR 08726
Final Action	00/00/00	

Small Entity: No

Agency Contact: William Ziegler, Legal Assistant, Department of Health and Human Services, Social Security Administration, Office of Regulations, 6401 Security Blvd., Baltimore, MD 21235, 301 965-1759

RIN: 0960-AB39

649. SUPPLEMENTAL SECURITY INCOME PROGRAM; SPOUSAL DEEMING COMPUTATION INVOLVING STATE SUPPLEMENTATION

Legal Authority: Bouchard v. Secretary, USDC (Mass 1984); Livermore v. Heckler, 743 F.2d 1396 (9th Cir. 1984); 42 USC 1382e

CFR Citation: 20 CFR 416.1163(d); 20 CFR 416.2025(b)

Legal Deadline: None.

Abstract: This proposed rule would use the Livermore decision as the basis for a nationwide policy providing that for purposes of calculating State supplementary payments an optional State supplementary rate for a couple would be used instead of the rate for an individual in spousal deeming cases.

Timetable:

Action	Date	FR Cite
NPRM	08/13/87	52 FR 30169
NPRM Comment Period End	10/13/87	
Final Action	07/00/88	

Small Entity: No

Agency Contact: Dave Smith, Legal Assistant, Department of Health and Human Services, Social Security Administration, 6401 Security Blvd., Baltimore, MD 21235, 301 965-1758

RIN: 0960-AB95

650. OLD-AGE, SURVIVORS, AND DISABILITY INSURANCE AND SUPPLEMENTAL SECURITY INCOME PROGRAMS; DECISIONS BY ADMINISTRATIVE LAW JUDGES IN CASES REMANDED BY COURTS

Legal Authority: 42 USC 405; 42 USC 1302; 42 USC 1383; 42 USC 401; 42 USC 421

CFR Citation: 20 CFR 404.953; 20 CFR 404.983; 20 CFR 404.984; 20 CFR 416.1453; 20 CFR 416.1483; 20 CFR 416.1484; 20 CFR 404.955; 20 CFR 404.986; 20 CFR 416.1455; 20 CFR 416.1486, (New)

Legal Deadline: None.

Abstract: If the court remands a case and the SSA Appeals Council remands it to an administrative law judge (ALJ), under current regulations the ALJ returns the case to the Appeals Council with a recommended decision, and the Appeals Council must review that decision and take further action in every case before the decision becomes final. This can involve delay. The proposed regulation would permit the ALJ to make a decision which would become final unless, within 30 days after the decision is received, the claimant files exceptions or within that period requests an extension of time to file exceptions, or within 60 days after the date of the decision the Appeals Council decides to review the decision on its own. The change will permit prompter final decisions and some administrative savings. It will not affect program cost.

Timetable:

Action	Date	FR Cite
NPRM	10/16/87	52 FR 38466
NPRM Comment Period End	12/15/87	
Final Action	09/00/88	

Small Entity: No

Agency Contact: Phil Berge, Legal Assistant, Department of Health and Human Services, Social Security Administration, 6401 Security Blvd., Baltimore, MD 21235, 301 965-1769

RIN: 0960-AC07

651. SUPPLEMENTAL SECURITY INCOME PROGRAM; PROHIBITION ON DIRECT PAYMENT OF FEES TO REPRESENTATIVES

Legal Authority: 42 USC 1302; 42 USC 1383

CFR Citation: 20 CFR 416.1520; 20 CFR 416.1525; 20 CFR 416.1528; 20 CFR 416.1335

Legal Deadline: None.

Abstract: In these proposed rules, we will state explicitly our policy of not withholding money from a claimant's retroactive SSI benefits to pay a fee directly to the claimant's representative. We believe that no authority exists under the Social Security Act for such withholding. Furthermore, such withholding is prohibited by the assignment provisions of section 207 of the Social Security Act. We expect no costs. The issue is now pending in Supreme Court in Galbreath, No. 86-1146, and any final regulation will be based on the Court's decision.

Timetable:

Action	Date	FR Cite
NPRM	03/17/87	52 FR 8309
NPRM Comment Period End	05/16/87	

Next Action Undetermined

Small Entity: No

Agency Contact: Jack Schanberger, Legal Assistant, Department of Health and Human Services, Social Security Administration, 6401 Security Blvd., Baltimore, MD 21235, 301 965-8471

RIN: 0960-AC08

652. SUPPLEMENTAL SECURITY INCOME PROGRAM; DEFINE OUT OF RESOURCES FOR ONE MONTH CERTAIN CASH PAYMENTS FOR MEDICAL/SOCIAL SERVICES

Legal Authority: 42 USC 1382(a)(1)(B)

CFR Citation: 20 CFR 416.1201(a)

Legal Deadline: None.

Abstract: The proposed revision would provide that, for one calendar month following receipt, money paid by a medical or social services program to enable someone to pay for an approved service would not be a resource. If still unexpended after a month, the money would be considered available for basic living expenses and so would be a resource. This will allow people a reasonable time in which to pay for services without affecting their supplemental security income eligibility. (The change would not apply to money which simply reimburses a person for a service payment already made.)

Timetable:

Action	Date	FR Cite
NPRM	10/06/87	52 FR 36725
NPRM Comment Period End	12/07/87	
Final Action	06/00/88	

Small Entity: No

Government Levels Affected: Federal

Agency Contact: Henry Lerner, Legal Assistant, Department of Health and Human Services, Social Security Administration, Office of Regulations, 6401 Security Boulevard, Baltimore, MD 21235, 301 965-1756

RIN: 0960-AC11

653. SUPPLEMENTAL SECURITY INCOME PROGRAM: FEDERAL ADMINISTRATION OF OPTIONAL STATE SUPPLEMENTATION

Legal Authority: 42 USC 1382e; 42 USC 1302

CFR Citation: 20 CFR 416.2030(a)(2); 20 CFR 416.2040(b)

Legal Deadline: None.

Abstract: 42 USC 1382e provides that at the option of a State with a federally administered optional supplementation program, the supplementation agreement between such State and the Secretary of HHS may be modified to allow Federal administration of optional supplementary payments to any individual in a medical facility where more than 50 percent of the individual's care is covered by the Medicaid program (Living Arrangements (LA) "D" recipients). The proposed regulation will reflect the amendment to the statute discussed above.

Timetable:

Action	Date	FR Cite
Interim Final Rule	06/00/88	

Small Entity: No

Public Compliance Cost: Initial Cost: $0; Yearly Recurring Cost: $0

Affected Sectors: None

Government Levels Affected: State, Federal

Agency Contact: Irving Darrow, Legal Assistant, Department of Health and Human Services, Social Security Administration, Office of Regulations, 6401 Security Boulevard, Baltimore, MD 21235, 301 965-1755

RIN: 0960-AC13

654. OLD-AGE, SURVIVORS, AND DISABILITY INSURANCE AND SUPPLEMENTAL SECURITY INCOME PROGRAMS; AGAINST EQUITY AND GOOD CONSCIENCE: DEFINED

Legal Authority: 42 USC 404; 42 USC 405; 42 USC 1302; 42 USC 1383(b)

CFR Citation: 20 CFR 404.509; 20 CFR 416.554

Legal Deadline: None.

Abstract: The proposed change would allow us to grant waiver of recovery of the overpayment to individuals who did not receive the overpayment, who are without fault, living in a separate household at the time of the overpayment, and who had no knowledge of the overpayment.

Timetable:

Action	Date	FR Cite
NPRM	03/30/87	52 FR 10116
NPRM Comment Period End	05/29/87	
Final Action	06/00/88	

Small Entity: No

Agency Contact: Duane Heaton, Legal Assistant, Department of Health and Human Services, Social Security Administration, Office of Regulations, 6401 Security Boulevard, Baltimore, MD 21235, 301 965-8470

RIN: 0960-AC33

655. OLD-AGE, SURVIVORS, AND DISABILITY INSURANCE PROGRAM; ADDITION OF DOWN SYNDROME TO THE LISTING OF IMPAIRMENTS

Legal Authority: 42 USC 1302; 42 USC 405

CFR Citation: 20 CFR 404P

Legal Deadline: None.

Abstract: We propose to add Down Syndrome to the multiple body systems, category of impairments, in Part B of the Listing of Impairments to provide for evaluation of Down syndrome claims according to the impairment criteria for the major system affected. The Listing of Impairments describes, for each of the major body systems, a level of severity which is considered sufficient to find a person disabled or blind under the disability program. Part B contains additional medical criteria that apply only to the evaluation of impairments of persons under age 18.

Timetable:

Action	Date	FR Cite
NPRM	10/05/87	52 FR 37161
NPRM Comment Period End	12/04/87	
Final Action	09/00/88	

Small Entity: No

Agency Contact: Harry J. Short, Legal Assistant, Department of Health and Human Services, Social Security Administration, Office of Regulations, 6401 Security Boulevard, Baltimore, MD 21235, 301 965-1757

RIN: 0960-AC35

DEPARTMENT OF HEALTH AND HUMAN SERVICES (HHS) — Completed Actions

Social Security Administration (SSA)

656. SUPPLEMENTAL SECURITY INCOME PROGRAM; MANDATORY PASS THROUGH UNDER STATE SUPPLEMENTATION PROVISIONS

Significance: Agency Priority

CFR Citation: 20 CFR 416, Subpart T

Completed:

Reason	Date	FR Cite
Final Action	09/28/87	52 FR 36235

Small Entity: No

Agency Contact: David Smith 301 594-7460

RIN: 0960-AA05

657. OLD-AGE, SURVIVORS, AND DISABILITY INSURANCE, SUPPLEMENTAL SECURITY INCOME, AND BLACK LUNG PROGRAMS; REPRESENTATION OF CLAIMANTS

CFR Citation: 20 CFR 404R; 20 CFR 410F; 20 CFR 416O

Completed:

Reason	Date	FR Cite
Regulation action discontinued	01/00/88	

Small Entity: No

Agency Contact: Ellan Hylton 202 235-2963

RIN: 0960-AA64

658. OLD-AGE, SURVIVORS, AND DISABILITY INSURANCE; EFFECT OF PENSION FROM NONCOVERED EMPLOYMENT

Significance: Regulatory Program

CFR Citation: 20 CFR 404, Subpart C

Completed:

Reason	Date	FR Cite
Final Action	12/17/87	52 FR 47914

Small Entity: No

Agency Contact: Duane Heaton 301 594-6624

RIN: 0960-AA65

659. SUPPLEMENTAL SECURITY INCOME PROGRAM; RESOURCE LIMITS FOR CONDITIONAL SSI PAYMENTS

CFR Citation: 20 CFR 416, Subpart L

Completed:

Reason	Date	FR Cite
Final Action	08/24/87	52 FR 31757

Small Entity: No

Agency Contact: Henry D. Lerner 301 594-7463

RIN: 0960-AA75

660. SUPPLEMENTAL SECURITY INCOME PROGRAM; PRESUMPTIVE DISABILITY AND PRESUMPTIVE BLINDNESS; CATEGORIES OF IMPAIRMENTS-AIDS

Significance: Agency Priority

CFR Citation: 20 CFR 416.934

Completed:

Reason	Date	FR Cite
Final Action	02/09/88	53 FR 03739

Small Entity: No

Agency Contact: William Ziegler 301 965-1759

RIN: 0960-AA79

561. OLD AGE SURVIVORS DISABILITY INSURANCE AND SUPPLEMENTAL SECURITY INCOME PROGRAMS; QUALIFICATIONS OF MEDICAL PROFESSIONALS EVALUATING MENTAL IMPAIRMENTS

Significance: Regulatory Program

CFR Citation: 20 CFR 404.1503; 20 CFR 404.1526; 20 CFR 404.1546; 20 CFR 404.1615; 20 CFR 404.1616; 20 CFR 404.1617; 20 CFR 416.903; 20 CFR 416.926; 20 CFR 416.946; 20 CFR 416.1015; 20 CFR 414.1016; 20 CFR 416.1017

Completed:

Reason	Date	FR Cite
Final Action	09/09/87	52 FR 33921

Small Entity: No

Agency Contact: William Ziegler 301 965-1759

RIN: 0960-AB31

662. DISCLOSURE OF PERSONAL INFORMATION TO LAW ENFORCEMENT AGENCIES AND COURTS (PRERULEMAKING ACTIVITY)

Significance: Regulatory Program

CFR Citation: 20 CFR 401.315

Completed:

Reason	Date	FR Cite
Regulation action discontinued	01/00/88	

Small Entity: No

Agency Contact: Larry Dudar 301 594-7459

RIN: 0960-AB66

663. OLD-AGE, SURVIVORS, AND DISABILITY INSURANCE AND SUPPLEMENTAL SECURITY INCOME PROGRAMS; USE OF WORK EVALUATIONS TO EVALUATE INDIVIDUALS WITH MENTAL IMPAIRMENTS

Significance: Regulatory Program

CFR Citation: 20 CFR 404.1548; 20 CFR 416.948

Completed:

Reason	Date	FR Cite
Regulation action discontinued	01/00/88	

Small Entity: Undetermined

Agency Contact: Harry Short 301 965-1757

RIN: 0960-AB92

664. OLD-AGE, SURVIVORS, AND DISABILITY INSURANCE, BLACK LUNG, AND SUPPLEMENTAL SECURITY INCOME PROGRAMS; APPOINTING ALJ'S TO HEAR AND DECIDE CASES

CFR Citation: 20 CFR 404.929; 20 CFR 416.1429; 20 CFR 410.630; 20 CFR 410.634

Completed:

Reason	Date	FR Cite
Regulation action discontinued	01/00/88	

Small Entity: No

Agency Contact: Jack Schanberger 301 594-6785

RIN: 0960-AB97

665. OLD-AGE, SURVIVORS, AND DISABILITY INSURANCE AND SUPPLEMENTAL SECURITY INCOME PROGRAMS; APPLICATION OF DEPENDENCY TEST TO ADOPTED GREAT-GRANDCHILDREN; DEMONSTRATION PROJECTS

CFR Citation: 20 CFR 404.362; 20 CFR 404.1599; 20 CFR 416.250

Completed:

Reason	Date	FR Cite
Final Action	10/08/87	52 FR 37603

Small Entity: No

Agency Contact: Henry Lerner 301 594-7463

RIN: 0960-AC23

DEPARTMENT OF HEALTH AND HUMAN SERVICES (HHS) — Completed Actions

Public Health Service (PHS)—Office of Assistant Secretary for Health (OASH)

666. STATUTORY PROHIBITION ON USE OF APPROPRIATED FUNDS IN PROGRAMS WHERE ABORTION IS A METHOD OF FAMILY PLANNING

Significance: Agency Priority

CFR Citation: 42 CFR 59

Completed:

Reason	Date	FR Cite
Final Action	02/02/88	53 FR 2922
Final Action Effective	03/03/88	53 FR 2922

Small Entity: No

Agency Contact: Nabers Cabaniss 202 245-0152

RIN: 0905-AC64

DEPARTMENT OF HEALTH AND HUMAN SERVICES (HHS)
Public Health Service (PHS)—Centers for Disease Control (CDC)

Final Rule Stage

667. PROJECT GRANTS FOR HEALTH PROGRAMS FOR REFUGEES

Legal Authority: 8 USC 1522(b) Section 412(b)(5) Immigration and Nationality Act; PL 96-212 Refugee Act of 1980; PL 97-363 Refugee Assistance Amendments of 1982

CFR Citation: 42 CFR 51e

Legal Deadline: None.

Abstract: Regulations are required by Department policy for this project grant program administered by the Centers for Disease Control (CDC) under an intra-agency agreement with the Office of Refugee Resettlement (ORR). The project grants are awarded to State and local health agencies to assist them in providing initial health assessments to arriving refugees. These health assessments specifically address conditions of public health concerns, like tuberculosis, and also identify personal health problems that could impair the effective resettlement of the refugee. CDC has established the program requirements, guidelines, and standards for evaluation.

Timetable:

Action	Date	FR Cite
NPRM	05/06/86	51 FR 16724
NPRM Comment Period End	07/07/86	
Final Action	06/00/88	

Small Entity: No

Additional Information: FTS 236-1802

Agency Contact: Anthony M. Scardaci, Associate Dir., Ctr. for Prevention Services, Department of Health and Human Services, Centers for Disease Control, 1600 Clifton Road, N.E., Atlanta, GA 30333, 404 329-1802

RIN: 0905-AB43

668. NIOSH REVISION OF TESTS AND REQUIREMENTS OF CERTIFICATION OF PERMISSIBILITY OF RESPIRATORY PROTECTIVE DEVICES USED IN MINES AND MINING

Significance: Regulatory Program

Legal Authority: 30 USC 801; 30 USC 844; 30 USC 957

CFR Citation: 30 CFR 11; 42 CFR 84

Legal Deadline: None.

Abstract: There are three major problems that the proposed regulatory action is intended to solve. First, the current regulatory provisions in 30 CFR 11 in some instances date back almost fifty years. As a result the provisions are not current with many of the extensive changes in respirator technology. Second, the current regulations do not provide for testing of respirators under either actual or simulated use conditions prior to certification. Third, the resources required to conduct routine respirator certification testing has made it difficult for NIOSH to keep respirator performance standards current with advances in respirator technology and with new knowledge on respirator performance characteristics. Alternatives considered: (1) the Federal government could relinquish the field entirely to the private sector. (2) The Federal government could promulgate performance standards but not be involved in assuring compliance with those standards. (3) The Federal government could continue to be the certifier of respirators but have manufacturers conduct testing. (4) The Federal government could continue its present role of total operation of the respirator system. NIOSH (cont)

Timetable:

Action	Date	FR Cite
NPRM	08/27/87	52 FR 32402
Final Action	10/00/88	

Small Entity: Undetermined

Additional Information: ABSTRACT CONT: selected alternative number (3). Cost is yet to be determined. Public hearings on the proposal were held on January 20, 1988 in San Francisco, and on January 27-28 in Washington D.C. The record for these hearings closed February 27, 1988.

Agency Contact: Dr. Nelson A. Leidel, Senior Science Advisor, Department of Health and Human Services, Public Health Service, Office of the Director, NIOSH 404 639-3901, Centers for Disease Control, 404 329-3773

RIN: 0905-AB58

DEPARTMENT OF HEALTH AND HUMAN SERVICES (HHS)
Public Health Service (PHS)—Food and Drug Administration (FDA)

Prerule Stage

669. DRUG EXPORTS

Significance: Agency Priority

Legal Authority: PL 99-660 Drug Export Amendment Act of 1986

CFR Citation: Not yet determined

Legal Deadline: None.

Abstract: The Drug Export Amendment Act of 1986 authorizes the export for commercial marketing abroad of veterinary and human drugs not approved for marketing in the United States. Under previous law, the export of new human and animal drugs for marketing was confined to drugs that were approved by FDA for domestic use. The law establishes three separate pathways for the export of unapproved products. Under each pathway, FDA approval is required before export is permitted. As a prerulemaking activity, FDA is developing guidance material for manufacturers instructing them as to what information must be submitted to the agency to obtain approval for the export of unapproved products. The guidance material will also identify FDA sources of information on agency practices and policies concerning the implementation of the Drug Export Amendment Act of 1986. The agency will then decide what, if any, regulations are necessary for the efficient implementation of the amendment, and establish timeframes for the development of those regulations.

Timetable:

Action	Date	FR Cite
Next Action Undetermined		

Small Entity: Undetermined

Agency Contact: Wayne Mitchell, Regulatory Counsel, Division of Regulatory Affairs, Department of Health and Human Services, Food and Drug Administration, Center for Drug Evaluation and Research (HFN-362), 5600 Fishers Lane, Rockville, MD 20857, 301 295-8046

RIN: 0905-AC44

DEPARTMENT OF HEALTH AND HUMAN SERVICES (HHS) **Proposed Rule Stage**
Public Health Service (PHS)—Food and Drug Administration (FDA)

670. OVER-THE-COUNTER (OTC) DRUG REVIEW

Significance: Agency Priority

Legal Authority: 21 USC 321(p) Federal Food, Drug, and Cosmetic Act; 21 USC 352 Federal Food, Drug, and Cosmetic Act; 21 USC 355 Federal Food, Drug, and Cosmetic Act; 21 USC 371(a) Federal Food, Drug, and Cosmetic Act

CFR Citation: 21 CFR 310; 21 CFR 330; 21 CFR 333; 21 CFR 334; 21 CFR 335; 21 CFR 336; 21 CFR 337; 21 CFR 338; 21 CFR 339; 21 CFR 340; 21 CFR 341; 21 CFR 342; 21 CFR 343; 21 CFR 344; 21 CFR 345; ...

Legal Deadline: None.

Abstract: The OTC drug review establishes conditions under which OTC drugs are considered generally recognized as safe and effective and not misbranded. After a final monograph (i.e., final rule) is issued, only OTC drugs meeting the conditions of the monograph, or having an approved new drug application, may be legally marketed. NOTE: NPRM for "Antidotes, Toxic Ingestion Products" to be combined with NPRM for "Emetic Products" and reproposed as "Poison Treatment Products." NPRM for "Astringent (Wet Dressings) Products" to be included in NPRMs for "External Analgesic" & "Skin Protectant Products." NPRM for "Diaper Rash Products" to be included in NPRMs for "Antifungal," "Antimicrobial," "External Analgesic" and "Skin Protectant Products." NPRM for "Fever Blister/Cold Sore Products (External)" to be included in NPRMs for "External Analgesic" and "Skin Protectant Products." NPRM for "Insect Bites and Stings (Relief) Products" to be included in NPRMs for "External Analgesic" and "Skin Protectant Products." "Poison Ivy/Oak/Sumac Prevention" to be included in NPRMs for "External Analgesic" and "Skin Protectant Products." NPRM for "Mercurial (Topical) Products" to be included in NPRM (cont)

Timetable:

Acne (Topical) Products
- ANPRM 03/23/82 (47 FR 12430)
- NPRM 01/15/85 (50 FR 2172)
- Final Action 00/00/00

Alcohol (Topical) Products
- ANPRM 05/21/82 (47 FR 22324)

Anorectal Products
- ANPRM 05/27/80 (45 FR 35576)
- NPRM 09/00/88

Antacid Drug Products
- ANPRM 04/05/73 (38 FR 8714)
- NPRM 11/12/73 (38 FR 31260)
- Final Action 06/04/74 (39 FR 9862)

Anthelmintic Products
- ANPRM 09/09/80 (45 FR 59541)
- NPRM 08/24/82 (47 FR 37062)
- Final Action 08/01/86 (51 FR 27756)

Antibiotic First Aid Products
- ANPRM 04/01/77 (42 FR 17642)
- NPRM 07/09/82 (47 FR 29986)
- Final Action 12/11/87 (52 FR 47312)

Anticaries Products
- ANPRM 03/28/80 (45 FR 20666)
- NPRM 09/30/85 (50 FR 39854)
- NPRM 09/00/88

Antidiarrheal Products
- ANPRM 03/21/75 (40 FR 12924)
- NPRM 04/30/86 (51 FR 16138)
- Final Action 00/00/00

Antidotes, Toxic Ingestion Prdts (Now Poison Treatment Prdts)
- ANPRM 01/05/82 (47 FR 444)

Antiemetic Products
- ANPRM 03/21/75 (40 FR 12934)
- NPRM 07/13/79 (44 FR 41064)
- Final Action 04/30/87 (52 FR 15886)

Antiflatulent Drug Products
- NPRM 11/12/73 (38 FR 31260)
- Final Action 06/04/74 (39 FR 19877)
- NPRM (Amendment) 01/29/88 (53 FR 2716)

Antifungal (Topical) Products
- ANPRM 03/23/82 (47 FR 12480)
- NPRM 09/00/88

Antimicrobial Products
- ANPRM 09/13/74 (39 FR 33103)
- NPRM 01/06/78 (43 FR 1210)
- Revised NPRM-final 09/00/88

Antiperspirant Products
- ANPRM 10/10/78 (43 FR 46694)
- NPRM 06/20/82 (47 FR 36492)
- Final Action 00/00/00

Aphrodisiac Products
- ANPRM 10/01/82 (47 FR 43572)
- NPRM 01/15/85 (50 FR 2168)
- Final Action 00/00/00

Astringent (Wet Dressings) Prdts (To be merged w/other rulemkg)
- ANPRM 09/07/82 (47 FR 39436)

Benign Prostatic Hypertrophy Products
- ANPRM 10/01/82 (47 FR 43566)
- NPRM 02/20/87 (52 FR 5406)

Boil Ointments
- ANPRM 06/29/82 (47 FR 28306)
- NPRM 01/26/88 (53 FR 2198)
- Final Action 00/00/00

Camphorated Oil Drug Products
- ANPRM 09/26/80 (45 FR 63869)
- Final Action 09/21/82 (47 FR 41716)

Cholecystokinetic Products
- ANPRM 02/12/80 (45 FR 9286)
- NPRM 08/24/82 (47 FR 37068)
- Final Action 06/10/83 (48 FR 27004)

Corn and Callus Remover Products
- ANPRM 01/05/82 (47 FR 522)
- NPRM 02/20/87 (52 FR 5412)
- Final Action 00/00/00

Cough/Cold (Anticholinergic) Products
- ANPRM 09/09/76 (41 FR 38312)
- NPRM 07/09/82 (47 FR 30002)
- Final Action 11/08/85 (50 FR 46582)

Cough/Cold (Antihistamine) Products
- ANPRM 09/09/76 (41 FR 38312)
- NPRM 01/15/85 (50 FR 2200)
- NPRM (Amendment) 08/24/87 (52 FR 31692)
- Final Action 00/00/00

Cough/Cold (Antitussive) Products
- ANPRM 09/09/76 (41 FR 38312)
- NPRM 10/19/83 (48 FR 48576)
- Final Action 08/12/87 (52 FR 30042)

Cough/Cold (Bronchodilator) Products
- ANPRM 09/09/76 (41 FR 38312)
- NPRM 10/26/82 (47 FR 47520)
- Final Action 10/02/86 (51 FR 35326)

Cough/Cold (Combination) Products
- ANPRM 09/09/76 (41 FR 38312)
- NPRM 09/00/88

Cough/Cold (Expectorant) Products
- ANPRM 09/09/76 (41 FR 38312)
- NPRM 07/09/82 (47 FR 30002)
- Final Action 09/00/88

Cough/Cold (Nasal Decongestant) Products
- ANPRM 09/09/76 (41 FR 38312)
- NPRM 01/15/85 (50 FR 2220)
- Final Action 00/00/00

Dandruff, Seborrheic Dermatitis and Psoriasis Control Products
- ANPRM 12/03/82 (47 FR 54646)
- NPRM 07/30/86 (51 FR 27346)
- Final Action 00/00/00

Diaper Rash Products (To be merged w/other rulemkg)
- ANPRM 09/07/82 (47 FR 39406)

Digestive Aid Products
- ANPRM 01/05/82 (47 FR 454)
- NPRM 01/29/88 (53 FR 2706)
- Final Action 00/00/00

Emetic Products
- ANPRM 03/21/75 (40 FR 12939)
- NPRM 09/05/78 (43 FR 39544)

Exocrine Pancreatic Insufficiency Products
- ANPRM 12/21/79 (44 FR 75666)
- NPRM 11/08/85 (50 FR 46594)
- Final Action 00/00/00

External Analgesic Products
- ANPRM 12/04/79 (44 FR 69768)
- NPRM 02/08/83 (48 FR 5852)
- NPRM (Amendment) 07/30/86 (51 FR 27360)
- Final Action 00/00/00

Fever Blister Products (Internal)
- ANPRM 01/05/82 (47 FR 502)
- NPRM 06/17/85 (50 FR 25156)
- Final Action 00/00/00

Fvr Blister/Cold Sore Prdts (Ext.) (To be merged w/other rulemkg)
- ANPRM 09/07/82 (47 FR 39436)

Hair Grower and Hair Loss Prevention Products
- ANPRM 11/27/80 (45 FR 73955)
- NPRM 01/15/85 (50 FR 2190)
- Final Action 00/00/00

Hormone (Topical) Products
- ANPRM 01/05/82 (47 FR 430)
- NPRM 09/00/88

Hypo/Hyperphosphatemia Products
- ANPRM 12/09/80 (45 FR 81154)
- NPRM 01/15/85 (50 FR 2160)
- Final Action 00/00/00

Ingrown Toenail Relief Products
ANPRM 10/17/80 (45 FR 69128)
NPRM 09/03/82 (47 FR 39120)
Final Action 00/00/00
Insect Bite & Sting (Relief) Prdts (To be merged w/other rulemkg)
ANPRM 09/07/82 (47 FR 39412)
Insect Repellent Drug Products (Internal)
ANPRM 01/05/82 (47 FR 424)
NPRM 06/10/83 (48 FR 26986)
Final Action 06/17/85 (50 FR 25170)
Internal Analgesic Products
ANPRM 07/08/77 (42 FR 35346)
NPRM 09/00/88
Internal Deodorant Products
ANPRM 01/05/82 (47 FR 512)
NPRM 06/17/85 (50 FR 25162)
Final Action 00/00/00
Laxative Products
ANPRM 03/21/75 (40 FR 12902)
NPRM 01/15/85 (50 FR 2124)
NPRM (Amendment) 10/01/86 (51 FR 35136)
Final Action 00/00/00
Leg Muscle Cramps (Nocturnal Relief) Products
ANPRM 10/01/82 (47 FR 43562)
NPRM 11/08/85 (50 FR 46588)
Final Action 00/00/00
Male Genital Desensitizer Products
ANPRM 09/07/82 (47 FR 39412)
NPRM 10/02/85 (50 FR 40260)
Final Action 00/00/00
Menstrual Products
ANPRM 12/07/82 (47 FR 55075)
NPRM 09/00/88
Mercurial (Topical) Products (To be merged w/other rulemkg)
ANPRM 01/05/82 (47 FR 436)
Nailbiting/Thumbsucking Deterrent Products
ANPRM 10/17/80 (45 FR 69122)
NPRM 09/03/82 (47 FR 39096)
Final Action 00/00/00
Nighttime Sleep Aid Products
ANPRM 12/08/75 (40 FR 57292)
NPRM 06/13/78 (43 FR 25544)
Final Action 04/00/88
Ophthalmic Products
ANPRM 05/06/80 (45 FR 30002)
NPRM 06/28/83 (48 FR 29788)
Final Action 04/00/88
Oral Discomfort (Relief) Products
ANPRM 05/25/82 (47 FR 22712)
NPRM 00/00/00
Oral Health Care Products
ANPRM 05/25/82 (47 FR 22760)
NPRM 01/27/88 (53 FR 2436)
Final Action 00/00/00
Oral Mucosal Injury Products (Merged w/Oral Health Care)
ANPRM 11/02/79 (44 FR 63270)
NPRM 07/26/83 (48 FR 33984)
Oral Wound Healing Products
ANPRM 11/02/79 (44 FR 63270)
NPRM 07/26/83 (48 FR 33984)
Final Action 07/18/86 (51 FR 26112)
Otic Products
ANPRM 12/16/77 (42 FR 63556)
NPRM 07/09/82 (47 FR 30012)
Final Action 00/00/00
Otic Products (Earwax)
ANPRM 12/16/77 (42 FR 63556)
NPRM 07/09/82 (47 FR 30012)
Final Action 08/08/86 (51 FR 28656)
Overindulgence Remedies
ANPRM 10/01/82 (47 FR 43540)
NPRM 00/00/00
Pediculicide Products
ANPRM 06/29/82 (47 FR 28312)
NPRM 04/00/88
Poison Ivy/Oak/Sumac Prevention (To be merged w/other rulemkg)
ANPRM 09/07/82 (47 FR 39412)
Poison Treatment Products
NPRM 01/15/85 (50 FR 2244)
Final Action 00/00/00
Skin Bleaching Products
ANPRM 11/03/78 (43 FR 51546)
NPRM 09/03/82 (47 FR 39108)
Final Action 09/00/88
Skin Protectant Products
ANPRM 08/04/78 (43 FR 34628)
NPRM 02/15/83 (48 FR 6820)
Final Action 00/00/00
Smoking Deterrent Products
ANPRM 01/05/82 (47 FR 490)
NPRM 07/03/85 (50 FR 27552)
Final Action 00/00/00
Stimulant Products
ANPRM 12/08/75 (40 FR 57292)
NPRM 06/13/78 (43 FR 25544)
Final Action 04/00/88
Stomach Acidifier Products
ANPRM 10/19/79 (44 FR 60316)
NPRM 01/15/85 (50 FR 2184)
Final Action 00/00/00
Vaginal Contraceptive Products
ANPRM 12/12/80 (45 FR 82014)
NPRM 00/00/00
Vaginal Drug Products
ANPRM 10/13/83 (48 FR 46694)
NPRM 00/00/00
Wart Remover Products
ANPRM 10/03/80 (45 FR 65609)
NPRM 09/03/82 (47 FR 39102)
NPRM (Amendment) 03/27/87 (52 FR 9992)
Final Action 00/00/00
Weight Control Products
ANPRM 02/26/82 (47 FR 8466)
NPRM 00/00/00

Small Entity: No

Additional Information: ABSTRACT CONT: for "Antimicrobial Products." NPRM for "Alcohol (Topical) Products" to be included in revised NPRM for "Antimicrobial Products." The NPRM for "Antimicrobial Products" is being revised because it is being updated and split into two sections: first aid products and health care products.

SMALL BUSINESSES CONT: The effects, if any, vary depending on the individual rulemaking. However, the agency anticipates that the rules would not have a significant economic impact on a substantial number of small entities as defined by the Regulatory Flexibility Act.

Agency Contact: William E. Gilbertson, Director, Division of OTC Drug Evaluation, Department of Health and Human Services, Food and Drug Administration, Center for Drug Evaluation and Research (HFN-210), 5600 Fishers Lane, Rockville, MD 20857, 301 295-8000

RIN: 0905-AA06

671. CURRENT GOOD MANUFACTURING PRACTICE FOR FINISHED PHARMACEUTICALS; RETROSPECTIVE REVIEW

Significance: Agency Priority

Legal Authority: 21 USC 351 Federal Food, Drug, and Cosmetic Act; 21 USC 352 Federal Food, Drug, and Cosmetic Act; 21 USC 360b Federal Food, Drug, and Cosmetic Act; 21 USC 371(a) Federal Food, Drug, and Cosmetic Act

CFR Citation: 21 CFR 211

Legal Deadline: None.

Abstract: As part of its retrospective review, FDA plans to determine the need for any changes in the current GMPs to eliminate unnecessary requirements and to allow flexibility without undermining protection of the public health.

Timetable:

Action	Date	FR Cite
NPRM	07/00/88	

Small Entity: No

Agency Contact: Robert J. Meyer, Consumer Safety Officer, Division of Regulatory Affairs, Department of Health and Human Services, Food and Drug Administration, Center for Drug Evaluation and Research (HFN-362), 5600 Fishers Lane, Rockville, MD 20857, 301 295-8049

RIN: 0905-AA73

672. CURRENT GOOD MANUFACTURING PRACTICE (CGMP) FOR BLOOD AND BLOOD COMPONENTS; RETROSPECTIVE REVIEW

Significance: Agency Priority

BEST COPY AVAILABLE

Legal Authority: 21 USC 321 Federal Food, Drug, and Cosmetic Act; 21 USC 352 Federal Food, Drug, and Cosmetic Act; 21 USC 355 Federal Food, Drug, and Cosmetic Act; 21 USC 371 Federal Food, Drug, and Cosmetic Act; 42 USC 262 Public Health Service Act; 5 USC 553 Administrative Procedures Act; 5 USC 702 Administrative Procedures Act; 5 USC 703 Administrative Procedures Act; 5 USC 704 Administrative Procedures Act

CFR Citation: 21 CFR 606

Legal Deadline: None.

Abstract: FDA is responsible for issuing regulatory standards for blood and blood components to ensure the continued safety, purity, and potency of such products. Since 1975, CGMP regulations have been in effect that provide standards for facilities, personnel, and manufacturing procedures for blood and blood components. In accordance with the Regulatory Flexibility Act, FDA has conducted a retrospective review of its CGMP regulations for blood and blood components, to determine how the regulations may be revised to relieve regulatory burdens and increase flexibility without adversely affecting the public health. Part of the retrospective review of the CGMP will be completed through FDA's implementation of an efficacy review of blood and blood derivatives which responds to recommendations of a Committee of scientific experts--the Panel on Review of Blood and Blood Derivatives. To complete the remainder of the retrospective review program regarding the CGMP, FDA will issue a proposed rule to revise the CGMP regulations.

Timetable:

Blood & Blood Components; Retrospective Review
NPRM 01/00/89
Final Action 00/00/00

Blood & Blood Derivatives; Implementation of Efficacy Review
NPRM 12/24/85 (50 FR 52602)
Comment Period Ends 03/24/86 (50 FR 52602)
Final Action 03/00/89

Small Entity: No

Agency Contact: Steven F. Falter, Consumer Safety Officer, Division of Regulatory Affairs, Department of Health and Human Services, Food and Drug Administration, Center for Biologics Evaluation and Research (HFN-364), 5600 Fishers Lane, Rockville, MD 20857, 301 295-8046

RIN: 0905-AA75

673. NEW ANIMAL DRUG APPROVAL PROCESS

Significance: Agency Priority

Legal Authority: 21 USC 360(b) Federal Food, Drug, and Cosmetic Act; 21 USC 371 Federal Food, Drug, and Cosmetic Act

CFR Citation: 21 CFR 514.1; 21 CFR 514.8

Legal Deadline: None.

Abstract: Based upon an evaluation of an action issues report, the agency has concluded that it will recommend that the Secretary propose revision of the existing regulations in a manner consistent with the current procedural regulations for human drugs where appropriate. The New Animal Drug Application (NADA) revisions would articulate general requirements in regulations containing performance standards and would complement them through detailed guidelines on, among other matters, appropriate ways of meeting requirements for submission of chemistry, pharmacology, and statistical data that would better address the intricate scientific issues involved. Although the guidelines would not establish regulatory requirements, persons would be able to rely on them with confidence that action taken under a guideline would be acceptable to the agency. A separate proposed rule would provide for reporting requirements for marketed animal drugs.

Timetable:

New Animal Drug Approval Process
NPRM 03/00/89

Rptg. Requirements for Marketed Animal Drugs
NPRM 12/00/88

Small Entity: Undetermined

Additional Information: AGENCY CONTACT CONT: For Information Concerning Reporting Requirements for Marketed Animal Drugs Contact: Andrew J. Beaulieu, Director, Division of Surveillance, Center for Veterinary Medicine, Food and Drug Administration, 5600 Fishers Lane, Rockville, Maryland 20857, (301) 443-3044

Agency Contact: Frank G. Pugliese, Supervisory Consumer Safety Officer, Office of New Animal Drug Evaluation, Department of Health and Human Services, Food and Drug Administration, Center for Veterinary Medicine (HFV-102), 5600 Fishers Lane, Rockville, MD 20857, 301 443-4500

RIN: 0905-AA96

674. POLICIES CONCERNING USES OF SULFITING AGENTS

Significance: Regulatory Program

Legal Authority: 21 USC 342 Federal Food, Drug, and Cosmetic Act; 21 USC 371(a) Federal Food, Drug, and Cosmetic Act; 21 USC 321(s) Federal Food, Drug, and Cosmetic Act; 21 USC 348 Federal Food, Drug, and Cosmetic Act

CFR Citation: 21 CFR 182.3616; 21 CFR 182.3637; 21 CFR 182.3739; 21 CFR 182.3766; 21 CFR 182.3798; 21 CFR 182.3862; 21 CFR 100

Legal Deadline: None.

Abstract: Acceptable evidence and information exists to show that a subgroup of asthmatics is at moderate to severe risk for a severe reaction upon exposure to sulfites. The agency's primary tool for handling a situation where population subgroups may be at increased risk from a food ingredient that is safe for most people is to use labeling to inform those persons who need or want to avoid the ingredient. The agency issued a final rule, effective January 7, 1987, that requires that when a sulfiting agent is present in a finished food at 10 parts per million or greater, the sulfiting agent must be declared on the label. In addition, FDA issued a final rule, effective August 8, 1986, prohibiting the use of sulfiting agents on raw fruits and vegetables intended to be served or sold raw to consumers (e.g., in salad bars). The agency is now considering what it options are with regard to the GRAS status of 1) sulfiting agents used on "fresh" potatoes and 2) other food uses of sulfiting agents. Options being considered are: 1) affirming all uses of sulfiting agents as GRAS with specific limitation; 2) affirming most uses of (cont)

Timetable:

Food Labeling; Declaration of Sulfiting Agents
NPRM 04/03/85 (50 FR 13306)
Final Action 07/09/86 (51 FR 25012)
EFFECTIVE DATE 01/09/87 (51 FR 25012)

GRAS Status of the Use of Sulfiting Agents on Potatoes
NPRM 12/10/87 (52 FR 46968)
Final Action 12/00/88

GRAS Status of Certain Other Food Uses of Sulfiting Agents, Etc.
NPRM 10/00/88
Final Action 00/00/00

Revoking Use of Sulfiting Agents on Fruits & Vegetables, Etc.
NPRM 08/14/85 (50 FR 32836)
Final Action 07/09/86 (51 FR 25021)
Final Action Effective 08/09/86 (51 FR 25021)

Small Entity: No

Additional Information: ABSTRACT CONT: sulfiting agents as GRAS (excluding certain potato products) with specific limitations; and 3) revoking the GRAS status of all uses of sulfiting agents in food.

Agency Contact: Robert L. Martin, Division of Food and Color Additives, Department of Health and Human Services, Food and Drug Administration, Center for Food Safety and Applied Nutrition (HFF-334), 200 C Street, S.W., Washington, DC 20204, 202 426-9463

RIN: 0905-AB52

675. REQUIREMENTS FOR ADVERSE EXPERIENCE REPORTING FOR LICENSED BIOLOGICAL PRODUCTS

Significance: Agency Priority

Legal Authority: 21 USC 351 Federal Food, Drug, and Cosmetic Act; 21 USC 352 Federal Food, Drug, and Cosmetic Act; 21 USC 355 Federal Food, Drug, and Cosmetic Act; 21 USC 371 Federal Food, Drug, and Cosmetic Act; 21 USC 374 Federal Food, Drug, and Cosmetic Act; 42 USC 262 Public Health Service Act

CFR Citation: 21 CFR 211; 21 CFR 310; 21 CFR 600

Legal Deadline: None.

Abstract: This regulatory action is being taken to improve the safety of marketed drug products by a reporting scheme that will require serious adverse reactions associated with licensed biological products to be reported to the Food and Drug Administration (FDA).

The purpose of the regulatory action is to require prompt reporting to the agency of serious adverse experiences for all licensed biological products.

The regulatory action being considered by FDA would be consistent with the agency's requirements regarding adverse reactions reporting for approved new drugs under 21 CFR 314.80 (see February 22, 1985; 50 FR 7452). These biologic regulations would require that all "serious and unexpected" adverse experiences and any "significant increase in frequency" of a serious expected event be reported to the agency within 15 working days. Known and nonserious adverse biological product experiences would be required to be reported to the agency at quarterly or annual intervals, depending on the length of marketing experience with the product. This information (cont)

Timetable:

Action	Date	FR Cite
NPRM	09/00/88	

Small Entity: No

Additional Information: ABSTRACT CONT: permits the agency to monitor effectively the safety of all licensed biological products.

Agency Contact: Robert D. Bradley, Consumer Safety Officer, Division of Regulatory Affairs, Department of Health and Human Services, Food and Drug Administration, Center for Drug Evaluation and Research (HFN-364), 5600 Fishers Lane, Rockville, MD 20857, 301 295-8046

RIN: 0905-AB53

676. PROPOSED RULE TO IMPLEMENT THE ORPHAN DRUG AMENDMENTS TO THE FEDERAL FOOD, DRUG, AND COSMETIC ACT

Significance: Regulatory Program

Legal Authority: PL 97-414 Orphan Drug Act

CFR Citation: Not yet determined

Legal Deadline: None.

Abstract: The Orphan Drug Act is intended to provide incentives for drug companies to invest in the development of drugs for rare diseases or conditions. Certain incentives are necessary because "orphan drugs" are unlikely to be profitable. The agency is required to carry out provisions of the Orphan Drug Act, e.g., by designating a drug as an orphan drug, by providing protocol assistance, and by granting seven years of exclusive approval status. The proposed rule would establish procedures whereby drug sponsors can take advantage of the incentives to encourage development of orphan drugs. While several provisions of the Orphan Drug Act call for promulgation of regulations, the agency is considering the extent to which regulations will be needed to provide the framework and guidance for implementing a program of incentives to drug sponsors and manufacturers.

Timetable:

Action	Date	FR Cite
Interim Guidelines	09/09/83	48 FR 40784
Revised Interim Guidelines	05/09/85	50 FR 19583
NPRM	12/00/88	

Small Entity: Undetermined

Agency Contact: Emery J. Sturniolo, Assistant to the Director, Department of Health and Human Services, Food and Drug Administration, Office of Orphan Products Development (HF-35), 5600 Fishers Lane, Rockville, MD 20857, 301 443-4718

RIN: 0905-AB55

677. IMPLEMENTATION OF TITLE I OF THE "DRUG PRICE COMPETITION AND PATENT TERM RESTORATION ACT OF 1984" (TITLE I)

Significance: Agency Priority

Legal Authority: PL 98-417, (Title I)

CFR Citation: Not yet determined

Legal Deadline: None.

Abstract: Until the passage of Title I of the "Drug Price Competition and Patent Term Restoration Act of 1984," abbreviated new drug application (ANDA) procedures were only available for generic products equivalent to pioneer drugs approved before 1962. Title I opened up the ANDA policy to generic copies of products approved after 1962. This rulemaking is intended to establish clear and uniform procedures for the review and timely approval of ANDAs. This should assist the generic drug industry by ending considerable confusion about the procedures governing review of ANDAs. In turn, with the availability of lower-cost generic products, it is estimated that consumers may save millions of dollars. The statute calls for promulgation of implementing regulations, however, the agency also expects to develop guidelines and other policy statements to assist in developing approvable applications. Revised target dates for this regulatory action are appropriate because many new issues have been identified in petitions and letters to the agency from trade associations and

attorneys representing individual manufacturers concerning exclusivity, patent coverage, (cont)

Timetable:

Action	Date	FR Cite
NPRM	04/00/89	
Final Action	00/00/00	

Small Entity: Undetermined

Additional Information: ABSTRACT CONT: and some of the complex provisions of the act. The resolution of these many minor issues will be reflected in the NPRM and will permit the agency to develop a comprehensive proposed rule.

Agency Contact: Marilyn Watson, Special Asst. to the Division Director, Division of Regulatory Affairs, Department of Health and Human Services, Food and Drug Administration, Center for Drug Evaluation and Research (HFN-360), 5600 Fishers Lane, Rockville, MD 20857, 301 295-8038

RIN: 0905-AB63

678. ABBREVIATED NEW ANIMAL DRUG APPLICATIONS FOR POST-1962 ANIMAL DRUGS

Significance: Agency Priority

Legal Authority: 21 USC 360b Federal Food, Drug, and Cosmetic Act

CFR Citation: 21 CFR 514.1; 21 CFR 514.2; 21 CFR 514.3; 21 CFR 514.11

Legal Deadline: None.

Abstract: This proposed rule would permit applicants to file abbreviated new animal drug applications (ANADAs) for products identical to approved post-1962 drugs and to omit certain reports that are required in full NADAs to show safety and effectiveness of the product. It would apply only to certain drug products specified by FDA. If adopted, the proposed rule would reduce duplicative testing of drugs and also reduce the cost to the manufacturer of getting the affected drugs on the market. This issue is currently under Congressional review. Further agency action contingent upon Congressional review.

Timetable:

Action	Date	FR Cite
Next Action Undetermined		

Small Entity: Undetermined

Agency Contact: Richard A. Carnevale, Deputy Director, Office of New Animal Drug Evaluation, Department of Health and Human Services, Food and Drug Administration, Center for Veterinary Medicine (HFV-120), 5600 Fishers Lane, Rockville, MD 20857, 301 443-4314

RIN: 0905-AB72

679. INFANT FORMULA ACT

Significance: Regulatory Program

Legal Authority: 21 USC 371(a) Federal Food, Drug, and Cosmetic Act; PL 99-570 Infant Formula Act of 1986

CFR Citation: 21 CFR 7; 21 CFR 106

Legal Deadline: None.

Abstract: The agency is preparing two proposals and one final rule which will implement the Infant Formula Act of 1986. The final rule will amend FDA's Infant Formula Recall regulations. These amended regulations will mandate the recall of infant formulas that are in violation of the Act and which have been determined by the Secretary to pose a health hazard. The first proposal will establish current good manufacturing practice regulations and strengthen the agency's existing quality control procedures for infant formulas. The second proposal will establish infant formula microbiological testing, consumer complaints, and record retention requirements.

Timetable:

Infant Form Cons Comp, Micro Test & Recd Retention Reg
NPRM 06/00/88
Infant Formula Current Good Practices; Qual Control Proc
NPRM 00/00/00
Infant Formula Recall
NPRM 08/14/87 (52 FR 30171)
Comment Period Ends 10/13/87 (52 FR 30171)
Final Action 10/00/88

Small Entity: No

Additional Information: AGENCY CONTACT CONT: For Information Concerning Infant Formula, Microbiological Testing, Consumer Complaints, Record Retention Requirements, Good Manufacturing Practices, and Quality Control Procedures Contact: Nicholas Duy, Consumer Safety Officer, Center for Food Safety and Applied Nutrition (HFF-204), Department of Health and Human Services, Food and Drug Administration, 200 C Street, SW, Washington, DC 20204, (202) 245-3117

Agency Contact: Curtis Coker, Consumer Safety Officer, (For Info Concerning Infant Formula Recalls), Department of Health and Human Services, Food and Drug Administration, Center for Food Safety and Applied Nutrition (HFF-314), 200 C Street, SW, Washington, DC 20204, 202 485-0024

RIN: 0905-AC46

680. PROTECTION OF HUMAN SUBJECTS; INFORMED CONSENT; STANDARDS FOR INSTITUTIONAL REVIEW BOARDS FOR CLINICAL INVESTIGATIONS

Significance: Regulatory Program

Legal Authority: 21 USC 346(a) Federal Food, Drug and Cosmetic Act; 21 USC 351 to 357 Federal Food, Drug and Cosmetic Act; 21 USC 360 Federal Food, Drug and Cosmetic Act; 21 USC 360c to 360f Federal Food, Drug and Cosmetic Act; 21 USC 360h to 360j Federal Food, Drug and Cosmetic Act; 21 USC 371(a) Federal Food, Drug and Cosmetic Act; 21 USC 376 Federal Food, Drug and Cosmetic Act; 21 USC 381 Federal Food, Drug and Cosmetic Act; 42 USC 216 Public Health Service Act; 42 USC 241 Public Health Service Act; 42 USC 262 Public Health Service Act; 42 USC 263b to 263n Public Health Service Act

CFR Citation: 21 CFR 50; 21 CFR 56

Legal Deadline: None.

Abstract: In the FEDERAL REGISTER of June 3, 1986 (51 FR 20204), the Office of Science and Technology Policy (OSTP) issued for public comment a proposed Model Federal Policy for the Protection of Human Research Subjects. This Model Policy is to enhance uniformity in the implementation of a common core of regulations governing research with human subjects. FDA has concurred in the proposed Model Policy to the extent permitted by law. FDA will propose to amend its regulations to eliminate certain inconsistencies with the proposed Model Policy. OSTP has advised the Agency that concurrent publication of the final Model Policy and FDA's proposed rule is needed.

Timetable:

Action	Date	FR Cite
NPRM	00/00/00	

HHS—PHS—FDA **Proposed Rule Stage**

Small Entity: No

Agency Contact: Bonnie M. Lee, Public Health Advisor, Health Assessment Policy Staff, Department of Health and Human Services, Food and Drug Administration, Office of Health Affairs (HFY-20), 5600 Fishers Lane, Rockville, MD 20857, 301 443-1382

RIN: 0905-AC52

681. MENSTRUAL TAMPONS; PROPOSED USER LABELING

Significance: Regulatory Program

Legal Authority: 21 USC 321; 21 USC 352; 21 USC 360; 21 USC 371; 21 USC 374

CFR Citation: 21 CFR 801.430

Legal Deadline: None.

Abstract: FDA is considering a proposal to require tampon manufacturers to include on the package label information to describe absorbency of the tampon. The NPRM would also propose requiring that absorbency be determined in accordance with a specific test method.

Timetable:

Action	Date	FR Cite
NPRM	04/00/88	

Small Entity: Undetermined

Agency Contact: Les Weinstein, Office of Standards and Regulations, Department of Health and Human Services, Food and Drug Administration, Center for Devices and Radiological Health (HFZ-84), 5600 Fishers Lane, Rockville, MD 20857, 301 443-4874

RIN: 0905-AC58

682. ● GRANTS FOR FACULTY TRAINING PROJECTS ON GERIATRIC MEDICINE AND DENTISTRY

Legal Authority: 42 USC 216; 42 USC 295g to 8

CFR Citation: 42 CFR 57, Subpart PP (proposed)

Legal Deadline: None.

Abstract: These proposed rules would govern grants made to schools of medicine, schools of osteopathy, teaching hospitals and graduate medical education programs for the purpose of providing support, including traineeships and fellowships, for geriatric medicine training projects to train physicians and dentists who plan to teach geriatric medicine or geriatric dentistry, in accordance with PL 100-177, the Public Health Amendments of 1987.

Timetable:

Action	Date	FR Cite
NPRM	09/00/88	

Small Entity: No

Agency Contact: Donald L. Weaver, M.D., Director, Division of Medicine, BHPr, Department of Health and Human Services, Public Health Service, Room 4c-25 Parklawn Building, 5600 Fishers Lane, Rockville, MD 20857, 301 295-8049

RIN: 0905-AC71

DEPARTMENT OF HEALTH AND HUMAN SERVICES (HHS)
Public Health Service (PHS)—Food and Drug Administration (FDA)

Final Rule Stage

683. AVAILABILITY OF BULK NEW ANIMAL DRUG SUBSTANCES FOR USE BY LICENSED VETERINARIANS

Significance: Agency Priority

Legal Authority: 21 USC 360b Federal Food, Drug, and Cosmetic Act

CFR Citation: 21 CFR 514.1

Legal Deadline: None.

Abstract: This proposed rule would permit veterinarians to obtain bulk new animal drug substances for compounding products for use in their own practice. A number of veterinarians have requested that the regulations be revised in order that bulk new animal drug substances may be legally obtained by them for use in their practices. Seventeen comments were received in response to the proposed rule, five from pharmaceutical companies, six from trade/professional associations, three from consultants, two from veterinary practitioners, and one from a Federal agency. Only three of those commenting supported the proposal. The remaining 14 comments opposed the proposal. The agency is reevaluating the proposal in light of the comments received.

Timetable:

Action	Date	FR Cite
NPRM	07/01/85	50 FR 27016
NPRM Comment Period End	09/30/85	50 FR 27016

Next Action Undetermined

Small Entity: No

Agency Contact: Donald A. Gable, Director, Division of Therapeutic Drugs for Food Animals, Department of Health and Human Services, Food and Drug Administration, Center for Veterinary Medicine (HFV-130), 5600 Fishers Lane, Rockville, MD 20857, 301 443-1414

RIN: 0905-AB01

684. PROPOSED USER CHARGE; NEW DRUG APPLICATIONS, ABBREVIATED NEW DRUG APPLICATIONS, NEW DEVICE APPLICATIONS, AND ANTIBIOTIC APPLICATIONS REVIEW

Significance: Agency Priority

Legal Authority: 21 USC 351 Federal Food, Drug, and Cosmetic Act; 21 USC 352 Federal Food, Drug, and Cosmetic Act; 21 USC 353 Federal Food, Drug, and Cosmetic Act; 21 USC 355 Federal Food, Drug, and Cosmetic Act; 21 USC 356 Federal Food, Drug, and Cosmetic Act; 21 USC 357 Federal Food, Drug, and Cosmetic Act; 21 USC 371 Federal Food, Drug, and Cosmetic Act; 31 USC 9701 Independent Offices Appropriation Act

CFR Citation: 21 CFR 314

Legal Deadline: None.

Abstract: The proposed rule would initiate a program that would require drug manufacturers (as beneficiaries of special services that the agency provides) to bear the costs that the agency incurs in reviewing and approving new drug and antibiotic applications, abbreviated new drug applications, "class III" device applications, and certain supplemental applications. The agency would set fees for different types of applications. The benefit accruing to an applicant under the agency's new drug, antibiotic, and device application review and approval activity is that the applicant may lawfully market its new drug, antibiotic,

or class III device upon gaining agency approval. Review by the agency also benefits applicants by helping ensure that they will market only safe and effective drug products or devices. This, in turn, enhances public confidence in applicants' drug products or medical devices. Congress has prohibited FDA from implementing user charges in FY 1988. Legislation has been submitted to Congress to implement user charges for both drugs and devices. The future of this proposed rule is dependent on the outcome of Congressional action.

Timetable:

Action	Date	FR Cite
NPRM	08/06/85	50 FR 31726
NPRM Comment Period End	09/05/85	50 FR 31726

Next Action Undetermined

Small Entity: No

Agency Contact: Marilyn Watson, Special Asst. to the Division Director, Division of Regulatory Affairs, Department of Health and Human Services, Food and Drug Administration, Center for Drug Evaluation and Research (HFN-360), 5600 Fishers Lane, Rockville, MD 20857, 301 295-8030

RIN: 0905-AB56

685. PROVISIONALLY LISTED COLOR ADDITIVES

Significance: Regulatory Program

Legal Authority: 21 USC 371 Federal Food, Drug, and Cosmetic Act; 21 USC 376(b) to (d) Federal Food, Drug, and Cosmetic Act; 21 USC 376 note Federal Food, Drug, and Cosmetic Act

CFR Citation: 21 CFR 81.1; 21 CFR 81.27

Legal Deadline: None.

Abstract: Substantial progress has been made in reducing the number of provisionally listed additives and only 3 color additives remain on the provisional list. The agency is presently reviewing petitions to list these color additives permanently. Because FD&C Red No. 3 animal feeding studies have shown a treatment-related increased incidence of tumor bearing animals, the agency considered the use of quantitative risk assessment as a basis for assessing the safety of this color additive in external drugs and cosmetics. As a preliminary step in its consideration of this approach, the agency formed a scientific peer review panel of government scientists to consider whether it is possible to quantify the risk presented by the use of FD&C Red No. 3 based on the scientific data available to the agency and, if so, what level of risk is presented by the use of this color additive. The agency has received the report from the scientific review panel in which the panel estimates the risk of cancer from use of FD&C Red No. 3 in external drugs and cosmetics. Furthermore, for FD&C Red No. 3 the industry has postulated a secondary mechanism for the observed tumorigenic response in the animal feeding (cont)

Timetable:

D&C Orange No. 17
Final Action 08/07/86 (51 FR 28331)
D&C Red No. 19
Final Action 08/07/86 (51 FR 28346)
D&C Red No. 37
Final Action 06/06/86 (51 FR 20786)
D&C Red No. 8 and D&C Red No. 9
Final Action 12/05/86 (51 FR 43877)
D&C Red Nos. 33 and 36
Final Action 04/00/88
FD&C Red No. 3
Final Action 05/00/88
FD&C Yellow No. 5
Final Action 07/07/86 (51 FR 24517)
FD&C Yellow No. 6
Final Action 11/19/86 (51 FR 41765)

Small Entity: No

Additional Information: ABSTRACT CONT: study. The agency asked a second scientific peer review panel of government scientists to consider data relating to the issue of a possible secondary mechanism and implications for risk assessment. The panel was also asked to determine what, if any, further studies or analyses may be necessary to resolve the issues. The panel submitted its report to the Commissioner in July 1987. The report was made available to the public in August 1987. D&C Red Nos. 33 and 36 present concern about their possible carcinogenicity, as well as concern about carcinogenic impurities.

Agency Contact: Donna A. Dennis, Supervisor, Division of Food and Color Additives, Department of Health and Human Services, Food and Drug Administration, Center for Food Safety and Applied Nutrition (HFF-330), 200 C Street, SW, Washington, DC 20204, 202 426-9463

RIN: 0905-AB60

686. PATENT TERM RESTORATION FOR CERTAIN REGULATED PRODUCTS (TITLE II OF "DRUG PRICE COMPETITION AND PATENT TERM RESTORATION ACT OF 1984")

Significance: Regulatory Program

Legal Authority: 21 USC 348 Federal Food, Drug and Cosmetic Act; 21 USC 355 Federal Food, Drug and Cosmetic Act; 21 USC 357 Federal Food, Drug and Cosmetic Act; 21 USC 360e Federal Food, Drug and Cosmetic Act; 21 USC 376 Federal Food, Drug and Cosmetic Act; 42 USC 216 Public Health Service Act; 42 USC 241 Public Health Service Act; 42 USC 262 Public Health Service Act; 42 USC 263b to 263h Public Health Service Act; 35 USC 156 Drug Price Competition and Patent Term; Restoration Act, Title II; 35 USC 271 Drug Price Competition and Patent Term; Restoration Act, Title II; 35 USC 282 Drug Price Competition and Patent Term; Restoration Act, Title II

CFR Citation: 21 CFR 60

Legal Deadline: None.

Abstract: On July 11, 1986, the agency proposed regulations to implement the patent term restoration provisions (Title II) of the Drug Price Competition and Patent Term Restoration Act of 1984 (Pub. L. 98-417). Patent term restoration extending patent life, is available for certain patents related to human drug products, and to medical devices, food additives, or color additives subject to regulation under the Federal Food, Drug, and Cosmetic Act or the Public Health Service Act.

Timetable:

Action	Date	FR Cite
Request for Public Comments on Implementing Title II	06/26/85	50 FR 26791
NPRM	07/11/86	51 FR 25338
NPRM Comment Period End	10/09/86	51 FR 25338
Final Action	04/00/88	

Small Entity: No

Agency Contact: Philip L. Chao, Regulatory Counsel, Health Assessment Policy Staff, Department of Health and Human Services, Food and Drug Administration, Office of Health Affairs (HFY-20), 5600 Fishers Lane, Rockville, MD 20857, 301 443-1382

RIN: 0905-AB65

687. FOOD LABELING INFORMATION REGARDING GOOD NUTRITION AND HEALTH

Significance: Regulatory Program

Legal Authority: 15 USC 1453 Fair Packaging and Labeling Act; 15 USC 1455 Fair Packaging and Labeling Act; 21 USC 321 Federal Food, Drug, and Cosmetic Act; 21 USC 343 Federal Food, Drug, and Cosmetic Act; 21 USC 348 Federal Food, Drug, and Cosmetic Act; 21 USC 371 Federal Food, Drug, and Cosmetic Act

CFR Citation: 21 CFR 101

Legal Deadline: None.

Abstract: In the FEDERAL REGISTER of August 4, 1987, the Food and Drug Administration (FDA) discussed an initiative concerning health-related claims or information on food labeling and the criteria it will apply in evaluating the propriety of such labeling. Consistent with this initiative, FDA proposed to amend certain regulations on food labeling to codify and to clarify its policy on the appropriate use of health-related messages. The agency also announced its intention to form a Public Health Service (PHS) committee that will attempt to develop "health messages" appropriate for use on food labeling.

FDA recognizes that this initiative represents a substantive change in past agency policy, and because of the complexity of the matter and the broad public interest, wishes to proceed cautiously and deliberately in its regulatory approach.

Pending this rulemaking proceeding, the agency will employ the criteria discussed in the preamble to the notice in evaluating the propriety of bringing enforcement action against products bearing health messages on food labeling.

Timetable:

Action	Date	FR Cite
NPRM	08/04/87	52 FR 28843
NPRM - Comment Period Ends	11/02/87	52 FR 28843
NPRM - Extension of Comment Period	11/02/87	52 FR 42003
NPRM - Correction of Extension of Comment Period	11/16/87	52 FR 43772
NPRM - Extension of Comment Period Ends	01/04/88	52 FR 43772
Final Action	07/00/88	

Small Entity: No

Agency Contact: David G. Hattan, Chief, Regulatory Affairs Staff, Department of Health and Human Services, Food and Drug Administration, Center for Food Safety and Applied Nutrition (HFF-204), 200 C Street, SW, Washington, DC 20204, 202 245-3117

RIN: 0905-AB67

688. FOOD LABELING: DEFINITIONS OF CHOLESTEROL FREE, LOW CHOLESTEROL, AND REDUCED CHOLESTEROL

Significance: Regulatory Program

Legal Authority: 21 USC 343 Federal Food, Drug, and Cosmetic Act; 21 USC 321(n) Federal Food, Drug, and Cosmetic Act; 21 USC 371 Federal Food, Drug, and Cosmetic Act

CFR Citation: 21 CFR 101.9; 21 CFR 101.25

Legal Deadline: None.

Abstract: In the FEDERAL REGISTER of November 25, 1986, the agency published a proposed rule that would provide a mechanism to allow relevant, truthful, and nonmisleading claims about cholesterol and fatty acid on product labeling for consumers. This proposed rule resulted from the medical and consumer interest in the association between dietary fat and cholesterol and the occurrence of coronary heart disease, the leading cause of death and disability in the United States today. The proposed rule would allow industry voluntarily to provide consumers with cholesterol and fatty acid information currently prohibited by regulations by permitting the use of meaningful descriptors of the cholesterol content of foods as established by regulation (e.g., "cholesterol free," "low cholesterol," and "reduced cholesterol"). Additionally, the proposal would allow the use of comparative claims (e.g., 50 percent less cholesterol than our original product), provided quantitative cholesterol content information is supplied. Public comments submitted in response to the proposed rule are being reviewed.

Timetable:

Action	Date	FR Cite
NPRM	11/25/86	51 FR 42584
NPRM Extension of Comment Period	01/23/87	52 FR 2558
NPRM Comment Period End	03/27/87	52 FR 2558
Final Action	12/00/88	

Small Entity: No

Agency Contact: David G. Hattan, Chief, Regulatory Affairs Staff, Department of Health and Human Services, Food and Drug Administration, Center for Food Safety and Applied Nutrition (HFF-204), 200 C Street, SW, Washington, DC 20204, 202 245-3117

RIN: 0905-AB68

689. METHYLENE CHLORIDE

Significance: Regulatory Program

Legal Authority: 21 USC 361 Federal Food, Drug, and Cosmetic Act; 21 USC 362 Federal Food, Drug, and Cosmetic Act; 21 USC 371(a) Federal Food, Drug, and Cosmetic Act

CFR Citation: 21 CFR 700.19

Legal Deadline: None.

Abstract: Methylene chloride is used as a solvent in aerosol cosmetic products (hair sprays). Recent carcinogenicity bioassay studies, however, have shown that methylene chloride is an animal carcinogen. These studies indicate that the continued use of methylene chloride, in functional amounts, in such cosmetic products may pose a significant risk to the public health, especially in specific segments of the population that are continually exposed to aerosol cosmetics containing methylene chloride. The agency has been informed of voluntary efforts by the cosmetic industry to replace methylene chloride but believes that prohibiting its use in cosmetics is the only approach that will assure that the public health will be fully safeguarded from all such products, both foreign and domestic. FDA announced in the December 18, 1985, NPRM its conclusion that methylene chloride used as a solvent to extract caffeine from green coffee beans was not a danger under the Delaney Clause to the Food Additives Amendment because the risk was so miniscule as to be considered

de minimis. FDA is reconsidering this conclusion in light of a recent appeals court (cont)

Timetable:

Action	Date	FR Cite
NPRM	12/18/85	50 FR 51551
NPRM - Comment Period Ends	02/18/86	50 FR 51551
NPRM - Comment Period Extended	02/24/86	51 FR 6494
NPRM - Extended Comment Period Ends	04/04/86	51 FR 6494
NPRM - Comment Period Reopened	12/05/86	51 FR 43935
NPRM - Reopened Comment Period Ends	01/05/87	51 FR 43935
Final Action	11/00/88	

Small Entity: No

Additional Information: ABSTRACT CONT: decision that struck down a similar interpretation of the color additive Delaney Clause.

Agency Contact: Terry C. Troxell, Division of Regulatory Guidance, Department of Health and Human Services, Food and Drug Administration, Center for Food Safety and Applied Nutrition (HFF-312), 200 C Street, SW, Washington, DC 20204, 202 485-0229

RIN: 0905-AC00

---

690. COMMON OR USUAL NAME FOR DILUTED FRUIT OR VEGETABLE JUICE BEVERAGES OTHER THAN DILUTED ORANGE JUICE BEVERAGES

Significance: Regulatory Program

Legal Authority: 21 USC 321(n) Federal Food, Drug and Cosmetic Act; 21 USC 343 Federal Food, Drug and Cosmetic Act; 21 USC 371(a) Federal Food, and Cosmetic Act

CFR Citation: 21 CFR 102.33

Legal Deadline: None.

Abstract: In 1980, FDA published a regulation (21 CFR 102.33) to require the declaration of the percent of juice contained in all diluted juice beverages. This regulation was published to extend the percent juice declaration required for diluted orange juice beverages (21 CFR 102.32) to all other diluted juice beverages. These two regulations were developed to provide consumers with information as to the various amounts of juice in the diluted juice beverages offered for sale. The regulation regarding percentage juice declaration for diluted orange juice beverages had been in effect for several years and functioning well before the regulation addressing all other diluted juice beverages was published. With publication of 21 CFR 102.33, a controversy developed over the applicability of the regulation to diluted cranberry juice beverages. The controversy centered around the fact that cranberry juice is a high acid juice and is not normally consumed as a single strength juice. Due to this unresolved controversy, 21 CFR 102.33 has not been made effective. In the FEDERAL REGISTER of July 16, 1987 (52 FR 26690), the agency proposed to revoke the common or usual (cont)

Timetable:

Action	Date	FR Cite
NPRM - To Revoke Regulation	07/16/87	52 FR 26690
NPRM - Comment Period Ends	09/14/87	52 FR 26690
NPRM - Extension of Comment Period	09/25/87	52 FR 36046
NPRM - Extended Comment Period Ends	12/13/87	52 FR 36046
NPRM - Comment Period Reopened	01/22/88	53 FR 1795
NPRM - Reopened Comment Period Ends	01/27/88	53 FR 1795
Final Action	10/00/88	

Small Entity: No

Additional Information: ABSTRACT CONT: name regulation (21 CFR 102.33) for diluted fruit or vegetable juice beverages other than diluted orange juice beverages. The revocation of this regulation will allow voluntary percentage labeling of these diluted juice beverages at the discretion of the manufacturer and according to the demands of the marketplace. Diluted orange juice beverages would continue to be subject to the percentage labeling requirement that has been in effect for diluted orange juice beverages since 1973. This proposed action also withdraws the proposed rule published in the FEDERAL REGISTER of June 1, 1984 (49 FR 22831), which, among other things, exempted cranberry juice products from percentage ingredient labeling requirements.

Agency Contact: Evelyn Osman, Division of Regulatory Guidance, Department of Health and Human Services, Food and Drug Administration, Center for Food Safety and Applied Nutrition (HFF-312), 200 C Street, SW, Washington, DC 20204, 202 485-0229

RIN: 0905-AC48

---

691. ● TAMPER-RESISTANT PACKAGING REQUIREMENTS FOR OVER-THE-COUNTER (OTC) DRUGS

Significance: Regulatory Program

Legal Authority: 21 USC 321(n); 21 USC 351; 21 USC 352; 21 USC 355; 21 USC 356; 21 USC 357; 21 USC 371

CFR Citation: 21 CFR 211.132

Legal Deadline: None.

Abstract: The agency is considering amending the current tamper-resistant packaging regulations and updating information it previously made available on tamper-resistant packaging technologies. Under this approach, the agency is considering revisions to require special precautions against tampering for two-piece, hard, gelatin capsules, the dosage form that has been the subject of fatal tamperings.

The agency is also considering other measures to provide additional guidance to manufacturers regarding tamper-resistant packaging technology and public education to improve consumer's alertness to tampering.

Any action taken would reflect the Administration policy that the consumer is the key to tamper resistance, and the ultimate goal of tamper-resistant packaging is that it should offer a signal to consumers about tampering.

Timetable:

Action	Date	FR Cite
Final Action	10/00/88	

Small Entity: Undetermined

Agency Contact: Adele S. Seifried, Division of Regulatory Affairs,

VOL 53 ISS 79 PT 1 APR 25 1988 UMI

HHS—PHS—FDA

Final Rule Stage

Department of Health and Human Services, Food and Drug Administration, Center for Drug Evaluation and Research (HFN-362), 5600 Fishers Lane, Rockville, MD 20857, 301 295-8046

RIN: 0905-AC70

DEPARTMENT OF HEALTH AND HUMAN SERVICES (HHS)
Public Health Service (PHS)—Food and Drug Administration (FDA)

Completed Actions

692. GOOD LABORATORY PRACTICE FOR NONCLINICAL LABORATORY STUDIES

Significance: Regulatory Program

CFR Citation: 21 CFR 58

Completed:

Reason	Date	FR Cite
Final Action	09/04/87	52 FR 33768
Final Action Effective	10/05/87	52 FR 33768

Small Entity: No

Agency Contact: Paul D. Lepore 301 443-2390

RIN: 0905-AA84

693. ANIMAL DRUG SAFETY POLICY

Significance: Regulatory Program

CFR Citation: 21 CFR 70.50; 21 CFR 500.80; 21 CFR 500.82; 21 CFR 500.84; 21 CFR 500.86; 21 CFR 500.88; 21 CFR 500.90; 21 CFR 514.1; 21 CFR 514.111; 21 CFR 514.115

Completed:

Reason	Date	FR Cite
Final Action	12/31/87	52 FR 49572
Final Action Effective	02/29/88	52 FR 49572

Small Entity: No

Agency Contact: Robert Benson 301 443-4500

RIN: 0905-AB04

694. GENERAL BIOLOGICAL PRODUCTS STANDARDS; ADDITIONAL STANDARDS FOR HUMAN BLOOD AND BLOOD PRODUCTS; TEST FOR ANTIBODY TO HUMAN IMMUNODEFICIENCY VIRUS (HIV)

Significance: Regulatory Program

CFR Citation: 21 CFR 610.45, (New); 21 CFR 640.2(f), (Revision); 21 CFR 640.5, (New); 21 CFR 640.14, (Revision); 21 CFR 640.23(a), (Revision); 21 CFR 640.33(a), (Revision); 21 CFR 640.53(a), (Revision); 21 CFR 640.67, (Revision); 21 CFR 640.70(a)(11), (New); 21 CFR 640.71(a)(4), (New); 21 CFR 640.72(a)(2), (Revision)

Completed:

Reason	Date	FR Cite
Final Action	01/05/88	53 FR 111
Final Action Effective	02/04/88	53 FR 111

Small Entity: No

Agency Contact: Steven F. Falter 301 295-8046

RIN: 0905-AB62

DEPARTMENT OF HEALTH AND HUMAN SERVICES (HHS)
Public Health Service (PHS)—Health Resources and Services Administration (HRSA)

Proposed Rule Stage

695. GRANTS FOR RESIDENCY TRAINING AND FACULTY DEVELOPMENT IN GENERAL INTERNAL MEDICINE AND/OR GENERAL PEDIATRICS

Legal Authority: 42 USC 216; 42 USC 295g-4; 42 USC 295g-4(a)

CFR Citation: 42 CFR 57, Subpart FF

Legal Deadline: None.

Abstract: These regulations propose to amend the existing regulations for residency training in general internal medicine and general pediatrics and to implement section 784 (a)(3) and (4) to plan, develop, and operate a program and provide financial assistance to physicians who plan to teach in general internal medicine and general pediatrics.

Timetable:

Action	Date	FR Cite
NPRM	04/00/88	

Small Entity: No

Agency Contact: Donald L. Weaver, M.D., Director, Division of Medicine, BHPr, Department of Health and Human Services, Health Resources and Services Administration, Public Health Service, 5600 Fishers Lane, Room 4C-25, Rockville, MD 20857, 301 443-6190

RIN: 0905-AB50

696. HEALTH EDUCATION ASSISTANCE LOAN (HEAL) PROGRAM: IMPLEMENTATION OF PUB. L. 99-129

Legal Authority: 42 USC 216; 42 USC 294 to 294l

CFR Citation: 42 CFR 60

Legal Deadline: None.

Abstract: This rule proposes to implement provisions of the Health Professions Training Assistance Act of 1985 (Pub. L. 99-129) which require public comment before being published as final regulations.

Timetable:

Action	Date	FR Cite
NPRM	09/30/88	

Small Entity: No

Agency Contact: Ms. Peggy Washburn, Chief, Program Devel. Br., DSA, BHPr, Department of Health and Human Services, Health Resources and Services Administration, Room 8-48, Parklawn Building, 5600 Fishers Lane, Rockville, MD 20857, 301 443-4540

RIN: 0905-AC28

697. GRANTS FOR NURSE PRACTITIONER AND NURSE MIDWIFERY TRAINEESHIP PROGRAMS

Legal Authority: 42 USC 216; 42 USC 296m

CFR Citation: 42 CFR 57, Subpart AA

Legal Deadline: None.

Abstract: These proposed regulations would implement the provisions of the Nurse Education Amendments of 1985 (Pub. L. 99-92) and add debt management provisions of the Debt Collection Act of 1982 (Pub. L. 97-365).

Timetable:

Action	Date	FR Cite
NPRM	05/00/88	

Small Entity: No

Agency Contact: Jo Eleanor Elliott, R.N., M.A., Director, Division of Nursing, BHPr, Department of Health and Human Services, Health Resources and Services Administration, Room 5C-26, Parklawn Building, 5600 Fishers Lane, Rockville, MD 20857, 301 443-5786

RIN: 0905-AC30

698. GRANTS FOR HEALTH PROFESSIONS PROJECTS IN GERIATRICS

Legal Authority: 42 USC 216; 42 USC 295g-8

CFR Citation: 42 CFR 57, Subpart 00 (Proposed)

Legal Deadline: None.

Abstract: These proposed regulations would implement provisions for 788 (d) of the Public Health Service Act relating to geriatric education of the Health Professions Training Assistance Act of 1985 (Pub. L. 99-129).

Timetable:

Action	Date	FR Cite
NPRM	05/00/88	

Small Entity: No

Agency Contact: Thomas L. Louden, D.D.S., Director, Div. of Associated and Dental Health Professions, BHPr, Department of Health and Human Services, Health Resources and Services Administration, Room 8-101, Parklawn Building, 5600 Fishers Lane, Rockville, MD 20857, 301 443-6853

RIN: 0905-AC33

699. POST-BACCALAUREATE FACULTY FELLOWSHIP PROGRAM

Legal Authority: 42 USC 216; 42 USC 297

CFR Citation: 42 CFR 57, Subpart BB (Proposed)

Legal Deadline: None.

Abstract: These proposed regulations would implement section 830 (b) of the Public Health Service Act relating to post-baccalaureate fellowships for faculty to conform with the Nurse Education Amendments of 1985 (Pub. L. 99-92).

Timetable:

Action	Date	FR Cite
NPRM	06/00/88	

Small Entity: No

Agency Contact: Ms. Jo Eleanor Elliott, R.N., M.A., Director, Division of Nursing, BHPr, Department of Health and Human Services, Health Resources and Services Administration, Room 5C-26, Parklawn Building, 5600 Fishers Lane, Rockville, MD 20857, 301 443-5786

RIN: 0905-AC34

700. GRANTS FOR COMMUNITY HEALTH SERVICES CRITERIA AND PROCEDURE FOR DETERMINING MEDICALLY UNDERSERVED POPULATIONS (MUP)

Legal Authority: PL 99-280, Sec 2; 42 USC 254c(b)

CFR Citation: 42 CFR 51c102(e)

Legal Deadline: None.

Abstract: Section 330(b) of the Public Health Service Act was amended by Section 2 of the Health Services Amendments Act of 1986 (P.L. 99-280). The amendment requires the Secretary to publish, in regulation, criteria for the designation of areas or population groups with shortages of personnel health services. These designated areas are eligible for the award of grants for planning and operating Community Health Centers. The amendment requires that the Secretary consult with the Chief Executive Officer of a State and local officials in publishing MUP designation criteria and in designating or dedesignating MUP. The amendment also requires the Secretary to consult with State organizations representing a majority of Community Health Centers in the State.

Timetable:

Action	Date	FR Cite
NPRM	06/00/88	

Small Entity: No

Agency Contact: James P. Purvis, Director, Office of Program and Policy, Development, Department of Health and Human Services, Health Resources and Services Administration, 5600 Fishers Lane, Room 7-15, Rockville, MD 20857, 301 443-1034

RIN: 0905-AC35

701. IMPLEMENTATION OF HEALTH CARE QUALITY IMPROVEMENT ACT OF 1986 (TITLE IV, PUBLIC LAW 99-660)

Significance: Regulatory Program

Legal Authority: 42 USC 11136; 42 USC 11137

CFR Citation: 45 CFR 60, (Proposed)

Legal Deadline: None.

Abstract: This rule proposes to implement the Health Care Quality Improvement Act of 1986, Title IV of PL 99-660, specifically related to section 426 for the disclosure and correction of information and section 427(b) for confidentiality of information .

Timetable:

Action	Date	FR Cite
NPRM	03/21/88	53 FR 9260
NPRM Comment Period End	05/20/88	
Final Action	10/00/88	

Small Entity: No

Agency Contact: J. Jarrett Clinton, M.D., Director, Bureau of Health Professions, Department of Health and Human Services, Public Health Service, Room 8-05, Parklawn Building, 5600 Fishers Lane, Rockville, Maryland 20857, 301 443-5796

RIN: 0905-AC51

702. ● NATIONAL HEALTH SERVICE CORPS LOAN REPAYMENT PROGRAM AND SPECIAL REPAYMENT PROVISIONS PROVISIONS PROGRAM

Significance: Regulatory Program

Legal Authority: PL 100-177

CFR Citation: 42 CFR 62.21 to 62.27; 42 CFR 62.51 to 62.56; 42 CFR 62.71 to 62.76

Legal Deadline: Statutory, May 28, 1988.

HHS—PHS—HRSA **Proposed Rule Stage**

Abstract: The National Health Service Corps Amendments of 1987 , PL 100-177 amends the Public Health Service Act adding a new section at 338B of the Act authorizing the Secretary to establish the NHSC Loan Repayment Program. PL 160-177 also amends the PHS Act by adding a new section 338H authorizing the Secretary to establish a program of matching grants to support state loan repayment programs similar to the Federal Loan Repayment Program. PL100- 177 also establishes a new program which is not part of the PHS Act which provides a time limited opportunity for person in default of their scholarship obligation as of November 1, 1987 to repay these obligations through service or through a combination of service and monetary payment. The statute requires that the Secretary issue regulations for the Loan Repayment Program with in 180 days of enactment of PL 100-177 .

Timetable:

Action	Date	FR Cite
NPRM	04/00/88	

Small Entity: No

Agency Contact: James P. Purvis, Director, Office Of Program and Policy, Development, BHCDA, Department of Health and Human Services, Health Resources and Services Administration, 5600 Fishers Lane, Room 7-05, Rockville, MD 20857, 301 443-1034

RIN: 0905-AC65

703. ● AREA HEALTH EDUCATION CENTER (AHEC) PROGRAM

Legal Authority: 42 USC 216; 42 USC 295g to l

CFR Citation: 42 CFR 57 Subpart MM

Legal Deadline: None.

Abstract: This NPRM proposes to amend the existing regulations governing the Area Health Education Center (AHEC) Program, under section 781 of the Public Health Service Act, to incorporate provisions that would: 1) limit involvement by the Federal Government in the support of any new project to a maximum of 5 years; 2) require an applicant to submit a plan describing how the center will continue operations after a maximum of 5 years of support by the Federal Government; and 3) add an evaluation criteria to include the extent to which minorities or low-income individuals reside in the area served by the Center.

Timetable:

Action	Date	FR Cite
NPRM	09/00/88	

Small Entity: No

Agency Contact: Donald L. Weaver, M.D., Director, Division of Medicine, BHPr, Department of Health and Human Services, Health Resources and Services Administration, Room 4C-25, Parklawn Building, 5600 Fishers Lane, Rockville, MD 20857, 301 443-6190

RIN: 0905-AC67

704. ● DESIGNATION OF MENTAL HEALTH MANPOWER SHORTAGE AREAS

Legal Authority: 42 USC 216; 42 USC 254e

CFR Citation: 42 CFR Pat 5

Legal Deadline: None.

Abstract: This notice proposes an amendment to the existing regulations, governing the Designation of Health Manpower Shortage Areas authorized by section 332 of the Public Health Service Act, which would replace the current criteria for designations of areas having shortages of psychiatrists, with criteria for mental health manpower shortage areas to include not only psychiatrists but also other core mental health professionals (clinical psychologists, psychiatric social workers and psychiatric nurses) in a geographic area.

Timetable:

Action	Date	FR Cite
NPRM	09/00/88	

Small Entity: No

Agency Contact: Richard C. Lee, Chief, Distribution & Shortage Analysis Br, ODAM, BHPr, Department of Health and Human Services, Health Resources and Services Administration, Room 8-57, Parklawn Building, Rockville, MD, 20857, 301 443-6932

RIN: 0905-AC68

705. ● HEALTH EDUCATION ASSISTANCE LOAN (HEAL) PROGRAM

Legal Authority: 42 USC 216; 42 USC 2941

CFR Citation: 42 CFR 60

Legal Deadline: None.

Abstract: This NPRM would amend the HEAL regulations, 42 CFR Part 60, to clarify the litigation requirement for all lenders and holders and to clarify the applicability of various sections of the regulations.

Timetable:

Action	Date	FR Cite
NPRM	04/00/88	

Small Entity: No

Agency Contact: Ms. Peggy Washburn, Chief, Program Development Branch, DSA, BHPr, Department of Health and Human Services, Health Resources and Services Administration, Room 8-48, Parklawn Building, 5600 Fishers Lane , Rockville, MD 20857, 301 443-4540

RIN: 0905-AC69

DEPARTMENT OF HEALTH AND HUMAN SERVICES (HHS) — Final Rule Stage

Public Health Service (PHS)—Health Resources and Services Administration (HRSA)

706. GRANTS FOR NURSE ANESTHETIST TRAINEESHIPS

Legal Authority: 42 USC 216; 42 USC 297-1

CFR Citation: 42 CFR 57, Subpart F (Proposed)

Legal Deadline: None.

Abstract: These rules implement section 831 of the Public Health Service Act to make grants to public or private nonprofit institutions to cover the costs of traineeships for the training, in programs which meet such requirements as the Secretary shall by regulation prescribe and which are accredited by an entity or entities designated by the Secretary of Education, of licensed registered nurses to be nurse anesthetists.

Timetable:

Action	Date	FR Cite
NPRM	12/16/86	51 FR 45000
NPRM Comment Period End	02/17/87	
Final Action	05/00/88	

Small Entity: No

Agency Contact: Dr. Thomas P. Phillips, Chief, Advanced Nurse Training Res. Br., Division of Nursing, BHPr, Department of Health and Human Services, Health Resources and Services Administration, 5600 Fishers Lane, Room 5C-25, Rockville, MD 20857, 301 443-6333

RIN: 0905-AB33

707. HEALTH PROFESSIONS STUDENT LOAN (HPSL) PROGRAM: DEFERMENT REVISIONS

Significance: Agency Priority

Legal Authority: 42 USC 216; 42 USC 294m to 294q

CFR Citation: 42 CFR 57, Subpart C

Legal Deadline: Statutory, January 22, 1986. Within 90 days after the Act's enactment, the Secretary of HHS shall promulgate regulations to carry out Sec. 741(c)(2) of the Public Health Service Act. Although the regulations will not be published until after the legal deadline, no requests for new deferments are expected until after publication.

Abstract: This rule amends existing regulations governing the Health Professions Student Loan (HPSL) Program to include the revised deferment provisions enacted on October 22, 1985, as part of the Health Professions Training Assistance Act of 1985 (Pub. L. 99-129).

Timetable:

Action	Date	FR Cite
NPRM	10/28/86	51 FR 39460
NPRM Comment Period End	12/29/86	
Final Action	00/00/00	

Small Entity: No

Agency Contact: Ms. Peggy Washburn, Chief, Program Devel. Br., DSA, BHPr, Department of Health and Human Services, Health Resources and Services Administration, Room 8-48, Parklawn Building, 5600 Fishers Lane, Rockville, MD 20857, 301 443-4540

RIN: 0905-AC06

708. HEALTH EDUCATION ASSISTANCE LOAN (HEAL) PROGRAM: DEFERMENT REVISIONS

Significance: Agency Priority

Legal Authority: 42 USC 216; 42 USC 294 to 294l

CFR Citation: 42 CFR 60

Legal Deadline: Statutory, January 22, 1986. Within 90 days after the Act's enactment, the Secretary of HHS shall promulgate regulations to carry out clause (ii) of Sec. 731(a)(2)(B) of the Public Health Service Act. Although the regulations will not be published until after the legal deadline, no requests for new deferments are expected until after pub.

Abstract: This rule amends existing regulations governing the Health Education Assistance Loan (HEAL) Program to include the revised deferment provisions enacted on October 22, 1985, as part of the Health Professions Training Assistance Act of 1985 (Pub. L. 99-129).

Timetable:

Action	Date	FR Cite
NPRM	10/28/86	51 FR 39464
NPRM Comment Period End	12/29/86	
Final Action	00/00/00	

Small Entity: No

Agency Contact: Ms. Peggy Washburn, Chief, Program Devel. Br., DSA, BHPr, Department of Health and Human Services, Health Resources and Services Administration, Room 8-48, Parklawn Building, 5600 Fishers Lane, Rockville, MD 20857, 301 443-4540

RIN: 0905-AC07

709. NURSING SPECIAL PROJECT GRANTS

Legal Authority: 42 USC 216; 42 USC 296k

CFR Citation: 42 CFR 57, Subpart T

Legal Deadline: None.

Abstract: This regulation would implement the provisions of the Nursing Education Amendments of 1985 (Pub. L. 99-92) and the Health Professions Training Assistance Act of 1985 (Pub. L. 99-129) to bring the existing regulations into compliance with the law.

These amendments add four new purposes to the Nursing Special Projects Program and revise the existing regulations to add project requirements for each of the new purposes along with an additional project requirement for one of the original grant projects.

Timetable:

Action	Date	FR Cite
NPRM	06/05/87	52 FR 21490
NPRM Comment Period End	08/04/87	
Final Action	04/00/88	

Small Entity: No

Agency Contact: Ms. Jo Eleanor Elliott, R.N., M.A., Director, Division of Nursing, BHPr, Department of Health and Human Services, Health Resources and Services Administration, Room 5C-26, Parklawn Building, 5600 Fishers Lane, Rockville, MD 20857, 301 443-5786

RIN: 0905-AC18

710. AREA HEALTH EDUCATION CENTERS (AHEC)

Legal Authority: 42 USC 216; 42 USC 295g-1

CFR Citation: 42 CFR 57, Subpart MM

Legal Deadline: None.

Abstract: These regulations would implement provisions of the Health Professions Training Assistance Act of 1985 (Pub.L. 99-129) to bring the existing regulations into compliance with the law.

Timetable:

Action	Date	FR Cite
Final Action	00/00/00	

Small Entity: No

Agency Contact: Donald L. Weaver, M.D., Director, Division of Medicine, BHPr, Department of Health and Human Services, Health Resources and Services Administration, Room 4C-25, Parklawn Building, 5600 Fishers Lane, Rockville, MD 20857, 301 443-6190

RIN: 0905-AC22

711. NURSING STUDENT LOAN (NSL) PROGRAM: IMPLEMENTATION OF THE LAW (PUB. L. 99-92)

Legal Authority: 42 USC 216; 42 USC 297a to 297h

CFR Citation: 42 CFR 57, Subpart D

Legal Deadline: None.

Abstract: These regulations propose to implement provisions of the Nurse Education Amendments of 1985 (Pub. L. 99-92) which require public comment

before being published in final regulations.

Timetable:

Action	Date	FR Cite
NPRM	06/05/87	52 FR 21486
NPRM Comment Period End	07/20/87	
Final Action	09/00/88	

Small Entity: No

Agency Contact: Ms. Peggy Washburn, Chief, Program Devel. Br., DSA, BHPr, Department of Health and Human Services, Public Health Service, Room 8-48, Parklawn Building, 5600 Fishers Lane, Rockville, MD 20857, 301 443-4540

RIN: 0905-AC31

712. HEALTH PROFESSIONS STUDENT LOAN (HPSL) PROGRAM: IMPLEMENTATION OF THE LAW (PUB. L. 99-129)

Legal Authority: 42 USC 216; 42 USC 294m to 294q

CFR Citation: 42 CFR 57, Subpart C

Legal Deadline: None.

Abstract: These regulations propose to implement provisions of the Health Professions Training Assistance Act of 1985 (Pub. L. 99-129) which require public comment before they can be published in final regulations.

Timetable:

Action	Date	FR Cite
NPRM	06/03/87	52 FR 20989
NPRM Comment Period End	07/20/87	
Final Action	09/00/88	

Small Entity: No

Agency Contact: Ms. Peggy Washburn, Chief, Program Devel. Br., DSA, BHPr, Department of Health and Human Services, Health Resources and Services Administration, Room 8-48,Parklawn Building, 5600 Fishers Lane, Rockville, MD 20857, 301 443-4540

RIN: 0905-AC32

713. HEALTH MANPOWER SHORTAGE AREA DESIGNATION CRITERIA

Legal Authority: 42 USC 216; 42 USC 254e

CFR Citation: 42 CFR 5

Legal Deadline: None.

Abstract: This notice proposes an amendment to the existing regulations governing the criteria for Designation of Health Manpower Shortage Areas required by Section 332 of the P.H.S Act. This amendment would revise the definition for the term "internees" used in the criteria for designating those Federal and State institutions which have a shortage of primary medical care, dental care, or psychiatric manpower.

Timetable:

Action	Date	FR Cite
NPRM	10/29/87	52 FR 41594
NPRM Comment Period End	12/28/87	
Final Action	07/00/88	

Small Entity: No

Agency Contact: Richard C. Lee, Chief, Distribution & Shortage Analysis Br., Office of Data Analysis & Management, BHPr, Department of Health and Human Services, Public Health Service, Room 8-57, Parklawn Building, 5600 Fishers Lane, Rockville, Maryland 20857, 301 443-6932

RIN: 0905-AC50

714. ● GRANTS FOR CONSTRUCTION OF TEACHING FACILITIES, EDUCATIONAL IMPROVEMENTS, SCHOLARSHIPS, AND STUDENT LOANS

Legal Authority: 42 USC 295g to 3(a)(1); 42 USC 295G TO 6(a); 42 USC 296m; 42 USC 296l; 42 USC 295h to 1c; 42 USC 295g to 4; 42 USC 295g to 1

CFR Citation: 42 CFR Pat 57

Legal Deadline: None.

Abstract: This final regulation removes all non-statutory funding preferences from regulations governing various PHS health professions training grant programs. This action is necessary to provide more flexibility in program management by enabling these training grant programs to be more responsive to the emerging and changing public health care needs of the nation.

Timetable:

Action	Date	FR Cite
Final Action	00/00/00	

Small Entity: No

Agency Contact: Ms. Rosemary Havill, Program Coordination Branch, OPS, BHPr, Department of Health and Human Services, Health Resources and Services Administration, Rm 7-74, Parklawn Building, 5600 Fishers Lane, Rockville, MD 20857, 301 443-1530

RIN: 0905-AC66

DEPARTMENT OF HEALTH AND HUMAN SERVICES (HHS) — Completed Actions

Public Health Service (PHS)—Health Resources and Services Administration (HRSA)

715. INDIAN HEALTH SERVICE, 42 CFR PART 36 SUBPART I, CONTRACTS UNDER THE INDIAN SELF-DETERMINATION ACT: AMENDMENTS

CFR Citation: 42 CFR 36, Subpart I

Completed:

Reason	Date	FR Cite
Withdrawn A general revision is not called for at this time.	12/11/87	

Small Entity: Undetermined

Agency Contact: Lloyd Fagg 301 443-6344

RIN: 0905-AB31

716. REASONABLE VOLUME OF UNCOMPENSATED SERVICES TO PERSONS UNABLE TO PAY (HILL-BURTON)

Significance: Regulatory Program

CFR Citation: 42 CFR 124, Subpart F

Completed:

Reason	Date	FR Cite
Final Action	12/03/87	52 FR 46022
Final Action Effective	02/01/88	

Small Entity: No

Agency Contact: Roger McClung 301 443-4273

RIN: 0905-AB35

VOL 53 ISS 79 PT 1 AP 25 1988 UMI

HHS—PHS—HRSA

Completed Actions

717. GENERAL REVIEW AND REVISION OF PUBLIC LAW 93-638 PROGRAM AND CONTRACTING REGULATIONS

Significance: Regulatory Program

CFR Citation: 41 CFR 3 to 4; 42 CFR 36, Subpart H and I

Completed:

Reason	Date	FR Cite
Withdrawn A general revision is not called for at this time.	12/11/87	

Small Entity: Undetermined

Agency Contact: Richard J. McCloskey 301 443-1116

RIN: 0905-AB98

718. CHANGES IN PUBLIC LAW 93-638. REGULATIONS TO REVISE THE DECLINATION APPEALS PROCESS AND CLARIFY ITS SCOPE

CFR Citation: 42 CFR 36

Completed:

Reason	Date	FR Cite
Withdrawn General revision of regulation is not called for at this time.	12/11/87	

Small Entity: Undetermined

Agency Contact: Les Morris 301 443-1115

RIN: 0905-AB99

DEPARTMENT OF HEALTH AND HUMAN SERVICES (HHS)

Proposed Rule Stage

Public Health Service (PHS)—National Institutes of Health (NIH)

719. MISCONDUCT IN SCIENCE

Significance: Regulatory Program

Legal Authority: 42 USC 241; 42 USC 289b

CFR Citation: 42 CFR 50

Legal Deadline: None.

Abstract: Recipients of Public Health Service research and research training funds do not presently have sufficient guidance regarding their responsibility to investigate and report possible misconduct in PHS-funded research or research training. While many institutions have voluntarily established procedures for dealing with misconduct in science, they are not required to do so and in many recent instances the lack of defined procedures has delayed or compromised awardees' investigations. Institutional policies regarding reports to funding agencies vary considerably. The proposed regulation will define the point at which funding agencies are notified and will require awardees to develop procedures for dealing with misconduct in science. Section 493 of the PHS Act requires that the HHS Secretary issue regulations.

Timetable:

Action	Date	FR Cite
NPRM	04/00/88	
Final Action	10/00/88	

Small Entity: No

Agency Contact: George J. Galasso, Ph.D., Associate Director for Extramural Affairs, Department of Health and Human Services, Public Health Service, National Inst. of Health, Bldg. 1, Rm. 111, 9000 Rockville Pike, Bethesda, MD 20892, 301 496-5356

RIN: 0905-AB91

720. CHANGES IN NIH PROGRAM REGULATIONS DUE TO P.L. 99-158,P.L. 99-499 AND TITLE X OF P.L. 99-660

Legal Authority: PL 99-158, Sec 2; PL 99-499, Sec 126; PL 99-499, Sec 209; PL 99-660, Title X

CFR Citation: 42 CFR 4; 42 CFR 52 to 52h; 42 CFR 59a; 42 CFR 64; 42 CFR 66

Legal Deadline: None.

Abstract: The regulations of the National Institutes of Health will be revised to show changed section numbers in the PHS Act and reflect program changes under the Health Research Extension Act of 1985 (P.L. 99-158), the Superfund Amendments and Reauthorization Act of 1986 (P.L. 99-499), and the provisions of Title X of P.L. 99-660 concerning Alzheimer's Disease and Related Dementias Research.

Timetable:

Action	Date	FR Cite
NPRM	00/00/00	

Small Entity: Not Applicable

Agency Contact: Lowell D. Peart, NIH Regulations Officer, Department of Health and Human Services, National Institutes of Health, 9000 Rockville Pike, 31/3B07, Bethesda, MD 20892, 301 496-4606

RIN: 0905-AC02

721. NATIONAL INSTITUTES OF HEALTH CENTER GRANTS 42 CFR PART 52A

Legal Authority: 42 USC 216; 42 USC 285a-3; 42 USC 285b-4; 42 USC 285c-5; 42 USC 285d-6; 42 USC 285e-2

CFR Citation: 42 CFR 52a

Legal Deadline: None.

Abstract: The NIH Center Grants Regulations will be revised to incorporate changes necessitated by the Health Research Extension Act of 1985 (P.L. 99-158).

Timetable:

Action	Date	FR Cite
NPRM	07/00/88	

Small Entity: Not Applicable

Agency Contact: Lowell D. Peart, NIH Regulations Officer, Department of Health and Human Services, National Institutes of Health, 9000 Rockville Pike, 31/3B07, Bethesda, MD 20892, 301 496-4606

RIN: 0905-AC27

DEPARTMENT OF HEALTH AND HUMAN SERVICES (HHS)
Public Health Service (PHS)—National Institutes of Health (NIH)

Final Rule Stage

722. NATIONAL LIBRARY OF MEDICINE PROGRAMS. REVISION OF GENERAL RULES FOR THE NATIONAL LIBRARY OF MEDICINE AND NATIONAL LIBRARY OF MEDICINE GRANTS

Legal Authority: 42 USC 216; 42 USC 286; 42 USC 286b-2; 42 USC 286b-3; 42 USC 286b-5; 42 USC 286b-6; 42 USC 284

CFR Citation: 42 CFR 4; 42 CFR 59a; 42 CFR 63; 42 CFR 64

Legal Deadline: None.

Abstract: All of the regulations are being substantially clarified and reduced in size by eliminating out of date or otherwise available information. The regulations at 42 CFR Part 4 pertain to the access of facilities and library collections. Those at 42 CFR Part 59a deal with NLM extramural programs. Part 59a is being amended to remove the requirement that photocopies of biomedical material be provided without charge to users. The regulations at 42 CFR Part 63 deal with both NIH and NLM traineeships. Part 63 is proposed to be revised to reflect authority in section 405, PHS Act. The regulations at 42 CFR Part 64 govern the training grants of NIH and NLM.

Timetable:

Action	Date	FR Cite
NPRM	02/11/85	50 FR 05638
Final Action	06/00/88	

Small Entity: No

Agency Contact: Kenneth Carney, Executive Officer, Department of Health and Human Services, Public Health Service, National Library of Medicine, Bethesda, MD 20894, 301 496-6491

RIN: 0905-AA66

DEPARTMENT OF HEALTH AND HUMAN SERVICES (HHS)
Health Care Financing Administration (HCFA)

Prerule Stage

723. DISCONTINUATION OF PREVAILING CHARGE DIFFERENTIALS FOR SPECIALISTS

Legal Authority: 42 USC 1395u(b)(3)

CFR Citation: 42 CFR 405.504(b)

Legal Deadline: None.

Abstract: This notice requests comments on a possible change to the regulations that govern determinations of the reasonable charges that Medicare pays for physician services. We are considering discontinuing the establishment of separate prevailing charge screens for physicians' services based on specialty practice, with the possible exception of specified medical visits and consultations.

Timetable:

Action	Date	FR Cite
Notice of Request For Comments	04/00/88	

Small Entity: Undetermined

Agency Contact: Bernard Patashnik, Director, Division of Medical Services, Reimbursement, Department of Health and Human Services, Health Care Financing Administration, Rm. 1-H-5 ELR, 6325 Security Blvd., Baltimore, MD. 21207, 301 597-1334

RIN: 0938-AD26

DEPARTMENT OF HEALTH AND HUMAN SERVICES (HHS)
Health Care Financing Administration (HCFA)

Proposed Rule Stage

724. AMENDING COST REPORTS AND REOPENING INTERMEDIARY PAYMENT DETERMINATIONS AND ADMINISTRATIVE REVIEW DECISIONS

Legal Authority: 42 USC 1302; 42 USC 1395f(b); 42 USC 1395g; 42 USC 1395l; 42 USC 1395x(v); 42 USC 1395hh; 42 USC 1395rr; 42 USC 1395ww; 42 USC 1395xx; 42 USC 405; 42 USC 1395ii; 42 USC 1395oo

CFR Citation: 42 CFR 405.453; 42 CFR 405.1833; 42 CFR 405.1885; 42 CFR 405.1887; 42 CFR 405.1803(b); 42 CFR 405.1811(a); 42 CFR 405.1813; 42 CFR 405.1837(b); 42 CFR 405.1841; 42 CFR 405.1863; 42 CFR 405.1877; 42 CFR 405.1880

Legal Deadline: None.

Abstract: This proposal would establish rules to govern and distinguish between the amending of cost reports and the reopening of Medicare intermediary payment determinations and administrative review decisions. This proposal would provide guidance to intermediaries and the Provider Reimbursement Review Board concerning the circumstances under which those actions may be taken.

Timetable:

Action	Date	FR Cite
NPRM	00/00/00	

Small Entity: No

Agency Contact: Harold Fishman, Division Director, Department of Health and Human Services, Health Care Financing Administration, Division of Medicare Eligibility Policy, Room 323 EHR, 6325 Security Blvd., Baltimore, MD 21207, 301 594-9077

RIN: 0938-AA33

725. MEDICAID ELIGIBILITY

Legal Authority: 42 USC 1396a(a)(10); 42 USC 1302; 42 USC 1396a(f); 42 USC 1396a(a)(17); 42 USC 1396b(f)(1); 42 USC 1396d(a)

CFR Citation: 42 CFR 435; 42 CFR 436

Legal Deadline: None.

Abstract: This regulation would conform the current regulations to changes with respect to Medicaid eligibility groups and coverage criteria made by the Tax Equity and Fiscal Responsibility Act of 1982 (TEFRA). Most of these changes affect the provisions of September 30, 1981 regulations concerning Medicaid eligibility for the optional categorically needy and the medically needy, published as a result of the Omnibus Budget Reconciliation Act of 1981. The regulations would also respond to

public comments received on the September 30 regulations and make some administrative changes to clarify policy and enhance the efficient operation of the Medicaid program (for example, clarification of policy on establishing the medically needy income level for one person).

Timetable:

Action	Date	FR Cite
NPRM	09/00/88	

Small Entity: No

Agency Contact: Marinos Svolos, Division Director, Department of Health and Human Services, Health Care Financing Administration, Div of Medicaid Eligibility, Room 416, East High Rise Bldg, 6325 Security Blvd, Baltimore, MD 21207, 301 594-9050

RIN: 0938-AA58

726. MMIS: DEFINITION OF "MECHANIZED CLAIMS PROCESSING AND INFORMATION RETRIEVAL SYSTEM"

Legal Authority: 42 USC 1302; 42 USC 1396b(a)(3); 42 USC 1396b(r)

CFR Citation: 42 CFR 433.111; 42 CFR 433.112; 42 CFR 433.113; 42 CFR 433.119; 42 CFR 433.120; 42 CFR 433.121; 42 CFR 433.122; 42 CFR 433.131

Legal Deadline: None.

Abstract: This rule would change the definition of "mechanized claims processing and information retrieval systems" to clarify under what circumstances we will pay Federal financial participation at a percentage higher than 50 percent for a Medicaid Management Information System.

Timetable:

Action	Date	FR Cite
NPRM	00/00/00	

Small Entity: No

Agency Contact: Guy Harriman, Division Director, Department of Health and Human Services, Health Care Financing Administration, Division of Medicaid Procedures, G-C-7 Meadows East, 6300 Security Blvd., Baltimore, MD 21207, 301 594-4880

RIN: 0938-AA63

727. DEDUCTION OF INCURRED MEDICAL EXPENSES (SPENDDOWN)

Significance: Agency Priority

Legal Authority: 42 USC 1302; 42 USC 1396a(a)(10); 42 USC 1396a(a)(17)

CFR Citation: 42 CFR 435.732; 42 CFR 435.831; 42 CFR 436.831

Legal Deadline: None.

Abstract: These regulations permit States to revise the process by which medical expenses are considered in determining Medicaid eligibility. This process applies when an individual's income level during a budget period would ordinarily preclude eligibility except that incurred medical expenses reduce income to the eligibility level.

Timetable:

Action	Date	FR Cite
NPRM	09/02/83	48 FR 39959
NPRM Comment Period End	11/01/83	
Developing detailed study of issues	00/00/00	

Small Entity: No

Agency Contact: Marinos Svolos, Director, Div. of Medicaid Eligibility, Department of Health and Human Services, Health Care Financing Administration, Room 416 East High Rise Bldg., 6325 Security Boulevard, Baltimore, MD 21207, 301 594-9050

RIN: 0938-AB07

728. PAYMENT FOR CLINICAL DIAGNOSTIC LABORATORY SERVICES

Legal Authority: 42 USC 1395l(a)(1)(D); 42 USC 1395l(a)(2)(D); 42 USC 1395l(b)(4); 42 USC 1395l(h); 42 USC 1395cc(a)(2)(A); 42 USC 1396b(i)(7); 42 USC 1302; 42 USC 1395hh

CFR Citation: 42 CFR 405.439; 42 CFR 405.501; 42 CFR 405.502; 42 CFR 405.505; 42 CFR 405.511; 42 CFR 405.516; 42 CFR 405.1672; 42 CFR 405.1675; 42 CFR 405.1684; 42 CFR 431.54; 42 CFR 447.10; 42 CFR 447.300; 42 CFR 447.321; 42 CFR 447.342

Legal Deadline: None.

Abstract: These regulations would implement provisions of Pub.L. 98-369, 99-272, and 99-509 relating to payment and "assignment" for diagnostic laboratory tests, establishing in regulations the methods for implementing fee schedules. This rule would set forth the methods by which the fee schedules would be updated and would allow certain adjustment or exceptions to the fee schedules. In accordance with the statute, the regulations would provide that on January 1, 1990 and thereafter, fees will be determined on a nationwide basis.

Timetable:

Action	Date	FR Cite
NPRM	00/00/00	

Small Entity: No

Agency Contact: Bernard Pataknik, Division Director, Department of Health and Human Services, Health Care Financing Administration, Division of Medical Services Reimbursement, Room 1-A-5 ELR, 6325 Security Blvd., Baltimore, MD 21207, 301 597-1334

RIN: 0938-AB50

729. PHYSICIAN CERTIFICATION AND PLAN OF CARE REQUIREMENTS AND INSPECTION OF CARE REVIEWS

Legal Authority: 42 USC 1302; 42 USC 1396a(a)(26); 42 USC 1396a(a)(30)(B); 42 USC 1396a(a)(31); 42 USC 1396a(a)(44); 42 USC 1396b(g)

CFR Citation: 42 CFR 400; 42 CFR 440; 42 CFR 441; 42 CFR 456

Legal Deadline: None.

Abstract: These rules would revise the regulations to incorporate changes made by sections 2363 and 2368 of the Deficit Reduction Act of 1984. These statutes made the requirements for physician certification and development of a plan of care (formerly utilization control requirements) State plan requirements. States are no longer required to make the quarterly showings of compliance for those requirements or for utilization review. A quarterly demonstration to the Secretary of a satisfactory utilization control program is, under sections 2363 and 2368, limited to inspections of care in participating mental hospitals, skilled nursing facilities and intermediate care facilities, including intermediate care facilities for the mentally retarded.

Timetable:

Action	Date	FR Cite
NPRM	00/00/00	

Small Entity: Yes

Agency Contact: Thomas E. Hoyer, Division Director, Department of Health and Human Services, Health Care Financing Administration, Div. of Provider Services & Coverage Pol.,

Room 405 EHR, 6325 Security Blvd., Baltimore, MD 21207, 301 594-9446

RIN: 0938-AB55

730. MEDICARE: HEALTH MAINTENANCE ORGANIZATIONS AND COMPETITIVE MEDICAL PLANS: COORDINATED OPEN ENROLLMENT

Significance: Agency Priority

Legal Authority: 42 USC 1395mm(c)(3)(A)(iii); 42 USC 1302; 42 USC 1395hh

CFR Citation: 42 CFR 417

Legal Deadline: None.

Abstract: These regulations would implement section 2350 of Pub. L. 98-369 by requiring that HMOs and CMPs hold coordinated open enrollment periods in geographic areas that encompass two or more organizations.

Timetable:

Action	Date	FR Cite
NPRM	00/00/00	

Small Entity: Undetermined

Agency Contact: Stanley Katz, Division Director, Department of Health and Human Services, Health Care Financing Administration, Div. of Medical Services Coverage Policy, Room 489 EHR, 6325 Security Blvd., Baltimore, MD 21207, 301 594-8561

RIN: 0938-AB57

731. PAYMENT FOR THE SERVICES OF PHYSICIANS FURNISHED IN TEACHING SETTINGS AND OTHER PROVIDERS

Legal Authority: 42 USC 1395u; 42 USC 1395x; 42 USC 1395xx; 42 USC 1302; 42 USC 1395l(a); 42 USC 1395hh

CFR Citation: 42 CFR 405.465; 42 CFR 405.466; 42 CFR 405.480; 42 CFR 405.481; 42 CFR 405.482; 42 CFR 405.522; 42 CFR 405.523; 42 CFR 405.524; 42 CFR 405.525; 42 CFR 405.550; 42 CFR 405.551; 42 CFR 405.552; 42 CFR 405.553; 42 CFR 405.554; 42 CFR 405.555; ...

Legal Deadline: None.

Abstract: These regulations would implement provisions of section 948 of P.L. 96-499 and section 2307 of P.L. 98-369. This legislation deals with certain problems that have arisen in the Medicare program with respect to payment for physicians in the teaching setting. Specifically addressed by Congress is the problem of distinguishing between the services a physician furnishes to individual patients as a teaching physician and services furnished to the provider, as well as the method of reimbursement for these services. This proposed rule sets forth the conditions under which physicians in teaching settings would be reimbursed on a reasonable cost basis or, alternatively, on a reasonable charge basis. It also describes the methods used to determine the customary charges for the services of those physicians. This rule would also clarify related issues of physician reimbursement.

Timetable:

Action	Date	FR Cite
NPRM	04/00/88	

Small Entity: No

Agency Contact: Bernard Patashnik, Director, Division of Medical Services Reimbursement, Department of Health and Human Services, Health Care Financing Administration, Room 1-H-5 ELR, 6325 Security Blvd., Baltimore, MD 21207, 301 597-1334

RIN: 0938-AB61

732. REVIEW OF CURRENT RULES AFFECTING CLINICAL LABORATORIES

Significance: Regulatory Program

Legal Authority: 42 USC 1395x; 42 USC 1302; 42 USC 1395hh; 42 USC 263a

CFR Citation: 42 CFR 405.1310 to 405.1317; 42 CFR 482.27; 42 CFR 74

Legal Deadline: None.

Abstract: Currently, hospital-based and independent laboratories are subject to varying State Licensure requirements and to Medicare regulations that vary from requirements of private accreditation entities and from regulations governing laboratories performing tests under interstate commerce. One consequence is that the quality of laboratories' services is adjudged using different standards. Inconsistent standards not only create confusion regarding necessary performance levels, but may permit laboratories with substandard performance to continue furnishing covered services. This proposed rule would establish better measures of performance and amend requirements to improve the quality of laboratory services.

Timetable:

Action	Date	FR Cite
NPRM	04/00/88	

Small Entity: Yes

Additional Information: Taken from the Regulatory Program of the United States Government 1987 - 1988 which projected final action in October 1987.

Agency Contact: Wayne Smith, Director, Office of Survey and Certification, Department of Health and Human Services, Health Care Financing Administration, 2-D-2 ME, 6300 Security Blvd., Baltimore, MD 21207, 301 594-5547

RIN: 0938-AB96

733. MEDICARE SECONDARY PAYOR AND MEDICARE RECOVERY AGAINST THIRD PARTIES

Significance: Agency Priority

Legal Authority: 42 USC 1302; 42 USC 1395y(b); 42 USC 1395hh

CFR Citation: 42 CFR 405; 42 CFR 411; 42 CFR 489

Legal Deadline: None.

Abstract: This proposed rule would revise regulations to reflect recent statutory provisions regarding HCFA's right to bring an action directly against certain third parties or to join or intervene in an action against a third party. It would also place certain requirements on hospitals regarding the identification and billing of potential Medicare secondary payor cases. Additionally, it would include requirements regarding timely refunds to Medicare when collections have been made from another insurer. The proposal would also clarify rules for Medicare payment for services furnished to an end-stage renal disease (ESRD) patient who is also covered under an employer group health plan. It would include the changes pertaining to Medicare conditional payments for ESRD beneficiaries made by section 4036(a) of the Omnibus Budget Reconciliation Act of 1987. It would update policies pertaining to Medicare payment for services covered under a workers' compensation law or plan, or under no-fault or liability insurance. It would make Medicare secondary to all kinds of no-fault insurance, not just automobile no-fault insurance.

Timetable:

Action	Date	FR Cite
NPRM	04/00/88	

Small Entity: Yes

Agency Contact: Herbert Pollock, Branch Chief, Department of Health and Human Services, Health Care Financing Administration, Medicare Claims Payment Policy Branch, Rm. 323 EHR, 6325 Security Blvd., Baltimore, MD 21207, 301 594-4978

RIN: 0938-AC05

734. CHANGES IN PAYMENT POLICY FOR DIRECT GRADUATE MEDICAL EDUCATION COSTS

Significance: Regulatory Program

Legal Authority: 42 USC 1302; 42 USC 1395hh; 42 USC 1395ww(h)

CFR Citation: 42 CFR 405.521; 42 CFR 405.522; 42 CFR 412.113; 42 CFR 413.85; 42 CFR 413.86

Legal Deadline: None.

Abstract: This rule sets forth proposed changes in Medicare Policy concerning payment for direct graduate medical education costs of providers associated with approved residency programs. These changes are necessary in order to implement section 1886(h) of the Social Security Act which was added by section 9202 of the Consolidated Omnibus Budget Reconciliation Act of 1985 and amended by section 9314 of the Omnibus Budget Reconciliation Act of 1986. The changes in this rule are effective for cost reporting periods beginning on or after July 1, 1985.

Timetable:

Action	Date	FR Cite
NPRM	04/00/88	

Small Entity: Yes

Agency Contact: Linda Magno, Director, Div. of Hospital Payment Policy, Office of Reimbursement Policy, Department of Health and Human Services, Health Care Financing Administration, 1-H-1 ELR, 6325 Security Blvd., Baltimore, MD 21207, 301 594-9343

RIN: 0938-AC27

735. EFFECT OF APPEALS ON HOSPITAL-SPECIFIC PORTION OF THE PROSPECTIVE PAYMENT RATE

Significance: Agency Priority

Legal Authority: 42 USC 1302; 42 USC 1395hh; 42 USC 1395ww

CFR Citation: 42 CFR 412.71; 42 CFR 412.72; 42 CFR 412.73; 42 CFR 412.76; 42 CFR 412.128

Legal Deadline: None.

Abstract: This proposed rule would amend and clarify the prospective payment regulations governing administrative and judicial review of payment amounts in order to resolve confusion concerning interpretation of those regulations. In particular, the rule would amend and clarify the provisions pertaining to adjustment of the hospital-specific rate under the prospective payment system.

Timetable:

Action	Date	FR Cite
NPRM	00/00/00	

Small Entity: Yes

Agency Contact: Edward Rees, Branch Chief, Department of Health and Human Services, Health Care Financing Administration, Payment Determination Policy Branch, Rm. 1-H-1 ELR, 6325 Security Blvd., Baltimore, MD 21207, 301 597-6403

RIN: 0938-AC40

736. USE OF THE HCFA HOSPITAL WAGE INDEX FOR DETERMINING PAYMENT TO HOSPICES

Legal Authority: 42 USC 1395f(i); 42 USC 1302; 42 USC 1395hh

CFR Citation: 42 CFR 418.306(c)

Legal Deadline: None.

Abstract: This notice would replace the current wage index used to determine payment for hospice care furnished to Medicare beneficiaries with the HCFA survey-based hospital wage index.

Timetable:

Action	Date	FR Cite
Proposed Notice	00/00/00	

Small Entity: No

Agency Contact: Anthony Lovecchio, Director, Div. of Alternative Reimbursement Systems, Department of Health and Human Services, Health Care Financing Administration, 1-A-3 East Low Rise, 6325 Security Blvd., Baltimore, MD 21207, 301 594-4011

RIN: 0938-AC49

737. HOSPICE/CASE MANAGEMENT

Legal Authority: 42 USC 1396d(a)(18); 42 USC 1396d(o); 42 USC 1396b(a)(13)(C); 42 USC 1396o(a)(2)(E); 42 USC 1396o(b)(2)(E); 42 USC 1302; 42 USC 1396n(g); PL 99-509; PL 99-514; PL 99-272

CFR Citation: 42 CFR 418.32; 42 CFR 431.50; 42 CFR 435.218; 42 CFR 435.231; 42 CFR 440.185; 42 CFR 440.190; 42 CFR 440.250; 42 CFR 441; 42 CFR 447.53; 42 CFR 447.327; 42 CFR 447.381 to 384; 42 CFR 435.726; 42 CFR 435.735; 42 CFR 436.231; 42 CFR 441.18; ...

Legal Deadline: None.

Abstract: These regulations would implement 3 provisions of Pub. L. 99-272: (1) under section 9505, Medicare coverage of hospice care at State option, the regulations would establish eligibility requirements, covered services, reimbursement procedures and conditions of participation; (2) under section 9508, Medicaid coverage of case management services, at State option case management services may be furnished to specific Medicaid groups or geographic areas within a State; (3) under section 9123 there is an indefinite extension of the Medicare hospice benefit, which was scheduled to end on 09/30/86. These regulations would also implement sections 9411, 9412, and 9435d of Pub. L. 99-509, and section 1895(c) of Pub. L. 99-514, all relating to optional State coverage of case management and hospice services for the Medicaid population.

Timetable:

Action	Date	FR Cite
NPRM	04/00/88	

Small Entity: Yes

Agency Contact: Thomas Hoyer, Director, Div. of Provider Services & Coverage Policy, Department of Health and Human Services, Health Care Financing Administration, Room 405 EHR, 6325 Security Blvd., Baltimore, MD 21207, 301 594-9446

RIN: 0938-AC52

738. HOME AND COMMUNITY-BASED SERVICES AND RESPIRATORY CARE FOR VENTILATOR-DEPENDENT INDIVIDUALS

Legal Authority: 42 USC 1302; 42 USC 1396n(c)

CFR Citation: 42 CFR 435.726; 42 CFR 435.735; 42 CFR 440.180; 42 CFR 441.301; 42 CFR 441.302; 42 CFR 441.303; 42 CFR 441.304; 42 CFR 441.305; 42 CFR 441.306; 42 CFR 441.307; 42 CFR 441.308; 42 CFR 441.310; 42 CFR 440.185; 42 CFR 440.250

Legal Deadline: None.

Abstract: This rule would revise the regulations for home and community based services as required by section 9502 of Pub.L. 99-272 and sections 9408 and 9411 of Pub.L. 99-509. Also, this proposal would provide for respiratory care services as medical assistance under the State plan, in accordance with section 9408 of Pub.L. 99-509.

Timetable:

Action	Date	FR Cite
NPRM	04/00/88	

Small Entity: No

Agency Contact: Thomas Hoyer, Director, Division of Provider Services Coverage Pol., Department of Health and Human Services, Health Care Financing Administration, Room 405 EHR, 6325 Security Blvd., Baltimore, MD 21207, 301 594-9446

RIN: 0938-AC55

---

739. ● BILLING AND VERIFICATION ADD-ON RELATING TO HOME HEALTH AGENCIES COST PER VISIT LIMITS FOR COST REPORTING PERIODS BEGINNING JULY 1, 1986 AND JULY 1, 1987

Legal Authority: 42 USC 1395x(v)(1)(A); 42 USC 1395x(v)(1)(L)

CFR Citation: 42 CFR 413.30

Legal Deadline: None.

Abstract: This notice responds to the public comments we received concerning the billing and verification add-on factors that were included in the two schedules of limits on home health agency costs that were published in the Federal Register on July 7, 1987 (52 FR 25562). The first schedule of limits was applicable to cost reporting periods beginning on or after July 1, 1986 but before July 1, 1987, and the second to cost reporting periods beginning on or after July 1, 1987.

Timetable:

Action	Date	FR Cite
Final Notice	00/00/00	

Small Entity: No

Agency Contact: William J. Goeller, Director, Division of Payment and Reporting Policy, Department of Health and Human Services, Health Care Financing Administration, Room 1-F-5 ELR, 6325 Security Blvd, Baltimore, MD 21207, 301 597-1803

RIN: 0938-AC56

---

740. PARTICIPATION IN CHAMPUS AND CHAMPVA, HOSPITAL ADMISSIONS FOR VETERANS, DISCHARGE RIGHTS NOTICE, AND HOSPITAL RESPONSIBILITY FOR EMERGENCY CARE

Significance: Agency Priority

Legal Authority: 42 USC 1395x; 42 USC 1395cc; 42 USC 1395dd; 42 USC 1395hh; 42 USC 1302

CFR Citation: 42 CFR 405.1903; 42 CFR 489.20; 42 CFR 489.24; 42 CFR 489.25; 42 CFR 489.26; 42 CFR 489.27; 42 CFR 489.53; 42 CFR 1001.202; 42 CFR 1001.203; 42 CFR 1001.211; 42 CFR 1001.221; 42 CFR 1003.100; 42 CFR 1003.101; 42 CFR 1003.102; 42 CFR 1003.103; ...

Legal Deadline: None.

Abstract: This proposed rule would implement sections 9121 and 9122 of PL 99-272 as amended by PL 100-203. Specifically, under section 9121, Medicare participating hospitals with emergency departments would be required to provide upon request medical examinations and treatments for individuals with emergency medical conditions and women in active labor. Hospitals failing to meet those requirements may have their Medicare provider agreements suspended or terminated. In addition, the hospital and the responsible physician may each be subject to a civil money penalty for each such violation. Under section 9122, Medicare participating hospitals would be required to accept CHAMPUS and CHAMPVA payment as payment in full for services provided to CHAMPUS and CHAMPVA beneficiaries. These regulations would also implement section 233 of PL 99-576, which requires Medicare hospitals to admit veterans. They would also implement section 9305(b)(1) of PL 99-509, which requires Medicare hospitals to give patients a notice of their discharge rights. section 9305(b)(1) of PL 99-509 which requires Medicare hospitals to give patients a written notice of their discharge rights.

Timetable:

Action	Date	FR Cite
NPRM	04/00/88	

Small Entity: No

Agency Contact: Thomas Hoyer, Director, Div. of Provider Services & Coverage Policy, Department of Health and Human Services, Health Care Financing Administration, Room 405 EHR Bldg., 6325 Security Blvd., Baltimore, MD 21207, 301 594-9446

RIN: 0938-AC58

---

741. PAYMENT FOR KIDNEYS SENT TO FOREIGN COUNTRIES OR TRANSPLANTED IN NON-MEDICARE BENEFICIARIES

Legal Authority: 42 USC 1395rr; 42 USC 1302; 42 USC 1395hh

CFR Citation: 42 CFR 413.179

Legal Deadline: None.

Abstract: These regulations will exclude the costs associated with kidneys sent to foreign countries or transplanted in non-Medicare recipients from Medicare payments made to organ procurement agencies.

Timetable:

Action	Date	FR Cite
NPRM	03/02/88	53 FR 6672
NPRM Comment Period End	05/02/88	
Final Action	00/00/00	

Small Entity: No

Agency Contact: Mark Horney, Program Analyst, Office of Reimbursement Policy, Department of Health and Human Services, Health Care Financing Administration, 1-A-5 ELR, 6325 Security Boulevard, Baltimore, MD 21207, 301 597-6939

RIN: 0938-AC59

---

742. MEDICARE BENEFICIARY APPEALS

Legal Authority: 42 USC 1302; 42 USC 1395ff; 42 USC 1395hh; 42 USC 1395 et seq; 42 USC 1395ii; 42 USC 1395pp; 42 USC 1395u; 42 USC 405(a); 42 USC 405(d); 42 USC 1320(c); 42 USC 1395i; 42 USC 1395cc; PL 100-203, Sec 4307

CFR Citation: 42 CFR 405.701; 42 CFR 405.708; 42 CFR 405.716; 42 CFR 405.717; 42 CFR 405.718a through d; 42 CFR 405.719; 42 CFR 405.720; 42 CFR 405.722; 42 CFR 405.724; 42 CFR 405.730; 42 CFR 405.801; 42 CFR 426; 42 CFR 405.702

Legal Deadline: None.

Abstract: These regulations would establish a new Part 426, setting forth the procedures under which HCFA Administrative Law Judges (ALJs) would conduct hearings of certain Medicare appeals, which are now heard by ALJs of the Social Security Administration. These hearings involve appeals under section 1869 and 1879 of the Social Security Act concerning the amount of benefits payable under Part A and Part B. Prior to enactment of the Omnibus Reconciliation Act of 1986, ALJ hearings were not available for appeals of Part B payments, except for certain matters arising under section 1876 of the Act (payment to health maintenance organizations and competitive medical plans). Part 426 also would establish procedures for a Medicare Review Board, judicial review, reopening of ALJ and Board decisions, representation of parties and payment of certain travel expenses.

Timetable:

Action	Date	FR Cite
NPRM	00/00/00	

Small Entity: No

Agency Contact: Harold Shaffer, Special Assistant, AAO, Department of Health and Human Services, Health Care Financing Administration, Room 784 EHR Bldg., 6325 Security Blvd., Baltimore, MD 21207, 301 597-4854

RIN: 0938-AC81

743. MEDICAID ELIGIBILITY FOR QUALIFIED SEVERELY IMPAIRED INDIVIDUALS

Legal Authority: 42 USC 1302; 42 USC 1396a(f); 42 USC 1396a(10)(A)(i)(II); 42 USC 1396a(O); 42 USC 1396d(q); 42 USC 1382h; 42 USC 1382h note; 42 USC 1396a note

CFR Citation: 42 CFR 435.120; 42 CFR 435.121; 42 CFR 435.725; 42 CFR 435.733

Legal Deadline: None.

Abstract: This proposed rule would amend the Medicaid regulations to specify for Medicaid, mandatory categorically needy eligibility for individuals who, although severely impaired, work and demonstrate ability to perform substantial gainful activity and who are considered to be Supplemental Security Income (SSI) beneficiaries by virtue of 1619 of the Act. It also specifies how States electing the option under Section 1902 to provide Medicaid under criteria more restrictive than SSI, will treat the "1619" individuals. It also would specify how SSI payments made to certain institutionalized individuals are to be disregarded as income under Medicaid for up to two months. The amendments would conform the regulations to provisions of the Omnibus Budget Reconciliation Act of 1986 and the Employment Opportunities for Disabled Americans Act.

Timetable:

Action	Date	FR Cite
NPRM	04/00/88	

Small Entity: No

Agency Contact: Richard Strauss, Program Analyst, Division of Medicaid Eligibility Policy, Department of Health and Human Services, Health Care Financing Administration, Room 448 East High Rise Bldg., 6325 Security Blvd., Baltimore, MD 21207, 301 594-6529

RIN: 0938-AC82

744. DENIAL OF PAYMENT FOR SUBSTANDARD QUALITY CARE, REVIEW OF BENEFICIARY COMPLAINTS

Significance: Regulatory Program

Legal Authority: 42 USC 1320c-3(a); 42 USC 1395cc(a)(1)(K); 42 USC 1395u; 42 USC 1395pp(b); PL 99-272, Sec 9403; PL 99-509, Sec 9353(c); PL 100-203, Sec 4096(a)(1)(A)

CFR Citation: 42 CFR 462.105; 42 CFR 466.70; 42 CFR 466.74; 42 CFR 466.83; 42 CFR 466.88; 42 CFR 466.93; 42 CFR 466.94; 42 CFR 466.98; 42 CFR 466.100; 42 CFR 466.106; 42 CFR 473.12; 42 CFR 473.14; 42 CFR 473.40; 42 CFR 476.133; 42 CFR 489.21; ...

Legal Deadline: None.

Abstract: The purpose of this proposed rule is to implement section 9403 of PL 99-272 and 9353(c) of PL 99-509 and PL 100-203, section 4096(a)(1)(A). Under section 9403 of PL 99-272, Peer Review Organizations (PROs) are authorized to deny Medicare payment to a physician or hospital for services furnished that are of substandard quality. The PRO determinations to deny Medicare payment for these services would be made on the basis of criteria that are consistent with guidelines established by the Secretary. Under section 9353(c) of PL 99-509, PROs would conduct an appropriate review of all written complaints from beneficiaries or their representatives about the quality of services not meeting professionally recognized standards of health care. Under PL 100-203 beneficiaries are protected from liability for the cost of physician services where payment is denied because services were of substandard quality.

Timetable:

Action	Date	FR Cite
NPRM	04/00/88	

Small Entity: Yes

Agency Contact: Patricia Booth, Acting Director, Division of Review Program, Department of Health and Human Services, Health Care Financing Administration, 2-D-2 Meadows East Bldg., 6300 Security Blvd., Baltimore, MD 21207, 301 594-7909

RIN: 0938-AC84

745. REVISED EFFECTIVE DATE OF MEDICARE/MEDICAID PROVIDER AGREEMENT AND SUPPLIER PARTICIPATION

Legal Authority: 42 USC 1302; 42 USC 1395cc; 42 USC 1393ff(c); 42 USC 1395hh; 42 USC 1396i

CFR Citation: 42 CFR 440.10; 42 CFR 440.70; 42 CFR 442.13; 42 CFR 488.40; 42 CFR 489.13; 42 CFR 498.3

Legal Deadline: None.

Abstract: This proposed rule would revise Medicare and Medicaid rules to provide for a 60-day conditional certification period for facilities seeking participation in the Medicare and Medicaid program to apply uniform effective rules to all Medicare or Medicaid providers, including Medicare Suppliers, and Medicaid only hospitals and home health agencies; and to specify that effective date decisions are precluded from Medicare reconsiderations and hearings.

Timetable:

Action	Date	FR Cite
NPRM	00/00/00	

Small Entity: Yes

Agency Contact: Peter Burdette, Program Analyst, Office of Survey and Certification, Department of Health and Human Services, Health Care Financing Administration, Room 2-D-2 Meadows East Bldg., 6300 Security Blvd., Baltimore, MD 21207, 301 594-3222

RIN: 0938-AC88

VOL 53 ISS 79 PT 1 APR 25 1988 UMI

746. RECOGNITION OF COLLEGE OF AMERICAN PATHOLOGISTS LABORATORY ACCREDITATION PROGRAM

Legal Authority: 42 USC 1395bb

CFR Citation: 42 CFR 405.1310; 42 CFR 482.27

Legal Deadline: None.

Abstract: This notice proposes that the Health Care Financing Administration recognize the accreditation program of the College of American Pathologists for clinical laboratories participating in the Medicare program. As a result of HCFA's recognition, these laboratories would not ordinarily be subject to an inspection by State survey agencies to determine their compliance with Federal requirements. They would be "deemed" to meet the Medicare Conditions of Participation for Hospital-Based Laboratories (42 CFR 482.27) or conditions for coverage of services of independent laboratories (42 CFR 405.1310).

Timetable:

Action	Date	FR Cite
Final Notice	00/00/00	
Proposed Notice	00/00/00	

Small Entity: No

Agency Contact: Mike Goldman, Chief, Laboratory and Ambulatory Services Branch, Department of Health and Human Services, Health Care Financing Administration, 2-D-2 Meadows East Building, 6300 Security Boulevard, Baltimore, MD 21207, 301 594-9737

RIN: 0938 AC89

747. PRO REVIEW OF SURGICAL PROCEDURES AND REQUIREMENTS FOR SECOND OPINIONS

Legal Authority: 42 USC 1320c-13; 42 USC 1302; 42 USC 1395hh

CFR Citation: 42 CFR 466.150 to 190; 42 CFR 473.12; 42 CFR 473.14; 42 CFR 473.40

Legal Deadline: None.

Abstract: This proposed rule would implement section 9401 of Pub.L. 99-272, which provides that, under Medicare, a physician must request from the Peer Review Organization (PRO) preadmission review for certain surgical procedures. Under section 9401, if the PRO determines that the procedure is not appropriate and medically necessary, the PRO will deny payment under Medicare If the PRO cannot determine whether a surgical procedure is medically necessary and appropriate, the beneficiary would obtain an opinion from a second physician, or where the opinion of the second physician differs from the first physician, the beneficiary may obtain an opinion from a third physician.

Timetable:

Action	Date	FR Cite
NPRM	00/00/00	

Small Entity: Undetermined

Agency Contact: Richard Husk, Director, Office of Medical Review, Department of Health and Human Services, Health Care Financing Administration, Room 2-D-2 Meadows East Bldg., 6300 Security Blvd., Baltimore, MD 21207, 301 594-7909

RIN: 0938-AC90

748. PAYMENT FOR THE COST OF MALPRACTICE INSURANCE FOR HOSPITALS EXCLUDED FROM THE PROSPECTIVE PAYMENT SYSTEM

Legal Authority: 42 USC 1302; 42 USC 1395f(b); 42 USC 1395g; 42 USC 1395l(a); 42 USC 1395x(v); 42 USC 1395hh; 42 USC 1395rr; 42 USC 1395ww; 42 USC 1395xx

CFR Citation: 42 CFR 413.56

Legal Deadline: None.

Abstract: Medicare's share of payment for the cost of a hospital's malpractice insurance is determined in part through the use of a scaling factor formula. In this notice, we are undertaking to develop a separate set of values for use in the scaling factor formula for hospitals excluded from the prospective payment system.

Timetable:

Action	Date	FR Cite
Notice	00/00/00	

Small Entity: Undetermined

Agency Contact: Paul Trimble, Special Assistant, Office of Reimbursement Policy, Department of Health and Human Services, Health Care Financing Administration, 1-F-5 East Low Rise Bldg., 6325 Security Blvd., Baltimore, MD 21207, 301 594-8640

RIN: 0938-AC97

749. CHANGES CONCERNING DETERMINATION OF ALLOWABLE INTEREST EXPENSE AND SUSPENSION OF PAYMENTS

Legal Authority: 42 USC 1320b-4; 42 USC 1395g; 42 USC 1395u; 42 USC 1395x(v)(1)(A); 42 USC 1395hh; 42 USC 1302

CFR Citation: 42 CFR 413.153; 42 CFR 405.370; 42 CFR 413.5(c)(3)

Legal Deadline: None.

Abstract: This rule proposes changes to the Medicare regulations to provide for the following: (1) elimination of the requirement that in case of overpayments to health care provider's, the contractor makes a determination that a suspension of payment is needed to protect the program against financial loss before the payment can be suspended; (2) elimination of the requirement that investment income of providers from gifts, grants, and endowments be offset against allowable interest expenses if that investment income is not held separately (that is, commingled with other funds); and (3) extension of the list of exceptions to the interest expense reduction provision to include investment income from deferred compensation plans and self-insurance funds.

Timetable:

Action	Date	FR Cite
NPRM	00/00/00	

Small Entity: No

Agency Contact: William Goeller, Director, Division of Payment and Reporting Policy, Department of Health and Human Services, Health Care Financing Administration, 1-F-5 East Low Rise Building, 6325 Security Blvd., Baltimore, MD 21207, 301 597-1803

RIN: 0938-AC99

750. CHANGES CONCERNING THE DEFINITION OF ACCRUAL BASIS OF ACCOUNTING

Legal Authority: 42 USC 1395x(v)

CFR Citation: 42 CFR 413.24

Legal Deadline: None.

Abstract: This rule proposes to revise the Medicare regulations to clarify the definition of "accrual basis of accounting" to indicate that expenses must be incurred by provider of health care services before Medicare will pay its share of those expenses. This change

BEST COPY AVAILABLE

is intended to conform the regulations with the law and to promote economy and efficiency in the administration of the Medicare program.

Timetable:

Action	Date	FR Cite
NPRM	04/00/88	

Small Entity: No

Agency Contact: William Goeller, Director, Division of Payment and Reporting Policy, Department of Health and Human Services, Health Care Financing Administration, Room 1-F-5 ELR, 6325 Security Blvd., Baltimore, MD 21207, 301 597-1802

RIN: 0938-AD01

---

751. OPTIONAL PAYMENT SYSTEM FOR LOW MEDICARE VOLUME SKILLED NURSING FACILITIES

Significance: Regulatory Program

Legal Authority: 42 USC 1395yy(d)

CFR Citation: 42 CFR 413.30

Legal Deadline: None.

Abstract: This rule proposes to establish optional prospective payment rates for routine services furnished by certain skilled nursing facilities. The prospective rate would be on a per diem basis and would include payment for the cost of furnishing general inpatient routine services and associated capital-related costs. As specified in the Conference Committee Report accompanying PL 99-272, the rates paid to proprietary SNFs would include a component for the routine service portion of the return on equity capital. As specified in section 1861(v)(1)(B) of the Act, the return on equity component would only be included in the rate paid to proprietary SNFs. This rule would propose instructions for determining eligibility for payment under this system, and the methodology for calculating the prospective payment rates.

Timetable:

Action	Date	FR Cite
NPRM	00/00/00	

Small Entity: Yes

Agency Contact: William Goeller, Director, Division of Payment and Reporting Policy, Department of Health and Human Services, Health Care Financing Administration, Room 1-F-5 ELR, 6325 Security Blvd., Baltimore, MD 21207, 301 597-1802

RIN: 0938-AD02

---

752. CRITERIA AND PROCEDURES FOR MEDICAL SERVICES COVERAGE DECISIONS

Significance: Agency Priority

Legal Authority: 42 USC 1395y; 42 USC 1302; 42 USC 1395hh

CFR Citation: 42 CFR 405.202; 42 CFR 405.407; 42 CFR 405.408

Legal Deadline: None.

Abstract: The proposed rule would establish in regulations generally applicable standards and procedures for HCFA determinations as to whether and under what circumstances specific medical items and services should be paid for under Medicare. It establishes and explains the criteria relied upon for determining whether an item or service is "reasonable and necessary." The objective of the criteria and procedures set forth in this proposed rule is to assure that Federal funds are expended only for medical services that are covered under the Medicare program.

Timetable:

Action	Date	FR Cite
NPRM	00/00/00	

Small Entity: No

Agency Contact: Bart McCann, M.D., Chief, Special Coverage Issues Branch, Department of Health and Human Services, Health Care Financing Administration, 455 East High Rise Bldg., 6325 Security Blvd., Baltimore, MD 21207, 301 594-9370

RIN: 0938-AD07

---

753. REVISIONS TO CONDITIONS OF PARTICIPATION FOR HOSPITALS AND CONDITIONS FOR COVERAGE OF SERVICES OF INDEPENDENT LABORATORIES AND SUPPLIERS OF ESRD SERVICES

Significance: Regulatory Program

Legal Authority: 42 USC 1395x(e)(6)(B); PL 99-509, Sec 9339(d); 42 USC 1395x(ee); 42 USC 1302; 42 USC 1395hh

CFR Citation: 42 CFR 405.1312; 42 CFR 405.2171; 42 CFR 482.21; 42 CFR 405.2135; 42 CFR 405.2137; 42 CFR 482.27; 42 CFR 482.43

Legal Deadline: None.

Abstract: These revisions would (a) require hospitals to provide a discharge planning process; and (b) allow a laboratory director to meet State standards for qualifications, rather than federal, if they differ. These revisions would conform our regulations with requirements of Pub.L. 99-509.

Timetable:

Action	Date	FR Cite
NPRM	04/00/88	

Small Entity: No

Agency Contact: Robert Wren, Director, Office of Coverage Policy, Department of Health and Human Services, Health Care Financing Administration, Room 401 East High Rise, 6325 Security Blvd., Baltimore, MD 21207, 301 594-9690

RIN: 0938-AD11

---

754. RECOGNITION OF JOINT COMMISSION ON ACCREDITATION OF HEALTHCARE ORGANIZATIONS' HOME CARE PROGRAM STANDARDS AND THE NATIONAL LEAGUE FOR NURSING'S STANDARDS FOR HOME HEALTH AGENCIES

Significance: Agency Priority

Legal Authority: 42 USC 1395bb(a); 42 USC 1302; 42 USC 1395hh

CFR Citation: Not applicable

Legal Deadline: None.

Abstract: Under this proposed notice, hospital-based home health agencies accredited by the Joint Commission on Accreditation for Healthcare Organizations' and home health agencies accredited by the National League for Nursing would be considered or "deemed" to meet the Medicare conditions of participation. Thus, these agencies would not ordinarily be subject to an inspection by State survey agencies to determine their compliance with Federal requirements. As a result of the home health agency's deemed status, a State also could choose to permit the agency to participate as a provider under the Medicaid program.

Timetable:

Action	Date	FR Cite
Proposed Notice	12/31/87	52 FR 49510
Public Comment Period End	02/29/88	
Final Notice	00/00/00	

Small Entity: No

VOL 53 ISS 79 PT 1 AP 25 1988 UMI

Agency Contact: Anita Heygster, Program Analyst, Long Term Care Branch, Department of Health and Human Services, Health Care Financing Administration, Room 431 EHR, 6325 Security Blvd., Baltimore, MD 21207, 301 594-9025

RIN: 0938-AD13

755. EXPLANATION OF RIGHTS AND OTHER HMO/CMP PROVISIONS

Legal Authority: 42 USC 1395mm; PL 99-509, Sec 9312(a); 42 USC 1302; 42 USC 1395hh

CFR Citation: 42 CFR 417.413; 42 CFR 417.428; 42 CFR 417.432; 42 CFR 417.436; 42 CFR 417.446; 42 CFR 417.448; 42 CFR 417.460; 42 CFR 417.640; 42 CFR 417.494

Legal Deadline: None.

Abstract: This proposed rule would revise Medicare regulations to repeal the "two-for-one" rule for Medicare enrollees; expand required information and require annual notice of HMO/CMP enrollees rights; and add a provision to terminate a contract for noncompliance pertaining to restrictions on waivers of 50 percent for Medicare enrollment. These revisions would implement provisions of the Omnibus Budget Reconciliation Act of 1986.

Timetable:

Action	Date	FR Cite
NPRM	00/00/00	

Small Entity: Yes

Agency Contact: Joan Mahanes, Program Analyst, Office of Coverage Policy, Department of Health and Human Services, Health Care Financing Administration, Room 463 East High Rise Bldg., 6325 Security Blvd., Baltimore, MD 21207, 301 594-8046

RIN: 0938-AD14

756. ELIGIBILITY OF ALIENS FOR MEDICAID

Significance: Regulatory Program

Legal Authority: 42 USC 1396b(u); PL 99-603, Sec 201; PL 99-509

CFR Citation: 42 CFR 435.402; 42 CFR 436.402; 42 CFR 440.200; 42 CFR 440.250; 42 CFR 436.128; 42 CFR 436.406; 42 CFR 436.408; 42 CFR 436.2; 42 CFR 440.255; 42 CFR 435.139; 42 CFR 435.406; 42 CFR 435.408; 42 CFR 435.1; 42 CFR 435.3; 42 CFR 436.126; ...

Legal Deadline. None.

Abstract: This proposed rule would revise Medicaid regulations applicable for aliens who meet eligibility requirements as categorically needy or medically needy. It would establish in the regulations that aliens lawfully admitted for permanent residence or permanently residing in the United States under color of law may be eligible for all Medicaid services. It also would identify those aliens who may be eligible only for limited services.

Timetable:

Action	Date	FR Cite
NPRM	04/00/88	
Final Action	00/00/00	

Small Entity: No

Agency Contact: Marinos T. Svolos, Director, Division of Medicaid Eligibiltiy Policy, Department of Health and Human Services, Health Care Financing Administration, Room 400 East High Rise Bldg., 6325 Security Blvd., Baltimore, MD 21207, 301 594-9051

RIN: 0938-AD15

757. MEDICAID: ELIGIBILITY GROUPS EXTENDED COVERAGE OF SERVICES, AND CONDITIONS OF ELIGIBILITY: COBRA AND TEFRA

Legal Authority: 42 USC 1396a(a)(10); 42 USC 1302; 42 USC 1396d(a); 42 USC 1396k(a); 42 USC 1396s; 42 USC 1383c; 42 USC 673; 42 USC 675; 42 USC 672; 42 USC 1396a(a)(25)(b); 42 USC 1396a(e)(3)

CFR Citation: 42 CFR 435; 42 CFR 436

Legal Deadline: None.

Abstract: This proposed rule would amend the Medicaid regulations to incorporate numerous mandatory eligibility groups for Medicaid coverage: pregnant women; children in adoption and foster care; certain disabled widows and widowers; and certain disabled children being cared for at home. The rule would also provide for extended care for pregnant women after termination of pregnancy and add a condition of eligibility relating to third party liability. The amendments would conform the regulations to provisions of the Consolidated Omnibus Reconciliation Act of 1985 and the Tax Equity and Fiscal Responsibility Act of 1982. States have been informed that these provisions of the statute are self-implementing. Manual instructions containing procedures for States to implement the requirements have been issued.

Timetable:

Action	Date	FR Cite
NPRM	04/00/88	

Small Entity: No

Agency Contact: Marinos Svolos, Director, Division of Medicaid Eligibility Policy, Department of Health and Human Services, Health Care Financing Administration, Room 416 East High Rise Bldg., 6325 Security Blvd., Baltimore, MD 21207, 301 594-6050

RIN: 0938-AD16

758. MEDICAID ELIGIBILITY OF POVERTY LEVEL GROUPS AND EXTENDED COVERAGE OF SERVICES

Legal Authority: 42 USC 1396a(a)(10); 42 USC 1396a(l); 42 USC 1396a(f); 42 USC 1396a(b)(2); 42 USC 1302; 42 USC 1396a(m); 42 USC 1396a(n); 42 USC 1396b(f); 42 USC 1396b(u); 42 USC 1396d(p); 42 USC 1396r-1; 42 USC 1396a(a)(47); 42 USC 1396a(e)(6); 42 USC 1396a(e)(8); 42 USC 1396a(a)(17)

CFR Citation: 42 CFR 431; 42 CFR 435; 42 CFR 436; 42 CFR 440; 42 CFR 447

Legal Deadline: None.

Abstract: This proposed rule would amend the Medicaid regulations to incorporate changes relating to Medicaid eligibility groups and coverage of services made by the Omnibus Budget Reconciliation Act of 1987 (P.L. 100-203), the Omnibus Budget Reconciliation Act of 1986 (P.L. 99-509), and the Homeless Eligibility Clarification Act of 1986 (P.L. 99-570). This rule would add optional eligibility groups of pregnant women, infants and children, and aged and disabled individuals with incomes up to a specified percentage of the Federal poverty line; provide for optional Medicaid coverage of Medicare cost-sharing expenses for qualified Medicare beneficiaries with incomes at or below the Federal poverty line; clarify eligibility of homeless individuals; add provisions for a presumptive eligibility period for pregnant women who, based on preliminary information, appear to meet income requirements under Medicaid, and clarify coverage of and services to pregnant women and children.

Timetable:

Action	Date	FR Cite
NPRM	00/00/00	

Small Entity: No

Agency Contact: Marinos Svolos, Director, Division of Medicaid Eligibility, Department of Health and Human Services, Health Care Financing Administration, Room 416 East High Rise, 6325 Security Blvd., Baltimore, MD 21207, 301 966-4452

RIN: 0938-AD17

759. TRANSFER OF ASSETS

Legal Authority: 42 USC 1302; 42 USC 1396p(c)

CFR Citation: 42 CFR 435; 42 CFR 436

Legal Deadline: None.

Abstract: These regulations would conform the regulations with the provisions of section 132 of P.L. 97-248 and provide guidance to State Medicaid agencies, which in determining an individual's eligibility for Medicaid, include as a resource the uncompensated value of assets such as cash or property that the individual has transferred to someone else for less than fair market value within the 24 months preceding a Medicaid application.

Timetable:

Action	Date	FR Cite
NPRM	00/00/00	

Small Entity: Undetermined

Agency Contact: Marinos Svolos, Director, Division of Medicaid Eligibility, Department of Health and Human Services, Health Care Financing Administration, Room 416 East High Rise, 6325 Security Blvd., Baltimore, MD 21207, 301 594-9050

RIN: 0938-AD18

760. PAYMENT FOR SERVICES OF CERTIFIED REGISTERED NURSE ANESTHETISTS

Legal Authority: 42 USC 1395x(s)(II); 42 USC 1395l(l); 42 USC 1395x(bb); 42 USC 1302; 42 USC 1395hh

CFR Citation: 42 CFR 405.553

Legal Deadline: Statutory, January 1, 1989.

Abstract: Section 9320 of Pub. L. 99-509 provides for payment on a fee schedule basis for services of certified registered nurse anesthetists (CRNAs) furnished to Medicare beneficiaries on or after January 1, 1989. The payment amount would be equal to the lower of 80 percent of a fee schedule established by the Secretary (and adjusted annually by the change in the Medicare economic index) or 80 percent of the actual charge. CRNAs would be required to accept assignment for all Medicare services and civil monetary penalties could be imposed for violations of this requirement. Alternatively, the hospital or physician could bill for and receive payment for services of CRNAs where an employment relationship or contract so stipulates. The hospital or physician could not bill more for CRNA services than the amount the CRNA could bill directly.

Timetable:

Action	Date	FR Cite
NPRM	07/00/88	

Small Entity: Yes

Agency Contact: Bernard Patashnik, Director, Division of Medical Services, Reimbursement, Department of Health and Human Services, Health Care Financing Administration, 6325 Security Blvd., Baltimore, MD. 21207, 301 597-1334

RIN: 0938-AD25

761. WITHDRAWAL OF COVERAGE OF SINGLE PHOTON ABSORPTIOMETRY

Legal Authority: 42 USC 1395y; 42 USC 1302; 42 USC 1395hh

CFR Citation: Not applicable

Legal Deadline: None.

Abstract: This notice announces the Medicare program's intent to withdraw Medicare coverage (including coverage under the End-Stage Renal Disease (ESRD) program) for single photon absorptionmetry and radiographic absorptionmetry for measuring bone mineral density for either diagnostic or treatment purposes, and to continue noncoverage of dual photon absorptiometry.

Timetable:

Action	Date	FR Cite
Proposed Notice	00/00/00	

Small Entity: No

Agency Contact: Barton McCann, M.D., Chief, Special Coverage Issue Branch, Office of Coverage Policy, Department of Health and Human Services, Health Care Financing Administration, Rm. 455 EHR, 6325 Security Blvd., Baltimore, MD. 21207, 301 594-9370

RIN: 0938-AD26

762. MODIFICATION OF CERTAIN REQUIREMENTS FOR HEALTH INSURING ORGANIZATIONS

Legal Authority: 42 USC 1302; 42 USC 1396b(m)(2)(A); PL 99-272, Sec 9517(c); PL 99-514, Sec 1895(c)(4); PL 99-509, Sec 9435(e)

CFR Citation: 42 CFR 434.14; 42 CFR 434.20; 42 CFR 434.40; 42 CFR 434.42; 42 CFR 434.44

Legal Deadline: None.

Abstract: The proposed rule describes the conditions under which a Health Insuring Organization (HIO) is subject to Medicaid Health Maintenance Organization (HMO) regulations. It would require that an HIO which becomes operational on or after January 1, 1986 and arranges for the delivery of services to recipients be subject to HMO requirements. The regulations would specify that exemptions from certain HMO requirements are permitted for HIOs which began operations on or after January 1, 1986 if the HIOs obtained a section 1915(b) waiver prior to that date, or if an HIO is otherwise identified in the law. The exemptions last only until the expiration of a section 1915(b) waiver.

Timetable:

Action	Date	FR Cite
NPRM	00/00/00	

Small Entity: No

Agency Contact: Robert E. Wren, Office Director, Department of Health and Human Services, Health Care Financing Administration, Office of Coverage Policy, Rm. 401 EHR, 6325 Security Blvd., Baltimore, MD. 21207, 301 594-9690

RIN: 0938-AD31

763. OCCUPATIONAL THERAPY, PHYSICIAN ASSISTANTS

Legal Authority: 42 USC 1302; 42 USC 1395x(g); 42 USC 1395cc; 42 USC 1395k; 42 USC 1395l; 42 USC 1395n; 42 USC 1395x(r); 42 USC 1395x(s); 42 USC 1395x(cc); 42 USC 1395hh; 42 USC 1395rr; 42 USC 1395x; 42 USC 1395aa

CFR Citation: 42 CFR 405.1634; 42 CFR 410.150; 42 CFR 486.1; 42 CFR 486.2; 42 CFR 486.3; 42 CFR 486.13; 42 CFR 486.14; 42 CFR 486.21; 42 CFR 486.22; 42 CFR 486.23; 42 CFR 486.24; 42 CFR 486.15; 42 CFR 486.16; 42 CFR 486.17; 42 CFR 486.19; ...

Legal Deadline: None.

Abstract: This proposed rule would implement sections 9337 and 9338 of Pub.L 99-509 which provides Medicare coverage for outpatient occupational therapy services furnished by providers and independent practitioners, identical to the coverage for outpatient physical therapy, and for physician assistant services.

Timetable:

Action	Date	FR Cite
NPRM	00/00/00	

Small Entity: No

Agency Contact: Sheridan Gladhill, Program Analyst, Department of Health and Human Services, Health Care Financing Administration, Rm. 403, EHR, 6325 Security Blvd., Baltimore, MD. 21207, 301 594-9440

RIN: 0938-AD32

764. PROHIBITION ON UNBUNDLING OF HOSPITAL OUTPATIENT SERVICES

Legal Authority: 42 USC 1302; 42 USC 1395y(a)(14); 42 USC 1395cc(a)(1)(H); 42 USC 1395cc(g); 42 USC 1395hh

CFR Citation: 42 CFR 405; 42 CFR 410; 42 CFR 489; 42 CFR 1003

Legal Deadline: None.

Abstract: This proposed rule, issued jointly by HCFA and OIG, would prohibit Medicare payment for nonphysician services furnished to a hospital outpatient by a provider or supplier other than the hospital, unless the services are furnished under an arrangement with the hospital. The hospital would be obligated by its provider agreement to furnish the services directly or under an arrangement. These regulations would also authorize OIG to impose a civil money penalty, not to exceed $2,000, against any individual who knowingly and willfully presents, or causes to be presented, a bill or request for payment for a hospital outpatient service under Part B of Medicare in violation of an arrangement. These regulations would implement sections 9343(c)(1), (c)(2), and (c)(3) of the Omnibus Budget Reconciliation Act of 1986.

Timetable:

Action	Date	FR Cite
NPRM	00/00/00	

Small Entity: Undetermined

Agency Contact: Tom Hoyer, Director, Division of Provider Services and, Coverage Policy, Department of Health and Human Services, Health Care Financing Administration, Rm. 405 EHR, 6325 Security Blvd., Baltimore, MD. 21207, 301 594-9446

RIN: 0938-AD33

765. PHYSICIAN LIABILITY ON NON-ASSIGNED CLAIMS

Legal Authority: PL 99-509, Sec 9332; 42 USC 1395u; 42 USC 1302; 42 USC 1395hh

CFR Citation: 42 CFR 405.339

Legal Deadline: None.

Abstract: This regulation would implement Section 9332(c) of the Omnibus Budget Reconciliation Act of 1986 under which nonparticipating physicians who provide on an unassigned basis services which are determined to be medically unnecessary are required to refund to the beneficiary any amounts collected for such services. Exceptions to the refund requirement would be granted only if the physician did not know and could not reasonably have been expected to know that the service was not covered, or if the beneficiary, after being informed that Medicare will not pay for the service, agrees to pay.

Timetable:

Action	Date	FR Cite
NPRM	00/00/00	

Small Entity: Undetermined

Agency Contact: Elmer Smith, Director, Office of Eligibility Policy, Department of Health and Human Services, Health Care Financing Administration, Rm. 400 EHR, 6325 Security Blvd., Baltimore, MD. 21207, 301 594-9682

RIN: 0938-AD34

766. SOURCE OF STATE SHARE OF FINANCIAL PARTICIPATION

Significance: Agency Priority

Legal Authority: 42 USC 1302

CFR Citation: 42 CFR 433

Legal Deadline: None.

Abstract: This rule revises the current regulations concerning State's use of public and private donations as sources of the state share of financial participation in Medicaid.

Timetable:

Action	Date	FR Cite
NPRM	06/00/88	

Small Entity: Yes

Agency Contact: Thomas Ashman, Program Analyst, Department of Health and Human Services, Health Care Financing Administration, Rm. 350 ME Bldg., 6325 Security Blvd., Baltimore, MD. 21207, 301 594-7330

RIN: 0938-AD35

767. CHANGES TO PEER REVIEW ORGANIZATION REGULATIONS

Legal Authority: 42 USC 1395y(a); 42 USC 1320(c); 42 USC 1395hh; 42 USC 1396a(a)(30)

CFR Citation: 42 CFR 405.310; 42 CFR 431.630; 42 CFR 433.15; 42 CFR 434.53; 42 CFR 456.2; 42 CFR 456.650; 42 CFR 462.101; 42 CFR 462.102; 42 CFR 462.106; 42 CFR 462.107; 41 CFR 466.71; 42 CFR 466.76; 42 CFR 466.78; 42 CFR 466.83; 42 CFR 466.93; ...

Legal Deadline: None.

Abstract: This proposed rule sets forth several changes to the Medicare regulations governing Peer Review Organizations. Some of these changes are the result of the passage of the Consolidated Omnibus Budget Reconciliation Act of 1985 and the Omnibus Budget Reconciliation Act of 1986. Other changes are of a technical nature and are intended to clarify and correct existing regulations on the Peer Review Organization Program. The proposed rule also sets forth the policy for reimbursement of costs incurred by hospitals for photocopying medical records needed by PROs during offsite reviews.

Timetable:

Action	Date	FR Cite
NPRM	04/00/88	

Small Entity: No

Agency Contact: Richard Husk, Director, Office of Medical Review, Department of Health and Human Services, Health Care Financing Administration, Rm. 2-D-2 Meadows

East Bdlg., 6325 Security Blvd., Baltimore, MD. 21207, **301 594-7909**

RIN: 0938-AD38

768. ADMINISTRATIVE SANCTIONS FOR CIRCUMVENTING THE PROSPECTIVE PAYMENT SYSTEM AND PRO DISCLOSURE TO LICENSING AND CERTIFICATION BODIES

Legal Authority: 42 USC 1395hh; 42 USC 1395ww; 42 USC 1302

CFR Citation: 42 CFR 400; 42 CFR 412; 42 CFR 476; 42 CFR 498; 42 CFR 1001

Legal Deadline: None.

Abstract: This proposed rule would set forth the Secretary's authority to levy administrative sanctions against hospital providers who engage in fraudulent and abusive practices intended to circumvent the Prospective Payment System (PPS) under the Medicare program. The purpose of these proposed regulations is to clarify and strengthen the OIG's existing authority to protect the Medicare program from abuse by terminating any hospital who fails to correct abusive practices under PPS when directed to do so by the appropriate utilization and quality control Peer Review Organization (PRO). These regulations also revise and clarify HCFA's authority with respect to corrective action procedures and procedures for program payment denial against those hospital providers who circumvent PPS.

Timetable:

Action	Date	FR Cite
NPRM	00/00/00	

Small Entity: No

Agency Contact: Richard Husk, Director, Office of Medical Review, Health Standards and Quality Bureau, Department of Health and Human Services, Health Care Financing Administration, 2-D-2 Meadows East, 6325 Security Boulevard, Baltimore, MD 21207, **301 594-7909**

RIN: 0938-AD42

769. REVISION OF THE MEDICARE ECONOMIC INDEX

Legal Authority: 42 USC 1302; 42 USC 1395hh; 42 USC 1395u(b)(3)

CFR Citation: 42 CFR 405.504

Legal Deadline: None.

Abstract: This proposed rule would establish in regulations the revised proxy measures which we believe have a sounder economic foundation than the current ones and meet the requirements of the Omnibus Budget Reconciliation Act of 1986.

Timetable:

Action	Date	FR Cite
NPRM	00/00/00	

Small Entity: Undetermined

Agency Contact: Ross H. Arnett, III, Chief, Economics and Actuarial Analysis Branch, Department of Health and Human Services, Health Care Financing Administration, 1705 Equitable Building Room 100, 6325 Security Blvd, Baltimore, MD 21207, **301 594-6714**

RIN: 0938-AD43

770. UPDATE OF AMBULATORY SURGICAL CENTER PAYMENT RATES FOR JULY 1, 1988

Significance: Agency Priority

Legal Authority: 42 USC 1395l(a)(4); 42 USC 1395l(i); 42 USC 1302; 42 USC 1395hh

CFR Citation: 42 CFR 416.130

Legal Deadline: Statutory, July 1, 1988.

Abstract: We would state the methodology used to determine the payment amounts for ambulatory surgical services and update payment rates, effective July 1, 1988.

Timetable:

Action	Date	FR Cite
Proposed Notice	04/00/88	
Final Notice	06/01/88	

Small Entity: Yes

Agency Contact: Charles Booth, Director, Office of Reimbursement Policy, Department of Health and Human Services, Health Care Financing Administration, Health Care Financing Administration, Room 181 EHR, 6325 Security Blvd., Baltimore, MD 21207, **301 594-9760**

RIN: 0938-AD44

771. ● MISCELLANEOUS CHANGES AFFECTING PAYMENT FOR INPATIENT HOSPITAL SERVICES

Significance: Agency Priority

Legal Authority: 42 USC 1395y(a); 42 USC 1395cc(a); 42 USC 1395ww(b); 42 USC 1395ww(d); 42 USC 1302; 42 USC 1395hh

CFR Citation: 42 CFR 405.310; 42 CFR 412.2; 42 CFR 412.50; 42 CFR 412.63; 42 CFR 412.92; 42 CFR 412.106; 42 CFR 412.210; 42 CFR 413.30; 42 CFR 413.40; 42 CFR 489.23

Legal Deadline: None.

Abstract: We would make several revisions to the regulations governing payment for inpatient hospital services which, in general, are necessary to conform the regulations to current policy. These changes would 1) clarify when the changes in urban/rural designations are recognized for purposes of the prospective payment system; 2) clarify the effective date of the revised payment rate for a hospital that is classified as a sole community hospital; 3) add a definition of patient days used in computing a hospital's disproportionate share patient percentage as well as clarify how we calculate the Supplemental Security Income/Medicare percentage based on Medicare patient days; and 4) clarify that provisions that govern requests for exceptions to and exemptions from a hospital's rate-of-increase ceiling also govern requests for adjustments to the ceiling and that we grant a hospital's request for an exception or adjustment only if its costs exceed its rate-of-increase ceiling. In addition, we would make two technical and conforming changes to the regulations.

Timetable:

Action	Date	FR Cite
NPRM	04/00/88	

Small Entity: No

Agency Contact: Linda Magno, Director, Division of Hospital Payment Policy, Department of Health and Human Services, Health Care Financing Administration, 1-H-1 ELR, 6325 Security Blvd., Baltimore, MD 21207, **301 594-9343**

RIN: 0938-AD46

772. ● SCHEDULE OF LIMITS FOR SKILLED NURSING FACILITY INPATIENT ROUTINE SERVICE COSTS FOR REPORTING PERIODS BEGINNING ON OR AFTER OCTOBER 1, 1988

Significance: Agency Priority

Legal Authority: 42 USC 1395x(v)(1); 42 USC 1395yy; 42 USC 1302; 42 USC 1395hh

CFR Citation: 42 CFR 413.30

Legal Deadline: None.

Abstract: This notice would set forth a revised schedule of limits on skilled nursing facility inpatient routine service costs that are reimbursed under Medicare. This schedule would apply to cost reporting periods beginning on or after October 1, 1988.

Timetable:

Action	Date	FR Cite
Notice	09/01/88	

Small Entity: Undetermined

Agency Contact: William Goeller, Director, Division of Payment and Reporting Policy, Department of Health and Human Services, Health Care Financing Administration, 1-F-5 ELR, 6325 Security Blvd., Baltimore, MD 21207, 301 597-1802

RIN: 0938-AD48

773. ● CHANGES TO THE INPATIENT HOSPITAL PROSPECTIVE PAYMENT SYSTEM AND FISCAL YEAR 1989 RATES

Significance: Agency Priority

Legal Authority: 42 USC 1395ww; 42 USC 1302; 42 USC 1395hh

CFR Citation: 42 CFR 412

Legal Deadline: Statutory, June 1, 1988. In accordance with 42 USC 1395ww an NPRM must be published by 06/01/88. Final rule must be published by 09/01/88.

Abstract: This proposed rule will solicit public comments on various revisions to the inpatient hospital prospective payment system. It will also include proposed changes in the methods, amounts and factors used to determine the prospective payment rates applicable to discharges occurring during FY 1989. In addition, this proposed rule will propose amendments to implement relevant provisions of PL 100-203 that are applicable to discharges occurring during FY 1989.

Timetable:

Action	Date	FR Cite
NPRM	05/02/88	
Final Action Effective	09/01/88	

Small Entity: Yes

Agency Contact: Linda Magno, Director, Division of Hospital Payment Policy, Department of Health and Human Services, Health Care Financing Administration, 1-H-1 ELR, 6325 Security Blvd., Baltimore, MD 21207, 301 594-9343

RIN: 0938-AD49

774. ● APPLICATION OF THE COMPARABLE SERVICES LIMITATION IN DETERMINING REASONABLE CHARGES

Legal Authority: 42 USC 1395u(b)(3)(B); 42 USC 1302; 42 USC 1395hh

CFR Citation: 42 CFR 405.508

Legal Deadline: None.

Abstract: This proposed rule would clarify the circumstances under which Medicare carriers are to apply the comparable services limitation in making their determination of a reasonable charge for Medicare Part B services. Under section 1842(b)(3)(B) of the Act, carriers are prohibited from making a determination of a reasonable charge that would be higher than the charge upon which it would base payment to its own policyholders for a comparable service under comparable circumstances. Currently, there is a great deal of confusion among the carriers as to what constitutes comparable services and comparable circumstances, the result of which is that very few carriers are applying the comparable services limitation in their reasonable charge determination. We would revise the regulations to more clearly state how the comparable services limitation should be implemented by the carriers.

Timetable:

Action	Date	FR Cite
NPRM	00/00/00	

Small Entity: Undetermined

Agency Contact: Bernard Patashnik, Director, Division of Medical Services Reimbursement, Department of Health and Human Services, Health Care Financing Administration, 1-H-5 ELR, 6325 Security Blvd., Baltimore, MD 21207, 301 597-1334

RIN: 0938-AD50

775. ● PROTOCOL FOR THE REUSE OF DIALYSIS BLOODLINES

Legal Authority: 42 USC 1395rr(a)(7), as amended by PL 100-203; 42 USC 1302; 42 USC 1395hh

CFR Citation: 42 CFR 405.2150(d)

Legal Deadline: None. While the Secretary is not required to publish a regulation, ESRD facilities will not otherwise be permitted to re-use bloodlines after June 30, 1988.

Abstract: This rule would establish standards for safe and effective reuse of bloodlines. The statue forbids ESRD facilities to reuse bloodlines beginning July 1, 1988, unless the Secretary has established and the facilities follow, protocols for their reuse. Any protocols so established must be incorporated into conditions of coverage.

Timetable:

Action	Date	FR Cite
NPRM	04/00/88	
Final Action	07/01/88	

Small Entity: Undetermined

Agency Contact: Rita McGrath, Chief, Alternate Delivery Organization Branch, Department of Health and Human Services, Health Care Financing Administration, Room 469 EHR Bldg., 6325 Security Blvd., Baltimore, MD 21207, 301 594-6719

RIN: 0938-AD52

776. ● FEES FOR APPEALS

Legal Authority: 42 USC 1302; 42 USC 1395hh(a); 31 USC 9701

CFR Citation: 42 CFR 405.701 to 42

Legal Deadline: None.

Abstract: This proposed rule would require that a filing fee accompany all requests for hearings and appeals involving coverage or reimbursement disputes involving individual claims, when filed by Medicare providers. (Beneficiaries would be exempt from the filing fee.) The fee would be refunded if the provider won the appeal or was found to have filed in good faith. The purpose of this rule is to discourage unnecessary and frivolous appeals.

Timetable:

Action	Date	FR Cite
NPRM	00/00/00	

Small Entity: Undetermined

Agency Contact: James Conrad, Chief, Premiums Entitlement Branch, Department of Health and Human Services, Health Care Financing Administration, Room G-E-7, Meadows

East Bldg., 6325 Security Blvd., Baltimore, MD 21207, 301 594-9656

RIN: 0938-AD54

777. ● HOME AND COMMUNITY-BASED SERVICES FOR THE ELDERLY

Legal Authority: PL 100-203, Sec 4102; 42 USC 1396n(d)

CFR Citation: 42 CFR 441

Legal Deadline: Statutory, October 1, 1989. Regulation must be promulgated containing methodology.

Abstract: This regulation would implement section 4102 of PL 100-203. These rules would allow a State to provide skilled nursing facility (SNF), intermediate care facility (ICF), and home and community-based services to individuals 65 years of age and older, in exchange for a "cap" on the amount of money for which Medicaid Federal financial participation would be available. The program would be administered by means of waivers which a State could request. As currently constructed, the statute allows for waivers of statewideness, comparability, and income deeming. Home and community-based services could be made available to individuals age 65 or older who are shown by an evaluation to be likely to require the level of care provided in an SNF or ICF, the cost for which could be paid by Medicaid. For States electing this option, the waiver would replace the home and community-based services waivers available under section 1915(c) of the Act, for individuals in this age category.

Timetable:

Action	Date	FR Cite
NPRM	09/01/88	

Small Entity: Undetermined

Agency Contact: Thomas Hoyer, Director, Division of, Provider Services Coverage Policy, Department of Health and Human Services, Health Care Financing Administration, Room 405 EHR ., 6325 Security Blvd., Baltimore, MD 21207, 301 594-9446

RIN: 0938-AD55

778. ● REVISIONS TO MEDICAID ELIGIBILITY QUALITY CONTROL PROGRAM REQUIREMENTS BASED ON FINDINGS OF COBRA STUDIES

Legal Authority: PL 99-272, Sec 12301(c)(1); PL 99-514, Sec 1710

CFR Citation: 42 CFR 431

Legal Deadline: Statutory, March 30, 1988. COBRA, PL 99-272, requires regulations to be published by March 30, 1988, with an implementation date of July 1, 1988.

Abstract: These proposed regulations would revise or restructure the requirements of the Medicaid Eligibility Quality Control (MEQC) program to reflect changes determined necessary as a result of the findings of the studies of the quality control systems of the AFDC and Medicaid programs that were mandated by section 12301 of the Consolidated Omnibus Budget Reconciliation Act. The changes would focus on improvements in the quality of administration of the MEQC system and methods of gathering reasonable data to be used as a basis for withholding Federal funds from States that have excessive levels of erroneous Medicaid payments.

Timetable:

Action	Date	FR Cite
NPRM	00/00/00	

Small Entity: No

Agency Contact: Stephen A. Snyder, Analyst, Eligibility Assessment Branch, Department of Health and Human Services, Health Care Financing Administration, Room 233 EHR Bldg, 6325 Security Blvd., Baltimore, MD 21207, 301 594-8157

RIN: 0938-AD56

779. ● PROCEDURES FOR TERMINATING PROGRAM PARTICIPATION OF PROVIDERS AND SUPPLIERS

Legal Authority: 42 USC 1395aa; 42 USC 1395bb; 42 USC 1395cc; 42 USC 1302; 42 USC 1396a; 42 USC 1396i; 42 USC 1395hh

CFR Citation: 42 CFR 405; 42 CFR 416.35; 42 CFR 431.154; 42 CFR 442; 42 CFR 488; 42 CFR 489.53; 42 CFR 498.53; 42 CFR 498.5; 42 CFR 498.20; 42 CFR 498.56

Legal Deadline: None.

Abstract: These proposed regulations reflect the urgency we believe is necessary in removing Medicare and Medicaid patients from potentially dangerous situations, and would provide incentives for the provider or supplier to take prompt remedial action to remove threats to patients safety. When we determine that Medicare and Medicaid providers and suppliers fail to meet the conditions of participation or coverage, and the deficiencies immediately jeopardize patients' health and safety, we would give providers and suppliers notice of termination not more than 2 days before the effective date of termination. Generally, administrative hearings would be held after the effective date of termination.

Timetable:

Action	Date	FR Cite
NPRM	00/00/00	

Small Entity: Yes

Agency Contact: Alfreda Staton, Program Analyst, Health Standards and Quality Bureau, Department of Health and Human Services, Health Care Financing Administration, 2-D-2 Meadows East Bldg., 6300 Security Blvd., Baltimore, MD 21207, 301 594-5014

RIN: 0938-AD57

780. ● PART B PREMIUM FOR 12-MONTH PERIOD BEGINNING JANUARY 1, 1989

Legal Authority: 42 USC 1395r; 42 USC 1302; 42 USC 1395hh

CFR Citation: 42 CFR 405.902

Legal Deadline: None.

Abstract: This notice announces the monthly actuarial rates for aged (age 65 and over) and disabled (under age 65) enrollees in the Medicare Supplementary Medical Insurance (SMI) program for the 12-months beginning January 1, 1989. It also announces the monthly SMI premium rate to be paid by all enrollees during the 12-months beginning January 1, 1989.

Timetable:

Action	Date	FR Cite
NOTICE	09/30/88	

Small Entity: Undetermined

Agency Contact: Solomon Mussey, Supervisory Actuary, Department of Health and Human Services, Health Care Financing Administration, Room M-1 1705 Equitable Bldg., 6325 Security Blvd., Baltimore, MD 21207, 301 594-2829

RIN: 0938-AD58

781. ● REVISIONS TO THE FREEDOM OF INFORMATION REGULATIONS

Legal Authority: 42 USC 1306; 5 USC 552; 42 USC 1302

CFR Citation: 42 CFR 401.101; 42 CFR 401.102; 42 CFR 401.103; 42 CFR 401.104; 42 CFR 401.110; 42 CFR 401.111; 42 CFR 401.112; 42 CFR 401.120; 42 CFR 401.121; 42 CFR 401.122; 42 CFR 401.123; 42 CFR 401.124; 42 CFR 401.125; 42 CFR 401.130; 42 CFR 401.131; ...

Legal Deadline: None.

Abstract: This rule proposes changes to the regulations implementing the Freedom of Information Act. The regulations would be brought up-to-date in light of HCFA's experience with the FOIA and would conform HCFA's FOIA rules to the new HHS FOIA regulations, the guidelines from OMB and the Department of Justice, a Presidential Order, and the Freedom of Information Reform Act of 1986.

Timetable:

Action	Date	FR Cite
NPRM	00/00/00	

Small Entity: Undetermined

Agency Contact: Rosario Cirrincione, Chief, Freedom of Information Branch, Department of Health and Human Services, Health Care Financing Administration, Room 100 Professional Bldg., 6660 Security Blvd., Baltimore, MD 21207, 301 594-4323

RIN: 0938-AD60

---

782. ● MISCELLANEOUS AMENDMENTS TO THE HMO AND CMP REQUIREMENTS

Legal Authority: 42 USC 1302; 42 USC 1395(l); 42 USC 1395(x); 42 USC 1395hh; 42 USC 1395kk; 42 USC 216; 42 USC 300(e); 42 USC 9701; 42 USC 1395mm

CFR Citation: 42 CFR 417

Legal Deadline: None.

Abstract: In an earlier rulemaking (52 FR 36746) we redesignated rules from 42 CFR Part 110 to 42 CFR Part 417, subpart A. This redesignation resulted from HCFA assuming responsibility for a programmatic activity previously under the Public Health Service. This rule would make technical corrections and update cross-references to better integrate the relocated material with HCFA regulations.

Timetable:

Action	Date	FR Cite
NPRM	00/00/00	

Small Entity: No

Agency Contact: Larry Sobel, Legal Adviser, Office of Prepaid Health Care, Department of Health and Human Services, Health Care Financing Administration, 424 H, Hubert H. Humphrey Bldg., 200 Independence Ave. S.W., Washington, D.C. 20201, 202 245-0197

RIN: 0938-AD61

---

783. ● PAYMENT FOR RADIOLOGIST SERVICES

Significance: Agency Priority

Legal Authority: 42 USC 1395l(a)(1)(J); 42 USC 1395m(b); 42 USC 1302; 42 USC 1395hh

CFR Citation: 42 CFR 405.555

Legal Deadline: Statutory, August 1, 1988. Final Rule by 08/01/88 effective for services performed on or after 01/01/89.

Abstract: As a result of provisions included in section 4049 of PL 100-203, we are proposing a fee schedule for radiology services furnished by a board-certified or board eligible radiologist or by a physician whose charges for radiology services accounts for 50 percent or more of his or her total Medicare charges. These physicians would be paid at 80 percent of the lower of the actual charge or the appropriate fee schedule amount. The fee schedule amount for a nonparticipating physician would be 95 percent of the amount applicable to a participating physician. In addition, a nonparticipating physician's charges to beneficiaries would be capped. The proposed fee schedule would result in overall amount of payment to physicians for radiology services of 3 percent less than would have occurred without a fee schedule. The fee schedule would be updated annually in accordance with the annual increase in the Medicare Economic Index.

Timetable:

Action	Date	FR Cite
NPRM	07/15/88	
Final Action	12/01/88	
performed on or after		
Fee schedule in place for services 01/01/89		

Small Entity: Undetermined

Agency Contact: Bernard Patashnik, Director, Division of Medical Services Reimbursement, Department of Health and Human Services, Health Care Financing Administration, Room 1-H-5 ELR, 6325 Security Blvd., Baltimore, MD 21207, 301 597-1334

RIN: 0938-AD62

---

784. ● RELATIVE VALUE GUIDE FOR PHYSICIAN ANESTHESIA SERVICES

Legal Authority: PL 100-203, Sec 4048(b); 42 USC 1302; 42 USC 1395hh

CFR Citation: 42 CFR 405.553

Legal Deadline: Statutory, January 1, 1989. Under section 4048(b) of PL 100-203 the relative value guide is to be used for physician anesthesia services furnished on or after 01/01/89.

Abstract: This proposed rule will solicit public comments on a relative value guide for use by carriers in making payment for physician anesthesia services. Under section 4048(b) of PL 100-203 the relative value guide would be designed so as to not increase the overall amount of expenditures that would occur without use of the relative value guide.

Timetable:

Action	Date	FR Cite
Notice with 90 Day Comment Period	05/02/88	
Final Notice	10/01/88	

Small Entity: Undetermined

Agency Contact: Bernard Patashnik, Director, Division of, Medical Services Reimbursement, Department of Health and Human Services, Health Care Financing Administration, Room 1-H-5 ELR, 6325 Security Blvd., Baltimore, MD 21207, 301 597-1334

RIN: 0938-AD63

---

785. ● REVISED MEDICARE ECONOMIC INDEX FOR 1988 AND ESTABLISHMENT OF THE 1989 MEDICARE ECONOMIC INDEX

Legal Authority: 42 USC 1395u(b)(4); 42 USC 1395u(b)(4)(E); 42 USC 1302; 42 USC 1395hh

CFR Citation: 42 CFR 405.504

Legal Deadline: None.

Abstract: This notice will announce the percentage increase in the Medicare economic indices for primary care services of physicians as defined in section 1842(b)(4)(E)(iii) of the Social Security Act and for all other physicians services for 1988 and 1989.

Timetable:

Action	Date	FR Cite
Notice	00/00/00	

Small Entity: Undetermined

Agency Contact: Paul Riesel, Technical Assistant, Office of Reimbursement Policy, Department of Health and Human Services, Health Care Financing Administration, Room 1-H-5 ELR, 6325 Security Blvd., Baltimore, MD 21207, 301 597-1843

RIN: 0938-AD64

786. ● PROPOSED FEE SCHEDULE FOR DURABLE MEDICAL EQUIPMENT EFFECTIVE FOR ITEMS AND SERVICES PROVIDED ON OR AFTER JANUARY 1, 1989

Legal Authority: PL 100-203, Sec 4062; 42 USC 1302; 42 USC 1395hh; 42 USC 1395m; 42 USC 1395zz

CFR Citation: 42 CFR 405(o)

Legal Deadline: None.

Abstract: This proposed rule would implement section 4062 of PL 100-203. It would establish fee schedules and payment methodologies that would govern payments for six categories of durable medical equipment as required by section 4062 of PL 100-203. The new payment rates would be effective for services provided on or after January 1, 1989.

Timetable:

Action	Date	FR Cite
NPRM	00/00/00	

Small Entity: Undetermined

Agency Contact: Bernard Patashnik, Director of Medical Services Reimbursement, Office of Reimbursement Policy, Department of Health and Human Services, Health Care Financing Administration, Room 1-H-5 ELR, 6325 Security Blvd., Baltimore, MD 21207, 301 597-1334

RIN: 0938-AD65

787. ● ITEMS AND SERVICES NOT CHARGEABLE TO PATIENT PERSONAL FUNDS

Legal Authority: PL 100-203, Sec 4201(a)(3); PL 100-203, Sec 4211(a)(3)

CFR Citation: 42 CFR 483

Legal Deadline: Statutory, July 1, 1988.

Abstract: This proposed rule would define those costs which may be charged to the personal funds of Medicare and Medicaid patients in nursing facilities and the costs which are to be utilized in the payment amount for nursing facility services.

Timetable:

Action	Date	FR Cite
NPRM	00/00/00	

Small Entity: Undetermined

Agency Contact: Samuel Kidder, Chief, Long Term Care Branch, Department of Health and Human Services, Health Care Financing Administration, 429 EHR Bldg., 6325 Security Blvd., Baltimore, MD 21207, 301 597-5909

RIN: 0938-AD66

788. ● CRITERIA FOR STANDARD AND EXTENDED HOME HEALTH AGENCY SURVEYS

Legal Authority: PL 100-203, Sec 4022; 42 USC 1395hh

CFR Citation: 42 CFR 488

Legal Deadline: Statutory, January 1, 1989.

Abstract: This regulation would implement the requirements of PL 100-203, section 4022 which specify criteria for standard and extended home health agency surveys. The regulation would define each survey and the criteria for its use. It would additionally implement a new survey instrument and a home visit process. Finally, the regulation would require a Statewide 12 month average survey cycle.

Timetable:

Action	Date	FR Cite
NPRM	00/00/00	

Small Entity: Undetermined

Agency Contact: Walter Merten, Director, Division of Survey Procedures and Training, Department of Health and Human Services, Health Care Financing Administration, Meadows East Building, 6325 Security Blvd., Baltimore, MD 21207, 301 594-3813

RIN: 0938-AD67

789. ● INPATIENT HOSPITAL DEDUCTIBLE AND COINSURANCE AMOUNTS AND PART A PREMIUM FOR THE UNINSURED AGED FOR 1989

Legal Authority: 42 USC 1395e; 42 USC 1395i to 2(d)(2); 42 USC 1302; 42 USC 1395hh

CFR Citation: 42 CFR 408.22; 42 CFR 409.80; 42 CFR 409.82; 42 CFR 409.83; 42 CFR 409.85

Legal Deadline: Statutory, September 15, 1988.

Abstract: This notice announces the inpatient hospital deductible and coinsurance amounts and the monthly hospital insurance premium for the uninsured aged for calendar year 1989 under Medicare's hospital insurance program. The Medicare statute specifies the formulae to be used to determine these amounts.

Timetable:

Action	Date	FR Cite
Notice	09/30/88	

Small Entity: No

Agency Contact: Solomon Mussey, Supervisory Actuary, Department of Health and Human Services, Health Care Financing Administration, M-1 1705 Equitable Bldg., 6325 Security Blvd., Baltimore, MD 21207, 301 594-2829

RIN: 0938-AD68

DEPARTMENT OF HEALTH AND HUMAN SERVICES (HHS)

Health Care Financing Administration (HCFA)

Final Rule Stage

790. PAYMENTS TO INSTITUTIONS

Significance: Agency Priority

Legal Authority: 42 USC 1302; 42 USC 1396a(a)(10); 42 USC 1396a(a)(17)

CFR Citation: 42 CFR 435.722; 42 CFR 435.725; 42 CFR 435.733; 42 CFR 435.832; 42 CFR 436.832

Legal Deadline: None.

Abstract: This regulation alleviates problems encountered by States in calculating patient income to be applied to the cost of care in institutions. It is intended to permit States greater

VOL 53 ISS 79 PT 1 APR 25 1988 UMI

flexibility in administering their programs (Regulatory Reform). These regulations also implement a provision of Pub. L. 99-272. This provision requires that when States elect to use a special income standard for institutionalized individuals, Medicaid eligibility must begin with the first day of a period of not less than 30 consecutive days of institutionalization.

Timetable:

Action	Date	FR Cite
NPRM	03/19/85	50 FR 10992
NPRM Comment Period End	05/20/85	
Final Action	04/00/88	

Small Entity: Yes

Agency Contact: Marinos Svolos, Division Director, Department of Health and Human Services, Health Care Financing Administration, Division of Medicaid Eligibility, Room 416 East High Rise, 6325 Security Blvd., Baltimore, MD 21207, 301 594-9050

RIN: 0938-AB00

791. MISCELLANEOUS MEDICARE AND MEDICAID AMENDMENTS

Legal Authority: 42 USC 1302; 42 USC 1395hh

CFR Citation: 42 CFR 405; 42 CFR 409; 42 CFR 410; 42 CFR 416; 42 CFR 421; 42 CFR 441; 42 CFR 489

Legal Deadline: None.

Abstract: These rules amend existing Medicare and Medicaid regulations to conform them to statutory and policy changes that have occurred since those regulations were last published. The pertinent statutory changes are primarily those contained in the Omnibus Reconciliation Act of 1980 (P.L. 96-499).

Timetable:

Action	Date	FR Cite
NPRM	12/18/87	52 FR 48127
NPRM Comment Period End	02/16/88	
Final Action	00/00/00	

Small Entity: No

Agency Contact: Luisa Iglesias, Technical Assistant, Department of Health and Human Services, Health Care Financing Administration, BERC Regulations Staff, Rm. 4243 North, 300 Independence Ave., S.W., Washington, DC 20201, 202 245-0383

RIN: 0938-AB05

792. CHANGES TO THE LESSER OF COSTS OR CHARGES PROVISIONS

Significance: Regulatory Program

Legal Authority: 42 USC 1395f(b); 42 USC 1395f(k); 42 USC 1395l(a); PL 98-369, Sec 2308; 42 USC 1302; 42 USC 1395hh

CFR Citation: 42 CFR 413.13

Legal Deadline: None.

Abstract: This regulation eliminates application of the lesser of costs or charges aggregation method for determining payment for services furnished under Part A or Part B of Medicare effective with cost reporting periods beginning on or after October 1, 1984 (section 2308(a) of Pub.L. 98-369). We also eliminate the accumulation and carryover of unreimbursed costs to subsequent cost reporting periods applicable with cost reporting periods beginning on or after the effective date of the final rule. It revises the nominal charge provisions for providers that furnish services either free of charge or at a nominal charge in accordance with section 2308(b) of Pub.L. 98-369. It also revises the payment provisions for durable medical equipment furnished by home health agencies effective on or after July 18, 1984.

Timetable:

Action	Date	FR Cite
NPRM	09/18/86	51 FR 33074
NPRM Comment Period End	11/17/86	
Final Action	04/00/88	

Small Entity: Yes

Agency Contact: William Goeller, Director, Division of Payment & Reporting Policy, Department of Health and Human Services, Health Care Financing Administration, Room 1-F-5 East Low Rise, 6325 Security Boulevard, Baltimore, MD 21207, 301 597-1803

RIN: 0938-AB29

793. REVISIONS IN REPORTING AND RECORDKEEPING REQUIREMENTS

Legal Authority: 42 USC 1302; 42 USC 1395x(p); 42 USC 1395x(s)(3); 42 USC 1395x(s)(11); 42 USC 1395x(s)(12); 42 USC 1395aa; 42 USC 1395hh

CFR Citation: 42 CFR 405.1413(c); 42 CFR 405.1716(c); 42 CFR 405.1716(d); 42 CFR 405.1717(b); 42 CFR 405.1717(e); 42 CFR 405.1725(a); 42 CFR 405.1702; 42 CFR 405.1731(a); 42 CFR 405.1731(c); 42 CFR 434.36; 42 CFR 434.55; 42 CFR 405.1733(a); 42 CFR 405.1733(b); 42 CFR 434.27(a)

Legal Deadline: None.

Abstract: This final rule sets forth changes in several regulations containing collection of information requirements. The changes are HCFA's response to the Office of Management and Budget requirement to eliminate regulations that are overly prescriptive, duplicative, or lack practical utility. The requirements affect the providers and suppliers of outpatient physical therapy and speech pathology services; physical therapists in independent practice; portable X-ray services; and Medicaid contracts with health maintenance organizations and prepaid health plans.

Timetable:

Action	Date	FR Cite
NPRM	02/24/86	51 FR 6429
Final Action	04/00/88	

Small Entity: No

Agency Contact: Stanley Katz, Director Division of Medical Services Coverage Policy, Department of Health and Human Services, Health Care Financing Administration, 489 East High Rise Bldg., 6325 Security Blvd., Baltimore, Maryland 21207, 301 594-8561

RIN: 0938-AB46

794. WAIVER OF CERTAIN MEMBERSHIP REQUIREMENTS FOR CERTAIN HEALTH MAINTENANCE ORGANIZATIONS (HMOS) AND STATE OPTION FOR DISENROLLMENT RESTRICTIONS FOR CERTAIN HMOS UNDER MEDICAID

Legal Authority: 42 USC 1903(m); 42 USC 1302

CFR Citation: 42 CFR 434.26; 42 CFR 434.27; 42 CFR 434.20; 42 CFR 435.212; 42 CFR 435.326

Legal Deadline: None.

Abstract: This proposal would revise current Medicaid rules to expand the waiver authority of the Secretary to permit certain health maintenance organizations (HMOs) meeting certain requirements, to exceed the composition of enrollment limit to allow certain organizations to contract on a risk basis, to permit continuation of benefits to recipients enrolled in certain

organizations after they have lost entitlement of Medicaid, and give a State the option of restricting a Medicaid enrollee's right to disenroll from certain types of risk HMOs and other organizations. These regulations would conform our regulations with authority provided in section 2364 of Pub.L. 98-369, the Deficit Reduction Act of 1984, as amended by section 9517 of Pub.L. 99-272, the Consolidated Omnibus Budget Reconciliation Act of 1985.

Timetable:

Action	Date	FR Cite
NPRM	01/12/86	53 FR 744
NPRM Comment Period End	03/14/86	53 FR 744
Final Action	12/00/86	

Small Entity: No

Agency Contact: Robert E. Wren, Office Director, Department of Health and Human Services, Health Care Financing Administration, Office of Coverage Policy, Room 401 EHR, 6325 Security Blvd., Baltimore, MD 21207, 301 594-9690

RIN: 0938-AB54

795. INDIRECT PART B PAYMENT PROCEDURE

Legal Authority: 42 USC 1395u(b)(6)(B); 42 USC 1395hh; 42 USC 1302

CFR Citation: 42 CFR 405.1672; 42 CFR 405.1679; 42 CFR 405.1685; 42 CFR 405.1686

Legal Deadline: None.

Abstract: This regulation implements provisions of Pub.L. 98-369 that allow payment for services furnished under Part B of Medicare to be made to a health benefits plan.

Timetable:

Action	Date	FR Cite
NPRM	07/01/86	51 FR 23792
NPRM Comment Period End	07/31/86	51 FR 23792
Final Action	00/00/00	

Small Entity: No

Agency Contact: Harold Fishman, Division Director, Department of Health and Human Services, Health Care Financing Administration, Division of Medicare Eligibility, Room 446 EHR, 6325 Security Blvd., Baltimore, MD 21207, 301 594-9077

RIN: 0938-AB59

796. HOSPITAL INSURANCE ENTITLEMENT AND SUPPLEMENTARY MEDICAL INSURANCE ENROLLMENT AND ENTITLEMENT

Legal Authority: 42 USC 426; 42 USC 426-1; 42 USC 426a; 42 USC 1395c; 42 USC 1395i-2; 42 USC 1395p; 42 USC 1395q; 42 USC 1395r; 42 USC 1395v; 42 USC 1302; 42 USC 1395hh

CFR Citation: 42 CFR 405; 42 CFR 406; 42 CFR 407

Legal Deadline: None.

Abstract: This regulation would revise the Medicare rules that deal with hospital insurance entitlement and with supplementary medical insurance (SMI) enrollment and entitlement, as required by amendments to the Social Security Act. It would also revise Medicaid rules that deal with State buy-in agreements, under which States secure SMI benefits for certain Medicaid-eligible individuals, by paying their SMI premiums.

Timetable:

Action	Date	FR Cite
NPRM	02/19/88	53 FR 5008
Final Action	00/00/00	

Small Entity: No

Agency Contact: Denis Garrison, Chief, Medicare Eligibility and, Technical Issues Branch, Department of Health and Human Services, Health Care Financing Administration, Division of Medicare Eligibility Policy, Room 357 EHR, 6325 Security Blvd., Baltimore, MD 21207, 301 966-5643

RIN: 0938-AB60

797. TREATMENT OF SOCIAL SECURITY COST OF LIVING INCREASES FOR INDIVIDUALS WHO LOSE SSI ELIGIBILITY

Significance: Agency Priority

Legal Authority: 42 USC 1302; 42 USC 1396a (Note)

CFR Citation: 42 CFR 435.135; 42 CFR 435.136

Legal Deadline: None.

Abstract: Notice clarifies a portion of the regulations published on April 10, 1986 dealing with Medicaid eligibility of certain individuals receiving title II (Social Security) benefits who lost SSI and are ineligible for SSI because of title II cost of living increase which had been subject to an appeal when the regulations were published.

Timetable:

Action	Date	FR Cite
NPRM	04/12/85	50 FR 14397
NPRM Comment Period End	06/11/85	
Interim Final Rule	04/10/86	51 FR 12325
Final Action	00/00/00	

Small Entity: No

Agency Contact: Roy Trudel, Program Analyst, Department of Health and Human Services, Health Care Financing Administration, Division of Medicaid Eligibility Policy, Room 416 EHR, 6325 Security Blvd., Baltimore, MD 21207, 301 594-9128

RIN: 0938-AB62

798. MEDICARE/MEDICAID REVALUATION OF ASSETS

Significance: Regulatory Program

Legal Authority: 42 USC 1302; 42 USC 1395hh; 42 USC 1395x(v)(1)(O); 42 USC 1396a(a)(13)(B)

CFR Citation: 42 CFR 413.130; 42 CFR 413.134; 42 CFR 447.250; 42 CFR 447.253

Legal Deadline: None.

Abstract: This final rule implements changes to the regulations as required by section 2314 of Pub. L. 98-369 and sections 9110 and 9509 of Pub. L. 99-272. This rule imposes new limitation on the valuation of assets acquired as the result of changes in ownership occurring on or after July 18, 1984. These changes will affect hospitals and skilled nursing facilities under the Medicare program and hospitals, skilled nursing facilities, intermediate care facilities, and intermediate care facilities for the mentally retarded under the Medicaid program.

Timetable:

Action	Date	FR Cite
NPRM	10/26/87	52 FR 39927
NPRM Comment Period End	12/28/87	52 FR 39927
Final Action	00/00/00	

Small Entity: Yes

Agency Contact: William J. Goeller, Director, Division of Payment and Reporting Policy, Department of Health and Human Services, Health Care Financing Administration, Room 1-F-5

ELR, 6325 Security Blvd., Baltimore, MD 21207, 301 597-1803

RIN: 0938-AB64

799. OMB REVIEW OF INFORMATION COLLECTION AND RECORDKEEPING REQUIREMENTS FOR HOME HEALTH AGENCIES, INDEPENDENT LABORATORIES, AND PROVIDERS OF OUTPATIENT, PHYSICAL THERAPY AND/OR (CONT)

Legal Authority: 42 USC 1302; 42 USC 1395u; 42 USC 1395x; 42 USC 1395y; 42 USC 1395gg; 42 USC 1395hh; 42 USC 1395aa

CFR Citation: 42 CFR 405.1221(e); 42 CFR 405.1221(f); 42 CFR 405.1221(g); 42 CFR 405.1221(i); 42 CFR 405.1223(b); 42 CFR 405.1229(a); 42 CFR 405.1315(f); 42 CFR 405.1316(f); 42 CFR 405.1720(b); 42 CFR 405.1721; 42 CFR 405.1224; 42 CFR 405.1228; 42 CFR 405.1225(a); 42 CFR 405.1226; 42 CFR 405.1314; ...

Legal Deadline: None.

Abstract: The purpose of this final rule is to set forth changes in several regulations containing information collection requirements. We previously obtained public comments on proposed changes.

Timetable:

Action	Date	FR Cite
NPRM	12/31/86	51 FR 47266
NPRM Comment Period End	03/02/87	51 FR 47266
Final Action	12/00/88	

Small Entity: No

Additional Information: TITLE CONT: Speech Pathology Services

Agency Contact: Stefan Miller, Program Analyst, Department of Health and Human Services, Health Care Financing Administration, Office of Coverage Policy, Room 400 EHR, 6325 Security Blvd., Baltimore, MD 21207, 301 597-6394

RIN: 0938-AB68

800. CLARIFICATION OF POLICY ON ADJUSTING THE HOSPITAL-SPECIFIC PORTION OF THE PROSPECTIVE PAYMENT RATE

Significance: Agency Priority

Legal Authority: 42 USC 1395ww(d); 42 USC 1302; 42 USC 1395hh

CFR Citation: 42 CFR 412.72

Legal Deadline: None.

Abstract: This final rule clarifies Medicare's policy on adjusting the hospital-specific portion of the prospective payment rate for inpatient hospital services as the result of adjustments to a hospital's target amount for events occurring in the year following its base year. It clarifies that exemptions, exceptions, or adjustments granted under section 1886(b)(4) of the Act or 42 CFR 413.30 or 413.40(e)-(h) for periods subsequent to the base year have no effect on the hospital-specific portion of the prospective payment rates.

Timetable:

Action	Date	FR Cite
NPRM	03/10/86	51 FR 8208
NPRM Comment Period End	04/19/86	51 FR 8208
Final Action	00/00/00	

Small Entity: No

Agency Contact: Edward Rees, Branch Chief, Department of Health and Human Services, Health Care Financing Administration, Payment Determination Policy Branch, DHPP, R. 1-H-1 ELR, 6325 Security Blvd., Baltimore, MD 21207, 301 597-6403

RIN: 0938-AB71

801. CONDITIONS FOR INTERMEDIATE CARE FACILITIES FOR THE MENTALLY RETARDED

Significance: Agency Priority

Legal Authority: 42 USC 1302; 42 USC 1396d(c); 42 USC 1396d(d)

CFR Citation: 42 CFR 435; 42 CFR 442; 42 CFR 431.610(f)(1); 42 CFR 440.150(c)(3); 42 CFR 483

Legal Deadline: None.

Abstract: This rule revises the format and content of the standards for intermediate care facilities for the mentally retarded and persons with related conditions (ICFs/MR). The new format will be that of "conditions of participation" and will make the regulations for ICFs/MR consistent with the organization of the Medicare and Medicaid regulations for skilled nursing facilities. Revisions to the content of the regulations are intended to shift the focus away from facility-oriented requirements to client-oriented requirements. Thus, the rule is designed to increase the focus on the provision of active treatment services for clients, clarify Federal requirements, and maintain essential client protection.

Timetable:

Action	Date	FR Cite
NPRM	03/04/86	51 FR 7520
NPRM Comment Period End	05/05/86	51 FR 7520
Final Action	04/00/88	

Small Entity: No

Agency Contact: Samuel Kidder, Branch Chief, Department of Health and Human Services, Health Care Financing Administration, Long Term Care Branch, Room 429 EHR, 6325 Security Blvd., Baltimore, MD 21207, 301 597-5909

RIN: 0938-AB76

802. REVISION OF MEDICAID ELIGIBILITY QUALITY CONTROL (MEQC) PROGRAM REQUIREMENTS

Significance: Regulatory Program

Legal Authority: 42 USC 1396b; 42 USC 1302

CFR Citation: 42 CFR 431.800 to 431.808; 42 CFR 431.810 to 431.822; 42 CFR 431.830 to 431.836; 42 CFR 431.861 to 431.865

Legal Deadline: None.

Abstract: This final rule revises the regulations governing the Medicaid eligibility quality control (MEQC) program to include more specified program requirements and to establish new time frames for completing and reporting MEQC case findings to HCFA. The final rule also establishes a performance-based threshold for States to meet before HCFA will consider good faith waiver requests of disallowance of Federal financial participation in erroneous Medicaid payments and provides more definitive criteria for evaluating States good faith efforts to meet the national standard error rate. In addition, the rule makes several technical changes and specifies that States may rebut their quarterly projected error rates when they can present evidence that the projected rates were based on erroneous data. The revisions will strengthen the MEQC program and provide flexibility and incentives to States to produce more accurate Medicaid eligibility determinations.

Timetable:

Action	Date	FR Cite
NPRM	01/26/87	52 FR 02733
NPRM Comment Period End	03/27/87	52 FR 02733
Final Action	00/00/00	

Small Entity: No

Agency Contact: Randolph Graydon, Acting Director, Division of Program Performance, Department of Health and Human Services, Health Care Financing Administration, Bureau of Quality Control, 207-L ELR, 6325 Security Blvd., Baltimore, MD 21207, 301 597-1352

RIN: 0938-AB85

803. MEDICARE COVERAGE OF HEPATITIS B VACCINE FOR HIGH AND INTERMEDIATE RISK INDIVIDUALS, HEMOPHILIA CLOTTING AND CERTAIN X-RAY SERVICES

Legal Authority: 42 USC 1395x(s)(2)(l); 42 USC 1395x(s)(10)(B); 42 USC 1395l(k); 42 USC 1395m(b)(11); 42 USC 1302; 42 USC 1395(g); 42 USC 1395l; 42 USC 1395u; 42 USC 1395x; 42 USC 1395y; 42 USC 1395cc; 42 USC 1395gg; 42 USC 1395hh; 42 USC 1395pp

CFR Citation: 42 CFR 405.231(r); 42 CFR 405.232(b); 42 CFR 405.232(c); 42 CFR 405.310(a); 42 CFR 405.310(e); 42 CFR 405.310(k); 42 CFR 410.10; 42 CFR 410.29; 42 CFR 410.32; 42 CFR 410.63

Legal Deadline: None.

Abstract: This final rule implements section 2323 of P.L 98-369 which provides Medicare coverage for hepatitis B vaccine for those individuals who are eligible for Medicare and at high or intermediate risk of contracting hepatitis B. It would implement section 2324 of P.L. 98-369 that provides coverage for the self-administration of hemophilia clotting factors and the items necessary for their administration to Medicare eligibles. The final rule would also clarify Medicare coverage of certain x-ray services.

Timetable:

Action	Date	FR Cite
NPRM	09/10/87	52 FR 34244
NPRM Comment Period End	11/09/87	52 FR 34244
Final Action	00/00/00	

Small Entity: No

Agency Contact: James Hannon, Chief, Physician and Other Medical Services Branch, Department of Health and Human Services, Health Care Financing Administration, Office of Coverage Policy, Rm. 479 EHR, 6325 Security Blvd., Baltimore, MD 21207, 301 597-1734

RIN: 0938-AC07

804. REASONABLE CHARGE LIMITATIONS

Significance: Regulatory Program

Legal Authority: 42 USC 1395u(b)(3); 42 USC 1395u(b)(8); 42 USC 1395u(b)(9); 42 USC 1302; 42 USC 1395hh

CFR Citation: 42 CFR 405.502

Legal Deadline: None.

Abstract: This rule revises the regulations concerning special reasonable charge limits for Part B Services. It will conform the regulations to section 9333 of the Omnibus Budget Reconciliation Act of 1986 that specifies changes to the procedures for establishing special reasonable charge limits.

Timetable:

Action	Date	FR Cite
NPRM	02/18/86	51 FR 5726
Final Action with Comment Period	08/11/86	51 FR 28710
Final Action Comment Period End	10/10/86	
Final Action	00/00/00	

Small Entity: No

Agency Contact: Bernard Patashnik, Director, Department of Health and Human Services, Health Care Financing Administration, Division of Medical Services Reimbursement, Room 1-H-5 ELR, 6325 Security Blvd., Baltimore, MD 21207, 301 597-1334

RIN: 0938-AC08

805. ASSIGNMENT AND REASSIGNMENT OF PROVIDER-BASED HOME HEALTH AGENCIES AND HOSPICES TO DESIGNATED REGIONAL INTERMEDIARIES

Significance: Regulatory Program

Legal Authority: 42 USC 1395h(e)

CFR Citation: 42 CFR 421.3; 42 CFR 421.117; 42 CFR 421.128

Legal Deadline: None.

Abstract: This regulation requires all home health agencies and hospices to be served by designated regional intermediaries, instead of permitting provider-based HHAs and hospices to use the intermediaries their parent providers use. This reduces the number of intermediaries serving the HHAs and hospices, thus resulting in more consistent payment determinations and more effective and efficient administration.

Timetable:

Action	Date	FR Cite
NPRM	01/22/87	52 FR 02424
NPRM Comment Period End	03/23/87	52 FR 02424
Final Action	04/00/88	

Small Entity: No

Agency Contact: Irvin Robinson, Director, Division of Procurement, Department of Health and Human Services, Health Care Financing Administration, Room 334 Meadows East Bldg., 6300 Security Blvd., Baltimore, MD 21207, 301 594-8003

RIN: 0938-AC20

806. FIRE SAFETY STANDARDS FOR HOSPITALS, SKILLED NURSING FACILITIES, HOSPICES, INTERMEDIATE CARE FACILITIES AND AMBULATORY SURGICAL CENTERS

Significance: Agency Priority

Legal Authority: 42 USC 1395x(e)(9); 42 USC 1395x(j)(13); 42 USC 1395hh; 42 USC 1396d(c); 42 USC 1396d(d); 42 USC 1302; 42 USC 1395aa; 42 USC 1395bb; 42 USC 1395z

CFR Citation: 42 CFR 405.1022(b)(1); 42 CFR 405.1134(a); 42 CFR 416.44(b); 42 CFR 442.321(a); 42 CFR 442.321(c); 42 CFR 442.322; 42 CFR 442.323; 42 CFR 416.100(d); 42 CFR 482.41(b)

Legal Deadline: None.

Abstract: This final rule amends the fire safety standards for hospitals, skilled nursing facilities, hospices, intermediate care facilities and ambulatory surgical centers to incorporate by reference the 1985 edition of the Life Safety Code of the National Fire Protection Association.

Timetable:

Action	Date	FR Cite
NPRM	01/28/87	52 FR 02430
NPRM Comment Period End	03/23/87	52 FR 02430
Final Action	04/00/88	

Small Entity: No

VOL 53 ISS 79 PT 1 AP 25 1988 UMI

Agency Contact: Samuel Kidder, Chief, Long Term Care Branch, Department of Health and Human Services, Health Care Financing Administration, 300 East High Rise, 6325 Security Blvd., Baltimore, MD 21207, 301 597-5909

RIN: 0938-AC28

807. MEDICAID: ELIGIBILITY DETERMINATIONS BASED ON DISABILITY

Legal Authority: 42 USC 1396a(a)(10); 42 USC 1396d(a); 42 USC 1302

CFR Citation: 42 CFR 435.541; 42 CFR 435.911; 42 CFR 436.541

Legal Deadline: None.

Abstract: These regulations make explicit in the regulations HCFA's policy on the relationship between State Medicaid eligibility determinations based on disability and disability determinations by SSA under the Supplemental Security Income Program. The regulations incorporate the conditions under which the State agency must make independent determinations of disability and the effect of only SSA determination on Medicaid eligibility. The regulations also conform the Medicaid provisions on composition of medical review teams, required information, and the time limit for making determinations more closely to those used by SSA in making SSI determinations. Because of numerous questions raised and litigation, it is necessary to clarify our policy on the controlling nature of SSI disability determinations on Medicaid eligibility.

Timetable:

Action	Date	FR Cite
NPRM	12/14/87	52 FR 47414
NPRM Comment Period End	02/12/88	52 FR 47414
Final Action	00/00/00	

Small Entity: Undetermined

Agency Contact: Joyce Stokes, Branch Chief, Division of Medicaid Eligibility Policy, Department of Health and Human Services, Health Care Financing Administration, 436 East High Rise Bldg., 6325 Security Blvd., Baltimore, MD 21207, 301 597-3870

RIN: 0938-AC31

808. ADDITIONS TO AND DELETIONS FROM CURRENT LIST OF COVERED SURGICAL PROCEDURES FOR AMBULATORY SURGICAL CENTERS

Significance: Regulatory Program

Legal Authority: 42 USC 1395l(i)(1)

CFR Citation: 42 CFR 416.65

Legal Deadline: None.

Abstract: This notice announces proposed additions to and deletions from the current list of surgical procedures for which facility services are covered when the procedures are performed in an ambulatory surgical center (ASC).

Timetable:

Action	Date	FR Cite
Proposed Notice	08/11/87	52 FR 29729
Final Notice	00/00/00	

Proposed Notice

Comment Period Ends 10/13/87

Small Entity: No

Agency Contact: Stan Katz, Director, Division of Medical Services Coverage Policy, Department of Health and Human Services, Health Care Financing Administration, 489 East High Rise Bldg., 6325 Security Blvd., Baltimore, MD 21207, 301 594-8561

RIN: 0938-AC45

809. EMPLOYERS CONTRIBUTION TO HEALTH MAINTENANCE ORGANIZATIONS OPTION

Legal Authority: 42 USC 300e-9

CFR Citation: 42 CFR 110.808

Legal Deadline: None.

Abstract: This final rule will revise the requirement regarding employer contributions to a Health Maintenance Organization employee benefit plans.

Timetable:

Action	Date	FR Cite
NPRM	01/13/87	52 FR 01343
NPRM Comment Period End	03/16/87	

Next Action Undetermined*

Small Entity: No

Additional Information: *The Regulatory Program of the United States Government 1987-1988 projected final publication in July, 1987.

Agency Contact: Carolyn Cocotas, Special Assistant, Office of Prepaid Health Care, Department of Health and Human Services, Health Care Financing Administration, 317H HHH Bldg., 200 Independence Ave., SW, Washington, DC 20201, 202 245-8036

RIN: 0938-AC48

810. REIMBURSEMENT FOR PHYSICIAN'S OUTPATIENT MAINTENANCE DIALYSIS SERVICES

Legal Authority: 42 USC 1395rr; 42 USC 1302; 42 USC 1395hh

CFR Citation: 42 CFR 405.439(c)(5); 42 CFR 405.502(f)(1); 42 CFR 405.542(a); 42 CFR 405.542(b); 42 CFR 405.542(c)

Legal Deadline: None.

Abstract: This rule is necessitated by a court decision requiring the Secretary to reinstate a modified version of the initial method of reimbursement for physician's dialysis services. We also are clarifying and modifying some of the principles of the monthly capitation payment method. In addition, we will clarify that physician's services reimbursable under both the initial method and the monthly capitation payment must meet the general program requirements for dialysis services furnished to patients.

Timetable:

Action	Date	FR Cite
NPRM	10/05/87	52 FR 37176
NPRM Comment Period End	12/04/87	52 FR 37176
Final Action	00/00/00	

Small Entity: No

Agency Contact: Robert Niemann, Program Analyst, Reimbursement Policy Branch, Department of Health and Human Services, Health Care Financing Administration, 1-A-5 EHR Bldg., 6325 Security Blvd., Baltimore, MD 21207, 301 597-1810

RIN: 0938-AC57

811. STATE PLAN REQUIREMENTS AND OTHER PROVISIONS RELATING TO STATE THIRD-PARTY LIABILITY PROGRAMS

Significance: Agency Priority

Legal Authority: 42 USC 1396a(a)(25); 42 USC 1302

CFR Citation: 42 CFR 433.138; 42 CFR 433.139; 42 CFR 447.20; 42 CFR 447.21

Legal Deadline: Statutory, October 7, 1986. Section 9503 of Pub. L. 99-272 (April 7, 1986) requires that final regulations be published within 6 months after date of enactment.

Abstract: This rule implements, in part, those portions of sec. 9503 of Pub. L. 99-272 that set forth State plan requirements and other provisions relating to State third-party liability (TPL) programs. The provisions deal with (1) the integration of a State's pursuit of third-party claims with its Mechanized Claims Processing and Information Retrieval Systems and the Secretary's responsibility to develop performance standards to assess TPL collection efforts with respect to this integration; (2) certain exceptions to the cost avoidance method of claims payment in TPL situations; and (3) provider restrictions and provider penalties related to attempts at collection of cost sharing or portions of those amounts from Medicaid recipients when third party liability has been established.

Timetable:

Action	Date	FR Cite
NPRM	03/03/87	52 FR 06350
NPRM Comment Period End	04/02/87	52 FR 06350
Final Action	00/00/00	

Small Entity: No

Agency Contact: Sue Knefley, Program Analyst, Bureau of Quality Control, Department of Health and Human Services, Health Care Financing Administration, Third Party Liability Branch, 233 EHR, 6325 Security Blvd., Baltimore, MD 21207, 301 597-3631

RIN: 0938-AC64

812. ALTERNATE SANCTIONS FOR ESRD FACILITIES

Legal Authority: 42 USC 1302; 42 USC 1395hh; 42 USC 1395rr

CFR Citation: 42 CFR 405

Legal Deadline: None.

Abstract: These rules provide that, when the only deficiency cited for a supplier of ESRD services is a failure to cooperate in achieving the plans and objectives of the ESRD network of which the supplier is a member, and that failure does not jeopardize patient health and safety, HCFA may, as an alternative to terminations of Medicare coverage of the facility's ESRD services, impose alternative sanctions such as denial of payment for services furnished to patients accepted for care after the effective date of the sanction, or a gradual reduction in the payments for all patients, or withholding of payment without interest until the facility comes into compliance with the requirement.

Timetable:

Action	Date	FR Cite
NPRM	04/09/87	52 FR 11517
NPRM Comment Period End	06/08/87	
Final Action	00/00/00	

Small Entity: Yes

Agency Contact: Spencer B. Colburn, Chief, Hospital Services Branch, Department of Health and Human Services, Health Care Financing Administration, Room 2-D-2 ME Bldg., 6300 Security Blvd., Baltimore, MD 21207, 301 594-3413

RIN: 0938-AC68

813. REFUNDING OF FEDERAL SHARE OF OVERPAYMENTS MADE TO MEDICAID PROVIDERS

Legal Authority: 42 USC 1396b(d)

CFR Citation: 42 CFR 433.32 to 35; 42 CFR 433.112; 42 CFR 433.116; 42 CFR 433.300 to 322

Legal Deadline: None.

Abstract: These regulations specify the requirements and procedures under which States are allowed 60 days following the date of discovery of an overpayment to a Medicaid provider to recover or attempt to recover the overpayment before the Federal share must be credited to HCFA. The Federal Government will share in any overpayments that the State documents it is unable to recover because the debts of the provider have been discharged in bankruptcy or the provider is out-of-business. The regulations, which implement section 9512 of the Consolidated Omnibus Budget Reconciliation Act of 1986, are intended to aid in recovering improperly spent Federal funds expeditiously.

Timetable:

Action	Date	FR Cite
NPRM	12/21/87	52 FR 48290
NPRM Comment Period End	02/09/88	
Final Action	00/00/00	

Small Entity: No

Agency Contact: David Greenberg, Program Analyst, Bureau of Quality Control, Department of Health and Human Services, Health Care Financing Administration, Room 300 Meadows East Bldg., 6300 Security Blvd., Baltimore, MD 21207, 301 594-6229

RIN: 0938-AC83

814. MEDICARE COVERAGE OF IMMUNOSUPPRESSIVE DRUGS

Significance: Regulatory Program

Legal Authority: 42 USC 1395x(s)(2)(J); 42 USC 1302

CFR Citation: 42 CFR 410.10; 42 CFR 410.29; 42 CFR 410.65

Legal Deadline: None.

Abstract: This rule will implement section 9335(c) of Pub.L. 99-509 which authorizes Medicare coverage of immunosuppressive drugs for a period of 1-year following a Medicare-covered organ transplant. Current regulations reflect the statutory exclusion from Medicare Part B coverage of drugs or biologicals that can be self-administered. The regulations will be amended to reflect the new statutory requirement. Final regulation will also implement section 4075 of P.L. 100-203, which expanded coverage from "immunosuppressive drugs" to "prescription drugs used in immunosuppressive therapy."

Timetable:

Action	Date	FR Cite
NPRM	01/19/88	53 FR 1383
NPRM Comment Period End	03/21/88	
Final Action	00/00/00	

Small Entity: No

Agency Contact: James Hannon, Chief, Physician & Other Medical Services Branch, Department of Health and Human Services, Health Care Financing Administration, Room 479 East High Rise, 6325 Security Blvd., Baltimore, MD 21207, 301 597-1734

RIN: 0938-AD09

815. CONDITIONS OF PARTICIPATION FOR LONG TERM CARE FACILITIES

Significance: Regulatory Program

Legal Authority: 42 USC 1395x(j); 42 USC 1396a(a)(28); 42 USC 1396d(c); 42 USC 1302; 42 USC 1395hh

CFR Citation: 42 CFR 405.1101 to 405.1137; 42 CFR 442.1; 42 CFR 442.30; 42 CFR 442.100; 42 CFR 442.101; 42 CFR 442.105; 42 CFR 442.200 to 442.346; 42 CFR 483

Legal Deadline: None.

Abstract: In this final rule we respond to comments on our proposal and incorporate a number of self-implementing changes to the statute made by the Omnibus Budget Reconciliation Act of 1987, which was enacted after the proposed rule was published. These conditions would replace the existing separate conditions for SNFs participating in the Medicare program, and SNFs and ICFs participating in the Medicaid program. Although some essential distinctions imposed by the statute remain, these new conditions reflect common needs in SNFs and ICFs. The purpose of these revisions is to focus on actual facility performance in meeting residents' needs in a safe and healthful environment, rather than on the capacity of a facility to provider appropriate services. The results of this change in focus will be to enforce requirements from the perspective of quality of care and life for long term care patients, not only under Medicare and Medicaid, but generally since most of these requirements pertain to all patients of an SNF or ICF. These revisions are also expected to simplify Federal enforcement by using a single set of conditions for those activities we identify as common to all facilities.

Timetable:

Action	Date	FR Cite
NPRM	10/16/87	52 FR 38582
NPRM Comment Period End	01/14/88	52 FR 38582
Final Action	12/00/88	

Small Entity: Yes

Agency Contact: Samuel Kidder, Chief, Long Term Care Branch, Department of Health and Human Services, Health Care Financing Administration, Room 300 East High Rise, 6325 Security Blvd., Baltimore, MD 21207, 301 597-5909

RIN: 0938-AD12

816. MEDICARE, MEDICAID, AND CLINICAL LABORATORIES IMPROVEMENT ACT (CLIA) PATIENT CONFIDENTIALITY RULES

Legal Authority: 42 USC 216; 42 USC 1302; 42 USC 1395x; 42 USC 1395hh

CFR Citation: 42 CFR 74; 42 CFR 405; 42 CFR 441

Legal Deadline: None.

Abstract: This rule eliminates the requirement that a laboratory maintain the name and other identification of individuals undergoing testing to determine the presence of the Human Immunodeficiency Virus (HIV) antibody or causative agent, if the laboratory is not seeking Medicare or Medicaid payment for these tests.

Timetable:

Action	Date	FR Cite
Final Action with comment period	04/00/88	

Small Entity: No

Agency Contact: Mike Goldman, Chief, Laboratory and Ambulatory Branch, Department of Health and Human Services, Health Care Financing Administration, 2D2 Meadows East, 6300 Security Blvd., Baltimore, MD 21207, 301 594-9737

RIN: 0938-AD40

817. LONG TERM CARE SURVEY

Legal Authority: 42 USC 1302; 42 USC 1395x; 42 USC 1395bb; 42 USC 1395cc; 42 USC 1395hh; 42 USC 1395rr

CFR Citation: 42 CFR 405.1906; 42 CFR 442.30

Legal Deadline: Judicial, July 1, 1987. (Note: Published in Federal Register 7/1/87)

Abstract: These regulations respond to a U.S. District Court decision, which declared a previous rule affecting long term care surveys published in the Federal Register on June 13, 1986, to be procedurally invalid. The Court ordered that, by July 1, 1987, we publish a new proposed rule to correct the inadequacies identified by the Court. Accordingly, the proposed regulations described in detail HCFA's survey methodology, guidelines, and forms used in surveys, and the duties of the State survey agency. HCFA also solicited comments on the guidelines and forms that constitute the survey system set forth in appendices to the proposed rule.

Timetable:

Action	Date	FR Cite
NPRM	07/01/87	52 FR 24752
NPRM Comment Period End	09/29/87	52 FR 24752
Final Action	00/00/00	

Small Entity: Yes

Agency Contact: Wayne Smith, Director, Office of Survey and Certification, Department of Health and Human Services, Health Care Financing Administration, 6325 Security Blvd, Baltimore, MD 21207, 301 594-5547

RIN: 0938-AD41

818. ● HOME HEALTH AGENCIES: HOME HEALTH AIDE TRAINING AND PATIENT RIGHTS

Significance: Agency Priority

Legal Authority: 42 USC 1302; 42 USC 1395x(m); 42 USC 1395x(dd); 42 USC 1395hh; 42 USC 1395x(o)

CFR Citation: 42 CFR 405.1202; 42 CFR 405.1203; 42 CFR 405.1227; 42 CFR 409.40; 42 CFR 418.94; 42 CFR 418.202

Legal Deadline: Statutory, October 1, 1988. Minimum standards for home health aide training and competency evaluation programs must, pursuant to P.L. 100-203, be established by October 1, 1988.

Abstract: These regulations will establish requirements for home health aide training that will apply to all home health agencies that provide home health aide services under Part A or B of the Medicare program. In order for home health aide services to be covered under the Medicare program, home health aides must have completed a training and competency evaluation program or a competency evaluation program that we approve. Conforming changes are being made to the hospice regulation with respect to hospice personnel that perform home health aide services. These regulations also require a home health agency to protect and promote the rights of each individual under its care.

Timetable:

Action	Date	FR Cite
Final With Comment Period	10/01/88	

Small Entity: No

Agency Contact: Thomas Hoyer, Director, Division of, Provider Services Coverage Policy, Department of Health and Human Services, Health Care Financing Administration, Room 405, EHR, 6325 Security Blvd, Baltimore, MD 21207, 301 594-9446

RIN: 0938-AD45

819. ● SCHEDULES OF LIMITS ON HOME HEALTH AGENCY COSTS PER VISIT FOR COST REPORTING PERIODS BEGINNING ON OR AFTER JULY 1, 1988

Significance: Agency Priority

Legal Authority: 42 USC 1395x; 42 USC 1395hh; 42 USC 1302

CFR Citation: 42 CFR 413.30

Legal Deadline: None.

Abstract: This final notice with comment period set forth an updated schedule of limits on home health agency costs that may be reimbursed under the Medicare program. This updated schedule of limits will be applicable to cost reporting periods beginning on or after July 1, 1988.

Timetable:

Action	Date	FR Cite
Final Notice With Comment	06/01/88	

Small Entity: No

Agency Contact: William J. Goeller, Director, Division of Payment and Reporting, Department of Health and Human Services, Health Care Financing Administration, 1-F-5 ELR, 6325 Security Blvd., Baltimore, MD 21207, 301 597-1803

RIN: 0938-AD47

DEPARTMENT OF HEALTH AND HUMAN SERVICES (HHS) — Completed Actions

Health Care Financing Administration (HCFA)

820. SURVEY AND CERTIFICATION PROCEDURES

Significance: Regulatory Program

CFR Citation: 42 CFR 405; 42 CFR 442; 42 CFR 488; 42 CFR 489

Completed:

Reason	Date	FR Cite
Withdrawn New proposal to be issued using OBRA '87 requirements eff. 1990	02/26/88	

Small Entity: Yes

Agency Contact: Walter Merten 301 594-3612

RIN: 0938-AA36

821. RELATIONS WITH OTHER AGENCIES, MISCELLANEOUS MEDICAID DEFINITIONS AND THIRD PARTY LIABILITY QUALITY CONTROL

CFR Citation: 42 CFR 431.625; 42 CFR 435.1009; 42 CFR 440.2; 42 CFR 440.10; 42 CFR 440.20; 42 CFR 440.80; 42 CFR 431.800; 42 CFR 440.30; 42 CFR 441.200; 42 CFR 441.201; 42 CFR 441.202; 42 CFR 441.203; 42 CFR 441.206; 42 CFR 441.208

Completed:

Reason	Date	FR Cite
Final Action	12/17/87	52 FR 47926
Final Action Effective	01/19/88	52 FR 47926

Small Entity: No

Agency Contact: Thomas Hoyer 301 594-9446

RIN: 0938-AB21

822. FFP FOR SERVICES OF LONG TERM CARE FACILITIES

CFR Citation: 42 CFR 442.16; 42 CFR 442.40; 42 CFR 442.42

Completed:

Reason	Date	FR Cite
Final Action	08/28/87	52 FR 32544
Final Action Effective	09/28/87	52 FR 32544

Small Entity: No

Agency Contact: Gilda Martin 301 597-1399

RIN: 0938-AB42

823. MEDICAID PROGRAM; COVERAGE OF QUALIFIED PREGNANT WOMEN AND CHILDREN AND NEWBORN CHILDREN

CFR Citation: 42 CFR 435.3; 42 CFR 435.115; 42 CFR 435.116; 42 CFR 435.117; 42 CFR 435.301; 42 CFR 436.2; 42 CFR 436.114; 42 CFR 436.120; 42 CFR 436.124; 42 CFR 436.301

Completed:

Reason	Date	FR Cite
Final Action	11/09/87	52 FR 43063
Final Action Effective	12/09/87	52 FR 43063

Small Entity: No

Agency Contact: Richard Strauss 301 594-6529

RIN: 0938-AC02

824. CORRECTION AND REDUCTION PLANS FOR INTERMEDIATE CARE FACILITIES FOR THE MENTALLY RETARDED

CFR Citation: 42 CFR 442.1; 42 CFR 442.2; 42 CFR 442.109; 42 CFR 442.110; 42 CFR 442.111; 42 CFR 442.112; 42 CFR 442.113; 42 CFR 442.114; 42 CFR 442.115; 42 CFR 442.116

Completed:

Reason	Date	FR Cite
Final Action	01/25/88	53 FR 1984
Final Action Effective	04/07/86	53 FR 1984

Small Entity: Yes

Agency Contact: Mary Pratt 301 594-0005

RIN: 0938-AC51

825. SCHEDULE OF LIMITS FOR SKILLED NURSING FACILITY INPATIENT ROUTINE SERVICE COSTS FOR COST REPORTING PERIODS BEGINNING ON OR AFTER OCTOBER 1, 1987

Significance: Regulatory Program

CFR Citation: 42 CFR 413.30

Completed:

Reason	Date	FR Cite
Final Action	10/02/87	52 FR 37098
Final Action Effective	10/01/87	

Small Entity: No

Agency Contact: William Goeller 301 597-1802

RIN: 0938-AC54

826. REASONABLE CHARGE PAYMENT LIMITS FOR ENTERAL PRODUCTS AND SUPPLIES

Significance: Agency Priority

CFR Citation: 42 CFR 405.502

Completed:

Reason	Date	FR Cite
Withdrawn while continuing to analyze issues.	02/17/88	

Small Entity: Yes

Agency Contact: Sharon Harris 301 594-9474

RIN: 0938-AC67

827. ENTITIES PERFORMING QUALITY OF CARE REVIEW OF SERVICES PROVIDED BY RISK-BASIS HEALTH MAINTENANCE ORGANIZATIONS AND COMPETITIVE MEDICAL PLANS

CFR Citation: 42 CFR 466.70; 42 CFR 466.71; 42 CFR 466.72; 42 CFR 476.133; 42 CFR 476.137

Completed:

Reason	Date	FR Cite
Final Action	10/07/87	52 FR 37454
Final Action Effective	10/07/87	

Small Entity: No

Agency Contact: Richard Husk 301 594-7909

RIN: 0938-AC85

828. END STAGE RENAL DISEASE PROGRAM: RESPONSIBILITIES OF NETWORK ORGANIZATIONS

CFR Citation: 42 CFR 405.2112; 42 CFR 405.2113

Completed:

Reason	Date	FR Cite
Final Action 42 CFR 405.2112(f) and (j) subject to OMB approval	01/21/88	53 FR 1617
Final Action Effective	02/22/88	53 FR 1617

Small Entity: No

Agency Contact: Spencer Colburn 301 594-3413

RIN: 0938-AC86

829. END STAGE RENAL DISEASE PROGRAM: REVISED NETWORK AREA DESIGNATIONS

Significance: Agency Priority

CFR Citation: Not applicable

Completed:

Reason	Date	FR Cite
Final Action	10/02/87	52 FR 37018
Final Action Effective	11/02/87	52 FR 37018

Small Entity: Yes

Agency Contact: Spencer Colburn 301 594-3413

RIN: 0938-AC87

830. MEDICARE ECONOMIC INDEX FOR REASONABLE CHARGES (EFFECTIVE 01/01/88)

CFR Citation: 42 CFR 405.504

Completed:

Reason	Date	FR Cite
Final Action	10/14/87	52 FR 38145
Final Action Effective	01/01/88	52 FR 38145

Small Entity: Not Applicable

Agency Contact: Roland King 301 594-2826

RIN: 0938-AC91

831. PART B PREMIUM FOR 12-MONTH PERIOD BEGINNING 01/01/88

CFR Citation: 42 CFR 405.902

Completed:

Reason	Date	FR Cite
Final Action	09/30/87	52 FR 36716
Final Action Effective	01/01/88	52 FR 36716

Small Entity: Not Applicable

Agency Contact: Solomon Mussey 301 594-2829

RIN: 0938-AC92

832. INPATIENT HOSPITAL DEDUCTIBLE AND COINSURANCE AMOUNTS AND PART A PREMIUM FOR THE UNINSURED AGED FOR 1988

CFR Citation: 42 CFR 408.22; 42 CFR 409.80; 42 CFR 409.82; 42 CFR 409.83; 42 CFR 409.85

Completed:

Reason	Date	FR Cite
Final Action	09/16/87	52 FR 35056
Final Action Effective	01/01/88	52 FR 35056

Small Entity: Not Applicable

Agency Contact: Solomon Mussey 301 594-2829

RIN: 0938-AC94

833. PERIODIC INTERIM PAYMENTS FOR HOSPITALS

CFR Citation: 42 CFR 412.113; 42 CFR 412.116; 42 CFR 413.64; 42 CFR 418.307

Completed:

Reason	Date	FR Cite
Final Action	01/21/88	53 FR 1621
Comment Period Ends 03/22/88		
Final Action Effective	02/22/88	53 FR 1621

Small Entity: Yes

Agency Contact: William Goeller 301 597-1802

RIN: 0938-AC96

834. PAYMENT FOR FACILITY SERVICES RELATED TO AMBULATORY SURGICAL PROCEDURES PERFORMED IN HOSPITALS ON AN OUTPATIENT BASIS

Significance: Agency Priority

CFR Citation: 42 CFR 413.13; 42 CFR 413.118

Completed:

Reason	Date	FR Cite
Final Action Eff. for cost reporting beginning on or after 10/1/87.	10/01/87	52 FR 36765
Final Action Effective	10/01/87	52 FR 36765

Small Entity: Yes

Agency Contact: William Goeller 301 597-1803

RIN: 0938-AD00

835. STANDARDS FOR THE REUSE OF DIALYSIS FILTERS AND OTHER DIALYSIS SUPPLIES

Significance: Regulatory Program

CFR Citation: 42 CFR 405.2136; 42 CFR 405.2138; 42 CFR 405.2139; 42 CFR 405.2140; 42 CFR 405.2150

Completed:

Reason	Date	FR Cite
Final Action	10/02/87	52 FR 36926
Final Action Effective	10/02/87	52 FR 39626

Small Entity: Yes

Agency Contact: Rita McGrath 301 594-6719

RIN: 0938-AD10

836. SUPPLEMENTARY MEDICAL INSURANCE PREMIUMS

CFR Citation: 42 CFR 405; 42 CFR 406

Completed:

Reason	Date	FR Cite
Final Action	12/18/87	52 FR 48112
Final Action Effective	03/17/88	52 FR 48112

Small Entity: No

Agency Contact: Luisa V. Iglesias 202 245-0383

RIN: 0938-AD19

837. ORGAN PROCUREMENT ORGANIZATIONS AND ORGAN PROCUREMENT PROTOCOLS

Significance: Regulatory Program

CFR Citation: 42 CFR 485.308; 42 CFR 405.2102; 42 CFR 405.2163; 42 CFR 405.2171; 42 CFR 413.178; 42 CFR 441.10; 42 CFR 441.13; 42 CFR 482.12; 42 CFR 485.301; 42 CFR 485.302; 42 CFR 485.303; 42 CFR 485.304; 42 CFR 485.305; 42 CFR 485.306; 42 CFR 485.307; ...

Completed:

Reason	Date	FR Cite
Final Action	03/01/88	53 FR 6526
Final Action Effective	03/31/88	

Small Entity: No

Agency Contact: Robert Wren 301 594-9690

RIN: 0938-AD20

838. DISCONTINUATION OF BAD DEBT PAYMENT FOR HOSPITALS SUBJECT TO THE PROSPECTIVE PAYMENT SYSTEM

Significance: Agency Priority

CFR Citation: 42 CFR 412.2; 42 CFR 412.115; 42 CFR 413.80

Completed:

Reason	Date	FR Cite
Withdrawn OBRA 87 prohibits change in policy in effect on 8/1/87.	01/14/88	

Small Entity: Yes

Agency Contact: Charles Booth 301 594-9760

RIN: 0938-AD27

839. HOME HEALTH AGENCIES AIDE TRAINING AND DISCHARGE PLANNING, AND CONFORMING CHANGES TO THE HOSPICE PROGRAM

Significance: Agency Priority

CFR Citation: 42 CFR 405.1202; 42 CFR 405.1223; 42 CFR 405.1227; 42 CFR 405.1228; 42 CFR 409.40; 42 CFR 418.94; 42 CFR 418.202

Completed:

Reason	Date	FR Cite
Withdrawn Per OBRA '87 will be included in two other regulations	01/20/88	

Small Entity: No

Agency Contact: Thomas Hoyer 301 594-9446

RIN: 0938-AD29

840. ALIEN ELIGIBILITY, IMMIGRATION STATUS VERIFICATION AND WAIVER PROCEDURES FOR AFDC STATE ADMINISTERED ADULT ASSISTANCE AND MEDICAID PROGRAMS

CFR Citation: 42 CFR 433.15; 42 CFR 435.970; 42 CFR 435.972; 42 CFR 435.974; 42 CFR 435.976; 42 CFR 435.978; 42 CFR 435.980; 42 CFR 435.1010; 42 CFR 435.1015; 42 CFR 435.4; 42 CFR 435.402; 42 CFR 435.900; 42 CFR 435.945; 42 CFR 435.946

Completed:

Reason	Date	FR Cite
Withdrawn appears elsewhere in the Agenda.	02/26/88	

Small Entity: No

Agency Contact: David L. Landis 301 594-8000

RIN: 0938-AD35

841. TARGETING INFORMATION FOR INCOME AND ELIGIBILITY VERIFICATION

CFR Citation: 42 CFR 433.138; 42 CFR 435.941; 42 CFR 435.945; 42 CFR 435.952; 42 CFR 435.953

Completed:

Reason	Date	FR Cite
Withdrawn - Appears elsewhere in the agenda	01/25/88	

Small Entity: No

Agency Contact: David Landis 301 594-8000

RIN: 0938-AD37

DEPARTMENT OF HEALTH AND HUMAN SERVICES (HHS) — Proposed Rule Stage

Family Support Administration (FSA)

842. SCOPE OF PAYMENTS

Significance: Agency Priority

Legal Authority: 42 USC 1102; 42 USC 602

CFR Citation: 45 CFR 233.20(a)(2)(i); 45 CFR 233.20(a)(2)(V); 45 CFR 233.120

Legal Deadline: None.

Abstract: These proposed regulations would clarify that States may not provide simultaneous multiple shelter allowances or special need allowances to recipients under Titles I, IV-A, X, XIV, and XVI of the Social Security Act based on the type of housing in which they reside. Also, these regulations would limit Federal matching under the Emergency Assistance program to one 30-day period in twelve consecutive months and would require States to specify the maximum amount of assistance to be provided for each type of emergency.

Timetable:

Action	Date	FR Cite
ANPRM	03/01/87	
NPRM	03/00/88	
NPRM Comment Period End	05/00/88	
Final Action	11/00/88	

Small Entity: No

Additional Information: Split off from Regulation on Administrative

Improvement in the AFDC Program (RIN 0960-AB72).

Public Compliance Cost: Initial Cost: $0; Yearly Recurring Cost: $0

Government Levels Affected: Local, State, Federal

Agency Contact: Diann Dawson, Director, Division of Policy, Office of Family Assistance, Department of Health and Human Services, Family Support Administration, 2100 Second Street, SW, Washington, DC 20201, 202 245-3290

RIN: 0970-AA00

---

843. AID TO FAMILIES WITH DEPENDENT CHILDREN PROGRAM; ADMINISTRATIVE IMPROVEMENT IN THE AFDC PROGRAM

Significance: Regulatory Program

Legal Authority: 42 USC 303; 42 USC 602; 42 USC 606; 42 USC 1403; 42 USC 1383 Note; 42 USC 1302

CFR Citation: 45 CFR 205; 45 CFR 224; 45 CFR 232; 45 CFR 233; 45 CFR 238

Legal Deadline: None.

Abstract: The proposed rule will organize and codify those administrative changes which will better target program resources, reduce administrative cost, or increase State flexibility.

Timetable:

Action	Date	FR Cite
NPRM	09/30/88	
NPRM Comment Period End	11/30/88	
Final Action	02/28/89	

Small Entity: No

Agency Contact: Diann Dawson, Director, Division of Policy, Office of Family Assistance, Department of Health and Human Services, Family Support Administration, 2100 Second Street, SW, Washington, DC 20201, 202 245-3290

RIN: 0970-AA09

---

844. STANDARDS FOR CHILD SUPPORT ENFORCEMENT PROGRAM OPERATIONS

Significance: Regulatory Program

Legal Authority: 42 USC 1302

CFR Citation: 45 CFR 302; 45 CFR 303; 45 CFR 304; 45 CFR 305; 45 CFR 306

Legal Deadline: None.

Abstract: These proposed regulations will revise requirements and program standards to streamline and improve case processing within the IV-D agency. Specific standards and timeframes will be proposed for certain actions required to be taken in processing an IV-D case.

Timetable:

Action	Date	FR Cite
NPRM	09/00/88	
Final Action	03/00/89	

Small Entity: No

Government Levels Affected: Local, State, Federal

Agency Contact: Joyce Linder, Program Specialist, Office of Child Support Enforcement, FSA, Department of Health and Human Services, Family Support Administration, 330 C Street, S.W., Washington, DC 20201, 202 245-1773

RIN: 0970-AA16

---

845. CHILD SUPPORT ENFORCEMENT AUDIT REGULATIONS

Significance: Regulatory Program

Legal Authority: 42 USC 603(h); 42 USC 604(d); 42 USC 652(a)(1); 42 USC 652(a)(4); 42 USC 1302

CFR Citation: 45 CFR 305

Legal Deadline: None.

Abstract: OCSE is proposing to amend the current program regulations governing child support program audits. These proposed rules would streamline the current audit process and requirements and make corrections to certain inaccuracies in the audit regulations. In addition, we propose to add new performance indicators and update the scoring system.

Timetable:

Action	Date	FR Cite
NPRM	08/00/88	
Final Action	02/00/89	

Small Entity: No

Agency Contact: Elizabeth Matheson, Program Specialist, Office of Child Support Enforcement, FSA, Department of Health and Human Services, Family Support Administration, 330 C Street, S.W., Washington, DC 20201, 202 245-1999

RIN: 0970-AA17

---

846. DISTRIBUTION OF CHILD SUPPORT COLLECTIONS

Legal Authority: 42 USC 657; 42 USC 1302

CFR Citation: 45 CFR 302.51

Legal Deadline: None.

Abstract: OCSE is proposing to revise the child support enforcement program regulations governing the distribution of child support collections. These proposed rules would clarify the requirements that State child support enforcement agencies must adhere to when distributing payments made to AFDC families.

Timetable:

Action	Date	FR Cite
NPRM	01/00/89	
Final Action	06/00/89	

Small Entity: No

Agency Contact: Michael Fitzgerald, Program Specialist, Office of Child Support Enforcement, FSA, Department of Health and Human Services, Family Support Administration, 330 C Street, S.W., Washington, DC 20201, 202 245-1974

RIN: 0970-AA18

---

847. ALIEN VERIFICATION PROCEDURES FOR AFDC; STATE ADMINISTERED ADULT ASSISTANCE AND MEDICAID PROGRAMS; NOTICE OF PROPOSED RULEMAKING

Significance: Agency Priority

Legal Authority: PL 99-603, Sec 121; Immigration Reform and Control Act of 1986

CFR Citation: 45 CFR 233; 42 CFR 435; 45 CFR 205; 45 CFR 45; 42 CFR 433; 42 CFR 436

Legal Deadline: Statutory, October 1, 1987. INS must make an alien verification system that can be accessed by States by October 1, 1987. States may claim 100% reimbursement for implementing and operating SAVE on October 1, 1987.

Abstract: IRCA imposes new procedures on the AFDC, Adult Assistance Programs and Medicaid to verify immigration status of aliens applying for benefits under these programs with the Immigration and Naturalization Service. Under the law, States must be reimbursed at 100% for costs of their implementation and operation to access the alien status verification system. This regulation will specify what costs incurred by states

BEST COPY AVAILABLE

will be subject to 100% reimbursement. To provide uniformity and consistency between the AFDC and Medicaid programs with respect to reimbursement, the proposed rule will be issued jointly with a common preamble.

Timetable:

Action	Date	FR Cite
NPRM	05/30/88	
NPRM Comment Period End	07/30/88	
Final Action Effective	10/01/88	
Final Action	11/30/88	

Small Entity: No

Additional Information: The IRCA Implementing Task Force serves as the primary focal point for coordinating HHS responsibility under IRCA. The Task Force is the contact source for the issuance of the joint FSA/HCFA rule regarding alien verification procedures under the AFDC, Medicaid and Adult Assistance programs.

Government Levels Affected: State

Agency Contact: Diann Dawson, Director, Division of Policy, Office of Family Assistance, Department of Health and Human Services, Family Support Administration, 2100 Second Street, SW, Washington, DC 20201, 202 245-3290

RIN: 0970-AA41

---

848. ● EXCLUSION OF INDIAN TRUST FUNDS AND ALASKA NATIVE CLAIMS SETTLEMENT ACT DISTRIBUTIONS (ANCSA)

Significance: Regulatory Program

Legal Authority: PL 97-458, Sec 4; PL 98-64, Sec 2; PL 92-203, as amended

CFR Citation: 45 CFR 233.20(a)(4)(ii)(n); 45 CFR 233.20(a)(4)(ii)(o); 45 CFR 233.20(a)(4)(ii)(e); 45 CFR 233.20(a)(4)(ii)(k)

Legal Deadline: None.

Abstract: Would update current regulations by adding additional statutory exclusions for Indian Judgment Funds and other funds held in trust or distributed per capita under a plan approved by Congress of the Department of Interior and initial purchases made with such funds. Additionally, would exclude all land distributions made pursuant to Alaska Native Claims Settlement Act. Regulations would reflect the statutes, therefore, no alternatives are being considered. We have determined that there would be some savings under the trust funds exclusions, but there would be some costs under the ANCSA exclusion. In any given year, we estimate the maximum typical savings would be $350,000 and maximum typical costs would be $120,000. Therefore, the typical annual result would be a savings of $230,000. The regulations will provide guidelines to States for implementing the statutory provisions.

Timetable:

Action	Date	FR Cite
NPRM	05/00/88	

Small Entity: No

Agency Contact: Diann Dawson, Director, Division of Policy, Office of Family Assistance, Department of Health and Human Services, Family Support Administration, 2100 Second Street, SW, Washington, DC 20201, 202 245-3290

RIN: 0970-AA47

---

849. ● COOPERATION IN THIRD PARTY HEALTH COVERAGE

Significance: Regulatory Program

Legal Authority: Sec 402(a)(26) of the Scl Scrty Act as amended by Sec 12304; The Consolidated Omnibus Budget Reconciliation Act of 1985

CFR Citation: 45 CFR 232.13; 45 CFR 232.40; 45 CFR 232.41; 45 CFR 232.42; 45 CFR 232.43; 45 CFR 232.44; 45 CFR 232.45; 45 CFR 232.47; 45 CFR 232.49; 45 CFR 235.70

Legal Deadline: None.

Abstract: The proposed rules specify that as a condition of eligibility for AFDC, each applicant or recipient must cooperate with the State by identifying and providing information to assist the State in pursuing any third party who may be liable to pay for care and services available under the State's plan for medical assistance under title XIX, unless such individual has good cause for refusing to cooperate as determined by the State agency in accordance with standards prescribed by the Secretary.

Timetable:

Action	Date	FR Cite
NPRM	07/01/88	
NPRM Comment Period End	09/01/88	
Final Action	01/00/89	

Small Entity: No

Agency Contact: Diann Dawson, Director, Division of Policy, Office of Family Assistance, Department of Health and Human Services, Family Support Administration, 2100 Second Street, SW, Washington, DC 20201, 202 245-3290

RIN: 0970-AA49

---

850. ● COOPERATIVE AGREEMENTS

Significance: Agency Priority

Legal Authority: 42 USC 1302; 42 USC 654(7); 42 USC 652

CFR Citation: 45 CFR 302.34; 45 CFR 303.107; 45 CFR 304.22; 45 CFR 305.34

Legal Deadline: None.

Abstract: The regulation specifies provisions that must be contained in all cooperative agreements between IV-D agencies and courts and law enforcement agencies and in all purchase of service agreements between IV-D agencies and any other agency, private organization or individual.

Timetable:

Action	Date	FR Cite
NPRM	04/00/88	
Final Action	12/00/88	

Small Entity: No

Agency Contact: Norma Staley, Program Analyst, Department of Health and Human Services, Family Support Administration, 330 C Street SW, Washington, D.C. 20201, 202 245-1960

RIN: 0970-AA50

---

851. ● FY 1988 SCORING SYSTEM FOR PERFORMANCE INDICATORS

Significance: Agency Priority

Legal Authority: 42 USC 602(a)(27); 42 USC 652(a)(4); 42 USC 603(h); 42 USC 1302

CFR Citation: 45 CFR 305.98

Legal Deadline: None.

Abstract: The regulation updates the scoring system for performance indicators to include the four accounts receivable indicators effective FY 1988.

Timetable:

Action	Date	FR Cite
NPRM	08/00/88	
Interim Final Rule	08/00/88	
Final Action	02/00/89	

Small Entity: No

Additional Information: This regulation was intended to be part of revisions to program audit regulations (0970-AA17). Because a new scoring system must be published as soon as possible this part of the larger effort to revise the audit regulations is being separated and published as an interim final rule with comment period.

Agency Contact: John Treacy, Program Analyst, Department of Health and Human Services, Family Support Administration, 330 C Street SW, Washington, D.C., 202 245-1981

RIN: 0970-AA51

852. ● FEDERAL TAX REFUND OFFSET PROCESS - PRE-OFFSET NOTICE FEE

Significance: Agency Priority

Legal Authority: 42 USC 664; 42 USC 1302; 42 USC 654(13); 42 USC 6505

CFR Citation: 45 CFR 303.72

Legal Deadline: None.

Abstract: These regulations would permit OCSE to charge a fee for services provided in the Federal tax refund offset process. They would require State IV-D agencies to send pre-offset notices to absent parents unless the State requests and OCSE agrees to send the notices. In addition IRS fees would be deducted from offset amounts rather than billed and collected by HHS.

Timetable:

Action	Date	FR Cite
NPRM	04/00/88	
Final Action	10/00/88	

Small Entity: No

Agency Contact: Carol Jordan, Program Specialist, Department of Health and Human Services, Family Support Administration, 330 C Street SW, Washington, D.C. 20201, 202 245-1979

RIN: 0970-AA52

853. ● OMNIBUS BUDGET RECONCILIATION ACT OF 1987

Significance: Agency Priority

Legal Authority: PL 100-203, Sec 9133; The Omnibus Budget Reconciliation Act of 1987

CFR Citation: 45 CFR 233.53; 45 CFR 235.111; 45 CFR 233.20(a)(3)(x)

Legal Deadline: None.

Abstract: These proposed rules implement sections of OBRA regarding the support and maintenance disregard, the optional fraud control program, and treatment of foster care payments.

Timetable:

Action	Date	FR Cite
NPRM	06/30/88	
NPRM Comment Period End	08/31/88	

Small Entity: No

Government Levels Affected: State

Agency Contact: Diann Dawson, Director, Division of Policy, Office of Family Assistance, Department of Health and Human Services, Family Support Administration, 2100 Second Street, SW, Washington, DC 20201, 202 245-3290

RIN: 0970-AA56

DEPARTMENT OF HEALTH AND HUMAN SERVICES (HHS) — Final Rule Stage

Family Support Administration (FSA)

854. REFUGEE CASH AND MEDICAL ASSISTANCE

Significance: Agency Priority

Legal Authority: 8 USC 1522(a)(9)

CFR Citation: 45 CFR 400

Legal Deadline: None.

Abstract: This NPRM will provide special programs of refugee cash assistance (RCA) and refugee medical assistance (RMA) for the 12-month period beginning with the first month a refugee entered the United States.

Timetable:

Action	Date	FR Cite
NPRM	10/19/87	
NPRM Comment Period End	12/03/87	
Final Action Effective	02/15/88	
Final Action	06/00/88	

Small Entity: No

Government Levels Affected: Local, State

Agency Contact: Philip A. Holman, Director, Div. of Policy & Analysis, Office of Refugee Resettlement, Department of Health and Human Services, Family Support Administration, Rm 1229, 330 C Street, SW, Washington, DC 20201, 202 245-1027

RIN: 0970-AA01

855. RETROACTIVE MODIFICATION OF CHILD SUPPORT ARREARAGES

Legal Authority: PL 99-509, Sec 9103

CFR Citation: 45 CFR 302; 45 CFR 303; 45 CFR 304

Legal Deadline: None.

Abstract: This NPRM requires, as a result of the Omnibus Budget Reconciliation Act of 1986, that child support payments be judgments on and after the day they fall due as well as requires that States have procedures to prohibit the retroactive modification of child support arrearages.

Timetable:

Action	Date	FR Cite
NPRM	09/14/87	52 FR 34689
Final Action	06/00/88	

Small Entity: No

Government Levels Affected: Local, State, Federal

Agency Contact: Michael Fitzgerald, Program Specialist, Department of Health and Human Services, Family Support Administration, 330 C Street, S.W., Washington, DC 20201, 202 245-1974

RIN: 0970-AA03

856. AID TO FAMILIES WITH DEPENDENT CHILDREN; DEFINITION OF PERMISSIBLE STATE PRACTICE-QUALITY CONTROL

Significance: Agency Priority

Legal Authority: 42 USC 1302; 42 USC 602

CFR Citation: 45 CFR 205.40(a)(6)

Legal Deadline: None.

Abstract: This rule will amend the definition of "Permissible State Practice." The rule will enable quality control to review against Federal statutes and regulations when a state plan is not amended to reflect new federal rules, or when a State plan amendment is submitted which is inconsistent with new federal rules but the Department has not yet acted upon it or when a State plan amendment is submitted which is inconsistent with current Federal rules and there is no current applicable State plan provision.

Timetable:

Action	Date	FR Cite
NPRM	06/18/85	50 FR 25269
NPRM Comment Period End	08/19/85	

Next Action Undetermined

Small Entity: No

Agency Contact: Diann Dawson, Director, Division of Policy, Office of Family Assistance, Department of Health and Human Services, Family Support Administration, 2100 Second Street, SW, Washington, DC 20201, 202 245-3290

RIN: 0970-AA04

---

857. AID TO FAMILIES WITH DEPENDENT CHILDREN; TREATMENT OF UTILITY PAYMENTS BY APPLICANT OR RECIPIENTS LIVING IN CERTAIN FEDERALLY ASSISTANCE HOUSING

Legal Authority: PL 98-181, Sec 221; 42 USC 602; 42 USC 1302; PL 98-479, Sec 102

CFR Citation: 45 CFR 233.20

Legal Deadline: None.

Abstract: The proposed rule will provide that Housing and Urban Development Assisted Aid to Families With Dependent Children tenants who pay at HUD's direction utilities but no rent to landlord will have their utility payment considered rent by a State IV-A agency in computing the AID to Families With Dependent Children grant.

Timetable:

Action	Date	FR Cite
NPRM	08/27/87	52 FR 32323
NPRM Comment Period End	10/26/87	
Final Action	06/30/88	

Small Entity: No

Agency Contact: Diann Dawson, Director, Division of Policy, Office of Family Assistance, Department of Health and Human Services, Family Support Administration, 2100 Second Street, SW, Washington, DC 20201, 202 245-3290

RIN: 0970-AA05

---

858. AID TO FAMILIES WITH DEPENDENT CHILDREN PROGRAM; IMPLEMENTATION OF THE DEFICIT REDUCTION ACT OF 1984

Significance: Agency Priority

Legal Authority: 42 USC 1302; PL 98-369 The Deficit Reduction Act of 1984; PL 99-514 The Tax Reform Act of 1986

CFR Citation: 45 CFR 233.36; 45 CFR 237.50; 45 CFR 238.18; 45 CFR 238.20; 45 CFR 238.50; 45 CFR 239.12; 45 CFR 239.14; 45 CFR 239.16; 45 CFR 239.24; 45 CFR 239.58; 45 CFR 239.82; 45 CFR 233.10; 45 CFR 233.90; 45 CFR 232.20; 45 CFR 233.35; ...

Legal Deadline: None.

Abstract: The final regulations will clarify provisions first published in the Interim Final Rules implementing the Deficit Reduction Act of 1984 and as clarified by the Tax Reform Act of 1986.

Timetable:

Action	Date	FR Cite
Interim Final Rule	09/10/84	49 FR 35586
Final Action	06/30/88	

Small Entity: No

Agency Contact: Diann Dawson, Director, Division of Policy, Office of Family Assistance, Department of Health and Human Services, Family Support Administration, 2100 Second Street, SW, Washington, DC 20201, 202 245-3290

RIN: 0970-AA06

---

859. AID TO FAMILIES WITH DEPENDENT CHILDREN PROGRAM; EXTENSION OF MEDICAID ELIGIBILITY WHEN SUPPORT COLLECTIONS RESULT IN TERMINATION OF AFDC ELIGIBILITY

Legal Authority: 42 USC 606; 42 USC 1302; PL 98-378, Sec 20

CFR Citation: 45 CFR 233; 42 CFR 435; 42 CFR 436

Legal Deadline: Statutory, September 30, 1988.

Abstract: This NPRM rule, which implements section 20 of the Child Support Enforcement Amendments of 1984 (Pub. L. 98-378) specifies that in any case where the collection or increased collection of support under title IV-D of the Social Security Act contributes wholly or partly to a family's ineligibility for AFDC, the family is deemed, but only for the purpose of Medicaid eligibility, to be receiving AFDC for a period of four calendar months after the last month of AFDC eligibility. This applies only to families who receive AFDC in three of the six months immediately preceding the month of ineligibility. "Received" includes those individuals denied an AFDC payment solely because the payment amount is under $10, the recoupment of an overpayment, or because the payment is determined to be zero as a result of rounding. The estimated costs are: FY 1985--$30 million, FY 1986--$45 million, FY 1987--$50 million, and FY 1988--$55 million.

Timetable:

Action	Date	FR Cite
NPRM	03/00/88	
Final Action	12/00/88	
Final Action Effective	12/00/88	

Small Entity: No

Affected Sectors: None

Government Levels Affected: State

Agency Contact: Diann Dawson, Director, Division of Policy, Office of Family Assistance, Department of Health and Human Services, Family Support Administration, 2100 Second St., SW, Washington, DC 20201, 202 245-3290

RIN: 0970-AA07

---

860. CONSISTENCY FOR THE FOOD STAMP PROGRAM, AFDC PROGRAM, AND THE ADULT ASSISTANCE PROGRAMS

Significance: Regulatory Program

Legal Authority: 42 USC 1302; Sec. 1102, 49 Stat. 647

CFR Citation: 45 CFR 205.10(a)(4)(ii); 45 CFR 233.31(b); 45 CFR 233.20(a)(6)(v)(B); 45 CFR 205.10(a)(7); 45 CFR 205.10(a)(13); 45 CFR 205.52; 45 CFR 233.20(a)(3)(ii)(D); 45 CFR 233.20(a)(3)(iii)

Legal Deadline: None.

Abstract: Proposed rule will provide increased consistency in eligibility

policies and procedures between the AFDC and Food Stamp programs, within existing statutory requirements. The aim is to improve and simplify program administration and ease the burden placed upon the State agencies and individuals applying for assistance.

Timetable:

Action	Date	FR Cite
ANPRM	02/19/85	50 FR 6970
ANPRM Comment Period End	04/22/85	50 FR 6970
NPRM	09/29/87	52 FR 36546
NPRM Comment Period End	11/30/87	
Final Action	09/30/88	

Small Entity: Undetermined

Agency Contact: Diann Dawson, Director, Division of Policy, Office of Family Assistance, Department of Health and Human Services, Family Support Administration, 2100 Second Street, SW, Washington, DC 20201, 202 245-3290

RIN: 0970-AA08

861. REFUGEE RESETTLEMENT PROGRAM; REFUGEE CASH AND ASSISTANCE; REQUIREMENTS FOR JOB SEARCH, EMPLOYMENT SERVICES, AND EMPLOYMENT; REFUGEE MEDICAL ASSISTANCE; AND REFUGEE SOCIAL SERVICES

Significance: Regulatory Program

Legal Authority: 8 USC 1522(a)(9)

CFR Citation: 45 CFR 400

Legal Deadline: None.

Abstract: This regulation will establish requirements governing refugee cash assistance; refugee medical assistance; and refugee support (social) services, including job search employability services, and employment.

Timetable:

Action	Date	FR Cite
NPRM	01/30/86	51 FR 03918
NPRM Comment Period End	04/30/86	
Final Action	08/00/88	

Small Entity: No

Agency Contact: Philip A. Holman, Director, Div. of Policy & Analysis, Department of Health and Human Services, Family Support Administration, Rm 1229, 330 C Street, SW, Washington, DC 20201, 202 245-1027

RIN: 0970-AA10

862. AID TO FAMILIES WITH DEPENDENT CHILDREN PROGRAM; GENERAL ADMINISTRATION – PUBLIC ASSISTANCE PROGRAM – QUALITY CONTROL SYSTEM

Significance: Agency Priority

Legal Authority: 42 USC 1302; PL 97-248; PL 96-123

CFR Citation: 45 CFR 205.42; 45 CFR 205.44

Legal Deadline: None.

Abstract: These proposed rules amend the QC regulations under the AFDC program by establishing more definitive criteria to be used in determining whether waivers will be granted to states that fail to meet the statutory error standard.

Timetable:

Action	Date	FR Cite
NPRM	02/02/87	52 FR 21
NPRM Comment Period End	04/03/87	

Next Action Undetermined

Small Entity: No

Public Compliance Cost: Initial Cost: $0; Yearly Recurring Cost: $0; Base Year for Dollar Estimates: 1986

Government Levels Affected: Local, State, Federal

Agency Contact: Sean Hurley, Director, Division of Quality Control, Office of Family Assistance, Department of Health and Human Services, Family Support Administration, 2100 Second Street, SW, Washington, DC 20201, 202 245-2292

RIN: 0970-AA11

863. MEDICAL SUPPORT ENFORCEMENT #2

Significance: Regulatory Program

Legal Authority: 42 USC 652(f); 42 USC 1302

CFR Citation: 45 CFR 305; 45 CFR 306

Legal Deadline: None.

Abstract: These regulations would revise existing requirements governing cooperative agreements between Medicaid and IV-D agencies to provide medical support enforcement services and require enhanced State IV-D agency efforts in medical support enforcement.

Timetable:

Action	Date	FR Cite
NPRM	05/27/87	52 FR 19738
Final Action	06/00/88	

Small Entity: No

Additional Information: Related to RIN 0992-AA12 - Medical Support Enforcement.

Agency Contact: Andrew Hagan, Program Specialist, Office of Child Support Enforcement, OFA, Department of Health and Human Services, Family Support Administration, 330 C Street, S.W., Washington, DC 20201, 202 245-1992

RIN: 0970-AA13

864. DISREGARD OF CHILD SUPPORT PAYMENTS; REGULATIONS IMPLEMENTING THE DEFICIT REDUCTION ACT OF 1984

Legal Authority: 42 USC 1302; 42 USC 657(b)(1)

CFR Citation: 45 CFR 302.51

Legal Deadline: None.

Abstract: This final rule implements the Deficit Reduction Act of 1984 which amends the Social Security Act to require that the first $50 collected on a monthly support obligation be paid to the Aid to Families with Dependent Children (AFDC) family. This amount does not affect the family's AFDC eligibility or the amount of assistance to which they were entitled.

Timetable:

Action	Date	FR Cite
Interim Final Rule	09/10/84	49 FR 35604
Final Action	05/00/88	

Small Entity: No

Government Levels Affected: Local, State, Federal

Agency Contact: Carol Jordan, Program Specialist, Office of Child Support Enforcement, FSA, Department of Health and Human Services, Family Support Administration, 330 C Street, S.W., Washington, DC 20201, 202 245-1979

RIN: 0970-AA15

865. GRANTS TO STATES FOR PUBLIC ASSISTANCE PROGRAMS, TREATMENT OF REPLACEMENT CHECKS

Legal Authority: 42 USC 1302; 42 USC 603

CFR Citation: 45 CFR 201.5

Legal Deadline: None.

Abstract: This proposed regulation will require States to report on their quarterly statement of expenditures the Federal share of previously claimed assistance checks which are determined to be: (1) replacements of checks cashed by eligible recipients, or (2) original checks cashed by persons other than the authorized payee. This rule will also clarify procedures for claiming Federal Financial Participation for duplicate checks.

Timetable:

Action	Date	FR Cite
NPRM	07/24/87	52 FR 142
NPRM Comment Period End	09/22/87	
Final Action	06/00/88	

Small Entity: No

Agency Contact: A. Gary Mounts, Deputy Associate Administrator, Office of Grants Management, OFM, Department of Health and Human Services, Family Support Administration, Office of Grants Management, Office of Financial Management, 330 C Street, S.W. Washington, DC 20201, 202 245-9657

RIN: 0970-AA19

866. ESSENTIAL PERSONS

Significance: Agency Priority

Legal Authority: 42 USC 602; 42 USC 1302

CFR Citation: 45 CFR 233.20

Legal Deadline: None.

Abstract: The proposed regulation would preclude States from considering individuals to be essential persons for purposes of the AFDC program if they do not provide an essential benefit or service to the family.

Timetable:

Action	Date	FR Cite
NPRM	10/05/87	52 FR 37183
NPRM Comment Period End	11/19/87	
Final Action	06/30/88	

Small Entity: No

Additional Information: Split off from Regulation 00 Administrative Improvement in the AFDC Program (RIN 0970-aa09)

Public Compliance Cost: Initial Cost: $0; Yearly Recurring Cost: $0

Government Levels Affected: Local, State, Federal

Agency Contact: Diann Dawson, Director, Division of Policy, Office of Family Assistance, Department of Health and Human Services, Family Support Administration, 2100 Second Street, SW, Washington, DC 20201, 202 245-3290

RIN: 0970-AA44

867. ● ALIEN LEGALIZATION

Significance: Regulatory Program

Legal Authority: PL 99-603, Sec 201; The Immigration Reform and Control Act of 1986; PL 99-603, Sec 302; The Immigration Reform and Control Act of 1986

CFR Citation: 45 CFR 206.10(a)(1)(vii)(B); 45 CFR 233.20(a)(3)(vi)(B); 45 CFR 233.50(c)

Legal Deadline: None.

Abstract: These rules implement provisions of the Immigration Reform and Control Act of 1986, PL 99-603, as they relate to the Eligibility determining requirements of aliens applying for assistance payments under the AFDC and Adult Assistance Programs. Applicants who apply for a legal alien status under the new INS designated legalization program will be disqualified for a period of 5 years for entitlement to AFDC. Cuban/Haitian entrants designated with such a status by INS are exempt from this disqualification provision. The disqualification provision does not apply to applicants for legalization from applying for assistance under the Adult Assistance Program conducted in Guam, Puerto Rico, and the Virgin Islands. These rules also specify how income or disqualified alien parents and siblings should be counted in determining the eligibility of a dependent child.

Timetable:

Action	Date	FR Cite
Interim Final Rule	12/24/87	52 FR 48687
NPRM Comment Period End	02/22/88	
Final Action	07/30/88	

Small Entity: No

Government Levels Affected: State

Agency Contact: Diann Dawson, Director, Division of Policy, Office of Family Assistance, Department of Health and Human Services, Family Support Administration, 2100 Second Street, SW, Washington, DC 20201, 202 245-3290

RIN: 0970-AA48

DEPARTMENT OF HEALTH AND HUMAN SERVICES (HHS) — Completed Actions

Family Support Administration (FSA)

868. CHILD SUPPORT ENFORCEMENT PROGRAM; QUARTERLY REPORTING REQUIREMENTS

CFR Citation: 45 CFR 301; 45 CFR 304

Completed:

Reason	Date	FR Cite
Withdrawn	03/01/88	

Small Entity: No

Agency Contact: Joyce Linder 202 245-1773

RIN: 0970-AA02

869. PROVISION OF SERVICES IN INTERSTATE IV-D CASES

Significance: Regulatory Program

CFR Citation: 45 CFR 301; 45 CFR 302; 45 CFR 303; 45 CFR 305

Completed:

Reason	Date	FR Cite
Final Action	02/22/88	53 FR 5246

Small Entity: No

Agency Contact: Joyce Linder 202 245-1773

RIN: 0970-AA23

VOL 53 ISS 79 PT 1 AP 25 1988 UMI

870. CASE CLOSURE

CFR Citation: 45 CFR 303

Completed:

Reason	Date	FR Cite
Merged with 0970-AA16	03/01/88	

Small Entity: No

Agency Contact: Craig Hathaway 202 245-1973

RIN: 0970-AA24

871. STATE LEGALIZATION IMPACT ASSISTANCE GRANTS

Significance: Agency Priority

CFR Citation: 45 CFR 16; 45 CFR 402

Completed:

Reason	Date	FR Cite
Final Action	03/10/88	53 FR 7832
Final Action Effective	03/10/88	

Small Entity: No

Agency Contact: Norman L. Thompson 202 245-0562

RIN: 0970-AA40

[FR Doc. 88-5082 Filed 04-22-88; 8:45 am]

BILLING CODE 4150-04-T

VOL
53
ISS
79
PT
1
AP
25
1988
UMI

federal register

Monday
April 25, 1988

Part IX

Department of Housing and Urban Development

Semiannual Regulatory Agenda

DEPARTMENT OF HOUSING AND URBAN DEVELOPMENT (HUD)

DEPARTMENT OF HOUSING AND URBAN DEVELOPMENT

24 CFR Subtitles A and B

[Docket No. N-88-1775]

Semiannual Agenda of Regulations

AGENCY: Department of Housing and Urban Development.

ACTION: Semiannual agenda, under Executive Order 12291 and the Regulatory Flexibility Act, of regulations expected to be issued and under review.

SUMMARY: In accordance with section 5 of Executive Order 12291, "Federal Regulation," the Department is publishing its agenda of proposed regulations already issued or expected to be issued, and of currently effective rules that are under review. Also, under section 602 of the Regulatory Flexibility Act, the Department has prepared a regulatory flexibility agenda of regulations expected to be proposed or promulgated which are likely to have a significant economic impact on a substantial number of small entities. As permitted by Executive Order 12291 and the Regulatory Flexibility Act, the two agendas are combined for publication.

FOR FURTHER INFORMATION CONTACT: Grady J. Norris, Assistant General Counsel for Regulations, Department of Housing and Urban Development, Room 10276, 451 Seventh Street, SW., Washington, DC 20410, (202) 755-7055. (This is not a toll-free number.)

SUPPLEMENTARY INFORMATION: Executive Order 12291, "Federal Regulation," issued on February 17, 1981 (46 FR 13193), requires each agency to publish semiannually an agenda of regulations that the agency has issued or expects to issue and of currently effective regulations that are under agency review.

The Regulatory Flexibility Act, 5 U.S.C. 601-612, requires each agency to publish semiannually a regulatory flexibility agenda of rules expected to be proposed or promulgated which are likely to have a significant economic impact on a substantial number of "small entities," meaning small businesses, small organizations, or small governmental jurisdictions.

Executive Order 12291 and section 605 of the Regulatory Flexibility Act each permit incorporation of the agenda it requires with any other prescribed agenda. Accordingly, the agenda set out below combines the information required by the Executive Order and by the Regulatory Flexibility Act. In addition, the agenda contains certain information not required by either the Executive Order or by the Act which the Department considers useful, both better to inform the public and to enhance the Department's own inventory control over its body of regulations.

For purposes of Executive Order 12291, "regulation" or "rule" is defined as "an agency statement of general applicability and future effect designed to implement, interpret, or prescribe law or policy or describing the procedure or practice requirements of an agency," subject to certain exceptions. The agenda published below concentrates upon regulatory material contained, or expected to be contained, in the Code of Federal Regulations (CFR) (or incorporated therein by reference) following publication in the **Federal Register**. As appropriate, however, issuances in the nature of general statements of policy may be published in the **Federal Register** but not for codification in the CFR.

The Department also is subject to certain requirements involving congressional review of rulemaking actions, including publication of an agenda. Section 7(o) of the Department of Housing and Urban Development Act (42 U.S.C. 3535(o)) requires that the Secretary transmit to the congressional committees having jurisdictional oversight (the Senate Committee on Banking, Housing and Urban Affairs and the House Committee on Banking, Finance and Urban Affairs) a semiannual agenda of all rules or regulations which are under development or review by the Department. A rule appearing on the agenda cannot be published for comment before or during the first 15 calendar days of continuous session of Congress after transmittal of the agenda. If, within such period, either Committee notifies the Secretary that it intends to review any rule or regulation or portion thereof which appears on the agenda, the Secretary must submit to both Committees a copy of the rule or regulation, in the form it is intended to be proposed, at least 15 calendar days of continuous session before it is published for comment. The Semiannual Agenda appearing hereinafter is the agenda transmitted to the Committees in compliance with the foregoing requirement.

The agenda items are divided first by program office. Within each program office, the agenda items are divided into four groups: (i) Prerulemaking actions, (ii) publications or other implementations of notices of proposed rulemaking, (iii) publications or other implementations of final rules, and (iv) completed actions. Within each grouping, rules are listed in chronological order by the Part number of the CFR affected. Where a rule affects multiple parts of the CFR, the rule is listed by the first affected Part number. Priority rules include all regulations designated for priority development by the Department.

Items listed in this agenda are from the following Offices within the Department: Office of the Secretary; Office of Housing; Office of Public and Indian Housing; Office of Community Planning and Development; Office of Fair Housing and Equal Opportunity; Office of Administration; and Government National Mortgage Association.

Dated: February 24, 1988.

J. Michael Dorsey,

General Counsel.

Office of the Secretary—Prerule Stage

Sequence Number	Title	Regulation Identifier Number
872	24 CFR 50 Departmental Policies, Responsibilities, and Procedures for Protection and Enhancement of Environmental Quality (S-4-85; FR-2206)	2501-AA30

HUD

Office of the Secretary—Prerule Stage—Continued

Sequence Number	Title	Regulation Identifier Number
873	24 CFR 56 Flood Insurance Requirements for Mortgage Insurance Loan and Grant Programs (S-3-85; FR-2007)	2501-AA59
874	24 CFR 0058 Environmental Review Procedures for the Community Development Block Grant, Rental Rehabilitation and Housing Development Grant Programs (S-13-86; FR-2316)	2501-AA39
875	24 CFR 81.41 Secondary Market Operations of the Federal National Mortgage Association (FNMA) (S-3-81)	2501-AA10

Office of the Secretary—Proposed Rule Stage

Sequence Number	Title	Regulation Identifier Number
876	00 CFR 000 Home Equity Conversion Mortgage Insurance Demonstration (S-2-88; FR-2481)	2501-AA67
877	24 CFR 0003 Elimination of Obsolete Regulations (S-16-86; FR-2261)	2501-AA50
878	24 CFR 10 Amending Rules on Rules and FOIA Rules (S-3-87; FR-2320)	2501-AA57
879	24 CFR 24 Debarment Suspension and Limited Denial of Participation--All- Cash Sales Exception (S-4-87; FR-2356)	2501-AA60
880	24 CFR 35 Lead-Based Paint Hazard Elimination (S-1-88; FR-2447)	2501-AA68
881	24 CFR 0042 Uniform Relocation Act Amendments of 1987 (S-3-88; FR-2357) (formerly CPD-3-87)	2501-AA70
882	24 CFR 46 Protection of Human Subjects in Research (S-6-83; FR-1807)	2501-AA15
883	24 CFR 50 Procedure for Floodplain Management and the Protection of Wetlands. Implementation of Executive Orders 11988 and 11990 (S-7-84; FR-865)	2501-AA22
884	24 CFR 200 Restrictions on Housing Assistance to Ineligible Aliens (S-7-87; FR-2383 (formerly FR-1588))	2501-AA63

Office of the Secretary—Final Rule Stage

Sequence Number	Title	Regulation Identifier Number
885	24 CFR 15.14 Freedom of Information Reform Act of 1986--Fee Schedule and Fee Waiver Regulations (S-6-87; FR2362)	2501-AA62
886	24 CFR 17 Administrative Claim: Implementing Certain Provisions of the Debt Collection Act of 1982 (S-10-86; FR-1644)	2501-AA55
887	24 CFR 24 Suspension and Debarment (S-2-79; FR-1676)	2501-AA05
888	24 CFR 28 Administrative Remedies for False Claims and Statements (S-2-87; FR-2310)	2501-AA58
889	24 CFR 58 Environmental Review Procedures - Rental Rehabilitation and Housing Development Grant Program (S-6-84; FR-1965)	2501-AA25

Office of the Secretary—Completed Actions

Sequence Number	Title	Regulation Identifier Number
890	24 CFR 0060 Determination of Wage Rates for Maintenance and Technical Employees of Public Housing Agencies and Indian Housing Authorities (S-5-86; FR-2211)	2501-AA40
891	24 CFR 200 Restrictions on Housing Assistance to Ineligible Aliens (S-7-86; FR-1588)	2501-AA56

Office of Housing—Prerule Stage

Sequence Number	Title	Regulation Identifier Number
892	24 CFR 200 Revision of Use of Materials Bulletin used in the HUD Bldg. Product Standard and Certification Program (H-4-87; FR2308)	2502-AE04
893	24 CFR 203 Retention Period for Mortgagee Single Family Claim Records (H-81-84)	2502-AC50

HUD

Office of Housing—Prerule Stage—Continued

Sequence Number	Title	Regulation Identifier Number
894	24 CFR 203.2 Eligibility Requirements–Mortgagee Approval (H-13-88; FR-2453)	2502-AE37
895	24 CFR 219 Flexible Subsidy Program; 1983 Amendments (H-50-84)	2502-AC31
896	24 CFR 3280 Manufactured Home Construction & Safety Construction on Siding & Roofing Materials & Application Criteria (H-8-87; FR2327)	2502-AE06
897	24 CFR 3500 Real Estate Settlement Procedures Act – Controlled Business Provisions and Miscellaneous Amendments (H-45-84; FR-1942)	2502-AC09

Office of Housing—Proposed Rule Stage

Sequence Number	Title	Regulation Identifier Number
898	00 CFR 000 Nehemiah Opportunity Grants Program (H-25-88; FR-2478) 1987 HCD Act	2502-AE45
899	24 CFR 200 Issuance of FHA Debentures (H-36-86; FR-2268)	2502-AD68
900	24 CFR 200 Authorize Additional Types of Loans for Direct Endorsement Processing (H-4-88; FR-2433)	2502-AE48
901	24 CFR 201.54 Filing Period for Resubmission of Denied Claims (H-43-86)	2502-AD80
902	24 CFR 201 Amendments to the Title I Regulations (H-19-87; FR2370)	2502-AE15
903	24 CFR 203 Penalty for Lack of Documentation (H-80-84)	2502-AC54
904	24 CFR 203 HUD Inspections - No Duty of Care (H-1-85; FR-2025)	2502-AC92
905	24 CFR 203 Deregulation of Loan Origination Fees in FHA Single Family Housing (H-18-87; FR-2333)	2502-AD98
906	24 CFR 203.366 Mortgagee Charges for Serious Title Defects (H-28-87; FR-2368)	2502-AE11
907	24 CFR 203 Revision of HUD Mortgage Approval Process (H-5-88; FR-2434)	2502-AE27
908	24 CFR 203 Emergency Homeownership Counseling (H-20-88; FR-2460) 1987 HCD Act	2502-AE28
909	24 CFR 203.400 Deadline for Filing Single Family Supplemental Claims (H-26-88; FR-2487)	2502-AE51
910	24 CFR 203 Action to Reduce Losses under FHA Single Family Mortgage Insurance Program (H-28-88; FR-2491)	2502-AE52
911	24 CFR 204.280 Claim Processing on Defaulted Coinsured Single-Family Mortgages (H-1-88; FR-2410)	2502-AE25
912	24 CFR 207 Limitation on Prepayment of Mortgages on Multifamily Rental Housing (H-54-84; FR-1952)	2502-AC49
913	24 CFR 208 Computer Automation of Required Data for Certification and Recertifications Subsidy Billing Procedures for Certain Multifamily Subsidized Projects (H-2-88; FR-2421)	2502-AE26
914	24 CFR 221.55 Assignment Option (H-44-86)	2502-AD78
915	24 CFR 251 Assignment of Coinsuring Lender Interest to Warehouse Bank for Interim Funding (H-15-88; FR-2455)	2502-AE39
916	24 CFR 3282 Manufactured Home Procedural and Enforcement Regulations Interpretative Bulletins (H-31-87; FR2380)	2502-AE10
917	24 CFR 791 Review of Applications for Housing Assistance and Allocation of Housing Assistance Funds (S-10-84; FR-1896)	2502-AA73
918	24 CFR 882 Conforming Section 8 Existing Certificate Regulation to Housing Voucher Format (H-2-87; FR-2294)	2502-AD91
919	24 CFR 882 Interprogram Transfers of Assisted Tenants (H-8-88; FR-2436)	2502-AE32
920	24 CFR 885 Loans for the Elderly or Handicapped - Housing for the Handicapped (H-23-88; FR-2476) 1987 HCD Act	2502-AE47
921	24 CFR 886 Provision of Section 8 Existing Housing Assistance for Projects at Foreclosure Sales (H-3-86; FR-2158)	2502-AD43
922	24 CFR 886.310 Miscellaneous Revisions of Part 886 (H-37-86; FR-2275)	2502-AD69
923	24 CFR 1710 Land Registration (H-21-86)	2502-AD54
924	24 CFR 1710 Amendments to Interstate Land Sales Registration (H-47-86; FR-2503)	2502-AD81
925	24 CFR 3280.308 Manufactured Home Construction and Safety Standards - Formaldehyde Regulations (H-10-87; FR-2332)	2502-AE02
926	24 CFR 3280.309 Notice of Formaldehyde; Manufactured Home Construction and Safety (H-23-87; FR2349)	2502-AE21
927	24 CFR 3280.506 Manufactured Housing Energy Conservation Standards (H-29-88; FR-2497) 1987 HCD Act	2502-AE53
928	24 CFR 3282 Manufactured Home Procedural and Enforcement System (H-40-86; FR-2278)	2502-AD60
929	24 CFR 3282 Manufactured Home Design Inspection System (H-41-86; FR-2279)	2502-AD61

Office of Housing—Final Rule Stage

Sequence Number	Title	Regulation Identifier Number
930	00 CFR 000 Supportive Housing Demonstration Program (H-34-87; FR2385)	2502-AE13
931	00 CFR 000 Tenant Participation in Multifamily Projects (H-11-88; FR-2451) 1987 HCD Act	2502-AE35
932	00 CFR 000 HODAG 1987 Act Amendments (H-19-88; FR-2459) 1987 HCD Act	2502-AE43

VOL 53 ISS 79 PT 1 APR 25 1988 UMI

HUD

Office of Housing—Final Rule Stage—Continued

Sequence Number	Title	Regulation Identifier Number
933	24 CFR 200 Applicability of Minimum Property Standards Manufactured Homes under Title II of the National Housing Act (H-82-82; FR-1578)	2502-AB24
934	24 CFR 200 Minimum Property Standards (MPS) for Housing – Water Supply Systems (H-31-86; FR-2255)	2502-AD64
935	24 CFR 200 Manufactured Home Construction and Safety Standards for Lead in Water Piping(H-3-87; FR-2296)	2502-AE05
936	24 CFR 200 Restrictions on All-Cash Sales (Amendment to Part 200) (H-30-87; FR-2374)	2502-AE12
937	24 CFR 203 Temporary Mortgage Assistance Payments (TMAP) and Assignments to HUD (H-44-85; FR-2147)	2502-AD34
938	24 CFR 203 Criteria for Acceptability of Insured 10-Year Protection Plans (H-28-86; FR-2036)	2502-AD65
939	24 CFR 203 Allegany Reservation of the Seneca Nation (H-32-87; FR-2382)	2502-AE09
940	24 CFR 203 Single Family Mortgage Insurance - Occupant and Investor Mortgagors (H-16-88; FR-2456) 1987 HCD Act	2502-AE40
941	24 CFR 207.19 Multifamily Housing Mortgage Insurance – Regulation of Rents (H-9-88; FR-2448) 1987 HCD Act	2502-AE33
942	24 CFR 215 State Agency Amendments (H-70-84; FR-1997)	2502-AC73
943	24 CFR 215 Rent Supplements Federal Tenants Selection Preference (H-12-88; FR-2452) 1987 HCD Act	2502-AE36
944	24 CFR 219 Prepayment of Mortgages on Low- and Moderate-Income Housing (H-10-88; FR-2450) 1987 HCD Act	2502-AE34
945	24 CFR 219 Eligibility of Section 23 and Section 202 Housing for Flexible Subsidy (H-18-88; FR-2458) 1987 HCD Act	2502-AE42
946	24 CFR 232 FHA Insurance of Mortgages Covering Nursing Homes and Similar Projects (H-27-88; FR-2490)	2502-AE38
947	24 CFR 241 Additional Revisions - Hospital Insurance (H-24-86; FR-2227)	2502-AD70
948	24 CFR 242 Hospital Insurance - Alternate Certification Requirements (H-21-88; FR-2466) 1987 HCD Act	2502-AE29
949	24 CFR 252 Coinsurance for Nursing Homes and Intermediate Care Facilities (H-32-86; FR-2256)	2502-AD74
950	24 CFR 290 HUD-Owned Multifamily Projects-Management and Disposition (H-69-78; FR-432)	2502-AC68
951	24 CFR 735 Section 236 Rent Supplement (H-17-88; FR-2457) 1987 HCD Act	2502-AE41
952	24 CFR 850 Housing Development Grant Program (H-26-84; FR-1902)	2502-AC23
953	24 CFR 880 Section 8 Housing Assistance Payments Programs – Revisions to Contract Rent Adjustment Regulations (H-22-88; FR-2469) 1987 HCD Act	2502-AE44
954	24 CFR 882 Shared Housing in the Section 8 Moderate Rehabilitation Program (H-26-86; FR-2238)	2502-AD68
955	24 CFR 885 Management Rules and Comprehensive Housing and Community Development Amendments (H-34-83; FR-1761)	2502-AC03
956	24 CFR 885 Loans for the Elderly or Handicapped - Loan Interest Rate Provisions (H-24-88; FR-2477) 1987 HCD Act	2502-AE46
957	24 CFR 887 Section 8 Housing Assistance Payments Program - Housing Vouchers (H-42-85; FR-2170)	2502-AD26

Office of Housing—Completed Actions

Sequence Number	Title	Regulation Identifier Number
958	24 CFR 200 Use of Materials Bulletin No. 40c - Grademarking of Plywood (H-21-85; FR2407)	2502-AD01
959	24 CFR 200.163 Direct Endorsement Underwriter's Certification (H-29-86; FR-2241)	2502-AD71
960	24 CFR 200 Use of Material Bulletin used in HUD Bldg. Product Standards and Certification Program for Mat-Formed Particleboard Sheathing Panels (H-7-87; FR-2322)	2502-AD92
961	24 CFR 200 Lead Standards in Water Piping - Subpart S - MPS (H-1-87; FR2290)	2502-AE03
962	24 CFR 200.935 Rev. of UMB 44d to allow the Use of Carpet in Bathrooms & Kitchens Over a Concrete-Masonry Flooring System and a New Classification System for Carpet (H-20-87; FR 2402)	2502-AE07
963	24 CFR 0200 Use of Materials Bulletin No. 89 HUD Building Product Standards and Certification Program for Exterior Insulated Steel Door Systems (H-6-88; FR-2443)	2502-AE30
964	24 CFR 203 Conveyance of One- to Four-Family Properties Occupied by Tenants or Former Mortgagors (H-9-85; FR-2064)	2502-AB10
965	24 CFR 203 One-Time Mortgage Insurance Premium for Non-Mutual Fund - Single Family Insurance Program (H-40-84; FR-1930)	2502-AC35
966	24 CFR 203.49 Insurance of Single Family Adjustable Rate Mortgages (H-32-84; FR-1916)	2502-AC43
967	24 CFR 203 Single Family Foreclosures--Deficiency Judgements (H-6-86; FR-2193)	2502-AD38
968	24 CFR 203 Types of Satisfactory Title Evidence (H-48-86)	2502-AD83
969	24 CFR 203 Elimination of Prohibition on the Payment of Fees to Third Parties in Multifamily Insurance Mortgage Transaction (H-5-87; FR-2314)	2502-AD90
970	24 CFR 203 Single Family Mortgage Insurance Premium (H-11-87)	2502-AD93
971	24 CFR 203 FHA Single Family Borrower Eligibility (H-12-87)	2502-AD94
972	24 CFR 203 Single Family Downpayment Requirements (H-17-87; FR-2334)	2502-AD99
973	24 CFR 203 Acceptance of Partial Payments during TMAP/Assignment Processing (H-27-87; FR-2366)	2502-AE08
974	24 CFR 203 Miscellaneous Revisions to FHA Single Family and Multifamily Mortgage Insuring Authorities (H-7-88; FR-2445)1987 HCD Act	2502-AE31

HUD

Office of Housing—Completed Actions—Continued

Sequence Number	Title	Regulation Identifier Number
975	24 CFR 207 Mortgage Insurance Programs under National Housing Act (H-48-81; FR-1525)	2502-AA90
976	24 CFR 215 Preference in the Provision of Housing for Families Who Are Occupying Substandard Housing, Are Involuntarily Displaced, or Are Paying More Than 50% of Family Income (H-22-80; FR-1597)	2502-AA34
977	24 CFR 242 Hospital Insurance - Alternative Certification Requirements (H-21-88; FR2466) 1987 HCD Act	2502-AE24
978	24 CFR 882.101 Section 8 Housing Assistance Payments Programs Portability of Section 8 Existing Housing Certificates (H-46-83; FR-1800)	2502-AB88
979	24 CFR 882 Section 8 Housing Assistance Payments Programs– Miscellaneous Amendments (H-19-87; FR-2335)	2502-AE00
980	24 CFR 885 Loans for Housing for the Elderly or Handicapped–Allocation of Loan Authority, Processing of Applications, Direct Loan Processing Procedures (H-21-87; FR2345)	2502-AE20
981	24 CFR 247 Revisions to Part 886 Termination of Tenancy (H-59-84; FR-1950)	2502-AC59
982	24 CFR 3280 Manufactured Home Construction and Safety Standards - General (H-33-86; FR-2276)	2502-AD58
983	24 CFR 3280 Manufactured Home Construction and Safety Standards - Deregulatory Proposals (H-39-86; FR-2277)	2502-AD59
984	24 CFR 3280 Manufactured Home Construction and Safety Standards - Thermal Energy Standards Deregulation (H-42-86; FR-2280)	2502-AD62
985	24 CFR 3280.504 Part 3280 - Interpretative Bulletin on the Vapor Barrier Requirements of 24 CFR 3280.504 (H-46-86; FR-2285)	2502-AD82
986	24 CFR 3280 Notice Requesting a Private Organization to Develop and Maintain the Federal Manufactured Home Construction and Safety Standards (H-9-87; FR-2271)	2502-AD85

Office of Community Planning and Development—Proposed Rule Stage

Sequence Number	Title	Regulation Identifier Number
987	24 CFR 570.488 Community Development Block Grants: State's Program (CPD-7-83; FR-1877)	2506-AA38
988	24 CFR 570.450 to 465 Community Development Block Grants, Urban Development Action Grants (CPD-9-86; FR-2449)	2506-AA72
989	24 CFR 570 Urban Development Action Grant Applications from Consortia of Small Cities (CPD-6-87; FR2381)	2506-AA76
990	24 CFR 0570 Secretary's Discretionary Fund - Work Study Program (CPD-4-88; FR-2475) 1987 HCD Act	2506-AA81
991	24 CFR 570 Miscellaneous Revisions of Part 570 - 1987 HCD Act (CPD-5-88; FR-2496)	2506-AA84
992	24 CFR 571.702 (b) Indian Community Development Block Grant Program: Revision to Corrective and Remedial Action (CPD-13-84; FR-2102)	2506-AA58
993	24 CFR 590 Urban Homesteading Selection Procedures and Eligibility for Discretionary Fund Technical Assistance (CPD-1-88; FR-2461)	2506-AA79

Office of Community Planning and Development—Final Rule Stage

Sequence Number	Title	Regulation Identifier Number
994	24 CFR 511 Residential Rental Rehabilitation Program (CPD-7-84; FR-1901)	2506-AA55
995	24 CFR 511.1 Rental Rehabilitation Grants (CPD-2-88; FR-2472)	2506-AA80
996	24 CFR 570 Community Development Block Grant Regulations (CPD-6-84; FR-1895)	2506-AA47
997	24 CFR 0570.511 Community Development Block Grant Program: Escrow Accounts (CPD-2-86; FR-2164)	2506-AA66
998	24 CFR 570 Conserving Neighborhoods by Prohibiting Displacement (CPD-3-88; FR-2474) 1987 HCD Act	2506-AA82
999	24 CFR 576 Emergency Shelter Grants ('87 Act) (CPD-7-87; FR2387)	2506-AA77

Office of Community Planning and Development—Completed Actions

Sequence Number	Title	Regulation Identifier Number
1000	24 CFR 0042 Uniform Relocation Act Amendments of 1987 (CPD-3-87; FR-2357)	2506-AA78
1001	24 CFR 0570 Amendments to Community Development Block Grant Regulations; Entitlement Program (CPD-4-86)	2506-AA68

VOL 53 ISS 79 PT 1 AP 25 1988 UMI

HUD

Office of Community Planning and Development—Completed Actions—Continued

Sequence Number	Title	Regulation Identifier Number
1002	24 CFR 575 Emergency Shelter Grant Program (CPD-1-87; FR-2298)	2506-AA74

Government National Mortgage Association—Proposed Rule Stage

Sequence Number	Title	Regulation Identifier Number
1003	24 CFR 203 Book-Entry Securities of GNMA (GNMA-2-85)	2503-AA03
1004	24 CFR 390.17 GNMA Fees (GNMA-1-87; FR2395)	2503-AA05

Office of Fair Housing and Equal Opportunity—Proposed Rule Stage

Sequence Number	Title	Regulation Identifier Number
1005	24 CFR 9.101 Nondiscrimination Based on Handicapped in Programs Conducted by HUD (FR-2163; FH&EO-2-85)	2529-AA28
1006	24 CFR 111 Redesign for Fair Housing Assistance Program (FHEO-2-87; FR2403)	2529-AA33
1007	24 CFR 115 Recognition of Jurisdiction with Substantially Fair Housing Laws (FHEO-1-87)	2529-AA31
1008	24 CFR 125 Fair Housing - Coordination of Executive Agency and Regulatory Agency Affirmative Administration of Programs in Connection with HUD (FH&EO-1-88; FR-2480)	2529-AA36

Office of Fair Housing and Equal Opportunity—Final Rule Stage

Sequence Number	Title	Regulation Identifier Number
1009	24 CFR 8 Nondiscrimination Based on Handicap in Federally-Assisted Programs and Activities (FH&EO-4-84; FR-770)	2529-AA26
1010	24 CFR 105 Procedure for Processing Complaints under Section 804 of the Fair Housing Act (FH&EO-6-84; FR 2012)	2529-AA24
1011	24 CFR 125 The Fair Housing Initiatives Program (FH&EO; FR-2486) 1987 HCD Act	2529-AA37

Office of Fair Housing and Equal Opportunity—Completed Actions

Sequence Number	Title	Regulation Identifier Number
1012	24 CFR 120 Amendments of the Community Housing Resource Board Regulations (FH&EO-1-85; FR-2085)	2529-AA27

Office of Administration—Prerule Stage

Sequence Number	Title	Regulation Identifier Number
1013	24 CFR 3 Organization, Function, and Delegations of Authority Subpart C - Secretary's Delegations of Authority to Heads of Offices (ADM-2-82)	2535-AA01
1014	24 CFR 570 Federal Procurement of Cement Containing Fly Ash (ADM-1-84; FR-1938)	2535-AA05

HUD

Office of Administration—Proposed Rule Stage

Sequence Number	Title	Regulation Identifier Number
1015	48 CFR 24 HUD Acquisition Regulation (ADM-2-88; FR-2473)	2535-AA16
1016	24 CFR 29 OMB Cir. A-110, Uniform Administrative Requirements for Grants and Agreements with Universities, Hospitals and Other Nonprofit Organizations (ADM-1-87; FR2376)	2535-AA15

Office of Administration—Final Rule Stage

Sequence Number	Title	Regulation Identifier Number
1017	48 CFR Chap. 24 Amendment of the HUD Acquisition Regulations (ADM-5-85; FR-2131)	2535-AA10

Office of Administration—Completed Actions

Sequence Number	Title	Regulation Identifier Number
1018	24 CFR 0045 OMB Circular A-102, Uniform Requirement for Assistance to State and Local Governments (ADM-1-86, FR-2178)	2535-AA13

Office of Public and Indian Housing—Prerule Stage

Sequence Number	Title	Regulation Identifier Number
1019	24 CFR 0060 Determination of Wage Rates for Maintenance and Technical Employees of Public Housing Agencies and Indian Housing Authorities (P-10-88; FR2211)	2577-AA68
1020	24 CFR 968.5(g) Comprehensive Improvement Assistance Program: Multi-Stage Funding (P-1-88; FR-2415)	2577-AA55
1021	24 CFR 969 Effects of Debt Forgiveness on Public Housing Agency Annual Contributions Contracts (P-6-87; FR-2409)	2577-AA51

Office of Public and Indian Housing—Proposed Rule Stage

Sequence Number	Title	Regulation Identifier Number
1022	00 CFR 000 Economic Rent and Preference for Near Elderly Families in Public Housing Projects (P-4-88; FR-2462) 1987 HCD Act	2577-AA57
1023	00 CFR 000 Replacement Housing for Public Housing Demolition and Disposition (P-5-88; FR-2463) 1987 HCD Act	2577-AA58
1024	00 CFR 000 Limitation on Public Housing Development (P-6-88; FR-2464) 1987 HCD Act	2577-AA59
1025	00 CFR 000 Implementation of Percentage Limit Provisions Under Section 16 of the United Housing Act of 1937 (P-7-88; FR-2465)1987 HCD Act	2577-AA60
1026	24 CFR 904 Turnkey III Homeownership Opportunities Program (P-3-85; FR-2138)	2577-AA34
1027	24 CFR 905 Indian Housing Program--Revised Program Regulations (P-2-86; FR-2208)	2577-AA32
1028	24 CFR 905 Public Housing Resident Management; Public Housing Homeownership (P-9-88; FR-2489) 1987 HCD Act	2577-AA65
1029	24 CFR 812 Increase in Single Person Occupancy Limits (P-48-84; FR-2063)	2577-AA07
1030	24 CFR 965 Change in Consolidated Supply Program (CSP) (P-11-88; FR2428)	2577-AA67
1031	24 CFR 967 Revised Comprehensive Improvement Assistance Program (P-8-88; FR-2488)	2577-AA66
1032	24 CFR 968.12(i) Decontrol of Public Housing Authorities; CIAP Development (P-5-87; FR2408)	2577-AA48
1033	24 CFR 989 PHA Obligations with respect to Residual Receipts in the Public Housing, Turnkey III, and Sec. 23 Programs; (P-2-87; FR2354; formerly H-27-87)	2577-AA49
1034	24 CFR 989 Disallowance of Legal Fees; Litigation Controls for HUD Assistance Recipients (P-2-85; FR-2134)	2577-AA33

VOL 53 ISS 79 PT 1 APR 25 1988 UMI

HUD

Office of Public and Indian Housing—Proposed Rule Stage—Continued

Sequence Number	Title	Regulation Identifier Number
1035	24 CFR 990 Revision to PFS - '87 Act Changes (P-2-86; FR-2437) 1987 HCD Act	2577-AA56

Office of Public and Indian Housing—Final Rule Stage

Sequence Number	Title	Regulation Identifier Number
1036	24 CFR 968 Public and Indian Housing - Cost Containment Procedures (P-1-86; FR-2191)	2577-AA37
1037	24 CFR 905.211 Preemption of Certain State-Determined Prevailing Wage Rates Applicable to Public and Indian Housing Projects (P-6-86; FR-2231)	2577-AA42
1038	24 CFR 960 Public Housing -- Tenant Leases and PHA Grievance Hearings (P-26-79; FR-1164)	2577-AA18
1039	24 CFR 965.304 Individual Metering of Utilities of Existing PHA-Owned Projects (P-36-83; FR-1769)	2577-AA27
1040	24 CFR 965 PHA-Owned and Leased Project; Maintenance and Operation; Tenant Allowance for Utilities (P-8-86; FR-2260)	2577-AA40
1041	24 CFR 968 Public and Indian Housing Cost Containment Procedures - Comprehensive Improvement Assistance Program and Indian Housing (P-9-86; FR-2262)	2577-AA43

Office of Public and Indian Housing—Completed Actions

Sequence Number	Title	Regulation Identifier Number
1042	24 CFR 905.20y Indian Preference (P-4-87; FR2391)	2577-AA50
1043	24 CFR 990.102 Change in Inflation Factor Used to Calculate Public Housing Operating Subsidy (P-1-87 (formerly H-24-87); FR-2353)	2577-AA47

DEPARTMENT OF HOUSING AND URBAN DEVELOPMENT (HUD)

Prerule Stage

Office of the Secretary (HUDSEC)

872. DEPARTMENTAL POLICIES, RESPONSIBILITIES, AND PROCEDURES FOR PROTECTION AND ENHANCEMENT OF ENVIRONMENTAL QUALITY (S-4-85; FR-2206)

Legal Authority: 42 USC 4321; PL 95-557

CFR Citation: 24 CFR 50

Legal Deadline: None.

Abstract: This rule proposes revisions in the regulations governing HUD's consideration of environmental factors in decision-making under HUD programs other than the Community Development Block Grant, Urban Development Action Grant, Rental Rehabilitation, and Housing Development Grant Programs. The rule is intended to reduce regulatory burdens and procedural details based on experience under the existing regulations; reflect field office reorganization; and implement sec. 535 of the Housing Act of 1949, as amended.

Timetable:

Action	Date	FR Cite
Next Action Undetermined		

Small Entity: No

Additional Information: Replaces RIN: 2506-AA10

Agency Contact: Walter Prybyla, Department of Housing and Urban Development, Office of Community Planning and Development, Office of Environment and Energy, 202 755-6611

RIN: 2501-AA30

873. FLOOD INSURANCE REQUIREMENTS FOR MORTGAGE INSURANCE LOAN AND GRANT PROGRAMS (S-3-85; FR-2007)

Legal Authority: 42 USC 4012(a); 42 USC 4106(a)

CFR Citation: 24 CFR 56; 24 CFR 207; 24 CFR 232; 24 CFR 234; 24 CFR 238; 24 CFR 241; 24 CFR 242; 24 CFR 244; 24 CFR 250; 24 CFR 511; 24 CFR 570; 24 CFR 884; 24 CFR 904; 24 CFR 905

Legal Deadline: None.

Abstract: This rule would implement HUD's responsibilities under the Flood Disaster Protection Act of 1973. It would add a new Part 56 to specify HUD's responsibilities to require that flood insurance be obtained for eligible properties. This part would then be cross-referenced in the rules governing programs involving mortgage insurance, loans and grants.

Timetable:

Action	Date	FR Cite
Next Action Undetermined		

Small Entity: No

Additional Information: Replaced RIN: 2502-AC76

Agency Contact: Walter Prybyla, Deputy Director, Environmental Mgt. Div., Department of Housing and Urban Development, Office of Community Planning and Development, 202 755-6611

RIN: 2501-AA59

874. ENVIRONMENTAL REVIEW PROCEDURES FOR THE COMMUNITY DEVELOPMENT BLOCK GRANT, RENTAL REHABILITATION AND HOUSING DEVELOPMENT GRANT PROGRAMS (S-13-86; FR-2316)

Legal Authority: EO 11514; EO 11991; 42 USC 1437(i); 42 USC 4332; 42 USC 5304(f)

CFR Citation: 24 CFR 0058

Legal Deadline: None.

Abstract: This rule is related to RIN: 2501-AA25 (S-6-84; FR-1965). It proposes revisions in the regulations governing environmental review, decisionmaking and other actions by recipients of HUD assistance under the CDBG, Rental Rehabilitation and Housing Development grant programs that are not appropriate for final rulemaking. The proposed rulemaking is intended to solicit comments from the public on revisions to environmental policy that program experience has indicated may enhance compliance with NEPA, other environmental authorities and HUD legislation under the affected assistance programs.

Timetable:

Action	Date	FR Cite
Next Action Undetermined		

Small Entity: No

Agency Contact: Charles E. Thomsen, Architect, Department of Housing and Urban Development, Office of Community Planning and Development, Office of Environment and Energy, 202 755-6611

RIN: 2501-AA39

875. SECONDARY MARKET OPERATIONS OF THE FEDERAL NATIONAL MORTGAGE ASSOCIATION (FNMA) (S-3-81)

Legal Authority: 12 USC 1723a; 42 USC 3535(d)

CFR Citation: 24 CFR 81.41; 24 CFR 81.45

Legal Deadline: None.

Abstract: This rule would amend the definition of "FNMA security" at 24 CFR 81.41(b) to delete the exclusionary parenthetical and to remove the provision in 24 CFR 81.45(b) which allows FNMA debentures in book-entry form only.

Timetable:

Action	Date	FR Cite
Next Action Undetermined		

Small Entity: No

Government Levels Affected: Federal

Agency Contact: Walter T. Cassidy, Assistant General Counsel for Finance, Department of Housing and Urban Development, Office of the General Counsel, 202 755-7260

RIN: 2501-AA10

DEPARTMENT OF HOUSING AND URBAN DEVELOPMENT (HUD) — Proposed Rule Stage

Office of the Secretary (HUDSEC)

876. ● HOME EQUITY CONVERSION MORTGAGE INSURANCE DEMONSTRATION (S-2-88; FR-2481)

Significance: Regulatory Program

Legal Authority: PL 100-242, Sec 417

CFR Citation: 00 CFR 000

Legal Deadline: Statutory, October 1988.

Abstract: This regulation is intended to implement the Home Equity Conversion Mortgage demo program in order to meet the special needs of the elderly by permitting the conversion of a portion of accumulated home equity into liquid assets, and to encourage and increase the involvement of mortgagees and participants in the mortgage markets in the making and servicing of home equity conversion mortgages for elderly homeowners.

Timetable:

Action	Date	FR Cite
NPRM	10/00/88	
NPRM Comment Period End	12/00/88	
Final Action	03/00/89	
Final Action Effective	04/00/89	

Small Entity: No

Agency Contact: Jill Khadduri, Dir., Division of Policy Development, Department of Housing and Urban Development, Policy Development and Research, 202 755-5537

RIN: 2501-AA67

877. ELIMINATION OF OBSOLETE REGULATIONS (S-16-86; FR-2261)

Legal Authority: 42 USC 3535(d)

CFR Citation: 24 CFR 0003; 24 CFR 0043; 24 CFR 0052; 24 CFR 0130; 24 CFR 0200; 24 CFR 0203; 24 CFR 0205; 24 CFR 0207; 24 CFR 0209; 24 CFR 0210; 24 CFR 0211; 24 CFR 0213; 24 CFR 0215; 24 CFR 0220; 24 CFR 0221; ...

Legal Deadline: None.

Abstract: This rule would remove regulations that are obsolete or duplicative. The rule would also decontrol some programs.

Timetable:

Action	Date	FR Cite
NPRM	06/00/88	

Small Entity: No

Agency Contact: Tim Coward, Attorney Advisor, Office of Regulations, Department of Housing and Urban Development, Office of the General Counsel, 202 755-7055

RIN: 2501-AA50

878. AMENDING RULES ON RULES AND FOIA RULES (S-3-87; FR-2320)

Significance: Regulatory Program

Legal Authority: 42 USC 3535(d)

CFR Citation: 24 CFR 10; 24 CFR 15; 24 CFR 1720

Legal Deadline: None.

VOL 53 ISS 79 PT 1 APR 25 1988 UMI

Abstract: The Department is reviewing its procedural rules to determine to what extent they need to be updated. This includes the rules the Department uses in developing new rules or amending existing regulations, and the procedures the public may use in commenting on a rulemaking or must use to obtain information from HUD under the Freedom of Information Act as well as procedures applicable to the Interstate Land Sales Registration Program. It is the Department's intention to streamline procedures, to make procedures more uniform, to clarify procedures for public petition for rulemaking, and to be more explicit about the kinds of rulemaking that will be subject to public participation and the circumstances under which rules may receive expedited treatment.

Timetable:

Action	Date	FR Cite
NPRM	00/00/00	
Final Action	00/00/00	

Small Entity: No

Agency Contact: Grady J. Norris, Assistant General Counsel for Regulations, Department of Housing and Urban Development, Office of the General Counsel, 202 755-7055

RIN: 2501-AA57

---

879. DEBARMENT SUSPENSION AND LIMITED DENIAL OF PARTICIPATION--ALL- CASH SALES EXCEPTION (S-4-87; FR-2356)

Legal Authority: 42 USC 3535(d)

CFR Citation: 24 CFR 24

Legal Deadline: None.

Abstract: This proposed rule would delete or modify the all-cash sales exception at 24 CFR Section 24.3. Under the existing provision, individuals are permitted to purchase HUD-owned property at all-cash, public sales despite the imposition of sanctions under Part 24. This provision will be modified or removed entirely under the proposed rule as a response to fraudulent practices experienced by the Department.

Timetable:

Action	Date	FR Cite
NPRM	05/00/88	

Small Entity: Undetermined

Agency Contact: Patricia Black, Assistant General Counsel for, Inspector General & Admin Proceedings, Department of Housing and Urban Development, Office of the General Counsel, 202 755-7200

RIN: 2501-AA60

---

880. ● LEAD-BASED PAINT HAZARD ELIMINATION (S-1-88; FR-2447)

Legal Authority: 42 USC 4822

CFR Citation: 24 CFR 35; 24 CFR 200; 24 CFR 510; 24 CFR 511; 24 CFR 570; 24 CFR 575; 24 CFR 576; 24 CFR 590; 24 CFR 840; 24 CFR 881; 24 CFR 882; 24 CFR 905; 24 CFR 965; 24 CFR 968

Legal Deadline: Statutory, June 1988. Proposed Regulations due in two months from February 5, 1988 of the Housing and Community Development Act of 1987 signed by the President. Final Regulations due in four months.

Abstract: In response to amendments in the Housing and Community Development Act of 1987 to the Lead-Based Paint Poisoning Prevention Act, HUD is proposing to amend Public and Indian Housing testing and abatement regulations. Changes are also proposed in the construction cut-off dates to 1978 for other HUD programs including FHA Single Family and Multifamily Housing Programs, Section 8Housing Assistance Payments Program for Substantial Rehabilitation, Section 8 Existing Housing Certificate, Section 8 Moderate Rehabilitation Program, Community Development Block Grant, Urban Development Action Grant Secretary's Fund, Section 312 Rehabilitation Loan, Rental Rehabilitation, Urban Homesteading and Homeless and Transitional Housing Program.

Timetable:

Action	Date	FR Cite
NPRM	04/05/88	53 FR 11164
NPRM Comment Period End	04/29/88	53 FR 11164
Final Action	06/00/88	

Small Entity: No

Government Levels Affected: Local, State, Federal

Agency Contact: Garth Rieman, Special Assistant to the Under Secretary, Department of Housing and Urban Development, Office of the Secretary, 202 755-3532

RIN: 2501-AA68

---

881. ● UNIFORM RELOCATION ACT AMENDMENTS OF 1987 (S-3-88; FR-2357) (FORMERLY CPD-3-87)

Legal Authority: 42 USC 4601

CFR Citation: 24 CFR 0042

Legal Deadline: None.

Abstract: This proposed rule revise the existing regulations on relocation assistance in accordance with the recently enacted Uniform Relocation Act Amendment of 1987. (A government-wide common rule is expected to be developed, to which HUD will be a signatory agency.)

Timetable:

Action	Date	FR Cite
Interim Final Rule	02/19/88	53 FR 4964
NPRM	06/00/88	
Final Action	00/00/00	

Small Entity: Undetermined

Agency Contact: R. Harold Huecker, Dir., Relocation & Real Estate Division, Department of Housing and Urban Development, Office of the Secretary, 202 755-6336

RIN: 2501-AA70

---

882. PROTECTION OF HUMAN SUBJECTS IN RESEARCH (S-6-83; FR-1807)

Legal Authority: 42 USC 3535(d)

CFR Citation: 24 CFR 46

Legal Deadline: None.

Abstract: In response to a Presidential Commission, an Interagency Task Force on the Protection of Human Subjects in Research has proposed that all Federal agencies adopt a common policy and uniform regulations for the protection of human subjects in research.

HUD has agreed to adopt the policy and to issue a regulation based on a model to be promulgated by the Office of Science and Technology Policy.

Timetable:

Action	Date	FR Cite

Next Action Undetermined

Small Entity: No

Additional Information: Compliance costs for HUD's adoption of the model regulation will be minimal, because almost all research conducted by HUD falls within categories exempted from the requirements of the model

regulation. The infrequent projects that may not be exempt (perhaps one every two years) have in the past been proposed by organizations already subject to the Department of Health and Human Services regulation, and thus would not have any incremental compliance costs for the organization, other than the actual project requirements.

Costs would be slight.

Affected Sectors: Profit and Non-profit Research Organizations.

Levels of Government Affected: only HUD itself.

Agency Contact: Arthur S. Newburg, Senior Advisor for Research Management, Department of Housing and Urban Development, Office of the Secretary, 202 755-6230

RIN: 2501-AA15

883. PROCEDURE FOR FLOODPLAIN MANAGEMENT AND THE PROTECTION OF WETLANDS. IMPLEMENTATION OF EXECUTIVE ORDERS 11988 AND 11990 (S-7-84; FR-865)

Legal Authority: EO 11988; EO 11900; 42 USC 3535(d)

CFR Citation: 24 CFR 50; 24 CFR 55; 24 CFR 58; 24 CFR 200

Legal Deadline: None.

Abstract: This regulation sets forth the policy, procedure and responsibilities of the Department of Housing and Urban Development to implement and enforce Executive Order 11988, Floodplain Management, and Executive Order 11990, the Protection of Wetlands. This regulation replaces a general statement of Departmental policy (44 FR 47623; August 14, 1979) implementing these Executive Orders. In addition, this rule would revise HUD's Minimum Property Standards for One and Two Family Dwellings to accord with Executive Order 11988 and FEMA's regulations for its National Flood Insurance Program.

Timetable:

Action	Date	FR Cite
NPRM	06/00/88	

Small Entity: No

Agency Contact: Richard H. Broun, Director, Office of Environment & Energy, Department of Housing and Urban Development, Office of Community Planning and Development, 202 755-7894

RIN: 2501-AA23

884. RESTRICTIONS ON HOUSING ASSISTANCE TO INELIGIBLE ALIENS (S-7-87; FR-2383 (FORMERLY FR-1588))

Significance: Regulatory Program

Legal Authority: 42 USC 1436a

CFR Citation: 24 CFR 200; 24 CFR 215; 24 CFR 235; 24 CFR 236; 24 CFR 247; 24 CFR 812; 24 CFR 880; 24 CFR 881; 24 CFR 882; 24 CFR 883; 24 CFR 884; 24 CFR 885; 24 CFR 886; 24 CFR 887; 24 CFR 912

Legal Deadline: Statutory, October 1, 1988.

Abstract: This proposed rule will implement section 214 of the Housing and Community Development Act of 1980, as amended in 1981, 1986, and 1988. That Act prohibits the Secretary from providing financial assistance to substantially all illegal aliens as well as to most classes of aliens admitted for temporary purposes. The restriction applies to the Public and Indian Housing programs, the Section 8 Housing Assistance Payments programs, the Rent Supplement program, the Section 236 program, and the Section 235 homeownership assistance program.

This rule will replace the rule published on April 1, 1986, which was not made effective, but has been withdrawn. This new rule will provide that alien status must be verified with the Immigration and Naturalization Service by the entity responsible for tenant selection (or approval of a mortgage application).

Timetable:

Action	Date	FR Cite
NPRM	06/00/88	

Small Entity: No

Additional Information:

ADDITIONAL CONTACT PERSON (Public and Indian Housing):

Edward Whipple, Director, Rental and Occupancy Branch, Office of Public Housing, (202) 426-0744

Agency Contact: James J. Tahash, Director, Program Planning Division, Office of Multifamily Hsg. Management, Department of Housing and Urban Development, Office of Housing, 202 426-3944

RIN: 2501-AA63

DEPARTMENT OF HOUSING AND URBAN DEVELOPMENT (HUD) — Final Rule Stage

Office of the Secretary (HUDSEC)

885. FREEDOM OF INFORMATION REFORM ACT OF 1986—FEE SCHEDULE AND FEE WAIVER REGULATIONS (S-6-87; FR2362)

Legal Authority: 5 USC 552

CFR Citation: 24 CFR 15.14; 24 CFR 15.15; 24 CFR 15.16; 24 CFR 15.17; 24 CFR 15.18; 24 CFR 15.21; 24 CFR 15.31; 24 CFR 15.32; 24 CFR 15.33; 24 CFR 15.41; 24 CFR 15.42; 24 CFR 2002

Legal Deadline: None.

Abstract: Rule conforms HUD's FOIA Authorities in 24 CFR Parts 15 and 2002 to requirements of Freedom of Information Reform Act of 1986.

Timetable:

Action	Date	FR Cite
NPRM	09/24/87	52 FR 35923
Final Action	04/00/88	
Final Action Effective	05/00/88	

Small Entity: Undetermined

Agency Contact: David D. White, Assistant General Counsel for Administrative, Law, Department of Housing and Urban Development, Office of the General Counsel, 202 755-7137

RIN: 2501-AA62

886. ADMINISTRATIVE CLAIM: IMPLEMENTING CERTAIN PROVISIONS OF THE DEBT COLLECTION ACT OF 1982 (S-10-86; FR-1644)

Legal Authority: 42 USC 3711; 42 USC 3717; 42 USC 3535(d)

CFR Citation: 24 CFR 17

Legal Deadline: None.

Abstract: This rule would make final an interim rule published in 1984, implementing the administrative offset and salary offset provisions of the Debt Collection Act of 1982.

Timetable:

Action	Date	FR Cite
Interim Final Rule	08/14/84	49 FR 32346
Final Action	08/00/88	

Small Entity: Undetermined

Additional Information: Previously listed as 2535-AA09. Includes: ADM-1-82.

Agency Contact: Samuel B. Rothman, Attorney Advisor, Office of Program Enforcement, Department of Housing and Urban Development, Office of the General Counsel, 202 755-7184

RIN: 2501-AA55

---

887. SUSPENSION AND DEBARMENT (S-2-79; FR-1676)

Significance: Agency Priority

Legal Authority: 42 USC 3535(d)

CFR Citation: 24 CFR 24

Legal Deadline: Statutory, May 1988.

Abstract: This rule incorporates provisions contained in the OFPP Policy Letter 82-1 concerning government-wide debarment, suspension and ineligibility of HUD contractors, and amends HUD's existing regulations to conform to provisions of the OFPP Policy Letter, the FAR, and to certain technical provisions contained in the OMB final Guidelines for Nonprocurement Debarment and Suspension.

The follow-up final rule will make additional conforming changes to Part 24 based on the OMB final Guidelines for Nonprocurement Debarment and Suspension. The most substantive of these changes will (1) provide for government-wide effect of sanctions to all tiers of nonprocurement participants; and (2) implement a participant certification requirement that would require certain participants to verify that they have not, in the preceding three years, been subject to, or been proposed for, sanctions or otherwise been indicted, convicted or had a civil judgment rendered against them for specified offenses.

Public comments received on both the interim and proposed rules will be used to develop the final rule on Part 24.

Timetable:

Action	Date	FR Cite
NPRM	10/11/83	48 FR 46072
NPRM Comment Period End	12/12/83	48 FR 46072
Interim Final Rule	10/02/87	52 FR 37112
NPRM	11/02/87	52 FR 42004
NPRM Comment Period End	01/04/88	52 FR 42004
Final Action	05/00/88	

Small Entity: No

Agency Contact: Patricia Black, Asst Gen Coun for Insp Gen & Admn Proceedngs, Department of Housing and Urban Development, Office of the General Counsel, 202 755-7200

RIN: 2501-AA05

---

888. ADMINISTRATIVE REMEDIES FOR FALSE CLAIMS AND STATEMENTS (S-2-87; FR-2310)

Significance: Agency Priority

Legal Authority: PL 99-501

CFR Citation: 24 CFR 28

Legal Deadline: Statutory, April 21, 1987.

Abstract: This rule would implement the Program Fraud Civil Remedies Act of 1986 by establishing administrative procedures for imposing civil penalties and assessments against persons who file false claims or statements while applying for certain benefits provided by the Federal Government.

Timetable:

Action	Date	FR Cite
NPRM	10/20/87	52 FR 38939
NPRM Comment Period End	12/21/87	52 FR 38939
Final Action	05/00/88	

Small Entity: Undetermined

Agency Contact: Patricia M. Black, Assistant General Counsel for Inspector General & Administrative Proceedings, Department of Housing and Urban Development, Office of the General Counsel, 202 755-7200

RIN: 2501-AA58

---

889. ENVIRONMENTAL REVIEW PROCEDURES - RENTAL REHABILITATION AND HOUSING DEVELOPMENT GRANT PROGRAM (S-6-84; FR-1965)

Legal Authority: 42 USC 1437o(i); 42 USC 5304(f)

CFR Citation: 24 CFR 58

Legal Deadline: None.

Abstract: This agenda item makes final two outstanding interim rules. These rules provide policies and procedures by which assisted communities and participating States discharge Federal environmental review responsibilities. They also streamline and reduce environmental requirements. They include: (1) an expanded listing of block grant activities and projects exempt or categorically excluded from the NEPA requirements; (2) a definitive list of related statutes and authorities that must be observed by grant recipients for the release of block grant funds as required by HUD legislation; and (3) additional provisions needed to conform with and implement innovative measures included in the HUD Amendments of 1981, such as the State-administered block grant program for small cities and the assumption of the environmental oversight responsibilities by States; and (4) (CONT)

Timetable:

Action	Date	FR Cite
Interim Final Rule	06/07/84	49 FR 23610
Interim Final Rule Effective	07/31/84	49 FR 23610
Final Action	00/00/00	

Small Entity: No

Additional Information: ABSTRACT CONT: for extending and adopting the environmental procedures, including historic preservation requirements, to the programs established by title III of the Housing and Urban-Rural Recovery Act of 1983.

Includes: RIN 2506-AA05 (CPD-21-81; FR-1027)

Agency Contact: Charles E. Thomsen, Department of Housing and Urban Development, Office of Community Planning and Development, Office of Environmental and Energy, Environmental Management Division, 202 755-6611

RIN: 2501-AA25

BEST COPY AVAILABLE

DEPARTMENT OF HOUSING AND URBAN DEVELOPMENT (HUD) — Completed Actions

Office of the Secretary (HUDSEC)

890. DETERMINATION OF WAGE RATES FOR MAINTENANCE AND TECHNICAL EMPLOYEES OF PUBLIC HOUSING AGENCIES AND INDIAN HOUSING AUTHORITIES (S-5-86; FR-2211)

CFR Citation: 24 CFR 0060

Completed:

Reason	Date	FR Cite
Withdrawn Transferred to Office of Public and Indian Housing	02/22/88	

Small Entity: No

Agency Contact: Justin Logsdon 202 755-5370

RIN: 2501-AA40

891. RESTRICTIONS ON HOUSING ASSISTANCE TO INELIGIBLE ALIENS (S-7-86; FR-1588)

Significance: Regulatory Program

CFR Citation: 24 CFR 200; 24 CFR 215; 24 CFR 235; 24 CFR 247; 24 CFR 812; 24 CFR 880; 24 CFR 881; 24 CFR 883; 24 CFR 884; 24 CFR 886; 24 CFR 912

Completed:

Reason	Date	FR Cite
Final Action	01/13/88	53 FR 842
Final Action Effective	03/15/88	53 FR 842

Small Entity: No

Agency Contact: James J. Tahash 202 426-3944

RIN: 2501-AA56

DEPARTMENT OF HOUSING AND URBAN DEVELOPMENT (HUD) — Prerule Stage

Office of Housing (OH)

892. REVISION OF USE OF MATERIALS BULLETIN USED IN THE HUD BLDG. PRODUCT STANDARD AND CERTIFICATION PROGRAM (H-4-87; FR2308)

Legal Authority: 12 USC 3535(d)

CFR Citation: 24 CFR 200

Legal Deadline: None.

Abstract: This rule would revise the following existing UM Bulletins in order to update the standards referenced in the UM's in accordance with 24 CFR 200.9.35.

UM 39a Aluminum Windows, Sliding Glass Doors and Storm Doors UM 48a Pressure Treated Lumber & Plywood UM 52a Wood Flush Doors UM 71 Polystyrene Form Insulation Sheathing Board UM 54 Solid Fuel Type Room Heaters & Fireplace Stove.

Timetable:

Action	Date	FR Cite
Next Action Undetermined		

Small Entity: Undetermined

Agency Contact: Leslie H. Breden, Officed of Manufactured Housing & Regulatory, Functions, Department of Housing and Urban Development, Office of Housing, 202 755-5929

RIN: 2502-AE04

893. RETENTION PERIOD FOR MORTGAGEE SINGLE FAMILY CLAIM RECORDS (H-81-84)

Legal Authority: 42 USC 3535(d)

CFR Citation: 24 CFR 203

Legal Deadline: None.

Abstract: Under the new Single Family Claims System, the mortgagee is not required to provide documentation to support the fiscal data reported or entered on the new claim form. Instead, the mortgagee will be randomly audited; at which time, the mortgagee is expected to produce all the supporting receipts, payment ledger records, etc.

Regulations will be changed to specify the retention period and file contents for records supporting single family claim payments and mortgagee reviews.

Timetable:

Action	Date	FR Cite
Next Action Undetermined		

Small Entity: Yes

Agency Contact: John J. Coonts, Deputy Director, Office of Insured Single Family Housing, Department of Housing and Urban Development, Office of Housing, 202 755-3046

RIN: 2502-AC50

894. ● ELIGIBILITY REQUIREMENTS—MORTGAGEE APPROVAL (H-13-88; FR-2453)

Legal Authority: 12 USC 1709

CFR Citation: 24 CFR 203.2

Legal Deadline: None.

Abstract: This rule would clarify HUD requirements for approval of partnerships as mortgagees for mortgage insurance programs. The current rule only mentions limited partnerships with one general partner. The new rule would explain approval conditions for other limited partnerships and general partnerships.

Timetable:

Action	Date	FR Cite
Next Action Undetermined		

Small Entity: Undetermined

Agency Contact: Sandra Allison, Dir., Lender Approval & Recertification Div., Department of Housing and Urban Development, Office of Housing, 202 755-6924

RIN: 2502-AE37

895. FLEXIBLE SUBSIDY PROGRAM; 1983 AMENDMENTS (H-50-84)

Legal Authority: PL 98-181, Sec 217

CFR Citation: 24 CFR 219

Legal Deadline: None.

Abstract: Implements section 217 of the Housing and Urban Rural Recovery Act of 1983.

Timetable:

Action	Date	FR Cite
Next Action Undetermined		

Small Entity: Undetermined

Agency Contact: James J. Tahash, Director, Program Planning Division, Department of Housing and Urban Development, Office of the General

VOL 53 ISS 79 PT 1 APR 25 1988 UMI

HUD—OH **Prerule Stage**

Counsel, Office of Multifamily Housing Management, 202 426-3970

RIN: 2502-AC31

896. MANUFACTURED HOME CONSTRUCTION & SAFETY CONSTRUCTION ON SIDING & ROOFING MATERIALS & APPLICATION CRITERIA (H-9-87; FR2327)

Legal Authority: 42 USC 5403

CFR Citation: 24 CFR 3280

Legal Deadline: None.

Abstract: This Advance Notice of Proposed Rulemaking requests public comment on those portions of the Manufactured Home Construction and Safety Standards (Standards) that are applicable to the materials and application criteria for external coverings. The Department is concerned that certain siding and roofing materials, more common to conventional-type construction may not be compatible in important aspects with typical manufactured home construction. Consumer complaint information indicates that the current Standards do not address certain important problems areas.

Timetable:

Action	Date	FR Cite
Next Action Undetermined		

Small Entity: Undetermined

Agency Contact: Mark W. Holman, Acting Director, Manufactured Hsg. &, Construction Standards Division, Department of Housing and Urban Development, Office of Housing, 202 755-6590

RIN: 2502-AE06

897. REAL ESTATE SETTLEMENT PROCEDURES ACT – CONTROLLED BUSINESS PROVISIONS AND MISCELLANEOUS AMENDMENTS (H-45-84; FR-1942)

Significance: Agency Priority

Legal Authority: 12 USC 2601; 12 USC 2607; PL 98-181

CFR Citation: 24 CFR 3500

Legal Deadline: None.

Abstract: The rule will implement statutory amendments established by Section 461 of the Housing and Urban Rural Recovery Act of 1983 (Pub.L.98-181). The amendments address a problem identified as "controlled business" and the manner in which Section 8 of the Real Estate Settlement Procedures Act (12 USC 2607), the kickback prohibition of RESPA, is to be applied to such arrangements. No alternatives are being considered because of the statutory mandate. The potential costs cannot be accurately projected but are believed to be incidental. The rule will also contain other miscellaneous changes to clarify and update the existing rule.

Timetable:

Action	Date	FR Cite
Next Action Undetermined		

Small Entity: No

Additional Information: ADDITIONAL AGENCY CONTACT: John Coonts, Office of Insured Single Family Housing, (202) 755-3046.

Agency Contact: Grant E. Mitchell, Assistant General Counsel, Department of Housing and Urban Development, Office of the General Counsel, Office of Equal Opportunity and Admin. Law, Fiscal Management and Energy Division, 202 755-6550

RIN: 2502-AC09

DEPARTMENT OF HOUSING AND URBAN DEVELOPMENT (HUD) — Proposed Rule Stage

Office of Housing (OH)

898. ● NEHEMIAH OPPORTUNITY GRANTS PROGRAM (H-25-88; FR-2478) 1987 HCD ACT

Significance: Agency Priority

Legal Authority: Not yet determined

CFR Citation: 00 CFR 000

Legal Deadline: Statutory, July 1988. In the absence of appropriations for this program, HUD plans to publish a proposed rule, consider public comments, and stand by for implementation in the event of subsequent appropriations action.

Abstract: This rule would implement the Nehemiah Housing Opportunity Grants Program. Under this program HUD would provide assistance to private nonprofit organizations in the form of grants. The nonprofit organizations receiving grants would use the assistance to provide loans to families purchasing homes constructed or substantially rehabilitated under the program.

Timetable:

Action	Date	FR Cite
NPRM	06/00/88	
NPRM Comment Period End	07/00/88	

Small Entity: Undetermined

Agency Contact: Morris Carter, Director, Single Family Development Div., Department of Housing and Urban Development, Office of Housing, 202 755-6720

RIN: 2502-AE45

899. ISSUANCE OF FHA DEBENTURES (H-36-86; FR-2268)

Legal Authority: 12 USC 1710

CFR Citation: 24 CFR 200; 24 CFR 203; 24 CFR 207

Legal Deadline: None.

Abstract: This proposed rule would amend HUD regulations to permit HUD to pay mortgage insurance benefits to mortgagees in the form of uncertificated (book entry) debentures and to issue such book entry debentures to mortgagees who assign current mortgages to HUD under Section 221(g)(4) of the National Housing Act.

Timetable:

Action	Date	FR Cite
NPRM	00/00/00	

Small Entity: Undetermined

Agency Contact: Robert A. Spiegel, Office of Finance and Accounting, Department of Housing and Urban Development, Office of Administration, 202 755-5256

RIN: 2502-AD68

900. ● AUTHORIZE ADDITIONAL TYPES OF LOANS FOR DIRECT ENDORSEMENT PROCESSING (H-4-88; FR-2433)

Significance: Agency Priority

Legal Authority: 12 USC 1709; 12 USC 1715(b)

CFR Citation: 24 CFR 200; 24 CFR 203

Legal Deadline: None.

Abstract: This rule proposes to make the following types of mortgages eligible for processing through the direct endorsement program as (1) those insured under sections 222 and 203(k) and (2) those insured pursuant to section 238(c) of the National Housing Act. The rule would also make eligible loans originated by non- supervised mortgagees with a net worth of $100,000 or more for the direct endorsement program.

Timetable:

Action	Date	FR Cite
NPRM	05/00/88	

Small Entity: Undetermined

Agency Contact: John J. Coonts, Dir., Office of Insured Single Family Hsg., Department of Housing and Urban Development, Office of Housing, 202 755-3046

RIN: 2502-AE48

---

901. ● FILING PERIOD FOR RESUBMISSION OF DENIED CLAIMS (H-43-86)

Legal Authority: 12 USC 1703

CFR Citation: 24 CFR 201.54

Legal Deadline: None.

Abstract: It is the responsibility of lending institutions to submit complete and accurate loan files so that the Department can process the Title I Application for Loss in a timely manner and proceed with debt collection efforts. Inordinate delays of more than a year can often occur between the time a claim is returned to the lender because of regulatory violations or incomplete submissions and the lender's making an appeal of the denial. At present,there is no control on the refiling period.

If the appeal is approved for payment, debt collection efforts can be impaired by the often lengthy time between default on the loan and the initiation of collection efforts by the Department. Also, must staff time is spent in reviewing resubmitted claims which are being irresponsibly and repeatedly returned by lending institutions. This rule would control the time period during which appeals could be filed, the number of resubmitted claims, and the quality of the submissions. (CONT'D)

Timetable:

Action	Date	FR Cite
NPRM	00/00/00	

Small Entity: Undetermined

Additional Information: ABSTRACT CONT'D: This rule proposes that lending institutions that wish to appeal the denial of their application for Title I claim payments must return the claims with a narrative appeal within 3 months of the date of the letter of denial.

Agency Contact: Donald C. Demitros, Acting Director, Office of Finance, and Accounting, Department of Housing and Urban Development, Office of Administration, 202 755-5306

RIN: 2502-AD80

---

902. AMENDMENTS TO THE TITLE I REGULATIONS (H-19-87; FR2370)

Legal Authority: 12 USC 1703

CFR Citation: 24 CFR 201

Legal Deadline: None.

Abstract: This rule would involve the following revisions to the Title I loan insured program:(1) a requirement that affected new manufactured homes meet the thermal energy requirements in HUD's Minimum Property Standards; (2) restrictions on the use of loan proceeds for the acquisition of furniture; (3) a reduction in the length of hazard insurance coverage that can be financed; (4) an increase in the property improvement loan amount on which a security interest is required; and (5) the collection of a higher percentage of the loan insurance premium in the early years when the risks of default are greatest.

Timetable:

Action	Date	FR Cite
NPRM	06/00/88	

Small Entity: Undetermined

Agency Contact: Robert J. Coyle, Director, Title I Insurance Division, Department of Housing and Urban Development, Office of Housing, 202 755-6680

RIN: 2502-AE15

---

903. PENALTY FOR LACK OF DOCUMENTATION (H-80-84)

Legal Authority: 42 USC 3535(d)

CFR Citation: 24 CFR 203

Legal Deadline: None.

Abstract: The new single family process provides for "random audits" of mortgagees' records when single family claims for insurance benefits are filed with HUD. During the audit, the mortgagee will be required to provide specific supporting documentation. When the mortgagee cannot produce the required documentation, HUD will penalize the mortgagee for the amount not supported plus the current interest rate on that unsupported amount from the date of payment.

Timetable:

Action	Date	FR Cite
Next Action Undetermined		

Small Entity: No

Agency Contact: Linda Gibbs, Director, Mortgage Insurance Accounting and, Servicing, Department of Housing and Urban Development, Office of Administration, Office of Finance and Accounting, 202 755-2632

RIN: 2502-AC54

---

904. HUD INSPECTIONS - NO DUTY OF CARE (H-1-85; FR-2025)

Legal Authority: 42 USC 3535(d)

CFR Citation: 24 CFR 203; 24 CFR 234

Legal Deadline: None.

Abstract: Proposed regulation to protect HUD against suits brought under the Federal Tort Claims Act claiming negligent inspection of FHA-insured properties.

Timetable:

Action	Date	FR Cite
NPRM	04/13/88	53 FR 12431
NPRM Comment Period End	06/13/88	53 FR 12431

Small Entity: No

Agency Contact: John J. Coonts, Deputy Director, Office of Insured Single, Family Housing Division, Department of Housing and Urban Development, Office of Housing, 202 755-3046

RIN: 2502-AC92

---

905. DEREGULATION OF LOAN ORIGINATION FEES IN FHA SINGLE FAMILY HOUSING (H-16-87; FR-2333)

Legal Authority: 42 USC 3535(d)

CFR Citation: 24 CFR 203

Legal Deadline: None.

Abstract: Post-endorsement fees in the FHA single family program will be deregulated, as will loan origination fees.

Timetable:

Action	Date	FR Cite
NPRM	04/00/88	

Small Entity: Undetermined

Agency Contact: Morris E. Carter, Director, Single Family Development Div., Department of Housing and Urban Development, Office of Housing, 202 755-6720

RIN: 2502-AD98

906. MORTGAGEE CHARGES FOR SERIOUS TITLE DEFECTS (H-28-87; FR-2368)

Legal Authority: 12 USC 1710; 12 USC 1715(b); 12 USC 1709

CFR Citation: 24 CFR 203.366; 24 CFR 203.403

Legal Deadline: None.

Abstract: Proposed rule is intended to impose graduated charges on mortgagees who convey FHA-insured properties to HUD with serious title defects. These charges would increase with the length of time required by the mortgagee to rectify the defects.

Exploring the base on which the graduated charges will be calculated; i.e., whether to use a percentage of the total insured claim or materials averages of daily holding costs.

Timetable:

Action	Date	FR Cite
NPRM	06/00/88	

Small Entity: Undetermined

Agency Contact: Jacqueline Campbell, Dir., Single Family Property Disposition, Division, Department of Housing and Urban Development, Office of Housing, 202 755-5740

RIN: 2502-AE11

907. ● REVISION OF HUD MORTGAGE APPROVAL PROCESS (H-5-88; FR-2434)

Significance: Agency Priority

Legal Authority: 12 USC 1709

CFR Citation: 24 CFR 203

Legal Deadline: None.

Abstract: The rule would change present HUD practice concerning the use of mortgage forms in HUD single family mortgage insurance use in each jurisdiction. Instead, HUD will now require each mortgagee to use HUD-approved uniform language reflecting current HUD policies, along with language required by particular jurisdictions or programs. Mortgagees will now be responsible for including the uniform language and any other specific language required by HUD in mortgages which must be enforceable in the jurisdiction where the property is located.

Timetable:

Action	Date	FR Cite
NPRM	06/00/88	

Small Entity: No

Agency Contact: John J. Coonts, Dir., Office of Insured Single Family Hsg., Department of Housing and Urban Development, Office of Housing, 202 755-3046

RIN: 2502-AE27

908. ● EMERGENCY HOMEOWNERSHIP COUNSELING (H-20-88; FR-2460) 1987 HCD ACT

Legal Authority: PL 100-242, Sec 169

CFR Citation: 24 CFR 203

Legal Deadline: None.

Abstract: This rule would implement sec. 169(b) of the Housing and Community Development Act of 1987 authorizing HUD to make grants to nonprofit organizations to provide homeownership counseling to eligible homeowners.

Timetable:

Action	Date	FR Cite
NPRM	06/00/88	

Small Entity: No

Agency Contact: John J. Coonts, Dir., Office of Insured Single Family Hsg., Department of Housing and Urban Development, Office of Housing, 202 755-3046

RIN: 2502-AE28

909. ● DEADLINE FOR FILING SINGLE FAMILY SUPPLEMENTAL CLAIMS (H-26-88; FR-2487)

Legal Authority: 12 USC 1710

CFR Citation: 24 CFR 203.400

Legal Deadline: None.

Abstract: At present, there is no regulatory control over the time period that mortgagees can submit applications for supplemental insurance benefits. The Department has instructed lenders to file these supplemental claim within one year of the date of the original insurance settlement. This information has so far been contained in the Instructions for Single Family Application for Insurance Benefits, Form HUD-27011. This rule will formalize the requirement that lenders follow this one-year filing period for supplemental claims.

Timetable:

Action	Date	FR Cite
NPRM	04/00/88	

Small Entity: Undetermined

Agency Contact: Robert E. Falkenstein, Jr., Director, Single Family Servicing Div., Department of Housing and Urban Development, Office of Housing, 202 755-6672

RIN: 2502-AE51

910. ● ACTION TO REDUCE LOSSES UNDER FHA SINGLE FAMILY MORTGAGE INSURANCE PROGRAM (H-28-88; FR-2491)

Legal Authority: 12 USC 1715b; 12 USC 1735f(1); PL 100-242, Sec 407

CFR Citation: 24 CFR 203

Legal Deadline: None.

Abstract: This rule proposes to implement section 407 of the Housing and Community Development Act of 1987. Where, as a result of an annual review, the Secretary finds a mortgagee with a higher than normal default and claim rate, the Secretary shall require the mortgagee to submit a report with a plan for corrective action. Failure to submit the report or complete the plan for corrective action within the timeframe required may be cause for suspension of the mortgagee from participation in FHA programs.

Timetable:

Action	Date	FR Cite
NPRM	05/00/88	
NPRM Comment Period End	06/00/88	

Small Entity: Undetermined

Agency Contact: James Nistler, Deputy Asst. Sec. for Single Family Hsg., Department of Housing and Urban Development, Office of Housing, 202 755-6675

RIN: 2502-AE52

911. ● CLAIM PROCESSING ON DEFAULTED COINSURED SINGLE-FAMILY MORTGAGES (H-1-88; FR-2410)

Legal Authority: 12 USC 1715z-9

CFR Citation: 24 CFR 204.280; 24 CFR 204.281; 24 CFR 204.282; 24 CFR 204.283; 24 CFR 204.284; 24 CFR 204.292; 24 CFR 204.293; 24 CFR 204.294; 24 CFR 204.300; 24 CFR 204.301; 24 CFR 204.302

Legal Deadline: None.

Abstract: The rule will modify the foreclosure and claim processing provisions for coinsured mortgages to conform them to the requirements of Part 203 to the effect that defaulted insured mortgagors must be considered for TMAP or assignment/ forbearance assistance to avoid foreclosure.

Timetable:

Action	Date	FR Cite
NPRM	06/00/88	

Small Entity: No

Agency Contact: Curtis Myron, Dep. Dir., Single Family Servicing Div., Office of Insured Single Family Housing, Department of Housing and Urban Development, Office of Housing, 202 755-6664

RIN: 2502-AE25

912. LIMITATION ON PREPAYMENT OF MORTGAGES ON MULTIFAMILY RENTAL HOUSING (H-54-84; FR-1952)

Significance: Regulatory Program

Legal Authority: 12 USC 1715z-15; PL 100-242, Sec 261

CFR Citation: 24 CFR 207; 24 CFR 221; 24 CFR 215; 24 CFR 886; 24 CFR 245; 24 CFR 277; 24 CFR 219; 24 CFR 231; 24 CFR 242; 24 CFR 244

Legal Deadline: None.

Abstract: This rule would codify HUD policies for implementing section 250(a) and (b) of the National Housing Act, as added by section 433 of the Housing and Urban-Rural Recovery Act of 1983 and amended by section 261 of the Housing and Community Development Act of 1987. This rule would restrict prepayment of multifamily project mortgages whenever Secretary has prepayment approval responsibilities. Prepayment will not be approved unless project is no longer needed for lower income housing, tenants have been given notice and opportunity to comment, and a relocation assistance plan has been put in place. Similar restrictions will apply to termination of insurance. Where the Secretary is not responsible for approving prepayment and therefore cannot restrict it, priority will be given for additional section 8 and troubled project assistance in order to discourage prepayment. Additional requirements imposed on the prepayment of multifamily project mortgages by Title II, Subtitle B of the Housing and Community Development Act of 1987 are being implemented by separate rulemaking (FR-2450; H-10-88; RIN: 2502-AE34).

Timetable:

Action	Date	FR Cite
NPRM	08/00/88	

Small Entity: No

Agency Contact: James Tahash, Director, Department of Housing and Urban Development, Office of Housing, Program Planning, Office of Multifamily Housing Management, 202 755-3970

RIN: 2502-AC49

913. ● COMPUTER AUTOMATION OF REQUIRED DATA FOR CERTIFICATION AND RECERTIFICATIONS SUBSIDY BILLING PROCEDURES FOR CERTAIN MULTIFAMILY SUBSIDIZED PROJECTS (H-2-88; FR-2421)

Significance: Agency Priority

Legal Authority: 42 USC 3535(d)

CFR Citation: 24 CFR 208

Legal Deadline: None.

Abstract: This rule would require owners of certain multifamily subsidized projects to automate the information and transmission of HUD forms and worksheets for certification and recertification of compliance with HUD's tenant eligibility and rent procedures, and the computation of tenant rent/payment and the monthly subsidy billing forms, as applicable. This rule would apply to multifamily projects under the following program: section 236 rental assistance payments, section 8 housing assistance payments, section 221(d)(5), below market interest rate housing for low and moderate income mortgage insurance, and section 101 rent supplements.

Timetable:

Action	Date	FR Cite
NPRM	04/00/88	

Small Entity: No

Agency Contact: James J. Tahash, Director, Planning and Procedures Division, Department of Housing and Urban Development, Office of Housing, 202 426-3970

RIN: 2502-AE26

914. ASSIGNMENT OPTION (H-44-86)

Significance: Agency Priority

Legal Authority: 42 USC 3535(d)

CFR Citation: 24 CFR 221.55

Legal Deadline: None.

Abstract: This rule would make it possible for a mortgagee to net the escrow from the claim amount on automatic assignments. The escrow account can be built through a non-cash transaction in the Thrift system. This would eliminate misrouting of checks through the mail.

Timetable:

Action	Date	FR Cite
NPRM	00/00/00	

Small Entity: Not Applicable

Agency Contact: Linda Gibbs, Director, Mortgage Insurance Accounting and Servicing, Department of Housing and Urban Development, Office of Housing, 202 755-2632

RIN: 2502-AD78

915. ● ASSIGNMENT OF COINSURING LENDER INTEREST TO WAREHOUSE BANK FOR INTERIM FUNDING (H-15-88; FR-2455)

Legal Authority: 12 USC 1715z-9

CFR Citation: 24 CFR 251; 24 CFR 255

Legal Deadline: None.

Abstract: This rule would implement section 414(b)(2) of the Housing and Community Development Act of 1987. That section permits coinsuring mortgagees to assign their interest in a coinsured note or mortgage to a warehousing bank for purposes of interim funding while retaining the

VOL 53 ISS 79 PT 1 APR 25 1988 UMI

coinsurance risk for such note or mortgage.

Timetable:

Action	Date	FR Cite
NPRM	05/00/88	

Small Entity: Undetermined

Agency Contact: James Hamernick, Director, Office of Insured Multifamily Development, Department of Housing and Urban Development, Office of Housing, 202 755-6500

RIN: 2502-AE39

---

916. MANUFACTURED HOME PROCEDURAL AND ENFORCEMENT REGULATIONS INTERPRETATIVE BULLETINS (H-31-87; FR2380)

Legal Authority: 42 USC 5424

CFR Citation: 24 CFR 3282

Legal Deadline: None.

Abstract: This proposed rule would amend the Manufactured Home Procedural and Enforcement Regulations in order to remove the issuance of Interpretative Bulletins from the rulemaking process. The purpose of this procedural modification is to promote efficiency in issuing Interpretative Bulletins so that important guidance can be provided to the manufactured housing industry in a timely manner.

Timetable:

Action	Date	FR Cite
NPRM	05/00/88	

Small Entity: Undetermined

Agency Contact: Mark W. Holman, Acting Director, Manufactured Housing &, Construction Standards Division, Department of Housing and Urban Development, Office of Housing, 202 755-5210

RIN: 2502-AE10

---

917. REVIEW OF APPLICATIONS FOR HOUSING ASSISTANCE AND ALLOCATION OF HOUSING ASSISTANCE FUNDS (S-10-84; FR-1096)

Legal Authority: 42 USC 1439

CFR Citation: 24 CFR 791

Legal Deadline: None.

Abstract: The rule revises HUD's regulations for the allocation of housing assistance funds to conform with statutory changes made by the Housing and Urban-Rural Recovery Act of 1983. It contains an explicit description of the allocation formula, including some modifications to the factors making up the formula; deletes specific requirements on allocating funds in accordance with approved Housing Assistance Plans; and eliminates the requirements for local consultation in the allocation process. Part 791 would also be amended to consolidate local government submission requirements and HUD criteria for review of applications for housing.

Timetable:

Action	Date	FR Cite
Next Action Undetermined		

Small Entity: No

Additional Information: Includes: H-4-81, FR-1512.

Agency Contact: Stephen Cooley, Office of Housing Policy, Department of Housing and Urban Development, Office of Housing, 202 755-6454

RIN: 2502-AA73

---

918. CONFORMING SECTION 8 EXISTING CERTIFICATE REGULATION TO HOUSING VOUCHER FORMAT (H-2-87; FR-2294)

Significance: Regulatory Program

Legal Authority: 42 USC 1437f; PL 100-242, Sec 144; PL 100-242, Sec 145; PL 100-242, Sec 146; PL 100-242, Sec 147; PL 100-242, Sec 148; PL 100-242, Sec 149; PL 100-242, Sec 262

CFR Citation: 24 CFR 882

Legal Deadline: None.

Abstract: This rule will revise the Section 8 Certificate Program regulations in Part 882 to conform them to the extent practicable to the closely-related Housing Voucher Program regulations in Part 887, to implement certain statutory amendments to the Program under the Housing and Community Development Act of 1987 and to propose certain revisions based on programmatic experience.

Timetable:

Action	Date	FR Cite
NPRM	09/00/88	

Small Entity: No

Government Levels Affected: Local, State

Agency Contact: Madeline Hastings, Director, Existing Housing Division, Office of Elderly and Assisted Housing, Department of Housing and Urban Development, Office of Housing, 202 755-6887

RIN: 2502-AD91

---

919. ● INTERPROGRAM TRANSFERS OF ASSISTED TENANTS (H-8-86; FR-2436)

Legal Authority: 42 USC 3535(d)

CFR Citation: 24 CFR 882; 24 CFR 887; 24 CFR 905; 24 CFR 950

Legal Deadline: None.

Abstract: Because currently assisted tenants are unlikely to receive a Federal preference, the implementation of the Preference Rule (FR-1597) could have the effect of locking most public housing tenants in the public housing program, thereby denying them any opportunity they currently might have to move to the top of the waiting list for a Section 8 certificate or voucher. This virtually eliminates any possibility for the family to retain their assistance and also move closer to areas of better economic opportunity.

This proposed rule would allow a PHA to treat a currently assisted family's request for a transfer among the public housing, Section 8 certificate, and Housing Voucher programs it administers as an interprogram transfer rather than as a new admission.

This rule would complement the new provision in Sec. 146 of the Housing and Community Development Act of 1987 prohibiting a PHA in selecting families for assistance under Sec. 8, from excluding a family because the family resides in a public housing project.

Timetable:

Action	Date	FR Cite
NPRM	06/00/88	

Small Entity: Undetermined

Agency Contact: James J. Tahash, Dir., Planning and Procedures Division, Department of Housing and Urban Development, Office of Housing, 202 426-3944

RIN: 2502-AE32

920. ● LOANS FOR THE ELDERLY OR HANDICAPPED - HOUSING FOR THE HANDICAPPED (H-23-88; FR-2476) 1987 HCD ACT

Legal Authority: 12 USC 1701g

CFR Citation: 24 CFR 885

Legal Deadline: None. (HUD was directed to publish a NOFA to implement the program of Housing for nonelderly handicapped families not later than the expiration of the 120 day period following the date of enactment of the 1987 Act, to the extent that amounts are approved in an appropriations Act. To date no funds have been authorized.)

Abstract: Section 162 of the Housing and Community Development Act of 1987 authorizes a new type of assistance payments to be made to replace section 8 assistance payments made in connection with section 202 housing for the nonelderly handicapped. This rule would establish regulations for this program and modify existing Part 885 to exclude housing for the handicapped. The rule would also revise both section 202 programs to reflect revised Davis Bacon Requirements, requirements for supportive services descriptions, and provisions for the appeal of loan authority cancellation.

Timetable:

Action	Date	FR Cite
NPRM	06/00/88	
NPRM Comment Period End	08/00/88	

Small Entity: Undetermined

Agency Contact: Robert Wilden, Director, Assisted Elderly and Handicapped, Housing Division, Department of Housing and Urban Development, Office of Housing, 202 426-8730

RIN: 2502-AE47

921. PROVISION OF SECTION 8 EXISTING HOUSING ASSISTANCE FOR PROJECTS AT FORECLOSURE SALES (H-3-86; FR-2158)

Significance: Agency Priority

Legal Authority: 42 USC 1437f; 12 USC 3706; 12 USC 3717; 12 USC 1713(k)

CFR Citation: 24 CFR 886; 24 CFR 27

Legal Deadline: None.

Abstract: This proposed rule would amend Parts 886 and 27 to make Section 8 assistance available for projects sold at foreclosure sales and to propose any revisions or additions to HUD regulations that may be necessary to implement section 181 of the Housing and Community Development Act of 1987 and that require prior public comment.

Timetable:

Action	Date	FR Cite
NPRM	06/00/88	

Small Entity: No

Agency Contact: James J. Tahash, Director, Planning and Procedures Division, Department of Housing and Urban Development, Office of Housing, Office of Multifamily Housing Management, 202 426-3944

RIN: 2502-AD43

922. MISCELLANEOUS REVISIONS OF PART 886 (H-37-86; FR-2275)

Legal Authority: 42 USC 1437a; 42 USC 1437c; 42 USC 1437f

CFR Citation: 24 CFR 886.310; 24 CFR 886.330; 24 CFR 886.331; 24 CFR 886.334; 24 CFR 886.322; 24 CFR 886.333; 24 CFR 886.122

Legal Deadline: None.

Abstract: This proposed rule would amend Part 886 which governs procedures for additional assistance for projects with HUD-insured or HUD-held mortgages (Subpart A) and the Section 8 housing assistance payments program for the disposition of HUD owned projects (Subpart C). This rule would (1) modify the maximum monthly rent provisions of Subpart C to reflect Section 102(b)(7) of the Housing and Community Development Amendments of 1984; (2) amend the work write-up, cost estimate and cost certification provisions governing the rehabilitation of projects under Subpart C and (3) make other miscellaneous changes to Part 886.

Timetable:

Action	Date	FR Cite
NPRM	00/00/00	

Small Entity: Undetermined

Additional Information: This proposal was originally included as part of FR-1950.

Agency Contact: James Tahash, Director, Program Planning Division, Department of Housing and Urban Development, Office of Housing, 202 426-3970

RIN: 2502-AD69

923. LAND REGISTRATION (H-21-86)

Legal Authority: 15 USC 1701

CFR Citation: 24 CFR 1710

Legal Deadline: None.

Abstract: This rule would adjust the reporting and registering requirements for land registration and adjust the fee payment procedures.

Timetable:

Action	Date	FR Cite
NPRM	00/00/00	

Small Entity: No

Agency Contact: Lionel Cabrera, Chief, Land Sales Policy Examination Branch, Department of Housing and Urban Development, Office of Housing, 202 755-6924

RIN: 2502-AD54

924. AMENDMENTS TO INTERSTATE LAND SALES REGISTRATION (H-47-86; FR-2503)

Significance: Agency Priority

Legal Authority: 15 USC 1718; 42 USC 3535(d)

CFR Citation: 24 CFR 1710

Legal Deadline: None.

Abstract: The Department is proposing to amend the regulatory exemption section of its regulations to provide further relief from registration requirements with no loss in consumer protection.

Timetable:

Action	Date	FR Cite
NPRM	05/00/88	

Small Entity: No

Agency Contact: John L. Brady, Director, Interstate Land Registration Division, Department of Housing and Urban Development, Office of Housing, 202 755-0502

RIN: 2502-AD81

925. MANUFACTURED HOME CONSTRUCTION AND SAFETY STANDARDS - FORMALDEHYDE REGULATIONS (H-10-87; FR-2332)

Legal Authority: 42 USC 5403

CFR Citation: 24 CFR 3280.308; 24 CFR 3280.309; 24 CFR 3280.406

Legal Deadline: None.

Abstract: Medium density fiberboard is not currently covered by the standards but is a major emitter of formaldehyde. It is used extensively in cabinet construction and can cause problems similar to particleboard or plywood, materials already regulated by the standards.

Second, the Department has received a number of complaints concerning the language and posting requirements of the health notice. Consideration will be given to different notice requirements if the manufactured home meets more than the minimum standard of formaldehyde levels.

Third, the current rule requires recertification of plywood and particleboard following treatment with a product containing formaldehyde.

Timetable:

Action	Date	FR Cite
NPRM	00/00/00	

Small Entity: Undetermined

Agency Contact: Mark W. Holman, Acting Director, Manufactured Housing &, Construction Standards Division, Department of Housing and Urban Development, Office of Housing, 202 755-5210

RIN: 2502-AE02

---

926. NOTICE OF FORMALDEHYDE; MANUFACTURED HOME CONSTRUCTION AND SAFETY (H-23-87; FR2349)

Legal Authority: 42 USC 5403

CFR Citation: 24 CFR 3280.309

Legal Deadline: None.

Abstract: This rule would revise the Health Notice on formaldehyde emissions required under the Manufactured Home Construction and Safety Standards at 24 CFR 3280.309. The primary revisions would involve the shortening of the background information in the Notice on health risks arising from formaldehyde and engineering options to reduce formaldehyde levels, and the addition of an option for manufacturers concerning the location of the Notice.

Timetable:

Action	Date	FR Cite
NPRM	00/00/00	

Small Entity: No

Agency Contact: Mark W. Holman, Acting Director, Manufactured Housing &, Construction Standards Division, Department of Housing and Urban Development, Office of Housing, 202 755-6590

RIN: 2502-AE21

---

927. ● MANUFACTURED HOUSING ENERGY CONSERVATION STANDARDS (H-29-88; FR-2497) 1987 HCD ACT

Legal Authority: PL 100-242, Sec 568

CFR Citation: 24 CFR 3280.506

Legal Deadline: None.

Abstract: The regulation would revise the Department's thermal energy standards to comport with section 568's requirements that the Department's standards be "cost-effective energy conservation standards designed to ensure the lowest total of construction and operating costs."

Timetable:

Action	Date	FR Cite
NPRM	12/00/88	

Small Entity: Undetermined

Agency Contact: Mark Holman, Director, Manufactured Housing and, Construction Standards Division, Department of Housing and Urban Development, Office of Housing, 202 755-5210

RIN: 2502-AE53

---

928. MANUFACTURED HOME PROCEDURAL AND ENFORCEMENT SYSTEM (H-40-86; FR-2278)

Legal Authority: 42 USC 5403

CFR Citation: 24 CFR 3282

Legal Deadline: None.

Abstract: This rule would propose revisions to HUD enforcement regulations at 24 CFR Part 3282 to improve the effectiveness of Production Inspection Primary Inspection Agencies (IPIAs).

Timetable:

Action	Date	FR Cite
ANPRM	05/08/87	52 FR 17411
NPRM	05/00/88	
Final Action	09/00/88	

Small Entity: Undetermined

Agency Contact: Mark W. Holman, Acting Director, Manufactured Housing &, Construction Standards Division, Department of Housing and Urban Development, Office of Housing, 202 755-5210

RIN: 2502-AD60

---

929. MANUFACTURED HOME DESIGN INSPECTION SYSTEM (H-41-86; FR-2279)

Legal Authority: 42 USC 5403

CFR Citation: 24 CFR 3282

Legal Deadline: None.

Abstract: This proposed rule will deregulate the current design inspection system on manufactured homes and substitute a procedure for manufacturer certification,among other revisions.

Timetable:

Action	Date	FR Cite
NPRM	05/00/88	
Final Action	09/00/88	

Small Entity: Undetermined

Agency Contact: Mark W. Holman, Acting Director, Manufactured Housing &, Construction Standards Division, Department of Housing and Urban Development, Office of Housing, 202 755-5210

RIN: 2502-AD61

VOL 53 ISS 79 PT 1 AP 25 1988 UMI

DEPARTMENT OF HOUSING AND URBAN DEVELOPMENT (HUD) — Final Rule Stage

Office of Housing (OH)

930. SUPPORTIVE HOUSING DEMONSTRATION PROGRAM (H-34-87; FR2385)

Legal Authority: 42 USC 11381-88

CFR Citation: 00 CFR 000

Legal Deadline: None.

Abstract: This rule implement the Supportive Housing Demonstration Program contained in Subtitle C of Title IV of the Stewart B. McKinney Homeless Housing Act (Pub. L. 100-77, approved July 22, 1987). The program is designed to develop innovative approaches to providing supportive housing especially to deinstitutionalized homeless individuals, homeless families with children and homeless individuals with mental disabilities and other handicapped persons.

Timetable:

Action	Date	FR Cite
NPRM	10/26/87	52 FR 39946
NPRM Comment Period End	12/28/87	52 FR 39946
Final Action	06/00/88	

Small Entity: Undetermined

Agency Contact: Lawrence Goldberger, Director, Office of Elderly & Assisted, Housing, Department of Housing and Urban Development, Office of Housing, 202 755-5720

RIN: 2502-AE13

931. ● TENANT PARTICIPATION IN MULTIFAMILY PROJECTS (H-11-88; FR-2451) 1987 HCD ACT

Legal Authority: PL 100-242, Sec 183

CFR Citation: 00 CFR 000

Legal Deadline: None.

Abstract: This rule provides for the applicability of the tenant participation requirements of section 202 of the HCDA of 1978 to section 202 elderly and handicapped projects. The rule also removes the Secretary's authority not to provide for tenant participation in certain owner actions and authorizes the application of the tenant participation requirements in the Secretary's proposal to sell a multifamily housing project.

Timetable:

Action	Date	FR Cite
Final Action	05/00/88	

Small Entity: Undetermined

Agency Contact: James J. Tahash, Dir., Planning and Procedures Division, Department of Housing and Urban Development, Office of Housing, 202 426-3944

RIN: 2502-AE35

932. ● HODAG 1987 ACT AMENDMENTS (H-19-88; FR-2459) 1987 HCD ACT

Legal Authority: PL 100-242, Sec 151(a)-(e)

CFR Citation: 00 CFR 000

Legal Deadline: None.

Abstract: This final rule would amend existing provisions and add new provisions implementing section 151 of the HCDA of 1987.

Timetable:

Action	Date	FR Cite
Final Action	06/00/88	

Small Entity: Undetermined

Agency Contact: Jessica Franklin, Director, Development Grant Division, Department of Housing and Urban Development, Office of Housing, 202 755-6142

RIN: 2502-AE43

933. APPLICABILITY OF MINIMUM PROPERTY STANDARDS MANUFACTURED HOMES UNDER TITLE II OF THE NATIONAL HOUSING ACT (H-82-82; FR-1578)

Legal Authority: 42 USC 3535(d)

CFR Citation: 24 CFR 200; 24 CFR 203

Legal Deadline: None.

Abstract: Interim rule permits insured financing of properties with manufactured homes under Title II of the National Housing Act, as a means of broadening affordable home ownership opportunities. To qualify for such financing, the manufactured homes, foundations and sites must meet prescribed standards to insure adequate security for HUD-insured mortgages. By such action homeowners can expect reduced housing cost without sacrificing housing quality or durability.

Timetable:

Action	Date	FR Cite
Interim Final Rule	02/24/83	48 FR 7731
Interim Rule	02/24/83	48 FR 7731

Next Action Undetermined

Small Entity: Undetermined

Agency Contact: Morris Carter, Director, Single Family Development, Division, Department of Housing and Urban Development, Office of Housing, 202 755-6700

RIN: 2502-AB24

934. MINIMUM PROPERTY STANDARDS (MPS) FOR HOUSING — WATER SUPPLY SYSTEMS (H-31-86; FR-2255)

Legal Authority: 12 USC 1701 to 1715a-18

CFR Citation: 24 CFR 200

Legal Deadline: None.

Abstract: This proposed rule would amend the regulation relating to the applicability of the chemical and bacteriological standards of local health authorities to HUD-insured one- and two-family dwellings. This proposal provides that in the absence of local standards, those of the appropriate State agency would apply. This revision would simplify the requirements for water supply systems while furthering the Department's policy of relying on acceptable State and local building codes.

Timetable:

Action	Date	FR Cite
NPRM	06/08/87	52 FR 21596
NPRM Comment Period End	08/07/87	52 FR 21596
Final Action	05/00/88	

Small Entity: No

Agency Contact: Mark W. Holman, Acting Director, Manufactured Housing &, Construction Standards Division, Department of Housing and Urban Development, Office of Housing, 202 755-5210

RIN: 2502-AD64

935. ● MANUFACTURED HOME CONSTRUCTION AND SAFETY STANDARDS FOR LEAD IN WATER PIPING(H-3-87; FR-2296)

Legal Authority: 12 USC 1701

CFR Citation: 24 CFR 200

Legal Deadline: None.

Abstract: This final rule implements a provision of the Safe Drinking Water Act Amendments of 1986 that prohibits the insurance of a mortgage or the furnishing of assistance to newly

constructed residential property which contains a portable water system unless the system uses only lead free pipe, solder and flux. The provision is effective 24 months after the enactment of the Amendment.

Timetable:

Action	Date	FR Cite
Final Action	04/00/88	

Small Entity: Undetermined

Agency Contact: Mark W. Holman, Director, Manufactured Housing and, Construction Standards Division, Department of Housing and Urban Development, Office of Housing, 202 755-5210

RIN: 2502-AE05

936. RESTRICTIONS ON ALL-CASH SALES (AMENDMENT TO PART 200) (H-30-87; FR-2374)

Legal Authority: 12 USC 1703; 12 USC 1715b

CFR Citation: 24 CFR 200

Legal Deadline: None.

Abstract: This interim rule is intended to prohibit assumptors of a mortgage, or other persons purchasing property subject to a mortgage, on which an insured claim has been paid by the Department, from participating in a HUD "all cash public sale."

Timetable:

Action	Date	FR Cite
Interim Final Rule	06/00/88	

Small Entity: Undetermined

Agency Contact: John J. Coonts, Deputy Director, Office of Single Family, Housing, Department of Housing and Urban Development, Office of Housing, 202 755-3046

RIN: 2502-AE12

937. TEMPORARY MORTGAGE ASSISTANCE PAYMENTS (TMAP) AND ASSIGNMENTS TO HUD (H-44-85; FR-2147)

Significance: Agency Priority

Legal Authority: 12 USC 1715b; 12 USC 1715u

CFR Citation: 24 CFR 203; 24 CFR 204

Legal Deadline: None.

Abstract: Additional amendments to TMAP and Assignment rule are needed to reflect change in TMAP interest rate made by section 428 of the Housing and Community Development Act of 1987 and to assure that mortgagees inform mortgagors of the possible right to TMAP or assignment before they accept a deed in lieu of foreclosure from the mortgagor. [This rule was identified in earlier Agendas as RIN: 2502-AB79; H-29-81; FR-1415.]

Timetable:

Action	Date	FR Cite
NPRM	01/03/86	51 FR 216
NPRM Comment Period End	03/04/86	51 FR 216
Final Action	03/05/87	52 FR 6908
Final Action Effective	04/00/88	

Small Entity: No

Agency Contact: John Coonts, Deputy Director, Office of Insured Single, Family Housing, Department of Housing and Urban Development, Office of Housing, 202 755-3046

RIN: 2502-AD34

938. CRITERIA FOR ACCEPTABILITY OF INSURED 10-YEAR PROTECTION PLANS (H-28-86; FR-2036)

Significance: Agency Priority

Legal Authority: 12 USC 1709, Sec 203, 211; 12 USC 1715b; 42 USC 3535(d)

CFR Citation: 24 CFR 203

Legal Deadline: None.

Abstract: This proposed rule would revise the existing administrative criteria for acceptability of insured 10-year protection Plans (Plans). The Department began this proceeding by publishing a Notice informing the public that HUD intended to revise the criteria. This rule describes, among other things, criteria related to Plan acceptability, insurance and financial backing, Plan coverage, and methods for determining Plan obligations.

HUD acceptance of these Plans is a prerequisite to reduced inspection requirements on a property accepted for mortgage insurance before the commencement of construction. It is also a prerequisite to high loan-to-value insured financing for existing one-to-four family dwellings that are less than one year old and that were not approved and inspected by HUD or the Veterans Administration before the start of construction.

Timetable:

Action	Date	FR Cite
NPRM	06/10/87	52 FR 21961
NPRM Comment Period End	08/10/87	52 FR 21961
Final Action	06/00/88	

Public Comments

Notice of Solicitation 11/14/84 (49 FR 45075)

Small Entity: No

Agency Contact: John Coonts, Deputy Director, Office of Insured, Single Family Housing, Department of Housing and Urban Development, Office of Housing, 202 755-6924

RIN: 2502-AD65

939. ALLEGANY RESERVATION OF THE SENECA NATION (H-32-87; FR-2382)

Legal Authority: 12 USC 1709

CFR Citation: 24 CFR 203

Legal Deadline: None.

Abstract: This rule implements Public Law 99-601. The law authorizes the Secretary of HUD; notwithstanding any contrary requirements in the National Housing Act, to insure single family mortgages covering certain properties located on lands within the Allegany Reservation of the Seneca Indian Nation.

Timetable:

Action	Date	FR Cite
NPRM	12/21/87	52 FR 48197
NPRM Comment Period End	02/19/88	52 FR 48197
Final Action	05/00/88	

Small Entity: Undetermined

Agency Contact: John J. Coonts, Deputy Director, Office of Insured Single Family Housing, Department of Housing and Urban Development, Office of Housing, 202 755-3046

RIN: 2502-AE09

940. ● SINGLE FAMILY MORTGAGE INSURANCE - OCCUPANT AND INVESTOR MORTGAGORS (H-16-88; FR-2456) 1987 HCD ACT

Legal Authority: 12 USC 1709; 12 USC 1715b

CFR Citation: 24 CFR 203; 24 CFR 213; 24 CFR 221; 24 CFR 222; 24 CFR 226; 24 CFR 233; 24 CFR 234; 24 CFR 235

Legal Deadline: None.

Abstract: This rule implements section 406 of the Housing and Community Development Act of 1987. Section 406 authorizes HUD (1) to insure single family mortgages under title II of the National Housing Act, or (2) to approve a substitute mortgagor for single family mortgages insured under title II, only if the mortgagor is to occupy the dwelling as a principal or secondary residence, as determined by HUD. Section 406 provides that this occupancy requirement only applies if the mortgage involve a principal obligation that exceeds 75 percent of the loan-to-value or equivalent calculation under the insuring authority involved. The action exempts from the occupancy requirement, mortgagors under the Rehabilitation Loan program under section 203(k) of the National Housing Act, and certain public entity, nonprofit, serviceperson, and other mortgagors under various National Housing Act activities.

Timetable:

Action	Date	FR Cite
Final Action	04/00/88	

Small Entity: Undetermined

Agency Contact: Morris Carters, Dir., Single Family Development Division, Department of Housing and Urban Development, Office of Housing, 202 755-6700

RIN: 2502-AE40

---

941. ● MULTIFAMILY HOUSING MORTGAGE INSURANCE – REGULATION OF RENTS (H-9-88; FR-2448) 1987 HCD ACT

Legal Authority: PL 100-242, Sec 425

CFR Citation: 24 CFR 207.19; 24 CFR 220.511; 24 CFR 221.530

Legal Deadline: None.

Abstract: This rule implements section 425 of the Housing and Community Development Act of 1987. Section 425 requires HUD to regulate charges for accommodations (rents), facilities, and services for certain multifamily projects with HUD-insured project mortgages. Regulation must occur where (1) the mortgagor did not take steps, by December 1, 1987, to amend its regulatory agreement to incorporate rules changes published on April 19, 1983 and June 4, 1986, permitting mortgagors to set rental and other charges for their projects or to use alternative formulae for setting maximum project rentals; and (2) the project was receiving Section 8 assistance (other than Housing Certificates) as of December 1, 1987, or not less than one-half of the project units are occupied by lower income families.

Timetable:

Action	Date	FR Cite
Final Action	04/00/88	
Final Action Effective	05/00/88	

Small Entity: No

Government Levels Affected: Local, Federal

Agency Contact: James J. Tahash, Dir., Planning and Procedures Division, Department of Housing and Urban Development, Office of Housing, 202 426-3944

RIN: 2502-AE33

---

942. STATE AGENCY AMENDMENTS (H-70-84; FR-1997)

Legal Authority: 12 USC 1715z-16(b); 12 USC 1715z-16(c)

CFR Citation: 24 CFR 215; 24 CFR 221; 24 CFR 236; 24 CFR 245

Legal Deadline: None.

Abstract: This rule would make the Department's regulations on prohibited lease terms applicable to section 236 projects financed by state housing agencies.

Timetable:

Action	Date	FR Cite
NPRM	12/21/87	52 FR 48276
NPRM Comment Period End	02/19/88	52 FR 48276
Final Action	00/00/00	

Small Entity: No

Agency Contact: James Tahash, Director, Program Planning Division, Department of Housing and Urban Development, Office of Housing, Office of Multifamily Housing Management, 202 426-3970

RIN: 2502-AC73

---

943. ● RENT SUPPLEMENTS FEDERAL TENANTS SELECTION PREFERENCE (H-12-88; FR-2452) 1987 HCD ACT

Legal Authority: PL 100-242, Sec 168

CFR Citation: 24 CFR 215; 24 CFR 885

Legal Deadline: None.

Abstract: This final rule implements section 168 of the HCDA of 1987 striking the requirement that HUD make certain tenant eligibility determinations and empowering the project owner to make the determination. The rule also amends 24 CFR 885 to clarify the Federal preference are applicable to sections 202 and 8 projects.

Timetable:

Action	Date	FR Cite
Final Action	04/00/88	

Small Entity: Undetermined

Agency Contact: James J. Tahash, Dir., Planning and Procedures Division, Department of Housing and Urban Development, Office of Housing, 202 426-3944

RIN: 2502-AE36

---

944. ● PREPAYMENT OF MORTGAGES ON LOW- AND MODERATE-INCOME HOUSING (H-10-88; FR-2450) 1987 HCD ACT

Legal Authority: 12 USC 1715z-15

CFR Citation: 24 CFR 219; 24 CFR 245; 24 CFR 248

Legal Deadline: Statutory, April 1988. Section 234 of the Act provides that the Secretary shall issue final regulations not later than 60 days from the date of enactment; such regulations shall take effect no later than 45 days after the date of the issuance of the regulations.

Abstract: The regulation implements provisions of the Housing and Community Development Act of 1987 that provide that mortgages on "eligible low income housing" may be prepaid only in accordance with a "plan of action" approved by the Secretary. The regulation establishes procedures for the submission and negotiation of such plans of action, lists incentives which may be part of the plan of action, and provides standards which the plans of action must meet. The regulation is designed to preserve needed low income housing in cases where the project owner might otherwise prepay its mortgage and convert the project to higher-income use.

Timetable:

Action	Date	FR Cite
Interim Final Rule	04/05/88	53 FR 11224

Action	Date	FR Cite
Interim Final Rule Effective Date	05/20/88	53 FR 11224
Final Action	00/00/00	

Small Entity: Undetermined

Agency Contact: James J. Tahash, Director, Planning & Procedure Division, Office of Multifamily Housing Management, Department of Housing and Urban Development, Office of Housing, 202 426-3944

RIN: 2502-AE34

945. ● ELIGIBILITY OF SECTION 23 AND SECTION 202 HOUSING FOR FLEXIBLE SUBSIDY (H-18-88; FR-2458) 1987 HCD ACT

Legal Authority: PL 100-242, Sec 185(b); PL 100-242, Sec 186(b)

CFR Citation: 24 CFR 219

Legal Deadline: None.

Abstract: This final rule will implement section 185(b) and 186(b) of the HCDA of 1987 making section 23 and section 202 housing eligible for flexible subsidy.

Timetable:

Action	Date	FR Cite
Final Action	07/00/88	

Small Entity: Undetermined

Agency Contact: James J. Tahash, Dir., Planning and Procedures Division, Department of Housing and Urban Development, Office of Housing, 202 426-3944

RIN: 2502-AE42

946. ● FHA INSURANCE OF MORTGAGES COVERING NURSING HOMES AND SIMILAR PROJECTS (H-27-88; FR-2490)

Legal Authority: 12 USC 1715(b)

CFR Citation: 24 CFR 232

Legal Deadline: Statutory, May 5, 1988.

Abstract: This rule amends 24 CFR Part 232 to (1) make public nursing homes eligible for mortgage insurance and (2) establish an alternative procedure for satisfying the "certification of need" requirement governing mortgage insurance of nursing homes and intermediate care facilities. The rule implements section 410 of the Housing and Community Development Act of 1987.

Timetable:

Action	Date	FR Cite
Interim Final Rule	05/05/88	

Small Entity: Undetermined

Agency Contact: James Hamernick, Director, Office of Insured Multifamily Dev., Department of Housing and Urban Development, Office of Housing, 202 755-6500

RIN: 2502-AE38

947. ADDITIONAL REVISIONS - HOSPITAL INSURANCE (H-24-86; FR-2227)

Significance: Regulatory Program

Legal Authority: 12 USC 1715b; 12 USC 1715z-6; 12 USC 1715z-7

CFR Citation: 24 CFR 241; 24 CFR 242

Legal Deadline: None.

Abstract: This rule includes RIN 2502-AC61, Mortgage Insurance Requirements for Private and Public Hospitals (H-69-84; FR-1992) and RIN 2502-AC64, Maximum Mortgage Amounts for Hospitals (H-72-84; FR-2004). Statutory changes under the HDCA of 1987 affect the additional security requirements that may be imposed on public hospitals, as well as other significant features of HUD's earlier proposed rules.

Timetable:

Action	Date	FR Cite
NPRM	01/12/87	52 FR 1201
Final Action	05/00/88	

Small Entity: No

Additional Information: FR2466 (H-21-88; RIN: 2502-AE24) incorporated into FR2227.

Agency Contact: James L. Hamernick, Director, Office of Insured Multifamily Development, Department of Housing and Urban Development, Office of Housing, 202 755-6500

RIN: 2502-AD70

948. ● HOSPITAL INSURANCE - ALTERNATE CERTIFICATION REQUIREMENTS (H-21-88; FR-2466) 1987 HCD ACT

Significance: Agency Priority

Legal Authority: PL 100-242, Sec 409(a)

CFR Citation: 24 CFR 242

Legal Deadline: Statutory, April 1988. Ninety day statutory deadline from the date of enactment of the HCD Act of 1987.

Abstract: This interim rule implements sections 409(a) and 411 of the Housing and Community Development Act of 1987 as they pertain to the Department's hospital insurance program. These legislative provisions provide alternative means by which a hospital can qualify for mortgage insurance under the 242 program even though the hospital is located in a State that is unable to provide the statutorily required certificate of need.

Timetable:

Action	Date	FR Cite
Interim Final Rule	04/00/88	

Small Entity: Not Applicable

Agency Contact: James Hamernick, Dir., Office of Multifamily Housing Dev., Department of Housing and Urban Development, Office of Housing, 202 755-6500

RIN: 2502-AE29

949. COINSURANCE FOR NURSING HOMES AND INTERMEDIATE CARE FACILITIES (H-32-86; FR-2256)

Legal Authority: 12 USC 1715z(9)

CFR Citation: 24 CFR 252

Legal Deadline: None.

Abstract: The rule would authorize the coinsurance of mortgages covering nursing homes or intermediate care facilities pursuant to section 244 of the National Housing Act. It would also authorize the full insurance of existing nursing homes or intermediate care facilities pursuant to section 223(f) of the National Housing Act.

Timetable:

Action	Date	FR Cite
NPRM	12/31/87	52 FR 49425
NPRM Comment Period End	02/29/88	52 FR 49425
Final Action	06/00/88	

Small Entity: Undetermined

Agency Contact: James L. Hamernick, Director, Office of Insured Multifamily Hsg., Department of Housing and Urban Development, Office of Housing, 202 755-6500

RIN: 2502-AD74

950. HUD-OWNED MULTIFAMILY PROJECTS-MANAGEMENT AND DISPOSITION (H-69-78; FR-432)

Significance: Regulatory Program

Legal Authority: 12 USC 1715z-16; 12 USC 1701z-11; 12 USC 1701z-12; 12 USC 1713; 12 USC 1715b; PL 100-242, Sec 181

CFR Citation: 24 CFR 290; 24 CFR 886

Legal Deadline: None.

Abstract: Would conform current regulation more closely to Section 203 of the Housing and Community Development Act of 1978, as amended by Section 181 of the Housing and Community Development Act of 1988.

Timetable:

Action	Date	FR Cite
NPRM	10/18/84	49 FR 40888
NPRM Comment Period End	12/17/84	49 FR 40888
Final Action	07/00/88	

Small Entity: No

Agency Contact: Marc Harris, Multifamily Property Disposition Division, Department of Housing and Urban Development, Office of Housing, Office of Multifamily Housing Management, 202 755-9280

RIN: 2502-AC68

951. ● SECTION 236 RENT SUPPLEMENT (H-17-88; FR-2457) 1987 HCD ACT

Legal Authority: PL 100-242, Sec 167(a)

CFR Citation: 24 CFR 735

Legal Deadline: None.

Abstract: This rule will increase assistance to owners to provide sufficient payments to cover 100 (formerly 90%) of the necessary rent increases and changes in the income as eligible tenants.

Timetable:

Action	Date	FR Cite
Final Action	06/00/88	

Small Entity: Undetermined

Agency Contact: James Tahash, Dir., Planning & Procedures Division, Department of Housing and Urban Development, Office of Housing, 202 426-3944

RIN: 2502-AE41

952. HOUSING DEVELOPMENT GRANT PROGRAM (H-26-84; FR-1902)

Legal Authority: 42 USC 1437o

CFR Citation: 24 CFR 850

Legal Deadline: None.

Abstract: Implements the Housing Development Grant Program established by Section 301 of the Housing and Urban-Rural Recovery Act of 1983. Under this Program, the Secretary is authorized to make grants to cities and urban counties and to States acting on behalf of units of general local government to support new construction or substantial rehabilitation of residential rental housing. At least 20 percent of the units in a project assisted under this Program must be leased to, or made available for occupancy by, lower income families for a period of 20 years. The rent for these units cannot exceed 30 percent of the adjusted income of a family at 50 percent of area median income. Assisted projects must be located within eligible areas, special purpose areas or neighborhood preservation areas.

Timetable:

Action	Date	FR Cite
Interim Final Rule	06/14/84	49 FR 24634
Interim Final Rule effective	08/07/84	49 FR 24634
Final Action	06/00/88	

Small Entity: No

Agency Contact: Jessica Franklin, Director, Department of Housing and Urban Development, Office of Housing, Development Grant Division, 202 755-6142

RIN: 2502-AC23

953. ● SECTION 8 HOUSING ASSISTANCE PAYMENTS PROGRAMS – REVISIONS TO CONTRACT RENT ADJUSTMENT REGULATIONS (H-22-88; FR-2469) 1987 HCD ACT

Legal Authority: 42 USC 1437f; PL 100-242, Sec 142

CFR Citation: 24 CFR 880; 24 CFR 881; 24 CFR 882; 24 CFR 883; 24 CFR 884; 24 CFR 885; 24 CFR 886; 24 CFR 888

Legal Deadline: None.

Abstract: This rule implements the statutory changes in contract rent adjustments for the several Section 8 Housing Assistance Payments Programs enacted in section 142 of the Housing and Community Development Act of 1987.

Timetable:

Action	Date	FR Cite
Final Action	06/00/88	

Small Entity: Undetermined

Agency Contact: James J. Tahash, Dir., Planning & Procedures Division, Department of Housing and Urban Development, Office of Housing, 202 426-3944

RIN: 2502-AE44

954. SHARED HOUSING IN THE SECTION 8 MODERATE REHABILITATION PROGRAM (H-26-86; FR-2238)

Significance: Agency Priority

Legal Authority: 42 USC 1437f(p); 42 USC 3535(d)

CFR Citation: 24 CFR 882

Legal Deadline: None.

Abstract: This final rule will permit eligible applicants and tenants to share housing units with other eligible applicants or tenants in Section 8 Moderate Rehabilitation units, in accordance with the statutory directive in 42 USC 1437f(p). A proposed rule that included this program was published in 1984.

Timetable:

Action	Date	FR Cite
NPRM	12/07/84	49 FR 48005
NPRM Comment Period End	02/05/85	49 FR 48005
Final Action	00/00/00	

Small Entity: No

Agency Contact: Madeline Hastings, Director, Existing Housing Division, Department of Housing and Urban Development, Office of Housing, 202 755-6887

RIN: 2502-AD66

955. MANAGEMENT RULES AND COMPREHENSIVE HOUSING AND COMMUNITY DEVELOPMENT AMENDMENTS (H-34-83; FR-1761)

Legal Authority: 12 USC 1701q; 42 USC 3535(d)

CFR Citation: 24 CFR 885

Legal Deadline: None.

HUD—OH **Final Rule Stage**

Abstract: This rule would amend HUD's current regulations on loans for housing for the elderly or handicapped. The regulation adds regulatory provisions to govern section 202/8 project operations and management; incorporates changes required by statutory governing housing assistance payments contracts.

Timetable:

Action	Date	FR Cite
NPRM	12/09/87	52 FR 46614
NPRM Comment Period End	02/08/88	
Final Action	04/00/88	

Small Entity: Undetermined

Agency Contact: James J. Tahash, Director, Department of Housing and Urban Development, Office of Housing, Program Planning Division, Office of Multifamily Housing Management, 202 426-3970

RIN: 2502-AC03

956. ● LOANS FOR THE ELDERLY OR HANDICAPPED - LOAN INTEREST RATE PROVISIONS (H-24-88; FR-2477) 1987 HCD ACT

Legal Authority: 12 USC 1701g

CFR Citation: 24 CFR 885

Legal Deadline: None.

Abstract: This final rule would amend HUD's regulations governing projects that receive direct loans under section 202 of the Housing Act of 1959 and housing assistance payments under section 8 of the United States Housing Act of 1957. The rule would incorporate recent amendments to interest rate calculation provisions contained in the Housing and Community Development Act of 1987.

Timetable:

Action	Date	FR Cite
Final Action	04/00/88	

Small Entity: Undetermined

Agency Contact: Robert Wilden, Dir., Assisted Elderly and Handicapped, Housing Division, Department of Housing and Urban Development, Office of Housing, 202 426-8730

RIN: 2502-AE46

957. SECTION 8 HOUSING ASSISTANCE PAYMENTS PROGRAM - HOUSING VOUCHERS (H-42-85; FR-2170)

Significance: Regulatory Program

Legal Authority: 42 USC 1437f(o); PL 100-242, Sec 143; PL 100-242, Sec 144; PL 100-242, Sec 145; PL 100-242, Sec 146; PL 100-242, Sec 147; PL 100-242, Sec 148; PL 100-242, Sec 149; PL 100-242, Sec 262

CFR Citation: 24 CFR 887

Legal Deadline: None.

Abstract: This rule would implement permanent regulations for the Housing Voucher Program. It would implement in the final rule those amendments to the Housing Voucher Program enacted as part of the Housing and Community Development Act of 1987 that do not require prior notice and comment.

Timetable:

Action	Date	FR Cite
NPRM	08/14/87	52 FR 30388
NPRM Comment Period End	09/14/87	52 FR 30388
Final Action	06/00/88	

Small Entity: No

Agency Contact: Gerald Benoit, Director, Housing Voucher Division, Department of Housing and Urban Development, Office of Housing, Office of Elderly and Assisted Housing, 202 755-6477

RIN: 2502-AD26

DEPARTMENT OF HOUSING AND URBAN DEVELOPMENT (HUD) — Completed Actions

Office of Housing (OH)

958. USE OF MATERIALS BULLETIN NO. 40C - GRADEMARKING OF PLYWOOD (H-21-85; FR2407)

CFR Citation: 24 CFR 200

Completed:

Reason	Date	FR Cite
Withdrawn	02/11/88	

Small Entity: Undetermined

Agency Contact: Donald Fairman 202 755-5718

RIN: 2502-AD01

959. DIRECT ENDORSEMENT UNDERWRITER'S CERTIFICATION (H-29-86; FR-2241)

Significance: Agency Priority

CFR Citation: 24 CFR 200.163

Completed:

Reason	Date	FR Cite
Final Action	02/04/88	53 FR 3201
Final Action Effective	05/01/88	53 FR 6600

Small Entity: No

Agency Contact: John J. Coonts 202 755-3046

RIN: 2502-AD71

960. USE OF MATERIAL BULLETIN USED IN HUD BLDG. PRODUCT STANDARDS AND CERTIFICATION PROGRAM FOR MAT-FORMED PARTICLEBOARD SHEATHING PANELS (H-7-87; FR-2322)

CFR Citation: 24 CFR 200

Completed:

Reason	Date	FR Cite
Withdrawn	02/11/88	

Small Entity: Undetermined

Agency Contact: Leslie Breden 202 755-5929

RIN: 2502-AD92

961. LEAD STANDARDS IN WATER PIPING - SUBPART S - MPS (H-1-87; FR2290)

CFR Citation: 24 CFR 200

Completed:

Reason	Date	FR Cite
Final Action	04/06/88	53 FR 11270
Final Action Effective	06/19/88	53 FR 11270

Small Entity: Undetermined

Agency Contact: Mark W. Holman 202 755-5210

RIN: 2502-AE03

962. REV. OF UMB 44D TO ALLOW THE USE OF CARPET IN BATHROOMS & KITCHENS OVER A CONCRETE-MASONRY FLOORING SYSTEM AND A NEW CLASSIFICATION SYSTEM FOR CARPET (H-20-87; FR 2402)

CFR Citation: 24 CFR 200.935

Completed:

Reason	Date	FR Cite
Withdrawn	04/13/88	

Small Entity: Undetermined

Agency Contact: Donald R. Fairman 202 755-5718

RIN: 2502-AE07

963. ● USE OF MATERIALS BULLETIN NO. 89 HUD BUILDING PRODUCT STANDARDS AND CERTIFICATION PROGRAM FOR EXTERIOR INSULATED STEEL DOOR SYSTEMS (H-6-88; FR-2443)

Legal Authority: 12 USC 1701-1715z-18

CFR Citation: 24 CFR 0200

Legal Deadline: None.

Abstract: Use of Materials Bulletin No. 89 sets forth the Administrator qualifications and the procedures necessary to validate the manufacturer's certification of compliance with Insulated Steel Door Systems Institute (ISDSI) standards covering the composition of matter of the steel, air infiltration, water resistance, mechanical and thermal performance, and corrosion resistance of the exterior insulated steel door system.

Timetable:

Action	Date	FR Cite
Withdrawn	04/13/88	

Small Entity: Undetermined

Agency Contact: Leslie Breden, Office of Manufactured Hsg. & Regulatory Functions, Department of Housing and Urban Development, Office of Housing, 202 755-5929

RIN: 2502-AE30

964. CONVEYANCE OF ONE- TO FOUR-FAMILY PROPERTIES OCCUPIED BY TENANTS OR FORMER MORTGAGORS (H-9-85; FR-2064)

CFR Citation: 24 CFR 203

Completed:

Reason	Date	FR Cite
Final Action	01/14/88	53 FR 868
Final Action Effective	04/01/88	53 FR 8626

Small Entity: Undetermined

Agency Contact: Jacqueline B. Campbell 202 755-5740

RIN: 2502-AB10

965. ONE-TIME MORTGAGE INSURANCE PREMIUM FOR NON-MUTUAL FUND - SINGLE FAMILY INSURANCE PROGRAM (H-40-84; FR-1930)

CFR Citation: 24 CFR 203; 24 CFR 221; 24 CFR 226; 24 CFR 227; 24 CFR 234

Completed:

Reason	Date	FR Cite
Withdrawn	01/15/88	

Small Entity: Undetermined

Agency Contact: James B. Mitchell 202 426-4325

RIN: 2502-AC35

966. INSURANCE OF SINGLE FAMILY ADJUSTABLE RATE MORTGAGES (H-32-84; FR-1916)

CFR Citation: 24 CFR 203.49

Completed:

Reason	Date	FR Cite
Withdrawn	04/11/88	

Small Entity: No

Agency Contact: Morris Carter 202 755-6700

RIN: 2502-AC43

967. SINGLE FAMILY FORECLOSURES—DEFICIENCY JUDGEMENTS (H-6-86; FR-2193)

Significance: Regulatory Program

CFR Citation: 24 CFR 203

Completed:

Reason	Date	FR Cite
Final Action	02/16/88	53 FR 4384
Final Action Effective	03/28/88	53 FR 4384

Small Entity: No

Agency Contact: John J. Coonts 202 755-3046

RIN: 2502-AD38

968. TYPES OF SATISFACTORY TITLE EVIDENCE (H-48-86)

Significance: Agency Priority

CFR Citation: 24 CFR 203

Completed:

Reason	Date	FR Cite
Withdrawn	02/11/88	

Small Entity: Undetermined

Agency Contact: John J. Coonts 202 755-3046

RIN: 2502-AD83

969. ELIMINATION OF PROHIBITION ON THE PAYMENT OF FEES TO THIRD PARTIES IN MULTIFAMILY INSURANCE MORTGAGE TRANSACTION (H-5-87; FR-2314)

CFR Citation: 24 CFR 203

Completed:

Reason	Date	FR Cite
Withdrawn	01/27/88	

Small Entity: No

Agency Contact: James Hamernick 202 755-6500

RIN: 2502-AD90

970. SINGLE FAMILY MORTGAGE INSURANCE PREMIUM (H-11-87)

CFR Citation: 24 CFR 203

Completed:

Reason	Date	FR Cite
Withdrawn	01/05/88	

Small Entity: Undetermined

Agency Contact: Morris E. Carter 202 755-6720

RIN: 2502-AD93

971. FHA SINGLE FAMILY BORROWER ELIGIBILITY (H-12-87)

CFR Citation: 24 CFR 203

Completed:

Reason	Date	FR Cite
Withdrawn	01/05/88	

Small Entity: Undetermined

Agency Contact: Morris E. Carter 202 755-6720

RIN: 2502-AD94

972. SINGLE FAMILY DOWNPAYMENT REQUIREMENTS (H-17-87; FR-2334)

CFR Citation: 24 CFR 203

Completed:

Reason	Date	FR Cite
Withdrawn	11/23/87	

Small Entity: Undetermined

Agency Contact: Morris E. Carter 202 755-6720

RIN: 2502-AD99

973. ACCEPTANCE OF PARTIAL PAYMENTS DURING TMAP/ASSIGNMENT PROCESSING (H-27-87; FR-2366)

CFR Citation: 24 CFR 203

Completed:

Reason	Date	FR Cite
Withdrawn	12/02/87	

Small Entity: Undetermined

Agency Contact: John Coonts 202 755-3046

RIN: 2502-AE08

974. ● MISCELLANEOUS REVISIONS TO FHA SINGLE FAMILY AND MULTIFAMILY MORTGAGE INSURING AUTHORITIES (H-7-88; FR-2445)1987 HCD ACT

Significance: Agency Priority

Legal Authority: Not yet determined

CFR Citation: 24 CFR 203; 24 CFR 207; 24 CFR 213; 24 CFR 220; 24 CFR 221; 24 CFR 231; 24 CFR 232; 24 CFR 234; 24 CFR 250; 24 CFR 251; 24 CFR 255; 24 CFR 885

Legal Deadline: None.

Abstract: This rule implements a number of the amendments made by the Housing and Community Development Act of 1987 to HUD's single family and multifamily mortgage insurance authorities. Major changes include liberalization in the way HUD determines maximum mortgage dollar limits in the FHA home insurance program, increases in the maximum mortgage dollar limits for HUD's multifamily mortgage insurance programs, a new FHA insuring authority for the refinancing of insured graduated payment mortgages (GPMs), and expansion of mortgagors eligible for FHA single family mortgage insurance on Hawaiian home lands.

Timetable:

Action	Date	FR Cite
Final Action	03/18/88	53 FR 8874
Final Action Effective	04/27/88	53 FR 8874

Small Entity: Undetermined

Additional Information: Additional Contact:

James Hamernick, Director, Office of Insured Multifamily Development, (202) 755-6500

Agency Contact: John J. Coonts, Dir., Office of Insured Single Family Hsg., Department of Housing and Urban Development, Office of Housing, 202 755-3046

RIN: 2502-AE31

975. MORTGAGE INSURANCE PROGRAMS UNDER NATIONAL HOUSING ACT (H-48-81; FR-1525)

CFR Citation: 24 CFR 207; 24 CFR 213; 24 CFR 220; 24 CFR 221; 24 CFR 231; 24 CFR 232; 24 CFR 234; 24 CFR 242

Completed:

Reason	Date	FR Cite
Withdrawn	11/23/87	

Small Entity: No

Agency Contact: April LeClair 202 755-6223

RIN: 2502-AA90

976. PREFERENCE IN THE PROVISION OF HOUSING FOR FAMILIES WHO ARE OCCUPYING SUBSTANDARD HOUSING, ARE INVOLUNTARILY DISPLACED, OR ARE PAYING MORE THAN 50% OF FAMILY INCOME (H-22-80; FR-1597)

Significance: Regulatory Program

CFR Citation: 24 CFR 215; 24 CFR 880; 24 CFR 881; 24 CFR 882; 24 CFR 883; 24 CFR 884; 24 CFR 886; 24 CFR 904; 24 CFR 905; 24 CFR 960; 24 CFR 885

Completed:

Reason	Date	FR Cite
Final Action	01/15/88	53 FR 1122
Final Action Effective	03/04/88	53 FR 6600

Small Entity: No

Agency Contact: James Tahash 202 426-3970

RIN: 2502-AA34

977. ● HOSPITAL INSURANCE - ALTERNATIVE CERTIFICATION REQUIREMENTS (H-21-88; FR2466) 1987 HCD ACT

Legal Authority: Not yet determined

CFR Citation: 24 CFR 242

Legal Deadline: Statutory, May 1988.

Abstract: This interim rule implements sections 409(a) and 411 of the Housing and Community Development Act of 1987 as they pertain to the Department's hospital insurance program. These legislative provisions provide alternative means by which a hospital can qualify for mortgage insurance under the 242 program, even though the hospital is located in a state that is unable to provide the statutorily required certification of need.

Timetable:

Action	Date	FR Cite
Withdrawn (Incorporated into FR-2227, H-24-86; RIN: 2502-AD70)	02/05/88	

Small Entity: No

Agency Contact: James L. Hamernick, Director, Office of Insured Multifamily, Development, Department of Housing and Urban Development, Office of Housing, 202 755-6500

RIN: 2502-AE24

978. SECTION 8 HOUSING ASSISTANCE PAYMENTS PROGRAMS PORTABILITY OF SECTION 8 EXISTING HOUSING CERTIFICATES (H-46-83; FR-1800)

CFR Citation: 24 CFR 882.101; 24 CFR 882.102; 24 CFR 882.110; 24 CFR 882.116; 24 CFR 882.118; 24 CFR 882.119; 24 CFR 882.209; 24 CFR 882.210; 24 CFR 882.216; 24 CFR 882.218

Completed:

Reason	Date	FR Cite
Withdrawn	12/19/87	

Small Entity: No

Agency Contact: Madeline Hastings 202 755-6887

RIN: 2502-AB88

979. SECTION 8 HOUSING ASSISTANCE PAYMENTS PROGRAMS— MISCELLANEOUS AMENDMENTS (H-19-87; FR-2235)

CFR Citation: 24 CFR 882; 24 CFR 888

Completed:

Reason	Date	FR Cite
Withdrawn - Merged into RIN: 2502-AD91 (H-2-87; FR-2294)	01/22/88	

Small Entity: Undetermined

Agency Contact: Madeline Hastings 202 755-6887

RIN: 2502-AE00

980. LOANS FOR HOUSING FOR THE ELDERLY OR HANDICAPPED--ALLOCATION OF LOAN AUTHORITY, PROCESSING OF APPLICATIONS, DIRECT LOAN PROCESSING PROCEDURES (H-21-87; FR2345)

CFR Citation: 24 CFR 885

Completed:

Reason	Date	FR Cite
Withdrawn	01/21/88	

Small Entity: Undetermined

Agency Contact: Robert Wilden 202 755-8730

RIN: 2502-AE20

981. REVISIONS TO PART 886 TERMINATION OF TENANCY (H-59-84; FR-1950)

CFR Citation: 24 CFR 247; 24 CFR 886

Completed:

Reason	Date	FR Cite
Final Action	02/05/88	53 FR 3366
Final Action Effective	03/25/88	53 FR 3366

Small Entity: No

Agency Contact: James J. Tahash 202 426-3970

RIN: 2502-AC59

982. MANUFACTURED HOME CONSTRUCTION AND SAFETY STANDARDS - GENERAL (H-33-86; FR-2276)

CFR Citation: 24 CFR 3280

Completed:

Reason	Date	FR Cite
Withdrawn	02/11/88	

Small Entity: No

Agency Contact: Mark W. Holman 202 755-5210

RIN: 2502-AD58

983. MANUFACTURED HOME CONSTRUCTION AND SAFETY STANDARDS - DEREGULATORY PROPOSALS (H-39-86; FR-2277)

CFR Citation: 24 CFR 3280

Completed:

Reason	Date	FR Cite
Withdrawn	11/27/87	

Small Entity: No

Agency Contact: Mark W. Holman 202 755-5210

RIN: 2502-AD59

984. MANUFACTURED HOME CONSTRUCTION AND SAFETY STANDARDS - THERMAL ENERGY STANDARDS DEREGULATION (H-42-86; FR-2280)

CFR Citation: 24 CFR 3280

Completed:

Reason	Date	FR Cite
Withdrawn	12/29/87	

Small Entity: No

Agency Contact: Mark W. Holman 202 755-5210

RIN: 2502-AD62

985. PART 3280 - INTERPRETATIVE BULLETIN ON THE VAPOR BARRIER REQUIREMENTS OF 24 CFR 3280.504 (H-46-86; FR-2285)

CFR Citation: 24 CFR 3280.504

Completed:

Reason	Date	FR Cite
Withdrawn	11/17/87	

Small Entity: No

Agency Contact: Mark W. Holman 202 755-5210

RIN: 2502-AD82

986. NOTICE REQUESTING A PRIVATE ORGANIZATION TO DEVELOP AND MAINTAIN THE FEDERAL MANUFACTURED HOME CONSTRUCTION AND SAFETY STANDARDS (H-9-87; FR-2271)

Significance: Regulatory Program

CFR Citation: 24 CFR 3280

Completed:

Reason	Date	FR Cite
Notice	02/16/88	53 FR 4463

Small Entity: No

Agency Contact: Mark W. Holman 202 755-5210

RIN: 2502-AD85

DEPARTMENT OF HOUSING AND URBAN DEVELOPMENT (HUD) — Proposed Rule Stage

Office of Community Planning and Development (CPD)

987. COMMUNITY DEVELOPMENT BLOCK GRANTS: STATE'S PROGRAM (CPD-7-83; FR-1877)

Significance: Regulatory Program

Legal Authority: 42 USC 5301; PL 98-181, Sec 104; PL 98-181, Sec 101

CFR Citation: 24 CFR 570.488

Legal Deadline: None.

Abstract: This revision would implement amendments to the State administered CDBG program made in the Housing and Urban-Rural Recovery Act (Pub. L. 98-181) approved November 30, 1983, and the Housing and Community Development Act of 1987 (Pub. L. 100-242) approved February 5, 1988. The rule includes definitions of low and moderate income persons, requirements for meeting the three national objectives, the 60% test for low and moderate income benefit, added local and state public participation, coverage of program income, performance reporting and record keeping, and consequences of States' dropping program administration after FY 85.

Timetable:

Action	Date	FR Cite
NPRM	00/00/00	

Small Entity: No

Agency Contact: Richard J. Kennedy, Asst. Dir. State Small Cities Div., Department of Housing and Urban Development, Office of Community

Planning and Development, Office of Block Grant Assistance, State and Small Cities Division, 202 755-6322

RIN: 2506-AA38

988. COMMUNITY DEVELOPMENT BLOCK GRANTS, URBAN DEVELOPMENT ACTION GRANTS (CPD-9-86; FR-2449)

Significance: Agency Priority

Legal Authority: PL 100-242, Sec 515

CFR Citation: 24 CFR 570.450 to 465

Legal Deadline: Statutory, 00/00/00. Proposed rule promulgated within 60 days of enactment.

Abstract: This rule would implement section 515 of the Housing and Community Development Act of 1987, revising the UDAG selection system formula and criteria, and would incorporate technical changes listed in previous semiannual agendas.

Timetable:

Action	Date	FR Cite
NPRM	04/00/88	

Small Entity: No

Additional Information: Includes: CPD-14-83 (RIN: 2506-AA40)

Affected Sectors: All

Government Levels Affected: Local, Federal

Agency Contact: Michael McMahon, Dir., Policy/Support Division, Department of Housing and Urban Development, Office of Community Planning and Development, 202 755-6227

RIN: 2506-AA72

989. URBAN DEVELOPMENT ACTION GRANT APPLICATIONS FROM CONSORTIA OF SMALL CITIES (CPD-6-87; FR2381)

Legal Authority: 42 USC 5318

CFR Citation: 24 CFR 570

Legal Deadline: None.

Abstract: The Housing and Urban-Rural Recovery Act of 1983 permits consortia of small cities to apply for UDAG funds. This would allow geographically proximate small communities to apply jointly for funds to deal with common economic development problems beyond the administrative or financial capacities of any one of the communities.

Timetable:

Action	Date	FR Cite
NPRM	04/00/88	

Small Entity: Undetermined

Agency Contact: Stanley Newman, Director, Office of Urban Development, Action Grants, Department of Housing and Urban Development, Office of Community Planning and Development, 202 755-6290

RIN: 2506-AA76

990. ● SECRETARY'S DISCRETIONARY FUND - WORK STUDY PROGRAM (CPD-4-88; FR-2475) 1987 HCD ACT

Legal Authority: PL 100-242, Sec 107

CFR Citation: 24 CFR 0570

Legal Deadline: None.

Abstract: The proposed rule would implement section 501(b)(2) of the Housing and Community Development Act of 1987 under which HUD would use amounts set aside for the Secretary's Discretionary Fund for grants to institutions of higher education for the purposes of providing assistance to economically disadvantaged and minority students who participate on community development work-study programs.

Timetable:

Action	Date	FR Cite
NPRM	06/00/88	
NPRM Comment Period End	08/00/88	

Small Entity: Undetermined

Agency Contact: James Turk, Technical Assistance Division, Office of Program Policy Development, Department of Housing and Urban Development, Office of Community Planning and Development, 202 755-6092

RIN: 2506-AA81

991. ● MISCELLANEOUS REVISIONS OF PART 570 - 1987 HCD ACT (CPD-5-88; FR-2496)

Legal Authority: Not yet determined

CFR Citation: 24 CFR 570

Legal Deadline: None.

Abstract: The proposed rule would revise the Community Development Block Grants Program rules 24 CFR Part 570 as necessary to implement certain changes made in the Housing and Community Development Act of 1987 (Pub. L. 100-242, approved February 5, 1988). The proposed rule will mainly address those changes to the entitlement program that could not be included in the related rule in FR-1877.

Timetable:

Action	Date	FR Cite
NPRM	00/00/00	

Small Entity: Undetermined

Agency Contact: Jim Broughman, Director, Entitlement Cities Division, Department of Housing and Urban Development, Office of Community Planning and Development, 202 755-5977

RIN: 2506-AA84

992. INDIAN COMMUNITY DEVELOPMENT BLOCK GRANT PROGRAM: REVISION TO CORRECTIVE AND REMEDIAL ACTION (CPD-13-84; FR-2102)

Legal Authority: 42 USC 5301 to 5320

CFR Citation: 24 CFR 571.702 (b); 24 CFR 571.302(a)

Legal Deadline: None.

Abstract: This rule would amend the corrective and remedial actions available against grant recipients who fail to perform properly. One of the actions to be taken is to require recipients to reimburse their program account Letter of Credit in any amounts improperly expended. This amendment would allow the recipient to make such reimbursement through an in-kind contribution if sufficient cash is not available. In addition, it would allow alternative, non-cash transfer remedies to prevent a recurrence of the previous problems.

Timetable:

Action	Date	FR Cite
Next Action Undetermined		

Small Entity: No

Agency Contact: Leroy P. Gonnella, Director, Secretary's Fund Division, Department of Housing and Urban Development, Office of Community Planning and Development, 202 755-6092

RIN: 2506-AA58

993. ● URBAN HOMESTEADING SELECTION PROCEDURES AND ELIGIBILITY FOR DISCRETIONARY FUND TECHNICAL ASSISTANCE (CPD-1-88; FR-2461)

Significance: Agency Priority

Legal Authority: 12 USC 1706e

CFR Citation: 24 CFR 590

Legal Deadline: None.

Abstract: This rule would establish new selection procedures for urban homesteading programs and would make urban homesteading eligible for technical assistance from the Secretary's Discretionary Fund. This rule would also permit States and units of government to transfer urban homesteading property under the regular homesteading program and the State/local Demonstration Program to a qualified community organization that would carry out the functions of the State or unit of government.

Timetable:

Action	Date	FR Cite
NPRM	06/00/88	

Small Entity: Undetermined

Agency Contact: Richard Burk, Dir., Rehabilitation Loans & Homesteading, Department of Housing and Urban Development, Office of Community Planning and Development, 202 755-5327

RIN: 2506-AA79

DEPARTMENT OF HOUSING AND URBAN DEVELOPMENT (HUD) — Final Rule Stage

Office of Community Planning and Development (CPD)

994. RESIDENTIAL RENTAL REHABILITATION PROGRAM (CPD-7-84; FR-1901)

Legal Authority: 42 USC 1437o; 42 USC 3535(d); PL 98-479, Sec 103; PL 98-181, Sec 302; PL 98-181, Sec 301

CFR Citation: 24 CFR 511

Legal Deadline: None.

Abstract: This rule implements the Rental Rehabilitation Program authorized by section 17 of the U.S. Housing Act of 1937. The regulation (1) sets out a variety of program and other requirements to be met by grantees, State recipients and others that use or benefit from rental rehabilitation grants amounts, (2) enumerates the requirements for participating in the Rental Rehabilitation Program, (3) sets forth the formula by which allocations of rental rehabilitation grant amounts will be made to eligible grantees, (4) explains the rental housing assistance available for tenants, (5) enumerates administrative requirements for the Program, and (6) explains how HUD will review program performance.

Timetable:

Action	Date	FR Cite
Interim Final Rule	04/20/84	49 FR 16936
Interim Rule Effective	05/24/84	49 FR 16936
Final Action	08/00/88	

Small Entity: No

Additional Information: Includes: CPD-17-82; CPD-8-84; FR-1912; FR-2055 (RIN: 2506-AA60)

Agency Contact: Mary Kolesar, Director, Rental Rehabilitation Division, Department of Housing and Urban Development, Office of Community Planning and Development, 202 755-5970

RIN: 2506-AA55

995. ● RENTAL REHABILITATION GRANTS (CPD-2-88; FR-2472)

Legal Authority: 42 USC 1437o; PL 100-242, Sec 150

CFR Citation: 24 CFR 511.1; 24 CFR 511.3; 24 CFR 511.4; 24 CFR 511.10; 24 CFR 511.20

Legal Deadline: None.

Abstract: This rule makes a number of changes in the Rental Rehabilitation Grant program. Major changes include (1) making eligible, for rental rehabilitation assistance, real property that will be privately owned upon the completion of assisted rehabilitation or that is owned by certain nonprofit organizations; (2) increasing the $5,000 per-unit limit on the amount of rental rehabilitation assistance for any structure by means of a sliding per-unit scale from $5,000 to $8,500, depending on the number of bedrooms in the unit; (3) permitting a unit of general local government that has an ordinance requiring rehabilitation to meet seismic standards to use all its rental rehabilitation grants to rehabilitate units with one bedroom or less, if the occupants of the units will have incomes not in excess of 50 percent of the median area income; and (4) allowing States and formula cities and counties to retain up to 10 percent of any rental rehabilitation grant amounts they receive for administrative expenses in carrying out their rental rehabilitation programs.

Timetable:

Action	Date	FR Cite
Final Action	05/00/88	
Final Action Effective	06/00/88	

Small Entity: No

Government Levels Affected: Local, Federal

Agency Contact: Mary Ann Kolesar, Dir., Rehab Management Division, Department of Housing and Urban Development, Office of Community Planning and Development, 202 755-5970

RIN: 2506-AA80

996. COMMUNITY DEVELOPMENT BLOCK GRANT REGULATIONS (CPD-6-84; FR-1895)

Significance: Regulatory Program

Legal Authority: 42 USC 5301

CFR Citation: 24 CFR 570

Legal Deadline: None.

Abstract: As a result of the 1983, 1984, and 1987 amendments to the Housing and Community Development Act of 1974 as amended, this rule would set forth new requirements governing the administration of Community Development Block Grant funds under Subpart A (General Provisions), C (Eligible Activities), D (Entitlement Grants), F (Small Cities Programs), K (Other Applicable Laws), M (Loan Guarantees), J (Grant Administration), and O (Program Management).

HUD—CPD

Final Rule Stage

Timetable:

Action	Date	FR Cite
NPRM	10/31/84	49 FR 43852
NPRM Comment Period End	12/31/84	49 FR 43852
Final Action	00/00/00	

Small Entity: No

Additional Information: Includes: FR-1825, FR-1852, FR-1854; FR-1572

Government Levels Affected: Local, Federal

Agency Contact: James R. Broughman, Director, Department of Housing and Urban Development, Office of Community Planning and Development, Office of Block Grant Assistance, Entitlement Cities Division, 202 755-9267

RIN: 2506-AA47

997. COMMUNITY DEVELOPMENT BLOCK GRANT PROGRAM: ESCROW ACCOUNTS (CPD-2-86; FR-2164)

Legal Authority: 42 USC 5301 to 5321

CFR Citation: 24 CFR 0570.511

Legal Deadline: None.

Abstract: The Department is proposing to establish a rule that would govern the circumstances under which CDBG program recipients could establish escrow accounts for the purpose of disbursing funds to contractors expeditiously. The rule reflects U.S. Treasury Department requirements governing cash withdrawals.

Timetable:

Action	Date	FR Cite
NPRM	10/05/87	52 FR 37162
NPRM Comment Period End	12/04/87	
Final Action	05/00/88	

Small Entity: Undetermined

Agency Contact: Paul D. Webster, Dir., Financial Management Division, Department of Housing and Urban Development, Office of Community Planning and Development, 202 755-1871

RIN: 2506-AA66

998. ● CONSERVING NEIGHBORHOODS BY PROHIBITING DISPLACEMENT (CPD-3-88; FR-2474) 1987 HCD ACT

Legal Authority: Not yet determined

CFR Citation: 24 CFR 570

Legal Deadline: Statutory, October 1988. The program will take effect on 10/00/88 under section 509(b) of the 1987 Act.

Abstract: This proposed rule would implement section 509 of the Housing and Community Development Act of 1987 which requires an antidisplacement program as a condition to CPDG or UDAG amount.

Timetable:

Action	Date	FR Cite
Final Action	10/00/88	

Small Entity: Undetermined

Agency Contact: Harold J. Huecker, Director, Relocation and Real Estate Div., Office of Urban Rehabilitation, Department of Housing and Urban Development, Office of Community Planning and Development, 202 755-6336

RIN: 2506-AA82

999. EMERGENCY SHELTER GRANTS ('87 ACT) (CPD-7-87; FR2387)

Legal Authority: 42 USC 11371-77

CFR Citation: 24 CFR 576

Legal Deadline: Statutory, July 1988.

Abstract: This rule will implement statutory changes to the Emergency Shelter Grant Program required by amendments to the program set out in subtitles A and B of Title IV, McKinney Homeless Assistance Act, 42 USC 11301-77.

Timetable:

Action	Date	FR Cite
NPRM	11/06/87	52 FR 42664
NPRM Comment Period End	01/05/88	52 FR 42664
Final Action	06/00/88	
Final Action Effective	07/00/88	

Small Entity: Undetermined

Additional Information: In September 1987, the Department published a Notice specifying the conditions under which the Emergency Shelter Grant Program would operate during the period preceding the effectiveness of amended rules implementing the McKinney Act Amendments.

Agency Contact: Don I. Patch, Director, Office of Block Grants Assistance, Department of Housing and Urban Development, Office of Community Planning and Development, 202 755-6587

RIN: 2506-AA77

DEPARTMENT OF HOUSING AND URBAN DEVELOPMENT (HUD)
Office of Community Planning and Development (CPD)

Completed Actions

1000. UNIFORM RELOCATION ACT AMENDMENTS OF 1987 (CPD-3-87; FR-2357)

CFR Citation: 24 CFR 0042

Completed:

Reason	Date	FR Cite
Withdrawn Replaced by RIN: 2501-AA70 (S-3-88; FR-2357)	02/02/88	

Small Entity: Undetermined

Agency Contact: Harold J. Huecker 202 755-6336

RIN: 2506-AA78

1001. AMENDMENTS TO COMMUNITY DEVELOPMENT BLOCK GRANT REGULATIONS; ENTITLEMENT PROGRAM (CPD-4-86)

CFR Citation: 24 CFR 0570

Completed:

Reason	Date	FR Cite
Withdrawn	02/22/88	

Small Entity: No

Agency Contact: James R. Broughman 202 755-9267

RIN: 2506-AA68

1002. EMERGENCY SHELTER GRANT PROGRAM (CPD-1-87; FR-2298)

Significance: Regulatory Program

CFR Citation: 24 CFR 575

BEST COPY AVAILABLE

Completed:

Reason	Date	FR Cite
Final Action	10/19/87	52 FR 38864
Final Action Effective	12/02/87	52 FR 44861

Small Entity: No

Agency Contact: James Broughman 202 755-5977

RIN: 2506-AA74

DEPARTMENT OF HOUSING AND URBAN DEVELOPMENT (HUD) — Proposed Rule Stage
Government National Mortgage Association (GNMA)

1003. BOOK-ENTRY SECURITIES OF GNMA (GNMA-2-85)

Significance: Agency Priority

Legal Authority: 12 USC 1701

CFR Citation: 24 CFR 203

Legal Deadline: None.

Abstract: The regulation will provide for utilization of a book-entry system to govern the issuance and custody of GNMA securities. The system allows for maintenance of records by an Agent Bank and utilization of wire transfers. Further, the book-entry system will curtail loss, theft and repeated pledging of GNMA securities.

Timetable:

Action	Date	FR Cite
NPRM	00/00/00	

Small Entity: Undetermined

Government Levels Affected: Federal

Agency Contact: Walter T. Cassidy, Assistant General Counsel for Finance, Department of Housing and Urban Development, Office of the General Counsel, Office of Insured Housing and Finance, 202 755-7260

RIN: 2503-AA03

1004. GNMA FEES (GNMA-1-87; FR2395)

Legal Authority: 00 USC 0000

CFR Citation: 24 CFR 390.17

Legal Deadline: None.

Abstract: This proposed rule would revise the regulations in accordance with Pub. L. 100-14 relating to the charges and fees that GNMA may charge for its guaranty of mortgage-backed securities.

Timetable:

Action	Date	FR Cite
NPRM	00/00/00	

Small Entity: Undetermined

Agency Contact: Walter J. Cassidy, Assistant General Counsel for Finance, Department of Housing and Urban Development, Office of the General Counsel, 202 755-7260

RIN: 2503-AA05

DEPARTMENT OF HOUSING AND URBAN DEVELOPMENT (HUD) — Proposed Rule Stage
Office of Fair Housing and Equal Opportunity (FHEO)

1005. NONDISCRIMINATION BASED ON HANDICAPPED IN PROGRAMS CONDUCTED BY HUD (FR-2163; FH&EO-2-85)

Significance: Regulatory Program

Legal Authority: 29 USC 794

CFR Citation: 24 CFR 9.101; 24 CFR 9.102; 24 CFR 9.103; 24 CFR 9.110; 24 CFR 9.111; 24 CFR 9.130; 24 CFR 9.140; 24 CFR 9.149; 24 CFR 9.150; 24 CFR 9.151; 24 CFR 9.160; 24 CFR 9.170

Legal Deadline: None.

Abstract: This proposed rule would implement section 504 of the Rehab Act of 1973 (as extended by the Rehab. Comprehensive Service and Developmental Disabilities Act of 1978) for HUD-conducted programs or activities. This proposed rule will be a companion rule to the Department's rule on nondiscrimination based on handicap in federally assisted programs.

Timetable:

Action	Date	FR Cite
NPRM	09/00/88	

Small Entity: Undetermined

Agency Contact: David Enzel, Attorney, Department of Housing and Urban Development, Office of the General Counsel, 202 755-6207

RIN: 2529-AA28

1006. REDESIGN FOR FAIR HOUSING ASSISTANCE PROGRAM (FHEO-2-87; FR2403)

Significance: Regulatory Program

Legal Authority: 42 USC 3601-9

CFR Citation: 24 CFR 111

Legal Deadline: None.

Abstract: This proposed rule would change the current funding mechanism of the Fair Housing Assistance Program (FHAP) from a dual noncompetitive and competitive system to a single comprehensive noncompetitive funding mechanism. The new system will allow the same disbursement of 5 million dollars to substantially equivalent agencies. The FHAP agencies would be funded for cases processed and other eligible activities.

Timetable:

Action	Date	FR Cite
NPRM	07/00/88	

Small Entity: Undetermined

Agency Contact: Maxine Cunningham, Director, Federal, State & Local Programs, Department of Housing and Urban Development, Office of Fair Housing and Equal Opportunity, 202 755-0455

RIN: 2529-AA33

VOL 53 ISS 79 PT 1 APR 25 1988 UMI

HUD—FHEO **Proposed Rule Stage**

1007. RECOGNITION OF JURISDICTION WITH SUBSTANTIALLY FAIR HOUSING LAWS (FHEO-1-87)

Legal Authority: 42 USC 3610; 42 USC 3535(d)

CFR Citation: 24 CFR 115

Legal Deadline: None.

Abstract: Some of the Sections in this Regulation need to be changed to add definitions, set out specific issues and examples that qualify as acceptable/unacceptable under the rule; and clarify time frames. The proposed revisions will make application and recognition procedures easier for the Department relative to implementation. Agencies presently recognized will not be affected. However, agencies in the interim recognition stage may be affected.

Timetable:

Action	Date	FR Cite
NPRM	07/00/88	
NPRM Comment Period End	08/00/88	
Final Action	10/00/88	

Small Entity: No

Affected Sectors: 919 General Government, Not Elsewhere Classified

Government Levels Affected: Local, State, Federal

Agency Contact: Wagner Jackson, Acting Director, Office of Fair Housing, Enforcement & Sec. 3 Compliance, Department of Housing and Urban Development, Office of Fair Housing and Equal Opportunity, 202 755-6636

RIN: 2529-AA31

1008. ● FAIR HOUSING - COORDINATION OF EXECUTIVE AGENCY AND REGULATORY AGENCY AFFIRMATIVE ADMINISTRATION OF PROGRAMS IN CONNECTION WITH HUD (FH&EO-1-88; FR-2480)

Legal Authority: 42 USC 3601

CFR Citation: 24 CFR 125

Legal Deadline: None.

Abstract: The Fair Housing Law, Title VIII of the Civil Rights Act of 1968, charges the Secretary with the responsibility for the administration and enforcement of Title VIII. Section 808 of Title VIII requires the Secretary to administer programs and activities relating to housing and urban development in a manner affirmatively to further fair housing. All other Executive Agencies are required to administer programs relating to housing and urban development in a manner affirmatively to further fair housing and to cooperate with the Secretary in further fair goal of fair housing. In December 1980, Executive Order 12249 was issued to assure interagency coordination and consistent and effective implementation of Section 808. The Order reemphasizes the mandate of Title VII, stipulates the Secretary's leadership and coordination role and states the responsibilities of all Executive Agencies; includes Regulatory Agencies, in connection with the preparation and implementation of rules, regulations and procedures. The time has come to publish a rule for comment. A proposed rule in 1981 failed to be published.

Timetable:

Action	Date	FR Cite
NPRM	10/00/88	
NPRM Comment Period End	11/00/88	
Final Action	12/00/88	

Small Entity: Undetermined

Agency Contact: Wagner D. Jackson, Acting Director, Office of Fair Housing, Enforcement and Sec. 3 Compliance, Department of Housing and Urban Development, Office of Fair Housing and Equal Opportunity, 202 755-6636

RIN: 2529-AA36

DEPARTMENT OF HOUSING AND URBAN DEVELOPMENT (HUD) — Final Rule Stage
Office of Fair Housing and Equal Opportunity (FHEO)

1009. NONDISCRIMINATION BASED ON HANDICAP IN FEDERALLY-ASSISTED PROGRAMS AND ACTIVITIES (FH&EO-4-84; FR-770)

Significance: Regulatory Program

Legal Authority: 29 USC 794

CFR Citation: 24 CFR 8

Legal Deadline: None.

Abstract: Would add a new 24 CFR 8 Part to set forth procedures and policies to assure nondiscrimination based on handicap in programs and activities receiving Federal financial assistance.

Timetable:

Action	Date	FR Cite
Final Action	06/00/88	

Small Entity: No

Additional Information:

Proposed rule published 04/19/78 43 FR 16652

Interim rule published 05/06/83 48 FR 20638

Republished 05/18/83 48 FR 22470

Effective date revoked 06/15/83 48 FR 27528

(Interim rule was thereafter treated as a proposed rule.)

Agency Contact: David Enzel, Attorney, Department of Housing and Urban Development, Office of the General Counsel, 202 755-6207

RIN: 2529-AA26

1010. PROCEDURE FOR PROCESSING COMPLAINTS UNDER SECTION 804 OF THE FAIR HOUSING ACT (FH&EO-6-84; FR 2012)

Significance: Regulatory Program

Legal Authority: 42 USC 3601 to 3619; 42 USC 3535(d)

CFR Citation: 24 CFR 105

Legal Deadline: None.

Abstract: This rule would amend 24 CFR Part 105, which governs the processing of complaints under section 810 of the Fair Housing Act. The rule would reorganize Part 105 and would add more specific descriptions of the procedures used to investigate fair housing complaints, to make a determination to resolve matters raised in complaints, and to try to eliminate and correct alleged discriminatory housing practices.

Timetable:

Action	Date	FR Cite
NPRM	10/16/84	49 FR 40528
NPRM Comment Period End	12/17/84	49 FR 40528

VOL 53 ISS 79 PT 1 AP 25 1988 UMI

HUD—FHEO

Final Rule Stage

Next Action Undetermined

Small Entity: No

Government Levels Affected: Federal

Agency Contact: Charles M. Farbstein, Assistant General Counsel, Department of Housing and Urban Development, Office of the General Counsel, Equal Opportunity, 202 755-5570

RIN: 2529-AA24

1011. ● THE FAIR HOUSING INITIATIVES PROGRAM (FH&EO; FR-2486) 1987 HCD ACT

Significance: Regulatory Program

Legal Authority: PL 100-242, Sec 561

CFR Citation: 24 CFR 125

Legal Deadline: Statutory, 00/00/00. In addition to regular Congressional review, the authorizing legislation requires that effective date of final rule can not occur prior to 90 days after rule is submitted to Congress and further that no funds can be disbursed without a rule.

Abstract: The regulation describes the method by which HUD will fund fair housing enforcement activities in the fair housing initiatives program (FHIP).

The regulation also describes the guidelines for the conduct of a two fair housing testing demonstration in the private enforcement initiative of FHIP as required by the legislation.

Timetable:

Action	Date	FR Cite
Final Action	00/00/00	

Small Entity: Undetermined

Agency Contact: Harry L. Carey, Attorney-Advisor, Department of Housing and Urban Development, Office of the General Counsel, 202 755-5570

RIN: 2529-AA37

DEPARTMENT OF HOUSING AND URBAN DEVELOPMENT (HUD)

Completed Actions

Office of Fair Housing and Equal Opportunity (FHEO)

1012. AMENDMENTS OF THE COMMUNITY HOUSING RESOURCE BOARD REGULATIONS (FH&EO-1-85; FR-2085)

CFR Citation: 24 CFR 120

Completed:

Reason	Date	FR Cite
Withdrawn	11/23/87	

Small Entity: No

Agency Contact: Nathaniel K. Smith 202 755-5992

RIN: 2529-AA27

DEPARTMENT OF HOUSING AND URBAN DEVELOPMENT (HUD)

Prerule Stage

Office of Administration (OA)

1013. ORGANIZATION, FUNCTION, AND DELEGATIONS OF AUTHORITY SUBPART C - SECRETARY'S DELEGATIONS OF AUTHORITY TO HEADS OF OFFICES (ADM-2-82)

Legal Authority: 42 USC 3535(d)

CFR Citation: 24 CFR 3

Legal Deadline: None.

Abstract: Subpart C delegates authority from the Secretary to the Comptroller and then to certain Divisions. This subpart is almost entirely obsolete. The alternatives being considered are to eliminate Subpart C entirely or to update all of the obsolete references. The benefits of both alternatives are to eliminate a potentially confusing delegation of authority.

Timetable:

Action	Date	FR Cite
Next Action Undetermined		

Small Entity: No

Agency Contact: Albert M. Miller, Deputy Director, Department of Housing and Urban Development, Office of Administration, Office of Finance and Accounting, 202 755-6310

RIN: 2535-AA01

1014. FEDERAL PROCUREMENT OF CEMENT CONTAINING FLY ASH (ADM-1-84; FR-1936)

Legal Authority: 42 USC 3535(d); 42 USC 6962

CFR Citation: 24 CFR 570; 24 CFR 207

Legal Deadline: None.

Abstract: Rule will provide restrictions on Federal procurement of cement and concrete containing fly ash. Will be patterned on Environmental Protection Agency guidelines.

Timetable:

Action	Date	FR Cite
Next Action Undetermined		

Small Entity: No

Affected Sectors: Multiple

Government Levels Affected: Local, State

Agency Contact: Ed Girovasi, Director, Department of Housing and Urban Development, Office of Administration, Policy and Evaluation Division, Office of Procurement And Contracts, 202 755-5294

RIN: 2535-AA05

DEPARTMENT OF HOUSING AND URBAN DEVELOPMENT (HUD)
Office of Administration (OA)

Proposed Rule Stage

1015. ● HUD ACQUISITION REGULATION (ADM-2-88; FR-2473)

Legal Authority: 42 USC 3535(d)

CFR Citation: 48 CFR 24

Legal Deadline: None.

Abstract: The proposed rule will update the HUD Acquisition Regulation to conform to changes in the Federal Acquisition Regulation (FAR).

Timetable:

Action	Date	FR Cite
NPRM	00/00/00	

Small Entity: Undetermined

Agency Contact: Edward L. Girovasi, Jr., Director, Policy and Evaluation Division, Office of Procurement and Contracts, Department of Housing and Urban Development, Office of Administration, 202 755-5294

RIN: 2535-AA16

1016. OMB CIR. A-110, UNIFORM ADMINISTRATIVE REQUIREMENTS FOR GRANTS AND AGREEMENTS WITH UNIVERSITIES, HOSPITALS AND OTHER NONPROFIT ORGANIZATIONS (ADM-1-87; FR2376)

Legal Authority: 42 USC 3535(d)

CFR Citation: 24 CFR 29

Legal Deadline: None.

Abstract: This proposed rule would follow a government-wide common rule to provide uniformity to the administrative requirements for grants and agreements with universities, hospitals and other nonprofit organizations.

Timetable:

Action	Date	FR Cite
NPRM	11/00/88	

Small Entity: Undetermined

Agency Contact: Edward L. Girovasi, Jr., Director, Policy & Evaluation Division, Office of Procurement & Contracts, Department of Housing and Urban Development, Office of Administration, 202 755-5294

RIN: 2535-AA15

DEPARTMENT OF HOUSING AND URBAN DEVELOPMENT (HUD)
Office of Administration (OA)

Final Rule Stage

1017. AMENDMENT OF THE HUD ACQUISITION REGULATIONS (ADM-5-85; FR-2131)

Legal Authority: 40 USC 486(c); 42 USC 3535(d)

CFR Citation: 48 CFR Chap. 24

Legal Deadline: None.

Abstract: The rule adds Part 2452, Solicitation Provisions and Contract Clauses and Part 2453, Forms. When the original HUDAR was published in March, 1984, solicitation provisions and contract clauses were incorrectly placed, and no HUD forms were included at all.

Timetable:

Action	Date	FR Cite
NPRM	12/08/87	52 FR 46560
NPRM Comment Period End	02/08/88	52 FR 46560

Next Action Undetermined

Small Entity: No

Agency Contact: Gladyes Gines, Deputy Director, Policy & Evaluation, Divisioin, Department of Housing and Urban Development, Office of Administration, Office of Procurement and Contracts, 202 755-5294

RIN: 2535-AA10

DEPARTMENT OF HOUSING AND URBAN DEVELOPMENT (HUD)
Office of Administration (OA)

Completed Actions

1018. OMB CIRCULAR A-102, UNIFORM REQUIREMENT FOR ASSISTANCE TO STATE AND LOCAL GOVERNMENTS (ADM-1-86, FR-2178)

CFR Citation: 24 CFR 0045

Completed:

Reason	Date	FR Cite
Final Action	03/11/88	53 FR 8034
Final Action Effective	10/01/88	53 FR 8034

Small Entity: Undetermined

Agency Contact: Edward L. Girovasi 202 755-5294

RIN: 2535-AA13

DEPARTMENT OF HOUSING AND URBAN DEVELOPMENT (HUD)
Office of Public and Indian Housing (PIH)

Prerule Stage

1019. ● DETERMINATION OF WAGE RATES FOR MAINTENANCE AND TECHNICAL EMPLOYEES OF PUBLIC HOUSING AGENCIES AND INDIAN HOUSING AUTHORITIES (P-10-86; FR2211)

Legal Authority: 42 USC 1437j

CFR Citation: 24 CFR 0060

Legal Deadline: None.

Abstract: This rule would describe the Department's policies and procedures for determining or adopting prevailing wage rates under section 12 of the United States Housing Act of 1937.

VOL 53 ISS 79 PT 1 AP 25 1988 UMI

HUD—PIH **Prerule Stage**

Timetable:

Action	Date	FR Cite
Next Action Undetermined		

Small Entity: Undetermined

Agency Contact: Justin Logsdon, Assistant to the Secretary, Department of Housing and Urban Development, Office of the Secretary, 202 755-5370

RIN: 2577-AA68

1020. ● COMPREHENSIVE IMPROVEMENT ASSISTANCE PROGRAM: MULTI-STAGE FUNDING (P-1-88; FR-2415)

Legal Authority: 42 USC 1437l

CFR Citation: 24 CFR 968.5(g)

Legal Deadline: None.

Abstract: This final rule will change the provision of the current rule that limits multi-stage funding to two stages. Since the statute permits as many as five stages and there are situations where more than two stages are appropriate, the rule will amend sec. 968.5(g) to permit funding in as many as five stages.

Timetable:

Action	Date	FR Cite
ANPRM	04/00/88	

Small Entity: No

Agency Contact: Nancy Chisholm, Director, Policy Staff, Department of Housing and Urban Development, Office of Public and Indian Housing, 202 755-6713

RIN: 2577-AA55

1021. EFFECTS OF DEBT FORGIVENESS ON PUBLIC HOUSING AGENCY ANNUAL CONTRIBUTIONS CONTRACTS (P-6-87; FR-2409)

Legal Authority: 00 USC 0000

CFR Citation: 24 CFR 969; 24 CFR 970

Legal Deadline: None.

Abstract: This statement of policy will clarify the Department's policy with reference to the effect of the debt forgiveness provisions of the Consolidated Omnibus Budget Reconciliation Act of 1985 (COBRA) on public housing agency's annual contributions contracts (ACC) with HUD. The document will provide that debt forgiveness under COBRA does not constitute "payment in full" of ACC indebtedness, and that accordingly the obligations of a PHA under its ACC after debt forgiveness will continue until the ACC would have terminated if the debt had not been forgiven.

Timetable:

Action	Date	FR Cite
Statement of Policy	05/00/88	

Small Entity: No

Agency Contact: Robert Kenison, Associate General Counsel for Assisted, Housing & Community Development, Department of Housing and Urban Development, Office of Public and Indian Housing, 202 426-5212

RIN: 2577-AA51

DEPARTMENT OF HOUSING AND URBAN DEVELOPMENT (HUD)

Proposed Rule Stage

Office of Public and Indian Housing (PIH)

1022. ● ECONOMIC RENT AND PREFERENCE FOR NEAR ELDERLY FAMILIES IN PUBLIC HOUSING PROJECTS (P-4-88; FR-2462) 1987 HCD ACT

Legal Authority: 42 USC 1437a; PL 100-242, Sec 102(a); PL 100-242, Sec 111

CFR Citation: 00 CFR 000

Legal Deadline: None.

Abstract: This rule would permit PHAs to establish monthly ceiling rents for a period of three years of amounts determined by the PHAs to be appropriate but do not exceed certain statutory limitations. This rule would also give PHAs the discretion to give preference to families between 50 years and 62 years of age before families that are below the age of 50.

Timetable:

Action	Date	FR Cite
NPRM	06/00/88	

Small Entity: Undetermined

Agency Contact: Nancy Chisholm, Director, Office of Policy, Department of Housing and Urban Development, Office of Public and Indian Housing, 202 755-6713

RIN: 2577-AA57

1023. ● REPLACEMENT HOUSING FOR PUBLIC HOUSING DEMOLITION AND DISPOSITION (P-5-88; FR-2463) 1987 HCD ACT

Legal Authority: 42 USC 1437p; PL 100-242, Sec 121(a)-(d)

CFR Citation: 00 CFR 000

Legal Deadline: None.

Abstract: This rule would establish procedures for the approval and funding of replacement housing for public housing units that have been demolished or disposed of. In addition, this rule would require that HUD may approve an application for demolition if the project is obsolete, making it unusable for housing purposes and if no reasonable program modifications are feasible to return the project to a useful life. The rule would also require HUD, in allocating assistance for public housing acquisition or development or for Section 8 moderate rehabilitation, to give consideration to housing that replaces demolished public housing units in accordance with an approved replacement plan. PHAs would be prohibited from taking any action to demolish or dispose of public housing projects without obtaining HUD's approval and satisfying pertinent statutory requirements.

Timetable:

Action	Date	FR Cite
NPRM	09/00/88	

Small Entity: Undetermined

Agency Contact: Nancy Chisholm, Director, Office of Policy, Department of Housing and Urban Development, Office of Public and Indian Housing, 202 755-6713

RIN: 2577-AA58

1024. ● LIMITATION ON PUBLIC HOUSING DEVELOPMENT (P-6-88; FR-2464) 1987 HCD ACT

Significance: Agency Priority

Legal Authority: 42 USC 1437c; 42 USC 1437d; PL 100-242, Sec 103(a)&(b)

CFR Citation: 00 CFR 000

Legal Deadline: None.

Abstract: This rule would impose limitations on the use of public housing funds for development purposes for fiscal years beginning with fiscal year 1988. This rule would also require that (1) HUD enter into a contract involving new construction only if the PHA demonstrates to HUD's satisfaction that the cost of new construction is less than the cost of acquisition and rehabilitation and (2) the area for making this determination is the neighborhood where the PHA determines that the housing is needed.

Timetable:

Action	Date	FR Cite
NPRM	09/00/88	

Small Entity: Undetermined

Agency Contact: Nancy Chisholm, Director, Office of Policy, Department of Housing and Urban Development, Office of Public and Indian Housing, 202 755-6713

RIN: 2577-AA59

1025. ● IMPLEMENTATION OF PERCENTAGE LIMIT PROVISIONS UNDER SECTION 16 OF THE UNITED HOUSING ACT OF 1937 (P-7-88; FR-2465)1987 HCD ACT

Significance: Agency Priority

Legal Authority: 42 USC 1437n

CFR Citation: 00 CFR 000

Legal Deadline: Statutory, April 1988.

Abstract: This rule would establish admission procedures which set differing percentage limitations on admission of lower income families in separate assisted housing programs that when aggregated will achieve the overall 5 percent limitation on occupancy under public housing annual contribution contracts and section 8 housing assistance payments contracts.

Timetable:

Action	Date	FR Cite
NPRM	04/00/88	

Small Entity: No

Agency Contact: Nancy Chisholm, Director, Office of Policy, Department of Housing and Urban Development, Office of Public and Indian Housing, 202 755-6713

RIN: 2577-AA60

1026. TURNKEY III HOMEOWNERSHIP OPPORTUNITIES PROGRAM (P-3-85; FR-2138)

Legal Authority: 42 USC 1437

CFR Citation: 24 CFR 904

Legal Deadline: None.

Abstract: This would make miscellaneous amendments to the existing Turnkey III program regulations to facilitate program administration and to allow flexibility to address specific local problems. The amendments will clarify appropriate procedures to use when existing occupants are eligible to become homebuyers to facilitate the actual sales of the units.

Timetable:

Action	Date	FR Cite
Next Action Undetermined		

Small Entity: Undetermined

Agency Contact: Wayne Hunter, Senior Program Analyst, Department of Housing and Urban Development, Office of Public and Indian Housing, Office of Public Housing, 202 755-6713

RIN: 2577-AA34

1027. INDIAN HOUSING PROGRAM—REVISED PROGRAM REGULATIONS (P-2-86; FR-2208)

Legal Authority: 25 USC 450e(b)

CFR Citation: 24 CFR 905

Legal Deadline: None.

Abstract: This rule will constitute a consolidation of relevant provisions of regulations flowing from the U.S. Housing Act of 1937, as these affect the Indian housing programs. It is the Department's intention that this consolidated Part 905, followed with a comprehensive Indian Housing Handbook, should be the controlling regulatory package governing the development and operation of Indian housing projects.

Timetable:

Action	Date	FR Cite
NPRM	04/00/88	

Small Entity: No

Additional Information: Includes: P-31-82 (RIN: 2577-AA17)

Agency Contact: Patricia Arnaudo, Deputy Director, Office of Indian Housing, Department of Housing and Urban Development, Office of Public and Indian Housing, 202 755-1015

RIN: 2577-AA32

1028. ● PUBLIC HOUSING RESIDENT MANAGEMENT; PUBLIC HOUSING HOMEOWNERSHIP (P-9-88; FR-2489) 1987 HCD ACT

Significance: Regulatory Program

Legal Authority: PL 100-242, Sec 122; PL 100-242, Sec 123

CFR Citation: 24 CFR 905; 24 CFR 965; 24 CFR 967

Legal Deadline: None.

Abstract: Sections 122 and 123 of the Housing and Community Development Act of 1987 (Pub. L. 100-242, approved February 5, 1988) (1987 Act) amended the United States Housing Act of 1937 to encourage increased resident management of public housing projects and to promote homeownership among public housing tenants. The two new statutory initiatives are closely related, in that the homeownership program described in section 123 is intended to be undertaken only where the residents of a multifamily public housing project participating in the program have already formed a resident management corporation as prescribed in section 122. HUD will publish a proposed rule.

Timetable:

Action	Date	FR Cite
NPRM	07/00/88	

Small Entity: No

Government Levels Affected: Local, State, Federal

Agency Contact: Nancy Chisholm, Director, Office of Policy, Department of Housing and Urban Development, Office of Public and Indian Housing, 202 755-6713

RIN: 2577-AA65

1029. INCREASE IN SINGLE PERSON OCCUPANCY LIMITS (P-48-84; FR-2063)

Legal Authority: 42 USC 1437a

CFR Citation: 24 CFR 812; 24 CFR 912

Legal Deadline: None.

Abstract: Implements Section 202 of the Housing and Urban-Rural Recovery Act of 1983 to permit the Secretary to increase from 15 percent to 30 percent the number of units that may be occupied by single persons and that is

within the jurisdiction of any public housing agency. In addition, this rule would revise the procedures for HUD's approval of single person occupancy for affected dwelling units.

Timetable:

Action	Date	FR Cite
NPRM	05/00/88	

Small Entity: No

Additional Information: ADDITIONAL CONTACT PERSON: James J. Tahash; Director, Program Planning Division; Office of Multifamily Housing Management. (202) 426-3970.

Agency Contact: Edward Whipple, Chief, Occupancy Branch, Office of Public Housing, Department of Housing and Urban Development, Office of Public and Indian Housing, 202 426-0744

RIN: 2577-AA07

1030. ● CHANGE IN CONSOLIDATED SUPPLY PROGRAM (CSP) (P-11-88; FR2428)

Legal Authority: 42 USC 1437; 42 USC 1437a; 42 USC 1437d; 42 USC 1427g

CFR Citation: 24 CFR 965

Legal Deadline: None.

Abstract: This rule is proposing to remove the requirement to use purchase agreements for buying supplies with a value not in excess of the Open Market Purchase Limitation (currently $10,000).

Timetable:

Action	Date	FR Cite
NPRM	04/00/88	

Small Entity: Undetermined

Agency Contact: Michael E. Diggs, Chief, Consolidation Supply & Procurement, Branch, Department of Housing and Urban Development, Office of Public and Indian Housing, 202 472-4703

RIN: 2577-AA67

1031. ● REVISED COMPREHENSIVE IMPROVEMENT ASSISTANCE PROGRAM (P-8-88; FR-2488)

Significance: Regulatory Program

Legal Authority: PL 100-242, Sec 119

CFR Citation: 24 CFR 967

Legal Deadline: None.

Abstract: Section 119 of the Housing and Community Development Act of 1987 (Pub. L. 100-242, approved February 5, 1988) begins a two-part legislative process designed to develop an improved means of allocating funds for the Comprehensive Improvement Assistance Program (CIAP)

Section 119 contemplates the adoption, by the Congress, of a follow-up statute providing for a revised method for allocating assistance under the new Comprehensive Plan provisions. Until this additional legislation is approved, HUD's current method of allocating funds will continue in effect.

The Department will develop procedural rules to govern administration of CIAP under the new system outlined in section 119, and will publish proposed rules on the subject.

After a new statutory formula is adopted, the Department will publish a final rule linking the statutory allocation method with the previously proposed procedural rule, so that the "CIAP Block Grant" concept can be put into operation as promptly as possible.

Timetable:

Action	Date	FR Cite
NPRM	07/00/88	

Small Entity: No

Additional Information: Final action dependent on Congressional adoption of CIAP formula revisions to be submitted by HUD in 1988.

Government Levels Affected: Local, State, Federal

Agency Contact: Nancy Chisholm, Director, Office of Policy, Department of Housing and Urban Development, Office of Public and Indian Housing, 202 755-6713

RIN: 2577-AA66

1032. DECONTROL OF PUBLIC HOUSING AUTHORITIES; CIAP DEVELOPMENT (P-5-87; FR2408)

Legal Authority: 42 USC 1437

CFR Citation: 24 CFR 968.12(i); 24 CFR 968.15

Legal Deadline: None.

Abstract: This rule change to Part 968 would allow for PHAs who qualify as Recognized Performers to certify compliance with HUD requirements instead of obtaining HUD approval in two areas: management improvement contracts and line item budget revisions. Recognized Performers would still be required to include all elements of the appropriate certification specified in the rule, and to maintain the certification in their files.

Timetable:

Action	Date	FR Cite
Next Action Undetermined		

Small Entity: No

Agency Contact: Nancy S. Chisholm, Director, Policy Staff, Department of Housing and Urban Development, Office of Public and Indian Housing, 202 755-6713

RIN: 2577-AA48

1033. PHA OBLIGATIONS WITH RESPECT TO RESIDUAL RECEIPTS IN THE PUBLIC HOUSING, TURNKEY III, AND SEC. 23 PROGRAMS; (P-2-87; FR2354; FORMERLY H-27-87)

Legal Authority: 42 USC 1437g

CFR Citation: 24 CFR 989

Legal Deadline: None.

Abstract: This rule would reiterate the requirement of the Annual Contributions Contract that a PHA must submit to HUD its residual receipts within 60 days of the end of its fiscal year. The rule would also prescribe the method for determining the rate of interest due when residuals are not remitted on time. The rule will contain provisions for retention of residual receipts by the PHA under certain circumstances.

Timetable:

Action	Date	FR Cite
NPRM	07/00/88	

Small Entity: Undetermined

Agency Contact: Nancy Chisholm, Director, Office of Policy, Office of Policy & Indian Housing, Department of Housing and Urban Development, Office of Public and Indian Housing, 202 755-6713

RIN: 2577-AA49

1034. DISALLOWANCE OF LEGAL FEES; LITIGATION CONTROLS FOR HUD ASSISTANCE RECIPIENTS (P-2-85; FR-2134)

Legal Authority: 42 USC 1437g

CFR Citation: 24 CFR 989

Legal Deadline: None.

HUD—PIH **Proposed Rule Stage**

Abstract: This proposed rule will declare HUD policy regarding PHA legal expenses for litigation against HUD and prescribe limited litigation reporting procedures for HUD assistance recipients.

Timetable:

Action	Date	FR Cite
NPRM	06/00/88	

Small Entity: No

Agency Contact: Nancy Chisholm, Director, Office of Policy, Department of Housing and Urban Development, Office of Public and Indian Housing, 202 755-6713

RIN: 2577-AA33

1035. ● REVISION TO PFS - '87 ACT CHANGES (P-2-88; FR-2437) 1987 HCD ACT

Significance: Regulatory Program

Legal Authority: 42 USC 1437g

CFR Citation: 24 CFR 990

Legal Deadline: Statutory, June 15, 1988. The 1987 Act requires that the PFS be revised by June 15, 1988 for insurance costs. The 1987 Act also directs that changes in PFS generally be made effective before the start of a fiscal year and remain in place unchanged for an entire fiscal year. We expect to publish a proposed rule by June 15, 1988.

Abstract: This proposed rule will explore ways to change PHA/IHA risk protection coverage to reduce the financial impact and will revise the PFS' coverage of insurance costs. It also will include a formal review process, as required by section 118 of the 1987 Act.

Section 118 of the Housing and Community Development Act of 1987 requires that HUD revise the PFS "to accurately reflect the increase in insurance costs incurred by (PHAs)."

Timetable:

Action	Date	FR Cite
NPRM	06/00/88	

Small Entity: No

Agency Contact: Nancy Chisholm, Director, Policy Staff, Office of Public Housing, Department of Housing and Urban Development, Office of Public and Indian Housing, 202 755-6713

RIN: 2577-AA56

DEPARTMENT OF HOUSING AND URBAN DEVELOPMENT (HUD) — Final Rule Stage

Office of Public and Indian Housing (PIH)

1036. PUBLIC AND INDIAN HOUSING - COST CONTAINMENT PROCEDURES (P-1-86; FR-2191)

Significance: Regulatory Program

Legal Authority: 42 USC 1437d; PL 99-160

CFR Citation: 24 CFR 968; 24 CFR 941; 24 CFR 905

Legal Deadline: None.

Abstract: This rule will amend Public housing development regulations to reflect the repeal of Sec. 6(b) of the United States Housing Act. Sec. 6(b) limits on dwelling construction and equipment cost for the different areas of the country. The rule will also amend these regulations to incorporate new cost containment procedures.

Timetable:

Action	Date	FR Cite
NPRM	09/24/86	51 FR 33904

Next Action Undetermined

Small Entity: No

Agency Contact: Nancy Chisholm, Director, Office of Policy, Department of Housing and Urban Development, Office of Public and Indian Housing, 202 755-6713

RIN: 2577-AA37

1037. PREEMPTION OF CERTAIN STATE-DETERMINED PREVAILING WAGE RATES APPLICABLE TO PUBLIC AND INDIAN HOUSING PROJECTS (P-6-86; FR-2231)

Legal Authority: 42 USC 1437j

CFR Citation: 24 CFR 905.211

Legal Deadline: None.

Abstract: This rule would make State-determined prevailing wage rates inapplicable to Public and Indian Housing projects if these wage rates exceed the applicable federally-determined prevailing wage rates.

Timetable:

Action	Date	FR Cite
NPRM	10/21/87	52 FR 39233
NPRM Comment Period End	12/21/87	52 FR 39233
Final Action	06/00/88	

Small Entity: No

Agency Contact: Justin Logsdon, Assistant to the Secretary, Department of Housing and Urban Development, Office of the Secretary, 202 755-5370

RIN: 2577-AA42

1038. PUBLIC HOUSING – TENANT LEASES AND PHA GRIEVANCE HEARINGS (P-26-79; FR-1164)

Significance: Regulatory Program

Legal Authority: 42 USC 1437

CFR Citation: 24 CFR 960; 24 CFR 966

Legal Deadline: None.

Abstract: Would amend the regulations to simplify the requirements for provisions included in the lease between a PHA and its tenants and the requirements for the grievance procedure.

Timetable:

Action	Date	FR Cite
NPRM	07/23/86	51 FR 26504
NPRM Comment Period End	09/22/86	
Final Action	05/00/88	

Small Entity: No

Agency Contact: Edward Whipple, Department of Housing and Urban Development, Office of Public and Indian Housing, 202 426-0744

RIN: 2577-AA18

1039. INDIVIDUAL METERING OF UTILITIES OF EXISTING PHA-OWNED PROJECTS (P-36-83; FR-1769)

Legal Authority: 42 USC 1437 note; 42 USC 1437a; 42 USC 1437d; 42 USC 1437g

CFR Citation: 24 CFR 965.304; 24 CFR 965.310; 24 CFR 965.404; 24 CFR 965.408

Legal Deadline: None.

Abstract: Rule would revise the factors that PHAs use in estimating utility consumption savings resulting from conversions from mastermetered

VOL 53 ISS 79 PT 1 APR 25 1988 UMI

HUD—PIH **Final Rule Stage**

utilities systems to individually metered system and would amend energy audit provisions.

Timetable:

Action	Date	FR Cite
NPRM	11/14/83	48 FR 51785
NPRM Comment Period End	01/13/84	48 FR 51785

Next Action Undetermined

Small Entity: No

Agency Contact: Charles R. Ashmore, Utilities Officer, Department of Housing and Urban Development, Office of Public and Indian Housing, 202 755-6649

RIN: 2577-AA27

1040. PHA-OWNED AND LEASED PROJECT; MAINTENANCE AND OPERATION; TENANT ALLOWANCE FOR UTILITIES (P-8-86; FR-2260)

Legal Authority: 42 USC 1437; 42 USC 1437a; 42 USC 1437d; 42 USC 1437g

CFR Citation: 24 CFR 965

Legal Deadline: None.

Abstract: HUD's procedures for the establishment and administration by PHAs of allowances for utilities and surcharges for excess consumption are contained in Part 965, Subpart E. This rule amends Subpart E to clarify how utility consumption attributable to air conditioning and certain tenant supplied major equipment will be treated under the allowance and surcharge provisions.

Timetable:

Action	Date	FR Cite
NPRM	10/16/87	52 FR 38470
NPRM Comment Period End	12/04/87	52 FR 38470
Final Action	00/00/00	

Small Entity: No

Agency Contact: Charles Ashmore, Utility Specialist, Department of Housing and Urban Development, Office of Public and Indian Housing, 202 755-6640

RIN: 2577-AA40

1041. PUBLIC AND INDIAN HOUSING COST CONTAINMENT PROCEDURES - COMPREHENSIVE IMPROVEMENT ASSISTANCE PROGRAM AND INDIAN HOUSING (P-9-86; FR-2262)

Legal Authority: 42 USC 1437d; PL 99-160

CFR Citation: 24 CFR 968; 24 CFR 905

Legal Deadline: None.

Abstract: This rule would amend the Comprehensive Improvement Assistance Program and the Indian Housing Program regulations to reflect the repeal of Section 6(b) of the United States Housing Act. Section 6(b) limits dwelling construction and equipment costs for various areas of the country. This rule will also amend the regulations to incorporate new cost containment procedures.

Timetable:

Action	Date	FR Cite
NPRM	02/11/87	52 FR 4349
NPRM Comment Period End	04/13/87	52 FR 4349

Next Action Undetermined

Small Entity: No

Additional Information: This proposed rule was split off from FR-2191.

Government Levels Affected: Local

Agency Contact: Nancy Chisholm, Director, Office of Policy, Department of Housing and Urban Development, Office of Public and Indian Housing, 202 755-6713

RIN: 2577-AA43

DEPARTMENT OF HOUSING AND URBAN DEVELOPMENT (HUD)

Completed Actions

Office of Public and Indian Housing (PIH)

1042. INDIAN PREFERENCE (P-4-87; FR2391)

CFR Citation: 24 CFR 905.20y

Completed:

Reason	Date	FR Cite
Withdrawn	03/11/88	

Small Entity: Undetermined

Agency Contact: Joan Ladesh 202 755-1015

RIN: 2577-AA50

1043. CHANGE IN INFLATION FACTOR USED TO CALCULATE PUBLIC HOUSING OPERATING SUBSIDY (P-1-87 (FORMERLY H-24-87); FR-2353)

CFR Citation: 24 CFR 990.102

Completed:

Reason	Date	FR Cite
Withdrawn	01/06/88	

Small Entity: Undetermined

Agency Contact: Nancy S. Chisholm 202 755-6713

RIN: 2577-AA47

[FR Doc. 88-5083 Filed 04-22-88; 8:45 am]

BILLING CODE 4210-01-T

federal register

Monday
April 25, 1988

Part X

Department of the Interior

Semiannual Regulatory Agenda

VOL 53 ISS 79 PT 1 APR 25 1988 UMI

DEPARTMENT OF THE INTERIOR (DOI)

DEPARTMENT OF THE INTERIOR

Office of the Secretary

25 CFR Ch. I

30 CFR Chs. II, IV and VII

36 CFR Ch. I

43 CFR Subtitle A, Chs. I and II

48 CFR Ch. 14

50 CFR Chs. I and IV

Semiannual Agenda of Rules Scheduled for Review or Development

AGENCY: Office of the Secretary, Interior.

ACTION: Semiannual agenda of rules scheduled for review or development.

SUMMARY: This notice provides the semiannual agenda of rules scheduled for review or development between April 1988 and October 1988. An agenda is required by Executive Order 12291 and the Regulatory Flexibility Act.

ADDRESS: Unless otherwise indicated, all Agency Contacts are located at the Department of the Interior, 18th and C Streets, NW., Washington, DC 20240.

FOR FURTHER INFORMATION CONTACT: All comments and inquiries with regard to these rules should be directed to the appropriate Agency Contact. General comments relating to the agenda should be directed to the Division of Directives and Regulatory Management, Office of Management Analysis, Department of the Interior, at the address above or on 202-343-6191.

SUPPLEMENTARY INFORMATION: With this publication, the Department satisfies the requirement of Executive Order 12291 that the Department publish in April and October of each year an agenda of rules that have been issued or are expected to be issued, and currently effective rules that are scheduled for review.

Simultaneously, the Department meets the requirement of the Regulatory Flexibility Act (5 U.S.C. 601 *et seq.*) that an agenda be published in April and October of each year identifying rules which will have significant economic effects on a substantial number of small entities; those rules which will have such effects are specifically identified in the agenda.

This agenda also identifies rules determined to be "significant" under Executive Order 12498 and which are included in this Department's 1988-89 regulatory program. A more comprehensive discussion of this program and the rules are contained in the Regulatory Program of the United States Government which is published by the Office of Management and Budget.

Dated: February 25, 1988.

Rick Ventura,

Assistant Secretary, Policy, Budget & Administration.

Assistant Secretary for Policy, Budget, and Administration—Prerule Stage

Sequence Number	Title	Regulation Identifier Number
1044	Natural Resource Damage Assessments	1090-AA21
1045	Natural Resource Damage Assessments	1090-AA23

Assistant Secretary for Policy, Budget, and Administration—Proposed Rule Stage

Sequence Number	Title	Regulation Identifier Number
1046	Natural Resource Damage Assessments	1090-AA22
1047	Certification of Non-Delinquency by Applicants for Federal Financial Assistance	1090-AA19
1048	Department of the Interior Acquisition Regulation	1090-AA10
1049	Department of the Interior Acquisition Regulation	1090-AA14
1050	Department of the Interior, Procurement Ethics Regulation	1090-AA15

Assistant Secretary for Policy, Budget, and Administration—Final Rule Stage

Sequence Number	Title	Regulation Identifier Number
1051	Department of the Interior - Nonprocurement Debarment and Suspension Regulation	1090-AA12
1052	Department of the Interior Acquisition Regulation	1090-AA13

DOI

Assistant Secretary for Policy, Budget, and Administration—Completed Actions

Sequence Number	Title	Regulation Identifier Number
1053	Privacy Act	1090-AA20
1054	Uniform Administrative Requirements for Grants and Cooperative Agreements to State and Local Governments	1090-AA11

Office of the Solicitor—Proposed Rule Stage

Sequence Number	Title	Regulation Identifier Number
1055	Practices Before the Department	1092-AA00

Office of the Solicitor—Completed Actions

Sequence Number	Title	Regulation Identifier Number
1056	Records and Testimony; Freedom of Information Act	1092-AA02
1057	Trans-Alaska Pipeline Liability Fund	1092-AA03
1058	Implementation of the Program Fraud Civil Remedies Act	1092-AA05
1059	Take Pride in America	1092-AA06

Office for Equal Opportunity—Proposed Rule Stage

Sequence Number	Title	Regulation Identifier Number
1060	Nondiscrimination on the Basis of Sex in Education Programs and Activities Receiving or Benefiting from Federal Financial Assistance	1091-AA02

Office for Equal Opportunity—Final Rule Stage

Sequence Number	Title	Regulation Identifier Number
1061	Nondiscrimination on the Basis of Age in Programs or Activities Receiving Federal Financial Assistance	1091-AA00

Office of Hearings and Appeals—Proposed Rule Stage

Sequence Number	Title	Regulation Identifier Number
1062	Tribal Acquisition of Interests Under Special Statute	1094-AA08
1063	Special Rules Applicable to Public Land Hearings and Appeals	1094-AA25

DOI

Office of Hearings and Appeals—Final Rule Stage

Sequence Number	Title	Regulation Identifier Number
1064	Department Hearings and Appeals Procedures	1094-AA26
1065	Special Rules Applicable in Indian Affairs Hearings and Appeals	1094-AA31
1066	Special Rules Applicable to Surface Coal Mining Hearings and Appeals	1094-AA28
1067	Burden of Proof in Civil Penalty Proceedings	1094-AA33
1068	Amendment of Regulation Establishing Age at Which an Indian Can Execute a Will Devising Trust or Restricted Property	1094-AA35
1069	Special Rules Applicable to Public Land Hearings and Appeals	1094-AA30
1070	Service of Notice of Appeal and of Other Documents	1094-AA34

Office of Hearings and Appeals—Completed Actions

Sequence Number	Title	Regulation Identifier Number
1071	Special Rules Applicable to Surface Coal Mining Hearings and Appeals	1094-AA29
1072	Department Hearings and Appeals Procedures; Subpart A–General; Office of Hearings and Appeals; Power of the Secretary and Director	1094-AA32

United States Fish and Wildlife Service—Proposed Rule Stage

Sequence Number	Title	Regulation Identifier Number
1073	Injurious Wildlife - Mitten Crabs	1018-AB04
1074	Injurious Wildlife	1018-AB13
1075	Captive Bred Wildlife	1018-AB10
1076	Proposed Determination of Nonessential Experimental Population Status for an Introduced Population of the Nashville Crayfish in Tennessee	1018-AB12
1077	Marine Mammals: Incidental Taking by Commercial Fishing Operations	1018-AA96
1078	Marine Mammals: Take of Small Numbers Incidental to Specified Activities	1018-AB05
1079	Migratory Bird Hunting	1018-AA24
1080	Nontoxic Shot Regulations for Hunting Migratory Birds	1018-AA93
1081	Subsistence Take of Migratory Birds in Alaska	1018-AB03
1082	Hunting	1018-AA71
1083	Sport Fishing	1018-AA50
1084	Implementation of Klamath River Basin Fishery Resources Restoration Act	1018-AB11

United States Fish and Wildlife Service—Final Rule Stage

Sequence Number	Title	Regulation Identifier Number
1085	Humane Transport of Wild Mammals and Birds	1018-AA07
1086	Importation, Exportation, and Transportation of Wildlife	1018-AA79
1087	Endangered and Threatened Wildlife and Plants	1018-AA10
1088	Endangered and Threatened Wildlife and Plants	1018-AA84
1089	Endangered and Threatened Wildlife and Plants	1018-AA85
1090	Endangered and Threatened Wildlife and Plants	1018-AA95
1091	Endangered and Threatened Wildlife and Plants	1018-AA98
1092	Endangered and Threatened Wildlife and Plants	1018-AB02
1093	Endangered and Threatened Wildlife and Plants	1018-AB06
1094	Proposed Determination of Nonessential Experimental Population Status for an Introduced Population of the Yellowfin Madtom in Virginia	1018-AB08
1095	Proposed Determination of Experimental Population Status for an Introduced Population of Colorado Squawfish	1018-AB09
1096	Endangered and Threatened Wildlife and Plants	1018-AB14
1097	Marine Mammals: Reporting and Sealing Requirements for Alaska Natives	1018-AA20

VOL 53 ISS 79 PT 1 AP 25 1988 UMI

DOI

United States Fish and Wildlife Service—Final Rule Stage—Continued

Sequence Number	Title	Regulation Identifier Number
1098	Subsistence Take of Migratory Birds	1018-AA92
1099	General Permit Procedures and Migratory Bird Permits: Raptor Propagation and Falconry Regulations	1018-AB01
1100	Endangered Species Convention	1018-AA29
1101	Public Entry and Use	1018-AA36
1102	Fish and Wildlife Restoration Grants; Interest Earned on License Fees	1018-AA97

National Park Service—Prerule Stage

Sequence Number	Title	Regulation Identifier Number
1103	National Park Service Acquisition Regulation	1024-AB35

National Park Service—Proposed Rule Stage

Sequence Number	Title	Regulation Identifier Number
1104	Appalachian National Scenic Trail	1024-AB07
1105	Hawaii Volcanoes National Park: Fishing Regulations	1024-AB56
1106	Mammoth Cave NP: Fishing	1024-AA94
1107	Cape Hatteras National Seashore: Off-Road Vehicle Regulations	1024-AB54
1108	Rocky Mountain National Park: Fishing Regulations	1024-AB46
1109	Rocky Mountain National Park: Trucking Regulations	1024-AB57
1110	Glen Canyon National Recreation Area: Commercial Operations and Whitewater Boating Regulations	1024-AB72
1111	Big Thicket National Preserve: Hunting Regulations	1024-AB48
1112	Whiskeytown National Recreation Area Fishing Regulations	1024-AB51
1113	Cape Lookout National Seashore: Off-Road Vehicles	1024-AA89
1114	Minerals Management - Non-Federal Oil and Gas	1024-AB39
1115	Management of Mineral Development Associated with Mining Claims	1024-AB74
1116	Minerals Management: Nonfederal Rights Other Than Oil and Gas	1024-AB75
1117	NPS Units in Alaska: Concessions	1024-AB18
1118	Archeological and Historic Preservation Act; Department of the Interior Regulations	1024-AA49
1119	Historic Preservation Certifications Pursuant to Section 48(g) and Section 170(h) of the Internal Revenue Code of 1986	1024-AB73
1120	Cemetery Sites and Historical Places	1024-AA84

National Park Service—Final Rule Stage

Sequence Number	Title	Regulation Identifier Number
1121	Cuyahoga Valley NRA: Off-Road Vehicles and Snowmobiles	1024-AB44
1122	Canyon De Chelly National Monument	1024-AB47
1123	Fort Jefferson NM: Fishing; Boundary Adjustments	1024-AA96
1124	Jean Lafitte NHP: Crawfishing Regulations	1024-AB33
1125	Everglades NP: Mining	1024-AB10
1126	Lake Mead National Recreation Area: Noise Abatement Exemption	1024-AB50
1127	Lake Chelan NRA: Target Practice	1024-AB19
1128	Ross Lake NRA: Target Practice	1024-AB28
1129	Big Cypress National Preserve: Indian Use and Occupancy	1024-AA07
1130	Whiskeytown Unit, Whiskeytown - Shasta - Trinity NRA Gold Panning Regulations	1024-AB71
1131	Bighorn Canyon National Recreation Area - Fishing Regulations	1024-AB63
1132	Management of Mining Claim Activities	1024-AB37
1133	NPS Units in Alaska: Closure Regulations	1024-AA71
1134	Fire Island National Seashore: Zoning	1024-AA80

National Park Service—Final Rule Stage—Continued

Sequence Number	Title	Regulation Identifier Number
1135	National Register of Historic Places	1024-AA44
1136	Determination of Eligibility for Inclusion in the National Register of Historic Places	1024-AA46
1137	Curation of Federally Owned and Administered Archeological Collections	1024-AB13

National Park Service—Completed Actions

Sequence Number	Title	Regulation Identifier Number
1138	Applicability and Scope	1024-AB64
1139	Discrimination in Employment Practices and Furnishing Public Services	1024-AB65
1140	Upper Delaware SRR: Fishing	1024-AA87
1141	Springfield Armory Museum Closure	1024-AB70
1142	Delaware Water Gap NRA: Fishing	1024-AA98
1143	Appraisal Authority Under the Land and Water Conservation Fund State Grant Program	1024-AB68

Bureau of Indian Affairs—Prerule Stage

Sequence Number	Title	Regulation Identifier Number
1144	Revision of the Membership Roll of the Eastern Band of Cherokee Indians, North Carolina	1076-AB54

Bureau of Indian Affairs—Proposed Rule Stage

Sequence Number	Title	Regulation Identifier Number
1145	Procedures for Establishing that an American Indian Group Exists as an Indian Tribe	1076-AC15
1146	The Indian Police	1076-AB98
1147	Financial Assistance and Social Services Program	1076-AB99
1148	Financial Assistance and Social Services Program	1076-AC13
1149	Federal Schools For Indians (Revision)	1076-AB47
1150	School Boards	1076-AC14
1151	The Indian School Equalization Program (New School Starts, Program Expansions, School Closures, Consolidations, and Program Reductions)	1076-AB48
1152	Grants to Tribally Controlled Community Colleges and Navajo Community College	1076-AA11
1153	Preparation of Rolls of Indians	1076-AC11
1154	Loans to Indians from the Revolving Loan Fund	1076-AC00
1155	Revolving Cattle Pool	1076-AC02
1156	Loan Guaranty, Insurance, and Interest Subsidy	1076-AC01
1157	Individual Indian Money Accounts	1076-AB91
1158	Management of Osage Judgment Funds for Education and Socio-Economic Programs	1076-AB51
1159	Leasing of Restricted Lands of Members of Five Civilized Tribes, Oklahoma, for Mining	1076-AB41
1160	Contracts Under Indian Self-Determination Act (Subpart H - New School Starts and Program Expansions)	1076-AB49
1161	Small Tribes Governmental Assistance Grant Program	1076-AC10
1162	Indian Business Development Program	1076-AA55
1163	Tribal Gaming Management Contracts	1076-AC07
1164	Buy Indian Act Contracting	1076-AA56

VOL 53 ISS 79 PT 1 APR 25 1988 UMI

DOI

Bureau of Indian Affairs—Final Rule Stage

Sequence Number	Title	Regulation Identifier Number
1165	Appeals from Administrative Actions	1076-AB21
1166	Law and Order on Indian Reservations	1076-AA01
1167	Education Personnel	1076-AB02
1168	Administration of the Higher Education Program	1076-AA10
1169	Administration of the Indian Adult Education Programs	1076-AA15
1170	Preparation of a Roll of Alaska Natives	1076-AC12
1171	Attorney Fee Contracts with Indian Tribes; Payment of Tribal Attorney Fees with Federally Appropriated Funds	1076-AB87
1172	Navajo Grazing Regulations	1076-AA33
1173	Rights-of-Way Over Indian Lands	1076-AB89
1174	San Carlos Indian Irrigation Project, Arizona	1076-AC08
1175	Life Estates and Future Interests	1076-AC06
1176	Contracts for Prospecting and Mining on Indian Mineral Lands	1076-AA38
1177	Leasing of Allotted Lands for Mining	1076-AA39
1178	Oil and Gas Mineral Agreements	1076-AA82
1179	Leasing of Osage Reservation Lands for Oil and Gas Mining	1076-AC09
1180	Indian Fishing: Hoopa Valley Indian Reservation	1076-AA83

Bureau of Indian Affairs—Completed Actions

Sequence Number	Title	Regulation Identifier Number
1181	Law Enforcement Expenditures	1076-AB97
1182	Enrollment Appeals	1076-AB95
1183	Enrollment of Indians of the San Pasqual Band of Mission Indians in California	1076-AB59
1184	Use or Distribution of Indian Judgment Funds	1076-AB20
1185	Annuity and Other Per Capita Payments	1076-AB45
1186	Procedures for Depositing Funds to the Credit of 14X6140- Deposits of Proceeds of Lands Withdrawn for Native Selection, BIA	1076-AB67
1187	Land Records and Title Documents	1076-AB68
1188	Roads of the Bureau of Indian Affairs	1076-AB05
1189	Leasing of Osage Reservation Lands for Oil and Gas Mining	1076-AB79

Minerals Management Service—Prerule Stage

Sequence Number	Title	Regulation Identifier Number
1190	Air Quality -- Outer Continental Shelf Wide	1010-AB14

Minerals Management Service—Proposed Rule Stage

Sequence Number	Title	Regulation Identifier Number
1191	Processing and Transportation Allowances, Return on Capital Investment	1010-AB12
1192	Recoupments and Refunds of Excess Payments Under Federal Offshore Mineral Leases	1010-AB11
1193	Revision of Regulations Governing Appeals	1010-AB13
1194	Air Quality - Offshore California	1010-AA61
1195	Leasing of Minerals Other than Oil, Gas, and Sulphur in the Outer Continental Shelf	1010-AA82
1196	Mining Operations for Minerals Other Than Oil, Gas, and Sulphur in the Outer Continental Shelf	1010-AA81

Minerals Management Service—Final Rule Stage

Sequence Number	Title	Regulation Identifier Number
1197	Valuation of Coal for Royalty Purposes from Federal and Indian Leases	1010-AA83
1198	Onshore Production Reporting and Accounting	1010-AB10
1199	Oil and Gas and Sulphur Operations on the Outer Continental Shelf (OCS)	1010-AA53
1200	Supplemental Sales	1010-AB05
1201	Nondiscrimination in Employment in the Outer Continental Shelf	1010-AA87
1202	Prospecting for Minerals Other than Oil, Gas, and Sulphur in the Outer Continental Shelf	1010-AA71

Minerals Management Service—Completed Actions

Sequence Number	Title	Regulation Identifier Number
1203	Valuation of Oil for Royalty Purposes from Federal and Indian Leases	1010-AA30
1204	Valuation of Gas and Gas Products for Royalty Purposes, from Federal and Indian Leases	1010-AA54
1205	Change Effective Date of Adopted Modifications to NTL-5	1010-AB09
1206	Royalty-In-Kind Crude Oil	1010-AA31
1207	Extension of Protection of Proprietary Data and Information Until a Subsequent Lease Sale in an Area	1010-AA93

Office of Surface Mining Reclamation and Enforcement—Proposed Rule Stage

Sequence Number	Title	Regulation Identifier Number
1208	Surface Coal Mining and Reclamation Operations; Two Acre Exemption Repeal	1029-AB16
1209	Surface Coal Mining Operations; Definition of In Connection With	1029-AB08
1210	Permanent Regulatory Program; Requirements for Permits for Special Categories of Mining	1029-AA54
1211	Permanent Regulatory Program Definition of Support Facilities	1029-AA94
1212	Interim Program Revisions	1029-AB24
1213	Requirements for Coal Exploration--Permit Requirements for Exploration Removing More than 250 Tons of Coal	1029-AA92
1214	Federal Regulatory Programs; Permit Application Fees	1029-AB15
1215	Federal Lands Program	1029-AA76
1216	Definition and Criteria for Valid Existing Rights	1029-AA77
1217	Lands Unsuitable Regulations	1029-AA90
1218	Permanent Regulatory Program Definitions; Areas Unsuitable for Mining	1029-AA80
1219	Reprocessing Coal Waste	1029-AB23
1220	Permanent Program Performance Standards; Disposal of Coal Mine Waste	1029-AB09
1221	Permanent Program Performance Standards; Surface Mining Activities; Contemporaneous Reclamation	1029-AB02
1222	Permanent Program Performance Standards; Surface and Underground Mining Activities; Backfilling and Grading	1029-AA57
1223	Disposal of Excess Spoil on Preexisting Benches	1029-AB18
1224	Assessment Conference Scheduling	1029-AB22
1225	Improvidently Issued Permits	1029-AB20
1226	Delinquent Abandoned Mine Land Reclamation Fees	1029-AB21
1227	Abandoned Mine Land Reclamation; State Reclamation Grants	1029-AB13
1228	Tennessee Program Amendment; Significant Permit Revisions	1029-AB17

Office of Surface Mining Reclamation and Enforcement—Final Rule Stage

Sequence Number	Title	Regulation Identifier Number
1229	Termination of Jurisdiction Under SMCRA	1029-AB07
1230	Permanent Program Performance Standards; Surface and Underground Activities; Roads	1029-AA60
1231	Exemption for Coal Extraction Incidental to the Extraction of Other Minerals	1029-AA53
1232	Surface Coal Mining and Reclamation Operations on Indian Lands	1029-AB04
1233	Substantial Legal and Financial Commitment	1029-AB01
1234	Surface Coal Mining and Reclamation Operations; Permanent Regulatory Program-Ownership And Control	1029-AA56

VOL 53 ISS 79 PT 1 AP 25 1988 UMI

DOI

Office of Surface Mining Reclamation and Enforcement—Final Rule Stage—Continued

Sequence Number	Title	Regulation Identifier Number
1235	Requirements For Permits and Permit Processing; Permit Applications Minimum Requirements For Legal Financial Civil Penalties	1029-AA66
1236	Permit Processing	1029-AB14
1237	Permanent Regulatory Program - Ownership Information	1029-AA96
1238	Permanent Regulatory Program; Requirements for Permits, Information on Hydrologic Impacts	1029-AB11
1239	Permanent Program Performance Standards; Highwall Policy	1029-AB10
1240	Permanent Program Performance Standards - Surface Mining Activities, Underground Mining Activities -- Revegetation	1029-AA86
1241	Permanent Program Performance Standards - Surface Mining Activities, Underground Mining Activities - Impoundments	1029-AA79
1242	Special Permanent Program Performance Standards; Operations on Prime Farmland	1029-AA64
1243	Surface Coal Mining and Reclamation Operations; Permanent Regulatory Programs; Permanent Program Inspection and Enforcement Procedures	1029-AA67
1244	Ten Day Notice Review Criteria	1029-AB12
1245	Collection of AML Fees - Moisture Content of Coal	1029-AB03
1246	California Federal Program	1029-AB05

Office of Surface Mining Reclamation and Enforcement—Completed Actions

Sequence Number	Title	Regulation Identifier Number
1247	Exemption for Coal Extraction Incidental to Government Financed Construction	1029-AA58
1248	Individual Civil Penalties	1029-AA81
1249	Surface Coal Mining and Reclamation Operations; Permanent Regulatory Program; Federal Program for A State; Procedural Requirements	1029-AA71
1250	Unsuitability Petition Process	1029-AB00
1251	Surface Mining Permit Applications; Minimum Requirements for Information on Environmental Resources	1029-AA74
1252	Permanent Regulatory Program - Mountaintop Removal	1029-AA97
1253	Requirements for Permits for Special Categories of Mining; Experimental Practices	1029-AB06
1254	Requirement to Release Performance Bonds	1029-AA91
1255	Permanent Program Performance Standards Underground Mining Activities - Hydrologic Balance Protection	1029-AA75
1256	State-Federal Cooperative Agreements	1029-AA40

Bureau of Reclamation—Proposed Rule Stage

Sequence Number	Title	Regulation Identifier Number
1257	Acreage Limitation Rules and Regulations	1006-AA17
1258	Procedure to Process and Recover the Value of Rights-of-Use and Administrative Costs Incurred in Permitting Such Use	1006-AA18

Bureau of Reclamation—Completed Actions

Sequence Number	Title	Regulation Identifier Number
1259	Off-Road Vehicle Use	1006-AA06
1260	Acreage Limitation Rules and Regulations	1006-AA16

DOI

Bureau of Land Management—Proposed Rule Stage

Sequence Number	Title	Regulation Identifier Number
1261	Public Land Records	1004-AA77
1262	Minerals (Nonmineral Entries on Mineral Lands)	1004-AB20
1263	Exchanges - General Procedures	1004-AB28
1264	Indian Allotments	1004-AB10
1265	Rights-of-Way, Principles and Procedures	1004-AB00
1266	Rights-of-Way under the Mineral Leasing Act	1004-AA98
1267	Recreation and Public Purposes Act Leases	1004-AA73
1268	Exploration Activity; Oil and Gas Leasing; Geothermal Resource Leasing - General	1004-AB13
1269	Oil and Gas Leasing - Fees, Rentals and Royalties	1004-AB31
1270	Oil and Gas Leasing Competitive Leases	1004-AB41
1271	Onshore Oil and Gas Order No. 8 - Well Workovers, Completions, Abandonments	1004-AB37
1272	Onshore Oil and Gas Order No. 7 - Disposal of Produced Water	1004-AA66
1273	Onshore Oil and Gas Order No. 6 - Hydrogen Sulfide Operations	1004-AA67
1274	Onshore Oil and Gas Operations - Onshore Oil and Gas Order Number 4-Measurement of Crude Oil	1004-AA96
1275	Onshore Oil and Gas Operations - Cooperative Agreements, Delegations of Authority and Contracts for Oil and Gas Inspection and Enforcement	1004-AB32
1276	Geothermal Resource Operations	1004-AB18
1277	Sales of Forest Products; General - Preparation for Sale	1004-AB34
1278	Onshore Oil and Gas Order No. 5 - Measurement of Natural Gas	1004-AB22
1279	Coal Exploration and Mining Operations Rules	1004-AB42
1280	Operating Regulations for Exploration, Development and Production	1004-AA68
1281	Multiple Use: Mining: Mining Claims Under the General Mining Laws	1004-AB04
1282	Mining Claims Under the General Mining Law Nature and Classes of Mining Claims Assessment Work	1004-AB43
1283	Mining Claims Under the General Mining Laws	1004-AB36
1284	Sales of Forest Products; Conduct of Sales	1004-AB39
1285	Sales of Forest Products; Award of Contract	1004-AB40
1286	Protection of Special Status Plants	1004-AB09
1287	Cultural Resource Management	1004-AA69
1288	Paleontology	1004-AA27
1289	Recreation: General	1004-AA35
1290	Cadastral Survey	1004-AB07
1291	Unauthorized Use of Public Lands	1004-AA38

Bureau of Land Management—Final Rule Stage

Sequence Number	Title	Regulation Identifier Number
1292	Oil and Gas Leasing and Geothermal Resource Leasing-General	1004-AA97
1293	Land Classification	1004-AB19
1294	Onshore Oil and Gas Order No. 2 - Drilling Operations	1004-AB21
1295	Onshore Oil and Gas Order No. 3 - Site Security	1004-AB24
1296	Management of Existing Leases	1004-AB38
1297	Grazing Administration - Exclusive of Alaska	1004-AB23
1298	Conduct of Sales (Timber)	1004-AB35
1299	Off-Road Vehicles	1004-AB26
1300	Use Authorizations; Special Recreation Permits	1004-AA36

Bureau of Land Management—Completed Actions

Sequence Number	Title	Regulation Identifier Number
1301	Alaska State Selection	1004-AA12
1302	Leases, Permits and Easements	1004-AB29
1303	Competitive Leasing; Environment	1004-AB25

VOL 53 ISS 79 PT 1 APR 25 1988 UMI

DOI

Office of the Secretary—Completed Actions

Sequence Number	Title	Regulation Identifier Number
1304	Natural Resource Damage Assessment - Type B Amendments	1093-AA05
1305	Department of the Interior, Procurement Ethics Regulation	1093-AA06

DEPARTMENT OF THE INTERIOR (DOI) — Prerule Stage

Assistant Secretary for Policy, Budget, and Administration (ASPBA)

1044. ● NATURAL RESOURCE DAMAGE ASSESSMENTS

Significance: Regulatory Program

Legal Authority: 42 USC 9651(c) CERCLA

CFR Citation: 43 CFR 11

Legal Deadline: Statutory, March 20, 1989. 42 USC 9651(c)(3) requires biennial review and revision as appropriate of the regulations.

Abstract: CERCLA allows natural resource trustees to bring a claim against a potentially responsible party for resources that have been injured by a release of a hazardous substance or, under certain circumstances, a discharge of oil. Section 301(c)(2)(A) calls for the promulgation of simplified procedures for coastal and marine environments through the use of a computer model known as the natural resource damage assessment model for coastal and marine environments (NRDAM/CME). Section 301(c)(3) of CERCLA requires the biennial review of these natural resource damage assessment regulations. Since type A regulations were published as a final rule with an effective date of April 20, 1987, the Department will issue an advance notice of proposed rulemaking (ANPRM). This ANPRM will ask trustees, other interested parties, and members of the public to draw upon their experience with the type A procedures to advise the Department of areas where revisions to the type A procedures may be appropriate.

Timetable:

Action	Date	FR Cite
ANPRM	10/20/88	

Small Entity: No

Agency Contact: Bruce Blanchard, Director, Office of Envir. ProjectReview, Department of the Interior, Assistant Secretary for Policy, Budget, and Administration, Room 4239, MIB, 1801 C Street, NW, Washington, DC 20240, 202 343-3891

RIN: 1090-AA21

1045. ● NATURAL RESOURCE DAMAGE ASSESSMENTS

Significance: Regulatory Program

Legal Authority: 42 USC 9651(c) CERCLA

CFR Citation: 43 CFR 11

Legal Deadline: None.

Abstract: The Department has promulgated regulations, codified at 43 CFR Part 11, for the assessment of damages to natural resources injured by a release of a hazardous substance or, under certain circumstances, a discharge of oil. The regulations provide two types of assessment procedures: simplified procedures requiring minimal field investigation, referred to as the type A procedures; and alternative protocols for the testing, sampling, and valuing of natural resource damages, referred to as the type B procedures. The type A procedures that have been developed are for use in coastal and marine environments. The Department has stated that, when possible, it would develop additional type A procedures for other environments or natural resources. An advance notice of proposed rulemaking (ANPRM) will be issued by the Department. This ANPRM will solicit suggestions and supporting technical information for possible development of other type A procedures.

Timetable:

Action	Date	FR Cite
ANPRM	01/15/89	

Small Entity: No

Agency Contact: Bruce Blanchard, Director, Office of Envir. ProjectReview, Department of the Interior, Assistant Secretary for Policy, Budget, and Administration, Room 4239, 1801 C St., NW, Washington, DC 20240, 202 343-3891

RIN: 1090-AA23

DEPARTMENT OF THE INTERIOR (DOI) — Proposed Rule Stage

Assistant Secretary for Policy, Budget, and Administration (ASPBA)

1046. ● NATURAL RESOURCE DAMAGE ASSESSMENTS

Significance: Regulatory Program

Legal Authority: 42 USC 9651(c) CERCLA

CFR Citation: 43 CFR Part 11

Legal Deadline: Statutory, September 1, 1988. 42 USC 9651(c)(3) requires biennial review and revision as appropriate of the regulations.

Abstract: CERCLA allows natural resource trustees to bring a claim against a potentially responsible party for resources that have been injured by a release of a hazardous substance or, under certain circumstances, a discharge of oil. Section 301(c)(2)(B) calls for the promulgation of a set of

BEST COPY AVAILABLE

alternative protocols for the testing, sampling, and valuing of natural resource damages, referred to as the type B procedures. Section 301(c)(3) of CERCLA requires the biennial review of these natural resource damage assessment regulations. Since the general process and type B regulations were published as a final rule with an effective date of September 1, 1986, the Department will issue an advance notice of proposed rulemaking. This ANPRM will ask trustees, other interested parties, and members of the public to draw upon their experience with the type B procedures, and the general assessment process, to advise the Department of areas where revisions to the process and the type B procedures may be appropriate.

Timetable:

Action	Date	FR Cite
ANPRM	03/00/88	
NPRM	09/01/89	

Small Entity: No

Agency Contact: Bruce Blanchard, Director, Office of Envir. ProjectReview, Department of the Interior, Assistant Secretary for Policy, Budget, and Administration, Room 4239, 1801 C St., NW, Washington, DC 20240, 202 343-3891

RIN: 1090-AA22

1047. ● CERTIFICATION OF NON-DELINQUENCY BY APPLICANTS FOR FEDERAL FINANCIAL ASSISTANCE

Legal Authority: 31 USC 3511; 31 USC 3512; 31 USC 3302; 31 USC 3701; 31 USC 3711; 31 USC 3716 to 3719

CFR Citation: 43 CFR 12

Legal Deadline: None.

Abstract: This Notice of Proposed Rulemaking proposes a regulation requiring that a certification of nondelinquency be included in applications for Federal financial assistance. This proposed regulation will implement Paragraph 6 of Office of Management and Budget Circular A-129, "Managing Federal Credit Programs."

Timetable:

Action	Date	FR Cite
NPRM	04/00/88	

Small Entity: No

Agency Contact: William Opdyke, Acting Chief, Acquisition and AssistanceDiv, Department of the Interior, Assistant Secretary for Policy, Budget, and Administration, Asst. Secretary for Policy Budget & Admin., 18th & C Sts., NW, Washington, DC 20240, 202 343-3433

RIN: 1090-AA19

1048. DEPARTMENT OF THE INTERIOR ACQUISITION REGULATION

Legal Authority: 5 USC 301

CFR Citation: 48 CFR 1400

Legal Deadline: None.

Abstract: This rule will implement changes in the FAR as a result of the Small Business and Federal Procurement Competition Enhancement Act of 1984, P.L. 98-577.

Timetable:

Action	Date	FR Cite
Next Action Undetermined		

Small Entity: No

Agency Contact: William S. Opdyke, Acting Chief, Acquisition and AssistanceDiv, Department of the Interior, Assistant Secretary for Policy, Budget, and Administration, 18th & C Streets, NW, Washington, DC 20240, 202 343-3433

RIN: 1090-AA10

1049. DEPARTMENT OF THE INTERIOR ACQUISITION REGULATION

Legal Authority: 5 USC 301

CFR Citation: 48 CFR 1400

Legal Deadline: None.

Abstract: This rule makes miscellaneous revisions to the Department of the Interior Acquisition Regulation.

Timetable:

Action	Date	FR Cite
Next Action Undetermined		

Small Entity: Undetermined

Agency Contact: William Opdyke, Acting Chief, Acquisition and AssistanceDiv, Department of the Interior, Assistant Secretary for Policy, Budget, and Administration, 18th & C Streets, NW, Washington, DC 20240, 202 343-3433

RIN: 1090-AA14

1050. ● DEPARTMENT OF THE INTERIOR, PROCUREMENT ETHICS REGULATION

Legal Authority: 5 USC 301; EO 11222; 43 CFR 20.735

CFR Citation: 48 CFR 1400

Legal Deadline: None.

Abstract: This notice of proposed rulemaking proposes to provide implementing regulations in the Department of the Interior Acquisition Regulation for EO 11222 governing ethics conduct for Government employees. The proposed rule would also provide a special code of conduct for employees with procurement responsibilities in accordance with 43 CFR 20.735-2(h).

Timetable:

Action	Date	FR Cite
NPRM	05/00/88	

Small Entity: No

Agency Contact: William S. Opdyke, Chief, Division of Acquisition and Assistance, Department of the Interior, Assistant Secretary for Policy, Budget, and Administration, 18th and C Streets,NW, Washington, DC 20240, 202 343-3433

RIN: 1090-AA15

DEPARTMENT OF THE INTERIOR (DOI)

Final Rule Stage

Assistant Secretary for Policy, Budget, and Administration (ASPBA)

1051. DEPARTMENT OF THE INTERIOR - NONPROCUREMENT DEBARMENT AND SUSPENSION REGULATION

Legal Authority: 5 USC 301; EO 12549

CFR Citation: 43 CFR 12

Legal Deadline: None.

Abstract: This notice of proposed rulemaking proposes common regulations implementing the Office of Management and Budget guidelines which prescribe the scope, government criteria, minimum due process procedures, and other guidance for a system for nonprocurement debarment or suspension of a nonprocurement program participant and will have governmentwide effect.

Timetable:

Action	Date	FR Cite
NPRM	10/20/87	52 FR 39042
NPRM Comment Period End	12/21/87	52 FR 39042
Final Action	05/26/88	

Small Entity: Undetermined

Agency Contact: Colonel C. Armstrong, Deputy Director, Office of Acquisition & Property Management, Department of the Interior, Assistant Secretary for Policy, Budget, and Administration, Washington, DC 20240, 202 343-6431

RIN: 1090-AA12

1052. DEPARTMENT OF THE INTERIOR ACQUISITION REGULATION

Legal Authority: 5 USC 301

CFR Citation: 48 CFR 1415

Legal Deadline: None.

Abstract: This rule will establish formal source selection procedures for the Department pursuant to FAR 15.612.

Timetable:

Action	Date	FR Cite
NPRM	12/21/87	52 FR 48301
Final Action	06/00/88	

Small Entity: No

Agency Contact: William Opdyke, Acting Chief, Acquisition and Assistance, Division, Department of the Interior, Assistant Secretary for Policy, Budget, and Administration, 18th & C Streets, NW, Washington, DC 20240, 202 343-3433

RIN: 1090-AA13

DEPARTMENT OF THE INTERIOR (DOI)

Completed Actions

Assistant Secretary for Policy, Budget, and Administration (ASPBA)

1053. ● PRIVACY ACT

Legal Authority: 5 USC 552a

CFR Citation: 43 CFR 2.45 to 2.75

Legal Deadline: None.

Abstract: The Interior Department Privacy Act regulations are being revised to make them compatible with regulations of the Office of Personnel Management (OPM) regarding the handling of appeals of denials of access to, or amendment of records falling under the jurisdiction of OPM.

Timetable:

Action	Date	FR Cite
Final Action	02/09/88	53 FR 03748
Final Action Effective	03/10/88	53 FR 03748

Small Entity: No

Agency Contact: David R. DeAngelis, Privacy Act Officer, Department of the Interior, Assistant Secretary for Policy, Budget, and Administration, Office of Management Analysis, Office of the Secretary, Washington, DC 20240, 202 343-6191

RIN: 1090-AA20

1054. UNIFORM ADMINISTRATIVE REQUIREMENTS FOR GRANTS AND COOPERATIVE AGREEMENTS TO STATE AND LOCAL GOVERNMENTS

Legal Authority: 31 USC 501 et seq; 16 USC 452; EO 11541; 31 USC 6503 to 6504; Act of 1968; 16 USC 831h; 31 USC 6301; 5 USC 301; 24 USC 278; 31 USC 701 et seq as amended; 40 USC 474 et seq; 41 USC 5 et seq

CFR Citation: 43 CFR 12

Legal Deadline: None.

Abstract: This Notice of Proposed Rulemaking proposes common regulations establishing consistency and uniformity among Federal agencies in the administration of grants to State, local, and federally recognized Indian tribal governments.

Timetable:

Action	Date	FR Cite
NPRM	06/09/87	52 FR 21837
Final Action	03/11/88	53 FR 8034
Final Action Effective	10/01/88	

Small Entity: No

Agency Contact: Colonel C. Armstrong, Deputy Director, Office of Acquisition & Property Management, Department of the Interior, Assistant Secretary for Policy, Budget, and Administration, 18th & C Streets, NW, Washington, DC 20240, 202 343-6431

RIN: 1090-AA11

BILLING CODE 4310-RK-T

DEPARTMENT OF THE INTERIOR (DOI)

Proposed Rule Stage

Office of the Solicitor (OSOL)

1055. PRACTICES BEFORE THE DEPARTMENT

Legal Authority: 43 USC 1464

CFR Citation: 43 CFR 1

Legal Deadline: None.

Abstract: This rule governs practice in administrative proceedings before the Department. It will be revised to update its provisions and assure that they are consistent with the Department's employee conduct regulations (43 CFR Part 20) and the Ethics in Government Act.

Timetable:

Action	Date	FR Cite
NPRM	06/30/88	

Small Entity: No

Additional Information: Originally scheduled: January 1981.

Agency Contact: Barbara Abate, Paralegal, Department of the Interior, Office of the Solicitor, 18th and C Streets, NW, Washington, DC 20240, 202 343-5216

RIN: 1092-AA00

DEPARTMENT OF THE INTERIOR (DOI)
Office of the Solicitor (OSOL)

Completed Actions

1056. RECORDS AND TESTIMONY; FREEDOM OF INFORMATION ACT

Legal Authority: 5 USC 552

CFR Citation: 43 CFR 2

Legal Deadline: None.

Abstract: The Department's regulation will be amended to incorporate amendments to the FOIA made by the FOIA Reform Act of 1986, P.L. 99-570, and to update and clarify provisions that have been in effect since 1975.

Timetable:

Action	Date	FR Cite
NPRM	05/12/87	52 FR 17780
NPRM Comment Period End	06/11/87	
Final Action	11/30/87	52 FR 45584
Final Action Effective	12/30/87	52 FR 45584

Small Entity: No

Agency Contact: Barbara Abate, Paralegal, Department of the Interior, Office of the Solicitor, 18th & C Streets, NW, Washington, DC 20240, 202 343-5216

RIN: 1092-AA02

1057. TRANS-ALASKA PIPELINE LIABILITY FUND

Legal Authority: 43 USC 1653(c); 33 USC 1321(p)(1),(2)

CFR Citation: 43 CFR 29

Legal Deadline: None.

Abstract: These regulations, which supervise and administer the Fund provided for by Sec. 204(c) of the Trans-Alaska Pipeline Authorization Act, 43 USC Sec 1653(c) will be amended to eliminate inconsistencies between the existing regulations and the Act, clarify language which has been found to be confusing, delete provisions that are no longer necessary, and provide a more efficient process for filing and considering claims made against the Fund.

Timetable:

Action	Date	FR Cite
NPRM	06/29/87	52 FR 24181
NPRM Comment Period End	08/28/87	
Final Action	02/05/88	53 FR 3395
Final Action Effective	03/07/88	53 FR 3395

Small Entity: No

Agency Contact: Robert H. Moll, Attorney-Advisor, Department of the Interior, Office of the Solicitor, Washington, DC 20240, 202 343-5216

RIN: 1092-AA03

1058. IMPLEMENTATION OF THE PROGRAM FRAUD CIVIL REMEDIES ACT

Legal Authority: 15 USC 301; 31 USC 3801 to 3812

CFR Citation: 43 CFR 35

Legal Deadline: Statutory, April 19, 1987.

Abstract: The regulation will implement the Program Fraud Civil Remedies Act of 1986. It will establish administrative procedures for imposing the statutorily authorized civil penalties and assessments against any person who makes, submits, or presents a false, fictitious, or fraudulent claim or written statement to the Department of the Interior.

Timetable:

Action	Date	FR Cite
NPRM	06/29/87	52 FR 24186
NPRM Comment Period End	07/29/87	
Final Action	02/12/88	53 FR 4159
Final Action Effective	03/14/88	53 FR 4159

Small Entity: No

Agency Contact: Barbara Abate, Paralegal, Department of the Interior, Office of the Solicitor, 18th & C Streets, NW, Washington, DC 20240, 202 343-5216

RIN: 1092-AA05

1059. TAKE PRIDE IN AMERICA

Legal Authority: 5 USC 301; 15 USC Chapter 22; 18 USC 701

CFR Citation: 43 CFR 37

Legal Deadline: None.

Abstract: The regulation will govern the commercial and noncommercial use of the Take Pride in America campaign slogan and logo by Federal agencies, States, and the private sector.

Timetable:

Action	Date	FR Cite
No further action to be taken at this time.	00/00/00	

Small Entity: Undetermined

Agency Contact: Deborah Ryan Howard, Attorney-Advisor, Department of the Interior, Office of the Solicitor, 18th and C Streets, NW, Washington, DC 20240, 202 343-5216

RIN: 1092-AA06

BILLING CODE 4310-17-T

DEPARTMENT OF THE INTERIOR (DOI)
Office for Equal Opportunity (OEO)

Proposed Rule Stage

1060. NONDISCRIMINATION ON THE BASIS OF SEX IN EDUCATION PROGRAMS AND ACTIVITIES RECEIVING OR BENEFITING FROM FEDERAL FINANCIAL ASSISTANCE

Legal Authority: PL 92-318 Title IX of the Education Amendment of 1972; PL 93-568; PL 94-482; 20 USC 1681 to 1686

CFR Citation: 43 CFR 17, Subpart D

Legal Deadline: None.

Abstract: The Title IX regulation is intended to address the problem of discrimination on the basis of sex in any education program or activity receiving or benefiting from Federal financial assistance administered by the Department of the Interior (DOI).

No alternative for addressing problems of discrimination in DOI's education programs can be considered due to the fact that Title IX requires each Federal agency which extends Federal financial assistance to any educational program or activity, to issue rules and regulations implementing Title IX.

DOI's recipients are anticipated to incur expenses in two (2) areas: (1) Data collection and recordkeeping; (2) rectifying areas of noncompliance with Title IX. With respect to DOI, expenses will be incurred in three (3) areas: (1) Development and publication of the Title IX rule; (2) Provision of technical assistance; and (3) Accomplishing compliance reviews and enforcement activities.

Timetable:

Action	Date	FR Cite
NPRM	06/00/89	

Small Entity: Not Applicable

Agency Contact: Melvin C. Fowler, Supv. Equal Opportunity Spc., Department of the Interior, Office for Equal Opportunity, Washington, DC 20240, 202 343-3455

RIN: 1091-AA02

DEPARTMENT OF THE INTERIOR (DOI)
Office for Equal Opportunity (OEO)

Final Rule Stage

1061. NONDISCRIMINATION ON THE BASIS OF AGE IN PROGRAMS OR ACTIVITIES RECEIVING FEDERAL FINANCIAL ASSISTANCE

Legal Authority: The Age Discrimination Act of 1975, as amended; 42 USC 6101; 45 CFR 90

CFR Citation: 43 CFR 17, Subpart C

Legal Deadline: None.

Abstract: This rule will set forth guidelines for non-discrimination on the basis of age in programs or activities receiving Federal financial assistance from the Department.

Timetable:

Action	Date	FR Cite
NPRM	10/21/87	52 FR 39243
NPRM Comment Period End	11/20/87	52 FR 39243
Final Action	05/00/88	

Small Entity: No

Additional Information: LEGAL AUTHORITY: Originally scheduled: January 1979.

Public Compliance Cost: Initial Cost: $0; Yearly Recurring Cost: $0; Base Year for Dollar Estimates: 1986

Affected Sectors: None

Government Levels Affected: Local, State

Agency Contact: Melvin C. Fowler, Supervisory Equal Opportunity Spc., Department of the Interior, Office for Equal Opportunity, 18th and C Streets, NW, Washington, DC 20240, 202 343-3455

RIN: 1091-AA00

BILLING CODE 4310-RE-T

DEPARTMENT OF THE INTERIOR (DOI)
Office of Hearings and Appeals (OHA)

Proposed Rule Stage

1062. TRIBAL ACQUISITION OF INTERESTS UNDER SPECIAL STATUTE

Legal Authority: 25 USC 2201 to 2210

CFR Citation: 43 CFR 4.300; 43 CFR 4.301; 43 CFR 4.302; 43 CFR 4.303; 43 CFR 4.304; 43 CFR 4.305; 43 CFR 4.306; 43 CFR 4.307; 43 CFR 4.308

Legal Deadline: None.

Abstract: The Indian Land Consolidation Act (Act) was enacted on January 12, 1983, and changes existing law regarding the descent of Indian trust and restricted lands. The Act provides that certain undivided fractional interests in such lands can now be acquired by the tribe instead of descending by intestacy or devise. Existing regulations governing the probate of Indian lands by Indian Probate Judges must therefore be amended to conform with the Act.

Timetable:

Action	Date	FR Cite
NPRM	09/00/88	

Small Entity: No

Government Levels Affected: Federal

Agency Contact: Parlen L. McKenna, Chief Administrative Law Judge, Department of the Interior, Office of Hearings and Appeals, 4015 Wilson Blvd., Arlington, VA 22203, 703 235-3809

RIN: 1094-AA08

1063. SPECIAL RULES APPLICABLE TO PUBLIC LAND HEARINGS AND APPEALS

Legal Authority: 43 USC 1201

CFR Citation: 43 CFR 4.401(c); 43 CFR 4.413

Legal Deadline: None.

Abstract: Rulemaking is being proposed to amend the requirements for proof of service of documents to require that a party serving a document other than the

notice of appeal certify that he sent the document to the adverse party by mail.

Timetable:

Action	Date	FR Cite
NPRM	08/00/88	

Small Entity: Undetermined

Agency Contact: Wm. Philip Horton, Chief Administrative Judge, Department of the Interior, Office of Hearings and Appeals, 4015 Wilson Boulevard, Arlington, VA 22203, 703 235-3750

RIN: 1094-AA25

DEPARTMENT OF THE INTERIOR (DOI)
Office of Hearings and Appeals (OHA)

Final Rule Stage

1064. DEPARTMENT HEARINGS AND APPEALS PROCEDURES

Legal Authority: 43 USC 1201

CFR Citation: 43 CFR 4, Subpart B

Legal Deadline: None.

Abstract: Rulemaking is being proposed to make express provision for in camera review of information which is exempt, protected, or prohibited from unauthorized disclosure by Federal statute when such information is submitted in an administrative proceeding.

Timetable:

Action	Date	FR Cite
NPRM	05/03/87	52 FR 20755
NPRM Comment Period End	07/06/87	52 FR 20755
Final Action	04/01/88	

Small Entity: No

Agency Contact: Bruce A. Johnson, Deputy Director, Department of the Interior, Office of Hearings and Appeals, 4015 Wilson Boulevard, Arlington, VA 22203, 703 235-3810

RIN: 1094-AA26

1065. SPECIAL RULES APPLICABLE IN INDIAN AFFAIRS HEARINGS AND APPEALS

Legal Authority: 36 Stat. 855, as amended; 38 Stat. 586; 42 Stat. 1185, as amended; 56 Stat. 1021-1022; R.S. 463; R.S. 465; 5 USC 301; 25 USC 2; 25 USC 9; 25 USC 372; 25 USC 373; 25 USC 374; 25 USC 373a; 25 USC 373b

CFR Citation: 43 CFR 4, Subpart D

Legal Deadline: None.

Abstract: The agency is proposing to make changes to its regulations governing appeals to the Board of Indian Appeals in order to ensure compatibility between those regulations and proposed changes to administrative appeals regulations of the Bureau of Indian Affairs in 25 CFR Part 2. The rulemaking would incorporate two specific changes to regulations in 43 CFR Part 4, Subpart D, listed on previous agenda.

Timetable:

Action	Date	FR Cite
NPRM	11/06/87	52 FR 43009
NPRM Comment Period End	01/05/88	52 FR 43009
Final Action	09/00/88	

Small Entity: No

Agency Contact: Kathryn Lynn, Chief Administrative Judge, Department of the Interior, Office of Hearings and Appeals, 4015 Wilson Boulevard, Arlington, VA 22203, 703 235-3816

RIN: 1094-AA31

1066. SPECIAL RULES APPLICABLE TO SURFACE COAL MINING HEARINGS AND APPEALS

Legal Authority: 30 USC 1201

CFR Citation: 43 CFR 4.1100 et seq, Subpart L

Legal Deadline: None.

Abstract: Regulations will be proposed to add procedures for the assessment of individual civil penalties under 30 USC 1268(f).

Timetable:

Action	Date	FR Cite
NPRM	12/24/86	51 FR 46846
NPRM Comment Period End	02/23/87	51 FR 46846
Final Action	04/01/88	

Small Entity: Undetermined

Agency Contact: Will A. Irwin, Administrative Judge, Department of the Interior, Office of Hearings and Appeals, 4015 Wilson Boulevard, Arlington, VA 22203, 703 235-3750

RIN: 1094-AA28

1067. BURDEN OF PROOF IN CIVIL PENALTY PROCEEDINGS

Legal Authority: 30 USC 1268; 5 USC 301

CFR Citation: 43 CFR 4.1155

Legal Deadline: None.

Abstract: The proposed amendment of 43 CFR 4.1155 would correct the allocation of the ultimate burden of persuasion as to the fact of a violation in a civil penalty proceeding under section 518 of the Surface Mining Control and Reclamation Act of 1977 by changing it from the Office of Surface Mining Reclamation and Enforcement to the person who petitions for review of the civil penalty.

Timetable:

Action	Date	FR Cite
NPRM	10/15/87	52 FR 38246
NPRM Comment Period End	11/16/87	52 FR 38246
Final Action	04/01/88	

Small Entity: No

Agency Contact: Will A. Irwin, Administrative Judge, Department of the Interior, Office of Hearings and Appeals, 4015 Wilson Boulevard, Arlington, VA 22203, 703 235-3750

RIN: 1094-AA33

1068. ● AMENDMENT OF REGULATION ESTABLISHING AGE AT WHICH AN INDIAN CAN EXECUTE A WILL DEVISING TRUST OR RESTRICTED PROPERTY

Legal Authority: 25 USC 373

CFR Citation: 43 CFR 4.260

Legal Deadline: None.

Abstract: The amendment to the regulation will reflect the congressional determination to reduce from 21 to 18 the age at which an Indian can execute a will devising trust or restricted property. The amendment is contained

in section 2 of the Act of Nov. 5, 1987, 101 Stat. 886, P.L. 100-153.

Timetable:

Action	Date	FR Cite
Final Action	05/00/88	
Final Action Effective	05/00/88	

Small Entity: No

Agency Contact: Parlen McKenna, Chief Administrative Law Judge, Department of the Interior, Office of Hearings and Appeals, 4015 Wilson Boulevard, Arlington, VA 22203, 703 235-3800

RIN: 1094-AA35

1069. SPECIAL RULES APPLICABLE TO PUBLIC LAND HEARINGS AND APPEALS

Legal Authority: 43 USC 1201

CFR Citation: 43 CFR 4.411

Legal Deadline: None.

Abstract: The agency will propose to amend its procedural regulations to provide relief to appellants who mistakenly file their notices of appeal with the Board instead of the office specified in the regulations.

Timetable:

Action	Date	FR Cite
NPRM	10/20/87	52 FR 38950
NPRM Comment Period End	11/19/87	52 FR 38950
Final Action	05/00/88	

Small Entity: No

Agency Contact: David L. Hughes, Attorney-Advisor, Department of the Interior, Office of Hearings and Appeals, 4015 Wilson Boulevard, Arlington, VA 22203, 703 235-3750

RIN: 1094-AA30

1070. ● SERVICE OF NOTICE OF APPEAL AND OF OTHER DOCUMENTS

Legal Authority: 43 USC 1201

CFR Citation: 43 CFR 4.413

Legal Deadline: None.

Abstract: The rulemaking revises the existing rule to clarify and update procedural requirements for service by appellants of a notice of appeal and of other documents upon counsel who may represent the Government as a party in appeal proceedings before the Interior Board of Land Appeals. The outdated reference in the existing rule for service of appeals documents upon the Director of the U.S. Geological Survey is removed.

Timetable:

Action	Date	FR Cite
Interim Final Rule	04/00/88	

Small Entity: No

Agency Contact: Frances A. Patton, Special Counsel to the Director, Department of the Interior, Office of Hearings and Appeals, 4015 Wilson Boulevard, Arlington, VA 22203, 703 235-3810

RIN: 1094-AA34

DEPARTMENT OF THE INTERIOR (DOI)
Office of Hearings and Appeals (OHA)

Completed Actions

1071. SPECIAL RULES APPLICABLE TO SURFACE COAL MINING HEARINGS AND APPEALS

Legal Authority: 30 USC 1201

CFR Citation: 43 CFR 4.1100 et seq, Subpart L

Legal Deadline: None.

Abstract: Regulations are being proposed to add procedures for hearings and appeals under the permanent regulatory program of the Surface Mining Control and Reclamation Act of 1977 (including review of approval or disapproval of applications for permits).

Timetable:

Action	Date	FR Cite
NPRM	10/02/86	51 FR 35248
NPRM Comment Period End	11/03/86	51 FR 35248
Final Action	10/22/87	52 FR 39521
Final Action Effective	11/23/87	52 FR 39521

Small Entity: Undetermined

Agency Contact: Will A. Irwin, Administrative Judge, Department of the Interior, Office of Hearings and Appeals, 4015 Wilson Boulevard, Arlington, VA 22203, 703 235-3750

RIN: 1094-AA29

1072. DEPARTMENT HEARINGS AND APPEALS PROCEDURES; SUBPART A—GENERAL; OFFICE OF HEARINGS AND APPEALS; POWER OF THE SECRETARY AND DIRECTOR

Legal Authority: 43 USC 1201

CFR Citation: 43 CFR 4.5

Legal Deadline: None.

Abstract: The rulemaking corrects the language in the regulation to except from the reserved powers of the Secretary and the Director in appellate and other review proceedings before the Department only those proceedings before the Interior Board of Contract Appeals which are subject to the Contract Disputes Act of 1978. Other editorial changes are made to clarify the reserved powers of the Director under delegated authority of the Secretary.

Timetable:

Action	Date	FR Cite
Final Action	12/07/87	52 FR 46355
Final Action Effective	01/06/88	52 FR 46355

Small Entity: No

Agency Contact: Frances A. Patton, Special Counsel to the Director, Department of the Interior, Office of Hearings and Appeals, 4015 Wilson Boulevard, Arlington, VA 22203, 703 235-3810

RIN: 1094-AA32

BILLING CODE 4310-79-T

DEPARTMENT OF THE INTERIOR (DOI) **Proposed Rule Stage**

United States Fish and Wildlife Service (FWS)

1073. INJURIOUS WILDLIFE - MITTEN CRABS

Legal Authority: 18 USC 42

CFR Citation: 50 CFR 16

Legal Deadline: None.

Abstract: Regulations will be developed which would determine whether to add the mitten crab to the list of injurious wildlife, under the Lacey Act. Such act prohibits importation and introduction into the natural eco-system of the United States any species which may pose a threat to agriculture, the health and welfare of human beings and the welfare and survival of native wildlife species.

Timetable:

Action	Date	FR Cite
ANPRM	01/26/87	52 FR 2748
Request for Information Mitten crabs	01/26/87	52 FR 2748
NPRM	10/00/88	

Small Entity: Not Applicable

Agency Contact: Lynn B. Starnes, Chief, Division of Fish and Wildlife, Management Assistance, Department of the Interior, United States Fish and Wildlife Service, 18th and C Streets, NW, Washington, DC 20240, 202 632-2202

RIN: 1018-AB04

1074. INJURIOUS WILDLIFE

Legal Authority: 18 USC 42

CFR Citation: 50 CFR 16

Legal Deadline: None.

Abstract: Regulations will be revised regarding importation of fish or fish eggs of the fish family Salmonidae.

Timetable:

Action	Date	FR Cite
NPRM	08/00/88	

Small Entity: Undetermined

Agency Contact: Joseph J Webster, Acting Chief, National Fish Hatcheries, Department of the Interior, United States Fish and Wildlife Service, 18th and C Streets, NW, Washington, D.C. 20240, 202 653-8746

RIN: 1018-AB13

1075. CAPTIVE BRED WILDLIFE

Legal Authority: 16 USC 1531 et seq

CFR Citation: 50 CFR 17

Legal Deadline: None.

Abstract: This rule will be revised to relieve certain restrictions on the public that have been determined to be outmoded, burdensome and counter productive.

Timetable:

Action	Date	FR Cite
NPRM	12/00/88	

Small Entity: Not Applicable

Agency Contact: Marshall Jones, Acting Chief, Office of Management Authority, Department of the Interior, United States Fish and Wildlife Service, 18th and C Streets, NW, Washington, DC 20240, 202 343-4955

RIN: 1018-AB10

1076. PROPOSED DETERMINATION OF NONESSENTIAL EXPERIMENTAL POPULATION STATUS FOR AN INTRODUCED POPULATION OF THE NASHVILLE CRAYFISH IN TENNESSEE

Significance: Regulatory Program

Legal Authority: 16 USC 1531 et seq

CFR Citation: 50 CFR 17

Legal Deadline: None.

Abstract: The Service proposes to reintroduce the Nashville Crayfish (Orconectes shoupi), federally listed as an endangered species, into Richland Creek, Davison County, Tennessee, and to determine this population to be a nonessential experimental population according to Section 10(j) of the Endangered Species Act of 1973, as amended. Section 10(j) of the Act authorizes nonessential experimental populations to be treated as if they were proposed species for the purposes of Section 7 of the Act. The Nashville crayfish is presently know to inhabit Mill Creek and five of its tributaries in Davidson and Williamson Counties, Tennessee.

Timetable:

Action	Date	FR Cite
NPRM	04/00/88	
Final Action	12/00/88	

Small Entity: Not Applicable

Agency Contact: Kenneth Stansell, Chief, Branch of Listing and Recovery, Department of the Interior, United States Fish and Wildlife Service, Washington, DC 20240, 703 235-1975

RIN: 1018-AB12

1077. MARINE MAMMALS: INCIDENTAL TAKING BY COMMERCIAL FISHING OPERATIONS

Legal Authority: 16 USC 13

CFR Citation: 50 CFR 18

Legal Deadline: None.

Abstract: The Service will develop regulations to implement a provision contained in the 1981 amendments to the Marine Mammal Protection Act, concerning the incidental taking of marine mammals by commercial fishermen. The rules would apply to those species of marine mammals for which the Service has responsibility, i.e. sea otters, walrus, polar bears, manatees, and dugongs, except those listed as depleted.

Timetable:

Action	Date	FR Cite
NPRM	05/00/88	
Final Action	09/00/88	

Small Entity: Undetermined

Agency Contact: Lynn Starnes, Chief, Division of Fish and Wildlife, Management Assistance, Department of the Interior, United States Fish and Wildlife Service, 18th and C Streets, NW, Washington, DC 20240, 202 632-2202

RIN: 1018-AA96

1078. MARINE MAMMALS: TAKE OF SMALL NUMBERS INCIDENTAL TO SPECIFIED ACTIVITIES

Legal Authority: 16 USC 1371; 16 USC 1536

CFR Citation: 50 CFR 18; 50 CFR 402

Legal Deadline: None.

Abstract: This rule will implement the 1986 amendments to the Marine Mammal Protection Act to allow the incidental take of depleted as well as non-depleted marine mammals, modify standards for determining whether to allow incidental taking and require that the incidental take of endangered or threatened marine mammals not be authorized until authorized under the provisions of the Marine Mammal Protection Act.

VOL 53 ISS 79 PT 1 AP 25 1988 UMI

Timetable:

Action	Date	FR Cite
NPRM	04/00/88	

Small Entity: Not Applicable

Agency Contact: Lynn B. Starnes, Chief, Division of Fish and, Wildlife Management Assistance, Department of the Interior, United States Fish and Wildlife Service, 18th and C Streets, NW, Washington, DC 20240, 202 632-2202

RIN: 1018-AB05

1079. MIGRATORY BIRD HUNTING

Significance: Regulatory Program

Legal Authority: 16 USC 703 to 711

CFR Citation: 50 CFR 20

Legal Deadline: None.

Abstract: The Service annually publishes a series of documents establishing migratory bird hunting regulations for the 1988-89 season. This annual process consists of proposed frameworks providing outside limits for dates and hours of shooting, as well as bag and possession limits; final frameworks for hunting seasons from which States may select regulations; and final rules approving such State selections.

Timetable:

Action	Date	FR Cite
ANPRM	03/00/88	
NPRM	06/00/88	
Final Action	09/00/88	
1987-88 seasons		
ANPRM 03/13/87 (52 FR 7900)		
NPRM 06/03/87 (52 FR 20757)		
Final Action 09/29/87 (52 FR 36496)		
1987-88 seasons final frameworks		
Final Action 08/06/87 (52 FR 28176)		

Small Entity: Yes

Additional Information: SMALL BUSINESSES CONT: Small entities likely to be affected by these rules include some sporting goods stores, hardware stores, motels and hotels, restaurants, clothing stores, boat and marine equipment stores, marinas, gasoline stations, private hunting clubs, land owners' leasing hunting rights, and mail order houses selling hunting equipment and supplies. Originally scheduled: April 1985. E.O. 12291: These rules are major because of the economic values associated with migratory game bird hunting; however, the need to obtain and consider the latest population data for these migratory birds requires that the regulatory schedule be shortened. The regulatory impact analysis, as required by E.O. 12291, and the small entity flexibility analysis, as required by 5 U.S.C. 601 et seq., have been combined into one analysis as provided for by both authorities. Copies of the combined analysis will be available from the Agency Contact upon publication of the Notice of Intent in March 1985.

Analysis: Regulatory Impact Analysis; Regulatory Flexibility Analysis

Agency Contact: Rollin D. Sparrowe, Chief, Migratory Bird Management Office, Department of the Interior, United States Fish and Wildlife Service, 18th and C Streets, NW, Washington, DC 20240, 202 254-3207

RIN: 1018-AA24

1080. NONTOXIC SHOT REGULATIONS FOR HUNTING MIGRATORY BIRDS

Significance: Regulatory Program

Legal Authority: 16 USC 701 to 718

CFR Citation: 50 CFR 20

Legal Deadline: None.

Abstract: The Service, in coordination with the States, identifies areas of migratory bird hunting where the use of conventional lead shotshells results in lead poisoning of such birds and other wildlife. The Service will review existing nontoxic shot zones for the continued need for inclusion, and propose new areas for consideration as appropriate.

Timetable:

Action	Date	FR Cite
NPRM	04/00/88	
Final Action	09/00/88	
1987-88 season zones		
Final Action 10/05/87 (52 FR 37147)		
1988-89 season zones		
Final Action 09/00/88		

Small Entity: No

Agency Contact: Rollin Sparrowe, Chief, Office of Migratory Bird Management, Department of the Interior, United States Fish and Wildlife Service, Room 536 Matomic, Washington, DC 20240, 202 254-3207

RIN: 1018-AA93

1081. SUBSISTENCE TAKE OF MIGRATORY BIRDS IN ALASKA

Significance: Regulatory Program

Legal Authority: 16 USC 703

CFR Citation: 50 CFR 20

Legal Deadline: None.

Abstract: The Service will develop regulations that provide for subsistence harvest of migratory birds in Alaska. This action is being developed in cooperation with the State of Alaska, Alaskan Native organizations, and Canada.

Timetable:

Action	Date	FR Cite
NPRM	10/00/88	

Small Entity: Undetermined

Agency Contact: Marvin L. Plenert, Acting Assistant Director, Refuges and Wildlife, Department of the Interior, United States Fish and Wildlife Service, Room 3252 Interior, US Fish and Wildlife Service, Washington, DC 20240, 202 343-5333

RIN: 1018-AB03

1082. HUNTING

Legal Authority: 16 USC 460k; 16 USC 668dd

CFR Citation: 50 CFR 32

Legal Deadline: None.

Abstract: The Service will review annually and prior to each hunting season may amend hunting regulations for specific national wildlife refuges.

Timetable:

Action	Date	FR Cite
NPRM	06/00/88	51 FR 24179
Final Action	09/00/88	
1987-88 season refuge specific hunting regulations		
Final Action 10/09/87 (52 FR 37789)		

Small Entity: No

Additional Information: Originally scheduled: April 1983.

Agency Contact: James F. Gillett, Chief, Division of Refuge Management, Department of the Interior, United States Fish and Wildlife Service, 18th and C Streets, NW, Washington, DC 20240, 202 343-4311

RIN: 1018-AA71

1083. SPORT FISHING

Legal Authority: 16 USC 460k; 16 USC 668dd

CFR Citation: 50 CFR 33

Legal Deadline: None.

Abstract: The Service will review annually, and prior to each fishing season may amend fishing regulations for specific national wildlife refuges.

Timetable:

Action	Date	FR Cite
NPRM	10/00/88	
Final Action	12/00/88	
1987-88 refuge-specific regulations NPRM 01/20/88 (53 FR 1487)		

Small Entity: No

Additional Information: Originally scheduled: October 1983

Agency Contact: James F. Gillett, Chief, Division of Refuges, Department of the Interior, United States Fish and Wildlife Service, 18th and C Streets, NW, Washington, DC 20240, 202 343-4311

RIN: 1018-AA50

1084. IMPLEMENTATION OF KLAMATH RIVER BASIN FISHERY RESOURCES RESTORATION ACT

Legal Authority: 16 USC 460

CFR Citation: 50 CFR 72

Legal Deadline: None.

Abstract: This rule is necessary to implement the Klamath River Basin Fishery Resources Restoration Act. These include designation of the Klamath River Basin Conservation Area, establishment of qualifications of volunteers who carry out surveys, censuses, and other scientific studies, establishment of standards for determining the value of in-kind contributions and real and personal property provided by non-Federal sources to implement the conservation area restoration program, and establishment of the basis for determining whether matching funds will be provided in a timely and appropriate manner.

Timetable:

Action	Date	FR Cite
ANPRM	03/25/87	52 FR 9550
ANPRM Comment Period End	05/11/87	
NPRM	11/00/88	

Small Entity: Not Applicable

Agency Contact: Gary Edwards, Assistant Director - Fisheries, Department of the Interior, United States Fish and Wildlife Service, 18th and C Streets, NW, Washington, DC 20240, 202 343-6394

RIN: 1018-AB11

DEPARTMENT OF THE INTERIOR (DOI)
United States Fish and Wildlife Service (FWS)

Final Rule Stage

1085. HUMANE TRANSPORT OF WILD MAMMALS AND BIRDS

Significance: Regulatory Program

Legal Authority: PL 97-79, 95 Stat, 073

CFR Citation: 50 CFR 14

Legal Deadline: Statutory. 180 days after enactment of Public Law 97-79, dated November 16, 1981.

Abstract: Section 9(d) of the Lacey Act Amendments of 1981 shifts authority for prescribing requirements for the humane and healthful transport of wild mammals and birds from the Secretary of the Treasury to the Secretary of the Interior. This authority will be promulgated in Part 14.

Timetable:

Action	Date	FR Cite
ANPRM Notice of Public Meeting	02/26/82	47 FR 8386
ANPRM	06/30/82	47 FR 28431
NPRM	12/04/85	50 FR 49709
NPRM Comment Period End	03/05/86	51 FR 4945
Final Action	11/10/87	
Begin Review	02/09/88	53 FR 3894
Final Action Delay of effective date of final rule	02/10/88	53 FR 3894
Final Action Effective	08/00/88	
End Review	08/00/88	

Small Entity: No

Additional Information: Originally scheduled: April 1982.

Agency Contact: Marshall Jones, Acting Chief, Office of Management Authority, Department of the Interior, United States Fish and Wildlife Service, 18th and C Streets, NW, Washington, DC 20240, 202 343-4968

RIN: 1018-AA07

1086. IMPORTATION, EXPORTATION, AND TRANSPORTATION OF WILDLIFE

Legal Authority: 16 USC 3376(a)(2)

CFR Citation: 50 CFR 14

Legal Deadline: None.

Abstract: The Service would amend the requirements for marking and labeling containers or packages containing fish or wildlife in a joint rulemaking with the Department of Commerce. The Lacey Act Amendments of 1981 make it unlawful to import, export, or transport in interstate commerce any containers or packages containing fish or wildlife that are not marked or labeled in accordance with regulations jointly issued by the Secretaries of the Interior and of Commerce. Such regulations will be in accordance with existing commercial practices.

Timetable:

Action	Date	FR Cite
NPRM	07/07/86	51 FR 24559
NPRM Comment Period End	09/05/86	51 FR 24559
Final Action	09/00/88	

Small Entity: No

Additional Information: Originally scheduled: October 1983.

Agency Contact: Clark R. Bavin, Chief, Division of Law Enforcement, Department of the Interior, United States Fish and Wildlife Service, 18th and C Streets, NW, Washington, DC 20240, 202 343-9242

RIN: 1018-AA79

1087. ENDANGERED AND THREATENED WILDLIFE AND PLANTS

Legal Authority: 16 USC 1531 to 1543

CFR Citation: 50 CFR 17

VOL 53 ISS 79 PT 1 AP 25 1988 UMI

Legal Deadline: Statutory. In accordance with 16 U.S.C. 1533, the Service must take action (list, withdraw, or extend the rulemaking for six months) on a proposed listing no later than one year after such proposal.

Abstract: Regulations will be developed which would list, reclassify, or delist, as appropriate, certain species of fish, wildlife, and plants under the Endangered Species Act, and where prudent, would identify critical habitat for endangered and threatened species. Such actions are taken upon determination that species are endangered, threatened, or neither and are based solely on the biological information available to the Department.

Timetable:

Aleutian shield-fern
NPRM 04/24/87 (52 FR 13729)
Final Action 02/17/88 (53 FR 4626)
Barlaco
NPRM 04/24/87 (52 FR 13790)
Final Action 02/05/88 (53 FR 3565)
California freshwater shrimp
NPRM 04/22/87 (52 FR 13754)
Final Action 04/00/88
Chisos Mountain hedgehog cactus
NPRM 07/06/87 (52 FR 25275)
Final Action 07/00/88
Cumberland sandwort
NPRM 07/06/87 (52 FR 25268)
Final Action 07/00/88
Daphnopsis hellerana
NPRM 07/06/87 (52 FR 25265)
Final Action 07/00/88
Granite outcrop plants
NPRM 02/19/87 (52 FR 5150)
Final Action 02/05/88 (53 FR 3560)
Heller's blazing star
NPRM 02/19/87 (52 FR 5155)
Final Action 11/19/87 (52 FR 44397)
Higuero de Sierra
NPRM 01/14/87 (52 FR 1494)
Final Action 12/04/87 (52 FR 46085)
Houghton's goldenrod
NPRM 08/19/87 (52 FR 31045)
Final Action 08/00/88
Kearney's blue star
NPRM 07/10/87 (52 FR 26030)
Final Action 07/00/88
Lakeside daisy
NPRM 08/19/87 (52 FR 31048)
Final Action 08/00/88
Large-fruited sand verbena
NPRM 06/16/87 (52 FR 22944)
Final Action 06/00/88
Louisiana pearlshell
NPRM 04/24/87 (52 FR 13794)
Final Action 02/05/88 (53 FR 3567)
Mathis spiderling
NPRM 07/10/87 (52 FR 26033)
Final Action 07/00/88
Mexican and Sanborn's long nosed bats
NPRM 07/06/87 (52 FR 25271)
Final Action 07/00/88
Palo de Nigua
NPRM 04/24/87 (52 FR 13792)
Final Action 04/00/88
Pitcher's thistle
NPRM 07/20/87 (52 FR 27229)
Final Action 07/00/88
Relict trillium
NPRM 06/04/87 (52 FR 21088)
Final Action 06/00/88
Sacramento prickly poppy
NPRM 07/13/87 (52 FR 26164)
Final Action 07/00/88
Shasta crayfish
NPRM 07/10/87 (52 FR 26036)
Extend Comment Period 09/09/87 (52 FR 33980)
Final Action 11/00/88
Tipton kangaroo rat
NPRM 07/10/87 (52 FR 26040)
Extend Comment Period 09/09/87 (52 FR 33980)
Final Action 11/00/88
Visayan deer
NPRM 08/19/87 (52 FR 31051)
Final Action 08/00/88
White-haired goldenrod
NPRM 04/24/87 (52 FR 13797)
Final Action 04/00/88

Small Entity: No

Additional Information: After reviewing the biological status of candidate and listed species, the Service promptly proceeds to propose rules to list, delist, or reclassify such species as appropriate. Generally, final action on the proposed rules must be taken within one year.

Agency Contact: Kenneth Stansell, Chief, Branch of Listing and Recovery, Department of the Interior, United States Fish and Wildlife Service, 18th and C Streets, NW, Washington, DC 20240, 703 235-1975

RIN: 1018-AA10

1088. ENDANGERED AND THREATENED WILDLIFE AND PLANTS

Legal Authority: 16 USC 1531 to 1543

CFR Citation: 50 CFR 17

Legal Deadline: Statutory. In accordance with 16 U.S.C. 1533, the Service must take action (list, withdraw, or extend the rulemaking for six months) on a proposed listing no later than one year after such proposal.

Abstract: Regulations will be developed to list, reclassify or delist certain species of wildlife and plants as endangered or threatened species. When prudent, critical habitat will also be identified.

Timetable:

Thornber's fishhook cactus
NPRM 04/24/84 (49 FR 17551)
Final Action 00/00/00
Welsh's milkweed
NPRM 06/06/84 (49 FR 23399)
Final Action 10/28/87 (52 FR 41435)

Small Entity: Not Applicable

Additional Information: Originally scheduled: October 1984.

Agency Contact: Kenneth Stansell, Chief, Branch of Listing and Recovery, Department of the Interior, United States Fish and Wildlife Service, Washington, DC 20240, 703 235-1975

RIN: 1018-AA84

1089. ENDANGERED AND THREATENED WILDLIFE AND PLANTS

Legal Authority: 16 USC 1531 to 1543

CFR Citation: 50 CFR 17

Legal Deadline: Statutory. In accordance with 16 U.S.C. 1533, the Service must take action (list, withdraw, or extend the rulemaking for six months) on a proposed listing no later than one year after such proposal.

Abstract: Regulations will be developed to list, reclassify, or delist certain species of wildlife and plants as endangered or threatened species. When prudent, critical habitat will also be identified.

Timetable:

Blackside dace
NPRM 05/21/86 (51 FR 18624)
Final Action 06/12/87 (52 FR 22580)
Inyo brown towhee (critical habitat)
NPRM 08/03/87 (52 FR 28787)
Final Action 00/00/00
Inyo brown towhee(listing)
NPRM 03/07/85 (50 FR 9300)
Final Action 08/03/87 (52 FR 28717)

Small Entity: Not Applicable

Additional Information: Originally scheduled: April 1985.

Agency Contact: Kenneth Stansell, Chief, Branch of Listing and Recovery, Department of the Interior, United States Fish and Wildlife Service, 18th & C Streets, NW, Washington, DC 20240, 703 235-1975

RIN: 1018-AA85

1090. ENDANGERED AND THREATENED WILDLIFE AND PLANTS

Legal Authority: 16 USC 1531 to 1543

CFR Citation: 50 CFR 17

Legal Deadline: Statutory. In accordance with 16 U.S.C. 1533, the Service must take action (list, withdraw, or extend the rulemaking for six months) on a proposed listing no later than one year after such proposal.

VOL 53 ISS 79 PT 1 APR 25 1988 UMI

Abstract: Regulations will be developed which would list, reclassify, or delist, as appropriate, certain species of fish, wildlife and plants under the Endangered Species Act, and where prudent would identify critical habitat for endangered and threatened species. Such actions are taken upon determination that species are endangered, threatened, or neither and are based solely on the biological information available to the Department.

Timetable:

Least Bell's vireo critical habitat
Final Action 00/00/00
Least Bell's vireo listing
NPRM 05/03/85 (50 FR 18968)
Final Action 05/02/86 (51 FR 16474)

Small Entity: Not Applicable

Additional Information: After reviewing the biological status of candidate and listed species, the Service promptly proceeds to propose rules to list, delist, or reclassify such species as appropriate. Generally, final action on the proposed rules must be taken within one year.

Agency Contact: Kenneth Stansell, Chief, Branch of Listing and Recovery, Department of the Interior, United States Fish and Wildlife Service, 6th Floor Broyhill (OES), Washington, DC 20240, 703 235-1975

RIN: 1018–AA95

1091. ENDANGERED AND THREATENED WILDLIFE AND PLANTS

Legal Authority: 16 USC 1531 to 1543

CFR Citation: 50 CFR 17

Legal Deadline: Statutory. In accordance with 16 U.S.C. 1533, the Service must take action (list, withdraw, or extend the rulemaking for six months) on a proposed listing no later than one year after such proposal.

Abstract: Regulations will be developed which would list, reclassify, or delist, as appropriate, certain species of fish, wildlife and plants under the Endangered Species Act, and where prudent would identify critical habitat for endangered and threatened species. Such actions are taken upon determination that species are endangered, threatened, or neither and are based solely on the biological information available to the Department.

Timetable:

Bruneau hot spring snail
NPRM 12/30/86 (51 FR 47033)
Final Action 00/00/00
Leopard, goral, serow in Nepal
NPRM 06/14/85 (50 FR 24917)
Final Action 00/00/00

Small Entity: Not Applicable

Agency Contact: Kenneth Stansell, Chief, Branch of Listing and Recovery, Department of the Interior, United States Fish and Wildlife Service, 18th and C Streets, NW, Washington, DC 20240, 703 235-1975

RIN: 1018–AA98

1092. ENDANGERED AND THREATENED WILDLIFE AND PLANTS

Legal Authority: 16 USC 1531

CFR Citation: 50 CFR 17

Legal Deadline: Statutory. In accordance with 16 USC 1533, the Service must take action (list, withdraw, or extend the rulemaking for six months) on a proposed listing no later than one year after such proposal.

Abstract: Regulations will be developed which would list, reclassify, or delist, as appropriate certain species of fish, wildlife and plants under the Endangered Species Act, and where prudent, would identify critical habitat for endangered and threatened species. Such actions are taken upon determination that species are endangered, threatened, or neither and are based solely on the biological information available to the Department.

Timetable:

Blowout penstemon
NPRM 04/29/86 (51 FR 15929)
Final Action 09/01/87 (52 FR 32926)
Fish Creek Springs tui chub
NPRM 03/10/86 (51 FR 8215)
Final Action 00/00/00
Spreading wild buckwheat
NPRM 04/07/86 (51 FR 11880)
Extend Comment Period 09/08/87 (52 FR 33849)
Withdrawn 01/25/88 (53 FR 7929)
Virgin River chub
NPRM 06/24/86 (51 FR 22949)
Final Action 00/00/00
Wild Nile crocodile-Zimbabwe
NPRM 01/21/87 (52 FR 2227)
Extension of comment period 10/08/87 (52 FR 37640)
Final Action 00/00/00

Small Entity: Not Applicable

Agency Contact: Kenneth Stansell, Chief, Branch of Listing and Recovery, Department of the Interior, United States Fish and Wildlife Service, 18th and C Streets, NW, Washington, DC 20240, 703 235-1975

RIN: 1018–AB02

1093. ENDANGERED AND THREATENED WILDLIFE AND PLANTS

Legal Authority: 16 USC 1531

CFR Citation: 50 CFR 017

Legal Deadline: Statutory. In accordance with 16 USC 1533, the Service must take action (list, withdraw, or extend the rulemaking for six months) on a proposed listing no later than one year after such proposal.

Abstract: Regulations will be developed which would list, reclassify, or delist, as appropriate certain species of fish, wildlife and plants under the Endangered Species Act, and where prudent, would identify critical habitat for endangered and threatened species. Such actions are taken upon determination that species are endangered, threatened, or neither and are based solely on the biological information available to the Department.

Timetable:

Black capped vireo
NPRM 12/12/86 (51 FR 44808)
Final Action 10/06/87 (52 FR 37420)
Bradshaw's lomatium
NPRM 11/21/86 (51 FR 42116)
Final Action 00/00/00
Florida bonamia
NPRM 11/04/86 (51 FR 40044)
Final Action 11/02/87 (52 FR 42068)
Florida lizards
NPRM 01/21/87 (52 FR 2242)
Final Action 00/00/00
Miami palmetto
NPRM - Extend comment period 07/21/87 (52 FR 27437)
Final Action 05/00/88
Puerto Rican crested toad
NPRM 12/23/86 (51 FR 45923)
Final Action 08/04/87 (52 FR 28828)
Roseate tern
NPRM 11/04/86 (51 FR 40047)
Final Action 11/02/87 (52 FR 42063)

Small Entity: Not Applicable

Agency Contact: Kenneth Stansell, Chief, Branch of Listing and Recovery, Department of the Interior, United States Fish and Wildlife Service, 18th and C Streets, NW, Washington, DC 20240, 703 235-1975

RIN: 1018–AB06

1094. PROPOSED DETERMINATION OF NONESSENTIAL EXPERIMENTAL POPULATION STATUS FOR AN INTRODUCED POPULATION OF THE YELLOWFIN MADTOM IN VIRGINIA

Legal Authority: 16 USC 1531 et seq

CFR Citation: 50 CFR 17

Legal Deadline: None.

Abstract: The Service proposes to reintroduce a small catfish, the yellow madtom (Noturus flavipinnis), into the North Fork Holston River, Smyth County, Virginia, and determine this population to be a nonessential experimental population according to Section 10(j) of the Endangered Species Act of 1973, as amended. The Yellowfin madtom once likely inhabited many of the lower gradient streams of the Tennessee River basin upstream of Chattanooga, Tennessee. Presently, populations are confined to only three stream reaches in the Tennessee River Valley. This action is being taken in an effort to re-establish the yellowfin madtom within its historic range.

Timetable:

Action	Date	FR Cite
NPRM	09/08/87	52 FR 33850
Final Action	09/00/88	

Small Entity: Not Applicable

Agency Contact: Kenneth Stansell, Chief, Branch of Listing and Recovery, Department of the Interior, United States Fish and Wildlife Service, 18th and C Streets, NW, Washington, DC 20240, 703 235-1975

RIN: 1018-AB08

1095. PROPOSED DETERMINATION OF EXPERIMENTAL POPULATION STATUS FOR AN INTRODUCED POPULATION OF COLORADO SQUAWFISH

Legal Authority: 16 USC 1531 et seq

CFR Citation: 50 CFR 17

Legal Deadline: None.

Abstract: The Service proposes to introduce Colorado squawfish (Ptychocheilus lucius) into the lower Colorado River in Arizona and to determine the population to be "nonessential experimental" population according to Section 10(j) of the Endangered Species Act. The Service will propose a special rule to allow take in accordance with State law. In the past, Colorado squawfish were more widespread in the State of Arizona, occurring in several river drainages. This action is being taken in an effort to establish an additional population within the species' historic range.

Timetable:

Action	Date	FR Cite
NPRM	06/26/87	52 FR 32143
Final Action	09/00/88	

Small Entity: Not Applicable

Agency Contact: Kenneth Stansell, Chief, Branch of Listing and Recovery, Department of the Interior, United States Fish and Wildlife Service, 18th and C Streets, NW, Washington DC 20240, 703 235-1975

RIN: 1018-AB09

1096. ● ENDANGERED AND THREATENED WILDLIFE AND PLANTS

Legal Authority: 16 USC 1531 to 1543

CFR Citation: 50 CFR 17

Legal Deadline: Statutory. In accordance with 16 USC 1533, the Service must take action (list withdraw, or extend the rulemaking for six months) on a proposed listing no later than one year after such proposal.

Abstract: Regulations will be developed which would list, reclassify or delist, as appropriate, certain species of fish, wildlife, and plants under the Endangered Species Act, and where prudent, would identify critical habitat for endangered and threatened species. Such actions are taken upon determination that species are endangered, threatened, or neither and are based solely on the biological information available to the Department.

Timetable:

Alabama cave shrimp
NPRM 11/19/87 (52 FR 44578)
Final Action 11/00/88

Alabama cavefish
NPRM 12/04/87 (52 FR 46106)
Final Action 12/00/88

Boulder darter
NPRM 11/17/87 (52 FR 43921)
Final Action 11/00/88

Decurrent false aster
NPRM 02/25/88 (53 FR 5598)
Final Action 02/00/89

Dwarf lake iris
NPRM 12/04/87 (52 FR 46334)
Final Action 12/00/88

Erubia
NPRM 11/19/87 (52 FR 44580)
Final Action 11/00/88

Fassett's locoweed
NPRM 12/04/87 (52 FR 46336)
Final Action 12/00/88

Gila trout
NPRM 10/21/87 (52 FR 37424)
Final Action 10/00/88

Harperella
NPRM 02/25/88 (53 FR 5736)
Final Action 02/00/89

Hinckley oak
NPRM 09/16/87 (52 FR 34968)
Final Action 09/00/88

Independence Valley Speckled & Clover Valley dace
NPRM 09/18/87 (52 FR 35262)
Final Action 09/00/88

James River spiny mussel
NPRM 09/01/87 (52 FR 32939)
Final Action 09/00/88

Marshallia mohrii
NPRM 11/19/87 (52 FR 44583)
Final Action 11/00/88

Mead's milkweed
NPRM 10/21/87 (52 FR 39255)
Final Action 10/00/88

Sandplain gerardia
NPRM 11/19/87 (52 FR 44450)
Final Action 11/00/88

Short nose & Lost River sucker
NPRM 08/26/87 (52 FR 32145)
Final Action 08/00/88

Stephen's kangaroo rat
NPRM 11/19/87 (52 FR 44453)
Final Action 11/00/88

Swamp pink
NPRM 02/25/88 (53 FR 5740)
Final Action 02/00/89

Small Entity: No

Agency Contact: Kenneth Stansell, Chief, Branch of Listing and Recovery, Department of the Interior, United States Fish and Wildlife Service, 18th and C Streets, NW., Washington, D.C. 20240, 703 235-1975

RIN: 1018-AB14

1097. MARINE MAMMALS: REPORTING AND SEALING REQUIREMENTS FOR ALASKA NATIVES

Legal Authority: 16 USC 1362(a)

CFR Citation: 50 CFR 18

Legal Deadline: None.

Abstract: The Service will propose rules that would require the marking, tagging, or otherwise identifying of raw parts of certain marine mammals lawfully taken for Alaska Natives for purposes of subsistence or the creation and selling of authentic native articles of handicrafts and clothing. This rule is necessary for management purposes.

Timetable:

Action	Date	FR Cite
NPRM	12/03/85	50 FR 49577
Extend comment period	03/25/86	51 FR 10243
Final Action	06/00/88	

Small Entity: No

Additional Information: Originally scheduled: July 1980.

Agency Contact: Lynn Starnes, Chief, Division of Fish and Wildlife, Management Assistance, Department of the Interior, United States Fish and Wildlife Service, 18th and C Streets, NW, Washington, DC 20240, 202 632-2202

RIN: 1018-AA20

1098. SUBSISTENCE TAKE OF MIGRATORY BIRDS

Significance: Regulatory Program

Legal Authority: 16 USC 701 to 718

CFR Citation: 50 CFR 20

Legal Deadline: None.

Abstract: In 1979, the United States and Canada signed a protocol to amend the 1916 treaty concerning management of migratory birds. The protocol initiated efforts to recognize historical native subsistence of such birds. A rule will be developed to implement this international agreement.

Timetable:

Action	Date	FR Cite
ANPRM	03/10/83	48 FR 10101
NPRM	05/19/86	51 FR 18349
Final Action	00/00/00	

Small Entity: Not Applicable

Additional Information: This action will follow that in RIN 1018-AA90 that is listed in the Regulatory Program of the United States Government. The Protocol in 1018-AA90 was reviewed by Canadian officials and they wish to reopen negotiations. This will delay indefinitely final action on development of an international agreement.

Agency Contact: Marvin Plenert, Acting Assistant, Director - Refuges and Widlife, Department of the Interior, United States Fish and Wildlife Service, 18th and C Streets, NW, Washington, DC 20240, 202 343-5333

RIN: 1018-AA92

1099. GENERAL PERMIT PROCEDURES AND MIGRATORY BIRD PERMITS: RAPTOR PROPAGATION AND FALCONRY REGULATIONS

Legal Authority: 16 USC 703; 16 USC 1531

CFR Citation: 50 CFR 21; 50 CFR 13

Legal Deadline: None.

Abstract: This action will examine changes to the restrictions concerning propagation of raptors and standards for falconry. The Service will expand authorized activities and de-regulate certain other activities.

Timetable:

Action	Date	FR Cite
ANPRM	05/22/86	51 FR 18812
ANPRM Comment Period End	05/23/86	51 FR 18812
NPRM	12/28/87	52 FR 48948
NPRM Comment Period End	02/26/88	52 FR 48948
Final Action	09/00/88	

Small Entity: Undetermined

Agency Contact: Clark Bavin, Chief, Division of Law Enforcement, Department of the Interior, United States Fish and Wildlife Service, Room 300 Hamilton, US Fish and Wildlife Service, Washington, DC 20240, 202 343-9242

RIN: 1018-AB01

1100. ENDANGERED SPECIES CONVENTION

Legal Authority: 16 USC 1531 to 1543

CFR Citation: 50 CFR 23

Legal Deadline: None.

Abstract: The regulations implementing the Convention on International Trade in Endangered Species of Wild Fauna and Flora (CITES) will be clarified and revised to incorporate recommendations of the Parties.

Timetable:

Action	Date	FR Cite
NPRM	09/23/87	52 FR 35743
Final Action	12/00/88	

Changes in list of species in Appendices to CITES

Final Action 12/28/87 (52 FR 48820)

Small Entity: No

Agency Contact: Marshall Jones, Acting Chief, Office of Management Authority, Department of the Interior, United States Fish and Wildlife Service, 18th and C Streets, NW, Washington, DC 20240, 202 343-4968

RIN: 1018-AA29

1101. PUBLIC ENTRY AND USE

Legal Authority: 16 USC 460k; 16 USC 668dd

CFR Citation: 50 CFR 26

Legal Deadline: None.

Abstract: Regulations will be proposed which will simplify and reduce administrative costs related to the process by which special regulations, relating to public, access use, and recreation are issued for units of the National Wildlife Refuge system. Special regulations will be used for public access use and recreation on individual national wildlife refuges.

Timetable:

Action	Date	FR Cite
Final Action	12/00/88	

Public entry and use, Back Bay NWR

Final Action 09/23/87 (52 FR 35710)

Small Entity: No

Additional Information: Originally scheduled: April 1981.

Agency Contact: James F. Gillett, Chief, Division of Refuge Management, Department of the Interior, United States Fish and Wildlife Service, 18th and C Streets, NW, Washington, DC 20240, 202 343-4311

RIN: 1018-AA36

1102. FISH AND WILDLIFE RESTORATION GRANTS; INTEREST EARNED ON LICENSE FEES

Legal Authority: 16 USC 669i; 16 USC 777i

CFR Citation: 50 CFR 80

Legal Deadline: None.

Abstract: This action proposes to incorporate general accepted accounting principles related to interest earned on fees collected by the States through the sale of hunting and fishing licenses. The rule would require States to ensure that such interest is used in their fish and wildlife conservation programs.

DOI—FWS

Final Rule Stage

Timetable:

Action	Date	FR Cite
NPRM	12/09/85	51 FR 50185
NPRM Comment Period End	03/28/86	51 FR 7579
Final Action	10/00/88	

Small Entity: No

Agency Contact: Conley Moffett, Chief, Division of Federal Aid, Department of the Interior, United States Fish and Wildlife Service, 18th and C Streets, NW, Washington, DC 20240, 703 235-1526

RIN: 1018-AA97

BILLING CODE 4310-55-T

DEPARTMENT OF THE INTERIOR (DOI)
National Park Service (NPS)

Prerule Stage

1103. NATIONAL PARK SERVICE ACQUISITION REGULATION

Legal Authority: 5 USC 301; 40 USC 486(c)

CFR Citation: 48 CFR 1486; 48 CFR 1452.289; 48 CFR 1453.2; 48 CFR 1453.3

Legal Deadline: None.

Abstract: The proposed regulation would establish Bureau-specific solicitation provisions, contract clauses and prescriptions for their use. These are necessary to supplement and implement the Federal Acquisition Regulation and the Department of the Interior Acquisition Regulation. This will provide standard contractual language for provisions and clauses not otherwise available in the Federal or Interior regulations that are needed by our operational contracting activities. This action should result in cost savings as this development and standardization will relieve the individual contracting activities of the responsibility of developing their own.

Timetable:

Action	Date	FR Cite
Next Action Undetermined		

Small Entity: No

Agency Contact: Lawrence E. Sawler, Chief, Acquisition and Assistance System Branch, Department of the Interior, National Park Service, P.O. Box 37127, Washington, DC 20013-7127, 202 523-5021

RIN: 1024-AB35

DEPARTMENT OF THE INTERIOR (DOI)
National Park Service (NPS)

Proposed Rule Stage

1104. APPALACHIAN NATIONAL SCENIC TRAIL

Legal Authority: 16 USC 3; 16 USC 1246(i)

CFR Citation: 36 CFR 7.100

Legal Deadline: None.

Abstract: The Service proposes to review the levels of resource and visitor protection on the Appalachian Trail provided by the General Regulations in 36 CFR Parts 1 and 2 and to revise 36 CFR 7.100 accordingly.

Timetable:

Action	Date	FR Cite
NPRM	06/00/88	

Small Entity: No

Agency Contact: David A. Ritchie, Project Manager, Department of the Interior, National Park Service, Appalachian Trail Project Office, Harpers Ferry Center, Harpers Ferry, WV 25425, 304 535-2346

RIN: 1024-AB07

1105. HAWAII VOLCANOES NATIONAL PARK: FISHING REGULATIONS

Legal Authority: 16 USC 3

CFR Citation: 36 CFR 7.25

Legal Deadline: None.

Abstract: The Service is proposing to revise the fishing regulations that pertain to Hawaii Volcanoes National Park to clarify provisions that address Native Hawaiian fishing rights in the Kalapana extension area of the Park.

Timetable:

Action	Date	FR Cite
NPRM	05/00/88	

Small Entity: Undetermined

Agency Contact: David Ames, Superintendent, Hawaii Volcanoes National Park, Department of the Interior, National Park Service, Hawaii 96718-0052, 808 967-7311

RIN: 1024-AB66

1106. MAMMOTH CAVE NP: FISHING

Legal Authority: 16 USC 1; 16 USC 3

CFR Citation: 36 CFR 7.36

Legal Deadline: None.

Abstract: This proposed regulation pertains to Mammoth Cave National Park. The regulation will allow fishing to take place in accordance with applicable Kentucky State law.

Timetable:

Action	Date	FR Cite
NPRM	06/00/88	

Small Entity: Undetermined

Agency Contact: William Sturgeon, Acting Chief, Ranger Activities Branch, Department of the Interior, National Park Service, 75 Spring Street, SW, Atlanta, GA 30303, 404 221-4916

RIN: 1024-AA94

1107. CAPE HATTERAS NATIONAL SEASHORE: OFF-ROAD VEHICLE REGULATIONS

Legal Authority: 16 USC 3

CFR Citation: 36 CFR 7.58

Legal Deadline: None.

Abstract: The Service proposes to designate by regulation routes available for off-road vehicle use at Cape Hatteras National Seashore, NC.

Timetable:

Action	Date	FR Cite
NPRM	08/00/88	

Small Entity: Undetermined

Agency Contact: Thomas Hartman, Superintendent, Cape Hatteras National Seashore, Department of the Interior, National Park Service, Route 1, Box 675, Manteo, NC 27954, 919 473-2111

RIN: 1024-AB54

1108. ROCKY MOUNTAIN NATIONAL PARK: FISHING REGULATIONS

Legal Authority: 16 USC 3

CFR Citation: 36 CFR 7.7(a)

Legal Deadline: None.

Abstract: The Service proposes to revise this section to further define waters closed to fishing as well as to further clarify the possession limit of fish.

Timetable:

Action	Date	FR Cite
NPRM	07/00/88	

Small Entity: Undetermined

Agency Contact: David R. Stevens, Research Biologist, Department of the Interior, National Park Service, Rocky Mountain National Park, Estes Park, CO 80517, 303 586-2371

RIN: 1024-AB46

1109. ROCKY MOUNTAIN NATIONAL PARK: TRUCKING REGULATIONS

Legal Authority: 16 USC 3

CFR Citation: 36 CFR 7.7

Legal Deadline: None.

Abstract: The Service proposes to revise regulations that address permit requirements and establish a fee schedule for commercial trucks that use Trail Ridge Road within Rocky Mountain National Park.

Timetable:

Action	Date	FR Cite
NPRM	08/00/88	

Small Entity: Undetermined

Agency Contact: David Essex, Chief Ranger, Rocky Mountain National Park, Department of the Interior, National Park Service, Estes Park, CO 80517, 303 586-2371

RIN: 1024-AB67

1110. GLEN CANYON NATIONAL RECREATION AREA: COMMERCIAL OPERATIONS AND WHITEWATER BOATING REGULATIONS

Legal Authority: 16 USC 3

CFR Citation: 36 CFR 7.70

Legal Deadline: None.

Abstract: The Service proposes to amend special regulations that apply to Glen Canyon National Recreation Area by clarifying provisions that pertain to commercial operations and deleting duplicative provisions that pertain to Colorado River Whitewater boat trips.

Timetable:

Action	Date	FR Cite
NPRM	04/00/88	

Small Entity: No

Agency Contact: John Lancaster, Superintendent, Department of the Interior, National Park Service, Glen Canyon National Recreation Area, Box 1507, Page, AZ 86040, 602 645-2471

RIN: 1024-AB72

1111. BIG THICKET NATIONAL PRESERVE: HUNTING REGULATIONS

Legal Authority: 16 USC 3

CFR Citation: 36 CFR 7.85

Legal Deadline: None.

Abstract: The Service proposes to revise the hunting regulations that apply to the Big Thicket. Changes proposed include dates for open seasons, the use of temporary blinds, permits, the use of calling devices and the use of dogs.

Timetable:

Action	Date	FR Cite
NPRM	06/00/88	

Small Entity: No

Agency Contact: Ken Mabery, Park Ranger, Department of the Interior, National Park Service, Southwest Region, P.O. Box 728, Santa Fe, NM 87501, 505 988-6371

RIN: 1024-AB48

1112. WHISKEYTOWN NATIONAL RECREATION AREA FISHING REGULATIONS

Legal Authority: 16 USC 3

CFR Citation: 36 CFR 7.91

Legal Deadline: None.

Abstract: The Service is proposing to allow fishing at Whiskeytown National Recreation area in any manner authorized under applicable state law.

Timetable:

Action	Date	FR Cite
NPRM	07/00/88	

Small Entity: Undetermined

Agency Contact: Ray Foust, Superintendent, Department of the Interior, National Park Service, PO Box 188, Whiskeytown, CA 96095, 916 241-6584

RIN: 1024-AB61

1113. CAPE LOOKOUT NATIONAL SEASHORE: OFF-ROAD VEHICLES

Legal Authority: 16 USC 1; 16 USC 3

CFR Citation: 36 CFR 7.98

Legal Deadline: None.

Abstract: This proposed regulation pertains to Cape Lookout National Seashore and will establish criteria for the operation of vehicles in off road situations consistent with existing NPS policy.

Timetable:

Action	Date	FR Cite
NPRM	07/00/88	

Small Entity: Undetermined

Agency Contact: William Sturgeon, Acting Chief, Ranger Activities Branch, Department of the Interior, National Park Service, 75 Spring Street, SW, Atlanta, GA 30303, 404 221-4916

RIN: 1024-AA89

1114. ● MINERALS MANAGEMENT - NON-FEDERAL OIL AND GAS

Significance: Agency Priority

Legal Authority: 16 USC 1 et seq.; 16 USC 410g; 16 USC 4101; 16 USC 459d-3; 16 USC 459h-3; 16 USC 698c; 16 USC 698i; 16 USC 460-2(i); 16 USC 450kk; 16 USC 230a

CFR Citation: 36 CFR 9, Subpart B

Legal Deadline: None.

Abstract: Several sections of 36 CFR Part 9, Subpart B contain ambiguous language which has caused confusion in interpreting the existing regulations The NPS wants to make technical revisions to clarify requirements for both applicants and the Service. Also, the existing regulations exempt two classes of operators from compliance.

Because of these exemptions, the regulations apply to only 35% of the existing operations resulting in avoidable impacts to park resources and visitor values from unregulated operations. Examples of such revisions include: Making the regulations applicable to all oil and gas operations within all units of the National Park System by removing exemptions for operators; updating terms for consistency with existing policies, practices, and laws; removing the monetary ceiling and floor on bonds and security deposits so that bonds may be calculated and posted commensurate with reclamation costs; revising sections of the regulations to make them consistent with the enabling legislation of affected units; and, clarifying compliance issues associated with different access conditions. Revisions will decrease the potential for prolonged (Cont)

Timetable:

Action	Date	FR Cite
NPRM	04/00/88	
NPRM Comment Period End	07/00/88	
Final Action	11/00/88	
Final Action Effective	12/00/88	

Small Entity: Undetermined

Additional Information: ADDITIONAL ABSTRACT: uncertainty among applicants.

Agency Contact: Pam Matthes, Environmental Protection Specialist, Land Resources Division, Department of the Interior, National Park Service, P.O. Box 37127, Room 3223, 1100 L St. NW, Washington, DC 20013-7127, 202 523-5120

RIN: 1024-AB39

1115. ● MANAGEMENT OF MINERAL DEVELOPMENT ASSOCIATED WITH MINING CLAIMS

Significance: Agency Priority

Legal Authority: 16 USC 1901 et seq Mining in the Parks Act of 1976; 16 USC 1 et seq NPS Organic Act; 30 USC 21 et seq Mining Law of 1872

CFR Citation: 36 CFR 9, Subpart A

Legal Deadline: None.

Abstract: The existing regulations at 36 CFR Part 9, Subpart A, promulgated in January of 1977, contain several provisions that are either outdated or have proven difficult to understand, enforce and comply with. Most notable is a provision regarding the use of water in connection with mining claims within National Park System units. The current language creates a "catch 22" for miners seeking to use water in connection with their claims. In order to use water in a park, a miner must have perfected water right. However, to obtain a perfected water right, a miner must use water. Herein lies the "catch 22." The National Park Service (NPS) would like to rectify this dilemma through a rule change that would eliminate the perfected water right language while at the same time preserve the Service's ability to protect water quality and quantity. Additional changes sought by the NPS are as follows: (1) Several sections of the regulations refer to a surface disturbance moratorium (mandated by the Mining in the Parks Act of 1976, 16 USC 1901 et seq.) which expired in 1980. Other sections include transitional procedures used temporarily in implementing the regulations.

Timetable:

Action	Date	FR Cite
NPRM	04/00/88	
Final Action	04/00/88	
NPRM Comment Period End	05/00/88	
Final Action Effective	10/00/88	

Small Entity: Undetermined

Agency Contact: Carol McCoy, Chief, Policy and Regulations Section, Land Resources Division, Department of the Interior, National Park Service, P.O. Box 37127, Room 3223, 1100 L St., NW, Washington, DC 20013-7127, 202 523-5120

RIN: 1024-AB74

1116. ● MINERALS MANAGEMENT: NONFEDERAL RIGHTS OTHER THAN OIL AND GAS

Significance: Agency Priority

Legal Authority: 16 USC 1 et seq; 31 USC 9701; 5 USC 301

CFR Citation: 36 CFR Part 9, Subpart C

Legal Deadline: None.

Abstract: Extensive nonfederal mineral rights exist within units of the National Park System. The Service presently regulates only nonfederal oil and gas activities occurring in those units. Mineral activities, other than those associated with nonfederal oil and gas, are occurring in approximately 13 units of the System. There are also 7 additional units in which nonfederal mineral development is currently proposed or has recently been proposed. The Service is charged by Congress to ensure that the development of nonfederal mineral rights within park boundaries is consistent with the purposes for which the units were established. The proposed regulation would establish procedures and standards governing nonfederal mineral development, other than nonfederal oil and gas, in a manner that protects affected park units until such time that the Service has sufficient funds to acquire the mineral right.

Timetable:

Action	Date	FR Cite
NPRM	11/00/88	
Final Action	01/00/89	

Small Entity: Undetermined

Government Levels Affected: Local, State, Federal

Agency Contact: Sharon Kliwinski, Environmental Protection Specialist, Land Resources Division, Department of the Interior, National Park Service, P.O. Box 37127, Room 3223, 1100 L Street, NW, Washington, DC 20013-7127, 202 523-5120

RIN: 1024-AB75

1117. NPS UNITS IN ALASKA: CONCESSIONS

Legal Authority: 16 USC 1

CFR Citation: 36 CFR 13

Legal Deadline: None.

Abstract: This rulemaking will establish procedures for providing commercial visitor services in certain Alaska national park areas as provided for by the Alaska National Interest Lands Act.

Timetable:

Action	Date	FR Cite
NPRM	05/00/88	

Small Entity: Undetermined

Agency Contact: David B. Ames, Associate Regional Director, Department of the Interior, National Park Service, Alaska Regional Office -

NPS, 2525 Gambell Street, Anchorage, AK 99503, 907 271-4551

RIN: 1024-AB18

1118. ARCHEOLOGICAL AND HISTORIC PRESERVATION ACT DEPARTMENT OF THE INTERIOR REGULATIONS

Legal Authority: 16 USC 469; 16 USC 470; 16 USC 470aa

CFR Citation: 36 CFR 66

Legal Deadline: None.

Abstract: This rule is part of the Department's proposed overall rulemaking with respect to the Archeological and Historic Preservation Act of 1974. This guidance will facilitate the Department's coordination of activities authorized under the Act, and its reporting to Congress on the scope and effectiveness of the program, as required by section 5(c) of the Act.

Timetable:

Action	Date	FR Cite
ANPRM	10/28/85	50 FR 43587
ANPRM Comment Period End	11/27/85	50 FR 43587
NPRM	08/00/88	
Final Action	12/00/88	

Small Entity: Undetermined

Agency Contact: Bennie Keel, Department of the Interior, National Park Service, P.O. Box 37127, Washington, DC 20013-7127, 202 343-1876

RIN: 1024-AA49

1119. HISTORIC PRESERVATION CERTIFICATIONS PURSUANT TO SECTION 48(G) AND SECTION 170(H) OF THE INTERNAL REVENUE CODE OF 1986

Legal Authority: 16 USC 470(a) (1)(A); 26 USC 48 (g); 26 USC 170(h)

CFR Citation: 36 CFR 67, (Revised)

Legal Deadline: None.

Abstract: This proposed rule restates and makes amendments to the procedures by which owners desiring tax benefits for rehabilitation of historic buildings apply for certifications pursuant to Section 48(g) and Section 170(h) of the Internal Revenue Code of 1986. These tax laws require certifications from the Secretary of the Interior in order for taxpayers to receive tax benefits.

Timetable:

Action	Date	FR Cite
NPRM	05/00/88	

Small Entity: No

Agency Contact: H. Ward Jandl, Chief, Technical Preservation Services Branch, Department of the Interior, National Park Service, P O Box 37127, Washington, DC 20013-7127, 202 343-9584

RIN: 1024-AB73

1120. CEMETERY SITES AND HISTORICAL PLACES

Legal Authority: 16 USC 3

CFR Citation: 43 CFR 2653

Legal Deadline: None.

Abstract: The Service is proposing to amend 43 CFR 2653.5 by deleting all references to the Service as the consulting agency concerning the cultural value and significance of existing Alaska Native cemetery sites and historical places. This revision will relieve the Service from the responsibility of being the consulting agency for sites located on all Federal lands in Alaska, thus eliminating an expensive duplication of Federal effort.

Timetable:

Action	Date	FR Cite
Next Action Undetermined		

Small Entity: Undetermined

Additional Information: Originally scheduled: October 1983.

Agency Contact: Rich O'Guinn, Department of the Interior, National Park Service, Alaska Regional Office, 2525 Gambell Street, Anchorage, AK 99503, 907 271-2860

RIN: 1024-AA84

DEPARTMENT OF THE INTERIOR (DOI)

National Park Service (NPS)

Final Rule Stage

1121. CUYAHOGA VALLEY NRA: OFF-ROAD VEHICLES AND SNOWMOBILES

Legal Authority: 16 USC 3

CFR Citation: 36 CFR 7.17

Legal Deadline: None.

Abstract: The Service proposes to designate routes for off-road vehicles and snowmobile use in compliance with Executive Order 11644, in an area west of Riverview Road bounded by I-80 and I-271.

Timetable:

Action	Date	FR Cite
NPRM	06/15/87	52 FR 22662
NPRM Comment Period End	07/15/87	52 FR 22662
Final Action	09/00/88	

Small Entity: Undetermined

Agency Contact: Brian McHugh, Chief Park Ranger, Cuyahoga Valley NRA, Department of the Interior, National Park Service, 15610 Vaughn Road, Brecksville, Ohio 44141, 216 526-5256

RIN: 1024-AB44

1122. CANYON DE CHELLY NATIONAL MONUMENT

Legal Authority: 16 USC 3

CFR Citation: 36 CFR 7.19

Legal Deadline: None.

Abstract: This proposed rulemaking will establish criteria for the operation of horse rental facilities within Canyon De Chelly National Monument.

Timetable:

Action	Date	FR Cite
NPRM	05/27/87	52 FR 19735
NPRM Comment Period End	06/26/87	52 FR 19735
Final Action	06/00/88	

Small Entity: Undetermined

Agency Contact: Ken Mabery, Park Ranger, Department of the Interior, National Park Service, Southwest Region, P.O. Box 728, Santa Fe, NM 87501, 505 988-6371

RIN: 1024-AB47

1123. FORT JEFFERSON NM: FISHING; BOUNDARY ADJUSTMENTS

Legal Authority: 16 USC 1; 16 USC 3

CFR Citation: 36 CFR 7.27

Legal Deadline: None.

Abstract: This proposed regulation pertains to Fort Jefferson National Monument and will delete references to the taking of crayfish and conch. Information will be included to redefine the park boundary. These changes are necessary to reflect a closure of park waters to the removal of crayfish and conch and to update boundary changes mandated by Congressional action in 1980 that enlarged the park area.

Timetable:

Action	Date	FR Cite
NPRM	06/05/86	51 FR 28110
Final Action	07/00/88	

Small Entity: Undetermined

Agency Contact: William Sturgeon, Acting Chief, Ranger Activities Branch, Department of the Interior, National Park Service, 75 Spring Street, SW, Atlanta, GA 30303, 404 221-4916

RIN: 1024-AA96

1124. JEAN LAFITTE NHP: CRAWFISHING REGULATIONS

Legal Authority: 16 USC 3; 16 USC 230d

CFR Citation: 36 CFR 7.37

Legal Deadline: None.

Abstract: The proposed rulemaking pertains to Jean Lafitte National Historical Park located in Louisiana. The rulemaking will establish criteria for the harvesting of crawfish in the Barataria Unit and will establish a recreational and subsistence season. The policy is consistent with Public Law 95-625 and existing National Park Service and Department of the Interior policies.

Timetable:

Action	Date	FR Cite
NPRM	08/18/86	51 FR 29498
Final Action	07/00/88	

Small Entity: Undetermined

Agency Contact: James L. Isenogle, Superintendent, Jean Lafitte National Historical Park, Department of the Interior, National Park Service, 423 Canal Street, Rm. 206, New Orleans, LA 70130, 504 589-3882

RIN: 1024-AB33

1125. EVERGLADES NP: MINING

Legal Authority: 16 USC 3

CFR Citation: 36 CFR 7.45(a)

Legal Deadline: None.

Abstract: This deletion applies to Everglades National Park in Florida. Section 7.45(a) will be deleted because it is a duplication of the General Regulations 36 CFR, Sections 1.6, 1.7 and 2.1.

Timetable:

Action	Date	FR Cite
NPRM	06/05/86	51 FR 28108
NPRM Comment Period End	09/04/86	51 FR 28108
Final Action	07/00/88	

Small Entity: No

Additional Information: FTS 242-4916.

Agency Contact: William Sturgeon, Regional Law Enforcement Specialist, Department of the Interior, National Park Service, Southeast Regional Office, 75 Spring Street, SW, Atlanta, GA 30303, 404 221-4916

RIN: 1024-AB10

1126. LAKE MEAD NATIONAL RECREATION AREA: NOISE ABATEMENT EXEMPTION

Legal Authority: 16 USC 3

CFR Citation: 36 CFR 7.48(i)

Legal Deadline: None.

Abstract: The proposed rulemaking pertains to Lake Mead National Recreation Area, located in Arizona and Nevada. It would allow motor vessels to exceed existing noise limitations while participating in regattas; thereby, making possible the continuation of a traditional activity.

Timetable:

Action	Date	FR Cite
NPRM	12/20/85	50 FR 51866
NPRM Comment Period End	01/21/86	50 FR 51866
Final Action	05/00/88	

Small Entity: Undetermined

Agency Contact: Newton Sikes, Chief Ranger, Department of the Interior, National Park Service, 601 Nevada Hwy., Boulder City, NV 89005, 702 293-1041

RIN: 1024-AB50

1127. LAKE CHELAN NRA: TARGET PRACTICE

Legal Authority: 16 USC 3

CFR Citation: 36 CFR 7.62

Legal Deadline: None.

Abstract: This proposed rulemaking pertains to Lake Chelan NRA and will designate a specially designed and constructed facility and time and location for target practice.

Timetable:

Action	Date	FR Cite
NPRM	05/09/85	50 FR 19546
NPRM Comment Period End	06/10/85	50 FR 19546
Final Action	09/00/88	

Small Entity: No

Agency Contact: John Reynolds, Superintendent, North Cascades National Park, Department of the Interior, National Park Service, 800 State Street, Sedro Wooley, WA 98284, 206 855-1331

RIN: 1024-AB19

1128. ROSS LAKE NRA: TARGET PRACTICE

Legal Authority: 16 USC 1

CFR Citation: 36 CFR 7.69

Legal Deadline: None.

Abstract: This proposed rulemaking pertains to Ross Lake National Recreation Area and will designate a specially designed and constructed facility and time and location for target practice.

Timetable:

Action	Date	FR Cite
NPRM	05/09/85	50 FR 19546
NPRM Comment Period End	06/10/85	50 FR 19546
Final Action	09/00/88	

Small Entity: No

Agency Contact: John Reynolds, Superintendent, North Cascades National Park, Department of the Interior, National Park Service, 800 State Street, Sedro Wooley, WA 98284, 206 855-1331

RIN: 1024-AB26

1129. BIG CYPRESS NATIONAL PRESERVE: INDIAN USE AND OCCUPANCY

Legal Authority: 16 USC 3

CFR Citation: 36 CFR 7.86

Legal Deadline: None.

Abstract: This rule will define the Statutory rights of the Miccosukee and Seminole Indians within Big Cypress National Preserve. Although a proposed rule was published in 1981, a revised proposed rulemaking will be developed.

Timetable:

Action	Date	FR Cite
NPRM	11/21/81	46 FR 55709
Final Action	05/00/88	

Small Entity: No

Additional Information: Originally scheduled: January 1981.

Agency Contact: William Sturgeon, Acting Chief, Ranger Activities, Department of the Interior, National Park Service, Southeast Regional Office, 75 Spring Street, SW, Atlanta, GA 30303, 404 242-4916

RIN: 1024-AA07

1130. WHISKEYTOWN UNIT, WHISKEYTOWN - SHASTA - TRINITY NRA GOLD PANNING REGULATIONS

Legal Authority: 16 USC 3

CFR Citation: 36 CFR 7.91

Legal Deadline: None.

Abstract: The Service proposes to allow visitors to engage in limited Gold Panning Activities, using pan and trowel only, in certain designated streams within the recreation area. Any gold recovered by such methods could be retained for personal, non-commercial use.

Timetable:

Action	Date	FR Cite
NPRM	02/09/88	53 FR 3759
Final Action	04/00/88	

Small Entity: Undetermined

Agency Contact: Ray Foust, Superintendent, Department of the Interior, National Park Service, Whiskeytown National Recreation Area, Box 188, Whiskeytown, CA 96095, 916 241-6584

RIN: 1024-AB71

1131. BIGHORN CANYON NATIONAL RECREATION AREA - FISHING REGULATIONS

Legal Authority: 16 USC 3

CFR Citation: 36 CFR 7.92

Legal Deadline: None.

Abstract: The Service proposes to authorize fishing at Bighorn Canyon National Recreation area in any manner authorized under the applicable laws of Montana and Wyoming.

Timetable:

Action	Date	FR Cite
NPRM	10/10/86	51 FR 36409
NPRM Comment Period End	11/10/86	51 FR 36409
Final Action	06/00/88	

Small Entity: Undetermined

Agency Contact: Richard Lake, Chief, Park Ranger, Bighorn Canyon NRS, Department of the Interior, National Park Service, PO Box 458, Ft. Smith, MT 59035, 406 666-2412

RIN: 1024-AB63

1132. MANAGEMENT OF MINING CLAIM ACTIVITIES

Legal Authority: 16 USC 3 et seq NPS Organic Act; 16 USC 1901 et seq Mining in the Parks Act of 1976

CFR Citation: 36 CFR 9, Subpart A

Legal Deadline: None.

Abstract: The intent of this current rulemaking is to explain that mineral development on mining claims within the boundaries of units of the National Park System is governed by regulations at 36 CFR Part 9, Subpart A without regard to whether the claim is patented or how the claim is accessed. This rulemaking also explains the relationship of the 36 CFR Part 9, Subpart A regulations to those governing access in Alaska in 43 CFR Part 36. This rulemaking is necessary because confusion exists in the mining community in Alaska as to the scope of these regulations due to a regulatory provision that was contained at 36 CFR Part 13.15(d)(1) that exempted operators from compliance with the 36 CFR Part 9, Subpart A regulations if the operators could access their patented claims without crossing federally-owned parklands. Because there was no legal basis for such an exemption in either the Mining In The Parks Act or the Alaska National Interest Lands Conservation Act of 1980, the Department eliminated the exemption when it promulgated its regulations at 43 CFR Part 36.

Timetable:

Action	Date	FR Cite
ANPRM	07/20/84	49 FR 29415
ANPRM Comment Period End	08/20/84	49 FR 29415
30 day extension to ANPRM comment period to	09/20/84	
NPRM	04/03/87	52 FR 10866
NPRM Comment Period End	09/04/87	52 FR 28850
Final Action	04/00/88	

Small Entity: No

Agency Contact: Carol McCoy, Chief, Policy and Regulations Section, Land Resources Division, Department of the Interior, National Park Service, Room 3223 (660), Box 37127, Washington, DC 20013-7127, 202 523-5120

RIN: 1024-AB37

1133. NPS UNITS IN ALASKA: CLOSURE REGULATIONS

Legal Authority: 16 USC 3

CFR Citation: 36 CFR 13

Legal Deadline: None.

Abstract: This rule will provide for the closure of certain areas within Denali National Park and Preserve, Glacier Bay National Park and Preserve, Gates of the Arctic National Park and Preserve and Katmai National Park and Preserve to snowmachines, motorboat and aircraft use.

Timetable:

Action	Date	FR Cite
NPRM	04/06/83	48 FR 14978
NPRM Comment Period End	06/06/83	48 FR 14978
Comment Period Extension Begin	06/06/83	48 FR 26319
Comment Period Extension Ends	08/06/83	
Final Action	04/00/88	

Small Entity: No

Additional Information: Originally scheduled: April 1982.

Agency Contact: David B. Ames, Associate Regional Director, Department of the Interior, National Park Service, Alaska Regional Office, 2525 Gambell Street, Anchorage, AK 99503, 907 271-2564

RIN: 1024-AA71

VOL 53 ISS 79 PT 1 AP 25 1988 UMI

1134. FIRE ISLAND NATIONAL SEASHORE: ZONING

Legal Authority: 16 USC 3

CFR Citation: 36 CFR 28

Legal Deadline: None.

Abstract: This rule will be revised to add new definitions, to amend permitted and prohibited uses and to update zoning standards to reflect Seashore policy and local zoning ordinances.

Timetable:

Action	Date	FR Cite
NPRM	10/07/87	52 FR 37586
NPRM Comment Period End	11/06/87	52 FR 37586
Final Action	07/00/88	

Small Entity: Undetermined

Agency Contact: Larry Hovig, Department of the Interior, National Park Service, North Atlantic Regional Office, 15 State Street, Boston, MA 02109, 617 223-1178

RIN: 1024-AA80

1135. NATIONAL REGISTER OF HISTORIC PLACES

Legal Authority: 16 USC 470 et seq

CFR Citation: 36 CFR 60

Legal Deadline: None.

Abstract: This rule is being amended to revise: appeals for listing nominations by persons or local governments in States without approved State historic preservation programs; procedures for nominations from State and Federal agencies; and procedures for making changes to listed properties and removals from the National Register, including appeals, and to incorporate 36 CFR Part 63.

Timetable:

Action	Date	FR Cite
Interim Final Rule	11/16/81	
NPRM	08/05/86	51 FR 28204
NPRM Comment Period End	10/06/86	51 FR 28204
Final Action	05/16/88	
Final Action Effective	06/16/88	

Small Entity: No

Additional Information: Originally scheduled: January 1981.

Agency Contact: Carol Shull, Chief, National Register Branch, Interagency Resources Division, Department of the Interior, National Park Service, 18th and C Streets, NW, Washington, DC 20240, 202 343-9500

RIN: 1024-AA44

1136. DETERMINATION OF ELIGIBILITY FOR INCLUSION IN THE NATIONAL REGISTER OF HISTORIC PLACES

Legal Authority: 16 USC 470 et seq

CFR Citation: 36 CFR 63

Legal Deadline: None.

Abstract: This rule incorporates certain revisions responding to the National Historic Preservation Act Amendments of 1980. In addition to responding to the new law, these changes update and revise in other minor respects the procedures for determining the eligibility of properties for the National Register. This rule will be consolidated with 36 CFR Part 60. Proposed rule (36 CFR Part 1204) was published May 23, 1980 (45 FR 34909).

Timetable:

Action	Date	FR Cite
NPRM 36 CFR 1204	05/23/80	45 FR 34909
NPRM	08/05/86	51 FR 28216
NPRM Comment Period End	10/06/86	51 FR 28216
Final Action	05/16/88	
Final Action Effective	06/16/88	

Small Entity: No

Additional Information: Originally scheduled: July 1979.

Agency Contact: Carol Shull, Chief, National Register Branch, Interagency Resources Division, Department of the Interior, National Park Service, 18th and C Streets, NW, Washington, DC 20240, 202 343-9539

RIN: 1024-AA46

1137. CURATION OF FEDERALLY OWNED AND ADMINISTERED ARCHEOLOGICAL COLLECTIONS

Legal Authority: 16 USC 470a; 16 USC 470dd

CFR Citation: 36 CFR 79

Legal Deadline: None.

Abstract: This rule fulfills the Secretary of the Interior's responsibility to issue regulations on the disposition, exchange and curation of federally-owned and administered prehistoric and historic archeological artifacts and associated records recovered under the Antiquities Act of 1906, the Reservoir Salvage Act of 1960 (as amended by the Archeological and Historic Preservation Act of 1974), Section 110 of the National Historic Preservation Act of 1966 (as amended) and the Archeological Resources Protection Act of 1979. The regulation will establish (a) minimum standards for repositories that provide long-term curatorial services; (b) guidelines for Federal agencies for entering into contracts and agreements with repositories and other parties for the care and management of collections; (c) guidelines for access to, loan of and use of collections; and (d) guidelines for the exchange and ultimate disposition of collections.

Timetable:

Action	Date	FR Cite
ANPRM	10/11/85	50 FR 41527
ANPRM Comment Period End	11/12/85	50 FR 41527
NPRM	08/28/87	52 FR 32740
NPRM Comment Period End	10/27/87	52 FR 32740
Final Action	08/00/88	

Small Entity: No

Additional Information: The proposed rule was published for public comment on August 28, 1987. Comments were received from 41 agencies and organizations, including 11 Federal agencies, 7 State agencies, 8 Indian tribes and organizations, 7 museums, 5 archeological and museum organizations, 2 industrial firms, and 1 individual. The National Park Service is in the process of analyzing the comments, making appropriate revisions, and preparing responses to the comments for publication in the preamble of the final rulemaking.

Agency Contact: Dr. Bennie C. Keel, Departmental Consulting Archeologist, Department of the Interior, National Park Service, P.O. Box 37127, Washington, DC 20013-7127, 202 343-1876

RIN: 1024-AB13

BEST COPY AVAILABLE

VOL 53 ISS 79 PT 1 AP 25 1988 UMI

DEPARTMENT OF THE INTERIOR (DOI)

National Park Service (NPS)

Completed Actions

1138. APPLICABILITY AND SCOPE

Legal Authority: 16 USC 3

CFR Citation: 36 CFR 1.2; 36 CFR

Legal Deadline: None.

Abstract: The Service intends to make minor administrative changes to eleven general regulations to clarify their applicability on non-Federal lands under the legislative jurisdiction of the United States.

Timetable:

Action	Date	FR Cite
NPRM	04/14/87	52 FR 12037
NPRM Comment Period End	05/14/87	52 FR 12037
Final Action	09/18/87	52 FR 35238
Final Action Effective	10/19/87	52 FR 35238

Small Entity: No

Agency Contact: Andy Ringgold, Staff Park Ranger, Department of the Interior, National Park Service, P.O. Box 37127, Washington, DC 20013-7127, 202 343-1360

RIN: 1024-AB64

1139. DISCRIMINATION IN EMPLOYMENT PRACTICES AND FURNISHING PUBLIC SERVICES

Significance: Agency Priority

Legal Authority: 16 USC 3

CFR Citation: 36 CFR 5.8; 36 CFR 5.9

Legal Deadline: None.

Abstract: The Service intends to update these two regulations to reflect provisions of existing nondiscrimination statutes and Executive Orders, although the standard provisions of contracts issued by the Service reflect current nondiscrimination policies, these regulations were not revised as new statutory provisions were enacted.

Timetable:

Action	Date	FR Cite
Final Action	01/12/88	53 FR 739
Final Action Effective	02/11/88	53 FR 739

Small Entity: Yes

Agency Contact: David Gackenbach, Chief, Concessions Division, Department of the Interior, National Park Service, P.O. Box 37127, Washington, DC 20013-7127, 202 343-8153

RIN: 1024-AB65

1140. UPPER DELAWARE SRR: FISHING

Legal Authority: 16 USC 1; 16 USC 3

CFR Citation: 36 CFR 7

Legal Deadline: None.

Abstract: This regulation pertains to the Upper Delaware Scenic and Recreation River in New York State. The final regulations published on June 30, 1983 prohibit certain fishing methods that are allowed by New York State law. This proposed regulation would authorize fishing in any manner consistent with existing State law.

Timetable:

Action	Date	FR Cite
NPRM	08/24/87	52 FR 31788
NPRM Comment Period End	09/23/87	52 FR 31788
Final Action	02/09/88	53 FR 3747
Final Action Effective	03/10/88	53 FR 3747

Small Entity: Undetermined

Agency Contact: William Supernaugh, Acting Chief, Ranger Activities, Department of the Interior, National Park Service, 143 South Third Street, Philadelphia, PA 19106, 215 597-7075

RIN: 1024-AA87

1141. SPRINGFIELD ARMORY MUSEUM CLOSURE

Significance: Agency Priority

Legal Authority: 16 USC 3

CFR Citation: 36 CFR 7.23

Legal Deadline: None.

Abstract: The service is issuing an interim rule closing the Springfield Armory Museum to public access and use from September 8, 1987, through April 3, 1989. This closure is necessary because of serious public safety hazards that will exist during the complete renovation of the museum and research facilities.

Timetable:

Action	Date	FR Cite
Final Action	08/24/87	52 FR 31764
Final Action Effective	09/08/87	52 FR 31764

Small Entity: No

Agency Contact: W. Douglas Lindsay, Superintendent, Department of the Interior, National Park Service, Springfield Armory National Historic Site, One Armory Square, Springfield, MA 01105, 413 734-6477

RIN: 1024-AB70

1142. DELAWARE WATER GAP NRA: FISHING

Legal Authority: 16 USC 1; 16 USC 3

CFR Citation: 36 CFR 7.71

Legal Deadline: None.

Abstract: Final regulations published June 30, 1983 in the Federal Register prohibit several fishing methods that are authorized by State laws in Pennsylvania and New Jersey. This proposed regulation affects the Delaware Water Gap National Recreation Area and would allow fishing in any manner consistent with the State laws of Pennsylvania and New Jersey.

Timetable:

Action	Date	FR Cite
NPRM	02/12/87	52 FR 4511
NPRM Comment Period End	03/16/87	52 FR 4511
Final Action	09/15/87	52 FR 34776
Final Action Effective	10/15/87	52 FR 34776

Small Entity: Undetermined

Agency Contact: William Supernaugh, Acting Chief, Ranger Activities Branch, Department of the Interior, National Park Service, 143 South Third Street, Philadelphia, PA 19106, 215 597-7057

RIN: 1024-AA98

1143. APPRAISAL AUTHORITY UNDER THE LAND AND WATER CONSERVATION FUND STATE GRANT PROGRAM

Legal Authority: 42 USC 4601; 42 USC 4633

CFR Citation: 41 CFR 114-50

Legal Deadline: None.

Abstract: Currently, appraisals of land acquisitions supported by Land and Water Conservation Fund State Grants must be reviewed by the National Park Service if they are estimated at $100,000 or more. The National Park Service will examine whether this is an appropriate threshold given the administrative burden placed on the States and the potential for abuse of the program.

DOI—NPS **Completed Actions**

Timetable:

Action	Date	FR Cite
Withdrawn No further action expected at this time.	02/26/88	

Small Entity: No

Government Levels Affected: State, Federal

Agency Contact: Sam Hall, Chief of Recreation Grants Division, Department of the Interior, National Park Service, P.O. Box 37127, Washington, DC 20013, 202 343-3700

RIN: 1024-AB68

BILLING CODE 4310-70-T

DEPARTMENT OF THE INTERIOR (DOI) — Prerule Stage

Bureau of Indian Affairs (BIA)

1144. REVISION OF THE MEMBERSHIP ROLL OF THE EASTERN BAND OF CHEROKEE INDIANS, NORTH CAROLINA

Legal Authority: PL 85-154

CFR Citation: 25 CFR 75

Legal Deadline: None.

Abstract: This rule, which is subject to review, governed the revision authorized by the Act of August 21, 1957, Pub. L. 85-154, (71 Stat. 374), of the membership roll of the Eastern Band of Cherokee Indians, North Carolina, prepared and approved in accordance with the Act of June 4, 1924 (43 Stat. 376), and the Act of March 4, 1931 (46 Stat. 1518). The rule also provides procedures for maintaining a current membership roll. This Part has been redesignated from 25 CFR Part 47.

Timetable:

Action	Date	FR Cite
Begin Review	01/01/85	
End Review	09/00/86	

Small Entity: Undetermined

Agency Contact: Kathleen L. Slover, Tribal Enrollment Specialist, Department of the Interior, Bureau of Indian Affairs, 1951 Constitution Avenue, NW, Washington, DC 20245, 202 343-3592

RIN: 1076-AB54

DEPARTMENT OF THE INTERIOR (DOI) — Proposed Rule Stage

Bureau of Indian Affairs (BIA)

1145. ● PROCEDURES FOR ESTABLISHING THAT AN AMERICAN INDIAN GROUP EXISTS AS AN INDIAN TRIBE

Significance: Regulatory Program

Legal Authority: 5 USC 301; 25 USC 2; 25 USC 9

CFR Citation: 25 CFR 83

Legal Deadline: None.

Abstract: The proposed rule revision will resolve problems encountered with existing regulations published almost ten years ago. Revisions will reduce time and resources required to process petitions, clarify terms and definitions, interpret criteria, add a process whereby groups may withdraw a petition, improve the appeal process and respond to changing conditions. The revised rule will be more cost effective for the Department and Indian groups petitioning for Federal acknowledgment. The proposed revisions will be published taking into consideration ten years of experience with the regulations. Revisions will reflect recommendations received from the Congress, Indian groups and tribes, other Federal agencies and national organizations.

Timetable:

Action	Date	FR Cite
NPRM	04/00/88	
NPRM Comment Period End	08/00/88	
Final Action	11/00/88	

Small Entity: No

Agency Contact: John A. Shapard, Chief, Branch of Acknowledgment and Research, Department of the Interior, Bureau of Indian Affairs, Room 32 SIB, 18th & C Streets, NW, Washington, DC 20240, 202 343-3568

RIN: 1076-AC15

1146. THE INDIAN POLICE

Significance: Agency Priority

Legal Authority: 25 USC 2; 25 USC 9; 25 USC 13

CFR Citation: 25 CFR 11

Legal Deadline: None.

Abstract: The Bureau of Indian Affairs is revising its regulations governing the Bureau's police operations to make them consistent with contemporary enforcement policies and procedures and changes in the Interior Department Manual and the DIA Manual.

Timetable:

Action	Date	FR Cite
NPRM	06/00/88	
NPRM Comment Period End	09/00/88	
Final Action	12/00/88	

Small Entity: No

Agency Contact: James P. Donovan, Acting Chief, Division of Law Enforcement Services, Department of the Interior, Bureau of Indian Affairs, 1951 Constitution Ave., NW, Room 1342, Code 430, Washington, DC 20245, 202 343-5786

RIN: 1076-AB98

1147. FINANCIAL ASSISTANCE AND SOCIAL SERVICES PROGRAM

Significance: Regulatory Program

Legal Authority: 25 USC 13; PL 98-473

CFR Citation: 25 CFR 20

Legal Deadline: None.

Abstract: The Bureau is amending existing Financial Assistance and Social Services Program regulations to further define the adult care services provided to Indian people. These proposed regulations define the extent

of the program, establish eligibility requirements, and establish adult care services as a social services program separate and distinct from the general assistance program. The revision is needed to specifically define the Bureau's role in the provision of institutional and in-home care to Indian adults who are mentally or physically handicapped or otherwise disabled. The Bureau is also amending miscellaneous assistance provisions to conform with the congressional directive in Public Law 98-473. Miscellaneous assistance will be revised and defined as burial assistance. Emergency assistance previously provided under miscellaneous assistance was transferred to general assistance by revision of 25 CFR Part 20(c) on September 30, 1985.

Timetable:

Action	Date	FR Cite
Distribute draft rule to all Area Offices for review	04/30/88	
NPRM	06/30/88	
Final Action	09/30/88	

Small Entity: Undetermined

Agency Contact: David Hickman, Acting Chief, Division of Social Services, Department of the Interior, Bureau of Indian Affairs, 1951 Constitution Ave., NW, Washington, DC 20245, 202 343-6434

RIN: 1076-AB99

1148. ● FINANCIAL ASSISTANCE AND SOCIAL SERVICES PROGRAM

Legal Authority: 25 USC 13

CFR Citation: 25 CFR 20

Legal Deadline: None.

Abstract: This rulemaking action is being taken to further define various programmatic responsibilities of the Child Welfare Assistance and Child and Family Service Program under this part.

Timetable:

Action	Date	FR Cite
NPRM	04/00/88	
NPRM Comment Period End	06/00/88	
Final Action Effective	08/00/88	

Small Entity: No

Agency Contact: David L. Hickman, Acting Chief, Division of Social Services, Department of the Interior, Bureau of Indian Affairs, 1951 Constitution Avenue, NW, Washington, DC 20245, 202 343-6434

RIN: 1076-AC13

1149. FEDERAL SCHOOLS FOR INDIANS (REVISION)

Legal Authority: 34 Stat. 1018; 35 Stat. 783; 40 Stat. 564; 25 USC 288; 25 USC 289

CFR Citation: 25 CFR 31, (Revision)

Legal Deadline: None.

Abstract: The purpose of the proposed revision is to define the various types of schools funded by the Bureau and to clarify and define eligibility for non-Indian and Indian children of less than one-fourth blood who wish to attend Bureau-funded day and boarding schools. This proposed revision will also address criteria by which these students may attend Bureau-funded schools and tuition payments related thereto. Costs related to this part will be assumed by the public school district in the form of tuition payments, at no cost to the Bureau. Tuition fees charged will be comparable to but will not exceed the tuition cost charged by the State or County in which the Bureau school is located.

Timetable:

Action	Date	FR Cite
NPRM	04/00/88	
NPRM Comment Period End	05/00/88	
Final Action	09/00/88	

Small Entity: No

Additional Information: Section 31.3 was revised separately and published as a proposed rule. The passage of Pub. L. 99-228 supersedes that earlier revision and the conditions under which non-eligible students may attend Bureau-funded schools are incorporated in the current revision.

Agency Contact: Elizabeth Holmgren, Education Specialist, Branch of Elementary and Secondary Programs, Department of the Interior, Bureau of Indian Affairs, 18th & C Sts. NW, Washington, DC 20240, 202 343-4071

RIN: 1076-AB47

1150. ● SCHOOL BOARDS

Significance: Agency Priority

Legal Authority: 25 USC 2001 et seq

CFR Citation: 25 CFR 35

Legal Deadline: None.

Abstract: The purpose of this rule is to define and delineate the duties and responsibilities of local Indian School Boards in accordance with Federal statutes and regulations. This rule will provide Bureau-wide consistency for the overall exercise of authority and control of Bureau operated schools.

Timetable:

Action	Date	FR Cite
NPRM	09/00/88	

Small Entity: No

Agency Contact: George D. Scott, Education Specialist, Department of the Interior, Bureau of Indian Affairs, Office of Indian Education Programs, 18th & C Streets, NW, Washington, DC 20240, 202 343-4872

RIN: 1076-AC14

1151. THE INDIAN SCHOOL EQUALIZATION PROGRAM (NEW SCHOOL STARTS, PROGRAM EXPANSIONS, SCHOOL CLOSURES, CONSOLIDATIONS, AND PROGRAM REDUCTIONS)

Significance: Regulatory Program

Legal Authority: 92 Stat 2320; 42 Stat 208

CFR Citation: 25 CFR 39.22

Legal Deadline: None.

Abstract: The addition of regulations for "School Closures and Consolidations" will address a uniform procedure for school closure and consolidation in the Bureau-operated and funded schools. The new rule would provide the Bureau advance planning time in the development of its future budgets. The companion regulation on new school starts and program expansions will appear at 25 CFR 271, Subpart H and are incorporated by reference in this Part.

Timetable:

Action	Date	FR Cite
NPRM	04/00/88	
NPRM Comment Period End	05/00/88	
Final Action	09/00/88	

Small Entity: No

Agency Contact: Elizabeth Holmgren, Education Specialist, Department of the

Interior, Bureau of Indian Affairs, 18th & C Streets, NW, Washington, DC 20240, 202 343-4071

RIN: 1076-AB48

1152. GRANTS TO TRIBALLY CONTROLLED COMMUNITY COLLEGES AND NAVAJO COMMUNITY COLLEGE

Significance: Agency Priority

Legal Authority: 25 USC 1815; 25 USC 640

CFR Citation: 25 CFR 41, (Revision)

Legal Deadline: None.

Abstract: The Secretary proposes to revise the current regulations which are used to govern the administration of grants to the Tribally Controlled Community Colleges. The revision is mandatory since the current regulations do not apply to the new requirements which were made under the Amendments Act. The revision will govern the new requirements which include: 1. Planning Grants; 2. Forward Funding; 3. Facility Construction; 4. Endowments; and 5. New Method of Counting Students.

Timetable:

Action	Date	FR Cite
NPRM	05/00/88	

Small Entity: No

Agency Contact: Esther Whalen, Chief, Branch of Postsecondary Education, Department of the Interior, Bureau of Indian Affairs, 1951 Constitution Avenue, NW, Washington, DC 20245, 202 343-4671

RIN: 1076-AA11

1153. ● PREPARATION OF ROLLS OF INDIANS

Legal Authority: 5 USC 301; 25 USC 2; 25 USC 9; PL 100-139

CFR Citation: 25 CFR 61

Legal Deadline: Statutory, October 26, 1988. One year from date of enactment for completion of the tribal membership roll.

Abstract: This rulemaking action is being taken to amend the regulations contained in 25 CFR Part 61. Part 61 contains general enrollment procedures which can be made specifically applicable in the preparation of a particular roll by the Secretary by amending section 61.4 to include the qualifications for enrollment for that particular roll. Under the Cow Creek Band of Umpqua Tribe of Indians Distribution of Judgment Funds Act of 1987, the Secretary has been directed to prepare certain rolls of Cow Creek Indians to be used in the implementation of the Act. The proposed amendment is, therefore, to make the procedures contained in Part 61 applicable to the preparation of the Cow Creek rolls by adding in section 61.4 the qualifications for enrollment for each of the rolls to be prepared.

Timetable:

Action	Date	FR Cite
NPRM	04/00/88	
Final Action	06/00/88	

Small Entity: Undetermined

Agency Contact: Kathleen L. Slover, Tribal Enrollment Specialist, Department of the Interior, Bureau of Indian Affairs, Room 1352 Main Interior, 1951 Constitution Ave., NW, Washington, DC 20245, 202 343-3592

RIN: 1076-AC11

1154. LOANS TO INDIANS FROM THE REVOLVING LOAN FUND

Legal Authority: 25 USC 1451; PL 93-262

CFR Citation: 25 CFR 101

Legal Deadline: None.

Abstract: This part is being revised to incorporate legislative changes made pursuant to the Amendments to the Indian Financing Act of 1984, to reflect policy changes in program administration and to add clarifying language to the existing rule.

Timetable:

Action	Date	FR Cite
NPRM	06/00/88	
NPRM Comment Period End	07/00/88	
Final Action	12/00/88	

Small Entity: No

Agency Contact: J. D. Colbert, Chief, Division of Financial Assistance, Office of Trust and Economic Development, Department of the Interior, Bureau of Indian Affairs, 18th and C Streets, NW, Washington, DC 20240, 202 343-5831

RIN: 1076-AC00

1155. REVOLVING CATTLE POOL

Legal Authority: 5 USC 301

CFR Citation: 25 CFR 102

Legal Deadline: None.

Abstract: This program was transferred to the Bureau of Indian Affairs in the 1950's and is currently inactive. There have been no funds appropriated for the program; therefore, this part is proposed for removal. The terms and conditions of loans of cattle by the United States government to tribes, tribal corporations or tribal members were prescribed in 25 CFR 102. The loans consisted of cattle repayable in kind or assignment of cattle under specific agreements.

Timetable:

Action	Date	FR Cite
NPRM	06/00/88	
NPRM Comment Period End	07/00/88	
Final Action	12/00/88	

Small Entity: No

Agency Contact: J. D. Colbert, Chief, Division of Financial Assistance, Office of Trust and Economic Development, Department of the Interior, Bureau of Indian Affairs, 18th and C Streets, NW, Washington, DC 20240, 202 343-3657

RIN: 1076-AC02

1156. LOAN GUARANTY, INSURANCE, AND INTEREST SUBSIDY

Legal Authority: 88 Stat. 77

CFR Citation: 25 CFR 103

Legal Deadline: None.

Abstract: This part is being revised to incorporate legislative changes made pursuant to the Amendments to the Indian Financing Act of 1984, to reflect policy changes in program administration and to add clarifying language to the existing rule.

Timetable:

Action	Date	FR Cite
NPRM	06/00/88	
NPRM Comment Period End	07/00/88	
Final Action	12/00/88	

Small Entity: No

Agency Contact: J. D. Colbert, Chief, Division of Financial Assistance, Office of Trust and Economic Development, Department of the Interior, Bureau of Indian Affairs, 18th and C Streets, NW, Washington, DC 20240, 202 343-5831

RIN: 1076-AC01

1157. INDIVIDUAL INDIAN MONEY ACCOUNTS

Significance: Regulatory Program

Legal Authority: 5 USC 301; 25 USC 2; 25 USC 9; 43 USC 1457

CFR Citation: 25 CFR 115

Legal Deadline: None.

Abstract: The Individual Indian Money Account program involves funds held in trust status for individuals. Although the rule generally prohibits voluntary accounts, except in circumstances of substantial hardship, the Bureau currently maintains many such accounts in the program. The current regulations will be revised to include specific criteria which must be met by voluntary depositors and which determine cases of "substantial hardship" as required by the regulations.

Timetable:

Action	Date	FR Cite
Revise regulations for Exception Criteria	01/31/87	
NPRM	06/00/88	
Final Action	12/00/88	

Small Entity: Undetermined

Agency Contact: Betty L. Wilkinson, Chief, Division of Accounting Management, Department of the Interior, Bureau of Indian Affairs, 1951 Constitution Avenue, NW, Washington, DC 20245, 202 343-2578

RIN: 1076-AB91

1158. MANAGEMENT OF OSAGE JUDGMENT FUNDS FOR EDUCATION AND SOCIO-ECONOMIC PROGRAMS

Significance: Agency Priority

Legal Authority: 86 Stat 1295

CFR Citation: 25 CFR 122

Legal Deadline: None.

Abstract: The implementing rule for 25 CFR 122 has been reviewed and a determination was made that the portion of the regulations governing socio-economic programs is no longer needed. The rule will be revised to remove that portion of the program.

Timetable:

Action	Date	FR Cite
NPRM	04/00/88	

Small Entity: Undetermined

Agency Contact: Esther Whalen, Chief, Branch of Postsecondary Education, Division of Education Programs, Department of the Interior, Bureau of Indian Affairs, 1951 Constitution Avenue, NW, Washington, DC 20245, 202 343-4871

RIN: 1076-AB51

1159. LEASING OF RESTRICTED LANDS OF MEMBERS OF FIVE CIVILIZED TRIBES, OKLAHOMA, FOR MINING

Legal Authority: Sec. 2, 35 Stat. 312; Sec. 18, 41 Stat. 426; Sec. 1, 45 Stat. 495; Sec. 1, 47 Stat. 777; 25 USC 356; Secs. 3, 11, 35 Stat. 313, 316; Sec. 8, 47 Stat. 779

CFR Citation: 25 CFR 213

Legal Deadline: None.

Abstract: This rule is being revised to insure consistency with existing law and to improve operating procedures. Issues to be addressed include authority to lease inherited restricted land, the processing of lease payments through the Minerals Management Service, and the approval process for division orders. There are no alternatives being considered and the potential cost is unknown.

Timetable:

Action	Date	FR Cite
NPRM	07/00/88	

Small Entity: Not Applicable

Agency Contact: Joseph Johnston, Chief, Division of Mineral Resources, Department of the Interior, Bureau of Indian Affairs, 1951 Constitution Avenue, NW, Washington, DC 20245, 202 343-2790

RIN: 1076-AB41

1160. CONTRACTS UNDER INDIAN SELF-DETERMINATION ACT (SUBPART H - NEW SCHOOL STARTS AND PROGRAM EXPANSIONS)

Significance: Agency Priority

Legal Authority: 88 Stat. 2203; 42 Stat. 208

CFR Citation: 25 CFR 271

Legal Deadline: None.

Abstract: The purpose of the addition of the new rule "New Starts and Program Expansions," is to establish uniform application procedures and approval criteria for tribes seeking to operate new schools or to expand existing education programs through funding by the Indian School Equalization Formula. This rule would provide further clarification of the clause "adequate, free public school facilities" and refine existing criteria.

Timetable:

Action	Date	FR Cite
Hearings held with Indian leadership	08/00/86	
NPRM	04/00/88	
NPRM Comment Period End	05/00/88	
Final Action	08/00/88	

Small Entity: No

Additional Information: Adds a new Subpart H to 25 CFR 271.

Agency Contact: Elizabeth Holmgren, Education Specialist, Department of the Interior, Bureau of Indian Affairs, 18th & C Sts., NW, Washington, DC 20245, 202 343-4071

RIN: 1076-AB49

1161. SMALL TRIBES GOVERNMENTAL ASSISTANCE GRANT PROGRAM

Significance: Agency Priority

Legal Authority: 25 USC 450; 25 USC 13

CFR Citation: 25 CFR 279

Legal Deadline: None.

Abstract: This is a new program which will provide grants to small tribes to enable them to establish, improve or maintain basic governmental functions. This grant program will provide resources needed to allow small tribes to improve their capacity and ability to govern. The program also represents a refocus or redirection of activities previously conducted under the Self-Determination and Small Tribes Core Management Grant Programs. Therefore, Part 278 is proposed for removal from 25 CFR Subchapter M.

Timetable:

Action	Date	FR Cite
NPRM	04/00/88	
NPRM Comment Period End	06/00/88	

Small Entity: No

Agency Contact: George Clark, Division of Self-Determination Services, Office of Tribal Services, Department of the Interior, Bureau of Indian Affairs,

VOL 53 ISS 79 PT 1 APR 25 1988 UMI

1951 Constitution Avenue, NW, Washington, DC 20245, 202 343-4098

RIN: 1076-AC10

1162. INDIAN BUSINESS DEVELOPMENT PROGRAM

Significance: Regulatory Program

Legal Authority: 25 USC 1524 Indian Financing Act of 1974

CFR Citation: 25 CFR 286

Legal Deadline: None.

Abstract: This rule will activate an old grant program that has been granted appropriation authority since FY 1986. The Indian Financing Act amendments of 1984 authorize grants up to $250,000 to tribes and up to $100,000 to individual Indians for economic enterprises.

Timetable:

Action	Date	FR Cite
NPRM	04/00/88	
NPRM Comment Period End	05/00/88	
Final Action	12/00/88	

Small Entity: Undetermined

Agency Contact: J. D. Colbert, Chief, Division of Financial Assistance, Department of the Interior, Bureau of Indian Affairs, Office of Trust and Economic Development, Division of Financial Assistance, Washington, DC 20240, 202 343-5831

RIN: 1076-AA55

1163. TRIBAL GAMING MANAGEMENT CONTRACTS

Significance: Regulatory Program

Legal Authority: 25 USC 81; 25 USC 415; 25 USC 501

CFR Citation: 25 CFR 287

Legal Deadline: None.

Abstract: The Bureau of Indian Affairs is proposing a new rule which establishes the requirements to be met and procedures to be followed to obtain approval of management contracts for tribal gaming enterprises. This action is necessary because the federal courts have held that such management contracts are null and void without Secretarial approval pursuant to 25 U.S.C. 81. The intended effect of this rule is to replace the administrative guidelines previously announced by the Bureau for approval of such contracts and to establish uniform minimum standards for the review and approval of all such gaming management contracts.

Timetable:

Action	Date	FR Cite
NPRM	06/00/88	
NPRM Comment Period End	08/00/88	
Final Action	12/00/88	

Small Entity: No

Agency Contact: Joel Starr, Staff Assistant, Office of the Assistant Secretary, Department of the Interior, Bureau of Indian Affairs, 1951 Constitution Ave., NW, Washington, DC 20245, 202 343-6031

RIN: 1076-AC07

1164. BUY INDIAN ACT CONTRACTING

Legal Authority: 25 USC 47; 36 Stat. 891

CFR Citation: 48 CFR 1480

Legal Deadline: None.

Abstract: This rule will be codified as the new 48 CFR 1480 instead of the old 41 CFR Part 14H to establish policies and procedures concerning the Bureau of Indian Affairs acquisition management system. This issuance pertains to contracts (excluding building construction) entered pursuant to the Act of June 25, 1910 (25 U.S.C. 47), which is usually referred to as the "Buy Indian Act."

Timetable:

Action	Date	FR Cite
Proposed	11/15/84	49 FR 45187
NPRM	04/00/88	
NPRM Comment Period End	05/00/88	
Final Action	10/00/88	

Small Entity: Yes

Additional Information: Originally scheduled: April 1982.

Agency Contact: Peter A. Campanelli, Procurement Analyst, Department of the Interior, Bureau of Indian Affairs, 18th and C Streets, NW, Washington, DC 20240, 202 343-3496

RIN: 1076-AA56

DEPARTMENT OF THE INTERIOR (DOI) — Final Rule Stage

Bureau of Indian Affairs (BIA)

1165. APPEALS FROM ADMINISTRATIVE ACTIONS

Legal Authority: 5 USC 301; 25 USC 2; 25 USC 9

CFR Citation: 25 CFR 2

Legal Deadline: None.

Abstract: The present administrative appeal regulations are ambiguous and misleading. It is difficult to tell what issues may be appealed and to whom the appeal should be sent. Most deadlines are uncertain. Those that are certain are often unrealistic. It is also unclear when a final decision will be rendered by the Interior Board of Indian Appeals and when it will be rendered by the Assistant Secretary for Indian Affairs. Alternatives will be developed by reviewing the existing appeal regulations of other agencies. Consideration will be given to specifying which types of appeals go to the Assistant Secretary and which to the Board. The alternative of providing for the Assistant Secretary to make a case-by-case decision whether or not to refer the matter to the Board will also be considered. The primary benefit should be reduced frustration for both appellants and the BIA officials who handle the appeals. The greatest cost may be that both appellants and BIA officials may have to comply with more specified procedures and meet more deadlines in order for the system to work.

Timetable:

Action	Date	FR Cite
NPRM	11/06/87	52 FR 43006
NPRM Comment Period End	01/05/88	52 FR 43006
Final Action	06/00/88	

Small Entity: Undetermined

Agency Contact: Anne Bolton, Management Analyst, Department of the Interior, Bureau of Indian Affairs, Room 320 - Interior South, 1951

Constitution Avenue, NW, Washington, DC 20245, 202 343-5668

RIN: 1076-AB21

1166. LAW AND ORDER ON INDIAN RESERVATIONS

Significance: Agency Priority

Legal Authority: 25 USC 2; 25 USC 9; 25 USC 13

CFR Citation: 25 CFR 11

Legal Deadline: None.

Abstract: The present regulations contain a very incomplete criminal code that does not cover many areas of the law that are usually in the laws of the state where the reservation is located. The current regulations also contain very sketchy provisions on criminal and civil procedure. It is proposed to update the sections on criminal offenses, and essentially create new sections on criminal procedures, domestic relations, probate proceedings, appellate proceedings and juvenile proceedings. This will provide the Courts of Indian Offenses with more complete and up to date procedures and rules. Courts will have a six month period from the date of publications of the final rule to the effective date in which to revise their court codes. It is not anticipated that this revision will have any effect on the annual case load for these courts or require additional staffing. Therefore, the initiation of these rules should not result in additional costs.

Timetable:

Action	Date	FR Cite
NPRM	10/24/85	50 FR 43235
NPRM Comment Period End	01/31/86	51 FR 400
Final Action	04/00/88	
Code revisions by courts	10/00/88	
Final Action Effective	10/00/88	

Small Entity: Undetermined

Additional Information: Originally scheduled: January 1981.

Agency Contact: Joseph Little, Branch of Judicial Services, Department of the Interior, Bureau of Indian Affairs, 18th and C Streets, NW, Washington, DC 20240, 202 343-7915

RIN: 1076-AA01

1167. EDUCATION PERSONNEL

Significance: Agency Priority

Legal Authority: 25 USC 2011; 25 USC 2015

CFR Citation: 25 CFR 36, (Revision)

Legal Deadline: None.

Abstract: The review of this rule is to update and/or delete the requirements that apply to all individuals appointed or converted to contract education positions in the Bureau of Indian Affairs. The review applies to employees with continuing tenure in both the competitive and excepted service who incumber education positions.

Timetable:

Action	Date	FR Cite
NPRM	09/02/87	52 FR 33382
NPRM Comment Period End	10/02/87	52 FR 33382
Final Action	04/00/88	

Small Entity: No

Agency Contact: George D. Scott, Education Specialist, Department of the Interior, Bureau of Indian Affairs, Office of Indian Education Programs, 18th and C Streets, NW, Washington, DC 20240, 202 343-4872

RIN: 1076-AB02

1168. ADMINISTRATION OF THE HIGHER EDUCATION PROGRAM

Significance: Regulatory Program

Legal Authority: 25 USC 13; PL 67-85

CFR Citation: 25 CFR 40

Legal Deadline: None.

Abstract: This rule will revise established policies and provide uniform procedures to govern the higher education program administered under the authority of 25 U.S.C. 13. This rule applies only to educational grants; Bureau educational loans are governed by 25 CFR Part 91. This Part has been redesignated from 25 CFR Part 32.

Timetable:

Action	Date	FR Cite
NPRM	03/03/87	52 FR 6482
NPRM Comment Period End	05/04/87	52 FR 11503
Final Action	04/00/88	

Small Entity: No

Additional Information: Originally scheduled: January 1980.

Agency Contact: Esther Whalen, Chief, Branch of Postsecondary Education, Department of the Interior, Bureau of Indian Affairs, 18th and C Streets, NW, Washington, DC 20240, 202 343-4871

RIN: 1076-AA10

1169. ADMINISTRATION OF THE INDIAN ADULT EDUCATION PROGRAMS

Significance: Agency Priority

Legal Authority: 25 USC 13

CFR Citation: 25 CFR 46

Legal Deadline: None.

Abstract: These proposed regulations are designed to provide standardized administrative procedures for administering and operating Indian adult education programs.

Timetable:

Action	Date	FR Cite
NPRM	12/30/87	52 FR 49172
NPRM Comment Period End	02/29/88	52 FR 49172
Final Action	07/00/88	

Small Entity: No

Agency Contact: Esther Whalen, Chief, Branch of Postsecondary Education, Department of the Interior, Bureau of Indian Affairs, Office of Indian Education Programs, 18th and C Streets, NW, Washington, DC 20240, 202 343-4871

RIN: 1076-AA15

1170. ● PREPARATION OF A ROLL OF ALASKA NATIVES

Legal Authority: 43 USC 1601 et seq; 5 USC 301; 25 USC 2; 25 USC 9

CFR Citation: 25 CFR 69

Legal Deadline: None.

Abstract: This rulemaking action is being taken to remove 25 CFR Part 69 from the Code of Federal Regulations. The regulations provided procedural rules governing the preparation of a roll of Alaska Natives pursuant to the Alaska Native Claims Settlement Act of 1971, as amended. The application and appeal processes for preparing the roll of Alaska Natives were completed in 1981 and the rule is no longer needed. This Part has been redesignated from 25 CFR Part 43h.

Timetable:

Action	Date	FR Cite
Final Action	05/00/88	

Small Entity: No

Additional Information: It has been determined that this is a rule of agency procedure and practice and therefore does not require publication of a proposed rule.

Agency Contact: Kathleen L. Slover, Tribal Enrollment Specialist, Department of the Interior, Bureau of Indian Affairs, Room 1352 Main Interior, 1951 Constitution Ave., NW, Washington, DC 20245, 202 343-3592

RIN: 1076-AC12

1171. ATTORNEY FEE CONTRACTS WITH INDIAN TRIBES; PAYMENT OF TRIBAL ATTORNEY FEES WITH FEDERALLY APPROPRIATED FUNDS

Significance: Agency Priority

Legal Authority: 5 USC 301; 25 USC 476; 25 USC 13; 25 USC 2; 25 USC 9

CFR Citation: 25 CFR 89.40 to 89.46

Legal Deadline: None.

Abstract: The Bureau of Indian Affairs proposes to revise the rule concerning the circumstances under which the Bureau of Indian Affairs, in the performance of the Federal Government's trust responsibility to Indian tribes, may, in its discretion, provide Departmental funds to an Indian tribe or other Indian organization for the payment of a private attorney's legal services. The proposed revisions would not change the underlying policy of the current rule which is to pay for private counsel to represent Indian tribes only in exceptional circumstances. The principal changes involve representation in child custody proceedings, services of tribal court personnel, and non-litigation services. The proposed revision would also provide that when trust resources are involved, tribes and individual Indian allottees are eligible to apply for and receive Federally appropriated funds under 25 CFR 89.

Timetable:

Action	Date	FR Cite
NPRM	01/21/86	51 FR 2722
NPRM Comment Period End	03/24/86	51 FR 2722
Final Action	06/00/88	

Small Entity: No

Agency Contact: Frank Keel, Special Assistant, Office of Trust and Economic Development, Department of the Interior, Bureau of Indian Affairs, 1951 Constitution Avenue, NW, Code 201, Washington, DC 20245, 202 343-1861

RIN: 1076-AB87

1172. NAVAJO GRAZING REGULATIONS

Legal Authority: 5 USC 301; 25 USC 2; 25 USC 9; 25 USC 640d; 25 USC 640d-28

CFR Citation: 25 CFR 167

Legal Deadline: None.

Abstract: This rule will be revised to clarify the Secretary's responsibilities over grazing control and range restoration activities in the area formerly known as the Joint Use Area under the July 9, 1980 amendments to the Navajo-Hopi Settlement Act, 25 U.S.C. 640d and 640d-28. The rule will form Subpart B of the Existing Navajo Grazing Regulations, which are redesignated as Subpart A of 25 CFR Part 167.

Timetable:

Action	Date	FR Cite
NPRM	03/05/87	52 FR 6822
NPRM Comment Period End	06/03/87	52 FR 6822
Final Action	04/00/88	

Small Entity: No

Additional Information: In May 1982, the District Court for the District of Arizona invalidated the regulation of 25 CFR 167 and ordered the Bureau to publish new regulations. The Bureau published interim regulations on Hopi partitioned lands on September 8, 1982. During the past year several meetings have been held with the Navajo Tribe to obtain concurrence to include Navajo partitioned land in the regulations. The Navajo Tribe expressed the desire for separate regulations and Bureau has drafted a new regulation for Navajo Partitioned Land within the existing 25 CFR Part 167.

Agency Contact: Frank H. Khattat, Natural Resources Specialist, Department of the Interior, Bureau of Indian Affairs, 18th and C Streets, NW, Washington, DC 20245, 202 343-3959

RIN: 1076-AA33

1173. RIGHTS-OF-WAY OVER INDIAN LANDS

Legal Authority: 5 USC 301; 25 USC 323 to 328

CFR Citation: 25 CFR 169

Legal Deadline: None.

Abstract: The Bureau of Indian Affairs intends to amend several sections of its rights-of-way regulations which impose a variety of specific requirements on grantees of rights-of-way over Indian lands. These requirements were intended to implement public laws enacted around the turn of the century which authorized the Secretary of the Interior to issue rights-of-way for various specific purposes. In 1948 Congress gave the Department comprehensive authority to grant rights-of-way for any purpose or any term of years without the antiquated restrictions of the older statutes. The regulations continue to reflect the old requirements and the result has been inconsistent application of the 1948 Act. The removal or revisions of these sections would end that practice.

Timetable:

Action	Date	FR Cite
Final Action	04/00/88	

Small Entity: No

Agency Contact: Frank Hissong, Realty Specialist, Division of Real Estate Services, Department of the Interior, Bureau of Indian Affairs, 1951 Constitution Avenue, NW, Code 220, Washington, DC 20245, 202 343-3611

RIN: 1076-AB89

1174. SAN CARLOS INDIAN IRRIGATION PROJECT, ARIZONA

Significance: Agency Priority

Legal Authority: 43 Stat 476, Sec 5; 45 Stat 210; 45 Stat 211; 5 USC 301

CFR Citation: 25 CFR 177

Legal Deadline: None.

Abstract: The Bureau of Indian Affairs is amending the pertinent sections of the regulations governing charges and costs assessed the electric power customers for the electric power, energy and associated electric power services provided by the San Carlos Indian Irrigation (Project), Arizona. The purpose of the regulatory amendments is to increase the costs to the public for the services provided by the electric power division of the Project. The proposed rules increase the electric power assessment rates in the residential and general service rate schedules. This action causes the generation of needed additional revenues for the Project. The increased

assessment rates reflect the increased operating costs associated with labor, equipment and supplies. The electric power bills for service under the residential and general rate schedules will be increased by approximately 12.4 percent.

Timetable:

Action	Date	FR Cite
NPRM	12/10/87	52 FR 46781
NPRM Comment Period End	01/11/88	52 FR 46781
Final Action	09/00/88	

Small Entity: No

Agency Contact: Samuel Miller, Water and Land Resources Officer, Division of Water and Land Resources, Department of the Interior, Bureau of Indian Affairs, 18th and C Street, NW, Washington, DC 20240, 202 343-4004

RIN: 1076-AC08

1175. LIFE ESTATES AND FUTURE INTERESTS

Significance: Agency Priority

Legal Authority: 25 USC 372; 25 USC 373; 25 USC 487; 25 USC 607; 25 USC 2201 to 2211

CFR Citation: 25 CFR 179

Legal Deadline: None.

Abstract: The proposed rule would add a new part 179 to Title 25 of the Code of Federal Regulations to set forth the authorities, policy, and procedures to be followed in the administration of life estates and future interests on Indian land. These regulations are being proposed to address the need for a clearly stated uniform policy. At the present time, there are no regulations dealing with life estates and future interests, even though these have become increasingly prevalent in the activities of Indians and the Bureau of Indian Affairs.

Timetable:

Action	Date	FR Cite
NPRM	06/11/87	52 FR 29701
NPRM Comment Period End	10/13/87	52 FR 29701
Final Action	06/00/88	

Small Entity: Not Applicable

Agency Contact: Howard Piepenbrink, Chief, Branch of Titles and Research, Division of Real Estate Services, Department of the Interior, Bureau of Indian Affairs, 18th & C Street, NW, Washington, DC 20240, 202 343-5473

RIN: 1076-AC06

1176. CONTRACTS FOR PROSPECTING AND MINING ON INDIAN MINERAL LANDS

Significance: Agency Priority

Legal Authority: 25 USC 396; 25 USC 396d; 25 USC 415; 25 USC 476; 25 USC 477

CFR Citation: 25 CFR 211

Legal Deadline: None.

Abstract: The regulations in this Part govern contracts for the prospecting and mining of Indian-owned minerals, other than oil and gas. Revisions will be made which would combine rules for the review and approval of mineral development contracts on both tribal and allotted lands into one Part. This Part has been redesignated from 25 CFR Part 171.

Timetable:

Action	Date	FR Cite
NPRM	08/11/80	45 FR 53164
NPRM	07/12/83	48 FR 31978
NPRM	10/21/87	52 FR 39332
NPRM Public Comment Period End	12/21/87	52 FR 39332
Final Action	06/00/88	

Small Entity: Yes

Additional Information: The rule was republished as a proposed rule on 10/21/87 (52 FR 39332) to allow for additional public comment.

Agency Contact: Joseph Johnston, Chief, Div. of Energy & Mineral Resources, Department of the Interior, Bureau of Indian Affairs, 1951 Constitution Avenue, NW, Washington, DC 20245, 202 343-2790

RIN: 1076-AA38

1177. LEASING OF ALLOTTED LANDS FOR MINING

Significance: Agency Priority

Legal Authority: 25 USC 396; 35 Stat. 396

CFR Citation: 25 CFR 212

Legal Deadline: None.

Abstract: As a result of review, it has been determined that this Part is no longer necessary and should be revoked. The rules which currently govern the leasing of oil and gas on Indian allotted lands will be replaced by a new 25 CFR Part 225 and in the revisions to 25 CFR Part 211. This Part has been redesignated from 25 CFR Part 172.

Timetable:

Action	Date	FR Cite
NPRM	08/11/80	45 FR 53164
NPRM for removal	10/21/87	52 FR 39332
NPRM Public Comment Period End	12/21/87	52 FR 39332
Final Action	06/00/88	

Small Entity: No

Additional Information: The rule was republished for proposed removal with the proposed rulemaking actions for 25 CFR Parts 211 and 225 on 10/21/87 (52 FR 39332).

Agency Contact: Joseph Johnston, Chief, Div. of Energy & Mineral Resources, Department of the Interior, Bureau of Indian Affairs, 1951 Constitution Avenue, NW, Washington, DC 20245, 202 343-2790

RIN: 1076-AA39

1178. OIL AND GAS MINERAL AGREEMENTS

Legal Authority: PL 97-382; 52 Stat. 347; 35 Stat. 783

CFR Citation: 25 CFR 225

Legal Deadline: None.

Abstract: The Bureau proposes to publish regulations that will govern mineral agreements for the development of Indian owned oil and gas resources pursuant to the Indian Mineral Development Act of 1982, Public Law 97-382, which authorizes the tribes to enter into negotiated agreements rather than go through the previously required competitive advertising procedure.

Timetable:

Action	Date	FR Cite
NPRM	07/12/83	48 FR 31978
NPRM	10/21/87	52 FR 39332
NPRM Public Comment Period End	12/21/87	52 FR 39332
Final Action	06/00/88	

Small Entity: Undetermined

Additional Information: Originally scheduled: April 1983.

Agency Contact: Joseph Johnston, Chief, Div. of Energy and Mineral

Resources, Department of the Interior, Bureau of Indian Affairs, 1951 Constitution Avenue, NW, Washington, DC 20245, 202 343-2790

RIN: 1076-AA82

1179. LEASING OF OSAGE RESERVATION LANDS FOR OIL AND GAS MINING

Legal Authority: Sec 3, 34 Stat 543; Sec 1, 45 Stat 1478; Sec 2, 45 Stat 1478; Sec 1, 45 Stat 1479; Sec 2, 45 Stat 1479

CFR Citation: 25 CFR 226

Legal Deadline: None.

Abstract: The rules are being amended to strengthen the management of the Osage mineral estates and relieve the Osage oil lessees from basing the payment of royalties to the Osage Tribe on the offered or posted price of a major purchaser in the Kansas-Oklahoma area. These regulations will improve the management of the Osage mineral estate and will alleviate the economic hardship placed on the oil lessees.

Timetable:

Action	Date	FR Cite
NPRM	10/16/87	52 FR 38608
NPRM Comment Period End	11/16/87	52 FR 38608
Final Action	06/00/88	

Small Entity: No

Agency Contact: Joseph Johnston, Chief, Division of Energy and Mineral Resources, Department of the Interior, Bureau of Indian Affairs, 1951 Constitution Avenue, NW, Washington, DC 20240, 202 343-2790

RIN: 1076-AC09

1180. INDIAN FISHING: HOOPA VALLEY INDIAN RESERVATION

Legal Authority: 25 USC 2; 25 USC 9; 5 USC 301; Reorganization Plan No. 3 of 1950; 64 Stat. 1262

CFR Citation: 25 CFR 250

Legal Deadline: None.

Abstract: This rule, which contains the regulations for the Hoopa fishery, will be revised to remove burdensome requirements.

Timetable:

Action	Date	FR Cite
NPRM	06/24/83	48 FR 29004
Interim Final Rule	07/21/87	52 FR 27329
Public Comment Period End	08/20/87	52 FR 27329

Next Action Undetermined

Small Entity: Undetermined

Additional Information: Originally scheduled: April 1983.

Agency Contact: Gary L. Rankel, Chief, Branch of Fish, Wildlife & Recreation, Department of the Interior, Bureau of Indian Affairs, Main Interior, 18th & C Streets, NW, Washington, DC 20245, 202 343-4066

RIN: 1076-AA63

DEPARTMENT OF THE INTERIOR (DOI)

Bureau of Indian Affairs (BIA)

Completed Actions

1181. LAW ENFORCEMENT EXPENDITURES

Significance: Agency Priority

Legal Authority: 25 USC 2; 25 USC 9; 25 USC 13

CFR Citation: 25 CFR 11

Legal Deadline: None.

Abstract: The Bureau of Indian Affairs is developing a rule prohibiting the expenditure of Bureau of Indian Affairs law enforcement funds in those areas of Indian country where there is state jurisdiction over criminal offenses committed by or against Indians.

Timetable:

Action	Date	FR Cite
NPRM	03/26/87	52 FR 9669
NPRM Comment Period End	05/26/87	52 FR 9669
Withdrawn No further action will be taken at this time.	04/00/88	

Small Entity: No

Agency Contact: James P. Donovan, Acting Chief, Division of Law Enforcement Services, Department of the Interior, Bureau of Indian Affairs, 1951 Constitution Avenue, NW, Room 1342, Code 430, Washington, DC 20245, 202 343-5786

RIN: 1076-AB97

1182. ENROLLMENT APPEALS

Legal Authority: 5 USC 301; 25 USC 2; 25 USC 9; 25 USC 1401 et seq

CFR Citation: 25 CFR 62

Legal Deadline: None.

Abstract: The regulations contained in 25 CFR Part 62 are general regulations that govern appeals from adverse enrollment actions. This rulemaking action will revise the regulations to clarify the purpose of the rule and to make general changes of an administrative nature including the elimination of sex-based and gender specific terminology. This Part has been redesignated from 25 CFR Part 42.

Timetable:

Action	Date	FR Cite
Final Action	08/13/87	52 FR 30159
Final Action Effective	09/14/87	52 FR 30159

Small Entity: No

Additional Information: It has been determined that this is a rule of agency procedure and practice and therefore does not require publication of a proposed rule.

Government Levels Affected: Federal

Agency Contact: Kathleen L. Slover, Tribal Enrollment Specialist, Department of the Interior, Bureau of Indian Affairs, 1951 Constitution Avenue, NW, Washington, DC 20245, 202 343-3592

RIN: 1076-AB95

1183. ENROLLMENT OF INDIANS OF THE SAN PASQUAL BAND OF MISSION INDIANS IN CALIFORNIA

Legal Authority: 5 USC 301; 25 USC 2; 25 USC 9; 25 USC 1401 et seq

CFR Citation: 25 CFR 76

Legal Deadline: None.

Abstract: This rule governed the enrollment of persons in the San Pasqual Band of Mission Indians in California as of January 1, 1959. The rule also provides procedures for maintaining a current membership roll. As a result of review, it has been

determined that there is a continued need for this rule. However, the regulations do need to be revised. This rulemaking action will revise the regulations to make general revisions of an administrative nature including the elimination of sex-based and gender specific terminology and to provide procedures for the preparation of a current roll to serve as the basis for the distribution of judgment funds. This Part has been redesignated from 25 CFR Part 48.

Timetable:

Action	Date	FR Cite
NPRM	06/03/87	52 FR 20727
NPRM Comment Period End	07/06/87	52 FR 20727
Final Action	08/20/87	52 FR 31391
Final Action Effective	09/21/87	52 FR 31391

Small Entity: No

Agency Contact: Kathleen L. Slover, Tribal Enrollment Specialist, Department of the Interior, Bureau of Indian Affairs, 1951 Constitution Avenue, NW, Washington, DC 20245, 202 343-3592

RIN: 1076-AB59

1184. USE OR DISTRIBUTION OF INDIAN JUDGMENT FUNDS

Legal Authority: 5 USC 301; 87 Stat 466; 87 Stat 467; 87 Stat 468; 96 Stat 2512; 96 Stat 2513; 96 Stat 2514

CFR Citation: 25 CFR 87

Legal Deadline: None.

Abstract: The regulations govern the preparation of proposed plans for the use or distribution of all judgment funds awarded to Indian tribes and groups by the Indian Claims Commission, the United States Court of Claims or the United States Claims Court, excepting any tribe or group whose trust relationship with the Federal Government has been terminated and for which there exists legislation authorizing the disposition of its judgment funds; and of all funds deriving from judgments entered prior to the date of the Act for which there has been no enabling legislation. The regulations are being revised to eliminate gender-specific terminology, incorporate the provisions of the Act of January 12, 1983 and for clarification. The revisions will make the regulations current to existing laws and should enable parties affected to more easily understand the regulations. The proposed revisions are a result of a review of the rules completed on July 16, 1984.

Timetable:

Action	Date	FR Cite
Withdrawn No further action will be taken at this time.	04/00/88	

Small Entity: No

Additional Information: The proposed revisions to 25 CFR 87 have necessitated minor technical revisions to 25 CFR 115 which will be processed in conjunction with the proposed rule.

Agency Contact: John A. Shapard, Branch Chief, Acknowledgment & Research, Department of the Interior, Bureau of Indian Affairs, 1951 Constitution Avenue, NW, Washington, DC 20245, 202 343-3568

RIN: 1076-AB20

1185. ANNUITY AND OTHER PER CAPITA PAYMENTS

Legal Authority: 5 USC 301; PL 98-64

CFR Citation: 25 CFR 111, (Revision)

Legal Deadline: None.

Abstract: Procedures will describe standards by which per capita payments to Indians out of Tribal Trust Revenue may be made by either the Secretary of the Interior or by Tribal governments.

Information on cost or benefits, if applicable, is unknown at this point.

Timetable:

Action	Date	FR Cite
Withdrawn No further action will be taken at this time.	04/00/88	

Small Entity: No

Agency Contact: Barbara Davis, Trust Fund Specialist, Department of the Interior, Bureau of Indian Affairs, Office of Trust Responsibilities, 1951 Constitution Avenue, NW, Washington, DC 20245, 202 343-3963

RIN: 1076-AB45

1186. PROCEDURES FOR DEPOSITING FUNDS TO THE CREDIT OF 14X6140-DEPOSITS OF PROCEEDS OF LANDS WITHDRAWN FOR NATIVE SELECTION, BIA

Legal Authority: PL 94-204, 89 Stat. 1146; 43 USC 1613; 94 Stat. 2371

CFR Citation: 25 CFR 124, (Revision)

Legal Deadline: None.

Abstract: Provide up to date and correct deposit procedures to be used by all Departments and Agencies of the Federal Government and the State of Alaska for the deposit of proceeds derived from contracts, leases, permits, and rights-of-way or easements pertaining to affected lands or resources in affected lands withdrawn for Native selection pursuant to the Alaska Native Claims Settlement Act.

Timetable:

Action	Date	FR Cite
Withdrawn No further action will be taken at this time.	04/00/88	

Small Entity: No

Public Compliance Cost: Initial Cost: $0

Affected Sectors: None

Agency Contact: Betty L. Wilkinson, Chief, Division of Accounting Management, Department of the Interior, Bureau of Indian Affairs, Room 4604, Main Interior, 18th & C Sts., NW, Washington, DC 20245, 202 343-7336

RIN: 1076-AB67

1187. LAND RECORDS AND TITLE DOCUMENTS

Legal Authority: 25 USC 5; 25 USC 9

CFR Citation: 25 CFR 150; 43 CFR 4

Legal Deadline: None.

Abstract: This regulation will be reviewed with only minor changes expected due to a realignment of responsibilities concerning our title plants. This rule sets forth authorities, policy and procedures governing the recording, custody, maintenance, use and certification of title documents, and the issuance of title status reports for Indian land.

DOI—BIA **Completed Actions**

Timetable:

Action	Date	FR Cite
Withdrawn No further action will be taken at this time.	04/00/88	

Small Entity: No

Agency Contact: Howard Piepenbrink, Acting Chief, Division of Real Estate Services, Department of the Interior, Bureau of Indian Affairs, Rm. 4520-Main Int., 1951 Constitution Avenue, NW, Washington, DC 20245, 202 343-5473

RIN: 1076–AB68

1188. ROADS OF THE BUREAU OF INDIAN AFFAIRS

Significance: Agency Priority

Legal Authority: 25 USC 13; 25 USC 318(a); PL 97-424, Sec 105(a)(3); 23 USC 109(o); 23 USC 112(b); 23 USC 114(c); 23 USC 202(e); 23 USC 204; 23 USC 217

CFR Citation: 25 CFR 170

Legal Deadline: None.

Abstract: Indian reservation road construction is funded from the Highway Trust Fund. Other provisions include a requirement for proper maintenance of roads, applications of the "Buy Indian" and Indian Self Determination Acts, and joint program management by the Secretaries of Interior and Transportation. These changes in the law make changes in regulations imperative. The no-action alternative would leave program managers with outdated guidelines. Cost of the action will be minimal and it imposes no burden on the public. Benefits will be a better ordered road construction and maintenance program on Indian reservations, greater management efficiency, and clarity of procedures for federal managers, legislators and tribal officials. This part is also scheduled for review.

Timetable:

Action	Date	FR Cite
Withdrawn No further action will be taken at this time.	04/00/88	

Small Entity: No

Agency Contact: James T. Ball, Chief, Division of Transportation, Department of the Interior, Bureau of Indian Affairs, 1951 Constitution Avenue, NW, Washington, DC 20245, 202 343-4359

RIN: 1076–AB05

1189. LEASING OF OSAGE RESERVATION LANDS FOR OIL AND GAS MINING

Legal Authority: Sec 3, 34 Stat. 543; Sec 1, 45 Stat. 1478; Sec 2, 45 Stat. 1478; Sec 1, 45 Stat. 1479; Sec 2, 45 Stat. 1479

CFR Citation: 25 CFR 226; 25 CFR 2

Legal Deadline: None.

Abstract: The regulations in this part provide procedures and processes for oil and gas mining leasing of Osage Reservation lands. Changes are being considered.

Timetable:

Action	Date	FR Cite
Withdrawn No further action will be taken at this time.	04/00/88	

Small Entity: Undetermined

Agency Contact: Joseph C. Johnston, Chief, Div. of Energy & Mineral Resources, Department of the Interior, Bureau of Indian Affairs, Rm. 4529-Main Int., 1951 Constitution Avenue, NW, Washington, DC 20245, 202 343-2790

RIN: 1076–AB79

BILLING CODE 4310-02-T

DEPARTMENT OF THE INTERIOR (DOI) — Prerule Stage

Minerals Management Service (MMS)

1190. ● AIR QUALITY – OUTER CONTINENTAL SHELF WIDE

Significance: Regulatory Program

Legal Authority: 30 USC 1334

CFR Citation: 30 CFR 250.57

Legal Deadline: None.

Abstract: Amendments to the Department of the Interior (DOI) Air Quality regulation for oil and gas operations will be proposed for all Outer Continental Shelf (OCS) areas. The changes would update requirements and consider the need for current information collection burdens, and provide additional safeguards for those pollutants which could be critical to air quality in areas adjoining the OCS. A determination of potential costs and benefits cannot be made until the determination of effects of rulemaking has been prepared for RIN 1010-AA61, dealing with amendments to the DOI Air Quality regulation for oil and gas operations adjacent to the State of California. Considerable information has been developed during the negotiations conducted to implement that rulemaking. There have also been revisions to the related Environmental Protection Agency regulations which will affect both of these rulemakings. Timing, content, and format for this rulemaking for all OCS areas will not be determined until completion of the rulemaking RIN 1010-AA61.

Timetable:

Action	Date	FR Cite
Next Action Undetermined		

Small Entity: Undetermined

Agency Contact: William S. Cook, Petroleum Engineer, Department of the Interior, Minerals Management Service, Mail Stop 646, 12203 Sunrise Valley Drive, Reston, VA 22091, 703 648-7818

RIN: 1010–AB14

VOL 53 ISS 79 PT 1 AP 25 1988 UMI

DEPARTMENT OF THE INTERIOR (DOI) — **Proposed Rule Stage**

Minerals Management Service (MMS)

1191. ● PROCESSING AND TRANSPORTATION ALLOWANCES, RETURN ON CAPITAL INVESTMENT

Legal Authority: 30 USC 1701 et seq

CFR Citation: 30 CFR 206

Legal Deadline: None.

Abstract: The Minerals Management Service (MMS) published new oil and gas product valuation regulations in the Federal Register on January 15, 1988 (53 FR 1184 and 53 FR 1230). If a lessee has a non-arm's-length contract or has no contract for processing or transportation of oil or gas, the new regulations provide for an allowable deduction from royalty payments based upon the lessee's reasonable actual costs during the reporting period. These actual cost deductions allow the lessee to deduct operating and maintenance expenses, overhead, and at the lessee's option, either depreciation plus a return on undepreciated capital investment in the processing plant or transportation system, or a fixed cost equal to the initial depreciable investment multiplied by a rate of return. An amendment is needed to the regulations to establish the method to be used to determine the cost of capital, i.e., rate of return, to be applied to the lessee's investment in a processing plant or transportation system.

Timetable:

Action	Date	FR Cite
NPRM	05/00/88	
NPRM Comment Period End	06/00/88	

Small Entity: No

Agency Contact: Dennis C. Whitcomb, Chief, Rules and Procedures, Department of the Interior, Minerals Management Service, Denver Federal Center, MS 662, Bldg. 85, Denver, CO 80225, 303 231-3432

RIN: 1010-AB12

1192. RECOUPMENTS AND REFUNDS OF EXCESS PAYMENTS UNDER FEDERAL OFFSHORE MINERAL LEASES

Significance: Regulatory Program

Legal Authority: 43 USC 1339

CFR Citation: 30 CFR 230

Legal Deadline: None.

Abstract: This rulemaking is needed to add new regulations covering recoupment and refunds of excess payments made under Federal offshore mineral leases which are subject to section 10 of the Outer Continental Shelf Lands Act of 1953 (OCSLA), 43 USC 1339. This rule would establish requirements and guidelines for crediting (recouping) excess payments of royalties, rentals, bonuses, or other amounts against a current or future payment obligation or refunding such excess payment to any person lawfully entitled to receive a refund or credit for an overpayment made under an offshore lease. The new regulation is intended to lessen confusion on the part of payors, operators, and the Minerals Management Service.

Timetable:

Action	Date	FR Cite
NPRM	07/00/88	
NPRM Comment Period End	09/00/88	

Small Entity: Undetermined

Agency Contact: Dennis C. Whitcomb, Chief, Rules and Procedures, Department of the Interior, Minerals Management Service, Denver Federal Center, MS 662, Bldg. 85, Denver, CO 80225, 303 231-3432

RIN: 1010-AB11

1193. ● REVISION OF REGULATIONS GOVERNING APPEALS

Legal Authority: 30 USC 1701 et seq

CFR Citation: 30 CFR 243

Legal Deadline: None.

Abstract: Payors who appeal a bill for payment of additional royalty, rents, bonuses, penalties, or other assessments, are required by the existing appeal regulations to submit payment of the billed amount or to post a bond in an amount adequate to indemnify the lessor from loss or damage. However, some bills for payment that have been appealed have been neither paid nor secured by an acceptable surety. An amendment to the existing regulations is needed to establish a requirement that payment must be made or that an acceptable surety must by posted within a specified period of time as a condition for acceptance of the appeal for consideration by the Director, Minerals Management Service (MMS). An amendment is also needed to permit the posting of letters of credit, in addition to bonds, in accordance with current MMS practice.

Timetable:

Action	Date	FR Cite
NPRM	06/00/88	
NPRM Comment Period End	07/00/88	

Small Entity: No

Agency Contact: Dennis C. Whitcomb, Chief, Rules and Procedures, Department of the Interior, Minerals Management Service, Denver Federal Center, MS 662, Bldg. 85, Denver, CO 80225, 303 231-3432

RIN: 1010-AB13

1194. AIR QUALITY - OFFSHORE CALIFORNIA

Significance: Regulatory Program

Legal Authority: 43 USC 1334

CFR Citation: 30 CFR 250.57

Legal Deadline: None.

Abstract: Amendments to the DOI Air Quality regulation for oil and gas operations will be proposed for Outer Continental Shelf areas adjacent to California. The changes would provide additional safeguards for those pollutants which could be critical to air quality in the region. A determination of potential costs and benefits cannot be made until responses to the Advance Notice of Proposed Rulemaking are analyzed. The DOI has conducted a conflict assessment to determine the likelihood of the interested and affected parties being able to reach an agreement on an air quality regulatory program. If the affected parties involved can develop a mutually agreeable set of requirements, then DOI will initiate rulemaking based on that agreement.

Timetable:

Action	Date	FR Cite
ANPRM	01/07/85	50 FR 838
ANPRM Comment Period End	03/08/85	
Begin conflict assessment phase of negotiated rulemaking process	04/15/86	
Determine potential for negotiated agreement	07/30/86	

DOI—MMS **Proposed Rule Stage**

Action	Date	FR Cite
Reach agreement on a negotiated rule or begin develpmnt of rule through std process	12/31/87	
Complete Determination of Effects of Rules	02/00/88	
NPRM	03/00/88	
NPRM Comment Period End	06/00/88	
Final Action	12/00/88	

Small Entity: Undetermined

Agency Contact: William S. Cook, Petroleum Engineer, Department of the Interior, Minerals Management Service, Mail Stop 646, Reston, VA 22091, 703 648-7818

RIN: 1010-AA61

1195. LEASING OF MINERALS OTHER THAN OIL, GAS, AND SULPHUR IN THE OUTER CONTINENTAL SHELF

Significance: Regulatory Program

Legal Authority: 43 USC 1334

CFR Citation: 30 CFR 281

Legal Deadline: None.

Abstract: Proposes the desirability of new regulations to govern lease issuance on the Outer Continental Shelf (OCS) for minerals other than oil, gas, and sulphur under the authority of the OCS Lands Act; and requests comments and recommendations from interested parties. Alternative is to not have leasing requirements in regulations. Promulgation of regulation for leasing of hard mineral resources is not expected to add to the cost to industry. Regulations will ensure uniform leasing policy for all interested parties.

Timetable:

Action	Date	FR Cite
ANPRM	04/19/85	50 FR 15590
ANPRM Comment Period End	08/19/85	
NPRM	10/00/88	

Small Entity: No

Agency Contact: Jane Roberts, Legislative Specialist, Department of the Interior, Minerals Management Service, Mail Stop 646, 12203 Sunrise Valley Drive, Reston, VA 22091, 703 648-7820

RIN: 1010-AA82

1196. MINING OPERATIONS FOR MINERALS OTHER THAN OIL, GAS, AND SULPHUR IN THE OUTER CONTINENTAL SHELF

Significance: Regulatory Program

Legal Authority: 43 USC 1334

CFR Citation: 30 CFR 282

Legal Deadline: None.

Abstract: Proposes the desirability of new regulations to govern Production and Development Operations on the Outer Continental Shelf (OCS) for minerals other than oil, gas, and sulphur under the authority of the OCS Lands Act; and requests comments and recommendations from interested parties. Alternative is to specify requirements in a lease document. Promulgation of regulation is not expected to result in costs significantly more than those incurred through the unregulated use of good commercial practices. The regulation will require that hard mineral operations are conducted in a manner that will ensure safety and protection of the environment.

Timetable:

Action	Date	FR Cite
ANPRM	04/09/86	51 FR 12163
ANPRM Comment Period End	09/07/86	
NPRM	10/00/88	

Small Entity: Undetermined

Agency Contact: Jane Roberts, Legislative Specialist, Department of the Interior, Minerals Management Service, Mail Stop 646, 12203 Sunrise Valley Drive, Reston, VA 22091, 703 648-7820

RIN: 1010-AA81

DEPARTMENT OF THE INTERIOR (DOI)

Minerals Management Service (MMS)

Final Rule Stage

1197. VALUATION OF COAL FOR ROYALTY PURPOSES FROM FEDERAL AND INDIAN LEASES

Significance: Regulatory Program

Legal Authority: 30 USC 192 et seq

CFR Citation: 30 CFR 206

Legal Deadline: None.

Abstract: This regulation will provide consistent valuation procedures for coal for the purpose of royalty computations. It is being prepared in response to a Linowes Commission recommendation for a detailed definitive product valuation regulation which contains clear terms and procedures.

Timetable:

Action	Date	FR Cite
ANPRM	02/05/86	51 FR 4507
ANPRM Comment Period End	04/07/86	
NPRM	01/15/87	52 FR 1840
NPRM Comment Period End	04/15/87	
Reopen Public Comment Period	07/09/87	52 FR 25867
Reopened Public Comment Period End	07/23/87	
Reopen Public Comment Period	08/12/87	52 FR 29868
Reopened Public Comment Period End	10/13/87	
Notice of Intent to issue NPRM	11/17/87	52 FR 43919
Final Action	09/00/88	

Small Entity: No

Agency Contact: Dennis Whitcomb, Chief, Rules and Procedures, Department of the Interior, Minerals Management Service, Denver Federal Center, MS 662, Bldg 85, Denver, CO 80225, 303 231-3432

RIN: 1010-AA83

1198. ONSHORE PRODUCTION REPORTING AND ACCOUNTING

Significance: Regulatory Program

Legal Authority: 30 USC 1701 et seq

CFR Citation: 30 CFR 216; 43 CFR 3160

Legal Deadline: None.

Abstract: This rulemaking is needed to redesignate the Bureau of Land Management regulations at 43 CFR 3160 applicable to production reporting and accounting to Minerals Management Service regulations at 30 CFR 216 to reflect the transfer in functions. Also, a requirement will be added for unique information needed to report information by oil and gas well.

Timetable:

Action	Date	FR Cite
NPRM	01/15/88	53 FR 1039
NPRM Comment Period End	02/16/88	
Final Action	05/00/88	

Small Entity: No

Agency Contact: Dennis C. Whitcomb, Chief, Rules and Procedures, Department of the Interior, Minerals Management Service, Denver Federal Center, MS 662, Bldg. 85, Denver, CO 80225, 303 231-3432

RIN: 1010-AB10

1199. OIL AND GAS AND SULPHUR OPERATIONS ON THE OUTER CONTINENTAL SHELF (OCS)

Significance: Regulatory Program

Legal Authority: 43 USC 1334

CFR Citation: 30 CFR 250, (Revision)

Legal Deadline: None.

Abstract: The rules at 30 CFR 250 will be revised by consolidating regulations, OCS Orders, Notices to Lessees, and related offshore operating requirements into a unified body of regulations; eliminating burdensome and counterproductive requirements; adding performance standards; and simplifying and streamlining these rules to the maximum extent practicable. Other alternatives considered were not revising the regulations and revising only those regulations identified by industry.

Timetable:

Action	Date	FR Cite
NPRM	03/16/86	51 FR 8316
NPRM Comment Period End	11/25/86	51 FR 40819
Complete Initial Review of public comments	09/16/87	
Further NPRM:30 CFR 250.1	09/22/87	52 FR 35559
Complete draft of Final Rule	12/04/87	
Final Action	04/00/88	
Final Action Effective	07/00/88	

Small Entity: No

Additional Information: Merged in whole or in part into one rulemaking: 1010-AA11, 30 CFR 250.70 and .80, Penalties; 1010-AA13, 30 CFR 250.3, Disclosure of Information; 1010-AA25, OCS Order No. 2, para. 8, Safety Requirements for Drilling Operations in an H2S Environment; 1010-AA26, OCS Order No. 6, Well Completion of Oil & Gas Wells; 1010-AA28, OCS Order No. 11, Oil & Gas Production Rates, Prevention Waste, & Protection of Correlative Rights; 1010-AA32, 30 CFR 250.45, Reports of Accidents & Malfunctions; 1010-AA34, 30 CFR 250.75, Self-Inspection; 1010-AA47, 30 CFR 250.80-2, Remedies & Penalties; 1010-AA48, 30 CFR 250, Environmental Reports; 1010-AA49, 30 CFR 250, Protection of Cultural Resources; 1010-AA50, 30 CFR 250.35, Effects of Drilling & Reworking on Lease Term; 1010-AA51, OCS Order No. 5, Production Safety Systems; 1010-AA52, OCS Order No. 9, Pipelines; 1010-AA98, 30 CFR 250.44, Borehole Abandonment.

Agency Contact: Gerald D. Rhodes, Chief, Rules, Orders, and Standards Branch, Department of the Interior, Minerals Management Service, Mail Stop 646, Reston, VA 22091, 703 648-7816

RIN: 1010-AA53

1200. SUPPLEMENTAL SALES

Legal Authority: 43 USC 1331 et seq

CFR Citation: 30 CFR 256.12; 30 CFR 256.26

Legal Deadline: None.

Abstract: The rules at 30 CFR Part 256 will be revised to provide for supplemental sales and to establish limits on those supplemental sales. This rule is intended to allow the offering of rejected bid blocks, drainage blocks, and development blocks. The alternative is to operate under the current regulation and delay the leasing of certain blocks which may be critical to the development of an area or may be susceptible to loss of hydrocarbons.

Timetable:

Action	Date	FR Cite
NPRM	03/26/87	52 FR 9672
NPRM Comment Period End	04/27/87	
Comment Period Reopened	06/06/87	52 FR 29222
Final Action	04/00/88	
Final Action Effective	05/00/88	

Small Entity: No

Agency Contact: Mary McDonald, Program Analyst, Department of the Interior, Minerals Management Service, Mail Stop 646, 12203 Sunrise Valley Drive, Reston, VA 22091, 703 648-7817

RIN: 1010-AB05

1201. NONDISCRIMINATION IN EMPLOYMENT IN THE OUTER CONTINENTAL SHELF

Legal Authority: 43 USC 1863; 43 USC 1331 et seq; 42 USC 2000d to 2000e

CFR Citation: 30 CFR 271

Legal Deadline: None.

Abstract: There are no provisions in current Minerals Management Service regulations which provide a mechanism for remedy of unlawful discrimination in Outer Continental Shelf (OCS) employment. Rules would be developed to provide a process whereby persons who believed they had been denied employment because of unlawful discrimination would have a forum. These rules would implement the purposes of section 604 of the OCS Lands Act Amendment of 1978. Alternatives considered are no action, issuance of a policy statement and no rules, and proposal of extensive affirmative action rules similar to those rescinded in the past. Very few complaints are expected to arise as there has been no evidence of discrimination to date. Therefore, costs are expected to be minimal. Benefits would be the assurance that the requirements of section 604 are being fully carried out.

DOI—MMS

Final Rule Stage

Timetable:

Action	Date	FR Cite
NPRM	05/12/87	52 FR 17770
NPRM Comment Period End	06/11/87	
Final Action	04/00/88	
Final Action Effective	06/00/88	

Small Entity: No

Agency Contact: Mary McIlwaid, Program Analyst, Department of the Interior, Minerals Management Service, Mail Stop 646, 12203 Sunrise Valley Drive, Reston, VA 22091, 703 648-7817

RIN: 1010-AA87

1202. PROSPECTING FOR MINERALS OTHER THAN OIL, GAS, AND SULPHUR IN THE OUTER CONTINENTAL SHELF

Significance: Regulatory Program

Legal Authority: 43 USC 1334

CFR Citation: 30 CFR 280

Legal Deadline: None.

Abstract: Proposes the desirability of new regulations to govern exploration on the Outer Continental Shelf (OCS) for minerals other than oil, gas, and sulphur under the authority of the OCS Lands Act, and requests comments and recommendations from interested parties. Alternative is to specify requirements in a permitting document rather than in regulations. Promulgation of regulations is not expected to result in costs significantly more than those incurred through the unregulated use of good commercial practices. The rules will require that hard mineral operations will be conducted in a manner which will ensure safety and protection of the environment.

Timetable:

Action	Date	FR Cite
ANPRM	12/07/84	49 FR 47871
ANPRM Comment Period End	04/08/85	
NPRM	05/26/87	52 FR 9759
NPRM Comment Period End	06/24/87	
Final Action	10/00/88	

Small Entity: No

Agency Contact: Jane Roberts, Legislative Specialist, Department of the Interior, Minerals Management Service, Mail Stop 646, 12203 Sunrise Valley Drive, Reston, VA 22091, 703 648-7828

RIN: 1010-AA71

DEPARTMENT OF THE INTERIOR (DOI)

Minerals Management Service (MMS)

Completed Actions

1203. VALUATION OF OIL FOR ROYALTY PURPOSES FROM FEDERAL AND INDIAN LEASES

Significance: Regulatory Program

Legal Authority: 30 USC 1701 et seq.

CFR Citation: 30 CFR 206; 25 CFR 211; 25 CFR 212

Legal Deadline: None.

Abstract: Consistent oil valuation for royalty computation purposes from Federal and Indian leases will be prepared in response to a Linowes Commission recommendation that the Minerals Management Service issue detailed, definitive product valuation guidelines.

Timetable:

Action	Date	FR Cite
Notice of Proposed Guidelines	11/29/82	47 FR 53922
Notice of Proposed Guidelines	12/21/82	47 FR 56871
ANPRM	02/05/86	51 FR 4507
ANPRM Comment Period End	04/07/86	
NPRM	01/15/87	52 FR 1858
NPRM Comment Period End	04/15/87	
Further Notice of Proposed Rulemaking	08/17/87	52 FR 30828
Comment Period extended	09/02/87	52 FR 33247
Second further NPRM	10/23/87	52 FR 39846
Final Action	01/15/88	53 FR 1184
Final Action Effective	03/01/88	

Small Entity: No

Agency Contact: Dennis Whitcomb, Chief, Rules and Procedures, Department of the Interior, Minerals Management Service, Denver Federal Center, MS 662, Bldg 85, Denver, CO 80225, 303 231-3432

RIN: 1010-AA30

1204. VALUATION OF GAS AND GAS PRODUCTS FOR ROYALTY PURPOSES, FROM FEDERAL AND INDIAN LEASES

Significance: Regulatory Program.

Legal Authority: 30 USC 1701 et seq.

CFR Citation: 30 CFR 206

Legal Deadline: None.

Abstract: Consistent gas and gas products valuation regulations for Royalty computation purposes, from Federal and Indian leases will be prepared. These regulations are in response to a Linowes Commission recommendation that Minerals Management Service issue detailed, definitive product valuation regulations. These regulations will provide clear terms and procedures and will help clarify areas which are ambiguous.

Timetable:

Action	Date	FR Cite
Notice of Proposed Guidelines	11/29/82	47 FR 53922
Notice of Proposed Guidelines	12/21/82	47 FR 56871
ANPRM	02/05/86	51 FR 4507
ANPRM Comment Period End	04/07/86	
NPRM	02/13/87	52 FR 4732
NPRM	06/17/87	52 FR 30776
Comment Period extended	09/02/87	52 FR 33247
Second further NPRM	10/23/87	52 FR 39792
Final Action	01/15/88	53 FR 1230
Final Action Effective	03/01/88	

Small Entity: No

Agency Contact: Dennis Whitcomb, Chief, Rules and Procedures,

Department of the Interior, Minerals Management Service, Denver Federal Center, MS 662, Bldg 85, Denver, CO 80225, 303 231-3432

RIN: 1010-AA54

1205. CHANGE EFFECTIVE DATE OF ADOPTED MODIFICATIONS TO NTL-5

Legal Authority: 30 USC 1701 et seq

CFR Citation: 30 CFR 206

Legal Deadline: None.

Abstract: The Minerals Management Service (MMS) published a Notice in the Federal Register on July 25, 1986 (51 FR 26759), to modify Notice to Lessees Number 5 (NTL-5) to provide more flexibility in valuing for royalty purposes, natural gas produced from onshore Federal and Indian leases. The modification was effective on August 1, 1986. However, MMS has received many complaints from industry that the prospective August 1, 1986, effective date of the modification, in some cases, leads to results which are unreasonable and contrary to applicable mineral leasing laws. Consequently, MMS proposes to make the effective date retroactive to a date to be established based on comments received.

Timetable:

Action	Date	FR Cite
NPRM	01/15/87	52 FR 1671
NPRM Comment Period End	02/17/87	
Reopen Public Comment Period	07/01/87	52 FR 24536
Extend Reopened Public Comment Period	07/15/87	52 FR 26575
Reopened Public Comment Period End	07/15/87	
Reopened Public Comment Period End	07/31/87	
Withdrawn	03/01/88	53 FR 1230

Small Entity: No

Agency Contact: Dennis Whitcomb, Chief, Rules and Procedures, Department of the Interior, Minerals Management Service, Denver Federal Center, MS 662, Bldg 85, Denver, CO 80225, 303 231-3432

RIN: 1010-AB09

1206. ROYALTY-IN-KIND CRUDE OIL

Significance: Regulatory Program

Legal Authority: 30 USC 181 et seq; 43 USC 1331 et seq; 30 USC 1701 et seq

CFR Citation: 30 CFR 208; 30 CFR 209

Legal Deadline: None.

Abstract: The Royalty-In-Kind provisions of these rules, some of which were transferred from the Department of Energy, will be revised in order to simplify and streamline the Federal Government's process for selling its royalty crude oil. The contents of existing 30 CFR 208 and 30 CFR 209 will be combined at new 30 CFR 208. 30 CFR 209 will be removed. The revised rule would establish uniformity within the regulatory text, provide industry with a more efficient and responsive Royalty-in-Kind Program and improve the Federal Government's administration of this program.

Timetable:

Action	Date	FR Cite
ANPRM	10/10/82	47 FR 50924
ANPRM Comment Period End	01/10/83	
NPRM	01/20/87	52 FR 2202
Final Action	10/30/87	52 FR 41908
Final Action Effective	12/01/87	

Small Entity: No

Agency Contact: Dennis C. Whitcomb, Chief, Rules and Procedures, Department of the Interior, Minerals Management Service, Denver Federal Center, MS 662, Bldg. 85, Denver, CO 80225, 303 231-3432

RIN: 1010-AA31

1207. EXTENSION OF PROTECTION OF PROPRIETARY DATA AND INFORMATION UNTIL A SUBSEQUENT LEASE SALE IN AN AREA

Legal Authority: 43 USC 1331 et seq

CFR Citation: 30 CFR 251.14

Legal Deadline: None.

Abstract: In some instances, current regulations result in release of proprietary data and information before the company which collected the data and information is able to use it during a lease sale in the area to which the data and information pertain. The proposed rule will revise the regulations to ensure that parties generating proprietary data and information are able to use the data and information in at least one lease sale.

Timetable:

Action	Date	FR Cite
NPRM	09/29/87	52 FR 36435
NPRM Comment Period End	10/29/87	
Final Action	02/16/88	53 FR 4390

Small Entity: No

Additional Information: RIN's 1010-AA93 and 1010-97 have been combined into 1010-AA93.

Agency Contact: John Mirabella, Senior Regulatory Policy Analyst, Department of the Interior, Minerals Management Service, Mail Stop 646, 12203 Sunrise Valley Drive, Reston, VA 22091, 703 648-7815

RIN: 1010-AA93

BILLING CODE 4310-MR-T

DEPARTMENT OF THE INTERIOR (DOI)

Office of Surface Mining Reclamation and Enforcement (OSMRE)

Proposed Rule Stage

1208. SURFACE COAL MINING AND RECLAMATION OPERATIONS; TWO ACRE EXEMPTION REPEAL

Legal Authority: 30 USC 1201 et seq; PL 100-34

CFR Citation: 30 CFR 700.11

Legal Deadline: None.

Abstract: Section 528(2) of the Surface Mining Control and Reclamation Act of 1977, exempted from the requirements of the Act "the extraction of coal for commercial purposes where the surface mining operation affects two acres or less." On May 7, 1987, the President signed Pub. L. 100-34 which repealed the exemption. The rule action would remove the exemption provision from the regulations at 30 CFR 700.

Timetable:

Action	Date	FR Cite
Notice of Suspension: Two-Acre Exemption Repeal	05/04/87	52 FR 21225
NPRM	06/00/88	

Small Entity: Undetermined

Agency Contact: Arthur Abbs, Department of the Interior, Office of Surface Mining Reclamation and Enforcement, 1951 Constitution Ave., NW, Washington, DC 20240, 202 343-5351

RIN: 1029-AB16

1209. SURFACE COAL MINING OPERATIONS; DEFINITION OF IN CONNECTION WITH

Significance: Agency Priority

Legal Authority: 30 USC 1201 et seq

CFR Citation: 30 CFR 700.5

Legal Deadline: None.

Abstract: The rule will codify the definition of the phrase "in connection with" as used in the definition of surface coal mining operations at 30 CFR 700.5. The definition of "in connection with" will clarify which activities are associated with surface coal mining operations and therefore subject to the requirements of the Surface Mining Control and Reclamation Act.

Timetable:

Action	Date	FR Cite
NPRM	04/00/88	

Small Entity: No

Agency Contact: Raymond E. Aufmuth, Department of the Interior, Office of Surface Mining Reclamation and Enforcement, 1951 Constitution Ave., NW, Washington, DC 20240, 202 343-1514

RIN: 1029-AB08

1210. PERMANENT REGULATORY PROGRAM REQUIREMENTS FOR PERMITS FOR SPECIAL CATEGORIES OF MINING

Significance: Regulatory Program

Legal Authority: 30 USC 1201 et seq

CFR Citation: 30 CFR 701.5; 30 CFR 785.19(d)

Legal Deadline: None

Abstract: This proposed rule would respond to a ruling by the District Court for the District of Columbia which stated that the definition of farming and agricultural activities were not equal as it related to Alluvial Valley Floors as defined in OSM's regulations. The Court ordered that the definition be repromulgated in a manner consistent with Congressional intent. Pursuant to the Court ruling, additional guidance would be provided as to what the "essential hydrologic functions" are of AVFs.

Timetable:

Action	Date	FR Cite
NPRM	04/00/88	
NPRM Comment Period End	06/00/88	
Final Action	06/00/88	

Small Entity: No

Agency Contact: Doug Growitz, Department of the Interior, Office of Surface Mining Reclamation and Enforcement, 1951 Constitution Avenue, NW, Washington, DC 20240, 202 343-1507

RIN: 1029-AA54

1211. PERMANENT REGULATORY PROGRAM DEFINITION OF SUPPORT FACILITIES

Significance: Agency Priority

Legal Authority: 30 USC 1201 et seq

CFR Citation: 30 CFR 701.5

Legal Deadline: None

Abstract: The Office of Surface Mining Reclamation and Enforcement (OSMRE) proposes to remove the definition of "support facilities" from its regulations. In reviewing the decisions of regulatory authorities during the time periods when no definition was in effect (prior to the 1983 introduction of a definition and since the 1985 suspension of the definition), OSMRE found that the identification of facilities that support surface coal mining operations has been conducted in a manner consistent with the intent of the Surface Mining Control and Reclamation Act (SMCRA). Therefore, OSMRE has determined that a definition of "support facilities" is not needed in order to ensure that such facilities are regulated under SMCRA. This proposed rule would impose only minor costs to the coal industry since relatively few operations will be affected.

Timetable:

Action	Date	FR Cite
NPRM	04/00/88	

Small Entity: Undetermined

Agency Contact: Stephan Sheffield, Physical Scientist, Department of the Interior, Office of Surface Mining Reclamation and Enforcement, 1951 Constitution Ave., NW, Washington, DC 20240, 202 343-1514

RIN: 1029-AA94

1212. ● INTERIM PROGRAM REVISIONS

Legal Authority: 30 USC 1201 et seq

CFR Citation: 30 CFR 710; 30 CFR 715; 30 CFR 716; 30 CFR 717; 30 CFR 718; 30 CFR 720; 30 CFR 721; 30 CFR 722

Legal Deadline: None.

Abstract: The rule would amend those portions of the OSMRE interim regulatory program regulations which are different from the permanent regulatory program. OSMRE is undertaking this action to provide equity and regulatory consistency between the programs.

Timetable:

Action	Date	FR Cite
NPRM	06/00/88	

Small Entity: Undetermined

Agency Contact: Dermot Winters, Department of the Interior, Office of Surface Mining Reclamation and Enforcement, 1951 Constitution Ave., NW, Washington, DC 20240, 202 343-5241

RIN: 1029-AB24

1213. REQUIREMENTS FOR COAL EXPLORATION—PERMIT REQUIREMENTS FOR EXPLORATION REMOVING MORE THAN 250 TONS OF COAL

Significance: Agency Priority

Legal Authority: 30 USC 1201 et seq

CFR Citation: 30 CFR 772.11; 30 CFR 772.12

Legal Deadline: None.

Abstract: The proposed rule would comply with a court order of the District Court for the District of Columbia which remanded OSM

reporting requirements for surface coal exploration. The proposed rule would revise existing requirements to include the filing of a notice by all individuals or operators planning coal exploration, and specify the information required on applications for coal exploration. The obligation to report is a standing requirement of existing regulations. This rule would expand the requirement to report. Because affected States already have the expanded requirement in place, no additional costs or benefits are expected to be associated with the rule.

Timetable:

Action	Date	FR Cite
NPRM	06/00/88	

Small Entity: Undetermined

Agency Contact: Fred Block, Department of the Interior, Office of Surface Mining Reclamation and Enforcement, 1951 Constitution Ave., NW, Washington, DC 20240, 202 343-4553

RIN: 1029-AA92

1214. FEDERAL REGULATORY PROGRAMS; PERMIT APPLICATION FEES

Legal Authority: 30 USC 1201 et seq

CFR Citation: 30 CFR 736; 30 CFR 740; 30 CFR 746; 30 CFR 750; 30 CFR 772

Legal Deadline: None.

Abstract: The proposed rule would govern the collection by OSMRE of application fees for permits to conduct surface coal mining and reclamation operations, and for permits to conduct coal exploration, as well as fees for processing mining plans and for midterm review of surface coal mining and reclamation permits. Recipients of these services would be required to reimburse OSMRE for costs incurred in providing the services.

Timetable:

Action	Date	FR Cite
NPRM	05/00/88	

Small Entity: Undetermined

Agency Contact: Arthur Abbs, Department of the Interior, Office of Surface Mining Reclamation and Enforcement, 1951 Constitution Ave., NW, Washington, DC 20240, 202 343-5351

RIN: 1029-AB15

1215. FEDERAL LANDS PROGRAM

Significance: Regulatory Program

Legal Authority: 30 USC 1201 et seq; 30 USC 181 et seq

CFR Citation: 30 CFR 740; 30 CFR 745; 30 CFR 746

Legal Deadline: None.

Abstract: Various language changes will be proposed in 30 CFR 740, 745, and 746 in response to a ruling by the District Court for the District of Columbia with respect to the definition of "mining plans," the applicability of the Federal lands program, and for technical accuracy and to clarify ambiguous language that has surfaced since publication of the rules in February 1983.

Timetable:

Action	Date	FR Cite
NPRM	05/00/88	
NPRM Comment Period End	07/00/88	
Final Action	01/00/89	

Small Entity: Undetermined

Agency Contact: Leonard Richeson, Department of the Interior, Office of Surface Mining Reclamation and Enforcement, 1951 Constitution Ave., NW, Washington, DC 20240, 202 343-5150

RIN: 1029-AA76

1216. DEFINITION AND CRITERIA FOR VALID EXISTING RIGHTS

Significance: Regulatory Program

Legal Authority: 30 USC 1254; 30 USC 1272

CFR Citation: 30 CFR 761.5; 30 CFR 761.11(h)

Legal Deadline: None.

Abstract: OSM is repromulgating certain portions of its regulations which define "valid existing rights" and prohibit surface coal mining on lands within units of the National Park System, National Wildlife Refuge System and certain other areas designated by Congress. OSM is repromulgating these regulations as a result of a District Court Decision in Round III of the present litigation on OSM's permanent program regulations.

Timetable:

Action	Date	FR Cite
Notice of EIS and RIA Scoping Meeting, Request for Comments	01/22/87	52 FR 2421
Scoping Hearings for NEPA and RIA	02/06/87	
NPRM	04/00/88	
Hearing on Draft EIS	04/00/88	
NPRM Comment Period End	06/00/88	
Final Action	11/00/88	

Small Entity: Yes

Agency Contact: Annetta Cheek, Department of the Interior, Office of Surface Mining Reclamation and Enforcement, 1951 Constitution Ave., NW, Washington, DC 20240, 202 343-7951

RIN: 1029-AA77

1217. LANDS UNSUITABLE REGULATIONS

Significance: Agency Priority

Legal Authority: 30 USC 1254; 30 USC 1272

CFR Citation: 30 CFR 761.5; 30 CFR 761.11(a); 30 CFR 761.11(c); 30 CFR 769.14(a)(3); 30 CFR 769.14(b)(2)

Legal Deadline: None.

Abstract: OSMRE is repromulgating certain portions of its regulations under Subchapter F which contain criteria for and describe the petition process for designating lands unsuitable for surface coal mining operations. OSM is repromulgating these regulations as a result of a District Court decision in Round III of the present litigation on OSMRE's permanent program regulations.

Timetable:

Action	Date	FR Cite
NPRM	06/00/88	

Small Entity: No

Agency Contact: Jerry Schwartz, Department of the Interior, Office of Surface Mining Reclamation and Enforcement, 1951 Constitution Ave., NW, Washington, DC 20240, 202 343-5144

RIN: 1029-AA90

VOL 53 ISS 79 PT 1 AP 25 1988 UMI

1218. PERMANENT REGULATORY PROGRAM DEFINITIONS; AREAS UNSUITABLE FOR MINING

Significance: Regulatory Program

Legal Authority: 30 USC 1201 et seq

CFR Citation: 30 CFR 784

Legal Deadline: None.

Abstract: The proposed rule would clarify the applicability of the prohibitions in section 522(e) of the Surface Mining Control and Reclamation Act to the surface impacts of underground mining. The issue of the relationship between section 522(e) and mining related subsidence will be addressed in the proposed rulemaking. The rulemaking will seek to clarify whether OSM's rules have the effect of prohibiting underground mining operations related to the features and facilities within the distance limitations enumerated in section 522(e) of the Act. The proposed rulemaking will address the issue of what is a "Surface Impact" incident to an underground mine.

Timetable:

Action	Date	FR Cite
ANPRM	04/03/85	50 FR 13250
ANPRM Comment Period End	08/27/85	50 FR 13250
Notice of EIS and RIA Scoping Meeting and Request for Comments	01/22/87	52 FR 2421
EIS and RIA Scoping Meeting	02/06/87	
NPRM	04/00/88	
Hearing on Draft EIS	04/00/88	
NPRM Comment Period End	06/00/88	
Final Action	11/00/88	

Small Entity: Yes

Additional Information: The Office of Surface Mining has determined that the proposed rulemaking constitutes a major Federal action requiring an EIS to meet the requirements of the National Environmental Policy Act. OSM has also made the determination that the proposed rule may be significant within the meaning of E.O. 12291. Precise cost/price impacts cannot be determined prior to further development of the regulation, but such costs are anticipated to be significant in terms of E.O. 12291 and the Regulatory Flexibility Act. Therefore, a Preliminary Regulatory Impact Analysis and Small Entity Flexibility Analysis are being prepared.

Agency Contact: Dermot Winters, Department of the Interior, Office of Surface Mining Reclamation and Enforcement, 1951 Constitution Avenue, NW, Washington, DC 20240, 202 343-1928

RIN: 1029-AA80

1219. ● REPROCESSING COAL WASTE

Legal Authority: 30 USC 1201 et seq

CFR Citation: 30 CFR 786, (New); 30 CFR 829, (New)

Legal Deadline: None.

Abstract: The rule would revise existing permitting and performance standards to take into consideration the unique circumstances and requirements for reprocessing coal waste. The rule would identify the minimum requirements for this type of activity. The action is being undertaken in response to findings and planned actions identified during OSMRE's study of remining initiatives.

Timetable:

Action	Date	FR Cite
NPRM	06/00/88	

Small Entity: Undetermined

Agency Contact: Ray Aufmuth, Department of the Interior, Office of Surface Mining Reclamation and Enforcement, 1951 Constitution Ave., NW, Washington, DC 20240, 202 342-1514

RIN: 1029-AB23

1220. PERMANENT PROGRAM PERFORMANCE STANDARDS; DISPOSAL OF COAL MINE WASTE

Legal Authority: 30 USC 1201 et seq

CFR Citation: 30 CFR 816; 30 CFR 817

Legal Deadline: None.

Abstract: The rule will reexamine performance standards and design criteria for coal waste disposal. The action is in response to a District Court for the District of Columbia remand order which cited procedural defects in an earlier rulemaking (47 FR 44006, September 26, 1983), involving inadequate notice and comment and an inadequate administrative record.

Timetable:

Action	Date	FR Cite
NPRM	07/00/88	

Small Entity: Undetermined

Agency Contact: Dr. C. Y. Chen, Department of the Interior, Office of Surface Mining Reclamation and Enforcement, 1951 Constitution Ave., NW, Washington, DC 20240, 202 343-1501

RIN: 1029-AB09

1221. PERMANENT PROGRAM PERFORMANCE STANDARDS; SURFACE MINING ACTIVITIES; CONTEMPORANEOUS RECLAMATION

Significance: Agency Priority

Legal Authority: 30 USC 1201 et seq

CFR Citation: 30 CFR 816.100; 30 CFR 816.101

Legal Deadline: None.

Abstract: The rule is being proposed in response to a remand by the Court to provide additional guidance to the regulatory authorities. The proposed rule should ensure that all reclamation efforts proceed as contemporaneously as practicable with surface coal mining operations in accordance with Section 515(b)(16) of the Surface Mining Control and Reclamation Act of 1977.

Timetable:

Action	Date	FR Cite
NPRM	06/00/88	

Small Entity: Undetermined

Agency Contact: Robert Wiles, Department of the Interior, Office of Surface Mining Reclamation and Enforcement, 1951 Constitution Ave., NW, Washington, DC 20240, 202 343-1502

RIN: 1029-AB02

1222. PERMANENT PROGRAM PERFORMANCE STANDARDS SURFACE AND UNDERGROUND MINING ACTIVITIES BACKFILLING AND GRADING

Significance: Regulatory Program

Legal Authority: 30 USC 1201 et seq

CFR Citation: 30 CFR 816.102(g)(2); 30 CFR 816.104; 30 CFR 816.105

Legal Deadline: None.

Abstract: The regulation will address the sections that were remanded back

BEST COPY AVAILABLE

to OSM by the action of the Court. The regulation will provide additional guidance to the surface coal mine operator in fulfilling the performance standards of the Act. Costs will not be increased because the regulations will amplify existing requirements.

Timetable:

Action	Date	FR Cite
NPRM	08/00/88	
NPRM Comment Period End	10/00/88	
Final Action	03/00/89	

Small Entity: Undetermined

Agency Contact: Robert Wiles, Department of the Interior, Office of Surface Mining Reclamation and Enforcement, 1951 Constitution Avenue, NW, Washington, DC 20240, 202 343-1502

RIN: 1029-AA57

1223. DISPOSAL OF EXCESS SPOIL ON PREEXISTING BENCHES

Legal Authority: 30 USC 1201 et seq

CFR Citation: 30 CFR 816.74; 30 CFR 817.74

Legal Deadline: None.

Abstract: The regulations at 30 CFR 816.74/817.74 allow, with the approval of the regulatory authority, the disposal of excess spoil through placement on preexisting benches provided that the standards set forth in sections 816.71/817.71 are met. These standards contain the general requirements for the disposal of excess spoil. Based on the draft study entitled "Encouraging Abandoned Mine Land Reclamation via Remining: A Federal, State and Industry Initiative" and comments received, OSMRE has reviewed these regulations. Based on this review, OSMRE has concluded that excess spoil, when placed on the benches is similar to backfilling and grading of a highwall and bench and therefore could be regulated under the backfilling and grading regulations in section 816.102/817.102, in lieu of the "excess spoil" standards while maintaining the same environmental and safety standards. The proposed rule would apply the backfilling and grading requirements to disposal of excess spoil on preexisting benches.

Timetable:

Action	Date	FR Cite
NPRM	05/00/88	

Small Entity: Undetermined

Agency Contact: Raymond Aufmuth, Department of the Interior, Office of Surface Mining Reclamation and Enforcement, 1951 Constitution Ave., NW, Washington, DC 20240, 202 343-1514

RIN: 1029-AB18

1224. ● ASSESSMENT CONFERENCE SCHEDULING

Legal Authority: 30 USC 1201 et seq

CFR Citation: 30 CFR 843; 30 CFR 845

Legal Deadline: None.

Abstract: The rule would eliminate some procedural inconsistencies remaining from previous 30 CFR 843 and 845 rulemakings. In particular, the rules would allow for a more efficient and practical time frame for scheduling assessment conferences. OSMRE is undertaking this action in response to suggestions from the Interior Department's Offices of the Solicitor and from OSMRE personnel involved in administering the existing 30 CFR Part 843 and 845 requirements.

Timetable:

Action	Date	FR Cite
NPRM	07/00/88	

Small Entity: Undetermined

Agency Contact: Dermot Winters, Department of the Interior, Office of Surface Mining Reclamation and Enforcement, 1951 Constitution Ave., NW, Washington, DC 20240, 202 343-1928

RIN: 1029-AB22

1225. ● IMPROVIDENTLY ISSUED PERMITS

Legal Authority: 30 USC 1201 et seq

CFR Citation: 30 CFR 845

Legal Deadline: None.

Abstract: This rule will clarify that OSMRE will not require the assessment of civil penalties for notices of violation or cessation orders issued to a permittee who has secured an improvidently issued permit from a State regulatory authority. OSMRE distinguishes this type of violation from an environmental violation, which would be treated differently. However, present rules do not address this type of violation, necessitating this rulemaking.

Timetable:

Action	Date	FR Cite
NPRM	07/00/88	

Small Entity: Undetermined

Agency Contact: Sandi Olsen, Department of the Interior, Office of Surface Mining Reclamation and Enforcement, 1951 Constitution Ave., NW, Washington, DC 20240, 202 343-1134

RIN: 1029-AB20

1226. ● DELINQUENT ABANDONED MINE LAND RECLAMATION FEES

Legal Authority: 30 USC 1201 et seq

CFR Citation: 30 CFR 845

Legal Deadline: None.

Abstract: The rule will clarify that when OSMRE issues a notice of violation or cessation order for delinquent AML fees, that determination of civil penalties is not to be treated as an environmental violation, but must follow a discrete procedure. Present rules do not address this circumstance, necessitating this rulemaking.

Timetable:

Action	Date	FR Cite
NPRM	07/00/88	

Small Entity: Undetermined

Agency Contact: Daniel Lytton, Department of the Interior, Office of Surface Mining Reclamation and Enforcement, 1951 Constitution Ave., NW, Washington, DC 20240, 202 653-2871

RIN: 1029-AB21

1227. ABANDONED MINE LAND RECLAMATION; STATE RECLAMATION GRANTS

Legal Authority: 30 USC 1201 et seq

CFR Citation: 30 CFR 886

Legal Deadline: None.

Abstract: Cases have been identified where coal mine operators have also contracted with a State to conduct reclamation of abandoned mine land. This reclamation is conducted under

VOL 53 ISS 79 PT 1 APR 25 1988 UMI

the Abandoned Mine Land (AML) Reclamation Program and is funded by fees paid by coal operators on productions. Under the proposed rule, a reclamation contract could not be let to an operator with certain outstanding violations of the Surface Mining Control and Reclamation Act. The violations would include outstanding cessation orders and unpaid civil penalties and abandoned mine reclamation fees. The rule action is being initiated to prevent operators in violation of SMCRA from benefiting from the Act by receiving contracts funded under the AML program.

Timetable:

Action	Date	FR Cite
NPRM	06/00/88	

Small Entity: Undetermined

Agency Contact: Danny Lytton, Department of the Interior, Office of Surface Mining Reclamation and Enforcement, 1951 Constitution Ave., NW, Washington, DC 20240, 202 343-2866

RIN: 1029-AB13

1228. TENNESSEE PROGRAM AMENDMENT; SIGNIFICANT PERMIT REVISIONS

Legal Authority: 30 USC 1201 et seq

CFR Citation: 30 CFR 942.774

Legal Deadline: None.

Abstract: The rule applies to the Federal program for Tennessee and would establish guidelines for determining whether a proposed revision to an existing coal mining permit is significant. Significant permit revisions are subject to public comment and hearing requirements. The rule would assist OSMRE in making consistent determinations concerning the significance of permit revisions in Tennessee. The rule is being proposed in response to a decision on a petition for rulemaking, submitted to the Director, OSMRE.

Timetable:

Action	Date	FR Cite
Notice of Decision on Petition for Rulemaking	03/05/87	52 FR 6827
NPRM	06/00/88	

Small Entity: No

Agency Contact: James Tate, Jr., Department of the Interior, Office of Surface Mining Reclamation and Enforcement, 1951 Constitution Ave, NW, Washington, DC 20240, 202 343-4560

RIN: 1029-AB17

DEPARTMENT OF THE INTERIOR (DOI)

Office of Surface Mining Reclamation and Enforcement (OSMRE)

Final Rule Stage

1229. TERMINATION OF JURISDICTION UNDER SMCRA

Significance: Regulatory Program

Legal Authority: 30 USC 1201 et seq

CFR Citation: 30 CFR 700.11

Legal Deadline: None.

Abstract: The Surface Mining Control and Reclamation Act (the Act) doesn't specifically define the point at which regulatory jurisdiction ends. Therefore, a regulation is needed to define that point. The regulation in question is specific to the responsibilities of the Department of the Interior, OSMRE, and implement the Act. No other Federal agency is authorized to undertake this action on behalf of the Department. OSMRE has never addressed this issue in a rulemaking. The regulatory authority will issue a written determination ending regulatory jurisdiction under the Act when the following conditions apply. For permanent program operations, it proposed to terminate regulatory jurisdiction under the Act at the time of final bond release or when all regulatory program requirements have been met. For initial program operations, regulatory jurisdiction will end when all requirements of the regulatory program have been met.

Timetable:

Action	Date	FR Cite
NPRM	06/26/87	52 FR 24092
NPRM Comment Period End	09/04/87	52 FR 24092
Final Action	04/00/88	

Small Entity: No

Agency Contact: Daniel Stocker, Department of the Interior, Office of Surface Mining Reclamation and Enforcement, 1951 Constitution Ave., NW, Washington, DC 20240, 202 343-1314

RIN: 1029-AB07

1230. PERMANENT PROGRAM PERFORMANCE STANDARDS SURFACE AND UNDERGROUND ACTIVITIES ROADS

Significance: Regulatory Program

Legal Authority: 30 USC 1201 et seq

CFR Citation: 30 CFR 701.5; 30 CFR 816.150; 30 CFR 816.151; 30 CFR 817.150; 30 CFR 817.151

Legal Deadline: None.

Abstract: The regulation will address the sections that were remanded back to OSM by the action of the Court and modify some provisions that are confusing in the existing file. The changes will provide additional guidance to the surface coal mine operator in fulfilling the performance standards of the Act. Costs will not be increased because the regulations will amplify existing requirements.

Timetable:

Action	Date	FR Cite
NPRM	11/03/87	52 FR 42259
NPRM Comment Period End	01/12/88	52 FR 42259
Final Action	06/00/88	

Small Entity: No

Agency Contact: Robert Wiles, Department of the Interior, Office of Surface Mining Reclamation and Enforcement, 1951 Constitution Avenue, NW, Washington, DC 20240, 202 343-1503

RIN: 1029-AA60

1231. EXEMPTION FOR COAL EXTRACTION INCIDENTAL TO THE EXTRACTION OF OTHER MINERALS

Legal Authority: 30 USC 1201

CFR Citation: 30 CFR 702

Legal Deadline: None.

Abstract: The Surface Mining Act exempts mining operations that extract

other minerals where coal does not exceed 16 2/3 percent of tonnage of minerals removed for sale. Evidence of abuse of this exemption has been identified. Proposed regulations would establish procedures to administer the exemption. The costs of compliance for these operations are undetermined. Benefits would be to the public in terms of protection of health, safety, and environment from detrimental effects of mining. Legitimate noncoal operators would be able to compete fairly with those operations now using the exemption to undersell their legitimate competitors.

Timetable:

Action	Date	FR Cite
NPRM	06/01/87	52 FR 20546
NPRM Comment Period End	08/10/87	52 FR 20546
Final Action	06/00/88	

Small Entity: No

Agency Contact: James Fary, Department of the Interior, Office of Surface Mining Reclamation and Enforcement, 1951 Constitution Avenue, NW, Washington, DC 20240, 202 343-5384

RIN: 1029-AA53

1232. SURFACE COAL MINING AND RECLAMATION OPERATIONS ON INDIAN LANDS

Legal Authority: 30 USC 1201 et seq

CFR Citation: 30 CFR 750

Legal Deadline: None.

Abstract: The proposed rule would implement Court approved settlements involving OSMRE, the State of New Mexico, and the National Coal Association/American Mining Congress Joint Committee in regard to final Indian lands regulations. The rule would delete the reference to the American Indian Religious Freedom Act and revise the requirements addressing inclusion of surface coal mining and reclamation provisions in Indian leases.

Timetable:

Action	Date	FR Cite
NPRM	02/10/88	53 FR 3992
Final Action	09/00/88	

Small Entity: No

Agency Contact: Suzanne Hudak, Department of the Interior, Office of Surface Mining Reclamation and Enforcement, 1951 Constitution Ave., NW, Washington, DC 20240, 202 343-4540

RIN: 1029-AB04

1233. SUBSTANTIAL LEGAL AND FINANCIAL COMMITMENT

Significance: Agency Priority

Legal Authority: 30 USC 1201 et seq

CFR Citation: 30 CFR 762.5

Legal Deadline: None.

Abstract: The proposed rule would amend the definition of the phrase "substantial legal and financial commitments" as required by a District Court decision in Round III of the present litigation on OSMRE's permanent program regulations. The definition will clarify what is needed for a determination of a "substantial legal and financial commitment" in a surface coal mining operation. Such a determination would exempt land from a designation as unsuitable for surface coal mining operations.

Timetable:

Action	Date	FR Cite
NPRM	10/20/87	52 FR 39166
NPRM Comment Period End	12/29/87	52 FR 39166
Final Action	06/00/88	

Small Entity: No

Agency Contact: James M. Kress, Federal Land Specialist, Department of the Interior, Office of Surface Mining Reclamation and Enforcement, 1951 Constitution Ave., NW, Washington, DC 20240, 202 343-5145

RIN: 1029-AB01

1234. SURFACE COAL MINING AND RECLAMATION OPERATIONS PERMANENT REGULATORY PROGRAM-OWNERSHIP AND CONTROL

Significance: Regulatory Program

Legal Authority: 30 USC 1201 et seq

CFR Citation: 30 CFR 773

Legal Deadline: None.

Abstract: The proposed rule would require the regulatory authority to make findings prior to permit issuance that the applicant and persons or business entities closely connected to the applicant do not have any outstanding unabated violations, delinquent AML reclamation fee accounts, or unpaid final civil penalties.

Timetable:

Action	Date	FR Cite
NPRM	04/05/85	50 FR 13724
NPRM Comment Period End	11/04/87	52 FR 37164
Final Action	04/00/88	

Small Entity: No

Agency Contact: Andrew F. DeVito, Department of the Interior, Office of Surface Mining Reclamation and Enforcement, 1951 Constitution Avenue, NW, Washington, DC 20240, 202 343-5241

RIN: 1029-AA56

1235. REQUIREMENTS FOR PERMITS AND PERMIT PROCESSING PERMIT APPLICATIONS MINIMUM REQUIREMENTS FOR LEGAL FINANCIAL CIVIL PENALTIES

Significance: Regulatory Program

Legal Authority: 30 USC 1201 et seq

CFR Citation: 30 CFR 773, (Revision); 30 CFR 843

Legal Deadline: None.

Abstract: The existing rules pertaining to the requirements for permit and permit processing, permit applications and civil penalties are to be amended. The proposed revisions expressly establish an affirmative obligation on permittees and permit applicants to pay uncontested penalties and abate uncontested violations. Permittees and applicants for permits must meet these obligations prior to the issuance of a permit and as a condition of continued operation under existing permits.

Timetable:

Action	Date	FR Cite
NPRM	07/16/86	51 FR 25822
NPRM Comment Period End	10/24/86	51 FR 33905
Final Action	04/00/88	

Small Entity: No

Government Levels Affected: State, Federal

Agency Contact: Andrew DeVito, Department of the Interior, Office of Surface Mining Reclamation and Enforcement, 1951 Constitution Avenue, NW, Washington, DC 20240, 202 343-5241

RIN: 1029-AA66

1236. PERMIT PROCESSING

Legal Authority: 30 USC 1201 et seq

CFR Citation: 30 CFR 773.11

Legal Deadline: None.

Abstract: The proposed rule would require operators of surface coal mining operations who operated during the initial regulatory program without a permit to cease mining until they secure a permanent program permit. Only operators who held initial program permits may continue to operate after the Secretary has approved a State regulatory program, if they have submitted an application for a permanent program permit. The proposed rule responds to a remand of previously proposed regulation, in which the U.S. District Court concluded that the rule was inconsistent with the statute.

Timetable:

Action	Date	FR Cite
NPRM	11/09/87	52 FR 43174
NPRM Comment Period End	01/19/88	52 FR 43174
Final Action	07/00/88	

Small Entity: No

Agency Contact: Patrick Boyd, Department of the Interior, Office of Surface Mining Reclamation and Enforcement, 1951 Constitution Ave., NW, Washington, DC 20240, 202 343-4561

RIN: 1029-AB14

1237. PERMANENT REGULATORY PROGRAM - OWNERSHIP INFORMATION

Significance: Agency Priority

Legal Authority: 30 USC 1201 et seq

CFR Citation: 30 CFR 778

Legal Deadline: None.

Abstract: The Office of Surface Mining Reclamation and Enforcement is proposing to revise 30 CFR 778 which specifies what information must be furnished in a surface coal mining permit application. The permit application requirements are being revised in order to conform them to proposed revisions in 30 CFR 773 which govern the issuance of surface coal mining permits. The proposed revisions to 30 CFR 778 will require the submission of more detailed information on the ownership and control of permit applicants. It is not anticipated that the revision will impose a substantial financial burden on those applying for permits.

Timetable:

Action	Date	FR Cite
NPRM	05/28/87	52 FR 20032
NPRM Comment Period End	08/06/87	52 FR 20032
Final Action	06/00/88	

Small Entity: No

Agency Contact: Andrew DeVito, Senior Regulatory Analyst, Department of the Interior, Office of Surface Mining Reclamation and Enforcement, 1951 Constitution Ave., NW, Washington, DC 20240, 202 343-5241

RIN: 1029-AA96

1238. PERMANENT REGULATORY PROGRAM; REQUIREMENTS FOR PERMITS, INFORMATION ON HYDROLOGIC IMPACTS

Significance: Agency Priority

Legal Authority: 30 USC 1201 et seq

CFR Citation: 30 CFR 780.21(f); 30 CFR 784.14(e)

Legal Deadline: None.

Abstract: The rule sets a life of permit as the parameter for the determination of the probable hydrologic consequences (PHC) of the proposed operation upon the quality and quantity of surface and groundwater under seasonal flow conditions for the proposed permit and adjacent areas. The rule re-promulgates the suspended 1983 rules with an expanded preamble and record to support the rule language. This was requested by the Court as a result of litigation. The rule will result in lower costs to industry and a reduction in their information collection requirements.

Timetable:

Action	Date	FR Cite
NPRM	08/28/87	52 FR 32764
NPRM Comment Period End	11/06/87	52 FR 32764
Final Action	05/00/88	

Small Entity: No

Agency Contact: Doug Growitz, Department of the Interior, Office of Surface Mining Reclamation and Enforcement, 1951 Constitution Ave., NW, Washington, DC 20240, 202 343-1507

RIN: 1029-AB11

1239. PERMANENT PROGRAM PERFORMANCE STANDARDS; HIGHWALL POLICY

Legal Authority: 30 USC 1201 et seq

CFR Citation: 30 CFR 816.102

Legal Deadline: None.

Abstract: The proposed regulation is in accordance with a Court approved settlement agreement and would provide a method of calculating civil penalties when compliance with Section 30 CFR 816.102(a) cannot be accomplished using Best Technology Currently Available or where compliance would result in significant harm to the environment and the operation does not qualify for an exemption to total highwall elimination in accordance with 30 CFR 816.102(k). The regulation will require an undetermined information collection requirement on the regulatory authority, the cost of which has not been calculated.

Timetable:

Action	Date	FR Cite
NPRM	10/29/87	52 FR 41686
NPRM Comment Period End	01/07/88	52 FR 41686
Final Action	06/00/88	

Small Entity: No

Agency Contact: Ralph McDonald, Department of the Interior, Office of Surface Mining Reclamation and Enforcement, 1951 Constitution Ave., NW, Washington, DC 20240, 202 343-1514

RIN: 1029-AB10

1240. PERMANENT PROGRAM PERFORMANCE STANDARDS - SURFACE MINING ACTIVITIES, UNDERGROUND MINING ACTIVITIES – REVEGETATION

Significance: Agency Priority

Legal Authority: 30 USC 1201 et seq

CFR Citation: 30 CFR 816.116(b)(3)(ii); 30 CFR 816.116(c)(4); 30 CFR 817.116(b)(3)(ii); 30 CFR 817.116(c)(4); 30 CFR 816.116(c)(2); 30 CFR 817.116(c)(2)

Legal Deadline: None.

Abstract: This rule is being proposed in response to an order of the U.S. District

Court remanding several aspects of OSM regulations concerning revegetation which has inadequate support in the administrative record. OSM will propose rules concerning replanting of trees as a normal husbandry practice, the period for revegetation success, and rills and gullies control as a normal conservation practice. Costs and benefits of this action have not been determined since the final scope of the rule is not certain. This analysis will be based in large part on public comments received on the proposed rule.

Timetable:

Action	Date	FR Cite
NPRM	07/27/87	52 FR 28012
NPRM Comment Period End	02/01/88	52 FR 37334
Final Action	05/00/88	

Small Entity: No

Agency Contact: Patrick Boyd, Department of the Interior, Office of Surface Mining Reclamation and Enforcement, 1951 Constitution Avenue, NW, Washington, DC 20240, 202 343-4561

RIN: 1029-AA86

1241. PERMANENT PROGRAM PERFORMANCE STANDARDS - SURFACE MINING ACTIVITIES, UNDERGROUND MINING ACTIVITIES - IMPOUNDMENTS

Significance: Regulatory Program

Legal Authority: 30 USC 1201 et seq

CFR Citation: 30 CFR 816.49; 30 CFR 817.49

Legal Deadline: None.

Abstract: The regulation will address the issue addressed in a district court challenge to OSM regulations. The rule will address the problem of combination spillways and will specify a spillway configuration that must be installed to safely pass the designed precipitation event. In some cases, the rule may allow one spillway to serve as a combination principal and emergency spillway. The proposed action may reduce costs in those cases where one spillway will safely pass the design precipitation event with no corresponding decrease in environmental protection.

Timetable:

Action	Date	FR Cite
NPRM	10/21/87	52 FR 39364
NPRM Comment Period End	12/30/87	52 FR 39364
Final Action	05/00/88	

Small Entity: No

Agency Contact: Robert Wiles, Department of the Interior, Office of Surface Mining Reclamation and Enforcement, 1951 Constitution Ave., NW, Washington, DC 20240, 202 343-1502

RIN: 1029-AA79

1242. SPECIAL PERMANENT PROGRAM PERFORMANCE STANDARDS OPERATIONS ON PRIME FARMLAND

Significance: Regulatory Program

Legal Authority: 30 USC 1201 et seq

CFR Citation: 30 CFR 823.11(a); 30 CFR 823.11(b)

Legal Deadline: None.

Abstract: These regulations are being revised as ordered by the District Court for the District of Columbia. They will amend OSM's permanent program performance standards with respect to prime farmlands by allowing last cut lakes to remain after mining is complete only where they are beneficial or necessary to agricultural activity and allowing for a support facility exemption only for underground mines. These changes are mandated by Court Order, thus, no alternatives to this action are being considered.

Timetable:

Action	Date	FR Cite
NPRM	03/25/87	52 FR 9644
NPRM Comment Period End	06/03/87	52 FR 9644
Final Action	04/00/88	

Small Entity: No

Agency Contact: Donald Smith, Department of the Interior, Office of Surface Mining Reclamation and Enforcement, 1951 Constitution Avenue, NW, Washington, DC 20240, 202 343-1510

RIN: 1029-AA64

1243. SURFACE COAL MINING AND RECLAMATION OPERATIONS; PERMANENT REGULATORY PROGRAMS; PERMANENT PROGRAM INSPECTION AND ENFORCEMENT PROCEDURES

Significance: Regulatory Program

Legal Authority: 30 USC 1267

CFR Citation: 30 CFR 840; 30 CFR 842; 30 CFR 843

Legal Deadline: None.

Abstract: The proposed rule would define an "abandoned site" and address the inspection frequency for those sites. The rule would enable regulatory authorities to allocate inspector resources to ongoing operations where they are most needed by reducing the inspection frequency for abandoned sites as necessary to monitor conditions or changes of status without sacrificing environmental quality control.

Timetable:

Action	Date	FR Cite
NPRM	08/28/87	52 FR 32758
NPRM Comment Period End	11/30/87	52 FR 41471
Final Action	04/00/88	

Small Entity: No

Agency Contact: Daniel E. Stocker, Chief, Section of Inspection, Department of the Interior, Office of Surface Mining Reclamation and Enforcement, 1951 Constitution Avenue, NW, Washington, DC 20240, 202 343-1314

RIN: 1029-AA67

1244. TEN DAY NOTICE REVIEW CRITERIA

Significance: Regulatory Program

Legal Authority: 30 USC 1201 et seq

CFR Citation: 30 CFR 842.11; 30 CFR 843.12

Legal Deadline: None.

Abstract: The proposed rule would provide guidance to OSMRE in its evaluation of State responses to ten day notices. It would provide that OSMRE must accept a State's response as constituting appropriate action to cause a violation to be corrected or showing good cause for such failure, unless that response is arbitrary, capricious, or an abuse of discretion under the State program. The rule

VOL 53 ISS 79 PT 1 AP 25 1988 UMI

would also provide a mechanism whereby a State could seek informal review within OSMRE of an initial decision to inspect a mine site when OSMRE rejects the State's response to the ten day notice. The rulemaking is being proposed in response to a decision on a petition for rulemaking submitted to the Director, OSMRE.

Timetable:

Action	Date	FR Cite
Notice of Decision on Petition for Rulemaking	06/08/87	52 FR 21598
NPRM	09/09/87	52 FR 34050
NPRM Comment Period End	11/20/87	52 FR 41309
Final Action	04/00/88	

Small Entity: No

Agency Contact: Daniel Stocker, Department of the Interior, Office of Surface Mining Reclamation and Enforcement, 1951 Constitution Ave., NW, Washington, DC 20240, 202 343-1314

RIN: 1029-AB12

1245. COLLECTION OF AML FEES - MOISTURE CONTENT OF COAL

Significance: Regulatory Program

Legal Authority: 30 USC 1201 et seq

CFR Citation: 30 CFR 870

Legal Deadline: None.

Abstract: The present regulations require the weight of coal (for the purpose of calculating the tonnage upon which the AML fee is calculated) to be determined at the point of first sale. This weight includes not only that of the saleable coal, but also that of the extraneous material including the moisture content. Recent action by the Internal Revenue Service (IRS) issued a revenue-ruling for the Black Lung Tax to allow for the deduction of a moisture content allowance from the tonnage upon which the Black Lung Tax is collected. The IRS decision to make this change in its regulations was based on a Federal court decision. Taft Coal Co. v. U.S., 605 F. Supp. 366, (N.D. Ala. 1984). OSMRE proposes to change the existing regulations to create a standard moisture allowance which would be consistent with that allowed by the IRS for the Black Lung Tax program. Regulations dealing with the basis upon which a tax or fee is assessed should be consistent for administrative convenience and equity to the coal operator. Federal action is required since OSMRE is directly responsible for collecting the AML fee and for establishing the regulations promulgating (cont)

Timetable:

Action	Date	FR Cite
NPRM	05/18/87	52 FR 18680
NPRM Comment Period End	08/07/87	52 FR 27419
Final Action	04/00/88	

Small Entity: No

Additional Information: ABSTRACT CONT: standards under which the fee is collected. The regulations in question are specific to the responsibilities of the Department of the Interior, OSMRE, and they implement SMCRA. No other Federal agency is authorized to undertake this action on behalf of the Department. The regulation will be changed to include a moisture content allowance. Standards will be developed to establish a percentage allowance consistent with the IRS approach for the Black Lung Program and with industry technical standards for moisture content calculation.

Agency Contact: Jane Robinson, Department of the Interior, Office of Surface Mining Reclamation and Enforcement, 1951 Constitution Ave., NW, Washington, DC 20240, 202 343-2853

RIN: 1029-AB03

1246. CALIFORNIA FEDERAL PROGRAM

Legal Authority: 30 USC 1201 et seq

CFR Citation: 30 CFR 905

Legal Deadline: None.

Abstract: The proposed rule would establish a Federal program for the State of California. Under the Federal program, surface coal mining and reclamation operations in California will be subject to the OSMRE's permanent program requirements.

Timetable:

Action	Date	FR Cite
NPRM	10/22/87	52 FR 39594
NPRM Comment Period End	12/31/87	52 FR 39594
Final Action	06/00/88	

Small Entity: No

Agency Contact: Pat Boyd, Department of the Interior, Office of Surface Mining Reclamation and Enforcement, 1951 Constitution Ave., NW, Washington, DC 20240, 202 343-4561

RIN: 1029-AB05

DEPARTMENT OF THE INTERIOR (DOI)

Office of Surface Mining Reclamation and Enforcement (OSMRE)

Completed Actions

1247. EXEMPTION FOR COAL EXTRACTION INCIDENTAL TO GOVERNMENT FINANCED CONSTRUCTION

Legal Authority: 30 USC 1202; 30 USC 1211; 30 USC 1278

CFR Citation: 30 CFR 707

Legal Deadline: None.

Abstract: The regulations in 309 CFR Part 707 implementing the exemption for coal extraction incidental to government financed construction were under review to determine their impact on the Abandoned Mine Lands (AML) program. Proposed regulations were scheduled in case regulatory changes were determined necessary. The primary purpose of the review was to determine if the regulations prevent the removal, and consequent resource loss, of incidental amounts of coal encountered during AML reclamation. Upon review of the regulations and guidelines (45 FR 14810, March 6, 1980) for the AML program, OSMRE determined that extraction of coal incidental to an AML reclamation project is not prohibited by the regulations as specifically addressed in the guidelines. Therefore, action to revise the regulations was withdrawn.

Timetable:

Action	Date	FR Cite
Withdrawn Rule action determined not to be necessary.	11/02/87	

Small Entity: No

Agency Contact: James Fary, Department of the Interior, Office of Surface Mining Reclamation and Enforcement, 1951 Constitution Avenue, NW, Washington, DC 20240, 202 343-5384

RIN: 1029-AA58

1248. INDIVIDUAL CIVIL PENALTIES

Significance: Regulatory Program

Legal Authority: 30 USC 1201

CFR Citation: 30 CFR 723; 30 CFR 724; 30 CFR 845; 30 CFR 846, (New)

Legal Deadline: None.

Abstract: The proposed rule will improve the implementation of Section 518(f) of the Surface Mining Control and Reclamation Act by clarifying the meaning of "knowing and willful" and defining the manner in which a daily penalty will be assessed for a continuing violation. Corporate officials associated with a permittee in violation of the Act will be identified and assessed individual civil penalties in addition to any penalties imposed on the Corporate entity.

Timetable:

Action	Date	FR Cite
NPRM	12/24/86	51 FR 46838
NPRM Comment Period End	05/06/87	52 FR 11287
Final Action	02/06/88	53 FR 3664
Final Action Effective	03/09/88	

Small Entity: No

Agency Contact: Andrew DeVito, Department of the Interior, Office of Surface Mining Reclamation and Enforcement, Washington, DC 20240, 202 343-5241

RIN: 1029-AA81

1249. SURFACE COAL MINING AND RECLAMATION OPERATIONS; PERMANENT REGULATORY PROGRAM; FEDERAL PROGRAM FOR A STATE; PROCEDURAL REQUIREMENTS

Legal Authority: 30 USC 1251; 30 USC 1253 to 1269; 30 USC 1271; 30 USC 1272; 30 USC 1295

CFR Citation: 30 CFR 736

Legal Deadline: None.

Abstract: OSMRE will propose revisions to its rules governing standards and procedures for the promulgation, implementation, revision, and termination of a Federal program for a State for coal exploration and surface coal mining operations on non-Federal and non-Indian lands within that State.

Timetable:

Action	Date	FR Cite
NPRM	05/31/87	52 FR 10352
NPRM Comment Period End	06/01/87	52 FR 10352
Final Action	10/21/87	52 FR 39404
Final Action Effective	11/20/87	52 FR 39404

Small Entity: No

Agency Contact: Andrew DeVito, Department of the Interior, Office of Surface Mining Reclamation and Enforcement, 1951 Constitution Avenue, NW, Washington, DC 20240, Room 134S, 202 343-5241

RIN: 1029-AA71

1250. UNSUITABILITY PETITION PROCESS

Significance: Agency Priority

Legal Authority: 30 USC 1201 et seq

CFR Citation: 30 CFR 764; 30 CFR 769

Legal Deadline: None.

Abstract: The proposed rule would amend the State and Federal process for designating land unsuitable for surface coal mining operations. The revision would standardize the State and Federal procedures and establish new time frames for processing petitions. The revisions are required by a District Court decision in Round III of the present litigation on OSMRE's permanent program regulations.

Timetable:

Action	Date	FR Cite
NPRM	06/09/87	52 FR 21904
NPRM Comment Period End	08/18/87	52 FR 21904
Final Action	12/30/87	52 FR 49322
Final Action Effective	01/29/88	52 FR 49322

Small Entity: No

Agency Contact: Catie Roy, Program Analyst, Department of the Interior, Office of Surface Mining Reclamation and Enforcement, 1951 Constitution Ave., NW, Washington, DC 20240, 202 343-5143

RIN: 1029-AB00

1251. SURFACE MINING PERMIT APPLICATIONS MINIMUM REQUIREMENTS FOR INFORMATION ON ENVIRONMENTAL RESOURCES

Significance: Regulatory Program

Legal Authority: 30 USC 1201 et seq

CFR Citation: 30 CFR 779.20; 30 CFR 780.16; 30 CFR 783.20; 30 CFR 784.21; 30 CFR 816.97(a); 30 CFR 816.97(b); 30 CFR 817.97

Legal Deadline: None.

Abstract: OSM is amending Fish and Wildlife performance standards at 30 CFR 816.97 to comply with the District Court's decision of October 1, 1984, which pertains to protection of endangered and threatened species and the exclusion of wildlife from toxic ponds. In addition, OSM is amending the Fish and Wildlife permitting requirements at 30 CFR 779.20 and 780.16 to provide greater flexibility and clarity.

Timetable:

Action	Date	FR Cite
NPRM	05/29/86	51 FR 19498
NPRM Comment Period End	08/07/86	51 FR 19498
Final Action	12/11/87	52 FR 47352
Final Action Effective	01/11/88	52 FR 47352

Small Entity: No

Agency Contact: Chuck Wolf, Department of the Interior, Office of Surface Mining Reclamation and Enforcement, Ten Parkway Center, Pittsburgh, PA 15220, 412 937-2897

RIN: 1029-AA74

VOL 53 ISS 79 PT 1 APR 25 1988 UMI

1252. PERMANENT REGULATORY PROGRAM - MOUNTAINTOP REMOVAL

Significance: Agency Priority

Legal Authority: 30 USC 1201 et seq

CFR Citation: 30 CFR 785

Legal Deadline: None.

Abstract: The proposed rule amends the rules for "Permits for Special Categories of Mining – Mountaintop Removal Mining." This action will correct an inadvertent error whereby certain substantive provisions concerning mountaintop removal mining in the Surface Mining Control and Reclamation Act of 1977 (the Act) were not included in previous implementing regulations. These provisions include a finding for permit issuance that the applicant has presented specific plans for the proposed postmining land use and has made appropriate assurances for the use. The addition of these provisions will make the rules for mountaintop removal mining consistent with the Act, as well as with the Secretary's brief In Re: Permanent Surface Mining Regulation Litigation II, (round III). The requirements of the proposed rule will ensure that all the substantive provisions of the Act are applied to mountaintop removal coal mining operations.

Timetable:

Action	Date	FR Cite
NPRM	03/25/87	52 FR 9640
NPRM Comment Period End	06/03/87	52 FR 9640
Final Action	10/20/87	52 FR 39182
Final Action Effective	11/19/87	52 FR 39182

Small Entity: No

Agency Contact: Ralph McDonald, Department of the Interior, Office of Surface Mining Reclamation and Enforcement, 1951 Constitution Ave., NW, Washington, DC 20240, 202 343-5245

RIN: 1029-AA97

1253. REQUIREMENTS FOR PERMITS FOR SPECIAL CATEGORIES OF MINING; EXPERIMENTAL PRACTICES

Significance: Agency Priority

Legal Authority: 30 USC 1201 et seq

CFR Citation: 30 CFR 785.13

Legal Deadline: None.

Abstract: The proposed rule would revise the permit application requirements applicable to experimental practices as provided by section 711 of SMCRA. Section 711 allows for departures from the environmental protection performance standards of section 515 and 516 of the Act. The rule would be revised to encourage advances in mining and reclamation practices and special alternative postmining land uses. No additional costs to the environment would occur because experimental practices cannot be authorized if they are not as environmentally protective as the requirements of section 515 and 516. The rule revision may provide coal mine operators the ability to utilize more cost efficient mining and reclamation practices. OSMRE has discussed experimental practice issues with external groups and determined not to proceed with rulemaking.

Timetable:

Action	Date	FR Cite
Withdrawn Rule action determined not to be necessary.	01/27/88	

Small Entity: Undetermined

Agency Contact: John Parsons, Department of the Interior, Office of Surface Mining Reclamation and Enforcement, 1951 Constitution Ave., NW, Washington, DC 20240, 202 343-1505

RIN: 1029-AB06

1254. REQUIREMENT TO RELEASE PERFORMANCE BONDS

Significance: Agency Priority

Legal Authority: 30 USC 1201 et seq

CFR Citation: 30 CFR 800-40(a)(2)

Legal Deadline: None.

Abstract: This proposed rule would require that an applicant for bond release include the name of the permittee in the application. This action is being taken as a result of a commitment made during litigation on bonding requirements before the District Court for the District of Columbia where it was found that an explicit requirement for providing the name of the applicant was necessary. Also the proposed revision would allow certain third parties to guarantee self-bond. This action is being taken as a result of OSMRE on June 13, 1986 accepting a proposal to revise self-bonding regulations sought in a petition for rulemaking by the National Coal Association/American Mining Congress (NCA/AMC) Joint Committee on Surface Mine Regulations. There will be no increase or decrease in the cost/benefits of this rule.

Timetable:

Action	Date	FR Cite
NPRM	11/26/86	51 FR 42984
NPRM Comment Period End	02/04/87	51 FR 42984
Final Action	01/14/88	53 FR 994
Final Action Effective	02/13/88	

Small Entity: No

Agency Contact: Frank Mancino, Department of the Interior, Office of Surface Mining Reclamation and Enforcement, 1951 Constitution Avenue, NW, Washington, DC 20240, 202 343-5143

RIN: 1029-AA91

1255. PERMANENT PROGRAM PERFORMANCE STANDARDS UNDERGROUND MINING ACTIVITIES - HYDROLOGIC BALANCE PROTECTION

Significance: Regulatory Program

Legal Authority: 30 USC 1201 et seq

CFR Citation: 30 CFR 817.41(b)(2)

Legal Deadline: None.

Abstract: The rulemaking is in response to a challenge of this issue in District Court where the Office agreed to suspend 30 CFR 817.41(b)(2), concerning requirement to restore groundwater recharge capacity, and repromulgate the rule to develop the administrative records. OSM will propose two options: (1) removing 817.41(b)(2) and (2) retaining this paragraph while asking for comments concerning its legality, technological validity, and environmental impacts. Since this rule will be repromulgated with options, a determination of its potential costs and benefits cannot be assessed until comments are received and options chosen.

VOL 53 ISS 79 PT 1 AP 25 1988 UMI

DOI—OSMRE

Completed Actions

Timetable:

Action	Date	FR Cite
NPRM	12/11/86	51 FR 44742
NPRM Comment Period End	02/19/87	
Final Action	12/02/87	52 FR 45920
Final Action Effective	01/04/88	52 FR 45920

Small Entity: No

Agency Contact: Raymond Aufmuth, Department of the Interior, Office of Surface Mining Reclamation and Enforcement, Room 5010 L, 1951 Constitution Ave., NW, Washington, DC, 202 343-1514

RIN: 1029-AA75

1256. STATE-FEDERAL COOPERATIVE AGREEMENTS

Legal Authority: 30 USC 1201 et seq.

CFR Citation: 30 CFR Subchapter T

Legal Deadline: None.

Abstract: This Subchapter will incorporate the State-Federal Cooperative Agreements for the permanent regulatory programs on Federal lands in various States. The affected Parts in Title 30 are indicated in parentheses after each State.

Timetable:

Action	Date	FR Cite
Illinois (913)	03/24/87	52 FR 9402
Final Action	11/27/87	52 FR 45328
Final Action Effective	12/28/87	

Small Entity: No

Agency Contact: Art Abbs, Department of the Interior, Office of Surface Mining Reclamation and Enforcement, 1951 Constitution Avenue, NW, Washington, DC 20240, 202 343-5351

RIN: 1029-AA40

BILLING CODE 4310-05-T

DEPARTMENT OF THE INTERIOR (DOI)

Proposed Rule Stage

Bureau of Reclamation (RB)

1257. ● ACREAGE LIMITATION RULES AND REGULATIONS

Legal Authority: 5 USC 552; 43 USC 371; 43 USC 390

CFR Citation: 43 CFR 426

Legal Deadline: None.

Abstract: This rule will be revised to incorporate amendments to the Reclamation Reform Act included in PL 100-203 (Omnibus Budget Reconciliation Act of 1987).

Timetable:

Action	Date	FR Cite
NPRM	05/01/88	
NPRM Comment Period End	05/31/88	
Final Action	08/01/88	
Final Action Effective	09/01/88	

Small Entity: No

Agency Contact: James Cook, Chief, Division of Water and Land, Department of the Interior, Bureau of Reclamation, 18th and C Streets, NW, Washington, DC 20240, 202 343-5104

RIN: 1006-AA17

1258. ● PROCEDURE TO PROCESS AND RECOVER THE VALUE OF RIGHTS-OF-USE AND ADMINISTRATIVE COSTS INCURRED IN PERMITTING SUCH USE

Legal Authority: 43 USC 387; 31 USC 483(a)

CFR Citation: 43 CFR 429.3(a), (Revision); 43 CFR 429.3(d), (New); 43 CFR 429.6(c), (Revision)

Legal Deadline: None.

Abstract: These changes to 43 CFR 429 will provide greater flexibility in determining the value of low value uses by third parties of lands administered by the Bureau of Reclamation. Currently an appraisal is required to provide the use value. A periodic review of the value of the use will also be provided. And finally, the Authority of Reclamation's Regional directors to modify or waive the values to be recovered is further clarified.

Timetable:

Action	Date	FR Cite
NPRM	08/01/88	
NPRM Comment Period End	09/01/88	

Small Entity: No

Agency Contact: Terence G. Cooper, Department of the Interior, Bureau of Reclamation, 18th and C Streets, NW, Washington, DC 20240, 202 343-5204

RIN: 1006-AA18

DEPARTMENT OF THE INTERIOR (DOI)

Completed Actions

Bureau of Reclamation (RB)

1259. OFF-ROAD VEHICLE USE

Legal Authority: 43 USC 391 et seq

CFR Citation: 43 CFR 420

Legal Deadline: None.

Abstract: This rule governs the use of off-road vehicles on Bureau Lands and provides for the opening of only those lands where the use of such vehicles will not adversely affect associated project features or facilities. The provisions of this rule will be expanded to cover the use of ultralight vehicles, since, by definition, these vehicles are excluded from control of the Federal Aviation Administration.

Timetable:

Action	Date	FR Cite
Withdrawn Revision of this rule is not needed at this time.	04/00/88	

Small Entity: No

Agency Contact: Fred Gientke, Chief, Water O&M Branch, Department of the

Interior, Bureau of Reclamation, Bldg 67, Federal Center, Denver, CO 80225, 303 776-8081

RIN: 1006-AA06

1260. ACREAGE LIMITATION RULES AND REGULATIONS

Legal Authority: 5 USC 552; 43 USC 371; 43 USC 390

CFR Citation: 43 CFR 426

Legal Deadline: None.

Abstract: This rule will be amended to remove reference to the term "gift" in section 426.16(a).

Timetable:

Action	Date	FR Cite
NPRM	06/27/87	52 FR 24041
NPRM Comment Period End	07/27/87	
Final Action	10/26/87	52 FR 39918

Small Entity: No

Agency Contact: James Cook, Chief, Division of Water and Land, Department of the Interior, Bureau of Reclamation, 18th & C Sts., NW, Washington, DC 20240, 202 343-5104

RIN: 1006-AA16

BILLING CODE 4310-09-T

DEPARTMENT OF THE INTERIOR (DOI)
Bureau of Land Management (BLM)

Proposed Rule Stage

1261. PUBLIC LAND RECORDS

Legal Authority: 5 USC 301; 43 USC 2; 44 USC 3101; 43 USC 13; 43 USC 751; 43 USC 1201; 43 USC 2457; 43 USC 1740

CFR Citation: 43 CFR 1813

Legal Deadline: None.

Abstract: This rule will amend the existing regulations by updating them to reflect and accommodate the transition from the Manual Record System (Tract Books, Master Plats, etc.), to an Automated Records System.

Timetable:

Action	Date	FR Cite
NPRM	05/00/88	

Small Entity: Undetermined

Agency Contact: John Butterfield, Department of the Interior, Bureau of Land Management, 1800 C Street, NW, Washington, DC 20240, 202 343-8693

RIN: 1004-AA77

1262. MINERALS (NONMINERAL ENTRIES ON MINERAL LANDS)

Legal Authority: 30 USC 186; 30 USC 124

CFR Citation: 43 CFR Subpart 2093

Legal Deadline: None.

Abstract: The amendments made by this rulemaking would eliminate portions of the existing regulations that refer to repealed authorities and make minor changes that reflect the merger of functions between the Bureau of Land Management and the Minerals Management Service.

Timetable:

Action	Date	FR Cite
NPRM	05/00/88	

Small Entity: Undetermined

Agency Contact: Gary Rowe, Department of the Interior, Bureau of Land Management, 1800 C Street, NW, Washington, DC 20240, 202 343-8693

RIN: 1004-AB20

1263. EXCHANGES - GENERAL PROCEDURES

Legal Authority: 43 USC 1715; 43 USC 1716; 43 USC 1732; 43 USC 1740

CFR Citation: 43 CFR 2200

Legal Deadline: None.

Abstract: This rule will amend the existing regulations to provide procedures to facilitate and expedite the processing of land exchanges.

Timetable:

Action	Date	FR Cite
NPRM	06/00/88	

Small Entity: No

Agency Contact: Dave Hemstreet, Department of the Interior, Bureau of Land Management, 1800 C Street, NW, Washington, DC 20240, 202 343-8693

RIN: 1004-AB28

1264. INDIAN ALLOTMENTS

Legal Authority: 25 USC 334

CFR Citation: 43 CFR 2530

Legal Deadline: None.

Abstract: This rule would revise the existing regulations to remove obsolete and burdensome provisions and clarify and simplify the remaining provisions.

Timetable:

Action	Date	FR Cite
NPRM	05/00/88	

Small Entity: Undetermined

Agency Contact: Gary Rowe, Department of the Interior, Bureau of Land Management, 1800 C Street, NW, Washington, DC 20240, 202 343-8693

RIN: 1004-AB10

1265. RIGHTS-OF-WAY, PRINCIPLES AND PROCEDURES

Legal Authority: 43 USC 1746

CFR Citation: 43 CFR 2800

Legal Deadline: None.

Abstract: This rule will be amended to provide for improved administration of rights-of-way under the Federal Land Policy and Management Act.

Timetable:

Action	Date	FR Cite
NPRM	06/00/88	

Small Entity: Undetermined

Agency Contact: Theodore Bingham, Department of the Interior, Bureau of Land Management, 1800 C Street, NW, Washington, DC 20240, 202 343-5441

RIN: 1004-AB00

1266. RIGHTS-OF-WAY UNDER THE MINERAL LEASING ACT

Legal Authority: 30 USC 185

CFR Citation: 43 CFR 2880

Legal Deadline: None.

Abstract: This rule will be amended to provide for improved administration of

rights-of-way under the Mineral Leasing Act.

Timetable:

Action	Date	FR Cite
NPRM	08/00/88	

Small Entity: Undetermined

Agency Contact: Theodore Bingham, Department of the Interior, Bureau of Land Management, 1800 C Street, NW, Washington, DC 20240, 202 343-5441

RIN: 1004-AA98

1267. RECREATION AND PUBLIC PURPOSES ACT LEASES

Legal Authority: 43 USC 869 et seq

CFR Citation: 43 CFR 2910; 43 CFR 2912

Legal Deadline: None.

Abstract: The rule will amend the existing regulations to implement policy changes as they relate to the granting of public lands for recreation and public purposes under the Recreation and Public Purposes Act.

Timetable:

Action	Date	FR Cite
NPRM	07/00/88	

Small Entity: Undetermined

Agency Contact: Gary Rowe, Department of the Interior, Bureau of Land Management, 1800 C Street, NW, Washington, DC 20240, 202 343-8693

RIN: 1004-AA73

1268. EXPLORATION ACTIVITY; OIL AND GAS LEASING; GEOTHERMAL RESOURCE LEASING - GENERAL

Legal Authority: 30 USC 181 et seq; 30 USC 301 to 306; 30 USC 351 to 359; 43 USC 1701 et seq; PL 96-514; 40 Op. Atty. Gen. 41

CFR Citation: 43 CFR 3040; 43 CFR 3100; 43 CFR 3130; 43 CFR 3200

Legal Deadline: None.

Abstract: This rule would amend the existing regulations as they relate to bond coverage for oil and gas and geothermal resources. As a result of comments and a study by a special Task Force, several alternatives for bonding have been identified. These alternatives will be addressed in a second proposed rulemaking.

Timetable:

Action	Date	FR Cite
NPRM	05/01/85	50 FR 18614
NPRM Comment Period End	07/01/85	50 FR 18614
NPRM - Second	05/00/88	

Small Entity: No

Agency Contact: Rob Cervantes, Department of the Interior, Bureau of Land Management, 1800 C Street, NW, Washington, DC 20240, 202 653-2190

RIN: 1004-AB13

1269. OIL AND GAS LEASING - FEES, RENTALS AND ROYALTIES

Legal Authority: 16 USC 3101 et seq; 30 USC 181 et seq; 30 USC 351 to 359; 40 USC 760 et seq; 43 USC 1701 et seq

CFR Citation: 43 CFR 3100

Legal Deadline: None.

Abstract: This rule would amend the existing regulations to maintain all noncompetitive lease rentals at $1 per acre per year. This change would primarily be applicable to those noncompetitive leases that are later determined to be included in a known geologic structure.

Timetable:

Action	Date	FR Cite
NPRM	05/00/88	

Small Entity: Undetermined

Agency Contact: Mona Schermerhorn, Department of the Interior, Bureau of Land Management, 1800 C Street, NW, Washington, DC 20240, 202 653-2190

RIN: 1004-AB31

1270. ● OIL AND GAS LEASING COMPETITIVE LEASES

Significance: Agency Priority

Legal Authority: 30 USC 181 et seq; 30 USC 351 to 359; 16 USC 3101 et seq; 43 USC 1701 et seq; PL 97-35; PL 100-203

CFR Citation: 43 CFR 3100; 43 CFR 3120

Legal Deadline: Statutory, June 23, 1988.

Abstract: This rulemaking action will provide the procedures for the regulatory implementation of the Federal Onshore Oil and Gas Leasing Reform Act passed by the Congress as part of the Omnibus Budget Reconciliation Act of 1987.

Timetable:

Action	Date	FR Cite
NPRM	03/21/88	53 FR 9214
NPRM Comment Period End	04/21/88	
Final Action	06/17/88	
Final Action Effective	06/17/88	

Small Entity: No

Additional Information: Robert C. Bruce - 202 343-6735

Agency Contact: Jeff Zabler, Department of the Interior, Bureau of Land Management, 1800 C Street, NW, Washington, DC 20240, 202 653-2162

RIN: 1004-AB41

1271. ONSHORE OIL AND GAS ORDER NO. 8 - WELL WORKOVERS, COMPLETIONS, ABANDONMENTS

Legal Authority: 30 USC 189; 30 USC 359; 30 USC 396; 25 USC 396(d)

CFR Citation: 43 CFR 3162; 43 CFR 3164.1(b)

Legal Deadline: None.

Abstract: This Order is being issued under the Oil and Gas Operations regulations as found in 43 CFR Part 3160. The Order details the minimum standards of performance when conducting workover, completions, and abandonment of existing wells on Federal and Indian lands (except Osage Tribe). It also will contain enforcement actions that will result from the failure to meet the minimum standards.

Timetable:

Action	Date	FR Cite
NPRM	07/00/88	

Small Entity: Undetermined

Agency Contact: Sie Ling Chiang, Department of the Interior, Bureau of Land Management, 1800 C Street, NW, Washington, DC 20240, 202 653-2127

RIN: 1004-AB37

1272. ONSHORE OIL AND GAS ORDER NO. 7 - DISPOSAL OF PRODUCED WATER

Legal Authority: 30 USC 189; 30 USC 359

CFR Citation: 43 CFR 3164.1(b); 43 CFR 3162.3; 43 CFR 3162.5

Legal Deadline: None.

Abstract: This order is being issued under the revised oil and gas

VOL 53 ISS 79 PT 1 AP 25 1988 UMI

regulations as found in 43 CFR Part 3160. The order details the requirements for the handling, storing or disposing of water produced from oil or gas wells. It replaces NTL-2B. The Order will also contain inspection standards. This order is referenced in the Table at 43 CFR 3164.1(b).

Timetable:

Action	Date	FR Cite
NPRM	05/00/88	

Small Entity: No

Agency Contact: Sie Ling Chiang, Department of the Interior, Bureau of Land Management, 1800 C Street, NW, Washington, DC 20240, 202 653-2127

RIN: 1004-AA66

1273. ONSHORE OIL AND GAS ORDER NO. 6 - HYDROGEN SULFIDE OPERATIONS

Significance: Regulatory Program

Legal Authority: 30 USC 189; 30 USC 359

CFR Citation: 43 CFR 3164.1(b); 43 CFR 3162.3; 43 CFR 3162.5

Legal Deadline: None.

Abstract: This order is being issued under the revised oil and gas regulations as found in 43 CFR Part 3160. The order details the requirements for protecting workers and the public from hydrogen sulfide. It specifies documentation needed prior to operation and measures required during drilling and production. This order is referenced in the Table at 43 CFR 3164.1(b).

Timetable:

Action	Date	FR Cite
NPRM	10/15/84	49 FR 40354
NPRM Comment Period End	01/14/85	49 FR 48576
NPRM - Second	06/00/88	

Small Entity: No

Agency Contact: George F. Brown, Assistant Director, Fluid Leasable Minerals, Department of the Interior, Bureau of Land Management, 1800 C Street, NW, Washington, DC 20240, 202 653-2127

RIN: 1004-AA67

1274. ONSHORE OIL AND GAS OPERATIONS - ONSHORE OIL AND GAS ORDER NUMBER 4- MEASUREMENT OF CRUDE OIL

Legal Authority: 30 USC 189; 30 USC 359; 25 USC 396; 25 USC 396(d)

CFR Citation: 43 CFR 3164.1(b); 43 CFR 3162.7

Legal Deadline: None.

Abstract: This document is being issued under the oil and gas operations regulations as found in 43 CFR Part 3160. The order details the requirements for the accurate measurement and recording of the volumes of crude oil and lease condensation produced and sold from Federal and Indian (except Osage) leases. This includes such production from other leases which is allocated to a covered lease. This order will also contain inspection standards. This is referenced in the Table at 43 CFR 3164.1(b).

Timetable:

Action	Date	FR Cite
NPRM	02/03/88	53 FR 3158
NPRM Comment Period End	04/04/88	
Final Action	08/00/88	

Small Entity: Undetermined

Agency Contact: Sie Ling Chiang, Department of the Interior, Bureau of Land Management, 1800 C Street, NW, Washington, DC 20240, 202 653-2127

RIN: 1004-AA96

1275. ONSHORE OIL AND GAS OPERATIONS - COOPERATIVE AGREEMENTS, DELEGATIONS OF AUTHORITY AND CONTRACTS FOR OIL AND GAS INSPECTION AND ENFORCEMENT

Legal Authority: 30 USC 1701; 30 USC 1732; 30 USC 1735; 30 USC 1751

CFR Citation: 43 CFR 3190

Legal Deadline: None.

Abstract: This rule will provide the procedures for implementing the provisions of the Federal Oil and Gas Royalty Management Act authorizing delegations of authority to States in connection with oil and gas operations.

Timetable:

Action	Date	FR Cite
NPRM	05/00/88	

Small Entity: Undetermined

Agency Contact: Susan Pepperney, Department of the Interior, Bureau of Land Management, 1800 C Street, NW, Washington, DC 20240, 202 653-2200

RIN: 1004-AB32

1276. GEOTHERMAL RESOURCE OPERATIONS

Legal Authority: 30 USC 1001 to 1025

CFR Citation: 43 CFR 3200; 43 CFR 3260; 43 CFR 3270

Legal Deadline: None.

Abstract: This rulemaking will revise provisions related to geothermal leasing and geothermal operations conducted on Federal lands. The changes are designed to remove burdensome and cumbersome provisions and simplify the regulations.

Timetable:

Action	Date	FR Cite
NPRM	06/00/88	

Small Entity: No

Agency Contact: Sie Ling Chiang, Department of the Interior, Bureau of Land Management, 1800 C Street, NW, Washington, DC 20240, 202 653-2127

RIN: 1004-AB18

1277. SALES OF FOREST PRODUCTS; GENERAL - PREPARATION FOR SALE

Legal Authority: PL 90-554

CFR Citation: 43 CFR 5400; 43 CFR 5420

Legal Deadline: None.

Abstract: Existing regulations permit timber export and purchase volumes to "rachet" upward at a questionable rate, leading to substitution. The existing regulations need simplification. The rule would correct both of these concerns.

Timetable:

Action	Date	FR Cite
NPRM	06/00/88	

Small Entity: Undetermined

Agency Contact: Gary Ryan, Department of the Interior, Bureau of Land Management, 1800 C Street, NW, Washington, DC 20240, 202 653-8864

RIN: 1004-AB34

1278. ONSHORE OIL AND GAS ORDER NO. 5 - MEASUREMENT OF NATURAL GAS

Legal Authority: 30 USC 189; 30 USC 359; 25 USC 396; 25 USC 396(d)

CFR Citation: 43 CFR 3164.1(b); 43 CFR 3162.7

Legal Deadline: None.

Abstract: This order is being issued under the revised oil and gas operations regulations as found in 43 CFR Part 3160. The order details the requirements for the accurate measurement of the volumes of natural gas produced and sold from Federal and Indian (except Osage) leases. This includes such production from other leases which is allocated to a covered lease. The order also will contain inspection standards. This order is to be referenced in the Table at 43 CFR 3164.1(b).

Timetable:

Action	Date	FR Cite
NPRM	02/03/88	53 FR 3168
NPRM Comment Period End	04/04/88	
Final Action	08/00/88	

Small Entity: Undetermined

Agency Contact: Sie Ling Chiang, Department of the Interior, Bureau of Land Management, 1800 C Street, NW, Washington, DC 20240, 202 653-2127

RIN: 1004-AB22

1279. ● COAL EXPLORATION AND MINING OPERATIONS RULES

Legal Authority: 30 USC 181 et seq; 30 USC 351 to 359; 30 USC 1201 et seq

CFR Citation: 30 CFR 3480

Legal Deadline: None.

Abstract: This regulation will remove from the existing regulations language that provides that a suspension of a coal lease does not suspend the diligent development requirement.

Timetable:

Action	Date	FR Cite
NPRM	06/00/88	

Small Entity: No

Agency Contact: Paul Politzer, Department of the Interior, Bureau of Land Management, 1800 C Street, NW, Washington, DC 20240, 202 343-7722

RIN: 1004-AB42

1280. OPERATING REGULATIONS FOR EXPLORATION, DEVELOPMENT AND PRODUCTION

Legal Authority: 30 USC 181 et seq

CFR Citation: 43 CFR 3570

Legal Deadline: None.

Abstract: This rule will revise the existing regulations to streamline them and to have them reflect current policy and industry operating practices relating to the leasing of minerals other than oil and gas.

Timetable:

Action	Date	FR Cite
NPRM	04/00/88	

Small Entity: Undetermined

Agency Contact: Harry Moritz, Department of the Interior, Bureau of Land Management, 1800 C Street, NW, Washington, DC 20240, 202 343-7722

RIN: 1004-AA68

1281. MULTIPLE USE: MINING: MINING CLAIMS UNDER THE GENERAL MINING LAWS

Legal Authority: 30 USC 22 et seq; 30 USC 521 to 540; 30 USC 601 to 615; 30 USC 621 to 625; 43 USC 2; 43 USC 1732; 43 USC 1740; 61 Stat. 681

CFR Citation: 43 CFR Group 3700; 43 CFR Group 3800

Legal Deadline: None.

Abstract: These two groups of regulations will be combined into a single group, with the language being revised to remove burdensome, cumbersome and unnecessary provisions. In addition, the language will be updated and clarified and some provisions will be revised to meet the needs of today's conditions.

Timetable:

Action	Date	FR Cite
Notice of Intent to Propose Rulemaking	12/27/82	47 FR 57521
NPRM	06/00/88	

Small Entity: Undetermined

Agency Contact: Eugene Carlet, Department of the Interior, Bureau of Land Management, 1800 C Street, NW, Washington, DC 20240, 202 343-8537

RIN: 1004-AB04

1282. ● MINING CLAIMS UNDER THE GENERAL MINING LAW NATURE AND CLASSES OF MINING CLAIMS ASSESSMENT WORK

Legal Authority: 43 USC 1732 to 1733; 30 USC 28 - 1 - 2; 30 USC 26; 30 USC 33; 43 USC 1782

CFR Citation: 43 CFR 3800; 43 CFR 3840; 43 CFR 3850

Legal Deadline: None.

Abstract: This rulemaking will amend the existing regulations to include the criteria for the standard of discovery as applied to oil shale placer mining claims and provide clarification of what constitutes substantial compliance with assessment work requirements under the Mining Law.

Timetable:

Action	Date	FR Cite
NPRM	05/00/88	

Small Entity: No

Agency Contact: Eugene Carlet, Department of the Interior, Bureau of Land Management, 1800 C Street, NW, Washington, DC 20240, 202 343-8537

RIN: 1004-AB43

1283. MINING CLAIMS UNDER THE GENERAL MINING LAWS

Legal Authority: 30 USC 22; 43 USC 1201; 43 USC 1744; 43 USC 1734; 43 USC 1740

CFR Citation: 43 CFR Subpart 3809; 43 CFR Subpart 3833

Legal Deadline: None.

Abstract: The rule would make amendments to the regulatory provisions dealing with the recordation of mining claims and surface management of mining claims to incorporate changes recommended by Task Forces that studied these areas.

Timetable:

Action	Date	FR Cite
NPRM	06/00/88	

Small Entity: Undetermined

Agency Contact: Eugene Carlet, Department of the Interior, Bureau of Land Management, 1800 C Street, NW, Washington, DC 20240, 202 343-8537

RIN: 1004-AB36

1284. SALES OF FOREST PRODUCTS; CONDUCT OF SALES

Legal Authority: 30 USC 601 et seq; 43 USC 1181a

CFR Citation: 43 CFR 5400

Legal Deadline: None.

Abstract: This rule will amend the existing regulations to specify the conditions under which the provisions of this subpart are applicable to contracts that are not completed.

Timetable:

Action	Date	FR Cite
NPRM	05/00/88	

Small Entity: Undetermined

Agency Contact: Gary Ryan, Department of the Interior, Bureau of Land Management, 1800 C Street, NW, Washington, DC 20240, 202 653-8864

RIN: 1004-AB39

1285. SALES OF FOREST PRODUCTS; AWARD OF CONTRACT

Legal Authority: 30 USC 601 et seq; 43 USC 1181a

CFR Citation: 43 CFR 5400; 43 CFR 5450

Legal Deadline: None.

Abstract: This rule will amend the existing regulations as they relate to timber sale contract performance bonds to discourage bidding at such a rate that the bidder, if awarded the contract, would be unable to perform under the terms of the contract.

Timetable:

Action	Date	FR Cite
NPRM	04/00/88	

Small Entity: No

Agency Contact: Gary Ryan, Department of the Interior, Bureau of Land Management, 1800 C Street, NW, Washington, DC 20240, 202 653-8864

RIN: 1004-AB40

1286. PROTECTION OF SPECIAL STATUS PLANTS

Legal Authority: 43 USC 1701 et seq

CFR Citation: 43 CFR 6850

Legal Deadline: None.

Abstract: This rule will provide the procedure for protecting rare plants located on the public lands. The uncontrolled collection of these rare plants will endanger their existence.

Timetable:

Action	Date	FR Cite
NPRM	07/00/88	

Small Entity: Undetermined

Agency Contact: William H. Radtkey, Department of the Interior, Bureau of Land Management, 1800 C Street, NW, Washington, DC 20240, 202 653-8202

RIN: 1004-AB09

1287. CULTURAL RESOURCE MANAGEMENT

Legal Authority: 43 USC 1701 et seq; 16 USC 470 et seq; 42 USC 4321; 16 USC 432; 16 USC 470aa et seq; 42 USC 1996; 16 USC 433; 36 CFR 800.11

CFR Citation: 43 CFR 8100; 43 CFR 8110; 43 CFR 8111; 43 CFR 8140; 43 CFR 8141; 43 CFR 8142; 43 CFR 8143

Legal Deadline: None.

Abstract: The rule will adapt a Governmentwide compliance procedure to a Bureau-specific procedure, with substantial streamlining, reduction of outside consultation, quicker management decisions that are more rapidly carried out, public land users being allowed to proceed with land or resource use with less delay and cultural resources being protected as effectively as under the existing system of review.

Timetable:

Action	Date	FR Cite
NPRM	09/00/88	

Small Entity: Undetermined

Agency Contact: John G. Douglas, Department of the Interior, Bureau of Land Management, 1800 C Street, NW, Washington, DC 20240, 202 343-8353

RIN: 1004-AA69

1288. PALEONTOLOGY

Legal Authority: 43 USC 1701 et seq

CFR Citation: 43 CFR 8270

Legal Deadline: None.

Abstract: This rule will be revised to provide the procedures for the management of paleontological specimens located on the public lands.

Timetable:

Action	Date	FR Cite
NPRM	08/17/82	47 FR 35914
NPRM - Second	09/00/88	

Small Entity: No

Agency Contact: Carl Barna, Department of the Interior, Bureau of Land Management, 18th and C Streets, NW, Washington, DC 20240, 202 343-3207

RIN: 1004-AA27

1289. RECREATION: GENERAL

Legal Authority: 43 USC 1701 et seq; 43 USC 869; 43 USC 1181a; 43 USC 315; 43 USC 4321 et seq; 16 USC 460l to 461; 16 USC 1131; 16 USC 1271 to 1287; 16 USC 1241; 16 USC 670; 29 USC 794

CFR Citation: 43 CFR Subpart 8300

Legal Deadline: None.

Abstract: This rule will be amended to revise the policy statement for recreation management of the public lands.

Timetable:

Action	Date	FR Cite
NPRM	04/00/88	

Small Entity: Undetermined

Agency Contact: Rodger Schmitt, Department of the Interior, Bureau of Land Management, 18th and C Streets, NW, Washington, DC 20240, 202 343-8353

RIN: 1004-AA35

1290. CADASTRAL SURVEY

Legal Authority: 43 USC 1701 et seq; 48 USC 351; 43 USC 772; 43 USC 773

CFR Citation: 43 CFR 9180

Legal Deadline: None.

Abstract: This rule would revise the existing regulations to remove obsolete and burdensome provisions and clarify and simplify the remaining provisions.

Timetable:

Action	Date	FR Cite
NPRM	06/00/88	

Small Entity: Undetermined

Agency Contact: Bernard W. Hostrop, Department of the Interior, Bureau of Land Management, 1800 C Street, NW, Washington, DC 20240, 202 653-8798

RIN: 1004-AB07

1291. UNAUTHORIZED USE OF PUBLIC LANDS

Legal Authority: 43 USC 1701 et seq

CFR Citation: 43 CFR 9230

Legal Deadline: None.

Abstract: This rule will be amended to clarify those activities that are prohibited on the public lands, to provide managers with additional authority to resolve existing violations and to clarify the authority of the Secretary of the Interior in instances of mineral trespass.

Timetable:

Action	Date	FR Cite
NPRM	06/00/88	

Small Entity: Undetermined

Agency Contact: Walter I. Johnson, Jr., Department of the Interior, Bureau of Land Management, 18th and C Streets, NW, Washington, DC 20240, 202 653-8815

RIN: 1004-AA38

DEPARTMENT OF THE INTERIOR (DOI)
Bureau of Land Management (BLM)

Final Rule Stage

1292. OIL AND GAS LEASING AND GEOTHERMAL RESOURCE LEASING-GENERAL

Legal Authority: 16 USC 3101 et seq; 30 USC 181 et seq; 30 USC 351 to 359; 40 USC 760 et seq; 43 USC 1701 et seq

CFR Citation: 43 CFR 1820; 43 CFR 3040; 43 CFR Group 3100; 43 CFR Group 3200

Legal Deadline: None.

Abstract: This rulemaking will make corrections and modifications to the existing regulations, including procedural changes that have resulted from operations under the regulations.

Timetable:

Action	Date	FR Cite
NPRM	06/12/87	52 FR 22592
NPRM Comment Period End	08/11/87	52 FR 22592
Final Action	08/00/88	

Small Entity: No

Agency Contact: Mona Schermerhorn, Department of the Interior, Bureau of Land Management; 1800 C Street, NW, Washington, DC 20240, 202 653-2228

RIN: 1004-AA97

1293. LAND CLASSIFICATION

Legal Authority: 43 USC 315f; 43 USC 869; 43 USC 1701 et seq

CFR Citation: 43 CFR 2400

Legal Deadline: None.

Abstract: The rulemaking will revise the existing land classification regulations, will remove obsolete provisions, remove burdensome provisions, simplify the land classification system and provide a new protest system for use in connection with land classification decisions.

Timetable:

Action	Date	FR Cite
NPRM	10/22/87	52 FR 39542
NPRM Comment Period End	12/21/87	52 FR 39542
Final Action	06/00/88	

Small Entity: No

Agency Contact: Annette Jameson, Department of the Interior, Bureau of Land Management, 1800 C Street, NW, Washington, DC 20240, 202 343-8693

RIN: 1004-AB19

1294. ONSHORE OIL AND GAS ORDER NO. 2 - DRILLING OPERATIONS

Legal Authority: 30 USC 189; 30 USC 359; 30 USC 226; 25 USC 396; 25 USC 396(d)

CFR Citation: 43 CFR 3164.1(b); 43 CFR 3162.3; 43 CFR 3162.5

Legal Deadline: None.

Abstract: This order is being issued under the revised oil and gas operations regulations as found in 43 CFR Part 3160. The order details the uniform national minimum standards of performance which are expected for drilling operations on Federal and Indian (except Osage) lands. It also will contain enforcement actions that will result from failure to meet the minimum standards.

Timetable:

Action	Date	FR Cite
NPRM	08/13/87	52 FR 30310
NPRM Comment Period End	10/13/87	
Final Action	06/00/88	

Small Entity: Undetermined

Agency Contact: Sie Ling Chiang, Department of the Interior, Bureau of Land Management, 1800 C Street, NW, Washington, DC 20240, 202 653-2127

RIN: 1004-AB21

1295. ONSHORE OIL AND GAS ORDER NO. 3 - SITE SECURITY

Significance: Regulatory Program

Legal Authority: 30 USC 189; 30 USC 359; 30 USC 1701 et seq.; 25 USC 396; 25 USC 396(d)

CFR Citation: 43 CFR 3164.1(b); 43 CFR 3161.3; 43 CFR 3162.7-1; 43 CFR 3162.7-4

Legal Deadline: None.

Abstract: This order is being issued under the revised oil and gas operations regulations as found in 43 CFR Part 3160. The order supplements the minimum standards found in the regulations at 43 CFR 3162.7-4(b), (c) and (d).

Timetable:

Action	Date	FR Cite
NPRM	08/13/87	52 FR 30282
NPRM Comment Period End	10/13/87	
Final Action	07/00/88	

Small Entity: Undetermined

Agency Contact: Sie Ling Chiang, Department of the Interior, Bureau of Land Management, 1800 C Street, NW, Washington, DC 20240, 202 653-2127

RIN: 1004-AB24

1296. MANAGEMENT OF EXISTING LEASES

Legal Authority: 30 USC 181 et seq; 30 USC 351 to 359; 30 USC 521 to 531; 30 USC 1201 et seq

CFR Citation: 43 CFR 3450

Legal Deadline: None.

Abstract: This rule would eliminate the right of a lessee to object to readjusted lease terms and conditions that are mandated by law or required by

VOL 53 ISS 79 PT 1 APR 25 1988 UMI

regulation, and also would make the readjusted royalty and rental rates effective as of the date of the lease readjustment, regardless of whether there is a subsequent appeal of the readjusted terms and conditions.

Timetable:

Action	Date	FR Cite
NPRM	12/08/87	52 FR 46499
NPRM Comment Period End	01/07/88	52 FR 46499
Final Action	07/00/88	

Small Entity: Undetermined

Agency Contact: Harry W. Moritz, Department of the Interior, Bureau of Land Management, 1800 C Street, NW, Washington, DC 20240, 202 343-7722

RIN: 1004-AB38

1297. GRAZING ADMINISTRATION - EXCLUSIVE OF ALASKA

Legal Authority: 43 USC 315a to 315r; 43 USC 1701 et seq; 43 USC 118(d); 43 USC 1901 et seq

CFR Citation: 43 CFR 4100

Legal Deadline: None.

Abstract: The amendment made by this rulemaking would bring the existing regulations into compliance with the decision in Natural Resources Defense Council, Inc. v. Hodel, et al., No. CIV. S-84-616 RAR (1985). It also would update the existing regulations to have them conform to recent grazing policy changes.

Timetable:

Action	Date	FR Cite
NPRM	05/20/87	52 FR 19032
NPRM Comment Period End	08/19/87	52 FR 27321
Final Action	04/00/88	

Small Entity: Undetermined

Agency Contact: Billy R. Templeton, Department of the Interior, Bureau of Land Management, 1800 C Street, NW, Washington, DC 20240, 202 653-9195

RIN: 1004-AB23

1298. CONDUCT OF SALES (TIMBER)

Legal Authority: 43 USC 1181e; 30 USC 601 et seq

CFR Citation: 43 CFR 5440

Legal Deadline: None.

Abstract: This rule would amend the existing regulations to define more precisely when someone may be disbarred from participating in a timber sale and would provide notice and opportunity for a hearing to those who are subject to debarment.

Timetable:

Action	Date	FR Cite
NPRM	08/04/87	52 FR 28830
NPRM Comment Period End	10/05/87	52 FR 28830
Final Action	05/00/88	

Small Entity: No

Agency Contact: Gary Ryan, Department of the Interior, Bureau of Land Management, 1800 C Street, NW, Washington, DC 20240, 202 653-8864

RIN: 1004-AB35

1299. OFF-ROAD VEHICLES

Legal Authority: 43 USC 1201; 43 USC 315a; 16 USC 1531 et seq; 16 USC 1281c; 16 USC 670 et seq; 16 USC 4601 to 6a; 16 USC 1241 et seq; 43 USC 1701 et seq

CFR Citation: 43 CFR 8340

Legal Deadline: None.

Abstract: This rule will amend the existing regulations to clarify some of the definitions to remove confusion that has arisen since the implementation of the existing regulations and to improve the public notification process provided by the regulations.

Timetable:

Action	Date	FR Cite
NPRM	07/17/87	52 FR 27017
NPRM Comment Period End	09/15/87	52 FR 27017
Final Action	05/00/88	

Small Entity: Undetermined

Agency Contact: Richard E. Traylor, Department of the Interior, Bureau of Land Management, 1800 C Street, NW, Room 2661, Main Interior Bldg., Washington, DC 20240, 202 343-8353

RIN: 1004-AB26

1300. USE AUTHORIZATIONS; SPECIAL RECREATION PERMITS

Legal Authority: 43 USC 1201 et seq; 43 USC 1701 et seq; 43 USC 1181a; 16 USC 460 to 6a

CFR Citation: 43 CFR Subpart 8372

Legal Deadline: None.

Abstract: This rule is being revised to reflect revised, special recreation policies.

Timetable:

Action	Date	FR Cite
NPRM	09/16/85	50 FR 37555
NPRM Comment Period End	11/15/85	50 FR 37555
Final Action	06/00/88	

Small Entity: No

Agency Contact: Gary Marsh, Department of the Interior, Bureau of Land Management, 18th and C Streets, NW, Washington, DC 20240, 202 343-9353

RIN: 1004-AA36

DEPARTMENT OF THE INTERIOR (DOI)

Bureau of Land Management (BLM)

Completed Actions

1301. ALASKA STATE SELECTION

Legal Authority: 94 Stat. 2437

CFR Citation: 43 CFR Subpart 2627

Legal Deadline: None.

Abstract: This rule will be amended to provide a change in selection procedures for the State of Alaska as provided for in the amendments to the Alaska Statehood Act.

Timetable:

Action	Date	FR Cite
NPRM	11/18/83	48 FR 48400
Withdrawn	09/17/87	52 FR 35119

Small Entity: No

Agency Contact: Robert Faithful, Department of the Interior, Bureau of Land Management, 18th and C Streets, NW, Washington, DC 20240, 202 343-6511

RIN: 1004-AA12

VOL 53 ISS 79 PT 1 AP 25 1988 UMI

1302. LEASES, PERMITS AND EASEMENTS

Legal Authority: 43 USC 1732; 43 USC 1740; 43 USC 1733; 43 USC 1734

CFR Citation: 43 CFR 2920; 43 CFR 9260

Legal Deadline: None.

Abstract: This rule will amend the existing regulations to provide penalties for unauthorized use of public lands.

Timetable:

Action	Date	FR Cite
NPRM	07/27/87	52 FR 28024
NPRM Comment Period End	08/26/87	
Final Action	12/29/87	52 FR 49114
Final Action Effective	01/28/88	52 FR 49114

Small Entity: Undetermined

Agency Contact: Ralph Conrad, Department of the Interior, Bureau of Land Management, 1800 C Street, NW, Washington, DC 20240, 202 343-8693

RIN: 1004-AB29

1303. COMPETITIVE LEASING; ENVIRONMENT

Legal Authority: 30 USC 181 et seq; 30 USC 201a; 30 USC 351 to 359; 30 USC 1201 et seq; 43 USC 1701 et seq

CFR Citation: 43 CFR 3420; 43 CFR 3460

Legal Deadline: None.

Abstract: This rule will modify the existing regulations as they relate to the 20 coal unsuitability criteria and their application during the Bureau of Land Management's land use planning process. The changes made by the rule are a result of the Office of Technology Assessment's study of the Federal coal programs treatment of environmental issues.

Timetable:

Action	Date	FR Cite
NPRM	05/15/87	52 FR 18404
NPRM Comment Period End	06/15/87	52 FR 18404
Final Action	12/08/87	52 FR 46469
Final Action Effective	01/07/88	52 FR 46469

Small Entity: No

Agency Contact: Walter Rewinski, Department of the Interior, Bureau of Land Management, 1800 C Street, NW, Room 3600, Main Interior Bldg., Washington, DC 20240, 202 343-6621

RIN: 1004-AB25

BILLING CODE 4310-84-T

DEPARTMENT OF THE INTERIOR (DOI)
Office of the Secretary (OS)

1304. NATURAL RESOURCE DAMAGE ASSESSMENT - TYPE B AMENDMENTS

Legal Authority: 42 USC 9651(c)(1) CERCLA as amended

CFR Citation: 43 CFR 11

Legal Deadline: Statutory, April 17, 1987. SARA calls for any necessary amendments to be prepared within 6 months of enactment of SARA (Oct. 17, 1986).

Abstract: CERCLA allows trustees of natural resources that have been damaged by a release of a hazardous substance or a discharge of oil to bring a claim against the potentially responsible party of the Superfund. Section 301(c) requires the development of regulations for the assessment of damages to natural resources. Two sets of regulations are required by the Act: a set of simplified procedures that require minimal field investigations, referred to as the type A procedures, and a set of alternative procedures for the testing, sampling, and valuing of natural resource damages, referred to as the type B procedures. The Superfund Amendments and Reauthorization Act of 1986 (SARA), enacted on October 17, 1986, amended certain sections of CERCLA that pertain to natural resource damages and the Section 301(c) damage assessment regulations. This submittal covers the amendments required to the Section 301(c) damage assessment regulations.

Timetable:

Action	Date	FR Cite
NPRM	04/17/87	52 FR 12886
NPRM Comment Period End	06/17/87	52 FR 19696
Final Action	02/22/88	53 FR 5166
Final Action Effective	03/23/88	

Small Entity: No

Affected Sectors: None

Agency Contact: Bruce Blanchard, Director, Office of Environmental Review, Department of the Interior, Office of the Secretary, 18th & C Sts., NW, Washington, DC 20240, 202 343-3891

RIN: 1093-AA05

1305. DEPARTMENT OF THE INTERIOR, PROCUREMENT ETHICS REGULATION

Legal Authority: 5 USC 301; EO 11222; 43 CFR 20.735

CFR Citation: 48 CFR 1400

Legal Deadline: None.

Abstract: This notice of proposed rulemaking proposes to provide implementing regulations in the Department of the Interior Acquisition Regulation for E. O. 11222 governing ethics conduct for Government employees. The proposed rule would also provide a special code of conduct for employees with procurement responsibilities in accordance with 43 CFR 20.735-2(h).

Timetable:

Action	Date	FR Cite
NPRM	03/00/87	
Became RIN No. 1090-AA15	03/01/88	

Small Entity: No

Agency Contact: William S. Opdyke, Chief, Division of Acquistion and Assistance, Department of the Interior, Office of the Secretary, 18th and C Streets, NW, Washington, DC 20240, 202 343-3433

RIN: 1093-AA06

BILLING CODE 4310-RU-T

[FR Doc. 88-9064 Filed 04-22-88; 8:45 am]

federal register

Monday
April 25, 1988

Part XI

Department of Justice

Semiannual Regulatory Agenda

DEPARTMENT OF JUSTICE (DOJ)

DEPARTMENT OF JUSTICE

5 CFR Ch. I

28 CFR Ch. I

48 CFR Ch. 28

Regulatory Agenda

AGENCY: Justice Management Division, Justice.

ACTION: Regulatory agenda.

SUMMARY: The Department of Justice is publishing its April 1988 regulatory agenda pursuant to Executive Order No. 12291, "Federal Regulation," 3 CFR Part 127 (1981 Compilation), the Regulatory Flexibility Act, 5 U.S.C.A. 601-612 (West 1984), and Office of Management and Budget Bulletin No. 88-1, October 7, 1987.

FOR FURTHER INFORMATION CONTACT: Terry Samuels, Executive Secretariat, Justice Management Division, Department of Justice, Room 1110, 10th and Constitution Avenue, NW., Washington, DC 20530 (202-633-3123).

Dated: March 4, 1988.

Harry H. Flickinger,

Assistant Attorney General for Administration.

Civil Rights Division—Final Rule Stage

Sequence Number	Title	Regulation Identifier Number
1306	Nondiscrimination on the Basis of Age in Programs or Activities Receiving Federal Financial Assistance	1190-AA03
1307	Enforcement of Nondiscrimination on the Basis of Handicap in Department of Justice Programs	1190-AA16

Civil Rights Division—Completed Actions

Sequence Number	Title	Regulation Identifier Number
1308	Implementation of the Provisions of the Voting Rights Act Regarding Language Minority Groups	1190-AA15
1309	Unfair Immigration - Related Employment Practices	1190-AA17

General Administration—Proposed Rule Stage

Sequence Number	Title	Regulation Identifier Number
1310	Procedures for Tax Refund Offsets for the Collection of Judgments	1103-AA16
1311	Justice Acquisition Regulations Title 48 2870 Nondiscrimination on the Basis of Handicap in DOJ Contracting Activities	1103-AA17
1312	Determination for Access to National Security Information: Eligibility, Adjudication, and Appeal Procedures	1103-AA18

General Administration—Final Rule Stage

Sequence Number	Title	Regulation Identifier Number
1313	Representation and Appearances	1103-AA05
1314	Rules of Practice and Procedure for Administrative Hearings Before Administrative Law Judges in Cases Involving Allegations of Unlawful Employment of Aliens and Unfair (Cont)	1103-AA14
1315	Implementation of the Program Fraud Civil Remedies Act of 1986	1103-AA15

General Administration—Completed Actions

Sequence Number	Title	Regulation Identifier Number
1316	Justice Acquisition Regulations Title 48 2801 Career Management Program	1103-AA10

VOL 53 ISS 79 PT 1 APR 25 1988 UMI

DOJ

Immigration and Naturalization Service—Prerule Stage

Sequence Number	Title	Regulation Identifier Number
1317	Inspection of Persons Applying for Admission	1115-AA27
1318	Public Notice, Notice of Proposed Solicitation	1115-AB02

Immigration and Naturalization Service—Proposed Rule Stage

Sequence Number	Title	Regulation Identifier Number
1319	Seizure and Forfeiture of Vehicles, Vessels and Aircraft	1115-AA26
1320	Nonimmigrant Classes, Special Requirements	1115-AA65
1321	Application for Verification of Information from INS Service Records; Form and Fee Cancellation	1115-AA66
1322	Establishment of National Fines Office	1115-AA73
1323	Documentary Requirements; Nonimmigrants; Waivers; Admission of Certain Inadmissible Aliens; Parole	1115-AB00
1324	Acceptance by Overseas Immigration and Naturalization Service Officers and American Consulates of Jurisdiction of Relative Petitions based on Residence of Petitioners	1115-AB01

Immigration and Naturalization Service—Final Rule Stage

Sequence Number	Title	Regulation Identifier Number
1325	Asylum Procedures	1115-AA13
1326	Documentary Requirements: Nonimmigrants; Waivers; Admission of Certain Inadmissible Aliens; Parole; Direct Transits	1115-AA19
1327	Nonimmigrant Classes; Temporary Employees	1115-AA25
1328	Powers and Duties of Service Officers; Availability of Service Records	1115-AA28
1329	Powers and Duties of Service Officers; Availability of Service Records; Nonimmigrant Classes	1115-AA29
1330	Adjustment of Status to that of Persons Admitted for Permanent Residence; Creation of Records of Lawful Admission of Permanent Residence	1115-AA31
1331	Marriage Fraud Amendment Regulations	1115-AA32
1332	Bonds	1115-AA41
1333	Temporary Alien Workers Seeking Classification Under the Immigration and Nationality Act	1115-AA44
1334	State Employment Agencies	1115-AA50
1335	Detention and Release of Juveniles	1115-AA53
1336	Display of Control Numbers	1115-AA54
1337	Temporary Disqualification of Certain Newly Legalized Aliens from Receiving Benefits from Federal Programs of Financial Assistance	1115-AA55
1338	Special Agricultural Workers	1115-AA57
1339	Definitions of Felony and Misdemeanor	1115-AA58
1340	Documentary Requirements: Nonimmigrants; Waivers; Admission of Certain Inadmissible Aliens; Parole	1115-AA59
1341	Revision of Field Office Listing	1115-AA60
1342	Adjustment of Status for Certain Aliens	1115-AA64
1343	Certificate of Citizenship	1115-AA67
1344	Nonimmigrant Classes; Special Requirements for Admission; Extension and Maintenance of Status	1115-AA68
1345	Prevention of Unauthorized Landing of Aliens, by Owners and Operators of Railroad Lines, International Bridges, or Toll Roads	1115-AA72
1346	Visa Waiver Pilot Program	1115-AA75
1347	Equal Treatment of Fathers	1115-AA76
1348	Rule Revision to Add New Special Immigrant and Nonimmigrant Classifications	1115-AA80
1349	Immigration User Fee, Conforming Amendments	1115-AA81
1350	Special Agricultural Workers	1115-AA83
1351	Change of Nonimmigrant Classification	1115-AA87
1352	Contracts with Transportation Lines	1115-AA88
1353	Revision of Regulations Regarding the Seizure and Forfeiture of Conveyances	1115-AA95
1354	Adjustment of Status for Certain Aliens	1115-AA97

BEST COPY AVAILABLE

Immigration and Naturalization Service—Completed Actions

Sequence Number	Title	Regulation Identifier Number
1355	Immigration User Fee	1115-AA30
1356	Documentary Requirements: Nonimmigrants; Waivers; Admission of Certain Inadmissible Aliens; Parole; Judicial Recommendations Against Deportation; Proceedings to Determine Deportability	1115-AA34
1357	Addition of New Service Office	1115-AA49
1358	Adjustment of Status; Persons Admitted for Permanent Residence	1115-AA61
1359	Nonimmigrant Classes; Requirements for Admission, Extension, and Maintenance of Status	1115-AA69
1360	Control of Employment of Aliens	1115-AA71
1361	Documentary Requirements, Nonimmigrants	1115-AA74
1362	Change in Procedure in Asylum Adjudications	1115-AA94
1363	Residence, Physical Presence and Absence	1115-AA96
1364	Direct Mail of Applications and Petitions to the Regional Service Center in San Ysidro, California	1115-AA98
1365	Legalization and Special Agricultural Worker Applicants Assistance; Qualified Designated Entity Listing of Outreach Program	1115-AA99

Legal Activities—Proposed Rule Stage

Sequence Number	Title	Regulation Identifier Number
1366	Implementation of the Equal Access to Justice Act in Department of Justice Administrative Proceedings	1105-AA05

Office of Justice Programs—Final Rule Stage

Sequence Number	Title	Regulation Identifier Number
1367	Equal Employment Opportunity Program Guidelines	1121-AA10
1368	Nondiscrimination in Federal Assisted Programs -- Implementation of Section 809 (c) (1) of the Justice Assistance Act of 1984	1121-AA11
1369	Criminal Intelligence Systems Operating Policies	1121-AA12
1370	Criminal Justice Information Systems	1121-AA13

DEPARTMENT OF JUSTICE (DOJ)
Civil Rights Division (CRT)

Final Rule Stage

1306. NONDISCRIMINATION ON THE BASIS OF AGE IN PROGRAMS OR ACTIVITIES RECEIVING FEDERAL FINANCIAL ASSISTANCE

Legal Authority: 42 USC 6103

CFR Citation: 28 CFR 42, Subpart I, (New)

Legal Deadline: None.

Abstract: This regulation will implement the Age Discrimination Act of 1975, as amended, in programs or activities assisted by the Department of Justice (DOJ). The statute, 42 USC 6103(a)(4), requires that Federal agencies providing Federal financial assistance promulgate implementing regulations consistent with the general regulations issued by the Secretary of Health and Human Services (HHS), and the statute provides that such agency regulations shall not be effective until approved by HHS. In 1980 the proposed rule was published for comment, modified, approved by the DOJ Office of Legal Counsel, and on November 10, 1980 a draft final rule was forwarded to HHS for approval. On July 13, 1984 HHS conditionally approved the draft regulation. On August 12, 1987 DOJ submitted to HHS a draft final regulation.

Timetable:

Action	Date	FR Cite
NPRM Comment Period End	06/16/80	45 FR 32710
Final Action	00/00/00	

Small Entity: No

Agency Contact: Doreen Dennis, Attorney, Coordination and Review Section, Department of Justice, Civil Rights Division, P.O. Box 66118, Washington, DC 20035-6118, 202 724-2219

RIN: 1190-AA03

DOJ—CRT

Final Rule Stage

1307. ENFORCEMENT OF NONDISCRIMINATION ON THE BASIS OF HANDICAP IN DEPARTMENT OF JUSTICE PROGRAMS

Legal Authority: 29 USC 794

CFR Citation: 28 CFR 42

Legal Deadline: None.

Abstract: This proposed regulation would amend the regulation issued by the Department of Justice for enforcement of section 504 of the Rehabilitation Act of 1973, as amended, in federally assisted programs or activities to include a cross-reference to the Uniform Federal Accessibility Standards.

Timetable:

Action	Date	FR Cite
NPRM	03/01/87	
Final Action	04/01/88	

Small Entity: No

Agency Contact: Merrily Raffa, Attorney, Coordination and Review Section, Department of Justice, Civil Rights Division, P.O. Box 66118, Washington, DC 20035-6118, 202 724-2216

RIN: 1190-AA16

DEPARTMENT OF JUSTICE (DOJ)
Civil Rights Division (CRT)

Completed Actions

1308. IMPLEMENTATION OF THE PROVISIONS OF THE VOTING RIGHTS ACT REGARDING LANGUAGE MINORITY GROUPS

CFR Citation: 28 CFR 55

Completed:

Reason	Date	FR Cite
Final Action	01/12/88	53 FR 735
Final Action Effective	01/12/88	53 FR 735

Small Entity: Not Applicable

Agency Contact: David H. Hunter 202 724-5858

RIN: 1190-AA15

1309. UNFAIR IMMIGRATION - RELATED EMPLOYMENT PRACTICES

CFR Citation: 28 CFR 44

Completed:

Reason	Date	FR Cite
Final Action	10/06/87	52 FR 37402
Final Action Effective	11/05/87	

Small Entity: No

Agency Contact: Mary E. Mann 202 653-8121

RIN: 1190-AA17

DEPARTMENT OF JUSTICE (DOJ)
General Administration (DOJADM)

Proposed Rule Stage

1310. PROCEDURES FOR TAX REFUND OFFSETS FOR THE COLLECTION OF JUDGMENTS

Legal Authority: 31 USC 3720A; 31 USC 3718; 28 USC 508; 28 USC 516

CFR Citation: 28 CFR Not yet determined

Legal Deadline: None.

Abstract: The proposed regulation will establish procedures for referring to the Department of the Treasury debts for collection by offset against Federal income tax refunds.

Timetable:

Action	Date	FR Cite
NPRM	06/30/88	
NPRM Comment Period End	07/30/88	
Final Action Effective	08/30/88	

Small Entity: No

Agency Contact: Robert C. Niffenegger, Department of Justice, General Administration, 10th Street and Constitution Avenue, NW, Washington, DC 20530, 202 633-5345

RIN: 1103-AA16

1311. ● JUSTICE ACQUISITION REGULATIONS TITLE 48 2870 NONDISCRIMINATION ON THE BASIS OF HANDICAP IN DOJ CONTRACTING ACTIVITIES

Legal Authority: 29 USC 794

CFR Citation: 48 CFR 2870, (New); 48 CFR 2852.270-1

Legal Deadline: None.

Abstract: These rules will prohibit discrimination against the handicapped in agency programs or activities conducted by contractors. The rules will not have a significant cost impact on contractors but will enhance services to the handicapped and prevent discrimination.

Timetable:

Action	Date	FR Cite
NPRM	04/00/88	

Small Entity: No

Agency Contact: W. L. Vann, Procurement Executive, Department of Justice, General Administration, 601 D Street, NW, Room 6406, Washington, DC 20530, 202 272-9354

RIN: 1103-AA17

1312. ● DETERMINATION FOR ACCESS TO NATIONAL SECURITY INFORMATION: ELIGIBILITY, ADJUDICATION, AND APPEAL PROCEDURES

Legal Authority: EO 12356

CFR Citation: 28 CFR 17

Legal Deadline: None.

Abstract: To establish procedures for granting, denying, suspending, and revoking access to national security information originated by, or in the control of, the Department of Justice.

VOL 53 ISS 79 PT 1 APR 25 1988 UMI

DOJ—DOJADM **Proposed Rule Stage**

Timetable:

Action	Date	FR Cite
Next Action Undetermined		

Small Entity: Not Applicable

Agency Contact: D. Jerry Rubino, Director, Security and Emergency Planning, Staff, Department of Justice, General Administration, 10th & Constitution Avenue, N.W., Washington, DC 20530, 202 633-2094

RIN: 1103-AA18

DEPARTMENT OF JUSTICE (DOJ)
General Administration (DOJADM)

Final Rule Stage

1313. REPRESENTATION AND APPEARANCES

Significance: Agency Priority

Legal Authority: 8 USC 1103; 8 USC 1362

CFR Citation: 8 CFR 292.1

Legal Deadline: None.

Abstract: The contemplated regulation change would limit practice of foreign-licensed attorneys outside the definition of attorney under 8 CFR 1.1(f) to matters arising outside the United States and to those instances where the Immigration and Naturalization Service allows such practice. This is designed to help assure the high quality of representation in immigration matters.

Timetable:

Action	Date	FR Cite
NPRM	01/29/87	52 FR 2951
NPRM Comment Period End	03/02/87	52 FR 2951

Next Action Undetermined

Small Entity: No

Agency Contact: Gerald S. Hurwitz, Counsel to the Director, Department of Justice, General Administration, Executive Office for Immigration Review, Suite 1609, 5203 Leesburg Pike, Falls Church, VA 22041, 703 756-6470

RIN: 1103-AA05

1314. RULES OF PRACTICE AND PROCEDURE FOR ADMINISTRATIVE HEARINGS BEFORE ADMINISTRATIVE LAW JUDGES IN CASES INVOLVING ALLEGATIONS OF UNLAWFUL EMPLOYMENT OF ALIENS AND UNFAIR (CONT)

Significance: Agency Priority

Legal Authority: 5 USC 301; 5 USC 554; 8 USC 1103; 8 USC 1324a; 8 USC 1324b

CFR Citation: 28 CFR 66

Legal Deadline: None.

Abstract: These regulations will provide the rules of practice and procedure in administrative hearings regarding allegations of unlawful hiring, recruiting or referring for a fee, for employment in the United States of aliens knowing that the aliens are not authorized to work in the United States, or the continued employment of aliens in the United States knowing the aliens are (or have become) unauthorized to work in the United States, failure to comply with the employment verification requirements and unfair immigration-related employment practices.

Timetable:

Action	Date	FR Cite
Interim Final Rule	11/24/87	52 FR 44972

Next Action Undetermined

Small Entity: No

Additional Information: TITLE CONT: Immigration-Related Employment Practices

Agency Contact: Gerald S. Hurwitz, Counsel to the Director, Department of Justice, General Administration, Executive Office for Immigration Review, 5203 Leesburg Pike, Suite 1609, Falls Church, VA 22041, 703 756-6470

RIN: 1103-AA14

1315. IMPLEMENTATION OF THE PROGRAM FRAUD CIVIL REMEDIES ACT OF 1986

Legal Authority: 31 USC 3801 to 3812; 28 USC 509; 28 USC 510; 5 USC 301

CFR Citation: 28 CFR 0; 28 CFR 71

Legal Deadline: Statutory, April 29, 1987.

Abstract: Part A of these regulations will implement the Program Fraud Civil Remedies Act with respect to actions initiated by the Department of Justice. The rules will establish administrative procedures for imposing statutorily authorized civil penalties against any person who makes, submits or presents a false, fictitious, or fraudulent claim or written statement to the Department of Justice.

Part B of these rules designates officials within the Department of Justice who are authorized to exercise the authorities conferred upon the Attorney General with respect to cases brought to the Department of Justice by other agencies or by Department components.

Timetable:

Action	Date	FR Cite
NPRM	02/11/88	53 FR 4034
NPRM Comment Period End	03/14/88	
Final Action	05/02/88	
Final Action Effective	05/02/88	

Small Entity: No

Additional Information: Agency Contact with respect to Part A: Janis A. Sposato, General Counsel, Justice Management Division, Department of Justice, Room 6328, 10th and Constitution Avenue, NW, Washington, DC 20530, 202-633-3452

Agency Contact with respect to Part B: Michael F. Hertz, Director, Commercial Litigation Branch, Civil Division, Department of Justice, PO Box 261, Ben Franklin Station, Washington, DC 20044, 202-724-7179

Affected Sectors: None

Agency Contact: Janis A. Sposato/Michael F. Hertz, Department of Justice, General Administration, Washington, DC 20530

RIN: 1103-AA15

DEPARTMENT OF JUSTICE (DOJ)
General Administration (DOJADM)

Completed Actions

1316. JUSTICE ACQUISITION REGULATIONS TITLE 48 2801 CAREER MANAGEMENT PROGRAM

CFR Citation: 48 CFR 2801

Completed:

Reason	Date	FR Cite
Final Action	08/31/87	52 FR 32796
Final Action Effective	08/31/87	52 FR 32796

Small Entity: No

Agency Contact: W. L. Vann 202 272-8354

RIN: 1103-AA10

DEPARTMENT OF JUSTICE (DOJ)
Immigration and Naturalization Service (INS)

Prerule Stage

1317. INSPECTION OF PERSONS APPLYING FOR ADMISSION

Legal Authority: 31 USC 9701

CFR Citation: 8 CFR 235.11

Legal Deadline: None.

Abstract: This proposed rule would amend existing regulations to charge carriers for the administrative costs and the Service's portion of the Social Security taxes associated with billable 1931 Act overtime.

Timetable:

Action	Date	FR Cite
ANPRM	00/00/00	

Small Entity: No

Affected Sectors: Multiple

Government Levels Affected: Federal

Agency Contact: Charles S. Thomason, Jr., Systems Accountant, Department of Justice, Immigration and Naturalization Service, 425 Eye St., NW, Washington, DC 20536, 202 633-4705

RIN: 1115-AA27

1318. ● PUBLIC NOTICE, NOTICE OF PROPOSED SOLICITATION

Legal Authority: 8 USC 1101; 8 USC 1103; 8 USC 1151; 8 USC 1153; 8 USC 1154; 8 USC 1182; 8 USC 1255; 8 USC 1257

CFR Citation: 8 CFR 245

Legal Deadline: None.

Abstract: This notice announces the Service's consideration of implementation of a standardized English language/citizenship test for legalization purposes and to request comments from entities who are capable and interested in developing and implementing standardized tests for this effort.

Timetable:

Action	Date	FR Cite
Public Notice	04/30/88	

Small Entity: Undetermined

Additional Information: INS Number 1100-88

Agency Contact: Terrance M. O'Reilly, Deputy Assistant Commissioner, Department of Justice, Immigration and Naturalization Service, 202 786-3658

RIN: 1115-AB02

DEPARTMENT OF JUSTICE (DOJ)
Immigration and Naturalization Service (INS)

Proposed Rule Stage

1319. SEIZURE AND FORFEITURE OF VEHICLES, VESSELS AND AIRCRAFT

Legal Authority: 8 USC 1324

CFR Citation: 8 CFR 274

Legal Deadline: None.

Abstract: The proposed changes would amend existing regulations relating to the seizure and forfeiture of vehicles, vessels and aircraft.

Timetable:

Action	Date	FR Cite
NPRM	00/00/00	

Small Entity: No

Additional Information: INS Number 1033-87

Government Levels Affected: Federal

Agency Contact: Paul Virtue, Assistant General Counsel, Department of Justice, Immigration and Naturalization Service, 425 Eye St., NW, Washington, DC 20536, 202 633-2656

RIN: 1115-AA26

1320. NONIMMIGRANT CLASSES, SPECIAL REQUIREMENTS

Legal Authority: 8 USC 1101; 8 USC 1184

CFR Citation: 8 CFR 214.2(b)

Legal Deadline: None.

Abstract: The Immigration and Naturalization Service ("the Service") proposes to restrict the types of situations under which an alien may apply for an extension of stay as a nonimmigrant visitor for pleasure (B-2). Faced with ever-increasing adjudications caseloads and with resources which fail to keep pace with those increases, the Service must continually seek ways to carry out its responsibilities in a more efficient manner. By limiting the situations under which a visitor for pleasure may seek an extension of stay, the Service will decrease the amount of resources which must be dedicated to this area and will be able to increase its efforts in other areas having higher priority.

Timetable:

Action	Date	FR Cite
NPRM	00/00/00	

Small Entity: No

Additional Information: INS Number 1029-87

Government Levels Affected: Federal

Agency Contact: Michael L. Shaul, Senior Immigration Examiner, Department of Justice, Immigration and Naturalization Service, 202 633-3946

RIN: 1115-AA65

1321. APPLICATION FOR VERIFICATION OF INFORMATION FROM INS SERVICE RECORDS; FORM AND FEE CANCELLATION

Legal Authority: 8 USC 1103; 31 USC 9701

CFR Citation: 8 CFR 103.7

Legal Deadline: None.

Abstract: The Immigration and Nationalization Service ("the Service") entertains numerous requests for Verification of Information from INS Service Records, via Form G-641. This form has been misused as a substitute document, while other INS documents are being prepared (i.e.: I-94, I-551 or Certificate of Naturalization or Citizenship). Should an applicant need to have his or her status verified while waiting for one of these documents to be processed, and such verification can be satisfied by obtaining a copy of a document (Certified if necessary), an FOIA/PA request can be made. If verification is needed to obtain a benefit and a copy will not suffice, the agency needing verification can make a direct request to the INS and it will be handled as appropriate.

Discontinuing the use of Form G-641 will also eliminate the need to request Form G-350, Certification of Birth Data. Requests for this document are minimal since foreign-born children are issued an alien registration receipt card or a citizenship document by INS and no other form of identification should be necessary.

Timetable:

Action	Date	FR Cite
NPRM	00/00/00	

Small Entity: Undetermined

Additional Information: INS Number 1044-87

Government Levels Affected: Federal

Agency Contact: Ramonia Law-Hill, Information Management Specialist, Department of Justice, Immigration and Naturalization Service, 202 633-2582

RIN: 1115-AA66

1322. ESTABLISHMENT OF NATIONAL FINES OFFICE

Legal Authority: PL 99-591

CFR Citation: 8 CFR 280

Legal Deadline: None.

Abstract: This rule establishes a centralized handling of administrative fines; dept established as a precursor of National Collections office. Removes workload from district examiners.

Timetable:

Action	Date	FR Cite
NPRM	06/30/88	
NPRM Comment Period End	07/31/88	

Small Entity: No

Additional Information: INS Number 1108-88

Government Levels Affected: Federal

Agency Contact: Daniel J. Stephan, Assistant Chief Inspector, Department of Justice, Immigration and Naturalization Service, 202 633-2800

RIN: 1115-AA73

1323. ● DOCUMENTARY REQUIREMENTS; NONIMMIGRANTS; WAIVERS; ADMISSION OF CERTAIN INADMISSIBLE ALIENS; PAROLE

Legal Authority: 8 USC 1101; 8 USC 1102; 8 USC 1103; 8 USC 1182; 8 USC 1184; 8 USC 1225; 8 USC 1226; 8 USC 1252; 46 FR 8039; 8 CFR 2

CFR Citation: 8 CFR 212

Legal Deadline: None.

Abstract: This rule expands the coverage of the waiver of inadmissibility of mentally retarded aliens seeking entry as nonimmigrants.

Timetable:

Action	Date	FR Cite
NPRM	02/05/88	53 FR 3403
NPRM Comment Period End	04/05/88	53 FR 3403
Final Action	09/30/88	

Small Entity: No

Additional Information: INS Number 1102-88

Agency Contact: Joanna Lowden, Associate General Counsel, Department of Justice, Immigration and Naturalization Service, 202 633-2895

RIN: 1115-AB00

1324. ● ACCEPTANCE BY OVERSEAS IMMIGRATION AND NATURALIZATION SERVICE OFFICERS AND AMERICAN CONSULATES OF JURISDICTION OF RELATIVE PETITIONS BASED ON RESIDENCE OF PETITIONERS

Legal Authority: 8 USC 1101; 8 USC 1103; 8 USC 1151; 8 USC 1153; 8 USC 1154; 8 USC 1182; 8 USC 1255

CFR Citation: 8 CFR 204

Legal Deadline: None.

Abstract: This amendment revises and clarifies the process used by overseas INS offices and American consulates in accepting jurisdiction of Forms I-130, petitions for alien relatives.

Timetable:

Action	Date	FR Cite
NPRM	06/30/88	

Small Entity: No

Additional Information: INS Number 1055-87

Agency Contact: Yolanda Sanchez-K, Senior Immigration Examiner, Department of Justice, Immigration and Naturalization Service, 202 633-5014

RIN: 1115-AB01

DEPARTMENT OF JUSTICE (DOJ)
Immigration and Naturalization Service (INS)

Final Rule Stage

1325. ASYLUM PROCEDURES

Significance: Regulatory Program.

Legal Authority: 8 USC 1103; 8 USC 1158; 8 USC 1182; 8 USC 1225; 8 USC 1226; 8 USC 1252; 8 USC 1253; 8 USC 1283

CFR Citation: 8 CFR 208; 8 CFR 236.3; 8 CFR 242.17(c); 8 CFR 243.9; 8 CFR 253.1(f); 8 CFR 3

Legal Deadline: None.

Abstract: The proposed rule would set forth procedures to be used in adjudicating asylum and withholding of deportation applications under sections 208 and 243(h) of the Immigration and Nationality Act.

Timetable:

Action	Date	FR Cite
NPRM	08/28/87	52 FR 32552
NPRM Comment Period End	10/27/87	52 FR 32552
Final Action	00/00/00	

Small Entity: No

Additional Information: DOJ Order Number 1211-87

Agency Contact: Ralph B. Thomas, Immigration Inspector, Department of Justice, Immigration and Naturalization Service, 425 Eye St., NW, Washington, DC 20536, 202 633-5463

RIN: 1115-AA13

1326. DOCUMENTARY REQUIREMENTS: NONIMMIGRANTS; WAIVERS; ADMISSION OF CERTAIN INADMISSIBLE ALIENS; PAROLE; DIRECT TRANSITS

Legal Authority: 8 USC 1182

CFR Citation: 8 CFR 212.7(d)

Legal Deadline: None.

Abstract: This final rule outlines requirements for approval of section 212(k) waivers, including an amended I-193 for use in making the application.

Timetable:

Action	Date	FR Cite
Final Action	06/30/88	

Small Entity: No

Agency Contact: Susan Curda, Assistant Chief Inspector, Department of Justice, Immigration and Naturalization Service, 425 Eye St., NW, Washington, DC 20536, 202 633-2725

RIN: 1115-AA19

1327. NONIMMIGRANT CLASSES; TEMPORARY EMPLOYEES

Significance: Regulatory Program

Legal Authority: 8 USC 1101; 8 USC 1103; 8 USC 1182; 8 USC 1184; 8 USC 1258

CFR Citation: 8 CFR 214.2(h)

Legal Deadline: None.

Abstract: The Immigration Reform and Control Act of 1986 (IRCA) imposes sanctions against employers who hire aliens not authorized to work. Since many of the nation's agricultural employers have become dependent upon such workers to meet production and harvesting needs, Congress created the Special Agricultural Workers (SAW) Program and the Replenishment Agricultural Workers (RAW) Program to provide permanent resident status to certain agricultural workers. To clarify the process through which employers can employ nonimmigrant seasonal and temporary agricultural workers, Congress moved agricultural employment from H-2 classification into a separate H-2A class, and incorporated a labor certification process into the statute. This interim rule establishes special H-2A regulatory criteria. It supplements the Department of Labor's rules covering the temporary agricultural labor certification process. This rule amends Service regulations relating therefore to temporary alien workers seeking classification under section 101(a)(15) (H) of the Immigration and Nationality Act.

Timetable:

Action	Date	FR Cite
NPRM	08/08/86	51 FR 28576
NPRM Comment Period End	10/07/86	52 FR 28576
Interim Final Rule	06/01/87	52 FR 20554
Interim Rule Effective Date	06/01/87	52 FR 20554
Final Action	00/00/00	

Small Entity: No

Additional Information: INS Number 1008-87

Government Levels Affected: Federal

Agency Contact: Michael L. Aytes, Senior Immigration Examiner, Department of Justice, Immigration and Naturalization Service, 425 Eye St., NW, Washington, DC 20536, 202 633-3946

RIN: 1115-AA25

1328. POWERS AND DUTIES OF SERVICE OFFICERS; AVAILABILITY OF SERVICE RECORDS

Legal Authority: 8 USC 1103

CFR Citation: 8 CFR 103.2(b)

Legal Deadline: None.

Abstract: This proposed rule would authorize a district director to withhold adjudication of a visa petition or application when determined necessary to pursue a criminal investigation.

Timetable:

Action	Date	FR Cite
NPRM	05/30/86	51 FR 19559
NPRM Comment Period End	07/29/86	51 FR 19559
Next Action Undetermined		

Small Entity: No

Agency Contact: Lori Scialabba, Assistant General Counsel, Department of Justice, Immigration and Naturalization Service, 425 Eye St., NW, Washington, DC 20536, 202 633-3197

RIN: 1115-AA28

1329. POWERS AND DUTIES OF SERVICE OFFICERS; AVAILABILITY OF SERVICE RECORDS; NONIMMIGRANT CLASSES

Legal Authority: 8 USC 1101; 8 USC 1103; 8 USC 1182; 8 USC 1184; 8 USC 1351; 8 USC 1454; 8 USC 1455

CFR Citation: 8 CFR 103.1(f)(1); 8 CFR 214.4

Legal Deadline: None.

Abstract: This proposed rule would revise the procedures and authority to withdraw approval of a school to enroll foreign students.

Timetable:

Action	Date	FR Cite
NPRM	11/05/86	51 FR 40207
NPRM Comment Period End	01/05/87	51 FR 40207
Final Action	12/00/88	

Small Entity: No

Additional Information: INS Number C-87

Agency Contact: Joanna London, Associate General Counsel, Department of Justice, Immigration and Naturalization Service, 425 Eye St., NW, Washington, DC 20536, 202 633-2895

RIN: 1115-AA29

1330. ADJUSTMENT OF STATUS TO THAT OF PERSONS ADMITTED FOR PERMANENT RESIDENCE; CREATION OF RECORDS OF LAWFUL ADMISSION OF PERMANENT RESIDENCE

Legal Authority: 8 USC 1101; 8 USC 1103; 8 USC 1151; 8 USC 1153; 8 USC 1154; 8 USC 1182; 8 USC 1255; 8 USC 1257; 8 USC 1259

CFR Citation: 8 CFR 245.1; 8 CFR 245.6; 8 CFR 245.7; 8 CFR 245.8; 8 CFR 245.9; 8 CFR 249.2

Legal Deadline: Statutory, November 6, 1986.

Abstract: This interim rule will implement sections 117, 202, and 203 of the Immigration Reform and Control

Act of 1986. Section 107 contains prohibitions on adjustment of lawful permanent resident status by certain individuals. Section 202 provides for adjustment to lawful permanent resident status by certain nationals of Cuba and Haiti. Section 203 changes the registry date for creation of record of lawful permanent residence from June 30, 1948 to January 1, 1972.

Timetable:

Action	Date	FR Cite
Interim Final Rule	03/03/87	52 FR 6320
Correction of legal citation	04/27/87	52 FR 13627
Final Action	00/00/00	

Small Entity: No

Additional Information: INS Number 1003-87

Government Levels Affected: Federal

Agency Contact: Joseph D. Cuddihy, Senior Immigration Examiner, Department of Justice, Immigration and Naturalization Service, 425 Eye St., NW, Washington, DC 20536, 202 633-3329

RIN: 1115-AA31

1331. MARRIAGE FRAUD AMENDMENT REGULATIONS

Significance: Regulatory Program

Legal Authority: 5 USC 301; 8 USC 1101; 8 USC 1103; 8 USC 1151; 8 USC 1153; 8 USC 1154; 8 USC 1181; 8 USC 1182; 8 USC 1184; 8 USC 1186a; 8 USC 1203; 8 USC 1225; 8 USC 1226; 8 USC 1227; PL 99-639

CFR Citation: 8 CFR 204.1; 8 CFR 205.1; 8 CFR 211.1; 8 CFR 212.7; 8 CFR 214.2; 8 CFR 216.1; 8 CFR 216.2; 8 CFR 216.3; 8 CFR 216.4; 8 CFR 216.5; 8 CFR 223.2; 8 CFR 223a.4; 8 CFR 235.11; 8 CFR 242.7; 8 CFR 242.17; ...

Legal Deadline: None.

Abstract: The Immigration Marriage Fraud Amendments of 1986 (Pub.L. 99-639) became effective on November 10, 1986. The law provides for conditional permanent resident status for certain alien spouses, sons and daughters of US citizens and lawful permanent residents. It also provides for the removal of the conditional basis of such residence upon the filing of a joint petition by the conditional resident and the petitioning spouse. Additionally, the law provides for the termination of an alien's lawful permanent residence for failure to file the necessary petition or for other reasons. This rulemaking creates interim regulations necessary for the implementation of the law pending preparation of final regulations.

Timetable:

Action	Date	FR Cite
Interim Final Rule	01/27/88	53 FR 2426
Interim Rule Comment Period Ends	02/26/88	53 FR 2426
Final Action	00/00/00	

Small Entity: No

Additional Information: INS Number B-88

Agency Contact: Michael L. Shaul, Senior Immigration Examiner, Department of Justice, Immigration and Naturalization Service, 425 Eye St., NW, Washington, DC 20536, 202 633-3048

RIN: 1115-AA32

1332. BONDS

Legal Authority: 5 USC 552(A); 8 USC 1101; 8 USC 1103; 8 USC 1201; 8 USC 1361; 8 USC 1362; 8 USC 1363; 8 USC 1364; 8 USC 1365; 8 USC 1351; 8 USC 1443; 8 USC 1454; 8 USC 1455; 28 USC 1746; 7 USC 2243; ...

CFR Citation: 8 CFR 103

Legal Deadline: None.

Abstract: This rule proposes to eliminate surety bonds as acceptable security on immigration appearance, public charge, and maintenance of status and departure bonds. This change is necessary to increase alien appearances and minimize dollar losses to the U.S.

Timetable:

Action	Date	FR Cite
NPRM	07/01/87	52 FR 24475
NPRM Comment Period End	07/31/87	52 FR 24475
Final Action	00/00/00	

Small Entity: Undetermined

Additional Information: INS Number 1036-87

Government Levels Affected: Federal

Agency Contact: Karl Kmuk, Associate General Counsel, Department of Justice, Immigration and Naturalization Service, 202 633-1261

RIN: 1115-AA41

1333. TEMPORARY ALIEN WORKERS SEEKING CLASSIFICATION UNDER THE IMMIGRATION AND NATIONALITY ACT

Legal Authority: 8 USC 1101

CFR Citation: 8 CFR 214.2(h)

Legal Deadline: None.

Abstract: The proposed rule amends regulations of the INS relating to Temporary Alien Workers seeking classification under section 101(a) (15) (H) of the Immigration and Nationality Act.

Timetable:

Action	Date	FR Cite
NPRM	08/06/86	51 FR 28576
NPRM Comment Period End	10/07/86	51 FR 28576
Interim Final Rule	00/00/00	
Final Action	00/00/00	

Small Entity: No

Additional Information: INS Number 1040-87

Government Levels Affected: Federal

Agency Contact: Flora Richardson, Senior Immigration Examiner, Department of Justice, Immigration and Naturalization Service, 202 633-3240

RIN: 1115-AA44

1334. STATE EMPLOYMENT AGENCIES

Significance: Agency Priority

Legal Authority: 8 USC 1101; 8 USC 1103; 8 USC 1324a; PL 99-603

CFR Citation: 8 CFR 274a.6

Legal Deadline: None.

Abstract: This interim rule amends the regulations at 8 CFR 274a.6, defining procedures for state employment agencies in verifying the identity and employment eligibility of individuals and certifying verifications to employers.

Timetable:

Action	Date	FR Cite
Interim Final Rule	11/06/87	52 FR 43050
Effective date of Interim Rule	11/06/87	52 FR 43050
Comment period closes on Interim Rule	01/08/88	52 FR 43050
Final Action	00/00/00	

Small Entity: No

Additional Information: INS Number 1046-87

Government Levels Affected: State, Federal

Agency Contact: Steven M. Hurst, Senior Special Agent, Department of Justice, Immigration and Naturalization Service, 202 633-4495

RIN: 1115-AA50

1335. DETENTION AND RELEASE OF JUVENILES

Legal Authority: 8 USC 1101; 8 USC 1103; 8 USC 1182; 8 USC 1184; 8 USC 1225; 8 USC 1226; 8 USC 1228; 8 USC 1252; 8 USC 1182b; 8 USC 1182c; 8 USC 1254; 8 USC 1255; 8 USC 1357; 8 USC 1362

CFR Citation: 8 CFR 212; 8 CFR 242

Legal Deadline: None.

Abstract: The proposed rule would add a new Section 242.24 and would replace existing Subsection 212.5(a)(2)(ii) with a new section. The purpose of this regulation is to codify Service policy regarding detention and release of juvenile aliens and to provide a single policy for juveniles in both deportation and exclusion proceedings.

Timetable:

Action	Date	FR Cite
NPRM	10/15/87	52 FR 38245
NPRM Comment Period End	11/16/87	52 FR 38245
Final Action	00/00/00	

Small Entity: No

Additional Information: INS Number 1035-87

Government Levels Affected: Federal

Agency Contact: Mary Ruth Calhoun, Juvenile Detention Specialist, Department of Justice, Immigration and Naturalization Service, 202 633-4120

RIN: 1115-AA53

1336. DISPLAY OF CONTROL NUMBERS

Legal Authority: 66 Stat. 173; 8 USC 1103

CFR Citation: 8 CFR 299.5

Legal Deadline: None.

Abstract: A new Section 299.5 is being added to 8 CFR Part 299. The new section, titled, Display of Control Numbers, will allow the Immigration and Naturalization Service (Service), to compile, in one centralized location within its regulations, a listing of all current Service public use forms and their respective control numbers as assigned by the Office of Management and Budget (OMB) under the provisions of the Paperwork Reduction Act. The consolidated identification of public use forms will enable both Service officials and the public to easily identify those public use forms in current use by the Immigration and Naturalization Service.

Timetable:

Action	Date	FR Cite
Final Action	10/31/88	

Small Entity: No

Additional Information: INS Number 1045-87

Government Levels Affected: Federal

Agency Contact: Sharon A. Andrade, Management Analyst, Department of Justice, Immigration and Naturalization Service, 202 633-3291

RIN: 1115-AA54

1337. TEMPORARY DISQUALIFICATION OF CERTAIN NEWLY LEGALIZED ALIENS FROM RECEIVING BENEFITS FROM FEDERAL PROGRAMS OF FINANCIAL ASSISTANCE

Significance: Agency Priority

Legal Authority: 8 USC 1101, (Note); PL 99-603; 100 Stat. 3359

CFR Citation: 8 CFR 245a

Legal Deadline: None.

Abstract: This proposed rule implements section 245A of the Immigration and Nationality Act ("ACT"), as amended by Section 201 of the Immigration Reform and Control Act of 1986, Pub.L. 99-603 ("IRCA"). Section 245A(h) of the Act provides that, with certain exceptions, aliens granted lawful temporary resident status pursuant to section 245A(a) are not eligible for a period of five years after such grant to receive benefits from programs of financial assistance furnished under Federal law on the basis of financial need. The Attorney General is required by section 245A(h)(1)(A)(i) of the Act to identify such programs after consultation with other appropriate heads of the various departments and agencies of government. This proposed rule implements such provision.

Timetable:

Action	Date	FR Cite
NPRM	08/24/87	52 FR 31784
NPRM Comment Period End	09/23/87	52 FR 31784
Final Action	00/00/00	

Small Entity: No

Additional Information: INS Number 1038-87

Government Levels Affected: Federal

Analysis: Regulatory Impact Analysis

Agency Contact: Paul W. Virtue, Associate General Counsel, Department of Justice, Immigration and Naturalization Service, 202 633-2656

RIN: 1115-AA55

1338. SPECIAL AGRICULTURAL WORKERS

Significance: Agency Priority

Legal Authority: 8 USC 1101 note

CFR Citation: 8 CFR 210

Legal Deadline: None.

Abstract: This rule incorporates in 8 CFR 210, a reference to the rules established by the Secretary of Agriculture for implementation of the special agricultural worker provisions of the Immigration Reform and Control Act of 1986 (IRCA).

Timetable:

Action	Date	FR Cite
Final Action	00/00/00	

Small Entity: Undetermined

Additional Information: INS Number 1032-87

Government Levels Affected: Federal

Agency Contact: Gerald Heinauer, Senior Immigration Examiner, Department of Justice, Immigration and Naturalization Service, 202 633-4657

RIN: 1115-AA57

1339. DEFINITIONS OF FELONY AND MISDEMEANOR

Legal Authority: 8 USC 1255A

CFR Citation: 8 CFR 245a

Legal Deadline: None.

Abstract: Amends the definition of felony and misdemeanor as it applies to applicants for temporary resident status under the legalization program.

Timetable:

Action	Date	FR Cite
NPRM	09/30/87	52 FR 36582
NPRM Comment Period End	10/30/87	52 FR 36582
Final Action	00/00/00	

Small Entity: No

Additional Information: INS Number 1052-87

Government Levels Affected: Federal

Agency Contact: Franchesco Isgro, Acting Deputy General Counsel, Department of Justice, Immigration and Naturalization Service, 202 633-2517

RIN: 1115-AA58

1340. DOCUMENTARY REQUIREMENTS: NONIMMIGRANTS; WAIVERS; ADMISSION OF CERTAIN INADMISSIBLE ALIENS; PAROLE

Legal Authority: 8 USC 1103; 8 USC 1182

CFR Citation: 8 CFR 212.1(e)(3)

Legal Deadline: None.

Abstract: This rule amends the listing of countries, for which transit without visa privileges are unavailable, to include Syria.

Timetable:

Action	Date	FR Cite
Interim Final Rule	00/00/00	

Small Entity: No

Additional Information: INS Number 1013-87

Government Levels Affected: Federal

Agency Contact: Y. Peggy Wong, Assistant Chief Inspector, Department of Justice, Immigration and Naturalization Service, 202 633-4033

RIN: 1115-AA59

1341. REVISION OF FIELD OFFICE LISTING

Legal Authority: 66 Stat. 173; 8 USC 1103

CFR Citation: 8 CFR 100.4(d)

Legal Deadline: None.

Abstract: Amending the list of Border Patrol Sectors to include Puerto Rico under the Eastern Region.

Timetable:

Action	Date	FR Cite
Final Action	06/30/88	

Small Entity: No

Additional Information: INS Number 1040-87

Government Levels Affected: Federal

Agency Contact: Luis Barker, Deputy Chief, Border Patrol, Department of Justice, Immigration and Naturalization Service, 202 633-1109

RIN: 1115-AA60

1342. ADJUSTMENT OF STATUS FOR CERTAIN ALIENS

Legal Authority: PL 99-603; Stat. 3359; 8 USC 1101 note

CFR Citation: 8 CFR 245a

Legal Deadline: None.

Abstract: This regulation provides technical corrections to existing Service regulations published on May 1, 1987 at 52 FR 16205, and provides additional guidance as required.

Timetable:

Action	Date	FR Cite
Interim Final Rule	11/17/87	52 FR 43843
Interim Rule Effective	11/17/87	52 FR 43843
Comment Period Closes on Interim Rule	12/17/87	52 FR 43843
Final Action	00/00/00	

Small Entity: No

Additional Information: INS Number 1050-87

Government Levels Affected: Federal

Agency Contact: Terrance M. O'Reilly, Deputy Assistant Commissioner, Legalization, Department of Justice, Immigration and Naturalization Service, 202 633-4657

RIN: 1115-AA64

1343. CERTIFICATE OF CITIZENSHIP

Legal Authority: PL 99-653; 8 USC 1103; 8 USC 1409(c); 8 USC 1434; 8 USC 1444; 8 USC 1448; 8 USC 1452; 8 USC 1455

CFR Citation: 8 CFR 341

Legal Deadline: Statutory, November 6, 1986.

Abstract: This rule change will implement section 22 of Public Law 99-653, the Immigration and Nationality Act Amendments of 1986, regarding issuance of certificates of citizenship for adopted children. The effect of this rule change is to facilitate acquisition of United States citizenship by adopted alien children once they enter the United States.

Timetable:

Action	Date	FR Cite
Interim Final Rule	04/22/87	52 FR 13229
Notice of Final Action	00/00/00	

Small Entity: No

Additional Information: INS Number 1007-87

Government Levels Affected: Federal

Agency Contact: Thomas E. Cook, Senior Immigration Examiner, Department of Justice, Immigration and Naturalization Service, 202 633-5014

RIN: 1115-AA67

1344. NONIMMIGRANT CLASSES; SPECIAL REQUIREMENTS FOR ADMISSION; EXTENSION AND MAINTENANCE OF STATUS

Legal Authority: 8 USC 1101 (a)(15)(B); 8 USC 1184

CFR Citation: 8 CFR 214.2(b)

Legal Deadline: None.

Abstract: This notice announces the intent of the Immigration and Naturalization Service ("the Service") to set forth, in regulatory form, the special requirements for admission, extension and maintenance of status of nonimmigrant alien visitors for business and visitors for pleasure. Much of the Service's written policy relating to this subject is now contained in the Service's Operations Instructions at O.I. 214.2(b). Because it is more appropriate for interpretations and rules to be set forth in regulatory form, this information will become part of 8 CFR 214. In addition, the proposed rulemaking will clarify the criteria for according B-1 classification to members of certain occupations (such as participants in religious programs and members of foreign film crews). By issuing this advance notice, the Service is providing an opportunity to the public to submit comments and make suggestions at an earlier stage of the process. This will result in a proposed rule which is more comprehensive in its

scope and more understandable to the public.

Timetable:

Action	Date	FR Cite
ANPRM	10/01/87	52 FR 36783
ANPRM Comment Period End	11/16/87	52 FR 36783
Final Action	00/00/00	

Small Entity: No

Additional Information: INS Number 1025-87

Government Levels Affected: Federal

Agency Contact: Michael L. Shaul, Senior Immigration Examiner, Department of Justice, Immigration and Naturalization Service, 202 633-3946

RIN: 1115-AA68

1345. PREVENTION OF UNAUTHORIZED LANDING OF ALIENS, BY OWNERS AND OPERATORS OF RAILROAD LINES, INTERNATIONAL BRIDGES, OR TOLL ROADS

Legal Authority: 8 USC 1103; 8 USC 1321

CFR Citation: 8 CFR 271

Legal Deadline: None.

Abstract: It has long been the contention of owners of international bridges that sufficient safeguards to fine procedures were lacking in the statutory language of Section 271 (8 U.S.C. 1321) of the Immigration and Nationality Act, as amended. The Immigration Reform and Control Act of 1986, Public Law 99-603 Part B at Section 114 provides amelioration to some degree of this contention. This regulation provides for an inspection by the Attorney General, at the request of owners and operators of facilities which provide a means for the unlawful entry of aliens into the United States. If a determination is made that adequate measures have been taken by the owners to prevent such unlawful entry, the owners will be relieved from liability to fine proceedings as long as the facility remains in the condition in which approved.

Timetable:

Action	Date	FR Cite
NPRM	01/16/87	52 FR 1920
NPRM Comment Period End	02/17/87	52 FR 1920
Final Action	00/00/00	

Small Entity: No

Additional Information: INS Number 1019-87

Government Levels Affected: Federal

Agency Contact: Daniel Stephan, Assistant Chief Inspector, Department of Justice, Immigration and Naturalization Service, 202 633-2745

RIN: 1115-AA72

1346. VISA WAIVER PILOT PROGRAM

Significance: Agency Priority

Legal Authority: Sec 217 IRCA

CFR Citation: 8 CFR 212

Legal Deadline: None.

Abstract: Waives nonimmigrant tourist visa for nationals of eight different countries.

Timetable:

Action	Date	FR Cite
Interim Final Rule	04/30/88	

Small Entity: Undetermined

Additional Information: INS Number 1109-88

Government Levels Affected: Federal

Agency Contact: Y. Peggy Wong, Assistant Chief Inspector, Department of Justice, Immigration and Naturalization Service, 202 633-4033

RIN: 1115-AA75

1347. EQUAL TREATMENT OF FATHERS

Legal Authority: PL 99-603; 8 USC 1101; 8 USC 1103; 8 USC 1151; 8 USC 1153; 8 USC 1154; 8 USC 1182; 8 USC 1255

CFR Citation: 8 CFR 204

Legal Deadline: Statutory, November 6, 1987.

Abstract: This revision is to assist in the implementation of Pub. L. 99-603, the Immigration Reform and Control Act of 1986, which recognizes, for preference petition purposes, the relationship between a biological father and his illegitimate child.

Timetable:

Action	Date	FR Cite
Interim Final Rule	00/00/00	

Small Entity: No

Additional Information: INS Number 1049-87

Government Levels Affected: Federal

Agency Contact: Thomas E. Cook, Senior Immigration Examiner, Department of Justice, Immigration and Naturalization Service, 202 633-5014

RIN: 1115-AA76

1348. RULE REVISION TO ADD NEW SPECIAL IMMIGRANT AND NONIMMIGRANT CLASSIFICATIONS

Legal Authority: 8 USC 1103; 8 USC 1101; 8 USC 1184

CFR Citation: 8 CFR 101; 8 CFR 214

Legal Deadline: Statutory, November 6, 1987. Interim rules effective date.

Abstract: This revision was issued to assist in the implementation of P.L. 99-603, which created new special immigrant and nonimmigrant classifications. This provision was intended to alleviate hardships of international organizations and their immediate family members. The new nonimmigrant classification was added to minimize any family separations caused by ineligibility for special immigrant status on behalf of certain parents and children of persons accorded Section 101(a)(27)(I) status.

Timetable:

Action	Date	FR Cite
Interim Final Rule	02/05/88	53 FR 3331
Interim rule comment period closes	03/07/88	53 FR 3331
Final Action	05/00/88	

Small Entity: No

Additional Information: INS Number 1006-87

Government Levels Affected: Federal

Agency Contact: Thomas E. Cook, Senior Immigration Examiner, Department of Justice, Immigration and Naturalization Service, 202 633-5014

RIN: 1115-AA80

1349. IMMIGRATION USER FEE, CONFORMING AMENDMENTS

Significance: Regulatory Program

Legal Authority: 8 USC 1103; 8 USC 1356; PL 99-591

CFR Citation: 8 CFR 232; 8 CFR 233; 8 CFR 235; 8 CFR 237; 8 CFR 238; 8 CFR 239; 8 CFR 271; 8 CFR 273; 8 CFR 280; 8 CFR 299

Legal Deadline: None.

Abstract: Section 101(b) subsection 205 of the Department of Justice Appropriation Act, 1987 (P.L. 99-591) establishes the collection, payment, and remittance of a specific user fee for the Immigration inspection or preinspection of passengers (with certain exceptions) arriving in the U.S. aboard commercial aircraft or commercial vessels. Subsection 206 of P.L. 99-591 places the responsibility for physical custody of excludable aliens pursuant to former section 233 of the I & N Act of 1952, as amended on the INS. This proposed rule addresses this change from carrier responsibility to INS responsibility. This rule would also amend present regulations to conform to statutory deletions and amendments.

Timetable:

Action	Date	FR Cite
NPRM	01/22/88	53 FR 1791
NPRM Comment Period End	03/22/88	53 FR 1791
Final Action	00/00/00	

Small Entity: No

Additional Information: INS Number 1037-88

Government Levels Affected: Federal

Agency Contact: Charles S. Thomason, Jr., Systems Accountant, Department of Justice, Immigration and Naturalization Service, 202 633-4705

RIN: 1115-AA81

1350. SPECIAL AGRICULTURAL WORKERS

Significance: Agency Priority

Legal Authority: PL 99-603; 100 Stat. 3359; 8 USC 1101 note; 8 USC 1301; 8 USC 1302; 8 USC 1303; 8 USC 1304; 8 USC 1305; 8 USC 1351; 8 USC 1443; 8 USC 1454; 8 USC 1455; 8 USC 1182; 8 USC 1252; 8 USC 1362; ...

CFR Citation: 8 CFR 103; 8 CFR 210; 8 CFR 242

Legal Deadline: None.

Abstract: This rule implements a new amendment to section 210 of the INA by deleting the entry cut-off date for eligibility to file applications under section 210 in the United States; and establishing standards and procedures for processing "preliminary applications" at designated ports of entry on the southern land border. This rule clarifies and makes various grammatical and technical amendments to the regulations governing the Special Agricultural Worker Program including changes necessitated by the new amendments to section 210. The rule defines the term "preliminary application"; deletes the limitation on the authority of District Directors to deny applications at legalization offices; deletes the filing date requirement for eligible aliens apprehended prior to the application period; clarifies the provision concerning where appeals under Part 210 are to be filed; deletes the references to issuance of an Order to Show Cause and Warrant of Arrest in cases where the United States Attorney declines prosecution; clarifies the provision requiring notification of decisions to the applicant's representative; confirms that Special Agricultural Worker (CONT)

Timetable:

Action	Date	FR Cite
Interim Final Rule	04/15/88	

Small Entity: No

Additional Information: INS Number 1101-88

ADDITIONAL ABSTRACT: (SAW) applicants are permitted to travel outside the United States and reenter upon the presentation of a valid unexpired Form I-688A; provides for eligible applicants to be issued the Temporary Resident Card at any Legalization Office; and, deletes the transitional admission.

Agency Contact: Aaron Bodin, Deputy Assistant Commissioner, Special Agricultural Workers (SAW), Department of Justice, Immigration and Naturalization Service, 202 786-3658

RIN: 1115-AA83

1351. CHANGE OF NONIMMIGRANT CLASSIFICATION

Legal Authority: PL 99-603; 8 USC 1101; 8 USC 1103; 8 USC 1184; 8 USC 1257; 8 USC 1258

CFR Citation: 8 CFR 248

Legal Deadline: Statutory, November 6, 1987. Effective date Pub. L. 99-603

Abstract: This rule change will implement section 312 of Pub. L. 99-603, the Immigration Reform and Control Act of 1986, to facilitate an application for a change to nonimmigrant (N) status while in the United States.

Timetable:

Action	Date	FR Cite
Interim Final Effective Date	11/06/86	52 FR 11621
Interim Final Rule	05/11/87	52 FR 11621
Final Action	00/00/00	

Small Entity: No

Additional Information: INS Number 1000-87

Government Levels Affected: Federal

Agency Contact: Thomas E. Cook, Senior Immigration Examiner, Department of Justice, Immigration and Naturalization Service, 202 633-5014

RIN: 1115-AA87

1352. CONTRACTS WITH TRANSPORTATION LINES

Legal Authority: 8 USC 1103; 8 USC 1228

CFR Citation: 8 CFR 238

Legal Deadline: None.

Abstract: This rule amends the listing of transportation lines which have entered into agreements with the INS for the preinspection of their passengers and crew at locations outside the United States.

Timetable:

Action	Date	FR Cite
Quarterly update of listing	03/00/88	
Quarterly update of listing	06/00/88	

Small Entity: No

Additional Information: INS Number 1041-87

Government Levels Affected: Federal

Agency Contact: Janet M. Charney, Assistant Chief Inspector, Department of Justice, Immigration and Naturalization Service, 202 633-2694

RIN: 1115-AA88

1353. ● REVISION OF REGULATIONS REGARDING THE SEIZURE AND FORFEITURE OF CONVEYANCES

Legal Authority: 8 USC 1103; 8 USC 1324(b)

CFR Citation: 8 CFR 274

DOJ—INS **Final Rule Stage**

Legal Deadline: None.

Abstract: The rule revises the extant regulations regarding conveyances seizures and forfeitures by the INS. It clarifies and amends the regulations to reflect changes in the authorizing statute, Section 274(b) on the Immigration and Nationality Act (8 USC 1324(b)), and applicable provisions of regulations of the Department of Justice in 28 CFR Part 9.

Timetable:

Action	Date	FR Cite
Final Action	06/30/88	

Small Entity: Not Applicable

Additional Information: INS Number 1061-87

Agency Contact: Karl D. Klauck, Associate General Counsel, Department of Justice, Immigration and Naturalization Service, 202 633-1260

RIN: 1115-AA95

1354. ● ADJUSTMENT OF STATUS FOR CERTAIN ALIENS

Legal Authority: PL 99-603; 100 Stat. 3359; 8 USC 1101, (Note); PL 100-204; 101 Stat. 1331

CFR Citation: 8 CFR 245(a)

Legal Deadline: None.

Abstract: This rule amends the regulations published in the Federal Register at 52 FR 16205 on May 1, 1987, and 52 FR 43843 published on November 17, 1987. The rule further provides for another class of eligible aliens, specifically, certain nationals of countries for which extended voluntary departure (EVD) was made available at any time during the 5 year period ending on November 1, 1987.

Timetable:

Action	Date	FR Cite
Interim Final Rule	05/31/88	
Comment period closes for Interim Rule (30 days following publication in the Federal Register)	07/01/88	

Small Entity: No

Additional Information: INS Number 1106-88

Agency Contact: Terrance M. O'Reilly, Deputy Assistant Commissioner, Department of Justice, Immigration and Naturalization Service, 202 786-3658

RIN: 1115-AA97

DEPARTMENT OF JUSTICE (DOJ) — Completed Actions

Immigration and Naturalization Service (INS)

1355. IMMIGRATION USER FEE

Significance: Regulatory Program

CFR Citation: 8 CFR 286

Completed:

Reason	Date	FR Cite
Final Action	02/26/88	53 FR 5756
Final Action Effective	03/28/88	

Small Entity: No

Agency Contact: Charles S. Thompson, Jr. 202 633-4705

RIN: 1115-AA30

1356. DOCUMENTARY REQUIREMENTS: NONIMMIGRANTS; WAIVERS; ADMISSION OF CERTAIN INADMISSIBLE ALIENS; PAROLE; JUDICIAL RECOMMENDATIONS AGAINST DEPORTATION; PROCEEDINGS TO DETERMINE DEPORTABILITY

Significance: Regulatory Program

CFR Citation: 8 CFR 212.3(a) & (b); 8 CFR 241.1(a) & (b); 8 CFR 242.2; 8 CFR 287.1(g) to (i); 8 CFR 287.7(a) to (f)

Completed:

Reason	Date	FR Cite
Final Action	03/22/88	53 FR 9281

Small Entity: No

Agency Contact: Walter D. Cadman 202 786-4502

RIN: 1115-AA34

1357. ADDITION OF NEW SERVICE OFFICE

CFR Citation: 8 CFR 204

Completed:

Reason	Date	FR Cite
Final Action	11/20/87	52 FR 44592
Final Action Effective	11/20/87	52 FR 44592

Small Entity: No

Agency Contact: Yolanda Sanchez-K 202 633-5014

RIN: 1115-AA49

1358. ADJUSTMENT OF STATUS; PERSONS ADMITTED FOR PERMANENT RESIDENCE

CFR Citation: 8 CFR 245

Completed:

Reason	Date	FR Cite
Final Action	09/15/87	52 FR 34764
Final Action Effective	09/15/87	52 FR 34764

Small Entity: No

Agency Contact: Joseph D. Cuddihy 202 633-3320

RIN: 1115-AA61

1359. NONIMMIGRANT CLASSES; REQUIREMENTS FOR ADMISSION, EXTENSION, AND MAINTENANCE OF STATUS

CFR Citation: 8 CFR 214

Completed:

Reason	Date	FR Cite
Final Action	11/30/87	52 FR 45445
Final Action Effective	12/30/87	52 FR 45445

Small Entity: No

Agency Contact: Michael L. Shaul 202 633-3946

RIN: 1115-AA69

1360. CONTROL OF EMPLOYMENT OF ALIENS

CFR Citation: 8 CFR 274a

Completed:

Reason	Date	FR Cite
Final Action	03/16/88	53 FR 8611

Small Entity: No

VOL 53 ISS 79 PT 1 AP 25 1988 UMI

Agency Contact: Walter D. Cadman 202 786-4502

RIN: 1115-AA71

1361. DOCUMENTARY REQUIREMENTS, NONIMMIGRANTS

CFR Citation: 8 CFR 212

Completed:

Reason	Date	FR Cite
Final Action	12/16/87	52 FR 48082

Small Entity: No

Agency Contact: Y. Peggy Wong 202 633-4033

RIN: 1115-AA74

1362. ● CHANGE IN PROCEDURE IN ASYLUM ADJUDICATIONS

Legal Authority: Operating Instruction 208.8(e); Operating Instruction 208.9(c)

CFR Citation: 8 CFR 208

Legal Deadline: None.

Abstract: The notice instructs Asylum adjudicators that in cases where they are unable to make a final decision without input from the Department of State, they are to pose specific questions which will be addressed by Bureau of Human Rights and Humanitarian Affairs (BHRHA).

Timetable:

Action	Date	FR Cite
Public Notice	02/02/88	53 FR 2693

Small Entity: No

Additional Information: INS Number 1059-88

Agency Contact: Ralph Thomas, Deputy Assistant Commissioner, Department of Justice, Immigration and Naturalization Service, 202 633-5463

RIN: 1115-AA94

1363. ● RESIDENCE, PHYSICAL PRESENCE AND ABSENCE

Legal Authority: 8 USC 1103; 8 USC 1427; 8 USC 1428; 8 USC 1443

CFR Citation: 8 CFR 316A

Legal Deadline: None.

Abstract: This rule adds African Medical and Research Foundation (AMREF-USA) to the list of recognized American institutes conducting research abroad.

Timetable:

Action	Date	FR Cite
Final Action	12/10/87	52 FR 46738

Small Entity: No

Additional Information: INS Number 1057-87

Agency Contact: Raymond Jaroneski, Jr., Senior Immigration Examiner, Department of Justice, Immigration and Naturalization Service, 202 633-5014

RIN: 1115-AA96

1364. ● DIRECT MAIL OF APPLICATIONS AND PETITIONS TO THE REGIONAL SERVICE CENTER IN SAN YSIDRO, CALIFORNIA

Legal Authority: 8 USC 1101; 8 USC 1103; 8 USC 1151; 8 USC 1153; 8 USC 1154; 8 USC 1182; 8 USC 1255; 31 USC 9701

CFR Citation: 8 CFR 103; 8 CFR 204

Legal Deadline: None.

Abstract: This notice establishes the Regional Service Center in San Ysidro, California as the one approved filing location for the applications and petitions described in this notice.

Timetable:

Action	Date	FR Cite
Final Action		53 FR 5479
Public Notice	02/24/88	53 FR 5479

Small Entity: No

Additional Information: INS Number 1104-88

Agency Contact: Lloyd Sutherland, Senior Immigration Examiner, Department of Justice, Immigration and Naturalization Service, 202 633-3946

RIN: 1115-AA98

1365. ● LEGALIZATION AND SPECIAL AGRICULTURAL WORKER APPLICANTS ASSISTANCE; QUALIFIED DESIGNATED ENTITY LISTING OF OUTREACH PROGRAM

Legal Authority: PL 99-603

CFR Citation: 8 CFR 245a; 8 CFR 210

Legal Deadline: None.

Abstract: The Immigration and Naturalization Service has certified 977 qualified designated entities (QDEs) to assist legalization and special agricultural worker applicants seeking temporary residence according to the provisions of the Immigration Reform and Control Act of 1986. This notice lists those QDEs.

Timetable:

Action	Date	FR Cite
Notice to the Public	11/20/87	52 FR 44812

Small Entity: Not Applicable

Additional Information: INS Number 1056-87

Agency Contact: E. B. Duarte, Jr., Director, Outreach Program, Department of Justice, Immigration and Naturalization Service, 202 633-4123

RIN: 1115-AA99

DEPARTMENT OF JUSTICE (DOJ)

Legal Activities (LA) — **Proposed Rule Stage**

1366. IMPLEMENTATION OF THE EQUAL ACCESS TO JUSTICE ACT IN DEPARTMENT OF JUSTICE ADMINISTRATIVE PROCEEDINGS

Legal Authority: 5 USC 504 Equal Access to Justice Act

CFR Citation: 28 CFR 24, (Revision)

Legal Deadline: None.

Abstract: The Equal Access to Justice Act was reauthorized on August 5, 1985. Various new amendments have been adopted which require revision of the procedures for applications for attorneys fees, eligible parties, and proceedings covered.

Timetable:

Action	Date	FR Cite
NPRM	04/15/88	
NPRM Comment Period End	07/15/88	
Final Action	10/00/88	

Small Entity: No

Affected Sectors: Multiple

DOJ—LA **Proposed Rule Stage**

Government Levels Affected: Local, Federal

Analysis: Regulatory Impact Analysis

Agency Contact: John Wilson, Associate General Counsel, Department of Justice, Legal Activities, 633 Indiana Ave., NW, Room 1268, Washington, DC 20531, 202 724-7792

RIN: 1105-AA05

DEPARTMENT OF JUSTICE (DOJ)
Office of Justice Programs (OJP)

Final Rule Stage

1367. EQUAL EMPLOYMENT OPPORTUNITY PROGRAM GUIDELINES

Legal Authority: 42 USC 3789d(c)

CFR Citation: 28 CFR 42.301

Legal Deadline: None.

Abstract: To change Departmental nomenclature to comply with nomenclature changes in the Justice Assistance Act of 1984 and eliminate references to Title IV of the Civil Rights Act of 1964 and Title IX of the Education Amendments of 1977 which are not specifically applicable.

Timetable:

Action	Date	FR Cite
Final Action	10/00/88	

Small Entity: No

Agency Contact: Winifred A. Dunton, Director, Office of Civil Rights Compliance, Department of Justice, Office of Justice Programs, 633 Indiana Avenue, NW, Room 1269, Washington, DC 20531, 202 724-7681

RIN: 1121-AA10

1368. NONDISCRIMINATION IN FEDERAL ASSISTED PROGRAMS – IMPLEMENTATION OF SECTION 809 (C) (1) OF THE JUSTICE ASSISTANCE ACT OF 1984

Legal Authority: 42 USC 3789d(c)

CFR Citation: 28 CFR 42.201

Legal Deadline: None.

Abstract: To change Departmental nomenclature to comply with nomenclature changes in the Justice Assistance Act of 1984 and eliminate references to Title VI of the Civil Rights Act of 1964 and Title IX of the Education Amendments of 1977 which are not specifically applicable.

Timetable:

Action	Date	FR Cite
Final Action	10/00/88	

Small Entity: No

Agency Contact: Winifred A. Dunton, Director, Office of Civil Rights Compliance, Department of Justice, Office of Justice Programs, 633 Indiana Avenue, NW, Room 1269, Washington, DC 20531, 202 724-7681

RIN: 1121-AA11

1369. CRIMINAL INTELLIGENCE SYSTEMS OPERATING POLICIES

Legal Authority: 42 USC 3789(g) (c) and (d)

CFR Citation: 28 CFR 23

Legal Deadline: None.

Abstract: To change Office and Bureau nomenclature to comply with changes resulting from the Justice Assistance Act of 1984, Pub. L. 98-473, and clarification of policy issues relating to time periods for validation of intelligence information.

Timetable:

Action	Date	FR Cite
NPRM	12/15/87	
NPRM Comment Period End	02/15/88	
Final Action	04/00/88	

Small Entity: No

Public Compliance Cost: Initial Cost: $0

Government Levels Affected: Local, State

Agency Contact: John Wilson, Associate General Counsel, Department of Justice, Office of Justice Programs, 633 Indiana Ave., NW, Rm. 1254-C, Washington, DC 20531, 202 724-7795

RIN: 1121-AA12

1370. ● CRIMINAL JUSTICE INFORMATION SYSTEMS

Legal Authority: 42 USC 3789g

CFR Citation: 28 CFR 20

Legal Deadline: None.

Abstract: To change Office and Bureau nomenclature to comply with changes resulting from the Justice Assistance Act of 1984, Pub. L. 98-473 and State and Local Law Enforcement Assistance Act of 1986, Pub. L. 99-570 Subtitle K, and deletion of obsolete terminology.

Timetable:

Action	Date	FR Cite
Final Action	05/00/88	

Small Entity: No

Agency Contact: John J. Wilson, Associate General Counsel, Department of Justice, Office of Justice Programs, 633 Indiana Ave., NW, Room 1254-C, Washington, DC 20531, 202 724-7795

RIN: 1121-AA13

[FR Doc. 88-5796 Filed 04-22-88; 8:45 am]

BILLING CODE 4410-01-T

VOL
53

ISS
79

PT
1

AP
25

1988

UMI

federal register

Monday
April 25, 1988

Part XII

Department of Labor

Semiannual Regulatory Agenda

DEPARTMENT OF LABOR (DOL)

DEPARTMENT OF LABOR

Office of the Secretary

20 CFR Chs. I, IV, V, VI, and VII

29 CFR Subtitle A and Chs. II, IV, V, XVII, and XXV

30 CFR Ch. I

41 CFR Ch. 60

48 CFR Ch. 29

Semiannual Agenda of Regulations

AGENCY: Office of the Secretary, Labor.

ACTION: Semiannual agenda of regulations selected for review or development.

SUMMARY: This document sets forth the Department's Semiannual Agenda of Regulations which has been selected for review or development during the coming one-year period. The agenda complies with the requirements of both Executive Order 12291 and the Regulatory Flexibility Act.

DATES: The agenda includes all regulations which are expected to be under review or development between April 1988 and April 1989.

FOR FURTHER INFORMATION CONTACT: Roland G. Droitsch, Deputy Assistant Secretary for Policy, Office of the Assistant Secretary for Policy, Department of Labor, 200 Constitution Avenue, NW., Room S-2312, Washington, DC 20210, (202) 523-9058.

Note: Information pertaining to a specific regulation can be obtained from the Agency Contact listed for that particular regulation.

SUPPLEMENTARY INFORMATION: Executive Order 12291 and the Regulatory Flexibility Act require the semiannual publication in the **Federal Register** of an agenda of regulations.

Executive Order 12291 became effective February 17, 1981, and in substance requires the Department of Labor to publish an agenda, listing all the regulations it expects to have under active consideration for promulgation, proposal or review during the coming one-year period. It also requires the Department to conduct a Regulatory Impact Analysis for all "major" regulations being developed.

The Regulatory Flexibility Act became effective on January 1, 1981. It applies only to regulations for which a notice of proposed rulemaking was issued on or after January 1, 1981, and requires the Department of Labor to publish an agenda, listing all the regulations it expects to propose or promulgate that are likely to have a "significant economic impact on a substantial number of small entities" (5 U.S.C. 602). For any regulation that will have this impact, the Department must conduct a Regulatory Flexibility Analysis to gauge the economic consequences of the rule, and to analyze the availability of more flexible approaches for lightening the rule's regulatory burden on "small entities."

If a proposed regulation will not have a "significant economic impact on a substantial number of small entities," the Department of Labor must publish a certification to that effect at the time of the general notice of proposed rulemaking or at the time of the publication of the final rule. That certification must be accompanied by a succinct statement explaining the reasons for the agency's determinations.

As permitted by law, the Department of Labor is combining this publication of its agendas under the Regulatory Flexibility Act and Executive Order 12291.

The regulatory reform process, of which the Unified Agenda is a part, continues to be an extremely valuable aid in the development of better regulations by the Department. We believe that our regulatory reform program has resulted in improved regulatory management, more clearly written regulations and significantly less burdensome regulations.

Further improvement is certainly needed, and we are constantly seeking new and innovative approaches in pursuit of this goal. All interested members of the public are invited and encouraged to let Departmental officials know how our regulatory reform process can be further improved and, of course, to participate in and comment on the review or development of the regulations listed on the agenda.

The Department of Labor's next semiannual agenda, under Executive Order 12291 and the Regulatory Flexibility Act, will be published in October 1988.

Ann McLaughlin,
Secretary of Labor.

Office of the Secretary—Final Rule Stage

Sequence Number	Title	Regulation Identifier Number
1371	Production or Disclosure of Information or Materials	1290-AA08

Office of the Secretary—Completed Actions

Sequence Number	Title	Regulation Identifier Number
1372	Right to Financial Privacy Act	1290-AA05
1373	Implementation of the Program Fraud Civil Remedies Act	1290-AA07

VOL 53 ISS 79 PT 1 AP 25 1988 UMI

DOL

Employment Standards Administration—Prerule Stage

Sequence Number	Title	Regulation Identifier Number
1374	Child Labor Regulations, Orders and Statements of Interpretation (ESA/W-H)	1215-AA09

Employment Standards Administration—Proposed Rule Stage

Sequence Number	Title	Regulation Identifier Number
1375	Government Contractors: Nondiscrimination and Affirmative Action Obligations (ESA/OFCCP)	1215-AA01
1376	Nondiscrimination and Affirmative Action Obligations for Disabled Veterans, Veterans of Vietnam Era, and Handicapped Workers (ESA/OFCCP)	1215-AA02
1377	Defining and Delimiting the Terms "Any Employee Employed in a Bona Fide Executive, Administrative, or Professional Capacity. . ." (ESA/W-H)	1215-AA14
1378	Claims for Compensation Under the Federal Employees' Compensation Act	1215-AA29
1379	Employment of Workers with Disabilities Under Special Certificates	1215-AA34
1380	Employment of Homeworkers in Certain Industries	1215-AA36
1381	Reporting System for Employment of Special Agricultural Workers	1215-AA48

Employment Standards Administration—Final Rule Stage

Sequence Number	Title	Regulation Identifier Number
1382	Labor Standards Provisions, Davis-Bacon and Related Acts (ESA/WH)	1215-AA07
1383	Labor Standards on Projects or Productions Assisted by Grants from the National Endowment for the Arts (ESA/W-H)	1215-AA35
1384	Labor Standards for Foreign Agricultural Workers	1215-AA43
1385	Migrant and Seasonal Agricultural Worker Protection	1215-AA44

Employment Standards Administration—Completed Actions

Sequence Number	Title	Regulation Identifier Number
1386	General Regulations Under the Walsh-Healey Public Contracts Act	1215-AA33
1387	Claims for Compensation Under the War Hazards Compensation Act	1215-AA42

Employment and Training Administration—Prerule Stage

Sequence Number	Title	Regulation Identifier Number
1388	Services to Migrant and Seasonal Farmworkers, Job Service Complaint System, Monitoring and Enforcement	1205-AA37
1389	Use of Funds Transferred to the States Under Section 903(c) of the Social Security Act (Reed Act)	1205-AA43
1390	Disaster Unemployment Assistance Program (DUA)	1205-AA50
1391	Refocus of the Public Employment Service	1205-AA63

DOL

Employment and Training Administration—Proposed Rule Stage

Sequence Number	Title	Regulation Identifier Number
1392	Airline Deregulation: Employee Benefit Program	1205-AA07
1393	Job Corps Program Under Title IV-B of the Job Training Partnership Act	1205-AA54
1394	Labor Surplus Area Program Population Criteria Change as Revised by PL 99-272	1205-AA62
1395	Federal-State Unemployment Compensation Program: Income and Eligibility Verification System	1205-AA64
1396	Advances to States and Repayment of Advances; Interest on Advances	1205-AA65
1397	Labor Certification Process for the Permanent Employment of Aliens in the United States	1205-AA66
1398	Implementation of the Worker Adjustment Legislation	1205-AA67
1399	Job Training Partnership Act - Amendment Concerning Fixed Unit Price Performance Based Contracts	1205-AA68

Employment and Training Administration—Final Rule Stage

Sequence Number	Title	Regulation Identifier Number
1400	Limitations on Tax Credit Reduction and Interest on Advances to States	1205-AA14
1401	Extended Unemployment Compensation Program Extended Benefits	1205-AA15
1402	Unemployment Compensation for Ex-Servicemembers	1205-AA26
1403	Senior Community Service Employment Program	1205-AA29
1404	Administrative Procedure	1205-AA46
1405	Job Training Partnership Act Audits	1205-AA53
1406	Preference in Federal Procurement For Labor Surplus Areas Under Executive Orders 12073 and 10582	1205-AA55
1407	Labor Certification Process for Temporary Employment of Alien Workers in Agriculture: The H-2A Program	1205-AA59
1408	Trade Adjustment Assistance for Workers	1205-AA61

Employment and Training Administration—Completed Actions

Sequence Number	Title	Regulation Identifier Number
1409	Implementation of Job Training Partnership Act Amendments of 1986	1205-AA60

Pension and Welfare Benefits Administration—Prerule Stage

Sequence Number	Title	Regulation Identifier Number
1410	"Top Hat" Plans	1210-AA21

Pension and Welfare Benefits Administration—Proposed Rule Stage

Sequence Number	Title	Regulation Identifier Number
1411	Adequate Consideration	1210-AA15
1412	Qualified Domestic Relations Orders Under the Retirement Equity Act	1210-AA19
1413	Procedures for Filing and Processing Applications for Exemption from the Prohibited Transaction Provisions of ERISA, the Internal Revenue Code, and FERSA	1210-AA26
1414	Amount Of Bond For FERS Thrift Savings Fund	1210-AA28
1415	Allocation of Fiduciary Responsibility (FERSA)	1210-AA30
1416	Final Bonding Rules (FERSA and ERISA)	1210-AA31
1417	Civil Penalties Under FERSA	1210-AA32
1418	Civil Penalty for Failure or Refusal to File Annual Report	1210-AA34

VOL 53 ISS 79 PT 1 APR 25 1988 UMI

DOL

Pension and Welfare Benefits Administration—Final Rule Stage

Sequence Number	Title	Regulation Identifier Number
1419	Individual Benefits Reporting and Recordkeeping for Multiple Employer Plans	1210-AA02
1420	Individual Benefits Reporting and Recordkeeping for Single Employer Plans	1210-AA03
1421	Participant Directed Individual Account Plans	1210-AA08
1422	Loans to Participants	1210-AA09
1423	Definition of "Plan Assets" (Participant Contributions) (Proposed at 44 FR 50363, August 28, 1979)	1210-AA16
1424	Procedures for the Administrative Imposition of Civil Sanctions Under Section 502(i) of the Employee Retirement Income Security Act of 1974 (ERISA)	1210-AA20
1425	Proposed Regulation Exempting Certain Broker-Dealers and Investment Advisers From Bonding Requirements	1210-AA25

Pension and Welfare Benefits Administration—Completed Actions

Sequence Number	Title	Regulation Identifier Number
1426	Adoption of Temporary Bonding Regulations Under ERISA Section 412 for Purposes Of FERSA Section 8478	1210-AA29

Office of Labor Management Standards—Proposed Rule Stage

Sequence Number	Title	Regulation Identifier Number
1427	Labor Organization Annual Financial Reports	1294-AA04

Office of Labor Management Standards—Completed Actions

Sequence Number	Title	Regulation Identifier Number
1428	General Statement Concerning the Election Provisions of the Labor-Management Reporting and Disclosure Act of 1959 Characteristics of Candidates	1294-AA02

Mine Safety and Health Administration—Prerule Stage

Sequence Number	Title	Regulation Identifier Number
1429	Diesel-Powered Equipment for Underground Coal Mines	1219-AA27
1430	Notification, Investigation, Reports and Records of Accidents Injuries, Illnesses, Employment, and Coal Production in Mines	1219-AA33
1431	Asbestos	1219-AA46
1432	Hazard Communication	1219-AA47

Mine Safety and Health Administration—Proposed Rule Stage

Sequence Number	Title	Regulation Identifier Number
1433	Pattern of Violations	1219-AA04
1434	Underground Coal Mine Electrical Standards	1219-AA10
1435	Review of Metal and Nonmetal Electrical Standards	1219-AA14

BEST COPY AVAILABLE

DOL

Mine Safety and Health Administration—Proposed Rule Stage—Continued

Sequence Number	Title	Regulation Identifier Number
1436	Review of Metal and Nonmetal Explosives Standards	1219-AA17
1437	Metal and Nonmetal Air Quality Standards	1219-AA21
1438	Certification and Qualification of Persons	1219-AA36
1439	Automatic Warning Devices for Mobile Equipment	1219-AA38
1440	Automatic Brakes on Self-Propelled Electric Face Equipment	1219-AA39
1441	Electric Mine Lamps Other Than Standard Cap Lamps	1219-AA40
1442	Coal Air Quality	1219-AA41
1443	Multiple-Shot Blasting Units	1219-AA42
1444	Rules of Practice for Petitions for Modification of Mandatory Safety Standards	1219-AA45

Mine Safety and Health Administration—Final Rule Stage

Sequence Number	Title	Regulation Identifier Number
1445	Procedures for Approval of Mining Equipment	1219-AA05
1446	Underground Coal Mine Ventilation	1219-AA11
1447	Explosives and Blasting in Underground Coal Mines	1219-AA16
1448	Safety Standards for Loading, Hauling and Dumping and Machinery and Equipment at Metal and Nonmetal Mines	1219-AA19
1449	Approval Requirements for Explosives and Sheathed Explosive Units	1219-AA23
1450	Metal and Nonmetal Radiation Standards	1219-AA28
1451	Approval Criteria for Respiratory Protective Devices	1219-AA30

Mine Safety and Health Administration—Completed Actions

Sequence Number	Title	Regulation Identifier Number
1452	Underground Coal Mine Roof Control	1219-AA13
1453	Safety Standards for Machinery and Equipment at Metal and Nonmetal Mines	1219-AA19
1454	Mine Plan Approvals	1219-AA26
1455	Surface Coal Mine Electrical Standards	1219-AA32
1456	Escapeways and Escape Facilities	1219-AA37
1457	Hands-on Training in SCSR's	1219-AA43

Office of the Assistant Secretary for Administration and Management—Proposed Rule Stage

Sequence Number	Title	Regulation Identifier Number
1458	Nondiscrimination in Programs and Activities Receiving Federal Financial Assistance from the Department of Labor	1291-AA02

Office of the Assistant Secretary for Administration and Management—Final Rule Stage

Sequence Number	Title	Regulation Identifier Number
1459	Guidelines for Nonprocurement Suspension and Debarment	1291-AA11

VOL 53 ISS 79 PT 1 APR 25 1988 UMI

DOL

Office of the Assistant Secretary for Administration and Management—Completed Actions

Sequence Number	Title	Regulation Identifier Number
1460	Department of Labor Acquisition Regulation (DOLAR) Implementation of Competition in Contracting Act of 1984 (CICA) (Pub. L. 98-369) into DOLAR	1291-AA06
1461	Public Contracts and Property Management; Federal Standards for Audit of Federally Funded Grants, Contracts and Agreements	1291-AA10
1462	Uniform Requirements for Grants to State and Local Governments (Implementation of OMB Circular A-102)	1291-AA12
1463	Uniform Relocation Assistance and Real Property Acquisition for Federal and Federally Assisted Programs	1291-AA14

Occupational Safety and Health Administration—Prerule Stage

Sequence Number	Title	Regulation Identifier Number
1464	Asbestos, Tremolite, Anthophyllite and Actinolite	1218-AA26
1465	Manual Lifting (Parts 1910, 1915, 1917, 1918, 1919, 1926 and 1928)	1218-AA95
1466	Medical Surveillance Programs for Employees	1218-AB00
1467	Exposure Monitoring Programs	1218-AB01

Occupational Safety and Health Administration—Proposed Rule Stage

Sequence Number	Title	Regulation Identifier Number
1468	Carcinogen Policy	1218-AA01
1469	Respiratory Protection	1218-AA05
1470	Methods of Compliance	1218-AA28
1471	Oil and Gas Well Drilling and Servicing (Part 1910)	1218-AA34
1472	Benzene	1218-AA47
1473	Fall Protection Systems (Personal Protective Equipment) (Part 1910)	1218-AA48
1474	Confined Space (Part 1910)	1218-AA51
1475	Logging (Part 1910)	1218-AA52
1476	Control of Hazardous Energy Sources (Lockout/Tagout) (Part 1910)	1218-AA53
1477	Safety and Health Regulations for Longshoring (Part 1918)	1218-AA56
1478	4,4'-Methylenedianiline	1218-AA58
1479	Electric Power Generation, Transmission and Distribution (Part 1910)	1218-AA59
1480	Pulp, Paper and Paperboard Mills (Part 1910)	1218-AA61
1481	Motor Vehicles, Mechanized Equipment, and Marine Operations (Part 1926)	1218-AA63
1482	Steel Erection (Part 1926)	1218-AA65
1483	Fall Protection (Part 1915)	1218-AA66
1484	Scaffolds (Part 1915)	1218-AA68
1485	Access and Egress (Part 1915)	1218-AA70
1486	Face, Head, Eye and Foot Protection (Personal Protective Equipment) (Part 1910)	1218-AA71
1487	Welding, Cutting and Brazing (Part 1910)	1218-AA72
1488	Welding, Cutting and Heating (Part 1915)	1218-AA73
1489	Personal Protective Equipment (Part 1915)	1218-AA74
1490	Compressed Air (Part 1926)	1218-AA76
1491	1,3-Butadiene	1218-AA83
1492	Glycol Ethers: 2-Methoxyethanol, 2-Ethoxyethanol and their Acetates	1218-AA84
1493	Explosive and Other Dangerous Atmospheres (Part 1915)	1218-AA91
1494	Gear Certification (Part 1919)	1218-AA97
1495	Methylene Chloride	1218-AA98
1496	Hazard Communication	1218-AB02
1497	Walking and Working Surfaces (Part 1910)	1218-AB04
1498	Bloodborne Infectious Diseases	1218-AB15
1499	Cadmium	1218-AB16
1500	Permissible Exposure Limit Update	1218-AB17
1501	Hazardous Materials (Part 1910)	1218-AB20
1502	Shipyard Employment: Phase II (Part 1915)	1218-AB22

DOL

Occupational Safety and Health Administration—Final Rule Stage

Sequence Number	Title	Regulation Identifier Number
1503	Occupational Exposures to Toxic Substances in Laboratories	1218-AA00
1504	Ethylene Dibromide (EDB)	1218-AA06
1505	Access to Employee Exposure and Medical Records	1218-AA15
1506	Concrete and Masonry Construction (Part 1926)	1218-AA20
1507	Electrical Safety-Related Work Practices (Part 1910)	1218-AA32
1508	Powered Platforms for Exterior Building Maintenance (Part 1910)	1218-AA33
1509	Excavations (Part 1926)	1218-AA36
1510	Fall Protection (Part 1926)	1218-AA37
1511	Underground Construction (Tunnels and Shafts)(Part 1926)	1218-AA38
1512	Scaffolds (Part 1926)	1218-AA40
1513	Crane or Derrick Suspended Platforms (Part 1926)	1218-AA45
1514	Stairways and Ladders (Part 1926)	1218-AA57
1515	Hazardous Waste Operations and Emergency Response (Part 1910)	1218-AB13
1516	Lead (Reconsideration of the Feasibility of Compliance in Nine Industry Sectors)	1218-AB18
1517	Asbestos Short Term Exposure Limit	1218-AB21

Occupational Safety and Health Administration—Completed Actions

Sequence Number	Title	Regulation Identifier Number
1518	Ethylene Oxide	1218-AA03
1519	Grain Handling Facilities (Parts 1910 and 1917)	1218-AA22
1520	Safety Testing/Certification (Part 1910)	1218-AA42
1521	Presence Sensing Device Initiation of Mechanical Power Presses (Part 1910)	1218-AA54
1522	Formaldehyde	1218-AA82
1523	Surface Preparation and Preservation (Part 1915)	1218-AA96

DEPARTMENT OF LABOR (DOL)

Office of the Secretary (OS)

Final Rule Stage

1371. ● PRODUCTION OR DISCLOSURE OF INFORMATION OR MATERIALS

Significance: Agency Priority

Legal Authority: 5 USC 552, as amended; EO 12600

CFR Citation: 29 CFR 70, (Revision)

Legal Deadline: Statutory, April 27, 1987.

Abstract: The document proposes regulations to implement the Freedom of Information Reform Act of 1986, which requires agencies to promulgate regulations on a schedule of fees and on fee waivers, and Executive Order 12600, which requires predisclosure notification to submitters of confidential business information. The proposal also revises the existing DOL Freedom of Information Act (FOIA) regulations, which currently include interpretive material on FOIA exemptions, to limit the scope principally to procedural matters.

Timetable:

Action	Date	FR Cite
NPRM	02/23/88	53 FR 5346
NPRM Comment Period End	03/24/88	
Final Action	07/00/88	

Small Entity: No

Agency Contact: Seth D. Zinman, Associate Solicitor for Legislation and, Legal Counsel, Department of Labor, Office of the Secretary, 200 Constitution Avenue, NW, Room N2428, FPBldg., Washington, DC 20210, 202 523-8201

RIN: 1290-AA08

DEPARTMENT OF LABOR (DOL)
Office of the Secretary (OS)

Completed Actions

1372. RIGHT TO FINANCIAL PRIVACY ACT

Legal Authority: 12 USC 3401 et seq Right to Financial Privacy Act of 1978

CFR Citation: 29 CFR 19, (New)

Legal Deadline: None.

Abstract: These proposed regulations would authorize Department of Labor units to request financial records from a financial institution pursuant to the formal written request procedure established by the Right to Financial Privacy Act of 1978, 12 U.S.C. 3401 et seq., and would set forth the conditions under which such requests may be made. Section 1108(2) of the Right to Financial Privacy Act of 1978 requires that the formal written request be authorized by regulations promulgated by the head of the agency or department. These proposed regulations would thus, once implemented, enable Department of Labor units to utilize the formal written request procedure to obtain financial records.

Timetable:

Action	Date	FR Cite
NPRM	04/02/85	50 FR 13049
NPRM Comment Period End	05/02/85	50 FR 13049
Final Action	12/22/87	52 FR 48419
Final Action Effective	01/21/88	52 FR 48419

Small Entity: No

Agency Contact: Seth D. Zinman, Associate Solicitor, for Legislation and Legal Counsel, Department of Labor, Office of the Secretary, 200 Constitution Ave., NW, Rm N2428, FPBldg., Washington, DC 20210, 202 523-8201

RIN: 1290-AA05

1373. IMPLEMENTATION OF THE PROGRAM FRAUD CIVIL REMEDIES ACT

Significance: Agency Priority

Legal Authority: 31 USC 3801 to 3812

CFR Citation: 29 CFR 22

Legal Deadline: Statutory, April 21, 1987. The Act requires agencies to have implementing regulations within 180 days of the passage of the statute.

Abstract: This regulation will implement the Program Fraud Civil Remedies Act of 1986 (PL 99-509, Secs. 6101 to 6104). Specifically, this part will (i) establish administrative procedures for imposing civil remedies and assessment against persons who make, submit, or present, or cause to be made, submitted, or presented, false, fictitious, or fraudulent claims or written statements to authorities or to their agents, and (ii) specify the hearing and appeal rights of persons subject to allegations of liability for such penalties and assessments.

Timetable:

Action	Date	FR Cite
NPRM	06/02/87	52 FR 20606
NPRM Comment Period End	07/02/87	52 FR 20606
Final Action	12/22/87	52 FR 48492
Final Action Effective	01/21/88	52 FR 48492

Small Entity: Undetermined

Agency Contact: Seth D. Zinman, Associate Solicitor for Legislation and, Legal Counsel, Department of Labor, Office of the Secretary, Office of the Solicitor, 200 Constitution Avenue, NW RM N2428, Washington, DC 20210, 202 523-8201

RIN: 1290-AA07

DEPARTMENT OF LABOR (DOL)
Employment Standards Administration (ESA)

Prerule Stage

1374. CHILD LABOR REGULATIONS, ORDERS AND STATEMENTS OF INTERPRETATION (ESA/W-H)

Significance: Regulatory Program

Legal Authority: 29 USC 203

CFR Citation: 29 CFR 570

Legal Deadline: None.

Abstract: Section 3(1) of the Fair Labor Standards Act requires the Secretary of Labor to issue regulations with respect to minors between 14 and 16 years of age ensuring that the periods and conditions of their employment do not interfere with their schooling, health, or well-being. The Secretary also is directed to designate occupations that may be particularly hazardous for minors between 16 and 18 years of age. Child Labor Regulation No. 3 sets forth the permissible industries and occupations in which 14 and 15 year olds may be employed. In addition, this regulation specifies the number of hours in a day and in a week, and time periods within a day that such minors may be employed. The nonagricultural hazardous occupations orders which prohibit the employment of minors in such occupations are also contained in 29 CFR 570. Changes in technology and job content over the years require a review of these regulations. In order to increase job opportunities for such minors, while maintaining essential protection for their well-being, modifications to these regulations may be needed. The Department has established a Child (cont)

Timetable:

Action	Date	FR Cite
Notice published--decision to establish Child Labor Advisory Committee	07/21/87	52 FR 27476
Notice published--announcing meetings of Committee on March 9-10, 1988	02/17/88	53 FR 4788

Next Action Undetermined

Small Entity: Undetermined

Additional Information: ABSTRACT CONT: Labor Advisory Committee to advise the Secretary on the effective administration of the child labor provisions of the FLSA. The recommendations of the committee will be given careful consideration in the review of these regulations.

Agency Contact: Paula V. Smith, Administrator, Wage and Hour Division, Department of Labor, Employment Standards Administration, 200 Constitution Avenue, NW, Rm

S3502, FPBldg., Washington, DC 20210, 202 523-8305

RIN: 1215-AA09

DEPARTMENT OF LABOR (DOL)
Employment Standards Administration (ESA)

Proposed Rule Stage

1375. GOVERNMENT CONTRACTORS: NONDISCRIMINATION AND AFFIRMATIVE ACTION OBLIGATIONS (ESA/OFCCP)

Significance: Regulatory Program

Legal Authority: EO 11246, as amended; 38 USC 2012; 29 USC 793; 29 USC 1781

CFR Citation: 41 CFR 60-1; 41 CFR 60-2; 41 CFR 60-4; 41 CFR 60-20; 41 CFR 60-30; 41 CFR 60-50; 41 CFR 60-60; 41 CFR 60-250; 41 CFR 60-741

Legal Deadline: Statutory, October 1, 1983. Rules implementing Section 481 of the 1982 JTPA (29 USC 1781). The operational aspects of such rules need to be coordinated with the pending revisions to the Executive Order 11246 program discussed above.

Abstract: These regulations cover nondiscrimination and affirmative action obligations of Federal contractors under Executive Order 11246, as amended, the Vietnam Era Veterans' Readjustment Assistance Act of 1974 (38 U.S.C. 2012), as amended, and Section 503 of the Rehabilitation Act of 1973, as amended. Proposed changes were published in the Federal Register on 12/28/79 and 2/22/80. The resulting final rule was published on 12/30/80 but its effective date was stayed pending review in accordance with President Reagan's Executive Order 12291 of 2/17/81. Subsequently, OFCCP published an ANPRM (7/14/81, supplemented 8/21/81) and a NPRM 8/25/81, supplemented 4/23/82). The NPRM also extended the suspension of the effective date of the 12/30/80 final rule. OFCCP's review of regulatory options continues, and includes consideration of proposed regulations to integrate the requirements of Section 481 of the Job Training Partnership Act of 1982 (29 U.S.C. 1781) with the Executive Order 11246 program.

Timetable:

Action	Date	FR Cite
ANPRM	07/14/81	46 FR 36213
Supplement to ANPRM	08/21/81	46 FR 42490
Previous NPRM & Suspend Eff Date	08/25/81	46 FR 42968
NPRM	04/23/82	47 FR 17770
NPRM	03/00/89	
Final Action	09/00/89	

Small Entity: Yes

Agency Contact: Leonard J. Biermann, Deputy Director, Office of Federal Contract, Compliance Programs, Department of Labor, Employment Standards Administration, 200 Constitution Ave., NW, Rm C3324, FPBldg., Washington, DC 20210, 202 523-9475

RIN: 1215-AA01

1376. NONDISCRIMINATION AND AFFIRMATIVE ACTION OBLIGATIONS FOR DISABLED VETERANS, VETERANS OF VIETNAM ERA, AND HANDICAPPED WORKERS (ESA/OFCCP)

Significance: Agency Priority

Legal Authority: 29 USC 793; 38 USC 2012

CFR Citation: 41 CFR 60-1; 41 CFR 60-250; 41 CFR 60-741

Legal Deadline: None.

Abstract: This proposal would, among other things, incorporate 1978 and 1980 statutory amendments to definitions applicable to Section 503 of the Rehabilitation Act and to the Veterans' programs. However, since 1981 there have been additional amendments to the Rehabilitation Act and to the Vietnam Era Veterans' Readjustment Assistance Act affecting definitions applicable under the respective programs. All such statutorily required changes to the definitions would be incorporated into the proposed regulatory action contemplated under RIN - 1215-AA01.

Timetable:

Action	Date	FR Cite
NPRM	12/30/80	45 FR 86205
NPRM Comment Period End	03/02/81	45 FR 86205
NPRM Second	03/00/89	
Final Action	09/00/89	

Small Entity: Undetermined

Agency Contact: Leonard J. Biermann, Deputy Director, Office of Federal Contract, Compliance Programs, Department of Labor, Employment Standards Administration, 200 Constitution Ave., NW, Rm C3324, FPBldg., Washington, DC 20210, 202 523-9475

RIN: 1215-AA02

1377. DEFINING AND DELIMITING THE TERMS "ANY EMPLOYEE EMPLOYED IN A BONA FIDE EXECUTIVE, ADMINISTRATIVE, OR PROFESSIONAL CAPACITY. . ." (ESA/W-H)

Significance: Regulatory Program

Legal Authority: 29 USC 213(a)(1)

CFR Citation: 29 CFR 541

Legal Deadline: None.

Abstract: These regulations set forth the criteria used in the determination of the application of the Fair Labor Standards Act exemption for "executive," "administrative," "professional" and "outside sales employees" from the minimum wage and overtime requirements of the Act. The existing regulation was targeted for review by the President's Task Force on Regulatory Relief. A final rule increasing the salary test criteria was published on 01/13/81 (46 FR 3010) and was scheduled to become effective on 02/13/81. On 02/12/81 (46 FR 11972) an indefinite stay of the final rule was published. On 03/27/81 (46 FR 18998) a proposal to suspend the final rule indefinitely was published with comments due by 04/28/81. As a result of numerous comments and petitions received from industry groups regarding the duties and responsibilities tests as set forth in the regulations, as well as recent case law developments, the Department concluded that a more comprehensive review of these regulations was needed and decided to reopen the comment period and broaden the scope of the review to include all aspects of the regulations.

An ANPRM was published on 11/19/85 and its comment period was (cont)

Timetable:

Action	Date	FR Cite
Indefinite Stay of Final Rule	02/12/81	46 FR 11972
Proposal to suspend rule indefinitely	03/27/81	46 FR 18998
Comments due on suspension proposal	04/28/81	46 FR 18998
ANPRM	11/19/85	50 FR 47696
Extension of ANPRM Comment Period from 01/21/86 to 03/22/86	01/17/86	51 FR 2525
ANPRM Comment Period End	03/22/86	51 FR 2525
NPRM	07/00/86	
Final Action	12/00/88	

Small Entity: Yes

Additional Information: ABSTRACT CONT: subsequently extended to 03/22/86. Action on this regulation was delayed due to other regulatory priorities.

Agency Contact: Paula V. Smith, Administrator, Wage and Hour Division, Department of Labor, Employment Standards Administration, Rm S3502, FPBldg, 200 Constitution Ave., NW, Washington, DC 20210, 202 523-8305

RIN: 1215-AA14

1378. ● CLAIMS FOR COMPENSATION UNDER THE FEDERAL EMPLOYEES' COMPENSATION ACT

Significance: Agency Priority

Legal Authority: 5 USC 8101 et seq.

CFR Citation: 20 CFR 10

Legal Deadline: None.

Abstract: Certain provisions of Final Rules published April 1, 1987, have been challenged as being promulgated in violation of the APA. Those sections deal with collection of forfeited compensation from on-going benefits. In order to ensure that any doubt as to the procedural validity of the rules is laid to rest, the Department has taken two actions: 1) publishing an interim final rule which reinstates the affected sections without the language which has been challenged; and 2) a proposed rule with an invitation to comment, which in effect would reinstate the April 1, 1987 rule but would assure that any defects in the comment period are corrected.

Timetable:

Action	Date	FR Cite
NPRM	04/07/88	53 FR 11596
Interim Final Rule (Reinstating Affected Sections)	04/07/88	53 FR 11594
NPRM Comment Period End	06/06/88	
Final Action	08/00/88	

Small Entity: No

Agency Contact: Thomas M. Markey, Associate Director for Federal Employees', Compensation, OWCP, Department of Labor, Employment Standards Administration, 200 Constitution Ave., NW, RM S3229 - FPBldg., Washington, DC 20210, 202 523-7552

RIN: 1215-AA29

1379. EMPLOYMENT OF WORKERS WITH DISABILITIES UNDER SPECIAL CERTIFICATES

Significance: Regulatory Program

Legal Authority: 29 USC 214; 29 USC 211

CFR Citation: 29 CFR 524; 29 CFR 525; 29 CFR 529

Legal Deadline: None.

Abstract: These regulations establish the terms and conditions, pursuant to section 14(c) of the Fair Labor Standards Act (FLSA), under which handicapped workers may be employed, under certificate, at wage rates less than those otherwise required by statute. The 1986 Amendments to the FLSA substantially revised section 14(c) to simplify worker certification by eliminating separate certification for more productive workers, multiple handicapped individuals, and those in evaluation or training and work activities centers. Three affected regulations (29 CFR 524, 525 and 529) will be combined into a single proposed new rule which will be published for public comments.

Timetable:

Action	Date	FR Cite
NPRM	04/00/88	
Final Action	08/00/88	

Small Entity: Yes

Agency Contact: Paula V. Smith, Administator, Wage and Hour Division, Department of Labor, Employment Standards Administration, 200 Constitution Ave., NW, RM S3502, FPBldg., Washington, DC 20210, 202 523-8305

RIN: 1215-AA34

1380. EMPLOYMENT OF HOMEWORKERS IN CERTAIN INDUSTRIES

Significance: Regulatory Program

Legal Authority: 29 USC 211

CFR Citation: 29 CFR 530

Legal Deadline: None.

Abstract: This regulation sets forth restrictions on industrial homework and governs the issuance of certificates authorizing the employment of homeworkers in certain industries, pursuant to Section 11(d) of the Fair Labor Standards Act (FLSA). As originally issued, these regulations restricted the employment of industrial homework in seven industries: knitted outerwear; women's apparel; jewelry; buttons and buckles; gloves and mittens; handkerchiefs; and embroideries. The ban was removed on homework in the knitted outerwear industry by the Department 11/9/81 following extensive hearings and public comment. This action was subsequently upheld by the District Court for the District of Columbia. However, on appeal the ban was reimposed 2/29/84 by the U.S. Court of Appeals for the District of Columbia Circuit. On 3/27/84 the Department published a proposed rule rescinding the ban on homework in the knitted outerwear industry only. In addition to soliciting comments on the proposed recission, the Department sought comments on various alternatives to such action (49 FR 11786). On November 5, 1984, a final rule was published lifting the ban on homework for employers (cont)

Timetable:

Action	Date	FR Cite
NPRM	06/21/86	51 FR 30036
NPRM Comment Period End	12/04/86	51 FR 37298
NPRM Second	03/30/88	53 FR 10342
NPRM Second – Comment Period End	04/29/88	
Final Action	07/00/88	

Small Entity: No

Additional Information: ABSTRACT CONT: in the knitted outerwear industry who obtain a certificate from the Department. Based on analysis of the results of its enforcement experience under the new certification procedure, the Department is proposing to rescind the remaining restrictions in the other industries for employers who currently obtain certificates. A Notice of Proposed Rulemaking was published on August 21, 1986 (51 FR 30036). A notice extending the comment period to December 4, 1986 was published on October 21, 1986 (51 FR 37298). Based on the review of the comments and the Department's further examination of enforcement experience in knitted outerwear, a new proposal was developed which includes enforcement mechanisms to enhance compliance among employers of homeworkers.

Agency Contact: Paula V. Smith, Administrator, Wage and Hour Division, Department of Labor, Employment Standards Administration, 200 Constitution Avenue, NW, Rm S3502, FPBldg., Washington, DC 20210, 202 523-8305

RIN: 1215-AA36

1381. ● REPORTING SYSTEM FOR EMPLOYMENT OF SPECIAL AGRICULTURAL WORKERS

Significance: Regulatory Program

Legal Authority: Immigration Reform and Control Act of 1986

CFR Citation: Not yet determined

Legal Deadline: Statutory, September 30, 1988.

Abstract: Section 210A(b)(2) of the Immigration Reform and Control Act (IRCA) of 1986, requires reports from any person or entity who employs in seasonal agricultural services, beginning with fiscal year 1989 and ending with fiscal year 1992, a special agricultural worker (SAW) whose status was adjusted to temporary residency under either Section 210 or 210A of IRCA. The employer is required to provide reports on the employment of SAWs and replacement agricultural workers (RAWs) in seasonal agricultural services to the Federal Government and to provide a certificate or report on such employment to individual RAWs, but not SAWs. Thus, the procedures for implementing the SAW reporting system must be in place by the beginning of fiscal year 1989, with the first reports required in fiscal year 1989 and the first reports to RAW workers, if any are admitted, required in fiscal year 1990. The person or entity reporting could be a farm operator, a farm labor contractor, an agricultural services firm or an operator of horticultural and juvenile tree nurseries. Seasonal agricultural services are defined by USDA regulations (cont)

Timetable:

Action	Date	FR Cite
NPRM	07/00/88	
Final Action	09/00/88	

Small Entity: No

Additional Information: ABSTRACT CONT: for seasonal labor is unpredictable, e.g., Christmas trees and hops. (See 52 FR 20372) labor is unpredictable, e.g., christmas trees and hops. (See 52 FR 20372)

Agency Contact: Mr. Gary Reed, Director, Office of Program Economics, Office of Policy, Department of Labor, Employment Standards Administration, 200 Constitution Avenue, NW, Room S2114, FPBldg., Washington, DC 20210, 202 523-6006

RIN: 1215-AA48

DEPARTMENT OF LABOR (DOL)

Employment Standards Administration (ESA)

Final Rule Stage

1382. LABOR STANDARDS PROVISIONS, DAVIS-BACON AND RELATED ACTS (ESA/WH)

Significance: Regulatory Program

Legal Authority: 40 USC 276a to 276a7; 40 USC 276c; 40 USC 327 to 332; 5 USC Appendix Reorganization Plan No. 14 of 1950; 29 USC 259

CFR Citation: 29 CFR 1; 29 CFR 5

Legal Deadline: None.

Abstract: These regulations govern labor standards applicable to federally funded or assisted construction contracts subject to the Davis- Bacon and Related Acts (as well as contracts subject to the Contract Work Hours and Safety Standards Act). The Department plans to implement provisions in these regulations that would permit contractors to expand their use of semi-skilled "helpers" on Davis-Bacon covered projects at wages lower than those paid to skilled journeymen. Revised final rules were originally published 05/28/82 (47 FR 23658), but were deferred on 07/26/82 (47 FR 32070) due to an injunction issued by the U.S. District Court. Although the U.S. Court of Appeals for the D.C. Circuit has since upheld most of the key provisions published in 1982, the district court injunction remains in effect against certain provisions dealing with helpers. The Department intends to implement the helper provisions in accordance with the decisions of the District and Appeals Courts. A revised proposal was published 08/19/87 (52 FR 31366), and the comment period was later extended to 11/18/87 (52 FR 38473).

Timetable:

Action	Date	FR Cite
NPRM	08/19/87	52 FR 31366
NPRM Comment Period End	11/18/87	52 FR 38473
Final Action	06/00/88	

Small Entity: Yes

Agency Contact: Paula V. Smith, Administrator, Wage and Hour Division, Department of Labor, Employment Standards Administration, 200 Constitution Ave., NW, Rm S3502, FPBldg., Washington, DC 20210, 202 523-8305

RIN: 1215-AA07

1383. LABOR STANDARDS ON PROJECTS OR PRODUCTIONS ASSISTED BY GRANTS FROM THE NATIONAL ENDOWMENT FOR THE ARTS (ESA/W-H)

Significance: Regulatory Program

Legal Authority: 20 USC 954(i) to (j); 20 USC 956 (g)

CFR Citation: 29 CFR 505

DOL—ESA **Final Rule Stage**

Legal Deadline: Statutory, June 18, 1986.

Abstract: The National Foundation on the Arts and Humanities Act of 1965, as amended in 1976, requires the Secretary to determine the prevailing minimum compensation for professional performers and related or supporting professional personnel employed on projects or productions assisted by grants from the National Endowment for the Arts and the National Endowment for the Humanities. As originally enacted, these labor standards only applied to the Arts; the existing regulations do not reflect the amendments which applied the same labor standards to the Humanities. The Arts, Humanities, and Museums Amendments of 1985, which were enacted on December 20, 1985, require the Secretary of Labor to issue regulations to assure that prevailing minimum compensation is provided to all professional performers and related or supporting professional personnel employed on projects or productions financed in whole or in part by the National Endowment for the Humanities.

Timetable:

Action	Date	FR Cite
NPRM	09/21/87	52 FR 35447
NPRM Comment Period End	10/21/87	
Final Action	05/00/88	

Small Entity: No

Agency Contact: Paula V. Smith, Administrator, Wage and Hour Division, Department of Labor, Employment Standards Administration, Room S3502, FPBldg., 200 Constitution Ave., NW, Washington, DC 20210, 202 523-8305

RIN: 1215-AA35

1384. LABOR STANDARDS FOR FOREIGN AGRICULTURAL WORKERS

Significance: Regulatory Program

Legal Authority: PL 99-603

CFR Citation: 29 CFR 501

Legal Deadline: Statutory, June 1, 1987.

Abstract: The Immigration Reform and Control Act of 1986 contains certain labor standards requirements for foreign agricultural workers employed under the H-2A foreign agricultural worker program, as well as for U.S. workers hired by employers who utilize foreign agricultural workers. The standards relate to pay, working conditions, housing, transportation and recruitment. The Employment Standards Administration will issue regulations that incorporate the labor standards issued by the Employment and Training Administration and set forth procedures for enforcement of these labor standards. (Note: Final action on these regulations has been delayed until we acquire experience in enforcing the statutory requirements applicable to temporary foreign agricultural workers.

Timetable:

Action	Date	FR Cite
NPRM	05/05/87	52 FR 16795
NPRM Comment Period End	05/19/87	52 FR 16795
Interim Final Rule	06/01/87	52 FR 20524
Final Action	10/00/88	

Small Entity: Undetermined

Agency Contact: Paula V. Smith, Administrator, Wage and Hour Division, Department of Labor, Employment Standards Administration, 200 Constitution Avenue, NW, Rm S3502, FPBldg., Washington, DC 20210, 202 523-8305

RIN: 1215-AA43

1385. MIGRANT AND SEASONAL AGRICULTURAL WORKER PROTECTION

Significance: Agency Priority

Legal Authority: 29 USC 1801 to 1872; PL 99-603

CFR Citation: 29 CFR 500

Legal Deadline: Statutory, June 1, 1987.

Abstract: The Immigration Reform and Control Act of 1986 amended the Migrant and Seasonal Agricultural Worker Protection Act (MSPA) in a number of areas concerning the recruitment and employment of illegal aliens. Certain changes to the existing MSPA regulations are needed to conform them to the amended Act. These statutory changes became effective June 1, 1987. In addition, minor clarifying changes will be made in certain definitions in the current regulations.

Timetable:

Action	Date	FR Cite
NPRM	05/06/87	52 FR 16859
NPRM Comment Period End	06/05/87	52 FR 16859
Final Action	06/00/88	

Small Entity: Undetermined

Agency Contact: Paula V. Smith, Administrator, Wage and Hour Division, Department of Labor, Employment Standards Administration, 200 Constitution Avenue, NW, Rm S3502, FPBldg., Washington, DC 20210, 202 523-8305

RIN: 1215-AA44

DEPARTMENT OF LABOR (DOL)

Employment Standards Administration (ESA)

Completed Actions

1386. GENERAL REGULATIONS UNDER THE WALSH-HEALEY PUBLIC CONTRACTS ACT

Legal Authority: 41 USC 38

CFR Citation: 41 CFR 50-201.101(b)

Legal Deadline: None.

Abstract: The proposed rule would revise the role of the Small Business Administration (SBA) in determining a small business concern's eligibility as a "manufacturer" or "regular dealer" under the Walsh-Healey Public Contracts Act (PCA). Current procedures for small businesses require SBA review of all contracting agency findings of ineligibility, as well as all protests which challenge an agency's findings of eligibility. SBA did not have an opportunity to comment when the current rules were first adopted following enactment of the 1977 Amendments to the Small Business Act (P.L. 95-89, 91 Stat. 561 (15 USC 637(b)(7)(B)). SBA believes its review authority under the Act is restricted to only executive branch agency findings of noneligibility under PCA, and has requested revisions to the regulations which would eliminate SBA review in

protest cases which challenge an agency's findings that a small business is eligible for award. Additional revisions requested by SBA would streamline the processing of cases between SBA and Wage Hour.

Timetable:

Action	Date	FR Cite
NPRM	03/13/87	52 FR 7892
Final Action	03/10/88	53 FR 7741
Final Action Effective	05/09/88	

Small Entity: Yes

Agency Contact: Paula V. Smith, Administrator, Wage and Hour Division, Department of Labor, Employment Standards Administration, Room S-3502, FP Building, Washington, DC 20210, 202 523-8305

RIN: 1215-AA33

1387. CLAIMS FOR COMPENSATION UNDER THE WAR HAZARDS COMPENSATION ACT

Significance: Agency Priority

Legal Authority: 42 USC 1701 et seq

CFR Citation: 20 CFR 61; 20 CFR 62

Legal Deadline: None.

Abstract: The War Hazards Compensation Act regulations have been reviewed and modifications made to (1) reflect amendments made to the Act which replaced the World War II frame of reference in the Act with language applicable to the current and future conditions faced by employees of contractors working in hazardous overseas locations; (2) simplify and clarify the requirements for filing a claim under the Act; and (3) remove unnecessary and repetitious sections in the existing regulations.

Timetable:

Action	Date	FR Cite
NPRM	06/01/87	52 FR 20536
NPRM Comment Period End	06/19/87	52 FR 27417
Final Action	02/06/88	53 FR 3678
Final Action Effective	04/08/88	53 FR 3678

Small Entity: Not Applicable

Agency Contact: Thomas M. Markey, Associate Director for Federal Employees', Compensation, OWCP, Department of Labor, Employment Standards Administration, 200 Constitution Ave., NW, Rm S3229 - FPBldg., Washington, DC 20210, 202 523-7552

RIN: 1215-AA42

DEPARTMENT OF LABOR (DOL)

Employment and Training Administration (ETA)

Prerule Stage

1388. SERVICES TO MIGRANT AND SEASONAL FARMWORKERS, JOB SERVICE COMPLAINT SYSTEM, MONITORING AND ENFORCEMENT

Significance: Regulatory Program

Legal Authority: 29 USC 49(k)

CFR Citation: 20 CFR 653; 20 CFR 658; 20 CFR 651

Legal Deadline: None.

Abstract: ETA is reviewing services to migrant and seasonal farmworkers under the Wagner-Peyser Act as a result of amendments to Wagner-Peyser under Title V of the Job Training Partnership Act. It is anticipated that an ANPRM and subsequent rulemaking may result.

Timetable:

Action	Date	FR Cite
ANPRM	12/00/88	

Small Entity: Undetermined

Government Levels Affected: State, Federal

Agency Contact: Thomas M. Bruening, Chief, Division of Foreign Labor, Certifications, Department of Labor, Employment and Training Administration, 200 Constitution Ave., NW, Rm N4456, FPBldg., Washington, DC 202103, 202 535-0163

RIN: 1205-AA37

1389. USE OF FUNDS TRANSFERRED TO THE STATES UNDER SECTION 903(C) OF THE SOCIAL SECURITY ACT (REED ACT)

Legal Authority: 26 USC 3304; 42 USC 1302; 42 USC 503; 42 USC 1103

CFR Citation: 20 CFR 601; 20 CFR 651; 20 CFR 652; 20 CFR 658; 41 CFR 29 to 70

Legal Deadline: None.

Abstract: This regulation sets out Reed Act requirements for States. It covers: restoration of Reed Act funds used to pay unemployment benefits; appropriation by the States and use of funds for administration; and disposition, reduced usage, and replacement of Reed Act-financed property. The regulation implements P.L. 97-248 and updates existing material issued as manuals. Alternatives being considered include: (1) Issuing a regulation, another type of directive, or nothing; (2) Limiting the scope of the regulation to areas involving compliance with Federal law or not limiting scope; and (3) which rules, if any, should be issued regarding the calculation of Reed Act balances, restorations of Reed Act funds, program income, and sales, other dispositions, and reduced usage of property acquired with Reed Act funds. Issuing a regulation will benefit grantees by reducing their uncertainty as to the applicable rules. No significant additional costs will result.

Timetable:

Action	Date	FR Cite
ANPRM	06/00/88	
ANPRM Comment Period End	07/00/88	
NPRM	10/00/88	
Final Action	01/00/89	

Small Entity: Not Applicable

Public Compliance Cost: Initial Cost: $5,000; Yearly Recurring Cost: $5,000; Base Year for Dollar Estimates: 1984

Affected Sectors: 94 Administration of Human Resource Programs

Government Levels Affected: State, Federal

Agency Contact: David Hansen, Chief, Division of Fiscal Policy, Department of Labor, Employment and Training Administration, 200 Constitution Avenue, NW, Room C5317, FPBldg., Washington, DC 20210, 202 535-8762

RIN: 1205-AA43

DOL—ETA **Prerule Stage**

1390. DISASTER UNEMPLOYMENT ASSISTANCE PROGRAM (DUA)

Significance: Agency Priority

Legal Authority: 42 USC 5177

CFR Citation: 20 CFR 625, (Revision)

Legal Deadline: None.

Abstract: A few technical amendments are necessary to update the DUA Final Regulations which were published September 26, 1977. A clarification is needed on the administration of DUA in the Virgin Islands. Also, the Canal Zone should be deleted from the eligible "States." The formula for computing DUA weekly benefit amounts needs to be simplified. The first week of DUA payable needs to be clarified and the appropriate share of Federal-State costs needs to be determined.

Timetable:

Action	Date	FR Cite
Next Action Undetermined		

Small Entity: No

Additional Information: Disaster Relief Act was not amended, therefore, no need to revise regulations. Significance policy decisions were put on hold that would have required changes.

Affected Sectors: None

Government Levels Affected: State, Federal

Agency Contact: Lorenzo Roberts, Unemployment Insurance Specialist, Department of Labor, Employment and Training Administration, 200 Constitution Avenue, NW, Rm C4514, FPBldg., Washington, DC 20210, 202 535-0309

RIN: 1205-AA50

1391. REFOCUS OF THE PUBLIC EMPLOYMENT SERVICE

Legal Authority: PL 97-300 Wagner-Peyser Act as amended by the JTPA

CFR Citation: 20 CFR 652; 20 CFR 653

Legal Deadline: None.

Abstract: In September 1986, the Department of Labor announced in the Federal Register its review of the public employment service, raising the concern of the employment service capability to meet the current and future labor market needs, particularly the labor market needs that will emerge in the year 2000. The announcement provided the public an opportunity to respond either orally at public meetings held in October, 1986 or in writing directly to the Department. The announcement described the concern of the questions concerning the purpose and role of the employment service. An analysis of the public response to the announcement, as well as other data available to the Department from other research, studies, and papers provides the basis for the Department to propose a refocus of the employment service to address current and emerging labor force trends. Regulations may be proposed to the extent needed, to either implement any new legislation that may emerge or to achieve the new direction.

Timetable:

Action	Date	FR Cite
Next Action Undetermined		

Small Entity: Undetermined

Agency Contact: Clayton J. Cottrell, Chief, Division of Planning and Operations, Department of Labor, Employment and Training Administration, 200 Constitution Avenue, NW, Rm N4456, FPBldg., Washington, DC 20210, 202 535-0192

RIN: 1205-AA63

DEPARTMENT OF LABOR (DOL)
Employment and Training Administration (ETA)

Proposed Rule Stage

1392. AIRLINE DEREGULATION: EMPLOYEE BENEFIT PROGRAM

Significance: Agency Priority

Legal Authority: 49 USC 1552

CFR Citation: 20 CFR 638

Legal Deadline: None.

Abstract: These regulations are being developed to implement the benefit provisions contained in Sec. 43 of the Airline Deregulation Act of 1978. The Act requires the Secretary of Labor to specify the percentage of prior salary which an "eligible protected employee" would receive as a benefit payment under the Act. An eligible protected employee is a person who has had at least 4 years of employment with a certificated air carrier as of October 24, 1978 and who loses his or her job during the ten years following such date in a bankruptcy or major employment contraction if and only if the Department of Transportation determines that the principal causes of such job loss was deregulation. On May 17, 1984 the U.S. District Court for the District of Columbia held that Section 43 of the Airline Deregulation Act was unconstitutional. On July 16, 1985, the U.S. Court of Appeals decided that the employee protection provisions of Section 43 were severable from the legislative veto provisions. The U.S. Supreme Court ruled on March 25, 1987 that the legislative veto provisions were unconstitutional but the first right-to-hire provisions were constitutional, therefore, rulemaking can proceed on the (Cont'd)

Timetable:

Action	Date	FR Cite
NPRMPrevious	03/30/79	44 FR 19146
NPRM First right of hire	09/17/82	47 FR 41304
Comments due First right of hire NPRM	10/18/82	
NPRM	06/00/88	
NPRM Comment Period End	09/00/88	
Final Action	06/00/89	

Small Entity: No

Additional Information: ABSTRACT (CONT'D): monetary benefit aspects of the employee protection provisions.

Government Levels Affected: State, Federal

Agency Contact: Lorenzo Roberts, Unemployment Insurance Specialist, Department of Labor, Employment and Training Administration, 200 Constitution Avenue, NW, Rm C4514, FPBldg., Washington, DC 20210, 202 535-0309

RIN: 1205-AA07

1393. JOB CORPS PROGRAM UNDER TITLE IV-B OF THE JOB TRAINING PARTNERSHIP ACT

Legal Authority: 29 USC 1579

CFR Citation: 20 CFR 684

Legal Deadline: None.

Abstract: The regulations will revise and streamline the existing rules for the Job Corps program. These changes will not create new cost nor materially change the existing program. The new rules will be in compliance with Title IV-B of the Job Training Partnership Act.

Timetable:

Action	Date	FR Cite
NPRM	06/00/88	
NPRM Comment Period End	07/00/88	
Final Action	12/00/88	

Small Entity: Undetermined

Agency Contact: Peter E. Rell, Director, Office of Job Corps, Department of Labor, Employment and Training Administration, 200 Constitution Avenue, NW, Rm N4508, FPBldg., Washington, DC 20210, 202 535-0550

RIN: 1205-AA54

1394. LABOR SURPLUS AREA PROGRAM POPULATION CRITERIA CHANGE AS REVISED BY PL 99-272

Significance: Agency Priority

Legal Authority: EO 12073; EO 10582; PL 95-93; PL 95-302; PL 99-272

CFR Citation: 20 CFR 654

Legal Deadline: Statutory, July 7, 1986.

Abstract: The Consolidated Omnibus Budget Reconciliation Act of 1985 (Public Law 99-272) Section 18003 amended the Small Business Act to require the Secretary of Labor to reduce the population criteria for labor surplus areas from fifty-thousand to twenty-five thousand. Section 18003 of Public Law 99-272 became effective on July 7, 1986. The Department of Labor is in the process of implementing the new requirements of the Law but such data did not exist for such areas on a monthly basis at the time Public Law 99-272 was enacted. Implementation has, therefore, been hampered while the data for hundreds of areas were being developed on a monthly basis going back to January 1984.

Timetable:

Action	Date	FR Cite
Next Action Undetermined		

Small Entity: Undetermined

Government Levels Affected: Federal

Agency Contact: Clayton J. Cottrell, Chief, Division of Planning and Operations, Department of Labor, Employment and Training Administration, 200 Constitution Avenue, N.W., Rm N4456, FPBldg., Washington, DC 20210, 202 535-0182

RIN: 1205-AA62

1395. FEDERAL-STATE UNEMPLOYMENT COMPENSATION PROGRAM: INCOME AND ELIGIBILITY VERIFICATION SYSTEM

Significance: Regulatory Program

Legal Authority: 42 USC 1302

CFR Citation: 20 CFR 603, (Revision)

Legal Deadline: None.

Abstract: The Employment and Training Administration proposes to amend the regulations at 20 CFR 603, Income and Eligibility Verification System. The amendment will permit access to the State unemployment insurance information by the Federal Parent Locator Service for the purpose of child support enforcement.

Timetable:

Action	Date	FR Cite
NPRM	07/00/88	
NPRM Comment Period End	08/00/88	
Final Action	04/00/89	

Small Entity: No

Additional Information: Levels of Government Affected - State and the Federal Parent Locator Service

Government Levels Affected: State, Federal

Agency Contact: Barbara Ann Farmer, Director, Office of Program Management, Unemployment Insurance Service, Department of Labor, Employment and Training Administration, 200 Constitution Avenue, NW, Rm C4512, FPBldg., Washington, DC 20210, 202 535-0610

RIN: 1205-AA64

1396. ● ADVANCES TO STATES AND REPAYMENT OF ADVANCES; INTEREST ON ADVANCES

Significance: Regulatory Program

Legal Authority: 42 USC 1321; 42 USC 1322

CFR Citation: 20 CFR 606

Legal Deadline: None.

Abstract: Since 1981, the Congress has enacted major changes in the Federal Unemployment Tax Act (FUTA) and Social Security Act (SSA) with respect to advances to States for the payment of unemployment benefits and the repayment of such advances. A Notice of Proposed Rulemaking governing relief provisions only was published in the Federal Register on October 28, 1987. This proposed rule will address the accrual and repayment of interest associated with advances. States applying for advances will be given formal procedures and guidance to follow in the loan application and repayment process as well as the interest payment process. To date, UIPLs have been issued to SESAs describing the process.

Timetable:

Action	Date	FR Cite
NPRM	11/00/88	
NPRM Comment Period End	12/00/88	
Final Action	06/00/89	

Small Entity: No

Agency Contact: James H. Manning, Chief, Division of Actuarial Services, Unemployment Insurance Service, Department of Labor, Employment and Training Administration, 200 Constitution Avenue, NW, Room S4519, FPBldg., Washington, DC 20210, 202 535-0604

RIN: 1205-AA65

1397. ● LABOR CERTIFICATION PROCESS FOR THE PERMANENT EMPLOYMENT OF ALIENS IN THE UNITED STATES

Significance: Regulatory Program

Legal Authority: 8 USC 1182(a)(14)

CFR Citation: 20 CFR 656

Legal Deadline: None.

Abstract: Experience in administering the regulations relating to the certification of immigrant aliens for permanent employment in the United

States indicates that a number of changes should be made to these regulations. The proposed amendments would be intended to make labor certification process more efficient, to prevent abuse or manipulation of the labor certification process, to clarify some apparent ambiguities in the regulations, and to make the regulations easier to read. Before the Department of State (DOS) and the Immigration and Naturalization Service (INS) may issue visas and admit certain immigrant aliens to work permanently in the United States, the Secretary of Labor pursuant to section 212(a)(14) of the Immigration and Naturalization Act (INA) must certify to the Secretary of State and to the Attorney General that: (a) There are not sufficient United States workers who are able, willing, qualified and available at the time of the application for a visa and admission into the United States and at the place where the alien is to perform work; and (cont)

Timetable:

Action	Date	FR Cite
NPRM	06/00/88	
NPRM Comment Period End	07/00/88	
Final Action	12/00/88	

Small Entity: Undetermined

Additional Information: ABSTRACT CONT: (b) The employment of the alien will not adversely affect the wages and working conditions of similarly employed U.S. workers (8 USC 1182(a)(14). The Department of Labor (DOL) has promulgated regulations at 20 CFR Part 656 pursuant to and to implement section 212(a)(14) of the INA (8 USC 1182(a)(14). These regulations set forth the fact finding process designed to support the granting or denial of a permanent labor certification.

Agency Contact: Thomas M. Bruening, Chief, Division of Foreign Labor, Certification, Department of Labor, Employment and Training Administration, 200 Constitution Avenue, NW, Room N4456, FPBldg., Washington, DC 20210, 202 535-0163

RIN: 1205-AA66

1398. ● IMPLEMENTATION OF THE WORKER ADJUSTMENT LEGISLATION

Significance: Regulatory Program

Legal Authority: 29 USC 1501

CFR Citation: 20 CFR 631

Legal Deadline: None.

Abstract: In early 1987, the President proposed legislation for a new Worker Readjustment Program to respond to dislocations caused by plant closings, mass layoffs, international competition and technological change. The Congress, in conference, is considering worker readjustment legislation as a replacement for the Job Training Partnership Act (JTPA) Title III program for dislocated workers. The Department anticipates enactment in 1988. The new program will incorporate several important new changes. Among these changes are: (1) institutionalizing a State rapid response capability, (2) changing delivery system to mandate the designation of substate grantees, (3) focusing on better resource utilization through reallotment and reallocation provisions, (4) greater emphasis on training in innovative features such as certificates of continuing eligibility and individual vouchers for training. In addition, greater emphasis will be placed upon coordination and linkages among major training and employment program components such as the public employment service, the UI and TAA programs.

Timetable:

Program

NPRM 11/00/88

Interim Final Rule 02/00/89

Substate Designation

NPRM 10/00/88

Interim Final Rule 12/00/88

Small Entity: No

Agency Contact: Robert N. Colombo, Director, Office of Employment Training, Programs, Department of Labor, Employment and Training Administration, 200 Constitution Avenue, NW, Room N4469, FPBldg., Washingto, DC 20210, 202 535-0577

RIN: 1205-AA67

1399. ● JOB TRAINING PARTNERSHIP ACT - AMENDMENT CONCERNING FIXED UNIT PRICE PERFORMANCE BASED CONTRACTS

Significance: Regulatory Program

Legal Authority: Not Yet Determined

CFR Citation: 20 CFR 629, (Revision)

Legal Deadline: None.

Abstract: On October 13, the President signed into law the Job Training Partnership Act (JTPA) Amendments of 1986. In an Advance Notice of Proposed Rulemaking of January 16, 1987, the Department indicated that, in addition to proposed rules for the JTPA Amendments of 1986, it would review fixed-unit price performance- based contracting to determine the need for regulatory revision. The Department has completed this review with the resulting determination of the need for regulatory revision in this area. Proposed regulatory revisions will be published as a final rule around the latter part of 1988. The revisions will deal with the following critical areas: (1) the definition of the term "training" for the purposes of 20 CFR 629.38(a)(2) the allocation of charges among the several cost categories of the final elements of performance--"placement in unsubsidized employment in the occupation trained for, and at the specific wage"--do not occur; (3) clarification regarding the generation of profits and the use of such profits by contractors and/or (4) the practice of making incremental payments to contractors for achieving interim performance benchmarks rather than full performance.

Timetable:

Action	Date	FR Cite
NPRM	11/00/88	
NPRM Comment Period End	12/00/88	
Final Action	02/00/89	

Small Entity: No

Agency Contact: Mr. Robert N. Colombo, Director, Office of Employment and Training, Programs, Department of Labor, Employment and Training Administration, 200 Constitution Avenue, NW, Room N4469, FPBldg., Washington, DC 20210, 202 535-0577

RIN: 1205-AA68

DEPARTMENT OF LABOR (DOL)

Final Rule Stage

Employment and Training Administration (ETA)

1400. LIMITATIONS ON TAX CREDIT REDUCTION AND INTEREST ON ADVANCES TO STATES

Significance: Regulatory Program

Legal Authority: 26 USC 3302; 42 USC 1302; PL 97-35, Sec 2406

CFR Citation: 20 CFR 606, (New)

Legal Deadline: None.

Abstract: The Omnibus Budget Reconciliation Act of 1981 amended the tax credit provisions of FUTA to authorize the placing of a "cap" on reductions in tax credits on a State-by-State basis in certain prescribed circumstances. The amendment requires these determinations to be made in accordance with regulations prescribed by the Secretary of Labor. The same Act also amended Title XII of the Social Security Act to assess interest on advances to States, the payment of which is prohibited from State unemployment funds. The proposal would implement these statutory changes.

Timetable:

Action	Date	FR Cite
NPRM	10/28/87	52 FR 41463
NPRM Comment Period End	11/27/87	52 FR 41463
Final Action	07/00/88	

Small Entity: No

Government Levels Affected: State, Federal

Agency Contact: James Manning, Chief, Division of Actuarial Services, Department of Labor, Employment and Training Administration, 200 Constitution Avenue, NW, Rm S4519, FPBldg., Washington, DC 20210, 202 535-0504

RIN: 1205-AA14

1401. EXTENDED UNEMPLOYMENT COMPENSATION PROGRAM EXTENDED BENEFITS

Significance: Regulatory Program

Legal Authority: 26 USC 3304 Note; 42 USC 1302

CFR Citation: 20 CFR 615

Legal Deadline: None.

Abstract: These regulations would be amended to implement various statutory amendments of 1980, 1981, 1982, and 1983 to the Federal-State Extended Unemployment Compensation Act of 1970. The regulations would (1) provide for the denial of extended benefits to certain interstate claimants and to individuals who fail to actively engage in seeking work or refuse to accept an offer of suitable work, (2) provide for the purging of certain disqualifications in order to establish eligibility for extended benefits, and (3) establish the method of determining the rate of insured unemployment for extended benefit claims, the State trigger rates and removal of the National trigger.

Timetable:

Action	Date	FR Cite
NPRM	10/24/86	51 FR 37741
NPRM Comment Period End	11/24/86	51 FR 37741
Final Action	05/00/88	

Small Entity: Undetermined

Government Levels Affected: State, Federal

Agency Contact: Lorenzo Roberts, Unemployment Insurance Specialist, Department of Labor, Employment and Training Administration, 200 Constitution Avenue, NW, Rm C4514, FPBldg., Washington, DC 20210, 202 535-0309

RIN: 1205-AA15

1402. UNEMPLOYMENT COMPENSATION FOR EX-SERVICEMEMBERS

Significance: Regulatory Program

Legal Authority: 5 USC 8508; 5 USC 8521 to 8525

CFR Citation: 20 CFR 614

Legal Deadline: None.

Abstract: Section 201 of Public Law 97-362 (Miscellaneous Revenue Act of 1982) amends the eligibility requirements for unemployment compensation for ex-servicemembers. The proposed regulations would implement these new requirements.

Timetable:

Action	Date	FR Cite
NPRM	12/09/87	52 FR 46604
NPRM Comment Period End	01/08/88	52 FR 46604
Final Action	08/00/88	

Small Entity: No

Government Levels Affected: State, Federal

Agency Contact: Lorenzo Roberts, Unemployment Insurance Specialist, Department of Labor, Employment and Training Administration, 200 Constitution Avenue, NW, Rm C4514, FPBldg., Washington, DC 20210, 202 535-0309

RIN: 1205-AA26

1403. SENIOR COMMUNITY SERVICE EMPLOYMENT PROGRAM

Significance: Regulatory Program

Legal Authority: 42 USC 3056 et seq, Older Americans Community Svcs Employ Act

CFR Citation: 20 CFR 674

Legal Deadline: Statutory, May 8, 1985. P.L. 98-459, Section 205(c)

Abstract: The regulations will revise and update the existing rules for the Senior Community Service Employment Program. These changes will not create new cost nor materially change the existing program. However, the new rules will place the program in compliance with the 1984 Amendments to the Older Americans Act.

Timetable:

Action	Date	FR Cite
NPRM	07/19/85	50 FR 29606
NPRM Comment Period End	08/27/85	50 FR 34725
Extension of Comment Period to 9/19/85	08/27/85	50 FR 34725
Final Action	00/00/00	

Small Entity: No

Agency Contact: Paul A. Mayrand, Director, Office of Special Targeted, Programs, Department of Labor, Employment and Training Administration, 200 Constitution Avenue, NW, Rm N4641, FPBldg., Washington, DC 20210, 202 535-0500

RIN: 1205-AA29

1404. ADMINISTRATIVE PROCEDURE

Significance: Regulatory Program

Legal Authority: 42 USC 1302

CFR Citation: 20 CFR 601.9, (Revision)

Legal Deadline: None.

Abstract: The regulation will provide States with administrative appeal rights before the Office of Administrative Law Judges for final determinations disallowing costs or imposing corrective actions as a result of all audits in the Federal-State unemployment benefit and allowance programs. Currently, no

VOL 53 ISS 79 PT 1 AP 25 1988 UMI

such appeal rights exist and if a State seeks review of one of the above actions the only appeal forum is the Federal Court. Provision of these appeal rights before the Office of Administrative Law Judges should reduce the workload of the Federal Court system and allow the Department of Labor adjudicate the issues in a more informal setting with the Administrative Law Judges, who are more accustomed to dealing with the particular issues involved. The regulation will also correct what is perceived as an inequity, since most Employment and Training Administration programs have administrative appeal rights.

Timetable:

Action	Date	FR Cite
NPRM	06/10/86	51 FR 20991
NPRM Comment Period End	07/10/86	51 FR 20991
Final Action	09/00/88	

Small Entity: No

Additional Information: A Department of Labor Inter-Agency Task Force established to implement the Single Audit Act has decided that all Department of Labor programs shall have some type of appeal rights within the Department of Labor. The Office of the Assistant Secretary for Employment and Training Administration decided that appeal rights for all Employment and Training Administration programs shall be provided by the Office of Administrative Law Judges.

Government Levels Affected: State, Federal

Agency Contact: Linda D. Kontnier, Chief, Division of Debt Management, Department of Labor, Employment and Training Administration, 200 Constitution Avenue, NW, Rm N4671, FPBldg., Washington, DC 20210, 202 535-0704

RIN: 1205-AA46

1405. JOB TRAINING PARTNERSHIP ACT AUDITS

Significance: Agency Priority

Legal Authority: Section 164 Job Training Partnership Act; Section 169 Job Training Partnership Act

CFR Citation: 20 CFR 629.42

Legal Deadline: None.

Abstract: Governors are responsible for resolving audits of their JTPA subgrantees and subcontractors. Current ETA policy requires federal review and approval of these resolutions only in cases of fraud, gross mismanagement and abuse. More routine audit resolutions are only reviewed on a sample basis during onsite compliance reviews. However, a recent legal opinion stated that the JTPA regulations as presently written could be construed as requiring federal review and approval of all Governors' audit resolutions. The regulations may have to be amended in order to implement ETA's policy.

Timetable:

Action	Date	FR Cite
Final Action	00/00/00	

Small Entity: No

Affected Sectors: None

Government Levels Affected: State, Federal

Agency Contact: David O. Williams, Administrator, Office of Financial and Administrative Management, Department of Labor, Employment and Training Administration, 200 Constitution Avenue, NW, Rm N4671, FPBldg., Washington, DC 20210, 202 535-0690

RIN: 1205-AA53

1406. PREFERENCE IN FEDERAL PROCUREMENT FOR LABOR SURPLUS AREAS UNDER EXECUTIVE ORDERS 12073 AND 10582

Significance: Regulatory Program

Legal Authority: EO 12073; EO 10582

CFR Citation: 20 CFR 654.5(b)

Legal Deadline: None.

Abstract: Currently the Department of Labor only classifies civil jurisdictions (counties, cities over 50,000 population as well as townships and towns in certain selected States) as labor surplus areas. This policy has resulted in some employment centers in the nation's large metropolitan areas not being classified as labor surplus areas, even though the entire Metropolitan Statistical Areas or Primary Metropolitan Statistical Areas would meet the labor surplus area criteria if such geographic areas were classified. The proposed rule would grant the Assistant Secretary for Employment and Training the authority to classify Metropolitan Statistical Areas and Primary Metropolitan Statistical Areas as labor surplus areas to help alleviate unemployment in these areas. The change will add some additional labor surplus areas to the current list but it will not increase the funds going to such designated areas.

Timetable:

Action	Date	FR Cite
NPRM	07/24/86	51 FR 26555
NPRM Comment Period End	08/25/86	51 FR 26555
Final Action	06/00/88	

Small Entity: No

Agency Contact: Robert A. Schaerfl, Director, United States Employment Service, Department of Labor, Employment and Training Administration, 200 Constitution Ave., NW, Rm N4470 FPBldg., Washington, DC 20210, 202 535-0157

RIN: 1205-AA55

1407. LABOR CERTIFICATION PROCESS FOR TEMPORARY EMPLOYMENT OF ALIEN WORKERS IN AGRICULTURE: THE H-2A PROGRAM

Significance: Regulatory Program

Legal Authority: 8 USC 1101(a)(15)(H)(ii)(a)

CFR Citation: 20 CFR 655

Legal Deadline: Statutory, June 1, 1987.

Abstract: The regulation will implement the new H-2A program created by the Immigration Reform and Control Act of 1986 (IRCA). IRCA established H-2A as a new nonimmigrant subcategory for the admission of Foreign Temporary Agricultural Workers.

Timetable:

Action	Date	FR Cite
NPRM	05/05/87	52 FR 16770
NPRM Comment Period End	05/19/87	52 FR 16770
Interim Final Rule	06/01/87	52 FR 20496
Final Action	10/00/88	

Small Entity: Undetermined

Agency Contact: Thomas M. Bruening, Chief, Division of Foreign Labor, Certification, Department of Labor, Employment and Training Administration, 200 Constitution Avenue, NW, Rm N4456, FPBldg., Washington, DC 20210, 202 535-0153

RIN: 1205-AA59

VOL 53 ISS 79 PT 1 AP 25 1988 UMI

DOL—ETA **Final Rule Stage**

1408. TRADE ADJUSTMENT ASSISTANCE FOR WORKERS

Significance: Regulatory Program

Legal Authority: PL 99-272 Consolidated Omnibus Budget Reconciliation Act (1985)

CFR Citation: 20 CFR 617

Legal Deadline: None.

Abstract: These regulations implement PL 99-272, enacted on April 7, 1986, which amended the trade adjustment assistance provisions of the Trade Act of 1974, by extending the program for six (6) years to September 30, 1991; requiring participation in a job search program, where reasonably available, as a condition for receiving TRA payments; changing the number of weeks of employer authorized leave credited to satisfy the 26 weeks of employment in the last 52 weeks to qualify for TRA; extending the period to receiving basic TRA from 52 weeks to 104 weeks (no increase in the number of weeks payable); and making other changes.

Timetable:

Action	Date	FR Cite
NPRM	10/22/87	52 FR 39586
NPRM Comment Period End	11/23/87	52 FR 39586
Final Action	06/00/88	

Small Entity: Undetermined

Agency Contact: Glenn M. Zech, Deputy Director, Office of Trade, Adjustment Assistance, Department of Labor, Employment and Training Administration, 601 D Street, NW, Rm 6434, PHBldg., Washington, DC 20213, 202 376-2646

RIN: 1205-AA61

DEPARTMENT OF LABOR (DOL) **Completed Actions**

Employment and Training Administration (ETA)

1409. IMPLEMENTATION OF JOB TRAINING PARTNERSHIP ACT AMENDMENTS OF 1985

Significance: Regulatory Program

Legal Authority: JTPA Amendments of 1985

CFR Citation: 20 CFR 626, (Revision); 20 CFR 627, (Revision); 20 CFR 628, (Revision); 20 CFR 629, (Revision); 20 CFR 630, (Revision); 20 CFR 631, (Revision)

Legal Deadline: None.

Abstract: Issue regulations to implement those provisions of the 1986 amendments requiring regulatory revision. These include: (1) clarification on the use of six percent funds for technical assistance and post-program data collection; (2) clarification of the requirements for summer program plans and their approval/ disapproval; and (3) Title III eligibility criteria. Further, in areas not related to the JTPA Amendments, the Department intends to propose rulemaking. This will be policy clarifications, technical corrections, or to address other policy areas in the regulations which have emerged as problems.

Timetable:

Action	Date	FR Cite
ANPRM	01/16/87	52 FR 1932
ANPRM Comment Period End	02/17/87	52 FR 1932
NPRM	06/24/87	52 FR 23681
NPRM Comment Period End	07/24/87	52 FR 23681
Final Action	02/12/88	53 FR 4262
Final Action Effective	03/14/88	53 FR 4262

Small Entity: No

Public Compliance Cost: Initial Cost: $0; Yearly Recurring Cost: $0

Government Levels Affected: Local, State

Agency Contact: Robert N. Colombo, Director, Office of Employment and, Training Programs, Department of Labor, Employment and Training Administration, 200 Constitution Avenue, NW, Rm N4469, FPBldg., Washington, DC 20210, 202 535-0577

RIN: 1205-AA60

DEPARTMENT OF LABOR (DOL) **Prerule Stage**

Pension and Welfare Benefits Administration (PWBA)

1410. "TOP HAT" PLANS

Significance: Regulatory Program

Legal Authority: 29 USC 1135

CFR Citation: 29 CFR 2510

Legal Deadline: None.

Abstract: This regulation would provide guidance as to what constitutes an unfunded employee benefit plan maintained primarily for the purpose of providing deferred compensation for a select group of management or highly compensated employees ("top hat" plans) for purposes of Title I of ERISA.

Timetable:

Action	Date	FR Cite
Agency to complete review with respect to feasibility of & form of policy guidance	05/00/88	

Small Entity: Undetermined

Agency Contact: Judith B. Kahn, Employee Benefit Plan Specialist, Department of Labor, Office of the Secretary, 200 Constitution Ave., NW, Rm N5669, FPBldg., Washington, DC 20210, 202 523-8581

RIN: 1210-AA21

DEPARTMENT OF LABOR (DOL)

Pension and Welfare Benefits Administration (PWBA)

Proposed Rule Stage

1411. ADEQUATE CONSIDERATION

Significance: Regulatory Program

Legal Authority: 29 USC 1002(3)(18); 29 USC 1135

CFR Citation: 29 CFR 2510

Legal Deadline: None.

Abstract: This regulation would provide guidance as to what constitutes adequate consideration under Section 3(18) of ERISA for securities for which there is no generally recognized market.

Timetable:

Action	Date	FR Cite
NPRM	04/00/88	
NPRM Comment Period End	06/00/88	
Final Action	01/00/89	

Small Entity: Undetermined

Agency Contact: Daniel J. Maguire, Staff Attorney, Department of Labor, Office of the Secretary, 200 Constitution Ave., NW, Rm N4611, FPBldg., Washington, DC 20210, 202 523-9596

RIN: 1210-AA15

1412. QUALIFIED DOMESTIC RELATIONS ORDERS UNDER THE RETIREMENT EQUITY ACT

Legal Authority: 29 USC 1056(d)(3)(L); 29 USC 1135

CFR Citation: 29 CFR 2530

Legal Deadline: None.

Abstract: This regulation would clarify the application of the qualified domestic relations order provisions of Section 206(d)(3) of ERISA added by the Retirement Equity Act of 1984.

Timetable:

Action	Date	FR Cite
NPRM	00/00/00	

Small Entity: Undetermined

Agency Contact: Jean Van Ness, Staff Attorney, Department of Labor, Office of the Secretary, 200 Constitution Ave., NW, Rm N4611, FPBldg., Washington, DC 20210, 202 523-9593

RIN: 1210-AA19

1413. PROCEDURES FOR FILING AND PROCESSING APPLICATIONS FOR EXEMPTION FROM THE PROHIBITED TRANSACTION PROVISIONS OF ERISA, THE INTERNAL REVENUE CODE, AND FERSA

Significance: Regulatory Program

Legal Authority: 29 USC 1108; 29 USC 1135; 5 USC 8477 (C) (3)

CFR Citation: 29 CFR 2570

Legal Deadline: None.

Abstract: This regulation describes the procedures for filing and processing applications for exemptions from the prohibited transaction provisions of ERISA of 1974 and IRC and FERSA of 1986. The proposed regulation updates the description of the Department's procedures to reflect changes in the Department of Labor's exemption authority and to clarify the procedures by providing a more detailed description of the prohibited transaction exemption process.

Timetable:

Action	Date	FR Cite
NPRM	05/00/88	
Interim Final Rule	12/00/88	

Small Entity: Undetermined

Agency Contact: Daniel J. McGuire, Staff Attorney, Department of Labor, Pension and Welfare Benefits Administration, 200 Constitution Avenue, NW, Rm N5669, FPBuilding, Washington, DC 20210, 202 523-9596

RIN: 1210-AA26

1414. AMOUNT OF BOND FOR FERS THRIFT SAVINGS FUND

Significance: Agency Priority

Legal Authority: 5 USC 8478

CFR Citation: Not yet determined

Legal Deadline: None.

Abstract: Section 8478(b)(1) requires the Secretary of Labor to prescribe the amount of a bond at the beginning of each Fiscal Year of the fund. This rulemaking accomplishes that objective.

Timetable:

Action	Date	FR Cite
NPRM	00/00/00	

Small Entity: No

Agency Contact: Rudy F. Nuissl, Employee Benefit Plan Specialist, Department of Labor, Pension and Welfare Benefits Administration, 200 Constitution Avenue, NW, Rm N5669 FP Building, Washington, DC 20210, 202 523-7901

RIN: 1210-AA28

1415. ● ALLOCATION OF FIDUCIARY RESPONSIBILITY (FERSA)

Significance: Regulatory Program

Legal Authority: 5 USC 8477(e)(1)(E)

CFR Citation: Not yet determined

Legal Deadline: Statutory, December 31, 1988. Section 114 of the Federal Employees' Retirement System Technical Corrections Act of 1986 imposes a December 31, 1988 deadline for promulgating these regulations.

Abstract: Section 8477(e)(1)(E) of the Federal Employees' Retirement System Act of 1986 (FERSA) requires the Secretary of Labor to prescribe in regulations procedures for allocating fiduciary responsibilities among fiduciaries, including investment managers, with respect to the Thrift Savings Fund (Fund) established under FERSA. This regulation would carry out the requirement of FERSA that the Secretary promulgate regulations prescribing procedures for allocating fiduciary responsibility with respect to the Thrift Savings Fund.

Timetable:

Action	Date	FR Cite
NPRM	05/00/88	
Final Action	12/00/88	

Small Entity: No

Agency Contact: Gerald B. Lindrew, Assistant Director for Policy and Legislative Analysis, Department of Labor, Pension and Welfare Benefits Administration, 200 Constitution Avenue, NW, Room N5647, FPBldg., Washington, DC 20210, 202 523-7933

RIN: 1210-AA30

1416. ● FINAL BONDING RULES (FERSA AND ERISA)

Significance: Regulatory Program

Legal Authority: 5 USC 8478

CFR Citation: Not yet determined

Legal Deadline: Statutory, December 31, 1989. Section 113 of the Federal Employees' Retirement System Technical Corrections Act of 1986 imposes a December 31, 1989 deadline for promulgating final bonding regulations under FERSA.

Abstract: FERSA Section 8478 requires the Secretary of Labor to promulgate regulations governing the bonding of fiduciaries and other persons who handle the funds or other property of the Thrift Savings Fund established under FERSA. The regulations set forth the required bonding procedures.

Timetable:

Action	Date	FR Cite
Interim Final Rule	09/23/87	52 FR 35864
NPRM	02/00/89	
NPRM Comment Period End	04/00/89	

Small Entity: Undetermined

Agency Contact: Gerald B. Lindrew, Assistant Director for Policy and, Legislative Analysis, Department of Labor, Pension and Welfare Benefits Administration, 200 Constitution Avenue, NW, Room N5647, FPBldg., Washington, DC 20210, 202 523-7933

RIN: 1210-AA31

1417. ● CIVIL PENALTIES UNDER FERSA

Significance: Regulatory Program

Legal Authority: 5 USC 8477(e)(1)(B)

CFR Citation: Not yet determined

Legal Deadline: None.

Abstract: Section 8477(e)(1)(B) of the Federal Employees' Retirement System Act of 1986 (FERSA) authorizes the Secretary of Labor to assess civil penalties against parties in interest who engage in prohibited transactions with the Thrift Savings Fund (Fund) established under FERSA. The regulations will govern the procedures for imposing sanctions and enable the Department to penalize persons who violate the prohibited transaction rules with respect to assets of the Fund.

Timetable:

Action	Date	FR Cite
NPRM	05/00/88	
NPRM Comment Period End	08/00/88	
Final Action	11/00/88	

Small Entity: No

Agency Contact: Gerald B. Lindrew, Assistant Director for Policy and, Legislative Analysis, Department of Labor, Pension and Welfare Benefits Administration, 200 Constitution Avenue, NW, Room N5647, FPBldg., Washington, DC 20210, 202 523-7933

RIN: 1210-AA32

1418. ● CIVIL PENALTY FOR FAILURE OR REFUSAL TO FILE ANNUAL REPORT

Significance: Regulatory Program

Legal Authority: PL 100 to 203 Section 9342(c)

CFR Citation: Not yet determined

Legal Deadline: Statutory, January 1, 1989. Section 9342(d) of OBRA 1987 specifically directs the Secretary to issue not later than January 1, 1989, the regulations required to implement this provision.

Abstract: Section 502(c) of the Employee Retirement Income Security Act of 1974 (ERISA) was amended by Section 9342(c) of the Omnibus Budget Reconciliation Act of 1987 (OBRA 1987) to authorize the Secretary of Labor to assess a civil penalty of up to $1,000 a day from the date of a plan administrator's failure or refusal to file the complete annual report required to be filed with the Secretary under section 101(b)(4) of ERISA. This regulation would carry out the requirement of OBRA 1987 that the Secretary promulgate regulations implementing the new civil penalty provision relating to a plan administrator's failure or refusal to file a complete annual report.

Timetable:

Action	Date	FR Cite
NPRM	06/00/88	
NPRM Comment Period End	08/00/88	
Final Action	12/00/88	

Small Entity: Undetermined

Agency Contact: Gerald B. Lindrew, Assistant Director for Policy and, Legislative Analysis, Department of Labor, Pension and Welfare Benefits Administration, 200 Constitution Avenue, NW, Room N5647, FPBldg., Washington, DC 20210, 202 523-7933

RIN: 1210-AA34

DEPARTMENT OF LABOR (DOL)

Pension and Welfare Benefits Administration (PWBA)

Final Rule Stage

1419. INDIVIDUAL BENEFITS REPORTING AND RECORDKEEPING FOR MULTIPLE EMPLOYER PLANS

Significance: Regulatory Program

Legal Authority: 29 USC 1025; 29 USC 1059; 29 USC 1135

CFR Citation: 29 CFR 2520; 29 CFR 2530

Legal Deadline: None.

Abstract: The rule would govern: (1) reports that must be furnished to participants and beneficiaries in multiple employer pension plans, regarding the benefits to which they are entitled, or may become entitled, at retirement; and (2) records that must be maintained to provide the information necessary to prepare these reports. This rule was first proposed on 02/09/79 (44 FR 8294) jointly with the single employer plan benefit reporting regulations.

Timetable:

Action	Date	FR Cite
NPRM Previous	02/09/79	44 FR 8294
NPRM	08/08/80	45 FR 52824
NPRM Comment Period End	10/08/80	
Notice of Public Hearing on 11/25/80	11/12/80	45 FR 74727
Final Action	00/00/00	

Small Entity: Undetermined

Agency Contact: Katherine Lewis, Employee Benefit Plan Specialist, Department of Labor, Pension and Welfare Benefits Administration, 200 Constitution Ave., NW, Rm N5669, FPBldg., Washington, DC 20210, 202 523-7901

RIN: 1210-AA02

1420. INDIVIDUAL BENEFITS REPORTING AND RECORDKEEPING FOR SINGLE EMPLOYER PLANS

Significance: Regulatory Program

Legal Authority: 29 USC 1025; 29 USC 1059; 29 USC 1135

CFR Citation: 29 CFR 2520; 29 CFR 2530

Legal Deadline: None.

Abstract: The rule would govern: (1) reports that must be furnished to participants and beneficiaries in single employer pension plans, regarding the benefits to which they are entitled, or may become entitled, at retirement; and

(2) records that must be maintained to provide the information necessary to prepare these reports. This rule was first proposed on 02/09/79 (44 FR 8294) jointly with the multiple employer plan benefit reporting regulation.

Timetable:

Action	Date	FR Cite
NPRM Previous	02/09/79	44 FR 8294
NPRM	08/01/80	45 FR 51231
Notice of Public Hearing on 11/25/80	11/12/80	45 FR 74728
NPRM Comment Period End	10/01/81	
Final Action	00/00/00	

Small Entity: Undetermined

Agency Contact: Katherine Lewis, Employee Benefit Plan Specialist, Department of Labor, Pension and Welfare Benefits Administration, 200 Constitution Ave., NW, Rm N5669, FPBldg., Washington, DC 20210, 202 523-7901

RIN: 1210-AA03

1421. PARTICIPANT DIRECTED INDIVIDUAL ACCOUNT PLANS

Significance: Regulatory Program

Legal Authority: 29 USC 1104(c); 29 USC 1135

CFR Citation: 29 CFR 2550

Legal Deadline: None.

Abstract: The regulation would describe the kinds of participant directed individual account plans referred to in Section 404(c) of ERISA, the circumstances under which a participant or beneficiary will be considered to have exercised control over his individual account, and the consequences under section 404(c) of such an exercise of control.

Timetable:

Action	Date	FR Cite
NPRM	09/03/87	52 FR 33506
NPRM Comment Period End	11/02/87	
Final Action	12/00/88	

Small Entity: Undetermined

Agency Contact: Martin Staubus, Staff Attorney, Department of Labor, Office of the Secretary, 200 Constitution Ave., NW, Rm N4611, FPBldg., Washington, DC 20210, 202 523-9596

RIN: 1210-AA08

1422. LOANS TO PARTICIPANTS

Significance: Regulatory Program

Legal Authority: 29 USC 1135; 29 USC 1108

CFR Citation: 29 CFR 2550

Legal Deadline: None.

Abstract: This rule describes the circumstances under which the exemption in Section 408(b)(1) of ERISA from the prohibited transaction provisions for loans by a plan to plan participants will be available.

Timetable:

Action	Date	FR Cite
NPRM	01/22/88	53 FR 1798
NPRM Comment Period End	03/22/88	
Final Action	11/00/88	

Small Entity: Undetermined

Agency Contact: Susan Rees, Staff Attorney, Department of Labor, Office of the Secretary, 200 Constitution Ave., NW, Rm N4611, FPBldg., Washington, DC 20210, 202 523-8596

RIN: 1210-AA09

1423. DEFINITION OF "PLAN ASSETS" (PARTICIPANT CONTRIBUTIONS) (PROPOSED AT 44 FR 50363, AUGUST 28, 1979)

Significance: Regulatory Program

Legal Authority: 29 USC 1135

CFR Citation: 29 CFR 2550

Legal Deadline: None.

Abstract: This regulation would describe when monies paid to, or withheld by, an employer as contributions to an employee benefit plan are considered "Plan Assets" for purposes of Title I of ERISA and certain related provisions of the Internal Revenue Code. Proposed regulations dealing with this matter were published by the Department on August 28, 1979.

Timetable:

Action	Date	FR Cite
NPRM	08/28/79	44 FR 50363
NPRM Comment Period End	01/07/80	
Public Hearings	02/27/80	
Final Action	05/00/88	

Small Entity: No

Additional Information: Subpart of RIN 1210-AA06 (Definition of Plan Assets) which will be handled separately. This item is included as 1210-AA23 in the U.S. Regulatory Program.

Agency Contact: Daniel J. McGuire, Staff Attorney, Department of Labor, Office of the Secretary, 200 Constitution Ave., NW, Rm N4611, FPBldg., Washington, DC 20210, 202 523-8596

RIN: 1210-AA16

1424. PROCEDURES FOR THE ADMINISTRATIVE IMPOSITION OF CIVIL SANCTIONS UNDER SECTION 502(I) OF THE EMPLOYEE RETIREMENT INCOME SECURITY ACT OF 1974 (ERISA)

Significance: Regulatory Program

Legal Authority: 29 USC 1132 (i); 29 USC 1135

CFR Citation: 29 CFR 2560; 29 CFR 2570

Legal Deadline: None.

Abstract: This procedural rule would implement Section 502(i) of ERISA which authorizes the Secretary of Labor to impose civil sanctions against parties in interest (as defined in ERISA Section 3(14)) who engage in prohibited transactions with welfare plans and nonqualified pension plans.

Timetable:

Action	Date	FR Cite
NPRM	08/27/86	51 FR 30501
NPRM Comment Period End	10/27/86	51 FR 30501
Final Action	05/00/88	

Small Entity: No

Agency Contact: Susan Rees, Staff Attorney, Department of Labor, Office of the Secretary, 200 Constitution Ave., NW, Rm N4611, FPBldg., Washington, DC 20210, 202 523-9596

RIN: 1210-AA20

1425. PROPOSED REGULATION EXEMPTING CERTAIN BROKER-DEALERS AND INVESTMENT ADVISERS FROM BONDING REQUIREMENTS

Significance: Agency Priority

Legal Authority: 29 USC 1135; 29 USC 1112

CFR Citation: 29 CFR 2580

Legal Deadline: None.

Abstract: The proposed regulation is intended to provide an exemption from the bonding requirements of Section 412 (a) of ERISA for certain broker dealers

VOL 53 ISS 79 PT 1 AP 25 1988 UMI

DOL—PWBA **Final Rule Stage**

and investment advisers who handle plan assets if the proposed regulation's alternative bonding requirements are met. If adopted, the regulation would permit broker-dealer and their investment adviser affiliates to substitute the fidelity bond required by the self-regulatory organizations of which they are members, subject to a minimum level of coverage, for the bond otherwise required by Section 412 of ERISA.

Timetable:

Action	Date	FR Cite
NPRM	08/19/87	52 FR 31039
NPRM Comment Period End	10/19/87	52 FR 31039
Final Action	00/00/00	

Small Entity: No

Agency Contact: Linda Shore, Employee Benefit Plan Specialist, Department of Labor, Pension and Welfare Benefits Administration, 200 Constitution Avenue, NW, Rm N5667 FPBuilding, Washington, DC 20210, 202 523-8671

RIN: 1210-AA25

DEPARTMENT OF LABOR (DOL)

Completed Actions

Pension and Welfare Benefits Administration (PWBA)

1426. ADOPTION OF TEMPORARY BONDING REGULATIONS UNDER ERISA SECTION 412 FOR PURPOSES OF FERSA SECTION 8478

Significance: Regulatory Program

Legal Authority: 5 USC 8478; PL 99-556 SECTION 113

CFR Citation: Not yet determined

Legal Deadline: None.

Abstract: Section 8478 of FERS Requires the Secretary of Labor to prescribe within regulations concerning the bonding (for loss through theft or embezzlement) of property of the thrift savings fund. Section 113 of the Federal Employees' Retirement System Technical Corrections Act of 1986 authorizes the Secretary of Labor to apply the temporary bonding regulations under ERISA Section 412 to FERSA Section 8478 (until January 1, 1990). This rulemaking effects such interim adoption of the ERISA bonding regulations for FERSA purposes.

Timetable:

Action	Date	FR Cite
Interim Final Action Effective	04/01/87	
Interim Final Rule	09/23/87	52 FR 35864
Final Temporary Rule	09/23/87	52 FR 35864
End of Comment Period	11/23/87	

Small Entity: No

Agency Contact: Rudy F. Nuissl, Employee Benefit Plan Specialist, Department of Labor, Pension and Welfare Benefits Administration, 200 Constitution Avenue, NW, Rm N5669 FP Building, Washington, DC 20210, 202 523-7901

RIN: 1210-AA29

DEPARTMENT OF LABOR (DOL)

Proposed Rule Stage

Office of Labor Management Standards (OLMS)

1427. ● LABOR ORGANIZATION ANNUAL FINANCIAL REPORTS

Legal Authority: 29 USC 431; 29 USC 438; 29 USC 461

CFR Citation: 29 CFR 403

Legal Deadline: None.

Abstract: This proposed regulation would implement a new labor organization annual report form to replace Labor Organization Annual Report forms LM-2 and LM-3, which are incorporated in the Department's regulations at 29 CFR 403.3 and 403.4(a). It would also replace Form LM-1A, entitled "Report of Current Status: Labor Organization Information Supplement," which is incorporated in the regulations at 29 CFR 402.4(a).

Timetable:

Action	Date	FR Cite
NPRM	00/00/00	

Small Entity: No

Agency Contact: Kay H. Oshel, Chief, Division of Interpretations and, Standards, Department of Labor, Office of Labor Management Standards, 200 Constitution Avenue, NW, Room N5613, FPBldg., Washington, DC 20210, 202 523-7373

RIN: 1294-AA04

DEPARTMENT OF LABOR (DOL)
Office of Labor Management Standards (OLMS)

Completed Actions

1428. GENERAL STATEMENT CONCERNING THE ELECTION PROVISIONS OF THE LABOR-MANAGEMENT REPORTING AND DISCLOSURE ACT OF 1959 CHARACTERISTICS OF CANDIDATES

Legal Authority: 29 USC 481; 29 USC 482

CFR Citation: 29 CFR 452.46

Legal Deadline: None.

Abstract: This regulation will amend 29 CFR 452.46 regarding maximum age restrictions on candidacy for union office. The amendment is required in part to conform the regulations to a recent amendment to the Age Discrimination in Employment Act of 1967.

Timetable:

Action	Date	FR Cite
Final Action	03/17/88	53 FR 8753
Final Action Effective	03/17/88	

Small Entity: Not Applicable

Public Compliance Cost: Initial Cost: $0; Yearly Recurring Cost: $0

Affected Sectors: None

Government Levels Affected: Federal

Agency Contact: Kay Oshel, Chief, Division of Interpretations and Standards, Department of Labor, Office of Labor Management Standards, 200 Constitution Avenue, NW, Rm N5613, FPBldg., Washington, DC 20210, 202 523-7373

RIN: 1294-AA02

DEPARTMENT OF LABOR (DOL)
Mine Safety and Health Administration (MSHA)

Prerule Stage

1429. DIESEL-POWERED EQUIPMENT FOR UNDERGROUND COAL MINES

Significance: Regulatory Program

Legal Authority: 30 USC 811; 30 USC 957

CFR Citation: 30 CFR 7; 30 CFR 70; 30 CFR 75

Legal Deadline: None. Under the Mine act, the advisory committee must submit recommendations within 180 days of convening.

Abstract: MSHA has established a mining equipment approval program, including evaluation criteria, and corresponding safety standards requiring the use of certain equipment. Existing approval regulations do not generally apply to the diesel equipment now being used in underground coal mines. An Advisory Committee convened in January 1988 to make recommendations concerning what standards and regulations would be appropriate for coal mines.

Timetable:

Action	Date	FR Cite
Establishment of Advisory Committee	10/06/87	52 FR 37361
Notice of Appointment of Committee Members and Notice of First Meeting	01/05/88	53 FR 00189
Committee Delivers Recommendations	07/00/88	

Small Entity: Yes

Agency Contact: Patricia W. Silvey, Director, Office of Standards, Regulations, and Variances, Department of Labor, Mine Safety and Health Administration, 4015 Wilson Boulevard, Arlington, VA 22203, 703 235-1910

RIN: 1219-AA27

1430. NOTIFICATION, INVESTIGATION, REPORTS AND RECORDS OF ACCIDENTS INJURIES, ILLNESSES, EMPLOYMENT, AND COAL PRODUCTION IN MINES

Significance: Regulatory Program

Legal Authority: 30 USC 957; 30 USC 813(d)

CFR Citation: 30 CFR 50

Legal Deadline: None.

Abstract: In response to concerns raised by members of Congress and the mining community about the nature and accuracy of existing reporting obligations, MSHA established an intra-agency task force to review its requirements for reports of accidents, injuries and illnesses in coal and metal and nonmetal mines. The Agency focused on several aspects of the reporting requirements including the definition of an occupational injury or illness, and an expanded audit program. The Agency has determined that the existing regulations in Part 50 should be clarified and improved through the rulemaking process. MSHA will clarify the definitions of reportable injuries and illnesses and solicit suggestions from the public in this effort.

Timetable:

Action	Date	FR Cite
Begin Review	12/01/85	
Task Force Report Completed	03/03/86	
ANPRM	05/00/88	

Small Entity: Yes

Additional Information: MSHA will work closely with BLS and OSHA throughout the rulemaking to assure departmental consistency.

Agency Contact: Patricia W. Silvey, Director, Office of Standards, Regulations, and Variances, Department of Labor, Mine Safety and Health Administration, 4015 Wilson Boulevard, Rm 627, BT #3, Arlington, VA 22203, 703 235-1910

RIN: 1219-AA33

1431. ● ASBESTOS

Significance: Regulatory Program

Legal Authority: 30 USC 811

CFR Citation: 30 CFR 71.702; 30 CFR 56.5001(b); 30 CFR 57.5001(h)

Legal Deadline: None.

Abstract: In 1986, OSHA lowered its asbestos limit to general industry to .2 fibers per cubic centimeter. MSHA will consider whether this limit would also be appropriate for the mining industry based on the health risks posted and the economic and technical feasibility of lowering the present limit.

BEST COPY AVAILABLE

VOL 53 ISS 79 PT 1 AP 25 1988 UMI

DOL—MSHA **Prerule Stage**

Timetable:

Action	Date	FR Cite
To be coordinated with OSHA	06/00/88	

Small Entity: Undetermined

Agency Contact: Patricia W. Silvey, Director, Office of Standards, Regulations and Variances, Department of Labor, Mine Safety and Health Administration, 4015 Wilson Blvd., Room 631, BT #3, Arlington, VA 22203, 703 235-1910

RIN: 1219-AA46

1432. ● HAZARD COMMUNICATION

Significance: Regulatory Program

Legal Authority: 30 USC 811

CFR Citation: 30 CFR NEW

Legal Deadline: None.

Abstract: The primary purpose of this action is to provide miners with the means to receive necessary information on the hazards of chemical to which they are exposed and the action necessary to protect their safety and health. MSHA is reviewing OSHA's hazard communication standard and is also reviewing information collected by NIOSH.

Timetable:

Action	Date	FR Cite
ANPRM	03/30/88	53 FR 10257
ANPRM Comment Period End	05/31/88	
NPRM	12/00/88	

Small Entity: Undetermined

Agency Contact: Patricia W. Silvey, Director, Office of Standards, Regulations and Variances, Department of Labor, Mine Safety and Health Administration, 4015 Wilson Blvd., Room 631, BT #3, Arlington, VA 22203, 703 235-1910

RIN: 1219-AA47

DEPARTMENT OF LABOR (DOL) **Proposed Rule Stage**

Mine Safety and Health Administration (MSHA)

1433. PATTERN OF VIOLATIONS

Significance: Regulatory Program

Legal Authority: 30 USC 814(e); 30 USC 957

CFR Citation: 30 CFR 104

Legal Deadline: None.

Abstract: In 1980, a proposal was issued but subsequently withdrawn as a result of certain Review Commission decisions and other policy considerations. A second ANPRM which outlined new procedures for implementing the statutory provision for pattern of violations was issued in 1985. Various segment of the mining community have viewed the role of the pattern provision with marked differences, often resulting in a contradictory record to reconcile these differences and achieve the intended objective, the Agency has been working to develop both appropriate criteria and a meaningful procedure for identifying operators who are potential pattern violators.

Timetable:

Action	Date	FR Cite
ANPRM	02/08/85	50 FR 5470
Withdrawal of 1980 NPRM	02/08/85	50 FR 5470
Extension of Comment Period to 5/10/85	04/05/85	50 FR 13617
ANPRM Comment Period End	04/09/85	50 FR 5470
NPRM	05/00/88	

Small Entity: Yes

Agency Contact: Patricia W. Silvey, Director, Office of Standards, Regulations and Variances, Department of Labor, Mine Safety and Health Administration, 4015 Wilson Blvd., Rm 627, BT #3, Arlington, VA 22203, 703 235-1910

RIN: 1219-AA04

1434. UNDERGROUND COAL MINE ELECTRICAL STANDARDS

Significance: Regulatory Program

Legal Authority: 30 USC 811

CFR Citation: 30 CFR 75.500; 30 CFR 75.600; 30 CFR 75.700; 30 CFR 75.800; 30 CFR 75.900; 30 CFR 75.1000

Legal Deadline: None.

Abstract: Existing electrical standards for underground coal mines would be substantially reorganized, clarified, and updated. General incorporations by reference of the National Electric Code would be eliminated and replaced with specific standards applicable to underground coal mining operations. The Agency is in the process of developing a proposed rule that addresses the wide range of issues raised by commenters.

Timetable:

Action	Date	FR Cite
Begin Review	07/09/82	47 FR 30025
ANPRM	05/23/86	51 FR 18899
Comment Period Extended to 8/15/86	07/03/86	51 FR 24387
ANPRM Comment Period End	07/22/86	51 FR 18899
NPRM	08/00/88	

Small Entity: Yes

Agency Contact: Patricia W. Silvey, Director, Office of Standards, Regulations and Variances, Department of Labor, Mine Safety and Health Administration, 4015 Wilson Boulevard, Room 627, Arlington, VA 22203, 703 235-1910

RIN: 1219-AA10

1435. REVIEW OF METAL AND NONMETAL ELECTRICAL STANDARDS

Significance: Agency Priority

Legal Authority: 30 USC 811

CFR Citation: 30 CFR 56.12000; 30 CFR 57.12000

Legal Deadline: None.

Abstract: The electrical standards are part of the overall review of regulations dealing with metal and nonmetal mines and mills. General incorporations by reference of the National Electric Code would be eliminated and replaced with standards applicable to metal and nonmetal mining and mills.These standards would also be substantially clarified, updated, and realigned into functional categories, and would

include technological advances in electrical systems.

Timetable:

Action	Date	FR Cite
Begin Review	03/25/83	45 FR 19267
ANPRM	06/20/83	48 FR 22885
ANPRM Comment Period End	07/19/83	
NPRM	08/00/88	

Small Entity: Yes

Agency Contact: Patricia W. Silvey, Director, Office of Standards, Regulations and Variances, Department of Labor, Mine Safety and Health Administration, 4015 Wilson Boulevard, Rm 627, Arlington, VA 22203, 703 235-1910

RIN: 1219-AA14

1436. REVIEW OF METAL AND NONMETAL EXPLOSIVES STANDARDS

Significance: Agency Priority

Legal Authority: 30 USC 811

CFR Citation: 30 CFR 56.6000; 30 CFR 57.6000

Legal Deadline: None.

Abstract: The explosives standards are part of the overall review of regulations dealing with metal and nonmetal mines and mills. These standards would be clarified and updated consistent with technological advances, such as gaseous initiation systems, miniaturized detonating cord systems and the use of bulk mixing of explosives materials.

Timetable:

Action	Date	FR Cite
Begin Review	03/25/80	45 FR 19267
ANPRM	08/20/84	49 FR 33087
Extension of ANPRM Comment Period to 11/16/84	09/25/84	49 FR 37640
ANPRM Comment Period End	10/19/84	
NPRM	05/00/88	

Small Entity: Yes

Additional Information: Public hearings will most likely be held during July 1988.

Agency Contact: Patricia W. Silvey, Director, Office of Standards, Regulations and Variances, Department of Labor, Mine Safety and Health Administration, 4015 Wilson Boulevard, Room 627, Arlington, VA 22203, 703 235-1910

RIN: 1219-AA17

1437. METAL AND NONMETAL AIR QUALITY STANDARDS

Significance: Regulatory Program

Legal Authority: 30 USC 811

CFR Citation: 30 CFR 55.5; 30 CFR 56.5

Legal Deadline: None.

Abstract: The Agency is developing a NPRM which would replace an incorporation by reference with updated permissible exposure limits which are specifically applicable to the hazards encountered in metal and nonmetal mining. The proposal would solicit comment on which means of control would provide the necessary protection from airborne contaminants. Standards for use of respiratory protective equipment would replace an outdated incorporation by reference. Other issues being considered are: requirements for exposure monitoring and precautions for handling restricted-use chemicals; notification of workers of overexposures; and access to exposure records.

Timetable:

Action	Date	FR Cite
Begin Review	03/25/80	45 FR 19267
ANPRM	07/06/83	48 FR 31171
Extension of Comment Period to 10/05/83	08/12/83	48 FR 36789
Extension of Comment Period to 11/07/83	09/16/83	48 FR 41747
ANPRM Comment Period End	11/07/83	
NPRM	07/00/88	

Small Entity: Yes

Additional Information: Public hearings will most likely be held during September 1988. The Agency will also include air quality and chemical substances for coal mines (RIN: 1219-AA41) in the proposal because of the commonality of potential exposures and the desire of the Agency to have a uniform health enforcement program.

Agency Contact: Patricia W. Silvey, Director, Office of Standards, Regulations and Variances, Department of Labor, Mine Safety and Health Administration, 4015 Wilson Boulevard, Room 627, Arlington, VA 22203, 703 235-1910

RIN: 1219-AA21

1438. CERTIFICATION AND QUALIFICATION OF PERSONS

Legal Authority: 30 USC 811

CFR Citation: 30 CFR 75.100; 30 CFR 75.150; 30 CFR 77.100; 30 CFR 77.105

Legal Deadline: None.

Abstract: Certain MSHA regulations require persons working in coal mines to be qualified or certified to perform certain tasks, e.g., testing for methane, making ventilation examinations, etc. The existing rule requires operators to submit certification and qualification applications to MSHA every six months for recertification. The proposal eliminates the six-month limitation, permitting persons to remain certified or qualified for as long as they continue to satisfy the substantive requirements and remain employed at the same coal mine or independent contractor.

Timetable:

Action	Date	FR Cite
NPRM	04/13/88	53 FR 12250
NPRM Comment Period End	06/13/88	
Final Action	09/00/88	

Small Entity: Yes

Agency Contact: Patricia W. Silvey, Director, Office of Standards, Regulations, and Variances, Department of Labor, Mine Safety and Health Administration, 4015 Wilson Blvd., Rm 631, BT #3, Arlington, VA 22203, 703 235-1910

RIN: 1219-AA36

1439. AUTOMATIC WARNING DEVICES FOR MOBILE EQUIPMENT

Legal Authority: 30 USC 811

CFR Citation: 30 CFR 77.410

Legal Deadline: None.

Abstract: MSHA's existing standard requires mobile equipment to be equipped with devices which automatically sound an alarm when the equipment is put in reverse. MSHA is considering revising the standard to exclude pickup trucks if the driver has an unobstructed rear view. The Agency

is also considering allowing alternatives to automatic warning devices.

Timetable:

Action	Date	FR Cite
NPRM	04/10/88	53 FR 12253
NPRM Comment Period End	06/13/88	
Final Action	09/00/88	

Small Entity: Yes

Agency Contact: Patricia W. Silvey, Director, Office of Standards, Regulations, and Variances, Department of Labor, Mine Safety and Health Administration, 4015 Wilson Blvd., Rm 631, BT #3, Arlington, VA 22203, 703 235-1910

RIN: 1219-AA38

1440. AUTOMATIC BRAKES ON SELF-PROPELLED ELECTRIC FACE EQUIPMENT

Significance: Regulatory Program

Legal Authority: 30 USC 811

CFR Citation: 30 CFR 75.523-3

Legal Deadline: None.

Abstract: In 1973, the Agency issued installation and performance requirements for automatic emergency brakes on rubber-tired, self-propelled electric face equipment for underground coal mines. However, there was not sufficient technical data to develop criteria for evaluating the designs of these braking systems. On July 30, 1974, the effective dates for compliance with 75.523-3 were suspended indefinitely. MSHA now has sufficient technical date to review the standard.

Timetable:

Action	Date	FR Cite
NPRM	03/01/88	53 FR 6512
NPRM Comment Period End	05/02/88	53 FR 6512
Final Action	12/00/88	

Small Entity: Yes

Additional Information: Public hearings will most likely be held in May 1988.

Agency Contact: Patricia W. Silvey, Director, Office of Standards, Regulations, and Variances, Department of Labor, Mine Safety and Health Administration, 4015 Wilson Blvd., Rm. 627, BT #3, Arlington, VA 22203, 703 235-1910

RIN: 1219-AA39

1441. ELECTRIC MINE LAMPS OTHER THAN STANDARD CAP LAMPS

Legal Authority: 30 USC 811

CFR Citation: 30 CFR 20

Legal Deadline: None.

Abstract: Under existing standards MSHA is limited to investigating and approving lamps which meet the design, construction and test requirements specifically set forth in 30 CFR 20. As a result, the Agency is restricted from approving lamps that incorporate alternative technology. The proposal would amend Part 20 to enable the Agency to issue approvals for lamps which, after testing, are found to be safe for their intended use and provide, at a minimum, the same degree of protection as lamps currently approved under the existing standards.

Timetable:

Action	Date	FR Cite
NPRM	04/13/88	53 FR 12250
NPRM Comment Period End	06/13/88	
Final Action	09/00/88	

Small Entity: Yes

Agency Contact: Patricia W. Silvey, Director, Office of Standards, Regulations, and Variances, Department of Labor, Mine Safety and Health Administration, 4015 Wilson Blvd., Rm 627, BT #3, Arlington, VA 22203, 703 235-1910

RIN: 1219-AA40

1442. COAL AIR QUALITY

Significance: Regulatory Program

Legal Authority: 30 USC 811

CFR Citation: 30 CFR 70

Legal Deadline: None.

Abstract: Permissible exposure limits for most noxious and poisonous gases in underground coal mines are addressed in 30 CFR 75.301-2. This ventilation standard incorporates by reference an outdated national consensus standard. MSHA would replace the incorporation by reference with updated standards that are more specific to the mining industry. These standards would be recodified with other health standards for underground coal mining in 30 CFR 70.

Timetable:

Action	Date	FR Cite
NPRM	07/00/88	

Small Entity: Yes

Agency Contact: Patricia W. Silvey, Director, Office of Standards, Regulations and Variances, Department of Labor, Mine Safety and Health Administration, 4015 Wilson Blvd., Rm 627, BT #3, Arlington, VA 22203, 703 235-1910

RIN: 1219-AA41

1443. MULTIPLE-SHOT BLASTING UNITS

Legal Authority: 30 USC 811

CFR Citation: 30 CFR 25

Legal Deadline: None.

Abstract: The requirements for approval of blasting units are part of the overall coal review to update standards. The revision of existing Part 25 specifications is to be proposed as Subpart D to Part 7. Under this concept, testing would be done by the applicant or a third party, subject to Agency requirements and approval.

Timetable:

Action	Date	FR Cite
ANPRM	06/05/84	49 FR 23281
Notice of Public Conferences for 7/11/84	06/05/84	49 FR 23281
Extension of Comment Period to 9/24/84	07/31/84	49 FR 30636
ANPRM Comment Period End	08/10/84	49 FR 23281
NPRM	04/00/88	

Small Entity: Yes

Additional Information: The review of 30 CFR 25 was originally listed in the Agenda in 1984. In the October 1985 Agenda, MSHA consolidated the Review of Part 25 under 1219-AA16. A proposal is expected to be published in April 1988 which will revise 30 CFR 25 and combine it as a subpart of 30 CFR 7.

Agency Contact: Patricia W. Silvey, Director, Office of Standards, Regulations and Variances, Department of Labor, Mine Safety and Health

VOL 53 ISS 79 PT 1 AP 25 1988 UMI

Administration, 4015 Wilson Blvd., Rm 627, Arlington, VA 22203, 703 235-1910

RIN: 1219-AA42

1444. ● RULES OF PRACTICE FOR PETITIONS FOR MODIFICATION OF MANDATORY SAFETY STANDARDS

Significance: Regulatory Program

Legal Authority: 30 USC 811

CFR Citation: 30 CFR 44

Legal Deadline: None.

Abstract: On July 10, 1987, the United States Court of Appeals for the District of Columbia invalidated the Agency's existing interim relief regulation based in part, on procedural defects, holding that it was contrary to Congressional interest. (INT. UNION v. MSHA, 823 F. 2d 608 (D.C. Cir. 1987). Therefore, MSHA has issued a proposal addressing interim relief in situations where enforcement of a mandatory standard would result in a diminution of safety to affected miners or in emergency situations.

Timetable:

Action	Date	FR Cite
NPRM	06/00/88	

Small Entity: Undetermined

Additional Information: Public hearings will most likely be held in July 1988.

Agency Contact: Patricia W. Silvey, Director, Office of Standard, Regulations and Variances, Department of Labor, Mine Safety and Health Administration, 4015 Wilson Blvd., Room 631, BT #3, Arlington, VA 22203, 703 235-1910

RIN: 1219-AA45

DEPARTMENT OF LABOR (DOL)

Mine Safety and Health Administration (MSHA)

Final Rule Stage

1445. PROCEDURES FOR APPROVAL OF MINING EQUIPMENT

Significance: Regulatory Program

Legal Authority: 30 USC 811

CFR Citation: 30 CFR 7

Legal Deadline: None.

Abstract: This would be a new Part. Under existing regulations, certain equipment must be tested and approved by MSHA prior to use in certain underground mines. The proposal would permit manufacturers or independent laboratories to test certain equipment prior to issuance of the Agency's approval. The actual authority for approval would continue to remain with the government. The final rule contains a mechanism for monitoring quality assurance and conducting post-approval audits.

Timetable:

Action	Date	FR Cite
ANPRM	03/04/83	48 FR 09475
Notice of Public Hearings	03/18/83	48 FR 11665
ANPRM Comment Period End	05/03/83	
NPRM	02/06/86	51 FR 4686
Notice of Public Hearings	02/06/86	51 FR 4668
Extension of Comment Period to 5/7/86	04/04/86	51 FR 11586
NPRM Comment Period End	04/07/86	51 FR 4686
Final Action	04/00/88	

Small Entity: Yes

Additional Information: Public hearings were held during July 1986.

Agency Contact: Patricia W. Silvey, Director, Office of Standards, Regulations and Variances, Department of Labor, Mine Safety and Health Administration, 4015 Wilson Blvd., Rm 627, BT #3, Arlington, VA 22203, 703 235-1910

RIN: 1219-AA06

1446. UNDERGROUND COAL MINE VENTILATION

Significance: Regulatory Program

Legal Authority: 30 USC 811

CFR Citation: 30 CFR 75.300

Legal Deadline: None.

Abstract: The Agency published a proposed rule concerning ventilation in underground mines which included provisions for the introduction of new technology for systematic monitoring of explosive methane gas, as well as gases that may indicate a mine fire. Other important issues include ventilation of worked-out areas: timeframes for tests for methane; and using intake air that has been used to ventilate a belt conveyor entry. The existing escapeway standards contained in 30 CFR Part 75.1704 (previously RIN: 1219-AA37) are incorporated into the proposal.

Timetable:

Action	Date	FR Cite
Begin Review	07/09/82	47 FR 30025
ANPRM	11/19/85	50 FR 47702
Extension of ANPRM Comment Period to 4/4/86	02/14/86	51 FR 5546
ANPRM Comment Period End	02/18/86	
NPRM	01/27/88	53 FR 2382
NPRM Comment Period End	03/26/88	53 FR 2382
Final Action	05/00/89	

Small Entity: Yes

Additional Information: Public hearings are anticipated to be held during April 1988.

Agency Contact: Patricia W. Silvey, Director, Office of Standards, Regulations and Variances, Department of Labor, Mine Safety and Health Administration, 4015 Wilson Boulevard, Room 627, Arlington, VA 22203, 703 235-1910

RIN: 1219-AA11

1447. EXPLOSIVES AND BLASTING IN UNDERGROUND COAL MINES

Significance: Regulatory Program

Legal Authority: 30 USC 811

CFR Citation: 30 CFR 75.1300

Legal Deadline: None.

Abstract: The existing standards governing the use of explosives in underground coal mines are outdated and incomplete. MSHA's final rule will substantially reorganize, clarify and update these requirements. In addition,

the rule will recognize new explosive technology and will permit future changes in technology with assurances for a safe mining environment.

Timetable:

Action	Date	FR Cite
Begin Review	07/09/82	47 FR 30025
ANPRM	05/08/84	49 FR 19601
ANPRM Comment Period End	07/20/84	49 FR 19601
NPRM	05/09/86	51 FR 17284
Extension of Comment Period to 7/31/86	07/03/86	51 FR 24387
NPRM Comment Period End	07/08/86	51 FR 17284
Notice of Public Hearings	10/21/86	51 FR 37376
Supplemental Public Hearing	03/26/87	52 FR 9670
Final Action	06/00/88	

Small Entity: Yes

Additional Information: Public hearings were held in November 1986. See also RIN 1219-AA23 for abstract and timetables of related rulemaking to revise approval specifications for explosives. A supplemental public hearing was held 4/22/87 in Bruceton, PA in conjunction with public hearings on 30 CFR Part 15.

Agency Contact: Patricia W. Silvey, Director, Office of Standards, Regulations and Variances, Department of Labor, Mine Safety and Health Administration, 4015 Wilson Boulevard, Room 627, Arlington, VA 22203, 703 235-1910

RIN: 1219-AA16

1448. SAFETY STANDARDS FOR LOADING, HAULING AND DUMPING AND MACHINERY AND EQUIPMENT AT METAL AND NONMETAL MINES

Significance: Agency Priority

Legal Authority: 30 USC 811

CFR Citation: 30 CFR 56.9000; 30 CFR 57.9000

Legal Deadline: None.

Abstract: The loading, hauling and dumping and machinery and equipment (previously RIN: 1219-AA19) standards are part of the overall review of regulations dealing with metal and nonmetal mines and mills. As a result of consideration of the public rulemaking records relating to both the machinery and equipment and loading, hauling and dumping standards, the Agency reorganized the standards to more accurately and clearly identify the hazards. A combined final rule of these two sections was published in April 1988.

Timetable:

Action	Date	FR Cite
Begin Review	03/25/80	45 FR 19267
ANPRM	04/22/83	48 FR 17513
ANPRM Comment Period End	06/21/83	
NPRM	12/18/84	49 FR 49202
Extension of Time to Comment to 03/22/85	01/25/85	50 FR 3681
NPRM Comment Period End	02/19/85	49 FR 49202
Notice of Public Hearings	07/03/85	50 FR 27566
Final Action	04/00/88	

Small Entity: Yes

Additional Information: Public hearings were held during August 1985.

Agency Contact: Patricia W. Silvey, Director, Office of Standards, Regulations and Variances, Department of Labor, Mine Safety and Health Administration, 4015 Wilson Boulevard, Room 627, Arlington, VA 22203, 703 235-1910

RIN: 1219-AA18

1449. APPROVAL REQUIREMENTS FOR EXPLOSIVES AND SHEATHED EXPLOSIVE UNITS

Significance: Agency Priority

Legal Authority: 30 USC 811

CFR Citation: 30 CFR 15

Legal Deadline: None.

Abstract: The requirements for approval of explosives are part of the overall coal review of high priority standards. The final rule updated and clarified existing specifications and tests, and recognized new provisions in the development of sheathed explosive units. Public hearings were held during April 1987.

Timetable:

Action	Date	FR Cite
ANPRM	06/05/84	49 FR 23281
ANPRM Comment Period End	08/10/84	
NPRM	11/12/86	51 FR 41046
NPRM Comment Period End	01/12/87	51 FR 41046
Notice of Public Hearings	03/26/87	52 FR 9670
Final Action	07/00/88	

Small Entity: Yes

Agency Contact: Patricia W. Silvey, Director, Office of Standards, Regulations and Variances, Department of Labor, Mine Safety and Health Administration, 4015 Wilson Boulevard, Rm 627, Arlington, VA 22203, 703 235-1910

RIN: 1219-AA23

1450. METAL AND NONMETAL RADIATION STANDARDS

Significance: Regulatory Program

Legal Authority: 30 USC 811

CFR Citation: 30 CFR 57.5037 to 57.5047

Legal Deadline: None.

Abstract: MSHA is reviewing its radiation standards for underground metal and nonmetal mines and has identified certain issues with respect to regulatory action. The Agency published a proposal in December 1986 revising its existing ionizing radiation standards. Public hearings were held in August 1987.Several issues still remain to be resolved in the final rule and MSHA is coordinating with NIOSH, EPA, and NRC.

Timetable:

Action	Date	FR Cite
Request for Comments	01/29/85	50 FR 4144
Extension of Comment Period to 6/3/85	03/22/85	50 FR 11638
ANPRM	11/19/85	50 FR 47700
ANPRM Comment Period End	02/18/86	
NPRM	12/19/86	51 FR 45678
NPRM Comment Period End	02/16/87	51 FR 45678
Notice of Hearings	07/14/87	52 FR 26352
Extension of Comment Period to 02/29/88	11/12/87	
Final Action	08/00/88	

Small Entity: Yes

Agency Contact: Patricia W. Silvey, Director, Office of Standards,

Regulations, and Variances, Department of Labor, Mine Safety and Health Administration, 4015 Wilson Boulevard, Rm 627, Arlington, VA 22203, 703 235-1910

RIN: 1219-AA28

1451. APPROVAL CRITERIA FOR RESPIRATORY PROTECTIVE DEVICES

Significance: Regulatory Program

Legal Authority: 30 USC 957

CFR Citation: 30 CFR 11

Legal Deadline: None.

Abstract: Under the 1977 Mine Act, MSHA and the National Institute for Occupational Safety and Health (NIOSH) jointly approve respirators for use in hazardous atmospheres. New technology has been developed which has not been accommodated by the existing regulations. In addition, questions have been raised about laboratory testing and field performance of respirators. The decision has been made for NIOSH to have the lead in approval of respirators. MSHA will be involved with the devices which are uniquely adapted or required for mining. A proposed rule to remove MSHA's regulations upon completion of a concurrent NIOSH rulemaking was published in August 1987. However, further rulemaking is contingent upon NIOSH's timetables.

Timetable:

Action	Date	FR Cite
NPRM	08/27/87	52 FR 32313
Final Action	12/00/88	

Small Entity: Yes

Additional Information: Completion of MSHA's final rule is contingent upon NIOSH's completion of parallel rulemaking.

Agency Contact: Patricia W. Silvey, Director, Office of Standards, Regulations, and Variances, Department of Labor, Mine Safety and Health Administration, 4015 Wilson Boulevard, Arlington, Va 22203, 703 235-1910

RIN: 1219-AA30

DEPARTMENT OF LABOR (DOL)
Mine Safety and Health Administration (MSHA)

Completed Actions

1452. UNDERGROUND COAL MINE ROOF CONTROL

Significance: Regulatory Program

Legal Authority: 30 USC 811

CFR Citation: 30 CFR 75.200

Legal Deadline: None.

Abstract: The final rule clarified, revised, and updated MSHA's existing standards for controlling roof falls in underground coal mines. The final rule also recognized technical advances in roof support, such as the ATRS system which is a new and developing technology that stabilizes unsupported roof during the installation of support.

Timetable:

Action	Date	FR Cite
Begin Review	07/09/82	47 FR 30025
ANPRM	09/02/83	48 FR 40165
ANPRM Comment Period End	11/16/83	48 FR 40165
NPRM	10/15/85	50 FR 41784
Extension of Comment Period to 02/17/86	12/13/85	50 FR 50925
Notice of Public Hearings	01/17/86	51 FR 2525
Final Action	01/27/88	53 FR 2354
Final Action Effective	03/28/88	53 FR 2354

Small Entity: Yes

Additional Information: Public hearings were held during February 1986.

Agency Contact: Patricia W. Silvey, Director, Office of Standards, Regulations and Variances, Department of Labor, Mine Safety and Health Administration, 4015 Wilson Boulevard, Room 627, Arlington, VA 22203, 703 235-1910

RIN: 1219-AA13

1453. SAFETY STANDARDS FOR MACHINERY AND EQUIPMENT AT METAL AND NONMETAL MINES

Significance: Agency Priority

Legal Authority: 30 USC 811

CFR Citation: 30 CFR 56.14000; 30 CFR 57.14000

Legal Deadline: None.

Abstract: The machinery and equipment standards are part of the overall review of regulations dealing with metal and nonmetal mines and mills. As a result of consideration of the public rulemaking records relating to both the machinery and equipment and loading, hauling and dumping standards, the Agency reorganized the standards to more accurately and clearly identify the hazards. The Agency will publish a combined final rule of these two sections.

Timetable:

Action	Date	FR Cite
Begin Review	03/25/80	45 FR 19267
ANPRM	02/11/83	48 FR 6489
ANPRM Comment Period End	04/15/83	
NPRM	03/06/84	49 FR 8375
NPRM Comment Period End	05/07/84	49 FR 8375
Notice of Public Hearings	05/21/84	49 FR 21494
Combined with 1219-AA18 Combined with Loading, Hauling and Dumping regulation.	01/26/88	

Small Entity: Yes

Agency Contact: Patricia W. Silvey, Director, Office of Standards, Regulations and Variances, Department of Labor, Mine Safety and Health Administration, 4015 Wilson Boulevard, Rm 627, Arlington, VA 22203, 703 235-1910

RIN: 1219-AA19

1454. MINE PLAN APPROVALS

Significance: Regulatory Program

Legal Authority: 30 USC 811

CFR Citation: 30 CFR "Chapter I"

Legal Deadline: None.

Abstract: In March 1985, the Agency issued an ANPRM requesting comment on the existing plan approval process. After reviewing the comments, the Agency decided to incorporate plan

approval provisions into the regulations for roof support and ventilation in coal mines rather than develop a separate rulemaking. This item is therefore removed from the Agenda.

Timetable:

Action	Date	FR Cite
Request for comments	03/22/85	50 FR 11644
Incorporated into other regulations Incorporated with roof support and ventilation regulations.	01/26/88	

Small Entity: Yes

Agency Contact: Patricia W. Silvey, Director, Office of Standards, Regulations and Variances, Department of Labor, Mine Safety and Health Administration, 4015 Wilson Boulevard, Rm 627, Arlington, VA 22203, 703 235-1910

RIN: 1219-AA26

1455. SURFACE COAL MINE ELECTRICAL STANDARDS

Legal Authority: 30 USC 811

CFR Citation: 30 CFR 77.500; 30 CFR 77.600; 30 CFR 77.700; 30 CFR 77.800; 30 CFR 77.900; 30 CFR 77.1000; 30 CFR 77.1800

Legal Deadline: None.

Abstract: Existing electrical standards for surface coal mines would be reorganized, clarified, and updated. General incorporations by reference of the National Electric Code would be eliminated and replaced with specific standards applicable to surface coal mining operations. The Agency is also currently developing a proposal for its underground electrical standards. Because of the common issues. This rulemaking is, in part, contingent upon revisions now being developed for the underground proposal. Therefore, MSHA has decided to defer rulemaking at this time.

Timetable:

Action	Date	FR Cite
Deferred	12/15/87	

Small Entity: Yes

Agency Contact: Patricia W. Silvey, Director, Office of Standards, Regulations, and Variances, Department of Labor, Mine Safety and Health Administration, 4015 Wilson Boulevard, Rm 627, BT #3, Arlington, VA 22203, 703 235-1910

RIN: 1219-AA32

1456. ESCAPEWAYS AND ESCAPE FACILITIES

Significance: Regulatory Program

Legal Authority: 30 USC 811

CFR Citation: 30 CFR 75.1704; 30 CFR 75.1707

Legal Deadline: None.

Abstract: Escapeways are the primary means of egress during a fire or similar life threatening situation. MSHA's existing standards need to be updated and clarified to assure that escapeways are properly maintained and miners are informed of escape procedures.

Timetable:

Action	Date	FR Cite
Integrated into Ventilation Reg.	01/26/88	

Small Entity: Yes

Agency Contact: Patricia W. Silvey, Director, Office of Standards, Regulations and Variances, Department of Labor, Mine Safety and Health Administration, 4015 Wilson Blvd., Rm 627, BT #3, Arlington, VA 22203, 703 235-1910

RIN: 1219-AA37

1457. HANDS-ON TRAINING IN SCSR'S

Significance: Agency Priority

Legal Authority: 30 USC 811

CFR Citation: 30 CFR 75.1714

Legal Deadline: None.

Abstract: An emergency temporary standard (ETS) was published (6/30/87, 52 FR 24374) which required all coal miners to receive hands-on training in the use of SCSR's by 9/28/87. The ETS was issued in accordance with Section 101(b) of the Mine Act and revises 30 CFR 75.1714. The ETS was effective on the date of publication (6/30/87). In conjunction with the ETS, MSHA published a proposed rule (6/30/87; 52 FR 24378) which will supersede the ETS when promulgated in final form.

Timetable:

Action	Date	FR Cite
NPRM	06/30/87	52 FR 24378
Emergency Temporary Standard	06/30/87	52 FR 24374
NPRM Comment Period End	08/14/87	52 FR 24378
Final Action	03/30/88	53 FR 10332
Final Action Effective	04/29/88	

Small Entity: Yes

Agency Contact: Patricia W. Silvey, Director, Office of Standards, Regulations and Variances, Department of Labor, Mine Safety and Health Administration, 4015 Wilson Blvd., Room 627, Arlington, VA 22203, 703 235-1910

RIN: 1219-AA43

DEPARTMENT OF LABOR (DOL) — Proposed Rule Stage

Office of the Assistant Secretary for Administration and Management (OASAM)

1458. NONDISCRIMINATION IN PROGRAMS AND ACTIVITIES RECEIVING FEDERAL FINANCIAL ASSISTANCE FROM THE DEPARTMENT OF LABOR

Significance: Regulatory Program

Legal Authority: 29 USC 794; 42 USC 6101 to 6107; 42 USC 2000d to 2000d-4; 20 USC 1681 to 1683; 15 USC 3151; 29 USC 1501 et seq; 20 USC 1685; 20 USC 1686

CFR Citation: 29 CFR 31

Legal Deadline: Statutory, October 1, 1983. The statutory effective date for JTPA implementing regulations is 10/01/83; the ADA required implementing regulations within 90 days of the HHS guidance regulation which was published on June 12, 1979.

Abstract: DOL's existing regulations implementing Title VI of the Civil Rights Act of 1964 and Section 504 of

DOL—OASAM **Proposed Rule Stage**

the Rehabilitation Act of 1973, as amended would be amended and revised as a single comprehensive civil rights regulation covering all DOL statutory authority relating to nondiscrimination in Federally assisted programs with uniform administrative and enforcement procedures.

Timetable:

Action	Date	FR Cite
NPRM	00/00/00	
Final Action	00/00/00	

Small Entity: No

Additional Information: The regulation must be coordinated with DOJ pursuant to Executive Order 12250 and with the Office of Management and Budget for review pursuant to E.O. 12291, prior to publication as an NPRM.

Public Compliance Cost: Initial Cost: $0

Affected Sectors: None

Government Levels Affected: Local, State

Agency Contact: William J. Harris, Director, Directorate of Civil Rights, Department of Labor, Office of the Assistant Secretary for Administration and Management, 200 Constitution Ave., NW, Rm N4123, FPBldg., Washington, DC 20210, 202 523-6827

RIN: 1291-AA02

DEPARTMENT OF LABOR (DOL) — Final Rule Stage

Office of the Assistant Secretary for Administration and Management (OASAM)

1459. GUIDELINES FOR NONPROCUREMENT SUSPENSION AND DEBARMENT

Significance: Agency Priority

Legal Authority: EO 12549

CFR Citation: 29 CFR 98

Legal Deadline: Statutory, May 26, 1988. OMB Guidelines were published on May 26, 1987 and provided for rulemaking within one year.

Abstract: Executive Order 12549 provides that to the extent permitted by law, Executive Departments and agencies shall participate in a debarment and suspension from programs and activities involving Federal financial assistance. This proposed regulation covers the Department of Labor's participation in voluntary common rulemaking to implement the Executive Order. OMB has developed the guidelines and the proposed common rule.

Timetable:

Action	Date	FR Cite
NPRM	10/20/87	52 FR 39024
NPRM Comment Period End	12/29/87	
Final Action	05/00/88	

Small Entity: No

Government Levels Affected: Local, State, Federal

Agency Contact: Theodore Goldberg, Director, Office of Procurement and Grant, Policy, Department of Labor, Office of the Assistant Secretary for Administration and Management, 200 Constitution Avenue, NW, Rm S1522, FPBldg., Washington, DC 20210, 202 523-9174

RIN: 1291-AA11

DEPARTMENT OF LABOR (DOL) — Completed Actions

Office of the Assistant Secretary for Administration and Management (OASAM)

1460. DEPARTMENT OF LABOR ACQUISITION REGULATION (DOLAR) IMPLEMENTATION OF COMPETITION IN CONTRACTING ACT OF 1984 (CICA) (PUB. L. 98-369) INTO DOLAR

Significance: Agency Priority

Legal Authority: 5 USC 301; 29 USC 551; 40 USC 486(c); 41 USC 401; PL 98-369, Sec 2701; EO 12352; EO 12291

CFR Citation: 48 CFR 29

Legal Deadline: None.

Abstract: Develop Department of Labor Acquisition Regulations to implement new regulations incorporated into the Federal Acquisition Regulation (FAR) mandated by the Competition in Contracting Act of 1984 (Pub. L. 98-369).

Timetable:

Action	Date	FR Cite
Interim Final Rule	11/06/86	51 FR 40372
Final Action	02/09/88	53 FR 3839
Final Action Effective	03/10/88	53 FR 3839

Small Entity: No

Affected Sectors: All

Agency Contact: Theodore Goldberg, Director, Division of Procurement and Grant, Policy, Department of Labor, Office of the Assistant Secretary for Administration and Management, 200 Constitution Ave., NW, Rm S1522, FPBldg., Washington, DC 20210, 202 523-9174

RIN: 1291-AA06

1461. PUBLIC CONTRACTS AND PROPERTY MANAGEMENT; FEDERAL STANDARDS FOR AUDIT OF FEDERALLY FUNDED GRANTS, CONTRACTS AND AGREEMENTS

Significance: Agency Priority

Legal Authority: 5 USC 301; 31 USC 7505(a); OMB Circular No. A-128; OMB Circular No. A-110

CFR Citation: 29 CFR 96

Legal Deadline: None.

Abstract: Amends administrative requirements for audit by adding sections on audit resolution and audit appeals.

Timetable:

Action	Date	FR Cite
NPRM	06/27/86	51 FR 23433
NPRM Comment Period End	08/26/86	51 FR 23433

VOL 53 ISS 79 PT 1 AP 25 1988 UMI

DOL—OASAM **Completed Actions**

Action	Date	FR Cite
Final Action	02/26/88	53 FR 5966
Final Action Effective	03/28/88	53 FR 5966

Small Entity: No

Agency Contact: Theodore Goldberg, Director, Division of Procurement and Grant, Policy, Department of Labor, Office of the Assistant Secretary for Administration and Management, 200 Constitution Ave., NW, Rm S1522, FPBldg., Washington, DC 20210, 202 523-9174

RIN: 1291-AA10

1462. ● UNIFORM REQUIREMENTS FOR GRANTS TO STATE AND LOCAL GOVERNMENTS (IMPLEMENTATION OF OMB CIRCULAR A-102)

Significance: Agency Priority

Legal Authority: OMB Circular A-102

CFR Citation: 29 CFR 97

Legal Deadline: Statutory, March 12, 1988. Presidential memorandum dated March 12, 1987 directing affected Executive departments and agencies simultaneously issue a common rule that adopts government-wide terms and conditions for grants to State and local governments within one year.

Abstract: This is a common rule for Federal agencies to implement OMB Circular A-102 covering the administration of grants to State and local governments.

Timetable:

Action	Date	FR Cite
NPRM	06/09/87	52 FR 21816
NPRM Comment Period End	08/10/87	52 FR 21816
Final Action	03/11/88	53 FR 8034
Final Action Effective	10/01/88	

Small Entity: No

Agency Contact: Theodore Goldberg, Director, Office of Procurement and Grant, Policy, Department of Labor, Office of the Assistant Secretary for Administration and Management, 200 Constitution Avenue, NW, Room S1522, FPBldg., Washington, DC 20210, 202 523-9174

RIN: 1291-AA12

1463. ● UNIFORM RELOCATION ASSISTANCE AND REAL PROPERTY ACQUISITION FOR FEDERAL AND FEDERALLY ASSISTED PROGRAMS

Significance: Agency Priority

Legal Authority: 42 USC 4601-4655 Title IV of STURA

CFR Citation: 29 CFR 12

Legal Deadline: Statutory, September 1988. Federal Highway Administration (DOT), Lead Agency for common rulemaking effort has scheduled publication of final rule for September 1988.

Abstract: Implement provisions of the Uniform Act by rescinding common rule codified at 17 places in CFR and establish single rule published at one place in CFR, cross referenced from other titles.

Timetable:

Action	Date	FR Cite
Interim Final Rule	12/17/87	52 FR 48019

Small Entity: Undetermined

Government Levels Affected: Local, State, Federal

Agency Contact: Mr. Joseph McGovern, Program Analyst, Department of Labor, Office of the Assistant Secretary for Administration and Management, 200 Constitution Avenue, NW, Room S1513, FPBldg., Washington, DC 20210, 202 523-6401

RIN: 1291-AA14

DEPARTMENT OF LABOR (DOL) **Prerule Stage**

Occupational Safety and Health Administration (OSHA)

1464. ASBESTOS, TREMOLITE, ANTHOPHYLLITE AND ACTINOLITE

Significance: Regulatory Program

Legal Authority: 29 USC 655(b); 29 USC 657

CFR Citation: 29 CFR 1910.1001; 29 CFR 1926.58

Legal Deadline: None.

Abstract: On June 17, 1986, OSHA issued revised standards governing occupational exposure to asbestos, tremolite, anthophyllite, and actinolite in general industry and in the construction industry. These standards replaced OSHA's previous asbestos standard promulgated in 1972. Since the issuance of the revised standards OSHA has received letters and petitions, from both rulemaking participants and nonparticipants, that contain additional comments, assertions and information that the rulemaking record may not fully reflect. These letters and petitions concern the appropriateness of regulating nonasbestiform tremolite, anthophyllite and actinolite as presenting the same health risk as asbestos. OSHA has granted a temporary stay of the effective dates of the current standards as they apply to nonasbestiform varieties of tremolite, anthophyllite and actinolite. This action was taken, in part, to enable the Agency to review letters and memoranda from the National Institute for Occupational Safety and Health as well as submissions by the R.T. Vanderbilt Company and various other (Cont'd)

Timetable:

Action	Date	FR Cite
Notice of partial administrative stay	10/17/86	51 FR 37002
To be coordinated with MSHA	06/00/88	

Small Entity: Yes

Additional Information: ABSTRACT (CONT'D): trade associations concerning the appropriateness of regulating nonasbestiform tremolite, anthophyllite and actinolite in the revised standards. In addition, the temporary stay was imposed to allow sufficient time for OSHA to reopen the rulemaking record and conduct supplemental proceedings on the issue of whether, and how, to regulate occupational exposure to the nonasbestiform varieties of tremolite, anthophyllite and actinolite.

Agency Contact: Charles E. Adkins, Director, Health Standards Programs, Department of Labor, Occupational Safety and Health Administration, 200 Constitution Avenue, NW, Rm N3718, FPBldg., Washington, DC 20210, 202 523-7075

RIN: 1218-AA26

DOL—OSHA **Prerule Stage**

1465. MANUAL LIFTING (PARTS 1910, 1915, 1917, 1918, 1919, 1926 AND 1928)

Significance: Regulatory Program

Legal Authority: 29 USC 655(b)

CFR Citation: Not yet determined

Legal Deadline: None.

Abstract: The Nation's number one injury problem is back injuries. These injuries account for one of five compensation claims and one of four dollars expended for compensation. The purpose of the proposed request for comments and information is to enable OSHA to determine a course of action--possibly either rulemaking or informal guidance-aimed at reducing the number of back-related injuries which result from improper manual lifting. The request will identify a number of approaches to improving manual lifting, and invite public comments and suggestions. Specific engineering and administrative controls should reduce the pain, suffering, and lost time of the workforce as well as reduce the associated economic costs.

Timetable:

Action	Date	FR Cite
Request for Information onManual Lifting-Related Injuries	10/02/86	51 FR 35241
Reopening of Comment Period and Expansion of Scope	04/17/87	52 FR 12559

Next Action Undetermined

Small Entity: Undetermined

Additional Information: The Agency has determined that it will establish an interagency work group within the Department to seek more information in the area of manual lifting. Rulemaking is, therefore, not scheduled to begin immediately.

Affected Sectors: All

Government Levels Affected: State, Federal

Agency Contact: Barry J. White, Director, Safety Standards Programs, Department of Labor, Occupational Safety and Health Administration, 200 Constitution Avenue, NW, Rm N3605, FPBldg., Washington, DC 20210, 202 523-8061

RIN: 1218-AA95

1466. ● MEDICAL SURVEILLANCE PROGRAMS FOR EMPLOYEES

Significance: Regulatory Program

Legal Authority: 29 USC 655(b)

CFR Citation: 00 CFR "Not Yet Determined"

Legal Deadline: None.

Abstract: OSHA is developing a modification of the Z table permissible exposure limits of 29 CFR 1910.1000 in response to current scientific data. Section 6(b) of the Act requires provision for medical surveillance in each 6(b) rulemaking for a harmful substance. A generic standard for medical surveillance would satisfy the requirements of the Act thus enabling the Agency to deal directly with the narrower issues of the revision of the tables. No costs or benefits have yet been estimated.

Timetable:

Action	Date	FR Cite
ANPRM or Request for Information	00/00/00	

Small Entity: Undetermined

Agency Contact: Charles E. Adkins, Director, Health Standards Programs, Department of Labor, Occupational Safety and Health Administration, 200 Constitution Avenue, NW, Rm N3718, FPBldg., Washington, DC 20210, 202 523-7075

RIN: 1218-AB00

1467. ● EXPOSURE MONITORING PROGRAMS

Significance: Regulatory Program

Legal Authority: 29 USC 655(b)

CFR Citation: 00 CFR "Not Yet Determined"

Legal Deadline: None.

Abstract: OSHA is developing a modification of the Z table permissible exposure limits of 29 CFR 1910.1000 in response to current scientific data. Section 6(b)(7) of the Act requires provisions for exposure monitoring for each substance undergoing 6(b) rulemaking. A generic standard for exposure monitoring would satisfy the monitoring requirement of the Act thus enabling the Agency to deal directly with the narrower issues of the revision of the Z tables. No costs or benefits have yet been estimated.

Timetable:

Action	Date	FR Cite
ANPRM or Request for Information	00/00/00	

Small Entity: Undetermined

Agency Contact: Charles E. Adkins, Director, Health Standards Programs, Department of Labor, Occupational Safety and Health Administration, 200 Constitution Avenue, NW, Rm N3718, FPBldg., Washington, DC 20210, 202 523-7075

RIN: 1218-AB01

DEPARTMENT OF LABOR (DOL) — Proposed Rule Stage

Occupational Safety and Health Administration (OSHA)

1468. CARCINOGEN POLICY

Significance: Regulatory Program

Legal Authority: 29 USC 653; 29 USC 655; 29 USC 657

CFR Citation: 29 CFR 1990

Legal Deadline: None.

Abstract: The Carcinogen Policy describes the criteria and procedures OSHA will use to identify, classify, and then regulate carcinogens. The Policy also establishes a process for screening chemicals and for setting priorities for potential rulemaking activities. The Carcinogen Policy explicitly recognizes that periodic revisions are necessary in order to incorporate the latest scientific advances and techniques into the regulatory process. Hence, given the very rapid advances since 1980 in the understanding of the mechanisms of carcinogenesis, it is time for OSHA to review and modernize the Carcinogen Policy. The original standard was issued in 1980 before the Supreme Court "benzene" decision on significant risk. Thereafter, a final rule deleting

provisions of the Carcinogen Policy that were inconsistent with the benzene decision was published on 1/19/81 (46 FR 4889). A proposal was published on 1/23/81 (46 FR 7402) to permit alternatives to the risk analysis section of the carcinogen policy to be addressed. The proposal was withdrawn on 3/27/81 (46 FR 19000). An advance notice of proposed rulemaking was published on 1/5/82 (47 FR 187) with comments due by 4/5/82. That document (cont)

Timetable:

Action	Date	FR Cite
ANPRM	01/05/82	47 FR 187
End of Comment Period on stay	02/19/82	
ANPRM Comment Period End	04/05/82	
Stay published	01/04/83	48 FR 241
NPRM	12/00/88	

Small Entity: No

Additional Information: ABSTRACT CONT: also proposed to stay the publication of the candidate and priority lists. The final stay was published on 1/4/83 (48 FR 241). As part of its evaluation of the policy, OSHA is reviewing the public comments received in response to the document published by the Office of Science and Technology Policy entitled "Chemical Carcinogens, Review of the Science and its Associated Principles, May 1984" and is reviewing the later version of that document which was published March 14, 1985.

Government Levels Affected: Federal

Agency Contact: Charles E. Adkins, Director, Health Standards Programs, Department of Labor, Occupational Safety and Health Administration, 200 Constitution Ave., NW, Rm N3718, FPBldg., Washington, DC 20210, 202 523-7075

RIN: 1218-AA01

1469. RESPIRATORY PROTECTION

Significance: Regulatory Program

Legal Authority: 29 USC 655(b)

CFR Citation: 29 CFR 1910.134; 29 CFR 1915.152; 29 CFR 1918.102; 29 CFR 1926.103

Legal Deadline: None.

Abstract: The present respiratory protection standards have been in place for more than 10 years and do not take into consideration the current state-of-the-art for respiratory protection. In addition, the general industry standard for respirators contains redundancies and includes several advisory provisions which should be eliminated or changed. OSHA has reviewed the current standards and intends to propose revisions.

Timetable:

Action	Date	FR Cite
ANPRM	05/14/82	47 FR 20803
ANPRM Comment Period End	09/13/82	
Public Comment Period onPreproposal Draft Ends	11/29/85	
NPRM	07/00/88	

Small Entity: Yes

Agency Contact: Charles E. Adkins, Director, Health Standards Programs, Department of Labor, Occupational Safety and Health Administration, 200 Constitution Ave., NW, Rm N3718, FPBldg., Washington, DC 20210, 202 523-7075

RIN: 1218-AA05

1470. METHODS OF COMPLIANCE

Significance: Regulatory Program

Legal Authority: 29 USC 655(b)

CFR Citation: 29 CFR 1910.1000(e); 29 CFR 1910.134(a)(1)

Legal Deadline: None.

Abstract: OSHA's policy concerning the use of engineering controls and respirators was targeted for review by the President's Task Force on Regulatory Relief in 1981. Current OSHA regulations require that employers implement feasible engineering controls to maintain air contaminant concentrations in the workplace at or below the prescribed permissible exposure limits. The use of respirators is permitted only in those cases where engineering controls are not feasible, not yet installed, or not adequate. This policy has been criticized as being inflexible, not cost-effective, and often unnecessary for employee health protection. OSHA believes that any changes to the policy for use of engineering controls must be closely coordinated with revisions in the respiratory protection regulations (29 CFR 1910.134). This rulemaking does not address the assessment and reduction of any absolute existing risks, but rather addresses the possible change in risk abatement associated with the use of respirators instead of engineering controls.

Timetable:

Action	Date	FR Cite
ANPRM	02/22/83	48 FR 7473
ANPRM Comment Period End	06/22/83	
NPRM	05/00/88	

Small Entity: Yes

Agency Contact: Charles E. Adkins, Director, Health Standards Programs, Department of Labor, Occupational Safety and Health Administration, Rm N3718, FPBldg, 200 Constitution Ave., NW, Washington, DC 20210, 202 523-7075

RIN: 1218-AA28

1471. OIL AND GAS WELL DRILLING AND SERVICING (PART 1910)

Significance: Regulatory Program

Legal Authority: 29 USC 655(b)

CFR Citation: 29 CFR 1910.270

Legal Deadline: None.

Abstract: Employees in oil and gas well drilling and servicing are exposed to a variety of safety hazards which are not specifically covered by present OSHA safety standards. It has proved difficult to apply the existing general industry standards to control the unique nature of this industry. OSHA is considering a standard which will address the unique problems of oil and gas well drilling and servicing.

Timetable:

Action	Date	FR Cite
NPRM	12/28/83	48 FR 57202
NPRM Comment Period End	06/04/84	49 FR 9913
Public Hearing Held 07/24/84 thru	06/10/84	49 FR 9913
NPRM - Second	12/00/88	

Small Entity: Yes

Agency Contact: Barry White, Director, Safety Standards Programs, Department of Labor, Occupational Safety and Health Administration, 200 Constitution Ave., NW, Rm N3605, FPBldg., Washington, DC 20210, 202 523-8061

RIN: 1218-AA34

VOL 53 ISS 79 PT 1 AP 25 1988 UMI

1472. BENZENE

Significance: Regulatory Program

Legal Authority: 29 USC 655(b)

CFR Citation: 29 CFR 1910.1000, Table Z-2; 29 CFR 1910.1028

Legal Deadline: None.

Abstract: OSHA has amended its standard for occupational exposure to benzene by reducing the permissible exposure limit from 10 parts benzene per million parts of air (10 ppm) to an eight-hour time-weighted average of 1 ppm and by adding appropriate industrial hygiene and medical surveillance provisions necessary for the protection of employee health. This action is based on OSHA's determination that the amendments are needed to reduce the risk of leukemia and other adverse health effects associated with occupational exposure to benzene.

OSHA published its final amendment to the standard on September 11, 1987. Due to technical problems associated with the completion of a detailed study of feasibility in barge and tanker cleaning and repair operations, however, OSHA exempted these operations from certain provisions of the standard. OSHA intends to issue a proposal to amend the benzene standard which will address the factors specific to the barge and tanker cleaning and repair industry.

Timetable:

Action	Date	FR Cite
NPRM	12/10/85	50 FR 50512
Notice Changing Public Hearing	01/28/86	51 FR 3474
NPRM Comment Period End	02/14/86	50 FR 50512
Public Hearings	03/11/86	50 FR 50512
Final Action	09/11/87	52 FR 34460
Final Action Effective	12/10/87	
NPRM on Barge/Tanker Cleaning and Repair Operations	08/00/88	

Small Entity: Yes

Agency Contact: Charles E. Adkins, Director, Health Standards Programs, Department of Labor, Occupational Safety and Health Administration, 200 Constitution Ave., NW, Rm N3718, FPBldg., Washington, DC 20210, 202 523-7075

RIN: 1218-AA47

1473. FALL PROTECTION SYSTEMS (PERSONAL PROTECTIVE EQUIPMENT) (PART 1910)

Significance: Regulatory Program

Legal Authority: 29 USC 655(b)

CFR Citation: 29 CFR 1910, Subpart I

Legal Deadline: None.

Abstract: Existing standards do not contain criteria for personal fall protection systems. Consequently, requirements containing criteria for personal fall protection systems would be added to 29 CFR Part 1910; Subpart I, Personal Protection Equipment, to enhance employee protection from injury and death due to falls to different elevations.

Timetable:

Action	Date	FR Cite
NPRM	11/00/88	
Final Action	10/00/89	

Small Entity: No

Additional Information: 1. 1218-AA48 will be issued concurrently with 1218-AB04.

Agency Contact: Barry J. White, Director, Safety Standards Programs, Department of Labor, Occupational Safety and Health Administration, 200 Constitution Ave., NW, Rm N3605, FPBldg., Washington, DC 20210, 202 523-8061

RIN: 1218-AA48

1474. CONFINED SPACE (PART 1910)

Significance: Regulatory Program

Legal Authority: 29 USC 655(b)

CFR Citation: 29 CFR 1910.146

Legal Deadline: None.

Abstract: Entry into confined spaces has been responsible for many employee deaths and injuries. However, current standards do not specifically address the hazards associated with entry into confined spaces. Therefore, OSHA is proposing certain criteria and precautions which are necessary to minimize the hazards associated with employees entering confined spaces.

Timetable:

Action	Date	FR Cite
NPRM	09/00/88	
Final Action	12/00/89	

Small Entity: Undetermined

Analysis: Regulatory Impact Analysis

Agency Contact: Barry J. White, Director, Safety Standards Programs, Department of Labor, Occupational Safety and Health Administration, 200 Constitution Ave., NW, Rm N3605, FPBldg., Washington, DC 20210, 202 523-8061

RIN: 1218-AA51

1475. LOGGING (PART 1910)

Significance: Regulatory Program

Legal Authority: 29 USC 655(b)

CFR Citation: 29 CFR 1910.266, (Revision)

Legal Deadline: None.

Abstract: Logging is a very hazardous industry. It has an incidence rate nearly twice that of manufacturing, and reflecting the seriousness of the injuries incurred, a lost workday rate nearly four times as high. The purpose of the standard will be to protect workers from the ever-present hazards of chain saw operation, falling objects (trees, branches), rolling or sliding logs, falls from trees, and materials handling accidents. At present there is no OSHA standard specifically applicable to logging in general. There is a standard, 29 CFR 1910.266, applicable only to pulpwood logging; however, pulpwood logging is estimated to account for less than half of the logging activity in the United States. Development of a national OSHA standard addressing all types of logging will provide coverage for those loggers not now protected. The new regulation will provide coverage where there is no approved state regulation and will set a minimum safety level for those states that chose to develop a state regulation.

Timetable:

Action	Date	FR Cite
NPRM	07/00/88	
Final Action	07/00/89	

Small Entity: Undetermined

Additional Information: A preproposal draft standard was circulated for public comment. The proposed standard will be developed to incorporate public comment as appropriate.

Affected Sectors: 24 Lumber and Wood Products, Except Furniture

Government Levels Affected: State, Federal

Agency Contact: Mr. Barry J. White, Director, Safety Standards, Department of Labor, Occupational Safety and Health Administration, 200 Constitution Ave., NW, Rm N3605, FPBldg., Washington, DC 20210, 202 523-8061

RIN: 1218-AA52

1476. CONTROL OF HAZARDOUS ENERGY SOURCES (LOCKOUT/TAGOUT) (PART 1910)

Significance: Regulatory Program

Legal Authority: 29 USC 655(b)

CFR Citation: 29 CFR 1910.147, (New)

Legal Deadline: None.

Abstract: The proposed standard will fill a major gap in our current regulations which now depend for enforcement on the general duty clause, 5(a)(1). It will apply to those situations where the unexpected energization, start up or the release of stored energy could cause injury to employees. Providing comprehensive and uniform control procedures is also expected to reduce significantly the potential for injury and death of employees because the hazards targeted for control exist in virtually every workplace. Further, the proposed standard will respond to the concerns of organized labor who petitioned OSHA in 1979 and again in 1982 for regulatory action to protect employees and to the American National Standards Institute's petition for OSHA to adopt its consensus standard ANSI Z244.1-1982. Regulatory options involve developing a comprehensive standard covering all potentially hazardous energy sources or limiting the scope and application to those certain machines or industries that are causing most of the injuries.

Timetable:

Action	Date	FR Cite
ANPRM	06/17/80	45 FR 41012
ANPRM Comment Period End	09/15/80	
NPRM	04/00/88	
Final Action	03/00/89	

Small Entity: Yes

Affected Sectors: Multiple

Government Levels Affected: State, Federal

Agency Contact: Mr. Barry J. White, Director, Safety Standards, Department of Labor, Occupational Safety and Health Administration, 200 Constitution Ave., NW, Rm. N3605, FPBldg., Washington, DC 20210, 202 523-8061

RIN: 1218-AA53

1477. SAFETY AND HEALTH REGULATIONS FOR LONGSHORING (PART 1918)

Significance: Regulatory Program

Legal Authority: 29 USC 655 Occupational Safety and Health Act of 1970; 33 USC 941 Longshoremen's and Harborworkers Compensation Act

CFR Citation: 29 CFR 1910.16; 29 CFR 1918, (Revision)

Legal Deadline: None.

Abstract: The purpose of this regulatory action would be to update and revise a standard first issued in 1960. The current language in many instances addresses the hazards to cargo handling involving methods long since abandoned, and fails to address the serious hazards of newer methods. Because much of the current standard is out of date, there are problems with compliance. These revised requirements will provide both employers and employees with a blueprint for effective and safe workpractices in the cargo handling industry. No alternative other than revision is contemplated. The annual cost of the revision is expected to be minimal -- less than five million dollars.

Timetable:

Action	Date	FR Cite
NPRM	11/00/88	
Final Action	11/00/89	

Small Entity: Yes

Affected Sectors: 44 Water Transportation

Agency Contact: Barry White, Director, Safety Standards Programs, Department of Labor, Occupational Safety and Health Administration, 200 Constitution Ave., NW, Rm N3605 FPBldg., Washington, DC 20210, 202 523-8061

RIN: 1218-AA56

1478. 4,4'-METHYLENEDIANILINE

Significance: Regulatory Program

Legal Authority: 29 USC 655(b); 29 USC 657

CFR Citation: 29 CFR 1910

Legal Deadline: None.

Abstract: 4,4'-Methylenedianiline (MDA) is a chemical used primarily to manufacture methylenediphenyl diisocyanate, which is used to make polyurethane foams and elastomers. Recent scientific data indicate that MDA is a carcinogen in animals and a potential carcinogen in humans. In 1983, OSHA and the Environmental Protection Agency participated in a joint effort to publish an advance notice of proposed rulemaking to solicit information on MDA production and use, estimates of environmental and occupational exposure, and studies of its toxic and carcinogenic effects. EPA evaluated the data received in response to the advance notice and concluded that the chemical presents an unreasonable risk of injury to the health of exposed workers. Under the provisions of section 9(a) of the Toxic Substances Control Act, EPA referred MDA to OSHA for action. OSHA responded to the EPA referral on 2/26/86. OSHA established a mediated rulemaking advisory committee composed of interested parties from labor, industry and government to assist the agency in developing a proposed standard. The Committee completed its work in June 1987 (Cont'd)

Timetable:

Action	Date	FR Cite
ANPRM	09/20/83	48 FR 42836
ANPRM Comment Period End	11/23/83	48 FR 42836
Publication of Committee Recommendation	07/16/87	52 FR 26776
NPRM	04/00/88	
NPRM Comment Period End	05/00/88	
Final Action	10/00/88	

Small Entity: Undetermined

Additional Information: ABSTRACT (CONT'D): and forwarded its recommendations to the Agency. OSHA published the Committee's recommendations on July 16, 1987, and intends to publish a proposed standard for MDA within 90 days.

Agency Contact: Charles E. Adkins, Director, Health Standards Programs,

Department of Labor, Occupational Safety and Health Administration, 200 Constitution Ave., NW, Rm N3718, FPBldg., Washington, DC 20210, 202 523-7075

RIN: 1218-AA58

1479. ELECTRIC POWER GENERATION, TRANSMISSION AND DISTRIBUTION (PART 1910)

Significance: Regulatory Program

Legal Authority: 29 USC 655(b)

CFR Citation: 29 CFR 1910.269

Legal Deadline: None.

Abstract: A major area of coverage not addressed in the current OSHA electrical standards for general industry (29 CFR 1910) involves the maintenance and operation practices associated with electrical transmission and distribution lines, substations and generating stations. It is intended that the proposed standard fill this void by establishing minimum requirements for electrical safety work practices for qualified employees working on or near installations whose purpose is the generation and distribution of electricity.

Timetable:

Action	Date	FR Cite
NPRM	05/00/88	
Final Action	07/00/89	

Small Entity: No

Affected Sectors: Multiple

Government Levels Affected: Local, State, Federal

Agency Contact: Barry White, Director, Safety Standards Programs, Department of Labor, Occupational Safety and Health Administration, 200 Constitution Ave., NW, Rm N3605, FPBldg., Washington, DC 20210, 202 523-8061

RIN: 1218-AA59

1480. PULP, PAPER AND PAPERBOARD MILLS (PART 1910)

Significance: Regulatory Program

Legal Authority: 29 USC 655(b)

CFR Citation: 29 CFR 1910.261, (Revision)

Legal Deadline: None.

Abstract: This regulatory action will revise the existing standards covering mills where pulp, paper, and paperboard are manufactured and converted. The revision will develop performance oriented standards that address current gaps in coverage, the use of new technology, the elimination of outmoded or redundant provisions, and the use of appropriate OSHA general industry standards.

Timetable:

Action	Date	FR Cite
NPRM	01/00/89	
Final Action	08/00/89	

Small Entity: Undetermined

Affected Sectors: 26 Paper and Allied Products

Government Levels Affected: State, Federal

Agency Contact: Barry J. White, Director, Safety Standards, Department of Labor, Occupational Safety and Health Administration, 200 Constitution Ave., NW, Rm N3605, FPBldg., Washington, DC 20210, 202 523-8061

RIN: 1218-AA61

1481. MOTOR VEHICLES, MECHANIZED EQUIPMENT, AND MARINE OPERATIONS (PART 1926)

Legal Authority: 29 USC 655(b); 40 USC 333

CFR Citation: 29 CFR 1926.600; 29 CFR 1926.601; 29 CFR 1926.602; 29 CFR 1926.603; 29 CFR 1926.604; 29 CFR 1926.605; 29 CFR 1926.606

Legal Deadline: None.

Abstract: This regulatory action is being made to update the rollover protective structures to reflect the latest technology. In addition, the action will eliminate redundant provisions, remove outdated referenced consensus standards, and delete ambiguous language from the existing provisions which address motor vehicles, material handling equipment, pile driving equipment, site clearing, and marine operations and equipment.

Timetable:

Action	Date	FR Cite
Next Action Undetermined		

Small Entity: Undetermined

Additional Information: OSHA has determined, based on staff resources and priorities, that immediate action will not be taken. Data collection will continue and the Agency intends to reevaluate the decision within 12 to 18 months.

Agency Contact: Barry J. White, Director, Safety Standards Programs, Department of Labor, Occupational Safety and Health Administration, 200 Constitution Ave., NW, Rm N3605, FPBldg., Washington, DC 20210, 202 523-8061

RIN: 1218-AA63

1482. STEEL ERECTION (PART 1926)

Significance: Regulatory Program

Legal Authority: 29 USC 655; 40 USC 333

CFR Citation: 29 CFR 1926.750, (Revision); 29 CFR 1926.751, (Revision); 29 CFR 1926.752, (Revision)

Legal Deadline: None.

Abstract: This action will consolidate, clarify, and revise the provisions addressing fall protection for employees performing steel erection operations. When completed, the revised requirements may be relocated and incorporated into Subpart M (of Part 1926) which is the general fall protection standard. In addition, this action will consolidate, clarify, and revise the existing provisions governing steel erection assembly, flooring, bolting, riveting, fitting-up, and plumbing-up.

Timetable:

Action	Date	FR Cite
NPRM	12/00/88	
Final Action	12/00/89	

Small Entity: Undetermined

Agency Contact: Barry J. White, Director, Safety Standards Programs, Department of Labor, Occupational Safety and Health Administration, 200 Constitution Ave., NW, Rm N3605, FPBldg., Washington, DC 20210, 202 523-8061

RIN: 1218-AA65

1483. FALL PROTECTION (PART 1915)

Significance: Regulatory Program

Legal Authority: 29 USC 655(b); 33 USC 941

CFR Citation: 29 CFR 1915.201; 29 CFR 1915.202; 29 CFR 1915.203; 29 CFR 1915.73; 29 CFR 1915.74; 29 CFR 1915.75; 29 CFR 1915.77

Legal Deadline: None.

Abstract: This regulatory action will revise the existing shipyard standard covering fall protection and will

consolidate all related and applicable 29 CFR 1910 provisions into 29 CFR 1915. The revision will develop, in part, performance-oriented standards, address current gaps in coverage, address new technology and eliminate outmoded and redundant provisions.

Timetable:

Action	Date	FR Cite
NPRM	04/00/88	
Final Action	03/00/89	

Small Entity: No

Additional Information: 1. Applicable Part 1910 provisions under consideration: 29 CFR 1910.21 - .23.

Agency Contact: Barry J. White, Director, Safety Standards Programs, Department of Labor, Occupational Safety and Health Administration, 200 Constitution Avenue, NW, Room N3605, FPBldg., Washington, DC 20210, 202 523-8061

RIN: 1218-AA66

1484. SCAFFOLDS (PART 1915)

Significance: Regulatory Program

Legal Authority: 29 USC 655(b); 33 USC 941

CFR Citation: 29 CFR 1915.71; 29 CFR 1910.28; 29 CFR 1910.29

Legal Deadline: None.

Abstract: This regulatory action will revise the existing shipyard standards covering scaffolds and will consolidate all related and applicable 29 CFR 1910 provisions into 29 CFR 1915. The revision will develop, in part, performance-oriented standards, address current gaps in coverage, address new technology, and eliminate outmoded and redundant provisions.

Timetable:

Action	Date	FR Cite
NPRM	04/00/88	
Final Action	03/00/89	

Small Entity: No

Additional Information: Applicable Part 1910 provisions under consideration: 29 CFR 1910.28 - .29.

Agency Contact: Barry J. White, Director, Safety Standards Programs, Department of Labor, Occupational Safety and Health Administration, 200 Constitution Ave., NW, Rm N3605, FPBldg., Washington, DC 20210, 202 523-8061

RIN: 1218-AA68

1485. ACCESS AND EGRESS (PART 1915)

Significance: Regulatory Program

Legal Authority: 29 USC 655(b); 33 USC 941

CFR Citation: 29 CFR 1915.72; 29 CFR 1915.74; 29 CFR 1915.75; 29 CFR 1915.76

Legal Deadline: None.

Abstract: This regulatory action will revise the existing shipyard standards covering access and egress and will consolidate all related and applicable 29 CFR 1910 provisions into 29 CFR 1915. The revision will develop, in part, performance-oriented standards, address current gaps in coverage, address new technology, and eliminate outmoded and redundant provisions.

Timetable:

Action	Date	FR Cite
NPRM	04/00/88	
Final Action	03/00/89	

Small Entity: No

Additional Information: 1. Applicable Part 1910 provisions under consideration: 29 CFR 1910.24 - .27; 29 CFR 1910.36 - .37.

Agency Contact: Barry J. White, Director, Safety Standards Programs, Department of Labor, Occupational Safety and Health Administration, 200 Constitution Ave., NW, Rm N3605, FPBldg., Washington, DC 20210, 202 523-8061

RIN: 1218-AA70

1486. FACE, HEAD, EYE AND FOOT PROTECTION (PERSONAL PROTECTIVE EQUIPMENT) (PART 1910)

Significance: Regulatory Program

Legal Authority: 29 USC 655(b)

CFR Citation: 29 CFR 1910

Legal Deadline: None.

Abstract: Existing standards for eye, face, head, and foot protection reference outdated national consensus standards which have been updated and improved. Consequently, criteria for personal protective equipment for eye, face, head, and foot would be revised to reflect improved developments in these types of equipment. This would allow the use of better personal protective equipment and would result in improved employee protection from eye, face, head, and foot hazards.

Timetable:

Action	Date	FR Cite
NPRM	03/00/89	
Final Action	03/00/90	

Small Entity: Undetermined

Agency Contact: Barry J. White, Director, Safety Standards Programs, Department of Labor, Occupational Safety and Health Administration, 200 Constitution Ave., NW, Rm N3605 FPBldg., Washington, DC 20210, 202 523-8061

RIN: 1218-AA71

1487. WELDING, CUTTING AND BRAZING (PART 1910)

Significance: Regulatory Program

Legal Authority: 29 USC 655(b)

CFR Citation: 29 CFR 1910.251; 29 CFR 1910.252; 29 CFR 1910.253; 29 CFR 1910.254

Legal Deadline: None.

Abstract: OSHA proposes to revise and update its existing Subpart Q covering welding, cutting and brazing operations, and to develop performance-oriented standards designed to reduce the number of deaths and injuries due to unsafe equipment and unsafe operations. There has been no substantial revision to Subpart Q since its adoption in 1971. A complete and comprehensive revision is needed at this time to bring the standard into line with the current state-of-the art and updated consensus standards.

Timetable:

Action	Date	FR Cite
NPRM	10/00/88	
Final Action	11/00/89	

Small Entity: Undetermined

Affected Sectors: Multiple

Agency Contact: Barry J. White, Director, Safety Standards Programs, Department of Labor, Occupational Safety and Health Administration, 200 Constitution Ave., NW, Rm N3605, FPBldg., Washington, DC 20210, 202 523-8061

RIN: 1218-AA72

1488. WELDING, CUTTING AND HEATING (PART 1915)

Significance: Regulatory Program

Legal Authority: 29 USC 655(b); 33 USC 941

CFR Citation: 29 CFR 1915.51; 29 CFR 1915.52; 29 CFR 1915.53; 29 CFR 1915.54; 29 CFR 1915.55; 29 CFR 1915.56; 29 CFR 1915.57

Legal Deadline: None.

Abstract: This regulatory action will revise the existing shipyard standard covering welding, cutting, and heating. The revision will develop, in part, a performance-oriented standard, address current gaps in coverage, recognize new technology, and eliminate outmoded or redundant provisions. In addition, it will consolidate 29 CFR 1915 standards and applicable 29 CFR 1910 standards into one set of provisions.

Timetable:

Action	Date	FR Cite
NPRM	04/00/88	
Final Action	03/00/89	

Small Entity: Yes

Additional Information: 1. Applicable Part 1910 provisions under consideration: 29 CFR 1910.251 - .252.

Agency Contact: Barry J. White, Director, Safety Standards Programs, Department of Labor, Occupational Safety and Health Administration, 200 Constitution Ave., NW, Rm N3605, FPBldg., Washington, DC 20210, 202 523-8061

RIN: 1218-AA73

1489. PERSONAL PROTECTIVE EQUIPMENT (PART 1915)

Significance: Regulatory Program

Legal Authority: 29 USC 655(b); 33 USC 941

CFR Citation: 29 CFR 1915.151; 29 CFR 1915.152; 29 CFR 1915.153; 29 CFR 1915.154

Legal Deadline: None.

Abstract: This regulatory action will revise the existing shipyard standard covering personal protective equipment. The revision will develop, in part, a performance-oriented standard, address current gaps in coverage, recognize new technology, and eliminate outmoded or redundant provisions. It will consolidate 29 CFR 1915 standards and applicable 29 CFR 1910 standards into one set of provisions.

Timetable:

Action	Date	FR Cite
NPRM	04/00/88	
Final Action	03/00/89	

Small Entity: No

Additional Information: 1. Applicable Part 1910 provisions under consideration: 29 CFR 1910.132 through .137.

Agency Contact: Barry J. White, Director, Safety Standards Programs, Department of Labor, Occupational Safety and Health Administration, 200 Constitution Ave., NW, Rm N3605, FPBldg., Washington, DC 20210, 202 523-8061

RIN: 1218-AA74

1490. COMPRESSED AIR (PART 1926)

Legal Authority: 29 USC 655(b); 40 USC 333

CFR Citation: 29 CFR 1926.803

Legal Deadline: None.

Abstract: OSHA published a "Request for Comments and Information" on April 22, 1985, on the subject of working in compressed air and decompression (50 FR 15756). Based on the information obtained, OSHA has determined that immediate action will not be taken. The Agency intends to continue data collection, and to reevaluate the decision in light of additional input, staff resources, and Agency priorities within 12 to 18 months.

Timetable:

Action	Date	FR Cite
Request for Comments and Information	04/22/85	50 FR 15756
Comment Period Closed	07/22/85	

Next Action Undetermined

Small Entity: Undetermined

Agency Contact: Barry J. White, Director, Safety Standards Programs, Department of Labor, Occupational Safety and Health Administration, 200 Constitution Ave., NW, Room N3605, FPBldg., Washington, DC 20210, 202 523-8061

RIN: 1218-AA76

1491. 1,3-BUTADIENE

Significance: Regulatory Program

Legal Authority: 29 USC 655(b)

CFR Citation: 29 CFR 1910.1000, Table Z-1

Legal Deadline: None.

Abstract: On October 10, 1985, EPA referred 1,3-butadiene (BD) to OSHA for possible regulatory action under section 9(a) of the Toxic Substance Control Act. On April 11, 1986, OSHA responded to the EPA referral indicating that the Agency has preliminarily concluded that BD poses risk to the occupationally exposed population at the current OSHA permissible exposure limit and that the risk can be reduced or prevented through the promulgation of a revised standard. OSHA intends to initiate rulemaking to revise the standard for BD pursuant to section 6(b) of the Occupational Safety and Health Act.

Timetable:

Action	Date	FR Cite
EPA Referral	10/10/85	50 FR 41393
Request for Comments	12/27/85	50 FR 52952
Response to EPA Referral	04/11/86	51 FR 12526
ANPRM	10/01/86	51 FR 35003
ANPRM Comment Period End	12/30/86	
NPRM	09/00/88	

Small Entity: Undetermined

Agency Contact: Charles E. Adkins, Director, Health Standards Programs, Department of Labor, Occupational Safety and Health Administration, 200 Constitution Avenue, NW, Rm N3718, FPBldg., Washington, DC 20210, 202 523-7075

RIN: 1218-AA83

1492. GLYCOL ETHERS: 2-METHOXYETHANOL, 2-ETHOXYETHANOL AND THEIR ACETATES

Significance: Regulatory Program

Legal Authority: 29 USC 655; 29 USC 657

CFR Citation: 29 CFR 1910.1000

Legal Deadline: None.

Abstract: On May 20, 1986, the Environmental Protection Agency (EPA) issued a report to OSHA, under Section 9(a) of the Toxic Substances Control

Act, stating that EPA has reasonable basis to conclude that the risk of injury to worker health from exposure to four glycol ethers during their manufacture, processing and use is unreasonable, and that this risk may be prevented or reduced to a significant extent by OSHA regulatory action. EPA gave OSHA 180 days in which to respond to its report. OSHA published its response on December 11, 1986, stating that OSHA had preliminarily concluded that occupational exposures to the subject glycol ethers at the current OSHA permissible exposure limits may present significant risks to the health of workers. OSHA announced that it would begin rulemaking proceedings for these chemicals.

Timetable:

Action	Date	FR Cite
ANPRM	04/02/87	52 FR 10586
ANPRM Comment Period End	07/31/87	
NPRM	10/00/88	

Small Entity: Undetermined

Agency Contact: Charles E. Adkins, Director, Health Standards Programs, Department of Labor, Occupational Safety and Health Administration, 200 Constitution Avenue, NW, Rm N3718, FPBldg., Washington, DC 20210, 202 523-7075

RIN: 1218-AA84

1493. EXPLOSIVE AND OTHER DANGEROUS ATMOSPHERES (PART 1915)

Significance: Regulatory Program

Legal Authority: 29 USC 655(b); 33 USC 941

CFR Citation: 29 CFR 1915.11; 29 CFR 1915.12; 29 CFR 1915.13; 29 CFR 1915.14; 29 CFR 1915.15; 29 CFR 1915.16

Legal Deadline: None.

Abstract: This regulatory action will revise the existing shipyard standard covering explosive and other dangerous atmospheres. This revision will develop, in part, a performance-oriented standard, address any gaps in coverage, recognize new technology, and eliminate outmoded or redundant standards.

Timetable:

Action	Date	FR Cite
NPRM	04/00/88	
Final Action	03/00/89	

Small Entity: No

Affected Sectors: 373 Ship and Boat Building and Repairing

Government Levels Affected: State, Federal

Agency Contact: Barry J. White, Director, Safety Standards Programs, Department of Labor, Occupational Safety and Health Administration, 200 Constitution Ave., NW, Rm N3605, FPBldg., Washington, DC 20210, 202 523-8063

RIN: 1218-AA91

1494. GEAR CERTIFICATION (PART 1919)

Legal Authority: 29 USC 655; 29 USC 941

CFR Citation: 29 CFR 1919, (Revision)

Legal Deadline: None.

Abstract: In its May 7, 1987, Federal Register notice the Agency requested information to assist in the possible revision of 29 CFR Part 1919. Part 1919, entitled "Gear Certification," implements requirements located in each of OSHA's maritime standards which cover work carried out within the Federal maritime jurisdiction. Changes in the design and composition of cargo handling gear which have evolved since these rules were last amended (1969) provided questions as to the efficacy of the current rules. Additionally, the Agency sought comments that would suggest ways in which the administrative function of the accreditation program could be improved. Comment period ended: August 5, 1987.

Timetable:

Action	Date	FR Cite
Request for Information	05/07/87	52 FR 17302
Comment Period Closed	08/05/87	

Next Action Undetermined

Small Entity: Undetermined

Additional Information: The Agency has determined, based on input to its "Request for Comments and Information," that minor revision to Gear Certification (Part 1919) is necessary.

Affected Sectors: 37 Transportation Equipment; 44 Water Transportation

Agency Contact: Barry J. White, Director, Safety Standards Programs, Department of Labor, Occupational Safety and Health Administration, 200 Constitution Avenue, NW, Rm N3605, FPBldg., Washington, DC 20210, 202 523-8061

RIN: 1218-AA97

1495. METHYLENE CHLORIDE

Significance: Regulatory Program

Legal Authority: 29 USC 655; 29 USC 657

CFR Citation: 29 CFR 1910.1000

Legal Deadline: None.

Abstract: In July 1985, OSHA was petitioned by the United Automobile, Aerospace and Agricultural Implement Workers of America (UAW) to issue a hazard alert; issue an emergency temporary standard; and to begin work on a new permanent standard for methylene chloride (DCM). This request was based on information obtained from the Environmental Protection Agency and the National Toxicology Program indicating that DCM is an animal carcinogen and may have the potential to cause cancer in humans. In November 1986, OSHA notified the UAW that its petition had been granted, in part, and denied, in part. Specifically, OSHA has issued a set of guidelines for controlling occupational exposure to DCM and has decided to proceed with rulemaking to develop a new permanent standard. OSHA denied that portion of the petition requesting the issuance of an emergency temporary standard.

Timetable:

Action	Date	FR Cite
ANPRM	11/24/86	51 FR 42257
ANPRM Comment Period End	02/23/87	51 FR 42257
NPRM	11/00/88	

Small Entity: Undetermined

Agency Contact: Charles E. Adkins, Director, Health Standards Programs, Department of Labor, Occupational Safety and Health Administration, 200 Constitution Ave., NW, Rm N3718,

FPBldg., Washington, DC 20210, 202 523-7075

RIN: 1218-AA98

1496. ● HAZARD COMMUNICATION

Significance: Regulatory Program

Legal Authority: 29 USC 653; 29 USC 655; 29 USC 657; 33 USC 941; 40 USC 333; 5 USC 553

CFR Citation: 29 CFR 1910.1200; 29 CFR 1915.99; 29 CFR 1917.28; 29 CFR 1918.90; 29 CFR 1926.59; 29 CFR 1928.21

Legal Deadline: None.

Abstract: OSHA promulgated a final rule on August 24, 1987, that extended the protections of its Hazard Communication Standard (HCS) from the manufacturing sector to all other workplaces where employees are exposed to hazardous chemicals. The HCS requires covered employers to establish hazard communication programs for their employees, including labels on containers, material safety data sheets, and training programs. As the final rule was published pursuant to a court order without having published a NPRM, OSHA invited additional comment on the final rule for 60 days. The Agency is now proposing some modifications to the final rule to address issues of concern.

Timetable:

Action	Date	FR Cite
ANPRM	11/27/85	50 FR 48794
ANPRM Comment Period End	02/25/86	
NPRM	04/00/88	
NPRM Comment Period End	06/00/88	
Final Action	10/00/88	
Final Action Effective	12/00/88	

Small Entity: Undetermined

Agency Contact: Charles E. Adkins, Director, Health Standards Programs, Department of Labor, Occupational Safety and Health Administration, 200 Constitution Avenue, NW, Rm N3718, FPBldg., Washington, DC 20210, 202 523-7075

RIN: 1218-AB02

1497. WALKING AND WORKING SURFACES (PART 1910)

Significance: Regulatory Program

Legal Authority: 29 USC 655(b)

CFR Citation: 29 CFR 1910.21; 29 CFR 1910.22; 29 CFR 1910.23; 29 CFR 1910.24; 29 CFR 1910.25; 29 CFR 1910.26; 29 CFR 1910.27; 29 CFR 1910.28; 29 CFR 1910.29; 29 CFR 1910.30; 29 CFR 1910.31; 29 CFR 1910.32

Legal Deadline: None.

Abstract: Existing standards for walking and working surfaces need to be revised because they are out of date and restrict technological innovation. The proposed revision is performance-oriented and permits flexibility for compliance.

Timetable:

Action	Date	FR Cite
NPRM	11/00/88	
Final Action	10/00/89	

Small Entity: Undetermined

Additional Information: The agenda RIN 1218-AB04 is an aggregate of RIN 1218-AA46 (Scaffolds and Similar Work Surfaces (Part 1910)) and RIN 1218-AA50 (Ladders and Similar Climbing Devices (Part 1910)).

Agency Contact: Barry J. White, Director, Safety Standards Programs, Department of Labor, Occupational Safety and Health Administration, 200 Constitution Avenue, NW, Rm N3605, FPBldg., Washington, DC 20210, 202 523-8061

RIN: 1218-AB04

1498. BLOODBORNE INFECTIOUS DISEASES

Significance: Regulatory Program

Legal Authority: 29 USC 655 et seq

CFR Citation: 29 CFR Not yet determined

Legal Deadline: None.

Abstract: Many health-care workers are exposed to blood and body fluids from patients who have active bloodborne infections or are carriers of these infections. Such exposure presents a potential risk of disease for the health-care workers. One such disease, hepatitis B, has been shown to present a substantially increased risk for health-care workers. Data received by OSHA indicate that of the approximately 250,000 cases of hepatitis B diagnosed in the U.S. each year, approximately 5.5 percent, or 15,000 cases, are among health-care workers. It has been estimated that 222-265 health-care workers die each year as a result of hepatitis B and associated complications. About half of the nation's five million health-care workers are at increased risk from exposure to bloodborne infectious diseases. The highest risks are experienced by emergency room workers, dialysis unit workers, operating room personnel, intensive care unit workers and blood bank employees. OSHA's personal protective equipment standard, 29 CFR 1910.132(a), provisions for general housekeeping, 29 CFR 1910(a)(1) and waste disposal, 29 CFR 1910. 141(a)(4)(ii)) along with Section 5(a)(i) of the Act (Cont'd)

Timetable:

Action	Date	FR Cite
ANPRM	11/27/87	52 FR 45438
ANPRM Comment Period End	01/26/88	52 FR 45438

Next Action Undetermined

Small Entity: Undetermined

Additional Information: ABSTRACT (CONT'D): requiring employers to provide employment and a place of employment free of recognized hazards ..., will be used to reduce some, but not all of the hazards of bloodborne diseases. In 1983, the Agency issued voluntary guidelines for reducing the occupational risk of hepatitis B infection. In September 1986, OSHA was petitioned by the American Federation of State, County and Municipal Employees and other unions for the issuance of an emergency temporary standard to protect workers from occupational exposure to bloodborne infectious diseases, such as hepatitis B and acquired immune deficiency syndrome (AIDS).

Agency Contact: Charles E. Adkins, Director, Health Standards Programs, Department of Labor, Occupational Safety and Health Administration, 200 Constitution Avenue, NW, Rm N3718, FPBldg., Washington, Dc 20210, 209 523-7075

RIN: 1218-AB15

1499. CADMIUM

Significance: Regulatory Program

Legal Authority: 29 USC 655 et seq

CFR Citation: 29 CFR 1910, Table Z-2

Legal Deadline: None.

Abstract: On June 18, 1986, the International Chemical Workers Union

and the Public Citizen Health Research Group petitioned OSHA to issue an emergency temporary standard reducing the permissible exposure limit for cadmium to one microgram of cadmium per cubic meter of air. On June 25, 1987 the union and HR 6 filed a petition with the Court of Appeals requesting the Court to order OSHA to promulgate an ETS. In its July 1, 1987, response to the petitioners, OSHA stated that issuance of an emergency standard was not warranted, but that exposure to cadmium at levels permitted under the current standard represented a significant risk to worker health which would be addressed through section 6(b) rulemaking procedures. OSHA is in the process of developing a proposed standard.

Timetable:

Action	Date	FR Cite
Response to Petitioners	07/01/87	
NPRM	06/00/88	
Final Action	06/00/89	

Small Entity: Undetermined

Agency Contact: Charles E. Adkins, Director, Health Standards Programs, Department of Labor, Occupational Safety and Health Administration, 200 Constitution Avenue, NW, Rm N3718, FPBldg., Washington, DC 20210, 202 523-7075

RIN: 1218-AB16

1500. PERMISSIBLE EXPOSURE LIMIT UPDATE

Significance: Regulatory Program

Legal Authority: 29 USC 655 et seq

CFR Citation: 29 CFR 1910.1000, Tables Z-1 to Z-3

Legal Deadline: None.

Abstract: In 1972, OSHA promulgated permissible exposure limits (PELs) for a number of toxic substances, pursuant to authority granted by section 6(a) of the Act, which allowed OSHA (for a limited period) to adopt existing Federal standards or industry consensus standards as enforceable OSHA standards. Accordingly, the lists of toxic substances now codified at 29 CFR 1910.1000, Tables Z-1 and Z-3, were Federal standards adopted under the Walsh-Healey Public Contracts Act, which, in turn, were adopted from the American Conference of Governmental Industrial Hygienists (ACGIH) Threshold Limit Values (TLVs) for 1968. The substances listed at 29 CFR 1910.1000, Table Z-2, were adopted from American National Standards Institute standards. Industrial experience, new developments in control technology, and scientific data acquired since 1968 have led the ACGIH to make changes in its TLVs over the years. Many of the TLVs have been lowered, and limits for additional chemicals have been established. During this period, OSHA has promulgated revised standards for toxic substances on a substance-by-substance basis. This process, however, has not kept up with (Cont'd)

Timetable:

Action	Date	FR Cite
NPRM	04/00/88	
Final Action	10/00/88	

Small Entity: Yes

Additional Information: ABSTRACT (CONT'D): the number of changes made by ACGIH. OSHA believes that 29 CFR 1910.1000, Tables Z-1, Z-2 and Z-3 should be updated, as appropriate, to conform with current scientific and technical knowledge. OSHA intends to initiate rulemaking to accomplish this update.

Agency Contact: Charles E. Adkins, Director, Health Standards Programs, Department of Labor, Occupational Safety and Health Administration, 200 Constitution Avenue, NW, Rm N3718, FPBldg., Washington, DC 20210, 202 523-7075

RIN: 1218-AB17

1501. HAZARDOUS MATERIALS (PART 1910)

Significance: Regulatory Program

Legal Authority: 29 USC 655(b)

CFR Citation: 29 CFR 1910, Subpart H

Legal Deadline: None.

Abstract: Standards in 29 CFR Part 1910, Subpart H, which address the storage, handling and use of hazardous materials, such as compressed gases, acetylene, hydrogen, oxygen, liquified petroleum gases, and flammable and combustible liquids, will be revised. This regulatory action will provide a new approach to the revision of Subpart H and will occur in three phases in an expanded timeframe. The three phases will be (1) Process Hazards Management, (2) Flammable and Compressed Gases, and, (3) Hazardous Liquids. The first phase of the proposed action is intended to better protect employees from unexpected releases of significant quantities od dangerous substances. The remaining phases are intended to simplify, clarify and consolidate standards on hazardous materials and assist employers and employees in general industry to better understand and better focus on the hazards inherent in the use, handling, and storage of such materials.

Timetable:

Action	Date	FR Cite
ANPRM	01/23/81	46 FR 7692
ANPRM Comment Period End	02/01/82	46 FR 38108
NPRM	01/00/89	
Final Action	01/00/90	

Small Entity: Undetermined

Additional Information: This action merges two previous actions, "Hazardous Materials-- Flammable and Compressed Gases (Part 1910)" and "Hazardous Materials--Flammable and Combustible Liquids (Part 1910)" and will also include storage and handling of toxic materials.

Agency Contact: Barry J. White, Director, Safety Standards Programs, Department of Labor, Occupational Safety and Health Administration, 200 Constitution Avenue, NW, Rm N3605, FPBldg., Washington, DC 20210, 202 523-8061

RIN: 1218-AB20

1502. ● SHIPYARD EMPLOYMENT: PHASE II (PART 1915)

Significance: Regulatory Program

Legal Authority: 29 USC 655(b); 33 USC 941

CFR Citation: 29 CFR 1915.32; 29 CFR 1915.33; 29 CFR 1915.34; 29 CFR 1915.35; 29 CFR 1915.36

Legal Deadline: None.

Abstract: This regulatory action will complete the consolidation and updating of Parts 1915 and 1910 by providing shipyard employees with coverage under one comprehensive OSHA standard. This revision will involve the promulgation of 16 maritime subparts and their 1910 counterparts. Its completion will relieve shipyard owners from the burden of having to comply with two sets of rules that are complex,

prescriptive, confusing and, in some cases, conflicting. OSHA will establish an Advisory Committee to assist the agency in reviewing and revising these subparts. Experts from government, industry, unions and the states will be asked to work with OSHA on this project. A previously identified project, Surface Preparation and Preservation (RIN: 1218-AA98), will be included in this project.

Timetable:

Action	Date	FR Cite
NPRM	06/00/89	
Final Action	06/00/90	

Small Entity: No

Government Levels Affected: State, Federal

Agency Contact: Barry J. White, Director, Safety Standards Programs, Department of Labor, Occupational Safety and Health Administration, 200 Constitution Avenue, NW, Rm N3605, FPBldg., Washington, DC 20210, 202 523-8061

RIN: 1218-AB22

DEPARTMENT OF LABOR (DOL) — Final Rule Stage

Occupational Safety and Health Administration (OSHA)

1503. OCCUPATIONAL EXPOSURES TO TOXIC SUBSTANCES IN LABORATORIES

Significance: Regulatory Program

Legal Authority: 29 USC 655(b)

CFR Citation: 29 CFR 1910.1450

Legal Deadline: None.

Abstract: Existing OSHA standards are designed to protect employees who are engaged in work involving exposure to only a few toxic chemicals during relatively standardized, continuous or repetitive processes. In contrast, laboratory workers are exposed to a multitude of toxic substances under frequently changing or unpredictable conditions. During this rulemaking, OSHA will examine whether prudent work practices and protective equipment, chosen for the specific facility and task, are more effective, feasible and economical for laboratory work than adhering to OSHA's current substance-specific standards. Accordingly, OSHA has proposed a special performance-oriented work practices standard that, if promulgated, would apply to laboratory workers and would contain provisions specifically designed for laboratory conditions.

Timetable:

Action	Date	FR Cite
ANPRM	04/14/81	46 FR 21785
ANPRM Comment Period End	07/15/81	
NPRM	07/24/86	51 FR 26660
NPRM Comment Period End	10/22/86	51 FR 26660
Public Hearings	03/24/87	52 FR 1212
Final Action	07/00/88	

Small Entity: Yes

Agency Contact: Charles E. Adkins, Director, Health Standards Programs, Department of Labor, Occupational Safety and Health Administration, 200 Constitution Ave., NW, Rm N3718, FPBldg., Washington, DC 20210, 202 523-7075

RIN: 1218-AA00

1504. ETHYLENE DIBROMIDE (EDB)

Significance: Regulatory Program

Legal Authority: 29 USC 655(b)

CFR Citation: 29 CFR 1910.1048

Legal Deadline: None.

Abstract: Recent scientific studies have reported that ethylene dibromide causes cancer when administered orally, by inhalation and by skin application in laboratory animals. In addition, other studies have shown the chemical to be a mutagen, teratogen and testicular toxin in experimental animals. On the basis of these reports, OSHA has determined that its current permissible exposure limit of 20 ppm does not provide exposed workers adequate protection against cancer and other adverse health effects. A proposed standard for ethylene dibromide was published 10/07/83 (43 FR 45956). Public hearings were held in February 1984. OSHA is currently in the process of decisionmaking on the provisions to be included in the final standard.

Timetable:

Action	Date	FR Cite
ANPRM	12/18/81	46 FR 61671
ANPRM Comment Period End	05/31/82	
NPRM	10/07/83	48 FR 45956
NPRM Comment Period End	11/21/83	48 FR 45956
Public HearingHeld	02/08/84	
Final Action	12/00/88	

Small Entity: Yes

Agency Contact: Charles E. Adkins, Director, Health Standards Programs, Department of Labor, Occupational Safety and Health Administration, 200 Constitution Ave., NW, Rm N3718, FPBldg., Washington, DC 20210, 202 523-7075

RIN: 1218-AA06

1505. ACCESS TO EMPLOYEE EXPOSURE AND MEDICAL RECORDS

Significance: Regulatory Program

Legal Authority: 29 USC 655(b); 29 USC 657

CFR Citation: 29 CFR 1910.20

Legal Deadline: None.

Abstract: The existing record access rule was promulgated in May 1980. The rule requires employers to preserve and maintain exposure and medical records pertinent to employee exposure to toxic substances, and to ensure access to these records by employees, designated employee representatives and OSHA. As a result of numerous requests and suggestions for changes to the standard, OSHA published a proposal to revise the standard in 1982. OSHA intends to publish soon a final rule that resolves many of the issues raised in the 1982 proposal. This regulation will be similar to the regulation promulgated in 1980 with certain exceptions relating to: (1) first-aid records and medical records of short-term employees; (2) the microfilm storage of employee X-rays; (3) employer trade secrets; (4) employee exposure record requirements for other records; and (5) unconsented access to employee exposure records by union representatives.

BEST COPY AVAILABLE

Timetable:

Action	Date	FR Cite
NPRM	07/13/82	47 FR 30420
NPRM Comment Period End	09/14/82	
Public Hearing Held	10/05/82	
Final Action	05/00/88	

Small Entity: Undetermined

Agency Contact: Charles E. Adkins, Director, Health Standards Programs, Department of Labor, Occupational Safety and Health Administration, 200 Constitution Ave., NW, Rm N3718, FPBldg., Washington, DC 20210, 202 523-7075

RIN: 1218-AA15

1506. CONCRETE AND MASONRY CONSTRUCTION (PART 1926)

Significance: Regulatory Program

Legal Authority: 29 USC 655(b); 40 USC 333

CFR Citation: 29 CFR 1926.700; 29 CFR 1926.701; 29 CFR 1926.702

Legal Deadline: None.

Abstract: One of the greatest hazards associated with concrete and masonry structures in the construction industry is the collapse or failure of the entire structure or its forms and shoring. The catastrophic failures of recent years indicate that revision of the existing standard applicable to such construction operations is necessary. The current concrete standard contains outdated referenced standards, gaps in coverage, redundant provisions, and provisions which need clarification. The referenced standards are being updated and placed in the body of the standard. New standards are being added to cover precast concrete erection and masonry wall construction. The provisions that were identified as being redundant are being removed and the ambiguous provisions are being clarified. In addition, the record will be reopened to allow information and evidence obtained from the investigation of a recent major accident to be included in the record pertaining to lift-slab operations. Revised lift-slab rules will then be proposed.

Timetable:

Action	Date	FR Cite
ANPRM	02/09/82	47 FR 5910
ANPRM Comment Period End	04/10/82	
NPRM	09/16/85	50 FR 37543
Comment Period Extended 30 Daysto 12/16/85	10/21/85	50 FR 42571
NPRM Comment Period End	11/15/85	50 FR 37543
Public Hearing Scheduled	04/08/86	51 FR 11945
Public Hearing Rescheduled and Held June 17-18, 1986	05/09/86	51 FR 17203
Final Action on all but Lift-Slab Rules	06/00/88	
Reproposal Lift-Slab Rules	12/00/88	
Final Action on Lift-Slab Rules	06/00/89	

Small Entity: Undetermined

Additional Information: 1. 29 CFR 1926, Subpart Q currently entitled: "Concrete, Concrete Forms, and Shoring.

Agency Contact: Barry White, Director, Safety Standards Programs, Department of Labor, Occupational Safety and Health Administration, 200 Constitution Ave., NW, Rm N3605, FPBldg., Washington, DC 20210, 202 523-8061

RIN: 1218-AA20

1507. ELECTRICAL SAFETY-RELATED WORK PRACTICES (PART 1910)

Significance: Regulatory Program

Legal Authority: 29 USC 655(b)

CFR Citation: 29 CFR 1910.331; 29 CFR 1910.332; 29 CFR 1910.333; 29 CFR 1910.334; 29 CFR 1910.335; 29 CFR 1910.399; 29 CFR 1910.26(c)(3)(iii); 29 CFR 1910.67(b)(4); 29 CFR 1910.68(b)(4); 29 CFR 1910.68(c)(5)(iv)(c); 29 CFR 1910.94(a)(2)(iii); 29 CFR 1910.103(b)(3)(iii)(e); 29 CFR 1910.1910.106(h)(7)(iii)(a); 29 CFR 1910.110, Table H-28; 29 CFR 1910.178(c)(2); ...

Legal Deadline: None.

Abstract: Standards are currently under review for the second part (Subpart S of Part 1910) of OSHA's electrical standard which would establish a performance-oriented standard for electrical safety- related work practices to complement the existing electrical installation standards. The proposed standard includes requirements for work performed on or near exposed energized and deenergized parts of electrical equipment and includes requirements for both the safe use of the electrical equipment as well as the use of personal protection devices.

Timetable:

Action	Date	FR Cite
NPRM	11/30/87	52 FR 45530
NPRM Comment Period End	02/29/88	52 FR 45530
Final Action	02/00/89	

Small Entity: Undetermined

Affected Sectors: All

Government Levels Affected: Local, State, Federal

Agency Contact: Barry White, Director, Safety Standards Programs, Department of Labor, Occupational Safety and Health Administration, 200 Constitution Ave., NW, Rm N3605, FPBldg., Washington, DC 20210, 202 523-8061

RIN: 1218-AA32

1508. POWERED PLATFORMS FOR EXTERIOR BUILDING MAINTENANCE (PART 1910)

Significance: Regulatory Program

Legal Authority: 29 USC 655(b)

CFR Citation: 29 CFR 1910.66

Legal Deadline: None.

Abstract: The present standard, which requires positive engagement of a powered platform with a building face to provide stabilization, may need to be revised because many variance designs have been submitted which do not provide positive engagement of the platform, yet claim equal stability. The agency believes there may be merit to this claim. The proposal provides flexibility in compliance through performance-oriented provisions as alternatives to positive engagement. It would also expand the scope of the current standard to include requirements covering additional suspension equipment, fall protection, and employee training.

Timetable:

Action	Date	FR Cite
ANPRM	02/11/83	48 FR 6368
ANPRM Comment Period End	03/14/83	48 FR 6368
NPRM	01/22/85	50 FR 2890

Action	Date	FR Cite
NPRM Comment Period End	03/25/85	50 FR 2690
Reopening of NPRM Comment Period to 8/1/85	07/02/85	50 FR 27307
Informal Public Hearing	02/20/86	
Final Action	07/00/88	

Small Entity: No

Agency Contact: Barry White, Director, Safety Standards Programs, Department of Labor, Occupational Safety and Health Administration, 200 Constitution Ave., NW, Rm N3605, FPBldg., Washington, DC 20210, 202 523-8061

RIN: 1218-AA33

1509. EXCAVATIONS (PART 1926)

Significance: Regulatory Program

Legal Authority: 29 USC 655(b); 40 USC 333

CFR Citation: 29 CFR 1926.650; 29 CFR 1926.651; 29 CFR 1926.652; 29 CFR 1926.653

Legal Deadline: None.

Abstract: This rule prescribes the minimum measures to be taken to protect employees from injury during excavation work. A revision of the existing rule is being considered because trench and excavation sidewall failures that have resulted in death and injury to workers continue in significant numbers. Claims that the standards are ambiguous and too restrictive, especially with respect to the type of soil involved, have also been made.

Timetable:

Action	Date	FR Cite
NPRM	04/15/87	52 FR 12288
NPRM Comment Period End	10/14/87	52 FR 22799
Final Action	12/00/88	

Small Entity: No

Additional Information: 1. 29 CFR 1926.650 through .653 currently entitled: "Excavations, Trenching, and Shoring.

Agency Contact: Barry White, Director, Safety Standards Programs, Department of Labor, Occupational Safety and Health Administration, 200 Constitution Ave., NW, Rm N3605, FPBldg., Washington, DC 20210, 202 523-8061

RIN: 1218-AA36

1510. FALL PROTECTION (PART 1926)

Significance: Regulatory Program

Legal Authority: 29 USC 655(b); 40 USC 333

CFR Citation: 29 CFR 1926.104; 29 CFR 1926.105; 29 CFR 1926.500; 29 CFR 1926.501; 29 CFR 1926.502; 29 CFR 1926.107(b); 29 CFR 1926.250(b)(2); 29 CFR 1926.651(t) and (w); 29 CFR 1926.700(b)(1); 29 CFR 1926.951(b)(4)(i); 29 CFR 1926.107(c); 29 CFR 1926.107(f)

Legal Deadline: None.

Abstract: The existing standard has been proposed for revision because it is poorly formatted, contains unnecessary and restrictive provisions, and does not properly address the fall protection needs of certain areas and operations. The proposal raises several significant issues including (1) when fall protection systems must be installed, (2) whether work surface inspections are necessary to insure adequate structural integrity before commencing work, and (3) whether body belt systems or body harness systems are appropriate for use as fall protection. (Subpart M revised)

Timetable:

Action	Date	FR Cite
NPRM	11/25/86	51 FR 42680
NPRM Comment Period End	08/14/87	52 FR 20616
Final Action	11/00/88	

Small Entity: No

Additional Information: This agenda entry is part of Regulatory Program RIN 1218-AB05; Elevated Surfaces (Part 1926).

Agency Contact: Barry White, Director, Safety Standards Programs, Department of Labor, Occupational Safety and Health Administration, Rm N3605, FPBldg, 200 Constitution Ave., NW, Washington, DC 20210, 202 523-8061

RIN: 1218-AA37

1511. UNDERGROUND CONSTRUCTION (TUNNELS AND SHAFTS)(PART 1926)

Significance: Regulatory Program

Legal Authority: 29 USC 655(b); 40 USC 333

CFR Citation: 29 CFR 1926.800

Legal Deadline: None.

Abstract: The existing standards are being revised to update the treatment of hazards of construction in underground locations such as tunnels, shafts, chambers, passageways and covered excavations. In some cases, the existing standards are too restrictive. In addition, existing language is being rewritten to clarify the requirements.

Timetable:

Action	Date	FR Cite
NPRM	08/05/83	48 FR 35774
NPRM Comment Period extended to 02/17/84	12/19/83	48 FR 56087
Public Hearing Held	03/13/84	
Limited Reopening of Comment Period Until 10/18/85	08/19/85	50 FR 33357
Final Action	09/00/88	

Small Entity: No

Agency Contact: Barry White, Director, Safety Standards Programs, Department of Labor, Occupational Safety and Health Administration, 200 Constitution Ave., NW, Rm N3605, FPBldg., Washington, DC 20210, 202 523-8061

RIN: 1218-AA38

1512. SCAFFOLDS (PART 1926)

Significance: Regulatory Program

Legal Authority: 29 USC 655(b); 40 USC 333

CFR Citation: 29 CFR 1926.451; 29 CFR 1926.452; 29 CFR 1910.28; 29 CFR 1910.29; 29 CFR 1926.752(k)

Legal Deadline: None.

Abstract: The existing standard has been proposed for revision because it is poorly formatted, contains unnecessary and restrictive provisions, and omits necessary specific coverage for certain types of scaffolds. The proposal raises several significant issues including: (1) the use of crossbraces as guardrails, (2) the use of fall protection during scaffold erection and dismantling operations, and (3) the role of engineers in scaffold design. (Subpart L, revised)

Timetable:

Action	Date	FR Cite
NPRM	11/25/86	51 FR 42680
NPRM Comment Period End	08/14/87	52 FR 20616
Final Action	11/00/88	

Small Entity: Undetermined

Additional Information: This agenda entry is part of Regulatory Program RIN

1218-AB05; Elevated Surfaces (Part 1926).

Agency Contact: Barry White, Director, Safety Standards Programs, Department of Labor, Occupational Safety and Health Administration, Rm N3605, FPBldg, 200 Constitution Ave., NW, Washington, DC 20210, 202 523-8061

RIN: 1218-AA40

1513. CRANE OR DERRICK SUSPENDED PLATFORMS (PART 1926)

Significance: Regulatory Program

Legal Authority: 29 USC 655(b); 40 USC 333

CFR Citation: 29 CFR 1926.550

Legal Deadline: None.

Abstract: The use of cranes and derricks to suspend personnel in platforms is a hazardous operation that is not currently covered by OSHA Construction Standards. OSHA has issued administrative instructions on this practice, but this alternative to rulemaking has not been successful. This final rule has been developed to reduce the number of accidents, many of which involve multiple fatalities, that result from equipment inadequacies and failures or improper work practices. Data to determine the potential costs and benefits from this rulemaking are currently being evaluated.

Timetable:

Action	Date	FR Cite
NPRM	02/17/84	49 FR 6280
NPRM Comment Period End	09/10/84	49 FR 25248
Public Hearing Held	09/18/84	
Final Action	04/00/88	

Small Entity: No

Affected Sectors: 15 Building Construction-General Contractors and Operative Builders; 16 Heavy Construction Other Than Building Construction-Contractors; 17 Construction-Special Trade Contractors

Government Levels Affected: State, Federal

Analysis: Regulatory Impact Analysis; Regulatory Flexibility Analysis

Agency Contact: Barry White, Director, Department of Labor, Occupational Safety and Health Administration, Room N3605, 200 Constitution Ave. NW, Washington, DC 20210, 202 523-8061

RIN: 1218-AA45

1514. STAIRWAYS AND LADDERS (PART 1926)

Significance: Regulatory Program

Legal Authority: 29 USC 655(b); 40 USC 333

CFR Citation: 29 CFR 1926.450; 29 CFR 1926.452; 29 CFR 1926.501; 29 CFR 1926.502; 29 CFR 1926.1050; 29 CFR 1926.1051

Legal Deadline: None.

Abstract: The existing standard has been proposed for revision because it contains references to non-government voluntary regulations by topic. The proposal raises several significant issues including: (1) what is the appropriate height limit where the use of ladders as a means of access should be required, and (2) what are appropriate field tests for determining ladder strength. (New Subpart X)

Timetable:

Action	Date	FR Cite
NPRM	11/25/86	51 FR 42680
NPRM Comment Period End	08/14/87	52 FR 20616
Final Action	11/00/88	

Small Entity: No

Additional Information: This new Subpart X is a revision of the ladder and stairway portions of existing Subparts L (ladders and scaffolds) and M (Floor and Wall Openings and Stairways). The remaining portions of Subparts L and M are being revised as Subparts L (Scaffolds) and M (Fall Protection). (RIN 1218-AA37 - Fall Protection; RIN 1218-AA40 - Scaffolds.) This agenda entry is part of Regulatory Program RIN 1218-AB05; Elevated Surfaces (Part 1926).

Affected Sectors: Multiple

Government Levels Affected: State, Federal

Agency Contact: Barry White, Director, Department of Labor, Occupational Safety and Health Administration, 200 Constitution Avenue, NW, Rm N3605, FPBldg., Washington, DC 20210, 202 523-8061

RIN: 1218-AA57

1515. HAZARDOUS WASTE OPERATIONS AND EMERGENCY RESPONSE (PART 1910)

Significance: Regulatory Program

Legal Authority: PL 99-499 Section 126 (as amended); 29 USC 655; 29 USC 657; 5 USC 552(a); 5 USC 533

CFR Citation: 29 CFR 1910.120 (Subpart H)

Legal Deadline: Statutory, October 16, 1987.

Abstract: Public Law 99-499 requires the Secretary of Labor to promulgate a final standard for Hazardous Operations and Emergency Response by October 17, 1987. The law requires the proposed rule to address eleven areas: site analysis, training, medical surveillance, protective equipment, engineering controls, maximum exposure limits, informational programs, handling and labeling, new technology programs, decontamination procedures, and emergency response. The agency has developed a Preliminary Regulatory Impact Analysis which is available in the docket. The analysis estimates that the benefits are significant and that annualized costs are $71 million for training, $17 million for medical surveillance, $12 million for decontamination, $11 million for protection suits and $37 million for other requirements. OSHA held public hearings in Washington, D.C. and Seattle, Washington to enhance public comment and participation in this rulemaking. On December 22, 1987 Congress amended SARA to require the Secretary of Labor to develop a training certification program at least as comprehensive as the EPA's Model Program for (CONT'D)

Timetable:

Action	Date	FR Cite
Interim Final Rule	12/19/86	51 FR 45654
NPRM	08/10/87	52 FR 29620
NPRM Comment Period End	10/05/87	52 FR 29620
Public Hearings held in Washington, DC, and Seattle, Washington	10/13/87	52 FR 37973
Final Action	07/00/88	

Small Entity: Undetermined

Additional Information: INFORMATION REGARDING ITEM #6: Because Public Law 99-499 requires

the use of trained workers, there may be some impact or subcontractors who will either need to hire trained employees, than existing employees, or not participate in the cleanup of hazardous wastes. ABSTRACT (CONT'D): Asbestos Abatement in Schools. OSHA will be developing this certification program as a separate rulemaking.

Affected Sectors: All

Agency Contact: Barry J. White, Director, Safety Standards Programs, Department of Labor, Occupational Safety and Health Administration, 200 Constitution Avenue, NW, Rm N3605, FPBldg., Washington, DC 20210, 202 523-8061

RIN: 1218-AB13

1516. LEAD (RECONSIDERATION OF THE FEASIBILITY OF COMPLIANCE IN NINE INDUSTRY SECTORS)

Significance: Regulatory Program

Legal Authority: 29 USC 655 et seq

CFR Citation: 29 CFR 1910.1025

Legal Deadline: Judicial, October 1, 1987.

Abstract: On December 11, 1981 (46 FR 60758), OSHA published a Revised Statement of Reasons concerning the feasibility of compliance with paragraph (e)(1) of the standard for occupational exposure to lead, which had been promulgated in 1978. In this revised statement, OSHA stated that it could not reach a conclusion regarding feasibility, on the basis of the existing rulemaking record, for eight specific industry sectors: lead chromate pigments, lead chemicals, nonferrous foundries, brass and bronze ingot production, secondary copper smelting leaded steel, shipbuilding and ship repair, stevedoring, and battery breaking separate from secondary smelting, and that in addition, it wished to reexamine the applicability of the lead standard to the stevedoring industry. OSHA requested that the record (which was under review by the U.S. Court of Appeals for the District of Columbia Circuit) be remanded for supplementary administrative proceedings. The Court granted OSHA's December 1981 request on March 31, 1987, and remanded the record to OSHA for further administrative proceedings to determine the feasibility of section (e)(1) for the nine industry sectors OSHA had (Cont'd)

Timetable:

Action	Date	FR Cite
Reopening of Lead Rulemaking Records	08/03/87	52 FR 28727
End of Comment Period	09/16/87	
Public Hearings	09/29/87	
Final Action	07/00/88	

Small Entity: Yes

Additional Information: ABSTRACT (CONT'D): listed. The Court further ordered OSHA to return the record on or before October 1, 1987. On June 17, 1987, OSHA filed with the Court a motion requesting a 90-day extension to January 1, 1988. On July 31, 1987 the Court granted OSHA's motion. OSHA published in the Federal Register on August 3, 1987, a notice of a limited reopening of the rulemaking record (limited to the issue of feasibility) and specified September 2, 1987 for the receipt of comments from the public and September 15, 1987 for public hearings. Thereafter, at the request of industry and labor, OSHA deferred the relevant dates for the rulemaking until September 16 and 29, 1987, respectively.OSHA requested, and was granted by the Court, an extension for final action until July 15, 1988.

Agency Contact: Charles E. Adkins, Director, Health Standards Programs, Department of Labor, Occupational Safety and Health Administration, 200 Constitution Avenue, NW, Rm N3718, FPBldg., Washington, DC 20210, 202 523-7075

RIN: 1218-AB18

1517. ● ASBESTOS SHORT TERM EXPOSURE LIMIT

Significance: Regulatory Program

Legal Authority: 29 USC 655(b)

CFR Citation: 29 CFR 1910.1001; 29 CFR 1926.58

Legal Deadline: None.

Abstract: In June 1986, OSHA promulgated revised standards governing exposure to asbestos in general industry and construction. OSHA reduced the 8-hour Time Weighted Average (TWA) Permissible Exposure Limit (PEL) to 0.2 f/cc, but did not issue a short term exposure limit (STEL). OSHA's principal reason for not issuing an excursion limit was that the rulemaking record failed to show a dose-rate effect. Subsequently, in July 1986, the Court of Appeals for the District of Columbia, in reviewing the EtO standard, held that OSHA may not base its determination to not issue a STEL on the lack of a "dose-rate effect" and that the "OSH Act compels the Agency to adopt a STEL if the record shows that it would further reduce a significant health risk and is feasible to implement." To conform to this judicial decision OSHA plans to amend the Asbestos standards by the issuance of an appropriate excursion limit for all workplaces affected by the revised Asbestos standards.

Timetable:

Action	Date	FR Cite
NPRM	04/01/84	49 FR 14116
Final Action	06/20/86	51 FR 22612
Final Action Effective	07/21/86	51 FR 22612

Final Decision 06/00/88

Small Entity: No

Agency Contact: Charles E. Adkins, Director, Health Standards Programs, Department of Labor, Occupational Safety and Health Administration, 200 Constitution Avenue, NW, Rm N3718, FPBldg., Washington, DC 20210, 202 523-7075

RIN: 1218-AB21

DEPARTMENT OF LABOR (DOL)

Occupational Safety and Health Administration (OSHA)

Completed Actions

1518. ETHYLENE OXIDE

Significance: Regulatory Program

Legal Authority: 29 USC 655(b); 29 USC 657

CFR Citation: 29 CFR 1910.1047

Legal Deadline: Judicial, March 1988. In a July 21, 1987, decision the U.S. Court of Appeals for the District of Columbia Circuit ordered OSHA to adhere to the schedule set out in its response to petitioners' contempt motion and issue its final decision on the EtO STEL issue no later than March 1988.

Abstract: On July 25, 1986, in Public Citizen HRG v. Tyson, Docket No. 84-1252, the United States Court of Appeals for the District of Columbia upheld most of the final standard on EtO, including the 1 ppm TWA. However, the Court remanded the standard to the Agency for further proceedings on whether a short term exposure limit is necessary to further reduce the significant risk that exists with a 1 ppm TWA alone. In accordance with the Court's order, OSHA intends to reopen the EtO rulemaking record to review the issue of the STEL. This will be accomplished by publication of a notice of proposed rulemaking.

Timetable:

Action	Date	FR Cite
NPRM	01/21/88	53 FR 1724
NPRM Comment Period End	02/22/88	53 FR 1724
Final Action	04/06/88	53 FR 11414
Final Action Effective	06/06/88	

Small Entity: Undetermined

Agency Contact: Charles E. Adkins, Director, Health Standards Programs, Department of Labor, Occupational Safety and Health Administration, 200 Constitution Avenue, NW, Rm N3718, FPBldg., Washington, DC 20210, 202 523-7075

RIN: 1218-AA03

1519. GRAIN HANDLING FACILITIES (PARTS 1910 AND 1917)

Significance: Regulatory Program

Legal Authority: 29 USC 655(b); 33 USC 941

CFR Citation: 29 CFR 1910; 29 CFR 1917

Legal Deadline: None.

Abstract: Hazards associated with fires and explosions in grain handling facilities have existed for many years. These hazards continue to exist, and pose a risk of harm to employees working in these facilities. Based on an extensive rulemaking record resulting from a proposed standard for grain handling facilities, OSHA is developing a final rule to mitigate the hazards associated with these facilities. OSHA is carefully considering the record to assure that the scope, application and other provisions of the standard appropriately address the hazards.

Timetable:

Action	Date	FR Cite
ANPRM	02/15/80	45 FR 10732
ANPRM Comment Period End	03/24/80	
NPRM	01/06/84	49 FR 996
NPRM Comment Period End	06/08/84	49 FR 6923
Public Hearings held through 07/12/84	06/12/84	49 FR 6923
Final Action	12/31/87	52 FR 49592
Final Action Effective	03/30/88	52 FR 49592

Small Entity: Yes

Agency Contact: Barry White, Director, Safety Standards Programs, Department of Labor, Occupational Safety and Health Administration, Rm N3605, FPBldg, 200 Constitution Ave., NW, Washington, DC 20210, 202 523-8061

RIN: 1218-AA22

1520. SAFETY TESTING/CERTIFICATION (PART 1910)

Significance: Regulatory Program

Legal Authority: 29 USC 655; 29 USC 657

CFR Citation: 29 CFR 1907, (Revocation); 29 CFR 1910, (Revision)

Legal Deadline: None. On June 5, 1987, MET Electrical Testing Company sued the Department of Labor with respect to this rulemaking. The agency failed to meet its March 30, 1985 deadline established pursuant to settlement agreement with MET Electrical Testing Company, Inc. The suit is currently pending.

Abstract: This rulemaking would establish mandatory procedures for recognizing those organizations competent to fulfill testing requirements contained in many OSHA safety standards. It would also amend a number of existing OSHA standards by deleting references to two product testing groups, UL and FM, that are included in these standards which were originally adopted as national consensus standards under Section 6(a) of the Act. OSHA's unimplemented regulation, Accreditation of Testing Laboratories, 29 CFR Part 1907, would be superseded as a result of these changes.

Timetable:

Action	Date	FR Cite
ANPRM	01/04/83	48 FR 270
ANPRM Comment Period End	03/15/83	48 FR 7204
NPRM	03/06/84	49 FR 8326
NPRM Comment Period End	06/21/84	49 FR 19336
Informal Public Hearing	09/25/84	49 FR 28739
Limited Reopening of Record	11/30/84	49 FR 47049
Final Action	04/12/88	53 FR 12102
Final Action Effective	06/13/88	

Small Entity: No

Additional Information: 1. Settlement agreement: MET Electrical Testing Company, Inc. v. Raymond J. Donovan, Secretary of Labor: Civil No. Y-82-1133, in the U.S. District Court for the District of Maryland. 2. ANPR Title: "Accreditation of Testing Laboratories" 3. NPRM Title: "Safety Testing or Certification of Certain Workplace Equipment and Materials (formerly entitled Accreditation of Testing Laboratories)."

Agency Contact: Barry J. White, Director, Safety Standards Programs, Department of Labor, Occupational Safety and Health Administration, 200 Constitution Ave., NW, Rm N3605, Washington, D.C. 20210, 202 523-8061

RIN: 1218-AA42

1521. PRESENCE SENSING DEVICE INITIATION OF MECHANICAL POWER PRESSES (PART 1910)

Significance: Regulatory Program

Legal Authority: 29 USC 655(b)

CFR Citation: 29 CFR 1910.211, (Revision); 29 CFR 1910.217, (Revision)

Legal Deadline: None.

Abstract: This regulatory action will remove an existing provision which prohibits presence sensing device initiation of mechanical power presses, and will add provisions which will enable the presence sensing device initiation to be done safely. Presence sensing device initiation has been identified as presenting potential increases in safety and productivity with an ergonomic advantage of less

VOL 53 ISS 79 PT 1 AP 25 1988 UMI

worker fatigue. A final regulatory impact analysis has been completed. It is estimated that the discounted savings over the first 10 years the standard will be in effect will be approximately $535 million.

Timetable:

Action	Date	FR Cite
NPRM	03/29/85	50 FR 12700
NPRM Comment Period End	06/27/85	50 FR 12700
Final Action	03/14/88	53 FR 8322
Final Action Effective	06/13/88	

Small Entity: No

Additional Information: A preproposal draft standard was circulated for public comment.

Affected Sectors: Multiple

Agency Contact: Mr. Barry J. White, Director, Safety Standards, Department of Labor, Occupational Safety and Health Administration, 200 Constitution Ave., NW, Rm N3605, FPBldg., Washington, DC 20210, 202 523-8061

RIN: 1218-AA54

1522. FORMALDEHYDE

Significance: Regulatory Program

Legal Authority: 29 USC 655(b); 29 USC 657

CFR Citation: 29 CFR 1910.1000; 29 CFR 1910.1048; 29 CFR 1910.19

Legal Deadline: None. There is currently no applicable legal deadline. However, OSHA has submitted documents to the U.S. Court of Appeals for the District of Columbia Circuit indicating its intention to complete this regulatory action in November 1987.

Abstract: Studies indicate adverse health effects in humans and animals exposed to airborne formaldehyde at concentrations permitted by OSHA's present standard. In humans, formaldehyde causes reversible sensory irritation of the eyes, nose, and throat, asthma and dermal irritation sensitization. Chronic studies in animals suggest that formaldehyde may also pose a carcinogenic risk in humans. This information indicates that the present OSHA standard for formaldehyde may need revision. On December 10, 1985, OSHA published a proposed standard. Public hearings were held in May 1985. OSHA is currently in the process of decisionmaking on the provisions to be included in the final standard.

Timetable:

Action	Date	FR Cite
ANPRM	04/17/85	50 FR 15179
ANPRM Comment Period End	06/15/85	50 FR 15179
NPRM	12/10/85	50 FR 50412
NPRM Comment Period End	03/10/86	50 FR 50412
Public Hearings	05/05/86	51 FR 75842
Final Action	12/04/87	52 FR 46168
Final Action Effective	02/02/88	52 FR 46168

Small Entity: Yes

Agency Contact: Charles E. Adkins, Director, Health Standards Programs, Department of Labor, Occupational Safety and Health Administration, 200 Constitution Ave., NW, Rm N3718, FPBldg., Washington, DC 20210, 202 523-7075

RIN: 1218-AA82

1523. SURFACE PREPARATION AND PRESERVATION (PART 1915)

Legal Authority: 29 USC 655(b); 33 USC 941

CFR Citation: 29 CFR 1915.32; 29 CFR 1915.33; 29 CFR 1915.34; 29 CFR 1915.35; 29 CFR 1915.36

Legal Deadline: None.

Abstract: This regulatory action will revise the existing shipyard standard covering surface preparation and preservation in enclosed confined and other spaces. The revision will develop, in part, a performance-oriented standard, address current gaps in coverage, recognize new technology, and eliminate outmoded or redundant provisions. It will consolidate 29 CFR 1915 standards and applicable 29 CFR 1910 standards into one set of provisions.

Timetable:

Action	Date	FR Cite
Integrated into 1218-AB22	03/01/88	

Small Entity: No

Additional Information: Applicable Part 1910 provisions under consideration: 29 CFR 1910.94; 29 CFR 1910.106 - .107.

Government Levels Affected: State, Federal

Agency Contact: Barry J. White, Director, Safety Standards Programs, Department of Labor, Occupational Safety and Health Administration, 200 Constitution Ave., NW, Rm N3605, FPBldg., Washington, DC 20210, 202 523-8061

RIN: 1218-AA96

[FR Doc. 88-6195 Filed 04-22-88; 8:45 am]

BILLING CODE 4510-23-T

VOL
53
ISS
79
PT
1
AP
25
1988
UMI

federal register

Monday
April 25, 1988

Part XIII

Department of State

Semiannual Regulatory Agenda

DEPARTMENT OF STATE (STATE)

DEPARTMENT OF STATE

22 CFR Ch. I

[Docket No. SD - 213]

Unified Agenda of Federal Regulations

AGENCY: Department of State.

ACTION: Semiannual publication of regulatory agenda.

SUMMARY: As required by Executive Order 12291 and the Regulatory Flexibility Act of 1980 (Pub. L. No. 96-354), the April 1988 agenda of regulations of the Department of State is set forth below. This agenda was prepared under the guidelines of OMB Bulletin 88-1, dated October 7, 1987. The purpose of the agenda is to provide information to the public on the Department's regulatory plans.

FOR FURTHER INFORMATION CONTACT: James H. Thessin, Assistant Legal Adviser for Management, Department of State, Room 4427A, 2201 C Street, NW., Washington, DC 20520, telephone (202) 647-2350.

Dated: February 23, 1988.

Ronald I. Spiers,

Under Secretary for Management.

DEPARTMENT OF STATE (STATE) — Prerule Stage

1524. ESTABLISHMENT OF REGISTRY IN STATE DEPARTMENT FOR INFORMATION ABOUT EXECUTION OF INTERNATIONAL WILLS

Legal Authority: Eventual U.S. ratification of 1973 Convention; providing a Uniform Law on the Form of an International Will; will provide basis for establishing Registry

CFR Citation: 22 CFR 92.61(3), amendment to

Legal Deadline: None.

Abstract: By resolution of the international diplomatic conference that adopted the final text of the Convention (see 3, above), there was a recommendation that States establish an internal system to permit the optional registration of information to facilitate the discovery of international wills. The President transmitted the Convention to the Senate on July 2, 1986 with the recommendation that the Senate give its advice and consent to U.S. ratification of the Convention, and information about the intention to establish the Registry in the Department of State (Senate Treaty Doc. 99-29).

Timetable:

Action	Date	FR Cite
Hearing of Senate Foreign Relations Committee on the Convention	00/00/00	

Small Entity: Not Applicable

Agency Contact: Carmen A. DiPlacido, Director, Office of Citizens Consular Services, Department of State, Bureau of Consular Affairs, Washington, DC 20520, 202 647-3666

RIN: 1400-AA09

1525. FISHERMEN'S PROTECTIVE ACT PROCEDURES UNDER SECTION 7

Legal Authority: 22 USC 1977

CFR Citation: 22 CFR 33, (Revision)

Legal Deadline: None.

Abstract: This regulation clarifies procedures for the administration of the Fishermen's Guaranty Fund and claims evaluation, under Section 7 of the Fishermen's Protective Act, 22 USC 1971 et seq.

Timetable:

Action	Date	FR Cite
Next Action Undetermined		

Small Entity: Not Applicable

Agency Contact: Peter H. Flournoy, Attorney-Adviser, Department of State, Office of the Legal Adviser, Washington, DC 20520, 202 647-2282

RIN: 1400-AA10

1526. REGULATIONS IMPLEMENTING THE PROGRAM FRAUD CIVIL REMEDIES ACT

Legal Authority: PL 99-509, Sec 6104; 31 USC 3801 to 3812

CFR Citation: Not yet determined

Legal Deadline: Statutory, April 21, 1987.

Abstract: Regulations implement the Program Fraud Civil Remedies Act of 1986, which establishes an administrative remedy for fraudulent claims or statements submitted to agencies. Anyone who, with knowledge or reason to know, submits a false, fictitious or fraudulent claim or statement to an agency is liable for a $5,000 penalty and an assessment of double damages.

Timetable:

Action	Date	FR Cite
Next Action Undetermined		

Small Entity: Undetermined

Agency Contact: Jean Bailly, Attorney-Adviser, Department of State, L/M, Room 4427A, 2201 C Street, NW, Washington, DC 20520, 202 647-4446

RIN: 1400-AA13

1527. SOUTH AFRICA AND FAIR LABOR STANDARDS

Legal Authority: 22 USC 5034; 22 USC 5035; 22 USC 5111; 22 USC 5113

CFR Citation: 22 CFR 60 to 65

Legal Deadline: None.

Abstract: Executive Order 12532 of September 9, 1985 required U.S. firms operating in South Africa to take good faith measures with respect to certain fair labor standards. A final rule was promulgated for this purpose after receiving public comments. The requirements of this Executive Order were later codified in the Comprehensive Anti-Apartheid Act of October 2, 1986, and amendments to the regulations were promulgated as a final rule on October 22, 1986. The first annual review of the labor practices of U.S. firms was published in September, 1987. The Department of State has reviewed the regulations since the report was completed and has revised the questionnaire; it is updating the regulations. The Department will again review the regulations and questionnaire after the second report is issued during the summer of 1988.

VOL 53 ISS 79 PT 1 AP 25 1988 UMI

STATE — Prerule Stage

Timetable:

Action	Date	FR Cite
Next Action Undetermined		

Small Entity: Yes

Government Levels Affected: Local, State, Federal

Agency Contact: Robert Bruce, Executive Director, South Africa Fair Labor Standards Program, Department of State, AF/S, 2201 C Street, NW., Washington, DC 20520, 202 647-9866

RIN: 1400-AA19

1528. ● AUTOMOBILE LIABILITY INSURANCE REPORTING REQUIREMENTS UNDER THE FOREIGN MISSIONS ACT

Significance: Regulatory Program

Legal Authority: 22 USC 4301 et seq; 22 USC 254a

CFR Citation: 22 CFR 151

Legal Deadline: None.

Abstract: The Foreign Missions Act Amendments of 1983 amended the Diplomatic Relations Act of 1978 and the Foreign Missions Act to enforce more effectively a requirement that persons connected with foreign missions carry liability insurance against risks arising from the operation in the U.S. of automobiles, vessels or aircraft by persons entitled to diplomatic or consular immunity. The Department issues and enforces pertinent regulations with the aim of ensuring that the objectives of this program are achieved. The regulations are designed to carry out the obligations of the U.S. to foreign diplomatic and consular missions, to induce concessions for U.S. diplomatic and consular missions abroad, to protect the U.S. public against uninsured foreign drivers, and to combat international terrorism. The expected potential benefits to society will greatly outweigh potential costs. We continue our analysis and discussions to ensure that regulatory mechanisms chosen maximize net benefits and minimize net costs. We seek to set priorities for our regulatory goals and objectives to maximize aggregate net benefits to society. In that connection, the liability insurance regulations have first priority.

Timetable:

Action	Date	FR Cite
Completion of requisite study and Congressional Review	07/01/88	
Determination of milestones for future action	10/01/88	

Small Entity: No

Agency Contact: John Condayan, Acting Director, Office of Foreign Missions, Department of State, Room 2105, Washington, DC 20520, 202 647-3416

RIN: 1400-AA24

DEPARTMENT OF STATE (STATE) — Proposed Rule Stage

1529. FOREIGN MISSIONS ACT REGULATIONS

Significance: Regulatory Program

Legal Authority: 22 USC 4301 et seq; 22 USC 254(e)

CFR Citation: 22 CFR 151

Legal Deadline: None.

Abstract: The Foreign Missions Act creates certain authorities for the Secretary of State relating to the regulation of foreign missions, diplomatic, consular, and international organizations. Exercise of those authorities could involve restricting or controlling the access of such missions to American vendors of goods and services. Exercise of other authorities in the Foreign Missions Act could affect the location of premises of foreign missions. Exercise of authority in the Diplomatic Relations Act, 22 USC 254(a) et seq., as amended by Title VI of P.L. 98-164, will have an impact on the acquisition of liability insurance coverage for the operation of motor vehicles, vessels, and aircraft by personnel of foreign missions, and could in certain situations, subject foreign missions to surcharges or fees. The regulations under consideration would provide procedures for exercise of these authorities. These regulations are at the stage of preliminary consideration. No timetable has been established other than that established in Title VI of P.L. 98-164.

Timetable:

Action	Date	FR Cite
Next Action Undetermined		

Small Entity: No

Agency Contact: John Condayan, Acting Director, Office of Foreign Missions, Department of State, Room 2105, 2201 C Street, NW, Washington, DC 20520, 202 647-3416

RIN: 1400-AA04

1530. IMPLEMENTATION OF 1980 HAGUE CONVENTION ON THE CIVIL ASPECTS OF INTERNATIONAL CHILD ABDUCTION

Significance: Regulatory Program

Legal Authority: None, until ratification of treaty.

CFR Citation: 22 CFR Not yet determined

Legal Deadline: None.

Abstract: The 1980 Hague Convention provides for the prompt return of children habitually resident in one contracting State who have been wrongfully abducted to another, including wrongful retention by a non-custodial parent. When the United States ratifies the Convention and Congress enacts the federal legislation, the Bureau of Consular Affairs will be tasked by executive order to serve as U.S. Central Authority (CA) under the Convention. Thus it will receive applications for the return of children wrongfully abducted to or retained in the United States. In conjunction with cooperating authorities in the U.S. State where the child is believed to be located, the CA's task will include seeking to locate the child, facilitating the initiation of a court action to require the child's return, arranging for the provision of information about the child's circumstances in the country of its habitual residence, and arranging for the child's return transportation if return is ordered. The President transmitted the convention for advice and consent to ratification by the Senate on October 30, 1985 (Senate

VOL 53 ISS 79 PT 1 AP 25 1988 UMI

STATE — Proposed Rule Stage

Treaty Doc. 99-11). The Senate gave its advice and consent on October 9, 1986.

Timetable:

Action	Date	FR Cite
Senate Advice and Consent to ratification	10/09/86	

Next Action Undetermined

Small Entity: Not Applicable

Additional Information: Detailed legal analysis of Convention, submitted to Senate Foreign Relations Committee Chairman Lugar (January 1986), was published with Convention text and other documents in the Federal Register of March 26, 1986 (pages 10494 to 10516). Legislation to facilitate implementation of the Convention has been introduced in the Senate (S.1347) and the House (H.R.2673).

Agency Contact: Carmen A. DiPlacido, Dir., Office of Citizens Consular Services, Department of State, Bureau of Consular Affairs, Washington, DC 20520, 202 647-3666

RIN: 1400-AA05

1531. BANKING SERVICES - PROCEDURES FOR RESTRICTING

Legal Authority: 22 USC 4301 et seq

CFR Citation: 22 CFR 152

Legal Deadline: None.

Abstract: The rule will set out the procedures that the Department of State will follow whenever the banking services of particular foreign missions are restricted pursuant to the Foreign Missions Act, 22 USC 4301 et seq.

Timetable:

Action	Date	FR Cite

Next Action Undetermined

Small Entity: Not Applicable

Government Levels Affected: State, Federal

Agency Contact: John Condayan, Acting Director, Office of Foreign Missions, Department of State, Room 2105, 2201 C Street, NW, Washington, DC 20520, 202 647-3416

RIN: 1400-AA07

1532. UNIFORM ADMINISTRATIVE REQUIREMENTS FOR GRANTS AND AGREEMENTS WITH UNIVERSITIES, HOSPITALS, AND OTHER NONPROFIT ORGANIZATIONS

Legal Authority: 22 USC 2658

CFR Citation: 22 CFR 136, (new)

Legal Deadline: None.

Abstract: The Department of State will participate in the promulgation of a common regulation that establishes uniform administrative requirements for grants and cooperative agreements to universities, hospitals, and other nonprofit organizations. This effort will revise the current Office of Management and Budget (OMB) Circular A-110 (same title) for the purpose of restoring commonality between A-110 and OMB Circular A-102, "Uniform Administrative Requirements for Grants to State and Local Governments." Under the revised Circular A-102, and as directed by President Reagan on March 12, 1987, all affected agencies have proposed simultaneously common regulations that adopt government-wide terms and conditions. This procedure will be used to implement the revised Circular A-110. No other alternatives are being considered. The rule will be intended to promote consistency and uniformity among the participating agencies.

Timetable:

Action	Date	FR Cite
Notice requesting comments on OMB Circular A-110 review	06/24/87	52 FR 23729
Begin Review	06/24/87	52 FR 23729
NPRM	11/00/88	

Small Entity: Undetermined

Agency Contact: John J. Conway, Procurement Executive, Department of State, Room 227, SA-6, Washington, DC 20520, 703 875-7047

RIN: 1400-AA20

DEPARTMENT OF STATE (STATE) — Final Rule Stage

1533. DEPARTMENT OF STATE ACQUISITION REGULATION (DOSAR)

Legal Authority: 5 USC 301; 22 USC 2658; 40 USC 486(c)

CFR Citation: 48 CFR 601 to 653, (New)

Legal Deadline: None.

Abstract: The Department of State is publishing the Department of State Acquisition Regulation (DOSAR) as part of the Federal Acquisition Regulations System, which consists of the Federal Acquisition Regulation (FAR) and agency acquisition regulations that implement or supplement the FAR. This action is necessary to provide regulatory guidelines not otherwise found in the FAR for Department of State acquisitions. There are no other alternatives for addressing the problem; the DOSAR must be established in accordance with FAR Subpart 1.3. By this action, the Department of State will establish a single regulation for its acquisition policies, procedures, contract clauses, solicitation procedures, and forms that govern its relationship with its contractors and prospective contractors.

Timetable:

Action	Date	FR Cite
NPRM	05/28/87	52 FR 19990
NPRM Comment Period End	06/29/87	52 FR 19990
Final Action	04/00/88	
Final Action Effective	04/00/88	
Begin Review	05/00/88	
End Review	00/00/00	

Small Entity: No

Agency Contact: John J. Conway, Procurement Executive, Department of State, Room 227, SA-6, Washington, DC 20520, 703 875-7047

RIN: 1400-AA16

1534. GOVERNMENT-WIDE DEBARMENT AND SUSPENSION (NON-PROCUREMENT)

Legal Authority: 22 USC 2658

CFR Citation: 22 CFR 137, (new)

Legal Deadline: None.

Abstract: The Department of State is publishing this rule as an adoption of a common regulation establishing a uniform system of non-procurement debarment and suspension among many Federal agencies. This system is intended to curb fraud, waste, and

STATE **Final Rule Stage**

abuse in non-procurement activities using Federal assistance. Guidelines for the system were developed by a Task Force on Non - Procurement Suspension and Debarment. The task force was convened by the Office of Management and Budget (OMB), pursuant to its responsibilities established by President Reagan under Executive Order 12549, Debarment and Suspension (February 18, 1986). As a Federal agency, the Department of State must either adopt this common rule or promulgate a separate system that meets the requirements of Executive Order 12549.

Timetable:

Action	Date	FR Cite
Notice requesting comments on guidelines	02/21/86	51 FR 06372
Notice setting forth guidelines	05/29/87	52 FR 20360
NPRM	10/20/87	52 FR 39015
NPRM Comment Period End	12/21/87	52 FR 39015
Final Action	05/26/88	
Final Action Effective	05/26/88	

Small Entity: No

Agency Contact: John J. Conway, Procurement Executive, Department of State, Room 227, SA-6, Washington, DC 20520, 703 875-7047

RIN: 1400-AA21

1535. ● INTERNATIONAL TRAFFIC IN ARMS REGULATIONS (ITAR)

Legal Authority: 22 USC 2778

CFR Citation: 22 CFR 120; 22 CFR 121.1; 22 CFR 122.4; 22 CFR 123; 22 CFR 124; 22 CFR 125.4; 22 CFR 126.6; 22 CFR 126.7; 22 CFR 127; 22 CFR 128; 22 CFR 130

Legal Deadline: Statutory, October 1, 1988. Statutory deadline applies only to one proposed revision; the remainder of the proposals are not subject to a legal deadline.

Abstract: The ITAR were first published in their current form in 1955 and have been periodically amended to reflect statutory enactments and to implement foreign policy. The last substantial revision occurred in December 1984; minor amendments have been effected since that date. The proposed revisions principally clarify and implement existing authorities and controls. For example, they make express the intent of the regulations to exempt general FOIA releases from licensing requirements; to license specified aspects of sales of registrants to foreign corporations; to govern the movement of military vessels outside the U.S.; to specify required clauses in procurement agreements; and to prescribe broader compliance and debarment authority. The amendments would also replace a licensing requirement for temporary imports with a notification requirements, thus easing regulatory controls on such transactions, expediting the process, and, overall, providing ample benefits and reducing costs.

Timetable:

Action	Date	FR Cite
Final Action	10/01/88	

Small Entity: No

Agency Contact: Joseph P. Smaldone/Thomas Orum, Chief Licensing Officer, Office of Munitions Control, Department of State, PM/RASA/MC, Room 800, Department of State Annex 6, Washington, DC 20520, 703 875-6644

RIN: 1400-AA23

DEPARTMENT OF STATE (STATE) **Completed Actions**

1536. UNIFORM ADMINISTRATIVE REQUIREMENTS FOR GRANTS AND COOPERATIVE AGREEMENTS TO STATE AND LOCAL GOVERNMENTS

CFR Citation: 22 CFR 135, (new)

Completed:

Reason	Date	FR Cite
Final Action	03/11/88	53 FR 8034
Final Action Effective	10/01/88	

Small Entity: No

Agency Contact: John J. Conway 703 875-7047

RIN: 1400-AA22

[FR Doc. 88-5085 Filed 04-22-88; 8:45 am]

BILLING CODE 4710-06-T

VOL
53

ISS
79

PT
1

AP
25

1988

UMI

federal register

Monday
April 25, 1988

Part XIV

Department of Transportation

Semiannual Regulatory Agenda

DEPARTMENT OF TRANSPORTATION (DOT)

DEPARTMENT OF TRANSPORTATION

Office of the Secretary

14 CFR Chs. I and II

23 CFR Chs. I and II

33 CFR Chs. I and IV

41 CFR Ch. 12

46 CFR Chs. I-III

48 CFR Ch. 12

49 CFR Subtitle A, Chs. I-VI

[OST Docket No. 59; Notice 88-4]

Department Regulations Agenda; Semiannual Summary

AGENCY: Department of Transportation.

ACTION: Department regulations agenda.

SUMMARY: The Regulations Agenda is a semiannual summary of all current and projected rulemakings, reviews of existing regulations and completed actions of the Department. The agenda provides the public with information about the Department of Transportation's regulatory activity. It is expected that this information will enable the public to be more aware of, and allow it to more effectively participate in, the Department's regulatory activity.

ADDRESSES: The mailing address for the initiating offices of the Department which appear in the agenda is 400 Seventh Street, SW., Washington, DC 20590, except for the Federal Aviation Administration which is located at 800 Independence Avenue, SW., Washington, DC 20591; and the U.S. Coast Guard, which is located at 2100 Second Street, SW., Washington, DC 20593.

FOR FURTHER INFORMATION CONTACT:

General

For further information on the agenda in general, contact: Neil R. Eisner, Assistant General Counsel for Regulation and Enforcement, Department of Transportation, 400 Seventh Street, SW., Washington, DC 20590, 202-366-4723.

Specific

For further information about any particular item on the agenda, contact the individual listed in the column headed "Agency Contact" for that item.

SUPPLEMENTARY INFORMATION:

Table of Contents

Supplementary Information:
- Background
- Regulatory Flexibility Act
- Regulatory Impact Analysis
- Definitions
- Explanation of Information on the Agenda
- Mailing Lists for Regulatory Documents
- General Rulemaking Contact Persons
- Public Rulemaking Dockets
- Request for Comments
- Purpose
- Appendix A - Instructions for Obtaining Copies of Regulatory Documents
- Appendix B - General Rulemaking Contact Persons
- Appendix C - Public Rulemaking Dockets

Agenda

Background

Improvement of government regulations is a prime goal of the Reagan Administration. There should be no more regulations than necessary, and those that are issued should be simpler, more comprehensible, and less burdensome. Regulations should not be issued without appropriate involvement of the public; once issued, they should be periodically reviewed and revised, as needed, to assure that they continue to meet the needs for which they originally were designed.

To help the Department of Transportation ("Department") achieve these goals, and in accordance with Executive Order 12291 ("Federal Regulation"; 46 FR 13193; February 19, 1981) and the Department's Regulatory Policies and Procedures (44 FR 11034; February 26, 1979), the Department prepares a semiannual Regulations Agenda for publication in the **Federal Register**. The agenda summarizes all current and projected rulemaking, reviews of existing regulations and completed actions of the Department. These are matters on which action has begun or is projected during the succeeding twelve months or such longer period as may be anticipated or for which action has been completed since the last agenda.

The agendas are based on reports submitted by the initiating offices in January and July each year. After these reports are consolidated for, and reviewed by, the Department Regulations Council, the Department's Regulations Agenda is prepared and published in the **Federal Register**. The Department's last agenda was published in the **Federal Register** on October 26, 1987 (52 FR 40549). The next one is scheduled for publication in the **Federal Register** in October 1988.

Regulatory Flexibility Act

In 1980, Congress passed the Regulatory Flexibility Act (RFA), Pub. L. 96-354, which requires the designation of those regulations for which a Regulatory Flexibility Analysis will be prepared, i.e., those regulations that would have a significant economic impact on a substantial number of small entities. The heading "Small Entity" will indicate whether a Regulatory Flexibility Analysis is required by a "yes" or a "no." If a Regulatory Flexibility Analysis will be prepared for a particular rulemaking, that fact also will be noted under the heading "Analysis."

The RFA also requires that each year the Department publish a list of those regulations that have a significant economic impact on a substantial number of small entities and are to be reviewed under the Act during the succeeding twelve months. The agenda includes those regulations to be reviewed under the RFA or those for which review has been concluded since the last agenda. A "yes" or "no" will be found under the heading "small entity," for each such regulation. However, it should be noted that, after a preliminary assessment of the regulations listed for RFA review, it may be found that the regulations, in fact, do not have a significant economic impact on a substantial number of small entities and a full RFA review will be unnecessary.

Regulatory Impact Analysis

A preliminary and final Regulatory Impact Analysis is required for each proposed and final regulation, respectively; that

(1)Is likely to result in:

(a)An annual effect on the economy of $100 million or more;

DOT

(b)A major effect on the general economy in terms of costs, consumer prices, or production;

(c)A major increase in costs or prices for consumers; individual industries; Federal, State, or local government agencies; or geographic regions;

(d)Significant adverse effects on competition, employment, investment, productivity, innovation, or on the ability of United States-based enterprises to compete with foreign-based enterprises in domestic or export markets; or

(2)The Secretary or head of the initiating office determines requires such an analysis.

Definitions

The agenda covers all rules and regulations of the Department, including those that establish conditions for financial assistance. The following definitions are provided for ease in understanding the information in this document.

(1) *Initiating office* means an operating administration or other organizational element within the Department, the head of which is authorized by law or delegation to issue regulations or to formulate regulations for issuance by the Secretary.

(2) *Significant regulation* means a regulation that is not an emergency regulation and that in the judgment of the head of the initiating office, or the Secretary, or the Deputy Secretary

(a) Is a major regulation;

(b) Concerns a matter on which there is substantial public interest or controversy;

(c) Has a major impact on another operating administration or other parts of the Department or other Federal Agency;

(d) Has a substantial effect on State and local governments;

(e) Has a substantial impact on a major transportation safety problem;

(f) Initiates a substantial regulatory program or change in policy;

(g) Is substantially different from international requirements or standards; or

(h) Otherwise involves important Department policy.

(3) *Major regulation* means a significant regulation for which a Regulatory Impact Analysis is required to be prepared.

(4) *Emergency regulation* means (a) a regulation that, in the judgment of the head of the initiating office, circumstances require to be issued without notice and opportunity for public comment or made effective in less than 30 days after publication in the **Federal Register**; or (b) is governed by short-term statutory or judicial deadlines.

(5) *Nonsignificant regulation* means a regulation that, in the judgment of the head of the initiating office, is neither a significant nor an emergency regulation.

Explanation of Information on the Agenda

The format for this agenda is required by Office of Management and Budget Bulletin No. 86-16 (July 2, 1986).

First, the agenda is divided by initiating offices. Then, in accordance with the OMB Bulletin, for each initiating office the agenda is divided into four categories: (1) Prerule stage, (2) proposed rule stage, (3) final rule stage, and (4) completed actions. For each entry, the agenda provides the following information: (1) The "significance" of the action (i.e., whether it is significant because it is on the Regulatory Program or because of agency priority; or whether it is nonsignificant or routine and frequent); (2) a short descriptive title; (3) the legal basis for the action being taken or the regulation being reviewed; (4) the related regulatory citation in the Code of Federal Regulations; (5) an indication of any legal deadline; (6) an abstract of the review or the proposed or final regulation; (7) a timetable, including the earliest expected date for a decision on whether to issue the proposed or final regulation, or complete the review and determine the corrective action to be taken. (The action taken can be revocation or revision of the regulation, or it can be a determination that no regulatory action is necessary because the regulation is found to be achieving its goals and the goals and objectives of Executive Order 12291 and the Department's Regulatory Policies and Procedures.); (8) a statement as to whether the Regulatory Flexibility Act applies because of the rulemaking's effect on small entities; (9) if there is information that does not fit in the other categories, it will be included under a separate heading, entitled "Additional Information"; (10) a listing, where determined, of any analyses an initiating office will prepare or has prepared for the rulemaking document; e.g., a Regulatory Impact Analysis or Evaluation, an Environmental Impact Statement (EIS), a Regulatory Flexibility Analysis, or an Urban Impact Analysis. (It should be noted that, even though a Regulatory Impact Analysis is not required for some items on the agenda, the Department requires an economic analysis for all of its regulations. This economic analysis is contained in the Regulatory Evaluation if a Regulatory Impact Analysis is not prepared); (11) an agency contact office or official who can provide further information, including advice on how to obtain documents referenced in the agenda; and (12) a Regulation Identifier Number (RIN) assigned solely to identify an individual action in the agenda.

For nonsignificant regulations issued routinely and frequently as a part of an established body of technical requirements (such as the Federal Aviation Administration's Airspace Rules) to keep those requirements operationally current, only the general category of the regulations, the identity of a contact office or official, and an indication of the expected number of regulations are included; individual regulations are not listed.

If a regulatory docket number has already been established, it may be provided under the "Additional Information" heading. If a member of the public desires further information regarding a particular proposal or regulation, reference should be made to this docket number.

In the "Timetable" column, abbreviations are used to indicate the particular documents being considered for issuance by that date. ANPRM stands for Advance Notice of Proposed Rulemaking, SNPRM for Supplemental Notice of Proposed Rulemaking, NPRM for Notice of Proposed Rulemaking, and FR for Final Rule. Listing a future date in this column is not an indication that a proposed or a final rule will be issued on that date; it is the earliest date on which a decision is expected to be made on whether to issue the document listed. Submittal of any proposed or final rule to the Office of Management and Budget for review, under Executive Order 12291, must follow such a decision. For major rules, this review could take 60 days or more. If any document is issued, publication in the **Federal Register**

would follow within a few days. In addition, these dates are based on current schedules. Information received subsequent to the issuance of this agenda could result in a decision not to take regulatory action or in changes to proposed publication dates. For example, the need for further evaluation could result in a later publication date; evidence of a greater need for the regulation could result in an earlier publication date.

Finally, a dot (●) preceding an entry indicates that the entry appears in the agenda for the first time.

Mailing Lists for Regulatory Documents

To assist the public in obtaining regulatory documents issued within the Department of Transportation, an Appendix A has been included in this document. The appendix contains instructions on how to be placed on mailing lists for, or to obtain, copies of regulatory documents, including the Department's Semiannual Regulations Agenda, issued by the operating administrations of the Department and the Office of the Secretary. There is no charge for this service; however, because of the costs involved, the number of copies of a document forwarded to an individual requestor may be limited. Persons already on mailing lists for particular documents within the Department will remain on those lists and should not reapply.

By following the instructions specified in the appendix, a person can be placed on a mailing list for future copies of the Department's Regulations Agenda, which will be updated and published in the **Federal Register** every year during April and October. By using the agenda, individuals can determine which Notice or Advance Notice of Proposed Rulemaking, to be issued by elements of the Department, is of interest to them. Then, using the instructions in the appendix, such persons also can be placed on a mailing list to ensure that, after the document of interest is issued, a copy will be mailed to them for their review and comment. In this way, individuals will be relieved of the burden of having to review the **Federal Register**, perhaps on a daily basis. The Department expects that this process will ensure that those people placed on mailing lists will receive early notice so that their views on the document can be adequately prepared and presented within the established comment period.

General Rulemaking Contact Persons

To assist persons desiring to obtain general information concerning the rulemaking process within the Department's operating administrations, an Appendix B has been added to the agenda. This appendix sets forth the addresses and the telephone numbers of the persons who can respond quickly to requests for general rulemaking information. Please note, however, that questions related to particular rulemaking actions should still be referred to the contact person listed with the particular rulemaking on the agenda.

Public Rulemaking Dockets

To facilitate the inspection of docket files and the submission of comments by the public, an Appendix C sets forth the addresses and working hours for the Rules Docket for each operating administration.

Request for Comments

Agenda

Our agenda is intended primarily for the use of the public. Since its inception, we have made modifications and refinements that we believe provide the public with more helpful information as well as make the agenda easier to use. We would also like you, the public, to make suggestions or comments on how the agenda could be further improved. For example, do you find the information presented in an easily understandable manner? Do you find it easy to follow a regulation's development from agenda to agenda? Do you find that the format for setting out the information enables you to use the agenda easily? Do you find that the presentation of the information in the agenda is clearly explained in the preamble to the agenda? Your responses to these questions or any other comments or suggestions you may have should be sent to Neil R. Eisner, whose address appears above.

Reviews

In an effort to comply further with the spirit of Executive Order 12291 and the Regulatory Flexibility Act, we are also seeking suggestions on existing regulations that should be included in our review of existing regulations; that is, which existing regulations issued by an operating administration of the Department or the Office of the Secretary do you believe need to be reviewed to determine whether they should be revised or revoked? The Department is particularly interested in obtaining information on requirements that have a "significant economic impact on small entities" and therefore, must be reviewed under the Regulatory Flexibility Act. If you have any suggested regulations, please send them, along with your explanation of why they should be reviewed, to the concerned operating administration or the Office of the Secretary, at the appropriate address noted in the "Addresses" paragraph above.

In accordance with the Regulatory Flexibility Act, comments are specifically invited on regulations that are targeted for review under the RFA. Those comments should be addressed to the "contact" person of the operating administration involved, at the appropriate address noted in the "Addresses" paragraph above.

Purpose

The Department is publishing this Regulations Agenda in the **Federal Register** to share with interested members of the public the Department's preliminary expectations regarding its future regulatory actions. This should enable the public to be more aware of the Department's regulatory activity. Knowledge of the nature and scope of this activity, as well as the specific proposals and reviews being considered, should result in more effective public participation in the Department's regulatory activity. For example, awareness of the dates when notices may be issued seeking public comment should allow appropriate planning and more efficient use of the comment period. By providing the expected date for a decision on whether to issue a final rule, the Department expects that more appropriate planning by those concerned with the regulation will also be possible. This publication in the **Federal Register** does not impose any binding obligation on the Department, or any of the offices within the Department, with regard to any specific item on the agenda. Regulatory action in addition to the items listed is not precluded. If further information is desired on any of the items listed in the agenda, the public is encouraged to contact the individual listed for the particular item. Additional information concerning the agenda, in general, or the Department's Regulatory Policies and Procedures may be obtained from Neil R. Eisner, whose address and telephone number appear above.

DOT

Issued in Washington, DC on March 16, 1988.

Jim Burnley,

Secretary of Transportation.

Appendix A - Instructions for Obtaining Copies of Regulatory Documents

Some Administrations within the Department differ in procedures, or as to inclusion on a mailing list. For the offices listed below, persons desiring to obtain a copy of any regulatory document to be issued, that is listed in this agenda, should communicate, either by telephone or by letter, with the contact person listed with the regulation, at the following addresses:

United States Coast Guard (USCG)

(Name of contact person), United States Coast Guard, 2100 Second Street, SW., Washington, DC 20593.

Federal Highway Administration (FHWA)

(Name of contact person), Federal Highway Administration, 400 7th Street, SW., Washington, DC 20590.

Federal Railroad Administration (FRA)

(Name of contact person), Federal Railroad Administration, 400 7th Street, SW., Washington, DC 20590.

National Highway Traffic Safety Administration (NHTSA)

(Name of contact person), National Highway Traffic Safety Administration, 400 7th Street, SW., Washington, DC 20590.

Urban Mass Transportation Administration (UMTA)

(Name of contact person), Urban Mass Transit Administration, 400 7th Street, SW., Washington, DC 20590.

Saint Lawrence Seaway Development Corporation (SLSDC)

(Name of contact person), Saint Lawrence Seaway Development Corporation, 400 7th Street, SW., Room 5424, Washington, DC 20590.

Research and Special Programs Administration (RSPA)

David A. Watson, Training Unit, DHM-51, OHMT/RSPA, 400 7th Street, SW., Washington, DC 20590.

Maritime Administration (MARAD)

James Saari, Secretary, Maritime Administration, 400 Seventh Street, SW., [Room 7300B], Washington, DC 20590, (202) 366-5746.

Federal Aviation Administration (FAA)

The FAA has a mailing list system for Notices and Advance Notices of Proposed Rulemaking (NPRMs and ANPRMs). Persons interested in obtaining future copies of all of those documents to be issued by the FAA or only of those concerning certain parts of the Federal Aviation Regulations should request a copy of Advisory Circular No. 11-2, which describes the application procedure, by calling 202-267-3479 or by writing to: Federal Aviation Administration, Office of Public Affairs. Attention: Public Information Center, APA-200, 800 Independence Avenue, SW., Washington, DC 20591.

Office of the Secretary (OST)

Persons desiring to receive future copies of the Department's Regulations Agenda should submit their request to: Assistant General Counsel for Regulation and Enforcement, C-50, Office of the General Counsel, Department of Transportation, Washington, DC 20590, (202) 366-4723.

Persons who have an interest in specific regulatory documents to be issued by the Office of the Secretary should forward requests for copies of those documents to the same address. These requests should fully identify the document desired. Persons interested in a rulemaking document on an aviation matter (of the kind formerly handled by the CAB) will be placed on a mailing list for all OST aviation-related rulemakings if they so request.

Appendix B - General Rulemaking Contact Persons

The following is a list of persons who can be contacted within the Department for general information concerning the rulemaking process within the various operating administrations.

USCG - Bruce Novak, Marine Safety Council, USCG Headquarters Building, Room 2110, 2100 Second Street, SW., Washington, DC 20593. Telephone: 202/267-1477.

FAA - John H. Cassady, Office of Chief Counsel, Regulations and Enforcement Division, 800 Independence Ave., SW., Room 915A, Washington, DC 20591. Telephone: 202/267-3073.

FHWA - Michael J. Laska, Office of the Chief Counsel, 400 7th Street, SW., Room 4223, Washington, DC 20590. Telephone: 202/366-1383.

FRA - Mike Haley, Office of Chief Counsel, 400 7th Street, SW., Room 8201, Washington, DC 20590. Telephone: 202/366-0767.

NHTSA - Steve Kratzke, Office of Chief Counsel, 400 7th Street, SW., Room 5219, Washington, DC 20590. Telephone: 202/366-2992.

UMTA - Linda Hart, Office of Chief Counsel, 400 7th Street, SW., Room 9316, Washington, DC 20590. Telephone: 202/366-4011.

SLSDC - Fredrick A. Bush, General Counsel's Office, 400 7th Street, SW., Room 5424, Washington, DC 20590. Telephone: 202/366-0101.

RSPA - Mary Crouter, Office of Chief Counsel, 400 7th Street, SW., Room 8420, Washington, DC 20590. Telephone: 202/366-4367.

MARAD - James Saari, Secretary, Maritime Administration, 400 7th Street, SW., Room 7300B, Washington, DC 20590. Telephone: 202/366-5746.

OST - Neil Eisner, Office of Regulation and Enforcement, 400 7th Street, SW., Room 10424, Washington, DC 20590. Telephone: 202/366-4723.

Appendix C - Public Rulemaking Dockets

The following is a list of Rule Docket locations for the various operating administrations where the public may review regulatory dockets and hand-deliver comments on advance notices and notices of proposed rulemaking:

USCG - Marine Safety Council, 2100 2nd Street, SW., Room 2110, Washington, DC 20593. Working Hours: 7:30-4:00 (Monday-Friday).

FAA - Rules Docket, Office of Chief Counsel, Regulations and Enforcement Division, 800 Independence Ave., SW., Room 915G, Washington, DC 20591. Working Hours: 8:30-5:00.

FHWA - Docket Room, 400 7th Street, SW., Room 4205, (Federal Motor Carrier Safety Regulations in Room 3404), Washington, DC 20590. Working Hours: 7:45-4:15.

FRA - Docket Clerk, 400 7th Street, SW., Room 8201, Washington, DC 20590. Working Hours: 8:30-5:00.

NHTSA - Docket Room, 400 7th Street, SW., Room 5108, Washington, DC 20590. Working Hours: 8:00-4:00.

UMTA - Docket Clerk, 400 7th Street, SW., Room 9223, Washington, DC 20590. Working Hours: 8:30-5:00.

SLSDC - 400 7th Street, SW., Room 5424, Washington, DC 20590. Working Hours: 8:15-4:45.

RSPA - Docket Branch, 400 7th Street, SW., Room 8426, Washington, DC 20590. Working Hours: 8:30-5:00.

MARAD - Docket Clerk, 400 7th Street, SW., Room 7300, Washington, DC 20590. Working Hours: 9:00-5:30.

OST - Docket Clerk, 400 7th Street, SW., Room 4107, Washington, DC 20590. Working Hours: 9:00-5:30.

Office of the Secretary—Prerule Stage

Sequence Number	Title	Regulation Identifier Number
1537	+ Review of Department-Wide Drug Regulations	2105-AB24
1538	+ Consumer Protection for Default by Scheduled Air Carriers	2105-AA98
1539	+ Escrow/Bond Protection for Airline Tickets	2105-AB26
1540	Air Carrier Cargo Tariff Publications	2105-AA31
1541	Overseas Military Personnel Air-Charter Tariffs	2105-AA67
1542	Unfair and Deceptive Practices by Airline Ticket Agents	2105-AA70
1543	Direct Flights	2105-AA73
1544	Cargo Rate Changes on 30 Days' Notice	2105-AA99
1545	Comprehensive Review of CAB Consumer Rules	2105-AB03
1546	Price Advertising	2105-AB25

+ Designates significant regulation.

Office of the Secretary—Proposed Rule Stage

Sequence Number	Title	Regulation Identifier Number
1547	+ Electronic Filing of Tariffs	2105-AB00
154	+ Nondiscrimination on the Basis of Handicap (Air Travel)	2105-AA18
1549	+ Liberalization of Air-Carrier Charter Rules	2105-AA41
1550	+ Smoking Aboard Aircraft; Notice to Passengers	2105-AA72
1551	+ Certification of Speed-Limit Enforcement	2105-AB22
1552	Nondiscrimination in Federally-Assisted Programs of the Department of Transportation – State Transportation Agencies' EEO Affirmative Action Programs	2105-AA06
1553	Nondiscrimination on the Basis of Handicap (Directly Conducted Programs)	2105-AA29
1554	Diversion of Flights Within a Metropolitan Area	2105-AA78
1555	Baggage Liability Notices in International Air Transportation	2105-AA84
1556	Simplified Airline Counter-Sign Notices	2105-AA86
1557	Names of Air Carriers and Foreign Air Carriers	2105-AB18
1558	Counting UMTA Reduced-Fare Program Costs Toward 504 Cost Cap	2105-AB29

+ Designates significant regulation.

Office of the Secretary—Final Rule Stage

Sequence Number	Title	Regulation Identifier Number
1559	+ Commercial Space Transportation: Liability Requirements for Commercial Space Launch Activities	2105-AA25
1560	+ Minority Business Enterprise Program (Financial Assistance Programs)	2105-AA04
1561	+ Public Availability of Information	2105-AA05
1562	+ Nondiscrimination on the Basis of Handicap (Commuter Rail Programs)	2105-AB23
1563	Title VI Civil Rights Regulation	2105-AA02
1564	Minority Business Enterprise Program (Direct Contracting)	2105-AA03
1565	Consolidation of Transportation Grants to U.S. Territories	2105-AA08
1566	Nondiscrimination on the Basis of Age in DOT Financial Assistance Programs	2105-AA09
1567	Airline Time and Mileage Guides	2105-AA39
1568	Direct Air Carrier Responsibility for Returning Stranded Charter Passengers	2105-AA40
1569	Zones for Airline Mail Rates	2105-AA44
1570	Air Travelers: Age Discrimination	2105-AA45
1571	Policy Statement on Airline Preemption	2105-AA46

VOL 53 ISS 79 PT 1 APR 25 1988 UMI

DOT

Office of the Secretary—Final Rule Stage—Continued

Sequence Number	Title	Regulation Identifier Number
1572	Insurance for On-Demand Air-Taxi Operators and Canadian Air Taxis	2105-AA47
1573	Effect of Expiration of a Bilateral on Foreign Air-Carrier Authority	2105-AA68
1574	Implementation of Statute Requiring Interest on Subsidy Claims	2105-AA77
1575	Simplified Aviation Exemption Procedures	2105-AA82
1576	Update the Department of Transportation Acquisition Regulations to Implement the Competition in Contracting Act as Set Forth in the Federal Acquisition Regulations – Proposed Rules	2105-AB15
1577	Warranty Regulations for Major System Acquisitions of the United States Coast Guard – Proposed Rule	2105-AB16
1578	Exemption From Prior-Approval Requirements for Certain Transactions	2105-AB20
1579	Collection of Claims Owed the United States	2105-AB33
1580	Debarment and Suspension (Nonprocurement)	2105-AB34

+ Designates significant regulation.

Office of the Secretary—Completed Actions

Sequence Number	Title	Regulation Identifier Number
1581	+ Commercial Space Transportation: Licensing Regulations	2105-AA25
1582	+ Program Fraud Civil Remedies	2105-AB30
1583	+ Uniform Administrative Requirements for Grants and Cooperative Agreements to State and Local Governments	2105-AB31
1584	Minority Business Enterprise Program (Financial Assistance Programs); Counting Credit for Suppliers and Other Service Providers	2105-AA20
1585	Recovery of Debts to the United States by Salary Offset	2105-AB32

+ Designates significant regulation.

U.S. Coast Guard—Prerule Stage

Sequence Number	Title	Regulation Identifier Number
1586	+ California Offshore Routing System (83-032)	2115-AB29
1587	+ Imposition of User Fees for Certain Coast Guard Services; Documentation and Licensing (CGD 87-020)	2115-AC74
1588	+ Subdivision and Damage Stability of Dry Cargo Vessels (CGD 87-094)	2115-AC87
1589	Casualty Reporting Requirements for Recreational Boats (82-015)	2115-AA82
1590	Inspected Fish Processing and Fish Tender Vessels (86-026)	2115-AC27
1591	SOLAS 74/83 Emergency Drinking Water and Food Approval Requirements (85-202)	2115-AC48
1592	SOLAS 74/83 Revision of Hydraulic Release Device Approval Requirements (85-206)	2115-AC52
1593	SOLAS 74/83 Revision of Davit and Winch Approval Requirements (85-207)	2115-AC53
1594	SOLAS 74/83 Radar Reflector Approval Requirements (85-209)	2115-AC54
1595	SOLAS 74/83 Revision of Lifebuoy Approval Requirements (85-210)	2115-AC55

+ Designates significant regulation.

U.S. Coast Guard—Proposed Rule Stage

Sequence Number	Title	Regulation Identifier Number
1596	+ Revisions of the Regulations on Outer Continental Shelf Activities (84-098)	2115-AB74
1597	+ Mandatory Alcohol and Drug Testing Following Serious Marine Incidents Involving Commercial Vessels (CGD 86-080)	2115-AC62
1598	+ Tankerman Requirements (CGD 79-116)	2115-AA03
1599	+ User Fees for Coast Guard Services (84-026)	2115-AB73
1600	+ Programs for Chemical Drug Testing of Commercial Vessel Personnel (CGD 86-067)	2115-AC45
1601	+ Regulations for Self-Elevating Offshore Service and Support Vessels (CGD 86-074)	2115-AC63
1602	Fixed Fire-Extinguishing Systems on Uninspected Vessels (74-284)	2115-AA08
1603	Miscellaneous Changes to 46 CFR 56 (77-140)	2115-AA17

BEST COPY AVAILABLE

DOT

U.S. Coast Guard—Proposed Rule Stage—Continued

Sequence Number	Title	Regulation Identifier Number
1604	Crane Operator Qualifications and Standards for Offshore Crane Design, Inspection, Testing, and Operation (79-059)	2115-AA34
1605	Inflatable Liferaft Stability (80-113)	2115-AA50
1606	Maneuvering Performance Regulations (80-136)	2115-AA53
1607	Servicing Inflatable Liferafts (81-010)	2115-AA57
1608	Personal Flotation Devices (81-023)	2115-AA58
1609	General Revision of 46 CFR 151, Barges Carrying Certain Bulk Dangerous Cargoes (81-082)	2115-AA70
1610	Offshore Supply Vessel Regulations (82-004)	2115-AA77
1611	General Revisions of Pollution-Prevention Regulations for Tankers (82-030)	2115-AAB8
1612	Aids to Navigation on Outer Continental Shelf (82-054)	2115-AA92
1613	Safety Standards for Self-Propelled Vessels Carrying Bulk Liquefied Gases (82-058)	2115-AA95
1614	Nautical Schools: Implementing the Maritime Educational Training Act of 1980 (82-092)	2115-AB21
1615	Reassessment of Coast Guard Fire Protection Regulations to Incorporate SOLAS 1974 (83-026)	2115-AB36
1616	Reassessment of Coast Guard Marine Engineering Regulations -- Incorporation of SOLAS 74 Amendments (83-043)	2115-AB41
1617	Oil-Water Interface Detectors (CGD 84-052)	2115-AB66
1618	Licensing of Pilots-Manning of Vessels (84-060)	2115-AB67
1619	Marine Portable Tanks (84-043)	2115-AB69
1620	Personal Flotation Device Components (84-068)	2115-AB70
1621	Lifesaving Equipment--Implementation of 1983 Amendments to SOLAS 1974 (84-069)	2115-AB72
1622	Mobile Offshore Drilling Unit Regulations Revision (83-071a)	2115-AB88
1623	Safety Rules for Ships Carrying Hazardous Liquids (84-085)	2115-AB92
1624	Training in the Use of Automatic Radar Plotting Aids (ARPA) (85-089)	2115-AB99
1625	Certification of Seamen (84-088)	2115-AC02
1626	Inland Waterway Navigation Regulations; All Waters Tributary to the Gulf of Mexico (85-096)	2115-AC03
1627	Fire Detection and Alarm Systems (85-051)	2115-AC13
1628	Revisions to the Electrical Engineering Regulations (85-063)	2115-AC20
1629	Subchapter "T" Title 46, General Updates and Revisions (85-080)	2115-AC22
1630	46 CFR Subchapter 1. Editorial Revisions and Corrections (86-033)	2115-AC28
1631	Hazardous Materials Pollution Prevention (CGD 86-034)	2115-AC29
1632	Updating Approval Requirements for Breathing Apparatus (86-036)	2115-AC30
1633	Revised Approval Specifications for Noncombustibles and Prohibition of Asbestos for Commercial Vessels (86-035)	2115-AC32
1634	Uninspected Fish-Processing Vessels (86-025)	2115-AC34
1635	Cargo Lists and Tables Update (CGD 88-100)	2115-AC35
1636	Load Lines (86-013)	2115-AC37
1637	Navigation Bridge Visibility (CGD 85-099)	2115-AC42
1638	Fire Extinguishers (Portable and Semi-Portable) - Revising Approval Specifications and Updating Carriage Requirements (86-072)	2115-AC43
1639	SOLAS 74/83 Life Jacket Approval Requirements Revision (85-200)	2115-AC46
1640	SOLAS 74/83 Lifeboat and Rescue Boat Approval Requirements (85-201)	2115-AC47
1641	SOLAS 74/83 Revision of Pyrotechnic Distress Signal Approval Requirements (85-203)	2115-AC49
1642	SOLAS 74/83 Revision of Disembarkation Ladder Approval Requirements (85-204)	2115-AC50
1643	SOLAS 74/83 Revision to Inflatable Liferaft Approval (85-205)	2115-AC51
1644	SOLAS 74/83 Revision of Life Jacket Light Approval Requirements (85-211)	2115-AC56
1645	Advance Notice of Arrival (CGD 86-055)	2115-AC58
1646	Measurement of Vessels (87-015 b)	2115-AC67
1647	Posting Requirements on Inspected Vessels (87-031)	2115-AC68
1648	Port Access Routes; Approach to Freeport, Texas (CGD 87-038)	2115-AC78
1649	Port Access Routes; Approach to Mobile, Alabama (CGD 86-008)	2115-AC81
1650	Regattas and Marine Parades (CGD 87-087)	2115-AC84
1651	Oil Discharge Monitoring and Control System (CGD 87-057)	2115-AC85
1652	Alternative Provisions for Reinspections of Offshore Supply Vessels in Foreign Ports (CGD 82-004a)	2115-AC86

+ Designates significant regulation.

U.S. Coast Guard—Final Rule Stage

Sequence Number	Title	Regulation Identifier Number
1653	+ Intervals for Drydocking and Tailshaft Examination on Inspected Vessels (84-024)	2115-AB58
1654	+ Joint U.S.-Canada Vessel Traffic Management Regulations for the Pacific Region (79-131)	2115-AA39
1655	+ Licensing of Maritime Personnel (CGD 81 - 059)	2115-AA64
1656	+ Safety Rules for Vessels Engaged in Chemical Waste Incineration at Sea (84-025)	2115-AB60

VOL 53 ISS 79 PT 1 APR 25 1988 UMI

DOT

U.S. Coast Guard—Final Rule Stage—Continued

Sequence Number	Title	Regulation Identifier Number
1657	Hopper Dredge Working Freeboard - Load Line and Stability Requirements (76-080)	2115-AA11
1658	Defect Notification and First-Purchaser Information (77-115)	2115-AA16
1659	Hybrid Personal Flotation Devices: Establishment of Approval Requirements (78-174)	2115-AA29
1660	Launching Devices for Liferafts (79-168)	2115-AA45
1661	Vital System Automation (CGD 81-030)	2115-AA59
1662	General Bridge Permit Regulations (81-057)	2115-AA61
1663	Handheld Flashlights (82-042)	2115-AA91
1664	Safety/Security Zone Regulations	2115-AA97
1665	Anchorage Area Regulations	2115-AA98
1666	Documentation of Vessels; Controlling Interest (82-105)	2115-AB27
1667	Carriage and Use of Liquefied or Nonliquefied Flammable Gas as Cooking Fuels on Vessels Carrying Passengers for Hire (83-013)	2115-AB35
1668	Hazardous Materials Used as Ship's Stores Onboard Vessels (84-044)	2115-AB65
1669	Licensing of Officers and Operators for Mobile Offshore Drilling Units (81-59a)	2115-AB91
1670	MARPOL Pollution Prevention Regulations (85-026)	2115-AC11
1671	Carriage and Operational Requirements for Inflatable Life Jackets (78-174b)	2115-AC16
1672	Intervals for Internal Examination and Hydrostatic Testing of Pressure Vessel Type Cargo Tanks (85-061)	2115-AC18
1673	Self-Inspection of Fixed OCS Facilities (CGD 84-098(a))	2115-AC40
1674	Offshore Evacuation Procedures (84-098(b))	2115-AC41
1675	Emergency Position Indicating Radio Beacons for Uninspected Fishing, Fish Processing, and Fish Tending Vessels (87-016)	2115-AC69
1676	Delegation of Authority to Measure Vessels (87-015a)	2115-AC70
1677	Incorporations by Reference, Voluntary Industry Standards (CGD 87-046)	2115-AC72
1678	Electrical System Standard (CGD 87-009)	2115-AC73
1679	Assistance Towing Licenses (CGD 87-017)	2115-AC82
1680	Delegation of Authority to Area Commanders When Functioning as Maritime Defense Zone Commanders (CGD 87-065)	2115-AC88

+ Designates significant regulation.

U.S. Coast Guard—Completed Actions

Sequence Number	Title	Regulation Identifier Number
1681	+ Operating a Vessel While Intoxicated (84-099)	2115-AC23
1682	+ Vessel Bridge-to-Bridge Radiotelephone Communications on the Great Lakes (84-040)	2115-AB89
1683	Liquefied Natural Gas Waterfront Facility (78-038)	2115-AA22
1684	Delegation of Authority to United States Classification Societies (85-019)	2115-AC10
1685	U.S. Aid to Navigation Systems (86-031)	2115-AC33
1686	Immersion Suits (84-069a)	2115-AC66
1687	Security Measures: Placarding (CGD 87-044)	2115-AC75
1688	York Spit Channel, Chesapeake Bay, Navigation (CGD 86-066)	2115-AC76
1689	Inland Waterway Navigation Rules - San Joaquin and Sacramento River Deep Water Ship Channels (CGD 86-078)	2115-AC77
1690	Port Access Routes; Approach to Tampa Bay, Florida (CGD 85-097)	2115-AC79

+ Designates significant regulation.

Federal Aviation Administration—Prerule Stage

Sequence Number	Title	Regulation Identifier Number
1691	+ Powered Ultralights: Airman Certification Requirements	2120-AB69
1692	+ Ultralight Aircraft Registration and Marking	2120-AC09
1693	+ Airplane Cabin-Fire Protection	2120-AB22
1694	+ Flight Attendant Flight-Time Limitations and Rest Requirements	2120-AB97
1695	+ Part 129 Security Program for Foreign Air Carriers	2120-AC42
1696	+ Flight Plan Filing Requirements; National Airspace Review Recommendation	2120-AC56
1697	Review of Medical Standards and Certification Procedures	2120-AA70
1698	Review: Part 21–Certification Procedures for Products and Parts	2120-AB09

DOT

Federal Aviation Administration—Prerule Stage—Continued

Sequence Number	Title	Regulation Identifier Number
1699	Review of Parts 61, 141, 143 - Pilot, Pilot School and Ground Instructor Rules	2120-AB12
1700	Review: Part 121 – Certification and Operations: Domestic, Flag and Supplemental Air Carriers and Commercial Operators of Large Aircraft	2120-AB27
1701	Review: Part 135 – Air Taxi Operators and Commercial Operators	2120-AB28
1702	Review Part 75 for Retention or Revocation	2120-AC55
1703	Accelerated Ground Training - Flight Engineers' Skill Requirements	2120-AA79
1704	Instrument Flight Rule Requirements	2120-AA82
1705	Amendment of Sections 91.171, 91.172, and Appendices E and F of Part 43	2120-AA98
1706	Fatigue Evaluation, Bird Impact, and Lightning Protection for Propellers of Composite Construction	2120-AB05
1707	Standards for Approval for High Altitude Operation of Subsonic Airplanes	2120-AB18
1708	Primary Category Aircraft; Powered Ultralight; Falsification of Applications, Reports, or Records	2120-AB53
1709	Aircraft Registration; Recording of Aircraft Titles and Security Documents	2120-AC17
1710	Temporary Flight Restrictions	2120-AC40
1711	Alternate Airport Weather Minimum	2120-AC41
1712	Global Positioning System Use in Terminal Control Areas	2120-AC54
1713	National Airspace Review Recommendation - Operations in the Vicinity of an Airport	2120-AC57
1714	Proposed Revision of Part 93, Subpart O	2120-AC65

+ Designates significant regulation.

Federal Aviation Administration—Proposed Rule Stage

Sequence Number	Title	Regulation Identifier Number
1715	+ Review and Revision of Repair Station Requirements	2120-AC38
1716	+ Metropolitan Washington Airports Policy	2120-AA89
1717	+ Amend Part 23 to Include Requirements for Crash-Resistant Fuel Systems	2120-AA57
1718	+ Proposed Department of Energy Prohibited Areas	2120-AB39
1719	+ Elimination of Airport Delays	2120-AB42
1720	+ Proposed Revision of Noise Certification of Turbojet and Large Transport Category Aircraft	2120-AB88
1721	+ Fire Protection Requirements for Cargo and Baggage Compartments - Parts 121 and 135	2120-AC04
1722	+ SST Stage 3 Compliance	2120-AC22
1723	+ Flight Attendant Requirements During Deplaning and Boarding	2120-AC32
1724	+ Control of Drug and Alcohol Use for Personnel Engaged in Commercial and General Aviation Activities	2120-AC33
1725	+ Type and Number of Passenger Emergency Exits Required in Transport Category Airplanes	2120-AC43
1726	+ Improved Access to Type III and Type IV Emergency Exits	2120-AC46
1727	+ Pilots Convicted of Driving While Intoxicated (DWI)/Under Influence (DUI)	2120-AC51
1728	+ Design Standards for Fuel-Tank Access Panels	2120-AC58
1729	+ Access To Secured Areas on Airports	2120-AC69
1730	Part 91, Subpart B, Review for Simplification	2120-AA07
1731	Part 77 Review, Objects Affecting Navigable Airspace	2120-AA09
1732	Rotorcraft Regulatory Review Program Notice No. 4	2120-AA29
1733	Implementation of SAFER Propulsion System Recommendations	2120-AA49
1734	Miscellaneous Amendments	2120-AA50
1735	Aircraft Simulator Use in Airman Training and Certification	2120-AA83
1736	National Airspace Review (NAR): Terminal Airspace Task Group Recommendations	2120-AB02
1737	Transport Category Rotorcraft Performance	2120-AB36
1738	Miscellaneous Operational Amendments	2120-AB45
1739	Part 157 Review	2120-AB74
1740	Part 101 Review Program	2120-AB75
1741	Engine Fuel and Induction Systems	2120-AB76
1742	Amend Section 43.17 to Allow for Maintenance of U.S. Aeronautical Products in Canada in Compliance with the U.S.-Canadian Bilateral Airworthiness Agreement	2120-AB89
1743	Revised One-Engine-Inoperative Ratings for Rotorcraft	2120-AB90
1744	Turbine Burst Protection for Transport Category Helicopters	2120-AB91
1745	Antiblocking Device	2120-AB92
1746	Controlled Air Space Designations in International Air Space	2120-AB93
1747	Airspace Reclassification	2120-AB95
1748	Transponder Requirements in Coastal Air Defense Identification Zones (ADIZ)	2120-AB99
1749	Changes Requiring a New Type Certificate	2120-AC05
1750	Passenger-Carrying and Cargo Air Operations for Compensation or Hire	2120-AC08

VOL 53 ISS 79 PT 1 APR 25 1988 UMI

DOT

Federal Aviation Administration—Proposed Rule Stage—Continued

Sequence Number	Title	Regulation Identifier Number
1751	Part 23 Airworthiness Review, Notice No. 5 (Equipment, Systems, and Installation)	2120-AC14
1752	Part 23 Airworthiness Review, Notice No. 2	2120-AC15
1753	Noise and Emission Standards for Aircraft Powered by Advanced Turboprop (Propfan) Engines	2120-AC20
1754	Rotorcraft Certification Requirements; Coordination with European Airworthiness Authorities Steering Committee (AASC)	2120-AC27
1755	Part 99: Air Defense Identification Zones and Miscellaneous Editorial Revision	2120-AC37
1756	Improved Structural Requirements for Pressurized Cabins and Compartments in Transport Category Airplanes	2120-AC44
1757	Miscellaneous Changes to Emergency Evacuation Demonstration Procedures, Exit Handle Illumination, and PA Handsets	2120-AC45
1758	Non-Federal Air Traffic Control Towers	2120-AC59
1759	Fuel Venting and Exhaust-Emission Requirements for Turbine-Engine Powered Airplanes	2120-AC62
1760	Shoulder Harness for Each Seat in Part 27 and 29 Rotorcraft	2120-AC67
1761	Crash-Resistant Fuel Systems	2120-AC68

+ Designates significant regulation.

Federal Aviation Administration—Final Rule Stage

Sequence Number	Title	Regulation Identifier Number
1762	+ Low-Altitude Windshear Equipment Requirements for Takeoffs/Landings of Transport Category Airplanes	2120-AA01
1763	+ Improved Seat-Safety Standards	2120-AA58
1764	+ Revision of Foreign Repair Station Rules	2120-AC50
1765	+ Certification of Recreational Pilots and Annual Flight Review	2120-AA54
1766	+ Rotorcraft Structural Fatigue Including Tolerance to Flaws	2120-AA84
1767	+ Occupant Restraint in Normal and Transport Category Rotorcraft	2120-AB35
1768	+ Proposed Revision to Noise Certification Standards for Propeller-Driven Small Airplanes	2120-AB47
1769	+ Proposed Limits on the Growth of Noise from Certain Airplanes and Airplane Types	2120-AB50
1770	+ Independent Power Source for Public Address System in Transport Category Airplanes	2120-AB77
1771	+ Part 23 Airworthiness Review -- Notice No. 1 (Crashworthiness)	2120-AC16
1772	+ Location of Passenger Emergency Exits in Transport-Category Airplanes	2120-AC29
1773	+ Installation of Traffic Control Avoidance System in Domestic Transport Category Airplanes	2120-AC34
1774	+ Terminal Control Area Classification and Pilot/Equipment Requirements	2120-AC35
1775	+ Commuter Category Airplanes: Cockpit Voice Recorder (CVR) and Flight Data Recorder (FDR) Requirements	2120-AC48
1776	+ Transponder with Automatic Altitude Reporting Capability Requirement	2120-AC66
1777	+ Special Flight Rules in the Vicinity of the Grand Canyon National Park	2120-AC70
1778	Revision of Part 91	2120-AA13
1779	Inoperative Instruments or Equipment	2120-AA19
1780	Rotorcraft Regulatory Review Program Amendment No. 3	2120-AA28
1781	Transport Category Airplane Airworthiness Standards	2120-AA47
1782	Amend Part 23 to Include Empennage Fatigue Requirements	2120-AA59
1783	Noise Standards: Aircraft Type and Airworthiness Certification	2120-AA74
1784	Nighttime VFR Weather Minimums	2120-AB04
1785	Airworthiness Standards: Aircraft Engines, Electrical and/or Electronic Engine Control Systems	2120-AB06
1786	Standards for Approval of a Reduced V1 Methodology for Takeoff on Wet and Contaminated Runways	2120-AB17
1787	Low-Fuel-Quantity Alerting System	2120-AB45
1788	Helicopter Instrument Flight	2120-AB87
1789	Terminal Control Area (TCA) San Diego (Modification)	2120-AB98
1790	Flight Plan and Transponder-On Requirements in Air Defense Identification Zones (ADIZ)	2120-AC00
1791	Part 150 - Airport Noise-Compatibility Planning	2120-AC19
1792	Mandatory Reporting for Emergency Evacuation Systems and Components	2120-AC49
1793	Realignment of Restricted Areas in the Eglin AFB Area	2120-AC63
1794	Part 95 Instrument Flight Rules	2120-AA63
1795	Airworthiness Directives	2120-AA64
1796	Standard Instrument Approach Procedures	2120-AA65
1797	Airspace Actions	2120-AA66

+ Designates significant regulation.

DOT

Federal Aviation Administration—Completed Actions

Sequence Number	Title	Regulation Identifier Number
1798	+ Airport Certification: Revision and Reorganization	2120-AA10
1799	+ Civil Helicopter Noise Certification	2120-AB33
1800	+ Terminal Control Areas at 10,000 Feet Mean Sea level (MSL); Mode C Transponders above 10,000 feet MSL	2120-AC52
1801	Cessna Finance Petition	2120-AA15
1802	Standards for Approval of an Automatic Takeoff Thrust Control System	2120-AA46
1803	Aircraft Identification and Retention of Fuel System Modification Records	2120-AC11
1804	Improve Safety and Effectiveness of Islip Airport Radar Service Area (ARSA)	2120-AC47
1805	Part 31 – Airworthiness Standards: Manned Free Balloons	2120-AC60
1806	Part 63 – Certification: Flight Crewmembers Other Than Pilots	2120-AC61

+ Designates significant regulation.

Federal Highway Administration—Prerule Stage

Sequence Number	Title	Regulation Identifier Number
1807	+ Minimum Levels of Financial Responsibility for Motor Carriers: Self-Insurance	2125-AB65
1808	Review and Preemption of State Motor-Carrier Safety Regulations	2125-AC11
1809	National Standards For Traffic Control Devices; Revision of Part VI of the Manual On Uniform Traffic Control Devices	2125-AB83
1810	Federal Motor Carrier Safety Regulations; Paperwork Burdens	2125-AC04

+ Designates significant regulation.

Federal Highway Administration—Proposed Rule Stage

Sequence Number	Title	Regulation Identifier Number
1811	+ Controlled Substances	2125-AA79
1812	+ Truck Size and Weight; Specialized Equipment; Boat Transporters	2125-AB55
1813	+ Truck Size and Weight; Reasonable Access	2125-AB70
1814	+ Blood Alcohol Concentration Standard for Commercial Vehicle Operators	2125-AB79
1815	+ Truck Size and Weight; Special Permits	2125-AB80
1816	+ Air Quality Procedures for Use in Federal-Aid Highway and Federally Funded Transit Programs	2125-AB10
1817	+ Minimum Requirements for Private Motor Carriers of Passengers and Drivers of Private Motor Vehicles of Passengers	2125-AB62
1818	+ Uniform Relocation Act Amendments of 1987; General	2125-AB85
1819	+ Driver's Record of Duty Status; Onboard Recording Devices	2125-AB95
1820	+ Certification of Speed Limit Enforcement	2125-AC00
1821	Review: General Materials Requirements	2125-AA19
1822	Contract Procedures	2125-AA18
1823	Compliance with Motor Carrier Noise Standards	2125-AA27
1824	Pavement Policy	2125-AA88
1825	State Highway Agency Construction Contracts; Equal Opportunity Compliance Review; Program Requirements	2125-AB08
1826	Equal Employment Opportunity on Federal and Federal-Aid Construction Contracts (Including Supportive Services)	2125-AB15
1827	Federal-Aid Programs Approval and Project Authorization	2125-AB18
1828	Administration of Contracts	2125-AB30
1829	Labor and Employment	2125-AB37
1830	Manual on Uniform Traffic Control Devices; Restructure	2125-AB57
1831	Right-of-Way	2125-AB58
1832	Property Management, Disposals and Airspace	2125-AB60
1833	National Standards For Traffic Control Devices; Revision of Uniform Traffic Control Devices; Passing and No-Passing Zone Standards	2125-AB84
1834	Qualification of Drivers; Diabetes	2125-AB91
1835	Advance Construction of Federal-Aid Projects	2125-AC07
1836	State Fiscal Procedures and Reports; Rescission of Regulation	2125-AC08
1837	Construction Engineering Costs	2125-AC09
1838	Truck Size and Weight; National Network; Iowa and South Carolina	2125-AC10

VOL 53 ISS 79 PT 1 APR 25 1988 UMI

DOT

Federal Highway Administration—Proposed Rule Stage—Continued

Sequence Number	Title	Regulation Identifier Number
1839	Manual on Uniform Traffic Control Devices	2125-AA37

+ Designates significant regulation.

Federal Highway Administration—Final Rule Stage

Sequence Number	Title	Regulation Identifier Number
1840	+ Federal Motor Carrier Safety Regulations: General	2125-AA34
1841	+ Splash/Spray Suppressant Devices on Truck Tractors, Semitrailers and Trailers	2125-AA84
1842	+ Truck Size and Weight; Tandem Truck Safety Act	2125-AB28
1843	+ Inspection, Repair, and Maintenance	2125-AB34
1844	+ Parts and Accessories Necessary for Safe Operation; General	2125-AB45
1845	+ Safety Fitness Determination	2125-AB46
1846	+ Truck Size and Weight; Specialized Equipment; Maxi-Cube	2125-AB48
1847	+ Employee Safety and Health Standards	2125-AB50
1848	+ Driving a Motor Vehicle	2125-AB51
1849	+ Qualification of Drivers; Hazardous Materials Drivers	2125-AB64
1850	+ Semitrailer-Semitrailer; B-Train	2125-AB68
1851	+ Commercial Driver Test and Licensing Standards	2125-AB60
1852	Railroad Grade Crossings	2125-AA36
1853	Acceleration of Projects	2125-AA87
1854	Erosion and Sediment Control on Highway Construction Projects	2125-AB05
1855	Railroad-Highway Projects	2125-AB25
1856	Structural Supports for Highway Signs, Luminaries and Traffic Signals	2125-AB56
1857	Reimbursement for Railroad Work	2125-AB59
1858	National Bridge Inspection Standards; Frequency of Inspection and Inventory	2125-AB71
1859	Cargo Preference	2125-AB73
1860	Minimum Levels of Financial Responsibility for Motor Carriers; Environmental Restoration	2125-AB77
1861	Construction and Maintenance; Contract Procedures; Standardized Contract Clauses	2125-AB87
1862	State Education and Training Program	2125-AB92
1863	Truck Size and Weight; Exception to Bridge Formula	2125-AC03

+ Designates significant regulation.

Federal Highway Administration—Completed Actions

Sequence Number	Title	Regulation Identifier Number
1864	+ Truck Size and Weight; Grandfather Semitrailer Lengths	2125-AB26
1865	+ Hours of Service	2125-AB39
1866	+ Truck Size and Weight; Automobile Transporters	2125-AB42
1867	+ Accommodation of Utilities; Longitudinal Utility Use of Freeway Right-of-Way	2125-AB76
1868	+ Uniform Relocation Act Amendments of 1987; Specific Payments	2125-AB95
1869	Transfer of Federal-Aid Highway Funds	2125-AA64
1870	Highway Beautification: Outdoor Advertising; Technical Amendment	2125-AB32
1871	Labor and Employment; Convict Labor and Materials	2125-AB82
1872	Construction and Maintenance; Contract Procedures	2125-AB88
1873	Truck Size and Weight; National Network	2125-AB98
1874	Physical Construction Authorization	2125-AC01
1875	Rules of Practice and Rulemaking Procedures for Motor Carriers; Technical Amendments	2125-AC02

+ Designates significant regulation.

DOT

National Highway Traffic Safety Administration—Prerule Stage

Sequence Number	Title	Regulation Identifier Number
1876	+ Side-Impact Protection, Head/Neck Protection, and Occupant Ejection Mitigation	2127-AB85
1877	+ Uniform Tire-Quality Grading	2127-AA52
1878	+ Daytime Running Lights	2127-AB92
1879	+ Passenger Automobile Average Fuel Economy Standard	2127-AC33
1880	Review: Schoolbus Seating Systems	2127-AA65
1881	Review: Seating Systems	2127-AA69
1882	Review: Lamps, Reflective Devices, and Associated Equipment	2127-AB76
1883	Review: Impact Protection for the Driver from the Steering Control System	2127-AB78
1884	Review Roof Crush Resistance	2127-AC20
1885	Flammability of School Bus Interior Materials	2127-AA44
1886	Consumer Information - Wet Stopping Distance	2127-AA56
1887	Occupant Protection in Interior Impact	2127-AB16
1888	Federal Motor Vehicle Safety Standard No. 301 - Fuel-System Integrity	2127-AB43
1889	Occupant Crash Protection: Dynamic-Testing Petition	2127-AC00
1890	Non-Pneumatic Tires for Passenger Cars	2127-AC18
1891	Bumper Standard	2127-AC29
1892	Bumper Standard	2127-AC30
1893	Consumer Information - Uniform Tire-Quality Grading Standards	2127-AC31

+ Designates significant regulation.

National Highway Traffic Safety Administration—Proposed Rule Stage

Sequence Number	Title	Regulation Identifier Number
1894	+ Crashworthiness Ratings	2127-AA03
1895	+ Commercial Vehicle Conspicuity	2127-AA12
1896	+ Truck Rear Underride Protection	2127-AA43
1897	+ Pedestrian Protection	2127-AA45
1898	+ Anthropomorphic Test Dummies: Side-Impact Thorax Protection	2127-AA48
1899	+ Uniform Tire Quality Grading Standards - Treadwear Amendments	2127-AB21
1900	+ Side-Impact Protection: Thorax Protection	2127-AB86
1901	+ Heavy Duty Vehicle Brake Systems (Formerly Truck and Trailer Brake Systems)	2127-AA00
1902	+ Vehicle Classification	2127-AA57
1903	+ Voluntary Tire Registration	2127-AB18
1904	+ Heavy Trailer Stability	2127-AB42
1905	+ Occupant Crash Protection	2127-AB91
1906	+ Head Restraints	2127-AC06
1907	+ Federal Motor Vehicle Safety Standard (FMVSS) No. 208, Occupant Crash Protection - Chest Injury Criteria	2127-AC34
1908	Passenger-Car Brake Systems	2127-AA13
1909	Rearview Mirror Systems: Heavy Vehicles	2127-AA21
1910	Rearview Mirror Systems: Light Vehicles	2127-AA23
1911	Air-Brake Systems	2127-AA27
1912	Procedures for Considering Environmental Impacts	2127-AB79
1913	Voluntary Vehicle Identification Standard (Theft Prevention Standard)	2127-AB93
1914	Anthropomorphic Test Dummies Representing Children	2127-AB94
1915	Glazing Materials	2127-AB98
1916	Anthropomorphic Test Dummies Representing Children	2127-AC09
1917	Anthropomorphic Test Dummies Representing Children	2127-AC10
1918	Supplemental FMVSS No. 208 Injury Criteria - Facial Lacerations, Neck Injury, Knee Shear, Tibia and Ankle Injuries	2127-AC12
1919	Mandatory Use of the Part 572(E) Dummy in FMVSS 208 Compliance Testing	2127-AC13
1920	Federal Motor Vehicle Safety Standards No. 205, Glazing Materials	2127-AC14
1921	Federal Motor-Vehicle Safety Standard No. 221, Schoolbus Body Joint Strength	2127-AC19
1922	Gear Lock; Theft Protection	2127-AC24
1923	Insurer Reporting Requirements	2127-AC32
1924	Federal Motor Vehicle Safety Standard (FMVSS) No. 208, Occupant Crash Protection	2127-AC36
1925	Federal Motor Vehicle Safety Standard (FMVSS) No. 205, Glazing Materials	2127-AC38

+ Designates significant regulation.

VOL 53 ISS 79 PT 1 AP 25 1988 UMI

DOT

National Highway Traffic Safety Administration—Final Rule Stage

Sequence Number	Title	Regulation Identifier Number
1926	+ Splash and Spray Suppression Devices	2127-AA97
1927	+ Post-1986 Passenger Car Fuel-Economy Standards	2127-AB75
1928	+ Federal Motor Vehicle Safety Standard No. 222; Schoolbus Seating and Crash Protection	2127-AB84
1929	Seating Reference Point/Motor Vehicle Driver's Eye Range	2127-AA46
1930	Rearview Mirrors	2127-AA88
1931	Seat-Belt-Assembly Anchorages	2127-AA95
1932	Air-Brake Systems	2127-AB12
1933	Occupant Crash Protection	2127-AB71
1934	Lighting Simplification--Potential Amendments to Simplify FMVSS 108 Lamps, Reflective Devices, and Associated Equipment	2127-AB87
1935	Child Restraint Systems -- Built-In Child Restraints	2127-AB87
1936	New Pneumatic Tires for Passenger Cars	2127-AC16
1937	Standard No. 108, Lamps, Reflective Devices, and Associated Equipment	2127-AC22
1938	Power-Operated Window Systems	2127-AC25
1939	Motor-Vehicle Brake Fluids	2127-AC26

+ Designates significant regulation.

National Highway Traffic Safety Administration—Completed Actions

Sequence Number	Title	Regulation Identifier Number
1940	+ 1990-1991 Model Year Light-Truck Fuel-Economy Standards	2127-AC05
1941	+ Petitions for Exemption From the Vehicle Theft-Prevention Standard	2127-AB81
1942	+ Occupant Crash Protection: Light-Truck Safety-Belt Dynamic Testing	2127-AC01
1943	Steering Control Rearward Displacement	2127-AA32
1944	Motorcycle Helmets	2127-AA40
1945	Consumer Information--Stopping Distance	2127-AA50
1946	Hydraulic and Air Brake Systems	2127-AA92
1947	Federal Motor-Vehicle Safety Standard No. 208 - Occupant Crash Protection	2127-AC11
1948	Standard No. 112, Headlamp Concealment Devices	2127-AC21
1949	Federal Motor Vehicle Safety Standards (FMVSS) Nos. 201, Occupant Protection in Interior Impact and 204, Steering Control Rearward Displacement	2127-AC35
1950	Federal Motor Vehicle Safety Standard (FMVSS) No. 301, Fuel System Integrity	2127-AC37
1951	Federal Motor Vehicle Safety Standard (FMVSS) No. 213, Child Restraint System	2127-AC40
1952	Federal Motor Vehicle Safety Standard (FMVSS) No. 218, Motorcycle Helmets	2127-AC41

+ Designates significant regulation.

Federal Railroad Administration—Prerule Stage

Sequence Number	Title	Regulation Identifier Number
1953	+ Review of Radio Communication	2130-AA34
1954	Review: Regulatory Flexibility Act Reviews	2130-AA10
1955	Review of Locomotive Cab Safety	2130-AA32
1956	Review: Special Safety Inquiry; Power Brake Regulations	2130-AA40
1957	Safety Standards for Cabooses	2130-AA01
1958	Amendments to Regulations Implementing Section 905 of the 4R Act	2130-AA04
1959	Rules of Practice	2130-AA07
1960	Special Safety Inquiry; Rail-Highway Grade Crossing Safety	2130-AA27

+ Designates significant regulation.

DOT

Federal Railroad Administration—Proposed Rule Stage

Sequence Number	Title	Regulation Identifier Number
1961	+ Informal Safety Inquiry and Rulemaking; Control of Alcohol and Drug Use in Railroad Operations	2130-AA43

+ Designates significant regulation.

Urban Mass Transportation Administration—Proposed Rule Stage

Sequence Number	Title	Regulation Identifier Number
1962	+ Control of Drug Use in Federally Funded Mass Transportation Operations	2132-AA33
1963	+ Implementation of Section 19 of the Urban Mass Transportation Act of 1964 as Amended – Nondiscrimination	2132-AA01
1964	+ "Buy America" Requirements of the Surface Transportation Assistance Act of 1982	2132-AA15
1965	+ Major Capital Investment Projects	2132-AA22
1966	+ Charter Service Amendment	2132-AA32
1967	School Bus Operations	2132-AA09
1968	Air Quality Procedures for Use in Federal-Aid Highway and Federally Funded Transit Programs	2132-AA19
1969	Capital Leases	2132-AA28
1970	Rolling Stock Purchase Audits	2132-AA29
1971	Bus Testing Guidelines	2132-AA30

+ Designates significant regulation.

Urban Mass Transportation Administration—Final Rule Stage

Sequence Number	Title	Regulation Identifier Number
1972	Innovative Techniques and Methods	2132-AA05
1973	Technology Introduction	2132-AA07
1974	Project Management Oversight	2132-AA31

Urban Mass Transportation Administration—Completed Actions

Sequence Number	Title	Regulation Identifier Number
1975	+ Environmental Impact and Related Procedures	2132-AA03
1976	+ Extension of Safety Requirements to all Federally Assisted Buses	2132-AA24
1977	+ Maintenance of Equipment and Facilities	2132-AA26
1978	Miscellaneous Amendments - Organization, Functions, and Procedures	2132-AA06
1979	Section 15 Reporting Requirements for Section 9 Apportionment Grants; Penalty Procedures for Noncompliance	2132-AA23

+ Designates significant regulation.

Research and Special Programs Administration—Prerule Stage

Sequence Number	Title	Regulation Identifier Number
1980	+ Registration of Shippers and Carriers of Hazardous Materials	2137-AB43
1981	+ OST-FAA Information Rules: Standardized Regulatory Flexibility Requirements	2137-AB16
1982	+ Highway Routing Standards for Certain Types and Quantities of Hazardous Materials	2137-AB42
1983	Review of Commuter Air Traffic and Market Data Reporting	2137-AB18
1984	Revision of Operating Procedures for Motor Vehicles	2137-AA07
1985	Consolidation and Revision of Requirements for the Carriage of Explosives by Vessel	2137-AA10
1986	Specification Packages of Type B and Fissile Radioactive Materials	2137-AA29

VOL 53 ISS 79 PT 1 AP 25 1988 UMI

DOT

Research and Special Programs Administration—Prerule Stage—Continued

Sequence Number	Title	Regulation Identifier Number
1987	Quality Assurance for Radioactive Materials Shippers	2137-AA30
1988	DOT Specification 51 Portable Tanks	2137-AA36
1989	Airline Revenue/Nonrevenue, First Class/Coach Passengers: Revised Definitions	2137-AB00
1990	Subsidized Commuter Carriers and Foreign Air Carriers: Records and Retention Periods	2137-AB04
1991	Gas Detection and Monitoring in Compressor Station Buildings	2137-AB49

+ Designates significant regulation.

Research and Special Programs Administration—Proposed Rule Stage

Sequence Number	Title	Regulation Identifier Number
1992	+ Alignment of Airline Uniform System of Accounts and Reports with Generally Accepted Accounting Principles	2137-AA99
1993	+ Confidentiality of Parts 241 and 298 Airline Reports	2137-AB05
1994	+ Training for Hazardous Materials Transportation	2137-AB26
1995	+ Recodification of Explosive Regulations	2137-AA93
1996	+ Gas Gathering Line Definition	2137-AB15
1997	+ Proposals for Pipeline Safety	2137-AB27
1998	+ Hazardous Materials in Intrastate Commerce	2137-AB37
1999	+ Pipeline Operator Qualifications	2137-AB38
2000	+ Operation and Maintenance Procedures for Gas Pipelines	2137-AB44
2001	+ Pressure Testing Petroleum Product Pipelines	2137-AB46
2002	+ Hazardous Liquid Pipeline Damage-Prevention Program	2137-AB47
2003	+ Maps and Records of Pipeline Location and Characteristics; Notification of State Agencies	2137-AB48
2004	Private Carriers Licensed to Use Radioactive Materials	2137-AA28
2005	Specification 8W and 8WA Welded Steel Cylinders	2137-AA83
2006	Consolidation of Specifications for High-Pressure Seamless Cylinders and Rewrite of 49 CFR 173.34	2137-AA92
2007	Collection of Financial Information from the Commuter Air Carrier Industry	2137-AA98
2008	Deletion of Standards Affecting Iron and Copper Pipe and Other Materials	2137-AB24
2009	Enforcement of Motor Carrier Financial Responsibility Requirements	2137-AB35
2010	Standards for Construction of Fireworks and Novelties; Approval for Transportation	2137-AB36
2011	Detection and Repair of Cracks, Pits, Corrosion, Lining Flaws, Thermal Detection Flaws, and Other Defects of Tank Car Tanks	2137-AB40
2012	Fumigation	2137-AB41
2013	Conforming Gas and Liquid Pipeline Welding Standards: Final Phase	2137-AB45
2014	Determining the Extent of Corrosion on Exposed Gas Pipelines	2137-AB50
2015	DOT 3AL Aluminum Cylinders; Safety Problems	2137-AB51

+ Designates significant regulation.

Research and Special Programs Administration—Final Rule Stage

Sequence Number	Title	Regulation Identifier Number
2016	+ Performance-Oriented Packaging Standards	2137-AA01
2017	+ Collection of Service Segment Data and Charter Data from Foreign Air Carriers	2137-AA97
2018	+ Collection of Service Segment Data and Charter Data from U.S. Air Carriers	2137-AB01
2019	+ Reporting Unsafe Conditions on Gas and Hazardous Liquid Pipelines and at Liquefied Natural Gas Facilities	2137-AB23
2020	+ Requirements for Cargo Tanks	2137-AA42
2021	+ Data Collection and Reporting: Hazardous Materials Incident Reports	2137-AA51
2022	Definition of a Flammable Solid	2137-AA05
2023	Use of Interested Inspectors for Cylinder Inspections	2137-AA08
2024	Oxidizing Materials Definition, Criteria and Proposed Regulations	2137-AA11
2025	Odorization of LP Gas	2137-AA25
2026	Transportation of Hazardous Materials; Miscellaneous Amendments	2137-AA44
2027	Modifications to DOT Specification 21PF-1 Overpacks	2137-AA72
2028	Limitation Aboard Aircraft	2137-AA85
2029	Emergency Response Communication Standards	2137-AA88
2030	Hazardous Materials: Uranium Hexafluoride	2137-AB10

DOT

Research and Special Programs Administration—Final Rule Stage—Continued

Sequence Number	Title	Regulation Identifier Number
2031	Exception from Pressure Testing Non-Welded Tie-In Joints	2137-AB19
2032	Confirmation or Revision of Maximum Allowable Operating Pressure; Alternate Method	2137-AB20
2033	Molten Sulfur	2137-AB31
2034	State Designations of Alternative Routes for Radioactive Materials Transportation	2137-AB32
2035	Notification to RSPA of Route Plans for Radioactive Materials Transportation	2137-AB33
2036	Rear Bumpers on Cargo Tank Trucks	2137-AB34
2037	Shippers: Use of Tank-Car Tanks with Localized Thin Spots	2137-AB39

+ Designates significant regulation.

Research and Special Programs Administration—Completed Actions

Sequence Number	Title	Regulation Identifier Number
2038	+ State Pipeline Safety Inspector Standards	2137-AB28
2039	Revision of the IM Tank Table	2137-AA64
2040	Rewrite and Recodification of Section 173.34	2137-AA73
2041	Pipeline Safety Standards and Procedures; Miscellaneous Amendments	2137-AB22

+ Designates significant regulation.

Maritime Administration—Prerule Stage

Sequence Number	Title	Regulation Identifier Number
2042	+ Participation by Vessels Built With Construction-Differential Subsidy in the Carriage of Oil from Alaska in the Domestic Trade	2133-AA62
2043	Statistical Data for Use In Operating-Differential Subsidy (ODS) Application Hearings	2133-AA16
2044	Regulations and Minimum Standards for State, Territorial, or Regional Maritime Academies and Colleges	2133-AA57

+ Designates significant regulation.

Maritime Administration—Proposed Rule Stage

Sequence Number	Title	Regulation Identifier Number
2045	+ Cargo Preference, U.S.-Flag Vessels: Determination of Fair and Reasonable Rates for Bulk Vessels	2133-AA43
2046	+ Operating-Differential Subsidy for Bulk Cargo Vessels Engaged in Worldwide Services; Exclusion of Commercial Cargoes Reserved for U.S.-Flag Carriers	2133-AA66
2047	+ Cargo Preference – Implementation of P.L. 99-198	2133-AA55
2048	Rules of Practice and Procedures for Hearing in ODS Applications	2133-AA20
2049	Requirements for Conducting Vessel Subsidy Condition Surveys and for Accomplishing Subsidized Vessel Maintenance and Repairs	2133-AA54
2050	Capital Construction Fund – Federal Tax Amendments	2133-AA65
2051	General Procedures for Determining Operating Differential Subsidy for Liner Vessels	2133-AA67
2052	Operating-Differential Subsidy for Bulk Cargo Vessels Engaged in Worldwide Service	2133-AA68
2053	Cargo Preference – U.S.-Flag Vessels; Department of Defense Sponsored and Generated Oceanborne Cargoes	2133-AA69

+ Designates significant regulation.

DOT

Maritime Administration—Final Rule Stage

Sequence Number	Title	Regulation Identifier Number
2054	+ Approval of Marine Hull Underwriters	2133-AA50
2055	+ Cargo Preference, U.S.-Flag Vessels: Evaluation of Bids for Subsidized Liner Vessels	2133-AA52
2056	Suspension of ODS Agreements for All or Portion of the Vessels Included Therein	2133-AA17
2057	Marine Protection and Indemnity Insurance Instructions Under General Agency and Berth Agency Agreements	2133-AA51

+ Designates significant regulation.

Maritime Administration—Completed Actions

Sequence Number	Title	Regulation Identifier Number
2058	+ Cargo Preference U.S.-Flag Vessels; Determination of Fair and Reasonable Rates for Liner Vessels	2133-AA02
2059	Review: War Risk Insurance	2133-AA54

+ Designates significant regulation.

DEPARTMENT OF TRANSPORTATION (DOT) — Prerule Stage

Office of the Secretary (OST)

1537. + REVIEW OF DEPARTMENT-WIDE DRUG REGULATIONS

Significance: Agency Priority

Legal Authority: Not yet determined

CFR Citation: Not yet determined

Legal Deadline: None.

Abstract: The Department will review existing regulations to determine whether changes are necessary for each of the Modal Administrations' drug regulations. The Department seeks to address the use of drugs through its regulatory authority. The review will encompass each Model Administration's program. This rulemaking is considered significant because of substantial public interest.

Timetable:

Action	Date	FR Cite
Next Action Undetermined		

Small Entity: Undetermined

Analysis: Regulatory Evaluation

Agency Contact: Samuel E. Whitehorn, Attorney, Office of the General Counsel, Department of Transportation, Office of the Secretary, Regulations and Enforcement, 400 7th St., SW, Washington, DC 20590, 202 366-9307

RIN: 2105-AB24

1538. + CONSUMER PROTECTION FOR DEFAULT BY SCHEDULED AIR CARRIERS

Significance: Regulatory Program

Legal Authority: 49 USC 1371; 49 USC 1372; 49 USC 1381

CFR Citation: 00 CFR None

Legal Deadline: None.

Abstract: Transamerica petitioned the CAB to investigate ways to protect consumers against service defaults by scheduled air carriers in domestic, overseas, and foreign air transportation. Transamerica suggested that the Board condition the award of operating authority to perform direct carrier scheduled service on air carriers developing a default protection plan. For foreign air travel, it suggested that the obligation be limited to outbound flights. The petitioner argued that prompt action is necessary in order to ensure continued public confidence in scheduled air service and to protect passengers from unnecessary financial hardship. DOT is considering what action should be taken on the petition.

Timetable:

Action	Date	FR Cite
Petition filed in Docket 42386	07/25/84	
Next Action Undetermined		

Small Entity: No

Agency Contact: Tim Kelly, Transportation Industry Analyst, Department of Transportation, Office of the Secretary, 400 Seventh Street, SW, Washington, DC 20590, 202 366-2220

RIN: 2105-AA98

1539. + ESCROW/BOND PROTECTION FOR AIRLINE TICKETS

Significance: Agency Priority

Legal Authority: 49 USC 1371; 49 USC 1372; 49 USC 1381

CFR Citation: Not yet determined

Legal Deadline: None.

Abstract: This petition, filed by Mr. Theodore Harris, addresses the problem of airline passengers whose airline goes bankrupt after they bought their ticket but before they use it. The petitioner asks that airlines be required to protect such "unearned revenue" by escrowing it or by posting a bond in an amount equal to 150% of average unearned revenue. Exemptions could be granted to airlines which file evidence of ticket insurance plans or which enter into agreements with other airlines to accept the tickets of bankrupt carriers. This rulemaking is considered significant because of substantial public interest.

Timetable:

Action	Date	FR Cite
Petition for rulemaking (Dkt 44304)	08/27/86	

Next Action Undetermined

Small Entity: No

Analysis: Regulatory Evaluation

Agency Contact: Tim Kelly, Transportation Industry Analyst, Department of Transportation, Office of the Secretary, 400 Seventh Street, SW, Washington, DC 20590, 202 366-2220

RIN: 2105-AB26

1540. AIR CARRIER CARGO TARIFF PUBLICATIONS

Significance: Nonsignificant

Legal Authority: 49 USC 1324; 49 USC 1373; 49 USC 1482

CFR Citation: 14 CFR 221.171; 14 CFR 221.173

Legal Deadline: None.

Abstract: This petition proposes to amend the requirement that air carriers post cargo tariffs at stations, offices, and locations other than their principal office. The petitioners proposed to allow carriers to maintain a memorandum tariff at each location and have a toll-free number for shippers to obtain access to complete tariff information. Petitioners alleged that such a change would substantially reduce the cost and time burden of maintaining and continually updating voluminous files of current and past tariffs at each location. Further action on the proposal will depend on developments in rulemaking docket 43343, Electronic Filing of Tariffs, RIN 2105-AB00.

Timetable:

Action	Date	FR Cite
Petition Filed in Docket 42660	11/27/84	

Next Action Undetermined

Small Entity: No

Additional Information: Petition under consideration.

Agency Contact: Lawrence Myers, Attorney, Department of Transportation, Office of the Secretary, 400 Seventh Street, SW, Washington, DC 20590, 202 366-9183

RIN: 2105-AA31

1541. OVERSEAS MILITARY PERSONNEL AIR-CHARTER TARIFFS

Significance: Nonsignificant

Legal Authority: 49 USC 1373; 49 USC 1356

CFR Citation: 14 CFR 372

Legal Deadline: None.

Abstract: The reference to tariffs in the rule governing Overseas Military Personnel Charters (OMPC) has become obsolete, at least with respect to domestic air transportation. The CAB was considering whether to eliminate the tariff requirement for all OMPC's and replace it with consumer-protection requirements similar to those in its Public Charter rule in Part 380. This proposal is still being considered by DOT.

Timetable:

Action	Date	FR Cite

Next Action Undetermined

Small Entity: No

Agency Contact: Tim Kelly, Transportation Industry Analyst, Department of Transportation, Office of the Secretary, 400 Seventh Street, SW, Washington, DC 20590, 202 366-2220

RIN: 2105-AA67

1542. UNFAIR AND DECEPTIVE PRACTICES BY AIRLINE TICKET AGENTS

Significance: Nonsignificant

Legal Authority: 49 USC 1378; 49 USC 1381

CFR Citation: 14 CFR 399

Legal Deadline: None.

Abstract: Enforcement policies currently make reference to tariffs. DOT is considering whether to limit these provisions to foreign air transportation or to eliminate them entirely.

Timetable:

Action	Date	FR Cite

Next Action Undetermined

Small Entity: No

Agency Contact: Tim Kelly, Transportation Industry Analyst, Department of Transportation, Office of the Secretary, 400 Seventh Street, SW, Washington, DC 20590, 202 366-2220

RIN: 2105-AA70

1543. DIRECT FLIGHTS

Significance: Nonsignificant

Legal Authority: 49 USC 1381

CFR Citation: 14 CFR 399

Legal Deadline: None.

Abstract: Donald L. Pevsner petitioned the CAB to institute a rulemaking proceeding to ban use of the term "direct flight" because it is deceptive, and to declare use of the term to be a prima facie violation of section 411 of the Federal Aviation Act of 1958. The Department is now considering what action to take in response to the petition.

Timetable:

Action	Date	FR Cite

Next Action Undetermined

Small Entity: No

Additional Information: Petition under consideration. It has been filed in Docket 41217.

Agency Contact: Tim Kelly, Transportation Industry Analyst, Department of Transportation, Office of the Secretary, 400 Seventh Street, SW, Washington, DC 20590, 202 366-2220

RIN: 2105-AA73

1544. CARGO RATE CHANGES ON 30 DAYS' NOTICE

Significance: Nonsignificant

Legal Authority: 49 USC 1373

CFR Citation: 14 CFR 221.160

Legal Deadline: None.

Abstract: This rule would amend regulations to allow cargo tariffs which are within the zones established under 14 CFR 399.41 to be filed on 30 days' notice. There are two alternatives: either maintain the status quo (60 days' notice) or change cargo tariff filing regulations to 30 days' notice to be consistent with passenger tariff-filing requirements. Standardization of the regulatory tariff-filing requirements for both cargo and passenger tariffs would benefit the industry.

VOL 53 ISS 79 PT 1 APR 25 1988 UMI

DOT—OST **Prerule Stage**

Timetable:

Action	Date	FR Cite
Next Action Undetermined		

Small Entity: Undetermined

Analysis: Regulatory Evaluation

Agency Contact: Tom Moore, Chief, Tariffs Division, Department of Transportation, Office of the Secretary, 400 7th Street, SW, Washington, DC 20590, 202 366-2414

RIN: 2105-AA99

1545. COMPREHENSIVE REVIEW OF CAB CONSUMER RULES

Significance: Nonsignificant

Legal Authority: 49 USC 1301 et seq Federal Aviation Act of 1958, as amended

CFR Citation: 14 CFR 201.6; 14 CFR 203; 14 CFR 205; 14 CFR 221, Subpart N; 14 CFR 249; 14 CFR 250; 14 CFR 252; 14 CFR 253; 14 CFR 254; 14 CFR 296.6 and 297.30; 14 CFR 298.30; 14 CFR 379; 14 CFR 380; 14 CFR 382; 14 CFR 399, Subpart G

Legal Deadline: None.

Abstract: The Civil Aeronautics Board was an independent agency; its rules have now been transferred to DOT, a cabinet department. This review will identify any CAB rules which are not consistent with Department or Administration regulatory criteria, such as those that impose an unnecessarily high cost or those with paperwork burdens that can be reduced or which involve a level of benefits or costs which are either higher or lower than necessary. The review will examine all alternatives, from strengthening a given rule to eliminating it. Nonregulatory approaches, including the supplying of information by the Government, or regulation by another level of government, will be also considered. The benefits and costs will be known only after these alternatives have been developed.

Timetable:

Action	Date	FR Cite
Begin Review	02/25/85	
Next Action Undetermined		

Small Entity: Yes

Additional Information: The committee conducting this review will examine all CAB consumer rules. Rulemaking proceedings on individual regulations may follow, depending on the committee's findings and recommendations.

Agency Contact: William C. Boyd, Senior Industry Analyst, Department of Transportation, Office of the Secretary, 400 Seventh Street, SW, Room 10309, Washington, DC 20590, 202 366-5433

RIN: 2105-AB03

1546. PRICE ADVERTISING

Significance: Nonsignificant

Legal Authority: 49 USC 1371; 49 USC 1381

CFR Citation: 14 CFR 380.30(e); 14 CFR 399.64

Legal Deadline: None.

Abstract: The DOT rules cited above state that any price stated for air transportation, a tour or a tour component must be the entire price for that transportation, tour or component. In this petition, Mr. Donald Pevsner complains that some tour operators advertise prices which do not include additional features which must be purchased and which cost extra. He asks that the rules be amended to state that such additional features may only be priced separately if they may be purchased separately, i.e., if they are optional rather than mandatory.

Timetable:

Action	Date	FR Cite
Petition for rulemaking (Dkt 43147)	05/22/85	
Next Action Undetermined		

Small Entity: No

Agency Contact: Tim Kelly, Transportation Industry Analyst, Department of Transportation, Office of the Secretary, 400 Seventh Street, SW, Washington, DC 20590, 202 366-2220

RIN: 2105-AB25

DEPARTMENT OF TRANSPORTATION (DOT) — Proposed Rule Stage

Office of the Secretary (OST)

1547. + ELECTRONIC FILING OF TARIFFS

Significance: Regulatory Program

Legal Authority: 49 USC 1373

CFR Citation: 14 CFR 221

Legal Deadline: None.

Abstract: DOT will examine whether conversion from a paper document system to a computerized system of filing and monitoring air carrier tariffs can reduce paper flow, speed up processing, and allow the industry to utilize computer and telecommunications technology to communicate with DOT. The alternative is to maintain the current paper tariffs system. Potential savings to the industry may be greater than to the Government, since airlines already utilize automated fare and rate systems. In addition, airlines may be able to implement changes faster, thus responding more quickly to market conditions, and may be less burdened with the cost of producing and transmitting paper documents. The Department may reduce paper flow, experience savings in processing time and staffing, and improve the accuracy and control of tariff data. In order to assure that users' needs are taken into consideration and that the private sector is involved to the maximum extent in the design, implementation, and operation of such a system, the Department established an Advisory Committee to make continuing recommendations on technical, operational, and policy objectives of the electronic tariff system.

Timetable:

Action	Date	FR Cite
ANPRM	08/19/85	50 FR 33452
ANPRM Comment Period End	11/18/85	
Federal Register Notice establishing Advisory Committee	11/24/86	51 FR 42327
Next Action Undetermined		

Small Entity: Undetermined

Additional Information: As a consequence of discussions with the Committee the Department is planning

to experiment with existing data base and electronic mail systems, to determine whether any such systems can fulfill Departmental requirements for an electronic tariff system.

Analysis: Regulatory Flexibility Analysis; Regulatory Evaluation

Agency Contact: Thomas Moore, Chief, Tariffs Division Department of Transportation, Office of the Secretary, 400 Seventh Street, SW, Washington, DC 20590, 202 366-2414

RIN: 2105-AB00

1548. + NONDISCRIMINATION ON THE BASIS OF HANDICAP (AIR TRAVEL)

Significance: Agency Priority

Legal Authority: 29 USC 794; Section 404(a) of the Federal Aviation Act of 1958, as amended

CFR Citation: 49 CFR 27; 14 CFR 382

Legal Deadline: Statutory, January 30, 1987.

Abstract: The Civil Aeronautics Board (CAB) had a regulation providing protection of the rights of handicapped air travellers. Based on recent Congressional action, DOT began enforcing this regulation on January 1, 1985. The Supreme Court's decision in U.S. Department of Transportation v. Paralyzed Veterans of America held that Section 504 of the Rehabilitation Act of 1973 does not apply to nonsubsidized air carriers. This decision left the existing regulation intact. The Air Carrier Access Act of 1986 directed DOT to publish new regulations prohibiting disability-based discrimination in air travel. The Department will use comments received in response to its August 1986 information notice on issues affecting blind passengers as part of the record for this rulemaking. The Department convened an advisory committee to pursue the rulemaking through a negotiated process. The negotiations have concluded and an NPRM is being drafted, based on the material developed in the committee.

Timetable:

Action	Date	FR Cite
NPRM	04/01/88	
Final Action	07/30/88	

Small Entity: No

Agency Contact: Robert C. Ashby, Department of Transportation, Office of the Secretary, 400 Seventh Street, SW, Washington, DC 20590, 202 366-9306

RIN: 2105-AA16

1549. + LIBERALIZATION OF AIR-CARRIER CHARTER RULES

Significance: Agency Priority

Legal Authority: 49 USC 1324; 49 USC 1371; 49 USC 1372; 49 USC 1381; 49 USC 1386

CFR Citation: 14 CFR 207; 14 CFR 208; 14 CFR 212; 14 CFR 298; 14 CFR 380

Legal Deadline: None.

Abstract: The CAB proposed new charter rules for direct and indirect air carriers. The proposed rules retain the financial protections of existing rules for direct air carriers while eliminating rules restricting the types of groups (such as "affinity" or "single-entity") to whom charters may be sold. The proposal would also retain a security instrument and depository system for indirect air carriers, along with contract rules for public protection. The proposal also highlights depository bank and travel agent responsibilities in handling passenger funds. The proposal replaces one made earlier. DOT is considering what action should be taken. This rulemaking is significant because of substantial public interest.

Timetable:

Action	Date	FR Cite
NPRM	02/19/82	47 FR 7443
NPRM Comment Period End	04/20/82	
SNPRM Comment Period End 06/13/83	04/12/83	48 FR 15639

Next Action Undetermined

Small Entity: Yes

Additional Information: Docket 40338. Original NPRM was EDR-439/SPDR 88; SNPRM of 04/12/83 was EDR-456/SPDR-88.

Analysis: Regulatory Evaluation

Agency Contact: Tim Kelly, Transportation Industry Analyst, Department of Transportation, Office of the Secretary, 400 Seventh Street, SW, Washington, DC 20590, 202 366-2220

RIN: 2105-AA41

1550. + SMOKING ABOARD AIRCRAFT; NOTICE TO PASSENGERS

Significance: Agency Priority

Legal Authority: 49 USC 1324; 49 USC 1374; 49 USC 1377; 49 USC 1381; 49 USC 1386

CFR Citation: 14 CFR 252; 14 CFR 253

Legal Deadline: None.

Abstract: This rule would inform passengers of their right to a seat in a nonsmoking section of an aircraft by one of two proposed alternatives. The first would require airlines to include a prescribed notice on or with their tickets. The second would include smoking in the list of subjects incorporated by reference in the contract of carriage, which would inform passengers that additional information may be obtained from the place of ticketing. This rulemaking is significant because of substantial public interest.

Timetable:

Action	Date	FR Cite
NPRM	11/19/82	47 FR 52190
NPRM Comment Period End	12/20/82	

Next Action Undetermined

Small Entity: Yes

Additional Information: EDR-449, Docket 41009.

Analysis: Regulatory Evaluation

Agency Contact: Tim Kelly, Transportation Industry Analyst, Department of Transportation, Office of the Secretary, 400 Seventh Street, SW, Washington, DC 20590, 202 366-2220

RIN: 2105-AA72

1551. + CERTIFICATION OF SPEED-LIMIT ENFORCEMENT

Significance: Agency Priority

Legal Authority: 23 USC 141; 23 USC 154; 23 USC 118; 23 USC 315

CFR Citation: 23 CFR 659; 49 CFR 1.50; 49 CFR 1.48

Legal Deadline: None.

Abstract: The Department will review the existing 55 MPH procedural regulations to determine if they can be made more efficient and to update the regulation where necessary. Provisions addressing the effect of future compliance (for a State found not to be in compliance in a given fiscal year) on

the reinstatement of funds withheld will also be revised. This rulemaking is considered significant because of substantial public interest.

Timetable:

Action	Date	FR Cite
NPRM	03/11/88	53 FR 7943
NPRM Comment Period End	04/11/88	

Small Entity: No

Government Levels Affected: State

Agency Contact: Sam Whitehorn, Attorney, Department of Transportation, Office of the Secretary, 400 Seventh Street, SW, Washington, DC 20590, 202 366-9307

RIN: 2105-AB22

1552. NONDISCRIMINATION IN FEDERALLY-ASSISTED PROGRAMS OF THE DEPARTMENT OF TRANSPORTATION – STATE TRANSPORTATION AGENCIES' EEO AFFIRMATIVE ACTION PROGRAMS

Significance: Nonsignificant

Legal Authority: Federal-Aid Highway Act of 1968, as amended, Sec 22(a); RR Revitalization & Regulatory Reform Act of 1976, Sec 905; 49 USC 1615 Urban Mass Transportation Act of 1964, as amended; 29 USC 794 Rehabilitation Act of 1973, Sec 504

CFR Citation: 49 CFR 1.48(c); 49 CFR 2.49(u); 49 CFR 1.51(a)

Legal Deadline: None.

Abstract: The proposed regulation would set forth requirements and procedures for all State Departments of Transportation (DOTs) equal employment opportunity compliance programs. It would also consolidate FHWA, FRA, and UMTA responsibilities in this area. This proposed regulation is significant because it would affect the equal opportunity employment programs of all State transportation agencies. It is needed because OST, FHWA, FRA, and UMTA each have responsibility for implementing the equal employment opportunity programs of State DOTs. This proposed rule would assure full coordination among these departmental elements, reduce the burden on the recipients, simplify reporting requirements, and eliminate duplication of effort.

Timetable:

Action	Date	FR Cite
Next Action Undetermined		

Small Entity: No

Agency Contact: Dorsey Thomas, Department of Transportation, Office of the Secretary, 400 Seventh Street, SW, Washington, DC 20590, 202 366-4754

RIN: 2105-AA06

1553. NONDISCRIMINATION ON THE BASIS OF HANDICAP (DIRECTLY CONDUCTED PROGRAMS)

Significance: Nonsignificant

Legal Authority: 29 USC 794

CFR Citation: 49 CFR 28

Legal Deadline: None.

Abstract: This regulation would implement the 1978 amendments to section 504 of the Rehabilitation Act of 1973 which made its prohibition of discrimination on the ground of handicap applicable to the directly conducted programs of Federal agencies as well as to their financial assistance programs. The rule would apply to DOT facilities, personnel practices, and regulatory programs. It would be based on a model rule developed by the Department of Justice. The rule would also apply to DOT activities and functions transferred from the Civil Aeronautics Board after that agency's "sunset." A CAB NPRM that was being developed on this subject will be subsumed in this project. A draft NPRM is now being reviewed by the Department of Justice.

Timetable:

Action	Date	FR Cite
NPRM	04/15/88	

Small Entity: Undetermined

Agency Contact: Robert Ashby, Department of Transportation, Office of the Secretary, 400 Seventh Street, SW, Washington, DC 20590, 202 366-9306

RIN: 2105-AA29

1554. DIVERSION OF FLIGHTS WITHIN A METROPOLITAN AREA

Significance: Nonsignificant

Legal Authority: 49 USC 1301; 49 USC 1302; 49 USC 1305; 49 USC 1324; 49 USC 1371; 49 USC 1375; 49 USC 1377 to 1379; 49 USC 1381; 49 USC 1382; 49 USC 1386; 49 USC 1461; 49 USC 1481; 49 USC 1482; 49 USC 1502; 49 USC 1504; ...

CFR Citation: 14 CFR 253; 14 CFR 399

Legal Deadline: None.

Abstract: The CAB proposed to amend its rules requiring notice of contract terms for domestic travel to require that actual notice be given passengers of terms absolving carriers from any responsibility to transport a passenger to the destination named on the ticket, or to reimburse the passenger for expenses in reaching the airport noted on the ticket when a flight is diverted to another airport in the same metropolitan area. Alternatively, the Board proposed to declare it to be an unfair and deceptive practice to divert a passenger without arranging and paying for alternate transportation to the destination airport named on the passenger's ticket. The Board considered a final rule but did not decide what action to take. DOT is now considering what action to take.

Timetable:

Action	Date	FR Cite
NPRM	09/23/83	48 FR 43343
NPRM Comment Period End	11/07/83	
Reply Comment Period	11/28/83	

Next Action Undetermined

Small Entity: No

Additional Information: ADDITIONAL LEGAL AUTHORITIES: PL 96-354; 5 USC 601. Docket 41683, EDR 466/PSDR-81.

Analysis: Regulatory Evaluation

Agency Contact: Tim Kelly, Transportation Industry Analyst, Department of Transportation, Office of the Secretary, 400 Seventh Street, SW, Washington, DC 20590, 202 366-2220

RIN: 2105-AA78

1555. BAGGAGE LIABILITY NOTICES IN INTERNATIONAL AIR TRANSPORTATION

Significance: Nonsignificant

Legal Authority: 49 USC 1302; 49 USC 1324; 49 USC 1371; 49 USC 1372; 49 USC 1373; 49 USC 1374; 49 USC 1381; 49 USC 1386; 49 USC 1481; 49 USC 1482

CFR Citation: 14 CFR 221

Legal Deadline: None.

Abstract: In response to a petition by Mr. Howard Boros, the CAB proposed to amend the baggage liability notices provided to passengers in foreign air travel. The NPRM proposed to eliminate the disclaimer of liability for fragile and perishable items because that notice is false and misleading.

Timetable:

Action	Date	FR Cite
NPRM	12/18/84	49 FR 49111
NPRM Comment Period End	03/19/85	

Next Action Undetermined

Small Entity: No

Additional Information: Docket 41690; EDR-477.

Analysis: Regulatory Evaluation

Agency Contact: Timothy Kelly, Transportation Industry Analyst, Department of Transportation, Office of the Secretary, 400 Seventh Street, SW, Washington, DC 20590, 202 366-2220

RIN: 2105-AA84

1556. SIMPLIFIED AIRLINE COUNTER-SIGN NOTICES

Significance: Nonsignificant

Legal Authority: 49 USC 1301; 49 USC 1302; 49 USC 1324; 49 USC 1371 to 1374; 49 USC 1381; 49 USC 1386; 49 USC 1481; 49 USC 1482

CFR Citation: 14 CFR 221; 14 CFR 250; 14 CFR 256

Legal Deadline: None.

Abstract: The American Association of Airport Executives, the Airport Operators Council International and the Air Transport Association of America petitioned the CAB to simplify its counter-sign requirements. Presently, airlines are required to display four different consumer protection notices on their ticket counters. The petitioners alleged that the current notices are hard to read and, therefore, do not provide much notice to passengers. They proposed replacing the four notices with one simplified counter sign. The CAB adopted an NPRM that proposed a number of alternatives, such as a long and/or short notice, where the notices would be required to be posted and whether a smoking notice should be included. DOT is now considering what action to take in response to the notice and comments filed.

Timetable:

Action	Date	FR Cite
NPRM	08/01/84	49 FR 30742
NPRM Comment Period End	09/17/84	
Reply Comment Period End	10/02/84	

Next Action Undetermined

Small Entity: Yes

Additional Information: Docket 41971; EDR-474

Analysis: Regulatory Evaluation

Agency Contact: Tim Kelly, Transportation Industry Analyst, Department of Transportation, Office of the Secretary, 400 Seventh Street, SW, Washington, DC 20590, 202 366-2220

RIN: 2105-AA88

1557. NAMES OF AIR CARRIERS AND FOREIGN AIR CARRIERS

Significance: Nonsignificant

Legal Authority: 49 USC 1381; 49 USC 204(a); 49 USC 1371; 49 USC 1372; 49 USC 1386

CFR Citation: 14 CFR 215, (Revision)

Legal Deadline: None.

Abstract: The Department must now routinely decide issues of name similarity whenever an airline wishes to use a different name for its operations or a new applicant wishes to use a name for its proposed operations. The issue arises even where there is no evidence that use of a certain name will cause or has caused confusion with an existing name. The current rule is duplicative of other statutes. The issue can be decided privately without routine, active government intervention, or can be handled on a case-by-case basis. The proposed rule would 1) delete specific criteria for decisions on name cases, 2) emphasize ad hoc enforcement, and 3) change the rule to make it a form of registration. Removal of routine intervention would reduce delay in applications for name changes. It would not result in less protection for travelers when there is a real need for action.

Timetable:

Action	Date	FR Cite
NPRM	02/25/87	52 FR 5547
NPRM Comment Period End	04/27/87	52 FR 5547

Next Action Undetermined

Small Entity: No

Agency Contact: Joseph Brooks, Department of Transportation, Office of the Secretary, 400 Seventh Street, SW, Washington, DC 20590, 202 366-9349

RIN: 2105-AB18

1558. COUNTING UMTA REDUCED-FARE PROGRAM COSTS TOWARD 504 COST CAP

Significance: Nonsignificant

Legal Authority: 29 USC 704; 49 USC 1612(d)

CFR Citation: 49 CFR 27

Legal Deadline: None.

Abstract: The Department is considering whether or not to eliminate a provision in its rule concerning mass transit services for disabled persons, which permits incremental expenditures by recipients for the off-peak, reduced-fare program for elderly and handicapped passengers on mainline mass transit services to be counted in the calculation of the three-percent limit on required expenditures.

Timetable:

Action	Date	FR Cite
NPRM	04/04/88	

Small Entity: Undetermined

Analysis: Regulatory Evaluation 04/04/88

Agency Contact: Robert Ashby, Deputy Ass't General Counsel for Regulation and Enforcement, Department of Transportation, Office of the Secretary, 400 7th St SW, Washington, DC 20590, 202 366-9306

RIN: 2105-AB29

DEPARTMENT OF TRANSPORTATION (DOT) **Final Rule Stage**

Office of the Secretary (OST)

1559. + COMMERCIAL SPACE TRANSPORTATION: LIABILITY REQUIREMENTS FOR COMMERCIAL SPACE LAUNCH ACTIVITIES

Significance: Regulatory Program

Legal Authority: PL 98-575, Sec 15(c) to 16 Commercial Space Launch Act

CFR Citation: 00 CFR None

Legal Deadline: None.

Abstract: Persons authorized to conduct commercial launch activities by a license issued by OCST are required to have in effect at least that amount of third-party liability insurance prescribed by DOT for the licensed activity. In addition, launch firms must secure an amount of insurance, or offer other assurance, that will be adequate to protect the Government when its property or personnel are directly involved in the conduct of commercial launch activities. Rulemaking sets out the criteria OCST will consider in setting the appropriate amount of third-party liability and other insurance firms subject to its authority must carry.

Timetable:

Action	Date	FR Cite
ANPRM	05/07/85	50 FR 19250
ANPRM Comment Period End	07/08/85	50 FR 19250
Interim Final Rule	04/00/88	

Small Entity: No

Analysis: Regulatory Evaluation 04/00/88

Agency Contact: Gerald Musarra, Department of Transportation, Office of the Secretary, Commercial Space Transportation, 400 Seventh Street, SW, Washington, DC 20590, 202 366-6305

RIN: 2105-AA26

1560. + MINORITY BUSINESS ENTERPRISE PROGRAM (FINANCIAL ASSISTANCE PROGRAMS)

Significance: Agency Priority

Legal Authority: 42 USC 2000d Civil Rights Act of 1964, Title VI; 49 USC 1730; 45 USC 906; 49 USC 1615; PL 97-424, Sec 105(f); PL 100-17, Sec 106(c)

CFR Citation: 49 CFR 23

Legal Deadline: None.

Abstract: The Department is reviewing its regulation establishing a minority business enterprise (MBE) program in its financial assistance programs (49 CFR Part 23). This regulation has been controversial, is of interest to most DOT grant recipients and contractors, and affects the operations of all DOT financial assistance programs. Section 106(c) of the Surface Transportation and Uniform Relocation Assistance Act of 1987 (STURAA) extended and modified the program as applied to FHWA and UMTA; similar legislation applied the same requirements to the FAA. The Department issued a final rule to make the STURAA changes in October 1987; a similar rule for FAA programs is pending. The Department intends subsequently to issue an NPRM that would propose further changes in the regulation.

Timetable:

Action	Date	FR Cite
Final Action	03/31/80	45 FR 21172
NPRM Interim amdt. to final rule, pending revision of entire rule	03/12/81	46 FR 16282
Final Action for interim amendment	04/27/81	46 FR 23457
Interim Final Rule	10/21/87	52 FR 39225
Final Rule	10/21/87	52 FR 39225
Final Action	04/00/88	

Small Entity: Yes

Analysis: Regulatory Flexibility Analysis; Regulatory Evaluation 04/27/81 (46 FR 23457)

Agency Contact: Robert C. Ashby, Department of Transportation, Office of the Secretary, 400 Seventh Street, SW, Washington, DC 20590, 202 366-9306

RIN: 2105-AA04

1561. + PUBLIC AVAILABILITY OF INFORMATION

Significance: Agency Priority

Legal Authority: 5 USC 552 Freedom of Information Act

CFR Citation: 49 CFR 7

Legal Deadline: Statutory, April 27, 1987. The Freedom of Information Act of 1986, Pub. L. 99-570, Title I, Subtitle Q, requires agencies to promulgate regulations implementing the Act's new fee schedule, and establish guidelines for fee waivers within 180 days after the date of enactment.

Abstract: This involves a revision of DOT's Freedom of Information Act regulations. Specific areas addressed include fees to be charged for search and reproduction costs and the establishment of more precise criteria to enable the Department to determine when a waiver of fees is in the public interest. It also addressed records relating to those functions of the Civil Aeronautics Board that were transferred to the Department. This rulemaking is significant because of substantial public interest. It is needed to comply with recent statutory changes, including OMB and Department of Justice guidance, and periodic revisions to keep current with policy changes.

Timetable:

Action	Date	FR Cite
NPRM	10/17/85	50 FR 42049
NPRM Comment Period End	12/16/85	
SNPRM/Interim Final Rule	01/16/87	52 FR 1992
Comment Period End	02/17/87	
SNPRM Request for comments	11/06/87	52 FR 42689
Final Action	04/00/88	

Small Entity: No

Additional Information: Further, the timeframe for a supplemental NPRM addressing PUB. L. 99-570 (fee schedule, fee waiver and law enforcement provisions) is in accordance with statutory requirements and cognizant of the recently published OMB guidelines (52 FR 10012).

Agency Contact: Rebecca H. Lima, Department of Transportation, Office of the Secretary, 400 Seventh Street, SW, Washington, DC 20590, 202 366-4542

RIN: 2105-AA05

1562. + NONDISCRIMINATION ON THE BASIS OF HANDICAP (COMMUTER RAIL PROGRAMS)

Significance: Agency Priority

Legal Authority: 29 USC 704; 49 USC 1612(d)

CFR Citation: 49 CFR 27, Subpart E

Legal Deadline: None.

Abstract: This notice asks comment on several alternatives for providing accessible commuter rail service, or a substitute for it, to disabled persons. The notice also requests information on the likely ridership and cost effects of the alternative approaches suggested in the notice. Comments have been received and are being reviewed. Studies have been received or are

expected to be received in the near future. Final actions being considered include a number of alternatives spelled out in the notice, including various regulatory steps and taking no further regulatory action.

Timetable:

Action	Date	FR Cite
NPRM	05/23/86	51 FR 19032
NPRM Comment Period End	09/22/86	
Final Action	06/30/88	

Small Entity: No

Government Levels Affected: State

Analysis: Regulatory Evaluation 06/30/88

Agency Contact: Robert C. Ashby, Deputy Assistant General Counsel for Regulation and Enforcement, Department of Transportation, Office of the Secretary, 400 7th St., SW, Washington, DC 20590, 202 366-9306

RIN: 2105-AB23

1563. TITLE VI CIVIL RIGHTS REGULATION

Significance: Nonsignificant

Legal Authority: 42 USC 2000d-4

CFR Citation: 49 CFR 21

Legal Deadline: None.

Abstract: In 1981, the Department proposed a consolidation and expansion of its existing Title VI regulation (49 CFR Part 21). Few comments were received on this NPRM, and a final regulation was never published. The Department reviewed the existing regulation to determine if changes were needed. It was concluded that the Department can continue to enforce Title VI appropriately through the existing regulation. Consequently the Department does not anticipate further rulemaking action, and intends to withdraw the NPRM.

Timetable:

Action	Date	FR Cite
NPRM	01/19/81	46 FR 5588
NPRM Comment Period End	04/20/81	
To be withdrawn	12/00/88	

Small Entity: No

Analysis: Regulatory Evaluation 01/19/81

Agency Contact: Dorsey Thomas, Department of Transportation, Office of the Secretary, 400 Seventh Street, SW, Washington, DC 20590, 202 366-4754

RIN: 2105-AA02

1564. MINORITY BUSINESS ENTERPRISE PROGRAM (DIRECT CONTRACTING)

Significance: Nonsignificant

Legal Authority: EO 11625; EO 12138; 45 USC 803; PL 95-507

CFR Citation: 49 CFR 23

Legal Deadline: None.

Abstract: As part of the NPRM that proposed its minority business program rule (49 CFR Part 23), the Department proposed rules concerning minority business involvement in direct DOT procurement. However, because of the program established by Public Law 95-507, these proposed rules became unnecessary, and were never finalized. That program provides for subcontracting plans and goals in certain direct Federal contracts as well as for disadvantaged business set-asides under the Small Business Administration 8(a) program.

Timetable:

Action	Date	FR Cite
NPRM	05/17/79	44 FR 28928
NPRM Comment Period End	07/16/79	
Final Action concerning financial assistance programs	03/31/80	45 FR 21172
To be withdrawn	04/00/88	

Small Entity: No

Additional Information: The Department published a final rule concerning its financial assistance programs on March 31, 1980 (45 FR 21172). The Department has concluded that further rulemaking in the direct contracting field is unnecessary at this time, and intends to withdraw this proposed rule.

Analysis: Regulatory Evaluation 05/17/79

Agency Contact: Robert C. Ashby, Department of Transportation, Office of the Secretary, 400 Seventh Street, SW, Washington, DC 20590, 202 366-9306

RIN: 2105-AA03

1565. CONSOLIDATION OF TRANSPORTATION GRANTS TO U.S. TERRITORIES

Significance: Nonsignificant

Legal Authority: PL 95-134, Title V

CFR Citation: 49 CFR 29

Legal Deadline: None.

Abstract: Title V of Pub. L. 95-134 permits departments and agencies to consolidate grant programs, reduce reporting requirements, and waive local matching fund requirements. This proposal is being withdrawn because of problems concerning legal requirements with changing grant conditions.

Timetable:

Action	Date	FR Cite
NPRM	01/08/79	44 FR 1765
To be withdrawn	11/00/88	

Small Entity: No

Agency Contact: Jack Bennett, Department of Transportation, Office of the Secretary, 400 Seventh Street, SW, Washington, DC 20590, 202 366-9669

RIN: 2105-AA08

1566. NONDISCRIMINATION ON THE BASIS OF AGE IN DOT FINANCIAL ASSISTANCE PROGRAMS

Significance: Nonsignificant

Legal Authority: PL 94-135, Title III

CFR Citation: 29 CFR 1691

Legal Deadline: None.

Abstract: This regulation would prohibit age discrimination by recipients of DOT financial assistance programs. Few comments were received on the NPRM. The Department intends to publish a final rule.

Timetable:

Action	Date	FR Cite
NPRM	10/22/79	44 FR 60946
Final Action	12/00/88	

Small Entity: No

Agency Contact: Joseph Austin, Department of Transportation, Office of the Secretary, 400 Seventh Street, SW, Washington, DC 20590, 202 366-5992

RIN: 2105-AA09

1567. AIRLINE TIME AND MILEAGE GUIDES

Significance: Nonsignificant

Legal Authority: 49 USC 1302; 49 USC 1324; 49 USC 1371 to 1374; 49 USC 1381; 49 USC 1386; 49 USC 1481; 49 USC 1482

CFR Citation: 14 CFR 221

Legal Deadline: None.

Abstract: The DOT currently prohibits fares or rates based upon units of time. This rule would remove these restrictions.

Timetable:

Action	Date	FR Cite
NPRM	10/27/82	47 FR 47599
NPRM Comment Period End	12/13/82	

Next Action Undetermined

Small Entity: No

Additional Information: EDR 446, Docket 41034. Formerly entitled: Tariffs; Removal of Requirements for Statements of Fares or Rates Based upon Units of Distance or Time.

Analysis: Regulatory Evaluation 00/00/00

Agency Contact: Thomas Moore, Chief, Tariffs Division, Department of Transportation, Office of the Secretary, 400 Seventh Street, SW, Washington, DC 20590, 202 366-2414

RIN: 2105-AA39

1568. DIRECT AIR CARRIER RESPONSIBILITY FOR RETURNING STRANDED CHARTER PASSENGERS

Significance: Nonsignificant

Legal Authority: 49 USC 1324; 49 USC 1371

CFR Citation: 14 CFR 207; 14 CFR 208

Legal Deadline: None.

Abstract: This rule would make direct air carriers responsible for returning charter passengers stranded by strikes or other interruptions of their services by eliminating the force majeure clause from charter contracts. However, the Department is considering a comprehensive proposal (RIN 2105-AA41 in this agenda) to revise and simplify air charter rules. The Department's final action in this proceeding will be consistent with the comprehensive review of the charter rule.

Timetable:

Action	Date	FR Cite
NPRM	07/11/80	45 FR 46812
NPRM Comment Period End	09/25/80	
Reply Comment Period End	10/10/80	

Next Action Undetermined

Small Entity: No

Additional Information: EDR 405, Docket 37169.

Analysis: Regulatory Evaluation

Agency Contact: Tim Kelly, Transportation Industry Analyst, Department of Transportation, Office of the Secretary, 400 Seventh Street, SW, Washington, DC 20590, 202 366-2220

RIN: 2105-AA40

1569. ZONES FOR AIRLINE MAIL RATES

Significance: Nonsignificant

Legal Authority: 49 USC 1302; 49 USC 1324; 49 USC 1376; 49 USC 1551(b)(1)(D)

CFR Citation: 14 CFR 233, (Proposed)

Legal Deadline: None.

Abstract: This proposed rule would end the current practice of prescribing fixed rates for the transportation of mail by air, and in its place establish zones for each category of mail. Each zone would be defined by maximum and minimum rates prescribed by DOT, and airlines would be free to contract with the Postal Service for the carriage of mail at any price within the zone. The rule is now moot with regard to domestic mail rates except in Alaska.

Timetable:

Action	Date	FR Cite
NPRM	09/07/79	44 FR 52246
NPRM Comment Period End	10/22/79	44 FR 52246
Comment Period End 02/17/81	12/19/80	45 FR 83510
SNPRM	12/19/80	45 FR 83510
Final Action	06/15/88	

Small Entity: No

Additional Information: Original NPRM of 09/07/79 was EDR-387/PDR 68, Docket 46497; the SNPRM of 12/19/80 was EDR-387C/PDR-68C.

Analysis: Regulatory Evaluation 06/15/88

Agency Contact: Lawrence Myers, Attorney, Department of Transportation, Office of the Secretary, 400 Seventh Street, SW, Washington, DC 20590, 202 366-9183

RIN: 2105-AA44

1570. AIR TRAVELERS: AGE DISCRIMINATION

Significance: Nonsignificant

Legal Authority: 42 USC 6102

CFR Citation: 14 CFR 376, (Proposed)

Legal Deadline: None.

Abstract: This rule will prohibit discrimination against air travelers on the basis of age and implement the Age Discrimination Act of 1975. A final rule was adopted by the CAB on April 10, 1980, and was forwarded to the Secretary of HHS for approval, as required by the Age Discrimination Act. The rule was approved by HHS on July 13, 1984, with changes. However, these changes have not been incorporated. DOT is considering combining this rulemaking with a broader DOT age discrimination rule on which work is now under way.

Timetable:

Action	Date	FR Cite
NPRM	09/26/79	44 FR 55383
Final Action adopted by the Board	04/10/80	
HHS approved Final Rule with changes	07/13/84	

Next Action Undetermined

Small Entity: No

Additional Information: SPDR-74, Docket 36639.

Agency Contact: Robert Ashby, Department of Transportation, Office of the Secretary, 400 Seventh Street, SW, Washington, DC 20590, 202 366-9306

RIN: 2105-AA45

1571. POLICY STATEMENT ON AIRLINE PREEMPTION

Significance: Nonsignificant

Legal Authority: 49 USC 1305

CFR Citation: 14 CFR 399

Legal Deadline: None.

Abstract: This rule will set out Department policies for regulation of the rates, routes, and services of airlines that have interstate authority. The CAB concluded that under section 105 of the Federal Aviation Act of 1958 it, not the States, was responsible for economic regulation (or deregulation, as the case may be) of all the routes, rates, or services of any airline holding either (i) a certificate of public convenience

BEST COPY AVAILABLE

and necessity to provide interstate air transportation, or (ii) an exemption under section 416 of the Act from the requirement for such a certificate.

Timetable:

Action	Date	FR Cite
Interim Final Rule	02/15/79	44 FR 9948
Request for comments on Interim Rule (PSDR-55, Docket 34684)	02/15/79	44 FR 9953
Comment Period End	04/16/79	
Final Action	11/15/88	

Small Entity: Yes

Additional Information: PS-83, Docket 34684.

Agency Contact: Lawrence Myers, Attorney, Department of Transportation, Office of the Secretary, 400 Seventh Street, SW, Washington, DC 20590, 202 366-9183

RIN: 2105-AA46

1572. INSURANCE FOR ON-DEMAND AIR-TAXI OPERATORS AND CANADIAN AIR TAXIS

Significance: Nonsignificant

Legal Authority: PL 95-504; 49 USC 1371; 49 USC 1374; 49 USC 1386

CFR Citation: 14 CFR 205; 14 CFR 298

Legal Deadline: None.

Abstract: This rule would set the minimum per-person aircraft accident liability insurance limits for U.S. and Canadian on-demand air taxi operators at $150,000, instead of at $300,000 as it is for other air carriers. The NPRM further includes alternative proposals to set the per-person limit at $75,000 or $100,000 or to eliminate all minimum amounts, requiring a public notice instead. Other rules for insurance coverage for these carriers would be as in 14 CFR Part 205, including the prohibition on safety-related exclusions.

Timetable:

Action	Date	FR Cite
NPRM	02/04/80	45 FR 7566
NPRM Comment Period End	03/12/80	45 FR 7566
SNPRM	10/27/81	46 FR 52585
SNPRM	03/10/83	48 FR 10073

Next Action Undetermined

Small Entity: Yes

Additional Information: Docket 37531. Original NPRM (02/04/80) was EDR-395; the first SNPRM (10/27/81) was EDR-395B. The second SNPRM (03/10/83) was EDR-395C, and its comment period ended 05/17/83.

Analysis: Regulatory Evaluation

Agency Contact: John Hokanson, Chief, Regulatory Analysis Division, Department of Transportation, Office of the Secretary, 400 Seventh Street, SW, Washington, DC 20590, 202 366-1035

RIN: 2105-AA47

1573. EFFECT OF EXPIRATION OF A BILATERAL ON FOREIGN AIR-CARRIER AUTHORITY

Significance: Nonsignificant

Legal Authority: 49 USC 1159b; 49 USC 1324; 49 USC 1372; 49 USC 1386; 49 USC 1481; 49 USC 1502; 5 USC 558; 5 USC 559

CFR Citation: 14 CFR 377

Legal Deadline: None.

Abstract: In the past, the CAB had held that a foreign air carrier's permit or exemption authority continues after the underlying bilateral Service Agreement expired, by virtue of section 558(c) of the Administrative Procedure Act. Further review has determined the contemplated change is unwarranted.

Timetable:

Action	Date	FR Cite
NPRM	06/03/83	48 FR 24923
NPRM Comment Period End	08/02/83	
To be withdrawn	04/00/88	

Small Entity: No

Additional Information: SPDR-89 and SPDR-89A, Docket 41498.

Agency Contact: Richard M. Loughlin, Chief, Licensing Division, Department of Transportation, Office of the Secretary, 400 Seventh Street, SW, Room 6412, Washington, DC 20590, 202 366-2398

RIN: 2105-AA66

1574. IMPLEMENTATION OF STATUTE REQUIRING INTEREST ON SUBSIDY CLAIMS

Significance: Nonsignificant

Legal Authority: 49 USC 1324; 49 USC 1376; 49 USC 1389; PL 97-369

CFR Citation: 14 CFR 326, (Proposed)

Legal Deadline: None.

Abstract: Under section 322 of the FY 1983 Transportation Appropriations Act, interest may be paid on certain "hold-in" subsidy claims by certificated air carriers under sections 419 and 406 of the Act. This rule would set procedures for payment of that interest.

Timetable:

Action	Date	FR Cite
NPRM	12/21/83	48 FR 56599
NPRM Comment Period End	02/21/84	
Reply Comment Period End	03/02/84	
Final Action	11/00/88	

Small Entity: No

Additional Information: Docket 41655; PDR 87.

Agency Contact: Robert Ross, Department of Transportation, Office of the Secretary, 400 Seventh Street, SW, Washington, DC 20590, 202 366-9154

RIN: 2105-AA77

1575. SIMPLIFIED AVIATION EXEMPTION PROCEDURES

Significance: Nonsignificant

Legal Authority: 49 USC 1371; 49 USC 1372; 49 USC 1386

CFR Citation: 14 CFR 302; 14 CFR 389; 14 CFR 399

Legal Deadline: None.

Abstract: The CAB proposed updating its rules applicable to exemption procedures to conform the rules to the changes brought about by the Airline Deregulation Act and the International Air Transportation Competition Act of 1979, and to modernize the evidentiary and service requirements. The Department is evaluating comments received.

Timetable:

Action	Date	FR Cite
NPRM	10/05/84	49 FR 39337
NPRM Comment Period End	12/04/84	
Final Action	06/01/88	

Small Entity: No

Additional Information: PDR-88/ODR-27/PSDR-83.

Agency Contact: Gwynath Radloff, Department of Transportation, Office of

the Secretary, 400 Seventh Street, SW, Washington, DC 20590, 202 366-9305

RIN: 2105-AA82

1576. UPDATE THE DEPARTMENT OF TRANSPORTATION ACQUISITION REGULATIONS TO IMPLEMENT THE COMPETITION IN CONTRACTING ACT AS SET FORTH IN THE FEDERAL ACQUISITION REGULATIONS – PROPOSED RULES

Significance: Nonsignificant

Legal Authority: 40 USC 486(c); 10 USC 2301; 48 CFR 1.301; 49 CFR 1.59; PL 98-369, Title VII

CFR Citation: 48 CFR 1201, (Revision)

Legal Deadline: None.

Abstract: The Competition in Contracting Act (CICA) P.L. 98-369, effective April 1, 1985, makes major changes in the structure and control of the Federal acquisition process. These changes have been effected by the Federal Acquisition Regulation (FAR). The intent of the update of the Department's acquisition regulation is to implement the FAR coverage of CICA where required, and make other changes necessary to implement FAR changes through Federal Acquisition Circular #29.

Timetable:

Action	Date	FR Cite
Interim Final Rule	11/19/87	52 FR 44522
Comment Period End 01/19/88	11/19/87	52 FR 44522
Final Action	04/01/88	

Small Entity: Yes

Agency Contact: Roger C. Martino, Chief, Procurement Management Division, Department of Transportation, Office of the Secretary, Room 9100, 400 Seventh Street, SW, Washington, DC 20590, 202 366-4271

RIN: 2105-AB15

1577. WARRANTY REGULATIONS FOR MAJOR SYSTEM ACQUISITIONS OF THE UNITED STATES COAST GUARD – PROPOSED RULE

Significance: Nonsignificant

Legal Authority: PL 98-473

CFR Citation: 48 CFR 1246

Legal Deadline: None.

Abstract: This rulemaking would establish the regulations for Coast Guard warranties that shall be included in all contracts with prime contractors for major system acquisitions.

Timetable:

Action	Date	FR Cite
NPRM	02/04/88	53 FR 3222
NPRM Comment Period End	03/21/88	53 FR 3222
Final Action	06/01/88	

Small Entity: Undetermined

Agency Contact: Roger Martino, Department of Transportation, Office of the Secretary, Room 9100, 400 Seventh Street, SW, Washington, DC 20590, 202 366-4271

RIN: 2105-AB16

1578. EXEMPTION FROM PRIOR-APPROVAL REQUIREMENTS FOR CERTAIN TRANSACTIONS

Significance: Nonsignificant

Legal Authority: 49 USC 1301; 49 USC 1302; 49 USC 1303; 49 USC 1324; 49 USC 1371; 49 USC 1377; 49 USC 1378; 49 USC 1379; 49 USC 1382; 49 USC 1384; 49 USC 1386; 49 USC 1388; 49 USC 1551

CFR Citation: 14 CFR 303

Legal Deadline: None.

Abstract: The Department is reviewing current aviation-merger procedural regulations to reduce regulatory obstacles to air carrier acquisitions of other air carriers.

Timetable:

Action	Date	FR Cite
NPRM	05/02/86	51 FR 17490
NPRM Comment Period End	06/12/86	
Final Action	12/30/88	

Small Entity: No

Agency Contact: Donald Horn, Attorney, Department of Transportation, Office of the Secretary, 400 Seventh Street, SW, Washington, DC 20590, 202 366-2972

RIN: 2105-AB20

1579. ● COLLECTION OF CLAIMS OWED THE UNITED STATES

Significance: Nonsignificant

Legal Authority: 31 USC 3701 to 3720A

CFR Citation: 49 CFR 89

Legal Deadline: None.

Abstract: This proposed rule would implement the Debt Collection Act of 1982. The rule would provide DOT with formal procedures for the collection of claims owed the United States arising from activities under the jurisdiction of the Department.

Timetable:

Action	Date	FR Cite
NPRM	02/12/88	53 FR 4180
Final Action	06/00/88	

Small Entity: No

Agency Contact: Paul B. Larsen C-10, Attorney Adviser, Department of Transportation, Office of the Secretary, DOT/Office of the General Counsel, 400 Seventh Street, SW, Washington, DC 20590, 202 366-9167

RIN: 2105-AB33

1580. ● DEBARMENT AND SUSPENSION (NONPROCUREMENT)

Significance: Nonsignificant

Legal Authority: 49 USC 322; EO 12549

CFR Citation: 49 CFR 29

Legal Deadline: None.

Abstract: EO 12549 provides that agencies shall participate in a system for debarment and suspension from programs and activities involving Federal financial aid and benefits. The Order directs agencies to issue implementing regulations that are consistent with OMB guidelines. This rulemaking is to establish DOT's requirements and procedures for suspension and debarment in financial-assistance programs, consistent with the Executive Order.

Timetable:

Action	Date	FR Cite
Interim Final Rule	10/20/87	52 FR 39056
Final Action	05/26/88	

Small Entity: No

Government Levels Affected: Local, State, Federal

Agency Contact: Paul B. Larsen C-10, Attorney Adviser, Department of Transportation, Office of the Secretary, DOT/Office of the General Counsel, 400 Seventh Street, SW, Washington, DC 20590, 202 366-9161

RIN: 2105-AB34

DEPARTMENT OF TRANSPORTATION (DOT) — **Completed Actions**

Office of the Secretary (OST)

1581. + COMMERCIAL SPACE TRANSPORTATION: LICENSING REGULATIONS

Significance: Regulatory Program

Legal Authority: PL 98-575

CFR Citation: 14 CFR 400 to 415

Legal Deadline: None.

Abstract: These regulations constitute the procedural framework for reviewing and authorizing all proposals to conduct non-federal launch activities, including the launching of vehicles, operation of launch sites, and payload activities that are not licensed by other agencies. The Office also is publishing its general administrative procedures and a revised compilation of its information requirements. This final rule replaces all previous guidance, specifically the interim final rule, published February 26, 1986, and the Licensing Policy Statement, published February 25, 1985. These regulations are significant because they involve issues of substantial interest to the public and important DOT policies.

Timetable:

Action	Date	FR Cite
Notice of Policy and Request for Comments	02/25/85	
Comment Period on Notice 02/25/85 to	04/26/85	
Interim Final Rule	02/26/86	51 FR 6870
Comment on Interim Final Rule 02/26/86 to	04/28/86	
Final Action	04/04/88	53 FR 11004
Final Action Effective	04/04/88	

Small Entity: No

Agency Contact: Gerald Musarra, Department of Transportation, Office of the Secretary, Commercial Space Transportation, 400 Seventh Street, SW, Washington, DC 20590, 202 366-9305

RIN: 2105-AA25

1582. ● + PROGRAM FRAUD CIVIL REMEDIES

Significance: Agency Priority

Legal Authority: 31 USC 3801 to 3812

CFR Citation: 49 CFR 31

Legal Deadline: Statutory, April 19, 1987.

Abstract: This rule implements the Program Fraud Civil Remedies Act of 1986, which authorizes the Department of Transportation (and certain other Federal agencies) to impose through administrative adjudication civil penalties and assessments against certain persons making false claims or statements.

Timetable:

Action	Date	FR Cite
NPRM	10/02/87	52 FR 36968
NPRM Comment Period End	11/02/87	52 FR 36968
Final Action	01/14/88	53 FR 880
Final Action Effective	01/14/88	53 FR 880

Small Entity: Yes

Agency Contact: James R. Dann, Deputy Assistant General Counsel, Department of Transportation, Office of the Secretary, 400 Seventh Street, SW., Washington, DC 20590, 202 366-9167

RIN: 2105-AB30

1583. ● + UNIFORM ADMINISTRATIVE REQUIREMENTS FOR GRANTS AND COOPERATIVE AGREEMENTS TO STATE AND LOCAL GOVERNMENTS

Significance: Agency Priority

Legal Authority: 49 USC 322(a)

CFR Citation: 49 CFR 18

Legal Deadline: Statutory, March 11, 1988. A Presidential memorandum dated March 12, 1987 requires this regulation to be issued by March 11, 1988.

Abstract: This rule finalizes a common rule establishing consistency and uniformity among Federal agencies in the administration of grants and cooperative agreements to State, local, and federally recognized Indian tribal governments.

Timetable:

Action	Date	FR Cite
NPRM	06/09/87	52 FR 21844
NPRM Comment Period End	08/10/87	52 FR 21816
Final Action	03/11/88	53 FR 8084
Final Action Effective	10/01/88	

Small Entity: No

Additional Information: The rule is effective October 1, 1988 except for the $5,000 threshold for the definition of equipment in section 18.3, the $5,000 threshold for disposition of equipment in 18.32(e), and the $25,000 threshold for the use of small purchase procedures in section 18.36 (d)(1), which are effective March 12, 1988.

Agency Contact: Charles E. Ventura, Chief, Grants Management Division, Office of Acquisition & Grant Management, Department of Transportation, Office of the Secretary, 400 Seventh Street, SW, Washington, DC 20590, 202 366-4266

RIN: 2105-AB31

1584. MINORITY BUSINESS ENTERPRISE PROGRAM (FINANCIAL ASSISTANCE PROGRAMS): COUNTING CREDIT FOR SUPPLIERS AND OTHER SERVICE PROVIDERS

Significance: Nonsignificant

Legal Authority: 42 USC 2000d; 49 USC 1730; 45 USC 906; 49 USC 1615; PL 97-424, Sec 105(f), Surface Transp. Assist. Act of 1982

CFR Citation: 49 CFR 27.47(e)(i)

Legal Deadline: None.

Abstract: The former DOT MBE rule provided that recipients and contractors may receive a maximum of 20 percent credit for the cost of goods purchased from MBE suppliers who do not manufacture the goods. The Department considered changes to correct unintended anomalies that may have resulted from this approach, and published an NPRM on this rule October 3, 1985. The Department took final action on this proposal as part of a final rule to implement Section 106 (c) of the Surface Transportation and Uniform Relocation Assistance Act of 1987. The final rule permits 60 percent of the value of goods purchased from disadvantaged business enterprises (DBE) "resale dealers" to be counted toward DBE goals.

Timetable:

Action	Date	FR Cite
NPRM	10/03/85	50 FR 40422
Final Action	10/21/87	52 FR 39225
Final Action Effective	10/21/87	

Small Entity: No

Agency Contact: Robert C. Ashby, Department of Transportation, Office of the Secretary, 400 Seventh Street, SW, Washington, DC 20590, 202 366-9306

RIN: 2105-AA20

DOT—OST

Completed Actions

1585. ● RECOVERY OF DEBTS TO THE UNITED STATES BY SALARY OFFSET

Significance: Nonsignificant

Legal Authority: 5 USC 5514

CFR Citation: 49 CFR 92

Legal Deadline: None.

Abstract: This rule implements the Debt Collection Act of 1982. The rule establishes procedures for offset of debts against the pay of current or former Federal employees who are indebted to the United States under a program administered by DOT.

Timetable:

Action	Date	FR Cite
Final Action	02/12/88	53 FR 4170
Final Action Effective	03/14/88	

Small Entity: No

Agency Contact: Paul B. Larsen C-10, Attorney Adviser, Department of Transportation, Office of the Secretary, DOT/Office of the General Counsel, 400 Seventh Street, SW, Washington, DC 20590, 202 366-9167

RIN: 2105-AB32

DEPARTMENT OF TRANSPORTATION (DOT)
U.S. Coast Guard (USCG)

Prerule Stage

1586. + CALIFORNIA OFFSHORE ROUTING SYSTEM (83-032)

Significance: Regulatory Program

Legal Authority: 33 USC 1223; 33 USC 1224

CFR Citation: 33 CFR 166; 33 CFR 167

Legal Deadline: None.

Abstract: Would implement the results of the Port Access Route Study mandated by the Ports and Waterways Safety Act. As a result of the study, the Coast Guard has preliminarily determined that potential conflicts between oil drilling and shipping require creation of a fairway system off the coast of California from the vicinity of San Francisco to Los Angeles/Long Beach and changes to the San Francisco and Santa Barbara channel traffic-separation schemes. No structures would be permitted in the fairway.

Timetable:

Action	Date	FR Cite
Next Action Undetermined		

Small Entity: No

Additional Information: Results of the Port Access Study for California were published in the Federal Register on June 24, 1982 (47 FR 27430) and on October 14, 1982 (47 FR 46043), and on December 5, 1985 (50 FR 49861). This rulemaking will require coordination with the Minerals Management Service of the Department of the Interior.

Analysis: Regulatory Impact Analysis

Agency Contact: LTJG D. Reese, Department of Transportation, U.S. Coast Guard, 2100 Second Street, SW, Washington, DC 20593-0001, 202 267-0364

RIN: 2115-AB29

1587. + IMPOSITION OF USER FEES FOR CERTAIN COAST GUARD SERVICES; DOCUMENTATION AND LICENSING (CGD 87-020)

Significance: Agency Priority

Legal Authority: PL 99-509

CFR Citation: 46 CFR 169; 46 CFR 175

Legal Deadline: None.

Abstract: This proposal would enumerate selected Coast Guard services for which user fees would be charged, indicate how the charges are to be charged, indicate how the charges are to be made, and how they are to be paid. User fees are being considered for the following services to small passenger vessels and sailing school vessels: initial inspection for certification, inspection for certification, reinspection, drydock examination, licensing/certification, and documentation.

Timetable:

Action	Date	FR Cite
ANPRM	06/00/88	

Small Entity: Yes

Analysis: Regulatory Evaluation 06/00/88

Agency Contact: LCDR Thompson, Department of Transportation, U.S. Coast Guard, 2100 Second Street, SW, Washington, DC 20593-0001, 202 267-1483

RIN: 2115-AC74

1588. ● + SUBDIVISION AND DAMAGE STABILITY OF DRY CARGO VESSELS (CGD 87-094)

Significance: Agency Priority

Legal Authority: 46 USC 3301

CFR Citation: 46 CFR 174

Legal Deadline: None.

Abstract: This proposal would require dry cargo vessels to meet a minimum standard of subdivision and stability. This rulemaking is significant because of international implications.

Timetable:

Action	Date	FR Cite
ANPRM	04/06/88	53 FR 11440
ANPRM Comment Period End	01/03/89	

Small Entity: No

Analysis: Regulatory Evaluation 04/06/88

Agency Contact: Lt. R. Gilbert, Project Manager, Department of Transportation, U.S. Coast Guard, 2100 Second St., SW, Washington, DC 20593-0001, 202 267-2988

RIN: 2115-AC87

1589. CASUALTY REPORTING REQUIREMENTS FOR RECREATIONAL BOATS (82-015)

Significance: Nonsignificant

Legal Authority: 46 USC 1486

CFR Citation: 33 CFR 173; 33 CFR 174

Legal Deadline: None.

Abstract: Amend casualty and accident reporting requirements for operators of recreational boats involved in boating accidents, by raising the threshold for

requiring an accident report from $200 to $500.

Timetable:

Action	Date	FR Cite
Next Action Undetermined		

Small Entity: No

Additional Information: Docket No. CGD 82-015.

Agency Contact: Mr. C. Perry, Department of Transportation, U.S. Coast Guard, 2100 Second Street, SW, Washington, DC 20593-0001, 202 267-0979

RIN: 2115-AA82

1590. INSPECTED FISH PROCESSING AND FISH TENDER VESSELS (86-026)

Significance: Nonsignificant

Legal Authority: 46 USC Subtitle II; PL 98-364

CFR Citation: 46 CFR 105

Legal Deadline: None.

Abstract: This rulemaking project would implement the provisions of the Commercial Fishing Industry Vessel Act which requires development of regulations reflecting the specialized nature and economics of fish processing and fish tender vessel operations.

Timetable:

Action	Date	FR Cite
ANPRM	12/00/88	

Small Entity: Undetermined

Agency Contact: LCDR W. J. Morani, Jr., Department of Transportation, U.S. Coast Guard, 2100 Second St. SW, Washington, DC 20593-0001, 202 267-1181

RIN: 2115-AC27

1591. SOLAS 74/83 EMERGENCY DRINKING WATER AND FOOD APPROVAL REQUIREMENTS (85-202)

Significance: Nonsignificant

Legal Authority: 46 USC 3306(a)

CFR Citation: 46 CFR 160

Legal Deadline: None.

Abstract: Establish U.S. Coast Guard approval requirements for emergency drinking water and food meeting the 1983 Amendments to the Safety of Life at Sea Convention.

Timetable:

Action	Date	FR Cite
Next Action Undetermined		

Small Entity: No

Agency Contact: Ms. Lissa Martinez, Department of Transportation, U.S. Coast Guard, 2100 Second St., SW, Washington, DC 20593-0001, 202 267-1444

RIN: 2115-AC48

1592. SOLAS 74/83 REVISION OF HYDRAULIC RELEASE DEVICE APPROVAL REQUIREMENTS (85-206)

Significance: Nonsignificant

Legal Authority: 46 USC 3306(a)

CFR Citation: 46 CFR 160

Legal Deadline: None.

Abstract: Establish U.S. Coast Guard approval requirements for hydraulic releases meeting the 1983 Amendments to the 1974 Safety of Life at Sea Convention.

Timetable:

Action	Date	FR Cite
Next Action Undetermined		

Small Entity: No

Agency Contact: Mr. Milton Daniels, Project Manager, Department of Transportation, U.S. Coast Guard, 2100 Second St., SW, Washington, DC 20593-0001, 202 267-1444

RIN: 2115-AC52

1593. SOLAS 74/83 REVISION OF DAVIT AND WINCH APPROVAL REQUIREMENTS (85-207)

Significance: Nonsignificant

Legal Authority: 46 USC 3306(a)

CFR Citation: 46 CFR 160

Legal Deadline: None.

Abstract: Establish U.S. Coast Guard approval requirements for davits and winches meeting the 1983 Amendments to the 1974 Safety of Life at Sea Convention.

Timetable:

Action	Date	FR Cite
Next Action Undetermined		

Small Entity: No

Agency Contact: Mr. Milton Daniels, Project Manager, Department of Transportation, U.S. Coast Guard, 2100 Second St., SW, Washington, DC 20593-0001, 202 267-1444

RIN: 2115-AC53

1594. SOLAS 74/83 RADAR REFLECTOR APPROVAL REQUIREMENTS (85-209)

Significance: Nonsignificant

Legal Authority: 46 USC 3306(a)

CFR Citation: 46 CFR 160

Legal Deadline: None.

Abstract: Establish U.S. Coast Guard approval requirements for radar reflectors meeting the 1983 Amendments to the 1974 Safety of Life at Sea Convention.

Timetable:

Action	Date	FR Cite
Next Action Undetermined		

Small Entity: No

Agency Contact: LCDR W. Riley, Project Manager, Department of Transportation, U.S. Coast Guard, 2100 Second St., SW, Washington, DC 20593-0001, 202 267-1444

RIN: 2115-AC54

1595. SOLAS 74/83 REVISION OF LIFEBUOY APPROVAL REQUIREMENTS (85-210)

Significance: Nonsignificant

Legal Authority: 46 USC 3306(a)

CFR Citation: 46 CFR 160

Legal Deadline: None.

Abstract: Establish U.S. Coast Guard approval requirements for lifebuoys meeting the 1983 Amendments of the 1974 Safety of Life at Sea Convention.

Timetable:

Action	Date	FR Cite
Next Action Undetermined		

Small Entity: No

Agency Contact: LTJG C. Deleo, Project Manager, Department of

DOT—USCG Prerule Stage

Transportation, U.S. Coast Guard, 2100 Second St., SW, Washington, DC 20593-0001, 202 267-1444

RIN: 2115-AC55

DEPARTMENT OF TRANSPORTATION (DOT)
U.S. Coast Guard (USCG)

Proposed Rule Stage

1596. + REVISIONS OF THE REGULATIONS ON OUTER CONTINENTAL SHELF ACTIVITIES (84-098)

Significance: Regulatory Program

Legal Authority: 43 USC 1331

CFR Citation: 33 CFR 140; 33 CFR 141; 33 CFR 142; 33 CFR 143; 33 CFR 144; 33 CFR 145; 33 CFR 146

Legal Deadline: None.

Abstract: Would modify 33 CFR Subchapter N by extending coverage of workplace safety rules and by modernizing material standards for fixed platforms.

Timetable:

Action	Date	FR Cite
ANPRM	03/07/85	50 FR 9290
Extension of Comment Period to 09/03/85	05/16/85	50 FR 20445
ANPRM Comment Period End	09/03/85	50 FR 20445

Next Action Undetermined

Small Entity: No

Additional Information: CGD 84-098(a) Self-inspection of Fixed OCS Facilities separated from CGD 84-098. CGD 84-098(b) Offshore Evacuation Procedures separated from CGD 84-098.

Analysis: Regulatory Evaluation 00/00/00

Agency Contact: LCDR S. Ciccalone, Project Manager, Department of Transportation, U.S. Coast Guard, 2100 Second Street, SW, Washington, DC 20593-0001, 202 267-2307

RIN: 2115-AB74

1597. + MANDATORY ALCOHOL AND DRUG TESTING FOLLOWING SERIOUS MARINE INCIDENTS INVOLVING COMMERCIAL VESSELS (CGD 86-080)

Significance: Regulatory Program

Legal Authority: 33 USC 1231; 43 USC 1331; 46 USC 6101; 46 USC 6103

CFR Citation: 46 CFR 4

Legal Deadline: None.

Abstract: This notice proposes regulations which would: 1) require the owner, charterer, managing operator, agent, master, or person in charge of a commercial vessel (designated the "marine employer") to obtain blood, urine, and breath samples as appropriate from persons directly involved in certain serious marine incidents, within prescribed time limits; 2) define the serious marine incident criteria for which this requirement would be applicable; 3) require the marine employer to ship blood and urine samples to a laboratory designated by the Coast Guard for appropriate chemical analysis; and, 4) establish procedures regarding accountability for and processing of blood and urine samples from the time of sampling to the time of receipt of samples at the laboratory. The Coast Guard believes that these proposed regulations are necessary to better identify the extent of alcohol and drug involvement as primary or contributing causes of serious incidents, i.e., those which result in death, injury or significant property or environmental damage; to emphasize the seriousness with which the Federal Government views the problems of alcohol and drug use and abuse in the marine (cont.)

Timetable:

Action	Date	FR Cite
NPRM	04/00/88	

Small Entity: No

Additional Information: ABSTRACT CONT: transportation field; to establish a stronger and more effective deterrent to alcohol and drug use aboard or in connection with commercial vessels; and to provide more reliable information upon which to base enforcement actions.

Analysis: Regulatory Evaluation 04/00/88

Agency Contact: CDR David H. Blomberg, Project Manager, Department of Transportation, U.S. Coast Guard, 2100 Second Street, SW, Washington, DC 20593-0001, 202 267-2215

RIN: 2115-AC62

1598. + TANKERMAN REQUIREMENTS (CGD 79-116)

Significance: Agency Priority

Legal Authority: 46 USC 3703; 46 USC 7317; 46 USC 8703; 46 USC 9101; 46 USC 9102

CFR Citation: 33 CFR 155; 46 CFR 12; 46 CFR 13; 46 CFR 30; 46 CFR 31; 46 CFR 35; 46 CFR 70; 46 CFR 90; 46 CFR 98; 46 CFR 105; 46 CFR 151; 46 CFR 153; 46 CFR 157

Legal Deadline: None.

Abstract: Rulemaking would redefine and establish more stringent qualifying criteria for individuals engaged in transporting and transferring various categories of oil and dangerous liquid cargoes. The Port and Tanker Safety Act of 1978 mandated the establishment of personnel qualification and manning standards for tank vessels. In addition, the International Convention on the Standards for Training, Certification, and Watchkeeping for Seafarers (STCW), 1978 has entered into effect and establishes international standards for tank vessel personnel qualifications. This project is significant because of its impact on the environment in a publicly sensitive area.

Timetable:

Action	Date	FR Cite
NPRM	12/18/80	45 FR 83268

Next Action Undetermined

Small Entity: Yes

Additional Information: Former title: Qualifications of the Person in Charge of Oil Transfer Operations: Tankerman Requirements (79-116).

Public meetings were held during January and February of 1981.

Agency Contact: Mr. C. Heizer, Project Manager, Department of Transportation, U.S. Coast Guard, 2100

Second Street, SW, Washington, DC 20593, 202 267-0225

RIN: 2115-AA03

1599. + USER FEES FOR COAST GUARD SERVICES (84-026)

Significance: Agency Priority

Legal Authority: 31 USC 9701

CFR Citation: 33 CFR 27; 33 CFR 66; 33 CFR 74; 33 CFR 100

Legal Deadline: None.

Abstract: This proposal would impose fees for certain Coast Guard services in keeping with the Administration's policy of recovering costs of services provided by the Federal Government to identifiable beneficiaries to extent practicable. This rulemaking is significant because it is likely to be of substantial interest to the public.

Timetable:

Action	Date	FR Cite
Next Action Undetermined		

Small Entity: Yes

Additional Information: Further action must await enabling legislation.

Agency Contact: Mr. J. Kursban, Department of Transportation, U.S. Coast Guard, 2100 Second Street, SW, Washington, DC 20593-0001, 202 267-2420

RIN: 2115-AB73

1600. + PROGRAMS FOR CHEMICAL DRUG TESTING OF COMMERCIAL VESSEL PERSONNEL (CGD 86-067)

Significance: Agency Priority

Legal Authority: 46 USC 2103; 46 USC 3306; 46 USC 7101; 46 USC 7503; 46 USC 7701; 49 CFR 1.46(b)

CFR Citation: 46 CFR 5; 46 CFR 16

Legal Deadline: None.

Abstract: The purpose of this proposal is to minimize the safety risks posed by the use of dangerous drugs by merchant vessel personnel. Options being considered include pre-employment testing, periodic testing, and testing on a random basis. This rulemaking is considered significant because of substantial public interest.

Timetable:

Action	Date	FR Cite
Next Action Undetermined		

Small Entity: Undetermined

Additional Information: Former title: Drug Detection for Merchant Marine Personnel.

Agency Contact: Mr. S. T. Connaughton, Project Manager, Department of Transportation, U.S. Coast Guard, 2100 Second Street, SW, Washington, DC 20593-0001, 202 267-0214

RIN: 2115-AC45

1601. + REGULATIONS FOR SELF-ELEVATING OFFSHORE SERVICE AND SUPPORT VESSELS (CGD 86-074)

Significance: Agency Priority

Legal Authority: 46 USC 3306; 46 USC 3301

CFR Citation: 46 CFR 125 to 136; 46 CFR 170; 46 CFR 173; 46 CFR 174

Legal Deadline: None.

Abstract: The Coast Guard is proposing regulations that will establish safety standards for self-elevating offshore service vessels commonly known as liftboats. The high rate of casualties which have been experienced by these vessels has emphasized the need for specific regulations addressing the hazards inherent in their operations. These vessels support the offshore mineral and energy industry by performing a multitude of services such as dive support, painting, sandblasting and well servicing, among others. In performing these services, these vessels fall within the statutory definition of Offshore Supply Vessels (OSV) and are therefore subject to inspection as OSVs. The Coast Guard will consider using existing standards wherever possible, particularly those that have and are being applied to conventional OSVs. However, because of the unique design and operating characteristics exhibited by these liftboats, many of the current regulations used to inspect and certificate conventional OSVs are inadequate to ensure the safe operation of these vessels. The Coast Guard believes that development and enforcement of standards specifically addressing these (CONT)

Timetable:

Action	Date	FR Cite
ANPRM	04/16/87	52 FR 12439
ANPRM Comment Period End	07/16/87	52 FR 12439
NPRM	08/00/88	

Small Entity: Undetermined

Additional Information: unique hull forms and operating characteristics will significantly improve their safety record. These rules are not expected to impose substantial costs on industry. On February 14, 1983, the Coast Guard published an ANPRM concerning new construction of Offshore Supply Vessels (OSVs)(48 FR 6636). The information in the ANPRM presents the Coast Guard's overall approach with respect to developing comprehensive standards for conventional offshore supply vessels as contrasted with liftboats and other nonconventional OSVs. On March 7, 1985, the Coast Guard published an ANPRM on Revision of the Regulations on Outer Continental Shelf Activities (50 FR 9290). That ANPRM (CGD 84-098) solicited specific comments regarding appropriate standards that should be applied to the various types of vessels used for OCS activities. Some comments were received that addressed liftboats. These comments will be considered with the comments received in response to this rulemaking effort.

Analysis: Regulatory Evaluation 08/00/88

Agency Contact: LCDR S. Ciccalone, Project Manager, Department of Transportation, U.S. Coast Guard, 2100 Second St., SW, Washington, DC 20593-0001, 202 267-2307

RIN: 2115-AC63

1602. FIXED FIRE-EXTINGUISHING SYSTEMS ON UNINSPECTED VESSELS (74-284)

Significance: Nonsignificant

Legal Authority: 46 USC 2104; 46 USC 4104; 46 USC 4105; 46 USC 4302; 49 USC 108

CFR Citation: 46 CFR 162.029

Legal Deadline: None.

Abstract: Would establish standards for the construction and installation of Halon 1301 and other fixed fire extinguishing systems as optional systems for compliance with existing regulations. SNPRM will address new

VOL 53 ISS 79 PT 1 AP 25 1988 UMI

comments received requesting that industry specifications be used and incorporated by reference.

Timetable:

Action	Date	FR Cite
NPRM	04/19/82	47 FR 16648
SNPRM	06/00/88	

Small Entity: No

Additional Information: Docket No. CGD 74-284.

Analysis: Regulatory Evaluation 04/19/82 (47 FR 16648)

Agency Contact: Mr. K. Wahle, Department of Transportation, U.S. Coast Guard, 2100 Second Street, SW, Washington, DC 20593-0001, 202 267-1444

RIN: 2115-AA08

1603. MISCELLANEOUS CHANGES TO 46 CFR 56 (77-140)

Significance: Nonsignificant

Legal Authority: 46 USC 3301; 46 USC 3305; 46 USC 3306

CFR Citation: 46 CFR 50; 46 CFR 56

Legal Deadline: None.

Abstract: Would update Title 46, Subchapter F - Marine Engineering. Some facets of these regulations for shipboard piping systems have become obsolete as a result of technological developments and changes in cited codes and standards. SNPRM will be issued to include additional clarifying language and to delete the manufacturers' affidavit system.

Timetable:

Action	Date	FR Cite
NPRM	01/09/85	50 FR 1073
NPRM Comment Period End	03/11/85	
Comment Period Extension	03/21/85	50 FR 11397
SNPRM	04/00/88	

Small Entity: No

Additional Information: Docket No. CGD 77-140.

Analysis: Regulatory Evaluation 01/09/85 (50 FR 1073)

Agency Contact: Mr. H. Hime, Department of Transportation, U.S. Coast Guard, 2100 Second Street, SW, Washington, DC 20593-0001, 202 267-2206

RIN: 2115-AA17

1604. CRANE OPERATOR QUALIFICATIONS AND STANDARDS FOR OFFSHORE CRANE DESIGN, INSPECTION, TESTING, AND OPERATION (79-059)

Significance: Nonsignificant

Legal Authority: 46 USC 2104; 46 USC 3306; 46 USC 6101; 46 USC 6301; 49 USC 108

CFR Citation: 33 CFR 140; 33 CFR 143; 33 CFR 149; 46 CFR 107; 46 CFR 108; 46 CFR 109

Legal Deadline: None.

Abstract: Would develop required qualifications for crane operators employed on the Outer Continental Shelf and standards for crane design, inspection, and testing. SNPRM will address comments received on lessening the impact on small entities and other controversial issues.

Timetable:

Action	Date	FR Cite
ANPRM	01/10/80	45 FR 2052
NPRM	02/14/86	51 FR 5547
NPRM Comment Period End	08/15/86	51 FR 21378
SNPRM	04/00/88	

Small Entity: No

Additional Information: Docket No. CGD 79-059.

Analysis: Regulatory Evaluation 02/14/86 (51 FR 5547)

Agency Contact: LDCR Stephen Johnson, Department of Transportation, U.S. Coast Guard, 2100 Second Street, SW, Washington, DC 20593-0001, 202 267-2997

RIN: 2115-AA34

1605. INFLATABLE LIFERAFT STABILITY (80-113)

Significance: Nonsignificant

Legal Authority: 46 USC 3306

CFR Citation: 46 CFR 160

Legal Deadline: None.

Abstract: Would provide specific rules for function, size, and placement of stability appendages. Based on comments received, an SNPRM will issue.

Timetable:

Action	Date	FR Cite
ANPRM	06/29/81	46 FR 33341
NPRM	01/11/85	50 FR 1558
NPRM Comment Period End	04/11/85	
Extension of Comment Period	07/05/85	50 FR 37628
SNPRM	06/00/88	

Small Entity: No

Additional Information: Docket No. CGD 80-113. Comment period extended to 10/14/85.

Analysis: Regulatory Evaluation 01/11/85 (50 FR 1538)

Agency Contact: Mr. M. Daniels, Department of Transportation, U.S. Coast Guard, 2100 Second Street, SW, Washington, DC 20593-0001, 202 267-1444

RIN: 2115-AA50

1606. MANEUVERING PERFORMANCE REGULATIONS (80-136)

Significance: Nonsignificant

Legal Authority: 46 USC 3703

CFR Citation: 46 CFR 1; 33 CFR 164

Legal Deadline: None.

Abstract: Would establish requirements to improve ship maneuvering and stopping ability for new tank vessels and possibly all vessels in response to mandates in 46 USC 3703. International Maritime Organization recommendations will be considered.

Timetable:

Action	Date	FR Cite
ANPRM	09/14/81	46 FR 45631
ANPRM	07/17/84	49 FR 28893
NPRM	06/00/88	

Small Entity: No

Additional Information: The Subcommittee on Ship Design and Equipment, IMO, completed action on this item in May 1986 and the results are being included in the NPRM. Final action by the IMO Assembly in November 1987 has made it possible for the Coast Guard to resume action on promulgation of a rule.

Analysis: Regulatory Evaluation 06/00/88

Agency Contact: Mr. P. Cojeen, Department of Transportation, U.S. Coast Guard, 2100 Second Street, SW, Washington, DC 20593, 202 267-2966

RIN: 2115-AA53

1607. SERVICING INFLATABLE LIFERAFTS (81-010)

Significance: Nonsignificant

Legal Authority: 46 USC 2104; 46 USC 3306

CFR Citation: 46 CFR 160

Legal Deadline: None.

Abstract: Would allow liferaft servicing in U.S. and foreign ports without Coast Guard Marine Inspectors being present.

Timetable:

Action	Date	FR Cite
ANPRM	08/14/86	51 FR 29117
Public Meeting	01/27/87	51 FR 45783
ANPRM Comment Period End	02/10/87	
NPRM	06/00/88	

Small Entity: No

Additional Information: Docket No. CGD 81-010.

Analysis: Regulatory Evaluation 06/00/88

Agency Contact: Mr. Milton Daniels, Department of Transportation, U.S. Coast Guard, 2100 Second Street, SW, Washington, DC 20593-0001, 202 267-1444

RIN: 2115-AA57

1608. PERSONAL FLOTATION DEVICES (81-023)

Significance: Nonsignificant

Legal Authority: 46 USC 1454; 46 USC 1488

CFR Citation: 33 CFR 175; 33 CFR 181

Legal Deadline: None.

Abstract: Revokes an obsolete provision and makes several editorial changes.

Timetable:

Action	Date	FR Cite
NPRM	04/12/82	47 FR 15606

Next Action Undetermined

Small Entity: No

Additional Information: Docket No. CGD 81-023.

Analysis: Regulatory Evaluation 04/12/82 (47 FR 15606)

Agency Contact: Mr. C. Perry, Department of Transportation, U.S. Coast Guard, 2100 Second Street, SW, Washington, DC 20593-0001, 202 267-0979

RIN: 2115-AA56

1609. GENERAL REVISION OF 46 CFR 151, BARGES CARRYING CERTAIN BULK DANGEROUS CARGOES (81-082)

Significance: Nonsignificant

Legal Authority: 46 USC 3703

CFR Citation: 46 CFR 151

Legal Deadline: None.

Abstract: Would revise the rules for barges carrying bulk cargoes by clarifying the language, eliminating unnecessary requirements, and upgrading some existing requirements.

Timetable:

Action	Date	FR Cite
ANPRM	06/04/84	49 FR 23085
NPRM	01/00/89	

Small Entity: No

Additional Information: Docket No. CGD 81-082.

Docket No. CGD 81-087.

This project is being evaluated by the Chemical Transportation Advisory Committee.

Agency Contact: R. M. Query, Department of Transportation, U.S. Coast Guard, 2100 Second Street, SW, Washington, DC 20593-0001, 202 267-1217

RIN: 2115-AA70

1610. OFFSHORE SUPPLY VESSEL REGULATIONS (82-004)

Significance: Nonsignificant

Legal Authority: 46 USC 3301(3); 46 USC 3305; 46 USC 3306

CFR Citation: 46 CFR 125 to 136; 46 CFR 174

Legal Deadline: None.

Abstract: Create new 46 CFR subchapter governing Offshore Supply Vessels.

Timetable:

Action	Date	FR Cite
ANPRM	02/14/83	48 FR 6636
ANPRM Comment Period End	09/12/83	48 FR 6636
NPRM	04/00/88	

Small Entity: No

Additional Information: Docket No. CGD 82-004.

Analysis: Regulatory Evaluation 04/00/88

Agency Contact: LT. B. Russell, Department of Transportation, U.S. Coast Guard, 2100 Second Street, SW, Washington, DC 20593-0001, 202 267-2206

RIN: 2115-AA77

1611. GENERAL REVISIONS OF POLLUTION-PREVENTION REGULATIONS FOR TANKERS (82-030)

Significance: Nonsignificant

Legal Authority: 46 USC 3306; 46 USC 2104; 46 USC 3703

CFR Citation: 33 CFR 157

Legal Deadline: None.

Abstract: Amend pollution regulations to clarify, correct minor errors, and incorporate policy decisions and international interpretations.

Timetable:

Action	Date	FR Cite
NPRM	08/00/88	

Small Entity: No

Analysis: Regulatory Evaluation 08/00/88

Agency Contact: Mr. J.M. Kinsey, Department of Transportation, U.S. Coast Guard, 2100 Second Street, SW, Washington, DC 20593-0001, 202 267-1181

RIN: 2115-AA88

1612. AIDS TO NAVIGATION ON OUTER CONTINENTAL SHELF (82-054)

Significance: Nonsignificant

Legal Authority: 14 USC 2; 14 USC 83; 14 USC 85; 14 USC 92; 14 USC 633

CFR Citation: 33 CFR 67

Legal Deadline: None.

Abstract: This item will modify existing requirements to allow for the following: central approval of aids to navigation lighting equipment, conformance to International Association of Lighthouse Authorities marking recommendations for offshore structures, and realistic light-intensity requirements.

Timetable:

Action	Date	FR Cite
NPRM	05/00/88	

VOL 53 ISS 79 PT 1 AP 25 1988 UMI

Small Entity: No

Additional Information: Docket No. 82-054.

Analysis: Regulatory Evaluation 05/00/88

Agency Contact: Mr. C. B. Mosher, Department of Transportation, U.S. Coast Guard, 2100 Second Street, SW, Washington, DC 20593-0001, 202 267-0350

RIN: 2115-AA92

1613. SAFETY STANDARDS FOR SELF-PROPELLED VESSELS CARRYING BULK LIQUEFIED GASES (82-058)

Significance: Nonsignificant

Legal Authority: 46 USC 3703

CFR Citation: 46 CFR 154

Legal Deadline: None.

Abstract: Would revise the standards for self-propelled vessels carrying bulk liquefied gases by adopting Amendments 1 through 4 of the International Maritime Organization Code for the construction and equipment of ships carrying gases in bulk.

Timetable:

Action	Date	FR Cite
NPRM	01/00/89	

Small Entity: No

Analysis: Regulatory Evaluation 01/00/89

Agency Contact: LCDR R. Fitch, Department of Transportation, U.S. Coast Guard, 2100 Second Street, SW, Washington, DC 20593-0001, 202 267-1217

RIN: 2115-AA95

1614. NAUTICAL SCHOOLS: IMPLEMENTING THE MARITIME EDUCATIONAL TRAINING ACT OF 1980 (82-092)

Significance: Nonsignificant

Legal Authority: 46 USC 3306; 46 USC 12959(e)

CFR Citation: 46 CFR 166; 46 CFR 167; 46 CFR 168

Legal Deadline: None.

Abstract: Would update authority cites for Nautical Schools Inspection Regulations (46 CFR Subchapter "R") and update certain parts to conform with current inspection policies. Nautical School vessels operated by the United States (formerly called "Public Nautical School Ships") between 15 and 300 gross tons would be subject to inspection for the first time.

Timetable:

Action	Date	FR Cite
Next Action Undetermined		

Small Entity: No

Additional Information: Docket No. CGD 82-092.

Agency Contact: LCDR Vanhaverbeke, Department of Transportation, U.S. Coast Guard, 2100 Second Street, SW, Washington, DC 20593-0001, 202 267-1181

RIN: 2115-AB21

1615. REASSESSMENT OF COAST GUARD FIRE PROTECTION REGULATIONS TO INCORPORATE SOLAS 1974 (83-026)

Significance: Nonsignificant

Legal Authority: 46 USC 3301; 46 USC 3305; 46 USC 3306; 46 USC 3503; 46 USC 3703

CFR Citation: 46 CFR Subchapter D; 46 CFR Subchapter H; 46 CFR Subchapter I; 46 CFR Subchapter U

Legal Deadline: None.

Abstract: Would bring Coast Guard regulations into agreement with the international requirements of SOLAS 1974 (Safety of Life at Sea) and its amendments.

Timetable:

Action	Date	FR Cite
ANPRM	10/01/84	49 FR 38672
ANPRM Comment Period End	11/30/84	
NPRM	07/00/88	

Small Entity: No

Additional Information: Docket No. CGD 83-026. Incorporates part of docket CGD 81-090.

Analysis: Regulatory Evaluation 07/00/88

Agency Contact: Dr. A. Schneider, Department of Transportation, U.S. Coast Guard, 2100 Second Street, SW, Washington, DC 20593-0001, 202 267-2997

RIN: 2115-AB36

1616. REASSESSMENT OF COAST GUARD MARINE ENGINEERING REGULATIONS – INCORPORATION OF SOLAS 74 AMENDMENTS (83-043)

Significance: Nonsignificant

Legal Authority: 46 USC 3301; 46 USC 3305; 46 USC 3306; 46 USC 3307

CFR Citation: 46 CFR Subchapter F

Legal Deadline: None.

Abstract: Would effect a general reassessment of Subchapter F and incorporation of international requirements of Sept. 1984.

Timetable:

Action	Date	FR Cite
NPRM	06/00/88	

Small Entity: No

Additional Information: Docket No. CGD 83-043.

Analysis: Regulatory Evaluation 06/00/88

Agency Contact: Mr. M. Mattina, Department of Transportation, U.S. Coast Guard, 2100 Second Street, SW, Washington, DC 20593-0001, 202 267-2206

RIN: 2115-AB41

1617. OIL-WATER INTERFACE DETECTORS (CGD 84-052)

Significance: Nonsignificant

Legal Authority: 46 USC 3306; 46 USC 3703

CFR Citation: 46 CFR 162

Legal Deadline: None.

Abstract: This project would propose a new specification for approval of oil-water interface detectors presently required by Annex 1 of MARPOL 73/78 (Marine Pollution Prevention).

Timetable:

Action	Date	FR Cite
NPRM	11/00/88	

Small Entity: No

Analysis: Regulatory Evaluation 11/00/88

Agency Contact: Ms. L. Martinez, Department of Transportation, U.S. Coast Guard, 2100 Second Street, SW, Washington, DC 20593-0001, 202 267-1071

RIN: 2115-AB66

1618. LICENSING OF PILOTS-MANNING OF VESSELS (84-060)

Significance: Nonsignificant

Legal Authority: 46 USC 2104; 46 USC 3306; 46 USC 7101; 46 USC 7109; 46 USC 7112; 46 USC 8101; 46 USC 8502

CFR Citation: 46 CFR 157; 46 CFR 10.07; 46 CFR 15.812; 46 CFR 10.700

Legal Deadline: None.

Abstract: This proposal would: (1) delineate when certain inspected vessels are required to be under the direction and control of a pilot, (2) describe first class pilotage areas where local pilotage expertise is warranted, (3) allow licensed individuals to serve as pilot in areas not identified as first class pilotage areas on vessels that they are otherwise qualified to control, and (4) permit individuals with 5 years experience on towing vessel combinations of at least 5,000 gross tons while acting under the authority of a license as master, mate, or operator of uninspected towing vessels, with a minimum of 2 of the 5 years having been on towing vessels combinations of at least 10,000 gross tons, to obtain without a written examination, an endorsement as first class pilot, restricted to tug and barge combinations only, for those routes over which they have made the required number of round trips. Based on comments received, a SNPRM will be issued.

Timetable:

Action	Date	FR Cite
NPRM	06/24/85	50 FR 26117
NPRM Comment Period End	12/23/85	
SNPRM Supplemental	04/00/88	

Small Entity: No

Additional Information: This proposal has been split from a previously published NPRM identified by the same title with Coast Guard Docket number 77-084 and RIN 2115-AA04.

Analysis: Regulatory Evaluation 06/27/85 (50 FR 26117)

Agency Contact: Mr. J. Hartke, Department of Transportation, U.S. Coast Guard, 2100 Second Street, SW, Washington, DC 20593-0001, 202 267-0217

RIN: 2115-AB67

1619. MARINE PORTABLE TANKS (84-043)

Significance: Nonsignificant

Legal Authority: 49 USC 1801 to 1812

CFR Citation: 46 CFR 64; 46 CFR 98.30; 46 CFR 98.33; 46 CFR 98.35

Legal Deadline: None.

Abstract: This proposal would discontinue the Coast Guard specifications for Marine Portable Tanks. In their place, the Coast Guard would recognize tanks approved by the Department of Transportation, Research and Special Programs Administration as Intermodal Tanks.

Timetable:

Action	Date	FR Cite
NPRM	04/00/88	

Small Entity: Yes

Analysis: Regulatory Evaluation 04/00/88

Agency Contact: Mr. F. Thompson, Department of Transportation, U.S. Coast Guard, 2100 Second Street, SW, Washington, DC 20593-0001, 202 267-1577

RIN: 2115-AB69

1620. PERSONAL FLOTATION DEVICE COMPONENTS (84-068)

Significance: Nonsignificant

Legal Authority: 46 USC 3306(a); 46 USC 4104; 46 USC 4302

CFR Citation: 46 CFR 164; 46 CFR 160

Legal Deadline: None.

Abstract: This project would add state-of-the-art synthetic materials as standard components, add performance requirements for nonstandard components, and upgrade out-dated requirements.

Timetable:

Action	Date	FR Cite
NPRM	12/00/88	

Small Entity: No

Analysis: Regulatory Evaluation 12/00/88

Agency Contact: Mr. K. Heinz, Department of Transportation, U.S. Coast Guard, 2100 Second Street, SW, Washington, DC 20593-0001, 202 267-1444

RIN: 2115-AB70

1621. LIFESAVING EQUIPMENT—IMPLEMENTATION OF 1983 AMENDMENTS TO SOLAS 1974 (84-069)

Significance: Nonsignificant

Legal Authority: 46 USC 3306

CFR Citation: 33 CFR 175; 46 CFR 31; 46 CFR 33; 46 CFR 35; 46 CFR 71; 46 CFR 75; 46 CFR 78; 46 CFR 91; 46 CFR 94; 46 CFR 97; 46 CFR 107; 46 CFR 108; 46 CFR 109; 46 CFR 154; 46 CFR 160; ...

Legal Deadline: None.

Abstract: This project would implement the provisions of the 1983 amendments to SOLAS 1974 (Safety of Life at Sea) which came into force in July of 1986. It would also reorganize the lifesaving equipment regulations in order to simplify, clarify, and reduce redundancy.

Timetable:

Action	Date	FR Cite
ANPRM	12/31/84	49 FR 50745
ANPRM Comment Period End	03/01/85	
NPRM	06/00/88	

Small Entity: No

Additional Information: 46 CFR 30; 46 CFR 90; 46 CFR 112; 46 CFR 113; 46 CFR 167; 46 CFR 189; 46 CFR 192; 46 CFR 196; 46 CFR 199

Analysis: Regulatory Evaluation 06/00/88

Agency Contact: Mr. R. Markle, Department of Transportation, U.S. Coast Guard, 2100 Second Street, SW, Washington, DC 20593-0001, 202 267-1444

RIN: 2115-AB72

1622. MOBILE OFFSHORE DRILLING UNIT REGULATIONS REVISION (83-071A)

Significance: Nonsignificant

Legal Authority: 46 USC 86; 46 USC 2104; 46 USC 2303; 46 USC 3305; 46 USC 3306; 46 USC 3311; 46 USC 3312; 46 USC 3316

CFR Citation: 46 CFR 56; 46 CFR 58; 46 CFR 107; 46 CFR 108; 46 CFR 109; 46 CFR 111; 46 CFR 174

Legal Deadline: None.

Abstract: This project would revise the regulations in subchapter I-A to clarify them, bring them up to date, delete some unnecessary requirements, and incorporate the recommendations

developed from major casualties. These changes are largely editorial in nature.

Timetable:

Action	Date	FR Cite
ANPRM	01/25/85	50 FR 11741
Extension of Comment Period	05/16/85	50 FR 20461
ANPRM Comment Period End	09/23/85	
NPRM	07/00/89	

Small Entity: No

Analysis: Regulatory Evaluation 07/00/89

Agency Contact: LCDR Dupree, Department of Transportation, U.S. Coast Guard, 2100 Second Street, SW, Washington, DC 20593-0001, 202 267-2307

RIN: 2115-AB88

1623. SAFETY RULES FOR SHIPS CARRYING HAZARDOUS LIQUIDS (84-085)

Significance: Nonsignificant

Legal Authority: 46 USC 3703; 49 USC 1803

CFR Citation: 46 CFR 153

Legal Deadline: None.

Abstract: This project would amend 46 CFR Part 153 to incorporate changes to the International Maritime Organization code for the construction and equipment of ships carrying dangerous chemicals in bulk.

Timetable:

Action	Date	FR Cite
NPRM	04/00/88	

Small Entity: No

Analysis: Regulatory Evaluation 04/00/88

Agency Contact: Mr. R. M. Query, Department of Transportation, U.S. Coast Guard, 2100 Second Street, SW, Washington, DC 20593-0001, 202 267-1217

RIN: 2115-AB92

1624. TRAINING IN THE USE OF AUTOMATIC RADAR PLOTTING AIDS (ARPA) (85-089)

Significance: Nonsignificant

Legal Authority: 33 USC 1223; 46 USC 3703

CFR Citation: 33 CFR 164

Legal Deadline: None.

Abstract: Current regulations require installation of ARPA on certain ships to improve vessel and waterway safety. Training in the use of this equipment is necessary to ensure its proper application and maximum benefit. A very small percentage of licensed personnel (those manning vessels of 10,000 GT or larger) would be required to complete an ARPA training course. The course is expected to take 5 days and cost about $600.00 per student.

Timetable:

Action	Date	FR Cite
ANPRM	10/24/85	50 FR 53316
ANPRM Comment Period End	12/23/85	
NPRM	06/00/88	

Small Entity: No

Analysis: Regulatory Evaluation 06/00/88

Agency Contact: Mr. Robert Spears Jr., Department of Transportation, U.S. Coast Guard, 2100 Second Street, SW, Washington, DC 20593-0001, 202 267-0224

RIN: 2115-AB99

1625. CERTIFICATION OF SEAMEN (84-068)

Significance: Nonsignificant

Legal Authority: 46 USC 2103; 46 USC 7301

CFR Citation: 46 CFR 12

Legal Deadline: None.

Abstract: This rulemaking would simplify and restructure the entire part. Among the changes contemplated are the addition of several new endorsements to seamen's documents and new ratings. An ANPRM was issued to gather necessary additional information.

Timetable:

Action	Date	FR Cite
ANPRM	02/04/85	50 FR 4875
Comment Period Extended	05/03/85	50 FR 23318
ANPRM Comment Period End	08/01/85	

Next Action Undetermined

Small Entity: No

Analysis: Regulatory Evaluation

Agency Contact: Mr. S. Connaughton, Project Manager, Department of Transportation, U.S. Coast Guard, 2100 Second Street, SW, Washington, DC 20593-0001, 202 267-0214

RIN: 2115-AC02

1626. INLAND WATERWAY NAVIGATION REGULATIONS; ALL WATERS TRIBUTARY TO THE GULF OF MEXICO (85-096)

Significance: Nonsignificant

Legal Authority: 33 USC 1221

CFR Citation: 33 CFR 162

Legal Deadline: None.

Abstract: Proposes to revise and update the inland waterways navigation regulations for the Gulf Intercoastal Waterway from St. Marks, Fla. to the Rio Grande River.

Timetable:

Action	Date	FR Cite
NPRM	04/00/88	
NPRM Comment Period End	04/00/88	

Small Entity: No

Analysis: Regulatory Evaluation 04/00/88

Agency Contact: Ms. M. Hegy, Department of Transportation, U.S. Coast Guard, 2100 Second Street, SW, Washington, DC 20593-0001, 202 267-0415

RIN: 2115-AC03

1627. FIRE DETECTION AND ALARM SYSTEMS (85-051)

Significance: Nonsignificant

Legal Authority: 46 USC 3306; 46 USC 3703

CFR Citation: 46 CFR 161

Legal Deadline: None.

Abstract: This rulemaking would update the 30-year-old Coast Guard specification for fire detection and alarm systems to use modern terminology and address modern systems. Consensus standards would be adopted by reference.

Timetable:

Action	Date	FR Cite
NPRM	07/00/88	

Small Entity: No

Analysis: Regulatory Evaluation 07/00/88

Agency Contact: LCDR S. Johnson, Project Manager, Department of Transportation, U.S. Coast Guard, 2100 Second Street, SW, Washington, DC 20593-0001, 202 267-2997

RIN: 2115-AC13

1628. REVISIONS TO THE ELECTRICAL ENGINEERING REGULATIONS (85-063)

Significance: Nonsignificant

Legal Authority: 46 USC 2104; 46 USC 2113; 46 USC 3301; 46 USC 3306; 46 USC 3318; 46 USC 3703; 46 USC 4104

CFR Citation: 46 CFR 110; 46 CFR 111; 46 CFR 112; 46 CFR 113

Legal Deadline: None.

Abstract: This rulemaking would generally update and revise 46 CFR Subchapter J to address changes in technology, include international conventions (Amendments to SOLAS '74), clarify requirements, and reflect experience gained as a result of vessel reflaggings.

Timetable:

Action	Date	FR Cite
NPRM	07/00/88	

Small Entity: No

Analysis: Regulatory Evaluation 07/00/88

Agency Contact: Mr. Thomas Nolan, Department of Transportation, U.S. Coast Guard, 2100 Second Street, SW, Washington, DC 20593-0001, 202 267-2206

RIN: 2115-AC20

1629. SUBCHAPTER "T" TITLE 46, GENERAL UPDATES AND REVISIONS (85-080)

Significance: Nonsignificant

Legal Authority: 46 USC 3306

CFR Citation: 46 CFR 175; 46 CFR 176; 46 CFR 177; 46 CFR 178; 46 CFR 179; 46 CFR 180; 46 CFR 181; 46 CFR 182; 46 CFR 183; 46 CFR 184; 46 CFR 185; 46 CFR 186; 46 CFR 187

Legal Deadline: None.

Abstract: This rulemaking would revise Subchapter "T" to reflect recent statutory changes, incorporate new technology, and improve safety requirements. Among the changes contemplated would be a change in inspection intervals and drydocking intervals.

Timetable:

Action	Date	FR Cite
NPRM	06/00/88	

Small Entity: Yes

Analysis: Regulatory Evaluation 06/00/88

Agency Contact: LCDR W. Cummins, Project Manager, Department of Transportation, U.S. Coast Guard, 2100 Second Street, SW, Washington, DC 20593-0001, 202 267-1181

RIN: 2115-AC22

1630. 46 CFR SUBCHAPTER 1. EDITORIAL REVISIONS AND CORRECTIONS (86-033)

Significance: Nonsignificant

Legal Authority: 46 USC 1801 to 1812

CFR Citation: 46 CFR 2 to 195

Legal Deadline: None.

Abstract: This proposed rule would correct or remove outdated cross-references and statutory citations related to the transportation of hazardous materials throughout 46 CFR Chapter 1.

Timetable:

Action	Date	FR Cite
NPRM	04/00/88	

Small Entity: No

Additional Information: Project entails replacement of words "46 CFR" with "49 CFR" with necessary revised lead-ins.

Analysis: Regulatory Evaluation 04/00/88

Agency Contact: Mr. F. Thompson, Department of Transportation, U.S. Coast Guard, 2100 2nd St. SW, Washington, DC 20593-0001, 202 267-1577

RIN: 2115-AC28

1631. HAZARDOUS MATERIALS POLLUTION PREVENTION (CGD 86-034)

Significance: Nonsignificant

Legal Authority: 33 USC 1321

CFR Citation: 33 CFR 154 to 156

Legal Deadline: None.

Abstract: This Project would apply the present oil pollution prevention regulations in 33 CFR Parts 154-156 to vessels and onshore and offshore facilities transferring hazardous substances.

Timetable:

Action	Date	FR Cite
NPRM	04/00/88	

Small Entity: Yes

Additional Information: Former title: Hazardous Substances Pollution Prevention.

Analysis: Regulatory Evaluation 04/00/88

Agency Contact: Mr. K.J. Seigety, Project Manager, Department of Transportation, U.S. Coast Guard, 2100 Second St. SW, Washington, DC 20593-0001, 202 267-0491

RIN: 2115-AC29

1632. UPDATING APPROVAL REQUIREMENTS FOR BREATHING APPARATUS (86-036)

Significance: Nonsignificant

Legal Authority: 46 USC 3306(a)

CFR Citation: 46 CFR 160; 46 CFR 35 to 20

Legal Deadline: None.

Abstract: Proposal would update the approval specifications for breathing apparatus for merchant vessels by citing present certification agencies and test schedules. It is also proposed to revise the tank vessel regulations for the carriage of approved pressure-demand type self-contained breathing apparatus.

Timetable:

Action	Date	FR Cite
NPRM	08/00/88	

Small Entity: Yes

Analysis: Regulatory Evaluation 08/00/88

Agency Contact: Mr. K. Wahle, Department of Transportation, U.S. Coast Guard, 2100 Second St. SW, Washington, DC 20593-0001, 202 267-1444

RIN: 2115-AC30

1633. REVISED APPROVAL SPECIFICATIONS FOR NONCOMBUSTIBLES AND PROHIBITION OF ASBESTOS FOR COMMERCIAL VESSELS (86-035)

Significance: Nonsignificant

Legal Authority: 46 USC 3306 (a)

CFR Citation: 46 CFR 30 to 40; 46 CFR 70; 46 CFR 188 to 196; 46 CFR 140 to 154; 46 CFR 90

Legal Deadline: None.

Abstract: Proposal would revise the approval specifications for noncombustible materials for merchant vessel construction to delete asbestos as an acceptable noncombustible material.

Timetable:

Action	Date	FR Cite
NPRM	04/00/88	

Small Entity: Yes

Analysis: Regulatory Evaluation 04/00/88

Agency Contact: Mr. K. Wahle, Department of Transportation, U.S. Coast Guard, 2100 Second St. SW, Washington, DC 20593-0001, 202 267-1444

RIN: 2115-AC32

1634. UNINSPECTED FISH-PROCESSING VESSELS (86-025)

Significance: Nonsignificant

Legal Authority: 46 USC 4502 (a)

CFR Citation: 46 CFR 27

Legal Deadline: None.

Abstract: This rulemaking project would implement the provisions of the Commercial Fishing Industry Vessel Act which requires development of regulations for uninspected fish processing vessels that enter into service after December 31, 1987 and carry more than 16 persons who are primarily employed in the preparation of fish products.

Timetable:

Action	Date	FR Cite
ANPRM	07/09/87	52 FR 25890
Correction to ANPRM	08/10/87	52 FR 29556
ANPRM Comment Period End	09/08/87	52 FR 25890
NPRM	06/00/88	

Small Entity: Undetermined

Analysis: Regulatory Evaluation 06/00/88

Agency Contact: LCDR W. J. Morani, Jr., Department of Transportation, U.S. Coast Guard, 2100 Second St. SW, Washington, DC 20593-0001, 202 267-1181

RIN: 2115-AC34

1635. CARGO LISTS AND TABLES UPDATE (CGD 88-100)

Significance: Nonsignificant

Legal Authority: 46 USC 3703; 49 USC 1804

CFR Citation: 46 CFR 1.46(b); 46 CFR 1.46(t); 46 CFR 1.46(u); 46 CFR 30; 46 CFR 150; 46 CFR 151; 46 CFR 153; 46 CFR 154

Legal Deadline: None.

Abstract: The Coast Guard periodically issues rules listing additional cargoes which may be carried on tank vessels. Since this action is recurrent, the Coast Guard has established a continuing docket for this type of action. Notices for this rule are anticipated in Jan./Feb. of each year. Final rules will be completed prior to September 30 of each year.

Timetable:

Action	Date	FR Cite
Final Rule	06/04/87	52 FR 21036
NPRM	04/00/88	

Small Entity: No

Additional Information: Former regulation title: Compatibility of Cargoes.

Agency Contact: Dr. M. Parmarouskis/Mr. Payne, Chemical Engineer, Department of Transportation, U.S. Coast Guard, 2100 Second St. SW, Washington, DC 20593-0001, 202 267-1577

RIN: 2115-AC35

1636. LOAD LINES (86-013)

Significance: Nonsignificant

Legal Authority: 46 USC 5115; HR 1362

CFR Citation: 46 CFR 41 to 48

Legal Deadline: None.

Abstract: This proposal will revise 46 CFR Parts 42 and 44 through 46 and add Parts 41, 43, 47 and 48 (Subchapter E) to correct errors, replace previous omissions, incorporate new policies which have not been published and implement provisions of the new Load Line Law enacted on 21 Oct 86 and now in effect.

Timetable:

Action	Date	FR Cite
NPRM	09/00/88	

Small Entity: Undetermined

Analysis: Regulatory Evaluation 09/00/88

Agency Contact: Mr. R. Anderson, Naval Architect, Department of Transportation, U.S. Coast Guard, 2100 Second St. SW, Washington, DC 20593-0001, 202 267-2988

RIN: 2115-AC37

1637. NAVIGATION BRIDGE VISIBILITY (CGD 85-099)

Significance: Nonsignificant

Legal Authority: 46 USC 369; 46 USC 391a

CFR Citation: 33 CFR 164; 46 CFR 32; 46 CFR 72; 46 CFR 91; 46 CFR 92; 46 CFR 108; 46 CFR 157; 46 CFR 190

Legal Deadline: None.

Abstract: Limited visibility from the navigation bridge of vessels has been identified as a factor in vessel casualties and near-misses. This action would establish standards for acceptable limits of visibility based on existing international guidelines. Because the primary focus is on new vessel design, costs are estimated to be minimal compared to potential benefits in casualties prevented.

Timetable:

Action	Date	FR Cite
NPRM	05/00/88	

Small Entity: No

Analysis: Regulatory Evaluation 05/00/88

Agency Contact: Mr. Edward J. LaRue, Jr., Project Manager, Department of Transportation, U.S. Coast Guard, 2100 Second Street, SW, Washington, DC 20593-0001, 202 267-0416

RIN: 2115-AC42

1638. FIRE EXTINGUISHERS (PORTABLE AND SEMI-PORTABLE) - REVISING APPROVAL SPECIFICATIONS AND UPDATING CARRIAGE REQUIREMENTS (86-072)

Significance: Nonsignificant

Legal Authority: 46 USC 3306(a)

CFR Citation: 46 CFR 162; 46 CFR 25; 46 CFR 34; 46 CFR 76; 46 CFR 95; 46 CFR 108; 46 CFR 168; 46 CFR 181; 46 CFR 193; 33 CFR 145; 33 CFR 149

Legal Deadline: None.

Abstract: Update approval specifications for portable and semi-portable fire extinguishers to incorporate minimum acceptance standards, and minimum factory quality

control and independent laboratory inspection levels. Update extinguisher carriage and inspection requirements on vessels to reflect current fire extinguisher technology.

Timetable:

Action	Date	FR Cite
NPRM	09/00/88	

Small Entity: No

Analysis: Regulatory Evaluation 09/00/88

Agency Contact: Mr. Klaus Wahle, Project Manager, Department of Transportation, U.S. Coast Guard, 2100 Second St., SW, Washington, DC 20593-0001, 202 267-1444

RIN: 2115-AC43

1639. SOLAS 74/83 LIFE JACKET APPROVAL REQUIREMENTS REVISION (85-200)

Significance: Nonsignificant

Legal Authority: 46 USC 3306(a)

CFR Citation: 46 CFR 160

Legal Deadline: None.

Abstract: Would establish U.S. Coast Guard approval requirements for lifejackets meeting the 1983 Amendments to the 1974 Safety of Life at Sea Convention.

Timetable:

Action	Date	FR Cite
NPRM	07/00/89	

Small Entity: No

Additional Information: This is the first in a series of projects, numbered 85-200 to 85-211, which have been split off from Coast Guard 84-069 which implemented the 1983 Amendments to SOLAS 1974. So many revisions were necessary that it was better to make several small and easily identifiable projects rather than a large and confusing one. Because of staffing assignments, the projects may not be completed in numerical order, and many cannot be given estimated completion dates.

Analysis: Regulatory Evaluation 07/00/89

Agency Contact: Mr. Samuel Wehr, Project Manager, Department of Transportation, U.S. Coast Guard, 2100 Second St., SW, Washington, DC 20593-0001, 202 267-1444

RIN: 2115-AC46

1640. SOLAS 74/83 LIFEBOAT AND RESCUE BOAT APPROVAL REQUIREMENTS (85-201)

Significance: Nonsignificant

Legal Authority: 46 USC 3306(a)

CFR Citation: 46 CFR 160

Legal Deadline: None.

Abstract: Establish U.S. Coast Guard approval requirements for lifeboats and rescue boats meeting the 1983 Amendments to the 1974 Safety of Life at Sea Convention.

Timetable:

Action	Date	FR Cite
NPRM	10/00/88	

Small Entity: No

Analysis: Regulatory Evaluation 10/00/88

Agency Contact: LCDR W. Riley, Department of Transportation, U.S. Coast Guard, 2100 Second St., SW, Washington, DC 20593-0001, 202 267-1444

RIN: 2115-AC47

1641. SOLAS 74/83 REVISION OF PYROTECHNIC DISTRESS SIGNAL APPROVAL REQUIREMENTS (85-203)

Significance: Nonsignificant

Legal Authority: 46 USC 3306(a)

CFR Citation: 46 CFR 160

Legal Deadline: None.

Abstract: Establish U.S. Coast Guard approval requirements for pyrotechnic distress signals meeting the 1983 Amendments to the 1974 Safety of Life at Sea Convention.

Timetable:

Action	Date	FR Cite
NPRM	10/00/88	

Small Entity: No

Analysis: Regulatory Evaluation 10/00/88

Agency Contact: LCDR W. Riley, Department of Transportation, U.S. Coast Guard, 2100 Second St., SW, Washington, DC 20593-0001, 202 267-1444

RIN: 2115-AC49

1642. SOLAS 74/83 REVISION OF DISEMBARKATION LADDER APPROVAL REQUIREMENTS (85-204)

Significance: Nonsignificant

Legal Authority: 46 USC 3306(a)

CFR Citation: 46 CFR 160

Legal Deadline: None.

Abstract: Would establish U.S. Coast Guard approval requirements for disembarkation ladders meeting the 1983 Amendments to the Safety of Life at Sea Convention.

Timetable:

Action	Date	FR Cite
NPRM	10/00/88	

Small Entity: No

Analysis: Regulatory Evaluation 10/00/88

Agency Contact: LCDR W. Riley, Project Manager, Department of Transportation, U.S. Coast Guard, 2100 Second St., SW, Washington, DC 20593-0001, 202 267-1444

RIN: 2115-AC50

1643. SOLAS 74/83 REVISION TO INFLATABLE LIFERAFT APPROVAL (85-205)

Significance: Nonsignificant

Legal Authority: 46 USC 3306(a)

CFR Citation: 46 CFR 160

Legal Deadline: None.

Abstract: Establish U.S. Coast Guard approval requirement for inflatable liferafts meeting the 1983 Amendments to the 1974 Safety of Life at Sea Convention.

Timetable:

Action	Date	FR Cite
NPRM	06/00/88	

Small Entity: No

Analysis: Regulatory Evaluation 06/00/88

Agency Contact: Mr. Milton Daniels, Project Manager, Department of Transportation, U.S. Coast Guard, 2100 Second St., SW, Washington, DC 20593-0001, 202 267-1444

RIN: 2115-AC51

1644. SOLAS 74/83 REVISION OF LIFE JACKET LIGHT APPROVAL REQUIREMENTS (85-211)

Significance: Nonsignificant

Legal Authority: 46 USC 3306(a)

CFR Citation: 46 CFR 161

Legal Deadline: None.

Abstract: Establish U.S. Coast Guard approval requirement for life jacket lights meeting the 1983 Amendments to

the 1974 Safety of Life at Sea Convention.

Timetable:

Action	Date	FR Cite
NPRM	10/00/88	

Small Entity: No

Analysis: Regulatory Evaluation 10/00/88

Agency Contact: LCDR W. Riley, Project Manager, Department of Transportation, U.S. Coast Guard, 2100 Second St., SW, Washington, DC 20593-0001, 202 267-1444

RIN: 2115-AC56

1645. ADVANCE NOTICE OF ARRIVAL (CGD 86-055)

Significance: Nonsignificant

Legal Authority: 33 USC 1223(a)(5)

CFR Citation: 33 CFR 160

Legal Deadline: None.

Abstract: This revision to 33 CFR 160 Subpart C would require advance notices from all foreign commercial vessels of less than 1600 gross tons bound for parts or places in the Miami Captain of the Port zone. Currently 33 CFR 160.201(c)(1) excepts all vessels of less than 1600 gross tons from reporting advance notices of arrival. The revision would require vessels of more than 1600 gross tons to provide to the COTP crew makeup and charter information at least 24 hours prior to entering ports or places within the COTP zone.

Timetable:

Action	Date	FR Cite
NPRM	04/30/88	

Small Entity: Undetermined

Analysis: Regulatory Evaluation 04/30/88

Agency Contact: Lt. J. McDowell, Office of Marine Safety, Security and Environmental Protection, Department of Transportation, U.S. Coast Guard, Commandant (G-MPS-3), 2100 Second Street, SW, Washington, DC 20593-0001, 202 267-0491

RIN: 2115-AC58

1646. MEASUREMENT OF VESSELS (87-015 B)

Significance: Nonsignificant

Legal Authority: 46 USC Part J, Chap 141

CFR Citation: 46 CFR 69

Legal Deadline: None.

Abstract: This project would establish the International Convention on Tonnage Measurement of Ships, 1969, as the primary tonnage measurement system for measuring vessels of 79 feet and longer. The project will also extend simplified measurement to all vessels of less than 79 feet in length and eliminate all vessels of 79 feet in length and over from being measured under the simplified system.

Timetable:

Action	Date	FR Cite
NPRM	05/00/88	

Small Entity: No

Analysis: Regulatory Evaluation 05/00/88

Agency Contact: Mr. Dennis Lamont, Project Manager, Department of Transportation, U.S. Coast Guard, 2100 Second St., SW, Washington, DC 20593, 202 267-1100

RIN: 2115-AC67

1647. POSTING REQUIREMENTS ON INSPECTED VESSELS (87-031)

Significance: Nonsignificant

Legal Authority: 46 USC 3306

CFR Citation: 46 CFR 31; 46 CFR 71; 46 CFR 91; 46 CFR 167; 46 CFR 176; 46 CFR 189

Legal Deadline: None.

Abstract: Various laws, international agreements, and Coast Guard regulations require the posting of specific certificates, licenses, plans, operating instructions, and warnings onboard vessels. Some of these contain essential operational data which must be accessible at all times; others are primarily informational. This rulemaking project will seek to reduce posting requirements for nonessential operational data to reduce the burden on the public. Alternatives such as having items readily available rather than being posted are being considered.

Timetable:

Action	Date	FR Cite
ANPRM	06/24/87	52 FR 31786
ANPRM Comment Period End	11/24/87	52 FR 31786
NPRM	05/00/88	

Small Entity: No

Analysis: Regulatory Evaluation 05/00/88

Agency Contact: LCDR W. J. Morani, Jr., Project Manager, Department of Transportation, U.S. Coast Guard, 2100 Second Street, SW, Washington, DC 20593, 202 267-1181

RIN: 2115-AC68

1648. PORT ACCESS ROUTES; APPROACH TO FREEPORT, TEXAS (CGD 87-038)

Significance: Nonsignificant

Legal Authority: 33 USC 1223

CFR Citation: 33 CFR 166

Legal Deadline: None.

Abstract: A study of fairway anchorage sites and areas adjacent to the fairway in the approach to Freeport, Texas, has been announced and comments requested.

Timetable:

Action	Date	FR Cite
Fairway study completed	07/02/87	52 FR 25039
NPRM	07/01/88	

Small Entity: No

Government Levels Affected: Local, State, Federal

Analysis: Regulatory Evaluation 07/01/88

Agency Contact: Ms. M. Hegy, Project Manager, Department of Transportation, U.S. Coast Guard, COMDT (G-NSS-2), 2100 2nd St., SW, Washington, DC 20593, 202 267-0415

RIN: 2115-AC78

1649. PORT ACCESS ROUTES; APPROACH TO MOBILE, ALABAMA (CGD 86-008)

Significance: Nonsignificant

Legal Authority: 33 USC 1223

CFR Citation: 33 CFR 166

Legal Deadline: None.

Abstract: The Coast Guard is studying the request by an oil company to modify the fairway in the approach to Mobile, Alabama.

Timetable:

Action	Date	FR Cite
NPRM	06/00/88	

Small Entity: No

Additional Information: A public meeting will probably be held to discuss the issues in the study.

Government Levels Affected: Local, State, Federal

Analysis: Regulatory Evaluation 06/00/88

Agency Contact: Ms. M. Hegy, Project Manager, Department of Transportation, U.S. Coast Guard, COMDT (G-NSS-2), 2100 2nd St., SW, Washington, DC 20593, 202 267-0415

RIN: 2115-AC81

1650. ● REGATTAS AND MARINE PARADES (CGD 87-087)

Significance: Nonsignificant

Legal Authority: 33 USC 1233

CFR Citation: 33 CFR 100.15

Legal Deadline: None.

Abstract: This proposal would amend current regatta and marine parade regulations to increase the lead time requirement for submitting regatta permit applications. The rulemaking will allow the Coast Guard adequate time to review regatta permit applications, conduct appropriate coordination, and provide necessary public notice relating to regattas and marine events.

Timetable:

Action	Date	FR Cite
NPRM	04/04/88	

Small Entity: Yes

Analysis: Regulatory Evaluation 04/00/88

Agency Contact: Mr. Carlton Perry, Project Manager, Department of Transportation, U.S. Coast Guard, 2100 Second Street, SW, Washington, DC 20593-0001, 202 267-0979

RIN: 2115-AC84

1651. ● OIL DISCHARGE MONITORING AND CONTROL SYSTEM (CGD 87-057)

Significance: Nonsignificant

Legal Authority: 33 USC 1321(j); 33 USC 1903; 46 USC 391(a); 49 USC 1655(b)

CFR Citation: 46 CFR 162; 46 CFR 157

Legal Deadline: None.

Abstract: This project would revise the existing equipment approval requirements for the oil discharge monitoring and control system to bring the U.S. requirements in line with the more stringent International Maritime Organization Resolution A.586(14) "Revised Guidelines and Specifications for Oil Discharge Monitoring and Control Systems for Oil Tankers." This project does not create any new installation requirements for oil pollution prevention equipment on any class of vessels.

Timetable:

Action	Date	FR Cite
NPRM	04/00/88	

Small Entity: No

Analysis: Regulatory Evaluation 04/00/88

Agency Contact: Ms. L. Martinez, Project Manager, Department of Transportation, U.S. Coast Guard, 2100 Second St. SW, Washington, DC 20593-0001, 202 267-1444

RIN: 2115-AC85

1652. ● ALTERNATIVE PROVISIONS FOR REINSPECTIONS OF OFFSHORE SUPPLY VESSELS IN FOREIGN PORTS (CGD 82-004A)

Significance: Nonsignificant

Legal Authority: 46 USC 3306; 33 USC 1321(j)(1)

CFR Citation: 46 CFR 91.27-13(added)

Legal Deadline: None.

Abstract: The Coast Guard is proposing to amend the regulations concerning the reinspection of offshore supply vessels (OSVs) in foreign ports. Currently OSVs holding two year certificates of inspection are reinspected between the 10th and 14th month of the certificate's period. In recent years, more OSVs have been based overseas in remote locations. Vessel owners must reimburse the Coast Guard for inspector travel and per diem costs in connection with foreign inspections. This action would propose an alternative to the traditional Coast Guard mid-period reinspection. The benefits would be flexibility and financial savings to the OSV industry and more effective use of Coast Guard resources.

Timetable:

Action	Date	FR Cite
NPRM	04/00/88	

Small Entity: No

Analysis: Regulatory Evaluation 04/00/88

Agency Contact: Mr. J. Kinsey, Project Manager, Department of Transportation, U.S. Coast Guard, 2100 Second Street, SW, Washington, DC 20593-0001, 202 267-1181

RIN: 2115-AC86

DEPARTMENT OF TRANSPORTATION (DOT)

U.S. Coast Guard (USCG)

Final Rule Stage

1653. + INTERVALS FOR DRYDOCKING AND TAILSHAFT EXAMINATION ON INSPECTED VESSELS (84-024)

Significance: Regulatory Program

Legal Authority: 46 USC 3306

CFR Citation: 46 CFR 31; 46 CFR 61; 46 CFR 71; 46 CFR 91; 46 CFR 167; 46 CFR 169; 46 CFR 189

Legal Deadline: None.

Abstract: The Coast Guard has amended the intervals between drydocking and tailshaft examination intervals by extending them in most cases for certain classes of vessels. These changes would decrease the cost incurred by the marine industry in meeting these examination requirements and harmonize the intervals with those specified by various classification societies and those under construction internationally. The Coast Guard is reviewing the comments received and considering what final action to take on the proposal.

Timetable:

Action	Date	FR Cite
ANPRM	05/04/84	49 FR 19050
ANPRM Comment Period End	08/02/84	
NPRM	05/30/86	51 FR 19720
Correction	06/09/86	51 FR 20847
NPRM Comment Period End	09/30/86	51 FR 29116
Interim Final Rule	10/23/87	52 FR 39639
Final Action	08/00/88	

Small Entity: Yes

Analysis: Regulatory Evaluation 10/23/87 (52 FR 39639)

Agency Contact: LCDR Powers, Department of Transportation, U.S. Coast Guard, 2100 Second Street, SW, Washington, DC 20593-0001, 202 267-1185

RIN: 2115-AB58

1654. + JOINT U.S.-CANADA VESSEL TRAFFIC MANAGEMENT REGULATIONS FOR THE PACIFIC REGION (79-131)

Significance: Agency Priority

Legal Authority: 33 USC 1221

CFR Citation: 33 CFR 161

Legal Deadline: None.

Abstract: Would implement the provisions of an agreement for a cooperative vessel traffic management system for the Pacific region. This rulemaking is significant because of international considerations.

Timetable:

Action	Date	FR Cite
NPRM	08/18/83	48 FR 37433

Next Action Undetermined

Small Entity: No

Additional Information: All action on this proposal has been suspended pending legislative action by the Canadian Government.

Agency Contact: LTJG K. Bradley, Department of Transportation, U.S. Coast Guard, 2100 Second Street, SW, Washington, DC 20593-0001, 202 267-0412

RIN: 2115-AA39

1655. + LICENSING OF MARITIME PERSONNEL (CGD 81 - 059)

Significance: Agency Priority

Legal Authority: 46 USC 3306; 46 USC 7101; 46 USC 7102; 46 USC 7103; 46 USC 7104; 46 USC 7105; 46 USC 7106; 46 USC 7107; 46 USC 7108; 46 USC 7009; 46 USC 7110; 46 USC 7111; 46 USC 7112; 46 USC 7113; 46 USC 7114; ...

CFR Citation: 46 CFR 10; 46 CFR 35; 46 CFR 157; 46 CFR 175; 46 CFR 185; 46 CFR 186; 46 CFR 187; 46 CFR 15; 46 CFR 26

Legal Deadline: None.

Abstract: Amends the licensing regulations to simplify administration and improve readability to the public. Also provides a license structure for all mariners with which to advance in an orderly career pattern. Deletes many unnecessary and outdated licenses. This regulation has been made significant because of its far-reaching impact on all licensed officers of the merchant marine. The Coast Guard is reviewing the comments received and considering what final action to take on the proposal.

Timetable:

Action	Date	FR Cite
ANPRM	10/29/81	46 FR 53624
NPRM	08/08/83	48 FR 35920
Comment Period extended	11/10/83	48 FR 51650
NPRM Supplemental	10/24/85	50 FR 43316
Interim Final Rule	10/16/87	52 FR 38614
Final Action	09/00/88	

Small Entity: No

Additional Information: ADDITIONAL LEGAL AUTHORITIES: 46 USC 8101; 46 USC 8105; 46 USC 8104; 46 USC 8301; 46 USC 8302; 46 USC 8303; 46 USC 8304; 46 USC 8502; 46 USC 7701; 46 USC 7702; 46 USC 7703; Comment period runs until 02/21/86. Public hearings held in Washington, D.C.; New York, New York; Seattle, Washington; San Francisco, California; and New Orleans, Louisiana.

Analysis: Regulatory Evaluation 08/08/83 (48 FR 35920)

Agency Contact: LCDR Jenkins, Project Manager, Department of Transportation, U.S. Coast Guard, 2100 Second Street, SW, Washington, DC 20593, 202 267-0224

RIN: 2115-AA64

1656. + SAFETY RULES FOR VESSELS ENGAGED IN CHEMICAL WASTE INCINERATION AT SEA (84-025)

Significance: Agency Priority

Legal Authority: 46 USC 3703

CFR Citation: 46 CFR 150

Legal Deadline: None.

Abstract: Would establish safety rules for the design of vessels engaged in the incineration of chemical wastes at sea. This regulation is significant because of substantial public interest.

Timetable:

Action	Date	FR Cite
NPRM	08/25/86	51 FR 30241
NPRM Comment Period End	10/24/86	
Final Action	04/00/88	

Small Entity: No

Analysis: Regulatory Evaluation 08/25/86 (51 FR 30241)

Agency Contact: CDR R. Tanner, Department of Transportation, U.S. Coast Guard, 2100 Second Street, SW, Washington, DC 20593-0001, 202 267-1217

RIN: 2115-AB60

1657. HOPPER DREDGE WORKING FREEBOARD - LOAD LINE AND STABILITY REQUIREMENTS (76-080)

Significance: Nonsignificant

Legal Authority: 43 USC 1333(d); 46 USC 3306; 46 USC 3703; 46 USC 5115

CFR Citation: 46 CFR 42; 46 CFR 44; 46 CFR 45; 46 CFR 174; 46 CFR 170

Legal Deadline: None.

Abstract: Would permit self-propelled hopper dredge to load to a deeper draft (working freeboard). Only dredges desiring working freeboard must comply. Requirements for load line and stability are promulgated.

Timetable:

Action	Date	FR Cite
ANPRM	08/02/76	41 FR 32237
NPRM	12/10/79	44 FR 70791
SNPRM	01/24/80	45 FR 5780
SNPRM	12/14/87	52 FR 47422
Final Action	02/00/89	

Small Entity: No

Analysis: Regulatory Evaluation 02/00/89

Agency Contact: LCDR McCarthy, Department of Transportation, U.S. Coast Guard, 2100 Second Street, SW, Washington, DC 20593-0001, 202 267-2988

RIN: 2115-AA11

1658. DEFECT NOTIFICATION AND FIRST-PURCHASER INFORMATION (77-115)

Significance: Nonsignificant

Legal Authority: 46 USC 4310

CFR Citation: 33 CFR 179.01 to 179.19

Legal Deadline: None.

Abstract: This rulemaking would require marine dealers to furnish boat and engine manufacturers with serial numbers of new boats and engines sold and the names and addresses of retail first purchasers of those products. Manufacturers would use the information to locate purchasers of boats and engines recalled for defects which create a substantial risk of personal injury to the public and for failures to comply with applicable regulations. Currently many manufacturers cannot obtain sufficient first-purchaser information and their attempts to notify during recalls are inadequate.

Timetable:

Action	Date	FR Cite
NPRM	12/29/80	45 FR 85475
Supplemental NPRM	05/29/87	52 FR 20115
Supplemental NPRM	12/16/87	52 FR 47590
Final Action	06/00/88	

Small Entity: No

Additional Information: Docket No. CGD 77-115.

Analysis: Regulatory Evaluation 12/16/87 (52 FR 47950)

Agency Contact: Mr. Colihan, Project Manager, Department of Transportation, U.S. Coast Guard, 2100 Second Street, SW, Washington, DC 20593-0001, 202 267-0981

RIN: 2115-AA16

1659. HYBRID PERSONAL FLOTATION DEVICES: ESTABLISHMENT OF APPROVAL REQUIREMENTS (78-174)

Significance: Nonsignificant

Legal Authority: 46 USC 3306; 46 USC 3703; 46 USC 4104; 46 USC 4302

CFR Citation: 46 CFR 160

Legal Deadline: None.

Abstract: Would establish performance standards for hybrid PFDs and procedures for granting product approval to these devices.

Timetable:

Action	Date	FR Cite
ANPRM	03/15/79	44 FR 15933
NPRM	05/29/85	50 FR 21862
NPRM Comment Period End	07/15/85	
Interim Final Rule	08/22/85	50 FR 33923
Final Action	04/00/89	

Small Entity: No

Additional Information: Docket No. CGD 78-174. Two additional projects split from this one. They are listed in this Agenda as CGD 78-174a, Carriage and Operational Requirements for Hybrid PFDs and CGD 78-174b, Carriage and Operational Requirements for Inflatable Life Jackets. Entries for these projects follow in the agenda.

Analysis: Regulatory Evaluation 08/22/85 (50 FR 33923)

Agency Contact: Mr. S. Wehr, Department of Transportation, U.S. Coast Guard, 2100 Second Street, SW, Washington, DC 20593-0001, 202 267-1444

RIN: 2115-AA29

1660. LAUNCHING DEVICES FOR LIFERAFTS (79-168)

Significance: Nonsignificant

Legal Authority: 46 USC 2104; 46 USC 3306

CFR Citation: 46 CFR 160; 46 CFR 163

Legal Deadline: None.

Abstract: Would establish standards, procedures, and tests for approving equipment used to launch liferafts from vessels and offshore platforms.

Timetable:

Action	Date	FR Cite
NPRM	02/13/86	50 FR 5377
NPRM Comment Period End	05/13/86	
Final Action	06/00/88	

Small Entity: No

Additional Information: Docket No. CGD 79-168.

Analysis: Regulatory Evaluation 02/13/86 (51 FR 5377)

Agency Contact: LCDR Riley, Department of Transportation, U.S. Coast Guard, 2100 Second Street, SW, Washington, DC 20593-0001, 202 267-1444

RIN: 2115-AA45

1661. VITAL SYSTEM AUTOMATION (CGD 81-030)

Significance: Nonsignificant

Legal Authority: 46 USC 3306; 46 USC 8105

CFR Citation: 46 CFR 52; 46 CFR 56; 46 CFR 58; 46 CFR 61; 46 CFR 62; 46 CFR 110; 46 CFR 111; 46 CFR 113

Legal Deadline: None.

Abstract: Final rule would include provisions for the safe and reliable design and construction of vital system automation on new and modified U.S.-flag passenger vessels and U.S.-flag vessels regulated under 46 CFR Subchapters D, I, and U of 500 gross tons and over. It will also include the technical criteria for the evaluation of safe manning levels on automated vessels. Would incorporate the results of casualty analysis, the amendment to the International Convention for the Safety of Life at Sea, 1974 (SOLAS '74), and longstanding Coast Guard guidance on automation found in navigation and vessel inspection circulars NVIC 1-69 and NVIC 6-84.

Timetable:

Action	Date	FR Cite
NPRM	09/23/85	50 FR 38608
NPRM Comment Period End	02/21/86	
Final Action	07/00/88	

Small Entity: No

Additional Information: Docket No. CGD 81-030.

Analysis: Regulatory Evaluation 09/23/85 (50 FR 38608)

Agency Contact: LCDR Randall, Department of Transportation, U.S. Coast Guard, 2100 Second Street, SW, Washington, DC 20593, 202 267-2206

RIN: 2115-AA59

1662. GENERAL BRIDGE PERMIT REGULATIONS (81-057)

Significance: Nonsignificant

Legal Authority: 33 USC 401

CFR Citation: 33 CFR 115

Legal Deadline: None.

Abstract: Would establish the general bridge-permit program. There is an initiative to transfer the Bridge Program to the Corps of Engineers. If the Corps agrees and Congress approves, the program will be transferred.

Timetable:

Action	Date	FR Cite
NPRM	09/23/82	47 FR 41988
NPRM Supplemental	04/24/86	51 FR 15503

Next Action Undetermined

Small Entity: No

Additional Information: This project is inactive pending transfer of the Bridge Program from Coast Guard to the Corps of Engineers.

Analysis: Regulatory Evaluation 04/24/86 (51 FR 15503)

Agency Contact: Mr. N. Mpras, Assistant Division Chief, Department of Transportation, U.S. Coast Guard, 2100 Second Street, SW, Washington, DC 20593-0001, 202 267-0368

RIN: 2115-AA61

1663. HANDHELD FLASHLIGHTS (82-042)

Significance: Nonsignificant

Legal Authority: 46 USC 3306; 46 USC 3703

CFR Citation: 46 CFR 33; 46 CFR 35; 46 CFR 75; 46 CFR 77; 46 CFR 94; 46 CFR 96; 46 CFR 108; 46 CFR 154; 46 CFR 160; 46 CFR 161; 46 CFR 192; 46 CFR 195

Legal Deadline: None.

Abstract: Would delete 46 CFR 161.008 and incorporate by reference an industry standard in the applicable vessel subparts.

Timetable:

Action	Date	FR Cite
NPRM	09/25/87	52 FR 36062
NPRM Comment Period End	11/09/87	52 FR 36062
Final Action	04/00/88	

Small Entity: No

Additional Information: An industry standard has been developed and will be incorporated by reference in the applicable parts.

Analysis: Regulatory Evaluation 04/00/88

Agency Contact: Mr. T. Nolan, Department of Transportation, U.S. Coast Guard, 2100 Second Street, SW, Washington, DC 20593, 202 267-2206

RIN: 2115-AA91

1664. SAFETY/SECURITY ZONE REGULATIONS

Significance: Nonsignificant

Legal Authority: 33 USC 1233; 33 USC 1225

CFR Citation: 33 CFR 100; 33 CFR 165

Legal Deadline: None.

Abstract: Nonsignificant regulations issued routinely and frequently as a part of an established body of technical requirements to keep those requirements operationally current. Total actions expected to continue through 04/00/89.

Timetable:

Action	Date	FR Cite
Total actions expected to end	04/00/89	

Small Entity: No

Agency Contact: Ms. M. Hegy, Department of Transportation, U.S. Coast Guard, 2100 Second Street, SW, Washington, DC 20593-0001, 202 267-0415

RIN: 2115-AA97

1665. ANCHORAGE AREA REGULATIONS

Significance: Nonsignificant

Legal Authority: 33 USC 471; 33 USC 2030; 33 USC 2035; 33 USC 2071

CFR Citation: 33 CFR 110

Legal Deadline: None.

Abstract: Nonsignificant regulations issued routinely and frequently as a part of an established body of technical requirements to keep those requirements operationally current. Total actions expected to continue through 04/00/89.

Timetable:

Action	Date	FR Cite
Total actions expected to end	04/00/89	

Small Entity: No

Agency Contact: Ms. M. Hegy, Department of Transportation, U.S. Coast Guard, 2100 Second Street, SW, Washington, DC 20593-0001, 202 267-0415

RIN: 2115-AA98

1666. DOCUMENTATION OF VESSELS; CONTROLLING INTEREST (82-105)

Significance: Nonsignificant

Legal Authority: 46 USC 12121; 49 USC 108

CFR Citation: 46 CFR 67

Legal Deadline: None.

Abstract: Would define the term "controlling interests" for the purpose of documenting vessels owned by partnerships.

Timetable:

Action	Date	FR Cite
ANPRM	11/12/82	47 FR 51170
NPRM	07/16/84	49 FR 28744
NPRM Comment Period End	09/01/84	49 FR 28744
Comment period extended to 10/15/84	09/13/84	49 FR 35967
Final Action	06/00/88	

Small Entity: Undetermined

Additional Information: Docket No. CGD 82-105.

Analysis: Regulatory Evaluation 07/16/84 (49 FR 28744)

Agency Contact: Mr. T. L. Willis, Merchant Vessel Inspection and Documentation Division, Department of Transportation, U.S. Coast Guard, 2100 Second Street, SW, Washington, DC 20593-0001, 202 267-1492

RIN: 2115-AB27

1667. CARRIAGE AND USE OF LIQUEFIED OR NONLIQUEFIED FLAMMABLE GAS AS COOKING FUELS ON VESSELS CARRYING PASSENGERS FOR HIRE (83-013)

Significance: Nonsignificant

Legal Authority: 46 USC 2104; 46 USC 3306; 46 USC 4104; 46 USC 4105; 46 USC 4302

CFR Citation: 46 CFR 25; 46 CFR 58; 46 CFR 147; 46 CFR 184

Legal Deadline: None.

Abstract: Proposed requirements for the use of liquefied flammable gas and compressed natural gas as cooking fuels on passenger vessels.

Timetable:

Action	Date	FR Cite
NPRM	03/22/84	49 FR 10685
SNPRM	04/18/86	50 FR 15522
Final Action	04/00/88	

Small Entity: Yes

Additional Information: Docket No. CGD 83-013.

Analysis: Regulatory Evaluation 03/22/84 (49 FR 10685)

Agency Contact: LCDR Vanhaverbeke, Department of Transportation, U.S. Coast Guard, 2100 Second Street, SW, Washington, DC 20593-0001, 202 267-1181

RIN: 2115-AB35

BEST COPY AVAILABLE

1668. HAZARDOUS MATERIALS USED AS SHIP'S STORES ONBOARD VESSELS (84-044)

Significance: Nonsignificant

Legal Authority: 46 USC 3306

CFR Citation: 46 CFR 2; 46 CFR 31; 46 CFR 34; 46 CFR 58; 46 CFR 71; 46 CFR 76; 46 CFR 91; 46 CFR 107; 46 CFR 108; 46 CFR 109; 46 CFR 147; 46 CFR 167; 46 CFR 176; 46 CFR 181; 46 CFR 189; ...

Legal Deadline: None.

Abstract: Would reduce the burden on shippers and manufacturers by deleting the requirement for separate Coast Guard classification of Ship's Stores and adopting the classification and identification provisions found in 49 CFR Subchapter C which are already required for the transportation of hazardous materials. It would also eliminate requirements for materials no longer in use and delete Table S.

Timetable:

Action	Date	FR Cite
NPRM	07/07/87	52 FR 25409
Correction to NPRM	07/10/87	52 FR 26121
NPRM Comment Period End	10/05/87	52 FR 25409
Final Action	04/00/88	

Small Entity: No

Analysis: Regulatory Evaluation 07/07/87 (52 FR 25409)

Agency Contact: Mr. C. Rivkin, Department of Transportation, U.S. Coast Guard, 2100 Second Street, SW, Washington, DC 20593-0001, 202 267-1317

RIN: 2115-AB65

1669. LICENSING OF OFFICERS AND OPERATORS FOR MOBILE OFFSHORE DRILLING UNITS (81-59A)

Significance: Nonsignificant

Legal Authority: 46 USC 3306; 46 USC 7101; 46 USC 7102; 46 USC 7103; 46 USC 7104; 46 USC 7105; 46 USC 7106; 46 USC 7107; 46 USC 7108; 46 USC 7009; 46 USC 7110; 46 USC 7111; 46 USC 7112; 46 USC 7113; 46 USC 7114; ...

CFR Citation: 46 CFR 10; 46 CFR 15

Legal Deadline: None.

Abstract: This project resulted from comments received on Coast Guard proposed rulemaking 81-59, Licensing of Officers and Motorboat Operators and Registration of Staff Officers which is contained in this agenda under another listing. The comments suggested that licensing of officers on Mobile Offshore Drilling Units be discussed in a separate rulemaking. This project is the result of those suggestions; it establishes licensing requirements for officers on Mobile Drilling Units. The Coast Guard is reviewing the comments received and considering what final action to take on the proposal.

Timetable:

Action	Date	FR Cite
NPRM	08/08/83	48 FR 35920
SNPRM	10/24/85	50 FR 43316
Interim Final Rule	10/16/87	52 FR 38660
Final Action	09/00/88	

Small Entity: No

Additional Information: This project was split from Coast Guard docket 81-059, Licensing of Officers and Motorboat Operators and Registration of Staff Officers, which is listed elsewhere in this agenda with the RIN 2115-AA64.

Analysis: Regulatory Evaluation 10/16/87 (52 FR 38660)

Agency Contact: LCDR Jenkins, Department of Transportation, U.S. Coast Guard, 2100 Second Street, SW, Washington, DC 20593-0001, 202 267-0224

RIN: 2115-AB91

1670. MARPOL POLLUTION PREVENTION REGULATIONS (85-026)

Significance: Nonsignificant

Legal Authority: 33 USC 1321; 33 USC 1902; 33 USC 1903

CFR Citation: 33 CFR 155; 33 CFR 151

Legal Deadline: None.

Abstract: This rulemaking would implement various provisions of the International Convention for the Prevention of Pollution from Ships 1973, as modified by the Protocol of 1978 Relating Thereto (MARPOL 73/78). These proposed changes are largely editorial.

Timetable:

Action	Date	FR Cite
NPRM	02/07/86	51 FR 4768
Final Action	04/00/88	

Small Entity: No

Analysis: Regulatory Evaluation 04/00/88

Agency Contact: CDR David Pascoe, Department of Transportation, U.S. Coast Guard, 2100 Second Street, SW, Washington, DC 20593-0001, 202 267-0421

RIN: 2115-AC11

1671. CARRIAGE AND OPERATIONAL REQUIREMENTS FOR INFLATABLE LIFE JACKETS (78-174B)

Significance: Nonsignificant

Legal Authority: 46 USC 3306; 46 USC 3703; 46 USC 4104; 46 USC 4302

CFR Citation: 46 CFR 25; 46 CFR 26; 46 CFR 30; 46 CFR 33; 46 CFR 35; 46 CFR 70; 46 CFR 75; 46 CFR 78; 46 CFR 90; 46 CFR 94; 46 CFR 97; 46 CFR 108; 46 CFR 109; 46 CFR 160; 46 CFR 167; ...

Legal Deadline: None.

Abstract: Would establish approval and operating requirements for inflatable life jackets. Their use would be optional.

Timetable:

Action	Date	FR Cite
NPRM	05/29/85	50 FR 21878
Final Action	09/00/88	

Small Entity: No

Additional Information: This project, and a companion, Recreational Hybrid PFD's (78-174a), split from the rule titled Hybrid PFD's; Establishment of Approval Requirements (78-174) (RIN: 2115-AA29),which was published as an interim final rule (50 FR 33923).

Analysis: Regulatory Evaluation 05/29/85 (50 FR 21878)

Agency Contact: Mr. Wehr, Department of Transportation, U.S. Coast Guard, 2100 Second Street, SW, Washington, DC 20593-0001, 202 267-1444

RIN: 2115-AC16

1672. INTERVALS FOR INTERNAL EXAMINATION AND HYDROSTATIC TESTING OF PRESSURE VESSEL TYPE CARGO TANKS (85-061)

Significance: Nonsignificant

Legal Authority: 46 USC 3703

CFR Citation: 46 CFR 38; 46 CFR 151

Legal Deadline: None.

Abstract: The Coast Guard is proposing to amend the regulations that govern internal inspection and hydrostatic test intervals for pressure vessel cargo

VOL 53 ISS 79 PT 1 APR 25 1988 UMI

tanks on barges that transport liquefied gaseous cargoes and grade A flammable liquids.

Timetable:

Action	Date	FR Cite
ANPRM	12/03/85	50 FR 49536
ANPRM Comment Period End	03/03/86	
NPRM	09/08/87	52 FR 33841
Comment Period Extended to 03/07/88	12/01/87	52 FR 45665
NPRM Comment Period End	03/07/88	52 FR 45665
Final Action	08/00/88	

Small Entity: No

Analysis: Regulatory Evaluation 09/08/87 (52 FR 33841)

Agency Contact: LCDR Powers, Project Manager, Department of Transportation, U.S. Coast Guard, 2100 Second Street, SW, Washington, DC 20593-0001, 202 267-1185

RIN: 2115-AC18

1673. SELF-INSPECTION OF FIXED OCS FACILITIES (CGD 84-098(A))

Significance: Nonsignificant

Legal Authority: 43 USC 1333(d)(1); 43 USC 1348(c); 43 USC 1356; 43 USC 1.46(z)

CFR Citation: 33 CFR 140; 33 CFR 143

Legal Deadline: None.

Abstract: Would modify 33 CFR Subchapter N by requiring owners/operators of fixed OCS facilities to conduct an annual inspection for compliance with Coast Guard regulations and report the results of the self-inspection to the Coast Guard on a Coast Guard-provided form. This proposal minimizes cost to the industry and, by allowing available Coast Guard resources to be concentrated on program oversight and on those operations with poor safety records would improve safety on the OCS.

Timetable:

Action	Date	FR Cite
ANPRM	03/07/85	50 FR 9290
ANPRM Comment Period End	09/03/85	50 FR 20445
NPRM	07/07/87	52 FR 25392
NPRM Comment Period End	08/21/87	52 FR 25392
Final Action	06/00/88	

Small Entity: No

Additional Information: CGD 84-098(a) Self-Inspection of Fixed OCS Facilities separated from CGD 84-098 on 28 Mar. 1986.

Analysis: Draft Regulatory Evaluation 07/07/87 (52 FR 25392)

Agency Contact: LCDR A. Dupree, Project Manager, Department of Transportation, U.S. Coast Guard, 2100 Second St., SW, Washington, DC 20593-0001, 202 267-2307

RIN: 2115-AC40

1674. OFFSHORE EVACUATION PROCEDURES (84-098(B))

Significance: Nonsignificant

Legal Authority: 43 USC 1333(d); 43 USC 1348(c); 43 USC 1356; 49 CFR 1.46(z)

CFR Citation: 33 CFR 140; 33 CFR 146

Legal Deadline: Statutory, September 1, 1987. Omnibus Budget Reconciliation Act of 1986 (PL 99-509)

Abstract: Would modify 33 CFR Subchapter N to require evacuation procedures for all OCS facilities on the U.S. OCS. This would apply to MODUs, both foreign and U.S.-flag; Fixed Platforms and Floating Facilities. An alternative being considered is the mandatory use of stand-by boats.

Timetable:

Action	Date	FR Cite
ANPRM	03/07/85	50 FR 9290
ANPRM Comment Period End	09/03/85	50 FR 20445
NPRM	12/24/87	52 FR 48717
Final Action	09/00/88	

Small Entity: No

Additional Information: CGD 84-098(b) Offshore Evacuation Procedures for OCS facilities separated from CGD 84-098.

Analysis: Regulatory Evaluation 12/24/87 (52 FR 48717)

Agency Contact: LCDR A. Dupree, Project Manager, Department of Transportation, U.S. Coast Guard, 2100 Second St., SW, Washington, DC 20593-0001, 202 267-2307

RIN: 2115-AC41

1675. EMERGENCY POSITION INDICATING RADIO BEACONS FOR UNINSPECTED FISHING, FISH PROCESSING, AND FISH TENDING VESSELS (87-016)

Significance: Nonsignificant

Legal Authority: 46 USC 4102 as amended by Coast Guard Authorization Act of 1986

CFR Citation: 46 CFR 25; 46 CFR 26

Legal Deadline: None.

Abstract: The Coast Guard Authorization Act of 1986 amended 46 USC 4102 to require uninspected fishing, fish processing, and fish tender vessels operating on the high seas to carry "the number and type of Emergency Position Indicating Radio Beacons (EPIRBS) prescribed by regulation." By implementing the law this proposal would ensure rapid and effective search and rescue during emergency situations.

Timetable:

Action	Date	FR Cite
NPRM	09/03/87	52 FR 33448
NPRM Comment Period End	11/19/87	52 FR 39546
Final Action	04/00/88	

Small Entity: No

Analysis: Draft Regulatory Evaluation 05/14/87

Agency Contact: LCDR W. M. Riley, Project Manager, Department of Transportation, U.S. Coast Guard, 2100 Second St., SW, Washington, DC 20593-0001, 202 267-1444

RIN: 2115-AC69

1676. DELEGATION OF AUTHORITY TO MEASURE VESSELS (87-015A)

Significance: Nonsignificant

Legal Authority: 46 USC 14103

CFR Citation: 46 CFR 69

Legal Deadline: None.

Abstract: This project will propose standards to enable maritime-related organizations to participate with the American Bureau of Shipping in measuring U.S. vessels.

Timetable:

Action	Date	FR Cite
NPRM	12/03/87	52 FR 46103
NPRM Comment Period End	02/02/88	52 FR 46103
Final Action	04/00/88	

Small Entity: No

Analysis: Regulatory Evaluation 12/03/87 (52 FR 46103)

Agency Contact: Mr. Joseph T. Lewis, Project Manager, Department of Transportation, U.S. Coast Guard, 2100 Second St., SW, Washington, DC 20593, 202 267-2992

RIN: 2115-AC70

1677. INCORPORATIONS BY REFERENCE, VOLUNTARY INDUSTRY STANDARDS (CGD 87-046)

Significance: Nonsignificant

Legal Authority: 46 USC 4302; 49 CFR 1.46

CFR Citation: 33 CFR 183.5; 33 CFR 183.430; 33 CFR 183.435; 33 CFR 183.505; 33 CFR 183.516; 33 CFR 183.610

Legal Deadline: None.

Abstract: Rule amends 33 CFR 183, Subparts I, J and K, adopting the latest versions of voluntary industry standards by incorporation by reference. These changes do not involve substantive changes and are being published as as a final rule (editorial change).

Timetable:

Action	Date	FR Cite
Final Action	06/00/88	

Small Entity: Yes

Analysis: Regulatory Evaluation 06/00/88

Agency Contact: Mr. Alston Colihan, Project Manager, Department of Transportation, U.S. Coast Guard, 2100 Second Street, SW, Washington, DC 20593-0001, 202 267-0981

RIN: 2115-AC72

1678. ELECTRICAL SYSTEM STANDARD (CGD 87-009)

Significance: Nonsignificant

Legal Authority: 46 USC 4302; 49 CFR 1.46

CFR Citation: 33 CFR 183 to 435(a)(4); 33 CFR 183 to 435(a)(5)

Legal Deadline: None.

Abstract: Rule proposes to amend current regulations on electrical systems for new boats by incorporating Underwriters Laboratories (UL) Standard 1426 by reference to replace UL Standard 83 in Subpart I of Part 83. The proposed rule would also delete a general reference to acceptable wire types in circuits of 50 volts or more. The intended effect is to recognize one of the most widely used wire types, UL boat cable, and to delete a very general reference that is not considered useful.

Timetable:

Action	Date	FR Cite
NPRM	11/23/87	52 FR 44918
NPRM Comment Period End	02/22/88	52 FR 44918
Final Action	06/00/88	

Small Entity: Yes

Analysis: Regulatory Evaluation 06/00/88

Agency Contact: Mr. Alston Colihan, Project Manager, Department of Transportation, U.S. Coast Guard, 2100 Second Street, SW, Washington, DC 20593-0001, 202 267-0981

RIN: 2115-AC73

1679. ASSISTANCE TOWING LICENSES (CGD 87-017)

Significance: Nonsignificant

Legal Authority: 46 USC 8904; 46 USC 7101; 49 CFR 1.46

CFR Citation: 46 CFR 10; 46 CFR 157; 46 CFR 187

Legal Deadline: Statutory, January 1, 1988. Amendment to 46 USC 8904 requiring assistance towing licenses becomes effective 1 January 1988

Abstract: Rule proposes to amend the regulations for the licensing of maritime personnel to include specific licensing and manning requirements for all vessels, regardless of size, which tow a disabled vessel for consideration. This proposal is made in response to a statutory change requiring such licenses. This action is intended to provide assurance to all involved parties that all persons who provide assistance towing services have met minimum established standards for knowledge and experience.

Timetable:

Action	Date	FR Cite
NPRM	08/20/87	52 FR 31429
NPRM Comment Period End	10/19/87	52 FR 31429

Next Action Undetermined

Small Entity: No

Public Compliance Cost: Initial Cost: $18,750; Yearly Recurring Cost: $0; Base Year for Dollar Estimates: 1987

Analysis: Regulatory Evaluation 06/20/87 (52 FR 31429)

Agency Contact: LCDR Gary Kaminski, Project Manager, Department of Transportation, U.S. Coast Guard, 2100 Second St., S.W., Washington, DC 20593-0001, 202 267-0218

RIN: 2115-AC82

1680. ● DELEGATION OF AUTHORITY TO AREA COMMANDERS WHEN FUNCTIONING AS MARITIME DEFENSE ZONE COMMANDERS (CGD 87-065)

Significance: Nonsignificant

Legal Authority: 50 USC 191; EO 10173; EO 10277; EO 10352; EO 11249

CFR Citation: 33 CFR 1; 33 CFR 6; 33 CFR 19; 33 CFR 109; 33 CFR 125; 33 CFR 126; 33 CFR 147; 33 CFR 160; 33 CFR 161; 33 CFR 165; 33 CFR 167; 46 CFR 1; 46 CFR 6

Legal Deadline: None.

Abstract: Following the 1986 reorganization of the Coast Guard, Area Commanders do not have authority to establish security zones, control vessels, or perform other necessary actions. This rule would delegate that authority to the Area Commanders. Since this proposal deals with agency procedure, it will be issued as a rule with no notice of proposed rulemaking.

Timetable:

Action	Date	FR Cite
Final Action	04/00/88	

Small Entity: No

Agency Contact: Cdr Stone, Project Manager, Department of Transportation, U.S. Coast Guard, 2100 Second St. SW, Washington, DC 20593-0001, 202 267-0489

RIN: 2115-AC88

VOL 53 ISS 79 PT 1 AP 25 1988 UMI

DEPARTMENT OF TRANSPORTATION (DOT)
U.S. Coast Guard (USCG)

Completed Actions

1681. + OPERATING A VESSEL WHILE INTOXICATED (84-099)

Significance: Regulatory Program

Legal Authority: 46 USC 6101; 46 USC 7701; 46 USC 8105; 46 USC 7101; 46 USC 3306; 46 USC 2302(a)

CFR Citation: 33 CFR 95; 33 CFR 146; 33 CFR 150; 33 CFR 173; 33 CFR 177; 46 CFR 26; 46 CFR 4; 46 CFR 5; 46 CFR 35; 46 CFR 78; 46 CFR 97; 46 CFR 109; 46 CFR 167; 46 CFR 185; 46 CFR 196 to 197

Legal Deadline: None.

Abstract: Final rule (1) prohibits crewmembers on vessels subject to inspection from performing any duties while intoxicated or within four hours of consuming alcohol, (2) prescribes civil penalties for owners, charterers, managing operators, agents, masters or individuals in charge of vessels subject to inspection that allow crewmembers to perform any duties while intoxicated, (3) allows personnel licensed, documented or certificated by the Coast Guard to seek rehabilitation prior to being subject to suspension or revocation of license, certificate or document, (4) allows Coast Guard personnel to terminate the use of certain vessels when the operator is under the influence of an intoxicant to the extent that further operation of the vessel creates an unsafe condition, (5) amends the regulations requiring reports of all marine casualties to include specific information on the role of alcohol or drugs in the casualty, (6) sets a Federal standard for determining whether an individual is operating a recreational vessel while intoxicated.

Timetable:

Action	Date	FR Cite
NPRM	05/23/86	51 FR 18902
NPRM Comment Period End	08/21/86	
SNPRM Extended Comment Period to 5/11/87 (52 FR 4116)	02/09/87	52 FR 4116
Final Action	12/14/87	52 FR 47526
Final Action Effective	01/13/88	52 FR 47526

Small Entity: No

Additional Information: This project has been combined with Coast Guard docket 84-099a, Operating a Vessel While Intoxicated: Recreational Vessels. The RIN for that project was 2115-AC24.

Analysis: Regulatory Evaluation 05/23/86 (51 FR 18902)

Agency Contact: LCDR Wallace/Mr. S. Connaughton/Mr. Perry, Department of Transportation, U.S. Coast Guard, 2100 Second Street, SW, Washington, DC 20593-0001, 202 267-0214

RIN: 2115-AC23

1682. + VESSEL BRIDGE-TO-BRIDGE RADIOTELEPHONE COMMUNICATIONS ON THE GREAT LAKES (84-040)

Significance: Agency Priority

Legal Authority: 33 USC 1201; 33 USC 1202; 33 USC 1203; 33 USC 1204; 33 USC 1205; 33 USC 1206; 33 USC 1207; 33 USC 1208

CFR Citation: 33 CFR 26

Legal Deadline: None.

Abstract: Recreational boat use of Channel 16, a distress and safety frequency on the Great Lakes, has become so great that commercial vessels have been having difficulty communicating navigational information. The Coast Guard is considering making modifications to the existing radiotelephone requirements. Draft changes have been exchanged between the Canadian and U.S. Coast Guards to change the technical regulations of the Great Lakes Radio agreement. Review and re-exchange of drafts currently being considered. Both governments agree on channel 13. Sequential monitoring will not be accepted by either government as filling the requirements of a "continuous watch." Which size and type of vessels that will be required to monitor channel 13 needs to be clarified.

Timetable:

Action	Date	FR Cite
Request for comments	07/06/84	49 FR 27786
Withdrawn	12/28/87	

Small Entity: No

Additional Information: This project has been taken over by the Federal Communications Commission and will no longer be the responsibility of the Coast Guard.

Agency Contact: Mr. P. Palmer, Department of Transportation, U.S. Coast Guard, 2100 Second Street, SW, Washington, DC 20593-0001, 202 267-0362

RIN: 2115-AB89

1683. LIQUEFIED NATURAL GAS WATERFRONT FACILITY (78-038)

Significance: Nonsignificant

Legal Authority: 33 USC 1225

CFR Citation: 33 CFR 127

Legal Deadline: None.

Abstract: Would establish LNG Waterfront Facility Safety Regulations in accordance with Memorandum of Understanding between USCG and Research and Special Programs Administration.

Timetable:

Action	Date	FR Cite
ANPRM	08/03/78	43 FR 34362
ANPRM Supplementary	03/06/79	44 FR 12693
NPRM	05/16/86	51 FR 18276
Final Action	02/05/88	53 FR 3370
Final Action Effective	06/02/88	

Small Entity: Yes

Additional Information: Docket No. CGD 78-038.

Analysis: Regulatory Evaluation 05/16/86 (51 FR 18276)

Agency Contact: LCDR J. Whitehead, Department of Transportation, U.S. Coast Guard, 2100 Second Street, SW, Washington, DC 20593-0001, 202 267-0491

RIN: 2115-AA22

1684. DELEGATION OF AUTHORITY TO UNITED STATES CLASSIFICATION SOCIETIES (85-019)

Significance: Nonsignificant

Legal Authority: 46 USC 3316

CFR Citation: 46 CFR 2

Legal Deadline: None.

Abstract: The Coast Guard, under 46 U.S.C. 3316, delegates plan review and inspection to the American Bureau of Shipping. Other classification societies requested similar acceptance. The advance notice was withdrawn because of the adverse impact on Coast Guard resources and lack of support by shipowners and operators.

Timetable:

Action	Date	FR Cite
ANPRM	10/03/85	50 FR 40413
ANPRM Comment Period End	01/03/86	
Withdrawn	03/31/88	53 FR 10406

Small Entity: No

Analysis: Regulatory Evaluation 04/00/88

Agency Contact: Mr. J. Kinsey, Project Manager, Department of Transportation, U.S. Coast Guard, 2100 Second Street, SW, Washington, DC 20593-0001, 202 267-1181

RIN: 2115-AC10

1685. U.S. AID TO NAVIGATION SYSTEMS (86-031)

Significance: Nonsignificant

Legal Authority: 14 USC 81; 14 USC 87; 14 USC 92; 14 USC 93; 14 USC 633; 14 USC 85; 33 USC 1233; 43 USC 1333(d)

CFR Citation: 33 CFR 60; 33 CFR 66; 33 CFR 100

Legal Deadline: None.

Abstract: This regulation amends 33 CFR Part 62 – United States Aid to Navigation Systems – to include the International Association of Lighthouse Authorities System.

Timetable:

Action	Date	FR Cite
NPRM	05/24/87	52 FR 11506
Final Action	11/06/87	52 FR 42639
Final Action Effective	12/07/87	52 FR 42639

Small Entity: No

Analysis: Regulatory Evaluation 11/06/87 (52 FR 42639)

Agency Contact: LTJG Wulfkuhle, Department of Transportation, U.S. Coast Guard, 2100 Second St. SW, Washington, DC 20593-0001, 202 267-0348

RIN: 2115-AC33

1686. IMMERSION SUITS (84-069A)

Significance: Nonsignificant

Legal Authority: 46 USC 3306(a)

CFR Citation: 46 CFR 160

Legal Deadline: None.

Abstract: This project revised the specifications for approval of exposure suits. Existing approvals for exposure suits under 46 CFR 160.071 will be terminated on the effective date of these regulations and new approval will be issued for immersion suits under 46 CFR 160.171 after supplemental testing. Existing vessels could continue to use exposure suits approved under 46 CFR 160.071 as long as the suits remain serviceable. Ships, the construction or conversion of which started on or after July 1, 1986, will be required to have immersion suits approved under 46 CFR 160.071. The changes are needed to conform the regulations to the International Convention for Safety of Life at Sea, 1974, as amended (SOLAS 74/83).

Timetable:

Action	Date	FR Cite
ANPRM	12/31/84	
NPRM	02/04/86	51 FR 4401
NPRM Comment Period End	05/05/86	51 FR 4401
Final Action	01/12/87	52 FR 1185
Supplemental Notice of Proposed Rulemaking	04/23/87	52 FR 13479
Suspension of Effective Date	04/23/67	52 FR 13445
Comment Period End	06/08/87	
Final Action	10/22/87	52 FR 39531
Final Action Effective	01/20/88	52 FR 39531

Small Entity: No

Analysis: Regulatory Evaluation 02/04/86 (51 FR 4401)

Agency Contact: LCDR W. M. Riley, Project Manager, Department of Transportation, U.S. Coast Guard, 2100 Second St., SW, Washington, DC 20593-0001, 202 267-1444

RIN: 2115-AC66

1687. SECURITY MEASURES: PLACARDING (CGD 87-044)

Significance: Nonsignificant

Legal Authority: 50 USC 191; EO 10173

CFR Citation: 33 CFR 122

Legal Deadline: None.

Abstract: This rule amends the requirement to post a placard showing atomic attack safety instructions. The information on the placard is either outdated or found in other publications required to be maintained onboard merchant vessels.

Timetable:

Action	Date	FR Cite
Final Action	11/06/87	52 FR 42649
Final Action Effective	11/06/87	52 FR 42649

Small Entity: No

Analysis: Regulatory Evaluation 11/06/87 (52 FR 42649)

Agency Contact: LCDR Joel Whitehead, Department of Transportation, U.S. Coast Guard, Commandant (G-MPS-3), 2100 Second St., SW, Washington, DC 20593-0001, 202 267-0507

RIN: 2115-AC75

1688. YORK SPIT CHANNEL, CHESAPEAKE BAY, NAVIGATION (CGD 86-066)

Significance: Nonsignificant

Legal Authority: 33 USC 1231; 49 CFR 1.46

CFR Citation: 33 CFR 162.45

Legal Deadline: None.

Abstract: Deletes outdated navigation requirements no longer administered or enforced (33 CFR 162.45).

Timetable:

Action	Date	FR Cite
NPRM	05/21/87	52 FR 19173
NPRM Comment Period End	07/06/87	52 FR 19173
Final Action	11/06/87	52 FR 42650
Final Action Effective	12/07/87	52 FR 42650

Small Entity: No

Government Levels Affected: Local, State, Federal

Analysis: Regulatory Evaluation 11/06/87 (52 FR 42650)

Agency Contact: Ms. M. Hegy, Project Manager, Department of Transportation, U.S. Coast Guard, COMDT (NSS-2), 2100 2nd St., SW, Washington, DC 20593, 202 267-0415

RIN: 2115-AC76

1689. INLAND WATERWAY NAVIGATION RULES - SAN JOAQUIN AND SACRAMENTO RIVER DEEP WATER SHIP CHANNELS (CGD 86-078)

Significance: Nonsignificant

Legal Authority: 33 USC 1231; 49 CFR 1.46

DOT—USCG

Completed Actions

CFR Citation: 33 CFR 162.205

Legal Deadline: None.

Abstract: Contemplated action would have revised regulations to reflect current use and operation; as the action is no longer necessary, it is terminated.

Timetable:

Action	Date	FR Cite
Action terminated	12/28/87	

Small Entity: No

Government Levels Affected: Local, State, Federal

Agency Contact: Ms. Margie Hegy, Project Manager, Department of Transportation, U.S. Coast Guard, COMDT (NSS-2), 2100 2nd St., SW, Washington, DC 20593, 202 267-0415

RIN: 2115-AC77

1690. PORT ACCESS ROUTES; APPROACH TO TAMPA BAY, FLORIDA (CGD 85-097)

Significance: Nonsignificant

Legal Authority: 33 USC 1223

CFR Citation: 33 CFR 166

Legal Deadline: None.

Abstract: Based on the results of a Port Access Route study, the Coast Guard eliminates the existing Southern Tampa Fairway Anchorage and establishes a new fairway anchorage in the approach to Tampa Bay, Florida.

Timetable:

Action	Date	FR Cite
NPRM	07/27/87	52 FR 28019
NPRM Comment Period End	09/25/87	52 FR 28019
Final Action	01/19/88	53 FR 1347
Final Action Effective	02/18/88	53 FR 1347

Small Entity: No

Government Levels Affected: Local, State, Federal

Analysis: Regulatory Evaluation 07/27/87 (52 FR 28019)

Agency Contact: Ms. M. Hegy, Project Manager, Department of Transportation, U.S. Coast Guard, COMDT (G-NSS-2), 2100 2nd St., SW, Washington, DC 20593, 202 267-0415

RIN: 2115-AC79

DEPARTMENT OF TRANSPORTATION (DOT)

Federal Aviation Administration (FAA)

Prerule Stage

1691. + POWERED ULTRALIGHTS: AIRMAN CERTIFICATION REQUIREMENTS

Significance: Regulatory Program

Legal Authority: 49 USC 1301(7); 49 USC 1303; 49 USC 1344; 49 USC 1348; 49 USC 1352 to 1355; 49 USC 1401 to 1406; 49 USC 1421 to 1432; 49 USC 1471; 49 USC 1472; 49 USC 1502; 49 USC 1510; 49 USC 1522; 49 USC 2121 to 2125; 49 USC 106(g); 42 USC 4321

CFR Citation: 14 CFR 1; 14 CFR 61; 14 CFR 91; 14 CFR 103

Legal Deadline: None.

Abstract: Action would propose to establish airman certification requirements for persons operating powered ultralight aircraft. These mandatory certification standards are being considered because the response by ultralight operators to voluntary training programs has not been adequate. These proposed certification requirements would be intended to achieve an acceptable level of safety in the operation of these aircraft.

Timetable:

Action	Date	FR Cite
Next Action Undetermined		

Small Entity: No

Agency Contact: William Cook, Department of Transportation, Federal Aviation Administration, 800 Independence Ave., SW, Washington, DC 20591, 202 267-3844

RIN: 2120-AB69

1692. + ULTRALIGHT AIRCRAFT REGISTRATION AND MARKING

Significance: Regulatory Program

Legal Authority: 49 USC 1348; 49 USC 1354; 49 USC 1401; 49 USC 1402; 49 USC 1421 to 1430; 49 USC 1423; 49 USC 1522; 49 USC 1655(c); 49 USC 1347; 49 USC 1357(d)(2); 49 USC 1372; 49 USC 1442; 49 USC 1443; 49 USC 1472; 49 USC 1432

CFR Citation: 14 CFR 1; 14 CFR 103

Legal Deadline: None.

Abstract: This action would establish registration and marking requirements for powered ultralight aircraft. These requirements are needed to enforce existing ultralight air traffic safety requirements effectively and to enable the FAA to issue important safety information to powered ultralight operators. The FAA intends that these requirements will better protect the safety of other airspace users and persons and property on the ground from unsafe powered ultralight activity.

Timetable:

Action	Date	FR Cite
Next Action Undetermined		

Small Entity: No

Analysis: Regulatory Evaluation

Agency Contact: Joseph Gwiazdowski, Department of Transportation, Federal Aviation Administration, 800 Independence Ave., SW, Washington, DC 20591, 202 267-9541

RIN: 2120-AC09

1693. + AIRPLANE CABIN-FIRE PROTECTION

Significance: Agency Priority

Legal Authority: 49 USC 1344; 49 USC 1354(a); 49 USC 1355; 49 USC 1421 to 1430; 49 USC 106(g); PL 97-449

CFR Citation: 14 CFR 25

Legal Deadline: None.

Abstract: To develop a revision to FAR 25.853 to improve fire protection for lavatories and galleys by requiring that smoke detectors and fire extinguishers, among other things, be installed. This rulemaking is significant because it involves important Departmental policy.

Timetable:

Action	Date	FR Cite
Next Action Undetermined		

Small Entity: No

Additional Information: Project follows completion of Part 121 rulemaking.

Agency Contact: Gary L. Killion, Department of Transportation, Federal Aviation Administration, Northwest Mountain Region, 17900 Pacific Highway South, C-68966, Seattle, Washington 98168, 206 431-2112

RIN: 2120-AB22

1694. + FLIGHT ATTENDANT FLIGHT-TIME LIMITATIONS AND REST REQUIREMENTS

Significance: Agency Priority

Legal Authority: 49 USC 1354(a); 49 USC 1355; 49 USC 1356; 49 USC 1357; 49 USC 1401; 49 USC 1421 to 1431; 49 USC 1485; 49 USC 1502; 49 USC 106(g); PL 97-449

CFR Citation: 14 CFR 121; 14 CFR 135

Legal Deadline: None.

Abstract: The Association of Flight Attendants and the Joint Council of Flight Attendant Unions have petitioned the FAA to amend Part 121 and 135 to establish maximum duty time limits and minimum hours of rest for flight attendants. Summaries of the petitions were published (50 FR 6185 and 50 FR 25252) and requested comments to assist the FAA in determining what, if any, regulatory proposals should be developed. This rulemaking is considered significant because of substantial public interest.

Timetable:

Action	Date	FR Cite
Next Action Undetermined		

Small Entity: No

Agency Contact: Gary Martindell, Department of Transportation, Federal Aviation Administration, 800 Independence Ave., SW, Washington, DC 20591, 202 267-3757

RIN: 2120-AB97

1695. + PART 129 SECURITY PROGRAM FOR FOREIGN AIR CARRIERS

Significance: Agency Priority

Legal Authority: 49 USC 1346; 49 USC 1345(a); 49 USC 1356; 49 USC 1357; 49 USC 1421; 49 USC 1502; 49 USC 1511; 49 USC 106(g)

CFR Citation: 14 CFR 129

Legal Deadline: None.

Abstract: Notice would propose to require foreign air carriers that land or take off in the United States to submit to the Administrator for approval a written security program that describes the procedures, facilities, and equipment used by the foreign air carrier to provide for the protection of persons and property traveling in air transportation against acts of criminal violence and air piracy. This rulemaking is significant because of substantial public interest.

Timetable:

Action	Date	FR Cite
Next Action Undetermined		

Small Entity: Undetermined

Agency Contact: David Smith, Department of Transportation, Federal Aviation Administration, 800 Independence Avenue, SW, Washington, DC 20591, 202 267-3466

RIN: 2120-AC42

1696. + FLIGHT PLAN FILING REQUIREMENTS; NATIONAL AIRSPACE REVIEW RECOMMENDATION

Significance: Agency Priority

Legal Authority: 49 USC 1301(7); 49 USC 1303; 49 USC 1344; 49 USC 1348; 49 USC 1352 to 1355; 49 USC 1401; 49 USC 1421 to 1431; 49 USC 1471; 49 USC 1472; 49 USC 1502; 49 USC 1510; 49 USC 1522; 49 USC 2121 to 2125; 42 USC 4321 et seq; EO 11514; ...

CFR Citation: 14 CFR 91.83

Legal Deadline: None.

Abstract: Review flight-plan filing requirements and revise according to National Airspace Review Recommendations 2-3.1.4, 2-3.1.5, 2-3.1.6, 2-3.1.7, and 2-3.1.8, i.e., to establish lower ceiling and visibility criteria for rotorcraft so as to reduce the frequency of required IFR alternate airport filings; to allow fixed-wing aircraft to file IFR alternate airports that meet the same criteria as rotorcraft; to require pilots to indicate, in their flight plans, when their aircraft is equipped with special equipment. This rulemaking is considered significant because of substantial public interest.

Timetable:

Action	Date	FR Cite
ANPRM	12/01/88	

Small Entity: Undetermined

Additional Information: LEGAL AUTHORITY CONT: 49 USC 106(g). (Revised Pub L. 97-449, January 12, 1983)

Regulatory Project No: ATO-200-85-12R

Agency Contact: William C. Davis, Manager, Air Traffic Rule Branch, Department of Transportation, Federal Aviation Administration, 800 Independence Avenue, SW, Washington, DC 20591, 202 267-8783

RIN: 2120-AC56

1697. REVIEW OF MEDICAL STANDARDS AND CERTIFICATION PROCEDURES

Significance: Nonsignificant

Legal Authority: 49 USC 1354(a) Federal Aviation Act of 1958, Sec. 313(a); 49 USC 1355 Federal Aviation Act of 1958, Sec. 314; 49 USC 1421 Federal Aviation Act of 1958, Sec. 601; 49 USC 1427 Federal Aviation Act of 1958, Sec. 607

CFR Citation: 14 CFR 67

Legal Deadline: None.

Abstract: These regulations specify the medical standards which must be met before a medical certificate is issued to an airman. For example, a medical certificate is required before a person can obtain a pilot license. During rulemaking involving these regulations, a considerable number of commenters expressed the belief that the current standards should and could be revised to state, in generally applicable objective terms, all those circumstances in which the FAA will issue medical certificates. In the past, some certificates have been issued on a case-by-case basis, with appropriate limitations, under exemption and waiver provisions where strict compliance with the existing standards was not essential in the interest of safety. A comprehensive review of these regulations is necessary to determine if the commenters' arguments are correct. If they are and the requested regulatory changes are possible, it could greatly reduce burdens, both on the FAA and airmen,

associated with the processing of medical certificates.

Timetable:

Action	Date	FR Cite
Next Action Undetermined		

Small Entity: No

Additional Information: The FAA contracted with the American Medical Association (AMA) on August 29, 1983, to develop a comprehensive report which will be used by the FAA as part of its evaluation of Part 67 standards. AMA completed a professional review of the medical standards for civil airmen. The FAA announced the availability of the AMA report in the Federal Register on May 23, 1986 (51 FR 19040). RIN 2120-AB13 has been combined into this review.

Agency Contact: William H. Hark, M.D., Department of Transportation, Federal Aviation Administration, 800 Independence Avenue, SW, Washington, DC 20591, 202 267-3802

RIN: 2120-AA70

1698. REVIEW: PART 21—CERTIFICATION PROCEDURES FOR PRODUCTS AND PARTS

Significance: Nonsignificant

Legal Authority: 49 USC 1354(a) Federal Aviation Act of 1958, Sec. 313(a); 49 USC 1421 Federal Aviation Act of 1958, Sec. 601; 49 USC 1423 Federal Aviation Act of 1958, Sec. 603; 49 USC 1424 Federal Aviation Act of 1958, Sec. 604

CFR Citation: 14 CFR 21

Legal Deadline: None.

Abstract: This part prescribes procedural requirements for the issuance of type certificates and changes to those certificates; the issuance of production certificates; the issuance of airworthiness certificates; and the issuance of export airworthiness approvals. In addition it prescribes rules governing the holders of these certificates and procedural requirements for the approval of certain materials, parts, processes, and appliances. The review will also evaluate the impact on small entities in accordance with the Regulatory Flexibility Act.

Timetable:

Action	Date	FR Cite
Next Action Undetermined		

Small Entity: Undetermined

Analysis: Regulatory Flexibility Analysis

Agency Contact: M. C. Beard, Department of Transportation, Federal Aviation Administration, 800 Independence Avenue, SW, Washington, DC 20591, 202 267-9372

RIN: 2120-AB09

1699. REVIEW OF PARTS 61, 141, 143 - PILOT, PILOT SCHOOL AND GROUND INSTRUCTOR RULES

Significance: Nonsignificant

Legal Authority: 49 USC 1354; 49 USC 1355; 49 USC 1421; 49 USC 1422; 49 USC 1427; 49 USC 106(g)

CFR Citation: 14 CFR 61; 14 CFR 141; 14 CFR 143

Legal Deadline: None.

Abstract: The objective of this rulemaking project is to update and revise Parts 61, 141, and 143 of the Federal Aviation Regulations and determine the feasibility and need for consolidating Parts 61, 141, and 143 into a single regulation covering the entire spectrum of pilot training and certification.

Timetable:

Action	Date	FR Cite
Next Action Undetermined		

Small Entity: Undetermined

Additional Information: RIN 2120-AB14 has been combined into this review.

Agency Contact: John D. Lynch, Department of Transportation, Federal Aviation Administration, 800 Independence Avenue, SW, Washington, DC 20591, 202 267-8150

RIN: 2120-AB12

1700. REVIEW: PART 121 — CERTIFICATION AND OPERATIONS: DOMESTIC, FLAG AND SUPPLEMENTAL AIR CARRIERS AND COMMERCIAL OPERATORS OF LARGE AIRCRAFT

Significance: Nonsignificant

Legal Authority: 49 USC 1354(a) Federal Aviation Act of 1958, Sec. 313(a); 49 USC 1401 Federal Aviation Act of 1958, Sec. 501; 49 USC 1421 to 1430 Federal Aviation Act of 1958, Secs. 601-610; 49 USC 1502 Federal Aviation Act of 1958, Sec. 1102

CFR Citation: 14 CFR 121

Legal Deadline: None.

Abstract: Review of rules governing the certification and operations of air carriers, supplemental air carriers, and commercial air carriers engaging in: (1) interstate or overseas transportation under a certificate of public convenience and necessity; (2) foreign air transportation under a certificate of public convenience and necessity; (3) charter flights or other special service operations; and (4) carriage of persons or property in air commerce for compensation or hire. These regulations are being reviewed to comply with the Regulatory Flexibility Act.

Timetable:

Action	Date	FR Cite
Next Action Undetermined		

Small Entity: Undetermined

Analysis: Regulatory Flexibility Analysis

Agency Contact: Gary Martindell, Department of Transportation, Federal Aviation Administration, 800 Independence Avenue, SW, Washington, DC 20591, 202 267-3749

RIN: 2120-AB27

1701. REVIEW: PART 135 — AIR TAXI OPERATORS AND COMMERCIAL OPERATORS

Significance: Nonsignificant

Legal Authority: 49 USC 1354(a) Federal Aviation Act of 1958, Sec. 313(a); 49 USC 1355(a) Federal Aviation Act of 1958, Sec. 314(a); 49 USC 1421 to 1430 Federal Aviation Act of 1958, Secs. 601-610; 49 USC 1502 Federal Aviation Act of 1958, Sec. 1102

CFR Citation: 14 CFR 135

Legal Deadline: None.

Abstract: Review of rules governing: (1) air taxi operations conducted under Part 298; (2) transportation of mail by aircraft conducted under a postal service contract; and (3) carriage of persons or property for compensation or hire as a commercial operator in specified aircraft. These regulations are being reviewed to comply with the Regulatory Flexibility Act.

VOL 53 ISS 79 PT 1 APR 25 1988 UMI

Timetable:

Action	Date	FR Cite
Next Action Undetermined		

Small Entity: Undetermined

Analysis: Regulatory Flexibility Analysis

Agency Contact: Gary Davis, Department of Transportation, Federal Aviation Administration, 800 Independence Avenue, SW, Washington, DC 20591, 202 267-8096

RIN: 2120-AB28

1702. REVIEW PART 75 FOR RETENTION OR REVOCATION

Significance: Nonsignificant

Legal Authority: 49 USC 1348(a); 49 USC 1354(a); 49 USC 106(g), (Revised Pub L. 97-449, January 12, 1983); 14 CFR 11.69; 49 CFR 1.47

CFR Citation: 14 CFR 75

Legal Deadline: None.

Abstract: Review Part 75 per National Airspace Review Recommendations toward revocation and establish nonrulemaking procedures for handling Jet Route actions.

Timetable:

Action	Date	FR Cite
ANPRM	12/01/88	

Small Entity: Undetermined

Additional Information: Regulatory Project No: ATO-200-84-24R

Agency Contact: William C. Davis, Manager, Air Traffic Rules Branch, Department of Transportation, Federal Aviation Administration, 800 Independence Avenue, SW, Washington, DC 20591, 202 267-8783

RIN: 2120-AC55

1703. ACCELERATED GROUND TRAINING - FLIGHT ENGINEERS' SKILL REQUIREMENTS

Significance: Nonsignificant

Legal Authority: 49 USC 1348(a) Federal Aviation Act of 1958, Sec. 307(a); 49 USC 1348(c) Federal Aviation Act of 1958, Sec. 307(c); 49 USC 1354(a) Federal Aviation Act of 1958, Sec. 313(a); 49 USC 1421(a) Federal Aviation Act of 1958, Sec. 601(a)

CFR Citation: 14 CFR 63; 14 CFR 91; 14 CFR 125

Legal Deadline: None.

Abstract: This proposed action would amend the regulations to allow the flight engineers' normal procedure practical test to be conducted in an approved flight simulator in lieu of conducting it, in flight, in an airplane.

Timetable:

Action	Date	FR Cite
Next Action Undetermined		

Small Entity: No

Additional Information: Docket No. 22781.

Agency Contact: Michael J. Coffey, Department of Transportation, Federal Aviation Administration, 800 Independence Avenue, SW, Washington, DC 20591, 202 267-3750

RIN: 2120-AA79

1704. INSTRUMENT FLIGHT RULE REQUIREMENTS

Significance: Nonsignificant

Legal Authority: 49 USC 1348(a) Federal Aviation Act of 1958, Sec. 307(a); 49 USC 1348(c) Federal Aviation Act of 1958, Sec. 307(c); 49 USC 1354(a) Federal Aviation Act of 1958, Sec. 313(a); 49 USC 1421(a) Federal Aviation Act of 1958, Sec. 601(a)

CFR Citation: 14 CFR 135

Legal Deadline: None.

Abstract: The FAA is considering rulemaking to revise several sections of Part 135 dealing with instrument flight rules. The action is, in part, in response to petitions from Owen Aviation and Liberal Aircraft. The proposed rules would restore the right of single engine airplanes to operate in instrument flight rule conditions under specified conditions, relax minimums at foreign and military airports, and add visibility and ceiling requirements at airports without standard instrument approach procedures.

Timetable:

Action	Date	FR Cite
Next Action Undetermined		

Small Entity: No

Additional Information: Docket No. 20164

Agency Contact: Michael J. Coffey, Department of Transportation, Federal Aviation Administration, 800 Independence Avenue, SW, Washington, DC 20591, 202 267-3750

RIN: 2120-AA82

1705. AMENDMENT OF SECTIONS 91.171, 91.172, AND APPENDICES E AND F OF PART 43

Significance: Nonsignificant

Legal Authority: 49 USC 1354 Federal Aviation Act of 1958, Sec. 313; 49 USC 1421 Federal Aviation Act of 1958, Sec. 601

CFR Citation: 14 CFR 43; 14 CFR 91

Legal Deadline: None.

Abstract: This action would delay an October 15, 1992, compliance date to afford operators additional time to accomplish tests and inspections required by Sec. 91.171, correct inappropriate references, and delete a requirement for integrated system tests of ATC transponders by operators.

Timetable:

Action	Date	FR Cite
Next Action Undetermined		

Small Entity: No

Agency Contact: Larry Bessett, Department of Transportation, Federal Aviation Administration, 800 Independence Avenue, SW, Washington, DC 20591, 202 267-8177

RIN: 2120-AA98

1706. FATIGUE EVALUATION, BIRD IMPACT, AND LIGHTNING PROTECTION FOR PROPELLERS OF COMPOSITE CONSTRUCTION

Significance: Nonsignificant

Legal Authority: 49 USC 1354 Federal Aviation Act of 1958, Sec. 313; 49 USC 1421 Federal Aviation Act of 1958, Sec. 601; 49 USC 1423 Federal Aviation Act of 1958, Sec. 603

CFR Citation: 14 CFR 35

Legal Deadline: None.

Abstract: Would revise Part 35 Fatigue Limit Test (Propellers) to add requirement for composite propellers to include environmental effects in fatigue evaluation, bird impact, and lightning protection.

Timetable:

Action	Date	FR Cite
Next Action Undetermined		

Small Entity: No

Agency Contact: M. Buckman, Aerospace Engineer, Department of Transportation, Federal Aviation Administration, ANE-110, FAA NE Region, 12 New England Executive Park, Burlington, MA 01803, 617 273-7079

RIN: 2120-AB05

1707. STANDARDS FOR APPROVAL FOR HIGH ALTITUDE OPERATION OF SUBSONIC AIRPLANES

Significance: Nonsignificant

Legal Authority: 49 USC 1344; 49 USC 1354(a); 49 USC 1355; 49 USC 1421; 49 USC 1423; 49 USC 1424; 49 USC 1425; 49 USC 1428; 49 USC 1429; 49 USC 1430; 49 USC 106(g); PL 97-449

CFR Citation: 14 CFR 25

Legal Deadline: None.

Abstract: This proposal would review special conditions issued for high altitude operation and consolidate and incorporate these special conditions into Part 25.

Timetable:

Action	Date	FR Cite
Next Action Undetermined		

Small Entity: No

Affected Sectors: Multiple

Agency Contact: Gary Lium, Department of Transportation, Federal Aviation Administration, Northwest Mountain Region, 17900 Pacific Highway South, C-68966, Seattle, Washington 98168, 206 431-2134

RIN: 2120-AB18

1708. PRIMARY CATEGORY AIRCRAFT; POWERED ULTRALIGHT; FALSIFICATION OF APPLICATIONS, REPORTS, OR RECORDS

Significance: Nonsignificant

Legal Authority: 49 USC 1344; 49 USC 1348(c); 49 USC 1352; 49 USC 1354(a); 49 USC 1355; 49 USC 1421 to 1431; 49 USC 1502; 49 USC 1651(b)(2); 42 USC 1857(f)-10; 42 USC 4321 et seq; EO 11514; 49 USC 106(g); PL 97-449

CFR Citation: 14 CFR 21; 14 CFR 36; 14 CFR 43; 14 CFR 91; 14 CFR 141; 14 CFR 147

Legal Deadline: None.

Abstract: Action would propose to establish a new category of aircraft for type, production, and airworthiness certification. These aircraft will be designed for pleasure and personal use, and classified as a primary category aircraft. In addition, the notice will propose simplified type, production, and airworthiness certification procedures, special maintenance criteria, and associated changes to pilot requirements for this category of aircraft.

Timetable:

Action	Date	FR Cite
Next Action Undetermined		

Small Entity: Undetermined

Agency Contact: John McGrath, Department of Transportation, Federal Aviation Administration, 800 Independence Ave., SW, Washington, DC 20591, 202 267-8580

RIN: 2120-AB53

1709. AIRCRAFT REGISTRATION RECORDING OF AIRCRAFT TITLES AND SECURITY DOCUMENTS

Significance: Nonsignificant

Legal Authority: 49 USC 106(g); 49 USC 1354; 49 USC 1401; 49 USC 1403; 49 USC 1405; 49 USC 1406; 49 USC 1502; 4 UST 1830

CFR Citation: 14 CFR 47; 14 CFR 49

Legal Deadline: None.

Abstract: This is a recodification of 14 CFR Parts 47 and 49 in order to modernize these parts, making them compatible with modern business practices, in keeping with FAA policy.

The potential costs have not yet been assessed, but are considered to be negligible as the impact will be procedural and not substantive.

The potential benefits are the clarification of regulatory language and facilitation of procedures for registration of aircraft and recordation of conveyances affecting ownership of or interest in US civil aircraft.

Timetable:

Action	Date	FR Cite
Next Action Undetermined		

Small Entity: No

Agency Contact: Alonso J. Rodriguez, Attorney Advisor, Department of Transportation, Federal Aviation Administration, P.O. Box 25082, Oklahoma City, OK 73125, 405 686-2296

RIN: 2120-AC17

1710. TEMPORARY FLIGHT RESTRICTIONS

Significance: Nonsignificant

Legal Authority: 49 USC 3101(7); 49 USC 1303; 49 USC 1344; 49 USC 1348; 49 USC 1352 to 1355; 49 USC 1401; 49 USC 1421 to 1431; 49 USC 1471; 49 USC 1472; 49 USC 1502; 49 USC 1510; 49 USC 1522; 49 USC 2121 to 2125; 42 USC 4321 et seq; EO 11514; ...

CFR Citation: 14 CFR 91.91

Legal Deadline: None.

Abstract: Proposal to amend Section 91.91 to prevent interference with ground or aerial search or investigation by nonparticipating aircraft.

Timetable:

Action	Date	FR Cite
ANPRM	06/01/88	

Small Entity: Undetermined

Additional Information: LEGAL AUTHORITY CONT: 49 USC 106(g). (Revised Pub L. 97-449, January 12, 1983).

Regulatory Project No: ATO-200-87-9R

Analysis: Regulatory Evaluation 06/01/88

Agency Contact: William C. Davis, Manager, Air Traffic Rules Branch, Department of Transportation, Federal Aviation Administration, 800 Independence Avenue, SW, Washington, DC 20591, 202 267-8783

RIN: 2120-AC40

1711. ALTERNATE AIRPORT WEATHER MINIMUM

Significance: Nonsignificant

Legal Authority: 49 USC 1301(7); 49 USC 1303; 49 USC 1344; 49 USC 1348; 49 USC 1352 to 1355; 49 USC 1401; 49 USC 1421 to 1431; 49 USC 1471; 49 USC 1472; 49 USC 1502; 49 USC 1510; 49 USC 1522; 49 USC 2121 to 2125; 42 USC 4321 et seq; EO 11514; ...

DOT—FAA **Prerule Stage**

CFR Citation: 14 CFR 91.83(c)

Legal Deadline: None.

Abstract: Would revise Section 91.83(c)(1) of the Federal Aviation Regulations to include words that "any airport may be designated as an alternate airport if the forecast weather conditions will permit descent from the minimum en route altitude, approach, and landing under basic visual flight rules."

Timetable:

Action	Date	FR Cite
ANPRM	12/01/88	

Small Entity: Undetermined

Additional Information: LEGAL AUTHORITY CONT: 49 USC 106(g), (Revised Pub L. 97-449, January 12, 1983)

Regulatory Project No ATO-200-87P (Docket #25213)

Analysis: Regulatory Evaluation 12/01/88

Agency Contact: William C. Davis, Manager, Air Traffic Rules Branch, Department of Transportation, Federal Aviation Administration, 800 Independence Avenue, SW, Washington, DC 20591, 202 267-8783

RIN: 2120-AC41

1712. GLOBAL POSITIONING SYSTEM USE IN TERMINAL CONTROL AREAS

Significance: Nonsignificant

Legal Authority: 49 USC 1301(7); 49 USC 1303; 49 USC 1344; 49 USC 1348; 49 USC 1352 to 1355; 49 USC 1401; 49 USC 1421 to 1431; 49 USC 1471; 49 USC 1472; 49 USC 1502; 49 USC 1510; 49 USC 1522; 49 USC 2121 to 2125; 42 USC 4321 et seq; EO 11514; ...

CFR Citation: 14 CFR 91.90

Legal Deadline: None.

Abstract: Adoption of this recommendation would allow aircraft operating in a Group I or II Terminal Control Area to be equipped with Global Position System (GPS), Very High Frequency Omnirange Station (VOR) or Tactical Air Navigation (TACAN) equipment.

Timetable:

Action	Date	FR Cite
ANPRM	12/01/88	

Small Entity: Undetermined

Additional Information: LEGAL AUTHORITY CONT: 49 USC 106(g), (Revised Pub L. 97-449, January 12, 1983)

Regulatory Project No: ATO-200-85-17R

Agency Contact: Robert Laser, Air Traffic Control Specialist, Department of Transportation, Federal Aviation Administration, 800 Independence Avenue, SW, Washington, DC 20591, 202 267-9251

RIN: 2120-AC54

1713. NATIONAL AIRSPACE REVIEW RECOMMENDATION - OPERATIONS IN THE VICINITY OF AN AIRPORT

Significance: Nonsignificant

Legal Authority: 49 USC 1301(7); 49 USC 1303; 49 USC 1344; 49 USC 1348; 49 USC 1401; 49 USC 1421 to 1431; 49 USC 1452 to 1455; 49 USC 1471; 49 USC 1472; 49 USC 1502; 49 USC 1510; 49 USC 1522; 49 USC 2121 to 2125; 42 USC 4321 et seq; EO 11514; ...

CFR Citation: 14 CFR 91.85; 14 CFR 91.87; 14 CFR 91.89

Legal Deadline: None.

Abstract: This action would reorganize Sections 91.85, and 91.89 into two sections: a general section concerning aircraft turns and traffic flows, and another section dealing with rules at airports with control towers. Certain current provisions would be deleted.

Timetable:

Action	Date	FR Cite
ANPRM	12/01/88	

Small Entity: Undetermined

Additional Information: LEGAL AUTHORITY CONT: 49 USC 106(g), (Revised Pub. L. 97-449, January 12, 1983)

Regulatory Project No: ATO-200-85-14R

Agency Contact: William C. Davis, Manager, Air Traffic Rules Branch, Department of Transportation, Federal Aviation Administration, 800 Independence Avenue, SW, Washington, DC 20591, 202 267-8783

RIN: 2120-AC57

1714. ● PROPOSED REVISION OF PART 93, SUBPART O

Significance: Nonsignificant

Legal Authority: 49 USC 1302; 49 USC 1303; 49 USC 1348; 49 USC 1354(a); 49 USC 1421(a); 49 USC 1424; 49 USC 2402; 49 USC 2424; 49 USC 106(g)(Revised PL 97-449, January 12, 1983)

CFR Citation: 14 CFR 93

Legal Deadline: None.

Abstract: The purpose of this proposal is to lessen the burden on the flying public by reducing the lateral size of the existing Jacksonville, Florida, Navy Airport Traffic Area.

Timetable:

Action	Date	FR Cite
ANPRM	12/01/88	

Small Entity: Undetermined

Analysis: Regulatory Evaluation 12/01/88

Agency Contact: Robert Laser, Air Traffic Control Specialist, Department of Transportation, Federal Aviation Administration, 800 Independence Avenue, SW, Washington, DC 20591, 202 267-9248

RIN: 2120-AC65

DEPARTMENT OF TRANSPORTATION (DOT)
Federal Aviation Administration (FAA) **Proposed Rule Stage**

1715. + REVIEW AND REVISION OF REPAIR STATION REQUIREMENTS

Significance: Agency Priority

Legal Authority: 49 USC 1354; 49 USC 1355; 49 USC 1421; 49 USC 1427

CFR Citation: 14 CFR 145

Legal Deadline: None.

Abstract: Current repair station rules were developed during the infancy of the aviation industry. Very few changes were made to those rules since they were adopted in 1952. This rulemaking project proposes to review foreign repair-station requirements and update the rules to reflect the current international and domestic environment and needs. This rulemaking is considered significant because of substantial public interest.

Timetable:

Action	Date	FR Cite
NPRM	11/00/88	

Small Entity: No

Analysis: Regulatory Evaluation 11/00/88

Agency Contact: Leo Weston, Division Manager, AFS-300, Department of Transportation, Federal Aviation Administration, 800 Independence Ave., SW, Washington, DC 20591, 202 267-8203

RIN: 2120-AC38

1716. + METROPOLITAN WASHINGTON AIRPORTS POLICY

Significance: Regulatory Program

Legal Authority: 49 USC 1303 Federal Aviation Act of 1958, Sec. 103; 49 USC 1348(a) Federal Aviation Act of 1958, Sec. 307(a); 49 USC 1348(b) Federal Aviation Act of 1958, Sec. 307(b); 49 USC 1348(c) Federal Aviation Act of 1958, Sec. 307(c); 49 USC 1354(a) Federal Aviation Act of 1958, Sec. 313(a); Act for the Administration of Washington National Airport; Second Washington Airport Act; 64 Stat. 770, Sec. 4

CFR Citation: 14 CFR 93

Legal Deadline: None.

Abstract: This action proposed various operational ceilings at Washington National Airport and contemplated future guidance on operation and development of National and Dulles Airports. Proposed action has been superseded by the Metropolitan Washington Airports Act of 1986 and will be withdrawn.

Timetable:

Action	Date	FR Cite
SNPRM	06/14/84	49 FR 24626
Comment period end 07/16/84		
To be Withdrawn	05/00/88	

Small Entity: No

Analysis: Regulatory Evaluation 06/14/84 (49 FR 24626)

Agency Contact: Edward P. Faberman, Department of Transportation, Federal Aviation Administration, 800 Independence Avenue, SW, Washington, DC 20591, 202 267-3773

RIN: 2120-AA69

1717. + AMEND PART 23 TO INCLUDE REQUIREMENTS FOR CRASH-RESISTANT FUEL SYSTEMS

Significance: Agency Priority

Legal Authority: 49 USC 1354 Federal Aviation Act of 1958, Sec. 313; 49 USC 1421 Federal Aviation Act of 1958, Sec. 601; 49 USC 1423 Federal Aviation Act of 1958, Sec. 603

CFR Citation: 14 CFR 23

Legal Deadline: None.

Abstract: This action would amend Part 23 to include requirements for crash-resistant fuel tanks, lines and fittings. This rulemaking is significant because of substantial public interest.

Timetable:

Action	Date	FR Cite
ANPRM	03/05/85	50 FR 8948
ANPRM Comment Period End	07/03/85	

Next Action Undetermined

Small Entity: No

Agency Contact: Earsa L. Tankesley, Manager, Standards Office, Department of Transportation, Federal Aviation Administration, 601 E. 12th Street, Kansas City, MO 64106, 816 374-6930

RIN: 2120-AA57

1718. + PROPOSED DEPARTMENT OF ENERGY PROHIBITED AREAS

Significance: Agency Priority

Legal Authority: 49 USC 1348(a) Federal Aviation Act of 1958, Sec. 307(a); 49 USC 1354(a) Federal Aviation Act of 1958, Sec. 313(a); 49 USC 106(g) Revised, Pub. L. 97-449, January 12, 1983

CFR Citation: 14 CFR 11.65; 14 CFR 73

Legal Deadline: None.

Abstract: The proposed establishment or modification of prohibited airspace over these sites is one segment of a Department of Energy (DOE) comprehensive effort to enhance the protection of vital nuclear weapons research, development, and production facilities. If established, helicopter operations at any altitude over the designated sites would be prohibited without prior DOE authorization. This rulemaking is significant because it may be controversial. A summary of written and oral comments received in response to notices and hearings was sent to the DOE February 22, 1985, for them to address. DOE has conducted an indepth review of security at all sites. A draft final report is undergoing internal DOE coordination. Upon completion, DOE will decide if they will proceed with, modify, or withdraw part or all of their request for a proposed rule.

Timetable:

Action	Date	FR Cite
ANPRM	02/06/84	49 FR 04765
Public Hearings Announced	07/20/84	49 FR 29411
Extension of Comment Period	08/07/84	49 FR 31435

Next Action Undetermined

Small Entity: Yes

Agency Contact: Paul Gallant, Special Use Airspace, Department of Transportation, Federal Aviation Administration, 800 Independence Avenue, SW, Washington, DC 20591, 202 267-9253

RIN: 2120-AB39

1719. + ELIMINATION OF AIRPORT DELAYS

Significance: Agency Priority

Legal Authority: 49 USC 1303 Federal Aviation Act of 1958, Sec. 103; 49 USC 1348 Federal Aviation Act of 1958, Sec. 307; 49 USC 1354(a) Federal Aviation Act of 1958, Sec. 313(a); 49 USC 1421(a) Federal Aviation Act of 1958, Sec. 601(a); 14 CFR 11.49

CFR Citation: 14 CFR 93

Legal Deadline: None.

Abstract: This proposed rule is designed to alleviate increased delays throughout the air traffic system. If implemented, the FAA would alter current airline scheduling through a lottery process to more evenly space arrivals and departures throughout the day. Alternatives include voluntary schedule changes by the airlines. The rule, or the alternatives, would benefit the airline industry and the public by limiting delays. This regulation is significant because of its involvement with important departmental policy.

Timetable:

Action	Date	FR Cite
NPRM	08/20/84	49 FR 33082

Next Action Undetermined

Small Entity: No

Additional Information: Docket No. 24206.

Analysis: Regulatory Evaluation 08/20/84 (49 FR 33082)

Agency Contact: Edward P. Faberman, Deputy Chief Counsel, Department of Transportation, Federal Aviation Administration, 800 Independence Avenue, SW, Washington, DC 20591, 202 267-3773

RIN: 2120-AB42

1720. + PROPOSED REVISION OF NOISE CERTIFICATION OF TURBOJET AND LARGE TRANSPORT CATEGORY AIRCRAFT

Significance: Agency Priority

Legal Authority: 49 USC 1354(a) Federal Aviation Act of 1958, Sec. 313(a); 49 USC 1421(a) Federal Aviation Act of 1958, Sec. 601(a); 49 USC 1423 Federal Aviation Act of 1958, Sec. 603; 49 USC 1431(b) Federal Aviation Act of 1958, Sec. 611(b); 49 USC 1421 et seq National Environmental Policy Act, Title I; EO 11514

CFR Citation: 14 CFR 36; 14 CFR 91

Legal Deadline: None.

Abstract: Would revise certification and operational requirements for aircraft effective the date of the NPRM. On that date the current two-stage noise requirements would be replaced with a simpler single standard corresponding to the current Stage 3. This rulemaking is considered significant because of substantial public interest.

Timetable:

Action	Date	FR Cite
NPRM	04/16/88	

Small Entity: No

Analysis: Regulatory Evaluation 04/00/88

Agency Contact: Steven Albersheim, Environmental Specialist, Department of Transportation, Federal Aviation Administration, 800 Independence Ave., SW, Washington, DC 20591, 202 267-3560

RIN: 2120-AB88

1721. + FIRE PROTECTION REQUIREMENTS FOR CARGO AND BAGGAGE COMPARTMENTS - PARTS 121 AND 135

Significance: Agency Priority

Legal Authority: 49 USC 1354(a); 49 USC 1355; 49 USC 1356; 49 USC 1357; 49 USC 1401; 49 USC 1421 to 1430; 49 USC 1485; 49 USC 1502; 49 USC 106(g); PL 97-449; 49 USC 1472; 49 USC 1355(a); 49 USC 1431

CFR Citation: 14 CFR 121; 14 CFR 135

Legal Deadline: None.

Abstract: This action would propose requirements to improve cargo compartment fire protection for transport category airplanes operated under Parts 121 and 135 after a specified date. This action would propose a new rule which would require, within two years, replacement of ceiling and sidewall (including door and bulkhead) cargo compartment fire resistant liner panels in Class C and D cargo compartments greater than 200 cubic feet in volume in certain transport category airplanes. This rulemaking is significant because of substantial public interest in crashworthiness criteria.

Timetable:

Action	Date	FR Cite
NPRM	11/05/87	52 FR 42512
NPRM Comment Period End	05/03/88	

Small Entity: No

Analysis: Regulatory Evaluation 11/05/87 (52 FR 42512)

Agency Contact: Gary L. Killion, Department of Transportation, Federal Aviation Administration, Northwest Mountain Region, 17900 Pacific Highway South, C-68966, Seattle, Washington 98168, 206 431-2112

RIN: 2120-AC04

1722. + SST STAGE 3 COMPLIANCE

Significance: Agency Priority

Legal Authority: 49 USC 1354; 49 USC 1421; 49 USC 1423; 49 USC 1431

CFR Citation: 14 CFR 36

Legal Deadline: None.

Abstract: Part 36 prescribes noise type certification standards for turbojet airplanes. This proposal would revise Part 36 so that new type certificated supersonic aircraft would be required to meet Stage 3 noise levels. Action is considered significant because of the substantial public interest which may be generated on the issue.

Timetable:

Action	Date	FR Cite
ANPRM	10/30/86	51 FR 39663
Comment Period Reopened Until 07/01/87	03/12/87	52 FR 7618
NPRM	10/16/88	

Small Entity: Undetermined

Additional Information: Docket 25109.

Analysis: Regulatory Evaluation 10/16/88

Agency Contact: Steven Albersheim, Environmental Specialist, Department of Transportation, Federal Aviation Administration, 800 Independence Ave., SW, Washington, DC 20591, 202 267-3560

RIN: 2120-AC22

1723. + FLIGHT ATTENDANT REQUIREMENTS DURING DEPLANING AND BOARDING

Significance: Agency Priority

Legal Authority: None

CFR Citation: 14 CFR 121

Legal Deadline: None.

Abstract: This action proposes to revise the regulation dealing with the required number of flight attendants to clarify the original intent of the regulation. The current regulations are confusing and not clearly understood. The proposed amendments would clarify the number of flight attendants required when passengers are onboard an airplane, during specified periods, and proposals would allow for a reduced number of flight attendants onboard an airplane during specified periods. The proposals would specify the conditions to be met to reduce the number of flight attendants at these stops. Additionally, the proposals would allow other authorized persons to be substituted for the required flight attendants at these stops, and would clearly establish the requirements for training for those authorized persons. A proposed new rule would clarify where the required flight attendants and other persons must be located when they are onboard the airplane.

Timetable:

Action	Date	FR Cite
NPRM	07/00/88	

Small Entity: Undetermined

Analysis: Regulatory Evaluation 04/00/88

Agency Contact: David L. Catey, Department of Transportation, Federal Aviation Administration, 800 Independence Avenue, SW, Washington, DC 20591, 202 267-8096

RIN: 2120-AC32

1724. + CONTROL OF DRUG AND ALCOHOL USE FOR PERSONNEL ENGAGED IN COMMERCIAL AND GENERAL AVIATION ACTIVITIES

Significance: Agency Priority

Legal Authority: None

CFR Citation: 14 CFR 91

Legal Deadline: None.

Abstract: This notice invites comments on drug and alcohol abuse by personnel in the aviation industry and the options available for regulatory or other actions in the interest of aviation safety. It is intended to gather additional information on the extent to which abuse of drugs or alcohol is impairing the performance of personnel in the aviation community, such as commercial and general aviation pilots and mechanics, and on the costs and effectiveness of various drug and alcohol countermeasures. The rulemaking will cover mandatory random testing. This rulemaking is significant in view of the Secretary's initiative, based on substantial public interest as well as pending congressional legislation.

Timetable:

Action	Date	FR Cite
ANPRM	12/09/86	51 FR 44432
ANPRM Comment Period End	01/23/87	
Comment Period Extended to 02/23/87	01/23/87	52 FR 2547
NPRM	03/14/88	53 FR 8368
NPRM Comment Period End	06/13/88	

Small Entity: No

Agency Contact: Dr. Robert S. Bartanowicz, Assistant Manager, Safety Regulations Division, Department of Transportation, Federal Aviation Administration, 800 Independence Avenue, SW, Washington, DC 20591, 202 267-9679

RIN: 2120-AC33

1725. + TYPE AND NUMBER OF PASSENGER EMERGENCY EXITS REQUIRED IN TRANSPORT CATEGORY AIRPLANES

Significance: Agency Priority

Legal Authority: 49 USC 1344; 49 USC 1354(a); 49 USC 1355; 49 USC 1421; 49 USC 1423; 49 USC 1424; 49 USC 1425; 49 USC 1428; 49 USC 1429; 49 USC 1430; 49 USC 106(g); PL 97-449; 49 CFR 1.47(a)

CFR Citation: 14 CFR 25

Legal Deadline: None.

Abstract: This notice will propose to revise the current requirements for passenger emergency exits and to adopt two new exit types into the regulations. These proposals are intended to provide more consistent standards with respect to exit types and quantities required for passenger seating configurations while retaining the same level of safety. This notice also will propose to reduce the maximum inflation time of an escape slide to reflect the current state of the art. These proposals resulted from the Public Technical Conference on Emergency Evacuation of Transport Airplanes held in Seattle, Washington on September 3-6, 1985. This rulemaking is considered significant because it involves an important cabin-safety issue.

Timetable:

Action	Date	FR Cite
Next Action Undetermined		

Small Entity: No

Agency Contact: Franklin Tiangsing, Regulations Branch, Transport Standards Staff, Department of Transportation, Federal Aviation Administration, Northwest Mountain Region, 17900 Pacific Highway South C-68966, Seattle, WA 98168, 206 431-2134

RIN: 2120-AC43

1726. + IMPROVED ACCESS TO TYPE III AND TYPE IV EMERGENCY EXITS

Significance: Agency Priority

Legal Authority: 49 USC 1344; 49 USC 1354(a); 49 USC 1355 to 1357; 49 USC 1401; 49 USC 1421 to 1430; 49 USC 1472; 49 USC 1485; 49 USC 1502; 49 USC 106(g); PL 97-449

CFR Citation: 14 CFR 25; 14 CFR 121

Legal Deadline: None.

Abstract: This notice proposes to amend Parts 25 and 121 of the FAR to provide for improved access to Type III and Type IV emergency exits. These proposals are intended to improve the ability of occupants to evacuate an airplane under emergency conditions. This rulemaking is considered to be significant because it involves an important cabin-safety issue.

Timetable:

Action	Date	FR Cite
NPRM	09/00/88	

Small Entity: Undetermined

Analysis: Regulatory Evaluation 09/00/88

Agency Contact: Frank Tiangsing, Aerospace Engineer, Department of Transportation, Federal Aviation Administration, Northwest Mountain Region, 17900 Pacific Highway South, C-68966, Seattle, WA 98168, 206 431-2121

RIN: 2120-AC46

1727. + PILOTS CONVICTED OF DRIVING WHILE INTOXICATED (DWI)/UNDER INFLUENCE (DUI)

Significance: Agency Priority

Legal Authority: 49 USC 1354(a); 49 USC 1355; 49 USC 1421; 49 USC 1422; 49 USC 1427; 49 USC 106(g)

CFR Citation: 14 CFR 61; 14 CFR 65; 14 CFR 67

Legal Deadline: None.

Abstract: Notice will propose to amend the existing Federal Aviation Regulations to allow pilot certification action when a pilot has been convicted of multiple DWI/DUI motor-vehicle offenses. This rulemaking is a significant FAA initiative based on the DOT/Inspector General Report of Feb. 17, 1987, entitled "Report on Audit of Airmen Medical Certification Program."

Timetable:

Action	Date	FR Cite
Next Action Undetermined		

Small Entity: No

Agency Contact: Dr. Robert Bartanowicz, Department of Transportation, Federal Aviation Administration, 800 Independence Avenue, SW, Washington, DC 20591, 202 267-9679

RIN: 2120-AC51

1728. ● + DESIGN STANDARDS FOR FUEL-TANK ACCESS PANELS

Significance: Agency Priority

Legal Authority: 49 USC 1354(a); 49 USC 1355; 49 USC 1356; 49 USC 1357; 49 USC 1401; 49 USC 1421 to 1430; 49 USC 1472; 49 USC 1485; 49 USC 1502; 49 USC 106(g); PL 97-449; 49 CFR 1.47(a)

CFR Citation: 14 CFR 25; 14 CFR 121

Legal Deadline: None.

Abstract: This notice proposes to require that the fuel-tank access panels of transport category airplanes be designed to minimize penetration by likely foreign objects and be fire resistant. This proposed change is based on service experience and is intended to reduce the hazards associated with the loss of access panels. This notice also proposes to require that the panels of all turbine powered airplanes operated in air carrier service after a specified date meet these standards. This rulemaking is considered significant because it involves an important crashworthiness safety issue.

Timetable:

Action	Date	FR Cite
Next Action Undetermined		

Small Entity: No

Agency Contact: Iven Connally, Department of Transportation, Federal Aviation Administration, 17900 Pacific Highway South, C-68966, Seattle, WA 98168, 206 431-2120

RIN: 2120-AC58

1729. ● + ACCESS TO SECURED AREAS ON AIRPORTS

Significance: Agency Priority

Legal Authority: 49 USC 1354; 49 USC 1356; 49 USC 1358; 49 USC 1421; 49 USC 106(g); PL 97-449

CFR Citation: 14 CFR 107

Legal Deadline: None.

Abstract: This notice proposes to require certain airport operators to submit to the Administrator, for approval and inclusion in their approved security programs, a plan for the installation and use of a computer-controlled card system for access to secured areas of the airport. This notice proposes that airport operators submit a plan for a computer-controlled card system according to a schedule based on the number of passengers screened at the airport each year or as designated by the Director of Civil Aviation Security for the first phase of the schedule not withstanding the number of passengers screened annually. The proposal is significant because it is critical to aviation and airport security.

Timetable:

Action	Date	FR Cite
Next Action Undetermined		

Small Entity: No

Agency Contact: Donnie R. Blazer, Manager, Domestic Civil Aviation Security Division (ACS-100), Department of Transportation, Federal Aviation Administration, Office of Civil Aviation Security, 800 Independence Avenue, SW., Washington, DC 20591, 202 267-8058

RIN: 2120-AC69

1730. PART 91, SUBPART B, REVIEW FOR SIMPLIFICATION

Significance: Nonsignificant

Legal Authority: 49 USC 1301(7); 49 USC 1303; 49 USC 1344; 49 USC 1348; 49 USC 1352; 49 USC 1353; 49 USC 1354; 49 USC 1355; 49 USC 1401; 49 USC 1421; 49 USC 1422; 49 USC 1423; 49 USC 1424; 49 USC 1425; 49 USC 1426; ...

CFR Citation: 14 CFR 91

Legal Deadline: None.

Abstract: The agency set up a National Airspace Review Task Group for the review of 14 CFR Part 91, Subpart B. This action will cover the recommendations made by the group.

Timetable:

Action	Date	FR Cite
NPRM	06/01/88	

Small Entity: No

Additional Information: LEGAL AUTHORITY CONT: 49 USC 1427; 49 USC 1428; 49 USC 1429; 49 USC 1430; 49 USC 1431; 49 USC 1471; 49 USC 1502; 49 USC 1510; 49 USC 1522; 49 USC 2121; 49 USC 2122; 49 USC 2123; 49 USC 2124; 49 USC 2125; 49 USC 4321 et seq: EO 11514; 49 USC 106(g) Revised Pub L 97-449 January 12, 1983 Regulatory Project ATO-200-85-28R

Agency Contact: Robert Laser, Air Traffic Control Specialist, Department of Transportation, Federal Aviation Administration, 800 Independence Avenue, SW, Washington, DC 20591, 202 267-9251

RIN: 2120-AA07

1731. PART 77 REVIEW, OBJECTS AFFECTING NAVIGABLE AIRSPACE

Significance: Nonsignificant

Legal Authority: 49 USC 1304 Federal Aviation Act of 1958, Sec. 104; 49 USC 1348 Federal Aviation Act of 1958, Sec. 307; 49 USC 1354 Federal Aviation Act of 1958, Sec. 313; 49 USC 1431 Federal Aviation Act of 1958, Sec. 611; 49 USC 1501 Federal Aviation Act of 1958, Sec. 1101

CFR Citation: 14 CFR 77

Legal Deadline: None.

Abstract: Would revise and reorganize 14 CFR Part 77 in a more logical sequence and present regulatory requirements relating to proposed construction or alteration and their impact on navigable airspace. It is also intended to clarify and strengthen agency actions in determining whether a particular object would be a hazard to air navigation.

Timetable:

Action	Date	FR Cite
Notice of Review	06/19/78	43 FR 26322
Review Conference	12/06/80	
National Airspace Review Begins	07/09/84	
NPRM	06/01/88	

Small Entity: No

Additional Information: No docket number assigned; Regulatory Project ATO-200-85-15R

Analysis: Draft Regulatory Evaluation 06/01/87 (52 FR 20560); Final Regulatory Evaluation 10/31/88

Agency Contact: William C. Davis, Manager, Air Traffic Rules Branch, Department of Transportation, Federal Aviation Administration, 800 Independence Avenue, SW, Washington, DC 20591, 202 267-8783

RIN: 2120-AA09

1732. ROTORCRAFT REGULATORY REVIEW PROGRAM NOTICE NO. 4

Significance: Nonsignificant

Legal Authority: 49 USC 1344; 49 USC 1354(A); 49 USC 1355; 49 USC 1421; 49 USC 1423; 49 USC 1424; 49 USC 1425; 49 USC 1428; 49 USC 1429; 49 USC 1430; 49 USC 106(G); PL 97-449

CFR Citation: 14 CFR 27; 14 CFR 29

Legal Deadline: None.

Abstract: This is the fourth of a series of notices to be issued as part of the FAA's comprehensive Rotorcraft Regulatory Review Program. This notice contains proposals which would amend and update the airframe and related equipment requirements in Parts 27 and 29 of the Federal Aviation Regulations.

Timetable:

Action	Date	FR Cite
NPRM	04/15/88	

Small Entity: No

Analysis: Regulatory Impact Analysis

Agency Contact: James Major, Department of Transportation, Federal Aviation Administration, Fort Worth, TX 76193-0111, 817 624-5117

RIN: 2120-AA29

1733. IMPLEMENTATION OF SAFER PROPULSION SYSTEM RECOMMENDATIONS

Significance: Nonsignificant

Legal Authority: 49 USC 1354 Federal Aviation Act of 1958, Sec. 313; 49 USC 1421 Federal Aviation Act of 1958, Sec. 601; 49 USC 1423 Federal Aviation Act of 1958, Sec. 603; 49 USC 106(g)

CFR Citation: 14 CFR 25

Legal Deadline: None.

Abstract: This action would amend Sec. 25.975 to require fuel tank vent protection during ground fires and Sec. 25.1189 to require design practices which maximize the probability of engine fuel supply shut-off in a potential fire situation.

Timetable:

Action	Date	FR Cite
ANPRM	09/26/84	49 FR 38078
ANPRM Comment Period End	01/25/85	

Next Action Undetermined

Small Entity: No

Additional Information: Docket No. 24251

Agency Contact: James M. Walker, Department of Transportation, Federal Aviation Administration, NorthWest Mountain Region, 17900 Pacific Highway South, C-68966, Seattle, WA 98168, 206 431-2116

RIN: 2120-AA49

1734. MISCELLANEOUS AMENDMENTS

Significance: Nonsignificant

Legal Authority: 49 USC 1352 Federal Aviation Act of 1958, Sec. 311; 49 USC 1354 Federal Aviation Act of 1958, Sec. 313; 49 USC 1354(a) Federal Aviation Act of 1958, Sec. 313(a); 49 USC 1355(a) Federal Aviation Act of 1958, Sec. 314(a); 49 USC 1421 to 1430 Fed Aviation Act of 1958, Secs. 601 to 610; 49 USC 1502 Federal Aviation Act of 1958, Sec. 1102

CFR Citation: 14 CFR 21; 14 CFR 65; 14 CFR 107; 14 CFR 121; 14 CFR 135; 14 CFR 145

Legal Deadline: None.

Abstract: This action would amend various sections of the regulations. Some of the amendments are clarifying or editorial in nature or correct improper or obsolete references. Others relax certain existing requirements. Others allow issuance of special flight permits for an additional purpose, relax a requirement for passenger information signs, and eliminate the bulk erasure device on cockpit voice recorders. This action is in response to numerous complaints, suggestions, and petitions for exemption concerning several regulatory requirements received from users of the National Airspace System. These users state that these sections contain obsolete references and vague, complex, and inadequate language and that, in some instances, the cost of compliance is not justified by the benefits derived.

Timetable:

Action	Date	FR Cite
NPRM	10/03/83	48 FR 45214

Next Action Undetermined

Small Entity: No

Additional Information: Docket No. 23781.

Analysis: Regulatory Evaluation 10/03/83 (48 FR 45214)

Agency Contact: Jean Casciano, Department of Transportation, Federal Aviation Administration, 800 Independence Avenue, SW, Washington, DC 20591, 202 267-9683

RIN: 2120-AA50

1735. AIRCRAFT SIMULATOR USE IN AIRMAN TRAINING AND CERTIFICATION

Significance: Nonsignificant

Legal Authority: 49 USC 1354(a) Federal Aviation Act of 1958, Sec. 313(a); 49 USC 1421 Federal Aviation Act of 1958, Sec. 601; 49 USC 1424 Federal Aviation Act of 1958, Sec. 604

CFR Citation: 14 CFR 61; 14 CFR 135

Legal Deadline: None.

Abstract: This notice will propose to amend Part 61 to permit additional use of and establish approval criteria for aircraft simulators and training devices for airman training and certification by amending various sections of Part 61 and appendices including additional appendices for rotorcraft and helicopters and by adding a new appendix for advanced simulation criteria. Additionally, this notice will propose to permit additional usage of aircraft simulators and training devices for the pilot-in-command proficiency requirements of Part 61 for airmen operating large or multiengine turbojet-powered aircraft.

Timetable:

Action	Date	FR Cite
NPRM	11/00/88	

Small Entity: No

Analysis: Regulatory Evaluation 11/00/88

Agency Contact: Alberta A. Brown, Department of Transportation, Federal Aviation Administration, 800 Independence Avenue, SW, Washington, DC 20591, 202 267-8150

RIN: 2120-AA83

1736. NATIONAL AIRSPACE REVIEW (NAR): TERMINAL AIRSPACE TASK GROUP RECOMMENDATIONS

Significance: Nonsignificant

Legal Authority: 49 USC 1348 Federal Aviation Act of 1958, Sec. 307; 49 USC 1354(a) Federal Aviation Act of 1958, Sec. 313(a)

CFR Citation: 14 CFR 1; 14 CFR 71; 14 CFR 91

Legal Deadline: None.

Abstract: Would: (1) reclassify terminal control areas into one category; (2) apply the operating requirements of the current Group I TCA to Group II TCA's; (3) require student pilots to obtain a logbook endorsement from a certified instructor pilot prior to operating in any TCA; (4) replace the term "airport traffic area" with the term "control tower area," (5) apply the two-way radio communications requirements of

Section 91.87 for operations at an airport with an operating control tower operated by other entities; (6) adopt a new definition for airport traffic areas (control tower areas); (7) redefine control zones with a standard ceiling of 3,000 feet AGL; and (8) use nautical miles versus statute miles to describe certain terminal airspace designations.

Timetable:

Action	Date	FR Cite
ANPRM	02/05/85	50 FR 5054
ANPRM Comment Period End	06/06/85	50 FR 5054
NPRM	04/30/88	

Small Entity: Undetermined

Additional Information: Regulatory Project ATO-200-83-17R (Docket # 24455)

Agency Contact: William C. Davis, Manager, Air Traffic Rules Branch, Department of Transportation, Federal Aviation Administration, 800 Independence Avenue, SW, Washington, DC 20591, 202 267-8783

RIN: 2120-AB02

1737. TRANSPORT CATEGORY ROTORCRAFT PERFORMANCE

Significance: Nonsignificant

Legal Authority: 49 USC 1344; 49 USC 1354(A); 49 USC 1355; 49 USC 1421; 49 USC 1423; 49 USC 1424; 49 USC 1425; 49 USC 1428; 49 USC 1429; 49 USC 1430; 49 USC 106(g); PL 97-449

CFR Citation: 14 CFR 29

Legal Deadline: None.

Abstract: This project is to solicit public comment on possible revision and clarification of transport rotorcraft performance and airworthiness standards and to establish minimum gradients of climb during takeoff.

Timetable:

Action	Date	FR Cite
ANPRM	10/17/85	50 FR 42126
ANPRM Comment Period End	06/06/86	
NPRM	09/01/88	

Small Entity: Undetermined

Analysis: Regulatory Evaluation 09/01/88

Agency Contact: Jim S. Honaker, Department of Transportation, Federal Aviation Administration, Fort Worth, TX 76193-0111, 817 624-5109

RIN: 2120-AB36

1738. MISCELLANEOUS OPERATIONAL AMENDMENTS

Significance: Nonsignificant

Legal Authority: 49 USC 1354 Federal Aviation Act of 1958 Sec. 313(a); 49 USC 1421 Federal Aviation Act of 1958 Sec. 601; 49 USC 1423 Federal Aviation Act of 1958 Sec. 603; 49 USC 1424 Federal Aviation Act of 1958 Sec. 604

CFR Citation: 14 CFR 121; 14 CFR 91; 14 CFR 125; 14 CFR 135

Legal Deadline: None.

Abstract: This notice will propose to amend the regulations that deal with passenger information, safe passenger egress, child restraint, and emergency equipment. The proposals would prohibit smoking at any time in any location displaying a "no smoking" sign or placard. They would require that passengers wear safety belts at any time a "fasten seatbelts" sign is turned on. They would require that the "fasten seatbelts" sign be turned on during taxi. They would clearly establish a requirement for an assisting means of egress and the stowage of passenger service equipment prior to taxi. They would make the pilot in command or, in the case of operations under Part 121, the certificate holder responsible for informing the passengers that they may be liable for a civil penalty should they fail to comply with FAA regulations. They would require that supplementary child restraint devices be accepted by a certificate holder when requested by the child's attendant.

Timetable:

Action	Date	FR Cite
NPRM	02/00/89	

Small Entity: Undetermined

Agency Contact: Gary Davis, Department of Transportation, Federal Aviation Administration, 800 Independence Ave., SW, Washington, DC 20591, 202 267-3752

RIN: 2120-AB45

1739. PART 157 REVIEW

Significance: Nonsignificant

Legal Authority: Secs 309, 313(a), 314, 72 Stat. 751.; 49 USC 1350; 49 USC 1354(a); 49 USC 1355

CFR Citation: 14 CFR 157

Legal Deadline: None.

Abstract: Revision of FAR Part 157 to include issues relating to ultralight activities and to require notice of proposed traffic patterns and changes thereto. Pending completion of Regulatory Evaluation.

Timetable:

Action	Date	FR Cite
NPRM	06/01/88	

Small Entity: No

Additional Information: Regulatory Project ATO-200-86-13R

Analysis: Regulatory Evaluation 06/01/88

Agency Contact: William C. Davis, Manager, Air Traffic Rules Branch, Department of Transportation, Federal Aviation Administration, 800 Independence Avenue, SW, Washington, DC 20591, 202 267-8783

RIN: 2120-AB74

1740. PART 101 REVIEW PROGRAM

Significance: Nonsignificant

Legal Authority: Secs 307, 313(a), 402, 601, 602, 603, 902, 1110, 1302; 72 Stat 749; 49 USC 1348; 49 USC 1354; 49 USC 1372; 49 USC 1421; 49 USC 1442; 49 USC 1443; 49 USC 1472; 49 USC 1510; 49 USC 1522

CFR Citation: 14 CFR 1; 14 CFR 91; 14 CFR 101

Legal Deadline: None.

Abstract: This Review Program is intended to provide full public participation in matters concerning FAA evaluation of the operation of moored balloons, kites, unmanned rockets, and unmanned free balloons. Pending completion of Regulatory Evaluation. NPRM is being drafted.

Timetable:

Action	Date	FR Cite
NPRM	04/01/88	

Small Entity: Yes

Additional Information: Part 91 revision also required to provide comprehensive treatment of manned balloon operations and to clarify the respective applicability and requirements of both parts 91 and 101 with respect to balloon operations. Regulatory Project ATO-200-84-20R

Analysis: Regulatory Evaluation 04/01/88

DOT—FAA

Proposed Rule Stage

Agency Contact: Reginald C. Matthews, Air Traffic Control Specialist, Department of Transportation, Federal Aviation Administration, 800 Independence Avenue, SW, Washington, DC 20591, 202 267-9245

RIN: 2120-AB75

1741. ENGINE FUEL AND INDUCTION SYSTEMS

Significance: Nonsignificant

Legal Authority: 49 USC 1354 Federal Aviation Act of 1958, Sec. 313; 49 USC 1421 Federal Aviation Act of 1958, Sec. 601; 49 USC 1423 Federal Aviation Act of 1958, Sec. 603

CFR Citation: 14 CFR 33

Legal Deadline: None.

Abstract: Advance notice proposed the addition of a new paragraph, FAR Section 33.35(f), to incorporate requirements for the fuel mixture to go to full-rich if a disconnect occurs in the mixture linkage. NPRM would add additional requirement for safety of operation in the event throttle linkage disconnect occurs and modify the proposed full-rich position for mixture control to a position allowing safe operation following any disconnect.

Timetable:

Action	Date	FR Cite
ANPRM	02/26/86	51 FR 7224
ANPRM Comment Period End	04/29/86	

Next Action Undetermined

Small Entity: No

Analysis: Regulatory Evaluation 06/15/88

Agency Contact: George Mulcahy, Aerospace Engineer, Department of Transportation, Federal Aviation Administration, NE Region, 12 New England Executive Park, Burlington, MA 01803, 617 273-7077

RIN: 2120-AB76

1742. AMEND SECTION 43.17 TO ALLOW FOR MAINTENANCE OF U.S. AERONAUTICAL PRODUCTS IN CANADA IN COMPLIANCE WITH THE U.S.-CANADIAN BILATERAL AIRWORTHINESS AGREEMENT

Significance: Nonsignificant

Legal Authority: 49 USC 1354; 49 USC 1421; 49 USC 1422; 49 USC 1423; 49 USC 1424; 49 USC 1425; 49 USC 106(g)

CFR Citation: 14 CFR 43

Legal Deadline: None.

Abstract: The proposed amendment would revise Section 43.17 to provide for the acceptance of maintenance, alteration, or modification accomplished on U.S.-registered aircraft, other aeronautical products, and components, in Canada, by persons authorized by Transport Canada Airworthiness Group and approved for return to service in accordance with the U.S.-Canadian Bilateral Airworthiness Agreement.

Timetable:

Action	Date	FR Cite
NPRM	06/00/88	

Small Entity: Undetermined

Analysis: Regulatory Evaluation 07/00/88

Agency Contact: Angelo Mastrullo, Department of Transportation, Federal Aviation Administration, 800 Independence Ave., SW, Washington, DC 20591, 202 267-3805

RIN: 2120-AB80

1743. REVISED ONE-ENGINE-INOPERATIVE RATINGS FOR ROTORCRAFT

Significance: Nonsignificant

Legal Authority: 49 USC 1344; 49 USC 1354(A); 49 USC 1355; 49 USC 1421; 49 USC 1523; 49 USC 1424; 49 USC 1425; 49 USC 1428; 49 USC 1429; 49 USC 1430; 49 USC 106(G); PL 97-449

CFR Citation: 14 CFR 27; 14 CFR 29

Legal Deadline: None.

Abstract: This project proposes to revise Parts 27 and 29 to set forth qualifications and performance associated with optional 30-second/2-minute one-engine-inoperative (OEI) ratings for rotorcraft.

Timetable:

Action	Date	FR Cite
NPRM	12/15/88	

Small Entity: No

Analysis: Regulatory Evaluation 12/15/88

Agency Contact: Ray Twa, Department of Transportation, Federal Aviation Administration, Fort Worth, TX 76193-0111, 817 624-5158

RIN: 2120-AB90

1744. TURBINE BURST PROTECTION FOR TRANSPORT CATEGORY HELICOPTERS

Significance: Nonsignificant

Legal Authority: 49 USC 1344; 49 USC 1354(A); 49 USC 1355; 49 USC 1421; 49 USC 1423; 49 USC 1424; 49 USC 1425; 49 USC 1428; 49 USC 1429; 49 USC 1430; 49 USC 106(G); PL 97-449

CFR Citation: 14 CFR 29

Legal Deadline: None.

Abstract: This project proposes to revise Part 29 to require design features or other provisions to minimize the hazards of failure of high speed rotors used in turbine engines in transport category helicopters.

Timetable:

Action	Date	FR Cite
NPRM	11/30/88	

Small Entity: No

Analysis: Regulatory Evaluation 11/30/88

Agency Contact: Mike Mathias, Department of Transportation, Federal Aviation Administration, Fort Worth, TX 76193-0111, 817 624-5123

RIN: 2120-AB91

1745. ANTIBLOCKING DEVICE

Significance: Nonsignificant

Legal Authority: 49 USC 1348(a); 49 USC 106(g), (Revised Pub. L. 97-449, January 12, 1983); 14 CFR 11.45; 49 USC 1354(a)

CFR Citation: 14 CFR 91

Legal Deadline: None.

Abstract: Mr. John G. Rutty submitted a petition for rulemaking seeking to amend the FAR to require antiblocking and stuck microphone (ABD) relief circuitry operatively associated with aircraft voice communications radios employed in certain high-density air traffic areas. Action pending operational evaluation.

Timetable:

Action	Date	FR Cite
NPRM	12/01/88	

Small Entity: Undetermined

Additional Information: Docket Number 23755. Regulatory Project ATO-200-84-2P

Agency Contact: Reginald C. Matthews, Air Traffic Control Specialist, Department of Transportation, Federal Aviation Administration, 800 Independence Avenue, SW, Washington, DC 20591, 202 267-9345

RIN: 2120-AB92

1746. CONTROLLED AIR SPACE DESIGNATIONS IN INTERNATIONAL AIR SPACE

Significance: Nonsignificant

Legal Authority: 49 USC 1348(a) F.A. Act, Section 307(a); 49 USC 1354(a) F.A. Act, Section 313(a)

CFR Citation: 14 CFR 71; 14 CFR 75

Legal Deadline: None.

Abstract: User organizations recommended under the National Airspace Review to simplify the classification of offshore airspace designations.

Timetable:

Action	Date	FR Cite
ANPRM	07/29/85	50 FR 30798
ANPRM Comment Period End	10/28/85	50 FR 30798
NPRM	04/30/88	

Small Entity: Undetermined

Additional Information: Regulatory Project ATO-200-84-19R/ATO-200-84-7R

Analysis: Regulatory Evaluation 07/29/85 (50 FR 30798)

Agency Contact: William C. Davis, Manager, Air Traffic Rules Branch, Department of Transportation, Federal Aviation Administration, 800 Independence Avenue, SW, Washington, DC 20591, 202 267-9783

RIN: 2120-AB93

1747. AIRSPACE RECLASSIFICATION

Significance: Nonsignificant

Legal Authority: 49 USC 1348; 49 USC 1354; 14 CFR 11.45; 14 CFR 11.65

CFR Citation: 14 CFR 71; 14 CFR 73; 14 CFR 75; 14 CFR 91; 14 CFR 103; 14 CFR 105; 14 CFR 1

Legal Deadline: None.

Abstract: Users organizations recommended, under the National Airspace Review, to redesign the airspace system to a more simple system similar to the systems in place in Canada and proposed under ICAO recommendations.

Timetable:

Action	Date	FR Cite
ANPRM	02/05/85	50 FR 5046
ANPRM Comment Period End	06/06/85	50 FR 5046
NPRM	04/30/88	

Small Entity: Undetermined

Additional Information: Docket number 24456.

Regulatory Project ATO-200-84-7R

Analysis: Regulatory Evaluation 04/30/88

Agency Contact: William C. Davis, Manager, Air Traffic Rules Branch, Department of Transportation, Federal Aviation Administration, 800 Independence Avenue, SW, Washington, DC 20591, 202 267-9783

RIN: 2120-AB95

1748. TRANSPONDER REQUIREMENTS IN COASTAL AIR DEFENSE IDENTIFICATION ZONES (ADIZ)

Significance: Nonsignificant

Legal Authority: 49 USC 1348; 49 USC 1502; 49 USC 1510; 49 USC 1522; 49 USC 106(g) Revised Pub L 97-449, January 12, 1983

CFR Citation: 14 CFR 99

Legal Deadline: None.

Abstract: This proposal would require aircraft to have an operating transponder when operating into, within, or out of the United States through coastal air defense identification zones (ADIZ).

Timetable:

Action	Date	FR Cite
ANPRM	02/07/86	51 FR 4756
NPRM	06/01/88	

Small Entity: No

Additional Information: Regulatory Project ATO-200-85-8R (Docket # 24903)

Affected Sectors: Multiple

Analysis: Regulatory Evaluation 06/01/88

Agency Contact: Reginald C. Matthews, Air Traffic Control Specialist, Department of Transportation, Federal Aviation Administration, 800 Independence Avenue, SW, Washington, DC 20591, 202 267-9245

RIN: 2120-AB99

1749. CHANGES REQUIRING A NEW TYPE CERTIFICATE

Significance: Nonsignificant

Legal Authority: 49 USC 1344; 49 USC 1348(c); 49 USC 1352; 49 USC 1354(a); 49 USC 1355; 49 USC 1421 to 1431; 49 USC 1502; 49 USC 1651(b)(2); 42 USC 1857f-10; 42 USC 4321 et seq; EO 11514; 49 USC 106(g); PL 97-449

CFR Citation: 14 CFR 21

Legal Deadline: None.

Abstract: This notice would propose to amend the Federal Aviation Regulations to permit certain aircraft product changes to be accomplished under amended type certification or supplemental type certification procedure in lieu of applying for a new type certificate. The granting of several exemptions emphasized the need for a review of established criteria mandating an application for a new type certificate. The availability of advanced, high performance, light-weight engines and superior replacement systems requires this rule change for the upgrading of older seasoned designs to increase safety, utility, performance, and reliability, and reduce operational cost. The rule remains unchanged for aircraft product modifications which are so extensive that a substantially complete investigation of compliance is required.

Timetable:

Action	Date	FR Cite
NPRM	06/00/88	

Small Entity: No

Affected Sectors: Multiple

Analysis: Regulatory Evaluation 07/00/88

Agency Contact: Nick Dobi, Department of Transportation, Federal Aviation Administration, 800 Independence Ave., SW, Washington, DC 20591, 202 267-9568

RIN: 2120-AC05

1750. PASSENGER-CARRYING AND CARGO AIR OPERATIONS FOR COMPENSATION OR HIRE

Significance: Nonsignificant

Legal Authority: 49 USC 1301(7); 49 USC 1303; 49 USC 1344; 49 USC 1348; 49 USC 1352 to 1357; 49 USC 1401; 49 USC 1421 to 1431; 49 USC 1471; 49 USC 1472; 49 USC 1502; 49 USC 1510; 49 USC 1522; 49 USC 2121 to 2125; 49 USC 1485; 49 USC 106(g)

CFR Citation: 14 CFR 91; 14 CFR 121; 14 CFR 129; 14 CFR 135

Legal Deadline: None.

Abstract: The FAA proposes to update and clarify the certification and operations specifications requirements for persons who operate aircraft for compensation or hire by (1) codifying the Special Federal Aviation Regulation pertaining to the certification requirements and (2) consolidating into one part the certification and operations specifications requirements for persons who operate under Part 121 or Part 135. The proposal responds to the termination of the Civil Aeronautics Board (CAB) and to changes in the air transportation industry since the Airline Deregulation Act of 1978. The proposal would provide a guide enabling persons who operate aircraft for compensation or hire to determine the certification and operations requirements with which they must comply.

Timetable:

Action	Date	FR Cite
NPRM	04/00/88	

Small Entity: No

Agency Contact: Michael J. Coffey, Department of Transportation, Federal Aviation Administration, 800 Independence Ave., SW, Washington, DC 20591, 202 267-3752

RIN: 2120-AC06

1751. PART 23 AIRWORTHINESS REVIEW, NOTICE NO. 5 (EQUIPMENT, SYSTEMS, AND INSTALLATION)

Significance: Nonsignificant

Legal Authority: 49 USC 1354; 49 USC 1421; 49 USC 1423

CFR Citation: 14 CFR 23

Legal Deadline: None.

Abstract: This proposed amendment to Part 23 would allow certification of small airplanes with systems critical to safe flight that are not now approved without special conditions, exemptions, or equivalent safety findings.

Timetable:

Action	Date	FR Cite
NPRM	06/30/88	

Small Entity: No

Additional Information: This notice results from a regulatory review of Part 23 conducted in late 1984.

Analysis: Regulatory Evaluation 06/30/88

Agency Contact: Earsa L. Tankesley, Manager, Standards Office, Department of Transportation, Federal Aviation Administration, 601 East 12th Street, Kansas City, MO 64106, 816 374-6930

RIN: 2120-AC14

1752. PART 23 AIRWORTHINESS REVIEW, NOTICE NO. 2

Significance: Nonsignificant

Legal Authority: 49 USC 1354 Federal Aviation Act of 1958, Sec 313; 49 USC 1421 Federal Aviation Act of 1958, Sec 601; 49 USC 1423 Federal Aviation Act of 1958, Sec 603

CFR Citation: 14 CFR 23

Legal Deadline: None.

Abstract: This notice will propose design requirements applicable to advancements in technology being incorporated into current designs, reducing the hazards from bird strike, allowing certification of spin resistant airplanes, reducing the regulatory burden in showing compliance with some requirements, and providing requirements for new technology that is being utilized in the development of small airplanes.

Timetable:

Action	Date	FR Cite
NPRM	06/30/88	

Small Entity: No

Additional Information: This notice results from a regulatory review of Part 23 conducted in late 1984.

Analysis: Regulatory Evaluation 06/30/88

Agency Contact: Earsa L. Tankesley, Manager, Standards Office, Department of Transportation, Federal Aviation Administration, 601 East 12th Street, Kansas City, MO 64106, 816 374-6930

RIN: 2120-AC15

1753. NOISE AND EMISSION STANDARDS FOR AIRCRAFT POWERED BY ADVANCED TURBOPROP (PROPFAN) ENGINES

Significance: Nonsignificant

Legal Authority: 49 USC 1354; 49 USC 1421; 49 USC 1423; 49 USC 1431

CFR Citation: 14 CFR 36

Legal Deadline: None.

Abstract: Part 36 prescribes noise standards for type certification of airplanes. A new generation of aircraft powered by prop-fan engines may present a noise problem that is not currently addressed by Part 36 in that en route noise at cruise altitude (25,000 to 30,000 ft) may require a new standard. This proposal would establish a new standard to control high altitude flyover noise from these new types of aircraft.

Timetable:

Action	Date	FR Cite
ANPRM	03/13/87	52 FR 8050
ANPRM Comment Period End	06/11/87	
Comment period extended to 10/01/87	07/20/87	52 FR 27304
Next Action Undetermined		

Small Entity: Undetermined

Agency Contact: Harvey H. Van Wyen, Manager, Noise Policy & Regulatory Branch, Department of Transportation, Federal Aviation Administration, 800 Independence Ave., SW, Washington, DC 20591, 202 267-3553

RIN: 2120-AC20

1754. ROTORCRAFT CERTIFICATION REQUIREMENTS; COORDINATION WITH EUROPEAN AIRWORTHINESS AUTHORITIES STEERING COMMITTEE (AASC)

Significance: Nonsignificant

Legal Authority: 49 USC 1344; 49 USC 1354(a); 49 USC 1355; 49 USC 1421; 49 USC 1423; 49 USC 1424; 49 USC 1425; 49 USC 1428; 49 USC 1429; 49 USC 1430; 49 USC 106(g); PL 97-449

CFR Citation: 14 CFR 29; 14 CFR 27

Legal Deadline: None.

Abstract: Rotorcraft manufacturers and foreign airworthiness authorities would like one set of standards to reduce cost of airworthiness certifications. Many countries now use FAR Parts 27 and 29,

BEST COPY AVAILABLE

with some national differences, as their standards.

Timetable:

Action	Date	FR Cite
NPRM	06/29/88	

Small Entity: Undetermined

Agency Contact: R. T. Weaver, Department of Transportation, Federal Aviation Administration, Fort Worth, TX 76193-0111, 817 624-5122

RIN: 2120-AC27

1755. PART 99: AIR DEFENSE IDENTIFICATION ZONES AND MISCELLANEOUS EDITORIAL REVISION

Significance: Nonsignificant

Legal Authority: 49 USC 1348; 49 USC 1502; 49 USC 1510; 49 USC 1522; 49 USC 106(g) Revised Pub L 97-449, January 12, 1983

CFR Citation: 14 CFR 99

Legal Deadline: None.

Abstract: North American Air Defense modernization requires realignment of the Air Defense Identification Zones to bring them in line with planned coverage and current capabilities.

Timetable:

Action	Date	FR Cite
NPRM	12/01/88	

Small Entity: Undetermined

Additional Information: Regulatory Project ATO-200-86-20P (Docket #25113)

Agency Contact: Reginald C. Matthews, Air Traffic Control Specialist, Department of Transportation, Federal Aviation Administration, 800 Independence Avenue, SW, Washington, DC 20591, 202 267-9245

RIN: 2120-AC37

1756. IMPROVED STRUCTURAL REQUIREMENTS FOR PRESSURIZED CABINS AND COMPARTMENTS IN TRANSPORT CATEGORY AIRPLANES

Significance: Nonsignificant

Legal Authority: 49 USC 1344; 49 USC 1354(a); 49 USC 1355; 49 USC 1421; 49 USC 1423; 49 USC 1424; 49 USC 1425; 49 USC 1428; 49 USC 1429; 49 USC 1430; 49 USC 106(g); PL 97-449; 49 CFR 1.47(a)

CFR Citation: 14 CFR 25

Legal Deadline: None.

Abstract: Notice will propose to amend Part 25 of the Federal Aviation Regulations (FAR) to upgrade the structural requirements for transport category airplane pressurized cabins by (1) amending the criteria for evaluation of the secondary effects of openings in the pressure vessel, and (2) extending the area of consideration to include openings anywhere within the pressure vessel. The required opening sizes to be considered would not be changed. The proposal is the result of an FAA review of the pressurized cabin load requirements and is intended to make the pressurized cabin load requirements less design-dependent and more objective. It would require evaluation of openings in any pressurized compartment and examination of the effects of differential pressure loads on any critical structure inside or outside of the pressurized cabin.

Timetable:

Action	Date	FR Cite
Next Action Undetermined		

Small Entity: Undetermined

Agency Contact: James Haynes, Policy and Procedures Branch, Transport Standards Staff, Department of Transportation, Federal Aviation Administration, Northwest Mountain Region, 17900 Pacific Highway South C-68966, Seattle, WA 98168, 206 431-2113

RIN: 2120-AC44

1757. MISCELLANEOUS CHANGES TO EMERGENCY EVACUATION DEMONSTRATION PROCEDURES, EXIT HANDLE ILLUMINATION, AND PA HANDSETS

Significance: Nonsignificant

Legal Authority: 49 USC 1344; 49 USC 1354(a); 49 USC 1355 to 1357; 49 USC 1401; 49 USC 1421 to 1430; 49 USC 1472; 49 USC 1485; 49 USC 1502; 49 USC 106(g); PL 97-449

CFR Citation: 14 CFR 25; 14 CFR 121

Legal Deadline: None.

Abstract: Notice will propose to modify the procedures for conducting an emergency evacuation demonstration by requiring that the flight-crew take no active role in the demonstration and changing the age/sex distribution requirement for demonstration participants. This notice also proposes to standardize the illumination requirements for the handles of the various types of passenger emergency exits. In addition, it is proposed to add a requirement for a "push to talk" switch to the public address system. These proposals are intended to enhance the provisions of transport category airplanes for egress of occupants during emergency conditions.

Timetable:

Action	Date	FR Cite
Next Action Undetermined		

Small Entity: Undetermined

Agency Contact: Frank Tiangsing, Aerospace Engineer, Department of Transportation, Federal Aviation Administration, Northwest Mountain Region, 17900 Pacific Highway South, C-68966, Seattle, WA 98168, 206 431-2121

RIN: 2120-AC45

1758. ● NON-FEDERAL AIR TRAFFIC CONTROL TOWERS

Significance: Nonsignificant

Legal Authority: 49 USC 1301(7); 49 USC 1303; 49 USC 1344; 49 USC 1348; 49 USC 1352 to 1355; 49 USC 1401; 49 USC 1421 to 1431; 49 USC 1471; 49 USC 1472; 49 USC 1502; 49 USC 1510; 49 USC 1522; 49 USC 2121 to 2125; 42 USC 4321; 49 USC 106(g) (Revised PL 97-449, January 12, 1983); ...

CFR Citation: 14 CFR 91; 14 CFR 105

Legal Deadline: None.

Abstract: The adoption of this recommendation would allow review, study, and proposal of changes to Parts 91 and 105 of the regulations. This proposal would define the responsibilities of non-Federal air-traffic control towers as to compliance with FAA air-traffic control towers.

Timetable:

Action	Date	FR Cite
NPRM	06/01/88	

Small Entity: Undetermined

Additional Information: Regulatory Project No. ATO-200-87-14R

Analysis: Regulatory Evaluation 06/01/88

Agency Contact: William C. Davis, Manager, Air Traffic Rules Branch, Department of Transportation, Federal Aviation Administration, 800 Independence Avenue, SW, Washington, DC 20591, 202 267-8783

RIN: 2120-AC59

DOT—FAA **Proposed Rule Stage**

1759. ● FUEL VENTING AND EXHAUST-EMISSION REQUIREMENTS FOR TURBINE-ENGINE POWERED AIRPLANES

Significance: Nonsignificant

Legal Authority: 49 USC 1341(a); 49 USC 106(g)(Revised, PL 97-449, Jan. 12, 1983); 49 USC 1343(d); 49 USC 1348; 49 USC 1354(a); 49 USC 1401 to 1405; 49 USC 1421 to 1431; 49 USC 1481; 49 USC 1502

CFR Citation: 14 CFR 11; 14 CFR 21; 14 CFR 23; 14 CFR 25; 14 CFR 45; 14 CFR 91; 14 CFR 11, (SFAR 27)

Legal Deadline: None.

Abstract: Special Federal Aviation Regulation (SFAR) 27 prescribes standards and test procedures for fuel venting and exhaust emissions for the turbine powered airplanes. This proposal would replace SFAR 27, as amended through SFAR 27-6, with a new Part 34 of the Federal Aviation Regulations which will include all of the standards and test procedures of 40 CFR 87 previously included in SFAR 27. This will codify in a single part all of the applicable requirements of 40 CFR 87, Control of Air Pollution from Aircraft and Aircraft Engines; Emissions Standards and Test Procedures, as amended, December 30, 1982, and insert requirements to comply with Part 34 in the other affected Parts where applicable.

Timetable:

Action	Date	FR Cite
NPRM	10/16/88	

Small Entity: No

Analysis: Regulatory Evaluation 10/16/88

Agency Contact: Nicholas P. Krull, Manager, Air Quality Staff, Department of Transportation, Federal Aviation Administration, 800 Independence Avenue, SW, Washington, DC 20591, 202 267-3493

RIN: 2120-AC62

1760. ● SHOULDER HARNESS FOR EACH SEAT IN PART 27 AND 29 ROTORCRAFT

Significance: Nonsignificant

Legal Authority: 49 USC 1344; 49 USC 1354(a); 49 USC 1355; 49 USC 1421; 49 USC 1423; 49 USC 1424; 49 USC 1425; 49 USC 1428; 49 USC 1429; 49 USC 1430; 49 USC 106(g); PL 97-449

CFR Citation: 14 CFR 27; 14 CFR 29

Legal Deadline: None.

Abstract: This project proposes to amend Parts 27 and 29 to require a shoulder harness for each seat in rotorcraft manufactured after December 31, 1988.

Timetable:

Action	Date	FR Cite
NPRM	05/01/88	

Small Entity: Yes

Analysis: Regulatory Flexibility Analysis; Regulatory Evaluation 05/01/88

Agency Contact: James Major, Department of Transportation, Federal Aviation Administration, PO Box 1689, Fort Worth, TX 79193-0111, 817 624-5117

RIN: 2120-AC67

1761. ● CRASH-RESISTANT FUEL SYSTEMS

Significance: Nonsignificant

Legal Authority: 49 USC 1344; 49 USC 1354; 49 USC 1354(a); 49 USC 1355; 49 USC 1421; 49 USC 1423; 49 USC 1424; 49 USC 1425; 49 USC 1428; 49 USC 1429; 49 USC 1430; 49 USC 106(g); PL 97-449

CFR Citation: 14 CFR 27; 14 CFR 29

Legal Deadline: None.

Abstract: This project proposes to implement requirements in Parts 27 and 29 for crash-resistant fuel systems to reduce injuries or fatalities resulting from ignition of flammable fluids following an otherwise survivable crash of a rotorcraft.

Timetable:

Action	Date	FR Cite
NPRM	12/01/88	

Small Entity: Undetermined

Analysis: Regulatory Evaluation 12/01/88

Agency Contact: Mike Mathias, Department of Transportation, Federal Aviation Administration, Fort Worth, TX 76193-0111, 817 624-5118

RIN: 2120-AC68

DEPARTMENT OF TRANSPORTATION (DOT) **Final Rule Stage**

Federal Aviation Administration (FAA)

1762. + LOW-ALTITUDE WINDSHEAR EQUIPMENT REQUIREMENTS FOR TAKEOFFS/LANDINGS OF TRANSPORT CATEGORY AIRPLANES

Significance: Regulatory Program

Legal Authority: 49 USC 1354(a) Federal Aviation Act of 1958, Sec. 313(a); 49 USC 1421 Federal Aviation Act of 1958, Sec. 601; 49 USC 1424 Federal Aviation Act of 1958, Sec. 604

CFR Citation: 14 CFR 135

Legal Deadline: None.

Abstract: This notice proposes to require that all turbojet-powered airplanes operated in accordance with Part 121 have airborne systems that warn a flightcrew of the presence of low-altitude windshear conditions and then provide flight guidance to follow that would produce the optimal flight path for a missed approach procedure. This proposal would require that any Part 121 operator using an approved simulator as a part of its training program develop a specific windshear-related simulator flight training course for its flightcrews. This proposal would require that Part 121 and 135 operators using an approved training program include training concerning the low-altitude windshear phenomenon as a part of their normal ground training. Low-altitude windshear has been a prime causal factor in numerous air carrier accidents and possibly has contributed to a number of general aviation accidents.

Timetable:

Action	Date	FR Cite
ANPRM	05/03/79	44 FR 25807
NPRM	06/01/87	52 FR 20560
NPRM Comment Period End	09/28/87	
Final Action	10/31/88	

Small Entity: No

Additional Information: Docket No. 19110. In 1975, the FAA began a two-year effort to develop a windshear program. As part of the program, FAA began work to develop a windshear warning and pilot aiding device which

has achieved encouraging results. Following the initial announcement of this proposal, it was determined that a regulatory analysis would not be required; however, an evaluation will be made and docketed. ANPRM No. 79-11 was published on May 3, 1979 (44 FR 25807) and comment period closed August 3, 1979. (14 CFR Parts 91, 121 & 135).

Analysis: Regulatory Evaluation

Agency Contact: Gary Davis, Department of Transportation, Federal Aviation Administration, 800 Independence Avenue, SW, Washington, DC 20591, 202 267-3752

RIN: 2120-AA01

1763. + IMPROVED SEAT-SAFETY STANDARDS

Significance: Regulatory Program

Legal Authority: 49 USC 1344; 49 USC 1354(a); 49 USC 1355; 49 USC 1421; 49 USC 1423; 49 USC 1424; 49 USC 1425; 49 USC 1428; 49 USC 1429; 49 USC 1430; 49 USC 106(g); PL 97-449

CFR Citation: 14 CFR 25

Legal Deadline: None.

Abstract: To develop improved load-test criteria for occupant seat restraint systems on transport airplanes based on the ongoing joint FAA/NASA/industry transport airplane crashworthiness program which encompasses tests and studies of past survivable accident data. This rulemaking is significant because it involves important Departmental policy.

Timetable:

Action	Date	FR Cite
NPRM	07/17/86	51 FR 25982
NPRM Comment Period End	01/14/87	
Final Action	05/00/88	

Small Entity: No

Additional Information: Docket No. 25040

Analysis: Regulatory Evaluation 07/17/86 (51 FR 25982)

Agency Contact: Iven Connally, Department of Transportation, Federal Aviation Administration, Northwest Mountain Region, 17900 Pacific Highway South, C-68966, Seattle, Washington 98168, 206 431-2120

RIN: 2120-AA08

1764. + REVISION OF FOREIGN REPAIR STATION RULES

Significance: Regulatory Program

Legal Authority: 49 USC 1354(a); 49 USC 1355(a); 49 USC 1421; 49 USC 1422; 49 USC 1423; 49 USC 1424; 49 USC 1425; 49 USC 1426; 49 USC 1427; 49 USC 1428; 49 USC 1429; 49 USC 1430; 49 USC 1431; 49 USC 1502; 49 USC 106(g); ...

CFR Citation: 14 CFR 145

Legal Deadline: None.

Abstract: This notice proposes to update the regulations for certificating foreign repair stations to accommodate the increasing demand for maintenance and alteration of U.S.-registered aircraft manufactured worldwide. This proposal would (1) modify the requirement for determination of need before a foreign repair station may be considered for U.S. certification, and (2) modify the limitations on the scope of work that a foreign repair station may perform on U.S.-registered aircraft, engines, propellers, appliances, and component parts for use on U.S.-registered aircraft. In addition, it is proposed that a foreign or domestic manufacturer, or a product for which it holds a U.S. type certificate and that is certificated by the FAA as a repair station, be allowed to return to service a component maintained or altered by a noncertificated source subject to specified conditions. Lastly, to be consistent with the air carrier operating rules, the air taxi/commercial operator rules would be amended to permit the airworthiness release to be signed by a person authorized by a U.S.-certificated foreign repair station.

Timetable:

Action	Date	FR Cite
NPRM	11/24/87	52 FR 45124
NPRM Comment Period End	01/25/88	
Final Action	10/00/88	

Small Entity: Undetermined

Analysis: Regulatory Evaluation 11/24/87 (52 FR 45124)

Agency Contact: Leo Weston, Manager, Aircraft Maintenance Division, Department of Transportation, Federal Aviation Administration, 800 Independence Avenue, SW, Washington, DC 20591, 202 267-8203

RIN: 2120-AC50

1765. + CERTIFICATION OF RECREATIONAL PILOTS AND ANNUAL FLIGHT REVIEW

Significance: Agency Priority

Legal Authority: 49 USC 1354(a) Federal Aviation Act of 1958, Sec. 313(a); 49 USC 1355 Federal Aviation Act of 1958, Sec. 314; 49 USC 1421 Federal Aviation Act of 1958, Sec. 601; 49 USC 1422 Federal Aviation Act of 1958, Sec. 602

CFR Citation: 14 CFR 61

Legal Deadline: None.

Abstract: This final rule would establish a recreational pilot certificate which would allow a student pilot to receive certification to fly certain aircraft after fewer hours of training than are currently required of a private pilot applicant. The recreational pilot certificate is intended to be a low-cost alternative to a private pilot certificate for persons interested in flying basic, experimental, or homebuilt aircraft in close proximity to a home airport that is not in airspace in which communication with an air traffic control facility is required. The rule would also establish an annual flight review requirement for noninstrument-rated private pilots with fewer than 400 flight hours. This rulemaking is significant because of substantial public interest and safety implications.

Timetable:

Action	Date	FR Cite
NPRM	06/25/85	50 FR 26286
NPRM Comment Period End	09/24/85	

Next Action Undetermined

Small Entity: No

Additional Information: Docket No. 24695

Agency Contact: Edna French, Department of Transportation, Federal Aviation Administration, 800 Independence Avenue, SW, Washington, DC 20591, 202 267-3644

RIN: 2120-AA54

1766. + ROTORCRAFT STRUCTURAL FATIGUE INCLUDING TOLERANCE TO FLAWS

Significance: Agency Priority

Legal Authority: 49 USC 1344; 49 USC 1354(A); 49 USC 1355; 49 USC 1421; 49 USC 1423; 49 USC 1424; 49 USC 1425; 49 USC 1428; 49 USC 1429; 49 USC 1430; 49 USC 106(G); PL 97-449

CFR Citation: 14 CFR 29

Legal Deadline: None.

Abstract: This amendment would revise Section 29.571 to add flaw tolerance to the fatigue evaluation of rotorcraft structure. This rulemaking is considered significant because it involves important safety issues.

Timetable:

Action	Date	FR Cite
ANPRM	01/06/83	48 FR 772
ANPRM Comment Period End	04/18/83	48 FR 772
NPRM	09/22/86	51 FR 33704
NPRM Comment Period End	04/03/87	51 FR 45343
Final Action	05/15/88	

Small Entity: No

Additional Information: Docket No. 23485.

Public meeting held on February 8, 1983.

Analysis: Draft Regulatory Evaluation 09/22/86 (51 FR 33704); Regulatory Evaluation 05/15/88

Agency Contact: Robert T. Weaver, Department of Transportation, Federal Aviation Administration, Fort Worth, TX 76193-0111, 817 624-5122

RIN: 2120-AA84

1767. + OCCUPANT RESTRAINT IN NORMAL AND TRANSPORT CATEGORY ROTORCRAFT

Significance: Agency Priority

Legal Authority: 49 USC 1344 Federal Aviation Act of 1958, Sec. 303; 49 USC 1354(a) Federal Aviation Act of 1958, Sec. 313(a); 49 USC 1355 Federal Aviation Act of 1958, Sec. 314; 49 USC 1421 Federal Aviation Act of 1958, Sec. 601; 49 USC 1423 Federal Aviation Act of 1958, Sec. 603; 49 USC 1424 Federal Aviation Act of 1958, Sec. 604; 49 USC 1425 Federal Aviation Act of 1958, Sec. 605; 49 USC 1428 Federal Aviation Act of 1958, Sec. 608; 49 USC 1429 Federal Aviation Act of 1958, Sec. 609; 49 USC 1430 Federal Aviation Act of 1958, Sec. 610; 49 USC 106(g); PL 97-449

CFR Citation: 14 CFR 27; 14 CFR 29

Legal Deadline: None.

Abstract: This project proposes to amend the rotorcraft airworthiness standards in Parts 27 and 29 of the FAR. These proposals would add two dynamic crash-impact design requirement conditions for seat and occupant restraint systems, increase the static design load factors for seating devices and items of mass in the cabin or adjacent to the cabin as prescribed, prescribe a shoulder harness for each occupant, and add human impact injury criteria for the dynamic crash-impact conditions. These proposals are intended to significantly improve occupant protection levels in a survivable emergency landing impact. This rulemaking is significant because of the obvious safety improvements in crash situations, but also because of industry and operator concerns as to incurred costs due to increased weight and design effort.

Timetable:

Action	Date	FR Cite
NPRM	06/03/87	52 FR 20938
NPRM Comment Period End	12/30/87	

Next Action Undetermined

Small Entity: No

Analysis: Regulatory Flexibility Analysis; Regulatory Evaluation 06/03/87 (52 FR 20938)

Agency Contact: James Major, Department of Transportation, Federal Aviation Administration, Fort Worth, TX 76193-0111, 817 624-5117

RIN: 2120-AB35

1768. + PROPOSED REVISION TO NOISE CERTIFICATION STANDARDS FOR PROPELLER-DRIVEN SMALL AIRPLANES

Significance: Agency Priority

Legal Authority: 49 USC 1354 Federal Aviation Act of 1958, Sec. 313; 49 USC 1421 Federal Aviation Act of 1958, Sec. 601; 49 USC 1423 Federal Aviation Act of 1958, Sec. 603; 49 USC 1431 Federal Aviation Act of 1958, Sec. 611

CFR Citation: 14 CFR 21; 14 CFR 36

Legal Deadline: None.

Abstract: Would revise noise certification standards for propeller-driven small airplanes to substitute the use of actual takeoff tests for the level flyover tests currently specified. This proposal would revise test procedures applicable to noise certification tests conducted on or after January 1, 1988. It would also revise the noise-level limit numbers to approximate the equivalent of the sound levels measured and corrected in accordance with the current standard. These proposals result from industry requests for certification to be more directly based upon typical inservice noise measurements and from studies conducted in several nations over a three-year period under the auspices of the International Civil Aviation Organization. In addition, the FAA proposes to exempt antique airplanes and changes involving the addition of floats or skis from the acoustical change measurement and documentation requirements of Part 21. This regulation is significant because of substantial public interest.

Timetable:

Action	Date	FR Cite
NPRM	07/14/86	51 FR 25500
NPRM Comment Period End	10/09/86	
Final Action	10/00/88	

Small Entity: No

Analysis: Regulatory Evaluation 07/14/86 (51 FR 25500)

Agency Contact: Steven Albersheim, Environmental Specialist, Department of Transportation, Federal Aviation Administration, 800 Independence Ave., SW, Washington, DC 20591, 202 267-3560

RIN: 2120-AB47

1769. + PROPOSED LIMITS ON THE GROWTH OF NOISE FROM CERTAIN AIRPLANES AND AIRPLANE TYPES

Significance: Agency Priority

Legal Authority: 49 USC 1354(a) Federal Aviation Act of 1958, Sec. 313(a); 49 USC 1421(a) Federal Aviation Act of 1958, Sec. 601(a); 49 USC 1423 Federal Aviation Act of 1958, Sec. 603; 49 USC 1431(b) Federal Aviation Act of 1958, Sec. 611(b); 49 USC 1421 et seq National Environmental Policy Act, Title I; EO 11514; 49 USC 106(g)

CFR Citation: 14 CFR 36; 14 CFR 91

Legal Deadline: None.

Abstract: Would revise both noise certification standards and operating noise rules to ensure that aircraft certificated within certain broad noise groups or "stages" remain within those stages. Those proposals would apply to transport category large aircraft and to turbojet powered aircraft regardless of category. The proposed rule would prohibit modification of both individual airplanes and whole airplane types where those modifications would result in the growth of noise beyond the limits of the airplane's current stage. While the proposal would not restrict airplane

changes that result in lower noise, it would in some cases prohibit re-modification of those aircraft to return to their original noise levels. The FAA believes that these rules are necessary to correct a defect in the current regulations and to protect airports, aircraft operators and the public from the effects of that defect. This rulemaking is significant because of intense public interest.

Timetable:

Action	Date	FR Cite
NPRM	06/17/87	52 FR 23144
NPRM Comment Period End	09/14/87	
Final Action	10/16/88	

Small Entity: No

Analysis: Regulatory Evaluation 06/17/87 (52 FR 23144)

Agency Contact: Steven Albersheim, Environmental Specialist, Department of Transportation, Federal Aviation Administration, 800 Independence Ave., SW, Washington, DC 20591, 202 267-3560

RIN: 2120-AB50

1770. + INDEPENDENT POWER SOURCE FOR PUBLIC ADDRESS SYSTEM IN TRANSPORT CATEGORY AIRPLANES

Significance: Agency Priority

Legal Authority: 49 USC 1344; 49 USC 1354(a); 49 USC 1355; 49 USC 1421; 49 USC 1423; 49 USC 1424; 49 USC 1425; 49 USC 1428; 49 USC 1429; 49 USC 1430; 49 USC 106(g); PL 97-449

CFR Citation: 14 CFR 25; 14 CFR 121

Legal Deadline: None.

Abstract: This action would amend the regulations to require an independent power source for the public address (PA) system in certain transport category airplanes. The requirement would be applicable to future type certification of airplanes that are required to have PA systems for use in air carrier service and to such airplanes manufactured after a specified date, regardless of the date of application for type certificate. This rulemaking is considered significant because it involves an important cabin-safety issue.

Timetable:

Action	Date	FR Cite
NPRM	05/27/86	51 FR 19140
NPRM Comment Period End	11/24/86	

Next Action Undetermined

Small Entity: No

Additional Information: Docket No. 24995

Analysis: Regulatory Evaluation 05/27/86 (51 FR 19140)

Agency Contact: Robert Hall, Department of Transportation, Federal Aviation Administration, Northwest Mountain Region, 17900 Pacific Highway South, C-68966, Seattle, Washington 98168, 206 431-2143

RIN: 2120-AB77

1771. + PART 23 AIRWORTHINESS REVIEW — NOTICE NO. 1 (CRASHWORTHINESS)

Significance: Agency Priority

Legal Authority: 49 USC 1354; 49 USC 1421; 49 USC 1423

CFR Citation: 14 CFR 23

Legal Deadline: None.

Abstract: This notice proposes changes to the airworthiness standards to enhance cabin safety and occupant protection by raising the level of crashworthiness for new designs of small airplanes type certificated after a certain date. This rulemaking is considered significant because it involves important cabin-safety and crashworthiness issues.

Timetable:

Action	Date	FR Cite
NPRM	12/12/86	51 FR 44878
NPRM Comment Period End	06/12/87	

Next Action Undetermined

Small Entity: No

Additional Information: This notice is the first of several planned notices resulting from a regulatory review of Part 23 conducted in late 1984.

Analysis: Regulatory Evaluation 12/12/86 (51 FR 44878)

Agency Contact: Earsa L. Tankesley, Manager, Standards Office, Department of Transportation, Federal Aviation Administration, 601 East 12th Street, Kansas City, MO 64106, 816 374-6930

RIN: 2120-AC16

1772. + LOCATION OF PASSENGER EMERGENCY EXITS IN TRANSPORT-CATEGORY AIRPLANES

Significance: Agency Priority

Legal Authority: 49 USC 1344; 49 USC 1354(a); 49 USC 1355; 49 USC 1421; 49 USC 1423; 49 USC 1424; 49 USC 1425; 49 USC 1428; 49 USC 1429; 49 USC 1430; 49 USC 106(g); PL 97-449

CFR Citation: 14 CFR 21; 14 CFR 25; 14 CFR 121

Legal Deadline: None.

Abstract: This notice proposes to limit increases in passenger emergency escape path distance by establishing a new standard limiting the distance any passenger seat may be from the nearest emergency exit and the distance any exit may be from an adjacent exit. The proposal would make the standard applicable to type certification of new transport category airplane models, regardless of the date of original application for type certificate, and to airplanes operating under Part 121, except those already in operation. The standard would be applicable for issuance of standard airworthiness certificates for airplanes manufactured after the NPRM date. The proposal is a result of the recent public Emergency Evacuation Task Force and is intended to improve the likelihood of passengers safely escaping an airplane during an emergency evacuation; for this reason the rulemaking is considered significant.

Timetable:

Action	Date	FR Cite
NPRM	10/20/87	52 FR 39190
NPRM Comment Period End	12/21/87	

Next Action Undetermined

Small Entity: No

Analysis: Draft Regulatory Evaluation 10/20/87 (52 FR 39190)

Agency Contact: Arthur Hayes, Aerospace Engineer, Department of Transportation, Federal Aviation Administration, 800 Independence Ave., SW, Washington, DC 20591, 202 267-9937

RIN: 2120-AC29

VOL 53 ISS 79 PT 1 AP 25 1988 UMI

1773. + INSTALLATION OF TRAFFIC CONTROL AVOIDANCE SYSTEM IN DOMESTIC TRANSPORT CATEGORY AIRPLANES

Significance: Agency Priority

Legal Authority: None

CFR Citation: 14 CFR 121; 14 CFR 25

Legal Deadline: None.

Abstract: This notice proposes to require the installation and use of a Traffic Alert and Collision Avoidance System (TCAS) in large transport type airplanes and certain turbine powered smaller airplanes. TCAS, which utilizes the signal from existing transponders, would provide for a collision avoidance capability in the cockpit independent of the ground Air Traffic Control (ATC) system, or where there is no ATC coverage. Additionally, the notice proposes that all operators of TCAS-equipped airplanes have an FAA-approved TCAS training program for flight crewmembers. This rulemaking is considered significant because it involves important departmental policy.

Timetable:

Action	Date	FR Cite
NPRM	08/26/87	52 FR 32268
NPRM Comment Period End	12/24/87	

Next Action Undetermined

Small Entity: Undetermined

Analysis: Regulatory Flexibility Analysis; Regulatory Evaluation 08/26/87 (52 FR 32268)

Agency Contact: Frank Rock, Department of Transportation, Federal Aviation Administration, 800 Independence Avenue, SW, Washington, DC 20591, 202 267-9567

RIN: 2120-AC34

1774. + TERMINAL CONTROL AREA CLASSIFICATION AND PILOT/EQUIPMENT REQUIREMENTS

Significance: Agency Priority

Legal Authority: None

CFR Citation: 14 CFR 71; 14 CFR 91

Legal Deadline: None.

Abstract: Proposes to establish a single-class TCA having common pilot and equipment requirements. This proposed action is consistent with determinations made by the National Airspace Review and FAA TCA Review Teams that different classifications of TCA airspace are outdated and no longer valid, and that all aircraft, including helicopters, should operate under a single set of pilot and equipment requirements. Additionally, this proposal would require a Mode C transponder on all aircraft within 30 nautical miles of a TCA primary airport. This rulemaking is considered significant because it is controversial, involving substantial public interest.

Timetable:

Action	Date	FR Cite
NPRM	06/16/87	52 FR 22918
Comment Period Extended - NPRM to 09/16/87	08/06/87	52 FR 29205
NPRM Comment Period End	08/17/87	
Final Action	04/00/88	

Small Entity: Yes

Additional Information: RIN 2120-AC36 has been combined into this proceeding. Regulatory Project No AT-200-86-21R (Docket #25304)

Analysis: Regulatory Evaluation 06/16/87 (52 FR 22918)

Agency Contact: Reginald C. Matthews, Air Traffic Control Specialist, Department of Transportation, Federal Aviation Administration, 800 Independence Avenue, SW, Washington, DC 20591, 202 267-9245

RIN: 2120-AC35

1775. + COMMUTER CATEGORY AIRPLANES: COCKPIT VOICE RECORDER (CVR) AND FLIGHT DATA RECORDER (FDR) REQUIREMENTS

Significance: Agency Priority

Legal Authority: 49 USC 1354(a); 49 USC 1355(a); 49 USC 1421; 49 USC 1422; 49 USC 1423; 49 USC 1424; 49 USC 1425; 49 USC 1426; 49 USC 1427; 49 USC 1428; 49 USC 1429; 49 USC 1430; 49 USC 1431; 49 USC 1502; 49 USC 106(g)

CFR Citation: 14 CFR 135

Legal Deadline: None.

Abstract: This notice would initiate supplemental rulemaking action amending Part 135 to include requirements for CVR's/FDR's in multiengine, turbine-powered airplanes configured to carry six or more passengers and requiring two pilots. This rulemaking is considered significant because of substantial public and congressional interest.

Timetable:

Action	Date	FR Cite
NPRM	02/12/88	53 FR 4314
NPRM Comment Period End	03/28/88	53 FR 4314
Final Action	06/00/88	

Small Entity: No

Agency Contact: Frank Rock, Department of Transportation, Federal Aviation Administration, 800 Independence Avenue, SW, Washington, DC 20591, 202 267-9567

RIN: 2120-AC48

1776. ● + TRANSPONDER WITH AUTOMATIC ALTITUDE REPORTING CAPABILITY REQUIREMENT

Significance: Agency Priority

Legal Authority: 49 USC 1301(7); 49 USC 1303; 49 USC 1344; 49 USC 1348; 49 USC 1352 to 1355; 49 USC 1401; 49 USC 1421 to 1431; 49 USC 1471; 49 USC 1472; 49 USC 1502; 49 USC 1510; 49 USC 1522; 49 USC 2121 to 2125; 42 USC 4321 et seq

CFR Citation: 14 CFR 91

Legal Deadline: Statutory, June 30, 1988.

Abstract: This rulemaking proposes to require that all aircraft be equipped with a transponder and automatic altitude-reporting equipment (Mode C transponder) when operating in terminal air space where air traffic control radar service is provided, and when operating at, and above, 6,000 feet above the surface in controlled air space in the United States. In concert with these actions, the FAA is proposing to establish a 1,200-foot above-the-surface common floor for controlled air space over the United States. This rulemaking is considered significant because of substantial public interest and statutory requirement.

Timetable:

Action	Date	FR Cite
NPRM	02/12/88	53 FR 4306
Comment period extended to 05/12/88	03/24/88	53 FR 9758
NPRM Comment Period End	03/28/88	53 FR 4306
Final Action	06/00/88	

Small Entity: Undetermined

Additional Information:

Legal Authority Cont:

EO 11514

49 USC 106(g) (Revised Pub L 97-449, January 12, 1983)

Regulatory Project No. ATO-200-87-18R Rulemaking to amend the base of the Continental Control Area (RIN 2120-AC64) has been combined into this rulemaking. Contemplated action in RIN AC52 has also been subsumed in this rulemaking action.

Analysis: Regulatory Evaluation 04/01/88

Agency Contact: Reginald C. Matthews, Air Traffic Control Specialist, Department of Transportation, Federal Aviation Administration, 800 Independence Avenue, SW, Washington, DC 20591, 202 267-8245

RIN: 2120-AC56

1777. ● + SPECIAL FLIGHT RULES IN THE VICINITY OF THE GRAND CANYON NATIONAL PARK

Significance: Agency Priority

Legal Authority: PL 100-91; 49 USC 1348

CFR Citation: 14 CFR 199; 14 CFR 135

Legal Deadline: Statutory, May 27, 1988. PL 100-91 requires a final rule within 90 days of the date DOI submitted recommendations to the FAA, or by 3/28/88. However, if the recommendations would have adverse impacts on aviation safety, a final rule must be issued within 60 days of the finding. The latest possible date is 5/27/88.

Abstract: PL 100-91, signed on August 18, 1987, required the Department of Interior to submit recommendations to the FAA for regulation of aircraft overflight of the Grand Canyon. DOI submitted its recommendations to FAA on December 29, 1987. The law further requires that FAA adopt regulations which implement the DOI recommendations. This rulemaking fulfills that requirement.

Timetable:

Action	Date	FR Cite
NPRM	03/04/88	53 FR 7096
NPRM Comment Period End	03/25/88	
Final Action	05/27/88	

Small Entity: Undetermined

Analysis: Environmental Assessment 05/00/88

Agency Contact: David L. Bennett, Manager, Airspace and Traffic Branch, Department of Transportation, Federal Aviation Administration, 202 267-3491

RIN: 2120-AC70

1778. REVISION OF PART 91

Significance: Nonsignificant

Legal Authority: 49 USC 1348 Federal Aviation Act of 1958, Sec. 307; 49 USC 1354 Federal Aviation Act of 1958, Sec. 313; 49 USC 1354(a) Federal Aviation Act of 1958, Sec. 313(a); 49 USC 1355 Federal Aviation Act of 1958, Sec. 314; 49 USC 1401 Federal Aviation Act of 1958, Sec. 501; 49 USC 1402 Federal Aviation Act of 1958, Sec. 502; 49 USC 1421 Federal Aviation Act of 1958, Sec. 601; 49 USC 1422 to 1430 Fed. Aviation Act of 1958, Secs. 602 to 610; 49 USC 1502 Federal Aviation Act of 1958, Sec. 1102

CFR Citation: 14 CFR 91

Legal Deadline: None.

Abstract: This proposed amendment reorganizes and realigns the general operating and flight rules to make them more understandable and easier to use. Also, several changes are being made to provide more flexibility for certain operations. These changes resulted from comments received from the general public and aviation industry in response to a request for specific comments to help identify substantive areas needing review.

Timetable:

Action	Date	FR Cite
ANPRM	01/22/79	44 FR 4571
NPRM	09/10/81	46 FR 45256
NPRM	03/20/85	50 FR 11282
NPRM Comment Period End	07/18/85	

Next Action Undetermined

Small Entity: No

Additional Information: Docket No. 18334.

Analysis: Regulatory Evaluation 09/10/81 (46 FR 45256)

Agency Contact: Marion Clemens or Edna French, Department of Transportation, Federal Aviation Administration, 800 Independence Avenue, SW, Washington, DC 20591, 202 267-8150

RIN: 2120-AA13

1779. INOPERATIVE INSTRUMENTS OR EQUIPMENT

Significance: Nonsignificant

Legal Authority: 49 USC 1348(a) Federal Aviation Act of 1958, Sec. 307(a); 49 USC 1348(c) Federal Aviation Act of 1958, Sec. 307(c); 49 USC 1354 Federal Aviation Act of 1958, Sec. 313; 49 USC 1354(a) Federal Aviation Act of 1958, Sec. 313(a); 49 USC 1355 Federal Aviation Act of 1958, Sec. 314; 49 USC 1355(a) Federal Aviation Act of 1958, Sec. 314(a); 49 USC 1421(a) to 1430 Fed. Av. Act 1958, Secs. 601(a) to 610; 49 USC 1502 Federal Aviation Act of 1958, Sec. 1102

CFR Citation: 14 CFR 43; 14 CFR 91

Legal Deadline: None.

Abstract: This notice supplements NPRM 81-14, which proposed to permit the operation of powered aircraft with certain inoperative instruments and equipment that are not essential for the safe operation of the aircraft. After further review of the comments from the public, the FAA concluded that provisions in that notice could be accomplished with less paperwork, and the concept could be further modified to conform to other pertinent regulations. The supplemental NPRM proposed to permit rotorcraft and nonturbine powered airplanes (for which a master minimum equipment list has not been developed), that are not being utilized in an air carrier operation, to be operated with certain inoperative instruments and equipment. Furthermore, this supplemental NPRM proposed to permit flight operations with certain inoperative instruments and equipment for small multiengine rotorcraft and nonturbine-powered small multiengine airplanes (for which a master minimum equipment list has been developed and that are not being utilized in an air carrier operation) the option of selecting the minimum equipment (cont)

Timetable:

Action	Date	FR Cite
NPRM	10/26/81	46 FR 52278
NPRM Comment Period End	01/25/82	
SNPRM Comment Period End 03/16/86	12/15/87	52 FR 47680
Final Action	07/00/88	

Small Entity: No

Additional Information: ABSTRACT CONT: list concept or complying with the provision contained in the new proposed regulations.

Analysis: Regulatory Evaluation 10/26/81 (46 FR 52278)

DOT—FAA **Final Rule Stage**

Agency Contact: John Lynch, Department of Transportation, Federal Aviation Administration, 800 Independence Avenue, SW, Washington, DC 20591, 202 267-3841

RIN: 2120-AA19

1780. ROTORCRAFT REGULATORY REVIEW PROGRAM AMENDMENT NO. 3

Significance: Nonsignificant

Legal Authority: 49 USC 1354; 49 USC 1354(A); 49 USC 1355; 49 USC 1421; 49 USC 1423; 49 USC 1424; 49 USC 1425; 49 USC 1428; 49 USC 1429; 49 USC 1430; 49 USC 106(G); PL 97-449

CFR Citation: 14 CFR 1; 14 CFR 27; 14 CFR 29; 14 CFR 33

Legal Deadline: None.

Abstract: This amendment changes Parts 1, 27, 29, and 33 in the area of propulsion system requirements. New rules or changes to rules are included in the area of engine ratings, detailed combustion heater requirements, lightning protection, system tests, and oil requirements.

Timetable:

Action	Date	FR Cite
NPRM	11/27/84	49 FR 46670
NPRM Comment Period End	03/26/85	
Final Action	04/15/88	

Small Entity: No

Analysis: Regulatory Evaluation 11/27/84 (49 FR 46670)

Agency Contact: Mike Mathias, Department of Transportation, Federal Aviation Administration, Fort Worth, TX 76193-0111, 817 624-5123

RIN: 2120-AA28

1781. TRANSPORT CATEGORY AIRPLANE AIRWORTHINESS STANDARDS

Significance: Nonsignificant

Legal Authority: 49 USC 1344; 49 USC 1354(a); 49 USC 1355; 49 USC 1421; 49 USC 1423; 49 USC 1424; 49 USC 1425; 49 USC 1428; 49 USC 1429; 49 USC 1430; 49 USC 106(g); PL 97-449

CFR Citation: 14 CFR 25

Legal Deadline: None.

Abstract: This action would amend the airworthiness standards contained in Part 25 applicable to transport category airplanes to: (1) relieve the regulatory burden wherever possible, (2) ensure the airworthiness standards are practicable for the light transport airplanes common to regional air carrier operation, and (3) update Part 25 for clarity and accuracy.

Timetable:

Action	Date	FR Cite
NPRM	12/03/84	49 FR 47358
NPRM Comment Period End	04/04/85	

Next Action Undetermined

Small Entity: No

Additional Information: Docket No. 24344

Affected Sectors: Multiple

Analysis: Regulatory Evaluation 12/03/84 (49 FR 47358)

Agency Contact: Gary Killion, Department of Transportation, Federal Aviation Administration, NorthWest Mountain Region, 17900 Pacific Highway South, C-68966, Seattle, WA 98168, 206 431-2112

RIN: 2120-AA47

1782. AMEND PART 23 TO INCLUDE EMPENNAGE FATIGUE REQUIREMENTS

Significance: Nonsignificant

Legal Authority: 49 USC 1354 Federal Aviation Act of 1958, Sec. 313; 49 USC 1421 Federal Aviation Act of 1958, Sec. 601; 49 USC 1423 Federal Aviation Act of 1958, Sec. 603

CFR Citation: 14 CFR 23

Legal Deadline: None.

Abstract: This action would provide for fatigue integrity of small airplane empennage structure where present Part 23 fatigue requirements apply only to the wing.

Timetable:

Action	Date	FR Cite
NPRM	09/22/86	51 FR 33700
NPRM Comment Period End	01/21/87	

Next Action Undetermined

Small Entity: No

Additional Information: The FAA is evaluating additional data obtained from NASA.

Analysis: Regulatory Evaluation 02/18/86 (51 FR 33700)

Agency Contact: Earsa L. Tankesley, Manager, Standards Office, Department of Transportation, Federal Aviation Administration, 601 E. 12th Street, Kansas City, MO 64106, 816 374-6930

RIN: 2120-AA58

1783. NOISE STANDARDS: AIRCRAFT TYPE AND AIRWORTHINESS CERTIFICATION

Significance: Nonsignificant

Legal Authority: 49 USC 1354 Federal Aviation Act of 1958, Sec. 313; 49 USC 1421 Federal Aviation Act of 1958, Sec. 601; 49 USC 1423 Federal Aviation Act of 1958, Sec. 603; 49 USC 1431 Federal Aviation Act of 1958, Sec. 611

CFR Citation: 14 CFR 36

Legal Deadline: None.

Abstract: Part 36 prescribes noise type certification standards for turbo jet powered airplanes and propeller driven small airplanes regardless of category. This review will examine the need to reorganize and realign the noise standards to make them more understandable and easier to use. This review would reorganize existing material into several new subparts, and utilize an improved numbering system to provide for the easier inclusion of future changes. Other improvements would be made by deleting redundancies, obsolete compliance dates, and making other minor changes. Additionally, Part 36 will be reviewed in accordance with Executive Order 12291 to reduce regulatory burdens on the public, including the preparation of both a Regulatory Evaluation and a Regulatory Flexibility Analysis.

Timetable:

Action	Date	FR Cite
NPRM	01/29/85	50 FR 4172
NPRM Comment Period End	04/24/85	
Final Action	04/16/88	

Small Entity: Yes

Additional Information: Will also consider Petition for Rulemaking from the Aerospace Industries of America (Docket No. 23340; Petition Notice No. PR-82-13).

Analysis: Regulatory Flexibility Analysis; Environmental Assessment 01/29/85 (50 FR 4172); Regulatory Evaluation 01/29/85 (50 FR 4172)

Agency Contact: Steven Albersheim, Environmental Specialist, Department

of Transportation, Federal Aviation Administration, 800 Independence Ave., SW, Washington, DC 20591, 202 267-3560

RIN: 2120-AA74

1784. NIGHTTIME VFR WEATHER MINIMUMS

Significance: Nonsignificant

Legal Authority: 49 USC 1301(7); 49 USC 1303; 49 USC 1344; 49 USC 1348; 49 USC 1352; 49 USC 1353; 49 USC 1354; 49 USC 1355; 49 USC 1401; 49 USC 1421; 49 USC 1422; 49 USC 1423; 49 USC 1424; 49 USC 1425; 49 USC 1426; ...

CFR Citation: 14 CFR 91

Legal Deadline: None.

Abstract: Would standardize weather minimums in all airspace at night.

Timetable:

Action	Date	FR Cite
NPRM	07/23/85	50 FR 30124
NPRM Comment Period End	09/23/85	50 FR 30124
Final Action	06/01/88	

Small Entity: No

Additional Information: LEGAL AUTHORITY CONT: 49 USC 1427; 48 USC 1428; 49 USC 1429; 49 USC 1430; 49 USC 1431; 49 USC 1471; 49 USC 1472; 49 USC 1502; 49 USC 1510; 49 USC 1522; 49 USC 2121; 49 USC 2122; 49 USC 2123; 49 USC 2124; 49 USC 2125; 42 USC 4321 et seq; EO 11514, 49 USC 106(a), Revised Pub. L. 97-449, January 12, 1983, Regulatory Project ATO-200-83-16R (Docket # 24722)

Agency Contact: William C. Davis, Manager, Air Traffic Rules Branch, Department of Transportation, Federal Aviation Administration, 800 Independence Avenue, SW, Washington, DC 20591, 202 267-8783

RIN: 2120-AB04

1785. AIRWORTHINESS STANDARDS: AIRCRAFT ENGINES, ELECTRICAL AND/OR ELECTRONIC ENGINE CONTROL SYSTEMS

Significance: Nonsignificant

Legal Authority: 49 USC 1354 Federal Aviation Act of 1958, Sec. 313; 49 USC 1421 Federal Aviation Act of 1958, Sec. 601; 49 USC 1423 Federal Aviation Act of 1958, Sec. 603

CFR Citation: 14 CFR 33

Legal Deadline: None.

Abstract: Would add a new section, FAR 33.28 to incorporate requirements for electronic controls for aircraft engines.

Timetable:

Action	Date	FR Cite
NPRM	02/14/85	50 FR 6186
NPRM Comment Period End	07/29/85	

Next Action Undetermined

Small Entity: No

Analysis: Regulatory Evaluation 02/14/85 (50 FR 6186)

Agency Contact: Cosimo J. Bosco, Aerospace Engineer, Department of Transportation, Federal Aviation Administration, ANE-110, FAA NE Region, 12 New England Executive Park, Burlington, MA 01803, 617 270-24[illegible]

RIN: 2120-AB06

1786. STANDARDS FOR APPROVAL OF A REDUCED V1 METHODOLOGY FOR TAKEOFF ON WET AND CONTAMINATED RUNWAYS

Significance: Nonsignificant

Legal Authority: 49 USC 1344; 49 USC 1354(a) to 1357; 49 USC 1401; 49 USC 1421 to 1431; 49 USC 1472; 49 USC 1485; 49 USC 1502; 49 USC 106(g); PL 97-449

CFR Citation: 14 CFR 25; 14 CFR 121; 14 CFR 135

Legal Deadline: None.

Abstract: This action proposes amendments to Parts 25, 121, and 135 of the Federal Aviation Regulations (FAR) to add new standards for transport category airplanes which would provide for approval of a reduced takeoff decision speed (V1) methodology for takeoff on wet and contaminated runways.

Timetable:

Action	Date	FR Cite
NPRM	11/30/87	52 FR 45578
NPRM Comment Period End	03/30/88	

Next Action Undetermined

Small Entity: No

Additional Information: Docket 25471

Analysis: Regulatory Evaluation 11/30/87 (52 FR 45578)

Agency Contact: Denny Whitmire, Department of Transportation, Federal Aviation Administration, Northwest Mountain Region, 17900 Pacific Highway South, C-68966, Seattle, Washington 98168, 206 431-2119

RIN: 2120-AB17

1787. LOW-FUEL-QUANTITY ALERTING SYSTEM

Significance: Nonsignificant

Legal Authority: 49 USC 1344; 49 USC 1354(a); 49 USC 1355; 49 USC 1421; 49 USC 1423; 49 USC 1424; 49 USC 1425; 49 USC 1428; 49 USC 1429; 49 USC 1430; 49 USC 106(g); PL 97-449

CFR Citation: 14 CFR 25

Legal Deadline: None.

Abstract: Possible revision to FAR 25.1305 to include a requirement to install a means to alert the flightcrew of potentially unsafe low fuel.

Timetable:

Action	Date	FR Cite
NPRM	05/12/87	52 FR 17890
NPRM Comment Period End	09/09/87	

Next Action Undetermined

Small Entity: No

Additional Information: Docket No 25213.

Analysis: Regulatory Evaluation 05/12/87 (52 FR 17890)

Agency Contact: Neil Schalekamp, Department of Transportation, Federal Aviation Administration, Northwest Mountain Region, 17900 Pacific Highway South, C-68966, Seattle, Washington 98168, 206 431-2135

RIN: 2120-AB46

1788. HELICOPTER INSTRUMENT FLIGHT

Significance: Nonsignificant

Legal Authority: 49 USC 1344; 49 USC 1354(A); 49 USC 1355; 49 USC 1421; 49 USC 1423; 49 USC 1424; 49 USC 1425; 49 USC 1428; 49 USC 1429; 49 USC 1430; 49 USC 106(G); PL 97-449

CFR Citation: 14 CFR 27; 14 CFR 29

Legal Deadline: None.

Abstract: This project revises Appendix B of Parts 27 and 29 to permit IFR operations at airspeeds below the normal minimum instrument airspeed during approach and landing.

VOL 53 ISS 79 PT 1 APR 25 1988 UMI

Timetable:

Action	Date	FR Cite
NPRM	06/12/86	51 FR 21488
NPRM Comment Period End	04/03/87	51 FR 45343
Final Action	07/15/88	

Small Entity: No

Additional Information: The FAA has determined that adoption of this proposal will not result in an economic burden on the public. It is a relieving rule that removes a minimum speed limitation when certain optional performance standards are met.

Analysis: Regulatory Evaluation 06/12/86 (51 FR 21488)

Agency Contact: Jim S. Honaker, Department of Transportation, Federal Aviation Administration, Fort Worth, TX 76193-0111, 817 624-5109

RIN: 2120-AB87

1789. TERMINAL CONTROL AREA (TCA) SAN DIEGO (MODIFICATION)

Significance: Nonsignificant

Legal Authority: 49 USC 1348(a); 49 USC 1354(a); 49 USC 1510

CFR Citation: 49 CFR 71

Legal Deadline: None.

Abstract: Terminal Control Areas (TCA) are proposed to reduce the midair collision potential by eliminating the mix of controlled and uncontrolled aircraft in a higher density terminal environment.

Timetable:

Action	Date	FR Cite
NPRM	03/04/86	51 FR 7448
NPRM Comment Period End	05/05/86	
Final Action	04/01/88	

Small Entity: No

Analysis: Regulatory Evaluation 04/01/88

Agency Contact: Joe Gill, Air Traffic Control Specialist, Department of Transportation, Federal Aviation Administration, 800 Independence Avenue, SW, Washington, DC 20591, 202 267-9252

RIN: 2120-AB98

1790. FLIGHT PLAN AND TRANSPONDER-ON REQUIREMENTS IN AIR DEFENSE IDENTIFICATION ZONES (ADIZ)

Significance: Nonsignificant

Legal Authority: 49 USC 1348; 49 USC 1502; 49 USC 1510; 49 USC 1522; 49 USC 106(g) Revised Pub L 97-449, January 12, 1983

CFR Citation: 14 CFR 99

Legal Deadline: None.

Abstract: The proposal would require that all civil aircraft operating into, within, or out of the United States through a coastal air defense identification zone be operated under a filed flight plan regardless of true airspeed. Each such operation by an aircraft equipped with a functioning air traffic control (ATC) transponder would have to be conducted with that transponder on and replying on the appropriate code or on a code assigned by ATC.

Timetable:

Action	Date	FR Cite
NPRM	10/24/86	51 FR 37882
NPRM Comment Period End	12/23/86	
Final Action	04/01/88	

Small Entity: No

Additional Information: Regulatory Project ATO-200-85-13R (Docket # 25099)

Analysis: Regulatory Evaluation 10/24/86 (51 FR 37882)

Agency Contact: Reginald C. Matthews, Air Traffic Control Specialist, Department of Transportation, Federal Aviation Administration, 800 Independence Avenue, SW, Washington, DC 20591, 202 267-9245

RIN: 2120-AC00

1791. PART 150 - AIRPORT NOISE-COMPATIBILITY PLANNING

Significance: Nonsignificant

Legal Authority: 49 USC 1348(c); 49 USC 1354(a); 49 USC 1421; 49 USC 1431(b); 49 USC 1655(c); 49 USC 2101 to 2104(b); 49 USC 1.47(m); 49 USC 2201 et seq.

CFR Citation: 14 CFR 150

Legal Deadline: None.

Abstract: Part 150 of the Federal Aviation Regulations prescribes requirements for airport operators who voluntarily choose to submit compatibility planning programs to the FAA. Operators of airports whose maps and programs have been accepted by the FAA as meeting the Part 150 standards are then eligible to apply for funding noise-control projects under the Airport Improvement Program and are further afforded certain legal rights under the law. The current rule includes heliports that are located on public-use airports; the proposed rule would extend coverage to free-standing public-use heliports.

Timetable:

Action	Date	FR Cite
ANPRM	11/04/86	51 FR 40037
ANPRM Comment Period End	02/03/87	
Final Action	04/16/88	

Small Entity: No

Analysis: Regulatory Evaluation 11/04/86 (51 FR 40037)

Agency Contact: Robert B. Hixson, Environmental Specialist, Department of Transportation, Federal Aviation Administration, 800 Independence Ave., SW, Washington, DC 20591, 202 267-3565

RIN: 2120-AC19

1792. MANDATORY REPORTING FOR EMERGENCY EVACUATION SYSTEMS AND COMPONENTS

Significance: Nonsignificant

Legal Authority: 49 USC 1354(a); 49 USC 1355; 49 USC 1356; 49 USC 1357; 49 USC 1401; 49 USC 1421; 49 USC 1422; 49 USC 1423; 49 USC 1424; 49 USC 1425; 49 USC 1426; 49 USC 1427; 49 USC 1428; 49 USC 1429; 49 USC 1430; ...

CFR Citation: 14 CFR 121.703(a)

Legal Deadline: None.

Abstract: Notice proposed to amend the mechanical reliability reporting requirement contained in Part 121 to require certificate holders to report each failure, malfunction, or defect of emergency evacuation systems and components. This action is necessary to collect, record, analyze, and disseminate data concerning those failures, malfunctions, or defects that occur during training, testing, or actual emergency conditions to improve the levels of reliability and safety.

Timetable:

Action	Date	FR Cite
NPRM	06/03/87	52 FR 20982
Final Action	05/00/88	

Small Entity: No

Analysis: Regulatory Evaluation 06/03/87 (52 FR 20982)

Agency Contact: George Johnson, Department of Transportation, Federal Aviation Administration, 800 Independence Avenue, SW, Washington, DC 20591, 202 267-3796

RIN: 2120-AC49

1793. ● REALIGNMENT OF RESTRICTED AREAS IN THE EGLIN AFB AREA

Significance: Nonsignificant

Legal Authority: 49 USC 1302; 49 USC 1303; 49 USC 1348; 49 USC 1348(a); EO 10854; 49 USC 106(g)(Revised PL 97-449, January 12, 1983); 14 CFR 11.69; 49 USC 1354(a); 49 USC 1421(a); 49 USC 1424; 49 USC 1510; 49 USC 1522; 49 USC 2402; 49 USC 2424

CFR Citation: 14 CFR 73; 14 CFR 93

Legal Deadline: None.

Abstract: This revision proposes to realign restricted areas in the Eglin AFB area to increase the availability of airspace for civil users. In addition, to include certain portions of the realigned restricted areas, when not active in Section 93.81, Special Air Traffic Rule Airspace.

Timetable:

Action	Date	FR Cite
NPRM	01/08/88	53 FR 517
NPRM Comment Period End	02/19/88	53 FR 517
Final Action	07/31/88	

Small Entity: Undetermined

Agency Contact: Paul Gallant, Special Use Airspace, Department of Transportation, Federal Aviation Administration, 800 Independence Avenue, SW, Washington, DC 20591, 202 267-9253

RIN: 2120-AC63

1794. PART 95 INSTRUMENT FLIGHT RULES

Significance. Routine and Frequent

Legal Authority: 49 USC 1348 F.A. Act of 1958, Sec. 307; 49 USC 1510 F.A. Act of 1958, Sec. 1110

CFR Citation: 14 CFR 95

Legal Deadline: None.

Abstract: Nonsignificant regulations issued routinely and frequently as a part of an established body of technical requirements to keep those requirements operationally current. Total actions expected--2500. 05/00/88 - 05/00/89.

Timetable:

Action	Date	FR Cite
Final Action	05/00/89	

Small Entity: No

Agency Contact: Don Funai, Department of Transportation, Federal Aviation Administration, 800 Independence Avenue, SW, Washington, DC 20591, 202 267-8277

RIN: 2120-AA63

1795. AIRWORTHINESS DIRECTIVES

Significance: Routine and Frequent

Legal Authority: 49 USC 1354(a) F.A. Act, Sec. 313(a); 49 USC 1421 F.A. Act, Sec. 601; 49 USC 1423 F.A. Act, Sec. 603; 49 USC 1431(b) F.A. Act, Sec. 611(b)

CFR Citation: 14 CFR 39

Legal Deadline: None.

Abstract: Nonsignificant regulations issued routinely and frequently in order to correct known or expected safety problems on type certificated products. Total actions expected--300. 10/00/87 - 10/00/88.

Timetable:

Action	Date	FR Cite
Final Action	10/00/88	

Small Entity: Undetermined

Agency Contact: Jack McGrath, Department of Transportation, Federal Aviation Administration, 800 Independence Avenue, SW, Washington, DC 20591, 202 267-9580

RIN: 2120-AA64

1796. STANDARD INSTRUMENT APPROACH PROCEDURES

Significance: Routine and Frequent

Legal Authority: 49 USC 1348 F.A. Act, Sec. 307; 49 USC 1354(a) F.A. Act, Sec. 313(a); 49 USC 1421 F.A. Act, Sec. 601; 49 USC 1510 F.A. Act, Sec. 1110

CFR Citation: 14 CFR 97

Legal Deadline: None.

Abstract: Nonsignificant regulations issued routinely and frequently as a part of an established body of technical requirements to keep those requirements operationally current. Total actions expected--2800. 05/00/88 - 05/00/89.

Timetable:

Action	Date	FR Cite
Final Action	05/00/89	

Small Entity: No

Agency Contact: Don Funai, Department of Transportation, Federal Aviation Administration, 800 Independence Avenue, SW, Washington, DC 20591, 202 267-8277

RIN: 2120-AA65

1797. AIRSPACE ACTIONS

Significance: Routine and Frequent

Legal Authority: 49 USC 1348(a) F.A. Act, Sec. 307(a); 49 USC 1354(a) F.A. Act, Sec. 313(a)

CFR Citation: 14 CFR 71; 14 CFR 73; 14 CFR 75

Legal Deadline: None.

Abstract: Nonsignificant regulations issued routinely and frequently as a part of an established body of technical requirements to keep those requirements operationally current. Total actions expected--525. 10/00/87 - 10/00/88.

Timetable:

Action	Date	FR Cite
Final Action	10/00/88	

Small Entity: No

Agency Contact: Robert G. Burns, Manager, Airspace Branch, Department of Transportation, Federal Aviation Administration, 800 Independence Avenue, SW, Washington, DC 20591, 202 267-3075

RIN: 2120-AA66

DEPARTMENT OF TRANSPORTATION (DOT) **Completed Actions**

Federal Aviation Administration (FAA)

1798. + AIRPORT CERTIFICATION: REVISION AND REORGANIZATION

Significance: Regulatory Program

Legal Authority: 49 USC 1354 Federal Aviation Act of 1958, Sec. 313; 49 USC 1429 Federal Aviation Act of 1958, Sec. 609; 49 USC 1430 Federal Aviation Act of 1958, Sec. 610; 49 USC 1432 Federal Aviation Act of 1958, Sec. 612

CFR Citation: 14 CFR 139

Legal Deadline: None.

Abstract: Revision of 14 CFR Part 139 updates and clarifies the part including fire-fighting, rescue, and airport fueling operation requirements. This rulemaking was significant because of substantial public interest.

Timetable:

Action	Date	FR Cite
NPRM	10/23/85	50 FR 43094
NPRM Comment Period End	01/21/86	
Final Action	11/18/87	52 FR 44276

Small Entity: Yes

Additional Information: This project was initiated on June 25, 1975, in response to a GAO evaluation of the FAA's Airport Certification Program and the result it has on improving the safety of airports. Recent delays occurred due to industry concerns over aviation fueling responsibilities. FAA reviewed proposals by a group of aviation organizations, which resulted in changes in the NPRM.

Agency Contact: Jose Roman, Jr., Airport Safety Certification Specialist, Department of Transportation, Federal Aviation Administration, 800 Independence Avenue, SW, Washington, DC 20591, 202 267-8724

RIN: 2120-AA10

1799. + CIVIL HELICOPTER NOISE CERTIFICATION

Significance: Agency Priority

Legal Authority: 49 USC 1354(a) Federal Aviation Act of 1958, Sec. 313(a); 49 USC 1421(a) Federal Aviation Act of 1958, Sec. 601(a); 49 USC 1423 Federal Aviation Act of 1958, Sec. 603; 49 USC 1431(b) Federal Aviation Act of 1958, Sec. 611(b); 42 USC 4321 et seq. National Environmental Policy Act, Title I; EO 11514

CFR Citation: 14 CFR 21; 14 CFR 36

Legal Deadline: None.

Abstract: Final rule revises aircraft noise certification standards to add provisions applicable to civil helicopters in the normal, transport, and restricted categories, and provides noise-level limits and test procedures for the issuance of original and amended type certificates. The rule prohibits changes in type design of helicopters that may increase noise levels beyond certain limits but does not limit further manufacturing of existing types. Rule provides for commonality between U.S. standards and those adopted by the Int'l Civil Aviation Org. (ICAO). This rulemaking was considered significant because of substantial public interest.

Timetable:

Action	Date	FR Cite
NPRM	03/06/86	51 FR 7878
NPRM Comment Period End	09/02/86	
Final Action	02/05/88	53 FR 3534
Final Action Effective	02/05/88	53 FR 3534

Small Entity: No

Analysis: Regulatory Evaluation 03/06/86 (51 FR 7878)

Agency Contact: Steven Albersheim, Environmental Specialist, Department of Transportation, Federal Aviation Administration, 800 Independence Avenue, SW, Washington, DC 20591, 202 267-3560

RIN: 2120-AB33

1800. + TERMINAL CONTROL AREAS AT 10,000 FEET MEAN SEA LEVEL (MSL); MODE C TRANSPONDERS ABOVE 10,000 FEET MSL

Significance: Agency Priority

Legal Authority: 49 USC 1348(a); 49 USC 1354(a); 49 USC 1510; EO 10854; 49 USC 106(g), (Revised Pub L. 97-449, January 12, 1983); 14 CFR 11.69; 49 USC 1301(7); 49 USC 1303; 49 USC 1344; 49 USC 1348; 49 USC 1352 to 1355; 49 USC 1401; 49 USC 1421 to 1431; 49 USC 1471; 49 USC 1472

CFR Citation: 14 CFR 71.12; 14 CFR 71.40; 14 CFR 91.24

Legal Deadline: None.

Abstract: The Air Line Pilots Association requested amendment to Parts 71 and 91 to top all terminal control areas at 10,000 feet mean sea level and to require Mode C transponders above 10,000 feet mean sea level. This matter is now subsumed in RIN AC66, the regulatory proposal responding to recently enacted P.L. 100-102 and P.L. 100-223. Therefore, action on this entry is terminated.

Timetable:

Action	Date	FR Cite
Action terminated	02/02/88	

Small Entity: Undetermined

Additional Information: LEGAL AUTHORITY CONT: 49 USC 1502; 49 USC 1510; 49 USC 1522; 49 USC 2121 to 2125; 42 USC 4321 et seq; EO 11514; 49 USC 106(g), (Revised Pub L. 97-449, January 12, 1983).

Regulatory Project No: ATO-200-86-3R (Docket #24496)

Agency Contact: Robert Laser, Air Traffic Control Specialist, Department of Transportation, Federal Aviation Administration, 800 Independence Avenue, SW, Washington, DC 20591, 202 267-9251

RIN: 2120-AC52

1801. CESSNA FINANCE PETITION

Significance: Nonsignificant

Legal Authority: 49 USC 106(g); 49 USC 1354; 49 USC 1401; 49 USC 1403; 49 USC 1405; 49 USC 1406; 49 USC 1502; 4 UST 1630

CFR Citation: 14 CFR 49; 14 CFR 47

Legal Deadline: None.

Abstract: Petition for rulemaking to amend Parts 47 and 49 to provide all persons who hold a security interest in aircraft the same protection now afforded the seller of an aircraft under a conditional sales contract.

Timetable:

Action	Date	FR Cite
ANPRM	10/20/77	42 FR 55891
NPRM	05/22/80	45 FR 34826
Petition denied	01/25/88	53 FR 1911

Small Entity: No

Additional Information: Docket No. 17311.

Analysis: Regulatory Evaluation 05/22/80 (45 FR 34826)

Agency Contact: Agnes M. Jones, Aircraft Regulation Specialist, Department of Transportation, Federal Aviation Administration, PO Box 25724, Okla City, OK 73125, 405 686-2284

RIN: 2120-AA15

1802. STANDARDS FOR APPROVAL OF AN AUTOMATIC TAKEOFF THRUST CONTROL SYSTEM

Significance: Nonsignificant

Legal Authority: 49 USC 1344; 49 USC 1354(a); 49 USC 1355; 49 USC 1421; 49 USC 1423; 49 USC 1424; 49 USC 1425; 49 USC 1428; 49 USC 1429; 49 USC 1430; 49 USC 106(g); PL 97-449

CFR Citation: 14 CFR 25

Legal Deadline: None.

Abstract: This amendment provides new airplane and equipment airworthiness standards for installation of an automatic takeoff thrust control system on Part 25 aircraft. As the regulations did not provide airworthiness standards for this unusual system special conditions had been issued. This amendment eliminates the need for those special conditions.

Timetable:

Action	Date	FR Cite
NPRM	04/27/84	49 FR 18240
Extension of Comment Period	07/20/84	49 FR 29410
NPRM Comment Period End	08/27/84	
Final Action	12/09/87	52 FR 43152
Final Action Effective	12/09/87	

Small Entity: No

Additional Information: Docket 24046.

Public Compliance Cost: Initial Cost: $0; Yearly Recurring Cost: $0

Affected Sectors: Multiple

Analysis: Regulatory Evaluation 04/27/84 (49 FR 18240)

Agency Contact: James M. Walker, Department of Transportation, Federal Aviation Administration, NorthWest Mountain Region, 17900 Pacific Highway South, C-68966, Seattle, WA 98168, 206 431-2116

RIN: 2120-AA46

1803. AIRCRAFT IDENTIFICATION AND RETENTION OF FUEL SYSTEM MODIFICATION RECORDS

Significance: Nonsignificant

Legal Authority: 49 USC 1354; 49 USC 1421 to 1430; 49 USC 106(g); 49 USC 1355; 49 USC 1301(7); 49 USC 1303; 49 USC 1344; 49 USC 1348; 49 USC 1352 to 1355; 49 USC 1421 to 1431; 49 USC 1471; 49 USC 1472; 49 USC 1502; 49 USC 1510; 49 USC 2121 to 2125

CFR Citation: 14 CFR 43; 14 CFR 45; 14 CFR 91

Legal Deadline: None.

Abstract: This final rule amends the regulations to require: (1) that 12-inch high nationality and registration marks be displayed on all aircraft that penetrate an Air Defense Identification Zone or a Defense Early Warning Identification Zone; (2) that a civil aircraft identification data plate be displayed on the exterior surface of each U.S.-registered aircraft; and (3) that a copy of the form which authorizes the alteration of an aircraft with fuel tanks within the passenger or a baggage compartment be kept on board the modified aircraft. These amendments are necessary because of the increased dangers to civil aviation resulting from the major increase in illegal drug importations into the United States by air. They are intended to expand the effectiveness of narcotic interdiction and, thereby, provide for improvement in safety of civil aviation operations, while at the same time reducing the flow of drugs by air into the United States.

Timetable:

Action	Date	FR Cite
NPRM	07/10/86	51 FR 25174
NPRM Comment Period End	09/09/86	
Final Action	09/09/87	52 FR 34096

Small Entity: No

Analysis: Regulatory Evaluation 07/10/86 (51 FR 25174)

Agency Contact: Joseph Gwiazdowski, Department of Transportation, Federal Aviation Administration, 800 Independence Ave., SW, Washington, DC 20591, 202 267-9541

RIN: 2120-AC11

1804. IMPROVE SAFETY AND EFFECTIVENESS OF ISLIP AIRPORT RADAR SERVICE AREA (ARSA)

Significance: Nonsignificant

Legal Authority: 49 USC 1341(a); 49 USC 1343(d); 49 USC 1348; 49 USC 1354(a); 49 USC 1401 to 1405; 49 USC 1421 to 1431; 49 USC 1481; 49 USC 1502; 49 USC 106(g), (Review Pub L. 97-449, January 12, 1983); 49 USC 1348(a); 49 USC 1354(a); 49 USC 1510; EO 10854; 49 USC 106(g), (Revised Pub L. 97-449, January 12, 1983); 14 CFR 11.69

CFR Citation: 14 CFR 11; 14 CFR 71

Legal Deadline: None.

Abstract: The Long Island Pilots Ass'n petitioned to amended regulations to reduce the size of the regulatory airport radar service area to approximately a 5-mile radius inner core and a 7-mile radius outer core north of south shore of Long Island. This ARSA requires only two-way radio communication to enter or operate in the ARSA.

Timetable:

Action	Date	FR Cite
Petition denied	12/31/87	52 FR 49423

Small Entity: Undetermined

Additional Information: Docket No 25277

Agency Contact: Reginald C. Matthews, Air Traffic Control Specialist, Department of Transportation, Federal Aviation Administration, 800 Independence Avenue, SW, Washington, DC 20591, 202 267-9245

RIN: 2120-AC47

1805. ● PART 31 – AIRWORTHINESS STANDARDS: MANNED FREE BALLOONS

Significance: Nonsignificant

Legal Authority: 49 USC 1354; 49 USC 1421; 49 USC 1423

CFR Citation: 14 CFR 31

Legal Deadline: None.

Abstract: This part prescribes airworthiness standards for the issue of type certificates and changes to those certificates, for manned free balloons. An initial review of Part 31 to determine whether a full regulatory flexibility analysis of this part is required has been completed. No section of Part 31 was found to have a significant economic impact on a substantial number of small entities. Therefore, a regulatory flexibility review of Part 31 is not required. This review was completed as required by the Regulatory Flexibility Act of 1980 and no further action is necessary.

DOT—FAA

Completed Actions

Timetable:

Action	Date	FR Cite
End Review	09/25/87	

Small Entity: No

Agency Contact: Craig Beard, Department of Transportation, Federal Aviation Administration, 800 Independence Ave., SW, Washington, DC 20591, 202 267-8235

RIN: 2120-AC60

1806. ● PART 63 – CERTIFICATION: FLIGHT CREWMEMBERS OTHER THAN PILOTS

Significance: Nonsignificant

Legal Authority: 49 USC 1354(a); 49 USC 1355; 49 USC 1421; 49 USC 1422; 49 USC 1427; 49 USC 1429; 49 USC 1430; 49 USC 106(g)

CFR Citation: 14 CFR 63

Legal Deadline: None.

Abstract: This part prescribes the requirements for issuing flight engineer and flight navigator certificates and the general operating rules for holders of those certificates. It has been determined that Part 63 does not impose a significant economic impact on a substantial number of small entities, i.e., flight navigator training schools and small airlines. This review was completed as required by the Regulatory Flexibility Act of 1980 and no further action is necessary.

Timetable:

Action	Date	FR Cite
End Review	08/10/87	

Small Entity: No

Agency Contact: Robert Goodrich, Department of Transportation, Federal Aviation Administration, 800 Independenc Ave., SW, Washington, DC 20591, 202 267-8237

RIN: 2120-AC61

DEPARTMENT OF TRANSPORTATION (DOT)

Prerule Stage

Federal Highway Administration (FHWA)

1807. + MINIMUM LEVELS OF FINANCIAL RESPONSIBILITY FOR MOTOR CARRIERS: SELF-INSURANCE

Significance: Agency Priority

Legal Authority: 49 USC 10927 Note

CFR Citation: 49 CFR 387

Legal Deadline: None.

Abstract: The FHWA has determined that the issues associated with its authority to permit motor carriers to self-insure need to be examined in light of the insurance crisis affecting the motor carrier industry. The FHWA is seeking public comment from interested parties concerning self-insurance as a viable and effective mechanism for demonstrating financial responsibility as required by the Motor Carrier Act of 1980. This rulemaking action is considered significant because of the public interest in the issue being considered.

Timetable:

Action	Date	FR Cite
ANPRM	06/18/86	51 FR 22086
ANPRM Comment Period End	07/18/86	51 FR 22086
Supplemental ANPRM	06/00/88	

Small Entity: No

Additional Information: An interim final rule was published on June 18, 1986, at 51 FR 22080 permitting motor carriers of property to satisfy the financial responsibility requirements of the DOT (FHWA) by self-insuring if they have received approval from the ICC to self-insure and have maintained an FHWA "satisfactory" safety rating. This rulemaking action will further analyze the issues addressed in the interim final rule. After analyzing comments received to the 6/18/86 ANPRM, the FHWA has decided to issue a supplemental ANPRM in order to further explore the issues.

Analysis: Regulatory Evaluation 06/00/88

Agency Contact: Thomas P. Kozlowski, Department of Transportation, Federal Highway Administration, 400 Seventh St., SW, Washington, DC 20590, 202 366-2981

RIN: 2125-AB65

1808. ● REVIEW AND PREEMPTION OF STATE MOTOR-CARRIER SAFETY REGULATIONS

Significance: Nonsignificant

Legal Authority: 49 USC App. 2507; 49 USC App. 2508

CFR Citation: 49 CFR 390; 49 CFR 391; 49 CFR 392; 49 CFR 393; 49 CFR 394; 49 CFR 395; 49 CFR 396; 49 CFR 397; 49 CFR 398; 49 CFR 399

Legal Deadline: None.

Abstract: Sections 207-209 of the Motor Carrier Safety Act of 1984 establish a process whereby any State law or regulation pertaining to commercial motor vehicle safety in interstate commerce will be reviewed and analyzed by the Commercial Motor Vehicle Safety Regulatory Review Panel (Safety Panel). The Safety Panel is to determine if such law or regulation has the same effect as, is less stringent than, or is additional to or more stringent than the Federal Motor Carrier Safety Regulations. Based on the determination of the Safety Panel, the Secretary is to initiate a rulemaking proceeding to determine if such a law or regulation may remain in effect and enforced. This advance notice of proposed rulemaking is the initial rulemaking action for any possible preemptive action by the Secretary. It will contain alternatives for comment on ways the Secretary may satisfy the requirements of section 208 of the Act.

Timetable:

Action	Date	FR Cite
ANPRM	06/00/88	
NPRM	12/00/88	

Small Entity: No

Analysis: Regulatory Evaluation 12/00/88

Agency Contact: Thomas Kozlowski, Department of Transportation, Federal Highway Administration, 202 366-2981

RIN: 2125-AC11

1809. NATIONAL STANDARDS FOR TRAFFIC CONTROL DEVICES; REVISION OF PART VI OF THE MANUAL ON UNIFORM TRAFFIC CONTROL DEVICES

Significance: Nonsignificant

DOT—FHWA **Prerule Stage**

Legal Authority: 23 USC 109(b); 23 USC 315; 23 USC 402(a)

CFR Citation: 23 CFR 655

Legal Deadline: None.

Abstract: The FHWA is considering rulemaking regarding the need to update the standards in Part VI, Traffic Controls For Street and Highway Construction and Maintenance Operations, of the Manual On Uniform Traffic Control Devices (MUTCD). If adopted, these standards could be incorporated into the MUTCD.

Timetable:

Action	Date	FR Cite
Next Action Undetermined		

Small Entity: No

Additional Information: FHWA Docket # 86-12 has been assigned to this rulemaking action.

Agency Contact: Mr. Philip O. Russell, Department of Transportation, Federal Highway Administration, 202 366-0411

RIN: 2125-AB83

1810. ● FEDERAL MOTOR CARRIER SAFETY REGULATIONS; PAPERWORK BURDENS

Significance: Nonsignificant

Legal Authority: 49 USC 3102; 49 USC App 2503

CFR Citation: 49 CFR 350 to 399

Legal Deadline: None.

Abstract: By this rulemaking, the FHWA will be considering ways to reduce paperwork burdens imposed on motor carriers subject to the requirements of the Federal Motor Carrier Safety Regulations (49 CFR 350-399). Changes are being considered in accordance with the requirements of the Paperwork Reduction Reauthorization Act of 1986. This Act requires the agencies to set goals to reduce the paperwork burden imposed on motor carriers by 20 percent by September 30, 1990.

Timetable:

Action	Date	FR Cite
ANPRM	04/00/88	
NPRM	10/00/88	

Small Entity: No

Additional Information: A 90-day comment period will be provided for the ANPRM.

Analysis: Regulatory Evaluation 10/00/88

Agency Contact: Thomas P. Kozlowski, Department of Transportation, Federal Highway Administration, 202 366-2981

RIN: 2125-AC04

DEPARTMENT OF TRANSPORTATION (DOT)
Federal Highway Administration (FHWA)

Proposed Rule Stage

1811. + CONTROLLED SUBSTANCES

Significance: Regulatory Program

Legal Authority: 49 USC 3102; 23 USC 315; 49 USC 104; 49 USC App 2505

CFR Citation: 49 CFR 382

Legal Deadline: None.

Abstract: The FHWA is requesting comments on a proposal which would mandate chemical testing of interstate drivers of commercial motor vehicles for the use of drugs. The impetus for this action is the safety and health concern associated with the use of drugs by these personnel. The goal of the proposed rule is to reduce accidents and casualties that result from the use of drugs. This NPRM was preceded by two drug rulemaking actions which were published in the Federal Register on 5/13/86 (BMCS Docket No. MC-116, Amendment No. 83-17, 51 FR 17568; BMCS Docket No. MC-120, Notice No. 86-3, 51 FR 17572). The latter of those actions proposed a drug test plan (much less comprehensive than proposed here) for drivers of hazardous materials. The former requested comments on specific questions regarding the various aspects of a drug control program applicable to interstate drivers. The intent of this NPRM is to consolidate the subject matter of the previous actions and propose a comprehensive drug control program applicable to all drivers in interstate commerce. Because the impact of this proposal (cont)

Timetable:

Action	Date	FR Cite
ANPRM	09/27/82	47 FR 42383
Initial ANPRM Withdrawn	01/23/85	50 FR 2998
ANPRM	05/13/86	51 FR 17568
Extension Notice	07/06/86	51 FR 24722
ANPRM Comment Period End	08/11/86	51 FR 17568
NPRM	04/00/88	

Small Entity: No

Additional Information: ABSTRACT CONT: will result in an annual effect on the economy of over $100 million, this action is considered major under Executive Order 12291. This NPRM proposes a comprehensive drug testing program that incorporates a DOT modal approach to creating a drug-free transportation environment.

Analysis: Regulatory Impact Analysis; Regulatory Flexibility Analysis

Agency Contact: Thomas P. Kozlowski, Department of Transportation, Federal Highway Administration, 400 Seventh Street, SW, Washington, DC 20590, 202 366-2981

RIN: 2125-AA79

1812. + TRUCK SIZE AND WEIGHT; SPECIALIZED EQUIPMENT; BOAT TRANSPORTERS

Significance: Regulatory Program

Legal Authority: 23 USC 315; 23 USC 2311(d); PL 100-17, Sec 133

CFR Citation: 23 CFR 658

Legal Deadline: None.

Abstract: FHWA sought comments on a request to designate boat transporters as specialized equipment under provision of section 411(d) of the Surface Transportation Assistance Act of 1982 (STAA). Of prime concern were comments and information on the following issues relating to boat transporters: maneuvering characteristics, safety, control, offtracking, crosswind effects, and the need for overall length limits on boat transporters. Information on the similarities and dissimilarities between

VOL 53 ISS 79 PT 1 APR 25 1988 UMI

boat transporters and auto transporters was also solicited, as well as information on the consistency of truck configurations used for hauling boats. Comments were requested regarding the need to preempt current State regulation of this vehicle, as well as an actual definition and description of boat transporters, and on the types of vehicles that should be considered as specialized equipment as well as an actual definition.

Timetable:

Action	Date	FR Cite
ANPRM	03/18/86	51 FR 10234
ANPRM Comment Period End	05/09/86	51 FR 10234
NPRM	01/29/88	53 FR 2602
NPRM Comment Period End	04/18/88	53 FR 2602
Final Action	10/00/88	

Small Entity: No

Analysis: Regulatory Evaluation 01/29/88 (53 FR 2602)

Agency Contact: Philip W. Blow, Department of Transportation, Federal Highway Administration, 400 Seventh St., SW, Washington, DC 20590, 202 366-4036

RIN: 2125-AB55

1813. + TRUCK SIZE AND WEIGHT; REASONABLE ACCESS

Significance: Regulatory Program

Legal Authority: 49 USC 2311(d); 23 USC 315

CFR Citation: 23 CFR 658

Legal Deadline: None.

Abstract: The FHWA is requesting information and comments on the existing FHWA regulation governing reasonable access by commercial vehicles with lengths and widths authorized by the Surface Transportation Assistance Act of 1982 (STAA) as amended. This action has been initiated in response to a petition filed by the National Industrial Transportation League (NITL).

Timetable:

Action	Date	FR Cite
ANPRM	01/05/87	52 FR 298
ANPRM Comment Period End	05/05/87	52 FR 298
NPRM	04/00/88	

Small Entity: No

Analysis: Regulatory Evaluation 04/00/88

Agency Contact: Kevin E. Heanue, Department of Transportation, Federal Highway Administration, 400 Seventh St., SW, Washington, DC 20590, 202 366-2951

RIN: 2125-AB70

1814. + BLOOD ALCOHOL CONCENTRATION STANDARD FOR COMMERCIAL VEHICLE OPERATORS

Significance: Regulatory Program

Legal Authority: PL 99-570, Sec 12008; 49 USC App. 2505; 49 USC 3102

CFR Citation: 49 CFR 383; 49 CFR 391

Legal Deadline: Statutory, October 27, 1988.

Abstract: In response to Section 12008 of the Commercial Motor Vehicle Safety Act of 1986, the FHWA requested comments on the establishment of a commercial driver blood alcohol concentration (BAC) standard for "driving under the influence." Also in response to Section 12008 of the Act, the National Academy of Sciences (NAS) conducted a study on the appropriateness of selecting one of several alternative BAC levels as the level at which a person operating a commercial motor vehicle would be deemed to be driving under the influence of alcohol. Based on the results of the study and the rulemaking comments, the Secretary of Transportation must promulgate a commercial driver BAC standard. States would be required to enact laws providing that any driver who operates a commercial motor vehicle at the Federal BAC level or above it is deemed to be driving under the influence of alcohol. States not enacting a BAC-level law for commercial motor vehicle drivers risk the loss of Federal-aid highway funds. The comments received were available to the NAS and served as the docket comments, along with the NAS study for a future Notice of Proposed Rulemaking.

Timetable:

Action	Date	FR Cite
ANPRM	03/23/87	52 FR 9192
ANPRM Comment Period End	05/22/87	
NPRM	04/00/88	
Final Action	10/00/88	

Small Entity: No

Additional Information: If the Secretary does not promulgate a Federal standard by October 27, 1988, the BAC standard shall be deemed to be 0.04 percent.

Analysis: Regulatory Evaluation 04/00/88

Agency Contact: John Viner, Senior Research Engineer, Traffic Safety Research Division (HSR-30), Department of Transportation, Federal Highway Administration, 6300 Georgetown Pike, McLean, VA. 22101, 703 285-2419

RIN: 2125-AB79

1815. + TRUCK SIZE AND WEIGHT; SPECIAL PERMITS

Significance: Regulatory Program

Legal Authority: 23 USC 127; 49 USC 2311; 49 USC 2313; 49 USC App. 2316; 23 USC 315

CFR Citation: 23 CFR 658

Legal Deadline: None.

Abstract: This rulemaking action will delete language pertaining to the issuance of special permits in section 658.17 and will request that States identify grandfather rights claimed for single and tandem axle weight, gross weight, alternate bridge formula and special permit authority. The weights identified as having been determined by the States will be recognized as grandfather rights.

Timetable:

Action	Date	FR Cite
NPRM	04/00/88	
Final Action	10/00/88	

Small Entity: No

Analysis: Regulatory Evaluation 04/00/88

Agency Contact: John MacGowan, Department of Transportation, Federal Highway Administration, 400 Seventh St., SW, Washington, DC 20590, 202 366-4032

RIN: 2125-AB80

1816. + AIR QUALITY PROCEDURES FOR USE IN FEDERAL-AID HIGHWAY AND FEDERALLY FUNDED TRANSIT PROGRAMS

Significance: Agency Priority

Legal Authority: 23 USC 109(h); 23 USC 109(j); 23 USC 315; 42 USC 4332; 42 USC 7401; 42 USC 7506

CFR Citation: 23 CFR 770

Legal Deadline: None.

Abstract: This regulation proposes to consolidate and amend existing air quality requirements for transportation projects into a single amended air quality regulation. The amended regulation is intended to streamline and simplify (1) the process of determining which highway projects are exempt from the Federal assistance limitations of section 176(a) of the Clean Air Act (CAA), and (2) the conformity and priority procedures contained in 23 CFR 770. The amendments are also intended to provide more authority and flexibility to State and local agencies and to meet the objectives of the CAA in the most cost-effective and expeditious manner. The amendments are significant because they involve important departmental policy.

Timetable:

Action	Date	FR Cite
NPRM	04/00/88	

Small Entity: No

Additional Information: ADDITIONAL AGENCY CONTACT: Jocelyn Karp (202) 366-4063.

Analysis: Regulatory Evaluation 04/00/88

Agency Contact: James M. Shrouds, Department of Transportation, Federal Highway Administration, 400 Seventh Street, SW, Washington, DC 20590, 202 366-4838

RIN: 2125-AB10

1817. + MINIMUM REQUIREMENTS FOR PRIVATE MOTOR CARRIERS OF PASSENGERS AND DRIVERS OF PRIVATE MOTOR VEHICLES OF PASSENGERS

Significance: Agency Priority

Legal Authority: 49 USC 104; 49 USC 3102; 49 USC App 2503; 49 USC App 2505

CFR Citation: 49 CFR 384

Legal Deadline: None.

Abstract: The FHWA is considering proposing revisions to the requirements for private motor carriers of passengers and the drivers of private motor vehicles of passengers. The proposed revisions would require private motor carriers of passengers and drivers of private motor vehicles of passengers to operate under the Federal Motor Carrier Safety Regulations (FMCSR). However, the paperwork burden of these requirements will be minimized and several parts of the FMCSR will not apply to either private motor carriers of passengers or to drivers of such vehicles. This rulemaking is significant in that it is controversial, involving bringing new carriers under the regulatory scheme.

Timetable:

Action	Date	FR Cite
ANPRM	01/23/85	50 FR 2998
ANPRM Comment Period End	03/11/85	50 FR 2998
NPRM	04/00/88	

Small Entity: No

Analysis: Regulatory Evaluation 04/00/88

Agency Contact: Thomas P. Kozlowski, Department of Transportation, Federal Highway Administration, 400 Seventh St., SW, Washington, DC 20590, 202 366-2981

RIN: 2125-AB62

1818. + UNIFORM RELOCATION ACT AMENDMENTS OF 1987; GENERAL

Significance: Agency Priority

Legal Authority: 42 USC 4601 et seq; PL 100-17, Title IV

CFR Citation: 23 CFR 740

Legal Deadline: Statutory, April 2, 1989. A final rule must be promulgated by 4/2/89.

Abstract: This rulemaking action addresses the implementation of Title IV of the Surface Transportation and Uniform Relocation Assistance Act of 1987, Pub. L. 100-17, 101 Stat. 132 (STURAA). Title IV of STURAA amends the Uniform Relocation Assistance and Real Property Acquisition Policies Act of 1970 (Uniform Act), 42 U.S.C. sections 4601 to 4655 (1982). Title IV establishes: a lead agency (FHWA) to insure consistent Federal implementation; an increase in the maximum monetary benefits that can be provided to persons forced to relocate by Federal or federally assisted projects; an expansion of the Uniform Act's coverage to insure more types of displacing activities; and an allowance for a State certification program. This rulemaking action is considered significant because of the substantial public interest involved.

Timetable:

Action	Date	FR Cite
NPRM	04/00/88	

Small Entity: No

Analysis: Regulatory Evaluation 04/00/88

Agency Contact: Barbara Reichart, Department of Transportation, Federal Highway Administration, 202 366-0116

RIN: 2125-AB85

1819. + DRIVER'S RECORD OF DUTY STATUS; ONBOARD RECORDING DEVICES

Significance: Agency Priority

Legal Authority: 49 USC App 2505; 49 USC 3102

CFR Citation: 49 CFR 395

Legal Deadline: None.

Abstract: The FHWA has initiated rulemaking to address the use of onboard recording devices in motor vehicles operating in interstate commerce. This action is being taken in response to a petition filed by the Insurance Institute for Highway Safety (IIHS) on 2/25/87. The original IIHS petition (10/86) requested that the FHWA require motor carriers to use onboard recording devices for recording the driver's hours of service. This rulemaking is considered significant because of the substantial public interest involved.

Timetable:

Action	Date	FR Cite
ANPRM	07/13/87	52 FR 26289
ANPRM Comment Period End	10/13/87	52 FR 26289
NPRM	04/00/88	

Small Entity: No

Analysis: Regulatory Evaluation 04/00/88

Agency Contact: Mr. Thomas P. Kozlowski, Department of Transportation, Federal Highway Administration, 202 366-2981

RIN: 2125-AB95

1820. + CERTIFICATION OF SPEED LIMIT ENFORCEMENT

Significance: Agency Priority

Legal Authority: 23 USC 141; 23 USC 154; 23 USC 315; PL 100-17, Sec 174

CFR Citation: 23 CFR 659

Legal Deadline: None.

Abstract: The FHWA and the National Highway Traffic Safety Administration (NHTSA) are amending the regulations

on certification of speed limit enforcement in order to streamline the sanction process and to take into account the provisions mandated by section 174 of the Surface Transportation and Uniform Relocation Assistance Act of 1987 (STURAA). Section 174 of STURAA amended 23 U.S.C. 154 by giving the States the authority to increase, without loss of Federal-aid funds, the maximum speed limit to no more than 65 miles per hour (mph) on certain Interstate System highways. A notice of proposed rulemaking will be issued proposing revisions to the sanction process contained in 23 CFR Part 659. A separate final rulemaking action has been issued in order to provide the States the authority to adjust the speed sampling and analysis plan required for determining the level of 55 mph noncompliance.

Timetable:

Action	Date	FR Cite
Final Action Adjusting Sampling Plans	08/03/87	52 FR 28691
NPRM	04/00/88	

Small Entity: No

Additional Information: This rulemaking action, as well as the final rule on sampling plans (Supplemental), are considered significant because of the substantial public interest involved.

Analysis: Regulatory Evaluation 04/00/88

Agency Contact: Sheldon G. Strickland, Department of Transportation, Federal Highway Administration, 202 366-1993

RIN: 2125-AC00

1821. REVIEW: GENERAL MATERIALS REQUIREMENTS

Significance: Nonsignificant

Legal Authority: 23 USC 112; 23 USC 113; 23 USC 114; 23 USC 117; 23 USC 128

CFR Citation: 23 CFR 635D

Legal Deadline: None.

Abstract: This regulation would simplify procedures relating to general material requirements for Federal-aid construction work.

Timetable:

Action	Date	FR Cite
NPRM	11/00/88	

Small Entity: No

Additional Information: An initial NPRM was issued on 01/29/81 (46 FR 9642). It has been determined to issue another NPRM based on further review.

Analysis: Reg. Evaluation (Minimal Impact) 11/00/88

Agency Contact: William Weseman, Department of Transportation, Federal Highway Administration, 400 Seventh Street, SW, Washington, DC 20590, 202 366-0392

RIN: 2125-AA19

1822. CONTRACT PROCEDURES

Significance: Nonsignificant

Legal Authority: 23 USC 112; 23 USC 113; 23 USC 114; 23 USC 117; 23 USC 128

CFR Citation: 23 CFR 635

Legal Deadline: None.

Abstract: This revision will update and simplify existing Federal-aid contract procedures.

Timetable:

Action	Date	FR Cite
NPRM	08/18/78	43 FR 36685
NPRM Supplemental	11/00/88	

Small Entity: No

Additional Information: An initial NPRM was issued on 08/18/78, 43 FR 36685. It has been determined to issue another NPRM after further review.

Analysis: Regulatory Evaluation 11/00/88

Agency Contact: William Weseman, Department of Transportation, Federal Highway Administration, 400 Seventh Street, SW, Washington, DC 20590, 202 366-0392

RIN: 2125-AA18

1823. COMPLIANCE WITH MOTOR CARRIER NOISE STANDARDS

Significance: Nonsignificant

Legal Authority: 49 USC 3102

CFR Citation: 49 CFR 325

Legal Deadline: None.

Abstract: The FHWA is considering amending the noise emission standards to add a new minimum distance of 31 feet from which to measure highway noise. FHWA is also considering eliminating the correction factor which allowed a variance for noise tests taken at hard sites, e.g., asphalt, compared to those taken at soft sites, e.g., grassy areas.

Timetable:

Action	Date	FR Cite
NPRM	04/03/80	45 FR 22120

Next Action Undetermined

Small Entity: No

Agency Contact: Thomas P. Kozlowski, Department of Transportation, Federal Highway Administration, 400 Seventh Street, SW, Washington, DC 20590, 202 366-2981

RIN: 2125-AA27

1824. PAVEMENT POLICY

Significance: Nonsignificant

Legal Authority: 23 USC 109(a)(b)(c); 23 USC 315; 23 USC 101(e); 23 USC 402

CFR Citation: 23 CFR 626; 23 CFR 625

Legal Deadline: None.

Abstract: The existing regulation on pavement design would be modified to eliminate unnecessary requirements and duplicative provisions. Currently, the Federal Highway Administration (FHWA) uses the "American Association of State Highway and Transportation Officials (AASHTO) Interim Guide for Design of Pavement Structures, 1972," Chapter III Revised, 1981, to evaluate the adequacy of the proposed pavement designs for Federal-aid projects. AASHTO has approved a new Pavement Design Guide. FHWA will solicit public comment on the revised guide and adopt it for application on Federal-aid projects as a guide, not standard. It will be acceptable for State highway agencies to design pavement structures based upon other procedures and practices that by past performance have proven satisfactory for the pertinent conditions. If a State highway agency elects to use procedures other than AASHTO's, the procedures will require FHWA approval. The FHWA will check or review pavement design in accordance with procedures approved by the State highway agency. Each State highway agency will be required to have a pavement management system.

Timetable:

Action	Date	FR Cite
NPRM	01/26/88	53 FR 2041
SNPRM	04/11/88	53 FR 11875

Action	Date	FR Cite
NPRM Comment Period End	04/25/88	53 FR 2041
Comment Period Extended to	05/27/88	
Final Action	10/00/88	

Small Entity: No

Additional Information: A Federal Register notice was published on 4/24/85 (50 FR 16103) outlining and explaining the procedural steps the FHWA would take to effectuate Federal adoption of the revised guide.

Analysis: Reg. Evaluation (Minimal impact) 01/27/88 (53 FR 2041)

Agency Contact: Norman Van Ness, Department of Transportation, Federal Highway Administration, 400 Seventh Street, SW, Washington, DC 20590, 202 366-1324

RIN: 2125-AA88

1825. STATE HIGHWAY AGENCY CONSTRUCTION CONTRACTS; EQUAL OPPORTUNITY COMPLIANCE REVIEW; PROGRAM REQUIREMENTS

Significance: Nonsignificant

Legal Authority: 23 USC 112(b); 23 USC 140(a); 23 USC 315

CFR Citation: 23 CFR 230

Legal Deadline: None.

Abstract: The proposed revisions would amend the existing FHWA regulation governing construction contract equal employment opportunity (EEO) compliance procedures, which concern the employment practices of construction contractors on Federal highway projects. This proposal would eliminate existing detailed compliance procedures and allow States flexibility in adopting a procedure with respect to contract compliance.

Timetable:

Action	Date	FR Cite
NPRM	04/00/88	

Small Entity: No

Analysis: Regulatory Evaluation 04/00/88

Agency Contact: Glenn R. Reed, Department of Transportation, Federal Highway Administration, 400 Seventh Street, SW, Washington, DC 20590, 202 366-1518

RIN: 2125-AB08

1826. EQUAL EMPLOYMENT OPPORTUNITY ON FEDERAL AND FEDERAL-AID CONSTRUCTION CONTRACTS (INCLUDING SUPPORTIVE SERVICES)

Significance: Nonsignificant

Legal Authority: 23 USC 101; 23 USC 112; 23 USC 117; 23 USC 140; 23 USC 315

CFR Citation: 23 CFR 230; 23 CFR 640; 23 CFR 642

Legal Deadline: None.

Abstract: This revision will amend and update the existing policies and procedures relative to the equal employment opportunity program on Federal and Federal-aid highway construction contracts. In addition, this revision will amend the on-the-job training (OJT) special provisions and procedures for implementation of OJT supportive services programs to increase program effectiveness and address the current need for upgrading minorities and women in the skilled construction trades.

Timetable:

Action	Date	FR Cite
NPRM	11/22/82	47 FR 52470
NPRM Comment Period End	12/22/82	47 FR 52470
NPRM Supplemental	04/00/88	

Small Entity: No

Additional Information: A supplemental NPRM will be issued in order to propose updated revisions. The supplemental NPRM will address all procedures and provisions contained in 23 CFR 420. Therefore, the proposed rulemaking action explained under the entry (RIN No. 2125-AB27) formerly located in the "Proposed Rule Stage" portion of the agenda has been merged with this rulemaking action.

Analysis: Reg. Evaluation (Minimal Impact) 11/22/82 (47 FR 52470)

Agency Contact: Glenn Reed, Department of Transportation, Federal Highway Administration, 400 Seventh Street, SW, Washington, DC 20590, 202 366-1588

RIN: 2125-AB15

1827. FEDERAL-AID PROGRAMS APPROVAL AND PROJECT AUTHORIZATION

Significance: Nonsignificant

Legal Authority: 23 USC 105; 23 USC 106; 23 USC 116; 23 USC 134; 23 USC 315

CFR Citation: 23 CFR 630

Legal Deadline: None.

Abstract: This action addresses FHWA's programming and authorization policies and procedures for projects under the Federal-aid program. The purpose of this action will be to determine if revisions are warranted in order to improve overall management of the Federal-aid highway program.

Timetable:

Action	Date	FR Cite
ANPRM	08/03/84	49 FR 31079
NPRM	04/00/88	

Small Entity: Undetermined

Analysis: Reg. Evaluation (Minimal Impact) 04/00/88

Agency Contact: James A. Carney, Department of Transportation, Federal Highway Administration, 400 Seventh Street, SW, Washington, DC 20590, 202 366-0450

RIN: 2125-AB18

1828. ADMINISTRATION OF CONTRACTS

Significance: Nonsignificant

Legal Authority: 23 USC 315; 23 USC 104(f); 23 USC 114(a); 23 USC 307(c); 23 USC 402; PL 100-17, Sec 111(b)

CFR Citation: 23 CFR 172

Legal Deadline: None.

Abstract: Revisions to the existing regulation will be made to standardize the minimum requirements by including FHWA's interpretation of OMB Circular A-102 requirements. Inclusion of OMB Circular A-102 as an appendix to the regulations will be deleted. This rulemaking action will also address the changes to the selection procedures as required by section 111(b) of the Surface Transportation and Uniform Relocation Assistance Act of 1987.

Timetable:

Action	Date	FR Cite
NPRM	05/00/88	

Small Entity: No

Additional Information: A 60-day comment period will be provided.

Government Levels Affected: Local, State

VOL 53 ISS 79 PT 1 AP 25 1988 UMI

Analysis: Reg. Evaluation (Minimal Impact) 05/00/88

Agency Contact: Si Silence, Department of Transportation, Federal Highway Administration, 400 Seventh Street, SW, Washington, DC 20590, 202 366-4628

RIN: 2125-AB30

1829. LABOR AND EMPLOYMENT

Significance: Nonsignificant

Legal Authority: 23 USC 113; 23 USC 315

CFR Citation: 23 CFR 635

Legal Deadline: None.

Abstract: This amendment would revise the existing regulation prescribing the inclusion of prevailing wage rates determined by the Secretary of Labor in advertisements and contracts for Federal-aid highway projects. The proposed amendment would preclude the inclusion of State prevailing wage rates which are higher than those determined by the Department of Labor in Federal-aid contracts.

Timetable:

Action	Date	FR Cite
NPRM	09/27/85	50 FR 30137
NPRM Comment Period End	11/12/85	50 FR 30137
NPRM Supplemental	04/00/88	

Small Entity: No

Additional Information: Upon further review, the FHWA has determined to issue a supplemental NPRM.

Analysis: Reg. Evaluation (minimal impact) 09/27/85 (50 FR 30137)

Agency Contact: Ruth Anders, Department of Transportation, Federal Highway Administration, 400 Seventh Street, SW, Washington, DC 20590, 202 366-1394

RIN: 2125-AB37

1830. MANUAL ON UNIFORM TRAFFIC CONTROL DEVICES; RESTRUCTURE

Significance: Nonsignificant

Legal Authority: 23 USC 109(d); 23 USC 315; 23 USC 402(a)

CFR Citation: 23 CFR 655

Legal Deadline: None.

Abstract: The FHWA is considering the need for a new Manual on Uniform Traffic Control Devices (MUTCD) and a new format. The MUTCD is incorporated by reference in 23 CFR Part 655, Subpart F and is recognized as the national standard for traffic control devices on all public roads. The FHWA is interested in possible ways to simplify, clarify, or expedite the present format and procedures.

Timetable:

Action	Date	FR Cite
ANPRM	06/09/86	51 FR 20840
ANPRM Extended Comment period to 09/01/87	04/09/87	52 FR 11502
ANPRM Comment Period End	07/20/87	51 FR 20840
NPRM	04/00/88	

Small Entity: No

Additional Information: FHWA Docket No. 86-12.

Analysis: Regulatory Evaluation 04/00/88

Agency Contact: Philip O. Russell, Department of Transportation, Federal Highway Administration, 400 Seventh St., SW, Washington, DC 20590, 202 366-2184

RIN: 2125-AB57

1831. RIGHT-OF-WAY

Significance: Nonsignificant

Legal Authority: 23 USC 315

CFR Citation: 23 CFR 710; 23 CFR 712; 23 CFR 720

Legal Deadline: None.

Abstract: The FHWA intends to publish an NPRM to update and reorganize its right-of-way regulations for the Federal-aid highway program. Subjects to be addressed include State highway agency responsibilities, authorizations, and reimbursement.

Timetable:

Action	Date	FR Cite
NPRM	04/00/88	

Small Entity: No

Analysis: Reg. Evaluation (Minimal Impact) 04/00/88

Agency Contact: Douglas A. Wubbels, Department of Transportation, Federal Highway Administration, 400 Seventh St., SW, Washington, DC 20590, 202 366-2019

RIN: 2125-AB58

1832. PROPERTY MANAGEMENT, DISPOSALS AND AIRSPACE

Significance: Nonsignificant

Legal Authority: 23 USC 315

CFR Citation: 23 CFR 713

Legal Deadline: None.

Abstract: The FHWA intends to issue an NPRM proposing to update its regulations on property management, disposal and airspace relative to the Federal-aid highway program. This rulemaking action will reflect current departmental decisions and policies as well as recent legislative mandates.

Timetable:

Action	Date	FR Cite
NPRM	04/00/88	

Small Entity: No

Analysis: Reg. Evaluation (Minimal Impact) 04/00/88

Agency Contact: Douglas A. Wubbels, Department of Transportation, Federal Highway Administration, 400 Seventh St., SW, Washington, DC 20590, 202 366-2019

RIN: 2125-AB60

1833. NATIONAL STANDARDS FOR TRAFFIC CONTROL DEVICES; REVISION OF UNIFORM TRAFFIC CONTROL DEVICES; PASSING AND NO-PASSING ZONE STANDARDS

Significance: Nonsignificant

Legal Authority: 23 USC 109(d); 23 USC 315; 23 USC 402(a)

CFR Citation: 23 CFR 655

Legal Deadline: None.

Abstract: The FHWA is considering issuing a NPRM in response to a petition filed by the Center for Auto Safety (CAS) to revise no-passing zone standards. If adopted, the revised standards could be incorporated into the Manual On Uniform Traffic Control Devices (MUTCD).

Timetable:

Action	Date	FR Cite
ANPRM	06/11/86	51 FR 21180
ANPRM Comment Period End	07/20/87	51 FR 21180

BEST COPY AVAILABLE

Next Action Undetermined

Small Entity: No

Additional Information: FHWA Docket # 86-11 has been assigned to this rulemaking.

Agency Contact: Mr. Philip O. Russell, Department of Transportation, Federal Highway Administration, 202 366-0411

RIN: 2125-AB84

1834. QUALIFICATION OF DRIVERS; DIABETES

Significance: Nonsignificant

Legal Authority: 49 USC 3102; 49 USC App 2505; 23 USC 315

CFR Citation: 49 CFR 391.41(b)(3)

Legal Deadline: None.

Abstract: This rulemaking action responds to a petition filed by the American Diabetes Association (ADA) and others. The current diabetic rule prohibits insulin-using diabetics from driving in interstate or foreign commerce. The ADA has petitioned to change the regulation to provide for exemptions. The purpose of this action is to consider the proposed exemption program.

Timetable:

Action	Date	FR Cite
ANPRM	11/25/87	52 FR 45204
ANPRM Comment Period End	02/01/88	53 FR 42
NPRM	06/00/88	

Small Entity: No

Analysis: Regulatory Evaluation 06/00/88

Agency Contact: Thomas P. Kozlowski, Department of Transportation, Federal Highway Administration, 202 366-2981

RIN: 2125-AB91

1835. ● ADVANCE CONSTRUCTION OF FEDERAL-AID PROJECTS

Significance: Nonsignificant

Legal Authority: 23 USC 101(a); 23 USC 104; 23 USC 109; 23 USC 110; 23 USC 113; 23 USC 115; 23 USC 120(f); 23 USC 121(c); 23 USC 125; 23 USC 315; 23 USC 320; PL 100-17, Sec 113

CFR Citation: 23 CFR 630

Legal Deadline: None.

Abstract: The FHWA is revising its regulations relating to the advance construction of Federal-aid highway projects. The revisions incorporate new provisions mandated by section 113 of the Surface Transportation and Uniform Relocation Assistance Act of 1987 (STURAA). The procedures allow States to advance the construction of Federal-aid highway projects without requiring that Federal funds be obligated at the time the FHWA approves the project.

Timetable:

Action	Date	FR Cite
NPRM	05/00/88	

Small Entity: No

Analysis: Reg. Evaluation (Minimal Impact) 05/00/88

Agency Contact: Max I. Inman, Department of Transportation, Federal Highway Administration, 202 366-2853

RIN: 2125-AC07

1836. ● STATE FISCAL PROCEDURES AND REPORTS; RESCISSION OF REGULATION

Significance: Nonsignificant

Legal Authority: 23 USC 104(c)(d)(g); 23 USC 315

CFR Citation: 23 CFR 160

Legal Deadline: None.

Abstract: The FHWA is rescinding its regulations addressing the transfer of Federal-aid Highway and Safety Funds. These provisions contained in 23 CFR 160 were issued to prescribe the procedures for transfer of funds under subsections 104(c), (d) and (g), of Title 23, United States Code. The regulations are being rescinded because their sole function has evolved to a simple restatement of statutory language.

Timetable:

Action	Date	FR Cite
NPRM	04/00/88	

Small Entity: No

Analysis: Reg. Evaluation (Minimal Impact) 04/00/88

Agency Contact: Mr. Larry C. Hanna, Department of Transportation, Federal Highway Administration, 202 366-2906

RIN: 2125-AC08

1837. ● CONSTRUCTION ENGINEERING COSTS

Significance: Nonsignificant

Legal Authority: 23 USC 101(e); 23 USC 114(a); 23 USC 115(b); 23 USC 120 to 122; 23 USC 315; PL 95-599, Sec 115(c); PL 100-17, Sec 114

CFR Citation: 23 CFR 140

Legal Deadline: None.

Abstract: This rulemaking document will implement provisions mandated by section 114 of the Surface Transportation and Uniform Relocation Assistance Act of 1987 (STURAA). Section 114 revised 23 USC 121(d) by eliminating the 10-percent limitation on Construction Engineering (CE) costs and increasing the limitation to 15 percent of actual costs of construction excluding costs of right-of-way, preliminary engineering and CE.

Timetable:

Action	Date	FR Cite
NPRM	05/00/88	

Small Entity: No

Analysis: Reg. Evaluation (Minimal Impact) 05/00/88

Agency Contact: Max I. Inman, Department of Transportation, Federal Highway Administration, 202 366-2853

RIN: 2125-AC09

1838. ● TRUCK SIZE AND WEIGHT; NATIONAL NETWORK; IOWA AND SOUTH CAROLINA

Significance: Nonsignificant

Legal Authority: 23 USC 127; 23 USC 315; 49 USC 2311; 49 USC 2313; 49 USC App 2316

CFR Citation: 23 CFR 658

Legal Deadline: None.

Abstract: The FHWA is proposing to modify the National Network for commercial motor vehicles by deleting certain routes in Iowa and South Carolina. The National Network was established by the final rule on Truck Size and Weight published at 49 FR 23302 on June 5, 1984. It is maintained under 23 CFR 658, Appendix A, as amended.

Timetable:

Action	Date	FR Cite
NPRM	05/00/88	

Small Entity: No

Analysis: Reg. Evaluation (Minimal Impact) 05/00/88

Agency Contact: Mr. Richard A. Torbik, Department of Transportation,

Federal Highway Administration, 202 366-0233

RIN: 2125-AC10

1839. MANUAL ON UNIFORM TRAFFIC CONTROL DEVICES

Significance: Routine and Frequent

Legal Authority: 23 USC 109(b); 23 USC 109(d); 23 USC 402(a)

CFR Citation: 23 CFR 655

Legal Deadline: None.

Abstract: Nonsignificant regulations issued routinely and frequently as a part of an established body of technical requirements to keep those requirements operationally current. Total actions expected–2. 12/00/88.

Timetable:

Action	Date	FR Cite
Total actions expected to end	12/00/88	

Small Entity: No

Analysis: Reg. Evaluation (Minimal Impact) 12/00/88

Agency Contact: P. Russell, Department of Transportation, Federal Highway Administration, 400 Seventh Street, SW, Washington, DC 20590, 202 366-2184

RIN: 2125-AA37

DEPARTMENT OF TRANSPORTATION (DOT)
Federal Highway Administration (FHWA)

Final Rule Stage

1840. + FEDERAL MOTOR CARRIER SAFETY REGULATIONS: GENERAL

Significance: Regulatory Program

Legal Authority: 49 USC 3102; PL 98-554, Sec 206

CFR Citation: 49 CFR 390

Legal Deadline: None.

Abstract: This rulemaking action will address the general provisions regarding the Motor Carrier Safety Regulations (FMCSR) contained in Part 390 of 49 CFR. This rulemaking is being undertaken to implement section 206 of the Motor Carrier Safety Act (MCSA) of 1984 which mandated the reissuance of the FMCSR. The revisions seek to assist the various segments of the truck and bus industries in their efforts to comply with the FMCSR by (1) incorporating definitions from the Motor Carrier Safety Act of 1984; (2) clarifying and updating the regulations; (3) eliminating redundancy; (4) combining and locating in a single place the definitions of many general items presently located throughout the FMCSR; and (5) addressing comments concerning the elimination of certain regulatory exemptions.

Timetable:

Action	Date	FR Cite
ANPRM Fertilizer	02/10/82	47 FR 5273
ANPRM	01/23/85	50 FR 2998
Fertilizer ANPRM Withdrawn	01/23/85	50 FR 2998
ANPRM Comment Period End	03/11/85	50 FR 2998
NPRM	07/13/87	52 FR 26278
NPRM Comment Period End	09/11/87	52 FR 26278
Final Action	04/00/88	

Small Entity: No

Analysis: Regulatory Evaluation 07/13/87 (52 FR 26278)

Agency Contact: Thomas P. Kozlowski, Department of Transportation, Federal Highway Administration, 400 Seventh Street, SW, Washington, DC 20590, 202 366-2981

RIN: 2125-AA34

1841. + SPLASH/SPRAY SUPPRESSANT DEVICES ON TRUCK TRACTORS, SEMITRAILERS AND TRAILERS

Significance: Regulatory Program

Legal Authority: 49 USC 2314; 49 USC 3102; Section 414 of STAA of 1982

CFR Citation: 49 CFR 393

Legal Deadline: Statutory, April 2, 1988.

Abstract: Section 414 of the Surface Transportation Assistance Act of 1982 (Pub. L. 97-424) states that Congress declares the visibility on wet roadways in the Interstate System should be improved by reducing splash and spray from truck tractors, semitrailers and trailers. Congress instructed the Secretary to establish, by regulation, minimum standards with respect to the performance and installation of splash and spray suppression devices on truck tractors, semitrailers and trailers. Further, Congress mandated that all vehicles in use 5 years from date of enactment be equipped with such devices. The revisions to 49 CFR 393 will implement this mandate. This rulemaking is considered significant because of its economic impact on the motor carrier industry. Section 205 of the Surface Transportation Assistance Act of 1987 (P.L. 100-17) establishes a deadline of 4/2/88 for final action unless the Secretary determines that insufficient technology exists upon which to base a final rule.

Timetable:

Action	Date	FR Cite
NPRM	04/12/85	50 FR 14630
Comment Period Extended	06/11/85	50 FR 24549
NPRM Comment Period End	08/12/85	50 FR 24549
Final Action	04/02/88	

Small Entity: Yes

Additional Information: The public comment period was extended to 8/12/85 by a notice published on 6/11/85 (50 FR 24549).

As part of the Surface Transportation Reauthorization bill, introduced for consideration in the last Congress and reintroduced in this session, the Administration proposed a provision that would amend the existing splash and spray suppression-devices statute. The amendment is intended to give greater flexibility to the Department in dealing with this problem and to ensure that the Department's final decision can take the costs and benefits of various alternatives fully into account.

Analysis: Regulatory Evaluation 04/12/85 (50 FR 14630)

Agency Contact: Thomas P. Kozlowski, Department of Transportation, Federal Highway Administration, 400 Seventh Street, SW, Washington, DC 20590, 202 366-2981

RIN: 2125-AA84

1842. + TRUCK SIZE AND WEIGHT; TANDEM TRUCK SAFETY ACT

Significance: Regulatory Program

Legal Authority: 23 USC 315; PL 97-424, Sec 133; PL 97-424, Sec 411; PL 97-424, Sec 412; PL 97-424, Sec 413; PL 97-424, Sec 416

CFR Citation: 23 CFR 658

Legal Deadline: None.

Abstract: The FHWA is proposing to provide a statement of FHWA interpretation and policy addressing the size and weight provisions contained in the Tandem Truck Safety Act of 1984 (TTSA) which amended the Surface Transportation Assistance Act of 1982 (STAA). This action addresses (1) conditions under which segments of the National System of Interstate and Defense Highways may be deleted from the National Truck Network, (2) conditions affecting the designation of new routes on the Federal-Aid Primary System as part of the National Truck Network, and (3) new provisions for 102-inch wide 28 1/2-foot semi-trailers. The issue relative to the qualifications of highways previously designated with lane widths less than 12 feet was the subject of a separate rulemaking action finalized at 52 FR 35064 (09/17/87).

Timetable:

Action	Date	FR Cite
NPRM	09/18/85	50 FR 37970
NPRM Comment Period End	11/04/85	50 FR 37970
Final Action	04/00/88	

Small Entity: No

Additional Information: This action had previously been characterized as significant in the agenda. Upon further review, it has been determined that since this rulemaking proposes to technically amend the June 5, 1984, final rule on Truck Size and Weight and to finalize certain issues left unresolved, it is not considered significant. A Regulatory Impact Analysis has been prepared for the June 5 rulemaking and is available for inspection in the Headquarters office of FHWA, 400 Seventh Street, SW, Washington, D.C.

Analysis: Regulatory Evaluation 09/18/85 (50 FR 37970)

Agency Contact: C. John MacGowan, Department of Transportation, Federal Highway Administration, 400 Seventh Street, SW, Washington, DC 20590, 202 366-4032

RIN: 2125-AB28

1843. + INSPECTION, REPAIR, AND MAINTENANCE

Significance: Regulatory Program

Legal Authority: 49 USC 3102; PL 98-554, Sec 210; PL 98-554, Sec 204; 23 USC 315

CFR Citation: 49 CFR 396; 49 CFR 390; 48 CFR 393

Legal Deadline: None.

Abstract: The FHWA is seeking public comment concerning the development of Federal commercial motor vehicle inspection standards which would be applicable to motor carriers engaged in interstate or foreign commerce. This action is required by section 210 of the Motor Carrier Safety Act of 1984. The proposed revisions will require motor carriers to comply with Federal inspection standards, a State inspection program or an authorized self-inspection program.

Timetable:

Action	Date	FR Cite
ANPRM	01/10/85	50 FR 1245
ANPRM Comment Period End	02/24/85	
NPRM	02/26/87	52 FR 5913
SNPRM	04/27/87	52 FR 13853
Comment Period extended to 06/29/87		
NPRM Comment Period End	06/29/87	52 FR 13853
Final Action	04/00/88	

Small Entity: No

Additional Information: The NPRM proposed revisions after taking into account the public comments received to the ANPRM (01/10/85), 50 FR 1245). The 1/10/85 ANPRM also solicited comments on the provisions relating to the parts and accessories necessary for the safe operation of commercial motor vehicles. This section (parts and accessories) and comments made to it is the subject of a separate rulemaking action. See Final Rule Stage, RIN 2125-AB45.

Analysis: Regulatory Evaluation 02/26/87 (52 FR 5913)

Agency Contact: Thomas P. Kozlowski, Department of Transportation, Federal Highway Administration, 400 Seventh Street, SW, Washington, DC 20590, 202 366-2981

RIN: 2125-AB34

1844. + PARTS AND ACCESSORIES NECESSARY FOR SAFE OPERATION; GENERAL

Significance: Regulatory Program

Legal Authority: 49 USC 3102; PL 98-554, Sec 110

CFR Citation: 49 CFR 393

Legal Deadline: None.

Abstract: This rulemaking action responds to section 210 of the Motor Carrier Safety Act of 1984. Section 210 requires the Department to open Part 393 of the Federal Motor Carrier Safety Regulations (FMCSR), which concerns the parts and accessories necessary for the safe operation of commercial motor vehicles for public comment and review. In essence, Part 393 is the basis for the vehicle inspection currently performed on vehicles operated by motor carriers subject to DOT jurisdiction.

Timetable:

Action	Date	FR Cite
ANPRM	01/10/85	50 FR 1245
ANPRM Comment Period End	02/25/85	50 FR 1245
NPRM	02/26/87	52 FR 5892
SNPRM	04/27/87	52 FR 13853
Comment Period extended to 06/29/87		
NPRM Comment Period End	06/29/87	52 FR 13853
Final Action	04/00/88	

Small Entity: No

Additional Information: For the rulemaking action specifically addressing 49 CFR 393.42 (Front Wheel Brakes), see the entry entitled "Parts and Accessories Necessary for Safe Operation; Front Wheel Brakes," in 52 FR 2801 (01/27/87).

Analysis: Regulatory Evaluation 02/26/87 (52 FR 5892)

Agency Contact: Thomas P. Kozlowski, Department of Transportation, Federal Highway Administration, 400 Seventh Street, SW, Washington, DC 20590, 202 366-2981

RIN: 2125-AB45

1845. + SAFETY FITNESS DETERMINATION

Significance: Regulatory Program

Legal Authority: PL 98-554, Sec 215; 49 USC 3102

CFR Citation: 49 CFR 385

Legal Deadline: None.

Abstract: Section 215 of the Motor Carrier Safety Act of 1984 requires the FHWA, in cooperation with the Interstate Commerce Commission, to establish a procedure to determine the safety fitness of owners and operators of commercial motor vehicles including persons seeking new or additional operating authority as motor carriers. Comments were requested regarding the proposed changes in the current safety rating procedures and a new proposal for those carriers who have not previously been assigned a safety rating or who intend to be a new entrant into the motor carrier industry. It has been determined that this rulemaking action is a significant regulation under the regulatory policies and procedures of the Department of Transportation because of the total estimated indirect benefits that may result.

Timetable:

Action	Date	FR Cite
NPRM	06/25/86	51 FR 23088
NPRM Comment Period End	08/11/86	51 FR 23088
Final Action	04/00/88	

Small Entity: No

Analysis: Regulatory Evaluation 06/25/86 (51 FR 23088)

Agency Contact: Gerald J. Davis, Department of Transportation, Federal Highway Administration, 400 Seventh St., SW, Washington, DC 20590, 202 366-2898

RIN: 2125-AB46

1846. + TRUCK SIZE AND WEIGHT; SPECIALIZED EQUIPMENT; MAXI-CUBE

Significance: Regulatory Program

Legal Authority: 23 USC 315; 49 USC 2311(d); PL 99-591, Sec 324

CFR Citation: 23 CFR 658

Legal Deadline: None.

Abstract: An ANPRM had been issued requesting public comment on a petition to designate a particular combination of vehicles as specialized equipment under the provisions of section 411(d) of the Surface Transportation Assistance Act of 1982 (STAA). The final rule will now implement section 324 of the House Bill 5205 which was incorporated into law by section 302 of the Act Making Continuing Appropriations for Fiscal Year 1987, Pub. L. 99-591, 101 Stat. 3341, enacted on October 16, 1986. This section amended section 411(c) of the Surface Transportation Assistance Act of 1982 to authorize the "maxi-cube" vehicle to operate on the National Network in the same way as vehicles previously authorized by that section. The "maxi-cube" vehicle is a particular combination of vehicles described in the law. This action also withdraws the advance notice of proposed rulemaking (ANPRM) published at 50 FR 52940 (12/27/85) and 51 FR 7065 (Supplemental notice: 2/28/86) on the designation of the "maxi-cube" design as specialized equipment under section 411(d) of the STAA of 1982.

Timetable:

Action	Date	FR Cite
ANPRM	12/27/85	50 FR 52940
ANPRM Comment Period End	02/10/86	50 FR 52940
ANPRM Supplemental	02/28/86	51 FR 7065
Final Action	04/00/88	

Small Entity: No

Analysis: Reg. Evaluation (Minimal Impact) 04/00/88

Agency Contact: Philip W. Blow, Department of Transportation, Federal Highway Administration, 400 Seventh St., SW, Washington, DC 20590, 202 366-4036

RIN: 2125-AB48

1847. + EMPLOYEE SAFETY AND HEALTH STANDARDS

Significance: Regulatory Program

Legal Authority: PL 98-554, Sec 206; 49 USC App 2505

CFR Citation: 49 CFR 399

Legal Deadline: None.

Abstract: The Federal Highway Administration (FHWA) was considering proposing to revise Part 399 of the Federal Motor Carrier Safety Regulations (FMCSR) to implement Section 206 of the Motor Carrier Safety Act of 1984. After reviewing the public comments received to the ANPRM published on January 23, 1985 (50 FR 2998), the FHWA has decided that no revisions to this Part are warranted at this time. This part will be considered reissued pursuant to the Motor Carrier Safety Act of 1984.

Timetable:

Action	Date	FR Cite
ANPRM	01/23/85	50 FR 2998
ANPRM Comment Period End	04/22/85	50 FR 2998
To be withdrawn	04/00/88	

Small Entity: No

Agency Contact: Thomas P. Kozlowski, Department of Transportation, Federal Highway Administration, 400 Seventh Street, SW, Washington, DC 20590, 202 366-2981

RIN: 2125-AB50

1848. + DRIVING A MOTOR VEHICLE

Significance: Regulatory Program

Legal Authority: PL 98-554, Sec 206; 49 USC App 2505

CFR Citation: 49 CFR 392

Legal Deadline: None.

Abstract: The FHWA had considered revising Part 392 of the Federal Motor Carrier Safety Regulations (FMCSR) in accordance with section 206 of the Motor Carrier Safety Act of 1984. After reviewing the comments received in response to the ANPRM published on January 23, 1985 (50 FR 2998), FHWA has decided not to make further revisions to Part 392 at this time. This Part will be considered reissued as currently written pursuant to the Motor Carrier Safety Act of 1984.

Timetable:

Action	Date	FR Cite
ANPRM	01/23/85	50 FR 2998
ANPRM Comment Period End	04/22/85	50 FR 2998
To be withdrawn	04/00/88	

Small Entity: No

Agency Contact: Thomas P. Kozlowski, Department of Transportation, Federal Highway Administration, 400 Seventh Street, SW, Washington, DC 20590, 202 366-2981

RIN: 2125-AB51

1849. + QUALIFICATION OF DRIVERS; HAZARDOUS MATERIALS DRIVERS

Significance: Regulatory Program

Legal Authority: 49 USC 3102; 49 USC App 2505

CFR Citation: 49 CFR 391

Legal Deadline: None.

Abstract: The notice of proposed rulemaking published on 5/13/86 (51 FR 17572) which proposed to establish stricter driver qualification rules for drivers of vehicles containing certain classes of hazardous materials will be withdrawn. Certain rulemaking actions mandated by the Commercial Motor Vehicle Safety Act of 1986 will supersede this action. The subject matter of this rulemaking regarding training will be addressed by RSPA in subsequent rulemaking.

Timetable:

Action	Date	FR Cite
NPRM	05/13/86	51 FR 17572
NPRM Comment Period End	06/11/86	51 FR 17572
To be withdrawn	04/00/88	

Small Entity: No

Analysis: Regulatory Evaluation 05/13/86 (51 FR 17572)

Agency Contact: Jill Hochman, Department of Transportation, Federal Highway Administration, 400 Seventh St., SW, Washington, DC 20590, 202 366-4009

RIN: 2125-AB64

1850. + SEMITRAILER-SEMITRAILER; B-TRAIN

Significance: Regulatory Program

Legal Authority: 23 USC 325; PL 97-424, Sec 411; PL 97-424, Sec 413

CFR Citation: 23 CFR 658

Legal Deadline: None.

Abstract: FHWA requested comments on a proposal to interpret 23 CFR 658.13 such that a combination of vehicles described as a truck-tractor semitrailer-semitrailer be considered as a truck-tractor semitrailer-trailer for purposes of 23 CFR 658. It is FHWA's intent to implement the Surface Transportation Assistance Act of 1982 so that all configurations that offer safety and productivity advantages will be recognized under the regulations. This action is significant because of industry interest and that of the general public.

Timetable:

Action	Date	FR Cite
NPRM	03/01/85	50 FR 8342
NPRM Comment Period End	04/30/85	50 FR 8342
NPRM Extended comment period to 03/14/88	01/29/88	53 FR 2603
Final Action	10/00/88	

Small Entity: No

Analysis: Regulatory Evaluation 01/29/88 (53 FR 2603)

Agency Contact: Philip W. Blow, Department of Transportation, Federal Highway Administration, 400 Seventh St., SW, Washington, DC 20590, 202 366-4036

RIN: 2125-AB66

1851. + COMMERCIAL DRIVER TEST AND LICENSING STANDARDS

Significance: Regulatory Program

Legal Authority: 49 USC 2505; 49 USC 3102; PL 99-570, Sec 12005; PL 99-570, Sec 12006; PL 99-570, Sec 12009

CFR Citation: 49 CFR 383; 49 CFR 391

Legal Deadline: Statutory, July 15, 1988.

Abstract: Sections 12005 and 12006 of Pub. L. 99-570 require certain requirements to be in place by July 15, 1988 regarding minimum Federal standards which States must use for testing and licensing commercial motor vehicle drivers. FHWA issued a NPRM on December 11, 1987 proposing the standards. Included in the proposal are requirements placed on the State in section 12009 pertaining to a check with the information system before issuing a license. This rulemaking action is considered significant because of the substantial public interest involved.

Timetable:

Action	Date	FR Cite
ANPRM	06/01/86	51 FR 27567
ANPRM Comment Period End	11/05/86	51 FR 35538
NPRM	12/11/87	52 FR 47326
NPRM Comment Period End	02/09/88	52 FR 47326
Final Action	07/00/88	

Small Entity: No

Analysis: Regulatory Evaluation 12/11/87 (52 FR 47326)

Agency Contact: Jill L. Hochman, Department of Transportation, Federal Highway Administration, 400 Seventh St., SW, Washington, DC 20590, 202 366-4001

RIN: 2125-AB68

1852. RAILROAD GRADE CROSSINGS

Significance: Nonsignificant

Legal Authority: 49 USC 3102

CFR Citation: 49 CFR 392.10

Legal Deadline: None.

Abstract: The FHWA had considered a revision that would make this Federal regulation more consistent with the Uniform Vehicle Code with respect to stopping requirements. However, after further review it has been determined that no further action by the FHWA is needed in this area. Therefore, the 11/18/82 ANPRM will be withdrawn.

Timetable:

Action	Date	FR Cite
ANPRM	11/18/82	47 FR 51904
Withdrawal Notice	04/00/88	
Final Action	04/00/88	

Small Entity: No

Agency Contact: Thomas P. Kozlowski, Department of Transportation, Federal Highway Administration, 400 Seventh Street, SW, Washington, DC 20590, 202 366-2981

RIN: 2125-AA36

1853. ACCELERATION OF PROJECTS

Significance: Nonsignificant

Legal Authority: 23 USC 140; 23 USC 315; Surface Transportation Assistance Act of 1982, Sec. 129

CFR Citation: 23 CFR 630

Legal Deadline: None.

Abstract: This revision was intended to expedite the processing of Federal-aid highways projects by promoting wider use of the findings and recommendations of the demonstration project carried out under section 141 of the 1976 Federal-Aid Highway Act. This action was also being taken pursuant to section 129 of the Surface Transportation Assistance Act of 1982.

VOL 53 ISS 79 PT 1 APR 25 1988 UMI

DOT—FHWA **Final Rule Stage**

Timetable:

Action	Date	FR Cite
ANPRM	08/26/83	48 FR 38854
ANPRM Comment Period End	11/25/83	48 FR 57330
To be withdrawn	04/00/88	

Small Entity: No

Additional Information: An interim policy statement was published 6/6/83 (48 FR 25181) to implement acceleration methods for selected projects within existing regulations. Initially, FHWA had considered issuing a new regulation as a vehicle for accelerating Federal-aid projects pursuant to Section 129 of the STAA of 1982. However, it has been determined that the objectives of Section 129 can be best implemented by revisions to existing regulations. Therefore, separate regulations will not be issued regarding the acceleration program. This approach received the concurrence of Deputy Administrator Lamm on April 11, 1984. This regulation will be withdrawn.

Analysis: Reg. Evaluation (Minimal impact) 08/26/83 (48 FR 38854)

Agency Contact: S. M. Silence, Department of Transportation, Federal Highway Administration, 400 Seventh Street, SW, Washington, DC 20590, 202 366-4628

RIN: 2125-AA87

1854. EROSION AND SEDIMENT CONTROL ON HIGHWAY CONSTRUCTION PROJECTS

Significance: Nonsignificant

Legal Authority: 23 USC 109(g); 23 USC 315; 23 USC 109(h); 33 USC 1323

CFR Citation: 23 CFR 650

Legal Deadline: None.

Abstract: The proposed rule was intended to adopt the AASHTO Guide Specifications for water pollution control. After careful consideration of comments submitted in response to the NPRM and based upon a further review by FHWA, it has been determined that rulemaking in this area is no longer necessary. Therefore, the NPRM will be withdrawn.

Timetable:

Action	Date	FR Cite
NPRM	01/18/85	50 FR 2694
NPRM Comment Period End	03/18/85	
To be withdrawn	04/00/88	

Small Entity: No

Analysis: Reg. Evaluation (Minimal impact) 01/18/85 (50 FR 2694)

Agency Contact: Philip L. Thompson, Department of Transportation, Federal Highway Administration, 400 Seventh Street, SW, Washington, DC 20590, 202 366-4611

RIN: 2125-AB05

1855. RAILROAD-HIGHWAY PROJECTS

Significance: Nonsignificant

Legal Authority: 23 USC 109(e); 23 USC 120(d); 23 USC 130; 23 USC 315; 23 USC 405

CFR Citation: 23 CFR 646

Legal Deadline: None.

Abstract: The FHWA is proposing to amend its regulation prescribing policies and procedures for advancing Federal-aid and direct Federal highway projects involving railroad facilities. The proposed amendment will incorporate and clarify existing FHWA policy regarding participation with Federal-aid highway funds in providing specified horizontal and vertical clearances for railroad overpass and underpass structures at highways.

Timetable:

Action	Date	FR Cite
NPRM	02/20/85	50 FR 7067
NPRM Comment Period End	04/22/85	
Final Action	04/00/88	

Small Entity: No

Additional Information: Upon further review, it was determined that a supplemental NPRM was not necessary.

Analysis: Reg. Evaluation (Minimal impact) 02/20/85 (50 FR 7067)

Agency Contact: James A. Carney, Department of Transportation, Federal Highway Administration, 400 Seventh Street, SW, Washington, DC 20590, 202 366-0450

RIN: 2125-AB25

1856. STRUCTURAL SUPPORTS FOR HIGHWAY SIGNS, LUMINARIES AND TRAFFIC SIGNALS

Significance: Nonsignificant

Legal Authority: 23 USC 109; 23 USC 315; 23 USC 402

CFR Citation: 23 CFR 625

Legal Deadline: None.

Abstract: In May, 1985, the American Association of State Highway and Transportation Officials (AASHTO) approved its publication entitled "Standard Specification for Structural Supports for Highway Signs, Luminaries, and Traffic Signals," which is incorporated in 23 CFR 625 as a specification. FHWA proposed to adopt the AASHTO publication for Federal-aid application. An interim final rule adopted all of the 1985 AASHTO sign and luminaries specifications except section 7, Breakaway Supports. The SNPRM contained the results of FHWA's crash testing of previously accepted luminaire support systems and opened the docket for further comments.

Timetable:

Action	Date	FR Cite
NPRM	11/10/86	51 FR 40817
NPRM Comment Period End	05/11/87	51 FR 40817
Interim Final Rule	09/28/87	52 FR 32645
Supplemental NPRM	12/14/87	52 FR 47403
Final Action	08/00/88	

Small Entity: No

Analysis: Regulatory Evaluation 12/14/87 (52 FR 47403)

Agency Contact: James H. Hatton, Department of Transportation, Federal Highway Administration, 400 Seventh St., SW, Washington, DC 20590, 202 366-1329

RIN: 2125-AB56

1857. REIMBURSEMENT FOR RAILROAD WORK

Significance: Nonsignificant

Legal Authority: 23 USC 101; 23 USC 120(d); 23 USC 130; 23 USC 315

CFR Citation: 23 CFR 140

Legal Deadline: None.

Abstract: The FHWA is proposing to amend its regulation on reimbursement for railroad work to allow Federal-aid highway funds to be used to pay for various overhead and indirect construction costs incurred by railroad forces accomplishing work on Federal-aid highway projects.

Timetable:

Action	Date	FR Cite
NPRM	12/17/86	51 FR 44996
NPRM Comment Period End	02/17/87	51 FR 44996
Final Action	04/00/88	

Small Entity: No

Analysis: Reg. Evaluation (Minimal Impact) 12/17/86 (51 FR 44996)

Agency Contact: James A. Carney, Department of Transportation, Federal Highway Administration, 400 Seventh St., SW, Washington, DC 20590, 202 366-4652

RIN: 2125-AB59

1858. NATIONAL BRIDGE INSPECTION STANDARDS; FREQUENCY OF INSPECTION AND INVENTORY

Significance: Nonsignificant

Legal Authority: 23 USC 109(h); 23 USC 116(d); 12 USC 144; 23 USC 315

CFR Citation: 23 CFR 650

Legal Deadline: None.

Abstract: The FHWA is requesting comments to a proposal to revise the National Bridge Inspection Standards (NBIS). The revised regulation would permit States to increase the maximum time interval between the inspections for certain types or groups of bridges, as opposed to retaining the mandatory 2-year interval as required by regulations currently in effect. The proposed revisions would also require that States identify those bridges having fracture critical members or bridges which warrant underwater inspection consideration. The proposed revisions would provide State highway agencies greater flexibility with which to use available inspection resources in a cost-effective manner. It is intended that the proposed revisions would encourage efficient use of resources while ensuring that the safety of the traveling public is protected.

Timetable:

Action	Date	FR Cite
NPRM	04/07/87	52 FR 11092
Notice Extension of public comments	06/03/87	52 FR 20726
NPRM Comment Period End	07/09/87	52 FR 20726
Final Action	04/00/88	

Small Entity: No

Analysis: Reg. Evaluation (Minimal Impact) 04/07/87 (52 FR 11092)

Agency Contact: John J. Ahlskog, Department of Transportation, Federal Highway Administration, 400 Seventh St., SW, Washington, DC 20590, 202 366-4617

RIN: 2125-AB71

1859. CARGO PREFERENCE

Significance: Nonsignificant

Legal Authority: 23 USC 112; 23 USC 114; 23 USC 315; 23 USC 113; 23 USC 128; 31 USC 6506; 42 USC 3334; 42 USC 4602 et seq

CFR Citation: 23 CFR 635

Legal Deadline: None.

Abstract: The Federal Highway Administration (FHWA) is incorporating into its regulations the cargo preference requirements as mandated by the Cargo Preference Act of 1954 (Act) and its implementing regulations (46 CFR 381) developed by the Maritime Administration (MARAD). This final rule clarifies policies and procedures for the application of the Act's requirements to Federal-aid highway construction projects.

Timetable:

Action	Date	FR Cite
Final Action	04/00/88	

Small Entity: No

Analysis: Reg. Evaluation (Minimal Impact) 04/00/88

Agency Contact: William Weseman, Department of Transportation, Federal Highway Administration, 400 Seventh St., SW, Washington, DC 20590, 202 366-0392

RIN: 2125-AB73

1860. MINIMUM LEVELS OF FINANCIAL RESPONSIBILITY FOR MOTOR CARRIERS; ENVIRONMENTAL RESTORATION

Significance: Nonsignificant

Legal Authority: 49 USC 10927 note

CFR Citation: 49 CFR 387

Legal Deadline: None.

Abstract: The FHWA issued an interim final rule to redefine "environmental restoration" as that term is used in FHWA's financial responsibility regulations. This action was taken in response to a joint petition filed by the American Insurance Association (AIA) and the American Trucking Associations (ATA), and because of the current insurance crisis facing the motor carrier industry. This action made clear the motor carriers are required to provide evidence of financial responsibility to satisfy claims for damage to human health and to the environment, including necessary restoration costs, but not for potential or speculative damages for which they would not otherwise be found liable.

Timetable:

Action	Date	FR Cite
Interim Final Rule	09/23/86	51 FR 33654
Final Action	04/00/88	

Small Entity: No

Additional Information: Upon issuances of the interim final rule, the FHWA gave notice that comments would be accepted on the rulemaking action. A comment period was provided and Docket No. MC-126; Amendment No. 83-14 was established to receive comments. The FHWA will consider all comments and information received in order to determine whether to make the change permanent.

Analysis: Regulatory Evaluation 09/23/86 (51 FR 33654)

Agency Contact: Thomas P. Kozlowski, Department of Transportation, Federal Highway Administration, 400 Seventh St., SW, Washington, DC 20590, 202 366-2981

RIN: 2125-AB77

1861. CONSTRUCTION AND MAINTENANCE; CONTRACT PROCEDURES; STANDARDIZED CONTRACT CLAUSES

Significance: Nonsignificant

Legal Authority: 23 USC 112; 23 USC 117; 23 USC 315; PL 100-17, Sec 111(c)

CFR Citation: 23 CFR 635

Legal Deadline: None. A final rule must be issued by 4/2/89.

Abstract: The FHWA is amending its regulations on contract procedures to implement the provisions of Section 111(c) of the Surface Transportation and Uniform Relocation Assistance Act of 1987 (STURAA). Section 111(c) of STURAA amends 23 USC 112 to require a standardized contract clause in all Federal-aid contracts unless otherwise provided for by State law. The

DOT—FHWA

Final Rule Stage

standardized contract clause is to provide for the equitable adjustment of contract terms: (1) where site conditions differ from those specified in the contract; (2) where work has been suspended by order of the contracting agency (other than a suspension of work caused by the fault of the contractor or by weather); and (3) where there are material changes in the scope of the work.

Timetable:

Action	Date	FR Cite
NPRM	12/01/87	52 FR 45645
NPRM Comment Period End	02/01/88	52 FR 45645
Final Action	10/00/88	

Small Entity: No

Analysis: Reg. Evaluation (Minimal Impact) 12/01/87 (52 FR 45645)

Agency Contact: William A. Weseman, Chief, Construction and Maint. Division, Department of Transportation, Federal Highway Administration, 202 366-1548

RIN: 2125-AB87

1862. STATE EDUCATION AND TRAINING PROGRAM

Significance: Nonsignificant

Legal Authority: 23 USC 315; 23 USC 321(b) and (c); PL 100-17, Sec 131

CFR Citation: 23 CFR 260

Legal Deadline: None.

Abstract: The FHWA is amending 23 CFR 260 to implement Section 131 of the Surface Transportation and Uniform Relocation Assistance Act of 1987 (STURAA) enacted on April 2, 1987. Section 131 of the STURAA amends Section 321 of Title 23, United States Code, by allowing the States to use Federal-aid funds to pay 75 percent of the cost of education and training purchased from any source including the National Highway Institute. The provisions contained in 23 CFR 260 addressing the administration of Federal-aid funds for education and training of State and local highway department employees are being revised to reflect the statutory amendment.

Timetable:

Action	Date	FR Cite
Final Action	04/00/88	

Small Entity: No

Analysis: Reg. Evaluation (Minimal Impact) 04/00/88

Agency Contact: Larry Jones, National Highway Institute, Department of Transportation, Federal Highway Administration, 202 385-2779

RIN: 2125-AB92

1863. ● TRUCK SIZE AND WEIGHT; EXCEPTION TO BRIDGE FORMULA

Significance: Nonsignificant

Legal Authority: 23 USC 127; 49 USC 2311; 49 USC 2312; 49 USC 2313; 49 USC App 2316

CFR Citation: 23 CFR 658

Legal Deadline: None.

Abstract: This rulemaking action provides for an exception for tank trailers, dump trailers, and ocean transport containers to the Federal formula that specifies the maximum allowable gross weight for axle groups for vehicles operating on Interstate Highways. This action responds to Section 119 of the Surface Transportation and Uniform Relocation Assistance Act (STURAA) which amended 23 U.S.C. 127. The exception to the formula contained in section 127 provides for a greater weight to be carried on the second through fifth axles for the three types of five-axle truck tractor-semitrailer combination trucks.

Timetable:

Action	Date	FR Cite
Final Action	04/00/88	

Small Entity: No

Additional Information: Since the final rule will contain revisions which will be issued for the purpose of complying with the statutory language mandated by section 119 of STURAA of 1987, public comment would be impracticable and unnecessary.

Analysis: Reg. Evaluation (Minimal Impact) 04/00/88

Agency Contact: Philip W. Blow, Department of Transportation, Federal Highway Administration, 202 366-4036

RIN: 2125-AC03

DEPARTMENT OF TRANSPORTATION (DOT)

Federal Highway Administration (FHWA)

Completed Actions

1864. + TRUCK SIZE AND WEIGHT; GRANDFATHER SEMITRAILER LENGTHS

Significance: Regulatory Program

Legal Authority: PL 97-424, Sec 133; PL 97-424, Sec 411; PL 97-424, Sec 412; PL 97-424, Sec 413; PL 97-424, Sec 416

CFR Citation: 23 CFR 658

Legal Deadline: None.

Abstract: An analysis of comments to the March 1, 1985 NPRM indicates insufficient rationale to establish grandfathered semitrailer lengths in all States. A final rule establishes the grandfather semitrailer lengths for States where adequate documentation exits.

Timetable:

Action	Date	FR Cite
NPRM	03/01/85	50 FR 8342
NPRM Comment Period End	04/30/85	50 FR 8342
Final Action	01/29/88	53 FR 2597
Final Action Effective	01/29/88	53 FR 2597

Small Entity: No

Analysis: Reg. Evaluation (Minimal Impact) 01/29/88 (53 FR 2597)

Agency Contact: Philip W. Blow, Department of Transportation, Federal Highway Administration, 400 Seventh Street, SW, Washington, DC 20590, 202 366-4036

RIN: 2125-AB26

1865. + HOURS OF SERVICE

Significance: Regulatory Program

Legal Authority: 49 USC 3102; PL 98-554, Sec 206

CFR Citation: 49 CFR 395

Legal Deadline: None.

Abstract: Section 206 of the Motor Carrier Safety Act of 1984 (Act) directs the DOT to reissue regulations

pertaining to commercial motor vehicle safety. On November 23, 1984, the FHWA published a final rule at 49 FR 46145 regarding Hours of Service in order to comply with an opinion of the United States Court of Appeals for the District of Columbia Circuit. A docket was opened (MC-99-1) in order to request comments for further consideration of revisions to the requirement of the driver's record of duty status. Pursuant to section 206 of the Act, an ANPRM was issued (1/23/85; 50 FR 2998) and again requested comments regarding the requirement for recorded hours of service. This final rule incorporated all comments received to the above mentioned published rulemaking actions. This document eliminated certain items required on the driver's record of duty status and extends the 12-hour limitation in the 100-mile radius exemption to 15 hours or permitting a 50-mile radius rule as an option with the 15-hour rule. This rulemaking is considered significant because of the potential cost savings which may result from (con't)

Timetable:

Action	Date	FR Cite
ANPRM	01/23/85	50 FR 2998
ANPRM Comment Period End	03/11/85	50 FR 2998
NPRM	05/09/86	51 FR 17214
NPRM Comment Period End	06/09/86	51 FR 17214
Comment period extended to 08/18/86	07/08/86	51 FR 24722
Final Action	10/30/87	52 FR 41718
Final Action Effective	11/30/87	52 FR 41718

Small Entity: No

Additional Information: ABSTRACT CONT: the reduction in requirements for maintaining the driver's record of duty status.

Analysis: Regulatory Evaluation 10/30/87 (52 FR 41718)

Agency Contact: Thomas P. Kozlowski, Department of Transportation, Federal Highway Administration, 400 Seventh Street, SW, Washington, DC 20590, 202 366-2981

RIN: 2125-AB39

1866. + TRUCK SIZE AND WEIGHT; AUTOMOBILE TRANSPORTERS

Significance: Regulatory Program

Legal Authority: 23 USC 315; PL 97-424, Sec 133; PL 97-424, Sec 411; PL 97-424, Sec 412; PL 97-424, Sec 413; PL 97-424, Sec 416

CFR Citation: 23 CFR 658

Legal Deadline: None.

Abstract: FHWA proposed revisions to certain provisions established by the final rule on truck size and weight published at 49 CFR 23302 (06/05/84). This action establishes: (1) a definition for an automobile-transporter; (2) a minimum 75-foot overall length for a stinger-steered automobile-transporter; (3) the allowance of triple saddlemount combinations with a minimum length of 65 feet; and (4) no overall length limitation for conventional tractor-semitrailer automobile transporters when the semitrailer is 48 feet in length. Purpose of this rulemaking action was to clarify and further define certain issues contained in the June 5, 1984, final rule.

Timetable:

Action	Date	FR Cite
ANPRM	10/02/84	49 FR 38956
ANPRM Comment Period End	11/17/84	49 FR 38956
NPRM	11/25/85	50 FR 48431
NPRM Comment Period End	01/09/86	50 FR 48431
Final Action	01/29/88	53 FR 2593
Final Action Effective	02/29/88	53 FR 2593

Small Entity: No

Additional Information: A Regulatory Impact Analysis which had been prepared for the June 5, 1984, final rule on truck size and weight provisions is available for inspection in the Headquarters office of FHWA, 400 Seventh Street, SW, Washington, DC.

Analysis: Reg. Evaluation (Minimal Impact) 01/29/88 (53 FR 2593)

Agency Contact: Chester F. Phillips, Department of Transportation, Federal Highway Administration, 400 Seventh Street, SW, Washington, DC 20590, 202 366-2251

RIN: 2125-AB42

1867. + ACCOMMODATION OF UTILITIES; LONGITUDINAL UTILITY USE OF FREEWAY RIGHT-OF-WAY

Significance: Regulatory Program

Legal Authority: 23 USC 109; 23 USC 116; 23 USC 315

CFR Citation: 23 CFR 645

Legal Deadline: None.

Abstract: FHWA revised its regulation on the accommodation of utility facilities and private lines on the right-of-way of Federal-aid and direct Federal highway projects to clarify requirements regarding utility use of Federal-aid highways, and modified the conditions under which certain types of utilities may be located longitudinally on Federal-aid freeways (Interstate highways). This action considered the interest expressed by the telecommunication industry to gain access to the Interstate System for installation of underground fiber optics cable systems.

Timetable:

Action	Date	FR Cite
NPRM	12/19/86	51 FR 45479
Comment Period Extended to 03/17/87	02/11/87	52 FR 4349
NPRM Comment Period End	03/17/87	52 FR 4349
Final Action	02/02/88	53 FR 2829
Final Action Effective	02/06/88	53 FR 2829

Small Entity: No

Additional Information: A general notice was published in the Federal Register on April 1, 1986 (51 FR 11055).

Analysis: Regulatory Evaluation 02/02/88 (53 FR 2829)

Agency Contact: James A. Carney, Department of Transportation, Federal Highway Administration, 400 Seventh St., SW, Washington, DC 20590, 202 366-4652

RIN: 2125-AB76

1868. + UNIFORM RELOCATION ACT AMENDMENTS OF 1987; SPECIFIC PAYMENTS

Significance: Agency Priority

Legal Authority: PL 100-17, Title IV; 42 USC 4601 et seq

CFR Citation: 23 CFR 740

Legal Deadline: None.

Abstract: This rulemaking action implements those provisions of Title IV of the Surface Transportation and Uniform Relocation Assistance Act of 1987 (STURAA) which are non-controversial. These amendments to the Uniform Relocation Act primarily address the increases in the maximum specific dollar amounts paid by Federal,

State and local agencies from project funds to persons who are forced to relocate by Federal or federally assisted projects. These revisions were issued expeditiously so that displacing agencies who are currently authorized under State law can begin to provide the additional assistance provided by law. This rulemaking action is considered significant because of the substantial public interest involved. By taking this action, the FHWA is carrying out its responsibility as lead agency as required by STURAA. Any future revisions to this rule will be incorporated in the rulemaking under RIN 2125-AB85, entitled "Uniform Relocation Act Amendments of 1987; General."

Timetable:

Action	Date	FR Cite
Final rule	12/17/87	52 FR 47994

Small Entity: No

Analysis: Regulatory Evaluation 12/17/87 (52 FR 47994)

Agency Contact: Barbara Reichart, Department of Transportation, Federal Highway Administration, 202 366-0116

RIN: 2125-AB96

1869. TRANSFER OF FEDERAL-AID HIGHWAY FUNDS

Significance: Nonsignificant

Legal Authority: Surface Transportation Assistance Act of 1982, Sec. 116

CFR Citation: 23 CFR 160, Subpart A; 23 CFR 160, Subpart B; 23 CFR 160, Subpart C

Legal Deadline: None.

Abstract: This action was initiated to reflect the required statutory changes included in section 116 of the STAA of 1982 regarding the transfer of Interstate construction funds. Section 116 of the STAA of 1982 has been superseded by subsequent legislation. Therefore, as of 12/15/87, this rulemaking action has been terminated.

Timetable:

Action	Date	FR Cite
Terminated	12/15/87	

Small Entity: No

Agency Contact: Larry C. Hanna, Department of Transportation, Federal Highway Administration, 400 Seventh Street, SW, Washington, DC 20590, 202 366-0673

RIN: 2125-AA84

1870. HIGHWAY BEAUTIFICATION: OUTDOOR ADVERTISING; TECHNICAL AMENDMENT

Significance: Nonsignificant

Legal Authority: 23 USC 131; 23 USC 315

CFR Citation: 23 CFR 750

Legal Deadline: None.

Abstract: The FHWA had proposed to amend its regulations in order to clarify existing FHWA policy that temporary political campaign signs and other signs, displays, and devices associated with Federal, State, or local elections may be permitted without violating the Highway Beautification Act. Upon further review, the FHWA has determined that no action is needed at this time. Therefore, this rulemaking action is being terminated.

Timetable:

Action	Date	FR Cite
Action terminated	12/11/87	

Small Entity: No

Agency Contact: Edward V. A. Kussy, Department of Transportation, Federal Highway Administration, 700 Seventh Street, SW, Washington, DC 20590, 202 366-0791

RIN: 2125-AB32

1871. LABOR AND EMPLOYMENT; CONVICT LABOR AND MATERIALS

Significance: Nonsignificant

Legal Authority: 23 USC 112; 23 USC 113; 23 USC 114; 23 USC 117; 23 USC 128; 23 USC 315; 31 USC 6505; 42 USC 3334; 42 USC 4601 et seq; PL 100-17, Sec 112

CFR Citation: 23 CFR 635

Legal Deadline: None.

Abstract: FHWA amended its regulation on the use of convict labor and convict produced materials on Federal-aid highway projects to implement provisions mandated by section 112 of the Federal-Aid Highway Act of 1987 (PL 100-17). Section 112 amended section 114 of 23 USC by prohibiting the use of materials produced by convict labor on Federal-aid highway projects unless produced by convicts who are on parole, supervised release, or probation and limited in quantity not to exceed a designated prior amount produced. The regulations implementing 23 USC 114(b) are revised to reflect the statutory amendment.

Timetable:

Action	Date	FR Cite
Final Action	01/25/88	53 FR 1922
Final Action Effective	01/25/88	53 FR 1922

Small Entity: No

Analysis: Reg. Evaluation (Minimal Impact) 01/25/88 (53 FR 1922)

Agency Contact: William Weseman, Chief, Const. and Maintenance Division, Department of Transportation, Federal Highway Administration, 202 366-0392

RIN: 2125-AB82

1872. CONSTRUCTION AND MAINTENANCE; CONTRACT PROCEDURES

Significance: Nonsignificant

Legal Authority: 23 USC 112; 23 USC 117; 23 USC 315; PL 100-17, Sec 111(a)

CFR Citation: 23 CFR 635

Legal Deadline: None.

Abstract: This rulemaking action revises 23 CFR Part 635, Subpart A, B, and C to implement the provisions mandated by Section 111(c) of the Surface Transportation and Uniform Relocation Assistance Act of 1987 (STURAA). Section 111(c) of STURAA amends section 112(b) of Title 23, U.S.C., to add emergency situations to the conditions under which a Federal-aid project may be awarded by a method other than competitive bidding.

Timetable:

Action	Date	FR Cite
Final Action	11/25/87	52 FR 45171
Final Action Effective	11/25/87	52 FR 45171

Small Entity: No

Analysis: Reg. Evaluation (Minimal Impact) 11/25/87 (52 FR 45171)

Agency Contact: William A. Weseman, Chief, Construction and Maint. Division, Department of Transportation, Federal Highway Administration, 202 366-1548

RIN: 2125-AB88

VOL 53 ISS 79 PT 1 AP 25 1988 UMI

DOT—FHWA

Completed Actions

1873. TRUCK SIZE AND WEIGHT; NATIONAL NETWORK

Significance: Nonsignificant

Legal Authority: 23 USC 127; 23 USC 315; 49 USC 2311; 49 USC 2313

CFR Citation: 23 CFR 658

Legal Deadline: None.

Abstract: FHWA was considering modifying the National Network for commercial motor vehicles by adding routes in Georgia. The National Network was established by the final rule on Truck Size and Weight published at 49 FR 23302 on June 5, 1984. It is maintained under 23 CFR 658, Appendix A, as amended. At the request of the State of Georgia, this rulemaking is terminated.

Timetable:

Action	Date	FR Cite
Action terminated	02/04/88	

Small Entity: No

Agency Contact: Philip W. Blow, Department of Transportation, Federal Highway Administration, 202 366-4036

RIN: 2125-AB58

1874. ● PHYSICAL CONSTRUCTION AUTHORIZATION

Significance: Nonsignificant

Legal Authority: 23 USC 112; 23 USC 113; 23 USC 114; 23 USC 117; 23 USC 128; 31 USC 6506; 42 USC 3334; 42 USC 4601 et seq; PL 100-17, Sec 154

CFR Citation: 23 CFR 635

Legal Deadline: None.

Abstract: This rulemaking document amends the FHWA regulation regarding the erection of certain signs on Federal-aid construction projects to implement Section 154 of the Surface Transportation and Uniform Relocation Assistance Act (STURAA) of 1987. Section 154 mandates that those States that currently have a practice of erecting signs identifying funding sources on construction projects without Federal-aid highway assistance shall be required to erect signs displaying sources and amounts of funds on all Federal-aid highway projects. The current regulations provide for the erection of only those signs that conform to the standards developed by the Secretary of Transportation. This amendment allows the erection of signs that do not presently conform to standards developed by the Secretary.

Timetable:

Action	Date	FR Cite
Final Action	01/25/88	53 FR 1920
Final Action Effective	01/25/88	53 FR 1920

Small Entity: No

Additional Information: Since the final rule contained revisions which were issued for the purpose of literally complying with the statutory language mandated by section 154 of STURAA of 1987, public comment was impracticable and unnecessary.

Analysis: Reg. Evaluation (Minimal Impact) 01/25/88 (53 FR 1920)

Agency Contact: Mr. William A. Weseman, Department of Transportation, Federal Highway Administration, 202 366-0392

RIN: 2125-AC01

1875. ● RULES OF PRACTICE AND RULEMAKING PROCEDURES FOR MOTOR CARRIERS; TECHNICAL AMENDMENTS

Significance: Nonsignificant

Legal Authority: 49 USC 2701 et seq; 49 USC 2501 et seq; 49 USC 104(c)(2); 49 USC 501 et seq; 49 USC 3101 et seq; 49 USC 1801 et seq; 49 USC 10927

CFR Citation: 49 CFR 301; 49 CFR 386; 49 CFR 389

Legal Deadline: None.

Abstract: This rulemaking action makes technical amendments to various sections of the Motor Carrier regulations: to make the handling of the delegations of authority relating to motor carrier safety consistent with other delegations of authority within the FHWA; to clarify the authority of the administrative law judge to dismiss a case; to reflect a recent internal agency reorganization with new responsibilities and terminology given to the Office of Motor Carrier Standards; to provide nomenclature changes; and to add new authority provided by the Commercial Motor Vehicle Safety Act of 1986, Title XII of Pub. L. 99-570, 100 Stat. 3207-170.

Timetable:

Action	Date	FR Cite
Final Action	01/26/88	53 FR 2035
Final Action Effective	01/26/88	53 FR 2035

Small Entity: No

Analysis: Reg. Evaluation (Minimal Impact) 01/26/88 (53 FR 2035)

Agency Contact: Thomas P. Kozlowski, Department of Transportation, Federal Highway Administration, 202 366-2981

RIN: 2125-AC02

DEPARTMENT OF TRANSPORTATION (DOT)

National Highway Traffic Safety Administration (NHTSA)

Prerule Stage

1876. + SIDE-IMPACT PROTECTION, HEAD/NECK PROTECTION, AND OCCUPANT EJECTION MITIGATION

Significance: Regulatory Program

Legal Authority: 15 USC 1392; 15 USC 1407

CFR Citation: 49 CFR 571.214

Legal Deadline: None.

Abstract: Would propose amending the current standard to include head/neck protection and to mitigate ejection through side windows and doors.

Timetable:

Action	Date	FR Cite
ANPRM	04/00/88	

Small Entity: Undetermined

Agency Contact: Ralph Hitchcock, Department of Transportation, National Highway Traffic Safety Administration, 400 Seventh Street, SW, Washington, DC 20590, 202 366-0642

RIN: 2127-AB65

1877. + UNIFORM TIRE-QUALITY GRADING

Significance: Agency Priority

Legal Authority: 15 USC 1423

CFR Citation: 49 CFR 575

Legal Deadline: None.

Abstract: Would include rolling resistance for tires as a substitute for top temperature resistance grade in the Uniform Tire Quality Grading Standards. This rulemaking is significant because of substantial public interest.

Timetable:

Action	Date	FR Cite
Next Action Undetermined		

Small Entity: No

Agency Contact: Orron Kee, Department of Transportation, National Highway Traffic Safety Administration, 400 Seventh Street, SW, Washington, DC 20590, 202 366-0846

RIN: 2127-AA52

1878. + DAYTIME RUNNING LIGHTS

Significance: Agency Priority

Legal Authority: 15 USC 1392; 15 USC 1401; 15 USC 1403; 15 USC 1407

CFR Citation: 49 CFR 571.108

Legal Deadline: None.

Abstract: A petition was received from the Insurance Institute for Highway Safety (IIHS) on November 8, 1985. It requests that the Federal lighting regulation (FMVSS No. 108) be changed to allow installation of daytime running lights (DRLs) by original equipment manufacturers. Although the existing standard does not specifically prohibit DRLs, some changes to FMVSS No. 108 would be required to accommodate various suggested DRL configurations. NHTSA has exchanged information with Transport Canada on DRLs, and on the evaluation of effectiveness of various DRL configurations. Canada issued a proposed regulation which would require that new vehicles be equipped with DRLs. The agency would like to ensure that changes made in FMVSS No. 108 are compatible with the final technical specifications of Transport Canada. NHTSA plans to take action on the IIHS petition now that the Canadian NPRM is published. Proceeding is significant because of the importance of keeping pace with the Canadian action.

Timetable:

Action	Date	FR Cite
NPRM	03/24/87	52 FR 9316
NPRM Comment Period End	05/08/87	52 FR 9316
SNPRM	04/00/88	

Small Entity: Undetermined

Agency Contact: Ralph J. Hitchcock, Department of Transportation, National Highway Traffic Safety Administration, 400 Seventh St., SW, Washington, DC 20590, 202 366-0842

RIN: 2127-AB92

1879. ● + PASSENGER AUTOMOBILE AVERAGE FUEL ECONOMY STANDARD

Significance: Agency Priority

Legal Authority: 15 USC 2002

CFR Citation: 49 CFR 531.5

Legal Deadline: None.

Abstract: Mercedes Benz of North America, Inc., and General Motors Corporation have petitioned for retroactive amendment of passenger automobile corporate average fuel economy standards for Model Years (MY) 1984 and 1985 and for MY 1985, respectively. This action will consider the arguments set forth in the petitions and take appropriate further action. This rulemaking is significant because of substantial public interest.

Timetable:

Action	Date	FR Cite
Next Action Undetermined		

Small Entity: No

Agency Contact: Orron E. Kee, Chief, Motor Vehicle Requirements Division, Office of Market Incentives, Department of Transportation, National Highway Traffic Safety Administration, 400 7th St., SW, Washington, DC 20590, 202 366-0846

RIN: 2127-AC33

1880. REVIEW: SCHOOLBUS SEATING SYSTEMS

Significance: Nonsignificant

Legal Authority: 15 USC 1392; 15 USC 1407

CFR Citation: 49 CFR 571.222

Legal Deadline: None.

Abstract: This regulation was selected for review because of public interest.

Timetable:

Action	Date	FR Cite
Begin Review	06/01/85	
End Review	06/00/88	

Small Entity: No

Agency Contact: Frank Ephraim, Department of Transportation, National Highway Traffic Safety Administration, 400 Seventh Street, SW, Washington, DC 20590, 202 366-1574

RIN: 2127-AA65

1881. REVIEW: SEATING SYSTEMS

Significance: Nonsignificant

Legal Authority: 15 USC 1392; 15 USC 1401; 15 USC 1407

CFR Citation: 49 CFR 571.207

Legal Deadline: None.

Abstract: This regulation was selected for review because of costs.

Timetable:

Action	Date	FR Cite
Begin Review	05/01/86	
Preliminary evaluation report published	02/10/87	52 FR 4818
End Review	04/00/88	

Small Entity: No

Agency Contact: Frank Ephraim, Department of Transportation, National Highway Traffic Safety Administration, 400 Seventh Street, SW, Washington, DC 20590, 202 366-1574

RIN: 2127-AA69

1882. REVIEW: LAMPS, REFLECTIVE DEVICES, AND ASSOCIATED EQUIPMENT

Significance: Nonsignificant

Legal Authority: 15 USC 1392; 15 USC 1401; 15 USC 1407

CFR Citation: 49 CFR 571.108

Legal Deadline: None.

Abstract: The standard requires passenger cars sold after Oct. 1, 1985 to be equipped with center high-mounted stop lamps. The evaluation will determine the reduction of rear-impact collisions that occurred after the lamps were introduced in the vehicle fleet, as well as the cost of the lamps.

Timetable:

Action	Date	FR Cite
Begin Review	10/01/85	
Preliminary evaluation report published	03/20/87	52 FR 9609
Interim Report	12/01/88	
End Review	10/01/89	

Small Entity: Undetermined

Additional Information: The preliminary evaluation report indicated that cars equipped with center high-mounted stop lamps were 22 percent less likely to be struck in the rear while braking than cars without the lamps.

Agency Contact: Frank G. Ephraim, Director, Office of Standards Evaluation, Department of Transportation, National Highway Traffic Safety Administration, NPP-10, 400 Seventh Street, SW, Washington, DC 20590, 202 366-1574

RIN: 2127-AB76

1883. REVIEW: IMPACT PROTECTION FOR THE DRIVER FROM THE STEERING CONTROL SYSTEM

Significance: Nonsignificant

Legal Authority: 15 USC 1392; 15 USC 1401; 15 USC 1407

CFR Citation: 49 CFR 571.203

Legal Deadline: None.

Abstract: This review involves detailed quantitative analysis of factors limiting the performance of energy-absorbing steering assemblies in cars and an evaluation of the assemblies' fatality and injury reduction in light trucks.

Timetable:

Action	Date	FR Cite
Begin Review	06/01/86	
End Review	12/31/89	

Small Entity: Undetermined

Agency Contact: Frank G. Ephraim, Director, Office of Standards Evaluation, Department of Transportation, National Highway Traffic Safety Administration, NNP-10, 400 Seventh Street, SW, Washington, DC 20590, 202 366-1574

RIN: 2127-AB78

1884. REVIEW ROOF CRUSH RESISTANCE

Significance: Nonsignificant

Legal Authority: 15 USC 1392; 15 USC 1401; 15 USC 1407

CFR Citation: 49 CFR 571.216

Legal Deadline: None.

Abstract: This program was selected for review because of costs. The evaluation will study the effect of roof crush strength on the crashworthiness of passenger cars in rollover crashes.

Timetable:

Action	Date	FR Cite
Begin Review	10/01/87	
End Review	12/31/88	

Small Entity: No

Analysis: Regulatory Evaluation 12/31/88

Agency Contact: Frank Ephraim, Director, Office of Standards Evaluation, Department of Transportation, National Highway Traffic Safety Administration, 400 7th St., SW, Washington, DC 20590, 202 366-1574

RIN: 2127-AC20

1885. FLAMMABILITY OF SCHOOL BUS INTERIOR MATERIALS

Significance: Nonsignificant

Legal Authority: 15 USC 1392; 15 USC 1407

CFR Citation: 49 CFR 571

Legal Deadline: None.

Abstract: Would utilize guidelines prescribed by UMTA to define flammability characteristics of school bus interior materials.

Timetable:

Action	Date	FR Cite
Next Action Undetermined		

Small Entity: Yes

Agency Contact: R. Hitchcock, Department of Transportation, National Highway Traffic Safety Administration, 400 Seventh Street, SW, Washington, DC 20590, 202 366-0042

RIN: 2127-AA44

1886. CONSUMER INFORMATION - WET STOPPING DISTANCE

Significance: Nonsignificant

Legal Authority: 15 USC 1392; 15 USC 1407

CFR Citation: 49 CFR 575.105

Legal Deadline: None.

Abstract: Would develop a new rule for consumer information if tests indicate that there are significant differences in wet stopping distances among different models of cars on asphalt or concrete road surfaces.

Timetable:

Action	Date	FR Cite
Next Action Undetermined		

Small Entity: No

Additional Information: No test data has been developed that reliably compares stopping distances between different models of cars on wet pavement.

Agency Contact: Orron Kee, Chief, Motor Vehicle Requirements Division, Office of Market Incentives, Department of Transportation, National Highway Traffic Safety Administration, 400 Seventh Street, SW, Washington, DC 20590, 202 366-0846

RIN: 2127-AA56

1887. OCCUPANT PROTECTION IN INTERIOR IMPACT

Significance: Nonsignificant

Legal Authority: 15 USC 1392; 15 USC 1401; 15 USC 1407

CFR Citation: 49 CFR 571.201

Legal Deadline: None.

Abstract: This standard, which is applicable to passenger cars, light trucks and buses, and multipurpose passenger vehicles, includes requirements for padded instrument panels, seat backs, sun visors and arm rests. Its purpose is to provide impact protection for occupants. This regulation was selected for review because of costs, safety benefits, and public interest.

Timetable:

Action	Date	FR Cite
Begin Review	01/01/86	
End Review	04/00/88	

Small Entity: No

Analysis: Regulatory Evaluation 04/00/88

Agency Contact: Frank Ephraim, Department of Transportation, National Highway Traffic Safety Administration, 400 Seventh Street, SW, Washington, DC 20590, 202 366-1574

RIN: 2127-AB18

1888. FEDERAL MOTOR VEHICLE SAFETY STANDARD NO. 301 - FUEL-SYSTEM INTEGRITY

Significance: Nonsignificant

Legal Authority: 15 USC 1392; 15 USC 1401; 15 USC 1403; 15 USC 1407

CFR Citation: 49 CFR 571.301

Legal Deadline: None.

Abstract: This standard, which is applicable to passenger cars, light trucks, and school buses, specifies requirements for the integrity of motor vehicle fuel systems. The purpose of the standard is to reduce deaths and injuries caused by fires which result from fuel spillage after motor vehicle crashes. This evaluation follows up and expands on a prior study on passenger cars which showed that, while the regulation was effective in preventing deaths and injuries, the incidence of crash fires appeared to be increasing. This evaluation will also provide the initial assessment of the regulation as it applies to light trucks.

Timetable:

Action	Date	FR Cite
End Review	09/00/88	

Small Entity: No

Analysis: Regulatory Evaluation 09/00/88

Agency Contact: Frank Ephraim, Director, Office of Program Evaluation, Department of Transportation, National Highway Traffic Safety Administration, 400 Seventh Street, SW, Washington, DC 20590, 202 366-1574

RIN: 2127-AB43

1889. OCCUPANT CRASH PROTECTION: DYNAMIC-TESTING PETITION

Significance: Nonsignificant

Legal Authority: 15 USC 1392; 15 USC 1407

CFR Citation: 49 CFR 571.208

Legal Deadline: None.

Abstract: The American Seat Belt Council petitioned the agency to amend Standard No. 208 to require that automatic belts and dynamically tested manual belts meet the webbing requirements of Standard No. 209. NHTSA is currently reviewing the petition, to consider appropriate action.

Timetable:

Action	Date	FR Cite
Next Action Undetermined		

Small Entity: Undetermined

Analysis: Evaluation type to be determined

Agency Contact: Ralph Hitchcock, Director, Office of Vehicle Safety Standards, Department of Transportation, National Highway Traffic Safety Administration, NRM-10 400 Seventh St., SW, Washington, DC 20590, 202 366-0842

RIN: 2127-AC00

1890. NON-PNEUMATIC TIRES FOR PASSENGER CARS

Significance: Nonsignificant

Legal Authority: 15 USC 1392; 15 USC 1407

CFR Citation: 49 CFR 571.109

Legal Deadline: None.

Abstract: Based on a petition, the agency is considering creation of a new standard for temporary-use non-pneumatic spare tires. At the present time Federal Motor Vehicle Safety Standard No. 110 prohibits the use of non-pneumatic tires.

Timetable:

Action	Date	FR Cite
Request for Comments	09/23/87	52 FR 35740
Comment Period End	12/22/87	
Next Action Undetermined		

Small Entity: Undetermined

Agency Contact: Ralph Hitchcock, Director, Office of Vehicle Safety Standards, Department of Transportation, National Highway Traffic Safety Administration, 400 7th St., SW, Washington, DC 20590, 202 366-0842

RIN: 2127-AC16

1891. ● BUMPER STANDARD

Significance: Nonsignificant

Legal Authority: 15 USC 1392; 15 USC 1407

CFR Citation: 49 CFR 581; 49 CFR 582

Legal Deadline: None.

Abstract: Consumers Union has petitioned to restore the bumper-damage criteria to the 1982 protection level of 5mph or, if this is not possible, to require automobile dealers to provide repair cost and insurance premium information related to the bumper systems on the passenger cars that they sell. The agency has completed and published a study on the cost effects and consumer interest in bumper-damageability standards. The agency will now consider the arguments set forth in the petition and take appropriate further action.

Timetable:

Action	Date	FR Cite
Next Action Undetermined		

Small Entity: No

Agency Contact: Orron Kee, Chief, Motor Vehicle Requirements Division, Office of Market Incentives, Department of Transportation, National Highway Traffic Safety Administration, 400 7th St., SW, Washington, DC 20590, 202 366-0846

RIN: 2127-AC29

1892. ● BUMPER STANDARD

Significance: Nonsignificant

Legal Authority: 15 USC 1392; 15 USC 1407

CFR Citation: 49 CFR 581

Legal Deadline: None.

Abstract: Subaru of America has petitioned to modify the test conditions for bumper compliance testing so that vehicles with variable height suspension would be tested at the normal, unraised height position. This action will consider the arguments set forth in the petition and take appropriate further action.

Timetable:

Action	Date	FR Cite
Next Action Undetermined		

Small Entity: No

Agency Contact: Orron E. Kee, Chief, Motor Vehicle Requirements Divison, Office of Market Incentives, Department of Transportation, National Highway Traffic Safety Administration, 400 7th St., SW, Washington, DC 20590, 202 366-0846

RIN: 2127-AC30

1893. ● CONSUMER INFORMATION - UNIFORM TIRE-QUALITY GRADING STANDARDS

Significance: Nonsignificant

Legal Authority: 15 USC 1392; 15 USC 1401; 15 USC 1407; 15 USC 1421; 15 USC 1423

CFR Citation: 49 CFR 575.104(d)(1)(i)(B)(2)

Legal Deadline: None.

VOL 53 ISS 79 PT 1 AP 25 1988 UMI

DOT—NHTSA **Prerule Stage**

Abstract: The Rubber Manufacturers Association has petitioned to eliminate the requirement for tire tread labels for tire quality grading information. This action will consider the arguments set forth in the petition and take appropriate further action.

Timetable:

Action	Date	FR Cite
Next Action Undetermined		

Small Entity: No

Agency Contact: Orron E. Kee, Chief, Motor Vehicle Requirements Division, Office of Market Incentives, Department of Transportation, National Highway Traffic Safety Administration, 400 7th St., SW, Washington, DC 20590, 202 366-0846

RIN: 2127-AC31

DEPARTMENT OF TRANSPORTATION (DOT) — Proposed Rule Stage
National Highway Traffic Safety Administration (NHTSA)

1894. + CRASHWORTHINESS RATINGS

Significance: Regulatory Program

Legal Authority: 15 USC 1401; 15 USC 1941

CFR Citation: 49 CFR Chapter 5

Legal Deadline: None.

Abstract: Ratings: Would require manufacturers to disseminate crashworthiness performance information concerning their cars to the public, to provide consumers with comparative information on the crashworthiness performance of new car models. This rulemaking is considered significant because of the impact on manufacturers, the interest shown by consumers, and the potential significant effects on the automotive marketplace.

Timetable:

Action	Date	FR Cite
NPRM	01/22/81	46 FR 7025

Next Action Undetermined

Small Entity: No

Additional Information: Docket No. 79-17. NPRM, Notice 1. Comment due date extended to October 22, 1981 by notice published April 2, 1981 (46 FR 19947; Notice 2).

Analysis: Regulatory Impact Analysis

Agency Contact: Charles Gauthier, Department of Transportation, National Highway Traffic Safety Administration, 400 Seventh Street, SW, Washington, DC 20590, 202 366-4805

RIN: 2127-AA03

1895. + COMMERCIAL VEHICLE CONSPICUITY

Significance: Regulatory Program

Legal Authority: 15 USC 1392; 15 USC 1407

CFR Citation: 49 CFR 571.108

Legal Deadline: None.

Abstract: Would improve the conspicuity of commercial vehicles by establishing in FMVSS 108 performance requirements for the total lighting and marking system of commercial vehicles (excluding headlights).

Timetable:

Action	Date	FR Cite
ANPRM	05/27/80	45 FR 35405
Request for Comments	09/18/87	52 FR 35345
Comment Period End	11/30/87	

Next Action Undetermined

Small Entity: No

Additional Information: Docket No. 80-9.

Research underway.

Analysis: Regulatory Flexibility Analysis

Agency Contact: M. Finkelstein, Department of Transportation, National Highway Traffic Safety Administration, 400 Seventh Street, SW, Washington, DC 20590, 202 366-1537

RIN: 2127-AA12

1896. + TRUCK REAR UNDERRIDE PROTECTION

Significance: Regulatory Program

Legal Authority: 15 USC 1392; 15 USC 1407

CFR Citation: 49 CFR 571

Legal Deadline: None.

Abstract: Would require protective devices to reduce vehicle penetration under the rear ends of heavy trucks and trailers (without resulting in overly severe forces being transmitted to restrained and unrestrained occupants in vehicles that crash into the devices).

Timetable:

Action	Date	FR Cite
NPRM	01/06/81	46 FR 2136

Next Action Undetermined

Small Entity: Undetermined

Additional Information: Docket No. 1-11. NPRM, Notice 8.

Research underway.

Agency Contact: R. Hitchcock, Department of Transportation, National Highway Traffic Safety Administration, 400 Seventh Street, SW, Washington, DC 20590, 202 366-0842

RIN: 2127-AA43

1897. + PEDESTRIAN PROTECTION

Significance: Regulatory Program

Legal Authority: 15 USC 1392; 15 USC 1407

CFR Citation: 49 CFR 571

Legal Deadline: None.

Abstract: Would reduce adult pedestrian leg injuries and child injuries through modification of the vehicle bumper area.

Timetable:

Action	Date	FR Cite
NPRM	01/22/81	46 FR 7015

Next Action Undetermined

Small Entity: Yes

Additional Information: Docket No. 78-19. NPRM, Notice 1. Research underway.

Agency Contact: R. Hitchcock, Department of Transportation, National Highway Traffic Safety Administration, 400 Seventh Street, SW, Washington, DC 20590, 202 366-0842

RIN: 2127-AA45

1898. + ANTHROPOMORPHIC TEST DUMMIES: SIDE-IMPACT THORAX PROTECTION

Significance: Regulatory Program

Legal Authority: 15 USC 1392; 15 USC 1407

CFR Citation: 49 CFR 572

Legal Deadline: None.

Abstract: Would provide performance criteria for the adult surrogate dummies which would be required in dynamic testing of vehicles if Standard 214, Side Door Strength, is upgraded.

Timetable:

Action	Date	FR Cite
NPRM	04/00/88	

Small Entity: No

Analysis: Regulatory Evaluation 04/00/88

Agency Contact: R. Hitchcock, Department of Transportation, National Highway Traffic Safety Administration, 400 Seventh Street, SW, Washington, DC 20590, 202 366-0842

RIN: 2127-AA48

1899. + UNIFORM TIRE QUALITY GRADING STANDARDS - TREADWEAR AMENDMENTS

Significance: Regulatory Program

Legal Authority: 15 USC 1423

CFR Citation: 49 CFR 575

Legal Deadline: None.

Abstract: Would amend treadwear grading procedures of the Uniform Tire Quality Grading Standards to assure greater reliability of grading information for consumers. Test procedures would be amended to reduce variability. This regulation is significant because it involves important departmental policy.

Timetable:

Action	Date	FR Cite
NPRM	09/00/88	
NPRM Comment Period End	11/00/88	

Small Entity: No

Analysis: Preliminary Regulatory Evaluation 09/00/88

Agency Contact: Orron Kee, Chief, Motor Vehicle Requirements Div., Office of Market Incentives, Department of Transportation, National Highway Traffic Safety Administration, 400 Seventh Street, SW, Washington, DC 20590, 202 366-0846

RIN: 2127-AB21

1900. + SIDE-IMPACT PROTECTION: THORAX PROTECTION

Significance: Regulatory Program

Legal Authority: 15 USC 1392; 15 USC 1407

CFR Citation: 49 CFR 571.214

Legal Deadline: None.

Abstract: Would propose amending the current standard to upgrade thoracic protection in passenger-car side impacts.

Timetable:

Action	Date	FR Cite
NPRM	01/27/88	53 FR 2239
NPRM Comment Period End	10/24/88	53 FR 2239

Small Entity: Undetermined

Agency Contact: Ralph Hitchcock, Department of Transportation, National Highway Traffic Safety Administration, 400 Seventh Street, SW, Washington, DC 20590, 202 366-0842

RIN: 2127-AB86

1901. + HEAVY DUTY VEHICLE BRAKE SYSTEMS (FORMERLY TRUCK AND TRAILER BRAKE SYSTEMS)

Significance: Agency Priority

Legal Authority: 15 USC 1392 National Traffic & Motor Vehicle Safety Act of 1966; 15 USC 1407 National Traffic & Motor Vehicle Safety Act of 1966

CFR Citation: 49 CFR 571.121; 49 CFR 571.105

Legal Deadline: None.

Abstract: Would establish a new brake standard for all trucks, buses and trailers with a Gross Vehicle Weight Rating (GVWR) over 10,000 pounds. This standard would replace Standard No. 121, Air Brake Systems, and that portion of Standard No. 105, Hydraulic Brake Systems, that applies to vehicles with a GVWR over 10,000 pounds. It would also establish new requirements for heavy trailers having other than air-actuated brakes. In developing the standard, the agency will consider compatibility with international regulations. Research programs in support of this new standard and possible future upgradings of the standard will investigate such long-term advanced braking system concepts as antilock systems, automatic brake adjustors, load-sensing proportioning values, air driers, and retarders for heavy trucks, buses, and trailers. This rule is considered significant because of the level of public and Congressional interest. It is necessary to prevent and reduce the severity of accidents involving heavy vehicles by providing increased accident avoidance capability.

Timetable:

Action	Date	FR Cite
ANPRM	02/15/79	44 FR 9783
ANPRM	02/28/80	45 FR 13155

Next Action Undetermined

Small Entity: No

Additional Information: Docket No. 79-03. ANPRM, Notice 1; Second ANPRM, Notice 3.

Research underway.

Agency Contact: R. Hitchcock, Department of Transportation, National Highway Traffic Safety Administration, 400 Seventh Street, SW, Washington, DC 20590, 202 366-0842

RIN: 2127-AA00

1902. + VEHICLE CLASSIFICATION

Significance: Agency Priority

Legal Authority: 15 USC 1392; 15 USC 1407; 15 USC 2001

CFR Citation: 49 CFR 571

Legal Deadline: None.

Abstract: In response to a petition for rulemaking, the advance notice invites comment on possible amendments to the regulation with respect to the manner in which light trucks, vans, multipurpose vehicles, and certain other vehicles are classified. This rulemaking is significant because of substantial public interest.

Timetable:

Action	Date	FR Cite
ANPRM	10/26/87	52 FR 208
ANPRM Comment Period End	01/18/88	52 FR 208
NPRM	08/00/88	

Small Entity: No

Agency Contact: Deborah Parker, Department of Transportation, National Highway Traffic Safety Administration,

400 Seventh Street, SW, Washington, DC 20590, 202 366-6931

RIN: 2127-AA57

1903. + VOLUNTARY TIRE REGISTRATION

Significance: Agency Priority

Legal Authority: 15 USC 1392; 15 USC 1401; 15 USC 1407; 15 USC 1418; 15 USC 1421

CFR Citation: 49 CFR 574

Legal Deadline: None.

Abstract: This regulation requires that independent tire dealers provide customers with a card to register newly purchased tires so that the customer may send in the completed card. These dealers were formerly required to register the tires for the customer, a requirement which has been retained for manufacturer-owned stores. The Motor Vehicle Safety and Cost Savings Authorization Act of 1982 requires that an evaluation be conducted. This rulemaking is significant because of substantial public interest.

Timetable:

Action	Date	FR Cite
Begin Review	07/01/83	
Prelim. Evaluation Report Published	09/27/85	50 FR 186
ANPRM	12/23/86	51 FR 45916
ANPRM Comment Period End	02/06/87	51 FR 45916

Next Action Undetermined

Small Entity: No

Agency Contact: Frank Ephraim, Department of Transportation, National Highway Traffic Safety Administration, 400 Seventh Street, SW, Washington, DC 20590, 202 366-1574

RIN: 2127-AB18

1904. + HEAVY TRAILER STABILITY

Significance: Agency Priority

Legal Authority: 15 USC 1392; 15 USC 1407

CFR Citation: 49 CFR 571

Legal Deadline: None.

Abstract: In response to a petition for rulemaking, the agency is proposing a new regulation to add a requirement that 102-inch wide trailers be equipped with axle tracks having a minimum axle width of 77 inches. An advanced notice of proposed rulemaking seeking comments on the safety issue raised by the petition was published on May 22, 1984 (49 FR 21551). This rulemaking is significant because of the possible substantial impact on the industry and because it is a joint venture involving two operating administrations.

Timetable:

Action	Date	FR Cite
ANPRM	05/22/84	49 FR 21551
ANPRM Comment Period End	08/20/84	49 FR 21551

Next Action Undetermined

Small Entity: Yes

Additional Information: This regulation is a joint endeavor of NHTSA and the Bureau of Motor Carrier Safety (BMCS). A departmental task force was formed in February 1985 to analyze the economic issues associated with this undertaking. Thus, further public action awaits the results of the task-force analysis, which are anticipated in 1988.

Analysis: To Be Determined

Agency Contact: Ralph J. Hitchcock, Director, Office of Vehicle Safety Standards, Department of Transportation, National Highway Traffic Safety Administration, 400 Seventh Street, SW, Washington, DC 20590, 202 366-0842

RIN: 2127-AB42

1905. + OCCUPANT CRASH PROTECTION

Significance: Agency Priority

Legal Authority: 15 USC 1392; 15 USC 1407

CFR Citation: 49 CFR 571.208

Legal Deadline: None.

Abstract: ANPRM requested comments on proposing an amendment to Standard No. 208, Occupant Crash Protection, to require Type 2 safety belts in the outboard seating positions in the rear seats of passenger cars and MPVs and trucks with GVWR of 10,000 pounds or less. This action is significant because of the recent NTSB report on lap-belt injuries and resultant public interest expected.

Timetable:

Action	Date	FR Cite
ANPRM	06/16/87	52 FR 22816
ANPRM Comment Period End	07/31/87	52 FR 22816

Next Action Undetermined

Small Entity: Undetermined

Analysis: Regulatory Impact Analysis 00/00/00

Agency Contact: Ralph J. Hitchcock, Director, Office of Vehicle Safety Standards, Department of Transportation, National Highway Traffic Safety Administration, NRM-10, 400 Seventh St., SW, Washington, DC 20590, 202 366-0842

RIN: 2127-AB91

1906. + HEAD RESTRAINTS

Significance: Agency Priority

Legal Authority: 15 USC 1392; 15 USC 1407

CFR Citation: 49 CFR 571.202

Legal Deadline: None.

Abstract: Petition for rulemaking to require head restraints on vehicles other than passenger cars. NHTSA is currently reviewing the petition, to determine appropriate action.

Timetable:

Action	Date	FR Cite
NPRM	04/00/88	

Small Entity: Undetermined

Analysis: Regulatory Impact Analysis

Agency Contact: Ralph Hitchcock, Director, Office of Vehicle Safety Standards, Department of Transportation, National Highway Traffic Safety Administration, NRM-10 400 Seventh St., SW, Washington, DC 20590, 202 366-0842

RIN: 2127-AC06

1907. ● + FEDERAL MOTOR VEHICLE SAFETY STANDARD (FMVSS) NO. 208, OCCUPANT CRASH PROTECTION - CHEST INJURY CRITERIA

Significance: Agency Priority

Legal Authority: 15 USC 1392; 15 USC 1407

CFR Citation: 49 CFR 571.208

Legal Deadline: None.

Abstract: The intention is to upgrade the chest-deflection injury criteria for unrestrained occupants when vehicles are tested for Federal Motor Vehicle Safety Standard (FMVSS) No. 208 compliance with the Hybrid III Dummy. The Final Rule stated that the agency will have to resolve this issue by September 1, 1990. This rulemaking is significant because of substantial public interest.

Timetable:

Action	Date	FR Cite
Next Action Undetermined		

Small Entity: Undetermined

Agency Contact: Ralph Hitchcock, Director, Office of Vehicle Safety Standards, Department of Transportation, National Highway Traffic Safety Administration, 400 7th St., SW, Washington, DC 20590, 202 366-0842

RIN: 2127-AC34

1908. PASSENGER-CAR BRAKE SYSTEMS

Significance: Nonsignificant

Legal Authority: 15 USC 1392; 15 USC 1407

CFR Citation: 49 CFR 571.105

Legal Deadline: None.

Abstract: Would propose a New Standard No. 135. "Passenger Car Brake System," which would replace Standard No. 105, "Hydraulic Brake System," as it applies to that vehicle type. New Standard would differ from the existing one primarily in that it contains a revised and shortened test procedure based on a draft harmonized international procedure developed by the United Nations Economic Commission for Europe (ECE).

Timetable:

Action	Date	FR Cite
NPRM	05/10/85	50 FR 19744
Extended comment period to 01/13/86	09/17/85	50 FR 37702
NPRM Comment Period End	10/07/85	50 FR 19744
SNPRM	01/14/87	52 FR 1474
SNPRM Comment Period End	10/13/87	
SECOND SNPRM	08/00/88	

Small Entity: No

Additional Information: Docket No. 85-06.

Agency Contact: R. Hitchcock, Director, Office of Vehicle Safety Standards, Department of Transportation, National Highway Traffic Safety Administration, 400 Seventh Street, SW, Washington, DC 20590, 202 366-0842

RIN: 2127-AA13

1909. REARVIEW MIRROR SYSTEMS: HEAVY VEHICLES

Significance: Nonsignificant

Legal Authority: 15 USC 1392; 15 USC 1407

CFR Citation: 49 CFR 571.111

Legal Deadline: None.

Abstract: Would amend FMVSS No. 111 to improve mirror systems for trucks, buses and multipurpose passenger vehicles with a GVWR over 10,000 pounds.

Timetable:

Action	Date	FR Cite
NPRM	11/06/78	43 FR 51657
Next Action Undetermined		

Small Entity: No

Additional Information: Docket No. 71-3a. NPRM, Notice 4.

Research underway.

Agency Contact: R. Hitchcock, Department of Transportation, National Highway Traffic Safety Administration, 400 Seventh Street, SW, Washington, DC 20590, 202 366-0842

RIN: 2127-AA21

1910. REARVIEW MIRROR SYSTEMS: LIGHT VEHICLES

Significance: Nonsignificant

Legal Authority: 15 USC 1392; 15 USC 1407

CFR Citation: 49 CFR 571.111

Legal Deadline: None.

Abstract: Would amend Federal Motor Vehicle Safety Standard No. 111 to improve mirror systems for trucks, buses, and multipurpose passenger vehicles with a GVWR of 10,000 pounds or less.

Timetable:

Action	Date	FR Cite
NPRM	11/06/78	43 FR 51657
Next Action Undetermined		

Small Entity: No

Additional Information: Docket No. 71-3a. NPRM, Notice 4.

Agency Contact: R. Hitchcock, Department of Transportation, National Highway Traffic Safety Administration, 400 Seventh Street, SW, Washington, DC 20590, 202 366-0842

RIN: 2127-AA23

1911. AIR-BRAKE SYSTEMS

Significance: Nonsignificant

Legal Authority: 15 USC 1392; 15 USC 1407

CFR Citation: 49 CFR 571.121

Legal Deadline: None.

Abstract: Would revise the requirements in Standard No. 121 for parking and emergency brake functions for trailers. Based on comments to NPRM of 07/23/81 (46 FR 37952) a new NPRM may be deemed necessary.

Timetable:

Action	Date	FR Cite
NPRM	07/23/81	46 FR 37952
Next Action Undetermined		

Small Entity: No

Additional Information: Docket No. 79-03. NPRM, Notice 5.

Agency Contact: R. Hitchcock, Department of Transportation, National Highway Traffic Safety Administration, 400 Seventh Street, SW, Washington, DC 20590, 202 366-0842

RIN: 2127-AA27

1912. PROCEDURES FOR CONSIDERING ENVIRONMENTAL IMPACTS

Significance: Nonsignificant

Legal Authority: 42 USC 4321 et seq (National Environmental Policy Act-NEPA)

CFR Citation: 49 CFR 520

Legal Deadline: None.

Abstract: NHTSA's regulation will be reviewed and reissued, as necessary, where it conflicts with or is duplicative of the regulations of Council on Environmental Quality (CEQ), 40 CFR

Parts 1500-1508, and with DOT Order 5610.1C, each of which implements the National Environmental Policy Act (NEPA), 42 USC 4321, et seq.

Timetable:

Action	Date	FR Cite
NPRM	12/00/88	

Small Entity: No

Agency Contact: Kathleen C. DeMeter, Ass't Chief Counsel for General Law, Department of Transportation, National Highway Traffic Safety Administration, 400 Seventh Street, SW, Washington, DC 20590, 202 366-1834

RIN: 2127-AB79

1913. VOLUNTARY VEHICLE IDENTIFICATION STANDARD (THEFT PREVENTION STANDARD)

Significance: Nonsignificant

Legal Authority: 15 USC 2033

CFR Citation: 49 CFR to be determined

Legal Deadline: None.

Abstract: NHTSA will promulgate a voluntary vehicle identification standard under which any person may elect to inscribe or affix an identifying number or symbol on major parts of any motor vehicle manufactured or owned by such person for purposes of section 511 of Title 18, United States Code, and related provisions. Compliance with this standard shall not relieve any manufacturer of motor vehicles from compliance with the requirements of the Federal motor vehicle theft prevention standard (49 CFR Part 541), or any other applicable regulation. This rulemaking supplements the statutory requirement of 15 USC 2033 by allowing consumers to protect their vehicles and parts by identifying them.

Timetable:

Action	Date	FR Cite
NPRM	10/00/88	

Small Entity: Not Applicable

Agency Contact: Barbara Kurtz, Senior Program Analyst, Office of Market Incentives, Department of Transportation, National Highway Traffic Safety Administration, NRM-20, 400 Seventh St., SW, Washington, DC 20590, 202 366-4208

RIN: 2127-AB93

1914. ANTHROPOMORPHIC TEST DUMMIES REPRESENTING CHILDREN

Significance: Nonsignificant

Legal Authority: 15 USC 1392; 15 USC 1407

CFR Citation: 49 CFR 572

Legal Deadline: None.

Abstract: Would update the specifications of Part 572 covering the three-year-old child dummy to allow optional use of new accelerometers and a new head design.

Timetable:

Action	Date	FR Cite
NPRM	04/00/88	

Small Entity: Undetermined

Agency Contact: Ralph Hitchcock, Department of Transportation, National Highway Traffic Safety Administration, 400 Seventh St., SW, Washington, DC 20590, 202 366-0842

RIN: 2127-AB94

1915. GLAZING MATERIALS

Significance: Nonsignificant

Legal Authority: 15 USC 1392; 15 USC 1407

CFR Citation: 49 CFR 571.205

Legal Deadline: None.

Abstract: Possible amendment to Standard No. 205, Glazing Materials, to require markings remain visible when glazing is installed in vehicles.

Timetable:

Action	Date	FR Cite
Next Action Undetermined		

Small Entity: Undetermined

Agency Contact: Ralph Hitchcock, Director, Office of Vehicle Safety Standards, Department of Transportation, National Highway Traffic Safety Administration, NRM-10, 400 Seventh St., SW, Washington, DC 20590, 202 366-0842

RIN: 2127-AB98

1916. ANTHROPOMORPHIC TEST DUMMIES REPRESENTING CHILDREN

Significance: Nonsignificant

Legal Authority: 15 USC 1392; 15 USC 1407

CFR Citation: 49 CFR 572

Legal Deadline: None.

Abstract: Would add the specifications covering the 6-year-old child dummy to Part 572 to allow its use in evaluation of child restraints designated for older children.

Timetable:

Action	Date	FR Cite
NPRM	04/00/88	

Small Entity: Undetermined

Agency Contact: Ralph Hitchcock, Director, Office of Vehicle Safety Standards, Department of Transportation, National Highway Traffic Safety Administration, 400 7th St, SW, Washington, DC 20590, 202 366-0842

RIN: 2127-AC09

1917. ANTHROPOMORPHIC TEST DUMMIES REPRESENTING CHILDREN

Significance: Nonsignificant

Legal Authority: 15 USC 1392; 15 USC 1407

CFR Citation: 49 CFR 572

Legal Deadline: None.

Abstract: Would add the specification covering the 9-month-old child test dummy to Part 572 to allow its use in evaluation of restraints designated for infants and small toddlers.

Timetable:

Action	Date	FR Cite
NPRM	04/00/88	

Small Entity: No

Agency Contact: Ralph Hitchcock, Director, Office of Vehicle Safety Standards, Department of Transportation, National Highway Traffic Safety Administration, 400 7th St, SW, Washington, DC 20590, 202 366-0842

RIN: 2127-AC10

1918. SUPPLEMENTAL FMVSS NO. 208 INJURY CRITERIA - FACIAL LACERATIONS, NECK INJURY, KNEE SHEAR, TIBIA AND ANKLE INJURIES

Significance: Nonsignificant

Legal Authority: 15 USC 1392; 15 USC 1407

CFR Citation: 49 CFR 571.208

Legal Deadline: None.

Abstract: The intention to apply in Federal Motor Vehicle Safety Standard No. 208 rulemaking additional injury criteria in order to prevent facial lacerations, neck injury, knee shear, tibia, and ankle trauma was announced in Notice 39 Docket 74-14. The final rule (Notice 40) stated that the agency will issue another Notice on the additional injury criteria to gain additional information about the potential effects of adopting these criteria. Alternatives and potential costs were addressed in Notice 39.

Timetable:

Action	Date	FR Cite
Next Action Undetermined		

Small Entity: Undetermined

Agency Contact: Ralph Hitchcock, Director, Office of Vehicle Safety Standards, Department of Transportation, National Highway Traffic Safety Administration, 400 7th St., SW, Washington, DC 20590, 202 366-0842

RIN: 2127-AC12

1919. MANDATORY USE OF THE PART 572(E) DUMMY IN FMVSS 208 COMPLIANCE TESTING

Significance: Nonsignificant

Legal Authority: 15 USC 1392; 15 USC 1407

CFR Citation: 49 CFR 571.208

Legal Deadline: None.

Abstract: Petitions for reconsideration have raised the question of whether the Part 572(E) dummy's chest deflection limit of 2 in. is appropriate for belt restraints. The rulemaking will address the petitioner's issues.

Timetable:

Action	Date	FR Cite
NPRM	04/00/88	

Small Entity: Undetermined

Agency Contact: Ralph Hitchcock, Director, Office of Vehicle Safety Standards, Department of Transportation, National Highway Traffic Safety Administration, 400 7th St, SW, Washington, DC 20590, 202 366-0842

RIN: 2127-AC13

1920. FEDERAL MOTOR VEHICLE SAFETY STANDARDS NO. 205, GLAZING MATERIALS

Significance: Nonsignificant

Legal Authority: 15 USC 1392; 15 USC 1407

CFR Citation: 49 CFR 571.205

Legal Deadline: None.

Abstract: Based on a petition, would amend Federal Motor Vehicle Safety Standard No. 205, Glazing Materials, to revise the ball drop test (Test 12) for glass-plastic glazing. NHTSA is evaluating the petition.

Timetable:

Action	Date	FR Cite
NPRM	05/00/88	

Small Entity: Undetermined

Agency Contact: Ralph Hitchcock, Director, Office of Vehicle Safety Standards, Department of Transportation, National Highway Traffic Safety Administration, 400 7th St., SW, Washington, DC 20590, 202 366-0842

RIN: 2127-AC14

1921. FEDERAL MOTOR-VEHICLE SAFETY STANDARD NO. 221, SCHOOLBUS BODY JOINT STRENGTH

Significance: Nonsignificant

Legal Authority: 15 USC 1392; 15 USC 1401; 15 USC 1407

CFR Citation: 49 CFR 571.221

Legal Deadline: None.

Abstract: Requests comments on three items, all related to FMVSS No. 221 Schoolbus Body Joint Strength. These are: (a) possible new standard requiring minimum floor strength for large school buses over 10,000 lbs. GVWR, (b) revision of exemption provision for maintenance access panels, and (c) revision of test procedures of FMVSS No. 221.

Timetable:

Action	Date	FR Cite
ANPRM	06/15/87	52 FR 23314
ANPRM Comment Period End	08/03/87	52 FR 23314
Comment Period Extended to	10/15/87	52 FR 29873
NPRM	10/00/88	

Small Entity: Undetermined

Agency Contact: Ralph Hitchcock, Director, Office of Vehicle Safety Standards, Department of Transportation, National Highway Traffic Safety Administration, 400 7th St, SW, Washington, DC 20590, 202 366-0842

RIN: 2127-AC19

1922. GEAR LOCK; THEFT PROTECTION

Significance: Nonsignificant

Legal Authority: 15 USC 1392; 15 USC 1407

CFR Citation: 49 CFR 571.114

Legal Deadline: None.

Abstract: An amendment to Federal Motor Vehicle Safety Standard (FMVSS) No. 114 to prevent the inadvertent knocking out of gear of the gear shift lever and potential accidents, injuries and fatalities from vehicles rolling out of control. This amendment is in response to a petition for rulemaking relating to an inadvertent knock-out-of-gear accident resulting in a fatality. In addition, FMVSS 114 is proposed to be amended to insure that, if a steering column locking device is employed, the device cannot be activated until the key is removed and the vehicle must be in park on automatic transmission to remove the key and either reverse or first gear for manual transmissions.

Timetable:

Action	Date	FR Cite
NPRM	04/05/88	53 FR 11105
NPRM Comment Period End	05/20/88	

Small Entity: No

Agency Contact: Ralph Hitchcock, Director, Office of Vehicle Safety Standards, Department of Transportation, National Highway Traffic Safety Administration, 400 7th St, SW, Washington, DC 20590, 202 366-0842

RIN: 2127-AC24

1923. ● INSURER REPORTING REQUIREMENTS

Significance: Nonsignificant

Legal Authority: 15 USC 2032

CFR Citation: 49 CFR 544

Legal Deadline: None.

BEST COPY AVAILABLE

Abstract: Section 612(a)(4) of the Motor Vehicle Information and Cost Savings Act provides that NHTSA shall exempt from the reporting requirements of 49 CFR 544 any insurer (rentals or leasing company) that can establish to the agency that the cost of preparing and furnishing the report is excessive in relation to the size of the business of the insurer, and that the insurer's report will not significantly contribute to carrying out the purposes of Title VI. The Preamble to 49 CFR 544 provides instructions to rental or leasing companies wishing to be exempted from the reporting requirements. This is a one-time only exemption, and is not provided for in the Final Rule.

Timetable:

Action	Date	FR Cite
Next Action Undetermined		

Small Entity: Undetermined

Agency Contact: Barbara Kurtz, Program Analyst, Office of Market Incentives, Department of Transportation, National Highway Traffic Safety Administration, 400 7th St., SW, Washington, DC 20590, 202 366-4806

RIN: 2127-AC32

1924. ● FEDERAL MOTOR VEHICLE SAFETY STANDARD (FMVSS) NO. 208, OCCUPANT CRASH PROTECTION

Significance: Nonsignificant

Legal Authority: 15 USC 1392; 15 USC 1407

CFR Citation: 49 CFR 571.208

Legal Deadline: None.

Abstract: Motor Vehicle Manufacturer's Association (MVMA) petitioned to amend Federal Motor Vehicle Safety Standard (FMVSS) No. 208, Occupant Crash Protection, to require that height-adjustable seats, and other adjustable seat features such as lumbar supports, be placed in the nominal design riding position specified by the manufacturer.

Timetable:

Action	Date	FR Cite
NPRM	04/00/88	

Small Entity: Not Applicable

Agency Contact: Ralph Hitchcock, Director, Office of Vehicle Safety Standards, Department of Transportation, National Highway Traffic Safety Administration, 400 7th St., SW, Washington, DC 20590, 202 366-0842

RIN: 2127-AC36

1925. ● FEDERAL MOTOR VEHICLE SAFETY STANDARD (FMVSS) NO. 205, GLAZING MATERIALS

Significance: Nonsignificant

Legal Authority: 15 USC 1392; 15 USC 1407

CFR Citation: 49 CFR 571.205

Legal Deadline: None.

Abstract: The Taliq Corporation of Sunnyvale, CA, petitioned the agency to create a new category of glass-plastic glazing, AS-15. This proposed glazing would consist of a layer of tempered glass and a layer of plastic with the tempered glass layer on the outside surface when installed in the vehicle. This glazing would be permitted only in vehicle locations not requisite for driving visibility.

Timetable:

Action	Date	FR Cite
NPRM	12/00/88	
NPRM Comment Period End	03/00/89	

Small Entity: Undetermined

Agency Contact: Ralph Hitchcock, Director, Office of Vehicle Safety Standards, Department of Transportation, National Highway Traffic Safety Administration, 400 7th St., SW, Washington, DC 20590, 202 366-0842

RIN: 2127-AC38

DEPARTMENT OF TRANSPORTATION (DOT)
National Highway Traffic Safety Administration (NHTSA)

Final Rule Stage

1926. + SPLASH AND SPRAY SUPPRESSION DEVICES

Significance: Regulatory Program

Legal Authority: 49 USC 2314

CFR Citation: 49 CFR 583

Legal Deadline: None. Standard for new vehicles is now required to take effect one year after final rule is published.

Abstract: In accordance with the mandate of section 414 of the Surface Transportation Assistance Act of 1982, would establish minimum standards with respect to the performance of splash and spray suppression devices on truck tractors, semitrailers and trailers. Would also establish minimum standards with respect to the installation of splash and spray suppression devices on new vehicles. This regulation is significant because it is potentially controversial.

Timetable:

Action	Date	FR Cite
NPRM	04/12/85	50 FR 14632
NPRM Comment Period Extended	02/13/86	51 FR 5383
NPRM Comment Period End	04/14/86	51 FR 5383
Request for comment and Notice of Public Meetings	09/28/87	52 FR 36265
Comment Period End	11/27/87	
Final Action	04/00/88	

Small Entity: Yes

Additional Information: NHTSA's rulemaking would only affect new vehicles and equipment. However, section 414 of the Surface Transportation Assistance Act also mandates that the Department of Transportation establish minimum standards with respect to the installation of splash and spray devices for vehicles already in service. The Federal Highway Administration will conduct the rulemaking to satisfy that mandate. The Federal Highway Administration has classified its rulemaking as major. The costs of that rulemaking are expected to be much greater than NHTSA's rulemaking since (1) the population of vehicles in service is many times the annual production of new trucks, (2) a truck manufacturer will pay less per unit for each splash

and spray suppression device when ordered in large quantities, and (3) the labor time to install the devices is far less for a new truck manufacturer, since it can be done at the assembly plant. In 1984, the Surface Transportation Assistance Act was amended to change the implementation date from 1/1/85, for new vehicles and 1/1/88, for vehicles in service, to one year after publication of the Final Rule for new vehicles & 3 years later for vehicles in service.

Analysis: Preliminary Regulatory Evaluation 04/12/85 (50 FR 14632)

Agency Contact: R. Hitchcock, Department of Transportation, National Highway Traffic Safety Administration, 400 Seventh Street, SW, Washington, DC 20590, 202 366-6842

RIN: 2127-AA97

1927. + POST-1986 PASSENGER CAR FUEL-ECONOMY STANDARDS

Significance: Regulatory Program

Legal Authority: 15 USC 2002

CFR Citation: 49 CFR 531

Legal Deadline: Statutory, September 1, 1988. Amendments reducing the fuel economy standard for a particular model year are required to be made by the beginning of a model year.

Abstract: General Motors (GM) and Ford have petitioned for reduction of the passenger car average fuel economy standards for Model Year 1986 and beyond. The Center for Auto Safety and the Environmental Policy Institute petitioned to raise the standards for Model Years 1987 through 1990. All of these petitions were addressed in rulemakings which reduced the standard from 27.5 miles per gallon (mpg) to 26.0 mpg for Model Years 1986 through 1988 (10/06/86, 51 FR 35594). Further rulemaking action, for Model Years 1989 and beyond, is undetermined at this time, pending potential legislative action to repeal or amend the CAFE legislation.

Timetable:

Action	Date	FR Cite
NPRM	01/22/86	51 FR 2912
NPRM Comment Period End	03/24/86	51 FR 2912
SNPRM	07/30/86	51 FR 27224

Next Action Undetermined

Small Entity: No

Agency Contact: Orron Kee, Chief, Motor Vehicle Requirements Div., Office of Market Incentives, Department of Transportation, National Highway Traffic Safety Administration, 400 Seventh Street, SW, Washington, DC 20590, 202 366-6946

RIN: 2127-AB75

1928. + FEDERAL MOTOR VEHICLE SAFETY STANDARD NO. 222; SCHOOLBUS SEATING AND CRASH PROTECTION

Significance: Agency Priority

Legal Authority: 15 USC 1392; 15 USC 1401; 15 USC 1407

CFR Citation: 49 CFR 571.222

Legal Deadline: None.

Abstract: Would amend Federal Motor Vehicle Safety Standard No. 222, School Bus Passenger Seating and Crash Protection, to set requirements for safety belts when belts are voluntarily installed on school buses having gross vehicle weight ratings greater than 10,000 pounds. This rulemaking is significant because of substantial public interest.

Timetable:

Action	Date	FR Cite
NPRM	10/10/85	50 FR 41368
NPRM Comment Period End	11/25/85	50 FR 41368

Next Action Undetermined

Small Entity: No

Additional Information: Notice grants a petition for rulemaking submitted by the Wayne Corporation and proposes an amendment to Federal Motor Vehicle Safety Standard No. 222. Previous title: Federal Motor Vehicle Safety Standards; Schoolbus Passenger Seating and Crash Protection.

Analysis: Regulatory Impact Analysis

Agency Contact: Robert Williams, Department of Transportation, National Highway Traffic Safety Administration, NRM-12, 400 Seventh Steet, SW, Washington, DC 20590, 202 366-4919

RIN: 2127-AB84

1929. SEATING REFERENCE POINT/MOTOR VEHICLE DRIVER'S EYE RANGE

Significance: Nonsignificant

Legal Authority: 15 USC 1392; 15 USC 1407

CFR Citation: 49 CFR 571

Legal Deadline: None.

Abstract: Would update the definition of Seating Reference Point to incorporate latest industry practices.

Timetable:

Action	Date	FR Cite
ANPRM	03/08/82	47 FR 9865
NPRM	06/05/86	51 FR 20536
NPRM Comment Period End	08/04/86	51 FR 20536
Final Action	06/00/88	

Small Entity: No

Additional Information: Docket No. 82-05.

Analysis: Regulation Evaluation (Minimal) 06/05/86 (51 FR 20536)

Agency Contact: R. Hitchcock, Department of Transportation, National Highway Traffic Safety Administration, 400 Seventh Street, SW, Washington, DC 20590, 202 366-6842

RIN: 2127-AA46

1930. REARVIEW MIRRORS

Significance: Nonsignificant

Legal Authority: 15 USC 1392; 15 USC 1407

CFR Citation: 49 CFR 571.111

Legal Deadline: None.

Abstract: This proposal would amend Federal Motor Vehicle Safety Standard No. 111 by establishing requirements for passenger cars to: a) reduce the blind areas by upgrading mirror visibility using improved compliance testing procedures, b) upgrade occupant protection requirements and add pedestrian protection requirements using shatter-resistant and breakaway or foldaway tests, c) set specifications for day-night reflectance requirements to reduce headlight glare, d) set specifications for convex mirror quality and use, and e) minimize obstruction of the forward view by establishing mirror location specifications. Final Rule to permit use of passenger side convex mirrors published. Final Rule responding to petitions and clarifying 1982 Final Rule published.

Timetable:

Action	Date	FR Cite
NPRM	11/06/78	43 FR 51657
Final Action to permit use of passenger side convex mirrors published	09/02/82	47 FR 38698
Final Action responding to petitions and clarifying 1982 FR published	08/26/83	48 FR 38842

Next Action Undetermined

Small Entity: No

Additional Information: Docket No. 71-3a. NPRM, Notice 4; FR, Notice 6; FR, Notice 7.

Action to be terminated with respect to other issues not enumerated in the Abstract.

Agency Contact: R. Hitchcock, Director, Office of Vehicle Safety Standards, Department of Transportation, National Highway Traffic Safety Administration, 400 Seventh Street, SW, Washington, DC 20590, 202 366-0842

RIN: 2127-AA86

1931. SEAT-BELT-ASSEMBLY ANCHORAGES

Significance: Nonsignificant

Legal Authority: 15 USC 1392; 15 USC 1407

CFR Citation: 49 CFR 571.210

Legal Deadline: None.

Abstract: Proposes amending Standard No. 210 to harmonize the strength of the anchorage test with the United Nations Economic Commission for Europe (ECE) Regulation No. 14 and to upgrade other requirements and clarify language.

Timetable:

Action	Date	FR Cite
NPRM	02/03/87	52 FR 3293
NPRM Comment Period End	04/06/87	52 FR 3293
Final Action	09/00/88	

Small Entity: No

Analysis: Evaluation type to be determined

Agency Contact: R. Hitchcock, Department of Transportation, National Highway Traffic Safety Administration, 400 Seventh Street, SW, Washington, DC 20590, 202 366-0842

RIN: 2127-AA95

1932. AIR-BRAKE SYSTEMS

Significance: Nonsignificant

Legal Authority: 15 USC 1392; 15 USC 1407

CFR Citation: 49 CFR 571.121

Legal Deadline: None.

Abstract: Would amend the brake application and release timing requirements and test devices in Federal Motor Vehicle Safety Standard No. 121 in order to better simulate the real-world performance with respect to towing and towed units, especially multitrailer combinations.

Timetable:

Action	Date	FR Cite
NPRM	05/14/85	50 FR 20113
NPRM Comment Period End	06/28/85	50 FR 20113
NPRM Comment Period Extended to 12-30-85	07/01/85	50 FR 27032
Final Action	04/00/88	

Small Entity: No

Analysis: Regulatory Evaluation (minimal) 05/14/85 (50 FR 20113)

Agency Contact: Ralph Hitchcock, Director, Office of Vehicle Safety Standards, Department of Transportation, National Highway Traffic Safety Administration, 400 Seventh Street, SW, Washington, DC 20590, 202 366-0842

RIN: 2127-AB12

1933. OCCUPANT CRASH PROTECTION

Significance: Nonsignificant

Legal Authority: 15 USC 1392; 15 USC 1407

CFR Citation: 49 CFR 571.208

Legal Deadline: None.

Abstract: Proposes an amendment to standard No. 208, Occupant Crash Protection, to upgrade the safety belt requirements for new trucks, buses, and multipurpose passenger vehicles with a gross vehicle weight rating of more than 10,000 pounds.

Timetable:

Action	Date	FR Cite
NPRM	05/24/85	50 FR 23041
NPRM Comment Period End	07/15/85	
Final Action	04/00/88	

Small Entity: Undetermined

Analysis: Regulatory Evaluation (Minimal) 05/24/85 (50 FR 23041)

Agency Contact: Ralph Hitchcock, Department of Transportation, National Highway Traffic Safety Administration, NRM-10, 400 Seventh Street, SW, Washington, DC 20590, 202 366-0842

RIN: 2127-AB71

1934. LIGHTING SIMPLIFICATION—POTENTIAL AMENDMENTS TO SIMPLIFY FMVSS 108 LAMPS, REFLECTIVE DEVICES, AND ASSOCIATED EQUIPMENT

Significance: Nonsignificant

Legal Authority: 15 USC 1392; 15 USC 1407

CFR Citation: 49 CFR 571.108

Legal Deadline: None.

Abstract: Proposes a comprehensive review of headlighting requirements of FMVSS No. 108 which may be simplified, while being consistent with motor-vehicle safety. The agency has concentrated its efforts into five principal areas. The first is the feasibility of a standard directed toward onboard original equipment headlighting performance rather than toward performance of individual aftermarket headlamps in a laboratory environment. The second is the desirability of specifications for headlamp life. The third concerns the necessity of dimensional specifications for headlamp equipment. The fourth is the issue of headlamp aim. The fifth is the elimination of obsolete photometric requirements.

Timetable:

Action	Date	FR Cite
ANPRM	10/22/85	50 FR 42735
ANPRM Comment Period End	03/06/86	51 FR 1542
NPRM	12/29/87	52 FR 49038
NPRM Comment Period End	03/28/88	52 FR 49038
Final Action	10/00/88	

Small Entity: Undetermined

VOL 53 ISS 79 PT 1 AP 25 1988 UMI

Additional Information: Docket No. 85-15, Notice 1.

Docket No. 85-15, Notice 2.

Federal Register Notice (51 FR 1542) extended comments period from a closing date of Jan. 21, 1986 to March 6, 1986.

Agency Contact: Ralph Hitchcock, Department of Transportation, National Highway Traffic Safety Administration, 400 Seventh Street, SW, Washington, DC 20590, 202 366-0842

RIN: 2127-AB87

1935. CHILD RESTRAINT SYSTEMS – BUILT-IN CHILD RESTRAINTS

Significance: Nonsignificant

Legal Authority: 15 USC 1392; 15 USC 1407

CFR Citation: 47 CFR 571.213

Legal Deadline: None.

Abstract: Modify standard no. 213 to allow built-in child restraints and specify performance requirements for these built-in restraints.

Timetable:

Action	Date	FR Cite
NPRM	03/23/87	52 FR 9194
NPRM Comment Period End	05/22/87	
Final Action	04/00/88	

Small Entity: Undetermined

Analysis: Regulatory Evaluation 04/00/88

Agency Contact: Ralph Hitchcock, Director, Office of Vehicle Safety Standards, Department of Transportation, National Highway Traffic Safety Administration, NRM-10, 400 Seventh St., SW, Washington, DC 20590, 202 366-0842

RIN: 2127-AB97

1936. NEW PNEUMATIC TIRES FOR PASSENGER CARS

Significance: Nonsignificant

Legal Authority: 15 USC 1392; 15 USC 1407

CFR Citation: 49 CFR 571.109

Legal Deadline: None.

Abstract: Non-substantive amendments to Federal Motor Vehicle Safety Standard No. 109 to add an inflation pressure for reinforced tires. This increase in inflation pressure will be done without an increase in the tire load capacity. This change will allow reinforced tires (extra-load tires) to operate at a higher pressure for safety and optimum vehicle handling. No cost is involved.

Timetable:

Action	Date	FR Cite
NPRM	01/14/88	53 FR 936
NPRM Comment Period End	02/29/88	53 FR 936
Final Action	10/00/88	

Small Entity: Undetermined

Analysis: Regulatory Evaluation 10/00/88

Agency Contact: Ralph Hitchcock, Director, Office of Vehicle Safety Standards, Department of Transportation, National Highway Traffic Safety Administration, 400 7th St, SW, Washington, DC 20590, 202 366-0842

RIN: 2127-AC16

1937. STANDARD NO. 108, LAMPS, REFLECTIVE DEVICES, AND ASSOCIATED EQUIPMENT

Significance: Nonsignificant

Legal Authority: 15 USC 1392; 15 USC 1407

CFR Citation: 49 CFR 571.108

Legal Deadline: None.

Abstract: Volkswagen of America petitioned to change Federal Motor Vehicle Safety Standard No. 108, Lamps, Reflective Devices, and Associated Equipment to permit an additional standardized replaceable light source for motor vehicle headlamps. The type of light source proposed was that currently used in European headlamps, the type H-4. Review of the merits of the petition found that, as used in Europe, the light source was not capable of achieving the level of performance required of U.S. light sources and NHTSA subsequently proposed a U.S. version to be known as the type HB2, which would have interchangeability and performance aspects compatible with U.S. safety needs. Comments by the U.S. and foreign lighting and vehicle manufacturers led to a supplemental notice.

Timetable:

Action	Date	FR Cite
NPRM	05/13/85	50 FR 19961
NPRM Comment Period End	06/27/85	50 FR 19961
Supplemental NPRM	06/13/86	51 FR 21696
NPRM comment period ended 07/14/86		
Final Action	04/00/88	

Small Entity: Undetermined

Analysis: Regulatory Evaluation 04/00/88

Agency Contact: Ralph Hitchcock, Director, Office of Vehicle Safety Standards, Department of Transportation, National Highway Traffic Safety Administration, 400 7th St., SW, Washington, DC 20590, 202 366-0842

RIN: 2127-AC22

1938. POWER-OPERATED WINDOW SYSTEMS

Significance: Nonsignificant

Legal Authority: 15 USC 1392; 15 USC 1407

CFR Citation: 49 CFR 571.118

Legal Deadline: None.

Abstract: Amendments are proposed to Federal Motor Vehicle Safety Standard No. 118 to extend applicability of the standard to light trucks to broaden the safety potential, to allow lowering of power windows after the key is removed to provide more consumer convenience without degrading safety, and to change the terminology of the exterior activation device from key-locking to just locking which allows alternative locking systems, such as touch-pad locks.

Timetable:

Action	Date	FR Cite
NPRM	10/16/87	52 FR 38488
NPRM Comment Period End	11/30/87	52 FR 38488
Final Action	06/00/88	

Small Entity: Undetermined

Analysis: Regulatory Evaluation 06/00/88

Agency Contact: Ralph Hitchcock, Director, Office of Vehicle Safety Standards, Department of Transportation, National Highway Traffic Safety Administration, 400 7th St, SW, Washington, DC 20590, 202 366-0842

RIN: 2127-AC25

VOL 53 ISS 79 PT 1 APR 25 1988 UMI

1939. MOTOR-VEHICLE BRAKE FLUIDS

Significance: Nonsignificant

Legal Authority: 15 USC 1392; 15 USC 1407

CFR Citation: 49 CFR 571.116

Legal Deadline: None.

Abstract: Nonsubstantive amendment to Federal Motor Vehicle Safety Standard No. 116 to allow use of adhesive-type labels on fluid containers. Present standard allows only lithographed or silk-screen type labels directly on surface of containers. The latter type labels are considered more expensive for small-volume lots. No cost is involved.

Timetable:

Action	Date	FR Cite
NPRM	03/30/87	52 FR 10775
NPRM Comment Period End	06/02/87	52 FR 10775
Final Action	06/00/88	

Small Entity: Undetermined

Analysis: Regulatory Evaluation 06/00/88

Agency Contact: Ralph Hitchcock, Director, Office of Vehicle Safety Standards, Department of Transportation, National Highway Traffic Safety Administration, 400 7th St, SW, Washington, DC 20590, 202 366-0842

RIN: 2127-AC26

DEPARTMENT OF TRANSPORTATION (DOT) — Completed Actions

National Highway Traffic Safety Administration (NHTSA)

1940. + 1990-1991 MODEL YEAR LIGHT-TRUCK FUEL-ECONOMY STANDARDS

Significance: Regulatory Program

Legal Authority: 15 USC 2002

CFR Citation: 49 CFR 533

Legal Deadline: Statutory, April 1, 1988. Light truck fuel economy standards are required to be set at least 18 months prior to the beginning of the model year(s).

Abstract: In accordance with the mandatory requirements of Section 502 (b) of the Motor Vehicle Information and Cost Savings Act, this rulemaking establishes light-truck average fuel-economy standards for Model Years 1990 and 1991.

Timetable:

Action	Date	FR Cite
NPRM	11/12/87	52 FR 43366
NPRM Comment Period End	12/28/87	52 FR 43366
Final Action	04/05/88	53 FR 11074
Final Action Effective	05/05/88	

Small Entity: Not Applicable

Analysis: Regulatory Evaluation 04/05/88

Agency Contact: Orron Kee, Chief, Motor Vehicle Requirements Div., Office of Market Incentives, Department of Transportation, National Highway Traffic Safety Administration, NRM-21 400 Seventh St., SW, Washington, DC 20590, 202 366-4936

RIN: 2127-AC05

1941. + PETITIONS FOR EXEMPTION FROM THE VEHICLE THEFT-PREVENTION STANDARD

Significance: Agency Priority

Legal Authority: 15 USC 2025

CFR Citation: 49 CFR 543

Legal Deadline: None. Statute requires petitions for exemption to be submitted 6 months before start of production of passenger vehicle line.

Abstract: Establishes procedures to be followed by manufacturers in preparing and submitting petitions for exemptions from the vehicle theft-prevention standard. Passenger motor-vehicle manufacturers may petition NHTSA for these exemptions for vehicle lines whose standard equipment includes an antitheft device that is likely to be as effective as compliance with the vehicle theft prevention standard in deterring and reducing vehicle theft. Procedures are also established which the agency will follow in processing these petitions and in reaching determinations on whether they should be granted. These procedures have been issued as an interim final rule for MY 1987 and as a final rule for MY 1988 and beyond.

Timetable:

Action	Date	FR Cite
NPRM	01/07/86	51 FR 715
Interim Final Rule	01/07/86	51 FR 706
NPRM Comment Period End	03/10/86	51 FR 715
Final Action	09/08/87	52 FR 33821
Final Action Effective	09/08/87	52 FR 33821

Small Entity: No

Analysis: Preliminary Regulatory Evaluation 01/07/86 (51 FR 706); Final Regulatory Evaluation 09/08/87 (52 FR 33821)

Agency Contact: Barbara Kurtz, Senior Program Analyst, Office of Market Incentives, Department of Transportation, National Highway Traffic Safety Administration, NRM-20, 400 Seventh Street, SW, Washington, DC 20590, 202 366-4806

RIN: 2127-AB81

1942. + OCCUPANT CRASH PROTECTION: LIGHT-TRUCK SAFETY-BELT DYNAMIC TESTING

Significance: Agency Priority

Legal Authority: 15 USC 1392; 15 USC 1407

CFR Citation: 49 CFR 571.208

Legal Deadline: None.

Abstract: Amends Standard No. 208 to require dynamic testing of manual belts in light-duty trucks.

Timetable:

Action	Date	FR Cite
NPRM	04/12/85	50 FR 14569
NPRM Comment Period End	05/28/85	50 FR 14569
Final Action	11/23/87	52 FR 44898
Final Action Effective	09/01/91	52 FR 44898

Small Entity: Undetermined

Analysis: Regulatory Evaluation 11/23/87 (52 FR 44898)

Agency Contact: Ralph Hitchcock, Director, Office of Vehicle Safety Standards, Department of Transportation, National Highway Traffic Safety Administration, NRM-10

400 Seventh St., SW, Washington, DC 20590, 202 366-0842

RIN: 2127-AC01

1943. STEERING CONTROL REARWARD DISPLACEMENT

Significance: Nonsignificant

Legal Authority: 15 USC 1392; 15 USC 1407

CFR Citation: 49 CFR 571.204

Legal Deadline: None.

Abstract: Extends applicability of the Standard from vehicles with an unloaded weight of 4,000 pounds to vehicles with an unloaded weight of 5,500 pounds.

Timetable:

Action	Date	FR Cite
NPRM	04/04/85	50 FR 13402
NPRM Comment Period End	07/19/85	50 FR 20919
Final Action	11/23/87	52 FR 44893
Final Action Effective	09/01/91	52 FR 44893

Small Entity: No

Analysis: Regulatory Flexibility Analysis; Preliminary Regulatory Evaluation 04/04/85 (50 FR 13402); Final Regulatory Evaluation 11/23/87 (52 FR 44893)

Agency Contact: R. Hitchcock, Director, Office of Vehicle Safety Standards, Department of Transportation, National Highway Traffic Safety Administration, 400 Seventh Street, SW, Washington, DC 20590, 202 366-0842

RIN: 2127-AA32

1944. MOTORCYCLE HELMETS

Significance: Nonsignificant

Legal Authority: 15 USC 1392; 15 USC 1407

CFR Citation: 49 CFR 571.218

Legal Deadline: None.

Abstract: The proposal adds new headform sizes to Federal Motor Vehicle Safety Standard No. 218.

Timetable:

Action	Date	FR Cite
NPRM	09/27/85	50 FR 39144
NPRM Comment Period End	11/26/85	50 FR 39144
Final Action	04/06/88	53 FR 11280
Final Action Effective	10/03/88	

Small Entity: No

Analysis: Preliminary Regulatory Evaluation 09/27/85 (50 FR 39144)

Agency Contact: R. Hitchcock, Department of Transportation, National Highway Traffic Safety Administration, 400 Seventh Street, SW, Washington, DC 20590, 202 366-0842

RIN: 2127-AA40

1945. CONSUMER INFORMATION—STOPPING DISTANCE

Significance: Nonsignificant

Legal Authority: 15 USC 1392; 15 USC 1407

CFR Citation: 49 CFR 575.101

Legal Deadline: None.

Abstract: Proposed to modify requirements for stopping-distance consumer information. A notice was published approving various alternatives concerning the requirement to provide stopping-distance information. A final rule was issued which deleted the requirement that stopping-distance information be provided to first purchasers of new passenger cars and motorcycles at the time the vehicle is delivered to the first purchaser. The agency took this action because the primary purpose of consumer information is to permit prospective purchasers to obtain as much comparative information as possible before deciding which particular model to buy. Information provided after the consumer has purchased the vehicle cannot serve that purpose.

Timetable:

Action	Date	FR Cite
NPRM	06/30/83	48 FR 30166
NPRM Comment Period End	08/05/83	48 FR 30166
Final Action	07/24/87	52 FR 27806
Final Action Effective	07/24/87	52 FR 27806

Small Entity: No

Additional Information: Docket No. 83-09. NPRM, Notice 1.

Analysis: Regulatory Evaluation 07/24/87 (52 FR 27806)

Agency Contact: Charles Gauthier, Department of Transportation, National Highway Traffic Safety Administration, 400 Seventh Street, SW, Washington, DC 20590, 202 366-4805

RIN: 2127-AA50

1946. HYDRAULIC AND AIR BRAKE SYSTEMS

Significance: Nonsignificant

Legal Authority: 15 USC 1392; 15 USC 1407

CFR Citation: 49 CFR 571.105; 49 CFR 571.121

Legal Deadline: None.

Abstract: In response to a petition for rulemaking, amends the brake burnish procedures specified for vehicles over 10,000 pounds by Standards No. 105 and No. 121.

Timetable:

Action	Date	FR Cite
NPRM	06/27/83	48 FR 29560
NPRM Comment Period End	08/26/83	48 FR 29560
SNPRM published comment period ended 11/19/85	05/23/85	50 FR 21313
Final Action	03/14/88	53 FR 8190
Final Action Effective	09/12/88	

Small Entity: No

Additional Information: Docket Nos. 70-27 and 83-07. NPRM, Docket No. 70-27, Notice 26; Docket No. 83-07, Notice 1.

Analysis: Regulatory Evaluation (Minimal) 05/23/85 (50 FR 21313)

Agency Contact: R. Hitchcock, Department of Transportation, National Highway Traffic Safety Administration, 400 Seventh Street, SW, Washington, DC 20590, 202 366-0842

RIN: 2127-AA92

1947. FEDERAL MOTOR-VEHICLE SAFETY STANDARD NO. 208 - OCCUPANT CRASH PROTECTION

Significance: Nonsignificant

Legal Authority: 15 USC 1392; 15 USC 1407

CFR Citation: 49 CFR 571.208

Legal Deadline: None.

Abstract: In response to a petition from the Ford Motor Company to extend the current one car credit (for vehicles equipped with a driver side air bag and a manual lap/shoulder belt at the

passenger side) beyond the phase-in period to allow consolidation of engineering efforts to produce passenger side air bags as well as driver side air bags, an NPRM was issued on November 25, 1986 (51 FR 42598). Responses were favorable and subsequently, on March 30, 1987, a Final Rule (52 FR 10096) was issued permitting the extension of the one car credit, but limited to an additional four years beyond the end of the current phase-in period. Petition for reconsideration denied.

Timetable:

Action	Date	FR Cite
NPRM	11/25/86	51 FR 42598
NPRM Comment Period End	12/26/86	51 FR 42598
Final Action – Denial of Petition for Reconsideration	11/05/87	52 FR 42440
Final Action Effective	11/05/87	52 FR 42440

Small Entity: Undetermined

Agency Contact: Ralph Hitchcock, Director, Office of Vehicle Safety Standards, Department of Transportation, National Highway Traffic Safety Administration, 400 7th St, SW, Washington, DC 20590, 202 366-0842

RIN: 2127-AC11

1948. STANDARD NO. 112, HEADLAMP CONCEALMENT DEVICES

Significance: Nonsignificant

Legal Authority: 15 USC 1392; 15 USC 1407

CFR Citation: 49 CFR 571.112

Legal Deadline: None.

Abstract: Chrysler Corporation petitioned for a change to Federal Motor Vehicle Safety Standard No. 112, Headlamp Concealment Devices. It requested that a requirement, for no light to be projected to the left or above the final position of a headlamp beam during the operation of a concealed headlamp from closed to open or vice versa, be changed to a performance test. Agency review of the petition and standard found that the design restrictive requirement did not appear to solve a significant safety problem. The requirement was deleted rather than amended.

Timetable:

Action	Date	FR Cite
NPRM	02/23/87	52 FR 5474
NPRM Comment Period End	04/09/87	52 FR 5474
Final Action	09/23/87	52 FR 35709
Final Action Effective	10/23/87	52 FR 35709

Small Entity: Undetermined

Analysis: Regulatory Evaluation 09/23/87 (52 FR 35709)

Agency Contact: Ralph Hitchcock, Director, Office of Vehicle Safety Standards, Department of Transportation, National Highway Traffic Safety Administration, 400 7th St, SW, Washington, DC 20590, 202 366-0842

RIN: 2127-AC21

1949. ● FEDERAL MOTOR VEHICLE SAFETY STANDARDS (FMVSS) NOS. 201, OCCUPANT PROTECTION IN INTERIOR IMPACT AND 204, STEERING CONTROL REARWARD DISPLACEMENT

Significance: Nonsignificant

Legal Authority: 15 USC 1392; 15 USC 1407

CFR Citation: 49 CFR 571.201; 49 CFR 571.204

Legal Deadline: None.

Abstract: Mitsubishi Motors Corporation petitioned to exclude vehicles which conform to the frontal barrier crash test requirements (Section 5.1) of Federal Motor Vehicle Safety Standard (FMVSS) No. 208, Occupant Crash Protection, from the requirements of FMVSS No. 201, Occupant Protection in Interior Impacts and FMVSS No. 204, Steering Control Rearward Displacement. Upon consideration, petition was denied.

Timetable:

Action	Date	FR Cite
Petition denied	01/13/88	53 FR 780

Small Entity: Not Applicable

Agency Contact: Ralph Hitchcock, Director, Office of Vehicle Safety Standards, Department of Transportation, National Highway Traffic Safety Administration, 400 7th St., SW, Washington, DC 20590, 202 366-0842

RIN: 2127-AC35

1950. ● FEDERAL MOTOR VEHICLE SAFETY STANDARD (FMVSS) NO. 301, FUEL SYSTEM INTEGRITY

Significance: Nonsignificant

Legal Authority: 15 USC 1392; 15 USC 1407

CFR Citation: 49 CFR 571.301

Legal Deadline: None.

Abstract: TUV Rhineland petitioned the agency to use colored water in the fuel systems undergoing compliance crash testing of Federal Motor Vehicle Safety Standard (FMVSS) No. 301, Fuel System Integrity, for safety purposes. Agency review revealed no reason to grant this petition because the petitioner may use any method he chooses and agency experience does not indicate any problems with current practice using Stoddard solvent as a substitute fuel; also, water is not considered a satisfactory substitute.

Timetable:

Action	Date	FR Cite
Action terminated	01/25/88	

Small Entity: Not Applicable

Agency Contact: Ralph Hitchcock, Director, Office of Vehicle Safety Standards, Department of Transportation, National Highway Traffic Safety Administration, 400 7th St., SW, Washington, DC 20590, 202 366-0842

RIN: 2127-AC37

1951. ● FEDERAL MOTOR VEHICLE SAFETY STANDARD (FMVSS) NO. 213, CHILD RESTRAINT SYSTEM

Significance: Nonsignificant

Legal Authority: 15 USC 1392; 15 USC 1407

CFR Citation: 49 CFR 571.213

Legal Deadline: None.

Abstract: Mr. Verne L. Freeland petitioned that Federal Motor Vehicle Safety Standard (FMVSS) No. 213, Child Restraint Systems, be amended to permit the installation of built-in child restraint systems in passenger cars. Agency review of the petition concluded that built-in child restraint systems could provide a level of safety at least equal to that provided by add-on child restraint systems and possibly could be easier to use. Accordingly, the agency will permit the use of built-in child restraints.

DOT—NHTSA **Completed Actions**

Timetable:

Action	Date	FR Cite
NPRM	03/23/87	52 FR 9194
NPRM Comment Period End	05/22/87	52 FR 9194
Final Action	01/22/88	53 FR 1783
Final Action Effective	01/22/88	53 FR 1783

Small Entity: Not Applicable

Agency Contact: Ralph Hitchcock, Director, Office of Vehicle Safety Standards, Department of Transportation, National Highway Traffic Safety Administration, 400 7th St., SW, Washington, DC 20590, 202 366-0842

RIN: 2127-AC40

1952. ● FEDERAL MOTOR VEHICLE SAFETY STANDARD (FMVSS) NO. 218, MOTORCYCLE HELMETS

Significance: Nonsignificant

Legal Authority: 15 USC 1392; 15 USC 1407

CFR Citation: 49 CFR 571.218

Legal Deadline: None.

Abstract: Amends Federal Motor Vehicle Safety Standard (FMVSS) No. 218, Motorcycle Helmets, to require that all motorcycle helmets meet the minimum performance requirements in FMVSS 218.

Timetable:

Action	Date	FR Cite
NPRM	09/27/85	50 FR 39144
NPRM Comment Period End	06/26/86	50 FR 39144
Final Action	04/06/88	53 FR 11280
Final Action Effective	10/03/88	

Small Entity: No

Agency Contact: Ralph Hitchcock, Director, Office of Vehicle Safety Standards, Department of Transportation, National Highway Traffic Safety Administration, 400 7th St., SW, Washington, DC 20590, 202 366-0842

RIN: 2127-AC41

DEPARTMENT OF TRANSPORTATION (DOT)

Prerule Stage

Federal Railroad Administration (FRA)

1953. + REVIEW OF RADIO COMMUNICATION

Significance: Agency Priority

Legal Authority: 45 USC 431; 45 USC 437

CFR Citation: 49 CFR 220

Legal Deadline: None.

Abstract: The Agency is engaged in a review of the issue of radio communication in the railroad industry. The review will evaluate possible future courses of action to enhance the safety of railroad operations involving radio communication. This review is considered significant because of public-safety considerations.

Timetable:

Action	Date	FR Cite
Notice of Special Safety Inquiry	11/04/86	51 FR 40101
Public Hearing, Washington, DC 1/27/87 to	01/29/87	

Next Action Undetermined

Small Entity: No

Agency Contact: Philip Olekszyk, Department of Transportation, Federal Railroad Administration, 400 Seventh Street, SW, Washington, DC 20590, 202 366-0897

RIN: 2130-AA34

1954. REVIEW: REGULATORY FLEXIBILITY ACT REVIEWS

Significance: Nonsignificant

Legal Authority: PL 96-354

CFR Citation: 00 CFR None

Legal Deadline: None.

Abstract: In accordance with the Regulatory Flexibility Act (RFA) review plan published in the Federal Register on June 30, 1981 (46 FR 33693), FRA has not selected any specific regulations for RFA review at this time. Instead, FRA has established a plan to develop regulatory definitions of the criteria used in the RFA for the selection of regulations to be reviewed. A notice was published in the Federal Register on August 3, 1981 (46 FR 39461) initiating a safety inquiry to evaluate the effectiveness of the safety regulatory program as it applies to small railroads.

Timetable:

Action	Date	FR Cite
Review Plan	06/30/81	46 FR 33693
Notice of Safety Inquiry Review	08/03/81	46 FR 39461

Next Action Undetermined

Small Entity: Yes

Agency Contact: Lawrence I. Wagner, Department of Transportation, Federal Railroad Administration, 400 Seventh Street, SW, Washington, DC 20590, 202 366-0528

RIN: 2130-AA10

1955. REVIEW OF LOCOMOTIVE CAB SAFETY

Significance: Nonsignificant

Legal Authority: 45 USC 431; 45 USC 437; 45 USC 22; 45 USC 23; 45 USC 28; 45 USC 34

CFR Citation: 49 CFR 229

Legal Deadline: None.

Abstract: The Agency is engaged in a review of the issue of locomotive cab environment. The review will evaluate possible future courses of action to enhance the safety of railroad employees who occupy locomotive cabs.

Timetable:

Action	Date	FR Cite

Next Action Undetermined

Small Entity: No

Agency Contact: Philip Olekszyk, Department of Transportation, Federal Railroad Administration, 400 Seventh Street, SW, Washington, DC 20590, 202 366-0897

RIN: 2130-AA32

1956. REVIEW: SPECIAL SAFETY INQUIRY; POWER BRAKE REGULATIONS

Significance: Nonsignificant

Legal Authority: 45 USC 431; 45 USC 437

CFR Citation: 49 CFR 232

Legal Deadline: None.

Abstract: The inquiry will obtain information to assist in evaluation of the impact of the change in the power brake regulations made in August 1982 in Docket PB-6.

Timetable:

Action	Date	FR Cite
Notice of Special Safety Inquiry	09/03/85	50 FR 35643
Notice of Change of Hearing Date	09/26/85	50 FR 39025
Public Hearing, Washington, D.C.	10/24/85	

Next Action Undetermined

Small Entity: No

Additional Information: Docket RSSI-85-1.

Agency Contact: Philip Olekszyk, Department of Transportation, Federal Railroad Administration, 400 Seventh Street, SW, Washington, DC 20590, 202 366-0897

RIN: 2130-AA40

1957. SAFETY STANDARDS FOR CABOOSES

Significance: Nonsignificant

Legal Authority: 45 USC 431; 45 USC 438

CFR Citation: 49 CFR 237

Legal Deadline: None.

Abstract: The proposed rule would seek to establish comprehensive safety standards for cabooses.

Timetable:

Action	Date	FR Cite

Next Action Undetermined

Small Entity: No

Additional Information: Docket No. RSC-76-6

Analysis: Regulatory Evaluation

Agency Contact: Philip Olekszyk, Department of Transportation, Federal Railroad Administration, 400 Seventh Street, SW, Washington, DC 20590, 202 366-0897

RIN: 2130-AA01

1958. AMENDMENTS TO REGULATIONS IMPLEMENTING SECTION 905 OF THE 4R ACT

Significance: Nonsignificant

Legal Authority: PL 94-210

CFR Citation: 49 CFR 265

Legal Deadline: None.

Abstract: This action would amend 49 CFR Part 265 to make changes necessitated by the promulgation of the Department of Transportation's comprehensive Minority Business Enterprise regulation (49 CFR Part 23). Part 265 will be revised to omit those provisions now covered in Part 23.

Timetable:

Action	Date	FR Cite

Next Action Undetermined

Small Entity: No

Analysis: Regulatory Evaluation

Agency Contact: William Fashouer, Department of Transportation, Federal Railroad Administration, 400 Seventh Street, SW, Washington, DC 20590, 202 366-0621

RIN: 2130-AA04

1959. RULES OF PRACTICE

Significance: Nonsignificant

Legal Authority: PL 96-354

CFR Citation: 49 CFR 211

Legal Deadline: None.

Abstract: Action would amend 49 CFR Part 211 to respond to the provisions of the Regulatory Flexibility Act of 1980 by defining the criteria used by FRA in determining whether any regulatory proposal or final rule will have a significant economic impact on a substantial number of small entities.

Timetable:

Action	Date	FR Cite

Next Action Undetermined

Small Entity: No

Analysis: Regulatory Evaluation 00/00/00

Agency Contact: Lawrence I. Wagner, Department of Transportation, Federal Railroad Administration, 400 Seventh Street, SW, Washington, DC 20590, 202 366-0628

RIN: 2130-AA07

1960. SPECIAL SAFETY INQUIRY; RAIL-HIGHWAY GRADE CROSSING SAFETY

Significance: Nonsignificant

Legal Authority: 45 USC 431; 45 USC 437

CFR Citation: 00 CFR None

Legal Deadline: None.

Abstract: The inquiry will obtain information from the public to assist in evaluating possible future courses of action to enhance public safety at railroad-highway grade crossings.

Timetable:

Action	Date	FR Cite
Notice of Special Safety Inquiry	06/18/84	49 FR 24968
Public Hearing, St. Paul, Minnesota	07/16/84	
Notice of Special Safety Inquiry	12/24/84	49 FR 49961
Public Hearing, Washington, D.C. begins 01/23/85	01/24/85	
Summary Report on Hearings	07/16/85	

Next Action Undetermined

Small Entity: No

Additional Information: Docket No. RSSI - 84-3.

Agency Contact: Philip Olekszyk, Department of Transportation, Federal Railroad Administration, 400 Seventh Street, SW, Washington, DC 20590, 202 366-0897

RIN: 2130-AA27

DEPARTMENT OF TRANSPORTATION (DOT)
Federal Railroad Administration (FRA)

Proposed Rule Stage

1961. + INFORMAL SAFETY INQUIRY AND RULEMAKING; CONTROL OF ALCOHOL AND DRUG USE IN RAILROAD OPERATIONS

Significance: Regulatory Program

Legal Authority: 45 USC 431; 45 USC 438

CFR Citation: 49 CFR 219

Legal Deadline: None.

Abstract: Based on experience derived from the first year of administration of FRA's rule on Control of Alcohol and Drug Use in Railroad Operations, FRA has identified the need for additional capability to detect and control drug use that can impact on the safety of rail transportation. Accordingly, FRA is developing a proposed rule prohibiting any unauthorized use of controlled substances by employees subject to the current rule and mandating random testing of those employees for controlled substances. FRA has also conducted a special safety inquiry on the administration of the present rule and is developing a notice of proposed rulemaking to refine and enhance the existing regulatory requirements.

Timetable:

Action	Date	FR Cite
Notice of Informal Safety Inquiry	01/20/87	52 FR 2118
Public Hearing, Washington, D.C.	02/18/87	
NPRM	04/00/88	

Small Entity: No

Government Levels Affected: Federal

Analysis: Regulatory Evaluation 04/00/88

Agency Contact: Walter C. Rockey, Jr., Executive Assistant to the Associate Administrator for Safety, Department of Transportation, Federal Railroad Administration, 400 Seventh Street, SW, Washington, DC 20590, 202 366-0897

RIN: 2130-AA43

DEPARTMENT OF TRANSPORTATION (DOT)
Urban Mass Transportation Administration (UMTA)

Proposed Rule Stage

1962. + CONTROL OF DRUG USE IN FEDERALLY FUNDED MASS TRANSPORTATION OPERATIONS

Significance: Regulatory Program

Legal Authority: 49 USC 1601; 49 USC 1602; 49 USC 1607; 49 USC 1618

CFR Citation: 49 CFR 653

Legal Deadline: None.

Abstract: The purpose of this proposal is to eliminate the use of dangerous drugs by operators of mass transit vehicles or other transit safety sensitive workers. The proposal would require a recipient of Federal transit grants to certify that it has established a drug program consistent with the requirements of the regulation and providing for chemical testing of safety sensitive employees on a random basis as well as for pre-employment, post-accident, and reasonable suspicion.

Timetable:

Action	Date	FR Cite
NPRM	12/00/88	

Small Entity: Undetermined

Analysis: Regulatory Evaluation 12/00/88

Agency Contact: Daniel Duff, Assistant Chief Counsel for Legislation and Regulations, Department of Transportation, Urban Mass Transportation Administration, Office of the Chief Counsel, Room 9316, 400 7th St., SW, Washington, DC 20590, 202 366-4063

RIN: 2132-AA33

1963. + IMPLEMENTATION OF SECTION 19 OF THE URBAN MASS TRANSPORTATION ACT OF 1964 AS AMENDED -- NONDISCRIMINATION

Significance: Agency Priority

Legal Authority: 49 USC 1615

CFR Citation: 49 CFR 641

Legal Deadline: None.

Abstract: The proposed regulations would unify the civil rights regulations that recipients of funds under the Urban Mass Transportation Act must meet. This rulemaking is significant because substantial public interest is anticipated. Regulations are needed to implement a statutory provision which consolidates UMTA's authority to assure effective and uniform compliance with civil rights and equal employment opportunity requirements in a manner comparable to other agencies within the Department of Transportation.

Timetable:

Action	Date	FR Cite
NPRM	10/00/88	

Small Entity: Yes

Additional Information: Section 19 was added to the UMT Act in November 1978 by the Surface Transportation Assistance Act of 1978. UMTA plans to issue an NPRM in 1988.

Analysis: Regulatory Evaluation 10/00/88

Agency Contact: Akiro Sano, Department of Transportation, Urban Mass Transportation Administration, Office of Technical Assistance, 400 7th St., SW, Room 7412, Washington, DC 20590, 202 366-4018

RIN: 2132-AA01

1964. + "BUY AMERICA" REQUIREMENTS OF THE SURFACE TRANSPORTATION ASSISTANCE ACT OF 1982

Significance: Agency Priority

Legal Authority: PL 97-424, Sec 165; PL 100-17, Sec 337

CFR Citation: 49 CFR 661

Legal Deadline: None.

Abstract: This rulemaking will amend UMTA's Buy America requirements to implement new statutory provisions and reflect UMTA's experience with implementing the existing regulation. It is considered significant because of substantial public interest.

Timetable:

Action	Date	FR Cite
NPRM	04/00/88	

Small Entity: Yes

Additional Information: Section 337 of the Surface Transportation and Uniform

Relocation Assistance Act of 1987 amends the "Buy America" provisions of Section 165 of the Surface Transportation Assistance Act of 1982. UMTA's current "Buy America" regulation was issued as an Emergency Final Rule on September 15, 1983, 48 FR 41504.

Government Levels Affected: Local, State, Federal

Analysis: Regulatory Evaluation 04/00/88

Agency Contact: Edward J. Gill, Jr., Department of Transportation, Urban Mass Transportation Administration, Office of Chief Counsel, 400 7th St., SW, Room 9316, Washington, DC 20590, 202 366-4063

RIN: 2132-AA15

1965. + MAJOR CAPITAL INVESTMENT PROJECTS

Significance: Agency Priority

Legal Authority: 49 USC 1602; 49 USC 1604; 49 USC 1607; 49 USC 1607a-1; 23 USC 103(e)(4); 23 USC 142

CFR Citation: 49 CFR 611

Legal Deadline: None.

Abstract: This regulation would set out the process applicants for grants under the UMT Act (49 USC 1601 et seq.) and the Federal-Aid Highway Act should follow in order to be eligible for Federal financial assistance for major urban mass transportation investments. A major urban mass transportation investment is any project that involves the construction of a new fixed guideway for use by buses or rail vehicles. This regulation is significant because it involves important departmental policy.

Timetable:

Action	Date	FR Cite
Notice of Policy	05/18/84	49 FR 21284
NPRM	06/00/88	

Small Entity: Undetermined

Analysis: Regulatory Evaluation 06/00/88

Agency Contact: Don Emerson, Department of Transportation, Urban Mass Transportation Administration, Office of Grants Management, 400 7th St., SW, Room 9301, Washington, DC 20590, 202 366-0096

RIN: 2132-AA22

1966. + CHARTER SERVICE AMENDMENT

Significance: Agency Priority

Legal Authority: 49 USC 1602(f); 49 USC 1608(c)

CFR Citation: 49 CFR 604

Legal Deadline: None.

Abstract: This rulemaking would amend the regulation that implements section 3(f) of the UMT Act regarding charter bus operations by UMTA recipients. The amendment would concern the ability of certain nonprofit entities to obtain handicap-accessible vehicles for charter service, or to receive service that otherwise would be unavailable to them. This rulemaking is significant because of substantial public interest.

Timetable:

Action	Date	FR Cite
NPRM	04/00/88	

Small Entity: Yes

Additional Information: Former title: Charter Bus Operations. On April 13, 1987, UMTA published its final rule on charter bus service. Under this regulation a recipient of UMTA funds is prohibited from providing any charter service using UMTA funded equipment or facilities if there is at least one available charter operator willing and able to provide the charter service that the recipient proposes to provide. Congress is concerned that, under the requirements of this regulation, non-profit entities may not be able to afford the services of private charter operators, or, in the case of certain organizations, obtain the necessary handicap-accessible vehicles for charter service. This amendment would address those concerns.

Affected Sectors: Multiple

Government Levels Affected: Local, State

Analysis: Regulatory Evaluation 04/00/88

Agency Contact: Theodore Munter, Department of Transportation, Urban Mass Transportation Administration, Office of Chief Counsel, 400 7th St., SW, Room 9316, Washington, DC 20590, 202 366-4063

RIN: 2132-AA32

1967. SCHOOL BUS OPERATIONS

Significance: Nonsignificant

Legal Authority: 49 USC 1602(g); 49 USC 1608(c)(6); 23 USC 103(e)(4); 23 USC 142(a); 23 USC 142(c)

CFR Citation: 49 CFR 605

Legal Deadline: None.

Abstract: This regulation provides information regarding the restrictions imposed by section 3(g) of the UMT Act on the school bus operations by UMTA recipients. UMTA plans to issue an NPRM in 1988.

Timetable:

Action	Date	FR Cite
ANPRM	10/12/82	47 FR 44795
ANPRM Comment Period End	11/26/82	
NPRM	12/00/88	

Small Entity: Yes

Additional Information: UMTA originally issued this regulation on April 1, 1976 (41 FR 14128). UMTA reviewed this regulation and issued an ANPRM that proposed three alternatives to the current regulation: (1) retain the existing regulation, (2) modify the definition of "tripper services," and (3) define "exclusive" schoolbus service.

Analysis: Regulatory Flexibility Analysis; Regulatory Evaluation 12/00/88

Agency Contact: Daniel Duff, Assistant Chief Counsel, Legislation and Regulations, Department of Transportation, Urban Mass Transportation Administration, Office of Chief Counsel, 400 7th St., SW, Room 9316, Washington, DC 20590, 202 366-4063

RIN: 2132-AA09

1968. AIR QUALITY PROCEDURES FOR USE IN FEDERAL-AID HIGHWAY AND FEDERALLY FUNDED TRANSIT PROGRAMS

Significance: Nonsignificant

Legal Authority: 23 USC 109(h); 23 USC 109(j); 23 USC 315; 42 USC 4332; 42 USC 7401; 42 USC 7506

CFR Citation: 23 CFR 770; 49 CFR 623

Legal Deadline: None.

Abstract: This regulation proposes to consolidate and amend existing air quality requirements for transportation projects into a single amended air quality regulation. The amended regulation is intended to streamline and simplify (1) the process of determining

DOT—UMTA **Proposed Rule Stage**

which highway projects are exempt from the Federal assistance limitations of section 176(a) of the Clean Air Act (CAA), and (2) the conformity and priority procedures contained in 23 CFR 770. The amendments are also intended to provide more authority and flexibility to State and local agencies and to meet the objectives of the CAA in the most cost-effective and expeditious manner.

Timetable:

Action	Date	FR Cite
NPRM	04/00/88	

Small Entity: No

Additional Information: ADDITIONAL AGENCY CONTACT: James N. Shrouds, (202) 366-4836 of FHWA. RIN 2125-AB10.

Analysis: Regulatory Evaluation 04/00/88

Agency Contact: A. Joseph Ossi, Department of Transportation, Urban Mass Transportation Administration, Office of Grants Management, 400 7th St., SW, Room 9301, Washington, DC 20590, 202 366-0056

RIN: 2132-AA19

1969. CAPITAL LEASES

Significance: Nonsignificant

Legal Authority: 49 USC 1607a(j)

CFR Citation: 49 CFR 637

Legal Deadline: Statutory, November 28, 1987.

Abstract: This regulation would implement a statutory provision requiring UMTA to prescribe policies and procedures governing the eligibility for capital assistance under section 9 of the UMT Act, as amended, for leases of equipment and facilities where leasing is more cost-effective than purchase or construction.

Timetable:

Action	Date	FR Cite
NPRM	04/00/88	

Small Entity: Undetermined

Analysis: Regulatory Evaluation 04/00/88

Agency Contact: Daniel Duff, Assistant Chief Counsel for Legislation and Regulations, Department of Transportation, Urban Mass Transportation Administration, Office of Chief Counsel, 400 7th St., SW, Room 9316, Washington, DC 20590, 202 366-4063

RIN: 2132-AA28

1970. ROLLING STOCK PURCHASE AUDITS

Significance: Nonsignificant

Legal Authority: 49 USC 1609(j)

CFR Citation: 49 CFR 663

Legal Deadline: None.

Abstract: This regulation would implement a statutory provision that requires an independent pre-award and post-delivery audit of the purchase of transit rolling stock with UMTA assistance to assure compliance with Federal motor-vehicle safety standards, Buy America requirements, and adherence to bid specification requirements. Manufacturer certification of compliance with this requirement is not sufficient and independent inspections and auditing are required by the statute.

Timetable:

Action	Date	FR Cite
NPRM	04/00/88	

Small Entity: Undetermined

Analysis: Regulatory Evaluation 04/00/88

Agency Contact: Daniel Duff, Assistant Chief Counsel for Legislation and Regulations, Department of Transportation, Urban Mass Transportation Administration, Office of Chief Counsel, 400 Seventh Street, SW, Room 9316, Washington, DC 20590, 202 366-4063

RIN: 2132-AA29

1971. BUS TESTING GUIDELINES

Significance: Nonsignificant

Legal Authority: 49 USC 1609(h)

CFR Citation: 49 CFR 665

Legal Deadline: None.

Abstract: This regulation would implement a statutory provision that requires any new bus model purchased after September 30, 1989, to be tested at a facility established by the Secretary, by law, in Altoona, Pa.

Timetable:

Action	Date	FR Cite
NPRM	06/00/88	

Small Entity: Undetermined

Additional Information: Section 12(h) of the UMT Act, as amended, defines a "new bus model" as a "bus model which has not been used in mass-transportation service in the United States before the date of production of such model, or a bus model which has been used in such service but which is being produced with a major change in configuration or components." UMTA plans to issue an NPRM in 1988.

Analysis: Regulatory Evaluation 06/00/88

Agency Contact: Daniel Duff, Assistant Chief Counsel for Legislation and Regulations, Department of Transportation, Urban Mass Transportation Administration, Office of Chief Counsel, Room 9316, 400 Seventh Street, SW, Washington, DC 20590, 202 366-4063

RIN: 2132-AA30

DEPARTMENT OF TRANSPORTATION (DOT) **Final Rule Stage**

Urban Mass Transportation Administration (UMTA)

1972. INNOVATIVE TECHNIQUES AND METHODS

Significance: Nonsignificant

Legal Authority: 49 USC 1603(i)

CFR Citation: 49 CFR 644

Legal Deadline: None.

Abstract: UMTA intends to withdraw this rulemaking, which would have prescribed policies and procedures for administering the grant programs for projects using innovative techniques and methods in the management and operation of public transportation services under section 4(i) of the UMT Act, as amended, because UMTA now uses a different method of project selection which does not require solicitation.

VOL 53 ISS 79 PT 1 AP 25 1988 UMI

DOT—UMTA

Final Rule Stage

Timetable:

Action	Date	FR Cite
NPRM	12/01/80	45 FR 79669
To be withdrawn	04/00/88	

Small Entity: No

Analysis: Regulatory Evaluation 12/01/80 (45 FR 79669)

Agency Contact: Joseph Goodman, Department of Transportation, Urban Mass Transportation Administration, Office of Technical Assistance, 400 7th St., SW, Room 6100, Washington, DC 20590, 202 366-0240

RIN: 2132-AA05

1973. TECHNOLOGY INTRODUCTION

Significance: Nonsignificant

Legal Authority: 49 USC 1602(a)(1)(c)

CFR Citation: 49 CFR 641

Legal Deadline: None.

Abstract: UMTA intends to withdraw this rulemaking, which would have prescribed policies and procedures for administering the grant program for projects that would introduce new technology into public-transportation services under section 3(a)(1)(C) of the UMT Act, as amended, because UMTA now uses a different method of project selection which does not require solicitation.

Timetable:

Action	Date	FR Cite
NPRM	01/19/81	46 FR 5832
To be withdrawn	04/00/88	

Small Entity: No

Analysis: Regulatory Evaluation 01/19/81 (46 FR 5832)

Agency Contact: Joseph Goodman, Department of Transportation, Urban Mass Transportation Administration, Office of Technical Assistance, 400 7th St., SW, Room 6100, Washington, DC 20590, 202 366-0240

RIN: 2132-AA07

1974. PROJECT MANAGEMENT OVERSIGHT

Significance: Nonsignificant

Legal Authority: 49 USC 1619

CFR Citation: 49 CFR 633

Legal Deadline: Statutory, September 29, 1987.

Abstract: This regulation would implement a statutory provision that permits UMTA to use a portion of the funding of its major capital programs to hire outside contractors to perform project management oversight of major capital projects, and require an UMTA grantee constructing a major capital project to prepare and, after UMTA approval, implement a project management plan.

Timetable:

Action	Date	FR Cite
NPRM	08/11/87	52 FR 29709
NPRM Comment Period End	10/13/87	52 FR 29709
Final Action	04/00/88	

Small Entity: No

Analysis: Regulatory Evaluation 04/00/88

Agency Contact: Daniel Duff, Assistant Chief Counsel for Legislation, and Regulations, Department of Transportation, Urban Mass Transportation Administration, Office of Chief Counsel, 400 Seventh Street, SW, Room 9316, Washington, DC 20590, 202 366-4063

RIN: 2132-AA31

DEPARTMENT OF TRANSPORTATION (DOT)

Urban Mass Transportation Administration (UMTA)

Completed Actions

1975. + ENVIRONMENTAL IMPACT AND RELATED PROCEDURES

Significance: Agency Priority

Legal Authority: 42 USC 4321 et seq; 23 USC 101 et seq; 49 USC 1601 et seq; 49 USC 1653(f)

CFR Citation: 23 CFR 771; 49 CFR 622

Legal Deadline: None.

Abstract: This regulation covers the preparation of environmental impact statements and related documents and compliance with other Federal environmental requirements under UMTA and FHWA grant programs. The changes streamline the project development process and provide increased decisionmaking authority to agency field offices. This rulemaking was significant because it involved important departmental policy; it was needed to reduce burdens associated with the environmental review process.

Timetable:

Action	Date	FR Cite
Notice and Request for Comments	04/13/81	46 FR 21620
NPRM	08/01/83	48 FR 34894
Final Action	10/28/87	52 FR 32646
Final Action Effective	11/28/87	

Small Entity: No

Analysis: Regulatory Evaluation 08/01/83 (48 FR 34894)

Agency Contact: Robert W. Stout, Department of Transportation, Urban Mass Transportation Administration, 400 Seventh Street, SW, Washington, DC 20590, 202 366-0096

RIN: 2132-AA03

1976. + EXTENSION OF SAFETY REQUIREMENTS TO ALL FEDERALLY ASSISTED BUSES

Significance: Agency Priority

Legal Authority: 49 USC 1602; 49 USC 1607

CFR Citation: 49 CFR 637

Legal Deadline: None.

Abstract: On October 1, 1982, UMTA rescinded its policy making advanced design bus specifications (The "White Book") mandatory for its grantees, but continued to mandate certain safety requirements applicable to advanced design buses. On October 16, 1984, UMTA issued an ANPRM on whether these safety requirements should be extended to other buses financed by UMTA. UMTA intends to withdraw this rulemaking because the actions contemplated in the ANPRM are more appropriate to be considered for action by NHTSA.

Timetable:

Action	Date	FR Cite
ANPRM	10/16/84	49 FR 40426
To be withdrawn	04/00/88	

Small Entity: Undetermined

Government Levels Affected: Local, State

Agency Contact: Kenneth E. Bolton, Director of Policy, Department of Transportation, Urban Mass Transportation Administration, 400 Seventh Street, SW, Room 9300, Washington, DC 20590, 202 366-4060

RIN: 2132-AA24

1977. + MAINTENANCE OF EQUIPMENT AND FACILITIES

Significance: Agency Priority

Legal Authority: 49 USC 1602; 49 USC 1607

CFR Citation: 49 CFR 636

Legal Deadline: None.

Abstract: UMTA has terminated this rulemaking which would have required recipients of UMTA funds to have a maintenance program and to keep certain maintenance records. UMTA has determined that the maintenance program required by UMTA Circular 5030.1A, "Section 9 Formula Grant Application Instructions," and UMTA Circular 9010.1A, "Urban Mass Transportation Project Management Guidelines for Grantees," adequately addresses UMTA's maintenance concerns and that the recordkeeping provisions of the draft rulemaking are unnecessary.

Timetable:

Action	Date	FR Cite
Action terminated	12/28/87	

Small Entity: No

Agency Contact: Kenneth F. Bolton, Department of Transportation, Urban Mass Transportation Administration, Office of Policy, UMTA, 400 Seventh Street, SW, Room 9311, Washington, DC 20590, 202 366-4060

RIN: 2132-AA26

1978. MISCELLANEOUS AMENDMENTS - ORGANIZATION, FUNCTIONS, AND PROCEDURES

Significance: Nonsignificant

Legal Authority: 49 USC 1657; 49 USC 1659

CFR Citation: 49 CFR 601

Legal Deadline: None.

Abstract: UMTA has terminated this rulemaking, which would have reflected modifications in the organization and distribution of functions within the agency, because of certain ongoing and upcoming organizational changes.

Timetable:

Action	Date	FR Cite
Action terminated	12/10/87	

Small Entity: No

Agency Contact: Henry T. Carter, Department of Transportation, Urban Mass Transportation Administration, Office of Administration, 400 7th St., SW, Room 7423, Washington, DC 20590, 202 366-2465

RIN: 2132-AA06

1979. SECTION 15 REPORTING REQUIREMENTS FOR SECTION 9 APPORTIONMENT GRANTS; PENALTY PROCEDURES FOR NONCOMPLIANCE

Significance: Nonsignificant

Legal Authority: 49 USC 1607; 49 USC 1611

CFR Citation: 49 CFR 630

Legal Deadline: None.

Abstract: This regulation simplifies and implements procedures to handle late reporters, missing certifications and deadhead miles in order to provide more timely Section 9 formula apportionments based on the most valid data available.

Timetable:

Action	Date	FR Cite
NPRM	05/06/86	51 FR 17144
NPRM Comment Period End	07/07/86	
Final Action	09/25/87	52 FR 36182
Final Action Effective	10/26/87	52 FR 36182

Small Entity: No

Analysis: Regulatory Evaluation 05/07/86 (51 FR 17144)

Agency Contact: Robert A. Wilson, Director, Information Services, Department of Transportation, Urban Mass Transportation Administration, Office of Grants Management, 400 7th St., SW, Room 9305, Washington, DC 20590, 202 366-1619

RIN: 2122-AA23

DEPARTMENT OF TRANSPORTATION (DOT)

Research and Special Programs Administration (RSPA)

Prerule Stage

1980. ● + REGISTRATION OF SHIPPERS AND CARRIERS OF HAZARDOUS MATERIALS

Significance: Regulatory Program

Legal Authority: 49 USC 1804

CFR Citation: 49 CFR 171; 49 CFR 173; 49 CFR 177

Legal Deadline: None.

Abstract: DOT lacks comprehensive data on the number, volume, and other statistics characterizing the transportation of hazardous materials in commerce. Comments will be requested on the burdens and benefits associated with various alternatives that could be used to obtain such information. The registration of carriers and shippers is one such alternative.

Timetable:

Action	Date	FR Cite
ANPRM	09/00/88	

Small Entity: Undetermined

Agency Contact: Joseph S. Nalevanko, Department of Transportation, Research and Special Programs Administration, 400 Seventh St., SW, Washington, DC 20590, 202 366-4484

RIN: 2137-AB45

1981. + OST-FAA INFORMATION RULES: STANDARDIZED REGULATORY FLEXIBILITY REQUIREMENTS

Significance: Agency Priority

Legal Authority: 49 USC 1324; 49 USC 1371; 49 USC 1387

CFR Citation: 14 CFR 241; 14 CFR 298; 14 CFR 399

Legal Deadline: None.

Abstract: The threshold for the aviation-information program for regulatory flexibility analysis is 60 seats or maximum payload of 18,000 pounds or less. Carriers operating aircraft under these limits are

considered small carriers. FAA, on the other hand, uses a threshold based on the operational certificate requirements (Part 121 versus Part 135) with the threshold established at 30 seats or maximum payload of 7,500 pounds for a Part 135 certificate. FAA regulatory analysis for safety, congestion, etc., centers around the lower threshold which means much of the aviation economic information that they use has to be manipulated to fit their needs. This proposal of standardizing the threshold within the Department would save considerable resources and would eliminate much confusion in the air transportation industry. Most carriers, especially the newer ones, are familiar with FAA's requirements. This rulemaking is significant because it will achieve consistency in departmental treatment.

Timetable:

Action	Date	FR Cite
Next Action Undetermined		

Small Entity: No

Agency Contact: Jack Calloway, Chief, Regulations Division, Department of Transportation, Research and Special Programs Administration, Office of Aviation Information Management, DAI-1/Room 4125 Seventh Street, SW, Washington, DC 20590, 202 366-4383

RIN: 2137-AB16

1982. ● + HIGHWAY ROUTING STANDARDS FOR CERTAIN TYPES AND QUANTITIES OF HAZARDOUS MATERIALS

Significance: Agency Priority

Legal Authority: 49 USC 1804; 49 USC 1805

CFR Citation: 49 CFR 173.177; 49 CFR 397

Legal Deadline: None.

Abstract: Currently, except for certain radioactive materials, DOT has not promulgated uniform, national standards for the highway routing of hazardous materials. The proposal would establish such standards and provide guidance to States and localities to minimize the promulgation of State and local routing requirements that are inconsistent with the Hazardous Materials Transportation Act. This rulemaking is significant because of the safety implications.

Timetable:

Action	Date	FR Cite
ANPRM	04/07/88	53 FR 11618
ANPRM Comment Period End	10/11/88	

Small Entity: Undetermined

Agency Contact: Joseph S. Nalevanko, Department of Transportation, Research and Special Programs Administration, 400 Seventh St., SW, Washington, DC 20590, 202 366-4484

RIN: 2137-AB42

1983. REVIEW OF COMMUTER AIR TRAFFIC AND MARKET DATA REPORTING

Significance: Nonsignificant

Legal Authority: 49 USC 1324; 49 USC 1371; 49 USC 1374; 49 USC 1386

CFR Citation: 14 CFR 298

Legal Deadline: None.

Abstract: Currently commuter air carriers providing scheduled passenger service file two quarterly traffic schedules. One schedule summarizes nine traffic elements while the other schedule provides the origination and destination for all the carriers' on-line passengers. The Department is considering proposing a new traffic and market data system for certificated and foreign air carriers. This system could be used for commuter air carriers, providing the Department with one automated traffic and market data system for all carriers. This system would be less burdensome for the commuter air carriers and be more efficient for the user.

Timetable:

Action	Date	FR Cite
Next Action Undetermined		

Small Entity: Undetermined

Agency Contact: Jack Calloway, Chief, Regulations Division, Department of Transportation, Research and Special Programs Administration, DAI-1 Room 4125, 400 Seventh Street, SW, Washington, DC 20590, 202 366-4383

RIN: 2137-AB18

1984. REVISION OF OPERATING PROCEDURES FOR MOTOR VEHICLES

Significance: Nonsignificant

Legal Authority: 49 USC 1803 to 1806

CFR Citation: 49 CFR 177

Legal Deadline: None.

Abstract: Proposed simplification and recodification of the existing operating procedures for transportation of hazardous materials by motor vehicles as prescribed in Part 177. Development of driver training requirements (formerly Project 270-78).

Timetable:

Action	Date	FR Cite
Next Action Undetermined		

Small Entity: No

Additional Information: Project 261-78

Agency Contact: M. Morris, Department of Transportation, Research and Special Programs Administration, 400 Seventh Street, SW, Washington, DC 20590, 202 366-4488

RIN: 2137-AA07

1985. CONSOLIDATION AND REVISION OF REQUIREMENTS FOR THE CARRIAGE OF EXPLOSIVES BY VESSEL

Significance: Nonsignificant

Legal Authority: 49 USC 1803 to 1806

CFR Citation: 49 CFR 176

Legal Deadline: None.

Abstract: Proposed consolidation and revision of requirements for the carriage of military and commercial explosives by vessel and adoption of United Nations scheme for classification and compatibility of explosives for the water mode.

Timetable:

Action	Date	FR Cite
Next Action Undetermined		

Small Entity: No

Additional Information: Project 279-78

Agency Contact: H. Mitchell/F. Thompson (USCG), Department of Transportation, Research and Special Programs Administration, 400 Seventh Street, SW, Washington, DC 20590, 202 366-4488

RIN: 2137-AA10

VOL 53 ISS 79 PT 1 APR 25 1988 UMI

1986. SPECIFICATION PACKAGES OF TYPE B AND FISSILE RADIOACTIVE MATERIALS

Significance: Nonsignificant

Legal Authority: 49 USC 1803 to 1806; 49 USC 1808

CFR Citation: 49 CFR 173

Legal Deadline: None.

Abstract: The Department is considering addressing the possibility of continued use and needed modifications of certain radioactive materials package designs.

Timetable:

Action	Date	FR Cite
ANPRM	04/30/88	
ANPRM Comment Period End	06/30/88	

Small Entity: Undetermined

Additional Information: Project 300-83.

Agency Contact: M. Wangler, Department of Transportation, Research and Special Programs Administration, 400 Seventh Street, SW, Washington, DC 20590, 202 366-4545

RIN: 2137-AA29

1987. QUALITY ASSURANCE FOR RADIOACTIVE MATERIALS SHIPPERS

Significance: Nonsignificant

Legal Authority: 49 USC 1803 to 1806; 49 USC 1808

CFR Citation: 49 CFR 173

Legal Deadline: None.

Abstract: The Department is considering this proposal to solicit comments on the desirability of establishing quality assurance program requirements for all shippers of radioactive materials.

Timetable:

Action	Date	FR Cite
ANPRM	05/30/88	
ANPRM Comment Period End	07/30/88	

Small Entity: Undetermined

Additional Information: Project 291-80.

Agency Contact: M. Wangler, Department of Transportation, Research and Special Programs Administration, 400 Seventh Street, SW, Washington, DC 20590, 202 366-4545

RIN: 2137-AA30

1988. DOT SPECIFICATION 51 PORTABLE TANKS

Significance: Nonsignificant

Legal Authority: 49 USC 1803 to 1806

CFR Citation: 49 CFR 173

Legal Deadline: None.

Abstract: The Department is considering revising the requirements for DOT Specification 51 Portable Tanks. Consideration will also be given to adopting certain provisions of the recommendations of the United Nations and the International Maritime Organization.

Timetable:

Action	Date	FR Cite
Next Action Undetermined		

Small Entity: Undetermined

Additional Information: Project 302-83.

Agency Contact: Lee Jackson, Department of Transportation, Research and Special Programs Administration, 400 Seventh Street, SW, Washington, DC 20590, 202 366-4488

RIN: 2137-AA36

1989. AIRLINE REVENUE/NONREVENUE, FIRST CLASS/COACH PASSENGERS: REVISED DEFINITIONS

Significance: Nonsignificant

Legal Authority: 49 USC 1324; 49 USC 1373

CFR Citation: 14 CFR 241

Legal Deadline: None.

Abstract: The present definition of revenue and nonrevenue passengers for aviation reporting purposes is stated in terms of the exemptions for free and reduced-rate transportation in section 403(b) of the Federal Aviation Act of 1958. These definitions have become outmoded in the process of air-fare deregulation. In addition, first class and coach passengers are defined in terms of the type of fare paid with premium or standard fares being the benchmark for first class. With deregulation and the proliferation of new air fares in the marketplace, these definitions may also be outmoded. The DOT is considering several options for revising these definitions.

Timetable:

Action	Date	FR Cite
Next Action Undetermined		

Small Entity: No

Agency Contact: Jack Calloway, Chief, Regulations Division, Department of Transportation, Research and Special Programs Administration, Office of Aviation Information Management, DAI-1/Room 4125, 400 Seventh Street, SW, Washington, DC 20590, 202 366-4383

RIN: 2137-AB00

1990. SUBSIDIZED COMMUTER CARRIERS AND FOREIGN AIR CARRIERS: RECORDS AND RETENTION PERIODS

Significance: Nonsignificant

Legal Authority: 49 USC 1324; 49 USC 1371 to 1374; 49 USC 1377; 49 USC 1381; 49 USC 1386; 49 USC 1482

CFR Citation: 14 CFR 249

Legal Deadline: None.

Abstract: This rule would require commuter air carriers receiving subsidy to retain certain records in support of their claims for subsidy; require foreign air carriers submitting traffic and market data to retain records in support of their submissions; modify or eliminate several of the records prescribed for retention by public charter operators and overseas operators. In addition, the proposal would transfer the record retention requirements contained in Part 374a to Part 249.

Timetable:

Action	Date	FR Cite
Next Action Undetermined		

Small Entity: No

Agency Contact: Jack Calloway, Chief, Regulations Division, Department of Transportation, Research and Special Programs Administration, Office of Aviation Information Management, DAI-1/Room 4125, 400 Seventh Street, SW, Washington, DC 20590, 202 366-4383

RIN: 2137-AB04

VOL 53 ISS 79 PT 1 AP 25 1988 UMI

DOT—RSPA **Prerule Stage**

1991. ● GAS DETECTION AND MONITORING IN COMPRESSOR STATION BUILDINGS

Significance: Nonsignificant

Legal Authority: 49 USC 1672

CFR Citation: 49 CFR 192

Legal Deadline: None.

Abstract: Leaking gas accumulating inside an inadequately ventilated compressor station building is a serious safety problem that has caused recent deaths and injuries. This rulemaking action explores the need for additional regulations to lessen this potential for harm. Installation of gas detection and alarm systems and more specific operation and maintenance procedures for compressor stations are the alternatives being considered.

Timetable:

Action	Date	FR Cite
ANPRM	04/04/88	53 FR 10906
ANPRM Comment Period End	06/03/88	

Small Entity: No

Additional Information: National Transportation Safety Board Recommendation P-83-20 provides a basis for this action.

Agency Contact: B. Liebler, Department of Transportation, Research and Special Programs Administration, 400 Seventh St., SW, Washington, DC 20590, 202 366-4560

RIN: 2137-AB49

DEPARTMENT OF TRANSPORTATION (DOT)

Proposed Rule Stage

Research and Special Programs Administration (RSPA)

1992. + ALIGNMENT OF AIRLINE UNIFORM SYSTEM OF ACCOUNTS AND REPORTS WITH GENERALLY ACCEPTED ACCOUNTING PRINCIPLES

Significance: Regulatory Program

Legal Authority: 49 USC 1324; 49 USC 1371; 49 USC 1377

CFR Citation: 14 CFR 241

Legal Deadline: None.

Abstract: As part of the continuing effort to align the DOT's aviation accounting rules with generally accepted accounting principles, certain sections of the Uniform System of Accounts and Reports need to be deleted or amended. These changes would provide relief from the present requirements for most air carriers.

Timetable:

Action	Date	FR Cite
NPRM	03/24/88	53 FR 9653
NPRM Comment Period End	05/23/88	
Final Action	12/00/88	

Small Entity: No

Affected Sectors: 45 Transportation by Air

Analysis: Regulatory Evaluation 04/00/88

Agency Contact: Jack Calloway, Chief, Regulations Division, Department of Transportation, Research and Special Programs Administration, Office of Aviation Information Management, DAI-1/Room 4125, 400 Seventh Street, SW, Washington, DC 20590, 202 366-4383

RIN: 2137-AA99

1993. + CONFIDENTIALITY OF PARTS 241 AND 298 AIRLINE REPORTS

Significance: Regulatory Program

Legal Authority: 49 USC 1324; 49 USC 1373; 49 USC 1371; 49 USC 1374; 49 USC 1386

CFR Citation: 14 CFR 241; 14 CFR 298

Legal Deadline: None.

Abstract: This rule would consider whether some components of individual carrier's reports submitted under Parts 241 and 298 should be kept confidential and for how long.

Timetable:

Action	Date	FR Cite
NPRM	04/00/88	
NPRM Comment Period End	06/00/88	
Final Action	04/00/89	

Small Entity: No

Agency Contact: Jack Calloway, Chief, Regulations Division, Department of Transportation, Research and Special Programs Administration, Office of Aviation Information Management, DAI-1/Room 4125, 400 Seventh Street, SW, Washington, DC 20590, 202 366-4383

RIN: 2137-AB05

1994. + TRAINING FOR HAZARDOUS MATERIALS TRANSPORTATION

Significance: Regulatory Program

Legal Authority: 49 USC 1804

CFR Citation: 49 CFR 172

Legal Deadline: None.

Abstract: This regulation proposes to establish detailed training requirements for persons involved with the transportation of hazardous materials. Establishing more detailed training requirements should diminish the number of hazardous materials transportation incidents which can be attributed to human error. At this time, the potential cost of establishing this program is unknown.

Timetable:

Action	Date	FR Cite
NPRM	04/00/88	

Small Entity: Undetermined

Additional Information: Docket No. HM-126F

Analysis: Regulatory Evaluation 04/00/88

Agency Contact: Lee Jackson, Department of Transportation, Research and Special Programs Administration, 400 Seventh Street, SW, Washington, DC 20590, 202 366-4488

RIN: 2137-AB26

1995. + RECODIFICATION OF EXPLOSIVE REGULATIONS

Significance: Agency Priority

Legal Authority: 49 USC 1803 to 1808

CFR Citation: 49 CFR 172; 49 CFR 173

Legal Deadline: None.

Abstract: Proposed consolidation and revision of the regulations on the

classification and packaging of explosives, and the alignment of these regulations with the recommendations of the United Nations Committee of Experts on the Transport of Dangerous Goods. This rulemaking is considered significant because of substantial public interest.

Timetable:

Action	Date	FR Cite
Next Action Undetermined		

Small Entity: Undetermined

Additional Information: Docket No. HM-181A

Agency Contact: Charles Ke/H. Mitchell, Department of Transportation, Research and Special Programs Administration, 400 Seventh Street, SW, Washington, DC 20590, 202 366-4488

RIN: 2137-AA93

1996. + GAS GATHERING LINE DEFINITION

Significance: Agency Priority

Legal Authority: 49 USC 1672; 49 USC 1804

CFR Citation: 49 CFR 192.3

Legal Deadline: None.

Abstract: The existing definition of "gathering line" would be clearly defined to eliminate confusion in distinguishing these pipelines from transmission lines in rural areas. The costs should be minimal since the definition will conform to prevailing practices in government and industry. Action is significant because the definition is the subject of litigation.

Timetable:

Action	Date	FR Cite
Next Action Undetermined		

Small Entity: No

Additional Information: Suggested terminology is being coordinated with the Technical Pipeline Safety Standards Committee and State agencies in advance of a formal proposal for public comment.

Agency Contact: P. Cory, Department of Transportation, Research and Special Programs Administration, 400 Seventh Street, SW, Washington, DC 20590, 202 366-4561

RIN: 2137-AB15

1997. + PROPOSALS FOR PIPELINE SAFETY

Significance: Agency Priority

Legal Authority: 49 USC 1672; 49 USC 1804; 49 USC 2002

CFR Citation: 49 CFR 191; 49 CFR 192; 49 CFR 195

Legal Deadline: None.

Abstract: Based on the numerous public comments and recommendations of the Department's two pipeline safety advisory committees, many of the proposals put forth in the ANPRM will be withdrawn. Those not withdrawn will be further evaluated in special studies or become the subject of separate rulemakings.

Timetable:

Action	Date	FR Cite
ANPRM	02/11/87	52 FR 4361
ANPRM Comment Period End	03/30/87	52 FR 4361
NPRM to be withdrawn	04/00/88	

Small Entity: Undetermined

Agency Contact: B. Liebler, Office of Pipeline Safety, Department of Transportation, Research and Special Programs Administration, 400 7th Street, SW, Washington, DC 20590, 202 366-4560

RIN: 2137-AB27

1998. + HAZARDOUS MATERIALS IN INTRASTATE COMMERCE

Significance: Agency Priority

Legal Authority: 49 USC 1802 to 1808

CFR Citation: 49 CFR 171 to 179

Legal Deadline: None.

Abstract: ANPRM invites comments on the need for, and possible consequences of, DOT extending the application of its Hazardous Materials Regulations to all intrastate transportation of hazardous materials in commerce. This rulemaking is significant because of substantial public interest.

Timetable:

Action	Date	FR Cite
ANPRM	06/29/87	52 FR 24195
Comment Period Extended to 11/28/87	09/21/87	52 FR 35464
ANPRM Comment Period End	09/28/87	
NPRM	04/00/88	

Small Entity: Undetermined

Additional Information: Docket No. HM-200

Agency Contact: John Gale, Department of Transportation, Research and Special Programs Administration, 400 Seventh Street, SW, Washington, DC 20590, 202 366-4488

RIN: 2137-AB37

1999. + PIPELINE OPERATOR QUALIFICATIONS

Significance: Agency Priority

Legal Authority: 49 USC 1672; 49 USC 2002

CFR Citation: 49 CFR 192; 49 CFR 195

Legal Deadline: None.

Abstract: Training and qualification standards would be proposed for personnel involved in the operation and maintenance of gas and hazardous liquid pipelines. Special consideration would be given to operators of small gas systems to alleviate the burden of compliance. This rulemaking is considered significant because of substantial public interest.

Timetable:

Action	Date	FR Cite
ANPRM	03/23/87	52 FR 9189
ANPRM Comment Period End	05/07/87	52 FR 9189
NPRM	06/00/88	

Small Entity: Undetermined

Agency Contact: A. Garnett, Department of Transportation, Research and Special Programs Administration, 400 Seventh Street, SW, Washington, DC 20590, 202 366-2036

RIN: 2137-AB38

2000. ● + OPERATION AND MAINTENANCE PROCEDURES FOR GAS PIPELINES

Significance: Agency Priority

Legal Authority: 49 USC 1672

CFR Citation: 49 CFR 192

Legal Deadline: None.

Abstract: Adequate procedures for pipeline operation and maintenance, backed up by personnel training, have proven effective in minimizing the potential for accidents. Gas operators are required to have such procedures, but the existing requirements lack the clarity and specificity needed to assure a uniform, broad-based level of safety for all pipelines. Therefore, this proposal would clarify the existing requirements, make them more comprehensive, and, where appropriate, similar to the more detailed requirements applicable to the operation and maintenance of hazardous liquid pipelines. This is a significant action because of the need for adequate procedures to provide a basis for training and qualifying operator personnel.

Timetable:

Action	Date	FR Cite
NPRM	05/00/88	

Small Entity: Yes

Analysis: Regulatory Evaluation 05/00/88

Agency Contact: B. Liebler, Department of Transportation, Research and Special Programs Administration, 400 Seventh St., SW, Washington, DC 20590, 202 366-4560

RIN: 2137-AB44

2001. ● + PRESSURE TESTING PETROLEUM PRODUCT PIPELINES

Significance: Agency Priority

Legal Authority: 49 USC 2002

CFR Citation: 49 CFR 195

Legal Deadline: None.

Abstract: Recent accidents involving petroleum product pipelines demonstrate the potential for catastrophic losses if a large spill occurs in a populated area. Studies have shown that accidents attributable to hidden material or construction defects can be prevented by restricting operation to not more than 80 percent of a prior test or operating pressure. In this regard, significant results have been achieved by imposing such an operating restriction on those product pipelines that carry highly volatile liquids. This rule would extend this existing safety standard to all product pipelines. This rulemaking is significant because of substantial public interest in the safety implications.

Timetable:

Action	Date	FR Cite
NPRM	04/00/88	

Small Entity: No

Analysis: Regulatory Evaluation 04/00/88

Agency Contact: A. Garnett, Department of Transportation, Research and Special Programs Administration, 400 Seventh St., SW, Washington, DC 20590, 202 366-2036

RIN: 2137-AB46

2002. ● + HAZARDOUS LIQUID PIPELINE DAMAGE-PREVENTION PROGRAM

Significance: Agency Priority

Legal Authority: 49 USC 2002(e)

CFR Citation: 49 CFR 195

Legal Deadline: None.

Abstract: Each year a large percentage of hazardous liquid pipeline accidents are caused by excavation damage. Experience has shown that excavation accident rates diminish when operators participate in "one-call" damage prevention programs. The Federal gas pipeline safety regulations now require that gas operators participate in such programs. This action would apply a similar requirement to operators of hazardous liquid pipelines. This is a significant action because of the widespread interest in the use of "one-call" programs to prevent damage to buried pipelines.

Timetable:

Action	Date	FR Cite
NPRM	04/00/88	

Small Entity: No

Analysis: Regulatory Evaluation 04/00/88

Agency Contact: A. Garnett, Department of Transportation, Research and Special Programs Administration, 400 Seventh St., SW, Washington, DC 20590, 202 366-2036

RIN: 2137-AB47

2003. ● + MAPS AND RECORDS OF PIPELINE LOCATION AND CHARACTERISTICS; NOTIFICATION OF STATE AGENCIES

Significance: Agency Priority

Legal Authority: 49 USC 1672; 49 USC 2002

CFR Citation: 49 CFR 192; 49 CFR 195

Legal Deadline: None.

Abstract: Maintenance of appropriate information about pipelines is essential for emergency response, compliance with safety standards, and other purposes. As part of a continuing policy to adopt similar requirements for gas and hazardous liquid pipelines where appropriate for safety, this action proposes to equalize as far as possible the requirements that gas and liquid operators keep maps and records to show the location and other characteristics of pipelines. In addition, operators would be required to provide this information to State agencies upon request. This is a significant action because of Congressional and State concerns about the need for appropriate public officials to have pipeline information.

Timetable:

Action	Date	FR Cite
NPRM	08/00/88	

Small Entity: Yes

Additional Information: National Transportation Safety Board Recommendation P-87-34 and House Report 100-445 (Nov. 17, 1987) provide the bases for this action.

Analysis: Regulatory Evaluation 08/00/88

Agency Contact: B. Liebler, Department of Transportation, Research and Special Programs Administration, 400 Seventh St., SW, Washington, DC 20590, 202 366-4560

RIN: 2137-AB48

2004. PRIVATE CARRIERS LICENSED TO USE RADIOACTIVE MATERIALS

Significance: Nonsignificant

Legal Authority: 49 USC 1803 to 1806; 49 USC 1808

CFR Citation: 49 CFR 173; 49 CFR 177

Legal Deadline: None.

Abstract: The Department intends to propose exceptions from the regulations for private carriers which are licensed to use radioactive materials in the course of their businesses.

Timetable:

Action	Date	FR Cite
NPRM	07/01/88	
NPRM Comment Period End	08/15/88	
Final Action	11/15/88	

Small Entity: No

Additional Information: Project 298-82.

Analysis: Regulatory Evaluation 07/01/88

Agency Contact: M. Wangler, Department of Transportation, Research and Special Programs Administration, 400 Seventh Street, SW, Washington, DC 20590, 202 366-4545

RIN: 2137-AA28

2005. SPECIFICATION 8W AND 8WA WELDED STEEL CYLINDERS

Significance: Nonsignificant

Legal Authority: 49 USC 1803; 49 USC 1804; 49 USC 1808

CFR Citation: 49 CFR 171; 49 CFR 173; 49 CFR 178

Legal Deadline: None.

Abstract: Would eliminate existing Specifications 8 and 8AL and provide a consolidated specification for the manufacture of acetylene cylinders.

Timetable:

Action	Date	FR Cite
NPRM	04/00/88	
NPRM Comment Period End	06/00/88	
Final Action	11/00/88	
Final Action Effective	01/00/89	

Small Entity: No

Additional Information: Docket No. HM-23.

Analysis: Regulatory Evaluation 04/00/88

Agency Contact: M. Morris, Department of Transportation, Research and Special Programs Administration, 400 Seventh Street, SW, Washington, DC 20590, 202 366-4488

RIN: 2137-AA63

2006. CONSOLIDATION OF SPECIFICATIONS FOR HIGH-PRESSURE SEAMLESS CYLINDERS AND REWRITE OF 49 CFR 173.34

Significance: Nonsignificant

Legal Authority: 49 USC 1803 to 1808

CFR Citation: 49 CFR 172; 49 CFR 173

Legal Deadline: None.

Abstract: The Department will propose revision of requalification requirements for cylinders and proposed consolidation and revision of the specifications for high-pressure seamless cylinders. (Project No. 123-71).

Timetable:

Action	Date	FR Cite
NPRM	06/00/88	

Small Entity: No

Additional Information: Formerly entitled Review: Consolidation of Specifications for High-Pressure Seamless Cylinders.

Agency Contact: Charles H. Hochman, Department of Transportation, Research and Special Programs Administration, 400 Seventh Street, SW, Washington, DC 20590, 202 366-4545

RIN: 2137-AA92

2007. COLLECTION OF FINANCIAL INFORMATION FROM THE COMMUTER AIR CARRIER INDUSTRY

Significance: Nonsignificant

Legal Authority: 49 USC 1324; 49 USC 1371; 49 USC 1374; 49 USC 1386

CFR Citation: 14 CFR 298

Legal Deadline: None.

Abstract: DOT is proposing to collect basic financial information from the commuter carriers providing scheduled passenger service. Data would be used for fitness reviews; various economic analyses such as trust-fund revenue generation; airport and airways development; econometric modeling and regulatory cost-benefit analysis to aid aviation policy and regulatory decisions; and FAA's allocation planning for its inspection resources.

Timetable:

Action	Date	FR Cite
NPRM	04/00/88	
NPRM Comment Period End	06/00/88	

Small Entity: No

Analysis: Regulatory Evaluation 04/00/88

Agency Contact: Jack Calloway, Chief, Regulations Division, Department of Transportation, Research and Special Programs Administration, Office of Aviation Information Management, DAI-1/Room 4125, 400 Seventh Street, SW, Washington, DC 20590, 202 366-4383

RIN: 2137-AA96

2008. DELETION OF STANDARDS AFFECTING IRON AND COPPER PIPE AND OTHER MATERIALS

Significance: Nonsignificant

Legal Authority: 49 USC 1672; 49 USC 1804

CFR Citation: 49 CFR 192

Legal Deadline: None.

Abstract: This action proposes to delete the existing incorporation by reference of various documents intended for use in the design of gas pipelines. The materials to which the documents pertain are no longer generally used for gas pipelines so that reference to the documents can be deleted without affecting safety.

Timetable:

Action	Date	FR Cite
ANPRM	06/04/87	52 FR 21087
ANPRM Comment Period End	06/03/87	52 FR 21087
NPRM	04/00/88	

Small Entity: No

Additional Information: Docket No. PS-95

Analysis: Regulatory Evaluation 04/00/88

Agency Contact: P. Cory, Department of Transportation, Research and Special Programs Administration, 400 Seventh Street, SW, Washington, DC 20590, 202 366-4561

RIN: 2137-AB24

2009. ENFORCEMENT OF MOTOR CARRIER FINANCIAL RESPONSIBILITY REQUIREMENTS

Significance: Nonsignificant

Legal Authority: 49 USC 1803 to 1805; 49 USC 1808 to 1809; 49 USC 1655; 49 USC 1655(c); 49 USC 10927

CFR Citation: 49 CFR 171; 49 CFR 173; 49 CFR 387

Legal Deadline: None.

Abstract: This notice solicits comments on the merits of a petition for rulemaking from the National Tank Truck Carriers proposing to amend the Hazardous Materials Regulations to require shippers of hazardous materials by highway, in cargo tanks, to obtain documentary proof that the motor carrier possesses the minimum level of financial responsibility required by 49 CFR Part 387.

BEST COPY AVAILABLE

Timetable:

Action	Date	FR Cite
ANPRM	05/20/87	52 FR 19116
ANPRM Comment Period End	08/18/87	

Next Action Undetermined

Small Entity: Undetermined

Additional Information: Docket No. HM-199

Agency Contact: Joseph S. Nalevanko, Department of Transportation, Research and Special Programs Administration, 400 Seventh Street, SW, Washington, DC 20590, 202 366-4484

RIN: 2137-AB35

2010. STANDARDS FOR CONSTRUCTION OF FIREWORKS AND NOVELTIES; APPROVAL FOR TRANSPORTATION

Significance: Nonsignificant

Legal Authority: 49 USC 1802 to 1808

CFR Citation: 49 CFR 171; 49 CFR 173

Legal Deadline: None.

Abstract: Proposes to eliminate a requirement for examination of fireworks prior to their approval for transportation by the Director, Office of Hazardous Materials Transportation.

Timetable:

Action	Date	FR Cite
NPRM	02/12/88	53 FR 4348
NPRM Comment Period End	04/04/88	

Small Entity: Undetermined

Additional Information: Formerly entitled Standards for Construction of Fireworks and Approval for Transportation.

Agency Contact: Hattie L. Mitchell, Department of Transportation, Research and Special Programs Administration, 400 Seventh Street, SW, Washington, DC 20590, 202 366-4515

RIN: 2137-AB36

2011. ● DETECTION AND REPAIR OF CRACKS, PITS, CORROSION, LINING FLAWS, THERMAL DETECTION FLAWS, AND OTHER DEFECTS OF TANK CAR TANKS

Significance: Nonsignificant

Legal Authority: 49 USC 1803; 49 USC 1804; 49 USC 1805; 49 USC 1806

CFR Citation: 49 CFR 173

Legal Deadline: None.

Abstract: This rule would require tank-car owners and repair facilities to inspect for cracks and other defects after certain tank-car repairs to assure that no defects exist. A DOT Task Force assessed tank-car inspection and repair procedures and identified two major issues on which the ANPRM seeks comment: (1) the adequacy of crack detection and (2) the ability to repair detected cracks without collateral damage.

Timetable:

Action	Date	FR Cite
ANPRM	12/08/87	52 FR 46510
ANPRM Comment Period End	02/11/88	52 FR 46510
ANPRM Comment Period Extended to 05/13/88	02/16/88	53 FR 4862

Next Action Undetermined

Small Entity: Undetermined

Agency Contact: M. Morris/P. Olekszyk(FRA), Department of Transportation, Research and Special Programs Administration, 400 Seventh St., SW, Washington, DC 20590, 202 366-4488

RIN: 2137-AB40

2012. ● FUMIGATION

Significance: Nonsignificant

Legal Authority: 49 USC 1803; 49 USC 1804; 49 USC 1805

CFR Citation: 49 CFR 172; 49 CFR 173; 49 CFR 174

Legal Deadline: None.

Abstract: This proposal would revise the placarding requirements in the Hazardous Materials Regulations (HMR) to recognize the requirements of the Environmental Protection Agency (EPA) which address the placarding of commodities which have been fumigated. Those portions of the HMR which address the fumigation placard would be removed from the HMR to avoid duplication with EPA's requirements for placarding commodities which have been fumigated.

Timetable:

Action	Date	FR Cite
NPRM	12/00/88	

Small Entity: Undetermined

Agency Contact: Lee Jackson, Department of Transportation, Research and Special Programs Administration, 400 Seventh St., SW, Washington, DC 20590, 202 366-4488

RIN: 2137-AB41

2013. ● CONFORMING GAS AND LIQUID PIPELINE WELDING STANDARDS: FINAL PHASE

Significance: Nonsignificant

Legal Authority: 49 USC 1672; 49 USC 2002

CFR Citation: 49 CFR 192; 49 CFR 195

Legal Deadline: None.

Abstract: As part of a continuing policy to adopt similar requirements for gas and hazardous liquid pipelines where appropriate for safety, this action would be the last of a series of rulemakings undertaken to conform the gas and liquid pipeline welding standards.

Timetable:

Action	Date	FR Cite
NPRM	10/00/88	

Small Entity: No

Agency Contact: A. Garnett, Department of Transportation, Research and Special Programs Administration, 400 Seventh St., SW, Washington, DC 20590, 202 366-2036

RIN: 2137-AB45

2014. ● DETERMINING THE EXTENT OF CORROSION ON EXPOSED GAS PIPELINES

Significance: Nonsignificant

Legal Authority: 49 USC 1672

CFR Citation: 49 CFR 192

Legal Deadline: None.

Abstract: Corrosion is a major cause of gas and hazardous liquid pipeline accidents. A safety standard applicable to liquid pipelines requires operators to examine exposed pipe for evidence of external corrosion and, if harmful corrosion is found, to investigate further to determine the extent of the corrosion. As part of a continuing policy to adopt similar requirements for

VOL 53 ISS 79 PT 1 APR 25 1988 UMI

gas and liquid pipelines where appropriate for safety, this action proposes that exposed gas pipelines with evidence of harmful corrosion be investigated to determine the extent of the corrosion.

Timetable:

Action	Date	FR Cite
NPRM	10/00/88	

Small Entity: Yes

Additional Information: National Transportation Safety Board Recommendation P-87-3 provides a basis for this action.

Agency Contact: B. Liebler, Department of Transportation, Research and Special Programs Administration, 400 Seventh St., SW, Washington, DC 20590, 202 366-4560

RIN: 2137-AB50

2015. ● DOT 3AL ALUMINUM CYLINDERS; SAFETY PROBLEMS

Significance: Nonsignificant

Legal Authority: 49 USC 1803; 49 USC 1804; 49 USC 1805; 49 USC 1806; 49 USC 1808

CFR Citation: 49 CFR 178

Legal Deadline: None.

Abstract: Certain DOT 3AL cylinders made of aluminum alloy 6351 were discovered developing cracks during service and occasionally leaks developed resulting in loss of contents. This ANPRM is to alert and inform all persons possessing these cylinders of the problems, identify those cylinders at risk, and suggest steps to minimize risks. The ANPRM requests comments concerning ways to resolve the problems.

Timetable:

Action	Date	FR Cite
ANPRM	07/10/87	52 FR 26027
ANPRM Comment Period End	08/10/87	52 FR 26027
NPRM	12/00/88	

Small Entity: Undetermined

Agency Contact: C. Hochman, Department of Transportation, Research and Special Programs Administration, 400 Seventh St., SW, Washington, DC 20590, 202 366-4488

RIN: 2137-AB51

DEPARTMENT OF TRANSPORTATION (DOT)
Research and Special Programs Administration (RSPA)

Final Rule Stage

2016. + PERFORMANCE-ORIENTED PACKAGING STANDARDS

Significance: Regulatory Program

Legal Authority: 49 USC 1803; 49 USC 1804; 49 USC 1808

CFR Citation: 49 CFR 171; 49 CFR 172; 49 CFR 173; 49 CFR 176; 49 CFR 178; 49 CFR 179

Legal Deadline: None.

Abstract: To develop performance-oriented packaging standards and hazardous material classification based on the United Nations Committee of Experts on the Transport of Dangerous Goods. Also includes former non-significant rulemakings entitled "Consolidation of Specifications and Establishment of Performance Standards for Specification Bags" (Docket No. HM-153), "Specifications for and use of Specification 17 Steel Drums" (Docket No. HM-182), and "Organic Peroxide Requirements" (Project 186-72). The rulemaking is significant because a large number of specifications for packaging in the Hazardous Materials Regulations would be affected by this project. To a large extent the complexity and mass of the present Hazardous Materials Regulations are due to the detailed specification-type packaging standards contained in these regulations. To replace these with standards based on the U.N. system would both simplify the present regulations and facilitate international trade.

Timetable:

Action	Date	FR Cite
ANPRM	04/15/82	47 FR 16268
Correction Document and Notice of Meeting	06/17/82	47 FR 26172
Extension of Comment Period to 01/13/83	09/16/82	47 FR 40816
ANPRM Comment Period End	01/13/83	47 FR 40816
NPRM	05/05/87	52 FR 16482
NPRM Comment Period extended to 02/26/88	09/08/87	52 FR 33906
Supplemental NPRM	11/06/87	52 FR 42772
NPRM Comment Period End	02/26/88	52 FR 33906

Next Action Undetermined

Small Entity: No

Additional Information: Docket No. HM-181. A decision on whether to proceed with a final rule will be made following review and evaluation of comments to the docket. Comment period ended 2/26/88.

Analysis: Regulatory Flexibility Analysis; Regulatory Evaluation 05/05/87 (52 FR 16482)

Agency Contact: E. Mazzullo, Department of Transportation, Research and Special Programs Administration, 400 Seventh Street, SW, Washington, DC 20590, 202 366-4488

RIN: 2137-AA01

2017. + COLLECTION OF SERVICE SEGMENT DATA AND CHARTER DATA FROM FOREIGN AIR CARRIERS

Significance: Regulatory Program

Legal Authority: 49 USC 1301; 49 USC 1374; 49 USC 1381; 49 USC 1386; 49 USC 1482

CFR Citation: 14 CFR 217; 14 CFR 241

Legal Deadline: None.

Abstract: DOT has proposed a rule that would require submission to DOT of nonstop market data from foreign carriers providing scheduled service between their home countries and the United States. This information is needed to evaluate existing bilateral agreements and reciprocity between U.S. and foreign countries. In addition, international charter data currently collected from carriers would be incorporated with this reporting. This nonstop market data should replace much of the data collected by the Immigration and Naturalization Service

(INS) on Form I-92. Although there will be some start-up costs, it is anticipated that over the long run there will be substantial savings for both the industry and the government. See 2137-AB01 for companion rule for U.S. air carriers.

Timetable:

Action	Date	FR Cite
NPRM	07/15/87	52 FR 26498
NPRM Comment Period extended to 10/14/87	09/15/87	52 FR 34869
Final Action	09/00/88	

Small Entity: No

Affected Sectors: 45 Transportation by Air

Analysis: Regulatory Evaluation 07/15/87 (52 FR 26498)

Agency Contact: Jack Calloway, Chief, Regulations Division, Department of Transportation, Research and Special Programs Administration, Office of Aviation Information Management, DAI-1/Room 4125, 400 Seventh Street, SW, Washington, DC 20590, 202 366-4383

RIN: 2137-AA97

2018. + COLLECTION OF SERVICE SEGMENT DATA AND CHARTER DATA FROM U.S. AIR CARRIERS

Significance: Regulatory Program

Legal Authority: 49 USC 1324; 49 USC 1371; 49 USC 1377; 49 USC 1387

CFR Citation: 14 CFR 241

Legal Deadline: None.

Abstract: Large U.S. air carriers file detailed service segment data in ADP format for scheduled operations, while smaller carriers file a condensed version on a hardcopy form. Charter data is filed on another form. The Department has issued a rulemaking proposing to incorporate all three systems onto one automated data system by standardizing the reporting between scheduled and charter operations. Much of the data currently collected is proposed for elimination. Also, much of the data reported on the hardcopy Form 41 T-Schedules is proposed for elimination, since data for these schedules can be extracted from the automated system. Further, the foreign air carrier traffic and market reporting (2137-AA97) will be incorporated into this automated system providing a uniform traffic and market system for the Department.

Timetable:

Action	Date	FR Cite
NPRM	07/15/87	52 FR 26498
NPRM Comment Period extended to 10/14/87	09/15/87	52 FR 34869
Final Action	09/00/88	

Small Entity: No

Affected Sectors: 45 Transportation by Air

Analysis: Regulatory Evaluation 07/15/87 (52 FR 26498)

Agency Contact: Jack Calloway, Chief, Regulations Division, Department of Transportation, Research and Special Programs Administration, Office of Aviation Information Management, DAI-1/Room 4125, 400 Seventh Street, SW, Washington, DC 20590, 202 366-4383

RIN: 2137-AB01

2019. + REPORTING UNSAFE CONDITIONS ON GAS AND HAZARDOUS LIQUID PIPELINES AND AT LIQUEFIED NATURAL GAS FACILITIES

Significance: Regulatory Program

Legal Authority: 49 USC 1672(a); 49 USC 2002(a)

CFR Citation: 49 CFR 191; 49 CFR 192; 49 CFR 193; 49 CFR 195

Legal Deadline: Statutory, October 22, 1987. PL 99-516 (10/22/86)

Abstract: Operators would be required to report within five days of discovery any condition that could be an imminent danger or affect pipeline operational safety. The report would enable State and Federal agencies to investigate promptly. Few reports are expected, and the cost impact would be minimal.

Timetable:

Action	Date	FR Cite
NPRM	09/25/87	52 FR 36068
NPRM Comment Period End	11/09/87	
Final Action	04/00/88	

Small Entity: No

Analysis: Regulatory Evaluation 09/25/87 (52 FR 36068)

Agency Contact: L. Furrow, Department of Transportation, Research and Special Programs Administration, 400 Seventh St., SW, Washington, DC 20590, 202 366-2392

RIN: 2137-AB23

2020. + REQUIREMENTS FOR CARGO TANKS

Significance: Agency Priority

Legal Authority: 49 USC 1803 to 1808

CFR Citation: 49 CFR 173; 49 CFR 177; 49 CFR 178

Legal Deadline: None.

Abstract: The rule would modify cargo tank specifications in section 178.337-178.343 to improve clarity, quality control and safety and to provide for the manufacture of vacuum-loaded cargo tanks. It would also provide inspection, test, maintenance, repair, and requalification standards for cargo tanks. This rulemaking is being performed in conjunction with the FHWA. This rulemaking is considered significant because of substantial public interest.

Timetable:

Action	Date	FR Cite
ANPRM	06/29/82	47 FR 27876
NPRM	09/17/85	50 FR 37767
Corrections and Clarifications	12/05/85	50 FR 49866
NPRM Comment Period End	05/22/86	
Final Action	12/00/88	

Small Entity: Undetermined

Additional Information: Docket Nos. HM-183, 183A.

Analysis: Regulatory Evaluation 09/17/85 (50 FR 37767)

Agency Contact: J. O'Steen/ J. Pena, Department of Transportation, Research and Special Programs Administration, 400 Seventh Street, SW, Washington, DC 20590, 202 366-4545

RIN: 2137-AA42

2021. + DATA COLLECTION AND REPORTING: HAZARDOUS MATERIALS INCIDENT REPORTS

Significance: Agency Priority

Legal Authority: 49 USC 1803; 49 USC 1804; 49 USC 1809

CFR Citation: 49 CFR 171

Legal Deadline: None.

Abstract: The current regulations require reports of hazardous material

incidents. The objective of this review is to determine if the current data requirements can be modified to reduce the burden on industry but still result in the collection of the information needed for the hazardous materials safety program. Although safety programs, such as the one covered by these regulations, require data in order to function properly, it is possible that the data collection can be made less burdensome. This rulemaking is significant because of substantial public interest due to safety implications.

Timetable:

Action	Date	FR Cite
ANPRM	03/16/84	49 FR 10042
NPRM	03/27/87	52 FR 9996
NPRM Comment Period End	07/29/87	
Final Action	06/00/88	

Small Entity: No

Additional Information: Docket HM-36B.

Analysis: Regulatory Evaluation 03/27/87 (52 FR 9996)

Agency Contact: M. Morris, Department of Transportation, Research and Special Programs Administration, 400 Seventh Street, SW, Washington, DC 20590, 202 366-4488

RIN: 2137-AA51

2022. DEFINITION OF A FLAMMABLE SOLID

Significance: Nonsignificant

Legal Authority: 49 USC 1803 to 1806

CFR Citation: 49 CFR 173

Legal Deadline: None.

Abstract: This proposal involved new standards for classifying a material as a flammable solid. It is being incorporated into RIN 2137-AA01, Docket HM-121.

Timetable:

Action	Date	FR Cite
ANPRM	05/07/81	46 FR 25492
Consolidation Notice	04/00/88	

Small Entity: No

Additional Information: Formerly Docket HM-178.

Agency Contact: C. Ko, Department of Transportation, Research and Special Programs Administration, 400 Seventh Street, SW, Washington, DC 20590, 202 366-4496

RIN: 2137-AA05

2023. USE OF INTERESTED INSPECTORS FOR CYLINDER INSPECTIONS

Significance: Nonsignificant

Legal Authority: 49 USC 1803 to 1806

CFR Citation: 49 CFR 178

Legal Deadline: None.

Abstract: Proposal would result in ending of permitting "Interested" inspectors to perform inspections and testing of domestically manufactured low pressure gas cylinders.

Timetable:

Action	Date	FR Cite
NPRM	03/17/76	41 FR 1179

Next Action Undetermined

Small Entity: No

Additional Information: Docket No. HM-74A

Agency Contact: H. Mitchell, Department of Transportation, Research and Special Programs Administration, 400 Seventh Street, SW, Washington, DC 20590, 202 366-4488

RIN: 2137-AA08

2024. OXIDIZING MATERIALS DEFINITION, CRITERIA AND PROPOSED REGULATIONS

Significance: Nonsignificant

Legal Authority: 49 USC 1803 to 1806

CFR Citation: 49 CFR 173

Legal Deadline: None.

Abstract: Development of new standards for classifying a material as an oxidizing material.This proposal is being incorporated into RIN 2137-AA01, Docket HM-181.

Timetable:

Action	Date	FR Cite
ANPRM	06/15/81	46 FR 31294
Consolidation Notice	04/00/88	

Small Entity: No

Additional Information: Formerly Docket HM-179.

Agency Contact: M. Morris/C. Schultz, Department of Transportation, Research and Special Programs Administration, 400 Seventh Street, SW, Washington, DC 20590, 202 366-4488

RIN: 2137-AA11

2025. ODORIZATION OF LP GAS

Significance: Nonsignificant

Legal Authority: 49 USC 1803 o 1806

CFR Citation: 49 CFR 172

Legal Deadline: None.

Abstract: NPRM solicited comments on the benefit of requiring LP gas to be odorized. Odorization would enhance its identification during transportation in commerce. Comments to the NPRM indicated that further study should be made before proceeding to a final rule.

Timetable:

Action	Date	FR Cite
NPRM	09/27/84	49 FR 38164

Next Action Undetermined

Small Entity: No

Additional Information: Docket No. HM-126E.

Analysis: Regulatory Evaluation 09/27/84 (49 FR 38164)

Agency Contact: J. Potock, Department of Transportation, Research and Special Programs Administration, 400 Seventh Street, SW, Washington, DC 20590, 202 366-4488

RIN: 2137-AA25

2026. TRANSPORTATION OF HAZARDOUS MATERIALS; MISCELLANEOUS AMENDMENTS

Significance: Nonsignificant

Legal Authority: 49 USC 1803 to 1806

CFR Citation: 49 CFR 171 to 178

Legal Deadline: None.

Abstract: Nonsignificant regulations issued routinely and frequently as a part of an established body of technical requirements to keep those requirements operationally current. NPRM approximately every four months, with FR targeted approximately two months thereafter.

Timetable:

Action	Date	FR Cite
Periodic Update	03/19/85	50 FR 11048
NPRM	06/03/86	51 FR 19866
NPRM Comment Period End	09/04/86	51 FR 27223
Periodic Update	04/20/87	52 FR 13034

Action	Date	FR Cite
Periodic Update	04/00/88	

Small Entity: Undetermined

Additional Information: Docket No. HM-166.

Analysis: Regulatory Evaluation 03/22/84 (49 FR 10760)

Agency Contact: M. Morris, Department of Transportation, Research and Special Programs Administration, 400 Seventh Street, SW, Washington, DC 20590, 202 366-4488

RIN: 2137-AA44

2027. MODIFICATIONS TO DOT SPECIFICATION 21PF-1 OVERPACKS

Significance: Nonsignificant

Legal Authority: 49 USC 178; 49 USC 1803; 49 USC 1804; 49 USC 1808

CFR Citation: 49 CFR 178

Legal Deadline: None.

Abstract: This rulemaking responds to a Department of Energy request that DOT improve the water resistance of overpacks used in the transportation of enriched uranium hexafluoride.

Timetable:

Action	Date	FR Cite
NPRM	08/16/84	49 FR 32774
NPRM Comment Period End	09/12/84	
Final Action	04/00/88	

Small Entity: No

Additional Information: Docket No. HM-190.

Analysis: Regulatory Evaluation 08/16/84 (49 FR 32774)

Agency Contact: M. Wangler, Department of Transportation, Research and Special Programs Administration, 400 Seventh Street, SW, Washington, DC 20590, 202 366-4545

RIN: 2137-AA72

2028. LIMITATION ABOARD AIRCRAFT

Significance: Nonsignificant

Legal Authority: 49 USC 1803; 49 USC 1804; 49 USC 1807; 49 USC 1808

CFR Citation: 49 CFR 175

Legal Deadline: None.

Abstract: Proposes the removal of the fifty-pound limit on the quantity that may be stowed in an inaccessible location.

Timetable:

Action	Date	FR Cite
ANPRM	04/06/84	49 FR 13717
ANPRM Comment Period End	09/01/84	49 FR 13717
NPRM	02/13/85	50 FR 6013
NPRM Comment Period End	05/30/85	50 FR 6013

Next Action Undetermined

Small Entity: No

Additional Information: Further action to be determined based on NPRM comments.

Analysis: Regulatory Evaluation 02/13/85 (50 FR 6013)

Agency Contact: Ann Boylan, Transportation Reg. Specialist, Department of Transportation, Research and Special Programs Administration, 400 7th Street, SW, Washington, DC 20590, 202 366-4488

RIN: 2137-AA85

2029. EMERGENCY RESPONSE COMMUNICATION STANDARDS

Significance: Nonsignificant

Legal Authority: 49 USC 1803; 49 USC 1804; 49 USC 1805; 49 USC 1808

CFR Citation: 49 CFR 172

Legal Deadline: None.

Abstract: This proposal solicits comments on the potential benefits and consequences of requiring additional emergency response information on shipping papers and in vehicles when transporting hazardous materials.

Timetable:

Action	Date	FR Cite
ANPRM	03/16/84	49 FR 10048
Public Hearing held, Washington, D.C.	05/02/84	49 FR 10048
ANPRM Comment Period End	06/26/84	49 FR 10048
NPRM	08/20/87	52 FR 31466
NPRM Comment Period extended to 12/22/87	09/04/87	52 FR 33611
NPRM Comment Period End	09/21/87	52 FR 31466

Next Action Undetermined

Small Entity: No

Additional Information: HM-126C

Analysis: Regulatory Evaluation 08/20/87 (52 FR 31466)

Agency Contact: Lee Jackson, Department of Transportation, Research and Special Programs Administration, 400 7th Street, SW, Washington, DC 20590, 202 366-4488

RIN: 2137-AA88

2030. HAZARDOUS MATERIALS: URANIUM HEXAFLUORIDE

Significance: Nonsignificant

Legal Authority: 49 USC 1803; 49 USC 1804; 49 USC 1805; 49 USC 1806; 49 USC 1807; 49 USC 1808

CFR Citation: 49 CFR 171.7; 49 CFR 173.20

Legal Deadline: None.

Abstract: RSPA proposes to amend the Hazardous Materials Regulations to permit the continued use of packagings that do not meet the requirements of the American National Standards Institute (ANSI) Standard N 14.1 - 1987, DOT Class 106 A multi-unit tank car tanks, and certain packagings not manufactured in accordance with ANSI N 14.1-87. These latter packagings will be required to be manufactured in accordance with an earlier edition of ANSI 14.1, or be manufactured and stamped in accordance with Section VIII, Division 1 of the ASME Code. RSPA has determined that these packagings, which have been used safely in the past, should be permitted to continue in use.

Timetable:

Action	Date	FR Cite
NPRM	04/11/86	51 FR 12529
NPRM Comment Period End	07/01/86	51 FR 12529
Interim Final Rule	11/18/86	51 FR 41631
Revision to Final Rule	12/24/86	51 FR 46674
Emergency Final Rule	03/12/87	52 FR 7581
NPRM New	07/06/87	52 FR 25342
Revision to Final Rule	07/06/87	52 FR 25340
Amended NPRM	04/06/88	53 FR 11320
Comment period ends	05/06/88	

Small Entity: No

Additional Information: Docket No. HM-166V.

Analysis: Regulatory Evaluation 04/11/86 (51 FR 12529)

Agency Contact: M. Wangler, Department of Transportation, Research and Special Programs Administration, 400 Seventh Street, SW, Washington, DC 20590, 202 366-4545

RIN: 2137-AB10

2031. EXCEPTION FROM PRESSURE TESTING NON-WELDED TIE-IN JOINTS

Significance: Nonsignificant

Legal Authority: 49 USC 1672; 49 USC 1804

CFR Citation: 49 CFR 192.503(d)

Legal Deadline: None.

Abstract: The current exception from pressure testing welded tie-in joints would be expanded to include all types of tie-in joints. This change would be consistent with the intent of the original rule and would have minimal cost impact.

Timetable:

Action	Date	FR Cite
NPRM	01/15/88	53 FR 1045
NPRM Comment Period End	02/29/88	53 FR 1045
Final Action	07/00/88	

Small Entity: No

Additional Information: Docket No. PS-98.

Analysis: Regulatory Evaluation 01/15/88 (53 FR 1045)

Agency Contact: B. Liebler, Department of Transportation, Research and Special Programs Administration, 400 Seventh St., SW, Washington, DC 20590, 202 366-4560

RIN: 2137-AB19

2032. CONFIRMATION OR REVISION OF MAXIMUM ALLOWABLE OPERATING PRESSURE; ALTERNATE METHOD

Significance: Nonsignificant

Legal Authority: 49 USC 1672; 49 USC 1804

CFR Citation: 49 CFR 192.611(a)

Legal Deadline: None.

Abstract: This action proposes an alternate method for confirmation or revision of the maximum allowable operating pressure of pipelines previously tested to less than 90 percent of specified minimum yield strength. The alternate method would allow operators to establish a maximum allowable operating pressure in proportion to the level permitted for pipelines tested to 90 percent of specified minimum yield strength, or more, without retesting the pipeline. Considerable cost savings are expected.

Timetable:

Action	Date	FR Cite
NPRM	01/15/88	53 FR 1043
NPRM Comment Period End	03/15/88	53 FR 1043
Final Action	09/00/88	

Small Entity: No

Additional Information: Docket No. PS-97.

Analysis: Regulatory Evaluation 01/15/88 (53 FR 1043)

Agency Contact: B. Liebler, Department of Transportation, Research and Special Programs Administration, 400 Seventh St., SW, Washington, DC 20590, 202 366-4560

RIN: 2137-AB20

2033. MOLTEN SULFUR

Significance: Nonsignificant

Legal Authority: 49 USC 1803 to 1808

CFR Citation: 49 CFR 172; 49 CFR 173

Legal Deadline: None.

Abstract: RSPA is proposing to regulate molten sulfur as a hazardous material and make it subject to the hazardous materials communications requirements.

Timetable:

Action	Date	FR Cite
NPRM	11/21/86	51 FR 42114
NPRM Comment Period End	02/19/87	51 FR 42114
Final Action	04/00/88	

Small Entity: No

Additional Information: Docket No. HM-198.

Analysis: Regulatory Evaluation 11/21/86 (51 FR 42114)

Agency Contact: John Potock, Department of Transportation, Research and Special Programs Administration, 400 Seventh Street, SW, Washington, DC 20590, 202 366-4488

RIN: 2137-AB31

2034. STATE DESIGNATIONS OF ALTERNATIVE ROUTES FOR RADIOACTIVE MATERIALS TRANSPORTATION

Significance: Nonsignificant

Legal Authority: 49 USC 1804

CFR Citation: 49 CFR 177

Legal Deadline: None.

Abstract: Proposes to amend the Hazardous Materials Regulations to require that when a State routing agency designates an alternative route for the transportation of highway route controlled quantities of radioactive materials, the State must give written notice of such designations to RSPA. The creation of a repository for these designations would provide shippers, carriers, enforcement and emergency-response personnel, State agencies, local governments, and RSPA with definitive information concerning those alternative routes.

Timetable:

Action	Date	FR Cite
NPRM	07/16/87	52 FR 26928
NPRM Comment Period End	08/31/87	52 FR 26928
Final Action	04/00/88	

Small Entity: No

Additional Information: Docket No. HM-164A.

Analysis: Regulatory Evaluation 07/16/87 (52 FR 26928)

Agency Contact: John Gale, Transportation Regulations Specialist, Department of Transportation, Research and Special Programs Administration, 400 Seventh Street, SW, Washington, DC 20590, 202 366-4488

RIN: 2137-AB32

2035. NOTIFICATION TO RSPA OF ROUTE PLANS FOR RADIOACTIVE MATERIALS TRANSPORTATION

Significance: Nonsignificant

Legal Authority: 49 USC 1804

CFR Citation: 49 CFR 173; 49 CFR 177

Legal Deadline: None.

Abstract: Proposes to require carriers, rather than shippers, to give written notice to RSPA of route plans and other information relating to transportation of highway route controlled quantities of radioactive materials.

VOL 53 ISS 79 PT 1 AP 25 1988 UMI

DOT—RSPA

Final Rule Stage

Timetable:

Action	Date	FR Cite
NPRM	07/16/87	52 FR 26932
NPRM Comment Period End	08/31/87	52 FR 26932
Final Action	04/00/88	

Small Entity: No

Additional Information: Docket No. HM-164B.

Analysis: Regulatory Evaluation 07/16/87 (52 FR 26932)

Agency Contact: John Gale, Transportation Regulations Specialist, Department of Transportation, Research and Special Programs Administration, 400 Seventh Street, SW, Washington, DC 20590, 202 366-4488

RIN: 2137-AB33

2036. REAR BUMPERS ON CARGO TANK TRUCKS

Significance: Nonsignificant

Legal Authority: 49 USC 1803 to 1808

CFR Citation: 49 CFR 173

Legal Deadline: None.

Abstract: Proposes to provide a period of 36 months to allow operators of cargo tank trucks operated in combination with cargo tank full trailers to modify their front units by adding the required rear bumper.

This rulemaking is being performed in conjunction with the FHWA.

Timetable:

Action	Date	FR Cite
NPRM	08/08/86	51 FR 28605
NPRM Comment Period End	09/22/86	
Final Action	05/00/88	

Small Entity: No

Additional Information: Docket No. HM-183B.

Analysis: Regulatory Evaluation 08/08/86 (51 FR 28605)

Agency Contact: James O'Steen/D. Billings (FWHA), Department of Transportation, Research and Special Programs Administration, 400 Seventh Street, SW, Washington, DC 20590, 202 366-4545

RIN: 2137-AB34

2037. ● SHIPPERS: USE OF TANK-CAR TANKS WITH LOCALIZED THIN SPOTS

Significance: Nonsignificant

Legal Authority: 49 USC 1803; 49 USC 1804; 49 USC 1805; 49 USC 1806

CFR Citation: 49 CFR 173

Legal Deadline: None.

Abstract: This notice proposes to allow the use of railroad tank-car tanks with shell thicknesses in localized areas of less than the minimum currently allowed. The rule would require that tank shells be measured under specific conditions to ensure that the results of repairs do not further decrease shell thickness or result in a reduction in the level of safety. Under the existing rule, owners are required to bring tanks into conformance or remove them from hazardous materials service. This proposal would allow the tank cars to conform to a less stringent standard thereby avoiding the substantial costs associated with complete restoration or purchase of a new tank car, while still ensuring an adequate level of safety.

Timetable:

Action	Date	FR Cite
NPRM	12/08/87	52 FR 46511
NPRM Comment Period End	02/11/88	52 FR 46511
SNPRM Comment Period Extended to 05/13/88	02/18/88	53 FR 4862
Final Action	06/00/88	

Small Entity: No

Analysis: Regulatory Evaluation 12/08/87 (52 FR 46511)

Agency Contact: M. Morris/P. Gleksyk(FRA), Department of Transportation, Research and Special Programs Administration, 400 Seventh St., SW, Washington, DC 20590, 202 366-4488

RIN: 2137-AB39

DEPARTMENT OF TRANSPORTATION (DOT)

Research and Special Programs Administration (RSPA)

Completed Actions

2038. + STATE PIPELINE SAFETY INSPECTOR STANDARDS

Significance: Regulatory Program

Legal Authority: 49 USC 2004; 49 USC 1674

CFR Citation: 49 CFR 190

Legal Deadline: None.

Abstract: This action contemplated standards for State personnel who engage in compliance activities under the Federal/State cooperative pipeline safety program. The action is being removed from the Agenda pending legislative clarification of authority.

Timetable:

Action	Date	FR Cite
Action terminated	01/25/88	

Small Entity: No

Additional Information: At the time this agenda was prepared, future action was pending the enactment of statutory amendments needed to clarify the Department's authority in setting standards for State employees.

Agency Contact: C. DeLeon, Assistant Director for Regulations, Office of Pipeline Safety, Department of Transportation, Research and Special Programs Administration, 400 7th Street, SW, Washington, DC 20590, 202 366-1648

RIN: 2137-AB28

2039. REVISION OF THE IM TANK TABLE

Significance: Nonsignificant

Legal Authority: 49 USC 1803 to 1806

CFR Citation: 49 CFR 173

Legal Deadline: None.

Abstract: Contemplated revision to the IM Tank Table, by incorporating interim approvals granted, has been consolidated into RIN 2137-AA01, Docket HM-181.

Timetable:

Action	Date	FR Cite
Merged into Docket HM-181 (RIN 2137-AA01)	12/21/87	

DOT—RSPA **Completed Actions**

Small Entity: No

Additional Information: Formerly Docket HM-167A.

Agency Contact: Lee Jackson/Charles Ke, Department of Transportation, Research and Special Programs Administration, 400 Seventh Street, SW, Washington, DC 20590, 202 366-4488

RIN: 2137-AA64

2040. REWRITE AND RECODIFICATION OF SECTION 173.34

Significance: Nonsignificant

Legal Authority: 49 USC 1803 to 1806

CFR Citation: 49 CFR 173.34

Legal Deadline: None.

Abstract: Recodification and rewrite would provide industry with regulations set up by the functions to be performed, providing a more simplified and readable regulation. Proposal would include consolidation of DOT specification seamless steel and aluminum cylinders, and requalification, maintenance, and use requirements to be provided under new Part 180. This action has been incorporated into RIN 2137-AA92, entitled "Consolidation of Specifications for High-Pressure Seamless Cylinders and Rewrite of 49 CFR 173.34."

Timetable:

Action	Date	FR Cite
Merged into RIN 2137-AA92	12/21/87	

Small Entity: No

Additional Information: Project No. 305-83

Agency Contact: M. Morris, Technical Staff, Department of Transportation, Research and Special Programs Administration, 400 Seventh Street, SW, Washington, DC 20590, 202 366-4488

RIN: 2137-AA73

2041. PIPELINE SAFETY STANDARDS AND PROCEDURES; MISCELLANEOUS AMENDMENTS

Significance: Nonsignificant

Legal Authority: 49 USC 1672; 49 USC 1804

CFR Citation: 49 CFR 190; 49 CFR 192

Legal Deadline: None.

Abstract: Various editorial and other minor changes were made to the gas pipeline safety standards.

Timetable:

Action	Date	FR Cite
Final Action	01/21/88	53 FR 1633
Final Action Effective	02/22/88	53 FR 1633

Small Entity: No

Additional Information: Docket No. PS-99. Formerly entitled Transportation of Natural and Other Gas by Pipeline; Miscellaneous Amendments.

Agency Contact: B. Liebler, Department of Transportation, Research and Special Programs Administration, 400 Seventh St., SW, Washington, DC 20590, 202 366-4560

RIN: 2137-AB22

DEPARTMENT OF TRANSPORTATION (DOT) **Prerule Stage**

Maritime Administration (MarAd)

2042. + PARTICIPATION BY VESSELS BUILT WITH CONSTRUCTION-DIFFERENTIAL SUBSIDY IN THE CARRIAGE OF OIL FROM ALASKA IN THE DOMESTIC TRADE

Significance: Agency Priority

Legal Authority: 46 USC 1114(b); 46 USC 1156

CFR Citation: 46 CFR 250

Legal Deadline: None.

Abstract: This regulation now establishes conditions for MARAD approval of tanker vessels over 100,000 dwt built with CDS, for participation in the carriage of Alaskan oil from Alaska to the Panama Canal. MARAD is reassessing the need for this regulation in light of the experience in administering its provisions, its policy of allowing total repayment of CDS (46 CFR Part 276) and litigation challenging these policies. This rulemaking is significant due to substantial public interest.

Timetable:

Action	Date	FR Cite
Next Action Undetermined		

Small Entity: No

Agency Contact: Frances Olsen, Chief, Division of Trade Studies, Department of Transportation, Maritime Administration, 400 Seventh Street, SW, Room 8117, Washington, DC 20590, 202 366-2282

RIN: 2133-AA62

2043. STATISTICAL DATA FOR USE IN OPERATING-DIFFERENTIAL SUBSIDY (ODS) APPLICATION HEARINGS

Significance: Nonsignificant

Legal Authority: 46 USC 1175

CFR Citation: 46 CFR 207

Legal Deadline: None.

Abstract: Rulemaking would propose procedures that would assist preparation of standard forecasts of liner cargo (if a Final Rule covering ODS application hearing procedures is issued) in which forecast procedures would be included.

Timetable:

Action	Date	FR Cite
Next Action Undetermined		

Small Entity: No

Additional Information: Further action dependent on disposition of RIN 2133-AA20.

Affected Sectors: 441 Deep Sea Foreign Transportation of Freight

Agency Contact: Edmond J. Fitzgerald, Director, Office of Trade Analysis and Insurance, Department of Transportation, Maritime Administration, 400 Seventh Street, SW, Washington, DC 20590, 202 366-2400

RIN: 2133-AA16

2044. REGULATIONS AND MINIMUM STANDARDS FOR STATE, TERRITORIAL, OR REGIONAL MARITIME ACADEMIES AND COLLEGES

Significance: Nonsignificant

Legal Authority: 46 USC 1295

CFR Citation: 46 CFR 310

Legal Deadline: None.

Abstract: The Maritime Administration provides support to six State maritime schools for maritime education. The Federal support is outlined in agreements that have been executed between MARAD and the schools. The existing regulations will be revised to reflect changes in these agreements due to decreased federal support.

Timetable:

Action	Date	FR Cite
Next Action Undetermined		

Small Entity: No

Affected Sectors: 441 Deep Sea Foreign Transportation of Freight; 442 Deep Sea Domestic Transportation of Freight; 443 Freight Transportation on the Great Lakes-St. Lawrence Seaway; 822 Colleges, Universities, Professional Schools, and Junior Colleges

Government Levels Affected: State, Federal

Agency Contact: Arthur W. Friedberg, Director, Office of Maritime Labor & Training, Department of Transportation, Maritime Administration, 400 Seventh Street, SW, Washington, DC 20590, 202 366-5755

RIN: 2133-AA57

DEPARTMENT OF TRANSPORTATION (DOT)

Maritime Administration (MarAd)

Proposed Rule Stage

2045. + CARGO PREFERENCE, U.S.-FLAG VESSELS: DETERMINATION OF FAIR AND REASONABLE RATES FOR BULK VESSELS

Significance: Regulatory Program

Legal Authority: 46 USC 1241(b); 46 USC 1114(b)

CFR Citation: 46 CFR 382, (New)

Legal Deadline: None.

Abstract: This regulation would require provision of rate and cost data to MARAD so it can determine fair and reasonable rates for carriage of preference cargo in bulk vessels at the request of concerned Federal agencies. MARAD would calculate guideline fair and reasonable rates using a methodology which would base those rates on a vessel's actual or constructed costs as determined from data submitted by the operator. It would establish requirements for submission of data on which the methodology would be based. This rulemaking is significant because it concerns a matter on which there is substantial public interest. It would clarify the meaning of a statutory term.

Timetable:

Action	Date	FR Cite
NPRM	08/06/85	50 FR 31735
NPRM Comment Period End	10/07/85	
NPRM Supplemental	12/17/86	51 FR 45135
SNPRM	04/00/88	

Small Entity: No

Additional Information: This rulemaking has split from an earlier rulemaking: Cargo Preference - U.S. Flag Vessels - Determination of Fair and Reasonable Rates for Liners (RIN = 2133-AA02). Cargo preference regulation was last revised in 1977 (46 CFR 381).

Affected Sectors: 441 Deep Sea Foreign Transportation of Freight

Analysis: Supplemental Draft Evaluation 12/17/86 (51 FR 45135)

Agency Contact: Arthur B. Sforza, Director, Office of Ship Operating Assistance, Department of Transportation, Maritime Administration, 400 Seventh Street, SW, Washington, DC 20590, 202 366-2323

RIN: 2133-AA43

2046. ● + OPERATING-DIFFERENTIAL SUBSIDY FOR BULK CARGO VESSELS ENGAGED IN WORLDWIDE SERVICES; EXCLUSION OF COMMERCIAL CARGOES RESERVED FOR U.S.-FLAG CARRIERS

Significance: Regulatory Program

Legal Authority: 46 USC 1114, (Appendix)

CFR Citation: 46 CFR 252

Legal Deadline: None.

Abstract: The Maritime Administration (MARAD) has entered into operating-differential subsidy contracts (ODSA) with operators of bulk cargo vessels that provide for the subsidized carriage of commercial cargo in the oceanborne foreign commerce of the United States and between foreign ports. These ODSAs specifically exclude the carriage of statutory-preference cargoes, but are silent about the cargoes that, while not preference cargoes according to a district court decision that was affirmed by the Court of Appeals for the District of Columbia, are reserved to U.S.-flag carriers by agreement of a foreign country that is a recipient of United States foreign assistance, in the form of cash transfers or grants. MARAD intends to propose a rulemaking that states the policy of not paying ODS on these cargoes that are reserved to U.S.-flag vessels at premium rates and are not subject to foreign competition, based on the conclusion that these are not "commercial" cargoes within the contemplation of the ODSA provisions.

Timetable:

Action	Date	FR Cite
NPRM	04/00/88	

Small Entity: No

Agency Contact: Edmond Fitzgerald, Director, Off. of Trade Analysis & Insurance, Department of Transportation, Maritime Administration, DOT/MARAD, 400 Seventh St., SW, Washington, DC 20590, 202 366-2400

RIN: 2133-AA66

2047. + CARGO PREFERENCE – IMPLEMENTATION OF P.L. 99-198

Significance: Agency Priority

Legal Authority: 46 USC 1241

CFR Citation: 46 CFR 381

Legal Deadline: None.

Abstract: These amendments to the existing cargo-preference regulations

will implement S1142 of P.L. 98-198, the Food Security Act of 1985, that clarifies the applicability of cargo-preference requirements to the shipment of U.S. agricultural products. It provides for an increase in the required percentage of carriage on U.S.-flag vessels of agricultural commodities not specifically exempted from cargo-preference requirements. This rulemaking is considered significant because of substantial public interest.

Timetable:

Action	Date	FR Cite
NPRM	04/00/88	

Small Entity: No

Affected Sectors: 441 Deep Sea Foreign Transportation of Freight

Government Levels Affected: Federal

Analysis: Draft Evaluation 04/00/88

Agency Contact: Lewis C. Paine, Director, Office of Market Development, Department of Transportation, Maritime Administration, 400 Seventh Street, SW, Washington, DC 20590, 202 366-5517

RIN: 2133-AA55

2048. RULES OF PRACTICE AND PROCEDURES FOR HEARING IN ODS APPLICATIONS

Significance: Nonsignificant

Legal Authority: 46 USC 1114(b)

CFR Citation: 46 CFR 201; 46 CFR 208; 46 CFR 251

Legal Deadline: None.

Abstract: Amendments to existing agency rules of practice and procedure and regulations governing applications for financial assistance, as well as new Part 208, that would establish a standard discovery order and standard techniques for forecasting the adequacy of U.S.-flag liner service in hearings required under the Merchant Marine Act, 1936.

Timetable:

Action	Date	FR Cite
NPRM	06/25/79	44 FR 37003

Next Action Undetermined

Small Entity: No

Affected Sectors: 441 Deep Sea Foreign Transportation of Freight; 443 Freight Transportation on the Great Lakes-St. Lawrence Seaway

Agency Contact: Edmond J. Fitzgerald, Director, Office of Trade Analysis and Insurance, Department of Transportation, Maritime Administration, 400 Seventh Street, SW, Washington, DC 20590, 202 366-2400

RIN: 2133-AA20

2049. REQUIREMENTS FOR CONDUCTING VESSEL SUBSIDY CONDITION SURVEYS AND FOR ACCOMPLISHING SUBSIDIZED VESSEL MAINTENANCE AND REPAIRS

Significance: Nonsignificant

Legal Authority: 46 USC 1114(b); 46 USC 1173

CFR Citation: 46 CFR 272

Legal Deadline: None.

Abstract: MARAD is considering a proposal to amend its regulations concerning the requests for conducting condition surveys of subsidized vessels and accomplishing subsidized maintenance and repairs, in order to conform the regulations to reflect existing procedures of the agency and to advise the public of MARAD organizational changes.

Timetable:

Action	Date	FR Cite
NPRM	04/00/88	

Small Entity: No

Affected Sectors: 441 Deep Sea Foreign Transportation of Freight

Government Levels Affected: Federal

Agency Contact: John J. Davis, Chief, Div. of Ship Management, Department of Transportation, Maritime Administration, DOT/MARAD, 400 Seventh St., SW, Washington, DC 20590, 202 366-5776

RIN: 2133-AA64

2050. ● CAPITAL CONSTRUCTION FUND – FEDERAL TAX AMENDMENTS

Significance: Nonsignificant

Legal Authority: 46 USC 1114(b)

CFR Citation: 46 CFR 390.391

Legal Deadline: None.

Abstract: The Maritime Administration is amending its regulations concerning the Capital Construction Fund (CCF) to give effect to amendments in the Tax Reform Act of 1986 (P.L. 99-514) relative to the operation of a CCF.

Timetable:

Action	Date	FR Cite
NPRM	04/00/88	

Small Entity: No

Affected Sectors: 441 Deep Sea Foreign Transportation of Freight; 449 Services Incidental to Water Transportation; 443 Freight Transportation on the Great Lakes-St. Lawrence Seaway

Government Levels Affected: Federal

Agency Contact: Jean E. McKeever, Chief, Div. of Capital Assets Management, Department of Transportation, Maritime Administration, DOT/MARAD, 400 Seventh St., SW, Washington, DC 20590, 202 366-1965

RIN: 2133-AA65

2051. ● GENERAL PROCEDURES FOR DETERMINING OPERATING DIFFERENTIAL SUBSIDY FOR LINER VESSELS

Significance: Nonsignificant

Legal Authority: 46 App USC 1114(b)

CFR Citation: 46 CFR 282

Legal Deadline: None.

Abstract: The Maritime Administration (MARAD) proposes to amend the procedure for determining ODS for liner vessels operating in the foreign commerce of the United States. In determining rates for wage subsidy, MARAD proposes to use the U.S./foreign cost relationship at a point in time that is one year earlier than the date now used, and would also use a different and longer period as the basis for calculating the respective currency exchange rates.

Timetable:

Action	Date	FR Cite
NPRM	04/00/88	

Small Entity: No

Affected Sectors: 441 Deep Sea Foreign Transportation of Freight; 448 Water Transportation of Passengers

Government Levels Affected: Federal

Agency Contact: Arthur Sforza, Director, Office of Ship Operating Assistance, Department of Transportation, Maritime Administration, DOT/MARAD (560) 400

Seventh Street, SW, Washington, DC 20590, 202 366-2323

RIN: 2133-AA67

2052. ● OPERATING-DIFFERENTIAL SUBSIDY FOR BULK CARGO VESSELS ENGAGED IN WORLDWIDE SERVICE

Significance: Nonsignificant

Legal Authority: 46 App. USC 1114(b)

CFR Citation: 46 CFR 252

Legal Deadline: None.

Abstract: The Maritime Administration proposes to amend the procedure for determining ODS for bulk cargo vessels operating in the foreign commerce of the United States. In determining rates for wage subsidy, MARAD proposes to use the U.S./foreign cost relationship at a point in time that is one year earlier than the date now used, and would also use a different and longer period as the basis for calculating the respective currency exchange rates.

Timetable:

Action	Date	FR Cite
NPRM	04/00/88	

Small Entity: No

Affected Sectors: 441 Deep Sea Foreign Transportation of Freight; 448 Water Transportation of Passengers

Government Levels Affected: Federal

Agency Contact: Arthur Sforza, Director, Office of Ship Operating Assistance, Department of Transportation, Maritime Administration, DOT/MARAD (560) 400 Seventh Street, SW, Washington, DC 20590, 202 366-2323

RIN: 2133-AA68

2053. ● CARGO PREFERENCE – U.S.-FLAG VESSELS; DEPARTMENT OF DEFENSE SPONSORED AND GENERATED OCEANBORNE CARGOES

Significance: Nonsignificant

Legal Authority: 46 USC 1241(b)

CFR Citation: 46 CFR 381

Legal Deadline: None.

Abstract: MARAD is formalizing procedures that have been adopted by one or more agencies within the Department of Defense (DOD) to accomplish compliance with two cargo preference statutes that require that minimum specified percentages of oceanborne cargoes sponsored and generated by DOD be carried on privately owned U.S.-flag commercial vessels, and is making each of these procedures applicable to all DOD agencies, where appropriate. Most of these procedures are now contained in internal DOD documents.

Timetable:

Action	Date	FR Cite
NPRM	04/00/88	

Small Entity: No

Affected Sectors: 441 Deep Sea Foreign Transportation of Freight; 443 Freight Transportation on the Great Lakes-St. Lawrence Seaway; 473 Arrangement of Transportation of Freight and Cargo; 971 National Security

Government Levels Affected: Federal

Agency Contact: S. Thomas Romeo, Chief, Division of National Cargo, Department of Transportation, Maritime Administration, 400 Seventh Street SW (MAR-820), Room 7209, Washington, DC 20590, 202 366-4610

RIN: 2133-AA69

DEPARTMENT OF TRANSPORTATION (DOT)

Maritime Administration (MarAd)

Final Rule Stage

2054. + APPROVAL OF MARINE HULL UNDERWRITERS

Significance: Agency Priority

Legal Authority: 46 USC 1114(b); 46 USC 1279(b)

CFR Citation: 46 CFR 299, (New)

Legal Deadline: None.

Abstract: This notice of proposed rulemaking would establish MARAD's criteria for accepting an organization as an underwriter on any policy of insurance covering vessels under Title XI and Title VI programs or other MARAD administered aid programs. This rulemaking is significant because of substantial public interest.

Timetable:

Action	Date	FR Cite
ANPRM	10/11/85	50 FR 41531
ANPRM Comment Period End	11/12/85	50 FR 41531
Public meeting	04/17/86	
NPRM	10/16/87	52 FR 33481
NPRM Comment Period End	12/15/87	52 FR 33481
Comment Period extended to 01/15/88	12/17/87	52 FR 48077
Final Action	04/00/88	

Small Entity: No

Analysis: Regulatory Evaluation 04/00/88

Agency Contact: William B. Ebersold, Maritime Aids Specialist, Department of Transportation, Maritime Administration, 400 Seventh Street, SW, Room 8126, Washington, DC 20590, 202 366-0364

RIN: 2133-AA50

2055. + CARGO PREFERENCE, U.S.-FLAG VESSELS: EVALUATION OF BIDS FOR SUBSIDIZED LINER VESSELS

Significance: Agency Priority

Legal Authority: 46 USC 1241

CFR Citation: 46 CFR 381.8

Legal Deadline: None.

Abstract: This regulation would establish procedures governing the evaluation by U.S. shipper agencies of bids from subsidized U.S.-flag-liner vessel operators for the carriage of open rated civilian and military preference cargoes. This rulemaking is considered significant because of substantial public interest.

Timetable:

Action	Date	FR Cite
NPRM	02/10/86	51 FR 5015
Final Action	04/00/88	

Small Entity: No

Additional Information: On 11/11/84, MARAD issued a final rule setting forth procedures governing the evaluation by shipper agencies of bids from U.S.-flag bulk vessel operators for the carriage of dry bulk preference cargoes. Final

action awaiting final rulemaking publication by Department of Agriculture.

Government Levels Affected: Federal

Agency Contact: Arthur B. Sforza, Director, Office of Ship Operating Assistance, Department of Transportation, Maritime Administration, 400 Seventh Street, SW, Washington, DC 20590, 202 366-2323

RIN: 2133-AA52

2056. SUSPENSION OF ODS AGREEMENTS FOR ALL OR PORTION OF THE VESSELS INCLUDED THEREIN

Significance: Nonsignificant

Legal Authority: 46 USC 1184; 46 USC 1114(b); PL 97-35

CFR Citation: 46 CFR 295, (New)

Legal Deadline: None.

Abstract: These regulations would implement Sec. 1603 of the Omnibus Budget Reconciliation Act of 1981 (P.L. 97-35), which adds a new Sec. 614 to the Merchant Marine Act, 1936 (46 App. U.S.C. 1184).

Timetable:

Action	Date	FR Cite
NPRM	08/18/83	48 FR 37449
To Be Withdrawn	04/00/88	

Small Entity: No

Additional Information: NPRM being withdrawn because the Maritime Subsidy Board final Opinion and Order in Docket S-764, that does not require CDS repayment for bulk vessels carrying preference cargoes, is a more attractive alternative for operators than ODS suspension that requires CDS repayment. Also, operator of only liner vessels to make election is in bankruptcy.

Affected Sectors: 441 Deep Sea Foreign Transportation of Freight

Agency Contact: Raymond Barberesi, Department of Transportation, Maritime Administration, 400 Seventh Street, SW, Washington, DC 20590, 202 366-2256

RIN: 2133-AA17

2057. MARINE PROTECTION AND INDEMNITY INSURANCE INSTRUCTIONS UNDER GENERAL AGENCY AND BERTH AGENCY AGREEMENTS

Significance: Nonsignificant

Legal Authority: 46 USC 1114(b)

CFR Citation: 46 CFR 326

Legal Deadline: None.

Abstract: These amendments would reflect existing Maritime Administration (MARAD) practices, office names and addresses concerning the handling of marine protection insurance (P&I) claims by Agents under Agreements with the United States, acting by and through the Director, National Shipping Authority in MARAD, with respect to vessels under MARAD control in the National Defense Reserve Fleet.

Timetable:

Action	Date	FR Cite
NPRM	05/14/86	51 FR 17659
NPRM Comment Period End	07/14/86	
Final Action	04/00/88	

Small Entity: No

Affected Sectors: 441 Deep Sea Foreign Transportation of Freight; 442 Deep Sea Domestic Transportation of Freight

Agency Contact: Edmond J. Fitzgerald, Director, Office of Trade Analysis & Insurance, Department of Transportation, Maritime Administration, 400 Seventh Street, SW, Room 8117, Washington, DC 20590, 202 366-2406

RIN: 2133-AA51

DEPARTMENT OF TRANSPORTATION (DOT) — Completed Actions

Maritime Administration (MarAd)

2058. + CARGO PREFERENCE U.S.-FLAG VESSELS; DETERMINATION OF FAIR AND REASONABLE RATES FOR LINER VESSELS

Significance: Regulatory Program

Legal Authority: 46 USC 1241(b); 46 USC 1114(b)

CFR Citation: 46 CFR 382, (New)

Legal Deadline: None.

Abstract: Regulation requires provision of rate and cost data to MARAD so it can determine fair and reasonable rates for carriage of preference cargo at the request of concerned Federal agencies. This rulemaking was significant because it concerns a matter on which there is substantial public interest. It was needed to clarify the meaning of a statutory term.

Timetable:

Action	Date	FR Cite
NPRM	02/10/86	51 FR 5012
Final Action	10/09/87	
Final Action Effective	11/09/87	52 FR 37769

Small Entity: No

Analysis: Final Regulatory Evaluation 10/09/87 (52 FR 37769)

Agency Contact: Arthur B. Sforza, Director, Office of Ship Operating Assistance, Department of Transportation, Maritime Administration, 400 Seventh Street, SW, Washington, DC 20590, 202 366-2323

RIN: 2133-AA02

2059. REVIEW: WAR RISK INSURANCE

Significance: Nonsignificant

Legal Authority: 46 USC 1283

CFR Citation: 46 CFR 306

Legal Deadline: None.

Abstract: Final rule expands eligibility for War Risk Insurance to foreign flag vessels other than those documented under the laws of Panama, Liberia or Honduras, that are effectively U.S.-controlled vessels.

Timetable:

Action	Date	FR Cite
NPRM	10/16/87	52 FR 38386
NPRM Comment Period End	12/15/87	
Final Action	03/14/88	53 FR 8186

Action	Date	FR Cite
Final Action Effective	04/13/88	

Small Entity: No

Affected Sectors: 44 Water Transportation; 633 Fire, Marine, and Casualty Insurance

Agency Contact: Edmond J. Fitzgerald, Director, Office of Trade Analysis & Insurance, Department of Transportation, Maritime Administration, 400 Seventh Street, SW, Room 8117, Washington, DC 20590, 202 366-2400

RIN: 2133-AA54

[FR Doc. 88-8846 Filed 04-22-88; 8:45 am]

BILLING CODE 4910-81-T

VOL 53 ISS 79 PT 1 AP 25 1988 UMI

Reader Aids

Federal Register

Vol. 53, No. 79

Monday, April 25, 1988

INFORMATION AND ASSISTANCE

Federal Register

Index, finding aids & general information	523-5227
Public inspection desk	523-5215
Corrections to published documents	523-5237
Document drafting information	523-5237
Machine readable documents	523-5237

Code of Federal Regulations

Index, finding aids & general information	523-5227
Printing schedules	523-3419

Laws

Public Laws Update Service (numbers, dates, etc.)	523-6641
Additional information	523-5230

Presidential Documents

Executive orders and proclamations	523-5230
Public Papers of the Presidents	523-5230
Weekly Compilation of Presidential Documents	523-5230

The United States Government Manual

General information	523-5230

Other Services

Data base and machine readable specifications	523-3408
Guide to Record Retention Requirements	523-3187
Legal staff	523-4534
Library	523-5240
Privacy Act Compilation	523-3187
Public Laws Update Service (PLUS)	523-6641
TDD for the deaf	523-5229

FEDERAL REGISTER PAGES AND DATES, APRIL

10519–10868	1
10869–11030	4
11031–11238	5
11239–11486	6
11487–11632	7
11633–11814	8
11815–11990	11
11991–12136	12
12137–12370	13
12371–12508	14
12509–12670	15
12671–12758	18
12759–12908	19
12909–13096	20
13097–13234	21
13235–13398	22
13399–14772	25

CFR PARTS AFFECTED DURING APRIL

At the end of each month, the Office of the Federal Register publishes separately a List of CFR Sections Affected (LSA), which lists parts and sections affected by documents published since the revision date of each title.

3 CFR

Proclamations:

5784	10519
5785	10521
5786	10523
5787	11031
5788	11489
5789	11809
5790	11811
5791	11813
5792	12365
5793	12367
5794	12369
5795	12671
5796	12673
5797	13094
5798	13235
5799	13237

Executive Orders:

12634	11041
12635	12134
12636	13239

Administrative Orders:

Memorandums:

Mar. 31, 1988	11039

Presidential Determinations:

No. 88-10 of February 29, 1988	11487

5 CFR

831	11633
842	11633
1001	13097
1633	11815

Proposed Rules:

300	13121
531	13121
1632	11864
2431	10885

7 CFR

2	11636
300	10525
301	11825, 13241
318	12909
340	12910
400	10526
426	12759
724	12675
725	12675
726	12675
907	12371
908	12371
910	10527, 11636, 12509, 13242
911	11830, 13217
917	11832
929	12373
946	11043
981	12374
1032	11637
1064	11590
1126	11638
1421	11239
1864	13098
1927	13098
1944	13243, 13244
1951	13098
1955	13098
1956	13098
1965	13244
3600	11639
3601	11639

Proposed Rules:

6	11091
11	13125
53	10545
54	10545
401	12774
449	11299
916	12687
917	11669, 12691, 13413
918	11687
946	12423
949	10887
959	13415
1030	10894
1065	12424
1106	11092
1497	11474
1498	11474
1530	11096
1550	13125
1700	11511
1701	10545
1900	12695
1980	12695
3403	13048

8 CFR

Proposed Rules:

3	11300
208	11300
236	11300
242	11300
253	11300

9 CFR

77	11491, 12913
92	11043, 12640
307	13396
350	13396
351	13396
352	13396
354	13396
355	13396
362	13396
381	13396

Proposed Rules:

78	12019

10 CFR

51	13399
430	10869

500 ... 12137
1010 ... 11240, 12497
Proposed Rules:
2 ... 11310
40 ... 13128
50 ... 11311, 12425
76 ... 13276

12 CFR
202 ... 11044
205 ... 11046
226 ... 11047, 11055, 13379
229 ... 11832
265 ... 11640, 12509
547 ... 13105
548 ... 13105
549 ... 13105
563 ... 11242, 11243, 13105
569a ... 13105
569b ... 13105
569c ... 13105
611 ... 12140
615 ... 12140
Proposed Rules:
522 ... 13282
541 ... 13282
542 ... 13282
543 ... 13282
544 ... 13282
545 ... 13282
547 ... 13282
548 ... 13282
549 ... 13282
563 ... 13131, 13133, 13282
569a ... 13282
569b ... 13282
569c ... 13282
571 ... 13133, 13282
588 ... 13133

13 CFR
308 ... 12510
309 ... 13252

14 CFR
Ch. III ... 11004
21 ... 13113
23 ... 13113
39 ... 11246, 11641–11643, 11837, 11838, 12141, 12376, 12511, 12914, 12915, 13114, 13252
71 ... 10528, 11020, 11060, 13253
73 ... 11061, 11839–11841, 12916–12918, 13115, 13116, 13253
97 ... 11062, 12377
121 ... 12358
135 ... 12358
Proposed Rules:
Ch. I ... 11868
21 ... 11869, 13283
23 ... 11869, 13283
27 ... 10826, 11162
29 ... 10826, 11162
39 ... 11674–11676, 11678, 11871, 12427, 12947, 13285, 13394
71 ... 10546, 11100, 11101, 12866, 12947, 13287
73 ... 11102
298 ... 12774

15 CFR
370 ... 12660
371 ... 12665
373 ... 12665
378 ... 12665
379 ... 12665
385 ... 12665
399 ... 12665
Proposed Rules:
7 ... 12880
303 ... 13414

16 CFR
13 ... 11247, 12379
Proposed Rules:
13 ... 12534

17 CFR
30 ... 11491
200 ... 12412, 12918
229 ... 12924
230 ... 11841, 12918
239 ... 12918
240 ... 11841, 12924
249 ... 12924
Proposed Rules:
Ch. IV ... 12428
140 ... 13288
150 ... 13290
200 ... 12429
229 ... 12948
249 ... 12948

18 CFR
37 ... 11191, 12931
154 ... 11191, 13254
157 ... 11644, 11845
389 ... 12676, 12677
Proposed Rules:
272 ... 12704
274 ... 12704

19 CFR
7 ... 12143
103 ... 12937

20 CFR
10 ... 11594
416 ... 12938, 13254
Proposed Rules:
10 ... 11596

21 CFR
179 ... 12756
184 ... 11247
193 ... 12942
340 ... 11731
349 ... 13217
369 ... 13217
430 ... 13400
436 ... 13400
442 ... 13400
444 ... 12644, 12658
452 ... 12414
510 ... 11492
520 ... 11063
522 ... 11064, 11493
524 ... 11064, 12512, 13217
540 ... 11492
558 ... 11065, 11251
561 ... 11938, 12640, 12942
610 ... 12760
640 ... 12760
660 ... 12760
800 ... 11251
803 ... 11251
807 ... 11251
808 ... 11251
809 ... 11251
812 ... 11251
813 ... 11251
820 ... 11251
860 ... 11251
861 ... 11251
862 ... 11645
864 ... 11251
866 ... 11251
876 ... 11251
895 ... 11251
1002 ... 11251
1005 ... 11251
1010 ... 11251
1020 ... 11251
1030 ... 11251
1040 ... 11251
1050 ... 11251
1308 ... 10834, 10861, 10869
Proposed Rules:
133 ... 11312
172 ... 13134
175 ... 11402
176 ... 11402
177 ... 11402
178 ... 11402
193 ... 11938
332 ... 12778
357 ... 12779
561 ... 11313
868 ... 13296

22 CFR
120 ... 11494, 12099
121 ... 11494, 12099
122 ... 11494, 12099
123 ... 11494, 12099
124 ... 11494, 12099
125 ... 11494, 12099
126 ... 11494, 12099
127 ... 11494, 12099
128 ... 11494, 12099
514 ... 10528
602 ... 10529
706 ... 11992
Proposed Rules:
204 ... 11872
602 ... 12430

23 CFR
650 ... 11065
657 ... 12766
658 ... 12145
771 ... 11065
1204 ... 11255
1205 ... 11255
Proposed Rules:
625 ... 11875
626 ... 11875
1309 ... 11679

24 CFR
50 ... 11224
200 ... 11270, 13404
201 ... 11997, 13405
203 ... 10529, 11997, 13404, 13405
204 ... 13404
213 ... 13404
220 ... 13404
221 ... 11224, 13404
222 ... 13404
226 ... 13404
227 ... 13404
234 ... 11997, 13405
235 ... 13404
236 ... 11224
237 ... 13404
240 ... 13404
241 ... 11224
248 ... 11224
888 ... 13406
Proposed Rules:
35 ... 11164
200 ... 11164, 12431
510 ... 11164
511 ... 11164
570 ... 11164
882 ... 11164
886 ... 11164
888 ... 12278
941 ... 11164
965 ... 11164
968 ... 11164

25 CFR
61 ... 11271

26 CFR
1 ... 11002, 11066, 11162, 11731, 12000, 12149, 12513, 12677, 12678, 13464
26 ... 13464
602 ... 11066, 11162, 11731, 12000
Proposed Rules:
1 ... 11103, 11876, 12433, 12534, 12705
26 ... 13464
26a ... 13464
602 ... 13464

27 CFR
Proposed Rules:
4 ... 12024
12 ... 12024

28 CFR
0 ... 10870, 10871, 11645
66 ... 12099
71 ... 11645
Proposed Rules:
16 ... 12151

29 CFR
102 ... 10872
1907 ... 12102
1910 ... 11414, 12102
2610 ... 10530
2622 ... 10530
2644 ... 10531
2676 ... 12514
Proposed Rules:
516 ... 11590, 12497
530 ... 11590, 12497
1404 ... 12952
1910 ... 11511
1915 ... 11511
1917 ... 11511
1918 ... 11511
2550 ... 11886
2580 ... 11886

30 CFR
48 ... 12415
75 ... 11395
250 ... 10596, 12227
256 ... 10596, 12227
773 ... 11606
934 ... 11500
Proposed Rules:
20 ... 12250

75 ... 12250
77 ... 12250, 12253
702 ... 13415
785 ... 11685
823 ... 11685
935 ... 11887, 12705
948 ... 11888

31 CFR

Proposed Rules:
103 ... 11513

32 CFR

199 ... 13258
388 ... 10876
706 ... 12515

Proposed Rules:
45 ... 12034

33 CFR

84 ... 10532
95 ... 13117
100 ... 11502, 12415, 13118
117 ... 10533, 10534, 12416, 12417
165 ... 12417, 12679, 13118, 13119, 13407
173 ... 13117
177 ... 13117

Proposed Rules:
100 ... 11515, 12434, 12706
110 ... 11395, 11515
117 ... 11516, 11517, 12434, 12535, 12707, 12708
173 ... 13417
174 ... 13417

34 CFR

99 ... 11942
500 ... 11206
657 ... 10820
668 ... 11206

Proposed Rules:
105 ... 10808

35 CFR

103 ... 12516

36 CFR

211 ... 13263
1202 ... 12150
1228 ... 13407
1258 ... 12150

37 CFR

10 ... 13120

38 CFR

17 ... 13120
36 ... 11502

39 CFR

Proposed Rules:
111 ... 11685

40 CFR

22 ... 12256
24 ... 12256
52 ... 11068, 11273, 11655, 11847, 12417, 12896, 13121
60 ... 11590, 12008, 12009, 12498, 12517
61 ... 12517
180 ... 11071, 11274, 11938, 12151, 12418, 12640, 12943
228 ... 12944
261 ... 13282
300 ... 12680
372 ... 12748
704 ... 12522
707 ... 12522
710 ... 12522
712 ... 12522
716 ... 12522
717 ... 12522
720 ... 12522
721 ... 12522
723 ... 12522
750 ... 12522
761 ... 12522
763 ... 12522
790 ... 12522
796 ... 12522
797 ... 12522
799 ... 12522

Proposed Rules:
52 ... 11314, 11686, 11688, 12161, 12435, 12906, 12962, 13135
60 ... 12962
116 ... 11889
117 ... 11889
180 ... 10895
261 ... 12162
264 ... 11742
265 ... 11742
268 ... 11742
271 ... 11742
302 ... 11889, 11890, 12868
355 ... 12868
372 ... 12035
761 ... 11104
763 ... 10546
795 ... 12748
796 ... 11104
799 ... 12748

41 CFR

101-25 ... 11847
101-40 ... 11849
101-49 ... 12766

Proposed Rules:
201-33 ... 11518

42 CFR

405 ... 11504, 12010, 12945
406 ... 12945
409 ... 12945
410 ... 12945
413 ... 12016, 12641, 12945
416 ... 11504, 12945
418 ... 11504
421 ... 12945
434 ... 12010
435 ... 12681
436 ... 12681
442 ... 11504
482 ... 11504
489 ... 12945
498 ... 12945

Proposed Rules:
405 ... 12037, 12641
412 ... 12641
413 ... 12641
489 ... 12641

43 CFR

4 ... 13266

Proposed Rules:
3160 ... 11318

Public Land Orders:
6670 ... 10535
6671 ... 12419
6672 ... 12420
6673 ... 12420

44 CFR

64 ... 13268
67 ... 11510, 12152
80 ... 11275
82 ... 11275
83 ... 11275
205 ... 12681

Proposed Rules:
61 ... 10547
67 ... 12536

45 CFR

36 ... 11279
79 ... 11656
96 ... 11656
1611 ... 12017

Proposed Rules:
303 ... 12041
606 ... 10896
1356 ... 12436

46 CFR

26 ... 13117
35 ... 13117
78 ... 13117
97 ... 13117
109 ... 13117
185 ... 13117
197 ... 13117
502 ... 13270
572 ... 11072

Proposed Rules:
Ch. I ... 11440
502 ... 12440

47 CFR

Ch. 1 ... 13270
0 ... 11849
1 ... 11851
2 ... 10878, 11855
15 ... 11861
22 ... 11855
43 ... 12526
63 ... 12526
73 ... 11668, 11863, 12152, 12154, 12528, 12768-12770, 12946, 13272, 13409
90 ... 11849, 12154
94 ... 11855

Proposed Rules:
Ch. I ... 10549, 10550
43 ... 12546
63 ... 12546
68 ... 12546
73 ... 10905, 11690, 12167-12169, 12547-12549, 12779, 12963, 12964, 13419-13422
97 ... 12780

48 CFR

15 ... 10828
25 ... 12128
31 ... 10828, 12128, 13274
52 ... 10828, 12128
215 ... 11073
227 ... 10780
242 ... 11073
252 ... 10780, 11073
439 ... 12748
452 ... 12748
733 ... 13410
1033 ... 12770
1801 ... 13056
1807 ... 13056
1815 ... 13056
1819 ... 13056
1822 ... 13056
1825 ... 13056
1827 ... 13056
1829 ... 13056
1832 ... 13056
1836 ... 13056
1837 ... 13056
1842 ... 13056
1849 ... 13056
1851 ... 13056
1852 ... 13056
1853 ... 13056
1870 ... 13056
2804 ... 12421, 12856
2832 ... 12421
2852 ... 12421

Proposed Rules:
43 ... 11795
47 ... 11795
52 ... 11795, 12501
916 ... 11318
931 ... 11318
952 ... 11318
1505 ... 11519
1506 ... 11519

49 CFR

387 ... 12158
533 ... 11074
541 ... 13274
571 ... 11280, 12528
1160 ... 10536

Proposed Rules:
171 ... 11320, 12442
172 ... 12442
173 ... 11320, 12442
174 ... 12442
175 ... 12442
176 ... 12442
177 ... 11618, 12442
178 ... 12442
179 ... 12442
192 ... 10906
383 ... 12504
391 ... 12504
571 ... 11105
640 ... 11520
1185 ... 12443

50 CFR

17 ... 10879, 11609, 11612
23 ... 12497
285 ... 11510
301 ... 10536
611 ... 13410
672 ... 11297
675 ... 12772

Proposed Rules:
17 ... 12787, 13220-13230, 13379
18 ... 12043
228 ... 12169
611 ... 13422
644 ... 11321
650 ... 12709
653 ... 12790
658 ... 12046
683 ... 12712

LIST OF PUBLIC LAWS

Last List April 21, 1988

This is a continuing list of public bills from the current session of Congress which have become Federal laws. It may be used in conjunction with "P L U S" (Public Laws Update Service) on 523-6641. The text of laws is not published in the **Federal Register** but may be ordered in individual pamphlet form (referred to as "slip laws") from the Superintendent of Documents, U.S. Government Printing Office, Washington, DC 20402 (phone 202-275-3030).

H.J. Res. 527/Pub. L. 100-292

To designate the week of April 17, 1988, through April 24, 1988, as "Jewish Heritage Week." (Apr. 20, 1988; 102 Stat. 94; 1 page) Price: $1.00

VOL 53 ISS 79 PT 1 AP 25 1988 UMI

CFR CHECKLIST

This checklist, prepared by the Office of the Federal Register, is published weekly. It is arranged in the order of CFR titles, prices, and revision dates.

An asterisk (*) precedes each entry that has been issued since last week and which is now available for sale at the Government Printing Office.

New units issued during the week are announced on the back cover of the daily **Federal Register** as they become available.

A checklist of current CFR volumes comprising a complete CFR set, also appears in the latest issue of the LSA (List of CFR Sections Affected), which is revised monthly.

The annual rate for subscription to all revised volumes is $595.00 domestic, $148.75 additional for foreign mailing.

Order from Superintendent of Documents, Government Printing Office, Washington, DC 20402. Charge orders (VISA, MasterCard, CHOICE, or GPO Deposit Account) may be telephoned to the GPO order desk at (202) 783-3238 from 8:00 a.m. to 4:00 p.m. eastern time, Monday—Friday (except holidays).

Title	Price	Revision Date
1, 2 (2 Reserved)	$10.00	Jan. 1, 1988
*3 (1987 Compilation and Parts 100 and 101)	11.00	[1] Jan. 1, 1988
4	14.00	Jan. 1, 1988
5 Parts:		
1-699	14.00	Jan. 1, 1988
700-1199	15.00	Jan. 1, 1988
1200-End, 6 (6 Reserved)	11.00	Jan. 1, 1988
7 Parts:		
0-45	25.00	Jan. 1, 1987
27-45	11.00	Jan. 1, 1988
46-51	16.00	Jan. 1, 1988
52	23.00	Jan. 1, 1988
53-209	18.00	Jan. 1, 1987
210-299	22.00	Jan. 1, 1987
300-399	10.00	Jan. 1, 1987
400-699	15.00	Jan. 1, 1987
700-899	22.00	Jan. 1, 1988
900-999	26.00	Jan. 1, 1988
1000-1059	15.00	Jan. 1, 1988
1060-1119	12.00	Jan. 1, 1988
1120-1199	11.00	Jan. 1, 1988
1200-1499	17.00	Jan. 1, 1988
1500-1899	9.50	Jan. 1, 1988
1900-1939	11.00	Jan. 1, 1988
*1940-1949	21.00	Jan. 1, 1988
1945-End	26.00	Jan. 1, 1987
*2000-End	6.50	Jan. 1, 1988
8	11.00	Jan. 1, 1988
9 Parts:		
1-199	19.00	Jan. 1, 1988
*200-End	17.00	Jan. 1, 1988
10 Parts:		
0-199	29.00	Jan. 1, 1987
51-199	14.00	Jan. 1, 1988
200-399	13.00	[6] Jan. 1, 1987
400-499	13.00	Jan. 1, 1988
500-End	24.00	Jan. 1, 1988
11	10.00	July 1, 1988
12 Parts:		
1-199	11.00	Jan. 1, 1988
200-219	10.00	Jan. 1, 1988
220-299	14.00	Jan. 1, 1988
300-499	13.00	Jan. 1, 1987
500-End	27.00	Jan. 1, 1987
*600-End	12.00	Jan. 1, 1988
13	19.00	Jan. 1, 1987
14 Parts:		
1-59	21.00	Jan. 1, 1988
60-139	19.00	Jan. 1, 1988
140-199	9.50	Jan. 1, 1988
200-1199	20.00	Jan. 1, 1988
1200-End	11.00	Jan. 1, 1987
15 Parts:		
0-299	10.00	Jan. 1, 1988
300-399	20.00	Jan. 1, 1987
400-End	14.00	Jan. 1, 1989
16 Parts:		
0-149	12.00	Jan. 1, 1988
150-999	13.00	Jan. 1, 1988
1000-End	19.00	Jan. 1, 1988
17 Parts:		
1-199	14.00	Apr. 1, 1987
200-239	14.00	Apr. 1, 1987
240-End	19.00	Apr. 1, 1987
18 Parts:		
1-149	15.00	Apr. 1, 1987
150-279	14.00	Apr. 1, 1987
280-399	13.00	Apr. 1, 1987
400-End	8.50	Apr. 1, 1987
19 Parts:		
1-199	27.00	Apr. 1, 1987
200-End	5.50	Apr. 1, 1987
20 Parts:		
1-399	12.00	Apr. 1, 1987
400-499	23.00	Apr. 1, 1987
500-End	24.00	Apr. 1, 1987
21 Parts:		
1-99	12.00	Apr. 1, 1987
100-169	14.00	Apr. 1, 1987
170-199	16.00	Apr. 1, 1987
200-299	5.50	Apr. 1, 1987
300-499	26.00	Apr. 1, 1987
500-599	21.00	Apr. 1, 1987
600-799	7.00	Apr. 1, 1987
800-1299	13.00	Apr. 1, 1987
1300-End	6.00	Apr. 1, 1987
22 Parts:		
1-299	19.00	Apr. 1, 1987
300-End	13.00	Apr. 1, 1987
23	16.00	Apr. 1, 1987
24 Parts:		
0-199	14.00	Apr. 1, 1987
200-499	26.00	Apr. 1, 1987
500-699	9.00	Apr. 1, 1987
700-1699	18.00	Apr. 1, 1987
1700-End	12.00	Apr. 1, 1987
25	24.00	Apr. 1, 1987
26 Parts:		
§§ 1.0-1.60	12.00	Apr. 1, 1987
§§ 1.61-1.169	22.00	Apr. 1, 1987
§§ 1.170-1.300	17.00	Apr. 1, 1987
§§ 1.301-1.400	14.00	Apr. 1, 1987
§§ 1.401-1.500	21.00	Apr. 1, 1987
§§ 1.501-1.640	15.00	Apr. 1, 1987
§§ 1.641-1.850	17.00	Apr. 1, 1987
§§ 1.851-1.1000	27.00	Apr. 1, 1987
§§ 1.1001-1.1400	16.00	Apr. 1, 1987
§§ 1.1401-End	20.00	Apr. 1, 1987
2-29	20.00	Apr. 1, 1987
30-39	13.00	Apr. 1, 1987
40-49	12.00	Apr. 1, 1987
50-299	14.00	Apr. 1, 1987
300-499	15.00	Apr. 1, 1987
500-599	8.00	[6] Apr. 1, 1980
600-End	6.00	Apr. 1, 1987
27 Parts:		
1-199	21.00	Apr. 1, 1987
200-End	13.00	Apr. 1, 1987
28	23.00	July 1, 1987

Title	Price	Revision Date
29 Parts:		
0–99	16.00	July 1, 1987
100–499	7.00	July 1, 1987
500–899	24.00	July 1, 1987
900–1899	10.00	July 1, 1987
1900–1910	28.00	July 1, 1987
1911–1925	6.50	July 1, 1987
1926	10.00	July 1, 1987
1927–End	23.00	July 1, 1987
30 Parts:		
0–199	20.00	July 1, 1987
200–699	8.50	July 1, 1987
700–End	18.00	July 1, 1987
31 Parts:		
0–199	12.00	July 1, 1987
200–End	16.00	July 1, 1987
32 Parts:		
1–39, Vol. I	15.00	[4] July 1, 1984
1–39, Vol. II	19.00	[4] July 1, 1984
1–39, Vol. III	18.00	[4] July 1, 1984
1–189	20.00	July 1, 1987
190–399	23.00	July 1, 1987
400–629	21.00	July 1, 1987
630–699	13.00	[5] July 1, 1986
700–799	15.00	July 1, 1987
800–End	16.00	July 1, 1987
33 Parts:		
1–199	27.00	July 1, 1987
200–End	19.00	July 1, 1987
34 Parts:		
1–299	20.00	July 1, 1987
300–399	11.00	July 1, 1987
400–End	23.00	July 1, 1987
35	9.00	July 1, 1987
36 Parts:		
1–199	12.00	July 1, 1987
200–End	19.00	July 1, 1987
37	13.00	July 1, 1987
38 Parts:		
0–17	21.00	July 1, 1987
18–End	16.00	July 1, 1987
39	13.00	July 1, 1987
40 Parts:		
1–51	21.00	July 1, 1987
52	26.00	July 1, 1987
53–60	24.00	July 1, 1987
61–80	12.00	July 1, 1987
81–99	25.00	July 1, 1987
100–149	23.00	July 1, 1987
150–189	18.00	July 1, 1987
190–399	29.00	July 1, 1987
400–424	22.00	July 1, 1987
425–699	21.00	July 1, 1987
700–End	27.00	July 1, 1987
41 Chapters:		
1, 1–1 to 1–10	13.00	[6] July 1, 1984
1, 1–11 to Appendix, 2 (2 Reserved)	13.00	[6] July 1, 1984
3–6	14.00	[6] July 1, 1984
7	6.00	[6] July 1, 1984
8	4.50	[6] July 1, 1984
9	13.00	[6] July 1, 1984
10–17	9.50	[6] July 1, 1984
18, Vol. I, Parts 1–5	13.00	[6] July 1, 1984
18, Vol. II, Parts 6–19	13.00	[6] July 1, 1984
18, Vol. III, Parts 20–52	13.00	[6] July 1, 1984
19–100	13.00	[6] July 1, 1984
1–100	10.00	July 1, 1987
101	23.00	July 1, 1987
102–200	11.00	July 1, 1987
201–End	8.50	July 1, 1987
42 Parts:		
1–60	15.00	Oct. 1, 1987
61–399	5.50	Oct. 1, 1987
400–429	21.00	Oct. 1, 1987
430–End	14.00	Oct. 1, 1987
43 Parts:		
1–999	15.00	Oct. 1, 1987
1000–3999	24.00	Oct. 1, 1987
4000–End	11.00	Oct. 1, 1987
44	18.00	Oct. 1, 1987
45 Parts:		
1–199	14.00	Oct. 1, 1987
200–499	9.00	Oct. 1, 1987
500–1199	18.00	Oct. 1, 1987
1200–End	14.00	Oct. 1, 1987
46 Parts:		
1–40	13.00	Oct. 1, 1987
41–69	13.00	Oct. 1, 1987
70–89	7.00	Oct. 1, 1987
90–139	12.00	Oct. 1, 1987
140–155	12.00	Oct. 1, 1987
156–165	14.00	Oct. 1, 1987
166–199	13.00	Oct. 1, 1987
200–499	19.00	Oct. 1, 1987
500–End	10.00	Oct. 1, 1987
47 Parts:		
0–19	17.00	Oct. 1, 1987
20–39	21.00	Oct. 1, 1987
40–69	10.00	Oct. 1, 1987
70–79	17.00	Oct. 1, 1987
80–End	20.00	Oct. 1, 1987
48 Chapters:		
1 (Parts 1–51)	26.00	Oct. 1, 1987
1 (Parts 52–99)	16.00	Oct. 1, 1987
2 (Parts 201–251)	17.00	Oct. 1, 1987
2 (Parts 252–299)	15.00	Oct. 1, 1987
3–6	17.00	Oct. 1, 1987
7–14	24.00	Oct. 1, 1987
15–End	23.00	Oct. 1, 1987
49 Parts:		
1–99	10.00	Oct. 1, 1987
100–177	25.00	Oct. 1, 1987
178–199	19.00	Oct. 1, 1987
200–399	17.00	Oct. 1, 1987
400–999	22.00	Oct. 1, 1987
1000–1199	17.00	Oct. 1, 1987
1200–End	18.00	Oct. 1, 1987
50 Parts:		
1–199	16.00	Oct. 1, 1987
200–599	12.00	Oct. 1, 1987
600–End	14.00	Oct. 1, 1987
CFR Index and Findings Aids	27.00	Jan. 1, 1987
Complete 1988 CFR set	595.00	1988
Microfiche CFR Edition:		
Complete set (one-time mailing)	125.00	1984
Complete set (one-time mailing)	115.00	1985
Subscription (mailed as issued)	185.00	1987
Subscription (mailed as issued)	185.00	1988
Individual copies	3.75	1988

[1] Because Title 3 is an annual compilation, this volume and all previous volumes should be retained as a permanent reference source.

[2] No amendments to this volume were promulgated during the period Jan. 1, 1987 to Dec. 31, 1987. The CFR volume issued January 1, 1987, should be retained.

[3] No amendments to this volume were promulgated during the period Apr. 1, 1980 to March 31, 1987. The CFR volume issued as of Apr. 1, 1980, should be retained.

[4] The July 1, 1985 edition of 32 CFR Parts 1–189 contains a note only for Parts 1–39 inclusive. For the full text of the Defense Acquisition Regulations in Parts 1–39, consult the three CFR volumes issued as of July 1, 1984, containing those parts.

[5] No amendments to this volume were promulgated during the period July 1, 1986 to June 30, 1987. The CFR volume issued as of July 1, 1986, should be retained.

[6] The July 1, 1985 edition of 41 CFR Chapters 1–100 contains a note only for Chapters 1 to 49 inclusive. For the full text of procurement regulations in Chapters 1 to 49, consult the eleven CFR volumes issued as of July 1, 1984 containing those chapters.

VOL 53 ISS 79 PT 1 AP 25 1988 UMI

ion Date

. 1, 1987
. 1, 1987
. 1, 1987
. 1, 1987

. 1, 1987
. 1, 1987
. 1, 1987
. 1, 1987

. 1, 1987
. 1, 1987
. 1, 1987
. 1, 1987

. 1, 1987
. 1, 1987
. 1, 1987
. 1, 1987
. 1, 1987
. 1, 1987
. 1, 1987
. 1, 1987
. 1, 1987

. 1, 1987
. 1, 1987
. 1, 1987
. 1, 1987
. 1, 1987
. 1, 1987
. 1, 1987

. 1, 1987
. 1, 1987
. 1, 1987
. 1, 1987
. 1, 1987
. 1, 1987
. 1, 1987

. 1, 1987
. 1, 1987
. 1, 1987

. 1, 1987

1988

1984
1985
1987
1988
1988

should be

87 to Dec.

0 to March

arts 1–39
consult the

86 to June

apters 1 to
the eleven

VOL 53 ISS 79 PT 1 AP 25 1988 UMI

The authentic text behind the news . . .

The Weekly Compilation of **Presidential Documents**

Administration of Ronald Reagan

Weekly Compilation of
Presidential Documents

Monday, January 11, 1988
Volume 24—Number 1
Pages 1–14

This unique service provides up-to-date information on Presidential policies and announcements. It contains the full text of the President's public speeches, statements, messages to Congress, news conferences, personnel appointments and nominations, and other Presidential materials released by the White House.

The Weekly Compilation carries a Monday dateline and covers materials released during the preceding week. Each issue contains an Index of Contents and a Cumulative Index to Prior Issues.

Separate indexes are published periodically. Other features include lists of acts approved by the President and of nominations submitted to the Senate, a checklist of White House press releases, and a digest of other Presidential activities and White House announcements.

Published by the Office of the Federal Register, National Archives and Records Administration

Order Form

Mail To: Superintendent of Documents, U.S. Government Printing Office, Washington, DC 20402

Enclosed is $ _____ ☐ check, ☐ money order, or charge to my Deposit Account No.

☐☐☐☐☐☐☐–☐

Order No. _____

MasterCard and VISA accepted.

VISA MasterCard

Credit Card Orders Only
Total charges $ _____
Fill in the boxes below.

Customer's Telephone Nos.
Area Code Home Area Code Office

Credit Card No. ☐☐☐☐☐☐☐☐☐☐☐☐☐☐☐☐☐☐☐☐

Expiration Date Month/Year ☐☐☐☐

Charge orders may be telephoned to the GPO order desk at (202)783–3238 from 8:00 a.m. to 4:00 p.m. eastern time, Monday–Friday (except holidays)

ENTER MY SUBSCRIPTION FOR 1 YEAR TO: WEEKLY COMPILATION OF PRESIDENTIAL DOCUMENTS (PD)
$64.00 Domestic; $80.00 Foreign
$105.00 if Domestic first-class mailing is desired.

PLEASE PRINT OR TYPE

Company or Personal Name

Additional address/attention line

Street address

City | State | ZIP Code

(or Country)

(Rev 10-1-85)

(Rev. 2-1-88)

e, a
eses,
ivities

al
cords

20402

order
0 p.m.
s)

(PD)

VOL
53
ISS
79
PT
1
AP
25
1988
UMI

VOL
53

ISS
79

PT
2

AP
25

1988

UMI

4-25-88
Vol. 53

United Stat
Governmen
Printing Off
SUPERINTENDEN
OF DOCUMENTS
Washington, DC 2

OFFICIAL BUSINE
Penalty for private

4-25-88
Vol. 53 No. 79

federal register

Monday
April 25, 1988

Book 2 of 2 Books

United States
Government
Printing Office
SUPERINTENDENT
OF DOCUMENTS
Washington, DC 20402

OFFICIAL BUSINESS
Penalty for private use, $300

**********5-DIGIT 48106

A FR SERIA300S NOV 88 R
SERIALS PROCESSING
UNIV MICROFILMS INTL
300 N ZEEB RD
ANN ARBOR MI 48106

SECOND CLASS NEWSPAPER
Postage and Fees Paid
U.S. Government Printing Office
(ISSN 0097-6326)

VOL
53

ISS
79

PT
2

AP
25

1988

UMI

4-25-88
Vol. 53

BOOK 2
Pages 1

4-25-88
Vol. 53 No. 79

BOOK 2:
Pages 14179-14772

federal register

Book 2 of 2 Books
Monday, April 25, 1988

Unified Agenda of Federal Regulations

14180 Part XV—Department of the Treasury

14320 Part XVI—ACTION

14324 Part XVII—Agency for International Development

14328 Part XVIII—Architectural and Transportation Barriers Compliance Board

14332 Part XIX—Commission on Civil Rights

14334 Part XX—Environmental Protection Agency

14410 Part XXI—Equal Employment Opportunity Commission

14418 Part XXII—Federal Emergency Management Agency

14426 Part XXIII—Federal Mediation and Conciliation Service

14428 Part XXIV—General Services Administration

14442 Part XXV—Merit Systems Protection Board

14446 Part XXVI—National Aeronautics and Space Administration

14454 Part XXVII—National Archives and Records Administration

14460 Part XXVIII—National Foundation on the Arts and the Humanities/National Endowment for the Arts

14464 Part XXIX—National Foundation on the Arts and the Humanities/National Endowment for the Humanities

14468 Part XXX—National Science Foundation

14470 Part XXXI—Office of Management and Budget

14476 Part XXXII—Office of Personnel Management

14494 Part XXXIII—Panama Canal Commission

14498 Part XXXIV—Peace Corps

14500 Part XXXV—Pennsylvania Avenue Development Corporation

14504 Part XXXVI—Pension Benefit Guaranty Corporation

BEST COPY AVAILABLE

14512 Part XXXVII—Railroad Retirement Board

14520 Part XXXVIII—Selective Service System

14522 Part XXXIX—Small Business Administration

14536 Part XL—Tennessee Valley Authority

14540 Part XLI—Veterans Administration

14564 Part XLII—Department of Defense/General Services Administration/National Aeronautics and Space Administration

14580 Part XLIII—Commodity Futures Trading Commission

14584 Part XLIV—Consumer Product Safety Commission

14594 Part XLV—Farm Credit Administration

14604 Part XLVI—Federal Communications Commission

14620 Part XLVII—Federal Deposit Insurance Corporation

14628 Part XLVIII—Federal Energy Regulatory Commission, DOE

14636 Part XLIX—Federal Home Loan Bank Board

14648 Part L—Federal Maritime Commission

14656 Part LI—Federal Reserve System

14668 Part LII—Federal Trade Commission

14676 Part LIII—Interstate Commerce Commission

14682 Part LIV—National Credit Union Administration

14692 Part LV—Nuclear Regulatory Commission

14714 Part LVI—Securities and Exchange Commission

14733 Index

VOL 53 ISS 79 PT 2 AP 25 1988 UMI

federal register

Monday
April 25, 1988

Part XV

Department of the Treasury

Semiannual Regulatory Agenda

DEPARTMENT OF THE TREASURY (TREAS)

DEPARTMENT OF THE TREASURY (TREAS)
Departmental Offices (DO)

DEPARTMENT OF THE TREASURY

31 CFR Subtitle A, Chs. I and II

Semiannual Agenda

AGENCY: Departmental Offices, Treasury.

ACTION: Semiannual agenda.

SUMMARY: This notice is given pursuant to the requirements of the "Regulatory Flexibility Act" (Pub. L. 96-354, September 19, 1980) and Executive Order 12291 ("Federal Regulation," February 17, 1981), which require the publication of a semiannual agenda of regulations. The semiannual agenda of the Department of the Treasury conforms to the Unified Agenda Format developed by the Regulatory Information Service Center (RISC).

FOR FURTHER INFORMATION CONTACT: For additional information about a specific Departmental Offices regulation, contact the "agency contact" listed in the specific regulatory action. For general information concerning the agenda, contact Richard S. Carro, Associate General Counsel (Legislation, Litigation, and Regulation), Room 1422, 1500 Pennsylvania Avenue, NW., Washington, DC 20220, (202) 566-2558, not a toll-free call.

Dated: February 26, 1988.

Robert B. Zoellick,

Executive Secretary.

Departmental Offices—Proposed Rule Stage

Sequence Number	Title	Regulation Identifier Number
2060	31 CFR 10 Due Diligence Standards With Respect to Persons Practicing Before the Internal Revenue Service	1505-AA17

Departmental Offices—Final Rule Stage

Sequence Number	Title	Regulation Identifier Number
2061	31 CFR 103.25 Bank Secrecy Act; Transactions with Foreign Financial Agencies	1505-AA29

Departmental Offices—Completed Actions

Sequence Number	Title	Regulation Identifier Number
2062	31 CFR 103 Disclosure of Bank Secrecy Act Data	1505-AA25
2063	31 CFR 103 Bank Secrecy Act Reporting Requirements of the United States Postal Service	1505-AA27
2064	31 CFR 103.70 Bank Secrecy Act; Administrative Ruling System	1505-AA28

DEPARTMENT OF THE TREASURY (TREAS) — Proposed Rule Stage
Departmental Offices (DO)

2060. DUE DILIGENCE STANDARDS WITH RESPECT TO PERSONS PRACTICING BEFORE THE INTERNAL REVENUE SERVICE

Legal Authority: 5 USC 301; 31 USC 330; 31 USC 321

CFR Citation: 31 CFR 10

Legal Deadline: None.

Abstract: The proposed regulation would modify the current regulations governing practice before the Internal Revenue Service by clarifying the requirements relating to due diligence standards imposed on tax practitioners.

Timetable:

Action	Date	FR Cite
NPRM	08/14/86	51 FR 29113
Extend Public Comment Period to 11/13/86	08/27/86	51 FR 30510
NPRM Comment Period End	10/14/86	51 FR 29113

TREAS—DO **Proposed Rule Stage**

Action	Date	FR Cite
Extend public comment period to 02/13/87	11/06/86	51 FR 40340

Next Action Undetermined

Small Entity: Not Applicable

Agency Contact: Mr. Leslie S. Shapiro, Director of Practice, Department of the Treasury, Internal Revenue Service, 1111 Constitution Avenue, NW, Washington, DC 20224, 202 535-6787

RIN: 1505-AA17

DEPARTMENT OF THE TREASURY (TREAS) — Final Rule Stage
Departmental Offices (DO)

2061. ● BANK SECRECY ACT; TRANSACTIONS WITH FOREIGN FINANCIAL AGENCIES

Legal Authority: 12 USC 1829b; 12 USC 1951 to 1959; 31 USC 5311 to 5324

CFR Citation: 31 CFR 103.25

Legal Deadline: None.

Abstract: The proposed amendments would increase the utility of reporting under the Bank Secrecy Act by authorizing the reporting of completed as well as future transactions and preventing financial institutions from informing customers or other parties of a reporting requirement imposed under the regulations.

Timetable:

Action	Date	FR Cite
NPRM	10/26/87	52 FR 39922
NPRM Comment Period End	12/28/87	52 FR 39922
Final Action	03/00/88	
Final Action Effective	04/00/88	

Small Entity: No

Agency Contact: Jonathan J. Rusch, Assistant to the Director, Office of, Financial Enforcement, Department of the Treasury, Departmental Offices, Room 4320, Washington, DC 20220, 202 566-2516

RIN: 1505-AA29

DEPARTMENT OF THE TREASURY (TREAS) — Completed Actions
Departmental Offices (DO)

2062. DISCLOSURE OF BANK SECRECY ACT DATA

Legal Authority: 12 USC 1892b; 12 USC 1951 to 1959; 31 USC 5311 to 5324

CFR Citation: 31 CFR 103

Legal Deadline: None.

Abstract: This regulation would clarify current rules pertaining to disclosure of information reported under the Bank Secrecy Act and to add a new provision that would authorize charging of fees for costs incidental to certain disclosures to state and local government agencies.

Timetable:

Action	Date	FR Cite
NPRM	06/09/87	52 FR 21699
NPRM Comment Period End	07/08/87	52 FR 21699
Final Action	09/22/87	52 FR 35544
Final Action Effective	10/21/87	52 FR 35544

Small Entity: No

Agency Contact: Jonathan J. Rusch, Director, Office of Financial Enforcement, Department of the Treasury, Departmental Offices, Room 4320, Washington, DC 20220, 202 566-8022

RIN: 1505-AA25

2063. BANK SECRECY ACT REPORTING REQUIREMENTS OF THE UNITED STATES POSTAL SERVICE

Legal Authority: 12 USC 1892b; 12 USC 1951 to 1959; 31 USC 5311 to 5324

CFR Citation: 31 CFR 103

Legal Deadline: None.

Abstract: This document would place the United States Postal Service under the reporting requirements of the Bank Secrecy Act with respect to cash purchases of postal money orders exceeding $10,000, in response to the problem of drug money laundering through the purchase of postal money orders.

Timetable:

Action	Date	FR Cite
NPRM	09/22/87	52 FR 35562
NPRM Comment Period End	11/22/87	52 FR 39663
Final Action	01/13/88	53 FR 00776
Final Action Effective	04/12/88	53 FR 00776

Small Entity: No

Agency Contact: Jonathan J. Rusch, Director, Office of Financial Enforcement, Department of the Treasury, Departmental Offices, Room 4320, Washington, DC 20220, 202 566-8022

RIN: 1505-AA27

2064. ● BANK SECRECY ACT; ADMINISTRATIVE RULING SYSTEM

Legal Authority: 12 USC 1829b; 12 USC 1951 to 1959; 31 USC 5311 to 5324

CFR Citation: 31 CFR 103.70

Legal Deadline: None.

Abstract: This document established an administrative ruling system to facilitate dissemination of Treasury Department interpretations of the Bank Secrecy Act and its implementing regulations.

Timetable:

Action	Date	FR Cite
Final Action	09/22/87	52 FR 35545
Final Action Effective	10/21/87	52 FR 35545

Small Entity: No

Agency Contact: Jonathan J. Rusch, Assistant to the Director, Office of, Financial Enforcement, Department of the Treasury, Departmental Offices, Room 4320, Washington, DC 20220, 202 566-2516

RIN: 1505-AA26

Office of Revenue Sharing—Completed Actions

Sequence Number	Title	Regulation Identifier Number
2065	31 CFR 51 Final Wind-Down of Revenue Sharing Program	1507-AA12

DEPARTMENT OF THE TREASURY (TREAS)
Office of Revenue Sharing (ORS)

Completed Actions

2065. FINAL WIND-DOWN OF REVENUE SHARING PROGRAM

Legal Authority: 31 USC 6701 to 6724; PL 99-272

CFR Citation: 31 CFR 51

Legal Deadline: None.

Abstract: Congress has repealed the Revenue Sharing Act effective December 31, 1986 or the adjournment sine die of the 99th Congress whichever is earlier. Some regulatory changes have been made but final changes may need to be made in the regulations in order to effectuate this repeal. No alternative to wind-down of the Program or repeal of the Act exists. The elimination of the Program will be a substantial cost-cutting action.

Timetable:

Action	Date	FR Cite
Final Action	10/02/87	52 FR 36924

Small Entity: Undetermined

Agency Contact: Thomas P. O'Malley, Department of the Treasury, Office of Revenue Sharing, Room 1458, Washington, DC 20220, 202 566-2586

RIN: 1507-AA12

[FR Doc. 88-5797 Filed 04-22-88; 8:45 am]

BILLING CODE 4810-25-T

DEPARTMENT OF THE TREASURY (TREAS)
Financial Management Service (FMS)

Fiscal Service

31 CFR Ch. II

Semiannual Agenda

AGENCY: Financial Management Service, Treasury.

ACTION: Semiannual agenda.

SUMMARY: This notice is given pursuant to the requirements of the "Regulatory Flexibility Act" (Pub. L. 96-354, September 19, 1980) and Executive Order 12291 ("Federal Regulation," February 17, 1981), which require publication of a semiannual agenda of regulations under development or review.

FOR FURTHER INFORMATION CONTACT: For additional information about a specific regulation contained in this agenda, contact the "agency contact" listed in the specific regulatory action.

SUPPLEMENTARY INFORMATION: The proposed regulations are not considered to be major regulations within the meaning of E.O. 12291 and will not have a significant impact on small entities within the meaning of the Regulatory Flexibility Act.

Dated: March 4, 1988.

W. E. Douglas,

Commissioner.

Financial Management Service—Prerule Stage

Sequence Number	Title	Regulation Identifier Number
2066	31 CFR 205 Revision of 31 CFR Part 205 (TDC No. 1075), Payments Between the Federal Government and Recipient Organizations	1510-AA00
2067	31 CFR 210, (Revision) Federal Payments through Financial Institutions by the Automated Clearing House Method	1510-AA09
2068	31 CFR 235 Time Limitation on Payment and Cancellation of Treasury Checks and Reclamation Actions and Claims	1510-AA11

TREAS—FMS

Financial Management Service—Prerule Stage—Continued

Sequence Number	Title	Regulation Identifier Number
2069	31 CFR 225, (Revision) Acceptance of Bonds, Notes, or Other Obligations Issued or Guaranteed by the United States as Security in Lieu of Surety or Sureties on Penal Bonds	1510-AA13

Financial Management Service—Final Rule Stage

Sequence Number	Title	Regulation Identifier Number
2070	31 CFR 223, (Revision) Regulations Governing Surety Companies Doing Business with the United States	1510-AA12

DEPARTMENT OF THE TREASURY (TREAS) — Prerule Stage

Financial Management Service (FMS)

2066. REVISION OF 31 CFR PART 205 (TDC NO. 1075), PAYMENTS BETWEEN THE FEDERAL GOVERNMENT AND RECIPIENT ORGANIZATIONS

Significance: Agency Priority

Legal Authority: 31 USC 6503

CFR Citation: 31 CFR 205

Legal Deadline: None.

Abstract: Revision of 31 CFR 205 will implement a new funding technique for Federal programs. The regulation would require a State to pay interest on Federal funds from the time they are deposited to the State's account until the time those funds are paid out to redeem checks or warrants or make payments by other means. This new "Checks Issued-Interest Remitted" technique was developed in response to statutes in some States that require that funds reside in a bank account prior to the issuance of checks. This revision also provides for the remittance of interest by the Federal Government if a State disburses its own funds for program purposes in accordance with Federal law, regulation or Federal/State agreement.

Timetable:

Action	Date	FR Cite
Next Action Undetermined		

Small Entity: No

Additional Information: In addition, other cash management issues discussed by the State/Federal Cash Management Reform Task Force will be addressed in this regulation.

Government Levels Affected: Local, State, Federal

Agency Contact: Harold Blitz, (Acting) Manager, Treasury Programs Branch, Department of the Treasury, Financial Management Service, 401 14th Street, SW, Room 409A, Washington, DC 20227, 202 287-0590

RIN: 1510-AA00

2067. FEDERAL PAYMENTS THROUGH FINANCIAL INSTITUTIONS BY THE AUTOMATED CLEARING HOUSE METHOD

Significance: Agency Priority

Legal Authority: 5 USC 5525; 12 USC 391; 31 USC 321

CFR Citation: 31 CFR 210, (Revision)

Legal Deadline: None.

Abstract: Revision of 31 CFR Part 210 will clarify the breadth of payments governed by the regulations. These include non-benefit payments such as vendor payments, miscellaneous payments. Internal Revenue Service (IRS) tax refunds, savings bonds, grants and loans. It will also include the payment of discretionary allotments of net pay of Federal employees' salaries by DD/EFT. Electronic funds thus transferred through the Federal Reserve System eliminate the possibility of checks being lost, stolen, or forged. The Federal Government's operating efficiency will be improved, productivity will be increased, and the costs associated with the current methods will be reduced.

Timetable:

Action	Date	FR Cite
Next Action Undetermined		

Small Entity: No

Government Levels Affected: Local, State, Federal

Agency Contact: Sheryl Morrow, Manager, Policy and Research Branch, Department of the Treasury, Financial Management Service, 401 14th Street, SW, Room 328, Washington, DC 20227, 202 287-0308

RIN: 1510-AA09

2068. TIME LIMITATION ON PAYMENT AND CANCELLATION OF TREASURY CHECKS AND RECLAMATION ACTIONS AND CLAIMS

Significance: Agency Priority

Legal Authority: PL 100-86, Sec 1005 Title X; 31 USC 3328; 31 USC 3334; 31 USC 3712(a)

CFR Citation: 31 CFR 235; 31 CFR 240; 31 CFR 245

Legal Deadline: Statutory, 00/00/00. The Secretary of the Treasury, using his legal authority, extended the date the amendments shall become effective to 10/01/89. The notice of the extension appears at 53 FR 3584 (02/08/88).

VOL 53 ISS 79 PT 2 APR 25 1988 UMI

TREAS—FMS

Prerule Stage

Abstract: These regulations are required under PL 100-86, Sec 1005, and they will prescribe rules and procedures necessary in order to implement the time limitation on payment and cancellation of Treasury checks and reclamation actions and claims.

Timetable:

Action	Date	FR Cite
Next Action Undetermined		

Small Entity: Yes

Agency Contact: David A. Ingold, Chief Counsel, Department of the Treasury, Financial Management Service, 401 14th Street, SW, Room 531, Washington, DC 20227, 202 287-0673

RIN: 1510-AA11

2069. ACCEPTANCE OF BONDS, NOTES, OR OTHER OBLIGATIONS ISSUED OR GUARANTEED BY THE UNITED STATES AS SECURITY IN LIEU OF SURETY OR SURETIES ON PENAL BONDS

Significance: Agency Priority

Legal Authority: 31 USC 9303

CFR Citation: 31 CFR 225, (Revision)

Legal Deadline: None.

Abstract: The revision will address changes to definitions in the areas of authorized depositories and acceptable securities.

Timetable:

Action	Date	FR Cite
Next Action Undetermined		

Small Entity: No

Agency Contact: Terry Boyer, Manager, Surety Bond Branch, Department of the Treasury, Financial Management Service, 401 14th Street, SW, Room 259, Washington, DC, 20227, 202 287-3915

RIN: 1510-AA13

DEPARTMENT OF THE TREASURY (TREAS)
Financial Management Service (FMS)

Final Rule Stage

2070. REGULATIONS GOVERNING SURETY COMPANIES DOING BUSINESS WITH THE UNITED STATES

Significance: Agency Priority

Legal Authority: 31 USC 9301 to 9309

CFR Citation: 31 CFR 223, (Revision)

Legal Deadline: None.

Abstract: The revision makes editorial changes, and contains substantive changes to sections concerning business experience, collateral and reinsurance requirements. Substantive changes include: 1) a 3-year aging requirement in order to qualify for Treasury certification, 2) elimination of the alternative to use collateral for protecting excess risks, and 3) a requirement that all reinsurance on Federal bonds be placed with companies recognized by Treasury for reinsurance purposes. The proposed regulations provide provisions for exceptions to the aging and reinsurance regulations under certain circumstances. These regulations will help Treasury ensure that certified companies are capable of carrying out their surety contracts.

Timetable:

Action	Date	FR Cite
NPRM	08/05/87	52 FR 29039
NPRM Comment Period End	10/19/87	52 FR 37334
Final Action	06/30/88	
Final Action Effective	07/31/88	

Small Entity: No

Agency Contact: Terry Boyer, Manager, Surety Bond Branch, Department of the Treasury, Financial Management Service, 401 14th Street, SW, Room 259, Washington, DC 20227, 202 287-3915

RIN: 1510-AA12

[FR Doc. 88-6196 Filed 04-22-88; 8:45 am]

BILLING CODE 4810-35-T

DEPARTMENT OF THE TREASURY (TREAS)
Bureau of Alcohol, Tobacco and Firearms (BATF)

Bureau of Alcohol, Tobacco and Firearms

27 CFR Ch. I

[Notice No. 860]

Unified Agenda of Federal Regulations

AGENCY: Bureau of Alcohol, Tobacco and Firearms (ATF), Treasury.

ACTION: General notice; Unified Agenda of Federal Regulations of regulatory projects under development, consideration, and review.

SUMMARY: Pursuant to section 5 of Executive Order 12291, entitled "Federal Regulations," ATF is publishing an agenda of proposed regulations that are expected to be issued and of proposed regulations that have been issued and an agenda of existing regulations that are being reviewed under the terms of the Executive Order, within the next six months. The latter agenda also lists regulatory projects identified for review pursuant to the ATF Regulatory Reform Program. Pursuant to section 610 of the Regulatory Flexibility Act (Pub. L. 96-354; 5 U.S.C. 610), ATF is also indicating whether a regulatory project is likely to have a significant economic impact upon a substantial number of small entities.

This general notice is designed to give the public adequate notice of the regulatory activities being contemplated by ATF.

The agenda is based on information available at the present time. The next Unified Agenda of Federal Regulations will be published in the **Federal Register** of October 1988.

FOR FURTHER INFORMATION CONTACT: For information about any particular regulatory project, contact the person

TREAS—BATF

listed in the subheading "Agency Contact," for the regulatory project.

For general information about this general notice, contact Lori Weins, Wine and Beer Branch, Bureau of Alcohol, Tobacco and Firearms, Ariel Rios Federal Building, 1200 Pennsylvania Avenue, NW., Washington, DC 20226; (202) 566-7626.

Issuance

By Direction of the Secretary of the Treasury, this general notice reads as set forth below.

Dated: February 5, 1988.

Stephen E. Higgins,

Director.

Bureau of Alcohol, Tobacco and Firearms—Proposed Rule Stage

Sequence Number	Title	Regulation Identifier Number
2071	27 CFR 4 Recodification of 27 CFR Part 4	1512-AA17
2072	27 CFR 4.29 Grape Harvest Labeling for Wine	1512-AA31
2073	27 CFR 4 Labeling and Advertising of Wine, Distilled Spirits and Malt Beverages; Appearance of Athletes and Depiction of Athletic Events	1512-AA50
2074	27 CFR 250 Recodification of 27 CFR Part 250 as 27 CFR Part 26	1512-AA69
2075	27 CFR 4.24 Non-Generic Designations of Grape Wine Having Geographical Significance	1512-AA71
2076	27 CFR 27 Recodification of 27 CFR Part 251 as 27 CFR Part 27	1512-AA72
2077	27 CFR 4.73 Standards of Fill for Wine and Distilled Spirits	1512-AA77
2078	27 CFR 5.39 Label Disclosure for Brandy Treated with Wood	1512-AA81
2079	27 CFR 55 Fireworks Regulations	1512-AA52
2080	27 CFR 285 27 CFR Part 285, Manufacture of Cigarette Papers and Tubes	1512-AA33

Bureau of Alcohol, Tobacco and Firearms—Final Rule Stage

Sequence Number	Title	Regulation Identifier Number
2081	27 CFR 19.11 Implementation of the "Wine Impact Bill"	1512-AA06
2082	27 CFR 9 American Viticultural Areas	1512-AA07
2083	27 CFR 5.22 Standard of Identity for Vodka	1512-AA10
2084	27 CFR 197 Nonbeverage Drawback	1512-AA20
2085	27 CFR 240.180 to 240.400 Recodification of Wine Regulations (Subparts A to O)	1512-AA42
2086	27 CFR 4 Labeling and Advertising of Wine, Distilled Spirits and Malt Beverages; Use of the Word Light (Lite)	1512-AA48
2087	27 CFR 240 Materials and Processes for the Production and Treatment of Wine	1512-AA61
2088	27 CFR 4 Winegrape Varietal Designations	1512-AA67
2089	27 CFR 4.35 Winemaking Terminology	1512-AA70
2090	27 CFR 7 Use of Terms in the Labeling and Advertising of Malt Beverages Having an Alcohol Content of Less Than .5% by Volume	1512-AA73
2091	27 CFR 4.32 Labeling and Advertising of Wine, Distilled Spirits, and Malt Beverages; Disclosure of FD & C Yellow No. 6	1512-AA76
2092	27 CFR 25 Operation of a Retail Beer Dealership for on-premises consumption at a Brewery	1512-AA78
2093	27 CFR 72 Amendments to the Gun Control Act of 1968	1512-AA75
2094	27 CFR 178 Restrictions on Manufacture, Importation and Sale of Armor Piercing Ammunition	1512-AA79
2095	27 CFR 178 Simplified Recordkeeping for Low-volume Firearms Dealers	1512-AA80
2096	27 CFR 270.11 Manufacturer's Identification on Tobacco Products Packages	1512-AA28

Bureau of Alcohol, Tobacco and Firearms—Completed Actions

Sequence Number	Title	Regulation Identifier Number
2097	27 CFR 5.22(b)(1)(iii) Change in Standard of Identity for Straight Whiskies of the Same Type	1512-AA32
2098	27 CFR 5 Listing of Principal Place of Business on Distilled Spirits Labels	1512-AA74

VOL 53 ISS 79 PT 2 AP 25 1988 UMI

DEPARTMENT OF THE TREASURY (TREAS) **Proposed Rule Stage**

Bureau of Alcohol, Tobacco and Firearms (BATF)

ALCOHOL

2071. RECODIFICATION OF 27 CFR PART 4

Significance: Agency Priority

Legal Authority: 27 USC 205

CFR Citation: 27 CFR 4

Legal Deadline: None.

Abstract: To revise the wine labeling and advertising regulations; where applicable, to incorporate production regulations; and due to statutory amendments requested, may result in a legislative submission.

Timetable:

Action	Date	FR Cite
NPRM	12/00/88	

Small Entity: No

Additional Information: Additional Agency Contact: Ed Reisman

Agency Contact: James Hunt, ATF Coordinator, Department of the Treasury, Bureau of Alcohol, Tobacco and Firearms, Ariel Rios Federal Building, 1200 Pennsylvania Avenue, NW, Washington DC 20226, 202 566-7626

RIN: 1512-AA17

2072. GRAPE HARVEST LABELING FOR WINE

Significance: Agency Priority

Legal Authority: 27 USC 205E; 27 USC 205F

CFR Citation: 27 CFR 4.29

Legal Deadline: None.

Abstract: Late harvest designations, based on the Brix (percent by weight) level of the grapes at harvest would indicate to consumers that the grapes used to produce the wine were left on the vine for express purpose of increasing the sugar content. The designations would indicate additional techniques and processes were used in the production of the wine.

Timetable:

Action	Date	FR Cite
NPRM	12/00/88	

Small Entity: No

Agency Contact: James Hunt, ATF Coordinator, Department of the Treasury, Bureau of Alcohol, Tobacco and Firearms, Ariel Rios Federal Building, 1200 Pennsylvania Avenue, NW, Washington DC 20226, 202 566-7626

RIN: 1512-AA31

2073. LABELING AND ADVERTISING OF WINE, DISTILLED SPIRITS AND MALT BEVERAGES; APPEARANCE OF ATHLETES AND DEPICTION OF ATHLETIC EVENTS

Significance: Agency Priority

Legal Authority: 27 USC 205e to f

CFR Citation: 27 CFR 4; 27 CFR 5; 27 CFR 7

Legal Deadline: None.

Abstract: Discusses present policy on prohibition of active athletes and requests comments on whether the policy should be relaxed, retained, expanded to include all celebrities. On athletic events, comments are requested if the present prohibition should be expanded to include any athletic event, regardless of when the participants are shown consuming, or preparing to consume, alcohol beverages.

Timetable:

Action	Date	FR Cite
Next Action Undetermined		

Small Entity: No

Agency Contact: James Ficaretta, ATF Coordinator, Department of the Treasury, Bureau of Alcohol, Tobacco and Firearms, Ariel Rios Federal Building, 1200 Pennsylvania Avenue, NW, Washington DC 20226, 202 566-7626

RIN: 1512-AA50

2074. RECODIFICATION OF 27 CFR PART 250 AS 27 CFR PART 26

Significance: Agency Priority

Legal Authority: 26 USC 7651 to 7652; PL 85-859; 26 USC 5314; 26 USC 7805

CFR Citation: 27 CFR 250

Legal Deadline: None.

Abstract: As part of the recodification of Part 250, we plan to simplify, consolidate and or eliminate as many sections of regulations as possible placing particular emphasis on reducing the number of recordkeeping requirements, forms, and customs responsibilities. Wherever possible, we plan to utilize a proprietor's commercial records in lieu of requiring the proprietor to submit public use forms. These changes to Part 250 should considerably reduce the burden hours on industry.

Timetable:

Action	Date	FR Cite
NPRM	12/00/88	

Small Entity: No

Agency Contact: Richard Langford, ATF Coordinator, Department of the Treasury, Bureau of Alcohol, Tobacco and Firearms, Ariel Rios Federal Building, 1200 Pennsylvania Avenue, NW, Washington DC 20026, 202 566-7531

RIN: 1512-AA69

2075. NON-GENERIC DESIGNATIONS OF GRAPE WINE HAVING GEOGRAPHICAL SIGNIFICANCE

Significance: Agency Priority

Legal Authority: 27 USC 205

CFR Citation: 27 CFR 4.24

Legal Deadline: None.

Abstract: This proposal expands the list of names officially recognized under 27 CFR Part 4, as being non-generic for the purposes of labeling and advertising of wine. This proposal is the result of petitions from numerous foreign countries for ATF recognition of non-generic wine designations which, in their view, denote distinctive national products. This proposal is also an outgrowth of one of the commitments made by the United States, in the Exchange of Letters of July 28, 1983 with the Commission of the European Communities, to work within the regulatory framework of 27 CFR Part 4, to prevent erosion of non-generic designations of geographic significance. For practical reasons it is being proposed that only "examples" of non-generic designations be listed in Part 4 while a complete list of all non-generic designations be listed in a new Part 12.

Timetable:

Action	Date	FR Cite
NPRM	04/00/88	

Small Entity: No

Agency Contact: Lilia Vannett, ATF Specialist, Department of the Treasury, Bureau of Alcohol, Tobacco and Firearms, Ariel Rios Federal Building,

1200 Pennsylvania Avenue, NW, Washington DC 20226, 202 535-6245

RIN: 1512-AA71

2076. RECODIFICATION OF 27 CFR PART 251 AS 27 CFR PART 27

Significance: Agency Priority

Legal Authority: 26 USC 7805

CFR Citation: 27 CFR 27; 27 CFR 251

Legal Deadline: None.

Abstract: To update and clarify regulations relating to the Importation of Distilled Spirits, Wines and Beer and to incorporate related ATF Rulings into the regulations.

Timetable:

Action	Date	FR Cite
NPRM	12/00/88	

Small Entity: No

Agency Contact: Robert Petrangelo, ATF Coordinator, Department of the Treasury, Bureau of Alcohol, Tobacco and Firearms, Ariel Rios Federal Building, 1200 Pennsylvania Avenue, NW, Washington DC 20226, 202 566-7531

RIN: 1512-AA72

2077. STANDARDS OF FILL FOR WINE AND DISTILLED SPIRITS

Significance: Agency Priority

Legal Authority: 27 USC 205

CFR Citation: 27 CFR 4.73; 27 CFR 5.47

Legal Deadline: None.

Abstract: ATF is considering amending the standard of fill requirements for wine and distilled spirits. Based, in part, on a petition it has received, the Bureau wishes to gather information by inviting comments from the public and industry concerning the existing standards of fill.

Timetable:

Action	Date	FR Cite
ANPRM	06/24/87	52 FR 26385
ANPRM Comment Period Extended	08/21/87	
ANPRM Comment Period End	08/24/87	
ANPRM Extended Comment Period Ends	10/23/87	
NPRM	12/00/88	

Small Entity: No

Agency Contact: James Ficaretta, ATF Coordinator, Department of the Treasury, Bureau of Alcohol, Tobacco and Firearms, Ariel Rios Federal Building, 1200 Pennsylvania Avenue, NW, Washington, DC 20226, 202 566-7626

RIN: 1512-AA77

2078. ● LABEL DISCLOSURE FOR BRANDY TREATED WITH WOOD

Significance: Agency Priority

Legal Authority: 27 USC 205

CFR Citation: 27 CFR 5.39

Legal Deadline: None.

Abstract: ATF is proposing to amend the regulations in 27 CFR Part 5 concerning the wording, and placement, of the disclosure statement for brandy treated with wood.

Timetable:

Action	Date	FR Cite
NPRM	05/00/88	

Small Entity: No

Agency Contact: James Ficaretta, ATF Coordinator, Department of the Treasury, Bureau of Alcohol, Tobacco and Firearms, Ariel Rios Federal Building, 1200 Pennsylvania Avenue, NW, Washington, DC 200226, 202 566-7626

RIN: 1512-AA81

FIREARMS

2079. FIREWORKS REGULATIONS

Significance: Agency Priority

Legal Authority: 18 USC Chapter 40

CFR Citation: 27 CFR 55

Legal Deadline: None.

Abstract: Information gathering on Safe Handling of Explosive Materials in the Fireworks industry is necessary due to accidental explosions causing death. Injuries and property damage have occurred at fireworks manufacturing and assembling plants. Damage has been in the millions of dollars and some regulatory changes are needed. This notice to gather information is to determine changes needed and potential costs.

Timetable:

Action	Date	FR Cite
General Notice	06/08/84	49 FR 23872
NPRM	04/00/88	

Small Entity: No

Agency Contact: Larry White, ATF Specialist, Department of the Treasury, Bureau of Alcohol, Tobacco and Firearms, Ariel Rios Federal Building, 1200 Pennsylvania Avenue, NW, Washington DC 20226, 202 566-7591

RIN: 1512-AA52

TOBACCO PRODUCTS

2080. 27 CFR PART 285, MANUFACTURE OF CIGARETTE PAPERS AND TUBES

Significance: Agency Priority

Legal Authority: 26 USC 7805 (68A Stat 917)

CFR Citation: 27 CFR 285

Legal Deadline: None.

Abstract: To reduce or eliminate administrative and recordkeeping burdens under 27 CFR Part 285.

Timetable:

Action	Date	FR Cite
ANPRM	09/01/84	
ANPRM Comment Period End	10/02/84	
NPRM	06/00/88	

Small Entity: Undetermined

Agency Contact: Mary Wood, ATF Specialist, Department of the Treasury, Bureau of Alcohol, Tobacco and Firearms, Ariel Rios Federal Building, 1200 Pennsylvania Avenue, NW, Washington DC 20226, 202 566-7531

RIN: 1512-AA33

DEPARTMENT OF THE TREASURY (TREAS)

Final Rule Stage

Bureau of Alcohol, Tobacco and Firearms (BATF)

ALCOHOL

2081. IMPLEMENTATION OF THE "WINE IMPACT BILL"

Significance: Agency Priority

Legal Authority: 26 USC 5010

CFR Citation: 27 CFR 19.11; 27 CFR 19.37 to 19.40; 27 CFR 19.42; 27 CFR 19.346; 27 CFR 19.372; 27 CFR 19.402; 27 CFR 19.505; 27 CFR 19.566; 27 CFR 19.681; 27 CFR 19.748; 27 CFR 19.763; 27 CFR 19.764; 27 CFR 19.778 to 19.780; 27 CFR 170.681 to 170.691; 27 CFR 197.105; ...

Legal Deadline: None.

Abstract: Restores the tax system which existed for distilled spirits products containing wine or alcoholic flavoring materials prior to the enactment of the Distilled Spirits Tax Revision Act of 1979; also permits spirits bottled for industrial purposes to be transferred in bond between distilled spirits plants.

Timetable:

Action	Date	FR Cite
NPRM	03/27/87	52 FR 9873
NPRM Comment Period End	06/25/87	
Final Action	06/00/88	

Small Entity: No

Agency Contact: Richard Langford, ATF Coordinator, Department of the Treasury, Bureau of Alcohol, Tobacco and Firearms, Ariel Rios Federal Building, 1200 Pennsylvania Avenue, NW, Washington DC 20226, 202 566-7531

RIN: 1512-AA06

2082. AMERICAN VITICULTURAL AREAS

Significance: Agency Priority

Legal Authority: 27 USC 205

CFR Citation: 27 CFR 9

Legal Deadline: None.

Abstract: Establishes grape-growing regions as American viticultural areas for purposes of labeling and advertising of wine.

Timetable:

Ben Lomond Mountain, CA (contact Robert White)
- NPRM 04/27/87 (52 FR 13844)
- NPRM Comment Period End 05/27/87
- Final Action 12/09/87 (52 FR 46589)

Cayuga Lake, NY (contact Jim Ficaretta)
- NPRM 09/16/87 (52 FR 34927)
- NPRM Comment Period End 10/16/87
- Final Action 06/00/88

Middle Rio Grande Valley, NM (contact Ed Reisman)
- NPRM 05/26/87 (52 FR 19535)
- NPRM Comment Period End 06/29/87
- Final Action 04/00/88

Sierra Foothills, CA (contact Lori Weins)
- NPRM 05/26/87 (52 FR 19532)
- NPRM Comment Period End 07/27/87
- Final Action 11/18/87 (52 FR 44103)

Stags Leap District, CA (contact Jim Ficaretta)
- NPRM 02/11/87 (52 FR 4350)
- NPRM Comment Period End 04/13/87
- Final Action 06/00/88

Warren Hills, NJ (contact Steve Simon)
- NPRM 09/29/87 (52 FR 36432)
- NPRM Comment Period End 11/13/87
- Final Action 06/00/88

Western Connecticut Highlands, CT (contact Ed Reisman)
- NPRM 08/11/87 (52 FR 29705)
- NPRM Comment Period End 09/25/87
- Final Action 06/00/88

Wild Horse Valley, CA (contact Ed Reisman)
- NPRM 09/16/87 (52 FR 34924)
- NPRM Comment Period End 11/02/87
- Final Action 10/00/88

Small Entity: No

Agency Contact: See supplemental timetable, American Viticultural Areas, Department of the Treasury, Bureau of Alcohol, Tobacco and Firearms, Ariel Rios Federal Building, 1200 Pennsylvania Avenue, NW, Washington DC 20226, 202 566-7626

RIN: 1512-AA07

2083. STANDARD OF IDENTITY FOR VODKA

Significance: Agency Priority

Legal Authority: 27 USC 205

CFR Citation: 27 CFR 5.22

Legal Deadline: None.

Abstract: Considers clarifying the standard of identity for vodka by revoking Revenue Ruling 56-98 which permits the use of small quantities of sugar or citric acid in vodka; or would propose a new class and type of vodka which contains trace amounts of sugar or citric acid.

Timetable:

Action	Date	FR Cite
ANPRM	01/11/82	47 FR 1148
ANPRM Comment Period End	07/11/82	
NPRM	02/19/86	51 FR 6009
NPRM Comment Period End	05/20/86	
Final Action	09/00/88	

Small Entity: No

Agency Contact: David Brokaw, ATF Coordinator, Department of the Treasury, Bureau of Alcohol, Tobacco and Firearms, Ariel Riod Federal Building, 1200 Pennsylvania Avenue, NW, Washington DC 20226, 202 566-7626

RIN: 1512-AA10

2084. NONBEVERAGE DRAWBACK

Significance: Agency Priority

Legal Authority: 26 USC 5131 et seq

CFR Citation: 27 CFR 197

Legal Deadline: None.

Abstract: To update, clarify, simplify, and recodify the regulations relating to drawback of tax on distilled spirits used in the manufacture of non-beverage products.

Timetable:

Action	Date	FR Cite
NPRM	07/29/87	52 FR 28286
NPRM Comment Period End	10/29/87	
Final Action	12/00/88	

Small Entity: Yes

Additional Information: SMALL BUSINESSES CONT: This regulation affects approximately 500 entities.

Agency Contact: Steve Simon, ATF Specialist, Department of the Treasury, Bureau of Alcohol, Tobacco and Firearms, Ariel Rios Federal Building, 1200 Pennsylvania Avenue, NW, Washington DC 20226, 202 566-7626

RIN: 1512-AA20

2085. RECODIFICATION OF WINE REGULATIONS (SUBPARTS A TO O)

Significance: Agency Priority

Legal Authority: 26 USC 7805

CFR Citation: 27 CFR 240.180 to 240.400

Legal Deadline: None.

Abstract: To update, simplify, and clarify regulations relating to wine; and to incorporate ATF rulings into the Regulations.

VOL 53 ISS 79 PT 2 AP 25 1988 UMI

Timetable:

Action	Date	FR Cite
NPRM	03/07/86	51 FR 8098
NPRM Comment Period End	07/07/86	
NPRM Comment Period Extended	07/08/86	51 FR 24719
NPRM Extended Comment Period Ends	12/31/86	
Final Action	06/00/88	

Small Entity: No

Agency Contact: James Hunt, ATF Coordinator, Department of the Treasury, Bureau of Alcohol, Tobacco and Firearms, Ariel Rios Federal Building, 1200 Pennsylvania Avenue, NW, Washington DC 20226, 202 566-7626

RIN: 1512-AA42

2086. LABELING AND ADVERTISING OF WINE, DISTILLED SPIRITS AND MALT BEVERAGES; USE OF THE WORD LIGHT (LITE)

Significance: Agency Priority

Legal Authority: 27 USC 205e to f

CFR Citation: 27 CFR 4; 27 CFR 5; 27 CFR 7

Legal Deadline: None.

Abstract: "Light (Lite)" was addressed to a limited extent in Notice No. 362 (45 FR 83530). However, subsequent to its publication ATF was petitioned by the Center for Science in the Public Interest (CSPI), requesting mandatory caloric labeling on all alcohol beverages, as well as the establishment of upper limits on calories in products labeled as "light (lite)." Comments will be requested on CSPI's petition as well as other issues involving use of the term "light (lite)."

Timetable:

Action	Date	FR Cite
NPRM	08/12/86	51 FR 28836
NPRM Comment Period End	11/10/86	
NPRM Comment Period Reopened	11/14/86	51 FR 41355
NPRM Reopened Comment Period Ends	12/31/86	
Final Action	08/00/88	

Small Entity: No

Agency Contact: James Ficaretta, ATF Coordinator, Department of the Treasury, Bureau of Alcohol, Tobacco and Firearms, Ariel Rios Federal Building, 1200 Pennsylvania Avenue, NW, Washington DC 20226, 202 566-7626

RIN: 1512-AA48

2087. MATERIALS AND PROCESSES FOR THE PRODUCTION AND TREATMENT OF WINE

Significance: Agency Priority

Legal Authority: 27 USC 5382

CFR Citation: 27 CFR 240

Legal Deadline: None.

Abstract: Updates, clarifies, and simplifies the regulations relating to the production and treatment of wine.

Timetable:

Action	Date	FR Cite
NPRM	09/24/84	49 FR 37527
NPRM Comment Period Extended	01/22/85	50 FR 2832
NPRM Comment Period End	01/23/85	
Extended NPRM Comment Period Ends	03/01/85	
Final Action	12/00/88	

Small Entity: No

Additional Information: This was formerly part of RIN 1512-AA12 Materials and Processes for the Production and Treatment of Wine.

Agency Contact: Robert White, ATF Coordinator, Department of the Treasury, Bureau of Alcohol, Tobacco and Firearms, Ariel Rios Federal Building, 1200 Pennsylvania Avenue, NW, Washington DC 20226, 202 566-7626

RIN: 1512-AA61

2088. WINEGRAPE VARIETAL DESIGNATIONS

Significance: Agency Priority

Legal Authority: 27 USC 205(e)

CFR Citation: 27 CFR 4

Legal Deadline: None.

Abstract: This proposal would establish standardized lists of winegrape varietal names which may be used on domestic wine labels. In addition we are proposing a method by which new names may be added to the list. These standardized lists will assure more accurate and truthful identification of the wine.

Timetable:

Action	Date	FR Cite
NPRM	02/04/86	51 FR 4392
NPRM Comment Period End	04/07/86	
NPRM Comment Period Extended	04/08/86	51 FR 11944
NPRM Extended Comment Period Ends	07/07/86	
Final Action	06/00/88	

Small Entity: No

Agency Contact: Charles Bacon, ATF Coordinator, Department of the Treasury, Bureau of Alcohol, Tobacco and Firearms, Ariel Rios Federal Building, 1200 Pennsylvania Avenue, NW, Washington DC 20226, 202 566-7569

RIN: 1512-AA67

2089. WINEMAKING TERMINOLOGY

Significance: Agency Priority

Legal Authority: 27 USC 205(e)

CFR Citation: 27 CFR 4.35

Legal Deadline: None.

Abstract: ATF is proposing to define words denoting winemaking operations for use on wine labels in conjunction with the name and address of the bottler. This project partially fulfills the requirements of the court order in Wawskiewicz v. Department of the Treasury, 480 F. Supp. 739 (D.D.C. 1979), aff'd. in part, rev'd in part, 670 F.2d 296.

Timetable:

Action	Date	FR Cite
NPRM	05/29/86	51 FR 19361
NPRM Comment Period End	09/26/86	
Final Action	12/00/88	

Small Entity: No

Agency Contact: David Brokaw, ATF Coordinator, Department of the Treasury, Bureau of Alcohol, Tobacco and Firearms, Ariel Rios Federal Building, 1200 Pennsylvania Avenue, NW, Washington DC 20226, 202 566-7626

RIN: 1512-AA70

2090. USE OF TERMS IN THE LABELING AND ADVERTISING OF MALT BEVERAGES HAVING AN ALCOHOL CONTENT OF LESS THAN .5% BY VOLUME

Significance: Agency Priority

Legal Authority: 27 USC 205

CFR Citation: 27 CFR 7

Legal Deadline: None.

Abstract: ATF is proposing to incorporate into the regulations two Rulings (Rev. Rul. 57-322 and ATF Rul. 85-11) regarding the use of the terms "Non-Alcoholic," "Alcohol-Free," "Near Beer," and "Cereal Beverage" in the labeling and advertising of Malt Beverages.

Timetable:

Action	Date	FR Cite
NPRM	10/30/86	51 FR 39666
NPRM Comment Period End	01/28/87	
Final Action	07/00/88	

Small Entity: No

Agency Contact: Jim Ficaretta, ATF Coordinator, Department of the Treasury, Bureau of Alcohol, Tobacco and Firearms, Ariel Rios Federal Building, 1200 Pennsylvania Avenue, NW, Washington DC 20226, 202 566-7626

RIN: 1512-AA73

2091. LABELING AND ADVERTISING OF WINE, DISTILLED SPIRITS, AND MALT BEVERAGES; DISCLOSURE OF FD & C YELLOW NO. 6

Significance: Agency Priority

Legal Authority: 27 USC 205

CFR Citation: 27 CFR 4.32; 27 CFR 5.32; 27 CFR 7.22

Legal Deadline: None.

Abstract: ATF is proposing to amend the regulations by requiring the mandatory disclosure of FD & C Yellow No. 6 on labels of alcoholic beverages, because of evidence indicating the possibility of allergic-type reactions to the color additive. As in the case of FD & C Yellow No. 5, which also requires label disclosure under existing regulations FD & C Yellow No. 6 is used infrequently in the production of alcoholic beverages being limited to mostly cocktails, liqueurs, and other specialty products.

Timetable:

Action	Date	FR Cite
NPRM	09/04/87	52 FR 33603
Final Action	07/00/88	

Small Entity: No

Agency Contact: James Ficaretta, ATF Coordinator, Department of the Treasury, Bureau of Alcohol, Tobacco and Firearms, Ariel Rios Federal Building, 1200 Pennsylvania Avenue, NW, Washington, DC 20226, 202 566-7626

RIN: 1512-AA76

2092. OPERATION OF A RETAIL BEER DEALERSHIP FOR ON-PREMISES CONSUMPTION AT A BREWERY

Significance: Agency Priority

Legal Authority: 26 USC 5411

CFR Citation: 27 CFR 25

Legal Deadline: None.

Abstract: ATF is proposing to establish criteria and procedures for operating a retail beer dealership for on-premises consumption at a brewery. This proposal is the result of a petition submitted by Mr. Bill Owens, proprietor of Buffalo Bill's Brewery, located in Hayward, CA.

Timetable:

Action	Date	FR Cite
NPRM	08/31/87	52 FR 32814
NPRM Comment Period End	10/30/87	
Final Action	06/00/88	

Small Entity: Yes

Agency Contact: John Linthicum, ATF Coordinator, Department of the Treasury, Bureau of Alcohol, Tobacco and Firearms, Ariel Rios Federal Building, 1200 Pennsylvania Avenue, NW, Washington, DC 20226, 202 566-7626

RIN: 1512-AA78

FIREARMS

2093. AMENDMENTS TO THE GUN CONTROL ACT OF 1968

Significance: Agency Priority

Legal Authority: PL 99-308; PL 99-360

CFR Citation: 27 CFR 72; 27 CFR 178; 27 CFR 179

Legal Deadline: None.

Abstract: Implements changes required by Public Law 99-308 (Firearms Owners Protection Act of 1986), and amendments thereto (Public Law 99-360).

Timetable:

Action	Date	FR Cite
NPRM	10/29/86	51 FR 39635
Interim Final Rule	10/29/86	51 FR 39612
NPRM Comment Period End	01/27/87	
NPRM Comment Period Extended	01/28/87	52 FR 2865
NPRM Extended Comment Period Ends	02/27/87	
Final Action	12/00/88	

Small Entity: No

Agency Contact: Dan Crowley, ATF Specialist, Department of the Treasury, Bureau of Alcohol, Tobacco and Firearms, Ariel Rios Federal Building, 1200 Pennsylvania Avenue, NW, Washington DC 20226, 202 566-7591

RIN: 1512-AA75

2094. RESTRICTIONS ON MANUFACTURE, IMPORTATION AND SALE OF ARMOR PIERCING AMMUNITION

Significance: Agency Priority

Legal Authority: 18 USC 926

CFR Citation: 27 CFR 178

Legal Deadline: None.

Abstract: ATF is amending regulations to implement provisions of Public Law 99-408. The amended regulations will restrict the manufacture, importation and sale of armor piercing ammunition.

Timetable:

Action	Date	FR Cite
NPRM	01/16/87	52 FR 2053
Interim Final Rule	01/16/87	52 FR 2048
NPRM Comment Period End	04/16/87	
Final Action	12/00/88	

Small Entity: No

Agency Contact: Daniel Crowley, ATF Specialist, Department of the Treasury, Bureau of Alcohol, Tobacco and Firearms, Ariel Rios Federal Building, 1200 Pennsylvania Avenue, NW, Washington, DC 20226, 202 566-7591

RIN: 1512-AA79

VOL 53 ISS 79 PT 2 AP 25 1988 UMI

TREAS—BATF **Final Rule Stage**

2095. SIMPLIFIED RECORDKEEPING FOR LOW-VOLUME FIREARMS DEALERS

Significance: Agency Priority

Legal Authority: 18 USC 926

CFR Citation: 27 CFR 178

Legal Deadline: None.

Abstract: ATF is proposing to simplify recordkeeping procedures for sales or other dispositions of firearms by low-volume dealers.

Timetable:

Action	Date	FR Cite
NPRM	02/12/87	52 FR 4509
NPRM Comment Period End	05/13/87	
Final Action	12/00/88	

Small Entity: No

Agency Contact: Daniel crowley, ATF Specialist, Department of the Treasury, Bureau of Alcohol, Tobacco and Firearms, Ariel Rios Federal Building, 1200 Pennsylvania Avenue, NW, Washington, DC 20226, 202 566-7626

RIN: 1512-AA80

TOBACCO PRODUCTS

2096. MANUFACTURER'S IDENTIFICATION ON TOBACCO PRODUCTS PACKAGES

Significance: Agency Priority

Legal Authority: 26 USC 5723

CFR Citation: 27 CFR 270.11; 27 CFR 270.212; 27 CFR 275.163; 27 CFR 275.170; 27 CFR 275.172; 27 CFR 275.174; 27 CFR 290.11; 27 CFR 290.181; 27 CFR 290.185; 27 CFR 290.241 to 290.267; 27 CFR 295.42

Legal Deadline: None.

Abstract: To liberalize requirements relating to manufacturer identification on tobacco products packages and to make other miscellaneous changes.

Timetable:

Action	Date	FR Cite
NPRM	01/12/87	52 FR 1207
NPRM Comment Period End	03/13/87	
Final Action	06/00/88	

Small Entity: No

Agency Contact: Cliff Mullen, ATF Specialist, Department of the Treasury, Bureau of Alcohol, Tobacco and Firearms, Ariel Rios Federal Building, 1200 Pennsylvania Avenue, NW, Washington DC 20226, 202 566-7531

RIN: 1512-AA28

DEPARTMENT OF THE TREASURY (TREAS) — Completed Actions

Bureau of Alcohol, Tobacco and Firearms (BATF)

2097. CHANGE IN STANDARD OF IDENTITY FOR STRAIGHT WHISKIES OF THE SAME TYPE

Significance: Agency Priority

Legal Authority: 27 USC 205

CFR Citation: 27 CFR 5.22(b)(1)(iii); 27 CFR 19.346(b)

Legal Deadline: None.

Abstract: Current regulations do not provide for distilled spirits plant proprietors to mingle and still designate as straight whiskies of the same type produced at different distilleries or produced by different distillers. This project will allow such whiskies to be labeled as straight as long as the whiskies are produced within the same state. Their only alternative is to leave the regulations as they are and to not allow such whiskies to be mingled and designated as straight. We do not anticipate any extra costs to result from this change in regulations. This change will result in greater flexibility for distilled spirits plant proprietors.

Timetable:

Action	Date	FR Cite
NPRM	05/08/84	49 FR 19333
NPRM Comment Period End	07/06/84	
NPRM Comment Period Extended	07/13/84	49 FR 30538
Extended NPRM Comment Period Ends	10/29/84	
Final Action	10/28/87	52 FR 41419

Small Entity: No

Agency Contact: Robert White, ATF Coordinator, Department of the Treasury, Bureau of Alcohol, Tobacco and Firearms, Ariel Rios Federal Building, 1200 Pennsylvania Avenue, NW, Washington DC 20226, 202 566-7626

RIN: 1512-AA32

2098. LISTING OF PRINCIPAL PLACE OF BUSINESS ON DISTILLED SPIRITS LABELS

Significance: Agency Priority

Legal Authority: 26 USC 7805; 27 USC 205

CFR Citation: 27 CFR 5; 27 CFR 19

Legal Deadline: None.

Abstract: Will allow producers of distilled spirits who operate more than one distilled spirits plant to use a principal place of business as the address shown on labels in lieu of listing the actual place of production, provided the producer establishes a coding system for identifying where the product was actually bottled.

Timetable:

Action	Date	FR Cite
NPRM	01/23/85	51 FR 37605
NPRM Comment Period End	12/24/86	
Final Action	11/03/87	52 FR 42100

Small Entity: No

Agency Contact: Jim Hunt, ATF Coordinator, Department of the Treasury, Bureau of Alcohol, Tobacco and Firearms, Ariel Rios Federal Building, 1200 Pennsylvania Avenue, NW, Washington DC 20226, 202 566-7626

RIN: 1512-AA74

[FR Doc. 88-5798 Filed 04-22-88; 8:45 am]

BILLING CODE 4810-31-T

DEPARTMENT OF THE TREASURY (TREAS)
Comptroller of the Currency (OCC)

Comptroller of the Currency

12 CFR Ch. I

Semiannual Agenda of Regulatory Actions

AGENCY: Office of the Comptroller of the Currency, Treasury.

ACTION: Semiannual agenda of regulations.

SUMMARY: As required by the Regulatory Flexibility Act and Executive Order 12291, the Office of the Comptroller of the Currency (Office) has prepared this semiannual agenda of its rules and regulations currently under review and scheduled for review. Regulatory actions taken since the publication of the Office's previous semiannual agenda on October 26, 1987 (52 FR 40699) are also included. It is expected that this semiannual agenda will enable the public to be more aware of, and allow it to more effectively participate in, the Office's regulatory activity.

ADDRESS: The mailing address for all contacts: Office of the Comptroller of the Currency, 490 L'Enfant Plaza East, SW., Washington, DC 20219.

FOR FURTHER INFORMATION CONTACT: For general information about this semiannual agenda, contact Nancy Lowther, Financial Analyst, Legislative and Regulatory Analysis Division, (202) 447-1177.

For additional information about a particular item on this semiannual agenda, contact the individual identified as the contact person.

SUPPLEMENTARY INFORMATION: The Office has determined that none of the rulemakings discussed in this semiannual agenda requires a regulatory flexibility analysis; all entries have been determined not to have a "significant impact on a substantial number of small entities," and therefore are not subject to the provisions of the Act. Additionally, none of the rules is a "major" rule as defined by Executive Order 12291. Executive Order 12291 defines a "major" rule as one likely to result in:

(1) An annual effect on the economy of $100 million or more;

(2) A major increase in costs or prices for consumers, individual industries, Federal, State, or local government agencies, or geographic regions; or

(3) Significant adverse effects on competition, employment, investment, productivity, innovation, or on the ability of United States-based enterprises to compete with foreign-based enterprises in domestic or export markets.

Dated: February 22, 1988.

Robert L. Clarke,

Comptroller of the Currency.

Comptroller of the Currency—Proposed Rule Stage

Sequence Number	Title	Regulation Identifier Number
2099	12 CFR 9 Fiduciary Powers of National Banks and Collective Investment Funds	1557-AA04
2100	12 CFR 19 Rules of Practice and Procedure	1557-AA43
2101	12 CFR 4.19 Production of Documents and Testimony in Litigation Where the Comptroller or the Office is Not a Party	1557-AA57
2102	12 CFR 11, (New Subsection) Securities Exchange Act Disclosure Rules	1557-AA58
2103	12 CFR 3 Minimum Capital Ratios; Issuance of Directives	1557-AA61
2104	12 CFR 16 Securities Offering Disclosure Rules	1557-AA65
2105	12 CFR 9 Fiduciary Powers of National Banks and Collective Investment Funds	1557-AA66
2106	12 CFR 4 Supervision of Bank Operations	1557-AA67
2107	12 CFR 5.33 Merger, Consolidation, Purchase and Assumption	1557-AA71
2108	12 CFR 32 Lending Limits	1557-AA72
2109	12 CFR 12 Recordkeeping and Confirmation Requirements for Securities Transactions	1557-AA75
2110	12 CFR 4 Description of Office, Procedures, Public Information	1557-AA77

Comptroller of the Currency—Final Rule Stage

Sequence Number	Title	Regulation Identifier Number
2111	12 CFR 5 Rules, Policies, and Procedures for Corporate Activities	1557-AA00
2112	12 CFR 35 Agricultural Loan Loss Amortization	1557-AA73
2113	12 CFR 21 Minimum Security Devices and Procedures and Reports of Crimes and Suspected Crimes	1557-AA74
2114	12 CFR 1 Investment Securities Regulation	1557-AA78

VOL 53 ISS 79 PT 2 APR 25 1988 UMI

TREAS—OCC

Comptroller of the Currency—Completed Actions

Sequence Number	Title	Regulation Identifier Number
2115	12 CFR 18 Annual Financial Disclosures to Shareholders	1557-AA44
2116	12 CFR 1 Investment Securities Regulation	1557-AA60
2117	12 CFR 29 Real Estate Lending	1557-AA69
2118	12 CFR 32.8 Lending Limits; Substitute Lending Limit for Banks with Agricultural or Oil and Gas Loans	1557-AA76

DEPARTMENT OF THE TREASURY (TREAS)

Proposed Rule Stage

Comptroller of the Currency (OCC)

2099. FIDUCIARY POWERS OF NATIONAL BANKS AND COLLECTIVE INVESTMENT FUNDS

Legal Authority: Sec 1, 77 Stat 668; 12 USC 92a; 12 USC 481

CFR Citation: 12 CFR 9

Legal Deadline: None.

Abstract: Comments in response to a prior rulemaking Final Rule Docket No. 80-16 (46 FR 71571) published October 29, 1980 included recommendations that additional amendments should be made to 12 CFR Part 9. The OCC believes that the issues raised by the commenters can best be addressed through a comprehensive review of its regulations concerning national bank fiduciary powers and collective investment funds. The OCC requested comments from the public as to the desirability and feasibility of a comprehensive review of its trust regulations pertaining to collective investment funds, including specific matters which should be addressed. In view of the favorable disposition of litigation impacting on the fiduciary powers of national banks and collective investment funds (Investment Company Institute v. Clarke, 789 F.2d 175 (2d Cir. 1986), cert. denied, 55 U.S.L.W. 3316 (U.S. Nov. 4, 1986); Investment Company Institute v. Conover, 790 F.2d 925 (D.C. Cir. 1986), cert. denied, 55 U.S.L.W. 3316 (U.S. Nov. 4, 1986); Investment Company Institute v. Clarke, 793 F.2d 220 (9th Cir. 1986), cert. denied, 55 U.S.L.W. 3316 (U.S. Nov. 4, 1986); Investment Company Institute v. Clarke, No.

Timetable:

Action	Date	FR Cite
ANPRM	06/25/82	47 FR 27833
ANPRM Comment Period End	09/23/82	47 FR 27833
NPRM	05/00/88	
NPRM Comment Period End	07/00/88	
Final Action	12/00/88	

Small Entity: No

Additional Information: ABSTRACT CONTINUED: 86-3725 (W.D.N.C. August 25, 1986), appeal withdrawn by stipulation, Jan. 6, 1987), the project has been reactivated. The effect on small entities will be considered in the development of this rulemaking.

Agency Contact: Donald N. Lamson, Assistant Director, Department of the Treasury, Comptroller of the Currency, Securities & Corporate Practices Division, 490 L'Enfant Plaza East, SW, Washington, DC 20219, 202 447-1954

RIN: 1557-AA04

2100. RULES OF PRACTICE AND PROCEDURE

Legal Authority: 12 USC 1817(j); 12 USC 1818; 12 USC 1820; 15 USC 781(h); 15 USC 781(i); 15 USC 78o-4(c); 15 USC 78u; 15 USC 78w; 5 USC 554 to 557; PL 95-630; 12 USC 3102; 12 USC 3108(a)

CFR Citation: 12 CFR 19

Legal Deadline: None.

Abstract: The proposed regulation will set forth amendments to the hearing rules for administrative hearings. The effect on small entities will be considered in the development of this rulemaking.

Timetable:

Action	Date	FR Cite
NPRM	05/00/88	
NPRM Comment Period End	07/00/88	
Final Action	12/00/88	

Small Entity: No

Additional Information: ADDITIONAL AGENCY CONTACT: Brenda Curry, Senior Attorney, Legislative and Regulatory Analysis Division, (202) 447-1632, 490 L'Enfant Plaza East, SW, Washington, DC 20219.

Agency Contact: Robert L. Davis, Assistant Director, Department of the Treasury, Comptroller of the Currency, Enforcement and Compliance Division, 490 L'Enfant Plaza East, SW, Washington, DC 20219, 202 447-1818

RIN: 1557-AA43

2101. PRODUCTION OF DOCUMENTS AND TESTIMONY IN LITIGATION WHERE THE COMPTROLLER OR THE OFFICE IS NOT A PARTY

Legal Authority: 5 USC 301; 12 USC 481; 5 USC 552(b)(8)

CFR Citation: 12 CFR 4.19; 12 CFR 4.18(c); 12 CFR 7.6025(c); 12 CFR 4.18(a); 12 CFR 4.18(b)

Legal Deadline: None.

Abstract: This rule governs the release by the OCC of confidential documents, especially reports of examination, and testimony for use in litigation in which the OCC is not a party. The OCC is considering changing the rule to spell out the exact requirements for a request for such release, and the situations under which release might be authorized. The effect on small entities will be considered in the development of this rulemaking.

Timetable:

Action	Date	FR Cite
NPRM	00/00/00	

Small Entity: Undetermined

Agency Contact: Lester N. Scall, Senior Trial Attorney, Department of the Treasury, Comptroller of the Currency, Litigation Division, 490 L'Enfant Plaza East, SW, Washington, DC 20219, 202 447-1893

RIN: 1557-AA57

2102. SECURITIES EXCHANGE ACT DISCLOSURE RULES

Legal Authority: 15 USC 78

CFR Citation: 12 CFR 11, (New Subsection)

Legal Deadline: None.

Abstract: The proposed rule would require that more detailed and meaningful information be provided to shareholders and the OCC concerning banks' loan portfolios, including loans to borrowers in foreign countries experiencing liquidity problems, other sources of income and exposure to risks. This will assist shareholders in evaluating proposals for mergers, consolidations, acquisitions and similar matters and will assist the OCC in administering and enforcing the Securities Exchange Act of 1934 as it applies to national banks. The OCC considered not proposing the additional amendments or proposing them as a general guide rather than a rule. However, the OCC determined it was appropriate to propose the additional requirements as amendments to Part 11 because the OCC believes the proposed requirements will help to clarify the types of disclosures which the OCC, shareholders and the public would consider material in analyzing various Exchange Act filings and statements. The proposed rule will also include amendments to update Part 11 to conform with recent amendments by the Securities and Exchange Commission to its Securities Exchange Act Disclosure Rules. The (CONT)

Timetable:

Action	Date	FR Cite
NPRM	05/00/88	
NPRM Comment Period End	07/00/88	
Final Action	10/00/88	

Small Entity: No

Additional Information: ABSTRACT CONTINUED: effect on small entities will be considered in the development of this rulemaking.

Agency Contact: Michael C. Dugas, Attorney, Department of the Treasury, Comptroller of the Currency, Securities & Corporate Practices Division, 490 L'Enfant Plaza East, SW, Washington, DC 20219, 202 447-1954

RIN: 1557-AA58

2103. MINIMUM CAPITAL RATIOS; ISSUANCE OF DIRECTIVES

Significance: Regulatory Program

Legal Authority: 12 USC 1 et seq; 12 USC 93a; 12 USC 161; 12 USC 1818; 12 USC 3907; 12 USC 3909

CFR Citation: 12 CFR 3

Legal Deadline: None.

Abstract: The proposed guidelines provide for a common framework of capital adequacy measurement to remove a source of competitive inequality for banks operating internationally. However, the OCC believes the risk-based capital ratio is a useful tool for measuring capital adequacy at all national banks. The framework of measurement is mainly directed to the credit risk of balance sheet and off-balance sheet assets as they relate to bank capital. The effect on small entities will be considered in the development of this rulemaking.

Timetable:

Action	Date	FR Cite
ANPRM	03/27/86	51 FR 10602
ANPRM Comment Period End	06/25/86	51 FR 10602
NPRM	06/17/87	52 FR 23045
NPRM Comment Period End	08/17/87	52 FR 23045
NPRM	03/15/88	53 FR 8550
NPRM Public Comment Period	05/13/88	
Final Action	09/00/88	

Small Entity: No

Additional Information: ADDITIONAL AGENCY CONTACTS: Ed Irmler, Associate Director, Economic and Policy Analysis Division, (202) 447-1924; Larry Senter, National Bank Examiner, Commercial Activities Division, (202) 447-1164; C. Stewart Goddin, Senior International Economic Advisor, Multinational and Regional Bank Division, (202) 447-1747; 490 L'Enfant Plaza East, S.W., Washington, D.C. 20219.

Agency Contact: Sanford Brown, Attorney, Department of the Treasury, Comptroller of the Currency, Legal Advisory Services Division, 490 L'Enfant Plaza East, SW, Washington, DC 20219, 202 447-1880

RIN: 1557-AA61

2104. SECURITIES OFFERING DISCLOSURE RULES

Legal Authority: 12 USC 1 et seq; 12 USC 1818; 12 USC 93a

CFR Citation: 12 CFR 16

Legal Deadline: None.

Abstract: This regulation contains the OCC's disclosure requirements for securities offerings by national banks. The OCC is considering revisions which would clarify the coverage of the rule, specify the OCC's enforcement authority in connection with the rule, liberalize nonpublic offering requirements, provide for more meaningful disclosure requirements in public offerings, revise financial information requirements to be more consistent with 12 CFR Part 11, and where practicable, incorporate by reference provisions of 12 CFR Part 11. The effect on small entities will be considered in the development of this rulemaking.

Timetable:

Action	Date	FR Cite
NPRM	05/00/88	
NPRM Comment Period End	07/00/88	
Final Action	12/00/88	

Small Entity: Undetermined

Agency Contact: Michael C. Dugas, Attorney, Department of the Treasury, Comptroller of the Currency, Securities & Corporate Practices Division, 490 L'Enfant Plaza East, SW, Washington, DC 20219, 202 447-1954

RIN: 1557-AA65

2105. FIDUCIARY POWERS OF NATIONAL BANKS AND COLLECTIVE INVESTMENT FUNDS

Legal Authority: 12 USC 92a

CFR Citation: 12 CFR 9

Legal Deadline: None.

Abstract: The OCC proposes to amend this regulation to clarify the requirements concerning national bank fiduciary investment of uninvested or undistributed cash in fiduciary accounts. The effect on small entities will be considered in the development of this rulemaking.

Timetable:

Action	Date	FR Cite
NPRM	05/00/88	
NPRM Comment Period End	07/00/88	
Final Action	09/00/88	

Small Entity: No

Agency Contact: Barrett Aldemeyer, Attorney, Department of the Treasury, Comptroller of the Currency, Legal Advisory Services Division, 490 L'Enfant Plaza East, SW, Washington, DC 20219, 202 447-1880

RIN: 1557-AA66

2106. SUPERVISION OF BANK OPERATIONS

Legal Authority: 12 USC 1 et seq; 12 USC 481; 5 USC 552

CFR Citation: 12 CFR 4

Legal Deadline: None.

Abstract: The proposed regulation will set forth amendments to the existing description of supervision of bank operations by the Office of the Comptroller of the Currency. The effect on small entities will be considered in the development of this rulemaking.

Timetable:

Action	Date	FR Cite
NPRM	05/00/88	
NPRM Comment Period End	07/00/88	
Final Action	09/00/88	

Small Entity: No

Agency Contact: James F. E. Gillespie, Jr., Senior Attorney, Department of the Treasury, Comptroller of the Currency, Legal Advisory Services Division, 490 L' Enfant Plaza East, SW, Washington, DC 20219, 202 447-1880

RIN: 1557-AA67

2107. MERGER, CONSOLIDATION, PURCHASE AND ASSUMPTION

Legal Authority: 12 USC 1 et seq; 12 USC 93a; 12 USC 181; 12 USC 214a; 12 USC 215; 12 USC 215a; 12 USC 1828(c); 15 USC 78

CFR Citation: 12 CFR 5.33; 12 CFR 11.590

Legal Deadline: None.

Abstract: The OCC proposes to amend 12 CFR 5.33 to set forth the OCC's merger proxy statement filing requirements for banks that do not have a class of equity securities registered under the Securities Exchange Act of 1934 ("Exchange Act"), and to specify the disclosure that is required of such banks for various types of merger transactions. This proposal may also include an amendment to relevant portions of 12 CFR 11.590 so as to clarify the OCC's merger proxy requirements for Exchange Act registered banks and to ensure that these requirements will be consistent with those to be proposed at 12 CFR 5.33. These actions are expected to assist bank merger applicants in preparing their merger proxy materials, which are subject to OCC review and clearance pursuant to the OCC's merger procedures. The effect on small entities will be considered in development of this rulemaking.

Timetable:

Action	Date	FR Cite
NPRM	05/00/88	
NPRM Comment Period End	07/00/88	
Final Action	11/00/88	

Small Entity: Undetermined

Agency Contact: Laura Plaze, Attorney, Department of the Treasury, Comptroller of the Currency, Securities & Corporate Practices Division, 490 L'Enfant Plaza East, SW, Washington, DC 20219, 202 447-1954

RIN: 1557-AA71

2108. LENDING LIMITS

Legal Authority: 12 USC 1 et seq; 12 USC 84; 12 USC 93a

CFR Citation: 12 CFR 32

Legal Deadline: None.

Abstract: The OCC is considering several amendments to the lending limits regulation to simplify, clarify and improve that regulation. The effect on small entities will be considered in the development of this rulemaking.

Timetable:

Action	Date	FR Cite
NPRM	05/00/88	
NPRM Comment Period End	07/00/88	
Final Action	10/00/88	

Small Entity: Undetermined

Agency Contact: James F. E. Gillespie, Jr., Senior Attorney, Department of the Treasury, Comptroller of the Currency, Legal Advisory Services Division, 490 L'Enfant Plaza East, SW, Washington, DC 20219, 202 447-1880

RIN: 1557-AA72

2109. ● RECORDKEEPING AND CONFIRMATION REQUIREMENTS FOR SECURITIES TRANSACTIONS

Legal Authority: 12 USC 24; 12 USC 92a

CFR Citation: 12 CFR 12

Legal Deadline: None.

Abstract: This rulemaking will update 12 CFR Part 12 in light of the final regulations issued July 24, 1987 (52 FR 27910) by the Department of the Treasury as required by the Government Securities Act of 1986. The effect on small entities will be considered in the development of this rulemaking.

Timetable:

Action	Date	FR Cite
NPRM	07/00/88	
NPRM Comment Period End	09/00/88	
Final Action	12/00/88	

Small Entity: Undetermined

Agency Contact: John Kerr, National Bank Examiner, Department of the Treasury, Comptroller of the Currency, Investment Securities, 490 L'Enfant Plaza East, SW, Washington, DC 20219, 202 447-1901

RIN: 1557-AA75

2110. ● DESCRIPTION OF OFFICE, PROCEDURES, PUBLIC INFORMATION

Legal Authority: 12 USC 1 et seq; 5 USC 552; EO 12600

CFR Citation: 12 CFR 4

Legal Deadline: None.

Abstract: This proposed regulation implements recent amendments to the Freedom of Information Act (FOIA). The amendments concern Exemption 7 of the FOIA (relating to law

enforcement records) and the provisions of the FOIA concerning fees and fee waivers. In addition, the proposed regulation implements Executive Order 12600, which deals with predisclosure notification procedures for confidential commercial information. This proposed regulation also makes technical changes to the OCC's existing FOIA regulation. The proposed regulation, and the OCC's FOIA regulations in general, affect public disclosure of information by the OCC. The effect on small entities will be considered in the development of this rulemaking.

Timetable:

Action	Date	FR Cite
NPRM	05/00/88	
NPRM Comment Period End	07/00/88	
Final Action	10/00/88	

Small Entity: No

Additional Information: ADDITIONAL AGENCY CONTACT: Dean DeBuck, Freedom of Information Officer, (202) 447-1800, 490 L'Enfant Plaza East, S.W., Washington, D.C. 20219.

Agency Contact: Sanford Brown, Attorney, Department of the Treasury, Comptroller of the Currency, Legal Advisory Services Division, 490 L'Enfant Plaza East, SW, Washington, DC 20219, 202 447-1880

RIN: 1557-AA77

DEPARTMENT OF THE TREASURY (TREAS)
Comptroller of the Currency (OCC)

Final Rule Stage

2111. RULES, POLICIES, AND PROCEDURES FOR CORPORATE ACTIVITIES

Significance: Agency Priority

Legal Authority: 12 USC 1 et seq

CFR Citation: 12 CFR 5

Legal Deadline: None.

Abstract: The OCC is engaged in a continuing review of its rules, policies, and procedures governing corporate activities. The OCC proposes to make several miscellaneous technical amendments to this regulation to cause the regulation to conform to recent adjustments to OCC procedures and statutory changes for processing corporate filings; to centralize the OCC's distribution of forms and instructions for corporate activities filings; to provide clarification of the OCC's ability to impose conditions on transactions between a bank and its subsidiaries; and to outline the applicants' responsibility for accurate and complete filings. These proposals are expected to benefit national banks and the OCC by removing burdensome and costly regulatory requirements, while maintaining the OCC's ability to render an informed decision on the proposed activity; to eliminate public confusion about the availability of forms and instructions; and to enhance distribution efficiency. The effect on small entities is considered in the development of each rulemaking.

Timetable:

Action	Date	FR Cite
Technical Amendments	04/00/88	
Forms Distribution	06/00/88	
Operating Subsidiaries	06/00/88	
Applicants' Responsibility	08/00/88	

Small Entity: No

Agency Contact: Randall J. Miller, Director for Licensing Policy and Systems, Department of the Treasury, Comptroller of the Currency, Bank Organization & Structure Division, 490 L'Enfant Plaza East, SW, Washington, DC 20219, 202 447-1184

RIN: 1557-AA00

2112. ● AGRICULTURAL LOAN LOSS AMORTIZATION

Legal Authority: 12 USC 1 et seq; 12 USC 93a; Title VIII of the Competitive Equality Banking Act of 1987

CFR Citation: 12 CFR 35

Legal Deadline: Statutory, November 9, 1987.

Abstract: This regulation implements Title VIII of the Competitive Equality Banking Act of 1987 which permits agricultural banks to amortize losses on qualified agricultural loans. The regulation describes the procedures and standards applicable to banks desiring to amortize losses under that statute. It also describes the manner in which such amortizations are to be done. This regulation will not have significant impact on a substantial number of small entities.

Timetable:

Action	Date	FR Cite
Interim Final Rule	11/02/87	52 FR 41959
Final Action	05/00/88	

Small Entity: No

Additional Information: ADDITIONAL AGENCY CONTACTS: Jon A. Nagy, National Bank Examiner, Commercial Activities Division, (202) 447-1164; or Lance Cantor, Analyst, Special Supervision, (202) 447-1719, 490 L'Enfant Plaza East, S.W., Washington, D.C. 20219.

Agency Contact: James F. E. Gillespie, Jr., Senior Attorney, Department of the Treasury, Comptroller of the Currency, Legal Advisory Services Division, 490 L'Enfant Plaza East, SW, Washington, DC 20219, 202 447-1880

RIN: 1557-AA73

2113. ● MINIMUM SECURITY DEVICES AND PROCEDURES AND REPORTS OF CRIMES AND SUSPECTED CRIMES

Legal Authority: 12 USC 1 et seq; 12 USC 93a; 12 USC 1818; 12 USC 1881 to 1884

CFR Citation: 12 CFR 21

Legal Deadline: None.

Abstract: This regulation revises upward the reporting thresholds for reports of known or suspected crimes involving national banks. This regulation will not have significant impact on a substantial number of small entities.

Timetable:

Action	Date	FR Cite
Interim Final Rule	03/11/88	53 FR 7861
Interim Final Rule Comment Period End	05/10/88	
Final Action	08/00/88	

Small Entity: No

VOL 53 ISS 79 PT 2 AP 25 1988 UMI

TREAS—OCC **Final Rule Stage**

Agency Contact: Joel Miller, Attorney, Department of the Treasury, Comptroller of the Currency, Enforcement and Compliance Division, 490 L'Enfant Plaza East, SW, Washington, DC 20219, 202 447-1818

RIN: 1557-AA74

2114. ● INVESTMENT SECURITIES REGULATION

Legal Authority: PL 97-35, Sec 1342(a); 12 USC 1; 12 USC 24(7); PL 98-473, Title I

CFR Citation: 12 CFR 1

Legal Deadline: None.

Abstract: The OCC is amending 12 CFR Part 1 to make two nonsubstantive changes in the regulation. The first change in the regulation incorporates the existing statutory authority of national banks to underwrite and deal in obligations of the African Development Bank and the Inter-American Investment Corporation. The second change deletes from the regulation an outdated and unnecessary provision describing procedures for banks to request OCC rulings. This final rule will not have a significant economic impact on a substantial number of small entities.

Timetable:

Action	Date	FR Cite
Final Action	05/00/88	
Final Action Effective	06/00/88	

Small Entity: No

Additional Information: ADDITIONAL AGENCY CONTACT: Owen Carney, Director, Investment Securities, (202) 447-1901, 490 L'Enfant Plaza East, S.W., Washington, D.C. 20219

Agency Contact: Jonathan Rushdoony, Senior Attorney, Department of the Treasury, Comptroller of the Currency, Legal Advisory Services Division, 490 L'Enfant Plaza East, SW, Washington, DC 20219, 202 447-1880

RIN: 1557-AA78

DEPARTMENT OF THE TREASURY (TREAS) — Completed Actions
Comptroller of the Currency (OCC)

2115. ANNUAL FINANCIAL DISCLOSURES TO SHAREHOLDERS

Significance: Regulatory Program

Legal Authority: 12 USC 93a; 12 USC 161; 12 USC 1818

CFR Citation: 12 CFR 18

Legal Deadline: None.

Abstract: This final regulation revises certain disclosure requirements of the OCC. It requires all national banks to prepare an annual disclosure statement. This statement would include two consecutive years' comparative financial statements. The information to be disclosed is currently publicly available from the Call Report. The bank would have the option of including a narrative discussion of matters they deem important. The bank would notify shareholders along with the annual meeting notice and depositors and potential depositors via a lobby poster in the main office and each branch. Banks currently subject to 12 CFR 11 may use their F-2 form. This final rule will not have a significant economic impact on a substantial number of small entities.

Timetable:

Action	Date	FR Cite
ANPRM	07/13/84	49 FR 28566
ANPRM Comment Period End	10/11/84	49 FR 28566
NPRM	10/30/85	50 FR 45372
NPRM Comment Period End	02/28/86	51 FR 04504
NPRM	05/22/87	52 FR 23456
NPRM Public Comment Period End	06/21/87	52 FR 23457
Final Action	02/10/88	53 FR 03863
Final Action Effective	03/11/88	53 FR 03863

Small Entity: No

Agency Contact: Emily R. McNaughton, National Bank Examiner, Department of the Treasury, Comptroller of the Currency, Commercial Examinations Division, 490 L'Enfant Plaza East, SW, Washington, DC 20219, 202 447-1165

RIN: 1557-AA44

2116. INVESTMENT SECURITIES REGULATION

Legal Authority: 12 USC 1 et seq; 12 USC 24(7)

CFR Citation: 12 CFR 1

Legal Deadline: None.

Abstract: The Office proposes to amend this regulation to provide adequate safeguards for the purchase of mortgage-backed securities by national banks for their own accounts. The proposal will require that issues of such securities, in order to be eligible for purchase by national banks, must satisfy the Office's standards of investment quality and marketability. The proposal is considered a desirable alternative to leaving national banks without guidance in this area. The effect on small entities will be considered in the development of this rulemaking.

Timetable:

Action	Date	FR Cite
Withdrawn	02/00/88	

Small Entity: Undetermined

Additional Information: ADDITIONAL AGENCY CONTACT: Owen Carney, Director, Investment Securities Division, 202 447-1901, 490 L'Enfant Plaza East, SW, Washington, DC 20219.

Agency Contact: Jonathan Rushdoony, Senior Attorney, Department of the Treasury, Comptroller of the Currency, Legal Advisory Services Division, 490 L'Enfant Plaza East, SW, Washington, DC 20219, 202 447-1880

RIN: 1557-AA60

2117. REAL ESTATE LENDING

Legal Authority: 12 USC 1 et seq; 12 USC 93a; 12 USC 371; 12 USC 1701j-3

CFR Citation: 12 CFR 29; 12 CFR 30; 12 CFR 34

Legal Deadline: None.

Abstract: This final rule will revise 12 CFR 29 on adjustable-rate mortgages to conform disclosure requirements with Regulation Z, 12 CFR 226. Coverage of

the regulation will be limited to consumer credit, and secondary market authority will be expanded. Obsolete portions of 12 CFR 30 on due-on-sale clauses will be be rescinded. The revised adjustable-rate mortgages regulations and remaining regulations on due-on-sale clauses will then be transferred to 12 CFR 34 so that all substantive regulations on real estate lending will be found in the same place. This final rule will not have significant impact on a substantial number of small entities.

Timetable:

Action	Date	FR Cite
NPRM	10/02/87	52 FR 36953
NPRM Comment Period End	11/02/87	52 FR 36953
Final Action	03/11/88	53 FR 7885

Small Entity: No

Agency Contact: Ellen C. Starr, Attorney, Department of the Treasury, Comptroller of the Currency, Legal Advisory Services Division, 490 L'Enfant Plaza East, SW, Washington, DC 20219, 202 447-1880

RIN: 1557-AA69

2118. ● LENDING LIMITS; SUBSTITUTE LENDING LIMIT FOR BANKS WITH AGRICULTURAL OR OIL AND GAS LOANS

Legal Authority: 12 USC 1 et seq; 12 USC 84; 12 USC 93a

CFR Citation: 12 CFR 32.8

Legal Deadline: None.

Abstract: The OCC is amending the portion of its regulation on national bank lending limits dealing with the substitute lending limit for banks with charged-off agricultural and oil and gas loans. This final rule extends the period for eligible "special category charge-offs" and, also, the period of the substitute lending limit so as to make those periods consistent with the recently amended policy on capital forbearance. This final rule is intended to provide further temporary relief from lending limit restrictions for national banks with charge-offs of agricultural and oil and gas loans. This final rule will not have significant impact on a substantial number of small entities.

Timetable:

Action	Date	FR Cite
Final Action	02/03/88	53 FR 2997
Final Action Effective	02/03/88	53 FR 2997

Small Entity: No

Additional Information: ADDITIONAL AGENCY CONTACT: Jon A. Nagy, National Bank Examiner, Commercial Activities Division, (202) 447-1164, 490 L'Enfant Plaza East, S.W., Washington, D.C. 20219.

Agency Contact: James F. E. Gillespie, Jr., Senior Attorney, Department of the Treasury, Comptroller of the Currency, Legal Advisory Services Division, 490 L'Enfant Plaza East, SW, Washington, DC 20219, 202 447-1880

RIN: 1557-AA76

[FR Doc. 88-5799 Filed 04-22-88; 8:45 am]

BILLING CODE 4810-33-T

DEPARTMENT OF THE TREASURY (TREAS)

United States Customs Service (CUSTOMS)

Customs Service

19 CFR Ch. I

Semiannual Agenda

AGENCY: Customs Service, Treasury.

ACTION: Semiannual agenda.

SUMMARY: In response to Pub. L. 96-354, the "Regulatory Flexibility Act," and Executive Order 12291, "Federal Regulations," Customs has prepared and is publishing for public information a list of regulations either under development or under review.

FOR FURTHER INFORMATION CONTACT: For additional information regarding the substance of any particular regulatory project described in the agenda, please communicate with the person identified as the "Agency Contact." All agency contact persons are located at U.S. Customs Service Headquarters, the address of which is noted below. Comments or inquiries of a general nature about the agenda itself should be directed to Gertrude A. Bresnahan, Regulations and Disclosure Law Branch, Office of Regulations and Rulings, Headquarters, U.S. Customs Service, Room 2324, 1301 Constitution Avenue, NW., Washington, DC 20229 (202-566-8237).

SUPPLEMENTARY INFORMATION:

Background

Public Law 96-354, the "Regulatory Flexibility Act" (RFA) and Executive Order (E.O.) 12291 of February 17, 1981, "Federal Regulations," require semiannual publication, in April and October of each year, or an agenda of regulations which are "likely to have a significant economic impact on a substantial number of small entities" and "major" regulations, respectively. The RFA and E.O. 12291 also require agencies to include in their agendas currently effective rules which are under agency review. Customs agenda includes a brief abstract of each regulatory project ("project") being considered, an indication of whether the project will have an RFA impact, the section(s) of the Code of Federal Regulations affected, the legal authority for the action being taken, the name, title, and telephone number of an agency contact and, where applicable, an approximate timetable of completing action on any project for which Customs has published a notice of proposed rulemaking. In addition, the status of projects referred to in previously published agendas is shown. It has been determined that none of the projects listed as being under development meets the standards required of a "major" regulation provided in E.O. 12291.

General statutory authority for the development or review of regulations relating to Customs matters is found in section 301, title 5, United States Code (5 U.S.C. 301), and in sections 66 and 1624, title 19, United States Code (19 U.S.C. 66, 1624). When appropriate, additional specific statutory authority is indicated as the legal authority for the project.

Dated: February 19, 1988.

Harvey B. Fox,

Director, Office of Regulations and Rulings.

TREAS—CUSTOMS

United States Customs Service—Prerule Stage

Sequence Number	Title	Regulation Identifier Number
2119	19 CFR 19 Customs Warehouses; Duty-Free Stores	1515-AA22

United States Customs Service—Proposed Rule Stage

Sequence Number	Title	Regulation Identifier Number
2120	19 CFR 134 Country of Origin Marking	1515-AA59

United States Customs Service—Final Rule Stage

Sequence Number	Title	Regulation Identifier Number
2121	19 CFR 6 Air Commerce Regulations	1515-AA47
2122	19 CFR 4 Customs User Fees	1515-AA50
2123	19 CFR 141 Entry of Consolidated Shipments	1515-AA56
2124	19 CFR 4 Harbor Maintenance Fee	1515-AA57
2125	19 CFR 113 Continuous Importation and Entry Bond Secured by Corporate Sureties	1515-AA60
2126	19 CFR 6.14 Air Ambulance Operators -- Overflight Exemptions	1515-AA62
2127	19 CFR 4.7a Unique Bill of Lading	1515-AA63

United States Customs Service—Completed Actions

Sequence Number	Title	Regulation Identifier Number
2128	19 CFR 12 Semiconductor Chip Products	1515-AA51
2129	19 CFR 24 Formal Entry User Fee	1515-AA53
2130	19 CFR 141 Liens by Customs Brokers	1515-AA58

DEPARTMENT OF THE TREASURY (TREAS)
United States Customs Service (CUSTOMS)

Prerule Stage

2119. CUSTOMS WAREHOUSES; DUTY-FREE STORES

Legal Authority: 19 USC 1556; 19 USC 1565; 19 USC 1623

CFR Citation: 19 CFR 19; 19 CFR 144

Legal Deadline: None.

Abstract: Consideration of various actions in regard to administration of duty-free stores. Actions range from abolition of stores to their designation as class of bonded warehouse and/or increased regulation. Actions necessary due to need for increased efficiency of store administration by Customs and to address enforcement problems related to stores. Public comment requested on actions under consideration, as well as store operations in general. Work Plan 83-1 approved.

Timetable:

Action	Date	FR Cite
ANPRM	07/21/83	48 FR 33318
ANPRM Comment Period End	09/19/83	
Notice of Status	07/07/86	51 FR 24535
Pending Congressional Action	00/00/00	

Small Entity: No

Agency Contact: John R. Holl, Operation Officer, Department of the Treasury, United States Customs Service, Room 2426, 1301 Constitution Avenue, NW, Washington, DC 20229, 202 566-5354

RIN: 1515–AA22

DEPARTMENT OF THE TREASURY (TREAS)
United States Customs Service (CUSTOMS)

Proposed Rule Stage

2120. COUNTRY OF ORIGIN MARKING

Legal Authority: 5 USC 301; 19 USC 66; 19 USC 1202; 19 USC 1304; 19 USC 1624

CFR Citation: 19 CFR 134

Legal Deadline: None.

Abstract: Amendment to the Customs Regulations relating to the requirement that every imported article of foreign origin, or its container, shall be legibly and conspicuously marked to indicate to an ultimate purchaser in the U.S., the English name of the country of origin of the article. Proposal would require that whenever the full or abbreviated name of a country or place other than the country of origin, or a symbol readily associated with a country or place other than the country of origin appears anywhere on a foreign article or its container, then the actual country of origin of the article must be marked on the article or its container in close proximity to each reference to the country or place not the country of origin, or a hang tag or sticker affixed to a highly conspicuous portion of the article.

Timetable:

Action	Date	FR Cite
NPRM in Treasury Review	02/22/88	
NPRM	04/00/88	

Small Entity: No

Agency Contact: Lorrie Rodbart, Attorney, Department of the Treasury, United States Customs Service, Room 2343, 1301 Constitution Avenue, NW, Washington, DC 20229, 202 566-5765

RIN: 1515-AA59

DEPARTMENT OF THE TREASURY (TREAS)
United States Customs Service (CUSTOMS)

Final Rule Stage

2121. AIR COMMERCE REGULATIONS

Legal Authority: 5 USC 301; 19 USC 66; 19 USC 1624; 19 USC 1644; 49 USC 1509

CFR Citation: 19 CFR 6

Legal Deadline: None.

Abstract: Revises rules relating to the entry and clearance of aircraft and the transportation of persons and cargo by aircraft. Sets forth the general Customs requirements applicable to all air commerce.

Timetable:

Action	Date	FR Cite
NPRM	07/26/85	50 FR 30455
NPRM Comment Period End	10/24/85	
TD in Treasury Review	01/22/88	
Final Action	06/00/88	

Small Entity: No

Agency Contact: Larry L. Burton, Attorney, Department of the Treasury, United States Customs Service, Room 2417, 1301 Constitution Avenue, NW, Washington, DC 20229, 202 566-5706

RIN: 1515-AA47

2122. CUSTOMS USER FEES

Legal Authority: 19 USC 66; 19 USC 1202; 19 USC 1624; 31 USC 9701; PL 99-272

CFR Citation: 19 CFR 4; 19 CFR 6; 19 CFR 24; 19 CFR 111; 19 CFR 123; 19 CFR 145

Legal Deadline: Statutory, July 7, 1986.

Abstract: Amends Customs Regulations to provide for payment of specific fees to Customs for the processing of persons, aircraft, vehicles and merchandise arriving in the U.S. as well as for the payment of an annual fee by Customs brokers.

Timetable:

Action	Date	FR Cite
Interim Final Rule	06/11/86	51 FR 21152
Final Rule Pending internal decision	05/01/88	
Final Action	09/00/88	

Small Entity: Undetermined

Agency Contact: Denise Crawford, Operations Officer, Department of the Treasury, United States Customs Service, Room 4133, 1301 Constitution Avenue, NW, Washington, DC 20229, 202 566-9425

RIN: 1515-AA50

2123. ENTRY OF CONSOLIDATED SHIPMENTS

Legal Authority: 19 USC 66; 19 USC 1448; 19 USC 1484; 19 USC 1624

CFR Citation: 19 CFR 141; 19 CFR 178

Legal Deadline: None.

Abstract: Amendment to the Customs Regulations relating to entry procedures for consolidated shipments of imported merchandise. The amendment would ensure that if individual shipments of merchandise having various consignees are consolidated into a large shipment, the entry would not be made by a broker, or at a port of entry, designated by the consignee named in the master bill of lading or master air waybill if any individual bill of lading or individual air waybill within that shipment specifies a different broker, or port of entry, for making entry, or that entry will be made by the actual owner or purchaser.

Timetable:

Action	Date	FR Cite
NPRM	11/04/87	52 FR 42310
NPRM Comment Period End	02/16/88	53 FR 30
Final Action	08/00/88	

Small Entity: No

Additional Information: After consideration of the comments received in response to the previous notice proposing this change, and meetings with affected persons, it has been determined that many people did not understand the proposal. Accordingly, the document has been modified and it should be republished to allow all affected persons an opportunity to submit comments before any final decisions are made.

Agency Contact: William Rosoff, Attorney, Department of the Treasury, United States Customs Service, Room 2414, 1301 Constitution Avenue NW, Washington, DC 20229, 202 566-5856

RIN: 1515-AA56

VOL 53 ISS 79 PT 2 APR 25 1988 UMI

2124. HARBOR MAINTENANCE FEE

Legal Authority: 5 USC 301; 19 USC 66; 19 USC 81a to 81u; 19 USC 1202; 19 USC 623; 19 USC 1624; 31 USC 9701; PL 99-272; PL 99-509; PL 99-662

CFR Citation: 19 CFR 4; 19 CFR 24; 19 CFR 146; 19 CFR 178

Legal Deadline: Statutory, April 1, 1987.

Abstract: Amendments to the Customs Regulations to implement provisions of the Water Resources Development Act of 1986 which authorizes Customs to assess a harbor maintenance fee of 0.04 percent (.0004) on the value of commercial cargo loaded on or unloaded from a commercial vessel at a port unless specifically exempted from the fee. Proceeds of the fee are deposited in a trust fund for the U.S. Army Corps of Engineers to use for the improvement and maintenance of U.S. ports and harbors.

Timetable:

Action	Date	FR Cite
Interim Final Rule	03/30/87	
Interim Final Rule Public Comment Period End	08/28/87	
Final Action	10/15/87	
Comments being analyzed	02/08/88	
Next action pending development of new penalty guidelines and OMB approval of new reporting forms	05/00/88	

Small Entity: Undetermined

Agency Contact: Tracy Denning, Department of the Treasury, United States Customs Service, Room 4118, 1301 Constitution Ave., NW, Washington, DC 20229, 202 566-8301

RIN: 1515-AA57

2125. CONTINUOUS IMPORTATION AND ENTRY BOND SECURED BY CORPORATE SURETIES

Legal Authority: 19 USC 66; 19 USC 1484; 19 USC 1551; 19 USC 1565; 19 USC 1623; 19 USC 1624

CFR Citation: 19 CFR 113

Legal Deadline: None.

Abstract: Amendment to the Customs Regulations to provide that a continuous importation and entry bond secured by a corporate surety may only be filed with Customs under cover of a letter signed by an authorized officer or agent of that surety. Such an amendment would protect the Government from unnecessary delays in receiving payment from sureties of an importer's liabilities, for which the surety is also responsible, when the surety denies liability because it claims to have no record of the bond upon which the demand is made.

Timetable:

Action	Date	FR Cite
NPRM	09/18/87	52 FR 35274
NPRM Comment Period End	11/17/87	
Final Action	06/00/88	

Small Entity: No

Agency Contact: William Lawlor, Attorney, Department of the Treasury, United States Customs Service, Room 2417, 1301 Constitution Avenue, NW, Washington, DC 20229, 202 566-5706

RIN: 1515-AA60

2126. ● AIR AMBULANCE OPERATORS -- OVERFLIGHT EXEMPTIONS

Legal Authority: 5 USC 301; 19 USC 66; 19 USC 1202; 19 USC 1624; 49 USC 1474; 49 USC 1509

CFR Citation: 19 CFR 6.14

Legal Deadline: None.

Abstract: Amendment to the Customs Regulations to ease restrictions on air ambulance flights.

Timetable:

Action	Date	FR Cite
TD in Customs Review	01/26/88	
Interim Final Rule	06/00/88	

Small Entity: No

Agency Contact: Glenn Ross, Operations Officer, Department of the Treasury, United States Customs Service, Room 4416, 1301 Constitution Avenue, NW, Washington, DC 20229, 202 566-5607

RIN: 1515-AA62

2127. ● UNIQUE BILL OF LADING

Legal Authority: 5 USC 301; 19 USC 66; 19 USC 1624; 46 USC 3; 46 USC 91; 46 USC 2103

CFR Citation: 19 CFR 4.7a

Legal Deadline: None.

Abstract: Amendment to the Customs Regulations to require that each bill of lading which accompanies a shipment of imported cargo carried by vessel possess a unique 12 character identifier. This identifier will serve to distinguish the particular bill of lading from other bills of lading issued by that carrier or issuer and from bills issued by others. The identifier is designed to enable Customs Automated Commercial System to more accurately track the progress of cargo from its arrival to its release.

Timetable:

Action	Date	FR Cite
NPRM	12/09/87	52 FR 46602
NPRM Comment Period End	02/08/88	
Comments being analyzed	02/22/88	
Final Action	06/00/88	

Small Entity: No

Agency Contact: Robin Landis, Operations Officer, Department of the Treasury, United States Customs Service, Room 4140, 1301 Constitution Avenue, NW, Washington, DC 20229, 202 566-8151

RIN: 1515-AA63

BEST COPY AVAILABLE

DEPARTMENT OF THE TREASURY (TREAS)
United States Customs Service (CUSTOMS)

Completed Actions

2128. SEMICONDUCTOR CHIP PRODUCTS

Legal Authority: 17 USC 910; 19 USC 66; 19 USC 1202; 19 USC 1337; 19 USC 1623; 19 USC 1624

CFR Citation: 19 CFR 12

Legal Deadline: None.

Abstract: Implements Semiconductor Chip Protection Act by amending Customs Regulations to require persons seeking exclusion of infringing semiconductor chip products to first obtain a court order enjoining, or an order of the U.S. International Trade Commission excluding the importation of the products. Customs will then enforce the court order or exclusion orders.

Timetable:

Action	Date	FR Cite
NPRM	07/29/86	51 FR 27057
NPRM Comment Period End	09/29/86	
TD In Treasury Review	07/06/87	
Final Action TD 87-132	10/21/87	52 FR 39217
Final Action Effective	11/20/87	

Small Entity: No

Agency Contact: Samuel Orandle, Attorney, Department of the Treasury, United States Customs Service, Room 2343, 1301 Constitution Avenue, NW, Washington, DC 20229, 202 566-5765

RIN: 1515-AA51

2129. FORMAL ENTRY USER FEE

Significance: Agency Priority

Legal Authority: PL 99-514

CFR Citation: 19 CFR 24

Legal Deadline: Statutory, December 1, 1986.

Abstract: Amends Customs Regulations to implement a provision of the Omnibus Budget Reconciliation Act of 1986 which authorizes Customs to assess a merchandise processing user fee on formal entries of imported merchandise.

Timetable:

Action	Date	FR Cite
Interim Final Rule	12/01/86	51 FR 43188
NPRM Comment Period End	01/30/87	
Final Rule Pending Legislative Amendment	02/22/88	
No further action expected Further action depends on future legislation	03/23/88	

Small Entity: Undetermined

Agency Contact: Thomas Banner, Operations Officer, Department of the Treasury, United States Customs Service, 1301 Constitution Ave., NW, Room 4108, Washington, DC 20229, 202 535-4136

RIN: 1515-AA53

2130. LIENS BY CUSTOMS BROKERS

Legal Authority: 19 USC 66; 19 USC 1448; 19 USC 1484; 19 USC 1624

CFR Citation: 19 CFR 141; 19 CFR 171

Legal Deadline: None.

Abstract: Amendment to the Customs Regulations to implement a statutory provision which allows brokers to file liens for freight, charges, or contribution in general average, until proof has been produced that the lien has been satisfied or discharged. Imported merchandise cannot be released from Customs custody until the lien has been satisfied or discharged.

Timetable:

Action	Date	FR Cite
NPRM	02/25/86	51 FR 6555
NPRM Comment Period End	04/28/86	
TD under development	06/00/87	
Final Action TD 88-7	02/19/88	53 FR 4961
Final Action Effective	03/21/88	

Small Entity: No

Agency Contact: Jerry Laderberg, Attorney, Department of the Treasury, United States Customs Service, Room 2343, 1301 Constitution Avenue, NW, Washington, DC 20229, 202 566-5765

RIN: 1515-AA58

[FR Doc. 88-5800 Filed 04-22-88; 8:45 am]

BILLING CODE 4820-02-T

DEPARTMENT OF THE TREASURY (TREAS)
Internal Revenue Service (IRS)

Internal Revenue Service

26 CFR Ch. I

Improving Government Regulations; Semiannual Agenda of Regulations

AGENCY: Internal Revenue Service, Treasury.

ACTION: Semiannual agenda of regulations.

SUMMARY: This semiannual agenda lists the regulations that the Internal Revenue Service will be developing from April 1, 1988, through March 31, 1989. Determinations with respect to the agenda were made as of January 31, 1988. The purpose of this semiannual agenda is to give the public adequate notice of regulatory activities of the Internal Revenue Service.

FOR FURTHER INFORMATION CONTACT: Cynthia E. Grigsby, Legislation and Regulations Division, Office of the Chief Counsel, Internal Revenue Service, 1111 Constitution Avenue, NW., Washington, DC 20224, Attention: CC:LR (202-566-4336), not a toll-free call.

SUPPLEMENTARY INFORMATION:

General

Section 5 of Executive Order 12291 and section 602 of the Regulatory Flexibility Act both require that a semiannual agenda of regulations under development and review be published in the **Federal Register**. The next semiannual agenda of the Internal Revenue Service will be published in the **Federal Register** in October of 1988.

TREAS—IRS

Description

This Semiannual Agenda of Regulations lists all projects within the Internal Revenue Service (I.R.S.) as of January 31, 1988, for the development of regulations to appear in the Code of Federal Regulations. This agenda lists existing regulations under development by the Legislation and Regulations Division, the Employee Plans and Exempt Organizations Division, the General Litigation Division and the Office of Associate Chief Counsel (International) of the Office of Chief Counsel, I.R.S. The following information is provided for each regulation project: The title; priority status; its effect, if any, on small business; the part of the Code of Federal Regulations affected; the legal authority for issuing the regulation; a brief description of the problem to be addressed in the regulation; and a timetable of action taken and to be taken. Under additional information there is provided the control number of the project within the Chief Counsel's Office, and the names and telephone numbers of the drafting and reviewing attorneys.

By direction of the Secretary of the Treasury.

Lawrence B. Gibbs,

Commissioner of Internal Revenue.

Internal Revenue Service—Prerule Stage

Sequence Number	Title	Regulation Identifier Number
2131	05 USC 0552 Statement of Procedural Rules--Miscellaneous Amendments	1545-AJ53
2132	26 USC 0061 Taxation, valuation, and reporting of "frequent flyer" or similar bonus payments	1545-AK02
2133	26 USC 0145 Qualified 501 (c) (3) bonds	1545-AJ39
2134	26 USC 0146 State volume cap for tax-exempt bonds	1545-AJ37
2135	26 USC 0168 Modification of ACRS	1545-AJ36
2136	26 USC 0263A (f) Capitalization of certain interest expenses-- Notice of Proposed Rulemaking	1545-AK01
2137	26 USC 0336 Certain stock sales and distributions treated as asset transfers	1545-AK29
2138	26 USC 0338 Treatment of an affiliated group of corporations as a selling consolidated group for purposes of elective recognition under section 338 (h) (10)	1545-AK31
2139	26 USC 0383 Special limitations on certain credit and loss carryovers	1545-AK26
2140	26 USC 0832 Treatment of salvage and reinsurance in determining losses of property and casualty insurance companies	1545-AK49
2141	26 USC 0834 Interest deduction under section 834(c)(5)	1545-AL07
2142	26 USC 0861 Income Tax - Interest and Dividends of 80-20 Companies	1545-AJ58
2143	26 USC 0876 Exclusion of possession source income from gross income of certain individuals and treatment of corporations organized in Guam, Samoa or CNMI	1545-AJ80
2144	26 USC 0883 Income Tax - Reciprocal Exemptions for Certain Transportation Income	1545-AJ57
2145	26 USC 0887 Four percent tax on gross transportation income and ECI	1545-AJ60
2146	26 USC 0901 Amendment of Section 1.901-2(e)(3)	1545-AJ90
2147	26 USC 0952 Subpart F - Use of Deficits	1545-AJ71
2148	26 USC 0954 Subpart F FPHC Definitions	1545-AJ61
2149	26 USC 1441 Revised Withholding Tax Regulation to Modify "As soon as Practical" Requirements	1545-AL19
2150	26 USC 1503(d) Dual Resident Companies Limitation on Consolidated Losses	1545-AJ54
2151	26 USC 6038A Information with respect to certain foreign-owned corporations	1545-AJ56
2152	26 USC 6039E Information Regarding Resident Status	1545-AJ93
2153	26 USC 7654 Cover Over of Income Taxes	1545-AL18
2154	26 USC 7702 Definition of life insurance contract	1545-AL08
2155	26 USC 9999 Statement of Procedural Rules--Amendments to Statement of Procedural Rules--1981-1	1545-AD55

Internal Revenue Service—Proposed Rule Stage

Sequence Number	Title	Regulation Identifier Number
2156	26 USC 0001 Income Tax--Deduction for Bus Operating Authorities and Freight	1545-AJ18
2157	26 USC 0042 Low Income Housing Credit Recapture Rule	1545-AL12
2158	26 USC 0055 Income Tax--Alternative Minimum Tax	1545-AE80
2159	26 USC 0055 Alternative minimum tax for individuals	1545-AJ86
2160	26 USC 0056 Net Book Income Adjustment for U.S. Branches of Foreign Corporations	1545-AK22
2161	26 USC 0056 Net Book Income Adjustment for U.S. Branches of Foreign Corporations	1545-AK23
2162	26 USC 0056 Income Tax--Inventory Adjustment for the Alternative Minimum Tax	1545-AL02
2163	26 USC 0057 Income Tax-Minimum Tax. Item of Tax Preference for Intangible Drilling Costs Incurred in Drilling Oil, Gas or Geothermal Wells	1545-AA34
2164	26 USC 0058 Tax Benefit Rule for Corporate Add-On Minimum Tax under the Internal Revenue Code of 1954	1545-AK20
2165	26 USC 0067 2-Percent Floor on Miscellaneous Itemized Deductions	1545-AJ49
2166	26 USC 0072 Loans Treated as Distributions	1545-AE41

Internal Revenue Service—Proposed Rule Stage—Continued

Sequence Number	Title	Regulation Identifier Number
2167	26 USC 0079 Update and gender-neutralize mortality table used to determine permanent group-term life insurance benefits	1545-AK50
2168	26 USC 0089 Nondiscrimination Rules for Non-Pension Employee Benefit Plans	1545-AI78
2169	26 USC 0103 To Provide Regulations Under Section 147 (b)--Relating to Limitation on Maturity of Private Activity Bonds	1545-AE69
2170	26 USC 0103 Regulations Relating to Federally Guaranteed Bonds	1545-AG84
2171	26 USC 0103 Definition of "Reissuance" Under Section 103	1545-AI65
2172	26 USC 0103A To Revise Definition of Areas of Chronic Economic Distress for Purposes of Mortgage Subsidy Bonds	1545-AG88
2173	26 USC 0108 Income Tax--Discharge of Indebtedness	1545-AA67
2174	26 USC 0111 Income Tax--Part 1--Income Tax Regulations Under Section 111 Relating to Inclusion of Tax Benefit Items	1545-AH17
2175	26 USC 0117 Exclusion of qualified scholarships and fellowships from gross income	1545-AJ87
2176	26 USC 0117 (d) Qualified Tuition Reductions	1545-AI13
2177	26 USC 0119 (d) Income Tax--Tax Treatment of Faculty Housing	1545-AJ21
2178	26 USC 0130 Income Tax--Part 1 Personal Injury Liability Assignments	1545-AF39
2179	26 USC 0132 Income Tax--Prizes and Awards	1545-AJ19
2180	26 USC 0141 Income tax--Definition of "private activity bond"	1545-AJ34
2181	26 USC 0142 Tax-exempt bonds for residential rental projects	1545-AJ66
2182	26 USC 0144 Income tax--Student Loan Bonds	1545-AJ42
2183	26 USC 0148 Arbitrage restrictions on tax-exempt bonds; Rebate requirement	1545-AJ67
2184	26 USC 0148 General Arbitrage Restrictions of Tax-exempt bonds	1545-AJ81
2185	26 USC 0162 Income Tax--To Provide Better Definitions in the Area of Political Advertising & Grassroots Lobbying	1545-AA79
2186	26 USC 0162 (g) Definition of Related Violation	1545-AK83
2187	26 USC 0168 Income Tax--Normalization Requirement for Public Utility Property	1545-AA88
2188	26 USC 0170 Income Tax -- to Provide Regulations Relating to Contributions to Private Foundations	1545-AI09
2189	26 USC 0170 Final Regulations relating to the charitable contributions deduction in the context of bargain sales	1545-AJ85
2190	26 USC 0170 Deductions in excess of $5000 claimed by a subchapter C Corporation for charitable contributions of certain property	1545-AL09
2191	26 USC 0183 Election to Postpone Determination with Respect to the Presumption That an Activity is Engaged In for Profit	1545-AG27
2192	26 USC 0195 Income Tax--To Add Provisions Relating to Start-Up Expenditures	1545-AB02
2193	26 USC 0216 Provisions Relating to Cooperative Housing Corporations	1545-AJ96
2194	26 USC 0219 Income Tax -- Part 1, Excise Tax -- Part 54, Individual Retirement Accounts after TRA '86	1545-AK47
2195	26 USC 0246A Income Tax-Debt-Financed Portfolio Stock	1545-AH39
2196	26 USC 0263 A (f) Temporary Regulation--Capitalization of Certain Interest Expenses	1545-AK03
2197	26 USC 0274 Income Tax--To Add Provisions Relating to Foreign Conventions (as Amended by Section 4 of Public Law 96-608)	1545-AB04
2198	26 USC 0280G Notice of Proposed Rulemaking Relating to Restrictions on Golden Parachute Payments	1545-AH49
2199	26 USC 0302 Waiver of Family Attribution by Entities	1545-AF13
2200	26 USC 0336 Cross-reference--Recognition of gain or loss on liquidating sales and distributions of property (TRA 1986; sections 631 to 633)	1545-AK90
2201	26 USC 0338 Income Tax -- Application of Installment Method of Reporting and Mandatory application of MADSP formula for qualified stock purchases under section 338 (h) (10)	1545-AK25
2202	26 USC 0367 Transfer of Intangibles subject to Section 367 or 482 of the Code	1545-AJ91
2203	26 USC 0367 (b) Foreign Liquidations and Reorganizations (NPRM)	1545-AJ78
2204	26 USC 0367 (e) Regulations under section 367 (e)	1545-AL34
2205	26 USC 0367 (e) Regulations under section 367 (e)	1545-AL35
2206	26 USC 0368 Income Tax--Cross-reference-reorganizations involving financially troubled thrift institutions	1545-AB29
2207	26 USC 0368 Corporate Reorganization Amendments - Bankruptcy Tax Act of 1980	1545-AK33
2208	26 USC 0382 Income Tax--Limitation on Corporate Net Operating Loss Deduction	1545-AI99
2209	26 USC 0382 Computation of section 382 limitation	1545-AK27
2210	26 USC 0401 Defined Benefit Plan Terminations and the Reversion of Assets	1545-AF81
2211	26 USC 0401 (k) Cash or Deferred Arrangements (Tax Reform Act of 1986)	1545-AI79
2212	26 USC 0401 (L) Income Tax -- Part 1-- Application of Nondiscrimination rules to integrated plans	1545-AI86
2213	26 USC 0401 (m) Nondiscrimination requirements for employer matching contributions and employee contributions	1545-AI80
2214	26 USC 0401(a)(26) Income Tax - - Part 1--Additional Participation Requirements	1545-AK46
2215	26 USC 0401(a)(4) Study of Need for Special Antidiscrimination Rules for Pension, Etc. Plans of State and Local Governments	1545-AK44
2216	26 USC 0403 Nondiscrimination and other Rules Applicable to Section 402(b) Annuities	1545-AI90
2217	26 USC 0404 Income Tax--Employee Stock Ownership Plan Loan Payments	1545-AD77
2218	26 USC 0408 Study of Need for Regulations Relating to Simplified Employee Pensions as Affected by the Tax Reform Act of 1986	1545-AK45

VOL 53 ISS 79 PT 2 APR 25 1988 UMI

TREAS—IRS

Internal Revenue Service—Proposed Rule Stage—Continued

Sequence Number	Title	Regulation Identifier Number
2219	26 USC 0409 Income Tax--Requirements for Tax Credit Employee Stock Ownership Plans, Employee Plan Credit, and Defined Contribution Plan Voting Rights	1545-AD82
2220	26 USC 0409 Inc. Tax -- Part 1; Estate Tax -- Part 20, Employee Stock Ownership Plan rules Affected by TRA 1986	1545-AI87
2221	26 USC 0410(b) Coverage and separate lines of business rules	1545-AK41
2222	26 USC 0411 Rules Clarifying the Income Tax Regulations, Part 1, with Respect to Service Computation Under Pension, etc. Plans	1545-AE39
2223	26 USC 0411 Income Tax-Part I - Reduction of Accrued Benefits To Qualify for a Standard Termination of a Single Employer Defined Benefit Pension Plan	1545-AI46
2224	26 USC 0411 Inc. Tax -- Part 1 -- Benefit Accrual Beyond Normal Retirement Age	1545-AI85
2225	26 USC 0412 Income Tax-Part 1 - Variance From Minimum Funding Standard	1545-AI55
2226	26 USC 0414 Income Tax--Definitions and Special Rules; Service for Predecessor	1545-AD87
2227	26 USC 0414 Definition of "Highly Compensated Employee" and "Compensation"	1545-AI91
2228	26 USC 0414 (r) Definition of line of business	1545-AL23
2229	26 USC 0414(q) Definition of "highly compensated employee" and "compensation"	1545-AK40
2230	26 USC 0415 Limitations on Contributions and Benefits Under Qualified Plans	1545-AK42
2231	26 USC 0419 Treatment of Funded Welfare Benefit Plans	1545-AG14
2232	26 USC 0442 Inc. Tax--Part 1--Amendment of section 1.442-1 to Provide Simplified Procedures for Changes of Annual Accounting Period by Certain Exempt Organizations	1545-AI88
2233	26 USC 0453 Income Tax -- Gain or Loss on the Disposition of an Installment Obligation	1545-AB41
2234	26 USC 0453 Income Tax--Installment Sales Between Related Parties	1545-AB45
2235	26 USC 0453 Income Tax--Installment Sales Revision Act of 1980, Regulations Relating to Wrap-Around Mortgages	1545-AB46
2236	26 USC 0453 Income Tax Regulations--Part I. Installment Sales by Nontaxable Entities	1545-AF73
2237	26 USC 0453 Income Tax Regulations--Part 1--Special Rules Relating to Installment Obligations That Are Readily Tradable or Payable on Demand	1545-AG37
2238	26 USC 0457 Income Tax -- Deferred Compensation Plans of State and Local Governments and Tax-Exempt Organizations	1545-AI89
2239	26 USC 0460 Accounting for long-term contracts	1545-AJ28
2240	26 USC 0461 (h) Income Tax Regulations--The Economic Performance Requirement	1545-AH32
2241	26 USC 0465 Extension of the At-Risk Rules	1545-AF86
2242	26 USC 0465 Aggregation of Certain Activities for Purposes of the At-Risk Rules	1545-AI02
2243	26 USC 0465 Extension of At Risk Limitations to Real Property	1545-AK08
2244	26 USC 0469 Essential issues in connection with limitations on losses and credits from passive activities	1545-AK18
2245	26 USC 0469(k) Limitations on Passive Activity Losses and Credits	1545-AK62
2246	26 USC 0472 Inventory Computed by Use of Consumer or Producer Price Indexes	1545-AF65
2247	26 USC 0474 Simplified Dollar-value LIFO Method for Certain Small Businesses	1545-AK64
2248	26 USC 0514 Income Tax--Unrelated Trade or Business Income	1545-AE00
2249	26 USC 0585 Bad debt reserves of financial institutions	1545-AJ31
2250	26 USC 0595 Treatment of Foreclosed Property by Certain Creditors	1545-AF00
2251	26 USC 0612 Income Tax--Restoration of Depletion Deductions on Bonus and Advanced Royalties in Certain Cases	1545-AB69
2252	26 USC 0643 Property Distributed in Kind and Treatment of Multiple Trusts (Sec: 81 and 82 of The Tax Reform Act of 1984)	1545-AI06
2253	26 USC 0643 Clarification of Section 1.643 (a)-3 relating to the Inclusion of Capital Gain in Distributable Net Income	1545-AI31
2254	26 USC 0672 Income Taxation of Trusts and Estates	1545-AJ20
2255	26 USC 0679 Income Tax--Procedure & Administration--Foreign Trusts Having U.S. Beneficiaries	1545-AB79
2256	26 USC 0702 Income Tax - Application of effective date for new rules regarding deductions for meal, travel, and entertainment to partnerships and S corporations	1545-AK80
2257	26 USC 0704 To Provide Special Rules Concerning Related Party Loans in the Case of Partnership Allocations Attributable to Nonrecourse Debt	1545-AI66
2258	26 USC 0704 (c) Allocations of Income Gain, Loss, and Deduction with Respect to Property Contributed to a Partnership	1545-AG98
2259	26 USC 0706 Income Tax--Items Allocated to Portion of Year Partner Held Interest	1545-AB81
2260	26 USC 0707 Income Tax--Treatment of Payments to Partners Not Acting in Their Capacity as Partners	1545-AG83
2261	26 USC 0707 Amendment of Income Tax Regulations with Respect to Treatment of Disguised Sales by Partners	1545-AH22
2262	26 USC 0724 Contributions to a Partnership of Unrealized Receivables, Inventory Items or Capital Loss Property	1545-AG85
2263	26 USC 0752 Partner's Share of Partnership Liabilities	1545-AH26
2264	26 USC 0809 Imputed Earnings Rate for Mutual Life Insurance Companies	1545-AG63
2265	26 USC 0846 Income Tax Regulations--Discounting of unpaid losses of property and casualty insurance companies	1545-AJ51
2266	26 USC 0861 Apportionment of Expenses in the FSC and DISC Contexts	1545-AK78
2267	26 USC 0863 Transportation Income Source Rules	1545-AJ68

Internal Revenue Service—Proposed Rule Stage—Continued

Sequence Number	Title	Regulation Identifier Number
2268	26 USC 0863 Proposed Income Tax Regulations under the Tax Reform Act of 1986 – Source of income rules for income derived from space and ocean activities including telecommunications	1545-AJ54
2269	26 USC 0863 (a) Allocation of Gross Income Attributable to Interest rate swaps under section 863 (a)	1545-AL25
2270	26 USC 0864 (d) Related Person Factoring Income	1545-AH85
2271	26 USC 0865 Source rules for personal property sales	1545-AJ83
2272	26 USC 0871 Repeal of 30 Percent Withholding by the Tax Reform Act of 1984	1545-AG66
2273	26 USC 0871(i) Exemptions from withholding of NRA's and Foreign Corporations	1545-AJ59
2274	26 USC 0882 Untimely Filing by Foreign Corporations	1545-AJ74
2275	26 USC 0884 Branch Profits Tax (General Rule and Definitions) and 2nd Level Withholding Taxes	1545-AJ73
2276	26 USC 0887 Imposition of Tax on Gross Transportation Income of Nonresident Aliens and Foreign Corporations	1545-AK76
2277	26 USC 0892(c) Income Tax--Income of Foreign Governments and of International Organizations	1545-AJ79
2278	26 USC 0897 Income Tax--Partnership Rules Regarding Taxation of Foreign Investment in U.S. Real Property Interests	1545-AB98
2279	26 USC 0897 Temporary Regulations--Nonrecognition of Corporate Distributions and Reorganizations Under the Foreign Investment in Real Property Tax Act	1545-AF17
2280	26 USC 0897 Notice of Proposed Rulemaking--Nonrecognition of Corporate Distributions and Reorganizations Under the Foreign Investment in Real Property Tax Act	1545-AK79
2281	26 USC 0904(f) Treatment of Separate Limitation Losses	1545-AL17
2282	26 USC 0905 Income Tax--Procedure & Administration--Taxpayer's Obligation to File a Notice of Redetermination of Foreign Tax and Civil Penalties for Failure to File	1545-AC06
2283	26 USC 0907 Amendment of Regulations Under Section 907 of the Internal Revenue Code of 1954 to Conform Them to Section 211 of the Tax Equity and Fiscal Responsibility Act of 1982	1545-AE34
2284	26 USC 0932 Coordination of U.S. and Virgin Islands taxes	1545-AJ55
2285	26 USC 0932 Source Rules within the Virgin Islands	1545-AL40
2286	26 USC 0936(h) Amendment of Section 936(h) with respect to Election of Product	1545-AK77
2287	26 USC 0953(c) Special Rule for Foreign Captive Insurance Companies	1545-AJ70
2288	26 USC 0985 Functional Currency	1545-AL24
2289	26 USC 0988 Section 988(d) - Integrated Hedging Rules for Foreign Exchange gain or loss	1545-AL15
2290	26 USC 0988 Taxation of Exchange Gain or Loss on Foreign Currency denominated transactions	1545-AL16
2291	26 USC 0989 (c) Transition rule for qualified business units using a net worth method of accounting for taxable years beginning before January 1, 1987	1545-AL29
2292	26 USC 1031 Rules Relating to the Inapplicability of Section 1031 to Partnership Interests and the Limitation on the Period During Which Like Kind Exchanges May Be Made	1545-AH43
2293	26 USC 1059 Income Tax--Notice of Proposed Rulemaking - Amendment of Regulations Relating to Basis Reductions for Non-Taxed Portion of Extraordinary Dividends to Reflect TRA 1984	1545-AH41
2294	26 USC 1060 Income Tax--Special Allocation Rules for certain asset acquisitions	1545-AJ06
2295	26 USC 1092 Income Tax--Tax Straddles	1545-AC21
2296	26 USC 1248 Income Tax--Gain from Sale or Exchange of Stock in Foreign Corporations	1545-AC31
2297	26 USC 1253 Income Tax--To Clarify Tax Treatment of Transfers of Franchises, Trademarks, & Trade Names	1545-AC34
2298	26 USC 1256 (e) Hedging Exception to Mark-to-Market Rules for Section 1256 Contracts, Deferral of Certain Straddle Losses, and Wash-Sale and Short-Sale Principles Applicable to Certain Straddle Transactions	1545-AI59
2299	26 USC 1276 Disposition Gain Representing Accrued Market Discount Treated as Ordinary Income; Deferral of Interest Deduction Allocable to Accrued Market Discount	1545-AH82
2300	26 USC 1286 Income Tax-Treatment of Stripped Bonds and Stripped Coupon	1545-AH75
2301	26 USC 1361 Income Tax--Treatment of Obligations Which Purport to Represent Debt as a Second Class of Stock	1545-AC37
2302	26 USC 1362 Amendment of Income Tax Regulations Under Code Sections 1362 and 1363 Relating to the Election, Revocation, and Termination of an S Corporation	1545-AE26
2303	26 USC 1366 Income Tax--Pass-Thru of S Corporation Items to Shareholders	1545-AE85
2304	26 USC 1367 Income Tax--Rules Relating to Adjustment to Basis of Stock of Shareholders of S Corporation and to Determination of Basis of Property Distribution by Corporation	1545-AE88
2305	26 USC 1371 Income Tax--Application of Subchapter C Rules to S Corporations	1545-AE90
2306	26 USC 1374 Cross-reference--Application of section 1374 built-in gain tax to C corporation's electing S corporation status	1545-AK93
2307	26 USC 1377 Income Tax--Definitions and Special Rules Pertaining to S Corporation	1545-AE94
2308	26 USC 1446 Withholding Tax on Payments from Partnerships to Foreign Partners	1545-AL30
2309	26 USC 1502 Investment Adjustments Under the Consolidated Return Regulations	1545-AC47
2310	26 USC 1502 Income Tax--Application of Section 465 At Risk Limitations to Members that Join in Filing Consolidated Returns	1545-AC55
2311	26 USC 1502 Income Tax--Deletion of the requirement of section 1.1502-47 (d) (12) (v) (C) that, in applying tacking rule, profitable and loss life activities not be separated	1545-AI98
2312	26 USC 1502 Cross-reference--Consolidated return investment adjustments with respect to an acquired subsidiary's built-in gains or losses	1545-AK94
2313	26 USC 1502 Consolidated Returns	1545-AL44
2314	26 USC 1504 Income Tax--Includibility in an Affiliated Group of Subsidiaries Formed to Comply with Foreign Laws	1545-AC58

VOL 53 ISS 79 PT 2 AP 25 1988 UMI

TREAS—IRS

Internal Revenue Service—Proposed Rule Stage—Continued

Sequence Number	Title	Regulation Identifier Number
2315	26 USC 1504 Income Tax -- Amendment of Regulations Under Section 1504 (a) of the Code, as Amended by Section 60 of the Tax Reform Act of 1984, Defining "Affiliated Group"	1545-AH09
2316	26 USC 2001 Estate and Gift Taxes, Income Taxes-Unified Credit in Lieu of Exemptions, Unified Rate Schedule for Estate and Gift Taxes Situs of Foreign Partnerships for Estate Taxation	1545-AC60
2317	26 USC 2032 Estate Tax--Valuation of Certain Farm, etc. Real Property	1545-AC62
2318	26 USC 263A Capitalization of Certain Pension, etc. Costs	1545-AI92
2319	26 USC 2653 (b) Estate Tax--Generation skipping transfer tax	1545-AJ11
2320	26 USC 3121 Amendment of the Employment Tax Regulations Under Code Section 3121 to Conform to Section 321 of the Social Security Amendments of 1983	1545-AF91
2321	26 USC 3306 Treatment of Certain Deferred Compensation and Salary Reduction Arrangements	1545-AF97
2322	26 USC 3405 Employment Tax--Withholding from Pensions, Annuities, and Other Deferred Income	1545-AE98
2323	26 USC 3405 (d) (13) Withholding on Certain Deferred Payments Outside the United States	1545-AL31
2324	26 USC 3406 To Provide Regulations Relating to Backup Withholding Under Section 3406	1545-AE20
2325	26 USC 4041 Election to have certain diesel fuel taxes imposed on sales to retailers	1545-AJ13
2326	26 USC 4051 Excise Tax--Retailers Excise Taxes on Motor Vehicles	1545-AF61
2327	26 USC 4052 Excise Tax - Excise Tax on Heavy Trucks, Truck Trailers and Semitrailers, and Tractors	1545-AI51
2328	26 USC 453C Certain indebtedness treated as payment on installment obligations	1545-AJ27
2329	26 USC 4611 Income tax, excise tax, and environmental tax--Imposition of taxes on petroleum, certain chemicals, and corporations and additional excise taxes on certain fuels	1545-AJ23
2330	26 USC 4940 Income Tax--Excise Tax--Procedure and Administration--Various Private Foundation Provisions	1545-AG18
2331	26 USC 4943 Foundation Excise Tax-Excess Business Holdings	1545-AG49
2332	26 USC 4980 Excise Tax -- Part 54, Reversion of qualified plan assets to employer	1545-AI82
2333	26 USC 4991 Excise Tax--With Respect to the Definition of Taxable Crude Oil	1545-AD00
2334	26 USC 5881 Excise Tax on "greenmail"	1545-AL47
2335	26 USC 6011 Electronic filing of tax returns	1545-AL01
2336	26 USC 6031 Nominee Reporting of Partnership Information	1545-AJ98
2337	26 USC 6033 Amendment of Section 1.6033-2(g)(5) Relating to Returns by an Integrated Auxiliary of a Church	1545-AI52
2338	26 USC 6039D Returns, etc. on Certain Fringe Benefit Plans	1545-AI22
2339	26 USC 6045 Income Tax--Information Reporting on Real Estate Transactions	1545-AL06
2340	26 USC 6046A Income Tax Regulations relating to Returns as to Interests in Foreign Partnerships	1545-AK75
2341	26 usc 6049 Income Tax--To require issuers of certificates of deposit to furnish issue price to brokers	1545-AK36
2342	26 USC 6050M Treatment of net capital losses of regulated investment companies and real estate investment trusts-relationships between chapter 44 excise taxes and taxable income	1545-AJ04
2343	26 USC 6050M Reporting requirements pertaining to returns relating to persons receiving contracts from Federal executive agencies	1545-AJ05
2344	26 USC 6166 Estate Tax--Procedure and Administration--Deferral and Installment Payment of Estate Tax	1545-AD23
2345	26 USC 6224 Statement of Procedural Rules to Provide Procedures for Partnership-Level Proceedings with Respect to Partnership Items	1545-AI08
2346	26 USC 6244 Determination of the Tax Treatment of Subchapter S Items at the Corporate Level	1545-AE96
2347	26 USC 6311 Procedure and Administration Regulations--Payment of Taxes by Check or Money Order and Liability of Financial Institutions for Unpaid Taxes	1545-AI24
2348	26 USC 6323 Electronic filing of notice of Federal tax lien	1545-AK96
2349	26 USC 6325 Procedure and Administration--Release of Liens, Notice Before Levy, Property Exempt from Levy Redemption of Levied Real Property and Amount of Damages in Case of Wrongful Levy	1545-AE82
2350	26 USC 6404(e) Procedure and Administration - Abatement of Interest	1545-AK71
2351	26 USC 6501 Procedure and Administration Regulations--Extension of the Period for Assessment of Tax in Certain Circumstances	1545-AI23
2352	26 USC 6621 Essential issues in connection with differential interest rates	1545-AK06
2353	26 USC 6659 Procedure & Administration--Addition to Tax in the Case of Valuation Overstatements and Understatements, and Increase in the Negligence Penalty	1545-AD39
2354	26 USC 6700 Penalty for Promoting Abusive Tax Shelters	1545-AE99
2355	26 USC 6701 Penalty for Aiding and Abetting in the Understatement of Tax Liability	1545-AF01
2356	26 USC 6867 Income Tax--Presumption of Jeopardy in the Case of Illegal Activity Cash	1545-AE30
2357	26 USC 7425 Forfeiture of land sales contract with respect to discharge of Federal tax lien	1545-AK24
2358	26 USC 7425 Redemptions of Real Property Under IRC 7425 - Excess Expenses	1545-AL20
2359	26 USC 7609 Procedure and Administration - Suspension of Statues of Limitations in Absence of Third-Party Recordkeeper Response to Summons	1545-AK72
2360	26 USC 860A Income tax--essential issues relating to real estate mortgage investment conduits	1545-AJ35
2361	42 USC 0664 Proposed Amendments to the Procedure and Administration Regulations under the Child Support Enforcement Amendments of 1984 Relating to the Reduction of Tax Overpayments by Amounts Etc	1545-AH99

Internal Revenue Service—Final Rule Stage

Sequence Number	Title	Regulation Identifier Number
2362	26 USC 0025 To Provide Regulations Relating to Mortgage Credit Certificates	1545-AH06
2363	26 USC 0025 Income Tax--Information Reporting for Mortgage Credit Certificates	1545-AI39
2364	26 USC 0028 Credit for Clinical Testing Expenses for Certain Drugs for Rare Diseases or Conditions	1545-AF64
2365	26 USC 0032 Income Tax--Notice to Employees or Earned Income Credit	1545-AJ44
2366	26 USC 0042 Low-income housing credit	1545-AJ65
2367	26 USC 0042 Low-income housing credit for federally assisted buildings acquired during 10-year period	1545-AK92
2368	26 USC 0042 Low-Income Housing Credit for Federally-Assisted Buildings acquired during 10-year period	1545-AL05
2369	26 USC 0044 Income Tax--Credit for Increasing Research Activities	1545-AA07
2370	26 USC 0046 Income Tax--The Investment Credit for Qualified Progress Expenditures	1545-AA13
2371	26 USC 0047 Income Tax--Tax Treatment of Mass Assets for Investment Credit Purposes	1545-AA10
2372	26 USC 0047 Amendment of Income Tax Regulations Under Sections 47, 48 and 196 Relating to Basis Adjustment to Reflect Investment Tax Credit	1545-AF06
2373	26 USC 0048 Income Tax--Increase in Investment Tax Credit for Qualified Rehabilitation Expenditures	1545-AA12
2374	26 USC 0048 Income Tax--Definition of Films That Are "Topical or Otherwise Essentially Transitory in Nature"	1545-AA22
2375	26 USC 0048 Income Tax--Special Rules Added by Sec 223(c) of Crude Oil Windfall Profit Tax Act 1980, Relating to Reduction of Credit Where Property Is Financed by Subsidized ETC	1545-AA26
2376	26 USC 0056 Corporate alternative minimum tax book income adjustment	1545-AJ14
2377	26 USC 0056 Income Tax--Inventory Adjustment for the Alternative Minimum Tax	1545-AL03
2378	26 USC 0058 Tax Benefit Rule for Corporate Add-On Minimum Tax under the Internal Revenue Code of 1954	1545-AK21
2379	26 USC 0061 Income Tax--Nonqualified Salary Reduction Agreements	1545-AA35
2380	26 USC 0061 Income Tax--Taxation of Fringe Benefits and Exclusions from Gross Income for Certain Fringe Benefits	1545-AH73
2381	26 USC 0067 2-Percent Floor on Miscellaneous Itemized Deductions	1545-AJ48
2382	26 USC 0071 Treatment of Transfer of Property between Spouses, Tax Treatment of Alimony and Separate Maintenance Payments, and Dependency Exemption in the Case of Child of Divorced Parents	1545-AI49
2383	26 USC 0101(d) Income Tax Regulations--Mortality tables to be used to determine amount held by insurer with respect to a beneficiary	1545-AK14
2384	26 USC 0103 Income Tax--Exemption for Industrial Development Bonds for Water Facilities	1545-AA49
2385	26 USC 0103 Income Tax--To Define the Term "Principal User of a Facility"	1545-AA56
2386	26 USC 0103 Income Tax--Mortgage Subsidy Bonds	1545-AA63
2387	26 USC 0103 To Provide Regulations Requiring Certain Debt Obligations To Be Issued in Registered Form	1545-AE18
2388	26 USC 0103 To Provide Regulations Under Section 103(k) and (l)-- Relating to Public Approval and Information Reporting Requirements for Private Activity Bonds	1545-AE24
2389	26 USC 0103 Regulations Relating to $40 Million Small Issue Limit on Tax-Exempt Bonds Per Taxpayer	1545-AH19
2390	26 USC 0103 Income Tax--To Clarify the Definition of Property Which is a Pollution Control Facility	1545-AK10
2391	26 USC 0103 (b) To Provide Regulations Relating to the Tax Exemption of Obligations to Finance Mixed-Use Residential Rental Property	1545-AH68
2392	26 USC 0103 (c) Amendment of Regulations Relating to Arbitrage on Nonpurpose Obligations to Reflect Section 624 of TRA of 1984	1545-AH07
2393	26 USC 0120 Income Tax--Prepaid Legal Expenses	1545-AD62
2394	26 USC 0125 Income Tax--Tax Treatment of Cafeteria Plans	1545-AD63
2395	26 USC 0126 Income Tax-Exclusion from Income of Certain Cost-Sharing Payments Under Government Programs	1545-AA73
2396	26 USC 0131 Income Tax--Part I Exclusion from Gross Income for Certain Foster Care Payments	1545-AF52
2397	26 USC 0149 Information reporting for tax-exempt bonds	1545-AJ63
2398	26 USC 0162 (k) Continuation Coverage Requirements of Group Health Plans	1545-AI93
2399	26 USC 0163 Income Tax Regulations--Limitations on deductions for nonbusiness interest	1545-AK17
2400	26 USC 0165 Income Tax Regulations--Tax Straddles Relating to Section 108 of the Tax Reform Act of 1984	1545-AG57
2401	26 USC 0168 Income Tax--Accelerated Cost Recovery System	1545-AA87
2402	26 USC 0168 Tax-Exempt Entity Leasing	1545-AH76
2403	26 USC 0168 Tax-exempt entity leasing	1545-AJ36
2404	26 USC 0170 Deductions In Excess of $5,000 Claimed for Certain Charitable Contributions of Property and Information Reporting by Donees Who Make Certain Dispositions of Donated Property	1545-AG86
2405	26 USC 0219 Individual Retirement Plans and Simplified Employee Pensions	1545-AD59
2406	26 USC 0219 Individual Retirement Plans, Simplified Employee Pensions, and Qualified Voluntary Employee Contributions	1545-AD66
2407	26 USC 0263A Capitalization and inclusion in inventory costs of certain expenses	1545-AK05
2408	26 USC 0263A Practical capacity	1545-AK58
2409	26 USC 0267 Regulations Under Section 267 of the Code to Reflect Section 174 of the Tax Reform Act of 1984 Relating to Losses, Expenses, and Interest in Transactions Between Related Taxpayers	1545-AG11
2410	26 USC 0269 Income Tax--Personal Service Corporations	1545-AF11
2411	26 USC 0274 Income Tax--Deductibility of Gifts by Employers	1545-AB06
2412	26 USC 0274 (d) Income Tax--Substantiation requirements with respect to listed property and substantiation requirements relating to the taxation of fringe benefits	1545-AJ40

VOL 53 ISS 79 PT 2 AP 25 1988 UMI

TREAS—IRS

Internal Revenue Service—Final Rule Stage—Continued

Sequence Number	Title	Regulation Identifier Number
2413	26 USC 0280A Income Tax--Deductions for Expenses Attributable to Business Use of Homes, Rental of Vacation Homes	1545-AB09
2414	26 USC 0280F Limitations on Amount of Depreciation and Investment Tax Credit for Luxury Automobiles and Certain Other Property	1545-AG99
2415	26 USC 0304 Affiliated Groups	1545-AL41
2416	26 USC 0336 Income Tax--Part 1 Temporary Regulations-Recognition of gain or loss liquidating sales and distributions of property (TRA 1986, sections 631 to 633)	1545-AJ01
2417	26 USC 0336 Certain stock sales and distributions treated as asset transfers	1545-AK30
2418	26 USC 0338 Deemed Sale Price When Certain Stock Purchases Are Treated as Asset Acquisitions	1545-AF29
2419	26 USC 0338 Income Tax-Elections Under Section 338, as Added by Section 224 of the Tax Equity and Fiscal Responsibility Act of 1982 as Amended by the Technical Corrections Act of 1982	1545-AF38
2420	26 USC 0338 Regulations Under Section 338 (h) (10) as Added to the Code by Section 306 of the Technical Corrections Act of 1982, Relating to Special Elective Recognition of Gain or Loss	1545-AF93
2421	26 USC 0338 Income Tax--Application of Section 338 to Stock and Asset Acquisitions in the International Context	1545-AG13
2422	26 USC 0338 Questions and Answers Relating to Domestic Matters under Section 338 of the Internal Revenue Code of 1954 - Cross Reference to the Temporary Regulations	1545-AH88
2423	26 USC 0338 Statements of Election and due Dates	1545-AI53
2424	26 USC 0338 Income Tax-Application of Installment Method of Reporting and Mandatory application of MADSP formula for qualified stock purchases under section 338 (h) (10)	1545-AJ07
2425	26 USC 0338 Treatment of an affiliated group of corporations as a selling consolidated group for purposes of elective recognition under section 338 (h) (10)	1545-AK32
2426	26 USC 0355 Income Tax--Distribution of Stock and Securities of a Controlled Corporation	1545-AB20
2427	26 USC 0358 Income Tax--Triangular Reorganizations, Basis and Other Consequences	1545-AB21
2428	26 USC 0367 Income Tax--Treatment of Exchanges Described in Section 367 (b)	1545-AB26
2429	26 USC 0367 Amendment of the Income Tax Regulations under Section 367 of the Code (transfers to foreign corporations) to reflect section 131 of the Tax Reform Act of 1984 (P.L. 98-369)	1545-AK74
2430	26 USC 0367 (b) Foreign Liquidations and Reorganizations (Temporary Regulations)	1545-AJ76
2431	26 USC 0367(b) Income Tax--Part 1--Temporary-Whether Earnings and Profits Should be Allocated to an Acquiring CFC from an Acquired CFC Following a Non-Recognition Transaction	1545-AI32
2432	26 USC 0368 Income Tax--Temporary Regulations--Reorganizations Involving Financially Troubled Thrift Institutions	1545-AB28
2433	26 USC 0368 Income Tax--Exchange Funds	1545-AB31
2434	26 USC 0382 Income Tax--Ownership Change	1545-AJ00
2435	26 USC 0382 Computation of Section 382 Limitation	1545-AK87
2436	26 USC 0382 Limitation to groups filing consolidated returns	1545-AL36
2437	26 USC 0383 Special limitations on certain credit and loss carryovers	1545-AK28
2438	26 USC 0401 Income Tax--Refund of Mistaken Contributions	1545-AD68
2439	26 USC 0401 Certain Cash or Deferred Arrangements	1545-AD72
2440	26 USC 0401 Income Tax--Required Distributions from Qualified Plans and Individual Retirement Accounts and Partial Rollovers of Individual Retirement Accounts	1545-AE95
2441	26 USC 0401 Notice, Election, and Consent Rules under the Retirement Equity Act of 1984	1545-AH60
2442	26 USC 0402 Income Tax--Treatment of Certain Lump Sum Distributions	1545-AD73
2443	26 USC 0404A Income Tax--Deduction for Certain Foreign Deferred Compensation Plans	1545-AD81
2444	26 USC 0408 Annual Information Reports by Trustees and Issuers of Individual Retirement Plans	1545-AF83
2445	26 USC 0410 Retirement Equity Act Changes to Participation, Vesting, etc. Rules	1545-AH03
2446	26 USC 0411 Income Tax--Coordination of Vesting and Nondiscrimination Requirements for Qualified Plans	1545-AD83
2447	26 USC 0411 Survivor benefits, distribution restrictions and various other issues under the Retirement Equity Act of 1984	1545-AH01
2448	26 USC 0411 Income Tax-Part 1 - Reduction of Accrued Benefits To Qualify for a Standard Termination of a Single Employer Defined Benefit Pension Plan	1545-AI48
2449	26 USC 0411 Income Tax - Part 1 - Minimum Vesting Standards	1545-AI88
2450	26 USC 0412 Income Tax--Excise Tax Regulations--Funding for Qualified Plans	1545-AD84
2451	26 USC 0414 Income Tax--Definitions & Special Rules	1545-AB35
2452	26 USC 0414 Income Tax--Employees of an Affiliated Service Group	1545-AD90
2453	26 USC 0414 Income Tax Regulations--Affiliated Service Groups and Employee Leasing	1545-AE91
2454	26 USC 0417 Joint and Survivor Annuities	1545-AG72
2455	26 USC 0422A Income Tax--Creation & Treatment of Incentive Stock Options	1545-AB36
2456	26 USC 0441 Taxable Years of Certain Entities	1545-AK63
2457	26 USC 0444 Election of taxable years other than required taxable year	1545-AL46
2458	26 USC 0448 Limitation of the use of the cash method of accounting	1545-AJ52
2459	26 USC 0448 Clarification of determination of bad debt experience under nonaccrual-experience accounting method	1545-AL39
2460	26 USC 0451 Accounting for Long-Term Contracts; Corporations Filing Consolidated Returns With a Contractor	1545-AI19
2461	26 USC 0453 Income Tax--General Rules Relating to Installment Sales	1545-AB42

Internal Revenue Service—Final Rule Stage—Continued

Sequence Number	Title	Regulation Identifier Number
2462	26 USC 0453 Income Tax--Installment Obligations Received from a Liquidating Corporation	1545-AB43
2463	26 USC 0453 Income Tax--Installment Obligations Received in Transactions in which Gain or Loss is Generally Not Recognized	1545-AB44
2464	26 USC 0453 Income Tax--Installment Method Reporting by Dealers in Personal Property	1545-AB47
2465	26 USC 0453a Income Tax Regulations--Part 1. Installment Sale by Dealers in Personal Property	1545-AF71
2466	26 USC 0458 Income Tax--Exclusion from Gross Income with Respect to Magazines, Paperbacks, and Record Returns After Close of Taxable Year	1545-AB48
2467	26 USC 0461 (h) Temporary Income Tax Regulations--The Economic Performance Requirement	1545-AH33
2468	26 USC 0464 Income Tax--Limitation on Deductions in Case of Farming Syndicates	1545-AB51
2469	26 USC 0465 Income Tax--Determination of Amounts at Risk with Respect to Certain Activities	1545-AB52
2470	26 USC 0465 Aggregation of Certain Activities	1545-AI41
2471	26 USC 0467 Temporary Income Tax Regulations-Deferred Payments for Use of Property or Services	1545-AG81
2472	26 USC 0468A Income Tax Regulations -- Special Rules Relating to Nuclear Decommissioning Costs	1545-AI01
2473	26 USC 0472 Income Tax--Three-Year Averaging for Increases in Inventory Value when Electing LIFO Method of Accounting	1545-AB55
2474	26 USC 0474 Simplified Dollar-value LIFO Method for Certain Small Businesses	1545-AK65
2475	26 USC 0501 Income Tax--Rules Clarifying the Regulations With Respect to the Computation of "Gross Income" of an Electric Cooperative	1545-AD99
2476	26 USC 0593 Income Tax--Limitation on Additions to Bank Loss Reserves	1545-AB66
2477	26 USC 0613A Income Tax--Supplementary Rules on Limitations on Percentage Depletion for Oil & Gas	1545-AB73
2478	26 USC 0613A Income Tax--To Conform to Sec 3 of the Act of 12/28/80	1545-AB74
2479	26 USC 0702 Income Tax - Application of effective date for new rules regarding deductions for meal, travel, and entertainment to partnerships and S corporations	1545-AK85
2480	26 USC 0706 (b) Taxable Years of Certain Partnerships	1545-AJ47
2481	26 USC 0807 (d) Mortality and Morbidity Tables to be used for Insurance Products for which there are not applicable commissioner's tables	1545-AK04
2482	26 USC 0817 Income Tax Regulations-Diversification Requirements for Variable Annuity, Endowment, and Life Insurance Contracts	1545-AG79
2483	26 USC 0846 Temporary Income Tax Regulations--Discounting of unpaid losses of property and casualty insurance companies	1545-AI96
2484	26 USC 0863 (a) Allocation of gross income attributable to interest rate swaps under section 863 (a)	1545-AL26
2485	26 USC 0864 (e) Allocation and apportionment of expenses	1545-AL21
2486	26 USC 0871 Income Tax--Original Issue Discount	1545-AB93
2487	26 USC 0871 Employment Taxes: Application of the Repeal of 30% Withholding by the Tax Reform Act of 1984 and of Information Reporting and Backup Withholding in Light of Such Repeal	1545-AH15
2488	26 USC 0884 Branch Profits Tax (General Rule and Definitions) and Second Level Withholding Taxes (Temporary Regulations)	1545-AJ77
2489	26 USC 0904 Income Tax--Recapture of Overall Foreign Losses	1545-AC05
2490	26 USC 0904 Income Tax Regulations Under Section 121 of the Tax Reform Act of 1984 Relating to Resourcing Certain Amounts Received From A U.S. Owned Foreign Corporation	1545-AI33
2491	26 USC 0904 Separate Application of section 904 with respect to certain categories of income	1545-AJ69
2492	26 USC 0904 Separate application of section 904 with respect to certain categories of income	1545-AJ72
2493	26 USC 0905 Income Tax--Temporary Regulations--Taxpayer's Obligation to File a Notice of Redetermination of Foreign Tax and Civil Penalties for Failure to File	1545-AC09
2494	26 USC 0924 FSC Transfer Pricing Rules, Distributions, Dividends Received, Deduction and Other Special Rules for FSC	1545-AI16
2495	26 USC 0936 Income Tax--Definition of Qualified Possession Source Investment Income for Purposes of Puerto Rico & Possession Tax Credit	1545-AC10
2496	26 USC 0954 Current Taxation of Foreign Oil Related Income of Controlled Foreign Corporations	1545-AE38
2497	26 USC 0985 Functional Currency	1545-AL27
2498	26 USC 0989 (c) Transition rules for qualified business units using a net worth method of accounting for taxable years beginning before January 1, 1987	1545-AL28
2499	26 USC 0995 Proposed Income Tax Regulations Under the Tax Reform Act of 1984 Relating to INTEREST CHARGE DISCs	1545-AG71
2500	26 USC 1058 Income Tax--Transfers of Securities Under Certain Agreements	1545-AC20
2501	26 USC 1059A Customs Limitation on taxpayer's basis in property imported from related persons	1545-AJ92
2502	26 USC 1060 Income Tax--Special Allocation Rules for Certain Asset Acquisitions	1545-AJ03
2503	26 USC 1092 (b) Income Tax Regulations Under the Tax Reform Act of 1984 Relating to Mixed Straddles	1545-AH59
2504	26 USC 1092 (b) Income Tax Regulations Under the Economic Recovery Tax Act of 1981 and the Tax Reform Act of 1984, Relating to Straddles	1545-AH60
2505	26 USC 1254 Income Tax--Gain from Disposition of Interest in Oil or Gas Property	1545-AC35
2506	26 USC 1256(e) Hedging Exception to Mark-to-Market Rules for Section 1256 Contracts, Deferral of Certain Straddle Losses, and Wash-Sale and Short-Sale Principles Applicable to Certain Straddle Transactions	1545-AI72

VOL 53 ISS 79 PT 2 AP 25 1988 UMI

TREAS—IRS

Internal Revenue Service—Final Rule Stage—Continued

Sequence Number	Title	Regulation Identifier Number
2507	26 USC 1275 Regulations Under Section 1271 Through 1275 Relating to Tax Treatment of Debt Instruments Having Original Issue Discount	1545-AH46
2508	26 USC 1361 Income Tax--Definition of S Corporation	1545-AE86
2509	26 USC 1374 Temporary Regulation--Application of section 1374 Built-in Gain tax to C corporation's electing S corporation status	1545-AK91
2510	26 USC 1378 Income Tax--Certain Elections Under the Subchapter S Revision Act of 1982	1545-AF30
2511	26 USC 1402 (e) Applications for exemption from self-employment taxes for ministers, etc.	1545-AJ94
2512	26 USC 1441 Withholding on Items of Income Covered by an Income Tax Convention	1545-AH66
2513	26 USC 1446 Temporary Regulation on Withholding Tax on Payments from Partnerships to Foreign Partners	1545-AL32
2514	26 USC 1502 Income Tax--Credit & Deductions etc., for Consolidated Returns	1545-AC48
2515	26 USC 1502 Investment Adjustments Under the Consolidated Return Regulations	1545-AI58
2516	26 USC 1502 Temporary Regulations-Consolidated return investment adjustments with respect to an acquired subsidiary's built-in gains or losses	1545-AK95
2517	26 USC 1502 Consolidate Groups	1545-AL45
2518	26 USC 1504 Cross-reference--Alaska Native Corporations; Requirements for affiliation in order to file a consolidated return	1545-AK88
2519	26 USC 2036 Estate & Gift Taxes--Inclusion of Stock in Estate Where Decedent Retained Voting Rights	1545-AC63
2520	26 USC 2056 Estate and Gift Taxes--Increase in Limitations on Marital Deductions	1545-AC67
2521	26 USC 2653 (b) Estate Tax--Generation Skipping Transfer Tax	1545-AJ12
2522	26 USC 280F Leased Property under section 280F	1545-AL42
2523	26 USC 3121 Employment Tax--To Require Withholding of Social Security and Railroad Retirement Tax from Certain Payments of Sick Pay	1545-AC77
2524	26 USC 3406 Backup Withholding	1545-AL48
2525	26 USC 3508 Treatment of Real Estate Agents and Direct Sellers as Nonemployees for Employment Tax Purposes--Reporting Requirements with Respect to Direct Sellers	1545-AE62
2526	26 USC 4041 Election to have certain diesel fuel taxes imposed on sales to retailers	1545-AL14
2527	26 USC 4051 Temporary Regulation Excise Taxes on Heavy Trucks, Truck Trailers and Semitrailers, and Tractors Sold at Retail	1545-AF79
2528	26 USC 4052 Excise Tax - Excise Tax on Heavy Trucks, Truck Trailers and Semitrailers, and Tractors	1545-AI62
2529	26 USC 4081 Excise Tax--Collection of excise tax imposed on the sale or removal of gasoline	1545-AJ09
2530	26 USC 4091 Excise tax on diesel fuel	1545-AL43
2531	26 USC 4481 Reduction of the heavy vehicle use tax for foreign-based trucks	1545-AK98
2532	26 USC 453C Transitional rules relating to indebtedness treated as payment on installment obligations	1545-AK54
2533	26 USC 4911 Income Tax--Lobbying by Public Charities	1545-AE02
2534	26 USC 4977 Excise Tax--Election to Aggregate Lines of Business for Purposes of Certain Fringe Benefit Exclusions	1545-AI63
2535	26 USC 4981 Excise Tax -- Excess distributions from qualified retirement plans	1545-AI81
2536	26 USC 4981 Excise taxes relating to real estate investment trusts and regulated investment companies under the Tax Reform Act of 1986	1545-AJ02
2537	26 USC 4991 Excise Tax--Definition of Newly Discovered Oil	1545-AC96
2538	26 USC 4992 Excise Tax--Issues Arising Where Multiple Parties Share in Production, Including Unitizations, Partnerships, Trusts and Estates	1545-AC94
2539	26 USC 4993 Excise Tax--Incremental Tertiary Oil	1545-AD04
2540	26 USC 4994 Excise Tax--Oil From a Stripper Well Property	1545-AD01
2541	26 USC 4996 Excise Tax--Definition of Property Under the Crude Oil Windfall Profit Tax Act 1980	1545-AD06
2542	26 USC 6011 Elimination of Form 941 Filing Requirement for Quarters in Which Seasonal Employers Pay no Wages	1545-AI56
2543	26 USC 6011 Excise Tax -- Part 54 -- Procedure and Administration-- Part 301 -- Filing of Returns for Payment of Pension Excise Tax on Reversions of Qualified Plan Assets	1545-AI83
2544	26 USC 6031 Income Tax-Amendments to Requirements for Return of Partnership Income	1545-AE40
2545	26 USC 6031 Nominee Reporting of Partnership Information	1545-AJ97
2546	26 USC 6045 Information Returns of Brokers	1545-AG02
2547	26 USC 6045 Information Returns of Brokers	1545-AG52
2548	26 USC 6045 Information Reporting on Real Estate Transactions	1545-AJ25
2549	26 USC 6045 (e) Information Reporting on Real Estate Transactions	1545-AL38
2550	26 USC 6050H Income Tax--Mortgage Interest Reporting	1545-AG93
2551	26 USC 6050J Final Regulations Relating to Reports of Foreclosures and Abandonments of Security Under the Tax Reform Act of 1984	1545-AG48
2552	26 USC 6050M Reporting requirements pertaining to returns relating to persons receiving contracts from Federal executive agencies	1545-AL33
2553	26 USC 6081 (a) Grant of automatic extension of time to file partnership and trust returns	1545-AL37
2554	26 USC 6111 Proposed Regulations Under Sections 6111 and 6709, Relating to Tax Shelter Registration	1545-AG45
2555	26 USC 6157 Time and Manner of Making Quarterly Payments of the Railroad Unemployment Repayment Tax (NPRM)	1545-AI60

Internal Revenue Service—Final Rule Stage—Continued

Sequence Number	Title	Regulation Identifier Number
2556	26 USC 6222 Miscellaneous Rules Relating to Consolidated Administrative and Judicial Proceedings to Determine the Tax Treatment of Partnership Items	1545-AE51
2557	26 USC 6241 Small S Corporation exception and definition of Subchapter S item	1545-AJ99
2558	26 USC 6302 To require financial institutions to deposit estimated tax on trusts and estates	1545-AK35
2559	26 USC 6323 Electronic filing of notice of Federal tax lien	1545-AL00
2560	26 USC 6402 Proposed Regulations Under the Spending Reduction Act of 1984, Relating to Reduction of Tax Overpayments by the Amount of Past-Due Legally Enforceable Debt Owed to Federal Agency	1545-AG95
2561	26 USC 6402 Procedure and Administrative--Reduction of Tax Overpayments by amount of past due legally enforceable debt owed to Federal Agency	1545-AK12
2562	26 USC 6611 Procedure and Administration Regulations--Modifications of Interest Payments for Certain Periods	1545-AF10
2563	26 USC 6621 Procedure and Administration Regulations - Increased Rate of Interest on Substantial Underpayments Attributable to Certain Tax Motivated Transactions	1545-AG75
2564	26 USC 6655 To Provide Regulations Relating to Accelerated Payment of Estimated Taxes by Corporations	1545-AE37
2565	26 USC 6723 Penalty for failure to include correct information on information returns and payee statements	1545-AJ29
2566	26 USC 7103 (b) Procedure and Administration--Property seized by the Internal Revenue Service under the Money Laundering Control Act of 1986	1545-AL04
2567	26 USC 7216 Amendment of Regulations to Permit Disclosure of Tax Return Information between Franchisees who Jointly Operate a Tax Service	1545-AH91
2568	26 USC 7502 Procedure and Administration--Amendment of Regulations Relating to the Timely Mailing of Returns, Taxes and Deposits	1545-AD42
2569	26 USC 7701 (b) Amendment of Procedure and Administration Regulations Under Section 7701(b) (Definition of Resident Aliens) to Reflect Section 138 of the Tax Reform Act of 1984 (P.L. 98-369)	1545-AH13
2570	26 USC 7805 Effective Dates and Other Questions Arising Under Employee Benefit Provisions of the Tax Reform Act of 1984	1545-AI21
2571	26 USC 7871 Indian Tribal Governments Treated as States for Certain Purposes	1545-AF77
2572	26 USC 7872 Regulations on Income Tax Under the Tax Reform Act of 1984, Relating to Below-Market Loans	1545-AH72
2573	26 USC 9999 Income Tax--Maritime Capital Construction Fund	1545-AD46

Internal Revenue Service—Completed Actions

Sequence Number	Title	Regulation Identifier Number
2574	05 USC 0552 Miscellaneous amendments	1545-AJ95
2575	26 USC 0001 (i) Income Tax--Unearned of Minor Children	1545-AJ17
2576	26 USC 0025 Substantiation requirement for mortgage interest credit certificates	1545-AK34
2577	26 USC 0025 Substantiation requirement for mortgage interest credit certificates	1545-AK38
2578	26 USC 0032 Income Tax--Notice to Employees of Earned Income Credit	1545-AK00
2579	26 USC 0042 Low-income housing credit	1545-AK39
2580	26 USC 0101(d) Income Tax Regulations--Mortality tables to be used to determine amount held by insurer with respect to a beneficiary	1545-AK15
2581	26 USC 0146 (n) To Provide Regulations Relating to the State Volume Cap on Private Activity Bonds	1545-AH62
2582	26 USC 0163 Income Tax Regulations--Limitations on deductions for nonbusiness interest	1545-AK16
2583	26 USC 0382 Income Tax--Ownership Change	1545-AJ08
2584	26 USC 0410 Income Tax - Temporary Regulations on Minimum Vesting Standards	1545-AK43
2585	26 USC 0441 Taxable Years of Certain Entities	1545-AK61
2586	26 USC 0706 (b) Taxable years of Certain Partnerships (temporary)	1545-AJ46
2587	26 USC 0832 Treatment of Salvage and Reinsurance in determining Losses of Property and Casualty Insurance Companies	1545-AK48
2588	26 USC 0901 Statute of Limitations - Nationalized Companies	1545-AJ75
2589	26 USC 1563 Income Tax--To Reflect the U.S. Supreme Court in U.S. v. Vogel Fertilizer Co., Holding that Each Member of Stockgroup must Own Stock in Each Brother-Sister Corp	1545-AC59
2590	26 USC 3402 Submission of certain withholding exemption certificates and entitlements to additional withholding exemption	1545-AJ30
2591	26 USC 3406 To Provide Temporary Regulations Relating to Backup Withholding Where the Service Notifies Payor to Withhold Due to an Incorrect Taxpayer Identification Number	1545-AF90
2592	26 USC 4041 Sales of diesel and special motor fuel from unattended locations	1545-AK99
2593	26 USC 4081 Manufacturers and Retailers Excise Taxes--Taxes on Fuels, Tires and Gasoline	1545-AF58
2594	26 USC 4481 Reduction of the heavy vehicle use tax for foreign-based trucks	1545-AK97
2595	26 USC 4981 Excise Tax -- Excess distributions from qualified retirement plans	1545-AL13
2596	26 USC 4981 Excise Tax--Excess distributions from qualified retirement plans	1545-AL22

Internal Revenue Service—Completed Actions—Continued

Sequence Number	Title	Regulation Identifier Number
2597	26 USC 6041 Information Reporting of Allowances, or Reimbursements, or Charges for Travel and Other Expenses of Public Sector Employees and Certain Other Persons	1545-AI42
2598	26 USC 6205 Interest on Hospital Insurance Taxes on Wages of State and Local Government Employees	1545-AI45
2599	26 USC 6205 Interest on Hospital Insurance Taxes on Wages of State and Local Government Employees	1545-AI50
2600	26 USC 6302 Income Tax--Deposit of Estimated Income Tax by Certain Private Foundations and Tax-Exempt Organizations	1545-AJ43
2601	26 USC 6404(e) Procedure and Administration - Abatement of Interest	1545-AK70
2602	26 USC 6723 Penalty for failure to include correct information on information returns and payee statements	1545-AJ26
2603	26 USC 7701 Income Tax--Investment Credit in Case of Property Used by Tax Exempt Organizations & Governmental Units; Practice & Procedure --Definition of Service Contracts & Other Arrangements	1545-AA23

DEPARTMENT OF THE TREASURY (TREAS)

Prerule Stage

Internal Revenue Service (IRS)

2131. STATEMENT OF PROCEDURAL RULES--MISCELLANEOUS AMENDMENTS

Legal Authority: 5 USC 301; 5 USC 552

CFR Citation: 26 CFR 601; 26 CFR 602

Legal Deadline: None.

Abstract: The document contains miscellaneous amendments to the Statement of Procedural Rules (SPR). The SPR sets forth the procedural rules of the Internal Revenue Service for all taxes administered by the Service as well as certain rules that apply to the Bureau of Alcohol, Tobacco and Firearms. Some amendments update the SPR to reflect changes in nomenclature. The other amendments are described in the order of the sections of the SPR being amended.

Timetable:

Action	Date	FR Cite
Statement of Procedural Rules	00/00/00	

Small Entity: Not Applicable

Additional Information: LR-257-83.

Drafting Author: George H. Bradley (202) 343-0231.

Reviewing attorneys: George H. Bradley (202) 343-0231 and Charles Whedbee (202) 566-3458.

Agency Contact: George H. Bradley, Staff Assistant, Department of the Treasury, Internal Revenue Service, 1111 Constitution Ave., N.W., Washington, DC 20224, 202 343-0231

RIN: 1545-AJ53

2132. TAXATION, VALUATION, AND REPORTING OF "FREQUENT FLYER" OR SIMILAR BONUS PAYMENTS

Legal Authority: 26 USC 61 Internal Revenue Code of 1986; 26 USC 6041 Internal Revenue Code of 1986

CFR Citation: 26 CFR 1

Legal Deadline: None.

Abstract: The regulation will require information reporting with respect to "frequent flyer" or similar bonus payments in order to increase compliance. The regulation will also provide valuation rules to assist taxpayers in valuing the bonuses.

Timetable:

Action	Date	FR Cite
ANPRM	04/01/88	

Small Entity: Undetermined

Additional Information: LR-79-86

Drafting attorney: Katherine Lee Wambsgans (202) 566-3288.

Reviewing attorney: Paul A. Francis (202) 566-3218.

Treasury attorney: Susan Scherbel (202) 535-6965.

Agency Contact: Katherine Lee Wambsgans, Attorney, Department of the Treasury, Internal Revenue Service, 1111 Constitution Avenue, N.W., Washington, D.C. 20224, 202 566-3288

RIN: 1545-AK02

2133. QUALIFIED 50L (C) (3) BONDS

Legal Authority: 26 USC 7805 Internal Revenue Code of 1986; 26 USC 145 Internal Revenue Code of 1986

CFR Citation: 26 CFR 1

Legal Deadline: None.

Abstract: The regulations would provide rules for qualified 501 (c) (3) bonds.

Timetable:

Action	Date	FR Cite
ANPRM	06/01/88	

Small Entity: Not Applicable

Additional Information: LR-84-86.

Drafting attorney: Robert Beatson (202) 566-3459.

Reviewing attorney: Alice Bennett (202) 566-3294.

Treasury attorney: Elliot Stern (202) 566-2926.

Agency Contact: Robert Beatson, Attorney, Department of the Treasury, Internal Revenue Service, 1111 Constitution Avenue NW, Washington, DC 20224, 202 566-3459

RIN: 1545-AJ39

2134. STATE VOLUME CAP FOR TAX-EXEMPT BONDS

Legal Authority: 26 USC 7805 Internal Revenue Code of 1986; 26 USC 146 Internal Revenue Code of 1986

CFR Citation: 26 CFR 1

Legal Deadline: None.

Abstract: The regulation would provide state volume cap rules for tax-exempt bonds.

Timetable:

Action	Date	FR Cite
ANPRM	04/01/88	

Small Entity: Not Applicable

Additional Information: LR-85-86

Drafting attorney: David Selig (202) 566-3297.

Reviewing attorney: Gerald Rock: (202) 566-3294.

Treasury attorney: Elliot Stern (202) 566-2926.

Agency Contact: David Selig, Attorney, Department of the Treasury, Internal Revenue Service, 1111 Constitution Avenue NW, Washington, DC 20224, 202 566-3297

RIN: 1545-AJ37

2135. MODIFICATION OF ACRS

Legal Authority: 26 USC 7805 Internal Revenue Code of 1986; 26 USC 168 Internal Revenue Code of 1986

CFR Citation: 26 CFR 1

Legal Deadline: None.

Abstract: The regulation would provide rules concerning the accelerated cost recovery system

Timetable:

Action	Date	FR Cite
ANPRM	06/00/88	

Small Entity: Not Applicable

Additional Information: LR-88-86.

Drafting attorney: Richard Blumenreich (202) 566-4336.

Reviewing attorney: Ada Rousso (202) 566-3287.

Treasury attorney: Ellen Aprill (202) 566-5453.

Agency Contact: Robert Beatson, Attorney, Department of the Treasury, Internal Revenue Service, 1111 Constitution Avenue NW, Washington, DC 20224, 202 566-3459

RIN: 1545-AJ38

2136. CAPITALIZATION OF CERTAIN INTEREST EXPENSES-- NOTICE OF PROPOSED RULEMAKING

Significance: Agency Priority

Legal Authority: 26 USC 263A (f) Internal Revenue Code of 1986

CFR Citation: 26 CFR 1

Legal Deadline: None.

Abstract: The regulations will provide guidance concerning the capitalization of certain interest expenses and the allocation interest to property subject to the capitalization rules.

Timetable:

Action	Date	FR Cite
ANPRM	04/01/88	

Small Entity: Not Applicable

Additional Information: LR-121-86.

Drafting attorney: Katherine Lee Wambsgans (202) 566-3288.

Reviewing attorney: John Fischer (202) 566-3394.

Treasury attorney: Patricia McClanahan (202) 566-2926.

Agency Contact: Katherine Lee Wambsgans, Attorney, Department of the Treasury, Internal Revenue Service, 1111 Constitution Avenue, N.W., Washington, D.C. 20224, 202 566-3288

RIN: 1545-AK01

2137. CERTAIN STOCK SALES AND DISTRIBUTIONS TREATED AS ASSET TRANSFERS

Legal Authority: 26 USC 336 Internal Revenue Code of 1986; 26 USC 7805 Internal Revenue Code of 1986

CFR Citation: 26 CFR 1

Legal Deadline: None.

Abstract: The regulations would provide guidance for making an election under section 336 (e), and the consequences which result from making such an election.

Timetable:

Action	Date	FR Cite
ANPRM	07/01/88	
ANPRM Comment Period End	09/01/88	

Small Entity: Not Applicable

Additional Information: LR-52-87

Drafting attorney: Patricia W. Pellervo (202) 566-3458.

Reviewing attorney: Robert J. Mason (202) 566-3463.

Treasury attorney: Thomas Wessel (202) 566-4979.

Agency Contact: Patricia W. Pellervo, Attorney, Department of the Treasury, Internal Revenue Service, 1111 Constitution Avenue, N.W., Washington, D.C. 20224, 202 566-3458

RIN: 1545-AK29

2138. TREATMENT OF AN AFFILIATED GROUP OF CORPORATIONS AS A SELLING CONSOLIDATED GROUP FOR PURPOSES OF ELECTIVE RECOGNITION UNDER SECTION 338 (H) (10)

Legal Authority: 26 USC 338 Internal Revenue Code of 1986; 26 USC 7805 Internal Revenue Code of 1986

CFR Citation: 26 CFR 1

Legal Deadline: None.

Abstract: The regulations would provide the guidance for making elections under section 338 (h) (10) when the selling group is an affiliated group of corporations which does not file a consolidated federal income tax return, and the consequences of making such an election.

Timetable:

Action	Date	FR Cite
ANPRM	06/01/88	
ANPRM Comment Period End	08/01/88	

Small Entity: Not Applicable

Additional Information: LR-50-87

Drafting attorney: Judith C. Winkler (202) 566-3458.

Reviewing attorney: Robert J. Mason (202) 566-3463.

Treasury attorney: Thomas Wessel (20) 566-4979.

Agency Contact: Judith C. Winkler, Attorney, Department of the Treasury, Internal Revenue Service, 1111 Constitution Avenue, N.W., Washington, D.C. 20224, 202 566-3458

RIN: 1545-AK31

2139. SPECIAL LIMITATIONS ON CERTAIN CREDIT AND LOSS CARRYOVERS

Legal Authority: 26 USC 383 Internal Revenue Code of 1986; 26 USC 7805 Internal Revenue Code of 1986

CFR Citation: 26 CFR 1

Legal Deadline: None.

Abstract: The regulations would specify the manner and method on applying the special limitations on certain credit and loss carryovers under section 383.

Timetable:

Action	Date	FR Cite
ANPRM	06/30/88	
ANPRM Comment Period End	08/29/88	

Small Entity: Not Applicable

Additional Information: LR-69-87

Drafting attorney: Thomas J. Kane (202) 566-3458.

Reviewing attorney: Charles M. Whedbee (202) 566-3458.

Treasury attorney: Thomas Wessel (202) 566-4979.

Agency Contact: Thomas J. Kane, Attorney, Department of the Treasury, Internal Revenue Service, 1111 Constitution Avenue, N.W., Washington, D.C. 20224, 202 566-3458

RIN: 1545-AK26

2140. TREATMENT OF SALVAGE AND REINSURANCE IN DETERMINING LOSSES OF PROPERTY AND CASUALTY INSURANCE COMPANIES

Legal Authority: 26 USC 7005 Internal Revenue Code of 1986; 26 USC 832 Internal Revenue Code of 1986

CFR Citation: 26 CFR 1

Legal Deadline: None.

Abstract: The regulations will provide rules relating to the treatment of salvage and reinsurance recoverable in determining the paid and unpaid losses of property and casualty insurance companies.

Timetable:

Action	Date	FR Cite
NPRM	01/05/88	53 FR 153

Next Action Undetermined

Small Entity: Not Applicable

Additional Information: LR-65-87

Drafting attorney: Bill Blagg (202) 566-3238.

Reviewing attorney: Cynthia Clark (202) 566-3288.

Treasury attorney: Don Rocap (202) 566-6278.

Agency Contact: Bill Blagg, Attorney, Department of the Treasury, Internal Revenue Service, 1111 Constitution Avenue, N.W., Washington, D.C. 20224, 202 566-3238

RIN: 1545-AK49

2141. ● INTEREST DEDUCTION UNDER SECTION 834(C)(5)

Legal Authority: 26 USC 7805 Internal Revenue Code of 1986

CFR Citation: 26 CFR 1

Legal Deadline: None.

Abstract: The regulations clarify that in order to be deductible under section 834(c)(5), interest must relate to investment income.

Timetable:

Action	Date	FR Cite
ANPRM Comment Period End	00/00/00	

Small Entity: Not Applicable

Additional Information: LR-110-87

Drafting attorney: William Blagg (202) 566-3238.

Reviewing attorney: Cynthia Clark (202) 566-3288.

Treasury attorney: Don Rocap (202) 566-6278.

Income Taxes

Agency Contact: William L. Blagg, Attorney, Department of the Treasury, Internal Revenue Service, 1111 Constitution Ave., N.W., Washington, D.C. 20224, 202 566-3238

RIN: 1545-AL07

2142. INCOME TAX - INTEREST AND DIVIDENDS OF 80-20 COMPANIES

Legal Authority: 26 USC 7805 Internal Revenue Code of 1986; 26 USC 861 Internal Revenue Code of 1986

CFR Citation: 26 CFR 1

Legal Deadline: None.

Abstract: This regulation would provide rules with respect to the sourcing of dividends and interest paid by so-called "80-20" companies, that is, companies with 80% or more foreign source income.

Timetable:

Action	Date	FR Cite
ANPRM	00/00/00	

Small Entity: Not Applicable

Additional Information: INTL-950-86

Drafting Attorney: Riea Lainoff (202) 566-6645

Reviewing Attorney: Phyllis E. Marcus (202) 566-6645

Treasury Attorney: Mary Bennett (202) 566-5992

Agency Contact: Riea Lainoff, Attorney-Advisor, Department of the Treasury, Internal Revenue Service, 1111 Constitution Avenue, N.W., Washington, D.C. 20224, 202 566-6645

RIN: 1545-AJ58

2143. EXCLUSION OF POSSESSION SOURCE INCOME FROM GROSS INCOME OF CERTAIN INDIVIDUALS AND TREATMENT OF CORPORATIONS ORGANIZED IN GUAM, SAMOA OR CNMI

Legal Authority: 26 USC 876 Internal Revenue Code of 1986; 26 USC 881 Internal Revenue Code of 1986; 26 USC 931 Internal Revenue Code of 1986

CFR Citation: 26 CFR 1

Legal Deadline: None.

Abstract: The Tax Reform Act of 1986 eliminates the requirement that there be a mirrored system of taxation in Guam and the CNMI, and coordinates the tax system of these possessions and of American Samoa with the U.S. tax system. Guam the CNMI and American Samoa are granted full authority over their own local income tax systems, with respect to income from sources within or effectively connected with the conduct of a trade or business within any of these possessions. This grant of authority is effective, however, only if and so long as an implementing agreement is in effect between the possession at issue and the United States which provides for elimination of double taxation, prevention of evasion or avoidance of U.S. tax exchange of information, and other administrative matters.

Timetable:

Action	Date	FR Cite
ANPRM	00/00/00	

Small Entity: Not Applicable

Additional Information: INTL-968-86

Drafting Attorney: Lilo A. Hester (202) 287-4851.

Reviewing Attorney: Michael Patton (202) 287-4851.

Treasury Attorney: Peter Barnes (202) 566-5815.

Agency Contact: Lilo A. Hester, Attorney-Advisor, Department of the Treasury, Internal Revenue Service, 950 L'Enfant Plaza South, S.W., Room 3319, Washington, D.C. 20024, 202 287-4851

RIN: 1545-AJ80

2144. INCOME TAX - RECIPROCAL EXEMPTIONS FOR CERTAIN TRANSPORTATION INCOME

Legal Authority: 26 USC 7805 Internal Revenue Code of 1986; 26 USC 883 Internal Revenue Code of 1986; 26 USC 872 Internal Revenue Code of 1986

CFR Citation: 26 CFR 1

Legal Deadline: None.

Abstract: This regulation would provide rules with respect to whether a foreign country will be considered to grant a reciprocal Aircraft/Shipping exemption to U.S. corporations for purposes of section 883 of the Code, or to U.S. citizens for purposes of section 872 of the Code.

Timetable:

Action	Date	FR Cite
ANPRM	00/00/00	

Small Entity: Not Applicable

Additional Information: INTL-948-86

Drafting Attorney: Patricia A. Bray (202) 566-6645.

Reviewing Attorney: Phyllis E. Marcus (202) 566-6645.

Treasury Attorney: David Crowe (202) 566-5791.

Agency Contact: Patricia A. Bray, Attorney-Advisor, Department of the Treasury, Internal Revenue Service, 1111 Constitution Avenue, N.W., Washington, D.C. 20224, 202 566-6645

RIN: 1545-AJ57

2145. FOUR PERCENT TAX ON GROSS TRANSPORTATION INCOME AND ECI

Significance: Agency Priority

Legal Authority: 26 USC 7805 Internal Revenue Code of 1986; 26 USC 887 Internal Revenue Code of 1986

CFR Citation: 26 CFR 1

Legal Deadline: None.

Abstract: Four percent tax in gross transportation income. The regulation will address the circumstances in which persons must pay a transportation on tax on a gross basis, and the circumstances in which they have effectively connected transportation income so that they must file a tax return and pay the tax on a net basis.

Timetable:

Action	Date	FR Cite
ANPRM	00/00/00	

Small Entity: Not Applicable

Additional Information: INTL-940-86

Drafting Attorney: David L. Paul (202) 566-3289

Reviewing Attorney: John F. Dean (202) 566-3289

Treasury Attorney: Peter Daub (202) 566-5791

Agency Contact: David L. Paul, Attorney-Advisor, Department of the Treasury, Internal Revenue Service, 1111 Constitution Avenue, N.W., Washington, D.C. 20224, 202 566-3289

RIN: 1545-AJ60

2146. AMENDMENT OF SECTION 1.901-2(E)(3)

Legal Authority: 26 USC 901(i) Internal Revenue Code of 1986

CFR Citation: 26 CFR 1

Legal Deadline: None.

Abstract: Proposal would provide rules to implement 1986 Tax Act amendment to Section 901 concerning certain tax subsidiaries used by foreign governments. Proposal will deny foreign tax credit to the extent that there is a subsidy.

Timetable:

Action	Date	FR Cite
Next Action Undetermined		

Small Entity: Not Applicable

Additional Information: INTL-942-86

Drafting Attorney: Charles P. Besecky (202) 566-3319.

Reviewing Attorney: Charles C. Saverude (202) 566-6645.

Treasury Attorney: David Crowe (202) 566-5791.

Agency Contact: Charles P. Besecky, Attorney-Advisor, Department of the Treasury, Internal Revenue Service, 1111 Constitution Ave., N.W., Washington, D.C. 20224, 202 566-3319

RIN: 1545-AJ90

2147. SUBPART F - USE OF DEFICITS

Significance: Agency Priority

Legal Authority: 26 USC 7805 Internal Revenue Code of 1986; 26 USC 952 Internal Revenue Code of 1986; 26 USC 954 Internal Revenue Code of 1986

CFR Citation: 26 CFR 1

Legal Deadline: None.

Abstract: The regulation will provide rules for determining the extent to which current year deficits in unrelated income categories or prior year deficits may reduce the amount included in the gross income of any U.S. shareholder under section 951(a)(1)(A)(i) for taxable years after 1986.

Timetable:

Action	Date	FR Cite
ANPRM	00/00/00	

Small Entity: Not Applicable

Additional Information: INTL-954-86

Drafting Attorney: Barbara A. Felker (202) 566-6645

Reviewing Attorney: Phyllis E. Marcus (202) 566-6645

Treasury Attorney: Peter Daub (202) 566-5711

Agency Contact: Barbara Allen Felker, Attorney-Advisor, Department of the Treasury, Internal Revenue Service, 1111 Constitution Ave., N.W., Washington, D.C. 20224, 202 566-6645

RIN: 1545-AJ71

2148. SUBPART F FPHC DEFINITIONS

Significance: Agency Priority

Legal Authority: 26 USC 7805 Internal Revenue Code of 1986; 26 USC 954 Internal Revenue Code of 1986; 26 USC 957 Internal Revenue Code of 1986

CFR Citation: 26 CFR 1

Legal Deadline: None.

Abstract: Definition of FPHC income. Particular issues include the definition of income equivalent to interest, of property which does not give rise to income.

Timetable:

Action	Date	FR Cite
ANPRM	00/00/00	

Small Entity: Not Applicable

Additional Information: INTL-953-86

Drafting Attorney: David L. Paul (202) 566-3289

Reviewing Attorney: Phyllis Marcus (202) 566-3289

Treasury Attorney: Peter Daub (202) 566-5791

Agency Contact: David L. Paul, Attorney-Advisor, Department of the Treasury, Internal Revenue Service, 1111 Constitution Avenue, N.W., Washington, D.C. 20224, 202 566-3289

RIN: 1545-AJ61

2149. ● REVISED WITHHOLDING TAX REGULATION TO MODIFY "AS SOON AS PRACTICAL" REQUIREMENTS

Legal Authority: 26 USC 1441 Internal Revenue Code of 1986

CFR Citation: 26 CFR 1

Legal Deadline: None.

Abstract: These regulations will modify a requirement of Treas. Reg. section 1.1441-6(c) regarding the time for filing of Form 1001. Section 1.1441-6(a) provides that the withholding rate shall be reduced as may be provided by a treaty with any country. To secure a reduced treaty withholding rate, subsection (c) of the regulation requires the recipient of the income to file Form 1001 (ownership, exemptions, or reduced rate certificate) with the withholding agent. The regulation further provides that each such Form 1001 filed with any withholding agent shall be filed "as soon as practicable". The "as soon as practicable" requirement will be changed to a narrowed and more objective time period.

Timetable:

Action	Date	FR Cite
ANPRM	00/00/00	

Small Entity: No

Additional Information: INTL-685-87

Drafting Attorney: Lilo A. Hester (202) 287-4851

Reviewing Attorney: Michael F. Patton (202) 287-4851

Agency Contact: Lilo A. Hester, Attorney, Department of the Treasury, Internal Revenue Service, 950 L'Enfant Plaza South, S.W., Room 3319, Washington, D.C. 20024, 202 286-4851

RIN: 1545-AL19

2150. DUAL RESIDENT COMPANIES LIMITATION ON CONSOLIDATED LOSSES

Legal Authority: 26 USC 7805 Internal Revenue Code of 1986; 26 USC 1503(d) Internal Revenue Code of 1986

CFR Citation: 26 CFR 1

Legal Deadline: None.

Abstract: If a U.S. Corporation is subject to a foreign country's tax on worldwide income, or on a residence basis as opposed to a source basis, any taxable loss it incurs cannot reduce the taxable income of any other member of a U.S. affiliated group for any other taxable year. Where a corporation is subject to foreign tax on a residence basis, then for U.S. purposes, its loss will be available to offset income of that corporation in other years, but not income of another U.S. Corporation. Regulations may exempt a U.S. corporation from this rule to the extent that its losses do not offset the income of foreign corporations for foreign tax purposes.

Timetable:

Action	Date	FR Cite
ANPRM	00/00/00	

Small Entity: Not Applicable

Additional Information: INTL-992-86

Drafting Attorney: Riea M. Lainoff (202) 566-6645

Reviewing Attorney: Phyllis Marcus (202) 566-6645

Treasury Attorney: David Crowe (202) 566-6275

Agency Contact: Riea Lainoff, Attorney-Advisor, Department of the Treasury, Internal Revenue Service, 1111 Constitution Ave., N.W., Washington, D.C. 20224, 202 566-6645

RIN: 1545-AJ54

2151. INFORMATION WITH RESPECT TO CERTAIN FOREIGN-OWNED CORPORATIONS

Legal Authority: PL 99-514, Sec 1245

CFR Citation: 26 CFR 1

Legal Deadline: None.

Abstract: Prior to the Tax Reform Act of 1986 foreign controlled foreign corporations doing business in the US and foreign controlled US corporations are required to report transactions with related foreign corporations. The 86 Act requires such entities to report transactions with all related foreign parties, whether or not corporations. The Act also provides a new definition for the term related parties, and requires information necessary to carry out the installment sales rules, as amended by such Act, to also be reported.

Timetable:

Action	Date	FR Cite
ANPRM	00/00/00	

Small Entity: Yes

Additional Information: INTL-958-86

Drafting Attorney: Charles A. Ray (202) 287-4851.

Reviewing Attorney: Michael F. Patton (202) 287-4851.

Treasury Attorney: Stephen Shay (202) 566-5046.

Agency Contact: Charles A. Ray, Attorney-Advisor, Department of the Treasury, Internal Revenue Service, 950 L'Enfant Plaza South, S.W., Room 3319, Washington, D.C. 20024, 202 287-4851

RIN: 1545-AJ56

2152. INFORMATION REGARDING RESIDENT STATUS

Legal Authority: 26 USC 6039E Internal Revenue Code of 1986

CFR Citation: 26 CFR 301

Legal Deadline: None.

Abstract: The regulation will prescribe the information to be gatherer by the State Department and Immigration and Naturalization Service on Passport and Green card applicants and the penalties to be imposed on such applicants if they do not supply the information the State Department or Immigration and Naturalization Service.

Timetable:

Action	Date	FR Cite
ANPRM	00/00/00	

Small Entity: Not Applicable

Additional Information: INTL-978-86

Drafting Attorney: Gerald H. Parshall, Jr. (202) 287-4851.

Reviewing Attorney: Michael F. Patton (202) 287-4851

Treasury Attorney: David Crowe (202) 566-8275

Agency Contact: Gerald Parshall, Attorney-Advisor, Department of the Treasury, Internal Revenue Service, 950 L'Enfant Plaza South, S.W., Room 3319, Washington, D.C. 20024, **202 287-4851**

RIN: 1545-AJ93

2153. ● COVER OVER OF INCOME TAXES

Legal Authority: 26 USC 7654 Internal Revenue Code of 1986

CFR Citation: 26 CFR 1

Legal Deadline: None.

Abstract: These regulations relate to section 7654 of the Internal Revenue Code of 1986 which generally provides that net income tax collections from individuals described in sections 931 or 932(c), plus earned income of federal personnel while bona fide residents of specified possession.

Timetable:

Action	Date	FR Cite
ANPRM	06/00/88	

Small Entity: No

Additional Information: INTL-971-86

Drafting Attorney: Lilo A. Hester (202) 287-4851

Reviewing Attorney: Michael F. Patton (202) 287-4851

Treasury Attorney: Peter Barnes (202) 566-5815

Government Levels Affected: Federal

Agency Contact: Lilo A. Hester, Attorney, Department of the Treasury, Internal Revenue Service, 950 L'Enfant Plaza South, S.W., Room 3319, Washington, D.C. 20024, **202 287-4851**

RIN: 1545-AL18

2154. ● DEFINITION OF LIFE INSURANCE CONTRACT

Legal Authority: 26 USC 7805 Internal Revenue Code of 1986; 26 USC 7702 Internal Revenue Code of 1986

CFR Citation: 26 CFR 1

Legal Deadline: None.

Abstract: The regulation will provide rules to define a life insurance contract.

Timetable:

Action	Date	FR Cite
ANPRM	06/30/88	

Small Entity: Not Applicable

Additional Information: LR-107-87

Drafting attorney: Katherine Lee Wambsgans (202) 566-3288.

Reviewing attorney: Cynthia Clark (202) 566-3288.

Income Taxes

Agency Contact: Katherine Lee Wambsgans, Attorney, Department of the Treasury, Internal Revenue Service, 1111 Constitution Ave., N.W., Washington, D.C. 20224, **202 566-3288**

RIN: 1545-AL08

2155. STATEMENT OF PROCEDURAL RULES—AMENDMENTS TO STATEMENT OF PROCEDURAL RULES—1981-1

Legal Authority: 5 USC 552; 5 USC 301

CFR Citation: 26 CFR 601

Legal Deadline: None.

Abstract: Semi-annual update of the Statement of Procedural Rules.

Timetable:

Action	Date	FR Cite
Statement of Procedural Rules	06/30/88	

Small Entity: Not Applicable

Additional Information: LR-154-81.

Paralegal Specialist: Carroll Field (202) 566-3935.

Reviewing attorney: Charles M. Whedbee (202) 566-3458.

Agency Contact: Carroll Field, Paralegal Specialist, Department of the Treasury, Internal Revenue Service, 1111 Constitution Ave., N.W., Washington D.C. 20224, **202 566-3935**

RIN: 1545-AD55

DEPARTMENT OF THE TREASURY (TREAS)

Internal Revenue Service (IRS)

Proposed Rule Stage

2156. INCOME TAX—DEDUCTION FOR BUS OPERATING AUTHORITIES AND FREIGHT

Legal Authority: 26 USC 1 et seq Internal Revenue Code of 1986

CFR Citation: 26 CFR 1

Legal Deadline: None.

Abstract: These regulations will provide rules allowing taxpayers an ordinary deduction ratably over a 60-month period for the adjusted basis of bus operating authorities and freight forwarders held or acquired on certain specified dates.

Timetable:

Action	Date	FR Cite
NPRM	07/01/89	

Small Entity: Not Applicable

Additional Information: LR-110-88

Drafting attorney: Christopher Wilson (202) 566-4336.

Reviewing attorney: Ada Rousso (202) 566-3287.

Treasury attorney: Bryan Collins (202) 566-4979.

Agency Contact: Christopher J. Wilson, Attorney-Advisor, Department of the Treasury, Internal Revenue Service, 1111 Constitution Ave., N.W., Washington, D.C. 20224, **202 566-4336**

RIN: 1545-AJ18

2157. ● LOW INCOME HOUSING CREDIT RECAPTURE RULE

Significance: Agency Priority

Legal Authority: 26 USC 38 Internal Revenue Code of 1986; 26 USC 42 Internal Revenue Code of 1986; 26 USC 167 Internal Revenue Code of 1986; 26 USC 168 Internal Revenue Code of 1986; 26 USC 142(d) Internal Revenue Code of 1986; 26 USC 179 Internal Revenue Code of 1986; 26 USC 267(b) Internal Revenue Code of 1986; 26 USC 1274(d)(1) Internal Revenue Code of 1986; 26 USC 6621 Internal Revenue Code of 1986; 26 USC 6622 Internal Revenue Code of 1986

CFR Citation: 26 CFR 1

Legal Deadline: None.

Abstract: These regulations will provide guidance with respect to the recapture requirements of section 42(j)for the low-income housing credit. In addition, these regulations will clarify the types of housing that will qualify for the credit.

Timetable:

Action	Date	FR Cite
NPRM	04/15/88	

Small Entity: Undetermined

Additional Information: LR-108-87

Drafting attorney: Christopher J. Wilson (202) 566-4336.

Reviewing attorney: Ada S. Rousso (202) 566-3287.

Treasury attorney: Susan Himes (202) 566-8527.

Agency Contact: Christopher J. Wilson, Attorney-Advisor, Department of the Treasury, Internal Revenue Service, 1111 Constitution Ave., N.W., Washington, D.C. 20224, 202 566-4336

RIN: 1545-AL12

2158. INCOME TAX–ALTERNATIVE MINIMUM TAX

Legal Authority: 26 USC 7805 Internal Revenue Code of 1986; 26 USC 55 Internal Revenue Code of 1986; 26 USC 57 Internal Revenue Code of 1986; 26 USC 58 Internal Revenue Code of 1986

CFR Citation: 26 CFR 1

Legal Deadline: None.

Abstract: The Regulations will provide rules for the computation of the alternative minimum tax and the computation of the credits that may be used to reduce that tax, as well as rules for determining the amount of tax preference for excluded dividends and interest, mining exploration and development costs, and circulation, research and experimental expenditures. The Regulations will also provide rules relating to the optional 10 year write off of certain tax preferences.

Timetable:

Action	Date	FR Cite
Next Action Undetermined		

Small Entity: Not Applicable

Additional Information: LR-235-82.

Drafting attorney: William A. Jackson (202) 566-3287.

Reviewing attorney: Ada Rousso (202) 566-3287.

Treasury attorney: Neil Kimmelfield (202) 566-8528.

Agency Contact: William A. Jackson, Attorney, Department of the Treasury, Internal Revenue Service, 1111 Constitution Ave., N.W., Washington, D.C. 20224, 202 566-3287

RIN: 1545-AE80

2159. ALTERNATIVE MINIMUM TAX FOR INDIVIDUALS

Significance: Regulatory Program

Legal Authority: 26 USC 55 Internal Revenue Code of 1986; 26 USC 7805 Internal Revenue Code of 1986

CFR Citation: 26 CFR 1

Legal Deadline: None.

Abstract: This project will address issues relating to the alternative minimum tax for individuals. The issues addressed will include the adjustment to inventory to take into account alternative tax depreciation, determination of the preference amount for charitable contributions of appreciated property, and application of alternative tax adjustments in determining the alternative tax liability of a trust or estate.

Timetable:

Action	Date	FR Cite
NPRM	07/00/88	

Small Entity: Not Applicable

Additional Information: LR-2-87

Drafting attorney: William A. Jackson (202) 566-3287.

Reviewing attorney: Ada Rousso (202) 566-3287.

Treasury attorney: Neil Kimmelfield (202) 566-8528.

Agency Contact: William A. Jackson, Attorney, Department of the Treasury, Internal Revenue Service, 1111 Constitution Ave., N.W., Washington, DC 20224, 202 566-3287

RIN: 1545-AJ86

2160. NET BOOK INCOME ADJUSTMENT FOR U.S. BRANCHES OF FOREIGN CORPORATIONS

Legal Authority: 26 USC 7805 Internal Revenue Code of 1986; 26 USC 56 Internal Revenue Code of 1986

CFR Citation: 26 CFR 1

Legal Deadline: None.

Abstract: These regulations will provide rules for computing the alternative minimum tax net book income adjustment of a foreign corporation engaged in a trade or business in the United States.

Timetable:

Action	Date	FR Cite
Temporary Regulation	04/01/88	

Small Entity: Not Applicable

Additional Information: LR-54-87

Drafting attorney: Timothy J. McKenna (202) 566-3287.

Reviewing attorney: Ada S. Rousso (202) 566-3287.

Tax Legislative Counsel Reviewing Attorney: Richard Harvey (202) 535-5960.

International Tax Counsel Reviewing Attorney: Peter Daub (202) 566-5791.

Agency Contact: Timothy J. McKenna, Attorney, Department of the Treasury, Internal Revenue Service, 1111 Constitution Avenue, N.W., Washington, D.C. 20224, 202 566-3287

RIN: 1545-AK22

2161. NET BOOK INCOME ADJUSTMENT FOR U.S. BRANCHES OF FOREIGN CORPORATIONS

Legal Authority: 26 USC 7805 Internal Revenue Code of 1986; 26 USC 56 Internal Revenue Code of 1986

CFR Citation: 26 CFR 1

Legal Deadline: None.

Abstract: These regulations will provide rules for computing the alternative minimum tax net book income adjustment of a foreign corporation engaged in a trade or business in the United States.

Timetable:

Action	Date	FR Cite
NPRM	04/01/86	

Small Entity: Not Applicable

Additional Information: LR-55-87

Drafting attorney: Timothy J. McKenna (202) 566-3287.

Reviewing attorney: Ada S. Rousso (202) 566-3287.

Tax Legislative Counsel Reviewing attorney: J. Richard Harvey (202) 535-0900.

International Tax Counsel Reviewing attorney: Peter Daub (202) 566-5791.

Agency Contact: Timothy J. McKenna, Attorney, Department of the Treasury, Internal Revenue Service, 1111 Constitution Avenue, N.W., Washington, D.C. 20224, 202 566-3287

RIN: 1545-AK23

2162. INCOME TAX--INVENTORY ADJUSTMENT FOR THE ALTERNATIVE MINIMUM TAX

Legal Authority: 26 USC 7805 Internal Revenue Code of 1986; 26 USC 56(a) Internal Revenue Code of 1986

CFR Citation: 26 CFR 1

Legal Deadline: None.

Abstract: This regulation provides guidance with respect to inventory adjustments for the alternative minimum tax.

Timetable:

Action	Date	FR Cite
NPRM	00/00/00	

Small Entity: Not Applicable

Additional Information: LR-85-87

Drafting Attorney: William Jackson (202) 566-3287.

Reviewing Attorney: Ada Rousso (202) 566-3287.

Treasury Attorney: Tom Evans (202) 566-5453.

Agency Contact: William Jackson, Attorney, Department of the Treasury, Internal Revenue Service, 1111 Constitution Avenue, N.W., Washington, DC 20224, 202 566-3287

RIN: 1545-AL02

2163. INCOME TAX-MINIMUM TAX. ITEM OF TAX PREFERENCE FOR INTANGIBLE DRILLING COSTS INCURRED IN DRILLING OIL, GAS OR GEOTHERMAL WELLS

Legal Authority: 26 USC 7805 Internal Revenue Code of 1986; 26 USC 57 Internal Revenue Code of 1986

CFR Citation: 26 CFR 1

Legal Deadline: None.

Abstract: These regulations will explain the application and determination of the tax preference item for intangible drilling costs which was added by the Tax Reform Act of 1976. The regulations will provide rules for determining a taxpayer's net income from oil and gas properties, rules for determining if a well is nonproductive and rules for determining the proper preference tax if a well proves to be nonproductive after the close of a taxable year for which a tax return has already been filed.

Timetable:

Action	Date	FR Cite
NPRM	12/00/88	

Small Entity: Not Applicable

Additional Information: LR-209-78.

Drafting attorney: Ruth Hoffman (202) 566-3287.

Reviewing attorney: Ada S. Rousso (202) 566-3287.

Agency Contact: Ruth Hoffman, Attorney, Department of the Treasury, Internal Revenue Service, 1111 Constitution Ave., N.W., Washington, D.C. 20224, 202 566-3287

RIN: 1545-AA34

2164. TAX BENEFIT RULE FOR CORPORATE ADD-ON MINIMUM TAX UNDER THE INTERNAL REVENUE CODE OF 1954

Legal Authority: 26 USC 7805 Internal Revenue Code of 1986; 26 USC 58 Internal Revenue Code of 1986

CFR Citation: 26 CFR 1

Legal Deadline: None.

Abstract: The regulations provide rules for taking into account credit carryovers in applying the minimum tax benefit rule for corporations.

Timetable:

Action	Date	FR Cite
Next Action Undetermined		

Small Entity: Not Applicable

Additional Information: LR-56-87

Drafting attorney: William A. Jackson (202) 566-3287.

Reviewing attorney: Ada S. Rousso (202) 566-3287.

Treasury attorney: Neil Kimmelfield (202) 566-8528.

Agency Contact: William A. Jackson, Attorney, Department of the Treasury, Internal Revenue Service, 1111 Constitution Avenue, N.W., Washington, D.C. 20224, 202 566-3287

RIN: 1545-AK20

2165. 2-PERCENT FLOOR ON MISCELLANEOUS ITEMIZED DEDUCTIONS

Legal Authority: 26 USC 7805 Internal Revenue Code of 1986; 26 USC 67 (c) Internal Revenue Code of 1986

CFR Citation: 26 CFR 1

Legal Deadline: None.

Abstract: The regulations would provide guidance regarding the miscellaneous itemized deductions that are subject to the 2-percent floor and provide expense allocation rules for regulated investment companies and REMICs.

Timetable:

Action	Date	FR Cite
NPRM	04/01/88	

Small Entity: Not Applicable

Additional Information: LR-97-86.

Drafting attorney: Beverly A. Baughman (202) 566-3297.

Reviewing attorneys: John B. Bromell (202) 566-3328, Charles M Whedbee (202) 566-3458, Susan T. Baker (202) 566-3294.

Treasury attorney: Don Rocap (202) 566-8277.

Agency Contact: Beverly A. Baughman, Attorney, Department of the Treasury, Internal Revenue Service, 1111 Constitution Ave., N.W., Washington, D.C. 20224, 202 566-3297

RIN: 1545-AJ49

2165. LOANS TREATED AS DISTRIBUTIONS

Legal Authority: 26 USC 7805 Internal Revenue Code of 1986; 26 USC 72 Internal Revenue Code of 1986

CFR Citation: 26 CFR 1

Legal Deadline: None.

Abstract: The regulation will provide guidance on the application of new rules for determining the income tax treatment to be accorded loans to participants or beneficiaries from qualified employer plans. The new loan rules are provided in new section 72(p) of the Internal Revenue Code of 1954.

Timetable:

Action	Date	FR Cite
NPRM	06/30/88	

Small Entity: Not Applicable

Additional Information: EE-106-82.

Drafting attorney: Nerman Dobynes Hubbard (202) 566-3430.

Reviewing attorney: Michael A. Thrasher (202) 566-3961.

Agency Contact: Nerman Dobynes Hubbard, Attorney, Department of the Treasury, Internal Revenue Service, 1111 Constitution Ave., N.W., Washington, D.C. 20224, 202 566-3430

RIN: 1545-AE41

2167. UPDATE AND GENDER-NEUTRALIZE MORTALITY TABLE USED TO DETERMINE PERMANENT GROUP-TERM LIFE INSURANCE BENEFITS

Legal Authority: 26 USC 7805 Internal Revenue Code of 1986; 26 USC 79 Internal Revenue Code of 1986

CFR Citation: 26 CFR 1

Legal Deadline: None.

Abstract: The proposed regulations will update and gender-neutralize the mortality table used under section 79 to determine the value of permanent group-term life insurance benefits provided to employees.

Timetable:

Action	Date	FR Cite
NPRM	06/30/88	

Small Entity: Undetermined

Additional Information: LR-77-87

Drafting attorney: Bill Blagg (202) 566-3236.

Agency Contact: Bill Blagg, Attorney, Department of the Treasury, Internal Revenue Service, 1111 Constitution Avenue, N.W., Washington, D.C. 20224, 202 566-3238

RIN: 1545-AK50

2168. NONDISCRIMINATION RULES FOR NON-PENSION EMPLOYEE BENEFIT PLANS

Legal Authority: 26 USC 7805 Internal Revenue Code of 1986; 26 USC 89 Internal Revenue Code of 1986

CFR Citation: 26 CFR 1

Legal Deadline: None.

Abstract: These regulations will provide the following: an explanation of the eligibility, benefits and alternative tests contained in section 89; an explanation as to which plans are subject to section 89 requirements; and, rules concerning how the requirements will be applied in actual operation.

Timetable:

Action	Date	FR Cite
NPRM	00/00/00	

Small Entity: Undetermined

Additional Information: EE-130-86

Drafting Attorney: Steven T. Miller (202) 566-3422.

Reviewing Attorney: James L. Brokaw (202) 566-3422.

Agency Contact: Steven T. Miller, Attorney, Department of the Treasury, Internal Revenue Service, 1111 Constitution Ave., N.W., Washington, D.C. 20224, 202 566-3422

RIN: 1545-AI78

2169. TO PROVIDE REGULATIONS UNDER SECTION 147 (B)—RELATING TO LIMITATION ON MATURITY OF PRIVATE ACTIVITY BONDS

Legal Authority: 26 USC 7805 Internal Revenue Code of 1986; 26 USC 103 Internal Revenue Code of 1986

CFR Citation: 26 CFR 1

Legal Deadline: None.

Abstract: Rules will provide guidance with respect to computation of weighted average economic life and weighted average maturity. Rules limit the average length of the maturity of all private activity bonds (including qualified 501 (c) (3) bonds), other than mortgage revenue bonds and student loan bonds.

Timetable:

Action	Date	FR Cite
NPRM	06/30/88	

Small Entity: Not Applicable

Additional Information: LR-220-82.

Drafting attorney: Richard G. Blumenreich (202) 566-4336.

Reviewing attorney: Gerald Rock (202) 566-3287.

Office of Tax Legislative Counsel reviewing attorney: Elliot Stern (202) 566-2926.

Agency Contact: Richard G. Blumenreich, Attorney, Department of the Treasury, Internal Revenue Service, 1111 Constitution Ave., N.W., Washington, D.C. 20224, 202 566-4336

RIN: 1545-AE69

2170. REGULATIONS RELATING TO FEDERALLY GUARANTEED BONDS

Legal Authority: 26 USC 7805 Internal Revenue Code of 1986; 26 USC 149 (b) Internal Revenue Code of 1986

CFR Citation: 26 CFR 1

Legal Deadline: None.

Abstract: These regulations would provide guidance regarding the provisions enacted by the Tax Reform Act of 1984 which denies Federal income tax exemption for bonds issued by State or local governmental units if payments of principal or interest with respect to such bonds are directly or indirectly guaranteed by the Federal Government.

Timetable:

Action	Date	FR Cite
NPRM	00/00/00	

Small Entity: Not Applicable

Additional Information: LR-156-84.

Drafting attorney: John A. Tolleris (202) 566-3590.

Reviewing attorney: John M. Coulter, Jr. (202) 566-3740.

Office of Tax Legislative Counsel reviewing attorney: Elliott Stern (202) 566-2566.

Agency Contact: John A. Tolleris, Attorney, Department of the Treasury, Internal Revenue Service, 1111

BEST COPY AVAILABLE

Constitution Ave., N.W., Washington, D.C. 20224, 202 566-3590

RIN: 1545-AG84

2171. DEFINITION OF "REISSUANCE" UNDER SECTION 103

Legal Authority: 26 USC 7805 Internal Revenue Code of 1986

CFR Citation: 26 CFR 1

Legal Deadline: None.

Abstract: Proposed Regulations would provide guidance regarding whether changes in the terms of an outstanding obligation result in that obligation being treated as retired and reissued as a new obligation.

Timetable:

Action	Date	FR Cite
NPRM	12/31/88	

Small Entity: Not Applicable

Additional Information: LR-29-86.

Drafting attorney: Howard Gensler (202) 566-3459.

Reviewing attorney: Gerald Rock (202) 566-3287.

Treasury attorney: Elliott Stern (202) 566-2566.

Agency Contact: Howard Gensler, Attorney, Department of the Treasury, Internal Revenue Service, 1111 Constitution Avenue, NW, Washington, DC 20224, 202 566-3459

RIN: 1545-AI65

2172. TO REVISE DEFINITION OF AREAS OF CHRONIC ECONOMIC DISTRESS FOR PURPOSES OF MORTGAGE SUBSIDY BONDS

Legal Authority: 26 USC 7805 Internal Revenue Code of 1986

CFR Citation: 26 CFR 1.103A-2

Legal Deadline: None.

Abstract: The regulations will clarify the rules under section 103A relating to designations of areas of chronic economic distress. The regulations would provide objective tests to be used in analyzing requests for such designations.

Timetable:

Action	Date	FR Cite
NPRM	00/00/00	

Small Entity: Not Applicable

Additional Information: LR-307-84.

Drafting attorney: Robert Beatson (202) 566-3459.

Reviewing attorney: John M. Coulter, Jr. (202) 566-4473.

Agency Contact: Robert Beatson, Attorney, Department of the Treasury, Internal Revenue Service, 1111 Constitution Ave., N.W., Washington, D.C. 20224, 202 566-3459

RIN: 1545-AG88

2173. INCOME TAX—DISCHARGE OF INDEBTEDNESS

Legal Authority: 26 USC 7805 Internal Revenue Code of 1986; 26 USC 108 Internal Revenue Code of 1986; 26 USC 1017 Internal Revenue Code of 1986; PL 96-589, Sec 2 Bankruptcy Tax Act 1980

CFR Citation: 26 CFR 1

Legal Deadline: None.

Abstract: This proposal would provide rules relating to certain income from the discharge of indebtedness, including rules relating to the election to reduce the basis of assets in lieu of recognizing income.

Timetable:

Action	Date	FR Cite
Next Action Undetermined		

Small Entity: Not Applicable

Additional Information: LR-91-81.

Drafting attorney: Robert M. Casey (202) 566-3458.

Reviewing attorney: Charles M. Whedbee (202) 566-3458.

Office of Tax Legislative Counsel reviewing attorney: Patricia McClanahan (202) 566-8647.

Agency Contact: Robert M. Casey, Attorney, Department of the Treasury, Internal Revenue Service, 1111 Constitution Ave., N.W., Washington, D.C. 20224, 202 566-3458

RIN: 1545-AA67

2174. INCOME TAX—PART 1—INCOME TAX REGULATIONS UNDER SECTION 111 RELATING TO INCLUSION OF TAX BENEFIT ITEMS

Legal Authority: 26 USC 111 Internal Revenue Code of 1986; 26 USC 7805 Internal Revenue Code of 1986

CFR Citation: 26 CFR 1

Legal Deadline: None.

Abstract: This regulation will revise the rules for determining whether the recovery of an amount deducted in a prior taxable year must be included in income, to reflect changes in section 111 made by section 170 of the Tax Reform Act of 1984.

Timetable:

Action	Date	FR Cite
NPRM	12/00/88	

Small Entity: Not Applicable

Additional Information: LR-303-84.

Drafting attorney: William A. Jackson (202) 566-3287.

Reviewing attorney: Paul A. Francis (202) 566-3318.

Agency Contact: William A. Jackson, Attorney, Department of the Treasury, Internal Revenue Service, 1111 Constitution Ave., N.W., Washington, D.C. 20224, 202 566-3287

RIN: 1545-AH17

2175. EXCLUSION OF QUALIFIED SCHOLARSHIPS AND FELLOWSHIPS FROM GROSS INCOME

Legal Authority: 26 USC 7805 Internal Revenue Code of 1986; 26 USC 6041 (a) Internal Revenue Code of 1986

CFR Citation: 26 CFR 1

Legal Deadline: None.

Abstract: Regulations will provide rules relating to the exclusion of certain amounts received as a qualified scholarship. Regulations will also provide rules relating to withholding from certain payments and return of information requirements.

Timetable:

Action	Date	FR Cite
NPRM	04/01/88	

Small Entity: Not Applicable

Additional Information: LR-3-87

Drafting attorney: Ruth Hoffman (202) 566-3287.

Reviewing attorney: Ada S. Rousso (202) 566-3287.

Treasury attorney: Majorie Roberts (202) 566-2565.

Agency Contact: Ruth Hoffman, Attorney, Department of the Treasury, Internal Revenue Service, 1111

Constitution, N.W., Washington, DC 20224, 202 566-3287

RIN: 1545-AJ87

2176. QUALIFIED TUITION REDUCTIONS

Significance: Regulatory Program

Legal Authority: 26 USC 7805 Internal Revenue Code of 1986; 26 USC 117(d) Internal Revenue Code of 1986

CFR Citation: 26 CFR 1

Legal Deadline: None.

Abstract: The proposed regulations contain rules explaining when qualified tuition reductions provided for education below the graduate level to an employee of an educational organization or to a person treated as an employee will be excluded from the employee's gross income. The proposed regulations include rules relating to tuition reductions which discriminate in favor of officers, owners or highly compensated employees and so are includible in income.

Timetable:

Action	Date	FR Cite
NPRM	10/00/88	

Small Entity: Not Applicable

Additional Information: LR-35-85.

Drafting attorney: Ruth Hoffman (202) 566-3287.

Reviewing attorney: Gerald Rock (202) 566-3294.

Treasury attorney: Marjorie Roberts (202) 2927.

Agency Contact: Ruth Hoffman, Attorney, Department of the Treasury, Internal Revenue Service, 1111 Constitution Ave., N.W., Washington, D.C. 20224, 202 566-3287

RIN: 1545-AI13

2177. INCOME TAX--TAX TREATMENT OF FACULTY HOUSING

Legal Authority: 26 USC 7805 Internal Revenue Code of 1986; 26 USC 119 (d) Internal Revenue Code of 1986

CFR Citation: 26 CFR 1

Legal Deadline: None.

Abstract: The regulations will provide rules relating to the definition of a "qualified appraisal". In addition, the regulations will set forth the time and manner in which the appraisal shall be reviewed and updated.

Timetable:

Action	Date	FR Cite
NPRM	09/00/88	

Small Entity: Not Applicable

Additional Information:

LR-109-86.

Drafting attorney: Richard Blumenreich (202) 566-4336.

Reviewing attorney: Ada Rousso (202) 566-3287.

Treasury attorney: Marjorie Roberts (202) 566-2565.

Agency Contact: Richard Blumenreich, Attorney-Advisor, Department of the Treasury, Internal Revenue Service, 1111 Constitution Ave., N.W., Washington, D.C. 20224, 202 566-4336

RIN: 1545-AJ21

2178. INCOME TAX--PART 1 PERSONAL INJURY LIABILITY ASSIGNMENTS

Legal Authority: 26 USC 7805 Internal Revenue Code of 1986; 26 USC 130 Internal Revenue Code of 1986

CFR Citation: 26 CFR 1

Legal Deadline: None.

Abstract: This regulation project will provide rules on the exclusion from gross income for amounts received for agreeing to the assignment of a liability to make periodic payments as damages on account of personal injury or sickness.

Timetable:

Action	Date	FR Cite
NPRM	00/00/00	

Small Entity: No

Additional Information: LR-82-83.

Drafting attorney: Bill Blagg (202) 566-3238.

Reviewing attorney: Cynthia Clark (202) 566-3288.

Agency Contact: Bill Blagg, Attorney, Department of the Treasury, Internal Revenue Service, 1111 Constitution Ave., N.W., Washington, D.C. 20224, 202 566-3238

RIN: 1545-AF39

2179. INCOME TAX--PRIZES AND AWARDS

Legal Authority: 26 USC 74 Internal Revenue Code of 1986; 26 USC 132 Internal Revenue Code of 1986; 26 USC 170 Internal Revenue Code of 1986; 26 USC 274 Internal Revenue Code of 1986; 26 USC 6041 Internal Revenue Code of 1986; 26 USC 102 Internal Revenue Code of 1986

CFR Citation: 26 CFR 1

Legal Deadline: None.

Abstract: These regulations will incorporate changes with respect to the tax treatment of prizes and awards and certain employee achievement awards. They will provide guidance so that effective designations and transfers of awards may be accomplished as well as rules with respect to allowance of exclusions and deductions for awards given in an employment context.

Timetable:

Action	Date	FR Cite
NPRM	04/01/88	

Small Entity: Undetermined

Additional Information: LR-111-86.

Drafting attorney: Christopher J. Wilson (202) 566-4336.

Reviewing attorney: Fredric Grundeman (202) 566-3287.

Treasury attorney: Majorie Roberts (202) 566-2565.

Agency Contact: Christopher J. Wilson, Attorney-Advisor, Department of the Treasury, Internal Revenue Service, 1111 Constitution Ave., N.W., Washington, D.C. 20224, 202 566-4336

RIN: 1545-AJ19

2180. INCOME TAX--DEFINITION OF "PRIVATE ACTIVITY BOND"

Significance: Regulatory Program

Legal Authority: 26 USC 141 Internal Revenue Code of 1986

CFR Citation: 26 CFR 1

Legal Deadline: None.

Abstract: This regulation would provide guidance regarding the definition of private activity bonds", issued by State or local governmental units, which are generally taxable unless a specific exception applies to such bond issue. The Tax Reform Act of 1986 made significant revisions regarding this subject matter.

Timetable:

Action	Date	FR Cite
NPRM	12/31/88	

Small Entity: Not Applicable

Additional Information: LR-87-86.

Drafting Attorney: John A. Tolleris (202) 566-3590.

Reviewing Attorney: John M. Coulter, Jr. (202) 566-3740.

Office of Tax Legislative Counsel attorney: Elliot Stern (202) 566-2926.

Agency Contact: John A. Tolleris, Attorney, Department of the Treasury, Internal Revenue Service, 1111 Constitution Avenue NW, Washington, DC 20224, 202 566-3590

RIN: 1545-AJ34

2181. TAX-EXEMPT BONDS FOR RESIDENTIAL RENTAL PROJECTS

Legal Authority: 26 USC 7805 Internal Revenue Code of 1986

CFR Citation: 26 CFR 1

Legal Deadline: None.

Abstract: This project will provide regulations relating to tax-exempt bonds issued to provide qualified residential rental projects.

Timetable:

Action	Date	FR Cite
NPRM	08/15/88	

Small Entity: Not Applicable

Additional Information: LR-89-86

Drafting attorney: David Selig (202) 566-3297.

Reviewing attorney: Alice Bennett (202) 566-4473.

Treasury attorney: Elliott Stern (202) 566-2566.

Agency Contact: David Selig, Attorney, Department of the Treasury, Internal Revenue Service, 1111 Constitution Ave., N.W., Washington, DC 20224, 202 566-3297

RIN: 1545-AJ66

2182. INCOME TAX--STUDENT LOAN BONDS

Significance: Regulatory Program

Legal Authority: 26 USC 7805 Internal Revenue Code of 1986; 26 USC 144 (b) Internal Revenue Code of 1986; 26 USC 103 Internal Revenue Code of 1986

CFR Citation: 26 CFR 1

Legal Deadline: None.

Abstract: To provide guidance to issuers of tax-exempt student loan bonds regarding quarterly with the rules relating to qualified student loan bonds.

Timetable:

Action	Date	FR Cite
Next Action Undetermined		

Small Entity: Not Applicable

Additional Information: LR-80-86.

Drafting Attorney: Renay France (202) 566-3459.

Reviewing Attorney: John M. Coulter (202) 566-3331.

Treasury Attorney: Elliott Stern (202) 566-2566.

Agency Contact: Renay France, Attorney, Department of the Treasury, Internal Revenue Service, 1111 Constitution Avenue, NW, Washington, DC 20224, 202 566-3459

RIN: 1545-AJ42

2183. ARBITRAGE RESTRICTIONS ON TAX-EXEMPT BONDS; REBATE REQUIREMENT

Significance: Regulatory Program

Legal Authority: 26 USC 7805 Internal Revenue Code of 1986; 26 USC 148 Internal Revenue Code of 1986

CFR Citation: 26 CFR 1

Legal Deadline: None.

Abstract: This project will provide regulations relating to the requirement that arbitrage profits earned on tax-exempt bonds be paid to the United States.

Timetable:

Action	Date	FR Cite
NPRM	04/01/88	

Small Entity: Not Applicable

Additional Information: LR-91-86

Drafting attorney: Howard Gensler (202) 566-3459

Reviewing attorney: Gerald Rock (202) 566-3287.

Treasury attorney: Elliott Stern (202) 566-2566.

Agency Contact: Howard Gensler, Attorney-Advisor, Department of the Treasury, Internal Revenue Service, 1111 Constitution Ave., N.W., Washington, DC 20224, 202 566-3459

RIN: 1545-AJ67

2184. GENERAL ARBITRAGE RESTRICTIONS OF TAX-EXEMPT BONDS

Significance: Regulatory Program

Legal Authority: 26 USC 7805 Internal Revenue Code of 1986; 26 USC 148 Internal Revenue Code of 1986

CFR Citation: 26 CFR 1

Legal Deadline: None.

Abstract: This project will provide rules relating to the arbitrage restrictions on tax-exempt bonds, other than the rebate requirement.

Timetable:

Action	Date	FR Cite
NPRM	04/01/88	
Temporary Regulation	04/01/88	
NPRM Comment Period End	06/00/88	
Final Action	12/00/88	

Small Entity: Not Applicable

Additional Information: LR-90-86

Drafting attorney: Howard Gensler (202) 566-3459.

Reviewing attorney: Gerald Rock (202) 566-3287.

Treasury attorney: Elliott Stern (202) 566-2566.

Agency Contact: Howard Gensler, Attorney-Advisor, Department of the Treasury, Internal Revenue Service, 1111 Constitution Ave., N.W., Washington, DC 20224, 202 566-3459

RIN: 1545-AJ61

2185. INCOME TAX--TO PROVIDE BETTER DEFINITIONS IN THE AREA OF POLITICAL ADVERTISING & GRASSROOTS LOBBYING

Significance: Regulatory Program

Legal Authority: 26 USC 7805 Internal Revenue Code of 1986; 26 USC 162 Internal Revenue Code of 1986; 26 USC 4945 Internal Revenue Code of 1986

CFR Citation: 26 CFR 1

Legal Deadline: None.

Abstract: The regulation would provide better definitions in the area of political advertising and grassroots lobbying.

Timetable:

Action	Date	FR Cite
NPRM	07/30/88	

Small Entity: Not Applicable

Additional Information: LR-190-77.

Drafting attorney: Stuart G. Wessler (202) 566-3297.

Reviewing attorney: David R. Haglund (202) 566-3297.

Office of Tax Legislative Counsel reviewing attorney: Ellen Aprill (20) 566-5453.

Agency Contact: Stuart G. Wessler, Attorney, Department of the Treasury, Internal Revenue Service, 1111 Constitution Ave., N.W., Washington, D.C. 20224, 202 566-3297

RIN: 1545-AA79

2186. DEFINITION OF RELATED VIOLATION

Legal Authority: 26 USC 7805 Internal Revenue Code of 1986

CFR Citation: 26 CFR 1

Legal Deadline: None.

Abstract: Regulations would amend the definition of "related violations" under section 162(g) of the Internal Revenue Code of 1986 in order to update such definition in light of subsequent events.

Timetable:

Action	Date	FR Cite
NPRM	12/31/88	

Small Entity: No

Additional Information: LR-27-87

Drafting Attorney: Joel S. Rutstein (202) 566-3297.

Reviewing Attorney: John S. Bromell (202) 566-3326.

Agency Contact: Joel S. Rutstein, Attorney, Department of the Treasury, Internal Revenue Service, 1111 Constitution Avenue, N.W., Washington, D.C. 20224, 202 566-3297

RIN: 1545-AK63

2187. INCOME TAX—NORMALIZATION REQUIREMENT FOR PUBLIC UTILITY PROPERTY

Legal Authority: 26 USC 7805 Internal Revenue Code of 1986; 26 USC 168(e)(3) Internal Revenue Code of 1986

CFR Citation: 26 CFR 1

Legal Deadline: None.

Abstract: The temporary regulations would provide guidance to public utilities relating to the transitional rules for the public utility normalization requirements of ACRS under section 168 (e) (3). Prior to ACRS some public utilities did not have to normalize in order to use accelerated depreciation. Under the transitional rule these utilities are given until January 1, 1983 to meet the normalization requirements of section 168 (e) (3).

Timetable:

Action	Date	FR Cite
NPRM	00/00/00	

Small Entity: Not Applicable

Additional Information: LR-244-81.

Drafting attorney: Paulette C. Galanko (202) 566-3288.

Office of Tax Legislative Counsel (Treasury) reviewing attorney: Thomas Evans (202) 566-8277.

Agency Contact: Paulette C. Galanko, Attorney, Department of the Treasury, Internal Revenue Service, 1111 Constitution Ave., N.W., Washington, D.C. 20224, 202 566-3288

RIN: 1545-AA88

2188. INCOME TAX – TO PROVIDE REGULATIONS RELATING TO CONTRIBUTIONS TO PRIVATE FOUNDATIONS

Legal Authority: 26 USC 7805 Internal Revenue Code of 1986

CFR Citation: 26 CFR 1

Legal Deadline: None.

Abstract: These regulations will provide rules relating to the percentage limitations for charitable contributions to private foundations. The regulations will also provide rules relating to "qualified appreciated stock" as that term is defined in section 170 (e) (5) of the Internal Revenue Code.

Timetable:

Action	Date	FR Cite
NPRM	00/00/00	

Small Entity: Not Applicable

Additional Information: LR-231-84.

Drafting attorney: Stuart G. Wessler (202) 566-3297.

Reviewing attorney: Walter H. Woo (202) 566-3297.

Agency Contact: Stuart G. Wessler, Attorney, Department of the Treasury, Internal Revenue Service, 1111 Constitution Ave., N.W., Washington, D.C. 20224, 202 566-3297

RIN: 1545-AI09

2189. FINAL REGULATIONS RELATING TO THE CHARITABLE CONTRIBUTIONS DEDUCTION IN THE CONTEXT OF BARGAIN SALES

Legal Authority: 26 USC 7805 Internal Revenue Code of 1986

CFR Citation: 26 CFR 1

Legal Deadline: None.

Abstract: These regulations provide that a charitable contribution deduction will be disallowed if the amount of the contribution is less than the amount of gain that would have been recognized had the contributed portion of the property been sold by the donor of its fair market value at the time of the sale or exchange.

Timetable:

Action	Date	FR Cite
Next Action Undetermined		

Small Entity: No

Additional Information: LR-7-87

Drafting attorney: Joel S. Rutstein (202) 566-3297.

Reviewing attorney: David R. Haglund (202) 566-3297.

Agency Contact: Joel S. Rustein, Attorney, Department of the Treasury, Internal Revenue Service, 1111 Constitution Ave., N.W., Washington, DC 20224, 202 566-3297

RIN: 1545-AJ85

2190. ● DEDUCTIONS IN EXCESS OF $5000 CLAIMED BY A SUBCHAPTER C CORPORATION FOR CHARITABLE CONTRIBUTIONS OF CERTAIN PROPERTY

Legal Authority: 26 USC 7805 Internal Revenue Code of 1986; 26 USC 170(a)(1) Internal Revenue Code of 1986

CFR Citation: 26 CFR 1

Legal Deadline: None.

Abstract: The regulations will provide substantiation requirements with which subchapter C corporations must comply in order to take deductions for charitable contributions of certain property.

Timetable:

Action	Date	FR Cite
NPRM	04/01/88	

Small Entity: Not Applicable

Additional Information: LR-83-87

Drafting Attorney: Beverly A. Baughman (202) 566-3297

Revising Attorney: John B. Bromell (202) 566-3326

Treasury Attorney: A.L. Spitzer (202) 566-5911

Charitable Contributions

Agency Contact: Beverly A. Baughman, Attorney, Department of the Treasury, Internal Revenue Service, 1111 Constitution Avenue, N.W., Washington, D.C. 20224, 202 566-3297

RIN: 1545-AL09

2191. ELECTION TO POSTPONE DETERMINATION WITH RESPECT TO THE PRESUMPTION THAT AN ACTIVITY IS ENGAGED IN FOR PROFIT

Legal Authority: 26 USC 7805 Internal Revenue Code of 1986; 26 USC 183(e)(3) Internal Revenue Code of 1986

CFR Citation: 26 CFR 1

Legal Deadline: None.

Abstract: The regulations will provide rules relating to the election to postpone the determination whether the section 183 (d) presumption applies until the activity has been conducted for five (or seven) years. The regulations will specify who can make the election and the time and manner of making the election.

Timetable:

Action	Date	FR Cite
NPRM	00/00/00	

Small Entity: Not Applicable

Additional Information: LR-73-84.

Drafting attorney: Bill Blagg (202) 566-3238.

Reviewing attorney: Cynthia L. Clark (202) 566-3288.

Agency Contact: Bill Blagg, Attorney, Department of the Treasury, Internal Revenue Service, 1111 Constitution Ave. N.W., Washington, D.C. 20224, 202 566-3238

RIN: 1545-AG27

2192. INCOME TAX—TO ADD PROVISIONS RELATING TO START-UP EXPENDITURES

Legal Authority: 26 USC 7805 Internal Revenue Code of 1986; 26 USC 195 Internal Revenue Code of 1986

CFR Citation: 26 CFR 1

Legal Deadline: None.

Abstract: The regulations would provide guidance to taxpayers electing to amortize start-up expenditures relating to the creation or acquisition of an active trade or business.

Timetable:

Action	Date	FR Cite
NPRM	00/00/00	

Small Entity: Not Applicable

Additional Information: LR-36-81.

Drafting attorney: David R. Haglund (202) 566-3297.

Reviewing attorney: John Fischer (202) 566-3394.

Agency Contact: David R. Haglund, Attorney, Department of the Treasury, Internal Revenue Service, 1111 Constitution Ave., N.W., Washington, D.C. 20224, 202 566-3297

RIN: 1545-AB02

2193. PROVISIONS RELATING TO COOPERATIVE HOUSING CORPORATIONS

Legal Authority: 26 USC 7805 Internal Revenue Code of 1986; 26 USC 216 Internal Revenue Code of 1986

CFR Citation: 26 CFR 1

Legal Deadline: None.

Abstract: These regulations provide rules for determining a tenant-stockholder's proportionate share of taxes or interest in the case where the cooperative housing corporation has made the election provided in section 216 (b) (3) (B) of the Code. These regulations also provide rules for determining whether a deduction claimed by a tenant-stockholder should be disallowed as more proper allocable to the corporation's capital account.

Timetable:

Action	Date	FR Cite
NPRM	06/30/88	

Small Entity: Not Applicable

Additional Information: LR-102-86.

Drafting attorney: Joel S. Rutstein (202) 566-3297.

Reviewing attorney: Walter H. Woo (202) 566-3297.

Agency Contact: Joel S. Rutstein, Attorney, Department of the Treasury, Internal Revenue Service, 1111 Constitution Avenue, N.W., Washington, D.C. 20224, 202 566-3297

RIN: 1545-AJ96

2194. INCOME TAX – PART 1, EXCISE TAX – PART 54, INDIVIDUAL RETIREMENT ACCOUNTS AFTER TRA '86

Legal Authority: 26 USC 7805 Internal Revenue Code of 1986; 26 USC 219 Internal Revenue Code of 1986; 26 USC 408 Internal Revenue Code of 1986; 26 USC 72 Internal Revenue Code of 1986; 26 USC 6693 Internal Revenue Code of 1986

CFR Citation: 26 CFR 1; 26 CFR 25; 26 CFR 31; 26 CFR 54; 26 CFR 301

Legal Deadline: None.

Abstract: The regulations set forth rules for sponsors of and participants in individual retirement plans and spousal individual retirement plans.

Timetable:

Action	Date	FR Cite
NPRM	06/30/88	

Small Entity: Not Applicable

Additional Information: EE-26-87

Drafting Attorney: Mary E. Brennan (202) 566-3430.

Review Attorney: Richard J. Wickersham (202) 566-3250.

Agency Contact: Mary E. Brennan, Attorney, Department of the Treasury, Internal Revenue Service, 1111 Constitution Avenue N.W., Washington, D.C. 20224, 202 566-3430

RIN: 1545-AK47

2195. INCOME TAX-DEBT-FINANCED PORTFOLIO STOCK

Legal Authority: 26 USC 7805 Internal Revenue Code of 1986; 26 USC 246A Internal Revenue Code of 1986; 26 USC 7701(f) Internal Revenue Code of 1986

CFR Citation: 26 CFR 1

Legal Deadline: None.

Abstract: Amendment of the regulations to interpret the rule contained in section 246A of the Internal Revenue Code of 1954 relating

to the dividends received deduction where portfolio stock is debt financed.

Timetable:

Action	Date	FR Cite
NPRM	10/01/88	

Small Entity: Not Applicable

Additional Information: LR-261-84.

Drafting attorney: Patricia W. Pellervo (202) 566-3458.

Reviewing attorney: Robert J. Mason (202) 566-3463.

Agency Contact: Patricia W. Pellervo, Attorney, Department of the Treasury, Internal Revenue Service, 1111 Constitution Ave., N.W., Washington, D.C. 20224, 202 566-3458

RIN: 1545-AH39

2196. TEMPORARY REGULATION—CAPITALIZATION OF CERTAIN INTEREST EXPENSES

Significance: Regulatory Program

Legal Authority: 26 USC 263A(f) Internal Revenue Code of 1986

CFR Citation: 26 CFR 1

Legal Deadline: None.

Abstract: The regulations will provide guidance concerning the capitalization of certain interest expenses and the allocation of interest to property subject to the capitalization rules.

Timetable:

Action	Date	FR Cite
NPRM	04/00/88	
NPRM Comment Period End	06/00/88	

Small Entity: Not Applicable

Additional Information: LR-120-86.

Drafting attorney: Katherine Lee Wambsgans (202) 566-3288.

Reviewing attorney: John Fischer (202) 566-3394.

Treasury attorney: Patricia McClanahan (202) 566-2926.

Agency Contact: Katherine Lee Wambsgans, Attorney, Department of the Treasury, Internal Revenue Service, 1111 Constitution Avenue, N.W., Washington, D.C. 20224, 202 566-3288

RIN: 1545-AK03

2197. INCOME TAX—TO ADD PROVISIONS RELATING TO FOREIGN CONVENTIONS (AS AMENDED BY SECTION 4 OF PUBLIC LAW 96-608)

Legal Authority: 26 USC 7805 Internal Revenue Code of 1986; 26 USC 274(h) Internal Revenue Code of 1986; PL 96-608, Sec 4; PL 97-424, Sec 543; PL 98-67, Sec 222

CFR Citation: 26 CFR 1

Legal Deadline: None.

Abstract: The regulations would provide rules to assist taxpayers in determining whether it is as reasonable to hold a convention, seminar, or similar meeting outside North America as within it, and thus whether expenses relating to attendance at the convention are deductible.

Timetable:

Action	Date	FR Cite
NPRM	00/00/00	

Small Entity: Not Applicable

Additional Information: LR-114-81.

Drafting attorney: Christopher Wilson (202) 566-4336.

Reviewing attorney: John M. Fischer (202) 566-3394.

Draft of notice to Treasury for review 11/08/82.

Agency Contact: Christopher Wilson, Attorney, Department of the Treasury, Internal Revenue Service, 1111 Constitution Ave., N.W., Washington, D.C. 20224, 202 566-4336

RIN: 1545-AB04

2198. NOTICE OF PROPOSED RULEMAKING RELATING TO RESTRICTIONS ON GOLDEN PARACHUTE PAYMENTS

Legal Authority: 26 USC 7805 Internal Revenue Code of 1986; 26 USC 280G Internal Revenue Code of 1986

CFR Citation: 26 CFR 280G

Legal Deadline: None.

Abstract: These regulations will provide rules relating to restrictions on golden parachute payments. The regulations will provide guidance to taxpayers, who must comply with section 280G, by delineating the circumstances under which payments may be considered excess parachute payments.

Timetable:

Action	Date	FR Cite
NPRM	06/30/88	

Small Entity: Not Applicable

Additional Information: LR-217-84.

Drafting attorney: Stuart Wessler (202) 566-3297.

Reviewing attorney: Sharon Galm (202) 566-3930.

Treasury attorney: Don Rocap (202) 566-6278.

Agency Contact: Stuart Wessler, Attorney, Department of the Treasury, Internal Revenue Service, 1111 Constitution Ave., N.W., Washington, D.C. 20224, 202 566-3297

RIN: 1545-AH49

2199. WAIVER OF FAMILY ATTRIBUTION BY ENTITIES

Legal Authority: 26 USC 7805 Internal Revenue Code of 1986; 26 USC 302(c)(2) Internal Revenue Code of 1986

CFR Citation: 26 CFR 1

Legal Deadline: None.

Abstract: Proposal would interpret the definitions and special rule for waiver of family attribution by entities contained in section 302 (c) (2) of the Internal Revenue Code of 1954, which relates to the tax treatment of certain redemptions of corporate stock.

Timetable:

Action	Date	FR Cite
Next Action Undetermined		

Small Entity: Not Applicable

Additional Information: LR-189-82.

Drafting attorney: Robert M. Casey (202) 566-3458.

Reviewing attorney: Charles M. Whedbee (202) 566-3487.

Treasury attorney: Patricia McClanahan (202) 566-2926.

Agency Contact: Robert M. Casey, Attorney, Department of the Treasury, Internal Revenue Service, 1111 Constitution Ave., N.W., Washington, D.C. 20224, 202 566-3458

RIN: 1545-AF13

2200. CROSS-REFERENCE—RECOGNITION OF GAIN OR LOSS ON LIQUIDATING SALES AND DISTRIBUTIONS OF PROPERTY (TRA 1986; SECTIONS 631 TO 633)

Legal Authority: 26 USC 7805 Internal Revenue Code of 1986; 26 USC 336 Internal Revenue Code of 1986; 26 USC 337 Internal Revenue Code of 1986

CFR Citation: 26 CFR 1

Legal Deadline: None.

Abstract: Proposal would provide rules for the recognition of gain or loss on a corporations liquidating sales or distributions

Timetable:

Action	Date	FR Cite
NPRM	09/01/88	

Small Entity: Not Applicable

Additional Information:

LR-79-87.

Drafting attorney: Mark S. Jennings (202) 566-3458.

Reviewing attorney: Robert J. Mason (202) 566-3463.

Agency Contact: Mark S. Jennings, Attorney, Department of the Treasury, Internal Revenue Service, 1111 Constitution Avenue, N.W., Washington, D.C. 20224, 202 566-3458

RIN: 1545-AK90

2201. INCOME TAX -- APPLICATION OF INSTALLMENT METHOD OF REPORTING AND MANDATORY APPLICATION OF MADSP FORMULA FOR QUALIFIED STOCK PURCHASES UNDER SECTION 338 (H) (10)

Legal Authority: 26 USC 7805 Internal Revenue Code of 1986; 26 USC 338 Internal Revenue Code of 1986

CFR Citation: 26 CFR 1

Legal Deadline: None.

Abstract: The regulations will provide guidance for utilization of the installment method of reporting and will require the use of the MADSP formula in a qualified stock purchase to which section 338 (h) (10) applies.

Timetable:

Action	Date	FR Cite
NPRM	00/00/00	

Small Entity: Not Applicable

Additional Information: LR-75-87.

Drafting attorney: Judith C. Winkler (202) 566-3458.

Reviewing attorney: Robert J. Mason (202) 566-3463.

Treasury attorney: Thomas Wessel (202) 566-4979.

Agency Contact: Judith C. Winkler, Attorney, Department of the Treasury, Internal Revenue Service, 1111 Constitution Avenue, N.W., Washington, D.C. 20224, 202 566-3458

RIN: 1545-AK25

2202. TRANSFER OF INTANGIBLES SUBJECT TO SECTION 367 OR 482 OF THE CODE

Legal Authority: PL 99-514, Sec 1231

CFR Citation: 26 CFR 1.482-3(d)

Legal Deadline: None.

Abstract: Prior to the Reform Act of 1986, U.S. taxpayers were able to shift income out of the U.S. by transferring intangibles to Section 936 possessions corporations, contributing intangibles to related foreign corporations in Section 367 transactions or selling or licensing intangibles to related foreign parties at less than arm's-length prices and transactions subject to section 482. Valuing such transfers (at the time of transfer) has proven to be difficult and non-productive. The Reform Act of 1986 provides that payments to be received by the transferor of intangibles must be commensurate with the income from the intangible. Major issue - What portion of the income from the intangible will constitute "commensurate"? Provisions will raise large amounts of revenue.

Timetable:

Action	Date	FR Cite
NPRM	00/00/00	

Small Entity: Undetermined

Additional Information: INTL-937-86

Drafting Attorney: Bobby D. Burns (202) 287-4851

Reviewing Attorney: George Sellinger (202) 287-4851

Treasury Attorney: Mark Beams (202) 566-0247

Agency Contact: Bobby D. Burns, Attorney-Advisor, Department of the Treasury, Internal Revenue Service, 950 L'Enfant Plaza South, S.W., Room 3319, Washington, D.C. 20024, 202 287-4851

RIN: 1545-AJ91

2203. FOREIGN LIQUIDATIONS AND REORGANIZATIONS (NPRM)

Legal Authority: 26 USC 7805 Internal Revenue Code of 1986; 26 USC 367(b)(2) Internal Revenue Code of 1986

CFR Citation: 26 CFR 1; 26 CFR 7

Legal Deadline: None.

Abstract: Proposal would provide guidance concerning requirements relating to certain exchanges involving a foreign corporation.

Timetable:

Action	Date	FR Cite
NPRM	12/01/88	

Small Entity: Not Applicable

Additional Information: INTL-988-86

Drafting Attorney: Richard Chewning (202) 566-3490

Reviewing Attorney: Bernard Bress (202) 566-6440

Treasury Attorney: David Crowe (202) 566-5791

Agency Contact: Richard Chewning, Attorney-Advisor, Department of the Treasury, Internal Revenue Service, 1111 Constitution Ave., N.W., Washington, D.C. 20224, 202 566-3490

RIN: 1545-AJ78

2204. ● REGULATIONS UNDER SECTION 367 (E)

Legal Authority: 26 USC 367 (e) Internal Revenue Code of 1986

CFR Citation: 26 CFR 1

Legal Deadline: None.

Abstract: Whether gain should be recognized under section 367 (e) (1) and (2) on the distribution of stock, securities or other property.

Timetable:

Action	Date	FR Cite
Next Action Undetermined		

Small Entity: Undetermined

Additional Information: INTL-752-87

Drafting attorney: Steven Lipschutz and Charles P. Besecky (202) 566-3319.

Reviewing attorney: Charles C. Saverude (202) 566-5791.

Treasury attorney: Mary Bennett and David Crowe (202) 566-5791.

Income Taxes

Agency Contact: Steven Lipschutz or Charles P. Besecky, Attorneys, Department of the Treasury, Internal Revenue Service, 1111 Constitution Avenue, N.W., Washington, D.C. 20224, 202 566-3319

RIN: 1545-AL34

2205. ● REGULATIONS UNDER SECTION 367 (E)

Legal Authority: 26 USC 367 (e) Internal Revenue Code of 1986

CFR Citation: 26 CFR 1

Legal Deadline: None.

Abstract: Proposal deals with whether gain should be recognized under section 367 (e) (1) and (2) on the distributor of stock, securities or other property.

Timetable:

Action	Date	FR Cite
Next Action Undetermined		

Small Entity: Undetermined

Additional Information: INTL-704-87

Drafting attorneys: Steven Lipschutz and Charles P. Besecky (202) 566-3319.

Reviewing attorney: Charles C. Saverude (202) 566-6645.

Treasury attorneys: Mary Bennett and David Crowe (202) 566-5791.

Income Taxes

Agency Contact: Steven Lipschutz or Charles P. Besecky, Attorneys, Department of the Treasury, Internal Revenue Service, 1111 Constitution Avenue, N.W., Washington, D.C. 20224, 202 566-3319

RIN: 1545-AL35

2206. INCOME TAX--CROSS-REFERENCE-REORGANIZATIONS INVOLVING FINANCIALLY TROUBLED THRIFT INSTITUTIONS

Legal Authority: 26 USC 7805 Internal Revenue Code of 1986; 26 USC 368 Internal Revenue Code of 1986; 26 USC 382 Internal Revenue Code of 1986; 26 USC 597 Internal Revenue Code of 1986; 26 USC 381 Internal Revenue Code of 1986

CFR Citation: 26 CFR 1

Legal Deadline: None.

Abstract: Provision would provide regulations dealing with reorganizations of financially troubled thrift institutions and with the tax consequences of financial assistance payments made to such an institution by a supervisory governmental agency, thereby giving the public needed guidance on how the Internal Revenue intends to interpret these issues.

Timetable:

Action	Date	FR Cite
NPRM	12/31/89	

Small Entity: Not Applicable

Additional Information: LR-63-81.

Drafting attorney: Mark S. Jennings (202) 566-3458.

Reviewing attorney: Robert J. Mason (202) 566-3463.

Agency Contact: Mark S. Jennings, Attorney, Department of the Treasury, Internal Revenue Service, 1111 Constitution Ave., N.W., Washington, D.C. 20224, 202 566-3458

RIN: 1545-AB29

2207. CORPORATE REORGANIZATION AMENDMENTS - BANKRUPTCY TAX ACT OF 1980

Legal Authority: 26 USC 354 Internal Revenue Code of 1986; 26 USC 355 Internal Revenue Code of 1986; 26 USC 357 Internal Revenue Code of 1986; 26 USC 358 Internal Revenue Code of 1986; 26 USC 361 Internal Revenue Code of 1986; 26 USC 362 Internal Revenue Code of 1986; 26 USC 368 Internal Revenue Code of 1986; 26 USC 381 Internal Revenue Code of 1986; 26 USC 7805 Internal Revenue Code of 1986

CFR Citation: 26 CFR 1

Legal Deadline: None.

Abstract: The regulations would provide guidance with respect to amendments to the Internal Revenue Code by the Bankruptcy Tax Act of 1980. Dealing with bankruptcy and other insolvency reorganizations.

Timetable:

Action	Date	FR Cite
Next Action Undetermined		

Small Entity: Not Applicable

Additional Information: LR-74-87.

Drafting attorney: Robert M. Casey (202) 566-3458.

Reviewing attorney: Robert J. Mason (202) 566-3463.

Agency Contact: Robert M. Casey, Attorney, Department of the Treasury, Internal Revenue Service, 1111 Constitution Avenue, N.W., Washington, D.C. 20224, 202 566-3458

RIN: 1545-AK33

2208. INCOME TAX--LIMITATION ON CORPORATE NET OPERATING LOSS DEDUCTION

Legal Authority: 26 USC 7805 Internal Revenue Code of 1986; 26 USC 382 Internal Revenue Code of 1986

CFR Citation: 26 CFR 1

Legal Deadline: None.

Abstract: The regulation will explain and illustrate the limitations provided under section 382 of the Internal Revenue Code, of 1986 on a corporation's use of net operating loss carryovers.

Timetable:

Action	Date	FR Cite
NPRM	00/00/00	

Small Entity: Not Applicable

Additional Information: LR-103-86.

Drafting attorney: Keith Stanley (202) 566-3456.

Reviewing attorney: Charles M. Whedbee (202)566-3458.

Treasury attorney: Thomas Wessel (202)566-4979.

Agency Contact: Keith Stanley, Attorneys, Department of the Treasury, Internal Revenue Service, 1111 Constitution Avenue, N.W., Washington, D.C. 20224, 202 566-3458

RIN: 1545-AI99

2209. COMPUTATION OF SECTION 382 LIMITATION

Legal Authority: 26 USC 382 Internal Revenue Code of 1986; 26 USC 7805 Internal Revenue Code of 1986

CFR Citation: 26 CFR 1

Legal Deadline: None.

Abstract: The regulations would explain the manner and method of computing the section 382 limitation under circumstances when there are successive ownership changes, capital contributions, mergers and liquidations, and in instances when one corporation controls another corporation.

Timetable:

Action	Date	FR Cite
NPRM	00/00/00	

Small Entity: Not Applicable

Additional Information: LR-67-87

Drafting attorney: Keith E. Stanley (202) 566-3458.

Reviewing attorney: Robert J. Mason (202) 566-3463.

Treasury attorney: Thomas Wessel (202) 566-2928.

Agency Contact: Keith E. Stanley, Attorney, Department of the Treasury, Internal Revenue Service, 1111 Constitution Avenue, N.W., Washington, D.C. 20224, 202 566-3458

RIN: 1545-AK27

2210. DEFINED BENEFIT PLAN TERMINATIONS AND THE REVERSION OF ASSETS

Legal Authority: 26 USC 7805 Internal Revenue Code of 1986; 26 USC 401 Internal Revenue Code of 1986

CFR Citation: 26 CFR 1

Legal Deadline: None.

Abstract: The regulations describe when, in fact, a defined benefit pension plan has been terminated so as to permit reversion to the employer of excess assets.

Timetable:

Action	Date	FR Cite
NPRM	00/00/00	

Small Entity: Not Applicable

Additional Information: EE-106-83.

Drafting attorney: Suzanne K. Tank (202) 566-3422.

Reviewing attorney: James L. Brokaw (202) 566-4173.

Treasury attorney: Harry Conaway (202) 566-8277.

Agency Contact: Suzanne K. Tank, Attorney, Department of the Treasury, Internal Revenue Service, 1111 Constitution Ave., N.W., Washington, D.C. 20224, 202 566-3422

RIN: 1545-AF81

2211. CASH OR DEFERRED ARRANGEMENTS (TAX REFORM ACT OF 1986)

Legal Authority: 26 USC 7805 Internal Revenue Code of 1986; 26 USC 401(k) Internal Revenue Code of 1986

CFR Citation: 26 CFR 1

Legal Deadline: Statutory, January 31, 1988.

Abstract: These regulations will provide rules relating to cash or deferred arrangements brought about because of the amendment of section 401(k) by the Tax Reform Act of 1986.

Timetable:

Action	Date	FR Cite
NPRM	04/01/88	

Small Entity: Not Applicable

Additional Information: EE-158-86

Drafting Attorney: William D. Gibbs (202) 566-3430.

Reviewing Attorney: Mary E. Oppenheimer (202) 566-3544.

Treasury Attorney: Harry J. Conaway (202) 566-8277.

Agency Contact: William D. Gibbs, Attorney, Department of the Treasury, Internal Revenue Service, 1111 Constitution Ave., N.W., Washington, D.C. 20224, 202 566-3430

RIN: 1545-AI79

2212. INCOME TAX -- PART 1-- APPLICATION OF NONDISCRIMINATION RULES TO INTEGRATED PLANS

Legal Authority: 26 USC 7805 Internal Revenue Code of 1986; 26 USC 401(l) Internal Revenue Code of 1986; 26 USC 401(a)(5) Internal Revenue Code of 1986

CFR Citation: 26 CFR 1

Legal Deadline: Statutory, February 1, 1988. Final regulations are required to be issued by February 1, 1988.

Abstract: The regulations would provide rules with regard to the application of the nondiscrimination rules to integrated plans.

Timetable:

Action	Date	FR Cite
NPRM	04/01/88	

Small Entity: Undetermined

Additional Information: EE-159-86

Drafting Attorney: Michael Garvey (202) 566-3430.

Reviewing Attorney: Richard J. Wickersham (202) 566-3250.

Treasury Attorney: Harry Conaway (202) 566-8277.

Agency Contact: Michael Garvey, Attorney, Department of the Treasury, Internal Revenue Service, 1111 Constitution Ave., N.W., Washington, D.C. 20224, 202 566-3430

RIN: 1545-AI86

2213. NONDISCRIMINATION REQUIREMENTS FOR EMPLOYER MATCHING CONTRIBUTIONS AND EMPLOYEE CONTRIBUTIONS

Legal Authority: 26 USC 7805 Internal Revenue Code of 1986; 26 USC 401(m) Internal Revenue Code of 1986

CFR Citation: 26 CFR 1; 26 CFR 54

Legal Deadline: Statutory, January 31, 1988.

Abstract: These regulations will provide rules relating to nondiscrimination requirements for employer matching contributions and employee contributions. The regulations will also provide rules on computing the excise tax on excess contributions made under a cash or deferred arrangement and on excess aggregate contributions.

Timetable:

Action	Date	FR Cite
NPRM	04/01/88	

Small Entity: Not Applicable

Additional Information: EE-160-86

Drafting Attorney: William D. Gibbs (202) 566-3430.

Reviewing Attorney: Mary E. Oppenheimer (202) 566-3544.

Treasury Attorney: Harry J. Conaway (202) 566-8277.

Agency Contact: William D. Gibbs, Attorney, Department of the Treasury, Internal Revenue Service, 1111 Constitution Ave., N.W., Washington, D.C. 20224, 202 566-3430

RIN: 1545-AI80

2214. INCOME TAX - - PART 1-- ADDITIONAL PARTICIPATION REQUIREMENTS

Legal Authority: 26 USC 7805 Internal Revenue Code of 1986; 26 USC 401(a)(26) Internal Revenue Code of 1986

CFR Citation: 26 CFR 1

Legal Deadline: Statutory, February 1, 1988. 02/01/88 Deadline for final regulations

Abstract: The regulations set forth rules relating to minimum participation requirements.

Timetable:

Action	Date	FR Cite
NPRM	00/00/00	

Small Entity: Undetermined

Additional Information: EE-44-87

Drafting attorney: Mary E. Brennan (202) 566-3430.

Reviewing attorney: Richard J. Wickersham (202) 566-3205.

Agency Contact: Mary E. Brennan, Attorney, Department of the Treasury, Internal Revenue Service, 1111 Constitution Avenue N.W., Washington, D.C. 20224, 202 566-3430

RIN: 1545-AK46

2215. STUDY OF NEED FOR SPECIAL ANTIDISCRIMINATION RULES FOR PENSION, ETC. PLANS OF STATE AND LOCAL GOVERNMENTS

Legal Authority: 26 USC 7805 Internal Revenue Code of 1986; 26 USC 401(a)(4) Internal Revenue Code of 1986

CFR Citation: 26 CFR 1

Legal Deadline: None.

Abstract: Study of need for rules relating to antidiscrimination for state and local government plans.

Timetable:

Action	Date	FR Cite
NPRM	12/31/88	

Small Entity: Not Applicable

Additional Information: EE-51-87

Drafting Attorney: Mary E. Brennan (202) 566-3430.

Reviewing Attorney: Richard J. Wickersham (202) 566-3250.

Agency Contact: Mary Brennan, Attorney, Department of the Treasury, Internal Revenue Service, 1111 Constitution Avenue N.W., Washington, D.C. 20224, 202 566-3430

RIN: 1545-AK44

2216. NONDISCRIMINATION AND OTHER RULES APPLICABLE TO SECTION 402(B) ANNUITIES

Legal Authority: 26 USC 403(b)(10) Internal Revenue Code of 1986; 26 USC 7805 Internal Revenue Code of 1986

CFR Citation: 26 CFR 1

Legal Deadline: Statutory, February 1, 1988.

Abstract: The regulations will provide guidance regarding the nondiscrimination and other rules applicable to tax- sheltered section 403(b) annuities.

Timetable:

Action	Date	FR Cite
NPRM	06/30/88	

Small Entity: Not Applicable

Additional Information: EE-163-86

Drafting Attorney: Sylvia F. Hunt (202) 566-6212.

Reviewing Attorney: Michael A. Thrasher (202) 566-3961.

Treasury Attorneys: Scherbel/Conaway (202) 566-4902.

Agency Contact: Sylvia F. Hunt, Attorney, Department of the Treasury, Internal Revenue Service, 1111 Constitution Ave., N.W., Washington, D.C. 20224, 202 566-6212

RIN: 1545-AI90

2217. INCOME TAX--EMPLOYEE STOCK OWNERSHIP PLAN LOAN PAYMENTS

Legal Authority: 26 USC 7805 Internal Revenue Code of 1986; 26 USC 404(a)(9) Internal Revenue Code of 1986; 26 USC 415(c)(6) Internal Revenue Code of 1986

CFR Citation: 26 CFR 1

Legal Deadline: None.

Abstract: The regulations would provide guidance relating to the deduction limitations when employer contributions to an employee stock ownership plan are used to repay the principal and interest of an exempt loan that was made to the employee stock ownership plan.

Timetable:

Action	Date	FR Cite
NPRM	06/30/88	

Small Entity: Not Applicable

Additional Information: EE-152-81.

Drafting attorney: Mary Oppenheimer (202) 566-3544.

Reviewing attorney: Michael A. Thrasher (202) 566-3961.

Agency Contact: Mary Oppenheimer, Technical Assistant, Department of the Treasury, Internal Revenue Service, 1111 Constitution Ave., N.W., Washington, D.C. 20224, 202 566-3544

RIN: 1545-AD77

2218. STUDY OF NEED FOR REGULATIONS RELATING TO SIMPLIFIED EMPLOYEE PENSIONS AS AFFECTED BY THE TAX REFORM ACT OF 1986

Legal Authority: 26 USC 7805 Internal Revenue Code of 1986; 26 USC 408 Internal Revenue Code of 1986; 26 USC 404 Internal Revenue Code of 1986

CFR Citation: 26 CFR 1; 26 CFR 25; 26 CFR 31; 26 CFR 54; 26 CFR 301

Legal Deadline: None.

Abstract: Study of need for rules relating to simplified employee pensions as affected by Tax Reform Act of 1986.

Timetable:

Action	Date	FR Cite
NPRM	12/31/88	

Small Entity: Not Applicable

Additional Information: EE-59-87

Drafting Attorney: Mary E. Brennan (202) 566-3430.

Reviewing Attorney: Richard J. Wickersham (202) 566-3250.

Agency Contact: Mary E. Brennan, Attoreny, Department of the Treasury, Internal Revenue Service, 1111 Constitution Avenue N.W., Washington, D.C. 20224, 202 566-3430

RIN: 1545-AK45

2219. INCOME TAX--REQUIREMENTS FOR TAX CREDIT EMPLOYEE STOCK OWNERSHIP PLANS, EMPLOYEE PLAN CREDIT, AND DEFINED CONTRIBUTION PLAN VOTING RIGHTS

Legal Authority: 26 USC 7805 Internal Revenue Code of 1986; 26 USC 409 Internal Revenue Code of 1986; 26 USC 48 Internal Revenue Code of 1986; 26 USC 401 Internal Revenue Code of 1986; 26 USC 6699 Internal Revenue Code of 1986

CFR Citation: 26 CFR 1

Legal Deadline: None.

Abstract: The regulations provide rules for electing the employee plan credit under section 48 of the Internal Revenue Code, establishing a tax credit employee stock ownership plan under section 409 of the Internal Revenue Code and providing voting rights to participants of certain defined contribution plans under section 401(a)(22) of the Internal Revenue Code. Further, the regulations provide guidance for determining the applicability of and calculating the assessable penalties relating to tax credit employee stock ownership plans under section 6699 of the Internal Revenue Code. The regulations reorganize and modify the current regulations which are based on section 301(d), (e), and (f) of the Tax Reduction Act of 1975, and provide a single set of rules that would apply to tax credit employee stock ownership plans established under the provisions of the Tax Reduction Act of 1975 and the 1978 Revenue Act.

Timetable:

Action	Date	FR Cite
NPRM	08/31/88	

Small Entity: Not Applicable

Additional Information: EE-49-80.

Drafting attorney: John T. Ricotta (202) 566-3544.

Reviewing attorney: Michael A. Thrasher (202) 566-3961.

Office of Tax Legislative Counsel (Treasury) reviewing attorney: Harry Conaway (202) 566-8277.

Agency Contact: John T. Ricotta, Attorney, Department of the Treasury, Internal Revenue Service, 1111 Constitution Ave., N.W., Washington, D.C. 20224, 202 566-3544

RIN: 1545-AD82

2220. INC. TAX – PART 1; ESTATE TAX – PART 20, EMPLOYEE STOCK OWNERSHIP PLAN RULES AFFECTED BY TRA 1986

Legal Authority: 26 USC 409 Internal Revenue Code of 1986; 26 USC 401(a)(28) Internal Revenue Code of 1986; 26 USC 401(a)(23) Internal Revenue Code of 1986; 26 USC 133 Internal Revenue Code of 1986; 26 USC 404(k) Internal Revenue Code of 1986; 26 USC 2057 Internal Revenue Code of 1986; 26 USC 1042 Internal Revenue Code of 1986; 26 USC 2210 Internal Revenue Code of 1986; 26 USC 7805 Internal Revenue Code of 1986

CFR Citation: 26 CFR 1; 26 CFR 20

Legal Deadline: None.

Abstract: The proposed regulations would set forth requirements for the tax qualification of ESOPs and for various ESOP tax incentives.

Timetable:

Action	Date	FR Cite
NPRM	07/31/88	

Small Entity: Undetermined

Additional Information: EE-164-86

Drafting Attorney: John Ricotta (202) 566-3544.

Reviewing Attorney: Michael Thrasher (202) 566-3961.

Treasury Attorney: Harry Conaway (202) 566-8277.

Agency Contact: John Ricotta, Attorney, Department of the Treasury, Internal Revenue Service, 1111 Constitution Ave., N.W., Washington, D.C. 20224, 202 566-3544

RIN: 1545-AI87

2221. COVERAGE AND SEPARATE LINES OF BUSINESS RULES

Legal Authority: 26 USC 7805 Internal Revenue Code of 1986; 26 USC 410(b) Internal Revenue Code of 1986

CFR Citation: 26 CFR 1

Legal Deadline: Statutory, February 1, 1988.

Abstract: Rules relating to minimum coverage requirements.

Timetable:

Action	Date	FR Cite
NPRM	04/01/88	

Small Entity: Not Applicable

Additional Information: EE-128-86

Drafting Attorney: Nancy J. Marks (202) 566-3903.

Reviewing Attorney: Richard J. Wickersham (202) 566-3250.

Office of Tax Legislative Counsel (Treasury) reviewing attorney Harry J. Conaway (202) 566-8277.

Agency Contact: Nancy J. Marks, Attorney, Department of the Treasury, Internal Revenue Service, 1111 Constitution Avenue N.W., Washington, D.C. 20224, 202 566-3903

RIN: 1545-AK41

2222. RULES CLARIFYING THE INCOME TAX REGULATIONS, PART 1, WITH RESPECT TO SERVICE COMPUTATION UNDER PENSION, ETC. PLANS

Legal Authority: 26 USC 7805 Internal Revenue Code of 1986; 26 USC 410 Internal Revenue Code of 1986; 26 USC 411 Internal Revenue Code of 1986

CFR Citation: 26 CFR 1

Legal Deadline: None.

Abstract: This project was undertaken in order to clarify permissible methods of crediting service by qualified plans for purposes of vesting and participation.

Timetable:

Action	Date	FR Cite
NPRM	06/30/88	

Small Entity: Not Applicable

Additional Information: EE-65-82.

Drafting attorney: Nancy J. Marks (202) 566-3903.

Reviewing attorney: Richard J. Wickersham (202) 566-3250.

Office of Tax Legislative Counsel (Treasury) reviewing attorneys: Harry Conaway (202) 566-8277.

Agency Contact: Nancy J. Marks, Attorney, Department of the Treasury, Internal Revenue Service, 1111 Constitution Ave., N.W., Washington, D.C. 20224, 202 566-3903

RIN: 1545-AE39

2223. INCOME TAX-PART I - REDUCTION OF ACCRUED BENEFITS TO QUALIFY FOR A STANDARD TERMINATION OF A SINGLE EMPLOYER DEFINED BENEFIT PENSION PLAN

Legal Authority: 26 USC 7805 Internal Revenue Code of 1986

CFR Citation: 26 CFR 1

Legal Deadline: None.

Abstract: The regulations would provide guidelines for reducing accrued benefits for certain key employees in order to qualify for a standard termination of a single-employer defined benefit pension plan.

Timetable:

Action	Date	FR Cite
NPRM	06/30/88	

Small Entity: Not Applicable

Additional Information: EE-48-86.

Drafting attorney: Mary E. Brennan (202) 566-3903.

Reviewing attorney: Mary Oppenheimer (202) 566-3544.

Cross-referenced with temporary regulations EE-47-86.

Agency Contact: Mary E. Brennan, Attorney, Department of the Treasury, Internal Revenue Service, 1111 Constitution Avenue N.W., Washington, D.C. 20224, 202 566-3903

RIN: 1545-AI46

2224. INC. TAX – PART 1 – BENEFIT ACCRUAL BEYOND NORMAL RETIREMENT AGE

Legal Authority: 26 USC 7805 Internal Revenue Code of 1986; 26 USC 411(b)(1)(H) Internal Revenue Code of 1986; 26 USC 411(b)(2) Internal Revenue Code of 1986; 26 USC 410(a)(2) Internal Revenue Code of 1986; 26 USC 411(a)(8)(B) Internal Revenue Code of 1986

CFR Citation: 26 CFR 1

Legal Deadline: Statutory, February 1, 1988. Final regulations are required to be issued by February 1, 1988.

Abstract: The regulations would provide rules with regard to benefit accruals after attainment of normal retirement age and maximum age conditions on participating in certain type of plans.

Timetable:

Action	Date	FR Cite
NPRM	04/01/88	

Small Entity: Undetermined

Additional Information: EE-184-86

Drafting Attorney: Michael Garvey (202) 566-3430

Reviewing Attorney: Richard J. Wickersham (202) 566-3250

Treasury Attorney: Harry Conaway (202) 566-8277

Agency Contact: Michael Garvey, Attorney, Department of the Treasury, Internal Revenue Service, 1111 Constitution Ave., N.W., Washington, D.C. 20224, 202 566-3430

RIN: 1545-AI85

2225. INCOME TAX-PART 1 - VARIANCE FROM MINIMUM FUNDING STANDARD

Legal Authority: 26 USC 7805 Internal Revenue Code of 1986

CFR Citation: 26 CFR 1

Legal Deadline: None.

Abstract: The proposed regulations would supersede Rev. Proc. 83-41 and prescribe a standard waiver application form.

Timetable:

Action	Date	FR Cite
NPRM	06/30/88	

Small Entity: Undetermined

Additional Information: EE-42-86.

Drafting attorney: Mary E. Brennan (202) 566-3903.

Reviewing attorney: Jonathan Marget (202) 566-3651.

Agency Contact: Mary Brennan, Attorney, Department of the Treasury, Internal Revenue Service, 1111 Constitution Avenue, NW, Washington, DC 20224, 202 566-3903

RIN: 1545-AI55

2226. INCOME TAX–DEFINITIONS AND SPECIAL RULES; SERVICE FOR PREDECESSOR

Legal Authority: 26 USC 7805 Internal Revenue Code of 1986; 26 USC 414(a) Internal Revenue Code of 1986

CFR Citation: 26 CFR 1

Legal Deadline: None.

Abstract: Regulation will provide guidance to employers maintaining plans on when service with a predecessor employer must or may be treated as service under their plan.

Timetable:

Action	Date	FR Cite
NPRM	00/00/00	

Small Entity: Not Applicable

Additional Information: EE-22-78.

Drafting attorney: Marjorie Hoffman (202) 566-3430.

Reviewing attorney: Richard J. Wickersham (202) 566-3250.

Office of Tax Legislative Counsel (Treasury) reviewing attorney: Harry Conaway (202) 566-8277.

Agency Contact: Marjorie Hoffman, Attorney, Department of the Treasury, Internal Revenue Service, 1111 Constitution Ave., N.W., Washington, D.C. 20224, 202 566-3430

RIN: 1545-AD87

2227. DEFINITION OF "HIGHLY COMPENSATED EMPLOYEE" AND "COMPENSATION"

Legal Authority: 26 USC 7805 Internal Revenue Code of 1986; PL 99-514, Sec 1114 Tax Reform Act of 1986; PL 99-514, Sec 1115 Tax Reform Act of 1986

CFR Citation: 26 CFR 1

Legal Deadline: None.

Abstract: These regulations provide rules relating to the definitions of "highly compensation contained in subsections 414(q) and (s) of The Tax Reform Act of 1986.

Timetable:

Action	Date	FR Cite
NPRM	04/01/88	

Small Entity: No

Additional Information: EE-129-86

Drafting Attorney: Nancy J. Marks (202) 566-3903.

Reviewing Attorney: Richard J. Wickersham (202) 566-3250.

Office of Legislative Counsel (Treasury reviewing attorneys: Susan Scherbel (202) 566-4902, Harry S. Conaway (202) 566-8277.

Cross Reference to EE-74-87

Agency Contact: Nancy J. Marks, Attorney, Department of the Treasury, Internal Revenue Service, 1111 Constitution Ave., N.W., Washington, D.C. 20224, 202 566-3903

RIN: 1545-AI91

2228. ● DEFINITION OF LINE OF BUSINESS

Legal Authority: 26 USC 7805 Internal Revenue Code of 1986; 26 USC 414 (r) Internal Revenue Code of 1986

CFR Citation: 26 CFR 1

Legal Deadline: Statutory, February 1, 1988.

Abstract: Internal Revenue Code section 414 (r) defines line of business for purposes of applying the coverage requirements under section 410 (b) and the nondiscrimination requirements for

certain employee benefit plans under section 89.

Timetable:

Action	Date	FR Cite
Hearing	10/13/87	

Next Action Undetermined

Small Entity: Undetermined

Additional Information: EE-144-87

Drafting attorney: Rhonda G. Migdail (202) 566-3422.

Reviewing attorney: Richard Wickersham (202)

Treasury attorney: Paul Strella (202)

Agency Contact: RhondaG. Migdail, Attorney, Department of the Treasury, Internal Revenue Service, 1111 Constitution Avenue, N.W., Washington, D.C. 20224, 202 566-3422

RIN: 1545-AL23

2229. DEFINITION OF "HIGHLY COMPENSATED EMPLOYEE" AND "COMPENSATION"

Legal Authority: 26 USC 7805 Internal Revenue Code of 1986; 26 USC 414(q) Internal Revenue Code of 1986; 26 USC 414(s) Internal Revenue Code of 1986

CFR Citation: 26 CFR 1

Legal Deadline: Statutory, February 1, 1988.

Abstract: Provisions relating to the scope and meaning of the terms "highly compensated employee" and "compensation".

Timetable:

Action	Date	FR Cite
NPRM	04/01/88	

Small Entity: Not Applicable

Additional Information: EE-74-87

Drafting Attorney: Nancy J. Marks (202) 566-3903.

Reviewing Attorney: Richard J. Wickersham (202) 566-3250.

Office of Tax Legislative Counsel (Treasury) reviewing attorney: Harry Conaway (202) 566-8277.

Cross Reference to EE-129-86

Agency Contact: Nancy J. Marks, Attorney, Department of the Treasury, Internal Revenue Service, 1111 Constitution Avenue N.W., Washington, D.C., 202 566-3903

RIN: 1545-AK40

2230. LIMITATIONS ON CONTRIBUTIONS AND BENEFITS UNDER QUALIFIED PLANS

Legal Authority: 26 USC 7805 Internal Revenue Code of 1986; 26 USC 0415 Internal Revenue Code of 1986; 26 USC 401(a)(17) Internal Revenue Code of 1986; 26 USC 404(1) Internal Revenue Code of 1986

CFR Citation: 26 CFR 1

Legal Deadline: None.

Abstract: The regulations will address changes to limitations on contributions and benefits under qualified plans, a limit on the annual compensation which may be taken into account, special treatment of certain medical benefit accounts, retirement savings for church employees, and special rules for disabled participants. A special rule applies to participants with less than ten years of participation.

Timetable:

Action	Date	FR Cite
NPRM	00/00/00	

Small Entity: Not Applicable

Additional Information: EE-25-87

Drafting Attorney: Monice Rosenbaum (202) 566-3422.

Reviewing Attorney: Richard J. Wickersham (202) 566-3250.

Treasury Attorney: Harry J. Conaway (202) 566-8277.

Agency Contact: Monice Rosenbaum, Attorney, Department of the Treasury, Internal Revenue Service, 1111 Constitution Avenue N.W., Washington, D.C. 20224, 202 566-3422

RIN: 1545-AK42

2231. TREATMENT OF FUNDED WELFARE BENEFIT PLANS

Legal Authority: 26 USC 419 Internal Revenue Code of 1986; 26 USC 419A Internal Revenue Code of 1986; 26 USC 1239(d) Internal Revenue Code of 1986; 26 USC 7805 Internal Revenue Code of 1986

CFR Citation: 26 CFR 1

Legal Deadline: None.

Abstract: The regulations will provide guidance concerning the treatment of contributions made by an employer to a welfare benefit plan.

Timetable:

Action	Date	FR Cite
NPRM	12/00/88	

Small Entity: Not Applicable

Additional Information: EE-68-84.

Drafting attorney: Mark Schwimmer (202) 566-6212.

Reviewing attorney: Michael A. Thrasher (202) 566-3961.

Treasury attorney: Harry Conaway (202) 566-8277.

Agency Contact: Mark Schwimmer, Attorney, Department of the Treasury, Internal Revenue Service, 1111 Constitution Ave., N.W., Washington, DC 20224, 202 566-6212

RIN: 1545-AG14

2232. INC. TAX--PART 1--AMENDMENT OF SECTION 1.442-1 TO PROVIDE SIMPLIFIED PROCEDURES FOR CHANGES OF ANNUAL ACCOUNTING PERIOD BY CERTAIN EXEMPT ORGANIZATIONS

Legal Authority: 26 USC 7805 Internal Revenue Code of 1986; 26 USC 442 Internal Revenue Code of 1986

CFR Citation: 26 CFR 1

Legal Deadline: None.

Abstract: Revenue Procedure 85-58 provides change of accounting period approval procedures for exempt organizations. It substantially simplifies the former procedures in Revenue Procedure 76-9. The regulations under section 1.442-1 will be amended to reflect Revenue Procedure 85-58.

Timetable:

Action	Date	FR Cite
NPRM	00/00/00	

Small Entity: No

Additional Information: EE-06-86.

Drafting attorney: Suzanne K. Tank (202) 566-3422.

Reviewing attorney: Paul G. Accettura (202) 566-3544.

Office of Tax Legislative Counsel (Treasury) reviewing attorney:Suzanne Ross McDowell (202) 566-8278.

Agency Contact: Suzanne K. Tank, Attorney, Department of the Treasury, Internal Revenue Service, 1111 Constitution Avenue, NW, Washington, DC 20224, 202 566-3422

RIN: 1545-AI68

2233. INCOME TAX – GAIN OR LOSS ON THE DISPOSITION OF AN INSTALLMENT OBLIGATION

Legal Authority: 26 USC 7805 Internal Revenue Code of 1986; 26 USC 453B Internal Revenue Code of 1986

CFR Citation: 26 CFR 1

Legal Deadline: None.

Abstract: Proposal would provide rules for reporting gain or loss upon the disposition of an installment obligation.

Timetable:

Action	Date	FR Cite
NPRM	06/00/88	

Small Entity: Not Applicable

Additional Information: LR-103-81.

Drafting attorney: Michael J. Grace (202) 566-3288.

Reviewing attorney: Cynthia L. Clark (202) 566-3288.

Office of Tax Legislative Counsel (Treasury) reviewing attorney: Ellen Aprill (202) 566-5453.

Agency Contact: Michael J. Grace, Attorney, Department of the Treasury, Internal Revenue Service, 1111 Constitution Ave., N.W., Washington, D.C. 20224, 202 566-3288

RIN: 1545-AB41

2234. INCOME TAX–INSTALLMENT SALES BETWEEN RELATED PARTIES

Legal Authority: 26 USC 7805 Internal Revenue Code of 1986; 26 USC 453 Internal Revenue Code of 1986

CFR Citation: 26 CFR 1

Legal Deadline: None.

Abstract: Proposal would provide rules for reporting installment sales between related parties.

Timetable:

Action	Date	FR Cite
NPRM	06/00/88	

Small Entity: Not Applicable

Additional Information: LR-2-81.

Drafting attorney: Arthur E. Davis III (202) 566-3238.

Office of Tax Legislative Counsel (Treasury) reviewing attorney: Suzanne McDowell (202) 566-5453.

Agency Contact: Arthur E. Davis III, Attorney, Department of the Treasury, Internal Revenue Service, 1111 Constitution Ave., N.W., Washington, D.C. 20224, 202 566-3238

RIN: 1545-AB45

2235. INCOME TAX–INSTALLMENT SALES REVISION ACT OF 1980, REGULATIONS RELATING TO WRAP-AROUND MORTGAGES

Legal Authority: 26 USC 7805 Internal Revenue Code of 1986; 26 USC 453 Internal Revenue Code of 1986

CFR Citation: 26 CFR 1

Legal Deadline: None.

Abstract: Proposal would provide regulations for reporting sales of property under a wrap-around mortgage arrangement.

Timetable:

Action	Date	FR Cite
NPRM	00/00/00	

Small Entity: Not Applicable

Additional Information: LR-147-82.

Drafting attorney: Paulette C. Galanko (202) 566-3288.

Reviewing attorney: John H. Parcell (202) 566-3288.

Office of Tax Legislative Counsel (Treasury) reviewing attorney: Ellen Aprill (202) 566-5953.

Agency Contact: Paulette C. Galanko, Attorney, Department of the Treasury, Internal Revenue Service, 1111 Constitution Ave., N.W., Washington, D.C. 20224, 202 566-3288

RIN: 1545-AB46

2236. INCOME TAX REGULATIONS–PART I. INSTALLMENT SALES BY NONTAXABLE ENTITIES

Legal Authority: 26 USC 7805 Internal Revenue Code of 1986; 26 USC 453 Internal Revenue Code of 1986

CFR Citation: 26 CFR 1

Legal Deadline: None.

Abstract: This project will provide rules relating to installment sales by nontaxable entities and the election provision by foreign personal holding companies.

Timetable:

Action	Date	FR Cite
NPRM	12/00/88	

Small Entity: No

Additional Information: LR-143-83.

Drafting attorney: Michael J. Grace (202) 566-3288.

Reviewing attorney: Cynthia L. Clark (202) 566-3288.

Agency Contact: Michael J. Grace, Attorney, Department of the Treasury, Internal Revenue Service, 1111 Constitution Ave., N.W., Washington, D.C. 20224, 202 566-3288

RIN: 1545-AF73

2237. INCOME TAX REGULATIONS–PART 1–SPECIAL RULES RELATING TO INSTALLMENT OBLIGATIONS THAT ARE READILY TRADABLE OR PAYABLE ON DEMAND

Legal Authority: 26 USC 7805 Internal Revenue Code of 1986; 26 USC 453 Internal Revenue Code of 1986

CFR Citation: 26 CFR 1

Legal Deadline: None.

Abstract: These regulations will provide rules relating to installment obligations that are readily tradable or payable on demand.

Timetable:

Action	Date	FR Cite
Next Action Undetermined		

Small Entity: Undetermined

Additional Information: LR-54-84.

Drafting attorney: Michael J. Grace (202) 566-3288.

Reviewing attorney: Ewan D. Purkiss (202) 566-3238.

Agency Contact: Michael J. Grace, Attorney, Department of the Treasury, Internal Revenue Service, 1111 Constitution Ave., N.W., Washington, D.C. 20224, 202 566-3288

RIN: 1545-AG37

2238. INCOME TAX – DEFERRED COMPENSATION PLANS OF STATE AND LOCAL GOVERNMENTS AND TAX-EXEMPT ORGANIZATIONS

Legal Authority: 26 USC 7805 Internal Revenue Code of 1986; 26 USC 457 Internal Revenue Code of 1986

CFR Citation: 26 CFR 1

Legal Deadline: None.

Abstract: Internal Revenue Code section 457 provides an exclusion from gross income, in the case of a participant in an eligible deferred compensation plan, for any amounts

deferred under the plan and any income attributable to the amounts attributable to the amounts so deferred.

Timetable:

Action	Date	FR Cite
NPRM	00/00/00	

Small Entity: Not Applicable

Additional Information: EE-166-86

Drafting Attorney: Rhonda G. Migdail (202) 566-6212.

Reviewing Attorney: James L. Brokaw (202) 566-4173.

Treasury Attorney: Harry Conaway (202) 566-8277.

Agency Contact: Rhonda G. Migdail, Attorney, Department of the Treasury, Internal Revenue Service, 1111 Constitution Ave., N.W., Washington, D.C. 20224, 202 566-6212

RIN: 1545-AI89

2239. ACCOUNTING FOR LONG-TERM CONTRACTS

Significance: Regulatory Program

Legal Authority: 26 USC 7805 Internal Revenue Code of 1986; 26 USC 460 Internal Revenue Code of 1986

CFR Citation: 26 CFR 1

Legal Deadline: None.

Abstract: The regulations will provide rules relating to accounting for costs incurred in the performance of long-term contracts.

Timetable:

Action	Date	FR Cite
NPRM	06/30/88	

Small Entity: Not Applicable

Additional Information: LR-130-86

Drafting Attorney: Paulette C. Galanko (202) 566-3288.

Reviewing Attorney: John M. Fischer (202) 566-3394.

Treasury Attorney: Robert Scarborough (202) 566-4979.

Agency Contact: Paulette C. Galanko, Attorney, Department of the Treasury, Internal Revenue Service, 1111 Constitution Avenue N.W., Washington, D.C. 20224, 202 566-3288

RIN: 1545-AJ28

2240. INCOME TAX REGULATIONS—THE ECONOMIC PERFORMANCE REQUIREMENT

Legal Authority: 26 USC 7805 Internal Revenue Code of 1986; 26 USC 461(h) Internal Revenue Code of 1986

CFR Citation: 26 CFR 1

Legal Deadline: None.

Abstract: These regulations will provide guidance relating to when economic performance occurs with respect to a liability and how the recurring item exception applies.

Timetable:

Action	Date	FR Cite
NPRM	00/00/00	

Small Entity: Not Applicable

Additional Information: LR-258-84.

Drafting attorney: Bill Blagg (202) 566-3238.

Reviewing attorney: Cynthia Clark (202) 566-3288.

Agency Contact: Bill Blagg, Attorney, Department of the Treasury, Internal Revenue Service, 1111 Constitution Ave., N.W., Washington, D.C. 20224, 202 566-3238

RIN: 1545-AH32

2241. EXTENSION OF THE AT-RISK RULES

Legal Authority: 26 USC 7805 Internal Revenue Code of 1986; 26 USC 465 Internal Revenue Code of 1986

CFR Citation: 26 CFR 1

Legal Deadline: None.

Abstract: The regulations would provide guidance to taxpayers with respect to the extension of the at-risk rules to all activities other than the holding of real property. The regulations would also provide guidance with respect to the exception to the at-risk rules for closely-held corporations actively engaged in equipment leasing, and the recapture provision.

Timetable:

Action	Date	FR Cite
NPRM	06/00/88	

Small Entity: Not Applicable

Additional Information: LR-192-78.

Drafting attorney: Michael J. Grace (202) 566-3288.

Reviewing attorney: John H. Parcell (202) 566-3336.

Treasury attorney: Lorry Spitzer (202) 535-6968.

Agency Contact: Michael J. Grace, Attorney, Department of the Treasury, Internal Revenue Service, 1111 Constitution Ave., N.W., Washington, D.C. 20224, 202 566-3288

RIN: 1545-AF86

2242. AGGREGATION OF CERTAIN ACTIVITIES FOR PURPOSES OF THE AT-RISK RULES

Legal Authority: 26 USC 7805 Internal Revenue Code of 1986; 26 USC 465 Internal Revenue Code of 1986

CFR Citation: 26 CFR 1

Legal Deadline: None.

Abstract: The Regulation will provide rules for aggregating certain activities for purposes of applying the at-risk rules under section 465. In general, the at-risk rules limit the amount of loss deductible in a taxable year with respect to an activity to the amount the taxpayer is at risk in the activity. The aggregation rules will apply to taxable years beginning after December 31, 1985.

Timetable:

Action	Date	FR Cite
NPRM	04/01/88	

Small Entity: Not Applicable

Additional Information: LR-108-85.

Drafting attorney: Arthur E. Davis (202) 566-3238.

Treasury attorney: Robert Scarborough (202) 535-6969.

Agency Contact: Arthur E. Davis III, Attorney, Department of the Treasury, Internal Revenue Service, 1111 Constitution Ave., N.W., Washington, D.C. 20224, 202 566-3238

RIN: 1545-AI02

2243. EXTENSION OF AT RISK LIMITATIONS TO REAL PROPERTY

Legal Authority: 26 USC 7805 Internal Revenue Code of 1986; 26 USC 465 Internal Revenue Code of 1986; 26 USC 752 Internal Revenue Code of 1986; 26 USC 46 Internal Revenue Code of 1986

CFR Citation: 26 CFR 1

Legal Deadline: None.

Abstract: The regulations will explain the application of the at risk limitations to the activity of holding real property and the exception for qualified nonrecourse financing.

Timetable:

Action	Date	FR Cite
NPRM	04/01/88	

Small Entity: Not Applicable

Additional Information: LR-124-86.

Drafting attorney: Michael J. Grace (202) 566-3288.

Reviewing attorney: John H. Parcell (202) 566-3336.

Agency Contact: Michael J. Grace, Attorney, Department of the Treasury, Internal Revenue Service, 1111 Constitution Avenue, N.W., Washington, D.C. 20224, 202 566-3288

RIN: 1545-AK08

2244. ESSENTIAL ISSUES IN CONNECTION WITH LIMITATIONS ON LOSSES AND CREDITS FROM PASSIVE ACTIVITIES

Legal Authority: 26 USC 7805 Internal Revenue Code of 1986

CFR Citation: 26 CFR 1

Legal Deadline: None.

Abstract: The regulations will provide guidance to taxpayers on the most essential issues in connection with the computation of a taxpayer's passive activity loss and passive activity credit.

Timetable:

Action	Date	FR Cite
NPRM	04/01/88	

Small Entity: Not Applicable

Additional Information: LR-126-86

Drafting attorney: Michael J.Grace (202) 566-3288.

Reviewing attorney: John H. Parcell (202) 566-3336.

Income Tax

Agency Contact: Michael J. Grace, Attorney, Department of the Treasury, Internal Revenue Service, 1111 Constitution Ave., N.W., Washington, DC 20224, 202 566-3288

RIN: 1545-AK16

2245. LIMITATIONS ON PASSIVE ACTIVITY LOSSES AND CREDITS

Legal Authority: 26 USC 7805 Internal Revenue Code of 1986; 26 USC 469(k) Internal Revenue Code of 1986

CFR Citation: 26 CFR 1

Legal Deadline: None.

Abstract: Pursuant to the grant of regulatory authority in section 469(k), the regulations will define activity, material participation, active participation, and portfolio income, and prescribe the treatment of master limited partnerships and other passive income generators.

Timetable:

Action	Date	FR Cite
NPRM	04/01/88	

Small Entity: Not Applicable

Additional Information: LR-46-87

Drafting attorney: Michael J. Grace (202) 566-3288.

Reviewing attorney: John H. Parcell (202) 566-3336.

Tax Legislative Counsel: Neil D. Kimmelfield (202) 566-8528.

Income Taxes

Agency Contact: Michael J. Grace, Attorney, Department of the Treasury, Internal Revenue Service, 1111 Constitution Avenue, N.W., Washington, D.C. 20224, 202 566-3288

RIN: 1545-AK62

2246. INVENTORY COMPUTED BY USE OF CONSUMER OR PRODUCER PRICE INDEXES

Legal Authority: 26 USC 472 Internal Revenue Code of 1986

CFR Citation: 26 CFR 1

Legal Deadline: None.

Abstract: The proposed regulations would provide examples and further clarification of the existing regulations.

Timetable:

Action	Date	FR Cite
NPRM	00/00/00	

Small Entity: No

Additional Information: LR-57-83.

Drafting attorney: Arthur E. Davis (202) 566-3238.

Reviewing attorney: Cynthia Clark (202) 566-3288.

Agency Contact: Arthur E. Davis III, Attorney, Department of the Treasury, Internal Revenue Service, 1111 Constitution Ave., N.W., Washington, D.C. 20224, 202 566-3238

RIN: 1545-AF65

2247. SIMPLIFIED DOLLAR-VALUE LIFO METHOD FOR CERTAIN SMALL BUSINESSES

Legal Authority: 26 USC 7805 Internal Revenue Code of 1986; 26 USC 474 Internal Revenue Code of 1986

CFR Citation: 26 CFR 1

Legal Deadline: None.

Abstract: The regulations would provide guidance to certain small businesses that are eligible to elect a simplified dollar- value LIFO method of inventory valuation. This method requires the use of published government indexes.

Timetable:

Action	Date	FR Cite
NPRM	04/30/88	

Small Entity: No

Additional Information: LR-31-87

Drafting attorney: Arthur E. Davis III(202) 566-3238.

Reviewing attorney: Cynthia L. Clark (202 566-3288.

Treasury accountant-advisor: J. Richard Harvey (202) 566-2928.

Agency Contact: Arthur E. Davis III, Attorney, Department of the Treasury, Internal Revenue Service, 1111 Constitution Avenue, N.W., Washington, D.C. 20224, 202 566-3238

RIN: 1545-AK64

2248. INCOME TAX—UNRELATED TRADE OR BUSINESS INCOME

Legal Authority: 26 USC 7805 Internal Revenue Code of 1986; 26 USC 512(a) Internal Revenue Code of 1986; 26 USC 514(c) Internal Revenue Code of 1986

CFR Citation: 26 CFR 1

Legal Deadline: None.

Abstract: The regulation will address the issue of what constitutes real property acquired by a qualified trust. The guidance provided on this issue will determine the scope of the exception under 26 USC 514(c)(9) for such acquisitions from the term acquisition indebtedness. Under 26 USC

514, the existence of such indebtedness on income producing property gives rise to unrelated debt-financed taxable income. The regulation will also address the issue of the proper allocation method to determine fixed indirect expenses connected with the unrelated trade or business use of an exempt organization's property.

Timetable:

Action	Date	FR Cite
NPRM	00/00/00	

Small Entity: Not Applicable

Additional Information: EE-27-81.

Drafting attorney: Monice Rosenbaum (202) 566-3422.

Reviewing attorney: James L. Brokaw (202) 566-4173.

Agency Contact: Monice Rosenbaum, Attorney, Department of the Treasury, Internal Revenue Service, 1111 Constitution Ave., N.W., Washington, D.C. 20224, 202 566-3422

RIN: 1545-AE00

2249. BAD DEBT RESERVES OF FINANCIAL INSTITUTIONS

Legal Authority: 26 USC 7805 Internal Revenue Code of 1986; 26 USC 585 Internal Revenue Code of 1986

CFR Citation: 26 CFR 1

Legal Deadline: None.

Abstract: This document will provide proposed regulations that relate to the repeal of the bad debt reserve for large banks.

Timetable:

Action	Date	FR Cite
NPRM	12/31/88	

Small Entity: Not Applicable

Additional Information:

LR-81-86.

Drafting Attorney: Laura Ann M. Lauritzen (202) 566-3459.

Reviewing Attorney: Susan Baker (202) 566-3294.

Agency Contact: Susan E. Overlander, Attorney, Department of the Treasury, Internal Revenue Service, 1111 Constitution Avenue NW, Washington, DC 20224, 202 566-3459

RIN: 1545-AJ31

2250. TREATMENT OF FORECLOSED PROPERTY BY CERTAIN CREDITORS

Legal Authority: 26 USC 7805 Internal Revenue Code of 1986; 26 USC 595 Internal Revenue Code of 1986

CFR Citation: 26 CFR 1

Legal Deadline: None.

Abstract: Proposed regulation would amend the existing regulations relating to the treatment of amounts realized and expended with respect to property securing loans which have been foreclosed on by certain banks.

Timetable:

Action	Date	FR Cite
NPRM	06/00/88	

Small Entity: Not Applicable

Additional Information: LR-83-82.

Drafting attorney: Laura Ann M. Lauritzen (202) 566-3459.

Reviewing attorney: John M. Coulter, Jr. (202) 566-3331.

Agency Contact: Susan E. Overlander, Attorney, Department of the Treasury, Internal Revenue Service, 1111 Constitution Ave., N.W., Washington, D.C. 20224, 202 566-3459

RIN: 1545-AF00

2251. INCOME TAX—RESTORATION OF DEPLETION DEDUCTIONS ON BONUS AND ADVANCED ROYALTIES IN CERTAIN CASES

Legal Authority: 26 USC 7805 Internal Revenue Code of 1986; 26 USC 612 Internal Revenue Code of 1986; 26 USC 613 Internal Revenue Code of 1986

CFR Citation: 26 CFR 1

Legal Deadline: None.

Abstract: The regulations would provide rules relating to the restoration of depletion deductions on bonuses and advanced royalties and the deferment of the exclusion of advanced royalties from gross income from the property.

Timetable:

Action	Date	FR Cite
NPRM	06/00/88	

Small Entity: Not Applicable

Additional Information: LR-1148.

Drafting attorney: Walter H. Woo (202) 566-3297.

Reviewing attorney: John B. Bromell (202) 566-3326.

Office of Tax Legislative Counsel (Treasury) reviewing attorney: Bryan Collins (202) 566-2175.

Agency Contact: Walter H. Woo, Attorney, Department of the Treasury, Internal Revenue Service, 1111 Constitution Ave., N.W., Washington, D.C. 20224, 202 566-3297

RIN: 1545-AB69

2252. PROPERTY DISTRIBUTED IN KIND AND TREATMENT OF MULTIPLE TRUSTS (SEC: 81 AND 82 OF THE TAX REFORM ACT OF 1984)

Legal Authority: 26 USC 7805 Internal Revenue Code of 1986; 26 USC 643 Internal Revenue Code of 1986

CFR Citation: 26 CFR 1

Legal Deadline: None.

Abstract: These regulations will provide rules relating to the tax consequences when property is distributed in kind from a trust or estate, including rules specifying what gain is recognized upon distribution, who recognizes such gain, and what the basis of the distributed property is in the hands of the distributee. The regulations also explain election rules available to the distributing trust or estate. The regulations also explain rules under which certain multiple trusts will be treated as a single trust.

Timetable:

Action	Date	FR Cite
NPRM	12/00/88	

Small Entity: Not Applicable

Additional Information: LR-34-85.

Drafting attorney: Lauren G. Shaw (202) 566-3287.

Reviewing attorney: Ada S. Rousso (202) 566-3287.

Agency Contact: Lauren G. Shaw, Attorney, Department of the Treasury, Internal Revenue Service, 1111 Constitution Ave., N.W., Washington, D.C. 20224, 202 566-3287

RIN: 1545-AI06

2253. CLARIFICATION OF SECTION 1.643 (A)-3 RELATING TO THE INCLUSION OF CAPITAL GAIN IN DISTRIBUTABLE NET INCOME

Legal Authority: 26 USC 7805 Internal Revenue Code of 1986; 26 USC 643(a)(3) Internal Revenue Code of 1986

CFR Citation: 26 CFR 1

Legal Deadline: None.

Abstract: The proposed regulation will revise rules specifying when capital gains will be included in distributable net income.

Timetable:

Action	Date	FR Cite
NPRM	12/00/88	

Small Entity: Not Applicable

Additional Information: LR-148-85.

Drafting attorney: Lauren G. Shaw (202) 566-3287.

Reviewing attorney: Ada S. Rousso (202) 566-3287.

Agency Contact: Lauren G. Shaw, Attorney, Department of the Treasury, Internal Revenue Service, 1111 Constitution Avenue, N.W., Washington, D.C. 20224, 202 566-3287

RIN: 1545-AI31

2254. INCOME TAXATION OF TRUSTS AND ESTATES

Legal Authority: 26 USC 645 Internal Revenue Code of 1986; 26 USC 672 Internal Revenue Code of 1986; 26 USC 673 Internal Revenue Code of 1986; 26 USC 6654 (k) Internal Revenue Code of 1986

CFR Citation: 26 CFR 1

Legal Deadline: None.

Abstract: The regulations will provide rules regarding taxable years of trusts and estates, taxation of grantor trusts, and payment of estimated tax by trusts.

Timetable:

Action	Date	FR Cite
NPRM	12/00/88	

Small Entity: Not Applicable

Additional Information:

LR-108-86.

Drafting attorney: Maurice B. Foley (202) 566-4336.

Reviewing attorney: Fred Grundeman (202) 566-3287.

Agency Contact: Maurice B. Foley, Attorney, Department of the Treasury, Internal Revenue Service, 1111 Constitution Ave., N.W., Washington, D.C. 20224, 202 566-4336

RIN: 1545-AJ20

2255. INCOME TAX--PROCEDURE & ADMINISTRATION--FOREIGN TRUSTS HAVING U.S. BENEFICIARIES

Legal Authority: 26 USC 7805 Internal Revenue Code of 1986; 26 USC 679 Internal Revenue Code of 1986; 26 USC 678(b) Internal Revenue Code of 1986; 26 USC 643(a) Internal Revenue Code of 1986; 26 USC 643(c)(6)(C) Internal Revenue Code of 1986; 26 USC 643(c)(6)(D) Internal Revenue Code of 1986; 26 USC 643(d) Internal Revenue Code of 1986; 26 USC 6048 Internal Revenue Code of 1986; 26 USC 6677 Internal Revenue Code of 1986

CFR Citation: 26 CFR 1; 26 CFR 301

Legal Deadline: None.

Abstract: These regulations will provide to what extent a grantor of a foreign trust with United States beneficiaries will be treated as an owner of that trust, and thus taxed currently on the trust's income.

Timetable:

Action	Date	FR Cite
NPRM	00/00/00	

Small Entity: Not Applicable

Additional Information: LR-187-76.

Drafting attorney: Fred E. Grundeman (202) 566-3287.

Reviewing attorney: Ada S. Rousso (202) 566-3287.

Agency Contact: Fred E. Grundeman, Attorney, Department of the Treasury, Internal Revenue Service, 1111 Constitution Ave., N.W., Washington, D.C. 20224, 202 566-3287

RIN: 1545-AB79

2256. INCOME TAX - APPLICATION OF EFFECTIVE DATE FOR NEW RULES REGARDING DEDUCTIONS FOR MEAL, TRAVEL, AND ENTERTAINMENT TO PARTNERSHIPS AND S CORPORATIONS

Legal Authority: 26 USC 7805 Internal Revenue Code of 1986; 26 USC 702 Internal Revenue Code of 1986; 26 USC 1366 Internal Revenue Code of 1986

CFR Citation: 26 CFR 1

Legal Deadline: None.

Abstract: These regulations will provide guidance to taxpayers relating to the effective date for new rules regarding deductions for meals, travel, and entertainment to partnerships and S corporations.

Timetable:

Action	Date	FR Cite
NPRM	12/31/88	

Small Entity: Not Applicable

Additional Information: LR-29-87

Drafting Attorney: David R. Haglund (202) 566-3297

Reviewing Attorney: Walter Woo (202) 566-3297

Office of Tax Legislative Counsel Attorney: Marjorie Roberts (202) 566-2565

Agency Contact: David R. Haglund, Attorney, Department of the Treasury, Internal Revenue Service, 1111 Constitution Avenue, N.W., Washington, D.C. 20224, 202 566-3297

RIN: 1545-AK80

2257. TO PROVIDE SPECIAL RULES CONCERNING RELATED PARTY LOANS IN THE CASE OF PARTNERSHIP ALLOCATIONS ATTRIBUTABLE TO NONRECOURSE DEBT

Legal Authority: 26 USC 7805 Internal Revenue Code of 1986

CFR Citation: 26 CFR 1

Legal Deadline: None.

Abstract: This project will provide regulations relating to loans made to a partnership by a person related to a partner of the partnership.

Timetable:

Action	Date	FR Cite
NPRM	09/30/88	

Small Entity: Not Applicable

Additional Information: LR-30-86.

Drafting attorney: Robert E. Shaw (202) 566-3297.

Reviewing attorney: John B. Bromell (202) 566-3326.

Treasury attorney: Greg Marich (202) 566-2927.

Agency Contact: Robert E. Shaw, Attorney, Department of the Treasury, Internal Revenue Service, 1111 Constitution Ave., NW, Washington, DC 20224, 202 566-3297

RIN: 1545-AI66

2258. ALLOCATIONS OF INCOME GAIN, LOSS, AND DEDUCTION WITH RESPECT TO PROPERTY CONTRIBUTED TO A PARTNERSHIP

Legal Authority: 26 USC 7805 Internal Revenue Code of 1986

CFR Citation: 26 CFR 1

Legal Deadline: None.

Abstract: The regulations will provide rules and examples relating to the requirement to allocate income, gain, loss, and deduction so as to take into account the variation between the basis of the property and its fair market value at the time of contribution.

Timetable:

Action	Date	FR Cite
NPRM	09/30/88	

Small Entity: No

Additional Information: LR-164-84.

Drafting attorney: Robert E. Shaw (202) 566-3297.

Reviewing attorney: John B. Bromell (202) 566-3326.

Treasury attorney: Greg Marich (202) 566-4979.

Agency Contact: Robert E. Shaw, Attorney, Department of the Treasury, Internal Revenue Service, 1111 Constitution Ave., N.W., Washington, D.C. 20224, 202 566-3297

RIN: 1545-AG98

2259. INCOME TAX—ITEMS ALLOCATED TO PORTION OF YEAR PARTNER HELD INTEREST

Legal Authority: 26 USC 7805 Internal Revenue Code of 1986; 26 USC 706(d) Internal Revenue Code of 1986; 26 USC 704 Internal Revenue Code of 1986

CFR Citation: 26 CFR 1

Legal Deadline: None.

Abstract: The regulations would provide the methods to be used for allocating partnership items to partners whenever a partner's interest varies during the partnership taxable year.

Timetable:

Action	Date	FR Cite
NPRM	00/00/00	

Small Entity: Not Applicable

Additional Information: LR-265-76.

Drafting attorney: Robert E. Shaw (202) 566-3297.

Reviewing attorney: Paul A. Francis (202) 566-3930.

Treasury attorney: Greg Marich (202)566-2927.

Agency Contact: Robert E. Shaw, Attorney, Department of the Treasury, Internal Revenue Service, 1111 Constitution Ave., N.W., Washington, D.C. 20224, 202 566-3297

RIN: 1545-AB81

2260. INCOME TAX—TREATMENT OF PAYMENTS TO PARTNERS NOT ACTING IN THEIR CAPACITY AS PARTNERS

Legal Authority: 26 USC 7805 Internal Revenue Code of 1986; 26 USC 707 Internal Revenue Code of 1986

CFR Citation: 26 CFR 1

Legal Deadline: None.

Abstract: These regulations will provide guidance to taxpayers relating to the treatment of certain allocations and distributions to partners for services and transfers of property where the partner is not acting in his capacity as a partner.

Timetable:

Action	Date	FR Cite
NPRM	10/31/88	

Small Entity: Not Applicable

Additional Information: LR-234-84.

Drafting attorney: David R. Haglund (202) 566-3297.

Reviewing attorney: John B. Bromell (202) 566-3326.

Treasury attorney: Greg Marich (202) 566-4979.

Agency Contact: David R. Haglund, Attorney, Department of the Treasury, Internal Revenue Service, 1111 Constitution Ave., N.W., Washington, D.C. 20224, 202 566-3297

RIN: 1545-AG83

2261. AMENDMENT OF INCOME TAX REGULATIONS WITH RESPECT TO TREATMENT OF DISGUISED SALES BY PARTNERS

Legal Authority: 26 USC 7805 Internal Revenue Code of 1986; 26 USC 707 Internal Revenue Code of 1986

CFR Citation: 26 CFR 1

Legal Deadline: None.

Abstract: These regulations will provide rules for determining when partnership transactions are to be treated as disguised sales.

Timetable:

Action	Date	FR Cite
NPRM	00/00/00	

Small Entity: Not Applicable

Additional Information: LR-163-84.

Drafting attorney: David R. Haglund (202) 566-3297.

Reviewing attorney: John B. Bromell (202) 566-3297.

Office of Tax Legislative Counsel (Treasury) reviewing Treasury Attorney: Greg Marich (202) 566-4979.

Agency Contact: David R. Haglund, Attorney, Department of the Treasury, Internal Revenue Service, 1111 Constitution Ave., N.W., Washington, D.C. 20224, 202 566-3297

RIN: 1545-AH22

2262. CONTRIBUTIONS TO A PARTNERSHIP OF UNREALIZED RECEIVABLES, INVENTORY ITEMS OR CAPITAL LOSS PROPERTY

Legal Authority: 26 USC 7805 Internal Revenue Code of 1986; 26 USC 724 Internal Revenue Code of 1986

CFR Citation: 26 CFR 1

Legal Deadline: None.

Abstract: The regulation will provide rules for determining the character of gain or loss upon the disposition by a partnership of unrealized receivables, inventory items or capital loss property contributed to the partnership by a partner.

Timetable:

Action	Date	FR Cite
NPRM	07/00/88	

Small Entity: Not Applicable

Additional Information: LR-232-84.

Drafting attorney: Beverly A. Baughman (202) 566-3297.

Reviewing attorney: Walter H. Woo (202) 566-3297.

Agency Contact: Beverly A. Baughman, Attorney, Department of the Treasury, Internal Revenue Service, 1111 Constitution Ave., N.W., Washington, D.C. 20224, 202 566-3297

RIN: 1545-AG85

VOL 53 ISS 79 PT 2 AP 25 1988 UMI

2263. PARTNER'S SHARE OF PARTNERSHIP LIABILITIES

Legal Authority: 26 USC 7805 Internal Revenue Code of 1986; PL 98-369, Sec 79 Tax Reform Act of 1984

CFR Citation: 26 CFR 1

Legal Deadline: None.

Abstract: These regulations revise the Income Tax Regulations under section 752 of the Internal Revenue Code of 1954 to conform such regulations to changes in the law with respect to a partner's share of partnership liabilities.

Timetable:

Action	Date	FR Cite
NPRM	00/00/00	

Small Entity: Not Applicable

Additional Information: LR-229-84.

Drafting attorney: Robert E. Shaw (202) 566-3297.

Reviewing attorney: John Bromell (202) 566-3297.

Treasury attorney: Greg Marich (202) 566-2927.

Agency Contact: Robert E. Shaw, Attorney, Department of the Treasury, Internal Revenue Service, 1111 Constitution Ave., N.W., Washington, D.C. 20224, 202 566-3297

RIN: 1545-AH26

2264. IMPUTED EARNINGS RATE FOR MUTUAL LIFE INSURANCE COMPANIES

Legal Authority: 26 USC 7805 Internal Revenue Code of 1986; 26 USC 809(d) Internal Revenue Code of 1986

CFR Citation: 26 CFR 1

Legal Deadline: None.

Abstract: The regulations will provide guidance to mutual life insurance companies regarding the computation of the imputed earnings rate.

Timetable:

Action	Date	FR Cite
NPRM	12/00/88	

Small Entity: Not Applicable

Additional Information: LR-159-84.

Drafting attorney: Sharon L. Hall (202) 566-3288.

Agency Contact: Sharon L. Hall, Attorney, Department of the Treasury, Internal Revenue Service, 1111 Constitution Ave., N.W., Washington, D.C. 20224, 202 566-3288

RIN: 1545-AG63

2265. INCOME TAX REGULATIONS—DISCOUNTING OF UNPAID LOSSES OF PROPERTY AND CASUALTY INSURANCE COMPANIES

Legal Authority: 26 USC 7805 Internal Revenue Code of 1986; 26 USC 846 Internal Revenue Code of 1986

CFR Citation: 26 CFR 1

Legal Deadline: None.

Abstract: The regulations will provide rules relating to the discounting of unpaid losses of property and casualty insurance companies. It is anticipated that the regulations will provide guidance with respect to the treatment of salvage and subrogation and the use of a company's loss payment pattern.

Timetable:

Action	Date	FR Cite
NPRM	00/00/00	

Small Entity: Not Applicable

Additional Information: LR-139-86.

Drafting attorney: Bill Blagg (202) 566-3238.

Reviewing attorney: Cynthia Clark (202) 566-3288.

Agency Contact: Bill Blagg, Attorney, Department of the Treasury, Internal Revenue Service, 1111 Constitution Ave., N.W., Washington, DC 20224, 202 566-3238

RIN: 1545-AJ51

2266. APPORTIONMENT OF EXPENSES IN THE FSC AND DISC CONTEXTS

Legal Authority: 26 USC 7805 Internal Revenue Code of 1986

CFR Citation: 26 CFR 1

Legal Deadline: None.

Abstract: Proposal would provide guidance on how expenses in the DISC and FSC contexts will be apportioned.

Timetable:

Action	Date	FR Cite
NPRM	12/01/88	

Small Entity: Not Applicable

Additional Information: INTL-028-86

Drafting Attorney: Richard Chewning (202) 566-3490.

Reviewing Attorney: T. Timothy Tuerff (202) 566-9050.

Treasury Attorney: Mark Beams (202) 566-8275.

Agency Contact: Richard Chewning, Attorney, Department of the Treasury, Internal Revenue Service, 1111 Constitution Ave., N.W., Washington, D.C. 20224, 202 566-3490

RIN: 1545-AK78

2267. TRANSPORTATION INCOME SOURCE RULES

Legal Authority: 26 USC 7805 Internal Revenue Code of 1986; 26 USC 863 Internal Revenue Code of 1986

CFR Citation: 26 CFR 1

Legal Deadline: None.

Abstract: These regulations will provide rules relating to the source of income attributable to transportation which begins or ends in the United States.

Timetable:

Action	Date	FR Cite
NPRM	06/30/88	

Small Entity: Not Applicable

Additional Information: INTL-947-86

Drafting Attorney: Ann Zukas (202) 566-6645

Reviewing Attorney: Jack Feldman (202) 566-6645.

Treasury Attorney: Peter Daub (202) 566-5791

Agency Contact: Ann Zukas, Attorney-Advisor, Department of the Treasury, Internal Revenue Service, 1111 Constitution Ave., N.W., Washington, D.C. 20224, 202 566-6645

RIN: 1545-AJ66

2268. PROPOSED INCOME TAX REGULATIONS UNDER THE TAX REFORM ACT OF 1986 — SOURCE OF INCOME RULES FOR INCOME DERIVED FROM SPACE AND OCEAN ACTIVITIES INCLUDING TELECOMMUNICATIONS

Legal Authority: 26 USC 7805 Internal Revenue Code of 1986; 26 USC 863(d) Internal Revenue Code of 1986; 26 USC 863(e) Internal Revenue Code of 1986

CFR Citation: 26 CFR 1

Legal Deadline: None.

BEST COPY AVAILABLE

Abstract: The regulation will provide guidance relating to determining the source of income derived from space, and certain ocean activities (excluding mining within the continental shelf.) The regulation will also provide guidance on determining the source of income derived from international telecommunications activities.

Timetable:

Action	Date	FR Cite
NPRM	12/31/88	

Small Entity: Not Applicable

Additional Information: INTL-949-86

Drafting Attorney: Joseph M. Rosenthal (202) 566-3872

Reviewing Attorney: Benedetta Kissel (202) 566-3179

Treasury Attorney: David Crowe (202) 566-6275

Agency Contact: Joseph M. Rosenthal, Attorney-Advisor, Department of the Treasury, Internal Revenue Service, 1111 Constitution Ave., N.W., Washington, D.C. 20224, 202 566-3872

RIN: 1545-AJ84

2269. ● ALLOCATION OF GROSS INCOME ATTRIBUTABLE TO INTEREST RATE SWAPS UNDER SECTION 863 (A)

Legal Authority: 26 USC 7805 Internal Revenue Code of 1986; 26 USC 863 (a) Internal Revenue Code of 1986

CFR Citation: 26 CFR 1

Legal Deadline: None.

Abstract: This project provides source rules for income and expense attributable to interest rate swap agreements. Interest rate swap agreements are basically agreements used to hedge agreement interest rate fluctuation.

Timetable:

Action	Date	FR Cite
NPRM	00/00/00	

Small Entity: Not Applicable

Additional Information: INTL-773-87

Drafting attorney: Scott Farmer (202) 634-5406.

Reviewing attorney: Bob Katcher (202) 634-5406.

Treasury attorney: Peter Daub (202) 566-5991.

Income Taxes

Agency Contact: Scott Farmer, Attorney-Advisor, Department of the Treasury, Internal Revenue Service, 1111 Constitution Avenue, N.W., Washington, D.C. 20224, 202 634-5406

RIN: 1545-AL25

2270. RELATED PERSON FACTORING INCOME

Legal Authority: 26 USC 7805 Internal Revenue Code of 1986; 26 USC 864(d) Internal Revenue Code of 1986

CFR Citation: 26 CFR 1

Legal Deadline: None.

Abstract: These regulations will provide rules relating to the treatment of income derived by foreign corporations from factoring the receivables of related persons.

Timetable:

Action	Date	FR Cite
NPRM	00/00/00	

Small Entity: Not Applicable

Additional Information: INTL-49-86.

Drafting attorney: Barbara Felker (202) 566-6645.

Reviewing attorney: Phyllis Marcus (202) 566-6645.

Treasury attorney: Peter Daub (202) 566-5791.

Agency Contact: Barbara Allen Felker, Attorney, Department of the Treasury, Internal Revenue Service, 1111 Constitution Ave., N.W., Washington, D.C. 20224, 202 566-6645

RIN: 1545-AH85

2271. SOURCE RULES FOR PERSONAL PROPERTY SALES

Significance: Agency Priority

Legal Authority: 26 USC 7805 Internal Revenue Code of 1986; 26 USC 865 Internal Revenue Code of 1986

CFR Citation: 26 CFR 1

Legal Deadline: None.

Abstract: The regulation will provide rules for determining the source of income from sales of personal property. The regulation will set forth rules for sales by U.S. residents and non-residents and specify special rules for depreciable personal property, intangibles, sales connected with an office or other fixed place of business, and sales of a foreign affiliate by a U.S. corporation.

Timetable:

Action	Date	FR Cite
NPRM	04/01/88	

Small Entity: Not Applicable

Additional Information: INTL-946-86

Drafting Attorney: Carol P. Tello (202) 634-5404

Reviewing Attorney: Robert E. Culbertson (202) 634-5404

Treasury Attorney: Mary Bennett (202) 566-2964

Agency Contact: Carol F. Tello, Attorney-Advisor, Department of the Treasury, Internal Revenue Service, 1111 Constitution Ave., N.W., Washington, D.C. 20224, 202 634-5404

RIN: 1545-AJ83

2272. REPEAL OF 30 PERCENT WITHHOLDING BY THE TAX REFORM ACT OF 1984

Legal Authority: 26 USC 7805 Internal Revenue Code of 1986; 26 USC 871 Internal Revenue Code of 1986; 26 USC 881 Internal Revenue Code of 1986; 26 USC 1441 Internal Revenue Code of 1986

CFR Citation: 26 CFR 1

Legal Deadline: None.

Abstract: These regulations will provide rules relating to the definition of portfolio interest, the certifications required in the case of obligations that are issued in registered form, and related matters.

Timetable:

Action	Date	FR Cite
NPRM	00/00/00	

Small Entity: Not Applicable

Additional Information: INTL-39-86

Drafting attorney: Carl Cooper (202) 566-3388.

Reviewing attorney: Carol Doran Klein (202) 566-6419.

Treasury attorney: Peter Daub (202) 566-5791.

Agency Contact: Carl Cooper, Attorney, Department of the Treasury, Internal Revenue Service, 1111 Constitution Ave., N.W., Washington, D.C. 20224, 202 566-3388

RIN: 1545-AG66

2273. EXEMPTIONS FROM WITHHOLDING OF NRA'S AND FOREIGN CORPORATIONS

Significance: Agency Priority

Legal Authority: 26 USC 7805 Internal Revenue Code of 1986; 26 USC 871(i) Internal Revenue Code of 1986; 26 USC 881(d) Internal Revenue Code of 1986

CFR Citation: 26 CFR 1

Legal Deadline: None.

Abstract: Implement regulations concerning exemptions from withholding of non-resident aliens and foreign corporations under sections 871(i) and 881(d) of the Code. Specifically, the proposed regulation will address the individual or corporation that meets the 80 percent foreign business requirements for active foreign business income.

Timetable:

Action	Date	FR Cite
Next Action Undetermined		

Small Entity: Undetermined

Additional Information: INTL-951-86

Drafting Attorney: David A. Alvarez (202) 566-6307

Reviewing Attorney: Christine Halphen (202) 566-6645

Treasury Attorney: Mary Bennett (202) 566-5992

Agency Contact: David A. Alvarez, Attorney-Advisor, Department of the Treasury, Internal Revenue Service, 1111 Constitution Avenue, N.W., Washington, D.C. 20224, 202 566-6307

RIN: 1545-AJ59

2274. UNTIMELY FILING BY FOREIGN CORPORATIONS

Legal Authority: 26 USC 7805 Internal Revenue Code of 1986

CFR Citation: 26 CFR 1

Legal Deadline: None.

Abstract: Proposal would provide rules regarding deductibility of expenses by a foreign corporation that does not file a timely tax return.

Timetable:

Action	Date	FR Cite
NPRM	12/01/88	

Small Entity: Not Applicable

Additional Information: INTL-74-86

Drafting Attorney: Richard Chewning (202) 566-3490.

Reviewing Attorney: Bernard Bress (202) 566-6440.

Treasury Attorney: Unassigned.

Agency Contact: Richard Chewning, Attorney-Advisor, Department of the Treasury, Internal Revenue Service, 1111 Constitution Ave., N.W., Washington, D.C. 20224, 202 566-3490

RIN: 1545-AJ74

2275. BRANCH PROFITS TAX (GENERAL RULE AND DEFINITIONS) AND 2ND LEVEL WITHHOLDING TAXES

Legal Authority: 26 USC 7805 Internal Revenue Code of 1986; 26 USC 884 Internal Revenue Code of 1986

CFR Citation: 26 CFR 1

Legal Deadline: None.

Abstract: The regulations will provide guidance on the calculation of the branch profits tax. The regulations will provide rules for the treatment of interest allocable to effectively connected income.

Timetable:

Action	Date	FR Cite
NPRM	00/00/00	

Small Entity: Undetermined

Additional Information: INTL-934-86

Drafting Attorney: Richard M. Elliott (202) 566-6457

Reviewing Attorney: Benedetta A. Kissel (202) 566-3179

Treasury Attorney: Peter Daub (202) 566-5791

Agency Contact: Richard M. Elliott, Attorney, Department of the Treasury, Internal Revenue Service, 1111 Constitution Ave., N.W., Washington, D.C. 20224, 202 566-6457

RIN: 1545-AJ73

2276. IMPOSITION OF TAX ON GROSS TRANSPORTATION INCOME OF NONRESIDENT ALIENS AND FOREIGN CORPORATIONS

Legal Authority: 26 USC 7805 Internal Revenue Code of 1986; 26 USC 887 Internal Revenue Code of 1986

CFR Citation: 26 CFR 1

Legal Deadline: None.

Abstract: This regulation will provide rules for implementing the four percent tax on gross transportation income of nonresident aliens and foreign corporations.

Timetable:

Action	Date	FR Cite
Next Action Undetermined		

Small Entity: Not Applicable

Additional Information: INTL-940-86

Drafting Attorney: Patricia Bray (202) 566-6645.

Reviewing Attorney: Jacob Feldman (202) 566-6645.

Treasury Attorney: Peter Daub (202) 566-2964.

Agency Contact: Patricia A. Bray, Attorney, Department of the Treasury, Internal Revenue Service, 1111 Constitution Ave., N.W., Washington, D.C., 202 566-6645

RIN: 1545-AK76

2277. INCOME TAX—INCOME OF FOREIGN GOVERNMENTS AND OF INTERNATIONAL ORGANIZATIONS

Legal Authority: 26 USC 892(c) Internal Revenue Code of 1986

CFR Citation: 26 CFR 1

Legal Deadline: None.

Abstract: The regulations will provide rules governing the taxation of income of foreign governments and international organizations.

Timetable:

Action	Date	FR Cite
NPRM	04/01/88	

Small Entity: Not Applicable

Additional Information: INTL-959-86

Drafting Attorney: David A. Juster (202) 566-6384

Reviewing Attorney: Bernard T. Bress (202) 566-6440

Office of International Tax Counsel (Treasury) Reviewing Attorney: Peter Daub (202) 566-2964

Agency Contact: David A. Juster, Attorney-Advisor, Department of the Treasury, Internal Revenue Service, 1111 Constitution Ave., N.W., Washington, D.C. 20224, 202 566-6384

RIN: 1545-AJ79

2278. INCOME TAX—PARTNERSHIP RULES REGARDING TAXATION OF FOREIGN INVESTMENT IN U.S. REAL PROPERTY INTERESTS

Legal Authority: 26 USC 7805 Internal Revenue Code of 1986; 26 USC 897(e)(2) Internal Revenue Code of 1986; 26 USC 897(g) Internal Revenue Code of 1986

CFR Citation: 26 CFR 1

Legal Deadline: None.

Abstract: This regulation would provide rules for foreign partners to compute gain or loss on the sale or disposition of United States real property interests upon the sale of a partnership interest or a distribution in liquidation of a partnership interest.

Timetable:

Action	Date	FR Cite
NPRM	06/30/88	

Small Entity: Not Applicable

Additional Information: INTL-48-86

Drafting attorney: Jacob Feldman (202) 566-6645.

Reviewing attorney: Charles Saverude (202) 377-9060.

Treasury attorney: David Crowe (202) 566-5791.

Agency Contact: Jacob Feldman, Senior Reviewer, Department of the Treasury, Internal Revenue Service, 1111 Constitution Ave., N.W., Washington, D.C. 20224, 202 566-6645

RIN: 1545-AB98

2279. TEMPORARY REGULATIONS—NONRECOGNITION OF CORPORATE DISTRIBUTIONS AND REORGANIZATIONS UNDER THE FOREIGN INVESTMENT IN REAL PROPERTY TAX ACT

Legal Authority: 26 USC 897 Internal Revenue Code of 1986

CFR Citation: 26 CFR 1

Legal Deadline: None.

Abstract: Regulations would provide rules concerning the effect of certain distributions, including dividends, redemptions, distributions pursuant to reorganizations, and liquidations on corporations and their shareholders under the Foreign Investment in Real Property Tax Act. Regulations would also provide rules for determining the extent to which nonrecognition would apply to certain transfers of real property interests and the extent to which certain reorganizations will be treated as sales of property at fair market value.

Timetable:

Action	Date	FR Cite
NPRM	00/00/00	

Small Entity: Not Applicable

Additional Information: INTL-38-86.

Drafting attorney: Charles P. Besecky (202) 566-3319.

Reviewing attorney: Charles C. Saverude (202) 566-6645.

Treasury attorney: David Crowe (202) 566-5791.

Agency Contact: Charles P. Besecky, Attorney, Department of the Treasury, Internal Revenue Service, 1111 Constitution Ave., N.W., Washington, D.C. 20224, 202 566-3319

RIN: 1545-AF17

2280. NOTICE OF PROPOSED RULEMAKING—NONRECOGNITION OF CORPORATE DISTRIBUTIONS AND REORGANIZATIONS UNDER THE FOREIGN INVESTMENT IN REAL PROPERTY TAX ACT

Legal Authority: 26 USC 897 Internal Revenue Code of 1986

CFR Citation: 26 CFR 1

Legal Deadline: None.

Abstract: Proposal would provide rules concerning the effect of certain distributions including dividends, redemptions, distributions pursuant to reorganizations, and liquidations on corporations and their shareholders under the Foreign Investment in Real Property Tax Act. Proposal would also provide rules for determining the extent to which nonrecognition would apply to certain transfers of real property interests and the extent to which certain reorganizations will be treated as sales of property at fair market value.

Timetable:

Action	Date	FR Cite
Next Action Undetermined		

Small Entity: Not Applicable

Additional Information: INTL-491-87

Drafting Attorney: Charles P. Besecky (202) 566-3319.

Reviewing Attorney: Charles C. Saverude (202) 566-6008.

Treasury Attorney: David Crowe (202) 566-6645.

Agency Contact: Charles P. Besecky, Attorney, Department of the Treasury, Internal Revenue Service, 1111 Constitution Ave., N.W., Washington, D.C. 20224, 202 566-3319

RIN: 1545-AK79

2281. ● TREATMENT OF SEPARATE LIMITATION LOSSES

Legal Authority: PL 99-514, Sec 1203

CFR Citation: 26 CFR 1

Legal Deadline: None.

Abstract: Section 1203 of the Tax Reform Act of 1986 amends section 904 (f) by adding paragraph (5) at the end thereof which requires that foreign source losses with respect to any income category first offset the taxpayer's other foreign source income subject to a separate limitation for the taxable year on a proportionate basis before such losses offset the taxpayer's U.S. source income. Accordingly, the regulation will provide rules for the allocation of foreign source losses.

Timetable:

Action	Date	FR Cite
NPRM	12/00/88	

Small Entity: Not Applicable

Additional Information: INTL-932-86

Drafting Attorney: Willard W. Yates (202) 566-3896

Reviewing Attorney: Carol Doran-Klein (202) 566-6419

Treasury Attorney: Peter Barnes (202) 566-5815

Income Taxes

Agency Contact: Willard W. Yates, Attorney, Department of the Treasury, Internal Revenue Service, 1111 Constitution Avenue, N.W., Washington, D.C., 202 566-3896

RIN: 1545-AL17

2282. INCOME TAX—PROCEDURE & ADMINISTRATION—TAXPAYER'S OBLIGATION TO FILE A NOTICE OF REDETERMINATION OF FOREIGN TAX AND CIVIL PENALTIES FOR FAILURE TO FILE

Legal Authority: 26 USC 7805 Internal Revenue Code of 1986; 26 USC 905(c) Internal Revenue Code of 1986; 26 USC 6689 Internal Revenue Code of 1986

CFR Citation: 26 CFR 1; 26 CFR 301

Legal Deadline: None.

Abstract: The regulations will establish procedures for taxpayers by which they must notify the Service of a change in foreign tax liability for a taxable year for which they claimed the foreign tax credit. The regulations provide special rules for redetermining the taxpayer's United States tax liability when the dollar value of the foreign currency fluctuates between the time for which the foreign tax credit is originally claimed and the time for which the foreign tax credit is redetermined. In addition, the regulations set forth deadlines for compliance with the notification requirements.

Timetable:

Action	Date	FR Cite
NPRM	00/00/00	

Small Entity: Not Applicable

Additional Information: INTL - 61-86

Drafting attorney: Gerard Traficanti (202) 566-6384.

Reviewing attorney: Carol Doran Klein (202) 566-6419.

Draft of the Notice to International Tax Counsel of October 19, 1982. -duplicate of RIN A119

Agency Contact: Gerard Traficanti, Tax Law Specialist, Department of the Treasury, Internal Revenue Service, 1111 Constitution Ave., N.W., Room 5531, Washington, D.C. 20224, 202 566-6384

RIN: 1545-AC06

2283. AMENDMENT OF REGULATIONS UNDER SECTION 907 OF THE INTERNAL REVENUE CODE OF 1954 TO CONFORM THEM TO SECTION 211 OF THE TAX EQUITY AND FISCAL RESPONSIBILITY ACT OF 1982

Legal Authority: 26 USC 7805 Internal Revenue Code of 1986; 26 USC 907 Internal Revenue Code of 1986

CFR Citation: 26 CFR 1

Legal Deadline: None.

Abstract: Proposal would amend the regulations under section 907 of the Internal Revenue Code of 1954, relating to the foreign tax credit for taxes on oil and gas income, to conform them to section 211 of the Tax Equity and Fiscal Responsibility Act of 1982.

Timetable:

Action	Date	FR Cite
NPRM	12/01/88	

Small Entity: Not Applicable

Additional Information: INTL - 152-86.

Drafting attorney: Richard Chewning (202) 566-3490.

Reviewing attorney: Charles C. Saverude (202) 566-6645.

Treasury attorney: Peter Barnes (202) 566-8275.

Agency Contact: Richard Chewning, Attorney, Department of the Treasury, Internal Revenue Service, 1111 Constitution Ave., N.W., Washington, D.C. 20224, 202 566-3490

RIN: 1545-AE34

2284. COORDINATION OF U.S. AND VIRGIN ISLANDS TAXES

Legal Authority: PL 99-514, Sec 1274

CFR Citation: 26 CFR 1

Legal Deadline: None.

Abstract: Prior to the Tax Reform Act of 1986, inhabitants of the Virgin Islands satisfied their U.S. tax liability by filing a return with the Virgin Islands. The Tax Reform Act of 1986 repealed the inhabitant rule to correct an erroneous interpretation of its operation in connection with the Virgin Islands mirror code. Section 1274 of the Tax Reform Act of 1986 clarifies the filing obligations of individuals in the Virgin Islands. Bona fide residents of the Virgin Islands are required to file only one return with the Virgin Islands in which they report worldwide income and identify the sources of income from the Virgin Islands will be required to file two identical tax returns one with the US and one with the Virgin Islands and pay a pro rata amount of tax to each. Regulations are needed to clarify who qualifies as a bona fide resident. It is anticipated that the regulations will provide a facts and circumstances test for determining bona fide resident status. It is unknown what the operational costs will be.

Timetable:

Action	Date	FR Cite
Next Action Undetermined		

Small Entity: No

Additional Information: INTL-969-86

Drafting Attorney: Grace Perez-Navarro (202) 287-4851.

Reviewing Attorney: Michael Patton (202) 287-4851.

Treasury Attorney: Peter Barns (202) 566-5815.

Agency Contact: Grace Perez-Navarro, Associate Attorney, Department of the Treasury, Internal Revenue Service, 950 L'Enfant Plaza South, SW, Room 3319, Washington, D.C. 20024, 202 287-4851

RIN: 1545-AJ55

2285. ● SOURCE RULES WITHIN THE VIRGIN ISLANDS

Legal Authority: PL 99-514, Sec 1275

CFR Citation: 26 CFR 1

Legal Deadline: None.

Abstract: This regulation will provide sourcing rules for the determination as to whether income is derived from sources within the Virgin Islands or the U.S. or is effectively connected with the conduct of a trade or business within the Virgin Islands or the U.S. To the extent possible, the rules will be similar to those set forth in IRC sections 861-865.

Timetable:

Action	Date	FR Cite
Next Action Undetermined		

Small Entity: Not Applicable

Additional Information: INTL-969-86

Drafting attorney: Grace Perez-Navarro (202) 287-4851.

Reviewing Attorney: Michael Patton (202) 287-4851.

Treasury attorney: Peter Barnes (202) 566-5815.

Income Taxes

Agency Contact: Grace Perez-Navarro, Attorney, Department of the Treasury, Internal Revenue Service, 1111 Constitution Avenue, N.W., Washington, D.C. 20224, 202 287-4851

RIN: 1545-AL40

2286. AMENDMENT OF SECTION 936(H) WITH RESPECT TO ELECTION OF PRODUCT

Legal Authority: 26 USC 7805 Internal Revenue Code of 1986; 26 USC 936(h) Internal Revenue Code of 1986

CFR Citation: 26 CFR 1

Legal Deadline: None.

Abstract: The regulation would require that once a product election was made it could not be amended.

Timetable:

Action	Date	FR Cite
NPRM	00/00/00	

Small Entity: Not Applicable

Additional Information: INTL-450-87

Drafting Attorney: Philip Garlett (202) 566-6645.

Reviewing Attorney: Jacob Feldman (202) 566-3289.

Treasury Attorney: Mary Bennett (202) 566-5992.

Agency Contact: Philip Garlett, Attorney, Department of the Treasury, Internal Revenue Service, 1111 Constitution Ave., N.W., Washington, D.C. 20224, 202 566-6645

RIN: 1545-AK77

2287. SPECIAL RULE FOR FOREIGN CAPTIVE INSURANCE COMPANIES

Legal Authority: 26 USC 7805 Internal Revenue Code of 1986; 26 USC 953(c) Internal Revenue Code of 1986

CFR Citation: 26 CFR 1

Legal Deadline: None.

Abstract: The regulation defines related person insurance income; sets forth rules exceptions certain foreign corporations from section 953 (a), and sets forth rules regarding the amount of related person insurance income to be included in gross income.

Timetable:

Action	Date	FR Cite
NPRM	00/00/00	

Small Entity: Not Applicable

Additional Information: INTL-939-86

Drafting Attorney: Philip L. Garlett (202) 566-6645.

Reviewing Attorney: Jack Feldman (202) 566-3289

Treasury Attorney: Peter Barnes (202) 566-5815

Agency Contact: Philip L. Garlett, Attorney, Department of the Treasury, Internal Revenue Service, 1111 Constitution Ave., N.W., Washington, D.C. 20224, 202 566-6645

RIN: 1545-AJ70

2288. ● FUNCTIONAL CURRENCY

Legal Authority: 26 USC 7805 Internal Revenue Code Of 1986; 26 USC 985 Internal Revenue Code of 1986

CFR Citation: 26 CFR 1

Legal Deadline: None.

Abstract: This project provides rules for determining the currency an entity will compute gain or loss. If the entity is a foreign entity, it may be allowed to compute its gain or loss in a foreign currency and translate the net amount of such gain or loss into U.S. dollars.

Timetable:

Action	Date	FR Cite
NPRM	00/00/00	

Small Entity: Not Applicable

Additional Information: INTL-962-86

Drafting attorney: Scott Farmer (202) 634-5406.

Reviewing attorney: Bob Katcher (202) 634-5406.

Treasury attorney: David Crowe (202) 566-5791.

Income Taxes

Agency Contact: Scott Farmer, Attorney-Advisor, Department of the Treasury, Internal Revenue Service, 1111 Constitution Avenue, N.W., Washington, D.C. 20224, 202 634-5406

RIN: 1545-AL24

2289. ● SECTION 988(D) - INTEGRATED HEDGING RULES FOR FOREIGN EXCHANGE GAIN OR LOSS

Legal Authority: 26 USC 7805 Internal Revenue Code of 1986; 26 USC 988 Internal Revenue Code of 1986

CFR Citation: 26 CFR 1

Legal Deadline: None.

Abstract: This project will provide rules regarding fully hedged and partially hedged nonfunctional currency denominated transactions.

Timetable:

Action	Date	FR Cite
NPRM	11/01/88	

Small Entity: Not Applicable

Additional Information: INTL-968-86

Drafting Attorney: Jeffrey Dorfman (202) 634-5406

Reviewing Attorney: Alice Neff (202) 566-6645

Income Taxes

Agency Contact: Jeffrey Dorfman, Attorney, Department of the Treasury, Internal Revenue Service, 1111 Constitution Avenue, N.W., Washington, D.C. 20224, 202 634-5406

RIN: 1545-AL15

2290. ● TAXATION OF EXCHANGE GAIN OR LOSS ON FOREIGN CURRENCY DENOMINATED TRANSACTIONS

Legal Authority: 26 USC 7805 Internal Revenue Code of 1986; 26 USC 988 Internal Revenue Code of 1986

CFR Citation: 26 CFR 1

Legal Deadline: None.

Abstract: This project provides rules regarding the determination of gain or loss realized on section 988 transactions. Rules regarding the source and character of such gain or loss are also provided. The project also contains a definitional section which defines section 988 transactions, among other terms.

Timetable:

Action	Date	FR Cite
NPRM	05/01/88	

Small Entity: Not Applicable

Additional Information: INTL-936-86

Drafting Attorney: Jeffrey Dorfman (202) 634-5406

Reviewing Attorney: Alice Neff (202) 566-6645

Treasury Attorney: David Crowe (202) 566-5791

Income Taxes

Agency Contact: Jeffrey Dorfman, Attorney, Department of the Treasury, Internal Revenue Service, 1111 Constitution Ave., N.W., Washington, D.C. 20224, 202 634-5406

RIN: 1545-AL16

2291. ● TRANSITION RULE FOR QUALIFIED BUSINESS UNITS USING A NET WORTH METHOD OF ACCOUNTING FOR TAXABLE YEARS BEGINNING BEFORE JANUARY 1, 1987

Legal Authority: 26 USC 7805 Internal Revenue Code of 1986; 26 USC 989 (c) Internal Revenue Code of 1986

CFR Citation: 26 CFR 1

Legal Deadline: None.

Abstract: This project provides transition rules for those foreign branches of United States entities who used a net worth method of accounting prior to the enactment of the Tax Reform Act of 1986. Under the Act, foreign branches must now account for their operations under the profit and loss method as set forth in section 987 of the Code.

Timetable:

Action	Date	FR Cite
NPRM	00/00/00	

Small Entity: Not Applicable

Additional Information: INTL-964-86

Drafting attorney: David Rosenberg (202) 634-5406.

Reviewing attorney: Ann Fisher (202) 634-5406.

Treasury attorney: David Crowe (202) 566-5791.

Income Taxes

Agency Contact: David Rosenberg, Attorney-Advisor, Department of the Treasury, Internal Revenue Service, 1111 Constitution Avenue, N.W., Washington, D.C. 20224, 202 634-5406

RIN: 1545-AL29

2292. RULES RELATING TO THE INAPPLICABILITY OF SECTION 1031 TO PARTNERSHIP INTERESTS AND THE LIMITATION ON THE PERIOD DURING WHICH LIKE KIND EXCHANGES MAY BE MADE

Legal Authority: 26 USC 7805 Internal Revenue Code of 1986

CFR Citation: 26 CFR 1

Legal Deadline: None.

Abstract: This regulation will provide guidance with respect to changes made to section 1031 by the Tax Reform Act of 1984 including the inapplicability of section 1031 to partnership interests and the limitation on the period during which like kind exchanges may be made.

Timetable:

Action	Date	FR Cite
NPRM	00/00/00	

Small Entity: Not Applicable

Additional Information: LR-237-84.

Drafting attorney: Robert E. Shaw (202) 566-3297.

Reviewing attorney: Walter H. Woo (202) 566-3297.

Treasury attorney: Blake Rubin (202) 566-2927.

Agency Contact: Robert E. Shaw, Attorney, Department of the Treasury, Internal Revenue Service, 1111 Constitution Ave., N.W., Washington, D.C. 20224, 202 566-3297

RIN: 1545-AH43

2293. INCOME TAX—NOTICE OF PROPOSED RULEMAKING - AMENDMENT OF REGULATIONS RELATING TO BASIS REDUCTIONS FOR NON-TAXED PORTION OF EXTRAORDINARY DIVIDENDS TO REFLECT TRA 1984

Legal Authority: 26 USC 7805 Internal Revenue Code of 1986; 26 USC 1059 Internal Revenue Code of 1986

CFR Citation: 26 CFR 1

Legal Deadline: None.

Abstract: Amendment of the regulations to interpret the rule contained in section 1059 of the Internal Revenue Code of 1954 relating to the non-taxed portion of extraordinary dividends. The regulations will explain what dividends are extraordinary, the operations of the required basis reduction, the application of the holding period rule in section 246 (c), etc.

Timetable:

Action	Date	FR Cite
NPRM	10/01/88	

Small Entity: Not Applicable

Additional Information: LR-260-84.

Drafting attorney: Patricia W. Pellervo (202) 566-3458.

Reviewing attorney: Robert J. Mason (202) 566-3463.

Agency Contact: Patricia W. Pellervo, Attorney, Department of the Treasury, Internal Revenue Service, 1111 Constitution Ave., N.W., Washington, D.C. 20224, 202 566-3458

RIN: 1545-AH41

2294. INCOME TAX—SPECIAL ALLOCATION RULES FOR CERTAIN ASSET ACQUISITIONS

Legal Authority: 26 USC 7805 Internal Revenue Code of 1986; 26 USC 1060 Internal Revenue Code of 1986; 26 USC 755 Internal Revenue Code of 1986; 26 USC 338 Internal Revenue Code of 1986; 26 USC 167 Internal Revenue Code of 1986; 26 USC 1031 Internal Revenue Code of 1986

CFR Citation: 26 CFR 1

Legal Deadline: None.

Abstract: This regulation will explain and illustrate the application of the residual method of allocation to the purchase price in certain asset acquisitions. It will also provide certain informational reporting requirements.

Timetable:

Action	Date	FR Cite
NPRM	00/00/00	

Small Entity: No

Additional Information: LR-119-86.

Drafting attorney: Judith C. Winkler (202) 566-3458.

Reviewing attorney: Patricia W. Pellervo (202) 566-3458.

Reviewing attorney: Charles M. Whedbee (202) 566-3458.

Treasury attorney: Kathleen Ferrell (202) 566-2175.

Agency Contact: Judith C. Winkler, Attorney, Department of the Treasury, Internal Revenue Service, 1111 Constitution Avenue, N.W., Washington, D.C. 20224, 202 566-3458

RIN: 1545-AJ06

2295. INCOME TAX—TAX STRADDLES

Legal Authority: 26 USC 7805 Internal Revenue Code of 1986; 26 USC 1092 Internal Revenue Code of 1986; 26 USC 6653 Internal Revenue Code of 1986; 26 USC 263(g) Internal Revenue Code of 1986; 26 USC 1256 Internal Revenue Code of 1986; 26 USC 1212 Internal Revenue Code of 1986; 26 USC 1236 Internal Revenue Code of 1986; 26 USC 1234A Internal Revenue Code of 1986; 26 USC 1232 Internal Revenue Code of 1986; 26 USC 1221 Internal Revenue Code of 1986

CFR Citation: 26 CFR 1

Legal Deadline: None.

Abstract: These regulations will provide the rules under Title 5 of the Economic Recovery Tax Act of 1981 for tax straddles. These regulations will affect the tax treatment of regulated

futures contracts, forward contracts, and positions in commodities.

Timetable:

Action	Date	FR Cite
NPRM	07/00/88	

Small Entity: Not Applicable

Additional Information: LR-187-81.

Drafting attorney: Timothy J. McKenna (202) 566-3287.

Reviewing attorney: John M. Fischer (202) 566-3394.

In Office of Chief Counsel (Legislation and Regulations Division) for preparation of notice.

Agency Contact: Timothy J. McKenna, Attorney, Department of the Treasury, Internal Revenue Service, 1111 Constitution Ave., N.W., Washington, D.C. 20224, 202 566-3287

RIN: 1545-AC21

2296. INCOME TAX—GAIN FROM SALE OR EXCHANGE OF STOCK IN FOREIGN CORPORATIONS

Legal Authority: 26 USC 7805 Internal Revenue Code of 1986; 26 USC 1248 Internal Revenue Code of 1986; 26 USC 751 Internal Revenue Code of 1986

CFR Citation: 26 CFR 1

Legal Deadline: None.

Abstract: The regulations would amend existing regulations with respect to the section 1248 amount attributable to stock of lower tier subsidiaries and stock in less developed country corporations. The regulations would also provide rules for determining the section 1248 amount due to certain dispositions on which gain is not recognized. The regulations would also expand the foreign tax credit available with respect to the section 1248 amount attributable to third-tier subsidiaries.

Timetable:

Action	Date	FR Cite
Next Action Undetermined		

Small Entity: Not Applicable

Additional Information: INTL - 42-86

Drafting attorney: David A. Juster (202) 566-6384.

Reviewing attorney: Carol Doran Klein (202) 566-6419.

Draft of notice in International Tax Counsel for review.

Agency Contact: David A. Juster, Attorney CC:INTL:Br3, Department of the Treasury, Internal Revenue Service, 1111 Constitution Ave., N.W., Washington, D.C. 20224, 202 566-6384

RIN: 1545-AC31

2297. INCOME TAX—TO CLARIFY TAX TREATMENT OF TRANSFERS OF FRANCHISES, TRADEMARKS, & TRADE NAMES

Legal Authority: 26 USC 7805 Internal Revenue Code of 1986; 26 USC 1253 Internal Revenue Code of 1986

CFR Citation: 26 CFR 1

Legal Deadline: None.

Abstract: This regulation would clarify the tax treatment of the transfer of a franchise trademark, or trade name under section 1253 of the Internal Revenue Code of 1954. It would also provide guidance regarding how to allocate the basis among the portions of the sale proceeds which are treated as arising from the sale of a capital asset and other portions which are ordinary income.

Timetable:

Action	Date	FR Cite
NPRM	00/00/00	
Final Action	00/00/00	
Final Action Effective	00/00/00	

Small Entity: Not Applicable

Additional Information: LR-183-81.

Drafting attorney: John A. Tolleris (202) 566-3590.

Reviewing attorney: John M. Coulter, Jr. (202) 566-3740.

Agency Contact: John A. Tolleris, Attorney, Department of the Treasury, Internal Revenue Service, 1111 Constitution Ave., N.W., Washington, D.C. 20224, 202 566-3590

RIN: 1545-AC34

2298. HEDGING EXCEPTION TO MARK-TO-MARKET RULES FOR SECTION 1256 CONTRACTS, DEFERRAL OF CERTAIN STRADDLE LOSSES, AND WASH-SALE AND SHORT-SALE PRINCIPLES APPLICABLE TO CERTAIN STRADDLE TRANSACTIONS

Legal Authority: 26 USC 7805 Internal Revenue Code of 1986; 26 USC 1256 (e) Internal Revenue Code of 1986

CFR Citation: 26 CFR 1

Legal Deadline: None.

Abstract: These regulations will provide rules relating to the hedging transaction exception for section 1256 contracts and straddles.

Timetable:

Action	Date	FR Cite
NPRM	07/00/88	

Small Entity: Not Applicable

Additional Information: LR-11-86.

Drafting attorney: Timothy J. McKenna (202) 566-3287.

Reviewing attorney: John M. Fischer (202) 566-3394.

Treasury attorney: Kathleen Ferrell (202) 566-2175.

Agency Contact: Timothy J. McKenna, Attorney, Department of the Treasury, Internal Revenue Service, 1111 Constitution Ave., NW, Washington, DC 20224, 202 566-3287

RIN: 1545-AI59

2299. DISPOSITION GAIN REPRESENTING ACCRUED MARKET DISCOUNT TREATED AS ORDINARY INCOME; DEFERRAL OF INTEREST DEDUCTION ALLOCABLE TO ACCRUED MARKET DISCOUNT

Legal Authority: 26 USC 7805 Internal Revenue Code of 1986; 26 USC 1276 Internal Revenue Code of 1986; 26 USC 1278 Internal Revenue Code of 1986

CFR Citation: 26 CFR 1

Legal Deadline: None.

Abstract: These regulations will provide rules relating to the Treatment of Gain Realized on the Disposition of any Market Discount Bond as Ordinary Income. These regulations will also prescribe the extent to which a deduction for interest allocable to accrued market discount is deferred.

Timetable:

Action	Date	FR Cite
NPRM	12/31/88	

Small Entity: Not Applicable

Additional Information: LR-21-85.

Drafting attorney: Laura Ann M. Lauritzen (202) 566-3459.

Reviewing attorney: Susan T. Baker (202) 566-3294.

Treasury Attorney: Bryan Collins (202) 566-4979.

Agency Contact: Laura Ann M. Lauritzen, Attorney, Department of the Treasury, Internal Revenue Service, 1111 Constitution Avenue, N.W., Washington, D.C.20224, 202 566-6456

RIN: 1545-AH82

2300. INCOME TAX-TREATMENT OF STRIPPED BONDS AND STRIPPED COUPON

Legal Authority: 26 USC 7805 Internal Revenue Code of 1986; 26 USC 1286 Internal Revenue Code of 1986

CFR Citation: 26 CFR 1

Legal Deadline: None.

Abstract: These regulations will provide rules relating to the tax treatment of stripped bonds and stripped coupons purchased after July 1, 1982. In particular, guidance will be given as to the proper method for allocation of basis and purchase price.

Timetable:

Action	Date	FR Cite
NPRM	00/00/00	

Small Entity: Not Applicable

Additional Information: LR-19-85.

Drafting attorney: Ewan D. Purkiss (202) 566-3238.

Reviewing attorney: John A. Fischer (202) 566-3394.

Office of Tax Legislative Counsel reviewing attorney: Reed Shuldiner (202) 535-6963.

Agency Contact: Ewan D. Purkiss, Attorney-Advisor, Department of the Treasury, Internal Revenue Service, 1111 Constitution Avenue, N.W., Washington, D.C. 20224, 202 566-3238

RIN: 1545-AH75

2301. INCOME TAX--TREATMENT OF OBLIGATIONS WHICH PURPORT TO REPRESENT DEBT AS A SECOND CLASS OF STOCK

Legal Authority: 26 USC 7805 Internal Revenue Code of 1986; 26 USC 1361 Internal Revenue Code of 1986

CFR Citation: 26 CFR 1

Legal Deadline: None.

Abstract: The regulations would provide guidance to shareholders and debt instrument holders who must comply with the law relating to subchapter S corporations. The regulations will provide rules relating to whether or not a subchapter S corporation has more than one class of stock.

Timetable:

Action	Date	FR Cite
NPRM	00/00/00	

Small Entity: Not Applicable

Additional Information: LR-4-73.

Drafting attorney: David R. Haglund (202) 566-3297.

Reviewing attorney: Walter H. Woo (202) 566-3297.

Office of Tax Legislative Counsel (Treasury) reviewing attorney: Bryan Collins (202) 566-2175.

Agency Contact: David R. Haglund, Attorney, Department of the Treasury, Internal Revenue Service, 1111 Constitution Ave., N.W., Washington, D.C. 20224, 202 566-3297

RIN: 1545-AC37

2302. AMENDMENT OF INCOME TAX REGULATIONS UNDER CODE SECTIONS 1362 AND 1363 RELATING TO THE ELECTION, REVOCATION, AND TERMINATION OF AN S CORPORATION

Legal Authority: 26 USC 7805 Internal Revenue Code of 1986; 26 USC 1362 Internal Revenue Code of 1986; 26 USC 1363 Internal Revenue Code of 1986

CFR Citation: 26 CFR 1

Legal Deadline: None.

Abstract: The regulations would provide guidelines for electing, revoking and terminating S corporation status.

Timetable:

Action	Date	FR Cite
NPRM	00/00/00	

Small Entity: Not Applicable

Additional Information: LR-260-82.

Drafting attorney: Stuart G. Wessler (202) 566-3297.

Reviewing attorney: Walter H. Woo (202) 566-3297.

Treasury attorney: Bryan Collins (202) 535-6968.

Agency Contact: Stuart G. Wessler, Attorney, Department of the Treasury, Internal Revenue Service, 1111 Constitution Ave., N.W., Washington, D.C. 20224, 202 566-3297

RIN: 1545-AE26

2303. INCOME TAX--PASS-THRU OF S CORPORATION ITEMS TO SHAREHOLDERS

Legal Authority: 26 USC 7805 Internal Revenue Code of 1986; 26 USC 1366 Internal Revenue Code of 1986

CFR Citation: 26 CFR 1

Legal Deadline: None.

Abstract: The regulations would provide rules relating to the tax treatment of income and loss items passed through to the shareholders.

Timetable:

Action	Date	FR Cite
NPRM	06/30/88	

Small Entity: Not Applicable

Additional Information: LR-261-82.

Drafting attorney: Stuart G. Wessler (202) 566-3297.

Reviewing attorney: Walter H. Woo (202) 566-3297.

Office of Tax Legislative Counsel (Treasury) reviewing attorney: Bryan Collins (202) 566-2175.

Agency Contact: Stuart G. Wessler, Attorney, Department of the Treasury, Internal Revenue Service, 1111 Constitution Ave., N.W., Washington, D.C. 20224, 202 566-3297

RIN: 1545-AE85

2304. INCOME TAX--RULES RELATING TO ADJUSTMENT TO BASIS OF STOCK OF SHAREHOLDERS OF S CORPORATION AND TO DETERMINATION OF BASIS OF PROPERTY DISTRIBUTION BY CORPORATION

Legal Authority: 26 USC 7805 Internal Revenue Code of 1986; 26 USC 1367 Internal Revenue Code of 1986; 26 USC 1368 Internal Revenue Code of 1986

CFR Citation: 26 CFR 1

Legal Deadline: None.

Abstract: The proposed regulations would provide rules for adjusting the basis of stock of a shareholder in an S corporation and rules for determining the treatment of property distributions by an S corporation.

Timetable:

Action	Date	FR Cite
Next Action Undetermined		

Small Entity: Not Applicable

Additional Information: LR-264-82.

Drafting attorney: Stuart G. Wessler (202) 566-3297.

Reviewing attorney: Walter H. Woo (202) 566-3297.

Office of Tax Legislative Counsel (Treasury) reviewing attorney: Bryan Collins (202) 566-2175.

Agency Contact: Stuart G. Wessler, Attorney, Department of the Treasury, Internal Revenue Service, 1111 Constitution Ave., N.W., Washington, D.C. 20224, 202 566-3297

RIN: 1545-AE88

2305. INCOME TAX—APPLICATION OF SUBCHAPTER C RULES TO S CORPORATIONS

Legal Authority: 26 USC 7805 Internal Revenue Code of 1986; 26 USC 1371 Internal Revenue Code of 1986

CFR Citation: 26 CFR 1

Legal Deadline: None.

Abstract: The proposal would amend the regulations under section 1371 to changes made by the subchapter S Revision Act of 1982 relating to the application of subchapter C rules to S corporations and other technical amendments under sections 2, 5, and 6 of the Act. The regulation would provide the public with guidance to comply with the Act.

Timetable:

Action	Date	FR Cite
NPRM	00/00/00	

Small Entity: Not Applicable

Additional Information: LR-265-82.

Drafting attorney: Joel S. Rutstein (202) 566-3297.

Reviewing attorney: John B. Bromell (202) 566-3326.

Office of Tax Legislative Counsel (Treasury) reviewing attorney: Bryan Collins (202) 566-2175.

Agency Contact: Joel S. Rutstein, Attorney, Department of the Treasury, Internal Revenue Service, 1111 Constitution Ave., N.W., Washington, D.C. 20224, 202 566-3297

RIN: 1545-AE90

2306. CROSS-REFERENCE—APPLICATION OF SECTION 1374 BUILT-IN GAIN TAX TO C CORPORATION'S ELECTING S CORPORATION STATUS

Legal Authority: 26 USC 7805 Internal Revenue Code of 1986; 26 USC 1374 Internal Revenue Code of 1986; 26 USC 337 Internal Revenue Code of 1986

CFR Citation: 26 CFR 1

Legal Deadline: None.

Abstract: Proposal will provide rules relating to the section 1374 built-in gains tax to C corporations electing S corporation status.

Timetable:

Action	Date	FR Cite
NPRM	04/15/88	

Small Entity: Not Applicable

Additional Information:

LR-80-87.

Drafting attorney: Mark S. Jennings (202) 566-3458.

Reviewing attorney: Robert J. Mason (202) 566-3463.

Agency Contact: Mark S. Jennings, Attorney, Department of the Treasury, Internal Revenue Service, 1111 Constitution Avenue, N.W., Washington, D.C. 20224, 202 566-3458

RIN: 1545-AK93

2307. INCOME TAX—DEFINITIONS AND SPECIAL RULES PERTAINING TO S CORPORATION

Legal Authority: 26 USC 7805 Internal Revenue Code of 1986; 26 USC 1377 Internal Revenue Code of 1986; 26 USC 1379 Internal Revenue Code of 1986

CFR Citation: 26 CFR 1

Legal Deadline: None.

Abstract: Regulations would define and interpret special rules contained in Sections 1377 and 1379 of the Internal Revenue Code of 1986, the thereby giving guidance to the public on how the Internal Revenue Service intends to interpret those sections.

Timetable:

Action	Date	FR Cite
NPRM	06/30/88	

Small Entity: Not Applicable

Additional Information: LR-268-82.

Drafting attorney: Stuart G. Wessler (202) 566-3297.

Reviewing attorney: Walter H. Woo (202) 566-3297.

Office of Tax Legislative Counsel Reviewing attorney:

Bryan P. Collins (202) 566-2175.

Agency Contact: Stuart G. Wessler, Attorney, Department of the Treasury, Internal Revenue Service, 1111 Constitution Ave., N.W., Washington, D.C. 20224, 202 566-3297

RIN: 1545-AE94

2308. ● WITHHOLDING TAX ON PAYMENTS FROM PARTNERSHIPS TO FOREIGN PARTNERS

Significance: Agency Priority

Legal Authority: 26 USC 7805 Internal Revenue Code of 1986; 26 USC 1446 Internal Revenue Code of 1986

CFR Citation: 26 CFR 1

Legal Deadline: Statutory, December 31, 1987. Withholding must begin no later than January 1, 1988.

Abstract: The regulation explains when withholding is required under section 1446, how and when the amounts withheld are to be reported and paid over to the Internal Revenue Service, and when the taxpayer is to credit the tax withheld against its U.S. income tax liability or apply for a refund. The notice will be published simultaneously with, and will cross-reference to, temporary regulations dealing with these matters (INTL-938-86). No significant policy issues are involved.

Timetable:

Action	Date	FR Cite
NPRM	00/00/00	

Small Entity: Not Applicable

Additional Information: INTL-980-86

Drafting Attorney: David Chan (202) 634-5404.

Reviewing Attorney: Robert E.Culbertson, Jr. (202) 634-5404.

Treasury Attorney: David Crowe (202) 566-5791.

Income Taxes

Agency Contact: David F. Chan, Attorney-Advisor, Department of the Treasury, Internal Revenue Service,

1111 Constitution Avenue, N.W., Washington, D.C. 20224, 202 634-5404

RIN: 1545-AL30

2309. INVESTMENT ADJUSTMENTS UNDER THE CONSOLIDATED RETURN REGULATIONS

Legal Authority: 26 USC 7805 Internal Revenue Code of 1986; 26 USC 1502 Internal Revenue Code of 1986

CFR Citation: 26 CFR 1

Legal Deadline: None.

Abstract: Provision would amend the consolidated return investment adjustment rules by changing the computation of earnings and profits where section 312 (k), (l), (m), or (n) applies.

Timetable:

Action	Date	FR Cite
Next Action Undetermined		

Small Entity: No

Additional Information: LR-222-81.

Drafting attorney: Judith C. Winkler (202) 566-3458.

Reviewing attorney: John Broadbent (202) 566-3458.

Agency Contact: Judith C. Winkler, Attorney, Department of the Treasury, Internal Revenue Service, 1111 Constitution Ave., N.W., Washington, D.C. 20224, 202 566-3458

RIN: 1545-AC47

2310. INCOME TAX—APPLICATION OF SECTION 465 AT RISK LIMITATIONS TO MEMBERS THAT JOIN IN FILING CONSOLIDATED RETURNS

Legal Authority: 26 USC 7805 Internal Revenue Code of 1986; 26 USC 1502 Internal Revenue Code of 1986; 26 USC 465 Internal Revenue Code of 1986

CFR Citation: 26 CFR 1

Legal Deadline: None.

Abstract: Provision would amend the consolidated returns regulations to provide rules applying the at-risk limitations of section 465 of the Internal Revenue Code of 1954 to affiliated groups filing consolidated returns, thereby giving the public needed guidance as to how these rules apply to such groups.

Timetable:

Action	Date	FR Cite
NPRM	00/00/00	

Small Entity: No

Additional Information: LR-75-79.

Drafting attorney: Keith E. Stanley (202) 566-3458.

Reviewing attorney: Charles M. Whedbee (202) 566-3458.

Treasury attorney: Patricia McClanahan (202) 566-4902.

Agency Contact: Keith E. Stanley, Attorney, Department of the Treasury, Internal Revenue Service, 1111 Constitution Ave., N.W., Washington, D.C. 20224, 202 566-3458

RIN: 1545-AC55

2311. INCOME TAX—DELETION OF THE REQUIREMENT OF SECTION 1.1502-47 (D) (12) (V) (C) THAT, IN APPLYING TACKING RULE, PROFITABLE AND LOSS LIFE ACTIVITIES NOT BE SEPARATED

Legal Authority: 26 USC 7805 Internal Revenue Code of 1986; 26 USC 1502 Internal Revenue Code of 1986

CFR Citation: 26 CFR 1

Legal Deadline: None.

Abstract: The regulation will prospectively delete the requirement of section 1.1502-47 (d) (12) (v) (C) relating to the restriction on the separation of profitable activities from loss activities in applying the tacking rule to life insurance companies.

Timetable:

Action	Date	FR Cite
NPRM	00/00/00	

Small Entity: No

Additional Information: LR-157-86

Drafting attorney: Keith Stanley (202) 566-3458.

Reviewing attorney: Charles M. Whedbee (202) 566-3458.

Treasury attorney: Don Rocap (202) 566-6278.

Agency Contact: Keith E. Stanley, Attorney, Department of the Treasury, Internal Revenue Service, 1111 Constitution Avenue, N.W., Washington, D.C. 20224, 202 566-3458

RIN: 1545-AI98

2312. CROSS-REFERENCE—CONSOLIDATED RETURN INVESTMENT ADJUSTMENTS WITH RESPECT TO AN ACQUIRED SUBSIDIARY'S BUILT-IN GAINS OR LOSSES

Legal Authority: 26 USC 7805 Internal Revenue Code of 1986; 26 USC 1502 Internal Revenue Code of 1986; 26 USC 337 (d) Internal Revenue Code of 1986

CFR Citation: 26 CFR 1

Legal Deadline: None.

Abstract: Proposal will prevent the consolidated return investment adjustments from reflecting the recognized built-in gains or losses of assets acquired in certain corporation acquisitions.

Timetable:

Action	Date	FR Cite
NPRM	04/01/88	

Small Entity: Not Applicable

Additional Information:

LR-78-87

Drafting attorney: Mark S. Jennings (202) 566-3458.

Reviewing attorney: John Broadbent (202) 566-3458.

Agency Contact: Mark S. Jennings, Attorney, Department of the Treasury, Internal Revenue Service, 1111 Constitution Avenue, N.W., Washington, D.C. 20224, 202 566-3458

RIN: 1545-AK94

2313. ● CONSOLIDATED RETURNS

Legal Authority: 26 USC 7805 Internal Revenue Code of 1986; 26 USC 1502 Internal Revenue Code of 1986

CFR Citation: 26 CFR 1

Legal Deadline: None.

Abstract: This regulation provides revisions of consolidated return regulations under sections 1.1502-14 and 1.1502-31.

Timetable:

Action	Date	FR Cite
NPRM	00/00/00	

Small Entity: Not Applicable

Additional Information: LR-4-88

Drafting attorney: Patricia Pellervo (202) 566-3458.

Reviewing attorney: Charles Whedbee (202) 566-3458.

Income Taxes

Agency Contact: Patricia Pellervo, Attorney, Department of the Treasury, Internal Revenue Service, 1111 Constitution Avenue, N.W., Washington, D.C. 20224, 202 566-3458

RIN: 1545-AL44

2314. INCOME TAX–INCLUDIBILITY IN AN AFFILIATED GROUP OF SUBSIDIARIES FORMED TO COMPLY WITH FOREIGN LAWS

Legal Authority: 26 USC 7805 Internal Revenue Code of 1986; 26 USC 1504 Internal Revenue Code of 1986

CFR Citation: 26 CFR 1

Legal Deadline: None.

Abstract: The regulations would provide rules relating to an election to treat a foreign subsidiary of a United States corporation as a domestic corporation if the subsidiary is formed in a contiguous country to comply with foreign law.

Timetable:

Action	Date	FR Cite
NPRM	12/31/89	

Small Entity: Not Applicable

Additional Information: LR-189-77.

Drafting attorney: Mark S. Jennings (202) 566-3458.

Reviewing attorney: Robert J. Mason (202) 566-3463.

Agency Contact: Mark S. Jennings, Attorney, Department of the Treasury, Internal Revenue Service, 1111 Constitution Ave., N.W., Washington, D.C. 20224, 202 566-3458

RIN: 1545-AC58

2315. INCOME TAX – AMENDMENT OF REGULATIONS UNDER SECTION 1504 (A) OF THE CODE, AS AMENDED BY SECTION 60 OF THE TAX REFORM ACT OF 1984, DEFINING "AFFILIATED GROUP"

Legal Authority: 26 USC 7805 Internal Revenue Code of 1986; 26 USC 1504 Internal Revenue Code of 1986

CFR Citation: 26 CFR 1

Legal Deadline: None.

Abstract: These regulations will provide rules defining "affiliated group" for purposes of subtitle A of the Code.

Timetable:

Action	Date	FR Cite
NPRM	08/01/88	

Small Entity: Not Applicable

Additional Information: LR-152-84.

Drafting attorney: Patricia W. Pellervo (202) 566-3458.

Reviewing attorney: Robert J. Mason (202) 566-3463.

Office of Tax Legislative Counsel (Treasury) reviewing attorney: Bryan Collins (202) 566-2175.

Agency Contact: Patricia W. Pellervo, Attorney, Department of the Treasury, Internal Revenue Service, 1111 Constitution Ave., N.W., Washington, D.C. 20224, 202 566-3458

RIN: 1545-AH09

2316. ESTATE AND GIFT TAXES, INCOME TAXES-UNIFIED CREDIT IN LIEU OF EXEMPTIONS, UNIFIED RATE SCHEDULE FOR ESTATE AND GIFT TAXES SITUS OF FOREIGN PARTNERSHIPS FOR ESTATE TAXATION

Legal Authority: 26 USC 7805 Internal Revenue Code of 1986; 26 USC 2001 Internal Revenue Code of 1986; 26 USC 2010 Internal Revenue Code of 1986; 26 USC 2011 Internal Revenue Code of 1986; 26 USC 2012(a) Internal Revenue Code of 1986; 26 USC 2012(c) Internal Revenue Code of 1986; 26 USC 2013(b) Internal Revenue Code of 1986; 26 USC 2013(e)(1) Internal Revenue Code of 1986; 26 USC 2014(b)(2) Internal Revenue Code of 1986; 26 USC 2035 Internal Revenue Code of 1986; 26 USC 2038(a) Internal Revenue Code of 1986; 26 USC 2044 Internal Revenue Code of 1986; 26 USC 2052 Internal Revenue Code of 1986; 26 USC 2104 Internal Revenue Code of 1986; 26 USC 2106 Internal Revenue Code of 1986

CFR Citation: 26 CFR 20; 26 CFR 25; 26 CFR 1

Legal Deadline: None.

Abstract: The unified rate schedule for estate and gift taxes and unified credit in lieu of exemptions will be implemented by the regulation. The regulations also relate to the estate tax consequences of transfers made within three years of death. In addition, the regulations clarify the situs test of foreign partnerships for purposes of the estate taxation of nonresident alien decedents. The regulations also provide rules relating to charitable remainder trusts.

Timetable:

Action	Date	FR Cite
Next Action Undetermined		

Small Entity: Not Applicable

Additional Information: LR-212-76.

Drafting attorney: Ruth Hoffman (202) 566-3287.

Reviewing attorney: Fred E. Grundeman (202) 566-3287.

Agency Contact: Ruth Hoffman, Attorney, Department of the Treasury, Internal Revenue Service, 1111 Constitution Ave., N.W., Washington D.C. 20224, 202 566-3287

RIN: 1545-AC60

2317. ESTATE TAX–VALUATION OF CERTAIN FARM, ETC. REAL PROPERTY

Legal Authority: 26 USC 7805 Internal Revenue Code of 1986; 26 USC 2032A Internal Revenue Code of 1986; 26 USC 2013(f) Internal Revenue Code of 1986; 26 USC 1016(c) Internal Revenue Code of 1986; 26 USC 1040 Internal Revenue Code of 1986

CFR Citation: 26 CFR 20; 26 CFR 1

Legal Deadline: None.

Abstract: Special use valuation of certain farm and closely held business real property is available to qualifying estates. The regulation will contain definitions and rules relating to the various requirements which an estate must satisfy and will provide rules governing the imposition and payment of the "additional estate tax" should a qualified heir fail to meet the post-death requirements.

Timetable:

Action	Date	FR Cite
NPRM	07/00/88	

Small Entity: Not Applicable

Additional Information: LR-209-81.

Drafting attorney: Fred E. Grundeman (202) 566-3287.

Reviewing attorney: Ada S. Rousso (202) 566-3287.

Office of the Tax Legislative Counsel (Treasury) reviewing attorney: Susan Himes (202) 566-8527.

Agency Contact: Fred E. Grundeman, Attorney, Department of the Treasury, Internal Revenue Service, 1111

Constitution Ave., N.W., Washington, D.C. 20224, 202 566-3287

RIN: 1545-AC62

2318. CAPITALIZATION OF CERTAIN PENSION, ETC. COSTS

Legal Authority: 26 USC 7805 Internal Revenue Code of 1986; 26 USC 263A Internal Revenue Code of 1986; 26 USC 460 Internal Revenue Code of 1986

CFR Citation: 26 CFR 1

Legal Deadline: None.

Abstract: These regulations will provide guidance relating to the requirement that certain costs of deferred compensation must be capitalized rather than deducted currently.

Timetable:

Action	Date	FR Cite
NPRM	04/01/88	

Small Entity: Not Applicable

Additional Information: EE-56-78

Drafting Attorney: Michael Garvey (202) 566-3430.

Review Attorney: Jonathan P. Marget (202) 566-3961.

Treasury Attorney: Harry Conaway (202) 566-8277.

Agency Contact: Michael Garvey, Attorney, Department of the Treasury, Internal Revenue Service, 1111 Constitution Ave., N.W., Washington, D.C. 20224, 202 566-3430

RIN: 1545-AI92

2319. ESTATE TAX—GENERATION SKIPPING TRANSFER TAX

Legal Authority: 26 USC 7805 Internal Revenue Code of 1986; 26 USC 2653 Internal Revenue Code of 1986; 26 USC 2662 Internal Revenue Code of 1986; 26 USC 2663 Internal Revenue Code of 1986

CFR Citation: 26 CFR 26; 26 CFR 26a

Legal Deadline: None.

Abstract: The regulations will provide rules relating to the effective date provisions, return requirements, definitions, and certain special rules for the tax on generation skipping transfers.

Timetable:

Action	Date	FR Cite
NPRM	04/01/88	

Small Entity: Not Applicable

Additional Information:

LR-128-86.

Drafting attorney: Maurice B. Foley (202) 566-4336.

Reviewing attorney: Fred E. Grundeman (202) 566-3287.

Treasury attorney: Susan Himes (202) 566-8527.

Agency Contact: Maurice B. Foley, Attorney, Department of the Treasury, Internal Revenue Service, 1111 Constitution Ave., N.W., Washington, D.C. 20224, 202 566-4336

RIN: 1545-AJ11

2320. AMENDMENT OF THE EMPLOYMENT TAX REGULATIONS UNDER CODE SECTION 3121 TO CONFORM TO SECTION 321 OF THE SOCIAL SECURITY AMENDMENTS OF 1983

Legal Authority: 26 USC 7805 Internal Revenue Code of 1986; 26 USC 3121 Internal Revenue Code of 1986

CFR Citation: 26 CFR 36

Legal Deadline: None.

Abstract: The regulation would provide guidance to taxpayers with respect to agreements entered into under section 3121 of the Internal Revenue Code of 1954 as that Section was amended by section 321 of the Social Security Amendments of 1983.

Timetable:

Action	Date	FR Cite
NPRM	00/00/00	

Small Entity: Not Applicable

Additional Information: LR-192-83.

Drafting Attorney: John B. Bromell (202) 566-3297.

Reviewing attorney: John B. Bromell (202) 566-3297.

Agency Contact: John B. Bromell, Attorney, Department of the Treasury, Internal Revenue Service, 1111 Constitution Ave., N.W., Washington, D.C. 20224, 202 566-3297

RIN: 1545-AF91

2321. TREATMENT OF CERTAIN DEFERRED COMPENSATION AND SALARY REDUCTION ARRANGEMENTS

Legal Authority: 26 USC 7805 Internal Revenue Code of 1986; 26 USC 6302(c) Internal Revenue Code of 1886

CFR Citation: 26 CFR 31

Legal Deadline: None.

Abstract: Proposal would provide rules concerning the treatment of certain deferred compensation and salary reduction arrangements under section 3121 (v) and section 3306 (r) of the Internal Revenue Code of 1954, thereby giving needed guidance to the public on how the Internal Revenue Service intends to interpret those sections of the Code.

Timetable:

Action	Date	FR Cite
NPRM	06/30/88	

Small Entity: Not Applicable

Additional Information: EE-142-87.

Drafting attorney: Nerman Dobynes Hubbard (202) 566-3430.

Reviewing attorney: Michael A. Thrasher (202) 566-3651.

Agency Contact: Nerman Dobynes Hubbard, Attorney, Department of the Treasury, Internal Revenue Service, 1111 Constitution Ave., N.W., Washington, D.C. 20224, 202 566-3430

RIN: 1545-AF97

2322. EMPLOYMENT TAX—WITHHOLDING FROM PENSIONS, ANNUITIES, AND OTHER DEFERRED INCOME

Legal Authority: 26 USC 7805 Internal Revenue Code of 1986; 26 USC 3405 Internal Revenue Code of 1986; 26 USC 6047(e) Internal Revenue Code of 1986

CFR Citation: 26 CFR 35

Legal Deadline: None.

Abstract: Proposed regulations would clarify and amend the temporary regulations relating to withholding from pensions, annuities, and other deferred income.

Timetable:

Action	Date	FR Cite
NPRM	06/30/88	

Small Entity: Not Applicable

Additional Information: EE-115-82.

Drafting attorney: Mary E. Brennan (202) 566-3903.

Reviewing attorney: Richard J. Wickersham (202) 566-3250.

Treasury attorney: Harry Conaway (202) 566-8277.

Agency Contact: Mary E. Brennan, Attorney, Department of the Treasury, Internal Revenue Service, 1111 Constitution Ave., N.W., Washington, D.C. 20224, 202 566-3430

RIN: 1545-AE98

2323. ● WITHHOLDING ON CERTAIN DEFERRED PAYMENTS OUTSIDE THE UNITED STATES

Legal Authority: 26 USC 3405 (d) (13) Internal Revenue Code of 1986

CFR Citation: 26 CFR 35

Legal Deadline: None.

Abstract: The regulation will provide questions and answers dealing with circumstances under which an election for no withholding on employer deferred compensation plan payments may not be made.

Timetable:

Action	Date	FR Cite
NPRM	00/00/00	

Small Entity: Not Applicable

Additional Information: INTL

Drafting attorney: Gerald H. Parshall, Jr. (202) 287-4851.

Reviewing attorney: Michael F. Patton (202) 287-4851.

Treasury attorney: David Crowe (202) 566-8275.

Agency Contact: Gerald H. Parshall, Jr., Attorney-Advisor, Department of the Treasury, Internal Revenue Service, 950 L'Enfant Plaza South, S.W., Room 3319, Washington, D.C. 20024, 202 287-4851

RIN: 1545-AL31

2324. TO PROVIDE REGULATIONS RELATING TO BACKUP WITHHOLDING UNDER SECTION 3406

Legal Authority: 26 USC 7805 Internal Revenue Code of 1986; 26 USC 3406 Internal Revenue Code of 1986

CFR Citation: 26 CFR 31

Legal Deadline: None.

Abstract: The regulations will provide that a tax equal to 20 percent of any reportable payment is required to be withheld if certain conditions exist. With respect to reportable interest or dividends, backup withholding applies if (1) no number is provided in the manner required, (2) the Service notifies the payor that the payee's taxpayer identification number is not correct, (3) the payee is subject to backup withholding due to a notified payee underreporting, and (4) the payee fails to certify when required that he or she is not subject to backup withholding due to notified payee underreporting. With respect to other reportable payments (such as rents, royalties, nonemployee compensation, broker transactions, or barter exchanges), backup withholding applies if (1) no taxpayer identification number is provided, or (2) the Service notifies the payor that the payee's taxpayer identification number is not correct.

Timetable:

Action	Date	FR Cite
NPRM	12/30/88	

Small Entity: Not Applicable

Additional Information: LR-224-82.

Drafting attorney: Renay France (202) 566-3459.

Reviewing attorney: John M. Coulter, Jr. (202) 566-3331.

Treasury Attorneys: Susan Himes (202) 566-8527.

Agency Contact: Renay France, Attorney, Department of the Treasury, Internal Revenue Service, 1111 Constitution Ave., N.W., Washington, D.C. 20224, 202 566-3459

RIN: 1545-AE20

2325. ELECTION TO HAVE CERTAIN DIESEL FUEL TAXES IMPOSED ON SALES TO RETAILERS

Legal Authority: 26 USC 7805 Internal Revenue Code of 1986; 26 USC 4041 Internal Revenue Code of 1986

CFR Citation: 26 CFR 48

Legal Deadline: None.

Abstract: The regulations will provide guidance to assist diesel fuel retailers in making an election to have the diesel fuel excise tax collected by the wholesaler at the time the liquid is sold to the retailer.

Timetable:

Action	Date	FR Cite
NPRM	04/01/88	

Small Entity: Not Applicable

Additional Information:

LR-114-86.

Drafting attorney: Lauren G. Shaw (202) 566-3287.

Reviewing Attorney: William Jackson (202) 566-3287.

Treasury Attorney: Ellen Aprill (202) 566-2565.

Agency Contact: Lauren G. Shaw, Attorney-Advisor, Department of the Treasury, Internal Revenue Service, 1111 Constitution Ave., N.W., Washington, D.C. 20224, 202 566-3287

RIN: 1545-AJ13

2326. EXCISE TAX—RETAILERS EXCISE TAXES ON MOTOR VEHICLES

Legal Authority: 26 USC 4052 Internal Revenue Code of 1986; 26 USC 4051 Internal Revenue Code of 1986; 26 USC 4053 Internal Revenue Code of 1986

CFR Citation: 26 CFR 48

Legal Deadline: None.

Abstract: The regulations will provide guidance as to what kinds of vehicles are taxable and how the tax is computed.

Timetable:

Action	Date	FR Cite
NPRM	09/00/88	

Small Entity: Not Applicable

Additional Information: LR-30-83.

Drafting attorney: Maurice B. Foley (202) 566-4336.

Reviewing attorney: Ada Rousso (202) 566-3287.

Treasury attorney: Ellen Aprill (202) 566-5453.

Agency Contact: Maurice B. Foley, Attorney, Department of the Treasury, Internal Revenue Service, 1111 Constitution Ave., N.W., Washington, D.C. 20224, 202 566-4336

RIN: 1545-AF61

2327. EXCISE TAX - EXCISE TAX ON HEAVY TRUCKS, TRUCK TRAILERS AND SEMITRAILERS, AND TRACTORS

Legal Authority: 26 USC 4052 Internal Revenue Code of 1986

CFR Citation: 26 CFR 48

Legal Deadline: None.

Abstract: These regulations will clarify the definition of first retail sale.

Timetable:

Action	Date	FR Cite
NPRM	04/01/88	

Small Entity: No

Additional Information: LR-17-86.

Drafting attorney: Maurice B. Foley (202) 566-4336.

Reviewing attorney: Ada Rousso (202) 566-3287.

Treasury attorney: Ellen Aprill (202) 566-2565.

Agency Contact: Maurice B. Foley, Attorney, Department of the Treasury, Internal Revenue Service, 1111 Constitution Ave., N.W., Washington, D.C. 20224, 202 566-4336

RIN: 1545-AI51

2328. CERTAIN INDEBTEDNESS TREATED AS PAYMENT ON INSTALLMENT OBLIGATIONS

Legal Authority: 26 USC 7805 Internal Revenue Code of 1986; 26 USC 453C Internal Revenue Code of 1986

CFR Citation: 26 CFR 1

Legal Deadline: None.

Abstract: The regulations would provide guidance with respect to the requirement that certain indebtedness of a taxpayer be treated as a payment on certain installment obligations held by the taxpayer.

Timetable:

Action	Date	FR Cite
NPRM	00/00/00	

Small Entity: Not Applicable

Additional Information: LR-93-86

Drafting Attorney: Ewan D. Purkiss (202) 566-3238.

Reviewing Attorney: Cynthia Clark (202) 566-3288.

Treasury attorney: Ellen Aprill (202) 566-2565.

Agency Contact: Ewan Purkiss, Attorney, Department of the Treasury, Internal Revenue Service, 1111 Constitution Avenue, N.W., Washington, D.C. 20224, 202 566-3238

RIN: 1545-AJ27

2329. INCOME TAX, EXCISE TAX, AND ENVIRONMENTAL TAX—IMPOSITION OF TAXES ON PETROLEUM, CERTAIN CHEMICALS, AND CORPORATIONS AND ADDITIONAL EXCISE TAXES ON CERTAIN FUELS

Legal Authority: 26 USC 7805 Internal Revenue Code of 1986; 26 USC 59A Internal Revenue Code of 1986; 26 USC 4041 Internal Revenue Code of 1986; 26 USC 4042 Internal Revenue Code of 1986; 26 USC 4081 Internal Revenue Code of 1986; 26 USC 4611 Internal Revenue Code of 1986; 26 USC 4612 Internal Revenue Code of 1986; 26 USC 4661 Internal Revenue Code of 1986; 26 USC 4662 Internal Revenue Code of 1986

CFR Citation: 26 CFR 1; 26 CFR 48; 26 CFR 52

Legal Deadline: None.

Abstract: The regulations will provide rules for the computation of the environmental taxes on petroleum, certain chemicals, and additional excise taxes on certain fuels. The regulations will also provide rules for the computation of the environmental tax imposed on the modified alternative minimum taxable income of corporations.

Timetable:

Action	Date	FR Cite
NPRM	10/01/88	

Small Entity: Not Applicable

Additional Information:

LR-158-86.

Drafting attorney: Ruth Hoffman (202) 566-3287.

Reviewing attorney: William A. Jackson (202) 566-3287.

Treasury attorney: Kathleen Ferrell (202) 566-2175.

Agency Contact: Ruth Hoffman, Attorney, Department of the Treasury, Internal Revenue Service, 1111 Constitution Avenue, N.W., Washington, D.C. 20224, 202 566-3287

RIN: 1545-AJ23

2330. INCOME TAX—EXCISE TAX—PROCEDURE AND ADMINISTRATION—VARIOUS PRIVATE FOUNDATION PROVISIONS

Legal Authority: 26 USC 7805 Internal Revenue Code of 1986; 26 USC 4940 Internal Revenue Code of 1986; 26 USC 4941 Internal Revenue Code of 1986; 26 USC 4942 Internal Revenue Code of 1986; 26 USC 4943 Internal Revenue Code of 1986; 26 USC 4945 Internal Revenue Code of 1986

CFR Citation: 26 CFR 1; 26 CFR 53

Legal Deadline: None.

Abstract: These regulations will amend existing rules to reflect changes made by the Tax Reform Act of 1984 relating to the excise taxes on private foundations.

Timetable:

Action	Date	FR Cite
NPRM	12/31/88	

Small Entity: Not Applicable

Additional Information: EE-76-84.

Drafting attorney: V. A. Moore (202) 566-3422.

Reviewing attorney: James L. Brokaw (202) 566-4173.

Agency Contact: V. A. Moore, Attorney, Department of the Treasury, Internal Revenue Service, 1111 Constitution Ave., N.W., Washington, D.C. 20224, 202 566-3422

RIN: 1545-AG18

2331. FOUNDATION EXCISE TAX-EXCESS BUSINESS HOLDINGS

Legal Authority: 26 USC 7805 Internal Revenue Code of 1986; 26 USC 4943 Internal Revenue Code of 1986; PL 91-172, Sec 101 Tax Reform Act of 1969; PL 98-369, Sec 307 Tax Reform Act of 1984; PL 98-369, Sec 308; PL 98-369, Sec 309; PL 98-369, Sec 310; PL 98-369, Sec 314

CFR Citation: 26 CFR 53

Legal Deadline: None.

Abstract: Amendments to conform regulations to provisions enacted by the Tax Reform Act of 1984.

Timetable:

Action	Date	FR Cite
NPRM	00/00/00	

Small Entity: Not Applicable

Additional Information: EE-65-84.

Drafting attorney: Marjorie Hoffman (202) 566-3430.

Reviewing attorney: Richard J. Wickersham (202) 566-3250.

Agency Contact: Marjorie Hoffman, Attorney, Department of the Treasury, Internal Revenue Service, 1111 Constitution Ave., N.W., Washington, D.C. 20224, 202 566-3430

RIN: 1545-AG49

2332. EXCISE TAX – PART 54, REVERSION OF QUALIFIED PLAN ASSETS TO EMPLOYER

Legal Authority: 26 USC 7805 Internal Revenue Code of 1986; 26 USC 4980 Internal Revenue Code of 1986; PL 99-514, Sec 1132

CFR Citation: 26 CFR 54

Legal Deadline: None.

Abstract: The regulations would provide guidance regarding the excise tax on reversions of qualified plan assets imposed by section 4980 of the Internal Revenue Code of 1986.

Timetable:

Action	Date	FR Cite
NPRM	00/00/00	

Small Entity: No

Additional Information: EE-165-86

Drafting Attorney: Suzanne K. Tank (202) 566-3422.

Reviewing Attorney: James L. Brokaw (202) 566-4173.

Office of Tax Legislative Counsel (Treasury) reviewing attorney: Harry J. Conaway (202) 566-8277.

Agency Contact: Suzanne K. Tank, Attorney, Department of the Treasury, Internal Revenue Service, 1111 Constitution Ave., N.W., Washington, D.C. 20224, 202 566-3422

RIN: 1545-AI82

2333. EXCISE TAX–WITH RESPECT TO THE DEFINITION OF TAXABLE CRUDE OIL

Legal Authority: 26 USC 7805 Internal Revenue Code of 1986; 26 USC 4991 Internal Revenue Code of 1986

CFR Citation: 26 CFR 51

Legal Deadline: None.

Abstract: These regulations would provide rules relating to the definitions of crude oil, condensate, and tar sand for purposes of the windfall profit tax. These definitions are important because only crude oil is subject to the windfall profit tax.

Timetable:

Action	Date	FR Cite
NPRM	00/00/00	

Small Entity: Not Applicable

Additional Information: LR-226-81.

Drafting attorney: David R. Haglund (202) 566-3297.

Reviewing attorney: John B. Bromell (202) 566-3326.

Office of Tax Legislative Counsel (Treasury) reviewing attorney: Bryan Collins (202) 566-2175.

Agency Contact: David R. Haglund, Attorney, Department of the Treasury, Internal Revenue Service, 1111 Constitution Ave., N.W., Washington, D.C. 20224, 202 566-3297

RIN: 1545-AD00

2334. ● EXCISE TAX ON "GREENMAIL"

Legal Authority: 26 USC 7805 Internal Revenue Code of 1986; 26 USC 5881 Internal Revenue Code of 1986

CFR Citation: 26 CFR 48

Legal Deadline: None.

Abstract: This regulation provides a 50-percent excise tax on any gain realized by a person who receives "greenmail".

Timetable:

Action	Date	FR Cite
NPRM	07/15/88	

Small Entity: Not Applicable

Additional Information: LR-7-88

Drafting attorney: Robert Casey (202) 566-3458.

Reviewing attorney: Charles Whedbee (202) 566-3458.

Excise Taxes

Agency Contact: Robert Casey, Attorney, Department of the Treasury, Internal Revenue Service, 1111 Constitution Avenue, N.W., Washington, D.C. 20224, 202 566-3458

RIN: 1545-AL47

2335. ELECTRONIC FILING OF TAX RETURNS

Legal Authority: 26 USC 7805 Internal Revenue Code of 1986; 26 USC 6011 Internal Revenue Code of 1986

CFR Citation: 26 CFR 301

Legal Deadline: None.

Abstract: The regulations will provide guidance and standards to taxpayers governing the electronic filing of individual income tax returns.

Timetable:

Action	Date	FR Cite
NPRM	06/30/88	

Small Entity: Not Applicable

Additional Information: LR-21-87

Drafting Attorney: Lauren G. Shaw (202) 566-3287.

Reviewing Attorney: Gerald Rock (202) 566-6456.

Treasury Attorney: Patricia McClanahan (202) 566-2926.

Agency Contact: Lauren G. Shaw, Attorney, Department of the Treasury, Internal Revenue Service, 1111 Constitution Avenue, N.W., Washington, D.C. 20224, 202 566-3287

RIN: 1545-AL01

2336. NOMINEE REPORTING OF PARTNERSHIP INFORMATION

Legal Authority: 26 USC 7805 Internal Revenue Code of 1986; 26 USC 6031 Internal Revenue Code of 1986

CFR Citation: 26 CFR 1

Legal Deadline: None.

Abstract: These regulations will provide rules relating to nominee reporting of partnership interest which such nominee holds for another person. The regulations will provide the information that the nominee is required to provide and will also provide the manner in which this information is to be reported to the partnership.

Timetable:

Action	Date	FR Cite
NPRM	04/01/88	

Small Entity: Not Applicable

Additional Information: LR-156-86.

Drafting attorney: Stuart G. Wessler (202) 566-3297.

Reviewing attorney: Walter H. Woo (202) 566-3297.

Office of Tax Legislative Counsel Reviewing attorney: Greg Marich (202) 566-4979.

Agency Contact: Stuart G. Wessler, Attorney, Department of the Treasury, Internal Revenue Service, 1111 Constitution Avenue, N.W., Washington, D.C. 20224, 202 566-3297

RIN: 1545-AI98

2337. AMENDMENT OF SECTION 1.6033-2(G)(5) RELATING TO RETURNS BY AN INTEGRATED AUXILIARY OF A CHURCH

Legal Authority: 26 USC 7805 Internal Revenue Code of 1986; PL 91-172, Sec 101(d)(1) Tax Reform Act of 1969

CFR Citation: 26 CFR 1.6033-2(g)

Legal Deadline: None.

Abstract: These regulations will revise the definition of integrated auxiliary of a church in Section 1.6033-2 (g) (5) of the Treasury Regulations to be consistent with Rev. Proc. 86-23, 1986-1 CB 564.

Timetable:

Action	Date	FR Cite
NPRM	09/01/88	

Small Entity: Not Applicable

Additional Information: EE-41-86.

Drafting attorney: V.A. Moore (202) 566-3422.

Reviewing attorney: Paul Accettura (202) 566-3422.

Agency Contact: V.A. Moore, Attorney, Department of the Treasury, Internal Revenue Service, 1111 Constitution Avenue, N.W., Washington, D.C. 20224, 202 566-3422

RIN: 1545-AI52

2338. RETURNS, ETC. ON CERTAIN FRINGE BENEFIT PLANS

Legal Authority: 26 USC 6039D Internal Revenue Code of 1986; 26 USC 7805 Internal Revenue Code of 1986

CFR Citation: 26 CFR 301

Legal Deadline: None.

Abstract: The regulations will provide guidance concerning a return required by specified fringe benefit plans.

Timetable:

Action	Date	FR Cite
NPRM	12/30/88	

Small Entity: Not Applicable

Additional Information: EE-117-84.

Drafting attorney: Sylvia F. Hunt (202) 566-6212.

Reviewing attorney: Harry Beker (202) 566-6212.

Agency Contact: Sylvia F. Hunt, Attorney, Department of the Treasury, Internal Revenue Service, 1111 Constitution Ave., N.W., Washington, D.C. 20224, 202 566-6212

RIN: 1545-AI22

2339. ● INCOME TAX—INFORMATION REPORTING ON REAL ESTATE TRANSACTIONS

Legal Authority: 26 USC 7805 Internal Revenue Code of 1986; 26 USC 6045 Internal Revenue Code of 1986

CFR Citation: 26 CFR 1

Legal Deadline: None.

Abstract: This regulation would propose additional rules relating to the reporting of real estate transactions.

Timetable:

Action	Date	FR Cite
Temporary Regulation	04/30/88	

Small Entity: Not Applicable

Additional Information:

LR-130-87

Drafting attorney: Arthur E. Davis III (202) 566-3238.

Reviewing attorney:Cynthia Clark (202) 566-3288.

Treasury attorney: Patricia McClanahan (202) 566-8278.

Income taxes.

Agency Contact: Arthur E. Davis III, Attorney, Department of the Treasury, Internal Revenue Service, 1111 Constitution Ave., N.W., Washington, D.C. 20224, 202 566-3238

RIN: 1545-AL06

2340. INCOME TAX REGULATIONS RELATING TO RETURNS AS TO INTERESTS IN FOREIGN PARTNERSHIPS

Legal Authority: 26 USC 7805 Internal Revenue Code of 1986; 26 USC 6046A Internal Revenue Code of 1986

CFR Citation: 26 CFR 1

Legal Deadline: None.

Abstract: The regulations would give guidance for determining which United States persons who acquire, dispose of or change their interests in foreign partnerships must report their activities. Additionally, guidance would be given as to how, when and where such persons must report and what information they must supply.

Timetable:

Action	Date	FR Cite
ANPRM	12/31/85	
Comment Period End		
NPRM	00/00/00	

Small Entity: Not Applicable

Additional Information: INTL-879-86

Drafting Attorney: Charles A. Ray (202) 287-4851.

Reviewing Attorney: George M. Sellinger (202) 287-4851.

Treasury Attorney: Mark Beams (202) 566-5992.

Agency Contact: Charles A. Ray, Attorney, Department of the Treasury, Internal Revenue Service, 950 L'Enfant Plaza South, S.W., Washington, D.C. 20024, 202 287-4851

RIN: 1545-AK75

2341. INCOME TAX—TO REQUIRE ISSUERS OF CERTIFICATES OF DEPOSIT TO FURNISH ISSUE PRICE TO BROKERS

Legal Authority: 26 USC 7805 Internal Revenue Code of 1986

CFR Citation: 26 CFR 1

Legal Deadline: None.

Abstract: Proposed regulations would amend existing regulations to require issuers to furnish the issue price to brokers.

Timetable:

Action	Date	FR Cite
NPRM	04/01/88	

Small Entity: Not Applicable

Additional Information: LR-63-87

Drafting attorney: Laura Ann M. Lauritzen (202) 566-3459.

Reviewing attorney: Susan Baker (202) 566-3294.

Agency Contact: Laura Ann M. Lauritzen, Attorney, Department of the Treasury, Internal Revenue Service, 1111 Constitution Ave., N.W., Washington, D. C. 20224, 202 566-3459

RIN: 1545-AK36

2342. TREATMENT OF NET CAPITAL LOSSES OF REGULATED INVESTMENT COMPANIES AND REAL ESTATE INVESTMENT TRUSTS-RELATIONSHIPS BETWEEN CHAPTER 44 EXCISE TAXES AND TAXABLE INCOME

Legal Authority: 26 USC 852(b)(3) Internal Revenue Code of 1986; 26 USC 857(b)(3) Internal Revenue Code of 1986; 26 USC 7805 Internal Revenue Code of 1986

CFR Citation: 26 CFR 1

Legal Deadline: None.

Abstract: The regulation would establish rules pertaining to the relationship and effect of net capital losses of RICs and REITs attributable to transactions after the cut-off date for capital transactions and the taxable income if the entity for the subsequent taxable year.

Timetable:

Action	Date	FR Cite
Next Action Undetermined		

Small Entity: Not Applicable

Additional Information: LR-116-86.

Drafting attorney: Robert M. Casey (202) 566-3458.

Reviewing attorney: Charles M. Whedbee (202) 566-3458.

Treasury attorney: Don Rocap (202) 566-8278.

Government Levels Affected: Federal

Agency Contact: Robert M. Casey, Attorney, Department of the Treasury, Internal Revenue Service, 1111 Constitution Avenue, N.W., Washington, D.C. 20224, 202 566-3458

RIN: 1545-AJ04

2343. REPORTING REQUIREMENTS PERTAINING TO RETURNS RELATING TO PERSONS RECEIVING CONTRACTS FROM FEDERAL EXECUTIVE AGENCIES

Legal Authority: 26 USC 7805 Internal Revenue Code of 1986; 26 USC 6050M Internal Revenue Code of 1986

CFR Citation: 26 CFR 1

Legal Deadline: None.

Abstract: This regulation would provide guidance to the heads of Federal executive agencies for purposes of complying with information and reporting requirements prescribed by section 6050M.

Timetable:

Action	Date	FR Cite
NPRM	05/02/88	

Small Entity: Not Applicable

Additional Information: LR-133-86

Drafting attorney: Keith E. Stanley (202) 566-3458.

Reviewing attorney: Charles M. Whedbee (202) 566-3458.

Treasury attorney: Patricia McClanahan (202) 566-8278.

Government Levels Affected: Federal

Agency Contact: Keith E. Stanley, Attorney, Department of the Treasury, Internal Revenue Service, 1111 Constitution Avenue, N.W., Washington, D.C. 20224, 202 566-3458

RIN: 1545-AJ05

2344. ESTATE TAX--PROCEDURE AND ADMINISTRATION--DEFERRAL AND INSTALLMENT PAYMENT OF ESTATE TAX

Legal Authority: 26 USC 7805 Internal Revenue Code of 1986; 26 USC 6166 Internal Revenue Code of 1986; 26 USC 6161 Internal Revenue Code of 1986; 26 USC 6151 Internal Revenue Code of 1986

CFR Citation: 26 CFR 20; 26 CFR 301

Legal Deadline: None.

Abstract: The regulations will provide guidance to executors wishing to extend the time for payment of estate tax where the estate contains an interest in a closely held business. The regulations will provide rules in determining what qualifies as an interest in a closely held business. In addition, the regulations will explain when the installment privileges allowed by section 6166 will be terminated.

Timetable:

Action	Date	FR Cite
NPRM	06/00/88	

Small Entity: Not Applicable

Additional Information: LR-210-76.

Drafting attorney: Maurice B. Foley (202) 566-4336.

Reviewing attorney: Fred E. Grundeman (202) 566-3287.

Treasury attorney: Susan Himes (202) 566-8527.

Agency Contact: Maurice B. Foley, Attorney, Department of the Treasury, Internal Revenue Service, 1111 Constitution Ave., N.W., Washington, D.C. 20224, 202 566-4336

RIN: 1545-AD23

2345. STATEMENT OF PROCEDURAL RULES TO PROVIDE PROCEDURES FOR PARTNERSHIP-LEVEL PROCEEDINGS WITH RESPECT TO PARTNERSHIP ITEMS

Legal Authority: 5 USC 3011 Internal Revenue Code of 1986; 5 USC 6111 Internal Revenue Code of 1986

CFR Citation: 26 CFR 601

Legal Deadline: None.

Abstract: The amendment of the Statement of Procedural Rules will provide procedures for partnership-level proceedings with respect to partnership items.

Timetable:

Action	Date	FR Cite
NPRM	00/00/00	

Small Entity: Not Applicable

Additional Information: LR-237-82.

Drafting attorney: Robert E. Shaw (202) 566-3297.

Reviewing attorney: Paul A. Francis (202) 566-3218.

Agency Contact: Robert E. Shaw, Attorney, Department of the Treasury, Internal Revenue Service, 1111 Constitution Ave., N.W., Washington, D.C. 20224, 202 566-3297

RIN: 1545-AI08

2346. DETERMINATION OF THE TAX TREATMENT OF SUBCHAPTER S ITEMS AT THE CORPORATE LEVEL

Legal Authority: 26 USC 7805 Internal Revenue Code of 1986; 26 USC 6242 Internal Revenue Code of 1986; 26 USC 6243 Internal Revenue Code of 1986; 26 USC 6244 Internal Revenue Code of 1986; 26 USC 6233 Internal Revenue Code of 1986

CFR Citation: 26 CFR 301; 26 CFR 51

Legal Deadline: None.

Abstract: Proposed regulations would provide new rules for determining the tax treatment of any subchapter S item at the corporate level. Regulations would provide rules similar to rules for determining the tax treatment of partnership items.

VOL 53 ISS 79 PT 2 AP 25 1988 UMI

Timetable:

Action	Date	FR Cite
NPRM	04/01/88	

Small Entity: Not Applicable

Additional Information: LR-369-82.

Drafting attorney: Stuart G. Wessler (202) 566-3297.

Reviewing attorney: Walter H. Woo (202) 566-3297.

Office of Tax Legislative Counsel Reviewing attorney: Bryan Collins (202) 566-2175.

Agency Contact: Stuart G. Wessler, Attorney, Department of the Treasury, Internal Revenue Service, 1111 Constitution Ave., N.W., Washington, D.C. 20224, 202 566-3297

RIN: 1545-AE96

2347. PROCEDURE AND ADMINISTRATION REGULATIONS—PAYMENT OF TAXES BY CHECK OR MONEY ORDER AND LIABILITY OF FINANCIAL INSTITUTIONS FOR UNPAID TAXES

Legal Authority: 26 USC 7805 Internal Revenue Code of 1986; 26 USC 6311 Internal Revenue Code of 1986

CFR Citation: 26 CFR 301

Legal Deadline: None.

Abstract: The regulations will describe the circumstances under which taxpayers may pay taxes by check, money order or other guaranteed draft and the circumstances under which financial institutions on which such instruments are drawn may be liable for unpaid taxes.

Timetable:

Action	Date	FR Cite

Next Action Undetermined

Small Entity: Not Applicable

Additional Information: GL-549-87.

Drafting attorney: Nancy Olszewski (202) 566-4014.

Reviewing attorney: Michael R. Arner (202) 566-3358.

Agency Contact: Nancy Olszewski, General Attorney (Tax), Department of the Treasury, Internal Revenue Service, 1111 Constitution Avenue, N.W., Washington, D.C. 20224, 202 566-4014

RIN: 1545-AI24

2348. ELECTRONIC FILING OF NOTICE OF FEDERAL TAX LIEN

Legal Authority: 26 USC 7805 Internal Revenue Code of 1986; 26 USC 6323 Internal Revenue Code of 1986

CFR Citation: 26 CFR 301

Legal Deadline: None.

Abstract: The regulation clarifies that the term "Form 668" as used in section 6323 (f) (3) of the Code includes a notice of federal tax lien filed by the use of an electronic or magnetic medium where the law of the state in which a notice of Federal tax lien is filed permits such method of filing.

Timetable:

Action	Date	FR Cite
NPRM	04/01/88	

Small Entity: Not Applicable

Additional Information: LR-39-87

Drafting Attorney: Lauren G. Shaw (202) 566-3287.

Reviewing Attorney: Ada S. Rousso (202) 566-3287.

Treasury Attorney: Patricia McClanahan (202) 566-2926.

Agency Contact: Lauren G. Shaw, Attorney-Advisor, Department of the Treasury, Internal Revenue Service, 1111 Constitution Avenue, N.W., Washington, D.C. 20224, 202 566-3287

RIN: 1545-AK96

2349. PROCEDURE AND ADMINISTRATION—RELEASE OF LIENS, NOTICE BEFORE LEVY, PROPERTY EXEMPT FROM LEVY REDEMPTION OF LEVIED REAL PROPERTY AND AMOUNT OF DAMAGES IN CASE OF WRONGFUL LEVY

Legal Authority: 26 USC 7805 Internal Revenue Code of 1986; 26 USC 6325 Internal Revenue Code of 1986; 26 USC 6331 Internal Revenue Code of 1986; 26 USC 6334 Internal Revenue Code of 1986; 26 USC 6337 Internal Revenue Code of 1986; 26 USC 7426 Internal Revenue Code of 1986

CFR Citation: 26 CFR 301

Legal Deadline: None.

Abstract: The regulation will provide guidance in obtaining the issuance of a certificate of release of a notice of Federal tax lien. The regulation will revise existing regulations relating to the size of the exemption from levy available for certain property. The proposed regulation also increases the length of post-sale redemption period currently specified in the regulations. The proposed regulations provide rules for service employees administering the Code for providing notice of intention to levy upon the property of a delinquent taxpayer. The proposed regulations increase the amount of damages allowed where property has been levied wrongfully.

Timetable:

Action	Date	FR Cite
NPRM	00/00/00	

Small Entity: Not Applicable

Additional Information: GL-547-87.

Drafting attorney: Kevin B. Connelly (202) 566-3362.

Reviewing attorney: Michael R. Arner (202) 566-3358.

Agency Contact: Kevin B. Connelly, Senior Attorney, Department of the Treasury, Internal Revenue Service, 1111 Constitution Ave., N.W., Washington, D.C. 20224, 202 566-3362

RIN: 1545-AE82

2350. PROCEDURE AND ADMINISTRATION - ABATEMENT OF INTEREST

Legal Authority: 26 USC 7805 Internal Revenue Code of 1986

CFR Citation: 26 CFR 301

Legal Deadline: None.

Abstract: The regulations will provide guidance on the definition of ministerial act.

Timetable:

Action	Date	FR Cite
NPRM	00/00/00	52 FR 30177
Final Action	00/00/00	

Small Entity: Not Applicable

Additional Information: LR-34-87

Drafting attorney: Sharon L. Hall (202) 566-3288.

Reviewing attorney: Cynthia Clark (202) 566-3288.

Agency Contact: Sharon L. Hall, Attorney, Department of the Treasury, Internal Revenue Service, 1111 Constitution Avenue, N.W., Washington, D.C. 20224, 202 566-3288

RIN: 1545-AK71

2351. PROCEDURE AND ADMINISTRATION REGULATIONS—EXTENSION OF THE PERIOD FOR ASSESSMENT OF TAX IN CERTAIN CIRCUMSTANCES

Legal Authority: 26 USC 7805 Internal Revenue Code of 1986; 26 USC 6501 Internal Revenue Code of 1986

CFR Citation: 26 CFR 1

Legal Deadline: None.

Abstract: The regulations will describe circumstances under which the normal three-year period for the assessment and collection of tax may be extended.

Timetable:

Action	Date	FR Cite
NPRM	12/00/88	

Small Entity: Not Applicable

Additional Information: LR-162-85.

Drafting attorney: Michael J. Grace (202) 566-3288.

Reviewing attorney: John H. Parcell (202) 566-3336.

Agency Contact: Michael J. Grace, Attorney/Advisor, Department of the Treasury, Internal Revenue Service, 1111 Constitution Avenue, N.W., Washington, D.C. 20224, 202 566-3288

RIN: 1545-AI23

2352. ESSENTIAL ISSUES IN CONNECTION WITH DIFFERENTIAL INTEREST RATES

Legal Authority: 26 USC 7805 Internal Revenue Code of 1986; 26 USC 6621 Internal Revenue Code of 1986

CFR Citation: 26 CFR 1

Legal Deadline: None.

Abstract: The regulations will explain the computation of interest on underpayments and overpayments of tax, including the extent to which underpayments and overpayments will be offset in computing interest.

Timetable:

Action	Date	FR Cite
NPRM	06/00/88	

Small Entity: Not Applicable

Additional Information: LR-123-88

Drafting attorney: Michael J. Grace (202)566-3288.

Reviewing attorney: John H. Parcell (202)566-3336.

Agency Contact: Michael J. Grace, Attorney, Department of the Treasury, Internal Revenue Service, 1111 Constitution Avenue, N.W., Washington, D.C. 20224, 202 566-3288

RIN: 1545-AK06

2353. PROCEDURE & ADMINISTRATION—ADDITION TO TAX IN THE CASE OF VALUATION OVERSTATEMENTS AND UNDERSTATEMENTS, AND INCREASE IN THE NEGLIGENCE PENALTY

Legal Authority: 26 USC 7805 Internal Revenue Code of 1986; 26 USC 6659 Internal Revenue Code of 1986; 26 USC 6653 Internal Revenue Code of 1986; 26 USC 6660 Internal Revenue Code of 1986

CFR Citation: 26 CFR 301; 26 CFR 1

Legal Deadline: None.

Abstract: The regulations would provide rules and definitions with respect to the addition to tax in the case of valuation overstatements and understatements, including rules for computing the portion of an underpayment that is attributable to a valuation overstatement or understatement. The regulations would also provide rules with respect to the increase in the negligence and fraud penalties.

Timetable:

Action	Date	FR Cite
NPRM	06/00/88	

Small Entity: Not Applicable

Additional Information: LR-272-81.

Drafting attorney: Michael J. Grace (202) 566-3288.

Agency Contact: Michael J. Grace, Attorney, Department of the Treasury, Internal Revenue Service, 1111 Constitution Ave., N.W., Washington, D.C. 20224, 202 566-3288

RIN: 1545-AD39

2354. PENALTY FOR PROMOTING ABUSIVE TAX SHELTERS

Legal Authority: 26 USC 7805 Internal Revenue Code of 1986; 26 USC 6700 Internal Revenue Code of 1986

CFR Citation: 26 CFR 301

Legal Deadline: None.

Abstract: The regulations would provide rules and definitions relating to the penalty for promoting abusive tax shelters.

Timetable:

Action	Date	FR Cite
NPRM	00/00/00	

Small Entity: Not Applicable

Additional Information: LR-273-82.

Drafting attorney: Sharon Hall (202) 566-3288.

Reviewing attorney: John H. Parcell (202) 566-3336.

Agency Contact: Sharon Hall, Attorney, Department of the Treasury, Internal Revenue Service, 1111 Constitution Ave., N.W., Washington, D.C. 20224, 202 566-3288

RIN: 1545-AE99

2355. PENALTY FOR AIDING AND ABETTING IN THE UNDERSTATEMENT OF TAX LIABILITY

Legal Authority: 26 USC 7805 Internal Revenue Code of 1986; 26 USC 6701 Internal Revenue Code of 1986

CFR Citation: 26 CFR 301

Legal Deadline: None.

Abstract: Proposal will provide rules with respect to the penalty imposed on a person who aids and abets in the understatement of a third party's tax liability. The proposal also provides the standards which will subject one to the penalty.

Timetable:

Action	Date	FR Cite
NPRM	00/00/00	

Small Entity: Not Applicable

Additional Information: LR-274-82.

Drafting attorney: Sharon Hall (202) 566-3288.

Reviewing attorney: John H. Parcell (202) 566-3336.

Office of Tax Legislative Counsel reviewing attorney: Pat McClanahan (202) 566-6647.

Agency Contact: Sharon Hall, Attorney, Department of the Treasury, Internal Revenue Service, 1111 Constitution Ave., N.W., Washington, D.C. 20224, 202 566-3288

RIN: 1545-AF01

2356. INCOME TAX—PRESUMPTION OF JEOPARDY IN THE CASE OF ILLEGAL ACTIVITY CASH

Legal Authority: 26 USC 7805 Internal Revenue Code of 1986; 26 USC 6867 Internal Revenue Code of 1986

CFR Citation: 26 CFR 1

Legal Deadline: None.

Abstract: The regulations would provide guidance for applying the presumptions that an amount of cash in excess of ten thousand dollars without an acknowledged owner (1) represents gross income to a single individual, (2) is taxable at a rate of fifty percent, and (3) that collection of the tax is in jeopardy for the purposes of sections 6851 and 6861.

Timetable:

Action	Date	FR Cite
NPRM	00/00/00	

Small Entity: Not Applicable

Additional Information: GL-548-87.

Drafting attorney: John C. Isaacs (202) 566-3257.

Reviewing attorney: Michael R. Arner (202) 566-3358.

Agency Contact: John C. Isaacs, Attorney, Department of the Treasury, Internal Revenue Service, 1111 Constitution Ave., N.W., Washington, D.C. 20224, 202 566-3257

RIN: 1545-AE30

2357. FORFEITURE OF LAND SALES CONTRACT WITH RESPECT TO DISCHARGE OF FEDERAL TAX LIEN

Legal Authority: 26 USC 7805 Internal Revenue Code of 1986

CFR Citation: 26 CFR 301

Legal Deadline: None.

Abstract: The regulation will address the issue of when a land sales contract is considered to be forfeited for Federal tax purposes. It may be necessary, in so doing, to provide a definition or other guidelines as to what constitutes a land sales contract for purposes of this provision.

Timetable:

Action	Date	FR Cite
Next Action Undetermined		

Small Entity: Not Applicable

Additional Information: GL-550-87

Drafting Attorney: Michael W. Cogan (202) 566-3441.

Reviewing Attorney: Michael R. Arner (202) 566-3358.

Treasury Attorney: Patricia McClanahan (202) 566-2926.

Agency Contact: Michael W. Cogan, Attorney, Department of the Treasury, Internal Revenue Service, 1111 Constitution Avenue, N.W., Washington, D.C. 20224, 202 566-3441

RIN: 1545-AK24

2358. ● REDEMPTIONS OF REAL PROPERTY UNDER IRC 7425 - EXCESS EXPENSES

Legal Authority: 26 USC 7805 Internal Revenue Code of 1986; 26 USC 7425 Internal Revenue Code of 1986

CFR Citation: 26 CFR 301

Legal Deadline: None.

Abstract: Section 301.7425-4(b)(3)(ii), which deals with excess expenses incurred by a purchaser of property after a foreclosure sale and before redemption, provides that the Service may request a written itemized statement from the purchaser regarding excess expenses with 15 days, it shall be presumed that no excess expenses are payable. However, even after the 15-day period expires, a payment for excess expenses shall be made after the redemption within a reasonable time following the verification by the district director of a written itemized statement submitted by the purchaser. There is no specific time frame set for the purchaser to submit his claim after the redemption and after the expiration of the 15-day period. We are examining the feasibility of establishing a 30-day time limit within which a final claim for excess expenses must be submitted by the purchaser after the sale of the property. This will eliminate claims for reimbursement of expenses that may be submitted after redemption and sale of the property, where the liens were fully satisfied and released, and all surplus funds returned to the taxpayer.

Timetable:

Action	Date	FR Cite
Next Action Undetermined		

Small Entity: Undetermined

Additional Information: GL-520-87

Drafting attorney: Barton J. Uze (202) 566-3975. Procedure and Administration

Agency Contact: Barton J. Uze, Attorney, Department of the Treasury, Internal Revenue Service, 1111 Constitution Ave., NW, Washington, D.C. 20224, 202 566-3975

RIN: 1545-AL20

2359. PROCEDURE AND ADMINISTRATION - SUSPENSION OF STATUES OF LIMITATIONS IN ABSENCE OF THIRD-PARTY RECORDKEEPER RESPONSE TO SUMMONS

Legal Authority: 26 USC 7805 Internal Revenue Code of 1986

CFR Citation: 26 CFR 301

Legal Deadline: None.

Abstract: The regulations will provide guidance to taxpayers with regard to the changes made to section 7609 by the Tax Reform Act of 1986. Under those changes, statutes of limitations are suspended in certain cases in which a summons is served to a third-party recordkeeper and in which there is no resolution of the third- party recordkeeper's response to the summons.

Timetable:

Action	Date	FR Cite
NPRM	06/00/88	

Small Entity: Not Applicable

Additional Information: GL-521-87

Drafting attorney: Mitchel S. Hyman (202) 566-4620.

Reviewing attorney: Michael R. Arner (202) 566-3358.

Agency Contact: Mitchel S. Hyman, Attorney, Department of the Treasury, Internal Revenue Service, 1111 Constitution Avenue, N.W., Washington, D.C. 20224, 202 566-4620

RIN: 1545-AK72

2360. INCOME TAX--ESSENTIAL ISSUES RELATING TO REAL ESTATE MORTGAGE INVESTMENT CONDUITS

Legal Authority: 26 USC 7805 Internal Revenue Code of 1986; 26 USC 860E Internal Revenue Code of 1986

CFR Citation: 26 CFR 1

Legal Deadline: None.

Abstract: Regulations will provide guidance on real estate mortgage investment conduits, a new entity established to clarify the tax treatment

BEST COPY AVAILABLE

of investment in real estate mortgages and mortgage backed securities.

Timetable:

Action	Date	FR Cite
NPRM	04/01/88	

Small Entity: Not Applicable

Additional Information: LR-88-86.

Drafting Attorney: Laura Ann M. Lauritzen (202) 566-3459.

Reviewing Attorney: Susan T. Baker (202) 566-3294.

Treasury Attorney: Reed Shuldiner (202) 535-6963.

Agency Contact: Laura Ann M. Lauritzen, Attorney, Department of the Treasury, Internal Revenue Service, 1111 Constitution Avenue NW, Washington, DC 20224, 202 566-6456

RIN: 1545-AJ35

2361. PROPOSED AMENDMENTS TO THE PROCEDURE AND ADMINISTRATION REGULATIONS UNDER THE CHILD SUPPORT ENFORCEMENT AMENDMENTS OF 1984 RELATING TO THE REDUCTION OF TAX OVERPAYMENTS BY AMOUNTS ETC

Legal Authority: 26 USC 7805 Internal Revenue Code of 1986; 42 USC 664 Internal Revenue Code of 1986

CFR Citation: 26 CFR 301

Legal Deadline: None.

Abstract: These proposed regulations provide rules relating to the reduction of a taxpayer's overpayment of tax (i.e. tax refund) by the amount of any past due support which a State has agreed to collect under section 454 (6) of the Social Security Act. The regulations explain the steps a State must take to have a tax overpayment reduced by an amount of past-due support.

Timetable:

Action	Date	FR Cite
NPRM	06/30/88	

Small Entity: Not Applicable

Additional Information: LR-85-85.

Drafting attorney: Sharon L. Hall (202) 566-3288.

Reviewing attorney: David Dickinson (202) 566-6655.

TITLE CONT: of Past-Due Support Owed.

Agency Contact: Sharon L. Hall, Attorney, Department of the Treasury, Internal Revenue Service, 1111 Constitution Ave., N.W., Washington, D.C. 20224, 202 566-3288

RIN: 1545-AH99

DEPARTMENT OF THE TREASURY (TREAS)
Internal Revenue Service (IRS)

Final Rule Stage

2362. TO PROVIDE REGULATIONS RELATING TO MORTGAGE CREDIT CERTIFICATES

Legal Authority: 26 USC 7805 Internal Revenue Code of 1986; 26 USC 25 Internal Revenue Code of 1986

CFR Citation: 26 CFR 1.25-1 to 1.25-8T; 26 CFR 1.6709-1

Legal Deadline: None.

Abstract: The regulations will provide guidance on the issuance of mortgage credit certificates rules. Guidance will be provided with respect to the various eligibility requirements that mortgagors must satisfy as well as the various program requirements that issuers must satisfy.

Timetable:

Action	Date	FR Cite
NPRM	05/08/85	50 FR 19383
NPRM Comment Period End	07/08/85	50 FR 19383
Hearing	08/14/85	
Final Action	00/00/00	

Small Entity: Not Applicable

Additional Information: LR-245-84.

Drafting attorney: Robert Beatson (202) 566-3459.

Reviewing attorney: John M. Coulter, Jr. (202) 566-4473.

Agency Contact: Robert Beatson, Attorney, Department of the Treasury, Internal Revenue Service, 1111 Constitution Ave., N.W., Washington, D.C. 20224, 202 566-3459

RIN: 1545-AH06

2363. INCOME TAX—INFORMATION REPORTING FOR MORTGAGE CREDIT CERTIFICATES

Legal Authority: 26 USC 7805 Internal Revenue Code of 1986; 26 USC 25 Internal Revenue Code of 1986

CFR Citation: 26 CFR 1

Legal Deadline: None.

Abstract: The regulations would provide guidance to issuers of mortgage credit certificates relating to the information to be collected with respect to each recipient of a mortgage credit certificate. The regulations will also provide guidance regarding the time and manner of filing this information with the Internal Revenue Service.

Timetable:

Action	Date	FR Cite
NPRM	09/03/85	50 FR 35572
NPRM Comment Period End	11/04/85	
Final Action	00/00/00	

Small Entity: Not Applicable

Additional Information: LR-114-85.

Drafting attorney: Robert Beatson (202) 566-3459.

Reviewing attorney: John M. Coulter (202) 566-3331.

Agency Contact: Robert Beatson, Attorney, Department of the Treasury, Internal Revenue Service, 1111 Constitution Avenue, N.W., Washington, D.C. 20224, 202 566-3459

RIN: 1545-AI39

2364. CREDIT FOR CLINICAL TESTING EXPENSES FOR CERTAIN DRUGS FOR RARE DISEASES OR CONDITIONS

Legal Authority: 26 USC 7805 Internal Revenue Code of 1986; 26 USC 28 Internal Revenue Code of 1986; 26 USC 280C Internal Revenue Code of 1986

CFR Citation: 26 CFR 1; 26 CFR 602

Legal Deadline: None.

Abstract: These regulations will amend the Income Tax Regulations to conform the regulations to sections 28 and 280C of the Internal Revenue Code of 1986, relating to the credit for clinical testing expenses for rare diseases or conditions. The regulations will provide

the public with the guidance needed to comply with the law and will affect taxpayers seeking to obtain the credit.

Timetable:

Action	Date	FR Cite
NPRM	04/23/85	50 FR 15930
NPRM Comment Period End	06/24/85	50 FR 15930
Final Action	07/01/88	

Small Entity: Not Applicable

Additional Information: LR-55-83.

Drafting attorney: Stuart G. Wessler (202) 566-3297.

Reviewing attorney: John B. Bromell (202) 566-3326.

Office of Tax Legislative Counsel Reviewing attorney: Roberts

Agency Contact: Stuart G. Wessler, Attorney, Department of the Treasury, Internal Revenue Service, 1111 Constitution Ave., N.W., Washington, D.C. 20224, **202 566-3297**

RIN: 1545-AF64

2365. INCOME TAX--NOTICE TO EMPLOYEES OR EARNED INCOME CREDIT

Legal Authority: 26 USC 7805 Internal Revenue Code of 1986; PL 99-514,; 26 USC 6051 Internal Revenue Code of 1986

CFR Citation: 26 CFR 1

Legal Deadline: None.

Abstract: The regulations would provide the procedures necessary to implement the statutory requirement that employers noting certain employees whose wages are not subject to income tax withholding that they may be eligible for the refundable earned income credit.

Timetable:

Action	Date	FR Cite
NPRM	06/11/87	52 FR 22345
NPRM Comment Period End	08/10/87	
Final Action	11/30/88	

Small Entity: Not Applicable

Additional Information: LR-99-86

Drafting attorney: Joel S. Rutstein (202) 566-3297.

Reviewing attorney: John B. Bromell (202) 566-3297.

Agency Contact: Joel S. Rustesin, Attorney, Department of the Treasury, Internal Revenue Service, 1111 Constitution Ave., N.W., Washington, D.C. 20224, **202 566-3297**

RIN: 1545-AJ44

2366. LOW-INCOME HOUSING CREDIT

Legal Authority: 26 USC 7805 Internal Revenue Code of 1986; 26 USC 42 Internal Revenue Code of 1986

CFR Citation: 26 CFR 1

Legal Deadline: None.

Abstract: The regulations provide low-income housing credit allocation and reporting rules.

Timetable:

Action	Date	FR Cite
NPRM	06/22/87	52 FR 23471
NPRM Comment Period End	08/21/87	52 FR 23471
Hearing	11/09/87	
Final Action	07/01/88	

Small Entity: Not Applicable

Additional Information: LR-83-86

Drafting attorney: Robert Beatson (202) 566-3459.

Reviewing attorney: John Coulter (202) 566-3331.

Agency Contact: Robert Beatson, Attorney, Department of the Treasury, Internal Revenue Service, 1111 Constitution Ave., N.W., Washington, DC 20224, **202 566-3459**

RIN: 1545-AJ65

2367. LOW-INCOME HOUSING CREDIT FOR FEDERALLY ASSISTED BUILDINGS ACQUIRED DURING L0-YEAR PERIOD

Legal Authority: 26 USC 42 Internal Revenue Code of 1986

CFR Citation: 26 CFR 1

Legal Deadline: None.

Abstract: The regulation provides rules for federally-assisted buildings acquired during a l0-year period.

Timetable:

Action	Date	FR Cite
NPRM	11/03/87	52 FR 42116
Final Action	00/00/00	

Small Entity: Not Applicable

Additional Information: LR-62-87

Drafting Attorney: Robert Beatson (202) 566-3459.

Reviewing attorney: John Coulter (202) 566-4473.

Agency Contact: Robert Beatson, Attorney, Department of the Treasury, Internal Revenue Service, 1111 Constitution Avenue, N.W., Washington, D.C. 20224, **202 566-3459**

RIN: 1545-AK92

2368. LOW-INCOME HOUSING CREDIT FOR FEDERALLY-ASSISTED BUILDINGS ACQUIRED DURING 10-YEAR PERIOD

Legal Authority: 26 USC 7805 Internal Revenue Code of 1986; 26 USC 42 Internal Revenue Code of 1986

CFR Citation: 26 CFR 1

Legal Deadline: None.

Abstract: This regulation provides rules for Federally-assisted buildings acquired during a 10-year period.

Timetable:

Action	Date	FR Cite
NPRM	11/03/87	52 FR 42098
Final Action	07/01/88	

Small Entity: Not Applicable

Additional Information: LR-62-87

Drafting Attorney: Robert Beatson (202) 566-3459.

Reviewing Attorney: John Coulter (202) 566-4473.

Agency Contact: Robert Beatson, Attorney, Department of the Treasury, Internal Revenue Service, 1111 Constitution Avenue, N.W., Washington, D.C. 20224, **202 566-3459**

RIN: 1545-AL05

2369. INCOME TAX--CREDIT FOR INCREASING RESEARCH ACTIVITIES

Legal Authority: 26 USC 7805 Internal Revenue Code of 1986; 26 USC 30 Internal Revenue Code of 1986

CFR Citation: 26 CFR 1

Legal Deadline: None.

Abstract: The regulations will provide the extent to which taxpayers will be entitled to an income tax credit for increases in certain research activity.

Timetable:

Action	Date	FR Cite
NPRM	01/21/83	
NPRM Comment Period End	03/19/83	
Hearing	04/19/83	

Action	Date	FR Cite
Final Action	06/20/88	

Small Entity: Not Applicable

Additional Information: LR-236-81.

Drafting attorney: David R. Haglund (202) 566-3297.

Reviewing attorney: John Fischer (202) 566-3394.

Office of Tax Legislative Counsel (Treasury) reviewing attorney: Susan Himes (202) 566-8527.

Agency Contact: David R. Haglund, Attorney, Department of the Treasury, Internal Revenue Service, 1111 Constitution Ave., N.W., Washington, D.C. 20224, 202 566-3297

RIN: 1545-AA07

2370. INCOME TAX—THE INVESTMENT CREDIT FOR QUALIFIED PROGRESS EXPENDITURES

Legal Authority: 26 USC 7805 Internal Revenue Code of 1986; 26 USC 46 Internal Revenue Code of 1986; 26 USC 47 Internal Revenue Code of 1986; 26 USC 48 Internal Revenue Code of 1986

CFR Citation: 26 CFR 1

Legal Deadline: None.

Abstract: The proposed regulations add a new section to provide rules for claiming the investment credit for qualified progress expenditures.

Timetable:

Action	Date	FR Cite
NPRM	01/30/79	44 FR 05910
NPRM Comment Period End	04/01/79	44 FR 05910
Hearing	06/27/79	
Final Action	00/00/00	

Small Entity: Not Applicable

Additional Information: LR-73-75.

Drafting attorney: Robert Casey (202) 566-3458.

Reviewing attorney: Charles M. Whedbee (202) 566-3458.

Treasury attorney: Don Rocap (202) 566-8277.

Agency Contact: Robert Casey, Attorney, Department of the Treasury, Internal Revenue Service, 1111 Constitution Ave., N.W., Washington, D.C. 20224, 202 566-3458

RIN: 1545-AA13

2371. INCOME TAX—TAX TREATMENT OF MASS ASSETS FOR INVESTMENT CREDIT PURPOSES

Legal Authority: 26 USC 7805 Internal Revenue Code of 1986; 26 USC 38 Internal Revenue Code of 1986; 26 USC 46 Internal Revenue Code of 1986; 26 USC 47 Internal Revenue Code of 1986

CFR Citation: 26 CFR 1

Legal Deadline: None.

Abstract: Proposal would clarify the investment tax credit recapture treatment of mass assets thereby giving needed guidance to the public on how the Internal Revenue Service intends to interpret this area.

Timetable:

Action	Date	FR Cite
NPRM	12/20/85	50 FR 51874

Next Action Undetermined

Small Entity: Not Applicable

Additional Information: LR-92-73.

Drafting attorney: Mark S. Jennings (202) 566-3458.

Reviewing attorney: Robert J. Mason (202) 566-3463.

Agency Contact: Mark S. Jennings, Attorney, Department of the Treasury, Internal Revenue Service, 1111 Constitution Ave., N.W., Washington, D.C. 20224, 202 566-3458

RIN: 1545-AA10

2372. AMENDMENT OF INCOME TAX REGULATIONS UNDER SECTIONS 47, 48 AND 196 RELATING TO BASIS ADJUSTMENT TO REFLECT INVESTMENT TAX CREDIT

Legal Authority: 26 USC 7805 Internal Revenue Code of 1986; 26 USC 47 Internal Revenue Code of 1986; 26 USC 48 Internal Revenue Code of 1986; 26 USC 196 Internal Revenue Code of 1986

CFR Citation: 26 CFR 1

Legal Deadline: None.

Abstract: The proposed regulations would provide rules concerning a basis adjustment in the case of the investment tax credit.

Timetable:

Action	Date	FR Cite
NPRM	09/21/87	52 FR 35439
NPRM Comment Period End	11/20/87	
Final Action	00/00/00	

Small Entity: Not Applicable

Additional Information: LR-183-82.

Drafting attorney: David R. Haglund (202) 566-3297.

Reviewing attorney: Walter H. Woo (202) 566-3297.

Agency Contact: David R. Haglund, Attorney, Department of the Treasury, Internal Revenue Service, 1111 Constitution Ave., N.W., Washington, D.C. 20224, 202 566-3297

RIN: 1545-AF06

2373. INCOME TAX—INCREASE IN INVESTMENT TAX CREDIT FOR QUALIFIED REHABILITATION EXPENDITURES

Legal Authority: 26 USC 7805 Internal Revenue Code of 1986; 26 USC 48 Internal Revenue Code of 1986

CFR Citation: 26 CFR 1

Legal Deadline: None.

Abstract: The regulations provide rules and definitions relating to terms such as qualified rehabilitated expenditures, qualified rehabilitated building, substantial rehabilitation and certified historic structure.

Timetable:

Action	Date	FR Cite
NPRM	06/28/85	50 FR 26794
NPRM Comment Period End	08/27/85	
Hearing	11/15/85	
Final Action	04/01/88	

Small Entity: Not Applicable

Additional Information: LR-236-81.

Drafting attorney: Stuart G. Wessler (202) 566-3297.

Reviewing attorney: Walter H. Woo (202) 566-3297.

Office of Tax Legislative Counsel (Treasury) reviewing attorney: Susan Himes (202) 566-8527.

Agency Contact: Stuart G. Wessler, Attorney, Department of the Treasury, Internal Revenue Service, 1111 Constitution Ave., N.W., Washington, D.C. 20224, 202 566-3297

RIN: 1545-AA12

2374. INCOME TAX—DEFINITION OF FILMS THAT ARE "TOPICAL OR OTHERWISE ESSENTIALLY TRANSITORY IN NATURE"

Legal Authority: 26 USC 7805 Internal Revenue Code of 1986; 26 USC 48(k) Internal Revenue Code of 1986

CFR Citation: 26 CFR 1

Legal Deadline: None.

Abstract: The proposed regulations more specifically define what movie and television films and videotapes qualify for the investment credit.

Timetable:

Action	Date	FR Cite
NPRM	06/03/82	47 FR 24142
NPRM Comment Period End	08/02/82	47 FR 24142
Final Action	10/31/88	

Small Entity: Not Applicable

Additional Information: LR-143-80.

Drafting attorney: David R. Haglund (202) 566-3297.

Reviewing attorney: John B. Bromell (202) 566-3326.

Office of Tax Legislative Counsel (Treasury) reviewing attorney: Susan Himes (202) 566-8527.

Agency Contact: David R. Haglund, Attorney, Department of the Treasury, Internal Revenue Service, 1111 Constitution Ave., N.W., Washington, D.C. 20224, 202 566-3297

RIN: 1545-AA22

2375. INCOME TAX—SPECIAL RULES ADDED BY SEC 223(C) OF CRUDE OIL WINDFALL PROFIT TAX ACT 1980, RELATING TO REDUCTION OF CREDIT WHERE PROPERTY IS FINANCED BY SUBSIDIZED ETC

Legal Authority: 26 USC 7805 Internal Revenue Code of 1986; 26 USC 48(l) Internal Revenue Code of 1986; PL 96-223, Sec 223(c)

CFR Citation: 26 CFR 1

Legal Deadline: None.

Abstract: The regulations will provide that subsidized energy financing and proceeds of exempt industrial development bonds used to finance a facility reduce the qualified investment in the energy property contained in that facility for purposes of determining the amount of the energy tax credit.

Timetable:

Action	Date	FR Cite
NPRM	01/26/82	47 FR 03559
NPRM Comment Period End	03/20/82	47 FR 03559
Hearing	06/03/82	
Final Action	12/31/89	

Small Entity: Not Applicable

Additional Information: LR-176-80.

Drafting attorney: Mark S. Jennings (202) 566-3458.

Reviewing attorney: Robert J. Mason (202) 566-3463.

Agency Contact: Mark S. Jennings, Attorney, Department of the Treasury, Internal Revenue Service, 1111 Constitution Ave., N.W., Washington, D.C. 20224, 202 566-3458

RIN: 1545-AA26

2376. CORPORATE ALTERNATIVE MINIMUM TAX BOOK INCOME ADJUSTMENT

Legal Authority: 26 USC 55 Internal Revenue Code of 1986; 26 USC 56(c)(1) Internal Revenue Code of 1986; 26 USC 56(f) Internal Revenue Code of 1986

CFR Citation: 26 CFR 1

Legal Deadline: None.

Abstract: The regulations will describe rules for the computation of the alternative minimum net book income adjustment imposed on corporations.

Timetable:

Action	Date	FR Cite
NPRM	04/27/87	52 FR 15339
NPRM Comment Period End	06/29/87	
Final Action	09/00/88	

Small Entity: No

Additional Information: LR-107-86.

Drafting attorney: Timothy J. McKenna (202) 566-3287.

Reviewing attorney: Ada S. Rousso (202) 566-3287.

Office of Tax Legislative Counsel Attorney: Tom Evans (202) 566-4902, Richard Harvey (202) 535-6960, and Neil Kimmelfield (202) 566-8528.

Agency Contact: Timothy J. McKenna, Attorney, Department of the Treasury, Internal Revenue Service, 1111 Constitution Ave., N.W., Washington, D.C. 20224, 202 566-3287

RIN: 1545-AJ14

2377. INCOME TAX—INVENTORY ADJUSTMENT FOR THE ALTERNATIVE MINIMUM TAX

Legal Authority: 26 USC 7805 Internal Revenue Code of 1986; 26 USC 56 (a) Internal Revenue Code of 1986

CFR Citation: 26 CFR 1

Legal Deadline: None.

Abstract: This regulation provides guidance with respect to inventory adjustment for the alternative minimum tax.

Timetable:

Action	Date	FR Cite
Temporary Regulation	00/00/00	

Small Entity: Not Applicable

Additional Information: LR-64-87

Drafting Attorney: William Jackson (202) 566-3287.

Reviewing Attorney: Ada Rousso (202) 566-3287.

Treasury Attorney: Tom Evans (202) 566-5453.

Agency Contact: William Jackson, Attorney, Department of the Treasury, Internal Revenue Service, 1111 Constitution Avenue, N.W., Washington, DC 20224, 202 566-3287

RIN: 1545-AL03

2378. TAX BENEFIT RULE FOR CORPORATE ADD-ON MINIMUM TAX UNDER THE INTERNAL REVENUE CODE OF 1954

Legal Authority: 26 USC 7805 Internal Revenue Code of 1986; 26 USC 58 Internal Revenue Code of 1986

CFR Citation: 26 CFR 1

Legal Deadline: None.

Abstract: The regulations provide rules for taking into account credit carryovers in applying the minimum tax benefit rule for corporations.

Timetable:

Action	Date	FR Cite
Next Action Undetermined		

Small Entity: Not Applicable

Additional Information: LR-53-87

Drafting attorney: William A. Jackson (202) 566-3287.

Reviewing attorney: Ada S. Rousso (202) 566-3287.

Treasury attorney: Neil Kimmelfield (202) 566-8528.

Agency Contact: William A. Jackson, Attorney, Department of the Treasury, Internal Revenue Service, 1111 Constitution Avenue, N.W., Washington, D.C. 20224, **202 566-3287**

RIN: 1545-AK21

2379. INCOME TAX—NONQUALIFIED SALARY REDUCTION AGREEMENTS

Legal Authority: 26 USC 7805 Internal Revenue Code of 1986; 26 USC 61 Internal Revenue Code of 1986

CFR Citation: 26 CFR 1

Legal Deadline: None.

Abstract: This regulation would provide guidance regarding the tax treatment of nonqualified deferred compensation arrangements established by tax exempt charitable organizations such as non-profit hospitals for their employees.

Timetable:

Action	Date	FR Cite
NPRM	02/03/78	43 FR 4638
Final Action Effective	03/06/78	
NPRM Comment Period End	04/04/78	43 FR 4638
Hearing	05/14/78	
News release issued for comment	06/11/79	
Hearing	11/27/79	
Final Action	00/00/00	

Small Entity: Not Applicable

Additional Information: LR-194-77.

Drafting attorney: John A. Tolleris (202) 566-3590.

Reviewing attorney: John M. Coulter, Jr. (202) 566-3740.

Office of Tax Legislative Counsel (Treasury) reviewing attorney: Harry Conaway (202) 566-8277.

Agency Contact: John A. Tolleris, Attorney, Department of the Treasury, Internal Revenue Service, 1111 Constitution Ave., N.W., Washington, D.C. 20224, **202 566-3590**

RIN: 1545-AA35

2380. INCOME TAX—TAXATION OF FRINGE BENEFITS AND EXCLUSIONS FROM GROSS INCOME FOR CERTAIN FRINGE BENEFITS

Legal Authority: 26 USC 61 Internal Revenue Code of 1986; 26 USC 132 Internal Revenue Code of 1986; 26 USC 7805 Internal Revenue Code of 1986

CFR Citation: 26 CFR 1

Legal Deadline: None.

Abstract: Regulations will provide guidance on the taxation and valuation of fringe benefits. The regulations will also address the requirements for certain fringe benefit exclusions, including nondiscrimination and line of business restrictions.

Timetable:

Action	Date	FR Cite
Hearing	04/16/85	50 FR 7072
NPRM Comment Period End	02/21/86	50 FR 52333
Hearing	03/03/86	51 FR 2898
Hearing	04/29/86	51 FR 8517
NPRM	12/23/86	50 FR 52333
Interim Final Rule	12/23/86	50 FR 52281
Final Action	00/00/00	

Small Entity: Not Applicable

Additional Information: LR-216-84

Drafting Attorney: Rhonda G. Migdail (202) 566-6212.

Reviewing attorney: Paul A. Francis (202) 566-3218.

Treasury attorney: Susan Scherbel (202) 535-6965.

Agency Contact: Rhonda G. Migdail, Attorney, Department of the Treasury, Internal Revenue Service, 1111 Constitution Avenue, NW, Washington, DC 20224, **202 566-6212**

RIN: 1545-AH73

2381. 2-PERCENT FLOOR ON MISCELLANEOUS ITEMIZED DEDUCTIONS

Legal Authority: 26 USC 7805 Internal Revenue Code of 1986; 26 USC 67 (c) Internal Revenue Code of 1986

CFR Citation: 26 CFR 1

Legal Deadline: None.

Abstract: The regulations would provide guidance regarding the miscellaneous itemized deductions that are subject to the 2-percent floor and provide expense allocation rules for regulated investment companies and REMICs.

Timetable:

Temporary Regulation

Temporary Regulation 04/01/88

Small Entity: Not Applicable

Additional Information: LR-96-86.

Drafting attorney: Beverly A. Baughman (202) 566-3297.

Reviewing attorneys: John B. Bromell (202) 566-3326 and Charles M. Whedbee (202) 566-3458.

Treasury attorneys: Blake Rubin (202) 566-2927 and Don Rocap (202) 566-8277.

Agency Contact: Beverly A. Baughman, Attorney, Department of the Treasury, Internal Revenue Service, 1111 Constitution Ave.,N.W., Washington, D.C. 20224, **202 566-3297**

RIN: 1545-AJ48

2382. TREATMENT OF TRANSFER OF PROPERTY BETWEEN SPOUSES, TAX TREATMENT OF ALIMONY AND SEPARATE MAINTENANCE PAYMENTS, AND DEPENDENCY EXEMPTION IN THE CASE OF CHILD OF DIVORCED PARENTS

Legal Authority: 26 USC 7805 Internal Revenue Code of 1986; 26 USC 71 Internal Revenue Code of 1986; 26 USC 215 Internal Revenue Code of 1986; 26 USC 1041 Internal Revenue Code of 1986; 26 USC 152 Internal Revenue Code of 1986

CFR Citation: 26 CFR 1

Legal Deadline: None.

Abstract: The regulations will provide guidance to assist taxpayers in determining whether alimony and separate maintenance payments are deductible from income by the payor and includible in income by the payee, whether property transferred between spouses or between spouses incident to divorce has a carryover basis and whether the custodial or noncustodial parent is entitled to the dependency exemption.

Timetable:

Action	Date	FR Cite
NPRM	08/31/84	49 FR 34451
NPRM Comment Period End	10/20/84	49 FR 34528
Final Action	00/00/00	

Small Entity: No

Additional Information: LR-153-84.

Drafting attorney: Lauren G. Shaw (202) 566-3287.

Reviewing attorney: Ada S. Rousso (202) 566-3287.

Treasury attorney: Don Rocap (202) 566-8278.

Agency Contact: Lauren G. Shaw, Attorney-Advisor, Department of the Treasury, Internal Revenue Service, 1111 Constitution Ave., N.W., Washington, D.C. 20224, 202 566-3287

RIN: 1545-AI49

2383. INCOME TAX REGULATIONS—MORTALITY TABLES TO BE USED TO DETERMINE AMOUNT HELD BY INSURER WITH RESPECT TO A BENEFICIARY

Legal Authority: 26 USC 7805 Internal Revenue Code of 1986; 26 USC 101 (d)(2)(B)(ii) Internal Revenue Code of 1986

CFR Citation: 26 CFR 1

Legal Deadline: None.

Abstract: The regulations will prescribe the mortality table to be used to determine the amount held by an insurer with respect to a beneficiary of a life insurance contract.

Timetable:

Action	Date	FR Cite
NPRM	09/21/87	52 FR 35447
Final Action	00/00/00	

Small Entity: Not Applicable

Additional Information: LR-135-86

Drafting attorney: Katherine Wambsgans (202) 566-3288.

Reviewing attorney: Sharon L. Hall (202) 566-3288.

Treasury attorney: Don Rocap (202) 566-8277.

Agency Contact: Sharon L. Hall, Attorney, Department of the Treasury, Internal Revenue Service, 1111 Constitution Avenue, N.W., Washington, D.C. 20224, 202 566-3288

RIN: 1545-AK14

2384. INCOME TAX—EXEMPTION FOR INDUSTRIAL DEVELOPMENT BONDS FOR WATER FACILITIES

Legal Authority: 26 USC 7805 Internal Revenue Code of 1986; 26 USC 142(e) Internal Revenue Code of 1986

CFR Citation: 26 CFR 1

Legal Deadline: None.

Abstract: This regulation would provide guidance to determine the rules under which facilities for furnishing water to members of the general public can be financed with tax-exempt industrial development bonds under section 142 (e) of the Internal Revenue Code of 1986.

Timetable:

Action	Date	FR Cite
Final Action Effective	11/07/78	
NPRM	08/22/84	49 FR 33283
NPRM Comment Period End	10/22/84	49 FR 33283
Hearing	01/30/85	
Final Action	00/00/00	

Small Entity: Not Applicable

Additional Information: LR-190-78.

Drafting attorney: John A. Tolleris (202) 566-3590.

Reviewing attorney: John M. Coulter, Jr. (202) 566-3740.

Office of Tax Legislative Counsel reviewing attorney: Elliot Stern (202) 566-2926.

Agency Contact: John A. Tolleris, Attorney, Department of the Treasury, Internal Revenue Service, 1111 Constitution Ave., N.W., Washington, D.C. 20224, 202 566-3590

RIN: 1545-AA49

2385. INCOME TAX—TO DEFINE THE TERM "PRINCIPAL USER OF A FACILITY"

Legal Authority: 26 USC 7805 Internal Revenue Code of 1986; 26 USC 144(a) Internal Revenue Code of 1986

CFR Citation: 26 CFR 1

Legal Deadline: None.

Abstract: This regulation would define the meaning of the term "principal user of a facility" for purposes of applying the limitation set by the Internal Revenue Code upon the permissible size of a small issue of tax-exempt industrial development bonds, as diminished by certain other capital expenditures. This regulation would help identify other facilities the capital expenditures from which must be taken into account in determining whether that issue exceeds the small issue limitation.

Timetable:

Action	Date	FR Cite
NPRM	02/21/86	51 FR 6274
NPRM Comment Period End	04/22/86	51 FR 6274
Hearing	06/04/86	51 FR 6273
Final Action Effective	08/23/86	
Final Action	00/00/00	

Small Entity: Not Applicable

Additional Information: LR-59-74.

Drafting attorney: John A. Tolleris (202) 566-3590.

Reviewing attorney: John M. Coulter, Jr. (202) 566-3740.

Office of Tax Legislative Counsel reviewing attorney: Elliot Stern (202) 566-2926.

Agency Contact: John A. Tolleris, Attorney, Department of the Treasury, Internal Revenue Service, 1111 Constitution Ave., N W, Washington, D C 20224, 202 566-3590

RIN: 1545-AA56

2386. INCOME TAX—MORTGAGE SUBSIDY BONDS

Legal Authority: 26 USC 7805 Internal Revenue Code of 1986

CFR Citation: 26 CFR 1

Legal Deadline: None.

Abstract: The regulations would provide rules which interpret the provisions of section 103a, relating to Mortgage Subsidy Bonds. Mortgage Subsidy Bonds are any obligations a significant portion of the proceeds of which are used to provide financing for owner-occupied residences.

Timetable:

Action	Date	FR Cite
NPRM - Previous	07/01/81	46 FR 34348
Hearing	11/05/81	
NPRM	11/10/81	46 FR 55513
NPRM Comment Period End	01/09/82	46 FR 55513
Final Action	00/00/00	

Small Entity: Not Applicable

Additional Information: LR-10-81.

Drafting attorney: Robert Beatson (202) 566-3459.

Reviewing attorney: John M. Coulter, Jr. (202) 566-4473.

Agency Contact: Robert Beatson, Attorney, Department of the Treasury,

Internal Revenue Service, 1111 Constitution Ave., N.W., Washington, D.C. 20224, 202 566-3459

RIN: 1545-AA63

2387. TO PROVIDE REGULATIONS REQUIRING CERTAIN DEBT OBLIGATIONS TO BE ISSUED IN REGISTERED FORM

Legal Authority: 26 USC 7805 Internal Revenue Code of 1986; 26 USC 149(a) Internal Revenue Code of 1986; 26 USC 163(f) Internal Revenue Code of 1986

CFR Citation: 26 CFR 1

Legal Deadline: None.

Abstract: The rules will provide that certain debt obligations issued after December 31, 1982, must be in registered form. The rules will provide examples of certain obligations that are not subject to the registration requirements. The sanctions for not issuing an obligation in registered form are the denial of an interest deduction, loss of capital gains treatment, loss of an earnings and profits adjustment, and loss of tax-exempt interest status.

Timetable:

Action	Date	FR Cite
NPRM	11/15/82	47 FR 51414
NPRM Comment Period End	01/14/83	47 FR 51414
Hearing	01/25/83	47 FR 51413
Final Action	00/00/00	
Final Action Effective	00/00/00	

Small Entity: Not Applicable

Additional Information: LR-255-82.

Drafting attorney: Robert Beatson (202) 566-3459.

Reviewing attorney: John M. Coulter, Jr. (202) 566-4473.

Treasury attorney: Elliot Stern (202) 566-2566.

Agency Contact: Robert Beatson, Attorney, Department of the Treasury, Internal Revenue Service, 1111 Constitution Ave., N.W., Washington, D.C. 20224, 202 566-3459

RIN: 1545-AE18

2388. TO PROVIDE REGULATIONS UNDER SECTION 103(K) AND (L)—RELATING TO PUBLIC APPROVAL AND INFORMATION REPORTING REQUIREMENTS FOR PRIVATE ACTIVITY BONDS

Legal Authority: 26 USC 7805 Internal Revenue Code of 1986; 26 USC 103 Internal Revenue Code of 1954

CFR Citation: 26 CFR 1

Legal Deadline: None.

Abstract: The proposal will clarify the information reporting requirements with respect to private activity bonds. Industrial development bonds must be publicly approved--failure to fulfill this requirement results in loss of tax exemption for the interest on these bonds. Issuers of student loan bonds, charitable use bonds and industrial development bonds are required to supply certain information to the Internal Revenue Service. Failure to comply with this requirement will result in the loss of tax exemption for the bond's interest.

Timetable:

Action	Date	FR Cite
NPRM	05/11/83	48 FR 21166
NPRM Comment Period End	07/11/83	48 FR 21166
Final Action	00/00/00	

Small Entity: Not Applicable

Additional Information: LR-221-82.

Drafting attorney: Robert Beatson (202) 566-3459.

Reviewing attorney: John M. Coulter, Jr. (202) 566-3331.

Agency Contact: Robert Beatson, Attorney, Department of the Treasury, Internal Revenue Service, 1111 Constitution Ave., N.W., Washington, D.C. 20224, 202 566-3459

RIN: 1545-AE24

2389. REGULATIONS RELATING TO $40 MILLION SMALL ISSUE LIMIT ON TAX-EXEMPT BONDS PER TAXPAYER

Legal Authority: 26 USC 7805 Internal Revenue Code of 1986; 26 USC 144(a)(10) Internal Revenue Code of 1986

CFR Citation: 26 CFR 1

Legal Deadline: None.

Abstract: These regulations would provide guidance regarding the provision enacted by the Tax Reform Act of 1984 which generally denies Federal income tax exemption for a small issue of development bonds if any of its beneficiaries receives the benefits of more than $40 million of prior outstanding industrial development bonds allocated to itself, including its allocated portion of the small issue in question. These regulations would also provide guidance regarding how the proceeds of an issue of industrial development bonds are to be allocated among its beneficiaries.

Timetable:

Action	Date	FR Cite
NPRM	02/21/86	51 FR 6270
NPRM Comment Period End	04/22/86	51 FR 6270
Hearing	06/04/86	51 FR 6273
Final Action Effective	08/23/86	
Final Action	00/00/00	

Small Entity: Not Applicable

Additional Information: LR-157-84.

Drafting attorney: John A. Tolleris (202) 566-3590.

Reviewing attorney: John M. Coulter, Jr. (202) 566-3740.

Office of Tax Legislative Counsel reviewing attorney: Elliott Stern(202) 566-2926.

Agency Contact: John A. Tolleris, Attorney, Department of the Treasury, Internal Revenue Service, 1111 Constitution Ave., N.W., Washington, D.C. 20224, 202 566-3590

RIN: 1545-AH19

2390. INCOME TAX—TO CLARIFY THE DEFINITION OF PROPERTY WHICH IS A POLLUTION CONTROL FACILITY

Legal Authority: 26 USC 7805 Internal Revenue Code of 1986; 26 USC 103 (b) Internal Revenue Code of 1954

CFR Citation: 26 CFR 1

Legal Deadline: None.

Abstract: The regulations will define the term "air or water pollution control facilities". The regulations will further determine the portion of the cost of such facilities that may be financed with tax-exempt industrial development bonds, whenever the facilities also serve certain other purposes.

Timetable:

Action	Date	FR Cite
NPRM	08/20/75	40 FR 36371
Hearing	11/21/75	
NPRM Comment Period End	11/28/75	40 FR 36371
Final Action	00/00/00	

Small Entity: Not Applicable

Additional Information: LR-9-75.

Drafting attorney: Robert Beatson (202) 566-3459.

Reviewing attorney: John M. Coulter, Jr. (202) 566-3331.

Agency Contact: Robert Beatson, Attorney, Department of the Treasury, Internal Revenue Service, 1111 Constitution Ave., N.W., Washington, DC 20224, **202 566-3459**

RIN: 1545-AK10

2391. TO PROVIDE REGULATIONS RELATING TO THE TAX EXEMPTION OF OBLIGATIONS TO FINANCE MIXED-USE RESIDENTIAL RENTAL PROPERTY

Legal Authority: 26 USC 7805 Internal Revenue Code of 1986

CFR Citation: 26 CFR 1.103-8

Legal Deadline: None.

Abstract: The regulations will clarify the rule relating to obligations to provide residential rented property. The regulations will make clear that a residential rental project can consist in part of non-residential rental property.

Timetable:

Action	Date	FR Cite
NPRM	10/07/85	50 FR 46303
NPRM Comment Period End	01/06/86	
Hearing	02/10/86	51 FR 1392
Final Action	12/31/88	

Small Entity: Not Applicable

Additional Information: LR-269-84.

Drafting attorney: David Selig (202) 566-3297.

Reviewing attorney: John M. Coulter (202) 566-3331.

Treasury attorney: Elliot Stern (202) 566-2566.

Agency Contact: David Selig, Attorney, Department of the Treasury, Internal Revenue Service, 1111 Constitution Ave., N.W., Washington, D.C. 20224, **202 566-3297**

RIN: 1545-AH68

2392. AMENDMENT OF REGULATIONS RELATING TO ARBITRAGE ON NONPURPOSE OBLIGATIONS TO REFLECT SECTION 624 OF TRA OF 1984

Legal Authority: 26 USC 7805 Internal Revenue Code of 1986; 26 USC 103(c)(6) Internal Revenue Code of 1986

CFR Citation: 26 CFR 1

Legal Deadline: None.

Abstract: The regulations will provide rules relating to arbitrage on nonpurpose investments with respect to industrial development bonds. Rules will be the limitation on nonpurpose investments and the rebate requirement.

Timetable:

Action	Date	FR Cite
NPRM	01/07/85	50 FR 00837
NPRM Comment Period End	03/08/85	50 FR 00837
Final Action	00/00/00	

Small Entity: Not Applicable

Additional Information: LR-192-84.

Drafting attorney: Howard Gensler (202) 566-3459.

Reviewing attorney: Gerald Rock (202) 566-3238.

Treasury attorney: Elliott Stern (202) 566-2566.

Agency Contact: Howard Gensler, Attorney, Department of the Treasury, Internal Revenue Service, 1111 Constitution Ave., N.W., Washington, D.C. 20224, **202 566-3459**

RIN: 1545-AH07

2393. INCOME TAX--PREPAID LEGAL EXPENSES

Legal Authority: 26 USC 7805 Internal Revenue Code of 1986; 26 USC 120 Internal Revenue Code of 1986; 26 USC 501(c)(20) Internal Revenue Code of 1986

CFR Citation: 26 CFR 1

Legal Deadline: None.

Abstract: The regulations would provide rules relating to the establishment and operation of a qualified group legal services plan. Employer contributions to, and benefits provided under, a qualified plan are excluded from an employee's gross income.

Timetable:

Action	Date	FR Cite
NPRM	04/29/80	45 FR 28360
NPRM Comment Period End	06/30/80	45 FR 28360
Hearing	09/04/80	
Final Action	00/00/00	

Small Entity: Not Applicable

Additional Information: EE-5-78.

Drafting attorney: Monice Rosenbaum (202) 566-3422.

Reviewing attorney: Jonathan P. Marget (202) 566-3651.

Agency Contact: Monice Rosenbaum, Attorney, Department of the Treasury, Internal Revenue Service, 1111 Constitution Ave., N.W., Washington, D.C. 20224, **202 566-3422**

RIN: 1545-AD62

2394. INCOME TAX--TAX TREATMENT OF CAFETERIA PLANS

Significance: Regulatory Program

Legal Authority: 26 USC 7805 Internal Revenue Code of 1986; 26 USC 125 Internal Revenue Code of 1986

CFR Citation: 26 CFR 1

Legal Deadline: None.

Abstract: The regulations establish rules for the tax treatment of cafeteria plans meeting certain nondiscrimination standards. A cafeteria plan permits participating employees to select the particular fringe benefits desired from a package of employer-provided benefits which include statutory nontaxable benefits and cash.

Timetable:

Action	Date	FR Cite
NPRM	12/31/84	49 FR 50733
NPRM Comment Period End	01/30/85	
Hearing	03/11/85	
Final Action	12/31/88	

Small Entity: Not Applicable

Additional Information: EE-16-79.

Drafting attorney: Harry Beker (202) 566-6212.

Reviewing attorney: Michael A. Thrasher (202) 566-3961.

Office of Tax Legislative Counsel (Treasury) reviewing attorney: Harry Conaway (202) 566-8277.

Agency Contact: Harry Beker, Attorney, Department of the Treasury, Internal Revenue Service, 1111 Constitution Ave., N.W., Washington, D.C. 20224, 202 566-6212

RIN: 1545-AD63

2395. INCOME TAX-EXCLUSION FROM INCOME OF CERTAIN COST-SHARING PAYMENTS UNDER GOVERNMENT PROGRAMS

Legal Authority: 26 USC 7805 Internal Revenue Code of 1986; 26 USC 126 Internal Revenue Code of 1986; 26 USC 1255 Internal Revenue Code of 1986

CFR Citation: 26 CFR 1

Legal Deadline: None.

Abstract: The regulation will provide rules on the exclusion from income of certain cost sharing payments and on the amount recaptured when the property improved with government payments is sold within a certain specified period of time.

Timetable:

Action	Date	FR Cite
NPRM	05/21/81	46 FR 27723
NPRM Comment Period End	07/20/81	46 FR 27723
Hearing	12/01/81	46 FR 50808
Final Action	00/00/00	

Small Entity: Not Applicable

Additional Information: LR-222-78.

Drafting attorney: Katherine Lee Wambsgans (202) 566-3288.

Reviewing attorney: Ewan D. Purkiss (202) 566-3238.

Agency Contact: Katherine Lee Wambsgans, Attorney, Department of the Treasury, Internal Revenue Service, 1111 Constitution Ave., N.W., Washington, D.C. 20224, 202 566-3288

RIN: 1545-AA73

2396. INCOME TAX--PART I EXCLUSION FROM GROSS INCOME FOR CERTAIN FOSTER CARE PAYMENTS

Legal Authority: 26 USC 7805 Internal Revenue Code of 1986; 26 USC 131 Internal Revenue Code of 1986

CFR Citation: 26 CFR 1

Legal Deadline: None.

Abstract: This regulation project will explain what foster child care payments may be excluded from the gross income of a foster parent.

Timetable:

Action	Date	FR Cite
NPRM	02/01/85	50 FR 4702
NPRM Comment Period End	04/02/85	50 FR 4702
Hearing	06/25/85	
Final Action	00/00/00	

Small Entity: No

Additional Information: LR-83-83.

Drafting attorney: Sharon L. Hall (202) 566-3288.

Reviewing attorney: Cynthia L. Clark (202) 566-3288.

Agency Contact: Sharon L. Hall, Attorney, Department of the Treasury, Internal Revenue Service, 1111 Constitution Ave., N.W., Washington, D.C. 20224, 202 566-3288

RIN: 1545-AF52

2397. INFORMATION REPORTING FOR TAX-EXEMPT BONDS

Legal Authority: 26 USC 7805 Internal Revenue Code of 1986; 26 USC 149 Internal Revenue Code of 1986

CFR Citation: 26 CFR 1

Legal Deadline: None.

Abstract: The regulation would provide information reporting rules for tax-exempt bonds.

Timetable:

Action	Date	FR Cite
Hearing	06/26/86	
NPRM	03/11/87	52 FR 7408
NPRM Comment Period End	05/11/87	52 FR 7408
Final Action Effective	06/01/88	

Small Entity: Not Applicable

Additional Information: LR-146-86

Drafting attorney: Robert Beatson (202) 566-3459.

Reviewing attorney: John Coulter (202) 566-3331.

Treasury attorney: Elliot Stern (202) 566-2926.

Agency Contact: Robert Beatson, Attorney, Department of the Treasury, Internal Revenue Service, 1111 Constitution Ave., N.W., Washington, DC 20224, 202 566-3459

RIN: 1545-AJ63

2398. CONTINUATION COVERAGE REQUIREMENTS OF GROUP HEALTH PLANS

Legal Authority: 26 USC 7805 Internal Revenue Code of 1986; 26 USC 106(b) Internal Revenue Code of 1986; 26 USC 162(i)(2) Internal Revenue Code of 1986; 26 USC 162(k) Internal Revenue Code of 1986

CFR Citation: 26 CFR 1

Legal Deadline: None.

Abstract: These regulations will provide guidance relating to the requirement that a group health plan provide continuation coverage to individuals who would otherwise lose coverage as a result of certain events.

Timetable:

Action	Date	FR Cite
NPRM	06/15/87	52 FR 22716
NPRM Comment Period End	08/14/87	52 FR 22716
Hearing	11/04/87	
Final Action	12/00/88	

Small Entity: Not Applicable

Additional Information: EE-143-86

Drafting Attorney: Mark Schwimmer (202) 566-6212.

Review Attorney: Michael A. Thrasher (202) 566-6212.

Treasury Attorney: Priscilla Ryan (202) 566-4903.

Agency Contact: Mark Schwimmer, Attorney, Department of the Treasury, Internal Revenue Service, 1111 Constitution Ave., N.W., Washington, D.C. 20224, 202 566-6212

RIN: 1545-AI93

2399. INCOME TAX REGULATIONS--LIMITATIONS ON DEDUCTIONS FOR NONBUSINESS INTEREST

Legal Authority: 26 USC 7805 Internal Revenue Code of 1986; 26 USC 163 Internal Revenue Code of 1986

CFR Citation: 26 CFR 1

Legal Deadline: None.

Abstract: The regulations will provide guidance relating to the disallowance of a deduction for personal interest, including guidance regarding the definitions of qualified residence, qualified residence interest and qualified indebtedness.

Timetable:

Action	Date	FR Cite
NPRM	12/22/87	52 FR 48452
Final Action	12/00/88	

Small Entity: Not Applicable

Additional Information: LR-137-86

Drafting attorney: Sharon L. Hall (202) 566-3288.

Reviewing attorney: John Fischer (202) 566-3394.

Treasury attorney: Reed Shuldiner (202) 566-6963.

Agency Contact: Sharon L. Hall, Attorney, Department of the Treasury, Internal Revenue Service, 1111 Constitution Avenue, N.W., Washington, D.C. 20224, **202 566-3288**

RIN: 1545-AK17

2400. INCOME TAX REGULATIONS--TAX STRADDLES RELATING TO SECTION 108 OF THE TAX REFORM ACT OF 1984

Legal Authority: 26 USC 7805 Internal Revenue Code of 1986; 26 USC 165 Internal Revenue Code of 1986

CFR Citation: 26 CFR 1

Legal Deadline: None.

Abstract: These regulations will provide rules under section 108 of the Tax Reform Act of 1984 and section 1808 (d) of the Tax Reform Act of 1986, relating to the treatment of certain losses on straddles entered into before the effective date of the Economic Recovery Tax Act of 1981.

Timetable:

Action	Date	FR Cite
NPRM	08/23/84	49 FR 33458
NPRM Comment Period End	10/22/84	49 FR 33458
Hearing	11/29/84	
Final Action	09/08/88	

Small Entity: Not Applicable.

Additional Information: LR-147-84.

Drafting attorney: Timothy J. McKenna (202) 566-3287

Reviewing attorney: John Fischer (202) 566-3394.

Treasury attorney: Kathleen Ferrell (202) 566-2175.

Agency Contact: Timothy J. McKenna, Attorney, Department of the Treasury, Internal Revenue Service, 1111 Constitution Ave., N.W., Washington, D.C. 20224, **202 566-3287**

RIN: 1545-AG57

2401. INCOME TAX--ACCELERATED COST RECOVERY SYSTEM

Legal Authority: 26 USC 7805 Internal Revenue Code of 1986; 26 USC 168 Internal Revenue Code of 1986; 26 USC 179 Internal Revenue Code of 1986; 26 USC 1245 Internal Revenue Code of 1986; 26 USC 453 Internal Revenue Code of 1986; 26 USC 167 Internal Revenue Code of 1986; 26 USC 1250 Internal Revenue Code of 1986; 26 USC 57(a)(12) Internal Revenue Code of 1986; 26 USC 312(k) Internal Revenue Code of 1986; 26 USC 172(b) Internal Revenue Code of 1986; 26 USC 812(b) Internal Revenue Code of 1986; 26 USC 46(b) Internal Revenue Code of 1986; 26 USC 53(c) Internal Revenue Code of 1986; 26 USC 381(c) Internal Revenue Code of 1986

CFR Citation: 26 CFR 1

Legal Deadline: None.

Abstract: To provide regulations under section 168 and accompanying provisions clarifying the operation of the new accelerated cost recovery scheme. This new cost recovery system generally applies to property placed in service after December 31, 1980. Generally, section 168 applies to "recovery property" which is defined as tangible property of a character subject to the allowance for depreciation which is used in a trade or business, or held for the production of income.

Timetable:

Action	Date	FR Cite
NPRM	02/16/84	49 FR 5940
NPRM Comment Period End	05/16/84	49 FR 5940
Hearing held	05/21/84	
Final Action	00/00/00	

Small Entity: Not Applicable

Additional Information: LR-185-81.

Drafting attorney: Ada S. Rousso (202) 566-3287.

Reviewing attorney: John M. Coulter (202) 566-4473.

Treasury attorney: Ellen Aprill (202) 566-5453.

Agency Contact: Ada S. Rousso, Attorney, Department of the Treasury, Internal Revenue Service, 1111 Constitution Ave., N.W., Washington, D.C. 20224, **202 566-3287**

RIN: 1545-AA87

2402. TAX-EXEMPT ENTITY LEASING

Legal Authority: 26 USC 7805 Internal Revenue Code of 1986; 26 USC 7701 (e) Internal Revenue Code of 1986

CFR Citation: 26 CFR 1

Legal Deadline: None.

Abstract: These regulations provide rules concerning tax-exempt entity leasing and service contracts.

Timetable:

Action	Date	FR Cite
NPRM	07/02/85	50 FR 27297
NPRM Comment Period End	09/03/85	50 FR 27297
Hearing	11/25/85	
Final Action	04/01/88	

Small Entity: Not Applicable

Additional Information: LR-31-85.

Drafting attorney: Robert Beatson (202) 566-3459.

Agency Contact: Robert Beatson, Attorney, Department of the Treasury, Internal Revenue Service, 1111 Constitution Avenue, N.W., Washington, D.C. 20224, **202 566-3459**

RIN: 1545-AH76

2403. TAX-EXEMPT ENTITY LEASING

Legal Authority: 26 USC 7805 Internal Revenue Code of 1986; 26 USC 168 Internal Revenue Code of 1986

CFR Citation: 26 CFR 1

Legal Deadline: None.

Abstract: The proposed regulations provide rules concerning tax-exempt entity leasing and service contracts.

Timetable:

Action	Date	FR Cite
Final Action	04/01/88	

Small Entity: Not Applicable

Additional Information: LR-166-86

Drafting attorney: Robert Beatson (202) 566-3459.

Reviewing attorney: John Tolleris (202) 566-3294.

Treasury attorney: Kathleen Farrell (202) 566-2928.

Agency Contact: Robert Beatson, Attorney, Department of the Treasury, Internal Revenue Service, 1111 Constitution Avenue NW, Washington, DC 20224, **202 566-3459**

RIN: 1545-AJ36

2404. DEDUCTIONS IN EXCESS OF $5,000 CLAIMED FOR CERTAIN CHARITABLE CONTRIBUTIONS OF PROPERTY AND INFORMATION REPORTING BY DONEES WHO MAKE CERTAIN DISPOSITIONS OF DONATED PROPERTY

Legal Authority: 26 USC 7805 Internal Revenue Code of 1986; 26 USC 170(a)(1) Internal Revenue Code of 1986; 26 USC 6050L Internal Revenue Code of 1986

CFR Citation: 26 CFR 1

Legal Deadline: None.

Abstract: These regulations will provide rules relating to deductions for charitable contributions. The regulations provide that deductions for certain charitable contributions made by an individual, closely held corporations, personal service corporation, partnership, or S corporation shall not be allowed unless the donor obtains a qualified appraisal and attaches an appraisal summary to the donor's return on which the deduction is first claimed. Additionally, the regulations require the donee of certain charitable deduction property to make an information return.

Timetable:

Action	Date	FR Cite
NPRM	12/31/84	49 FR 50740
NPRM Comment Period End	03/01/85	49 FR 50740
Hearing	06/28/85	
Final Action	04/01/88	

Small Entity: Not Applicable

Additional Information: LR-200-84.

Drafting attorney: Beverly A. Baughman (202) 566-3297.

Reviewing attorney: John B. Bromell (202) 566-3326.

Treasury attorney: A.L. Spitzer (202) 565-5911.

Agency Contact: Beverly A. Baughman, Attorney, Department of the Treasury, Internal Revenue Service, 1111 Constitution Ave., N.W., Washington, D.C. 20224, 202 566-3297

RIN: 1545-AG86

2405. INDIVIDUAL RETIREMENT PLANS AND SIMPLIFIED EMPLOYEE PENSIONS

Legal Authority: 26 USC 7805 Internal Revenue Code of 1986; 26 USC 62 Internal Revenue Code of 1986; 26 USC 219 Internal Revenue Code of 1986; 26 USC 220 Internal Revenue Code of 1986; 26 USC 404(h) Internal Revenue Code of 1986; 26 USC 408 Internal Revenue Code of 1986; 26 USC 409 Internal Revenue Code of 1986; 26 USC 2503 Internal Revenue Code of 1986; 26 USC 3121 Internal Revenue Code of 1986; 26 USC 3306 Internal Revenue Code of 1986; 26 USC 4973 Internal Revenue Code of 1986; 26 USC 4974 Internal Revenue Code of 1986; 26 USC 6693 Internal Revenue Code of 1986

CFR Citation: 26 CFR 1; 26 CFR 25; 26 CFR 31; 26 CFR 54; 26 CFR 301

Legal Deadline: None.

Abstract: The regulations set forth rules for sponsors of and participants in individual retirement plans, spousal individual retirement plans, and simplified employee pensions.

Timetable:

Action	Date	FR Cite
NPRM	07/14/81	46 FR 36198
NPRM Comment Period End	09/14/81	46 FR 36198
Final Action	12/31/88	

Small Entity: Not Applicable

Additional Information: EE-7-78.

Drafting attorney: Mary E. Brennan (202) 566-3430.

Reviewing attorney: Richard J. Wickersham (202) 566-3250.

Office of Tax Legislative Counsel (Treasury) reviewing attorney: Harry Conaway (202) 566-8278.

Agency Contact: Mary E. Brennan, Attorney, Department of the Treasury, Internal Revenue Service, 1111 Constitution Ave., N.W., Washington, D.C. 20224, 202 566-3430

RIN: 1545-AD59

2406. INDIVIDUAL RETIREMENT PLANS, SIMPLIFIED EMPLOYEE PENSIONS, AND QUALIFIED VOLUNTARY EMPLOYEE CONTRIBUTIONS

Legal Authority: 26 USC 7805 Internal Revenue Code of 1986; 26 USC 219 Internal Revenue Code of 1986; 26 USC 408 Internal Revenue Code of 1986; 26 USC 409 Internal Revenue Code of 1986; 26 USC 415 Internal Revenue Code of 1986; 26 USC 2039 Internal Revenue Code of 1986; 26 USC 2517 Internal Revenue Code of 1986; 26 USC 6652 Internal Revenue Code of 1986

CFR Citation: 26 CFR 1; 26 CFR 20; 26 CFR 25; 26 CFR 301

Legal Deadline: None.

Abstract: These regulations set forth rules for individual retirement plans, simplified employee pensions, and qualified voluntary employee contributions after amendment of the Internal Revenue Code of 1954 by the Economic Recovery Tax Act of 1981.

Timetable:

Action	Date	FR Cite
NPRM	01/23/84	49 FR 2794
NPRM Comment Period End	03/23/84	49 FR 2794
Final Action	12/31/88	

Small Entity: No

Additional Information: EE-148-81.

Drafting attorney: Mary E. Brennan (202) 566-3430.

Reviewing attorney: Richard J. Wickersham (202) 566-3250.

Office of Tax Legislative Counsel (Treasury) reviewing attorney: Harry Conaway (202) 566-8277.

Agency Contact: Mary E. Brennan, Attorney, Department of the Treasury, Internal Revenue Service, 1111 Constitution Ave., N.W., Washington, D.C. 20224, 202 566-3430

RIN: 1545-AD66

2407. CAPITALIZATION AND INCLUSION IN INVENTORY COSTS OF CERTAIN EXPENSES

Significance: Regulatory Program

Legal Authority: 26 USC 7805 Internal Revenue Code of 1986; 26 USC 253A Internal Revenue Code of 1986

CFR Citation: 26 CFR 1

Legal Deadline: None.

Abstract: The regulations will provide rules relating to the costs incurred in

the production and acquisition of property for resale in a trade or business or activity conducted for profit.

Timetable:

Action	Date	FR Cite
NPRM	03/31/87	52 FR 10118
NPRM Comment Period End	05/29/87	
Hearing	12/07/87	
Final Action	00/00/00	

Small Entity: Not Applicable

Additional Information: LR-168-86.

Drafting attorney: Paulette C. Galanko (202) 566-3288.

Reviewing attorney: John M. Fischer (202) 566-3394.

Treasury attorney: Thomas Evans (202) 566-5453.

Agency Contact: Paulette C. Galanko, Attorney, Department of the Treasury, Internal Revenue Service, 1111 Constitution Avenue, N.W., Washington, D.C. 20224, 202 566-3288

RIN: 1545-AK05

2408. PRACTICAL CAPACITY

Legal Authority: 26 USC 263A Internal Revenue Code of 1986

CFR Citation: 26 CFR 1

Legal Deadline: None.

Abstract: The proposed regulations provide guidance on specific issues relating to when section 263A applies and whether certain accounting principles are permitted in accounting for the costs of property produced or property acquired for resales.

Timetable:

Action	Date	FR Cite
NPRM	08/07/87	52 FR 29391
NPRM Comment Period End	10/06/87	
Final Action	00/00/00	

Small Entity: Not Applicable

Additional Information: LR-73-87

Drafting attorney: Paulette C. Galanko (202) 566-3288.

Reviewing attorney: John M. Fischer (202) 566-3394.

Treasury attorney: Thomas Evans (202) 566-2764.

Agency Contact: Paulette Galanko, Attorney, Department of the Treasury, Internal Revenue Service, 1111 Constitution Avenue, N.W., Washington, D.C. 20224, 202 566-3288

RIN: 1545-AK56

2409. REGULATIONS UNDER SECTION 267 OF THE CODE TO REFLECT SECTION 174 OF THE TAX REFORM ACT OF 1984 RELATING TO LOSSES, EXPENSES, AND INTEREST IN TRANSACTIONS BETWEEN RELATED TAXPAYERS

Legal Authority: 26 USC 7805 Internal Revenue Code of 1986; 26 USC 267 Internal Revenue Code of 1986; 26 USC 706 Internal Revenue Code of 1986; 26 USC 1502 Internal Revenue Code of 1986

CFR Citation: 26 CFR 1

Legal Deadline: None.

Abstract: The regulation deals with changes in section 267 arising from section 174 of the Tax Reform Act of 1984. It deals with the matching of payor deductions and payee income items in the case of expenses and interest where the accrual method payor and the cash method payee are related persons. The regulation also deals with the deferral and restoration of loss on the sale or exchange of property from one member of a controlled group of corporations to another member.

Timetable:

Action	Date	FR Cite
NPRM	11/30/84	49 FR 47048
NPRM Comment Period End	01/29/85	49 FR 47048
Final Action	00/00/00	

Small Entity: No

Additional Information: LR-183-84.

Drafting attorney: Keith E. Stanley (202) 566-3458.

Reviewing attorney: Charles M. Whedbee (202) 566-3458.

Treasury attorney: Patricia McClanahan (202) 566-2926.

Agency Contact: Keith E. Stanley, John G. Schmalz, Attorneys, Department of the Treasury, Internal Revenue Service, 1111 Constitution Ave., N.W., Washington, D.C. 20224, 202 566-3458

RIN: 1545-AG11

2410. INCOME TAX--PERSONAL SERVICE CORPORATIONS

Legal Authority: 26 USC 7805 Internal Revenue Code of 1986; 26 USC 269A Internal Revenue Code of 1986

CFR Citation: 26 CFR 1

Legal Deadline: None.

Abstract: Proposal will provide rules for determining when the Internal Revenue Service may reallocate income or tax benefits between a personal service corporation and its employee-owners.

Timetable:

Action	Date	FR Cite
NPRM	03/31/83	48 FR 13438
NPRM Comment Period End	05/31/83	48 FR 13438
Hearing	07/19/83	
Final Action	00/00/00	

Small Entity: Not Applicable

Additional Information: LR-168-82.

Drafting attorney: Katherine Lee Wambsgans (202) 566-3288.

Reviewing attorney: John M. Fischer (202) 566-3394.

Agency Contact: Katherine Lee Wambsgans, Attorney, Department of the Treasury, Internal Revenue Service, 1111 Constitution Ave., N.W., Washington, D.C. 20224, 202 566-3288

RIN: 1545-AF11

2411. INCOME TAX—DEDUCTIBILITY OF GIFTS BY EMPLOYERS

Legal Authority: 26 USC 7805 Internal Revenue Code of 1986; 26 USC 274(b) Internal Revenue Code of 1986

CFR Citation: 26 CFR 1

Legal Deadline: None.

Abstract: The regulations would reflect the modification by the Economic Recovery Tax Act of 1981 of the third exception to the term "gift" (i.e., the exception within certain dollar limitations for awards of tangible personal property). The regulations would define the term "qualified plan award." The regulations would clarify the existing regulations under section 274 (b) of the Internal Revenue Code of 1954 by excluding from the term "tangible personal property" any award of cash, or of a gift certificate, or of a right to choose among 5 or more different items.

Timetable:

Action	Date	FR Cite
NPRM	12/16/82	47 FR 56367
NPRM Comment Period End	02/14/83	47 FR 56367
Final Action	00/00/00	

Small Entity: Not Applicable

Additional Information: LR-252-81.

Drafting attorney: Christopher Wilson (202) 566-4336.

Reviewing attorney: John B. Bromell (202) 566-3326.

Agency Contact: Christopher Wilson, Attorney, Department of the Treasury, Internal Revenue Service, 1111 Constitution Ave., N.W., Washington, D.C. 20224, **202 566-3297**

RIN: 1545-AB06

2412. INCOME TAX—SUBSTANTIATION REQUIREMENTS WITH RESPECT TO LISTED PROPERTY AND SUBSTANTIATION REQUIREMENTS RELATING TO THE TAXATION OF FRINGE BENEFITS

Legal Authority: 26 USC 7805 Internal Revenue Code of 1986

CFR Citation: 26 CFR 1

Legal Deadline: None.

Abstract: The regulations will set forth the requirements to substantiate any deduction or credit for certain business-related expenses with adequate records or sufficient evidence corroborating a taxpayer's own statement.

Timetable:

Action	Date	FR Cite
NPRM	11/06/85	50 FR 46006
NPRM Comment Period End	01/06/86	50 FR 46006
Hearing	03/04/86	51 FR 02898
Final Action	00/00/00	

Small Entity: Not Applicable

Additional Information: LR-140-86.

Drafting Attorney: Joel Rutstein (202) 566-3297.

Reviewing Attorney: Sharon Galm (202) 566-3930.

Agency Contact: Joel Rutstein, Attorney, Department of the Treasury, Internal Revenue Service, 1111 Constitution Avenue NW, Washington, DC 20224, **202 566-3297**

RIN: 1545-AJ40

2413. INCOME TAX—DEDUCTIONS FOR EXPENSES ATTRIBUTABLE TO BUSINESS USE OF HOMES, RENTAL OF VACATION HOMES

Legal Authority: 26 USC 7805 Internal Revenue Code of 1986; 26 USC 280A Internal Revenue Code of 1986

CFR Citation: 26 CFR 1

Legal Deadline: None.

Abstract: The regulations would provide rules for determining the deductibility of expenses incurred in connection with the business use, or rental to others, of a dwelling unit. The regulations provide rules for determining when the taxpayer uses a dwelling unit for personal use or when use by another person of the unit is treated as personal use of the unit by the taxpayer.

Timetable:

Action	Date	FR Cite
NPRM	07/21/83	48 FR 33326
NPRM Comment Period End	09/21/83	
Hearing	10/04/83	
Final Action	02/01/89	

Small Entity: Not Applicable

Additional Information: LR-261-76.

Drafting attorney: Joel S. Rutstein (202) 566-3297.

Reviewing attorney: Paul Francis (202) 566-3218.

Agency Contact: Joel S. Rutstein, Attorney, Department of the Treasury, Internal Revenue Service, 1111 Constitution Ave., N.W., Washington, D.C. 20224, **202 566-3297**

RIN: 1545-AB09

2414. LIMITATIONS ON AMOUNT OF DEPRECIATION AND INVESTMENT TAX CREDIT FOR LUXURY AUTOMOBILES AND CERTAIN OTHER PROPERTY

Legal Authority: 26 USC 7805 Internal Revenue Code of 1986; 26 USC 280F Internal Revenue Code of 1986

CFR Citation: 26 CFR 1

Legal Deadline: None.

Abstract: The regulations will clarify the rules limiting the investment tax credit and cost recovery deductions allowable with respect to passenger automobiles and certain other "listed property."

Timetable:

Action	Date	FR Cite
NPRM	10/24/84	49 FR 42743
NPRM Comment Period End	12/24/84	49 FR 42743
Second Hearing	03/04/86	51 FR 2898
Final Action	00/00/00	

Small Entity: Not Applicable

Additional Information: LR-145-84.

Drafting attorney: Joel Rutstein (202) 566-3297.

Reviewing attorney: Sharon Galm (202) 566-3930.

Treasury attorney: Marjorie Roberts (202) 566-2565.

Agency Contact: Joel Rutstein, Attorney, Department of the Treasury, Internal Revenue Service, 1111 Constitution Ave., N.W., Washington, D.C. 20224, **202 566-3297**

RIN: 1545-AG99

2415. ● AFFILIATED GROUPS

Legal Authority: 26 USC 7805 Internal Revenue Code of 1986; 26 USC 304 Internal Revenue Code of 1986

CFR Citation: 26 CFR 1

Legal Deadline: None.

Abstract: This regulation provides proper adjustments to stock bases and earnings and profits of members of an affiliated group in section 304 (a) transfers of intragroup stock.

Timetable:

Action	Date	FR Cite
Temporary Regulation	07/01/88	

Small Entity: Not Applicable

Additional Information: LR-2-88

Drafting attorney: Mark Jennings (202) 566-3458.

Reviewing attorney: Jerry Mason (202) 566-3458.

Income Taxes

Agency Contact: Mark Jennings, Attorney, Department of the Treasury, Internal Revenue Service, 1111 Constitution Avenue, N.W., Washington, D.C. 20224, **202 566-3458**

RIN: 1545-AL41

2416. INCOME TAX—PART 1 TEMPORARY REGULATIONS-RECOGNITION OF GAIN OR LOSS LIQUIDATING SALES AND DISTRIBUTIONS OF PROPERTY (TRA 1986, SECTIONS 631 TO 633)

Legal Authority: 26 USC 7805 Internal Revenue Code of 1986; 26 USC 336 Internal Revenue Code of 1986; 26 USC 337 Internal Revenue Code of 1986

CFR Citation: 26 CFR 1

Legal Deadline: None.

Abstract: Regulations would provide rules for the recognition of gain or loss on a corporation's liquidation sales or distributions.

Timetable:

Action	Date	FR Cite
Temporary Regulation	09/01/88	

Small Entity: Not Applicable

Additional Information: LR-117-86.

Drafting attorney: Mark S. Jennings (202) 566-3458.

Reviewing attorney: Robert J. Mason (202) 566-3463.

Agency Contact: Mark S. Jennings, Attorney, Department of the Treasury, Internal Revenue Service, 1111 Constitution Avenue, N.W., Washington, D.C. 20224, 202 566-3458

RIN: 1545-AJ01

2417. CERTAIN STOCK SALES AND DISTRIBUTIONS TREATED AS ASSET TRANSFERS

Legal Authority: 26 USC 336 Internal Revenue Code of 1986; 26 USC 7805 Internal Revenue Code of 1986

CFR Citation: 26 CFR 1

Legal Deadline: None.

Abstract: The regulations would provide guidance for making an election under section 336 (e) and the consequences which result from making such an election

Timetable:

Action	Date	FR Cite
Temporary Regulation	07/01/88	

Small Entity: Not Applicable

Additional Information: LR-51-87

Drafting attorney: Patricia W. Pellervo (202) 566-3458.

Reviewing attorney: Robert J. Mason (202) 566-3463.

Treasury attorney: Thomas Wessel (202) 566-4979.

Agency Contact: Patricia W. Pellervo, Attorney, Department of the Treasury, Internal Revenue Service, 1111 Constitution Avenue, N.W., Washington, D.C. 20224, 202 566-3458

RIN: 1545-AK30

2418. DEEMED SALE PRICE WHEN CERTAIN STOCK PURCHASES ARE TREATED AS ASSET ACQUISITIONS

Legal Authority: 26 USC 7805 Internal Revenue Code of 1986; 26 USC 336 Internal Revenue Code of 1986

CFR Citation: 26 CFR 1

Legal Deadline: None.

Abstract: Proposal will prescribe rules for computing the basis of stock purchased in certain stock acquisitions and for allocating this basis among the assets of the corporation whose stock was thus acquired.

Timetable:

Action	Date	FR Cite
NPRM	07/01/86	51 FR 23790
NPRM Comment Period End	09/02/86	
Final Action	10/01/88	

Small Entity: Not Applicable

Additional Information: LR-191-82.

Drafting attorney: Patricia W. Pellervo (202) 566-3458.

Reviewing attorney: Robert J. Mason (202) 566-3463.

Office of Tax Legislative Counsel reviewing attorney: Thomas Wessel (202) 566-3458.

Agency Contact: Patricia W. Pellervo, Attorney, Department of the Treasury, Internal Revenue Service, 1111 Constitution Ave., N.W., Washington, D.C. 20224, 202 566-3458

RIN: 1545-AF29

2419. INCOME TAX-ELECTIONS UNDER SECTION 338, AS ADDED BY SECTION 224 OF THE TAX EQUITY AND FISCAL RESPONSIBILITY ACT OF 1982 AS AMENDED BY THE TECHNICAL CORRECTIONS ACT OF 1982

Legal Authority: 26 USC 7805 Internal Revenue Code of 1986; 26 USC 336 Internal Revenue Code of 1986; PL 97-248, Sec 224; PL 97-448, Sec 306

CFR Citation: 26 CFR 1

Legal Deadline: None.

Abstract: This regulation will provide rules for making elections under section 338, which permits certain stock purchases to be treated as asset acquisitions.

Timetable:

Action	Date	FR Cite
NPRM	09/06/84	49 FR 35144
NPRM Comment Period End	11/05/84	

Next Action Undetermined

Small Entity: Not Applicable

Additional Information: LR-26-83.

Drafting attorney: Patricia W. Pellervo (202) 566-3458.

Reviewing attorney: Robert J. Mason (202) 566-3463.

Treasury attorney: Thomas F. Wessel (202) 566-2927.

Agency Contact: Patricia W. Pellervo, Attorney, Department of the Treasury, Internal Revenue Service, 1111 Constitution Ave., N.W., Washington, D.C. 20224, 202 566-3458

RIN: 1545-AF38

2420. REGULATIONS UNDER SECTION 338 (H) (10) AS ADDED TO THE CODE BY SECTION 306 OF THE TECHNICAL CORRECTIONS ACT OF 1982, RELATING TO SPECIAL ELECTIVE RECOGNITION OF GAIN OR LOSS

Legal Authority: 26 USC 7805 Internal Revenue Code of 1986; 26 USC 338 Internal Revenue Code of 1986

CFR Citation: 26 CFR 1

Legal Deadline: None.

Abstract: Proposal would interpret the rules of section 338 (h) (10) under which a special election can be made so that target recognizes gain or loss on the deemed sale of its assets. The proposal

is necessary so that affected taxpayers can make election under the provision.

Timetable:

Action	Date	FR Cite
NPRM	01/08/86	51 FR 763
NPRM Comment Period End	03/10/86	

Next Action Undetermined

Small Entity: Not Applicable

Additional Information: LR-218-83.

Drafting attorney: Patricia W. Pellervo (202) 566-3458.

Reviewing attorney: Robert J. Mason (202) 566-3463.

Office of Tax Legislative Counsel reviewing attorney: Thomas Wessel (202) 566-2927.

Agency Contact: Patricia W. Pellervo, Attorney-Advisor, Department of the Treasury, Internal Revenue Service, 1111 Constitution Ave., N.W., Washington, D.C. 20224, 202 566-3458

RIN: 1545-AF93

2421. INCOME TAX—APPLICATION OF SECTION 338 TO STOCK AND ASSET ACQUISITIONS IN THE INTERNATIONAL CONTEXT

Legal Authority: 26 USC 7805 Internal Revenue Code of 1986; 26 USC 338 Internal Revenue Code of 1986

CFR Citation: 26 CFR 338

Legal Deadline: None.

Abstract: These regulations will provide rules relating to section 338 as it applies to stock and asset acquisitions in the international context.

Timetable:

Action	Date	FR Cite
NPRM	02/12/86	51 FR 5208
NPRM Comment Period End	04/14/86	
Final Action	00/00/00	

Small Entity: Not Applicable

Additional Information: LR-35-84.

Drafting attorney: Ken Allison (202) 566-6457.

Reviewing attorney: Benedetta Kissel (202) 566-3179.

Agency Contact: Ken Allison, Attorney, Department of the Treasury, Internal Revenue Service, 1111 Constitution Ave., N.W., Washington, D.C., 20224, 202 566-6457

RIN: 1545-AG13

2422. QUESTIONS AND ANSWERS RELATING TO DOMESTIC MATTERS UNDER SECTION 338 OF THE INTERNAL REVENUE CODE OF 1954 - CROSS REFERENCE TO THE TEMPORARY REGULATIONS

Legal Authority: 26 USC 7805 Internal Revenue Code of 1986; 26 USC 338 Internal Revenue Code of 1986

CFR Citation: 26 CFR 1

Legal Deadline: None.

Abstract: These regulations provide guidance on a broad range of issues under section 338.

Timetable:

Action	Date	FR Cite
NPRM	06/24/85	50 FR 16430

Next Action Undetermined

Small Entity: Not Applicable

Additional Information: LR-33-85.

Drafting attorney: Patricia W. Pellervo (202) 566-3458.

Reviewing attorney: Robert J. Mason (202) 566-3463.

Treasury attorney: Thomas F. Wessel (202) 566-4979.

Agency Contact: Patricia W. Pellervo, Attorney, Department of the Treasury, Internal Revenue Service, 1111 Constitution Ave., N.W., Washington, D.C. 20224, 202 566-3458

RIN: 1545-AH88

2423. STATEMENTS OF ELECTION AND DUE DATES

Legal Authority: 26 USC 7805 Internal Revenue Code of 1986; 26 USC 338 Internal Revenue Code of 1986

CFR Citation: 26 CFR 1

Legal Deadline: None.

Abstract: The proposed regulations provide guidance to taxpayers who make express elections under section 338 pursuant to the extended July 15, 1986, filing deadline where the statute of limitations in the target's taxable year which includes the acquisition date has expired prior to July 15, 1986, or will expire shortly thereafter.

Timetable:

Action	Date	FR Cite
NPRM	05/16/86	51 FR 17989
NPRM Comment Period End	07/15/86	51 FR 17989

Next Action Undetermined

Small Entity: Undetermined

Additional Information: LR-6-86.

Drafting attorney: Patricia W. Pellervo (202) 566-3458.

Reviewing attorney: Robert J. Mason (202) 566-3463.

Treasury Attorney: Thomas Wessel (202) 566-4979.

Agency Contact: Patricia W. Pellervo, Attorney-Advisor, Department of the Treasury, Internal Revenue Service, 1111 Constitution Avenue N.W., Washington, D.C. 20224, 202 566-3458

RIN: 1545-AI53

2424. INCOME TAX-APPLICATION OF INSTALLMENT METHOD OF REPORTING AND MANDATORY APPLICATION OF MADSP FORMULA FOR QUALIFIED STOCK PURCHASES UNDER SECTION 338 (H) (10)

Legal Authority: 26 USC 7805 Internal Revenue Code of 1986; 26 USC 338 Internal Revenue Code of 1986

CFR Citation: 26 CFR 1

Legal Deadline: None.

Abstract: The regulations will provide guidance for utilization of the installment method of reporting and will require the use of the MADSP formula in a qualified stock purchase to which section 338 (h) (10) applies.

Timetable:

Action	Date	FR Cite
Temporary Regulation	06/30/88	

Small Entity: Not Applicable

Additional Information: LR-76-86

Drafting attorney: Judith C. Winkler (202) 566-3458.

Reviewing attorneys: Robert J. Mason (202) 566-3463.

Treasury attorney: Thomas Wessel (202) 566-4979.

Agency Contact: Judith C. Winkler, Attorney, Department of the Treasury, Internal Revenue Service, 1111

Constitution Avenue, N.W., Washington, D.C. 20224, 202 566-3458

RIN: 1545-AJ07

2425. TREATMENT OF AN AFFILIATED GROUP OF CORPORATIONS AS A SELLING CONSOLIDATED GROUP FOR PURPOSES OF ELECTIVE RECOGNITION UNDER SECTION 338 (H) (10)

Legal Authority: 26 USC 338 Internal Revenue Code of 1986; 26 USC 7805 Internal Revenue Code of 1986

CFR Citation: 26 CFR 1

Legal Deadline: None.

Abstract: The regulations would provide the guidance for making elections under section 338 (h) (10) when the selling group is an affiliated group of corporations which does not file a consolidated federal income tax return, and the consequences of making such an election.

Timetable:

Action	Date	FR Cite
Temporary Regulation	06/01/88	

Small Entity: Not Applicable

Additional Information: LR-49-87

Drafting attorney: Judith C. Winkler (202) 566-3458.

Reviewing attorney: Robert J. Mason (202) 566-3463.

Treasury attorney: Thomas Wessel (202) 566-4979.

Agency Contact: Judith C. Winkler, Attorney, Department of the Treasury, Internal Revenue Service, 1111 Constitution Avenue, N.W., Washington, D.C. 20224, 202 566-3458

RIN: 1545-AK32

2426. INCOME TAX--DISTRIBUTION OF STOCK AND SECURITIES OF A CONTROLLED CORPORATION

Legal Authority: 26 USC 7805 Internal Revenue Code of 1986; 26 USC 355 Internal Revenue Code of 1986

CFR Citation: 26 CFR 1

Legal Deadline: None.

Abstract: The proposal relates to the income tax treatment of the distribution of stock and securities of a controlled corporation.

Timetable:

Action	Date	FR Cite
NPRM	01/21/77	42 FR 3866
NPRM Comment Period End	03/22/77	42 FR 3866

Next Action Undetermined

Small Entity: Not Applicable

Additional Information: LR-936-70

Drafting attorney: Patricia W. Pellervo (202) 566-3458.

Reviewing attorney: Robert J. Mason (202) 566-3463.

Treasury attorney: Bryan Collins (202) 566-4979.

Agency Contact: Patricia W. Pellervo, Attorney, Department of the Treasury, Internal Revenue Service, 1111 Constitution Ave., N.W., Washington, D.C. 20224, 202 566-3458

RIN: 1545-AB20

2427. INCOME TAX--TRIANGULAR REORGANIZATIONS, BASIS AND OTHER CONSEQUENCES

Legal Authority: 26 USC 7805 Internal Revenue Code of 1986; 26 USC 368 Internal Revenue Code of 1986

CFR Citation: 26 CFR 1

Legal Deadline: None.

Abstract: The regulations would provide rules relating to basis of stock of a corporation acquiring property in exchange for stock of a corporation in control of the acquiring corporation.

Timetable:

Action	Date	FR Cite
NPRM	01/02/81	46 FR 112
NPRM Comment Period End	03/03/81	
Final Action	00/00/00	

Small Entity: Not Applicable

Additional Information: LR-993-71.

Drafting attorney: Keith E. Stanley (202) 566-3458.

Reviewing attorney: Robert J. Mason (202) 566-3463.

Office of Tax Legislative Counsel (Treasury) reviewing attorney: Thomas Evans (202) 566-8277.

Agency Contact: Keith E. Stanley, Attorney, Department of the Treasury, Internal Revenue Service, 1111 Constitution Ave., N.W., Washington, D.C. 20224, 202 566-3458

RIN: 1545-AB21

2428. INCOME TAX--TREATMENT OF EXCHANGES DESCRIBED IN SECTION 367 (B)

Legal Authority: 26 USC 7805 Internal Revenue Code of 1986; 26 USC 367(b) Internal Revenue Code of 1986

CFR Citation: 26 CFR 1; 24 CFR 0820; 13 CFR 6787; 05 CFR 0314; 22 CFR 3456

Legal Deadline: None. As an alternative to a no-rule position on this issue, the Service could publish a revenue procedure that contains the terms and conditions of a plan that must be.

Abstract:

Proposal would amend the regulations under section 367 (b) of the Internal Revenue Code.

Timetable:

Action	Date	FR Cite
NPRM	12/30/77	42 FR 65152
NPRM Comment Period End	03/01/78	42 FR 65152
Notice amended	10/02/79	44 FR 57390
Notice amended	12/27/82	47 FR 57502
Final Action	12/01/88	

Small Entity: Not Applicable

Additional Information: INTL - 76-86

Drafting attorney: Richard Chewning (202 566-3490.

Reviewing attorney: Bernard Bress (202) 566-6440.

Office of International Tax Counsel (Treasury) reviewing attorneys: Unassigned.

Office of Chief Counsel (INTL) for preparation of Treasury decision.

Affected Sectors: Multiple

Agency Contact: Richard Chewning, Attorney-Advisor, Department of the Treasury, Internal Revenue Service, 1111 Constitution Ave. N.W., Washington, D.C. 20224, 202 566-3490

RIN: 1545-AB26

2429. AMENDMENT OF THE INCOME TAX REGULATIONS UNDER SECTION 367 OF THE CODE (TRANSFERS TO FOREIGN CORPORATIONS) TO REFLECT SECTION 131 OF THE TAX REFORM ACT OF 1984 (P.L. 98-369)

Legal Authority: 26 USC 7805 Internal Revenue Code of 1986; 26 USC 367 Internal Revenue Code of 1986

CFR Citation: 26 CFR 1

Legal Deadline: None.

Abstract: The Income Tax Regulations under section 367 will be amended to reflect the changes made to that section by the Tax Reform Act of 1984. Section 367 now provides generally that a foreign corporations will not be considered to be a corporation, for purposes of certain nonrecognition provisions of the Code, upon the transfer of property to such corporation by a U.S. person. The statute provides certain exceptions to that rule, exemptions to those exceptions, and special rules applicable to certain specified transfers. The regulations will provide guidance concerning the applicability of the general rule and its exceptions and special rules, including guidance concerning transfers of assets for use in the active conduct of a trade or business, stock transfers, transfers of intangible assets, and transfers of branch operations that have operated at a loss.

Timetable:

Action	Date	FR Cite
Final Action	04/01/88	

Small Entity: Not Applicable

Additional Information: INTL-610-86

Drafting Attorney: Steven Lipschutz (202) 566-3319.

Reviewing Attorney: Charles Saverude (202) 566-6645.

Treasury Attorney: Mary Bennet (202) 566-3992.

Agency Contact: Steven Lipschutz, Attorney, Department of the Treasury, Internal Revenue Service, 1111 Constitution Ave., N.W., Washington, D.C. 20224, 202 566-3319

RIN: 1545-AK74

2430. FOREIGN LIQUIDATIONS AND REORGANIZATIONS (TEMPORARY REGULATIONS)

Legal Authority: 26 USC 7805 Internal Revenue Code of 1986; 26 USC 367(b)(2) Internal Revenue Code of 1986

CFR Citation: 26 CFR 7

Legal Deadline: None.

Abstract: Temporary regulations would provide guidance concerning requirements relating to certain exchanges involving a foreign corporation.

Timetable:

Action	Date	FR Cite
Temporary Regulation	12/01/88	

Small Entity: Not Applicable

Additional Information: INTL-891-86

Drafting Attorney: Richard Chewning (202) 566-3490

Reviewing Attorney: Bernard Bress (202) 566-6440

Treasury Attorney: David Crowe (202) 566-5791

Agency Contact: Richard Chewning, Attorney-Advisor, Department of the Treasury, Internal Revenue Service, 1111 Constitution Ave., N.W., Washington, D.C. 20224, 202 566-3490

RIN: 1545-AJ76

2431. INCOME TAX—PART 1—TEMPORARY-WHETHER EARNINGS AND PROFITS SHOULD BE ALLOCATED TO AN ACQUIRING CFC FROM AN ACQUIRED CFC FOLLOWING A NON-RECOGNITION TRANSACTION

Legal Authority: 26 USC 7805 Internal Revenue Code of 1954; 26 USC 367(b) Internal Revenue Code of 1954

CFR Citation: 26 CFR 1

Legal Deadline: None.

Abstract: Should earnings and profits be allocated to an acquiring CFC from an acquired CFC following a transaction which qualified for non-recognition treatment.

Timetable:

Action	Date	FR Cite
Temporary Regulation	00/00/00	

Small Entity: Not Applicable

Additional Information: INTL-76-86.

Drafting attorney: Marnie Carro (202) 566-3494

Reviewing attorney: Bernard Bress (202) 566-6440.

Agency Contact: Marnie Carro, Attorney, Department of the Treasury, Internal Revenue Service, 1111 Constitution Ave., N.W., Room 4109, Washington, D.C. 20224, 202 566-3494

RIN: 1545-AI32

2432. INCOME TAX—TEMPORARY REGULATIONS—REORGANIZATIONS INVOLVING FINANCIALLY TROUBLED THRIFT INSTITUTIONS

Legal Authority: 26 USC 7805 Internal Revenue Code of 1986; 26 USC 368 Internal Revenue Code of 1986; 26 USC 382 Internal Revenue Code of 1986; 26 USC 381 Internal Revenue Code of 1986; 26 USC 597 Internal Revenue Code of 1986

CFR Citation: 26 CFR 5c

Legal Deadline: None.

Abstract: Provision would provide temporary regulations dealing with reorganizations of financially troubled thrift institutions and with the tax consequences of financial assistance payments made to such an institution by a supervisory governmental agency, thereby giving the public needed guidance on how the Internal Revenue Service intends to interpret these issues.

Timetable:

Action	Date	FR Cite
Temporary Regulation	12/31/89	

Small Entity: Not Applicable

Additional Information: LR-230-81.

Drafting attorney: Mark S. Jennings (202) 566-3458.

Reviewing attorney: Robert J. Mason (202) 566-3463.

Agency Contact: Mark S. Jennings, Attorney, Department of the Treasury, Internal Revenue Service, 1111 Constitution Ave., N.W., Washington D.C. 20224, 202 566-3458

RIN: 1545-AB28

2433. INCOME TAX—EXCHANGE FUNDS

Legal Authority: 26 USC 7805 Internal Revenue Code of 1986; 26 USC 368(a)(2)(F) Internal Revenue Code of 1986

CFR Citation: 26 CFR 1

Legal Deadline: None.

Abstract: The regulations would provide rules relating to reorganizations of undiversified investment companies.

Timetable:

Action	Date	FR Cite
NPRM	01/07/81	46 FR 1744
NPRM Comment Period End	03/08/81	46 FR 1744

Next Action Undetermined

Small Entity: Not Applicable

Additional Information: LR-135-76.

Drafting attorney: Robert M. Casey (202) 566-3458.

Reviewing attorney: Robert J. Mason (202) 566-3463.

Agency Contact: Robert M. Casey, Attorney, Department of the Treasury, Internal Revenue Service, 1111 Constitution Ave., N.W., Washington, D.C. 20224, 202 566-3458

RIN: 1545-AB31

2434. INCOME TAX--OWNERSHIP CHANGE

Legal Authority: 26 USC 7805 Internal Revenue Code of 1986; 26 USC 382 Internal Revenue Code of 1986

CFR Citation: 26 CFR 1

Legal Deadline: None.

Abstract: The regulation will provide guidance on what constitutes "ownership change" under section 382 of the Internal Revenue Code of 1986 (generally, an "ownership change" is a shift in loss corporation stock ownership (often which the corporation's net operating loss carryovers are limited).

Timetable:

Action	Date	FR Cite
NPRM	08/11/87	52 FR 29704
NPRM Comment Period End	10/13/87	

Next Action Undetermined

Small Entity: Not Applicable

Additional Information: LR-106-86.

Drafting attorneys: Keith E. Stanley (202) 566-3458.

Reviewing attorney: Charles M. Whedbee (202) 566-3458.

Treasury attorney: Thomas Wessel (202) 566-2928.

Agency Contact: Keith Stanley, Attorney, Department of the Treasury, Internal Revenue Service, 1111 Constitution Avenue, N.W., Washington, D.C. 20224, 202 566-3458

RIN: 1545-AJ00

2435. COMPUTATION OF SECTION 382 LIMITATION

Legal Authority: 26 USC 382 Internal Revenue Code of 1986; 26 USC 7805 Internal Revenue Code of 1986

CFR Citation: 26 CFR 1

Legal Deadline: None.

Abstract: The regulations would explain the manner and method of computing the section 382 limitation under circumstances when there are successive ownership changes, capital contributions, mergers liquidations, and in instances when one corporation controls another corporation.

Timetable:

Action	Date	FR Cite
Temporary Regulation	05/31/88	

Small Entity: Not Applicable

Additional Information:

LR-66-87.

Drafting attorney: Keith E. Stanley (202) 566-3458.

Reviewing attorney: Robert J. Mason (202) 566-3463.

Treasury attorney: Thomas Wessel (202) 566-2928.

Agency Contact: Keith E. Stanley, Attorney, Department of the Treasury, Internal Revenue Service, 1111 Constitution Avenue, N.W., Washington, D.C. 20224, 202 566-3458

RIN: 1545-AK87

2436. ● LIMITATION TO GROUPS FILING CONSOLIDATED RETURNS

Legal Authority: 26 USC 7805 Internal Revenue Code of 1986; 26 USC 382 Internal Revenue Code of 1986

CFR Citation: 26 CFR 1

Legal Deadline: None.

Abstract: This temporary regulation imposes a limitation to groups that file consolidated returns.

Timetable:

Action	Date	FR Cite
Temporary Regulation	00/00/00	

Small Entity: Not Applicable

Additional Information: LR-132-87

Drafting attorney: John Broadbent (202) 566-3458.

Reviewing attorney:

Treasury attorney:

Income Taxes

Agency Contact: John Broadbent, Attorney, Department of the Treasury, Internal Revenue Service, 1111 Constitution Avenue, N.W., Washington, D.C. 20224, 202 566-3458

RIN: 1545-AL36

2437. SPECIAL LIMITATIONS ON CERTAIN CREDIT AND LOSS CARRYOVERS

Legal Authority: 26 USC 383 Internal Revenue Code of 1986; 26 USC 7805 Internal Revenue Code of 1986

CFR Citation: 26 CFR 1

Legal Deadline: None.

Abstract: The regulations would specify the manner and method on applying the special limitations on certain credit and loss carryovers under section 383.

Timetable:

Action	Date	FR Cite
Temporary Regulation	06/30/88	

Small Entity: Not Applicable

Additional Information: LR-68-87

Drafting attorney: Thomas J. Kane (202) 566-3458.

Reviewing attorney: Charles M. Whedbee (202) 566-3458.

Treasury attorney: Thomas Wessel (202) 566-4979.

Agency Contact: Thomas J. Kane, Attorney, Department of the Treasury, Internal Revenue Service, 1111 Constitution Avenue, N.W., Washington, D.C. 20224, 202 566-3458

RIN: 1545-AK28

2438. INCOME TAX--REFUND OF MISTAKEN CONTRIBUTIONS

Legal Authority: 26 USC 7805 Internal Revenue Code of 1986; 26 USC 401(a)(2) Internal Revenue Code of 1986

CFR Citation: 26 CFR 1

Legal Deadline: None.

Abstract: The regulations describe those circumstances under which an employer contribution or withdrawal liability payment to a multiemployer pension plan may be refunded due to a mistake of law or fact.

Timetable:

Action	Date	FR Cite
NPRM	03/11/83	48 FR 10374
NPRM Comment Period End	05/10/83	48 FR 10374
Final Action	06/30/88	

Small Entity: Not Applicable

Additional Information: EE-133-80.

Drafting attorney: John T. Ricotta (202) 566-3544.

Reviewing attorney: Michael A. Thrasher (202) 566-3961.

Office of Tax Legislative Counsel (Treasury) reviewing attorney: Harry Conaway (202) 566-8277.

Agency Contact: John T. Ricotta, Attorney, Department of the Treasury, Internal Revenue Service, 1111 Constitution Ave., N.W., Washington, D.C. 20224, 202 566-3544

RIN: 1545-AD68

2439. CERTAIN CASH OR DEFERRED ARRANGEMENTS

Legal Authority: 26 USC 7805 Internal Revenue Code of 1986; 26 USC 401(k) Internal Revenue Code of 1986; 26 USC 402(a)(8) Internal Revenue Code of 1986; PL 95-600, Sec 135 Revenue Act of 1978

CFR Citation: 26 CFR 1

Legal Deadline: None.

Abstract: Regulation will provide definitions and interpretations governing qualified cash or deferred arrangements described in section 401(k) of the Internal Revenue Code of 1954.

Timetable:

Action	Date	FR Cite
NPRM	11/10/81	46 FR 55544
NPRM Comment Period End	02/15/82	47 FR 00988
Hearing	04/20/82	
Final Action	04/01/88	

Small Entity: Not Applicable

Additional Information: EE-169-78.

Drafting attorney: William D. Gibbs (202) 566-3430.

Reviewing attorney: Mary E. Oppenheimer (202) 566-3544.

Office of Tax Legislative Counsel (Treasury) reviewing attorney: Harry Conaway (202) 566-8277.

Agency Contact: William D. Gibbs, Attorney, Department of the Treasury, Internal Revenue Service, 1111 Constitution Ave., N.W., Washington, D.C. 20224, 202 566-3430

RIN: 1545-AD72

2440. INCOME TAX—REQUIRED DISTRIBUTIONS FROM QUALIFIED PLANS AND INDIVIDUAL RETIREMENT ACCOUNTS AND PARTIAL ROLLOVERS OF INDIVIDUAL RETIREMENT ACCOUNTS

Legal Authority: 26 USC 408(a)(6) Internal Revenue Code of 1986; 26 USC 401(a)(9) Internal Revenue Code of 1986; 26 USC 408(b)(3) Internal Revenue Code of 1986; 26 USC 408(d)(3)(C) Internal Revenue Code of 1986; 26 USC 219(d)(4) Internal Revenue Code of 1986; 26 USC 403(b)(10) Internal Revenue Code of 1986; 26 USC 4974 Internal Revenue Code of 1986

CFR Citation: 26 CFR 1

Legal Deadline: None.

Abstract: This project will revise the Income Tax Regulations to incorporate the changes made in the law by the Tax Equity and Fiscal Responsibility Act of 1982 and the Tax Reform Act of 1984, and Income Tax Reform Act of 1986 concerning the required distributions from qualified plans, individual retirement accounts and 403(b) annuities and custodial accounts.

Timetable:

Action	Date	FR Cite
NPRM	07/27/87	52 FR 28070
HEARING	12/04/87	
Final Action	00/00/00	

Small Entity: Not Applicable

Additional Information: EE-113-82.

Drafting attorney: Marjorie Hoffman (202) 566-3430.

Reviewing attorney: Richard J. Wickersham (202) 566-3250.

Office of Tax Legislative Counsel (Treasury) reviewing attorney: Harry Conaway (202) 566-8277.

Agency Contact: Marjorie Hoffman, Attorney, Department of the Treasury, Internal Revenue Service, 1111 Constitution Ave., N.W., Washington, D.C. 20224, 202 566-3430

RIN: 1545-AE95

2441. NOTICE, ELECTION, AND CONSENT RULES UNDER THE RETIREMENT EQUITY ACT OF 1984

Legal Authority: 26 USC 7805 Internal Revenue Code of 1986

CFR Citation: 26 CFR 1; 26 CFR 602

Legal Deadline: None.

Abstract: The regulations would provide rules relating to notices, elections and consents required under the Retirement Equity Act of 1984.

Timetable:

Action	Date	FR Cite
NPRM	07/19/85	50 FR 29436
NPRM Comment Period End	09/17/85	50 FR 29436
Final Action	04/01/88	

Small Entity: Not Applicable

Additional Information: EE-35-85.

Drafting attorney: William D. Gibbs (202) 566-3430

Reviewing attorney: Richard J. Wickersham (202) 566-3250.

Office of Tax Legislative Counsel (Treasury) reviewing attorney: Harry Conaway (202) 566-8277.

This is included in the Regulatory Program of the United States under overall RIN 1545-AH71.

Agency Contact: William D. Gibbs, Attorney, Department of the Treasury, Internal Revenue Service, 1111 Constitution Ave., N.W., Washington, D.C. 20224, 202 566-3903

RIN: 1545-AH80

2442. INCOME TAX—TREATMENT OF CERTAIN LUMP SUM DISTRIBUTIONS

Legal Authority: 26 USC 7805 Internal Revenue Code of 1986; 26 USC 402(a)(2) Internal Revenue Code of 1986; 26 USC 402(e) Internal Revenue Code of 1986; 26 USC 403(a)(2)(A)(iii) Internal Revenue Code of 1986; 26 USC 411(d)(1) Internal Revenue Code of 1986; PL 93-406, Sec 2005 Employee Retirement Income Security Act; PL 94-455, Sec 1512 Tax Reform Act of 1976

CFR Citation: 26 CFR 1

Legal Deadline: None.

Abstract: Regulations will provide definitions and other guidance relating

to income tax treatment of certain distributions from qualified employee plans.

Timetable:

Action	Date	FR Cite
NPRM	04/30/75	40 FR 18798
Corrected NPRM	05/23/75	40 FR 22548
NPRM Comment Period End	06/16/75	40 FR 18798
Notice of Hearing	07/03/75	40 FR 28102
Hearing	08/12/75	
NPRM - Additional	05/31/79	44 FR 31228
Comment Period until	07/30/79	44 FR 31228
Final Action	00/00/00	

Small Entity: Not Applicable

Additional Information: EE-14-78.

Drafting attorney: Marjorie Hoffman (202) 566-3430.

Reviewing attorney: Richard J. Wickersham (202) 566-3250.

Office of Tax Legislative Counsel (Treasury) reviewing attorney: Harry Conaway (202) 566-8277.

Agency Contact: Marjorie Hoffman, Attorney, Department of the Treasury, Internal Revenue Service, 1111 Constitution Ave., N.W., Washington, D.C. 20224, 202 566-3430

RIN: 1545-AD73

2443. INCOME TAX—DEDUCTION FOR CERTAIN FOREIGN DEFERRED COMPENSATION PLANS

Legal Authority: 26 USC 7805 Internal Revenue Code of 1986; 26 USC 404A Internal Revenue Code of 1986

CFR Citation: 26 CFR 1

Legal Deadline: None.

Abstract: The regulations would provide guidance relating to the limitations on deductions and adjustments to earnings and profits (or accumulated profits) with respect to certain foreign deferred compensation plans.

Timetable:

Action	Date	FR Cite
NPRM	04/06/85	50 FR 13821
NPRM Comment Period End	06/07/85	50 FR 13821
Hearing	09/20/85	
Final Action	04/30/88	

Small Entity: Not Applicable

Additional Information: EE-14-81.

Drafting attorney: Nerman D. Hubbard (202) 566-3430.

Reviewing attorney: Michael A. Thrasher (202) 566-3961.

Agency Contact: Nerman D. Hubbard, Attorney, Department of the Treasury, Internal Revenue Service, 1111 Constitution Ave., N.W., Washington, D.C. 20224, 202 566-3430

RIN: 1545-AD81

2444. ANNUAL INFORMATION REPORTS BY TRUSTEES AND ISSUERS OF INDIVIDUAL RETIREMENT PLANS

Legal Authority: 26 USC 7805 Internal Revenue Code of 1986; 26 USC 408 Internal Revenue Code of 1986; PL 98-369, Sec 147

CFR Citation: 26 CFR 1

Legal Deadline: None.

Abstract: On June 28, 1983, the Internal Revenue Service issued news release IR-83-88 requiring new information reporting by trustees of individual retirement accounts and issuers of individual retirement annuities (including accounts and annuities that are simplified employee pensions). Form 5498, Individual Retirement Arrangement Information, was prescribed in the news release as the information return to be used for this purpose. This regulation project will amend the regulations under section 408 to conform them to the reporting requirements announced in the news release. In addition, section 147 of the Tax Reform Act of 1984 amended section 408 (i) of the Code to require that contributions be identified as to the taxable year to which they apply. This amendment will be included in this regulation period.

Timetable:

Action	Date	FR Cite
NPRM	11/16/84	49 FR 45450
NPRM Comment Period End	01/15/85	49 FR 45450
Final Action	06/30/88	

Small Entity: Not Applicable

Additional Information: EE-65-83.

Drafting attorney: Mary D. Brennan (202) 566-3430.

Reviewing attorney: Richard J. Wickersham (202) 566-3250.

Office of Tax Legislative Counsel (Treasury) reviewing attorney: Harry J. Conaway (202) 566-8277.

Agency Contact: Mary D. Brennan, Attorney, Department of the Treasury, Internal Revenue Service, 1111 Constitution Ave., N.W., Washington, D.C. 20224, 202 566-3430

RIN: 1545-AF83

2445. RETIREMENT EQUITY ACT CHANGES TO PARTICIPATION, VESTING, ETC. RULES

Legal Authority: 26 USC 7805 Internal Revenue Code of 1986; PL 98-297, Sec 301 Retirement Equity Act of 1984

CFR Citation: 26 CFR 1

Legal Deadline: None.

Abstract: These regulations provide rules relating to amendments to section 401(a)(25), 402(f), 410, 411, 6057(e), and 6652(j) of the Code, enacted by the Retirement Equity Act of 1984. The regulations will apply changes in the participation and vesting rules to plans that use the elapsed time method of service counting, and to class-year plans. In addition, the rules provide a sample notice that may be used to satisfy section 402(f). Rules governing reductions in accrued benefits will also be provided.

Timetable:

Action	Date	FR Cite
NPRM	01/30/86	51 FR 3798
NPRMDocument published is only a portion of total NPRM project	01/30/86	51 FR 03798
Hearing	05/22/86	51 FR 12340
Final Action	06/30/88	

Small Entity: Not Applicable

Additional Information: EE-95-84.

Drafting attorney: Nancy J. Marks (202) 566-3903.

Reviewing attorney: Richard J. Wickersham (202) 566-3250.

Office of Tax Legislative Counsel (Treasury) reviewing attorney: Harry J. Conaway (202) 566-8277.

Agency Contact: Nancy J. Marks, Attorney, Department of the Treasury, Internal Revenue Service, 1111 Constitution Ave., N.W., Washington, D.C. 20224, 202 566-3903

RIN: 1545-AH03

BEST COPY AVAILABLE

2446. INCOME TAX—COORDINATION OF VESTING AND NONDISCRIMINATION REQUIREMENTS FOR QUALIFIED PLANS

Legal Authority: 26 USC 7805 Internal Revenue Code of 1986; 26 USC 411(d)(1) Internal Revenue Code of 1986

CFR Citation: 26 CFR 1

Legal Deadline: None.

Abstract: This project was developed to prescribe rules for determining if the vesting schedule of a qualified plan discriminates in favor of employees who are officers, shareholders, or highly compensated.

Timetable:

Action	Date	FR Cite
NPRM	04/09/80	45 FR 24201
Partial Revised Notice	06/12/80	45 FR 39869
Hearing	07/10/80	45 FR 29308
Final Action	00/00/00	

Small Entity: Not Applicable

Additional Information: EE-164-78.

Drafting attorney: Marjorie Hoffman (202) 566-3430.

Reviewing attorney: Richard J. Wickersham (202) 566-3250.

Office of Tax Legislative Counsel (Treasury) reviewing attorney: Harry Conaway (202) 566-8277.

Agency Contact: Marjorie Hoffman, Attorney, Department of the Treasury, Internal Revenue Service, 1111 Constitution Ave., N.W., Washington, D.C. 20224, 202 566-3430

RIN: 1545-AD83

2447. SURVIVOR BENEFITS, DISTRIBUTION RESTRICTIONS AND VARIOUS OTHER ISSUES UNDER THE RETIREMENT EQUITY ACT OF 1984

Legal Authority: 26 USC 7805 Internal Revenue Code of 1986

CFR Citation: 26 CFR 1

Legal Deadline: None.

Abstract: These regulations will provide rules relating to the effective dates, transitional rules, restrictions on distributions from employee plans and other issues arising under the Retirement Equity Act of 1984.

Timetable:

Action	Date	FR Cite
NPRM	07/19/85	50 FR 29436
NPRM Comment Period End	09/17/85	50 FR 29436
Final Action	04/01/88	

Small Entity: Not Applicable

Additional Information: EE-3-85

Drafting attorney: William D. Gibbs (202) 566-3430.

Reviewing attorney: Richard J. Wickersham (202) 566-3250.

Office of Tax Legislative Counsel reviewing attorney: Harry J. Conaway (202) 566-8277.

This is included in the Regulatory Program of the United States under overall RIN 1545-AH71.

Agency Contact: William D. Gibbs, Attorney, Department of the Treasury, Internal Revenue Service, 1111 Constitution Ave., N.W., Washington, D.C. 20224, 202 566-3903

RIN: 1545-AH01

2448. INCOME TAX-PART 1 - REDUCTION OF ACCRUED BENEFITS TO QUALIFY FOR A STANDARD TERMINATION OF A SINGLE EMPLOYER DEFINED BENEFIT PENSION PLAN

Legal Authority: 26 USC 7805 Internal Revenue Code of 1986

CFR Citation: 26 CFR 1

Legal Deadline: None.

Abstract: The regulations would provide temporary guidelines for reducing benefits for certain key employees in order to qualify for a standard termination of a single-employer defined benefit pension plan.

Timetable:

Action	Date	FR Cite
Temporary Regulation	06/30/88	

Small Entity: Not Applicable

Additional Information: EE-47-86.

Drafting attorney: Mary E. Brennan (202) 566-3903.

Reviewing attorney: Mary Oppenheimer (202) 566-3544.

Cross-referenced with NPRM EE-48-86.

Agency Contact: Mary E. Brennan, Attorney, Department of the Treasury, Internal Revenue Service, 1111 Constitution Avenue N.W., Washington, D.C. 20224, 202 566-3903

RIN: 1545-AI48

2449. INCOME TAX - PART 1 - MINIMUM VESTING STANDARDS

Legal Authority: 26 USC 7805 Internal Revenue Code of 1986; 26 USC 410 Internal Revenue Code of 1986; PL 99-514, Sec 1113 Tax Reform Act of 1986; PL 99-514, Sec 1141 Tax Reform Act of 1986; 26 USC 411 Internal Revenue Code of 1986

CFR Citation: 26 CFR 1

Legal Deadline: Statutory, February 1, 1988. Deadline set by Section 1141 of PL 99-514 "Tax Reform Act of 1986"

Abstract: These regulations will amend existing rules to reflect changes made by section 1113 of the Tax Reform Act of 1986, relating to minimum vesting standards and participation standards.

Timetable:

Action	Date	FR Cite
NPRM	01/06/88	53 FR 261
Final Action	00/00/00	

Small Entity: Not Applicable

Additional Information: EE-167-86

Drafting Attorney: V.A. Moore (202) 566-3422.

Reviewing Attorney: James Brokaw (202) 566-4173.

Treasury Attorney: Harry Conaway (202) 566-8277.

Cross-Reference to EE-73-87

Agency Contact: V. A. Moore, Attorney, Department of the Treasury, Internal Revenue Service, 1111 Constitution Ave., N.W., Washington, D.C. 20224, 202 566-3422

RIN: 1545-AI88

2450. INCOME TAX—EXCISE TAX REGULATIONS—FUNDING FOR QUALIFIED PLANS

Legal Authority: 26 USC 7805 Internal Revenue Code of 1986; 26 USC 412 Internal Revenue Code of 1986; 26 USC 413(b) Internal Revenue Code of 1986; PL 93-406, Sec 1013

CFR Citation: 26 CFR 1; 26 CFR 54

Legal Deadline: None.

Abstract: The regulations would provide guidance relating to the minimum funding requirements for employee pension benefit plans, and to

excise taxes for failure to meet the minimum funding standards.

Timetable:

Action	Date	FR Cite
NPRM	12/01/82	47 FR 54093
NPRM Comment Period End	01/31/83	47 FR 54093
Final Action	00/00/00	

Small Entity: Not Applicable

Additional Information: EE-99-78.

Drafting attorney: Suzanne K. Tank (202) 566-3422.

Reviewing attorney: Jonathan P. Marget (202) 566-3651.

Office of Tax Legislative Counsel (Treasury) reviewing attorney: Harry Conaway (202) 566-8277.

Agency Contact: Suzanne K. Tank, Attorney, Department of the Treasury, Internal Revenue Service, 1111 Constitution Ave., N.W., Washington, D.C. 20224, 202 566-3422

RIN: 1545-AD84

2451. INCOME TAX—DEFINITIONS & SPECIAL RULES

Legal Authority: 26 USC 7805 Internal Revenue Code of 1986; 26 USC 414(b) Internal Revenue Code of 1986; 26 USC 414(c) Internal Revenue Code of 1986

CFR Citation: 26 CFR 1

Legal Deadline: None.

Abstract: The regulations relate to the definition of controlled groups of corporations and businesses under common control for purposes of certain provisions of the Employee Retirement Income Security Act of 1974 and pension related provisions of the Internal Revenue Code.

Timetable:

Action	Date	FR Cite
NPRM	11/05/75	40 FR 51467
NPRM Comment Period End	01/04/76	40 FR 51467
Final Action	04/01/88	

Small Entity: Not Applicable

Additional Information: LR-209-74.

Drafting attorney: Patricia Pellervo (202) 566-3458.

Reviewing attorney: Charles M. Whedbee (202) 566-3458.

Treasury attorney: Don Rocap (202) 566-8277.

Agency Contact: Patricia Pellervo, Attorney, Department of the Treasury, Internal Revenue Service, 1111 Constitution Ave., N.W., Washington, D.C. 20224, 202 566-3458

RIN: 1545-AB35

2452. INCOME TAX—EMPLOYEES OF AN AFFILIATED SERVICE GROUP

Legal Authority: 26 USC 7805 Internal Revenue Code of 1986; 26 USC 414(m) Internal Revenue Code of 1986

CFR Citation: 26 CFR 1

Legal Deadline: None.

Abstract: The regulations would provide rules with regard to the aggregation of employees of certain organizations for purposes of certain pension requirements.

Timetable:

Action	Date	FR Cite
NPRM	02/28/83	48 FR 8293
NPRM Comment Period End	04/29/83	
Final Action	00/00/00	

Small Entity: Not Applicable

Additional Information: EE-3-81.

Drafting attorney: Michael Garvey (202) 566-3430.

Reviewing attorney: Richard J. Wickersham (202) 566-3250.

Office of Tax Legislative Counsel (Treasury) reviewing attorney: Harry J. Conaway (202) 566-8277.

Agency Contact: Michael Garvey, Attorney, Department of the Treasury, Internal Revenue Service, 1111 Constitution Ave., N.W., Washington, D.C. 20224, 202 566-3430

RIN: 1545-AD90

2453. INCOME TAX REGULATIONS—AFFILIATED SERVICE GROUPS AND EMPLOYEE LEASING

Legal Authority: 26 USC 7805 Internal Revenue Code of 1986; 26 USC 414(n)Internal Revenue Code of 1986; 26 USC 414(m)(5)Internal Revenue Code of 1986; 26 USC 414(o)Internal Revenue Code of 1986

CFR Citation: 26 CFR 1

Legal Deadline: None.

Abstract: The regulations will provide rules regarding the treatment of certain leased employees. In addition, the regulations will provide guidance regarding the aggregation of certain management companies as affiliated service groups.

Timetable:

Action	Date	FR Cite
NPRM	08/27/87	52 FR 32502
NPRM Comment Period End	10/26/87	
Hearing	12/02/87	52 FR 45835
Final Action	00/00/00	

Small Entity: Not Applicable

Additional Information: EE-111-82.

Drafting attorney: Michael Garvey (202) 566-3430.

Reviewing attorney: Richard J. Wickersham (202) 566-3250.

Office of Tax Legislative Counsel reviewing attorney: Harry Conaway (202) 566-8277.

Agency Contact: Michael Garvey, Attorney, Department of the Treasury, Internal Revenue Service, 1111 Constitution Ave., N.W., Washington, D.C. 20224, 202 566-3430

RIN: 1545-AE91

2454. JOINT AND SURVIVOR ANNUITIES

Legal Authority: 26 USC 7805 Internal Revenue Code of 1986; 26 USC 417 Internal Revenue Code of 1986; 26 USC 401(a)(11) Internal Revenue Code of 1986

CFR Citation: 26 CFR 1

Legal Deadline: None.

Abstract: These regulations will provide rules on how plans which intend to qualify under section 401 can comply with the qualified joint and survivor annuity rules added to the Code by the Retirement Equity Act of 1984. The regulations will deal with which plans must provide survivor annuities, in what forms the survivor annuities may be paid, the notice and election procedures for survivor annuities and restrictions on a plan's ability to cash out a participant and spouse.

Timetable:

Action	Date	FR Cite
NPRM	10/22/82	47 FR 47600
Final Action	04/01/88	

Small Entity: Not Applicable

Additional Information: EE-94-84.

Drafting attorney: William D. Gibbs (202) 566-3430.

Reviewing attorney: Richard J. Wickersham (202) 566-3250.

Treasury attorney: Harry J. Conaway (202) 566-8277.

NPRM published under EE-52-78; contents of file transferred to EE-94-84.

Agency Contact: William D. Gibbs, Attorney, Department of the Treasury, Internal Revenue Service, 1111 Constitution Ave., N.W., Washington, D.C. 20224, 202 566-3430

RIN: 1545-AG72

2455. INCOME TAX—CREATION & TREATMENT OF INCENTIVE STOCK OPTIONS

Legal Authority: 26 USC 7805 Internal Revenue Code of 1986; 26 USC 422A Internal Revenue Code of 1986

CFR Citation: 26 CFR 1

Legal Deadline: None.

Abstract: The regulations would provide guidance for taxpayers who either grant or receive incentive stock options. The grant of an incentive stock option to an employee by an employer will not be a taxable event. At the time such option is exercised by the employee no amount of the spread between the fair market value of the stock at exercise and the option price will be included in the employee's gross income. When the stock acquired through the exercise of the option is sold, the entire gain will be treated as capital gain and not ordinary income if certain holding period and employment relationship requirements are met.

Timetable:

Action	Date	FR Cite
NPRM	02/07/84	49 FR 4504
NPRM Comment Period End	04/09/84	49 FR 4504
Hearing	06/21/84	49 FR 17040
Final Action	00/00/00	

Small Entity: Not Applicable

Additional Information: LR-279-81.

Drafting attorney: Michael J. Grace (202) 566-3288.

Reviewing attorney: John H. Parcell (202) 566-3288.

Treasury attorney: Susan Scherbel (202) 535-6965.

Agency Contact: Michael J. Grace, Attorney, Department of the Treasury, Internal Revenue Service, 1111 Constitution Ave., N.W., Washington, D.C. 20224, 202 566-3288

RIN: 1545-AB36

2456. TAXABLE YEARS OF CERTAIN ENTITIES

Legal Authority: 26 USC 7805 Internal Revenue Code of 1986; 26 USC 441 Internal Revenue Code of 1986

CFR Citation: 26 CFR 1

Legal Deadline: None.

Abstract: The regulations would provide guidance to S corporations, personal service corporations and partnerships, that must conform their taxable years, in general, to the taxable year of their owners.

Timetable:

Action	Date	FR Cite
NPRM	12/23/87	52 FR 48546
Final Action	00/00/00	

Small Entity: No

Additional Information: LR-45-87

Drafting attorney: Arthur E. Davis III (202) 566-3238.

Reviewing attorney: Cynthia Clark (202) 566-3288.

Treasury attorney: Richard Harvey (202) 566-6960.

Agency Contact: Arthur E. Davis III, Attorney, Department of the Treasury, Internal Revenue Service, 1111 Constitution Avenue, N.W., Washington, D.C. 20224, 202 566-3238

RIN: 1545-AK63

2457. ● ELECTION OF TAXABLE YEARS OTHER THAN REQUIRED TAXABLE YEAR

Legal Authority: 26 USC 7805 Internal Revenue Code of 1986; 26 USC 444 Internal Revenue Code of 1986

CFR Citation: 26 CFR 1

Legal Deadline: None.

Abstract: This regulation provides guidance with respect to elections of taxable years other than required taxable years.

Timetable:

Action	Date	FR Cite
Temporary Regulation	04/01/88	

Small Entity: Not Applicable

Additional Information: LR-6-88

Drafting attorney: Arthur Davis (202) 566-3238.

Reviewing attorney: Cynthia Clark (202) 566-3288.

Treasury attorney: Richard Harvey (202) 566-2928.

Income Taxes

Agency Contact: Arthur Davis, Attorney, Department of the Treasury, Internal Revenue Service, 1111 Constitution Avenue, N.W., Washington, D.C. 20224, 202 566-3238

RIN: 1545-AL46

2458. LIMITATION OF THE USE OF THE CASH METHOD OF ACCOUNTING

Legal Authority: 26 USC 7805 Internal Revenue Code of 1986; 26 USC 448 Internal Revenue Code of 1986

CFR Citation: 26 CFR 1

Legal Deadline: None.

Abstract: The regulations would provide guidance to certain C Corporations, partnerships with a corporate partner and tax shelters prohibited from using the cash method of accounting.

Timetable:

Action	Date	FR Cite
NPRM	06/16/87	52 FR 22796
Interim Final Rule	06/30/88	

Small Entity: Not Applicable

Additional Information: LR-122-86.

Drafting attorney: Ewan D. Purkiss (202) 566-3238.

Reviewing attorney: Cynthia Clark (202) 566-3288.

Treasury attorney: Thomas Evans (202) 566-5453.

Agency Contact: Ewan D. Purkiss, Attorney, Department of the Treasury, Internal Revenue Service, 1111 Constitution Ave., N.W., Washington, DC 20224, 202 566-3238

RIN: 1545-AJ52

2459. ● CLARIFICATION OF DETERMINATION OF BAD DEBT EXPERIENCE UNDER NONACCRUAL-EXPERIENCE ACCOUNTING METHOD

Legal Authority: 26 USC 7805 Internal Revenue Code of 1986; 26 USC 448 Internal Revenue Code of 1986

CFR Citation: 26 CFR 1

Legal Deadline: None.

Abstract: This temporary regulation provides a clarification of determining the bad debt experience under nonaccrual-experience accounting methods.

Timetable:

Action	Date	FR Cite
Temporary Regulation	00/00/00	

Small Entity: Not Applicable

Additional Information: LR-133-87

Drafting attorney: Ewan Purkiss (202) 566-3238.

Reviewing attorney:

Treasury attorney:

Income Taxes

Agency Contact: Ewan Purkiss, Attorney, Department of the Treasury, Internal Revenue Service, 1111 Constitution Avenue, N.W., Washington, D.C. 20224, 202 566-3238

RIN: 1545-AL39

2460. ACCOUNTING FOR LONG-TERM CONTRACTS; CORPORATIONS FILING CONSOLIDATED RETURNS WITH A CONTRACTOR

Legal Authority: 26 USC 7805 Internal Revenue Code of 1986

CFR Citation: 26 CFR 1

Legal Deadline: None.

Abstract: The regulation provides rules for the manufacturer of components and subassemblies reasonably expected to be incorporated in the subject matter of an extended period long-term contract in the case of members of a consolidated group.

Timetable:

Action	Date	FR Cite
NPRM	01/06/86	51 FR 3
NPRM Comment Period End	03/07/86	51 FR 3
Final Action	00/00/00	

Small Entity: Not Applicable

Additional Information: LR-121-85.

Drafting attorney: Paulette C. Galanko (202) 566-3288.

Reviewing attorney: John M. Fischer (202) 566-3394.

Office of Tax Legislative Counsel (Treasury) reviewing attorney: Evans (202) 566-4902.

Agency Contact: Paulette C. Galanko, Attorney, Department of the Treasury, Internal Revenue Service, 1111 Constitution Avenue, N.W., Washington, D.C. 20224, 202 566-3288

RIN: 1545-AI19

2461. INCOME TAX—GENERAL RULES RELATING TO INSTALLMENT SALES

Legal Authority: 26 USC 7805 Internal Revenue Code of 1986; 26 USC 453 Internal Revenue Code of 1986

CFR Citation: 26 CFR 1

Legal Deadline: None.

Abstract: Treasury decision will provide general rules and rules for reporting contingent installment obligations.

Timetable:

Action	Date	FR Cite
NPRM	02/04/81	46 FR 10749
NPRM Comment Period End	04/06/81	46 FR 10749
Hearing	10/01/81	46 FR 40774
Final Action	00/00/00	

Small Entity: Yes

Additional Information: LR-173-80.

Drafting attorney: Ewan Purkiss (202) 566-3238.

Reviewing attorney: Cynthia Clark (202) 566-3288.

Treasury attorney: Ellen Aprill (202) 566-5453.

Agency Contact: Ewan Purkiss, Attorney, Department of the Treasury, Internal Revenue Service, 1111 Constitution Ave., N.W., Washington, D.C. 20224, 202 566-3238

RIN: 1545-AB42

2462. INCOME TAX—INSTALLMENT OBLIGATIONS RECEIVED FROM A LIQUIDATING CORPORATION

Legal Authority: 26 USC 7805 Internal Revenue Code of 1986; 26 USC 453 Internal Revenue Code of 1986

CFR Citation: 26 CFR 1

Legal Deadline: None.

Abstract: Proposal would provide rules for reporting gain in respect of installment obligations received as liquidating distributions from corporations under a plan of complete liquidation.

Timetable:

Action	Date	FR Cite
NPRM	01/13/84	49 FR 1742
NPRM Comment Period End	03/16/84	49 FR 1742
Final Action	00/00/00	

Small Entity: Not Applicable

Additional Information: LR-184-80.

Drafting attorney: Paulette C. Galanko (202) 566-3288.

Office of Tax Legislative Counsel (Treasury) reviewing attorney: Ellen Aprill (202) 566-5453.

Agency Contact: Paulette C. Galanko, Attorney, Department of the Treasury, Internal Revenue Service, 1111 Constitution Ave., N.W., Washington, D.C. 20224, 202 566-3288

RIN: 1545-AB43

2463. INCOME TAX—INSTALLMENT OBLIGATIONS RECEIVED IN TRANSACTIONS IN WHICH GAIN OR LOSS IS GENERALLY NOT RECOGNIZED

Legal Authority: 26 USC 7805 Internal Revenue Code of 1986; 26 USC 453 Internal Revenue Code of 1986

CFR Citation: 26 CFR 1

Legal Deadline: None.

Abstract: Proposal would provide rules for reporting installment obligations that are received as boot in certain exchanges in which gain is not generally recognized.

Timetable:

Action	Date	FR Cite
NPRM	05/03/84	49 FR 18866
Final Action	00/00/00	

Small Entity: Not Applicable

Additional Information: LR-186-80.

Drafting attorney: Paulette C. Galanko (202) 566-3288.

Office of Tax Legislative Counsel (Treasury) reviewing attorney: Ellen Aprill (202) 566-5453.

Agency Contact: Paulette C. Galanko, Attorney, Department of the Treasury, Internal Revenue Service, 1111 Constitution Ave., N.W., Washington, D.C. 20224, 202 566-3288

RIN: 1545-AB44

2464. INCOME TAX—INSTALLMENT METHOD REPORTING BY DEALERS IN PERSONAL PROPERTY

Legal Authority: 26 USC 7805 Internal Revenue Code of 1986; 26 USC 453A Internal Revenue Code of 1986

CFR Citation: 26 CFR 1

Legal Deadline: None.

Abstract: Proposal would provide rules for installment method reporting by dealers in personal property.

Timetable:

Action	Date	FR Cite
NPRM	07/28/86	51 FR 26909
NPRM Comment Period End	09/29/86	
Final Action	04/01/88	

Small Entity: Not Applicable

Additional Information: LR-146-81.

Drafting attorney: Paulette C. Galanko (202) 566-3288.

Office of Tax Legislative Counsel (Treasury) reviewing attorney: Ellen Aprill (202) 566-5453.

Agency Contact: Paulette C. Galanko, Attorney, Department of the Treasury, Internal Revenue Service, 1111 Constitution Ave., N.W., Washington, D.C. 20224, 202 566-3288

RIN: 1545-AB47

2465. INCOME TAX REGULATIONS—PART 1. INSTALLMENT SALE BY DEALERS IN PERSONAL PROPERTY

Legal Authority: 26 USC 7805 Internal Revenue Code of 1986; 26 USC 453A Internal Revenue Code of 1986

CFR Citation: 26 CFR 1

Legal Deadline: None.

Abstract: This project will provide rules relating to sales by dealers of personal property on the installment plan.

Timetable:

Action	Date	FR Cite
NPRM	07/28/86	
NPRM Comment Period End	09/26/86	
Final Action	00/00/00	

Small Entity: No

Additional Information: LR-141-83.

Drafting attorney: Paulette C. Galanko (202) 566-3288.

Office of Tax Legislative Counsel reviewing attorney: Ellen Aprill (202) 566-5453.

Agency Contact: Paulette C. Galanko, Attorney, Department of the Treasury, Internal Revenue Service, 1111 Constitution Ave., N.W., Washington, D.C. 20224, 202 566-3288

RIN: 1545-AF71

2466. INCOME TAX—EXCLUSION FROM GROSS INCOME WITH RESPECT TO MAGAZINES, PAPERBACKS, AND RECORD RETURNS AFTER CLOSE OF TAXABLE YEAR

Legal Authority: 26 USC 7805 Internal Revenue Code of 1986; 26 USC 458 Internal Revenue Code of 1986

CFR Citation: 26 CFR 1

Legal Deadline: None.

Abstract: The regulation will provide rules on the exclusion from gross income of income attributable to the sale of magazines, paperbacks, or records that are returned.

Timetable:

Action	Date	FR Cite
NPRM	06/31/84	49 FR 34520
Final Action	12/31/88	

Small Entity: Not Applicable

Additional Information: LR-195-78.

Drafting attorney: Katherine Lee Wambsgans (202) 566-3288.

Agency Contact: Katherine Lee Wambsgans, Attorney, Department of the Treasury, Internal Revenue Service, 1111 Constitution Ave., N.W., Washington, D.C. 20224, 202 566-3288

RIN: 1545-AB48

2467. TEMPORARY INCOME TAX REGULATIONS—THE ECONOMIC PERFORMANCE REQUIREMENT

Legal Authority: 26 USC 7805 Internal Revenue Code of 1986; 26 USC 461 (h) Internal Revenue Code of 1986

CFR Citation: 26 CFR 1

Legal Deadline: None.

Abstract: These regulations will provide guidance relating to when economic performance occurs with respect to a liability and how the recurring item exception applies.

Timetable:

Action	Date	FR Cite
Temporary Regulation	00/00/00	

Small Entity: Not Applicable

Additional Information: LR-257-84.

Drafting attorney: Bill Blagg (202) 566-3238.

Reviewing attorney: Cynthia Clark (202) 566-3288.

Agency Contact: Bill Blagg, Attorney, Department of the Treasury, Internal Revenue Service, 1111 Constitution Ave., N.W., Washington, D.C. 20224, 202 566-3238

RIN: 1545-AH33

2468. INCOME TAX—LIMITATION ON DEDUCTIONS IN CASE OF FARMING SYNDICATES

Legal Authority: 26 USC 7805 Internal Revenue Code of 1986; 26 USC 464 Internal Revenue Code of 1986; 26 USC 278(b) Internal Revenue Code of 1986

CFR Citation: 26 CFR 1

Legal Deadline: None.

Abstract: The regulations would provide that enterprises which qualify as farming syndicates must deduct expenses for feed, seed fertilizer, etcetera, only when used or consumed and to capitalize certain cost of poultry. Furthermore, farming syndicates are to capitalize certain expenses of groves, orchards and vineyards to the extent such expenses are incurred before the grove, orchard or vineyard becomes productive.

Timetable:

Action	Date	FR Cite
NPRM	11/15/83	48 FR 51936
NPRM Comment Period End	01/16/84	48 FR 51936
Hearing	03/08/84	
Final Action	00/00/00	

Small Entity: Not Applicable

Additional Information: LR-144-76.

Drafting attorney: Ewan D. Purkiss (202) 566-3238.

Reviewing attorney: Cynthia C. Clark (202) 566-3288.

Office of Tax Legislative Counsel (Treasury) reviewing attorney: Thomas Evans (202) 566-6277.

Agency Contact: Ewan D. Purkiss, Attorney, Department of the Treasury, Internal Revenue Service, 1111 Constitution Ave., N.W., Washington, D.C. 20224, 202 566-3238

RIN: 1545-AB51

2469. INCOME TAX--DETERMINATION OF AMOUNTS AT RISK WITH RESPECT TO CERTAIN ACTIVITIES

Legal Authority: 26 USC 7805 Internal Revenue Code of 1986; 26 USC 465 Internal Revenue Code of 1986; PL 94-455, Sec 204 Tax Reform Act of 1976

CFR Citation: 26 CFR 1

Legal Deadline: None.

Abstract: The regulations would provide guidance to taxpayers for purposes of determining the amount the taxpayer is at risk in certain activities. This guidance is necessary because a taxpayer's deductions are limited to the amount the taxpayer is at risk in the activity. This at risk limit applies to most activities except the holding of real property and certain equipment leasing by closely-held corporations.

Timetable:

Action	Date	FR Cite
NPRM	06/05/79	44 FR 32235
NPRM Comment Period End	08/06/79	44 FR 32235
Hearing	09/27/79	44 FR 49701
Final Action	12/00/88	

Small Entity: Not Applicable

Additional Information: LR-168-76.

Drafting attorney: Michael J. Grace (202) 566-3288.

Reviewing attorney: John H. Parcell (202) 566-3336.

Treasury attorney: Lorry Spitzer (202) 535-6968.

Agency Contact: Michael J. Grace, Attorney, Department of the Treasury, Internal Revenue Service, 1111 Constitution Ave., N.W., Washington, D.C. 20224, 202 566-3288

RIN: 1545-AB52

2470. AGGREGATION OF CERTAIN ACTIVITIES

Legal Authority: 26 USC 7805 Internal Revenue Code of 1986; 26 USC 465 Internal Revenue Code of 1986

CFR Citation: 26 CFR 1

Legal Deadline: None.

Abstract: This temporary regulation will provide rules for aggregating certain activities for purposes of applying the at-risk rules under section 465. In general, the at-risk rules limit the amount of loss deductible in a taxable year with respect to an activity to the amount the taxpayer is at risk in the activity.

Timetable:

Action	Date	FR Cite
Temporary Regulation	04/01/88	

Small Entity: Not Applicable

Additional Information: LR-155-85.

Drafting attorney: Arthur E. Davis III (202) 566-3238.

Treasury attorney: Robert Scarborough (202) 535-6969.

Agency Contact: Arthur E. Davis III, Attorney, Department of the Treasury, Internal Revenue Service, 1111 Constitution Ave., N.W., Washington, D.C. 20224, 202 566-3238

RIN: 1545-AI41

2471. TEMPORARY INCOME TAX REGULATIONS-DEFERRED PAYMENTS FOR USE OF PROPERTY OR SERVICES

Legal Authority: 26 USC 7805 Internal Revenue Code of 1986; 26 USC 467 Internal Revenue Code of 1986

CFR Citation: 26 CFR 1T

Legal Deadline: None.

Abstract: The regulations will provide rules to the accrual of rents for the use of tangible property (and interest on rent that accrues but is not paid) under a section 467 rental agreement. A section 467 rental agreement will be defined. Certain tax avoidance transactions will be defined. Rules will be provided for the recapture of prior understated inclusions. Comparable rules for services will be provided.

Timetable:

Action	Date	FR Cite
Temporary Regulation	06/30/88	

Small Entity: Not Applicable

Additional Information: LR-292-84.

Drafting attorney: Sharon L. Hall (202) 566-3288.

Treasury attorney: Reed Shuldiner (202) 566-6963.

Agency Contact: Sharon L. Hall, Attorney, Department of the Treasury, Internal Revenue Service, 1111 Constitution Ave., N.W., Washington, D.C. 20224, 202 566-3288

RIN: 1545-AG81

2472. INCOME TAX REGULATIONS -- SPECIAL RULES RELATING TO NUCLEAR DECOMMISSIONING COSTS

Legal Authority: 26 USC 7805 Internal Revenue Code of 1986; 26 USC 468A Internal Revenue Code of 1986

CFR Citation: 26 CFR 1

Legal Deadline: None.

Abstract: The regulations will provide rules relating to the Federal income tax treatment of nuclear power plant decommissioning costs. The regulations will provide guidance with respect to the manner of making the election, the determination of the amount to be deducted, and the qualification requirements for the nuclear decommissioning fund.

Timetable:

Action	Date	FR Cite
NPRM	07/10/86	51 FR 25070
NPRM Comment Period End	09/08/86	51 FR 25070
Final Action	00/00/00	

Small Entity: Not Applicable

Additional Information: LR-18-85.

Drafting attorney: Bill Blagg (202) 566-3238.

Treasury attorney: Kathleen Ferrell (202) 566-2928.

Agency Contact: William L. Blagg, Attorney, Department of the Treasury, Internal Revenue Service, 1111 Constitution Ave., N.W., Washington, D.C. 20224, 202 566-3238

RIN: 1545-AI01

2473. INCOME TAX--THREE-YEAR AVERAGING FOR INCREASES IN INVENTORY VALUE WHEN ELECTING LIFO METHOD OF ACCOUNTING

Legal Authority: 26 USC 7805 Internal Revenue Code of 1986; 26 USC 472(d) Internal Revenue Code of 1986

CFR Citation: 26 CFR 1

Legal Deadline: None.

Abstract: The regulations would provide for three-year averaging for

increases in inventory value when electing the LIFO method of accounting.

Timetable:

Action	Date	FR Cite
NPRM	02/10/83	48 FR 6134
Final Action	00/00/00	

Small Entity: Not Applicable

Additional Information: LR-254-81.

Drafting attorney: Arthur E. Davis III (202) 566-3238.

Treasury attorney: J. Richard Harvey (202) 566-6960.

Agency Contact: Arthur E. Davis III, Attorney, Department of the Treasury, Internal Revenue Service, 1111 Constitution Ave., N.W., Washington, D.C. 20224, 202 566-3238

RIN: 1545-AB55

2474. SIMPLIFIED DOLLAR-VALUE LIFO METHOD FOR CERTAIN SMALL BUSINESSES

Legal Authority: 26 USC 7805 Internal Revenue Code of 1986; 26 USC 0474 Internal Revenue Code of 1986

CFR Citation: 26 CFR 1

Legal Deadline: None.

Abstract: The regulations would provide guidance to certain small businesses that are eligible to elect a simplified dollar- value LIFO method of inventory valuation. This method requires the use of published government indexes.

Timetable:

Action	Date	FR Cite
Temporary Regulation	04/30/88	

Small Entity: No

Additional Information: LR-30-87

Drafting attorney: Arthur E. Davis III(202) 566-3238.

Reviewing attorney: Cynthia L. Clark (202) 566-3288.

Treasury accountant-advisor: J. Richard Harvey (202) 566-2926.

Agency Contact: Arthur E. Davis III, Attorney, Department of the Treasury, Internal Revenue Service, 1111 Constitution Avenue, N.W., Washington, D.C. 20224, 202 566-3238

RIN: 1545-AK65

2475. INCOME TAX—RULES CLARIFYING THE REGULATIONS WITH RESPECT TO THE COMPUTATION OF "GROSS INCOME" OF AN ELECTRIC COOPERATIVE

Legal Authority: 26 USC 7805 Internal Revenue Code of 1986; 26 USC 501(c)(12) Internal Revenue Code of 1986

CFR Citation: 26 CFR 1

Legal Deadline: None.

Abstract: The regulations would provide that electric cooperatives would take into account costs of goods sold when determining income under the 85 percent member-income test.

Timetable:

Action	Date	FR Cite
NPRM	01/10/84	49 FR 1244
NPRM Comment Period End	03/12/84	49 FR 1244
Hearinghold 5/31/84	03/26/84	49 FR 1186
Final Action	12/31/88	

Small Entity: Not Applicable

Additional Information: EE-17-81.

Drafting attorney: William D. Gibbs (202) 566-3430.

Reviewing attorney: Richard J. Wickersham (202) 566-3250.

Agency Contact: William D. Gibbs, Attorney, Department of the Treasury, Internal Revenue Service, 1111 Constitution Ave., N.W., Washington, D.C. 20224, 202 566-3430

RIN: 1545-AD99

2476. INCOME TAX—LIMITATION ON ADDITIONS TO BANK LOSS RESERVES

Legal Authority: 26 USC 7805 Internal Revenue Code of 1986; 26 USC 585 Internal Revenue Code of 1986; PL 97-34, Sec 273

CFR Citation: 26 CFR 1

Legal Deadline: None.

Abstract: The regulations would impose a requirement of a minimum addition to bad debt reserves of mutual savings banks in order to conform the treatment of these institutions to financial institutions described in section 585.

Timetable:

Action	Date	FR Cite
NPRM	12/19/83	48 FR 56083
NPRM Comment Period End	02/17/84	48 FR 56083
Final Action	00/00/00	

Small Entity: Not Applicable

Additional Information: LR-152-79.

Drafting attorney: Susan E. Overlander (202) 566-3459.

Reviewing attorney: Gerald W. Rock (202) 566-6456.

Agency Contact: Susan E. Overlander, Attorney, Department of the Treasury, Internal Revenue Service, 1111 Constitution Ave., N.W., Washington, D.C. 20224, 202 566-3459

RIN: 1545-AB86

2477. INCOME TAX—SUPPLEMENTARY RULES ON LIMITATIONS ON PERCENTAGE DEPLETION FOR OIL & GAS

Legal Authority: 26 USC 7805 Internal Revenue Code of 1986; 26 USC 613(a) Internal Revenue Code of 1986; 26 USC 703(a) Internal Revenue Code of 1986; 26 USC 705(a) Internal Revenue Code of 1986

CFR Citation: 26 CFR 1

Legal Deadline: None.

Abstract: The regulations would clarify the circumstances under which percentage depletion will be available in the case of oil and gas wells.

Timetable:

Action	Date	FR Cite
NPRM	05/13/77	42 FR 24279
Hearing	08/31/78	
Final Action	04/01/88	

Small Entity: Not Applicable

Additional Information: LR-105-75.

Drafting attorney: Walter H. Woo (202) 566-3297.

Reviewing attorney: John B. Bromell (202) 566-3326.

Office of Tax Legislative Counsel (Treasury) reviewing attorney: Bryan Collins (202) 566-2175.

Agency Contact: Walter H. Woo, Attorney, Department of the Treasury, Internal Revenue Service, 1111 Constitution Ave., N.W., Washington, D.C. 20224, 202 566-3297

RIN: 1545-AB73

2478. INCOME TAX—TO CONFORM TO SEC 3 OF THE ACT OF 12/28/80

Legal Authority: 26 USC 7805 Internal Revenue Code of 1986; 26 USC 613A(c)(10) Internal Revenue Code of 1986

CFR Citation: 26 CFR 1

Legal Deadline: None.

Abstract: The regulation would provide guidance to taxpayers using the section 613A(c)(10) exception to the transfer rules under section 613A(c)(9). In general section 613A(c)(9) disallows percentage depletion to the transferee of proven oil or gas property. Section 613A(c)(10) relates to the transfer of qualified property by an individual to a qualified transferee corporation solely in exchange for stock.

Timetable:

Action	Date	FR Cite
NPRM	10/03/84	49 FR 39076
NPRM Comment Period End	12/03/84	49 FR 39076
Hearing	03/15/85	
Final Action	07/31/89	

Small Entity: Not Applicable

Additional Information: LR-35-81.

Drafting attorney: David R. Haglund (202) 566-3297.

Reviewing attorney: Walter H. Woo (202) 566-3297.

Office of Tax Legislative Counsel (Treasury) reviewing attorney: Bryan Collins (202) 566-2175.

Agency Contact: David R. Haglund, Attorney, Department of the Treasury, Internal Revenue Service, 1111 Constitution Ave., N.W., Washington, D.C. 20224, 202 566-3297

RIN: 1545-AB74

2479. INCOME TAX - APPLICATION OF EFFECTIVE DATE FOR NEW RULES REGARDING DEDUCTIONS FOR MEAL, TRAVEL, AND ENTERTAINMENT TO PARTNERSHIPS AND S CORPORATIONS

Legal Authority: 26 USC 7805 Internal Revenue Code of 1986; 26 USC 702 Internal Revenue Code of 1986; 26 USC 1366 Internal Revenue Code of 1986

CFR Citation: 26 CFR 1

Legal Deadline: None.

Abstract: These regulations will provide guidance to taxpayers relating to the effective date for new rules regarding deductions for meal, travel and entertainment to partnerships and S corporations.

Timetable:

Action	Date	FR Cite
Temporary Regulation	12/31/88	

Small Entity: Not Applicable

Additional Information: LR-28-87

Drafting Attorney: David R. Haglund (202) 566-3297.

Reviewing Attorney: Walter H. Woo (202) 566-3297.

Agency Contact: David R. Haglund, Attorney, Department of the Treasury, Internal Revenue Service, 1111 Constitution Avenue, N.W., Washington, D.C. 20224, 202 566-3297

RIN: 1545-AK85

2480. TAXABLE YEARS OF CERTAIN PARTNERSHIPS

Legal Authority: 26 USC 7805 Internal Revenue Code of 1986; 26 USC 706 (b) Internal Revenue Code of 1986

CFR Citation: 26 CFR 1

Legal Deadline: None.

Abstract: The regulations will provide rules for determining the appropriate taxable year for certain partnerships.

Timetable:

Action	Date	FR Cite
NPRM	12/29/87	52 FR 49030
Final Action	00/00/00	

Small Entity: Not Applicable

Additional Information: LR-101-86.

Drafting attorney: Beverly A. Baughman (202) 566-3297.

Reviewing attorney: Walter H. Woo (202) 566-3297.

Treasury attorney: J. Richard Harvey (202) 566-4902.

Agency Contact: Beverly A. Baughman, Attorney, Department of the Treasury, Internal Revenue Service, 1111 Constitution Ave., N.W., Washington, D.C. 20224, 202 566-3297

RIN: 1545-AJ47

2481. MORTALITY AND MORBIDITY TABLES TO BE USED FOR INSURANCE PRODUCTS FOR WHICH THERE ARE NOT APPLICABLE COMMISSIONER'S TABLES

Legal Authority: 26 USC 7805 Internal Revenue Code of 1986; 26 USC 807 (d) Internal Revenue Code of 1986

CFR Citation: 26 CFR 1

Legal Deadline: None.

Abstract: This project will provide rules relating to the mortality and morbidity tables to be used in computing reserves for life insurance contracts for which there are no applicable Commissioner's standard tables.

Timetable:

Action	Date	FR Cite
NPRM	01/02/87	52 FR 0083
NPRM Comment Period End	03/03/87	
Final Action	00/00/00	

Small Entity: Not Applicable

Additional Information: LR-71-86.

Drafting attorney: Sharon Hall (202) 566-3286.

Treasury attorney: Don Rocap (202) 566-8277.

Agency Contact: Sharon L. Hall, Attorney, Department of the Treasury, Internal Revenue Service, 1111 Constitution Avenue, N.W., Washington, D.C. 20224, 202 566-3288

RIN: 1545-AK04

2482. INCOME TAX REGULATIONS-DIVERSIFICATION REQUIREMENTS FOR VARIABLE ANNUITY, ENDOWMENT, AND LIFE INSURANCE CONTRACTS

Legal Authority: 26 USC 7805 Internal Revenue Code of 1986; 26 USC 817 Internal Revenue Code of 1986

CFR Citation: 26 CFR 1

Legal Deadline: None.

Abstract: The regulations will provide diversification requirements for variable annuity, endowment, and life insurance contracts. The testing of diversification for various periods and applicable effective dates.

Timetable:

Action	Date	FR Cite
NPRM	09/15/86	51 FR 32664
NPRM Comment Period End	11/14/86	51 FR 32664
Hearing	07/01/87	
Final Action	00/00/00	

Small Entity: Not Applicable

Additional Information: LR-295-84.

Drafting attorney: Ewan D. Purkiss (202) 566-3238.

Reviewing attorney: Cynthia Clark (202) 566-3288.

Treasury attorney: Donald Rocap (202) 566-8278.

Agency Contact: Ewan D. Purkiss, Attorney, Department of the Treasury, Internal Revenue Service, 1111 Constitution Ave., N.W., Washington, D.C. 20224, 202 566-3238

RIN: 1545-AG79

2483. TEMPORARY INCOME TAX REGULATIONS—DISCOUNTING OF UNPAID LOSSES OF PROPERTY AND CASUALTY INSURANCE COMPANIES

Legal Authority: 26 USC 7805 Internal Revenue Code of 1986; 26 USC 846 Internal Revenue Code of 1986

CFR Citation: 26 CFR 1

Legal Deadline: None.

Abstract: The regulations will provide rules relating to the discounting of unpaid losses by property and casualty insurance companies. It is anticipated that the regulations will provide guidance with respect to the treatment of salvage and subrogation and the use of company's loss payment pattern.

Timetable:

Action	Date	FR Cite
Temporary Regulation	00/00/00	

Small Entity: Not Applicable

Additional Information: LR-138-86.

Drafting attorney: Bill Blagg (202) 566-3238.

Reviewing attorney: Cynthia Clark (202) 566-3288.

Agency Contact: Bill Blagg, Attorney, Department of the Treasury, Internal Revenue Service, 1111 Constitution Ave., N.W., Washington, DC 20224, 202 566-3238

RIN: 1545-AI96

2484. ● ALLOCATION OF GROSS INCOME ATTRIBUTABLE TO INTEREST RATE SWAPS UNDER SECTION 863 (A)

Legal Authority: 26 USC 7805 Internal Revenue Code of 1986; 26 USC 863 (a) Internal Revenue Code of 1986

CFR Citation: 26 CFR 1

Legal Deadline: None.

Abstract: This project provides source rules for income and expenses attributable to interest rate swap agreements. Interest rate swap agreements are basically agreements used to hedge against interest rate fluctuation.

Timetable:

Action	Date	FR Cite
Temporary Regulation	00/00/00	

Small Entity: Not Applicable

Additional Information: INTL-987-86

Drafting attorney: Scott Farmer (202) 634-5406.

Reviewing attorney: Bob Katcher (20) 634-5406.

Treasury attorney: Peter Daub (202) 568-5991.

Income Taxes

Agency Contact: Scott Farmer, Attorney-Advisor, Department of the Treasury, Internal Revenue Service, 1111 Constitution Avenue, N.W., Washington, D.C. 20224, 202 634-5406

RIN: 1545-AL26

2485. ● ALLOCATION AND APPORTIONMENT OF EXPENSES

Significance: Regulatory Program

Legal Authority: 26 USC 861 (b) Internal Revenue Code of 1986; 26 USC 863 (b) Internal Revenue Code of 1986; 26 USC 864 (e) Internal Revenue Code of 1986; 26 USC 7805 Internal Revenue Code of 1986

CFR Citation: 26 CFR 1

Legal Deadline: None.

Abstract: The regulations provide rules relating to the allocation and apportionment of expenses, including interest expense for purposes of the foreign tax credit rules and other international tax provisions.

Timetable:

Action	Date	FR Cite
NPRM	09/11/87	52 FR 4580
NPRM Comment Period End	10/26/87	
Hearing	11/13/87	
Final Action	04/30/88	

Small Entity: Not Applicable

Additional Information: INTL-935-86

Drafting attorney: David Merrick (202) 566-6275.

Reviewing attorney: Charles Saverude (202) 377-9060.

Treasury attorney: Mark Beams (202) 566-8275. Income Tax

Agency Contact: David Merrick, Attorney-Advisor, Department of the Treasury, Internal Revenue Service, 1111 Constitution Avenue, N.W., Washington, D.C. 20224, 202 566-6276

RIN: 1545-AL21

2486. INCOME TAX—ORIGINAL ISSUE DISCOUNT

Legal Authority: 26 USC 7805 Internal Revenue Code of 1986; 26 USC 871 Internal Revenue Code of 1986; 26 USC 881 Internal Revenue Code of 1986; 26 USC 1441 Internal Revenue Code of 1986; 26 USC 1442 Internal Revenue Code of 1986; 26 USC 3401 Internal Revenue Code of 1986

CFR Citation: 26 CFR 1; 26 CFR 31

Legal Deadline: None.

Abstract: The regulations would provide rules with respect to the taxation of original issue discount on bonds and obligations held by nonresident alien individuals and foreign corporations. The regulations would also provide guidance to withholding agents for withholding tax on original issue discount on such bonds and obligations.

Timetable:

Action	Date	FR Cite
NPRM	07/12/76	41 FR 28517
NPRM Comment Period End	09/09/76	41 FR 28517
Hearing	11/18/76	
Final Action	00/00/00	

Small Entity: Not Applicable

Additional Information: INTL-237-86

Drafting attorney: Theresa E. Bearman (202) 566-3407.

Reviewing attorney: Robert A. Katcher (202) 566-3407.

Agency Contact: Theresa E. Bearman, Attorney-Advisor, Department of the Treasury, Internal Revenue Service, 1111 Constitution Ave., N.W., Washington, DC 20224, 202 566-3407

RIN: 1545-AB93

2487. EMPLOYMENT TAXES: APPLICATION OF THE REPEAL OF 30% WITHHOLDING BY THE TAX REFORM ACT OF 1984 AND OF INFORMATION REPORTING AND BACKUP WITHHOLDING IN LIGHT OF SUCH REPEAL

Legal Authority: 26 USC 7805 Internal Revenue Code of 1986; 26 USC 871 Internal Revenue Code of 1986; 26 USC 881 Internal Revenue Code of 1986; 26 USC 1441 Internal Revenue Code of 1986; 26 USC 1442 Internal Revenue Code of 1986; 26 USC 3406 Internal Revenue Code of 1986; 26 USC 6041 Internal Revenue Code of 1986; 26 USC 6045 Internal Revenue Code of 1986; 26 USC 6049 Internal Revenue Code of 1986

CFR Citation: 26 CFR 1

Legal Deadline: None.

Abstract: These regulations provide rules relating to the repeal of 30 percent withholding by the Tax Reform Act of 1984 and to the application of information reporting and backup withholding in light of such repeal.

Timetable:

Action	Date	FR Cite
Hearing held	01/28/85	49 FR 47870
NPRM	08/20/85	50 FR 33552
NPRM Comment Period End	10/22/85	50 FR 33552
NPRM	12/31/87	
Final Action	00/00/00	

Small Entity: No

Additional Information: INTL-53-86.

Drafting attorney: Carl Cooper (202) 566-3388.

Reviewing attorney:Carol Doran Klein (202) 566-6419.

Treasury attorney: Peter Daub (202) 566-5791.

Agency Contact: Carl Cooper, Attorney, Department of the Treasury, Internal Revenue Service, 1111 Constitution Ave., N.W., Room 4109, Washington, D.C. 20224, 202 566-3388

RIN: 1545-AH15

2488. BRANCH PROFITS TAX (GENERAL RULE AND DEFINITIONS) AND SECOND LEVEL WITHHOLDING TAXES (TEMPORARY REGULATIONS)

Legal Authority: 26 USC 7805 Internal Revenue Code of 1986; 26 USC 884 Internal Revenue Code of 1986

CFR Citation: 26 CFR 1

Legal Deadline: None.

Abstract: The regulations will provide guidance on the calculation of the branch profits tax. The regulations will provide rules for the treatment of interest allocable to effectively connected income.

Timetable:

Action	Date	FR Cite
Interim Final Rule	00/00/00	

Small Entity: Undetermined

Additional Information: INTL-979-86

Drafting Attorney: Richard M. Elliott (202) 566-6457

Reviewing Attorney: Benedetta A. Kissel (202) 566-3179

Treasury Attorney: Peter Daub (202) 566-5791

Agency Contact: Richard M. Elliott, Attorney-Advisor, Department of the Treasury, Internal Revenue Service, 1111 Constitution Ave., N.W., Washington, D.C. 20224, 202 566-6457

RIN: 1545-AJ77

2489. INCOME TAX--RECAPTURE OF OVERALL FOREIGN LOSSES

Legal Authority: 26 USC 7805 Internal Revenue Code of 1986; 26 USC 904(f) Internal Revenue Code of 1986; PL 97-248, Sec 211

CFR Citation: 26 CFR 1

Legal Deadline: None.

Abstract: The regulations would provide rules for determining the amount of and recapturing overall foreign losses. An overall foreign loss under any one of the separate limitations on the foreign tax credit may offset the taxpayer's United States tax on United States source income in the year of the loss. The recapture rules provide that a portion of the taxpayer's foreign taxable income under the same limitation in subsequent years is to be recharacterized as United States source income, thereby reducing the taxpayer's foreign tax credit and preventing a double tax benefit from the loss.

Timetable:

Action	Date	FR Cite
NPRM	01/24/86	51 FR 3193
Hearing	06/05/86	51 FR 11323
Final Action	04/01/88	

Small Entity: Not Applicable

Additional Information: INTL-47-86

Drafting attorney: Carolyn M. DuPuy (202) 566-3289.

Reviewing attorney: Jacob Feldman (202) 566-3289.

Treasury attorney: Peter Barnes (202) 566-5815.

Agency Contact: Carolyn M. DuPuy, Attorney, Department of the Treasury, Internal Revenue Service, 1111 Constitution Ave., N.W., Washington, D.C. 20224, 202 566-3289

RIN: 1545-AC05

2490. INCOME TAX REGULATIONS UNDER SECTION 121 OF THE TAX REFORM ACT OF 1984 RELATING TO RESOURCING CERTAIN AMOUNTS RECEIVED FROM A U.S. OWNED FOREIGN CORPORATION

Legal Authority: 26 USC 7805 Internal Revenue Code of 1954; 26 USC 904(g) Internal Revenue Code of 1954

CFR Citation: 26 CFR 1

Legal Deadline: None.

Abstract: The regulations will provide guidance on the resourcing of section 951 and 551 inclusions, and interest and dividends from certain U.S. owned foreign corporations. The regulations will provide rules for determining what interest amounts will be subject to resourcing.

Timetable:

Action	Date	FR Cite
NPRM	08/26/87	52 FR 32242
NPRM Comment Period End	10/26/87	
Hearing	11/12/87	
Final Action	00/00/00	

Small Entity: Not Applicable

Additional Information: INTL-931-86

Drafting attorney: Carolyn Dupuy (202) 566-3404.

Reviewing attorney: Carol Doran Klein (202) 566-6419.

Treasury attorney: Peter Daub (202) 566-5791.

Agency Contact: Carolyn M. Dupuy, Attorney, Department of the Treasury, Internal Revenue Service, 1111 Constitution Avenue, N.W., Washington, D.C. 20224, 202 566-3499

RIN: 1545-AI33

2491. SEPARATE APPLICATION OF SECTION 904 WITH RESPECT TO CERTAIN CATEGORIES OF INCOME

Significance: Regulatory Program

Legal Authority: 26 USC 7805 Internal Revenue Code of 1986; 26 USC 904 Internal Revenue Code of 1986

CFR Citation: 26 CFR 1

Legal Deadline: None.

Abstract: The regulation will provide rules for determining the separate application of the foreign tax credit limitation with respect to certain categories of income. The regulation will define the separate limitations, provide operational rules for determining the separate limitations (including look-through rules) and provide certain transition rules.

Timetable:

Action	Date	FR Cite
NPRM	08/26/87	
Hearing	11/12/87	
Final Action	04/30/88	

Small Entity: Not Applicable

Additional Information: INTL-931-86

Drafting Attorneys: Carolyn Dupuy (202) 566-3289 and Marnie Carro (202) 566-3499.

Reviewing Attorney: Carol Doran Klein (202) 566-6419

Treasury Attorney: Peter Daub (202) 566-2964

Agency Contact: Carolyn M. Dupuy & Marnie J. Carro, Attorney-Advisor, Department of the Treasury, Internal Revenue Service, 1111 Constitution Ave., N.W., Washington, D.C. 20224, 202 566-3289

RIN: 1545-AJ69

2492. SEPARATE APPLICATION OF SECTION 904 WITH RESPECT TO CERTAIN CATEGORIES OF INCOME

Legal Authority: 26 USC 7805 Internal Revenue Code of 1986; 26 USC 904 Internal Revenue Code of 1986

CFR Citation: 26 CFR 1

Legal Deadline: None.

Abstract: The regulation will provide guidance to taxpayers in computing the foreign tax credit limitations with respect to certain categories of income.

Timetable:

Action	Date	FR Cite
NPRM	08/26/87	52 FR 32242
NPRM Comment Period End	10/26/87	
Hearing	11/12/87	52 FR 32242
Final Action	12/31/88	

Small Entity: No

Additional Information: INTL-931-86

Drafting Attorney: Carolyn DuPuy (202) 566-3494

Reviewing Attorney: Carol Doran-Klein (202) 566-6419

Treasury Attorney: Unassigned

Agency Contact: Carolyn M. DuPuy, Attorney-Advisor, Department of the Treasury, Internal Revenue Service, 1111 Constitution Ave., N.W., Washington, D.C. 20224, 202 566-3494

RIN: 1545-AJ72

2493. INCOME TAX--TEMPORARY REGULATIONS--TAXPAYER'S OBLIGATION TO FILE A NOTICE OF REDETERMINATION OF FOREIGN TAX AND CIVIL PENALTIES FOR FAILURE TO FILE

Legal Authority: 26 USC 7805 Internal Revenue Code of 1986; 26 USC 905(c) Internal Revenue Code of 1986; 26 USC 6689 Internal Revenue Code of 1986

CFR Citation: 26 CFR 4

Legal Deadline: None.

Abstract: The regulations will establish procedures for taxpayers by which they must notify the Service of a change in foreign tax liability for a taxable year for which they claimed the foreign tax credit. The regulations provide special rules for redetermining the taxpayer's United States tax liability when the dollar value of the foreign currency fluctuates between the time for which the foreign tax credit is originally claimed and the time for which the foreign tax credit is redetermined. In addition, the regulations set forth deadlines for compliance with the notification requirements.

Timetable:

Action	Date	FR Cite
Temporary Regulation	00/00/00	

Small Entity: Not Applicable

Additional Information: INTL - 61-86

Drafting attorney: Gerard Traficanti (202) 566-6384.

Reviewing attorney: Carol Doran Klein (202) 566-6419.

Draft of the Treasury decision to International Tax Counsel, on October 19, 1982.

Agency Contact: Gerard Traficanti, Tax Law Specialist, Department of the Treasury, Internal Revenue Service, 1111 Constitution Ave., N.W., Room 5531, Washington, D.C. 20224, 202 566-6384

RIN: 1545-AC09

2494. FSC TRANSFER PRICING RULES, DISTRIBUTIONS, DIVIDENDS RECEIVED, DEDUCTION AND OTHER SPECIAL RULES FOR FSC

Significance: Regulatory Program

Legal Authority: 26 USC 7805 Internal Revenue Code of 1986; 26 USC 925(b)(1) Internal Revenue Code of 1986; 26 USC 925(b)(2) Internal Revenue Code of 1986; 26 USC 927(d)(2)(B) Internal Revenue Code of 1986; 26 USC 927(e)(1) to 927(e)(2) Internal Revenue Code of 1986

CFR Citation: 26 CFR 1

Legal Deadline: None.

Abstract: Proposal would provide rules for Application of the FSC Transfer Pricing Rules, Distributions, Dividends Received Deductions and Other Special FSC provisions.

Timetable:

Action	Date	FR Cite
NPRM	03/03/87	52 FR 6467
NPRM Comment Period End	05/02/87	52 FR 6467
Hearing	01/19/88	
Final Action	12/01/88	

Small Entity: Not Applicable

Additional Information: INTL - 153-86.

Drafting attorney: Richard Chewning (202) 566-3490.

Reviewing attorney: Carol Doran Klein (202) 566-3289.

Treasury attorney: D. Crowe (202) 566-8275.

Agency Contact: Richard Chewning, Attorney - Advisor, Department of the Treasury, Internal Revenue Service, 1111 Constitution Avenue, N.W., Washington, D.C. 20224, 202 566-3490

RIN: 1545-AI16

2495. INCOME TAX–DEFINITION OF QUALIFIED POSSESSION SOURCE INVESTMENT INCOME FOR PURPOSES OF PUERTO RICO & POSSESSION TAX CREDIT

Legal Authority: 26 USC 7805 Internal Revenue Code of 1986; 26 USC 936(d)(2) Internal Revenue Code of 1986

CFR Citation: 26 CFR 1

Legal Deadline: None.

Abstract: This regulation would provide rules with respect to what constitutes qualified possession source investment income for purposes of the Puerto Rico and possession tax credit.

Timetable:

Action	Date	FR Cite
NPRM	01/21/86	51 FR 2726
Final Action	00/00/00	

Small Entity: Not Applicable

Additional Information: INTL -44-86

Drafting attorney: Philip L. Garlett (202) 566-6645.

Reviewing attorney: Jacob Feldman (202) 566-6645.

Treasury attorney: Mary Bennett (202) 566-5815.

Agency Contact: Philip L. Garlett, Attorney, Department of the Treasury, Internal Revenue Service, 1111 Constitution Ave., N.W., Washington, D.C. 20224, 202 566-6645

RIN: 1545-AC10

2496. CURRENT TAXATION OF FOREIGN OIL RELATED INCOME OF CONTROLLED FOREIGN CORPORATIONS

Legal Authority: 26 USC 7805 Internal Revenue Code of 1986; 26 USC 954 Internal Revenue Code of 1986

CFR Citation: 26 CFR 1

Legal Deadline: None.

Abstract: Proposal would define and interpret when foreign oil related income will be subject to current taxation under section 954 of the Internal Revenue Code of 1954. Changes to the applicable law were made by section 212 of the Tax Equity and Fiscal Responsibility Act of 1982.

Timetable:

Action	Date	FR Cite
NPRM	08/27/87	52 FR 32308
NPRM Comment Period End	10/26/87	
Final Action	12/01/88	

Small Entity: Not Applicable

Additional Information: INTL-57-86.

Drafting attorney: Richard Chewning (202) 566-3490.

Reviewing attorney: Charles C. Saverude (202) 566-6645.

Treasury attorney: Peter Barnes (202) 566-6275.

Agency Contact: Richard Chewning, Attorney, Department of the Treasury, Internal Revenue Service, 1111 Constitution Ave., N.W., Washington, D.C. 20224, 202 566-3490

RIN: 1545-AE38

2497. ● FUNCTIONAL CURRENCY

Legal Authority: 26 USC 7805 Internal Revenue Code of 1986; 26 USC 985 Internal Revenue Code of 1986

CFR Citation: 26 CFR 1

Legal Deadline: None.

Abstract: This project provides rules for determining the currency an entity is a foreign entity it may be allowed to compute its gain or loss in foreign currency and translate the net amount of such gain or loss into U.S. dollars.

Timetable:

Action	Date	FR Cite
Temporary Regulation	00/00/00	

Small Entity: Not Applicable

Additional Information: INTL-982-86

Drafting attorney: Scott Farmer (202) 634-5406.

Reviewing attorney: Bob Katcher (202) 634-5406.

Treasury attorney: David Crowe (202) 566-5791.

Income Taxes

Agency Contact: Scott Farmer, Attorney-Advisor, Department of the Treasury, Internal Revenue Service, 1111 Constitution Avenue, N.W., Washington, D.C. 20224, 202 634-5406

RIN: 1545-AL27

2498. ● TRANSITION RULES FOR QUALIFIED BUSINESS UNITS USING A NET WORTH METHOD OF ACCOUNTING FOR TAXABLE YEARS BEGINNING BEFORE JANUARY 1, 1987

Legal Authority: 26 USC 7805 Internal Revenue Code of 1986; 26 USC 989 (c) Internal Revenue Code of 1986

CFR Citation: 26 CFR 1

Legal Deadline: None.

Abstract: This project provides transition rules for those foreign branches of United States entities who used a net worth method of accounting prior to the enactment of the Tax Reform Act of 1986. Under the Act foreign branches must now account for their operations under the profit and loss method as set forth in section 987 of the Code.

Timetable:

Action	Date	FR Cite
Temporary Regulation	00/00/00	

Small Entity: Not Applicable

Additional Information: INTL-984-86

Drafting attorney: David Rosenberg (202) 634-5406.

Reviewing attorney: Ann Fisher (202) 634-5406.

Treasury attorney: David Crowe (202) 566-5791.

Income Taxes

Agency Contact: David Rosenberg, Attorney-Advisor, Department of the Treasury, Internal Revenue Service, 1111 Constitution Avenue, N.W., Washington, D.C. 20224, 202 634-5406

RIN: 1545-AL28

2499. PROPOSED INCOME TAX REGULATIONS UNDER THE TAX REFORM ACT OF 1984 RELATING TO INTEREST CHARGE DISCS

Legal Authority: 26 USC 7805 Internal Revenue Code of 1986; 26 USC 995 Internal Revenue Code of 1986

CFR Citation: 26 CFR 1

Legal Deadline: None.

Abstract: The Regulations will provide guidance relating to the Interest Charge imposed on DISC shareholders for taxable years ending after 1984. The regulations will explain how the

Deemed Distribution is computed and how the Interest Charge is computed.

Timetable:

Action	Date	FR Cite
NPRM	02/02/87	52 FR 3256
Final Action	07/31/88	

Small Entity: Not Applicable

Additional Information: LR-172-84.

Drafting attorney: Joseph M. Rosenthal (202) 566-3872.

Reviewing attorney: Jacob Feldman (202) 566-3289.

Treasury attorney: Jane Sarosdy (202) 566-8275.

Agency Contact: Joseph M. Rosenthal, Attorney, Department of the Treasury, Internal Revenue Service, 1111 Constitution Ave., N.W., Washington, D.C. 20224, 202 566-3872

RIN: 1545-AG71

2500. INCOME TAX--TRANSFERS OF SECURITIES UNDER CERTAIN AGREEMENTS

Legal Authority: 26 USC 7805 Internal Revenue Code of 1986; 26 USC 1058 Internal Revenue Code of 1986

CFR Citation: 26 CFR 1

Legal Deadline: None.

Abstract: The regulations would provide that so long as the provisions of section 1058 and these regulations are met, the lender will neither recognize gain or loss on the transfer of securities nor upon the return of identical securities.

Timetable:

Action	Date	FR Cite
NPRM	07/26/83	48 FR 33912
NPRM Comment Period End	09/26/83	48 FR 33912
Final Action	00/00/00	

Small Entity: Not Applicable

Additional Information: LR-182-78.

Drafting attorney: Arthur E. Davis III (202) 566-3238.

Reviewing attorney: Cynthia L. Clark (202) 566-3288.

Agency Contact: Arthur E. Davis III, Attorney, Department of the Treasury, Internal Revenue Service, 1111 Constitution Ave., N.W., Washington, D.C. 20224, 202 566-3238

RIN: 1545-AC20

2501. CUSTOMS LIMITATION ON TAXPAYER'S BASIS IN PROPERTY IMPORTED FROM RELATED PERSONS

Legal Authority: PL 99-514, Sec 1248

CFR Citation: 26 CFR 1

Legal Deadline: None.

Abstract: Prior to the Tax Reform Act of 1986 importers could claim a transfer price for customs purposes that was too low to be consistent with the price they claim for income tax purposes. Section 1248 of the Tax Reform Act of 1986 addressed this problem by enacting Section 1059A of the Internal Revenue Code, under which importers cannot claim a transfer price for income tax purposes that is higher than would be consistent with the value they claim for customs purposes. Regulations will be needed to provide rules for coordinating customs and tax valuation principles. It is anticipated that as a result of Section 1059A of the Internal Revenue Code, some taxpayers will claim higher transfer prices for customs purposes. No estimate has been made of the revenue.

Timetable:

Action	Date	FR Cite
NPRM	09/03/87	52 FR 171
NPRM Comment Period End	11/02/87	
Final Action	04/01/88	

Small Entity: Not Applicable

Additional Information: INTL-960-86

Drafting Attorney: W. Edward Williams (202) 287-4851

Reviewing Attorney: George Sellinger (202) 287-4851

Treasury Attorney: Stephen Shay (202) 566-5046

Agency Contact: W. Edward Williams, Attorney-Advisor, Department of the Treasury, Internal Revenue Service, 950 L'Enfant Plaza South, S.W., Room 3319, Washington, D.C. 20024, 202 287-4851

RIN: 1545-AJ92

2502. INCOME TAX--SPECIAL ALLOCATION RULES FOR CERTAIN ASSET ACQUISITIONS

Legal Authority: 26 USC 7805 Internal Revenue Code of 1986; 26 USC 1060 Internal Revenue Code of 1986; 26 USC 755 Internal Revenue Code of 1986; 26 USC 338 Internal Revenue Code of 1986; 26 USC 167 Internal Revenue Code of 1986; 26 USC 1031 Internal Revenue Code of 1986

CFR Citation: 26 CFR 1

Legal Deadline: None.

Abstract: This regulation will explain and illustrate the application of the residual method of allocation to the purchase price in certain asset acquisitions. It will also provide certain information reporting requirements.

Timetable:

Action	Date	FR Cite
Temporary Regulation	04/15/88	

Small Entity: No

Additional Information: LR-118-86.

Drafting attorney: Judith C. Winkler (202) 566-3458.

Reviewing attorney: Charles M. Whedbee (202) 566-3458.

Treasury attorney: Kathleen Ferrell (202) 566-2175.

Agency Contact: Judith C. Winkler, Attorney, Department of the Treasury, Internal Revenue Service, 1111 Constitution Ave., N.W., Washington, D.C. 20224, 202 566-3458

RIN: 1545-AJ03

2503. INCOME TAX REGULATIONS UNDER THE TAX REFORM ACT OF 1984 RELATING TO MIXED STRADDLES

Legal Authority: 26 USC 7805 Internal Revenue Code of 1986; 26 USC 1092(b)(1) Internal Revenue Code of 1986; 26 USC 1092(b)(2) Internal Revenue Code of 1986

CFR Citation: 26 CFR 1

Legal Deadline: None.

Abstract: These regulations will provide rules relating to mixed straddles. The regulations will explain the application of the straddle-by-straddle identification rules of mixed straddles and the establishment of mixed straddle accounts.

Timetable:

Action	Date	FR Cite
NPRM	01/24/85	50 FR 3351
NPRM Comment Period End	03/25/85	50 FR 3351
Hearing	05/02/85	
Final Action	07/00/88	

Small Entity: Not Applicable

Additional Information: LR-299-84.

Drafting attorney: Timothy J. McKenna (202) 566-3287.

Reviewing attorney: John M. Fischer (202) 566-3394.

Treasury attorney: Kathleen Ferrell (202) 566-2175.

Agency Contact: Timothy J. McKenna, Attorney, Department of the Treasury, Internal Revenue Service, 1111 Constitution Ave., N.W., Washington, D.C. 20224, 202 566-3287

RIN: 1545-AH59

2504. INCOME TAX REGULATIONS UNDER THE ECONOMIC RECOVERY TAX ACT OF 1981 AND THE TAX REFORM ACT OF 1984, RELATING TO STRADDLES

Legal Authority: 26 USC 7805 Internal Revenue Code of 1986; 26 USC 1092 (b) Internal Revenue Code of 1986

CFR Citation: 26 CFR 1

Legal Deadline: None.

Abstract: These regulations will provide rules relating to tax straddles. The regulations will explain the general loss deferral rule under section 1092, and the application of rules similar to section 1091 and 1233 to straddles.

Timetable:

Action	Date	FR Cite
NPRM	01/24/85	50 FR 3352
NPRM Comment Period End	03/25/85	50 FR 3352
Hearing	05/02/85	
Final Action	07/00/88	

Small Entity: Not Applicable

Additional Information: LR-297-84.

Drafting attorney: Timothy J. McKenna (202) 566-3287.

Reviewing attorney: John M. Fischer (202) 566-3294.

Treasury attorney: Kathleen Ferrell (202) 566-2175.

Agency Contact: Timothy J. McKenna, Attorney, Department of the Treasury, Internal Revenue Service, 1111 Constitution Ave., N.W., Washington, D.C. 20224, 202 566-3287

RIN: 1545-AH60

2505. INCOME TAX--GAIN FROM DISPOSITION OF INTEREST IN OIL OR GAS PROPERTY

Legal Authority: 26 USC 7805 Internal Revenue Code of 1986; 26 USC 1254 Internal Revenue Code of 1986; 26 USC 751 Internal Revenue Code of 1986; PL 94-455, Sec 205 Tax Reform Act of 1976; PL 94-455, Sec 1901 Tax Reform Act of 1976; PL 95-618, Sec 402 Energy Tax Act of 1978

CFR Citation: 26 CFR 1

Legal Deadline: None.

Abstract: The regulations will determine the tax treatment of gain from the disposition of certain oil, gas, or geothermal property to determine how much of the gain from the disposition is subject to recapture under section 1254 and accorded ordinary income treatment. The regulations also will define intangible drilling and development costs, disposition, and oil, gas and geothermal property for purposes of section 1254.

Timetable:

Action	Date	FR Cite
NPRM	06/11/80	45 FR 39512
NPRM Comment Period End	08/11/80	45 FR 39512
Hearing	09/09/80	
Final Action	12/00/88	

Small Entity: Not Applicable

Additional Information: LR-276-76.

Drafting attorney: Robert Beatson (202) 566-3459.

Reviewing attorney: John M. Coulter, Jr. (202) 566-4473.

Agency Contact: Robert Beatson, Attorney, Department of the Treasury, Internal Revenue Service, 1111 Constitution Ave., N.W., Washington, D.C. 20224, 202 566-3459

RIN: 1545-AC35

2506. HEDGING EXCEPTION TO MARK-TO-MARKET RULES FOR SECTION 1256 CONTRACTS, DEFERRAL OF CERTAIN STRADDLE LOSSES, AND WASH-SALE AND SHORT-SALE PRINCIPLES APPLICABLE TO CERTAIN STRADDLE TRANSACTIONS

Legal Authority: 26 USC 7805 Internal Revenue Code of 1986; 26 USC 1256 (e) Internal Revenue Code of 1986

CFR Citation: 26 CFR 1

Legal Deadline: None.

Abstract: These regulations will provide rules relating to the hedging transaction exception for section 1256 contracts and straddles.

Timetable:

Action	Date	FR Cite
Temporary Regulation	07/00/88	

Small Entity: Not Applicable

Additional Information: LR-10-86.

Drafting attorney: Timothy J. McKenna (202) 566-3287.

Reviewing attorney: John M. Fischer (202) 566-3394.

Treasury attorney: Kathleen Ferrell (202) 566-2175.

Agency Contact: Timothy J. McKenna, Attorney, Department of the Treasury, Internal Revenue Service, 1111 Constitution Ave., NW, Washington, DC 20224, 202 566-3287

RIN: 1545-AI72

2507. REGULATIONS UNDER SECTION 1271 THROUGH 1275 RELATING TO TAX TREATMENT OF DEBT INSTRUMENTS HAVING ORIGINAL ISSUE DISCOUNT

Legal Authority: 26 USC 7805 Internal Revenue Code of 1986; 26 USC 1275 Internal Revenue Code of 1986

CFR Citation: 26 CFR 1

Legal Deadline: None.

Abstract: Regulations would provide guidance as to computation of amount to be included in income by holders and amount to be deducted by issuers of certain bonds issued after July 1, 1982. With respect to these bonds, original issue discount is computer based on constant interest accrual. Guidance is also provided as to the computation of original issue discount in special circumstances where the bond contains a variable interest rate, where put and call options are present, and in other circumstances.

Timetable:

Action	Date	FR Cite
NPRM	05/08/86	51 FR 12022
Hearing	11/17/86	51 FR 24162
Final Action	12/31/88	

Small Entity: Not Applicable

Additional Information: LR-189-84.

Drafting attorney: Laura Ann M. Lauritzen (202) 566-3459.

Reviewing attorney: Susan T. Baker (202) 566-3294.

Agency Contact: Laura Ann M. Lauritzen, Attorney, Department of the Treasury, Internal Revenue Service, 1111 Constitution Ave., N.W., Washington, D.C. 20224, 202 566-3459

RIN: 1545-AH46

2508. INCOME TAX—DEFINITION OF S CORPORATION

Legal Authority: 26 USC 7805 Internal Revenue Code of 1986; 26 USC 1361 Internal Revenue Code of 1986

CFR Citation: 26 CFR 1

Legal Deadline: None.

Abstract: The regulations would address the following matters: (1) the number of permitted shareholders of a small business corporation, (2) the types of trusts that are permitted to be shareholders of a small business corporation, (3) whether shares are permitted to be owned as a split interest and (4) the rules relating to corporations that are ineligible to be an S corporation.

Timetable:

Action	Date	FR Cite
NPRM	10/07/87	51 FR 35659
NPRM Comment Period End	12/08/87	
Final Action	07/31/88	

Small Entity: Not Applicable

Additional Information: LR-262-82.

Drafting attorney: Joel S. Rutstein (202) 566-3297.

Reviewing attorney: Walter H. Woo (202) 566-3297.

Office of Tax Legislative Counsel (Treasury) reviewing attorney: Bryan Collins (202) 566-2175.

Agency Contact: Joel S. Rutstein, Attorney, Department of the Treasury, Internal Revenue Service, 1111 Constitution Ave., N.W., Washington, D.C. 20224, 202 566-3297

RIN: 1545-AE86

2509. TEMPORARY REGULATION—APPLICATION OF SECTION 1374 BUILT-IN GAIN TAX TO C CORPORATION'S ELECTING S CORPORATION STATUS

Legal Authority: 26 USC 7805 Internal Revenue Code of 1986; 26 USC 1374 Internal Revenue Code of 1986; 26 USC 337 (d) Internal Revenue Code of 1986

CFR Citation: 26 CFR 1

Legal Deadline: None.

Abstract: Regulations will provide ruling relating to the section 1374 built-in gains tax to C corporations electing S corporation status

Timetable:

Action	Date	FR Cite
Temporary Regulation	04/15/86	

Small Entity: Not Applicable

Additional Information:

LR-6-87.

Drafting attorney: Mark S. Jennings (202) 566-3458.

Reviewing attorney: Robert J. Mason (202) 566-3463.

Agency Contact: Mark S. Jennings, Attorney, Department of the Treasury, Internal Revenue Service, 1111 Constitution Avenue, N.W., Washington, D.C. 20224, 202 566-3458

RIN: 1545-AK91

2510. INCOME TAX—CERTAIN ELECTIONS UNDER THE SUBCHAPTER S REVISION ACT OF 1982

Legal Authority: 26 USC 7805 Internal Revenue Code of 1986; 26 USC 1361 Internal Revenue Code of 1986; 26 USC 1362 Internal Revenue Code of 1986; 26 USC 1377 Internal Revenue Code of 1986; 26 USC 1378 Internal Revenue Code of 1986; 26 USC 1379 Internal Revenue Code of 1986

CFR Citation: 26 CFR 1

Legal Deadline: None.

Abstract: The regulations relate to the time and manner of making certain elections, consents, and refusals under the Subchapter S Revision Act of 1982 and to the taxable year which a corporation may select in order to make the election to be an S corporation.

Timetable:

Action	Date	FR Cite
NPRM	01/26/83	48 FR 03637
NPRM Comment Period End	03/28/83	48 FR 03637
Final Action	00/00/00	

Small Entity: Not Applicable

Additional Information: LR-1-83.

Drafting attorney: Walter H. Woo (202) 566-3297.

Reviewing attorney: Walter H. Woo (202) 566-3297.

Office of Tax Legislative Counsel (Treasury) reviewing attorney: Bryan Collins (202) 566-2175.

Agency Contact: Walter H. Woo, Attorney, Department of the Treasury, Internal Revenue Service, 1111 Constitution Ave., N.W., Washington, D.C. 20224, 202 566-3297

RIN: 1545-AF30

2511. APPLICATIONS FOR EXEMPTION FROM SELF-EMPLOYMENT TAXES FOR MINISTERS, ETC

Legal Authority: 26 USC 1402 (e) Internal Revenue Code of 1986; 26 USC 7805 Internal Revenue Code of 1986

CFR Citation: 26 CFR 1

Legal Deadline: None.

Abstract: This regulation will provide guidance with respect to applications for exemption from self-employment taxes under section 1402 (e) for ministers, members of a religious order and Christian Science practitioners.

Timetable:

Action	Date	FR Cite
NPRM	04/15/87	52 FR 12194
NPRM Comment Period End	06/15/87	52 FR 12194
Final Action	04/01/88	

Small Entity: Not Applicable

Additional Information: LR-154-86

Drafting attorney: Robert E. Shaw (202) 566-3297.

Reviewing attorney: John Bromell (202) 566-3297.

Treasury attorney: Susan Scherbel (202) 566-4902.

Agency Contact: Robert E. Shaw, Attorney, Department of the Treasury, Internal Revenue Service, 1111

Constitution Ave., N.W., Washington, DC 20224, 202 566-3297

RIN: 1545-AJ94

2512. WITHHOLDING ON ITEMS OF INCOME COVERED BY AN INCOME TAX CONVENTION

Legal Authority: PL 97-248, Sec 342; 26 USC 7805 Internal Revenue Code of 1986

CFR Citation: 26 CFR 1; 26 CFR 301

Legal Deadline: None.

Abstract: These regulations relate to the withholding on certain items of income subject to a reduced rate of, or exemption from, U.S. tax under an income tax convention to which the United States is a party. These regulations would amend the existing regulations to provide a certification requirement for obtaining reduced rates of, or exemption from, U.S. withholding tax on payments of fixed or determinable annual or periodical income and certain other income.

Timetable:

Action	Date	FR Cite
NPRM	09/10/84	49 FR 35511
NPRM Comment Period End	11/09/84	49 FR 35511
Final Action	00/00/00	

Small Entity: Not Applicable

Additional Information: INTL-41-86

Drafting attorney: Lilo A. Hester (202) 566-5862.

Reviewing attorney: Michael F. Patton (202) 566-5862.

Treasury attorney: Peter Daub (202) 566-5815.

Agency Contact: Lilo Alfreida Hester, Attorney, Department of the Treasury, Internal Revenue Service, 950 L'Enfant Plaza South, S.W., Suite 3319, Washington, DC 20024, 202 287-4851

RIN: 1545-AH86

2513. ● TEMPORARY REGULATION ON WITHHOLDING TAX ON PAYMENTS FROM PARTNERSHIPS TO FOREIGN PARTNERS

Significance: Agency Priority

Legal Authority: 26 USC 7805 Internal Revenue Code of 1986; 26 USC 1446 Internal Revenue Code of 1986

CFR Citation: 26 CFR 1

Legal Deadline: Statutory, December 31, 1987. Withholding must begin no later than January 1, 1988.

Abstract: The regulation explains when withholding is required under section 1446, how and when the amounts withheld are to be reported and paid over to the Internal Revenue Service, and when the taxpayer is to credit the tax withheld against its U.S. income tax liability or apply for a refund significant policy issues tax involved.

Timetable:

Action	Date	FR Cite
Temporary Regulation	00/00/00	

Small Entity: Not Applicable

Additional Information: INTL-938-86

Drafting attorney: David F.Chan (202) 634-5404.

Reviewing attorney: Robert E. Culbertson, Jr. (202) 634-5404.

Treasury attorney: David Crowe (202) 566-5791.

Income Taxes

Agency Contact: David F. Chan, Attorney-Advisor, Department of the Treasury, Internal Revenue Service, 1111 Constitution Avenue, N.W., Washington, D.C. 20224, Attn: CC:INTL, Room 3042, 202 634-5404

RIN: 1545-AL32

2514. INCOME TAX—CREDIT & DEDUCTIONS ETC., FOR CONSOLIDATED RETURNS

Legal Authority: 26 USC 7805 Internal Revenue Code of 1986; 26 USC 1502 Internal Revenue Code of 1986

CFR Citation: 26 CFR 1

Legal Deadline: None.

Abstract: Provision would amend the consolidated returns regulations to clarify, among other things, the rules relating to net operating loss carrybacks of a member of an affiliated group filing consolidated returns to a year in which the member was not in existence, thereby giving the public needed guidance on what the rule is in that situation.

Timetable:

Action	Date	FR Cite
NPRM	07/31/84	49 FR 30528
NPRM Comment Period End	10/01/84	
Hearing	12/10/84	
Final Action	12/31/88	

Small Entity: No

Additional Information: LR-97-79.

Drafting attorney: Judith C. Winkler (202) 566-3458.

Reviewing attorney: Robert J. Mason (202) 566-3463.

Office of Tax Legislative Counsel (Treasury) reviewing attorney: Patricia McClanahan (202) 566-4902.

Agency Contact: Judith C. Winkler, Attorney, Department of the Treasury, Internal Revenue Service, 1111 Constitution Ave., N.W., Washington, D.C. 20224, 202 566-3458

RIN: 1545-AC48

2515. INVESTMENT ADJUSTMENTS UNDER THE CONSOLIDATED RETURN REGULATIONS

Legal Authority: 26 USC 7805 Internal Revenue Code of 1986; 26 USC 1502 Internal Revenue Code of 1986

CFR Citation: 26 CFR 1

Legal Deadline: None.

Abstract: Provision would amend the consolidated return investment adjustment rules by changing the computation of earnings and profits where section 312 (k), (l), (m), or (n) applies.

Timetable:

Action	Date	FR Cite
Next Action Undetermined		

Small Entity: No

Additional Information: LR-15-86.

Drafting attorney: Judith C. Winkler (202) 566-3458.

Reviewing attorney: Robert J. Mason (202) 566-3463.

Agency Contact: Judith C. Winkler, Attorney, Department of the Treasury, Internal Revenue Service, 1111 Constitution Avenue, NW, Washington, DC 20224, 202 566-3458

RIN: 1545-AI56

2516. TEMPORARY REGULATIONS-CONSOLIDATED RETURN INVESTMENT ADJUSTMENTS WITH RESPECT TO AN ACQUIRED SUBSIDIARY'S BUILT-IN GAINS OR LOSSES

Legal Authority: 26 USC 7805 Internal Revenue Code of 1986; 26 USC 1502 Internal Revenue Code of 1986; 26 USC 337 Internal Revenue Code of 1986

CFR Citation: 26 CFR 1

Legal Deadline: None.

Abstract: Regulations will prevent the consolidated return investment adjustments from reflecting the recognized built-in gains or losses of assets acquired in certain corporate acquisitions.

Timetable:

Action	Date	FR Cite
Temporary Regulation	04/01/88	

Small Entity: Not Applicable

Additional Information:

LR-4-87.

Drafting attorney: Mark S. Jennings (202) 566-3458.

Reviewing attorney: John Broadbent (202) 566-3458.

Agency Contact: Mark S. Jennings, Attorney, Department of the Treasury, Internal Revenue Service, 1111 Constitution Avenue, N.W., Washington, D.C. 20224, 202 566-3458

RIN: 1545-AK95

2517. ● CONSOLIDATE GROUPS

Legal Authority: 26 USC 7805 Internal Revenue Code of 1986; 26 USC 1502 Internal Revenue Code of 1986

CFR Citation: 26 CFR 1

Legal Deadline: None.

Abstract: This regulation provides revisions of section1.1502-32 to alleviate the problems that occur when a subsidiary is deconsolidated and the consent dividend election is not available to the consolidated group.

Timetable:

Action	Date	FR Cite
Temporary Regulation	00/00/00	

Small Entity: Not Applicable

Additional Information: LR-5-88

Drafting attorney: Judith Winkler (202) 566-3458.

Reviewing attorney: John Broadbent (202) 566-3458.

Income Taxes

Agency Contact: Judith Winkler, Attorney, Department of the Treasury, Internal Revenue Service, 1111 Constitution Avenue, N.W., Washington, D.C. 20224, 202 566-3458

RIN: 1545-AL45

2518. CROSS-REFERENCE—ALASKA NATIVE CORPORATIONS; REQUIREMENTS FOR AFFILIATION IN ORDER TO FILE A CONSOLIDATED RETURN

Legal Authority: 26 USC 7805 Internal Revenue Code of 1986; 26 USC 1504 Internal Revenue Code of 1986; 26 USC 1502 Internal Revenue Code of 1986

CFR Citation: 26 CFR 1

Legal Deadline: None.

Abstract: Proposal will provide rules relating to the affiliated requirements of Alaska Native Corporations with certain other corporations in order to file a consolidated return.

Timetable:

Action	Date	FR Cite
NPRM	03/18/87	52 FR 8471

Next Action Undetermined

Small Entity: Not Applicable

Additional Information:

LR-23-87.

Drafting attorney: Mark S. Jennings (202) 566-3458.

Reviewing attorney: John Broadbent (202) 566-3458.

Agency Contact: Mark S. Jennings, Attorney, Department of the Treasury, Internal Revenue Service, 1111 Constitution Avenue, N.W., Washington, D.C. 20224, 202 566-3458

RIN: 1545-AK88

2519. ESTATE & GIFT TAXES—INCLUSION OF STOCK IN ESTATE WHERE DECEDENT RETAINED VOTING RIGHTS

Legal Authority: 26 USC 7805 Internal Revenue Code of 1986; 26 USC 2036(a) Internal Revenue Code of 1986

CFR Citation: 26 CFR 20

Legal Deadline: None.

Abstract: These regulations will provide the extent to which the retention of voting rights by a transferor of stock will require that the value of that stock be included in the transferor's gross estate.

Timetable:

Action	Date	FR Cite
NPRM	08/03/83	48 FR 35143
NPRM Comment Period End	11/03/83	48 FR 35143
Final Action	12/00/88	

Small Entity: Not Applicable

Additional Information: LR-181-76.

Drafting attorney: Fred E. Grundeman (202) 566-3287.

Reviewing attorney: Ada S. Rousso (202) 566-3287.

Office of Tax Legislative Counsel (Treasury) reviewing attorney: Susan Himes (202) 566-8527.

Agency Contact: Fred E. Grundeman, Attorney, Department of the Treasury, Internal Revenue Service, 1111 Constitution Ave., N.W., Washington, D.C. 20224, 202 566-3287

RIN: 1545-AC63

2520. ESTATE AND GIFT TAXES—INCREASE IN LIMITATIONS ON MARITAL DEDUCTIONS

Legal Authority: 26 USC 7805 Internal Revenue Code of 1986; 26 USC 2012 Internal Revenue Code of 1986; 26 USC 2014 Internal Revenue Code of 1986; 26 USC 2055 Internal Revenue Code of 1986; 26 USC 2056 Internal Revenue Code of 1986; 26 USC 2207A Internal Revenue Code of 1986; 26 USC 2519 Internal Revenue Code of 1986; 26 USC 2523 Internal Revenue Code of 1986; 26 USC 6019 Internal Revenue Code of 1986

CFR Citation: 26 CFR 20; 26 CFR 25

Legal Deadline: None.

Abstract: These regulations will clarify the estate and gift tax treatment of transfers of property between spouses. They will provide how an executor may elect to treat certain property as qualified terminable interest property, in which case the imposition of transfer taxes will be delayed until the latter of (1) the surviving spouse's disposition of an interest in the property or (2) the surviving spouse's death.

Timetable:

Action	Date	FR Cite
NPRM	05/21/84	49 FR 21350
NPRM Comment Period End	07/20/84	49 FR 21350
Final Action	00/00/00	

Small Entity: Not Applicable

Additional Information: LR-211-76.

Drafting attorney: Christopher J. Wilson (202) 566-4336.

Reviewing attorney: Fredric E. Grundeman (202) 566-3287.

Office of Tax Legislative Counsel (Treasury) reviewing attorney: Susan Himes (202) 566-8527.

Agency Contact: Christopher J. Wilson, Attorney-Advisor, Department of the Treasury, Internal Revenue Service, 1111 Constitution Ave., N.W., Washington, D.C. 20224, 202 566-4336

RIN: 1545-AC67

2521. ESTATE TAX—GENERATION SKIPPING TRANSFER TAX

Legal Authority: 26 USC 7805 Internal Revenue Code of 1986; 26 USC 2653 (b) Internal Revenue Code of 1986; 26 USC 2662 Internal Revenue Code of 1986; 26 USC 2663 Internal Revenue Code of 1986

CFR Citation: 26 CFR 26; 26 CFR 26a

Legal Deadline: None.

Abstract: The regulations will provide rules relating to the effective date provisions, return requirements, definitions, and certain special rules for the tax on generation-skipping transfers.

Timetable:

Action	Date	FR Cite
Temporary Regulation	04/01/88	

Small Entity: Not Applicable

Additional Information:

LR-127-86.

Drafting attorney: Maurice B. Foley (202) 566-4336.

Reviewing attorney: Fred E. Grundeman (202) 566-3287.

Treasury attorney: Susan Himes (202) 566-8527.

Agency Contact: Maurice B. Foley, Attorney, Department of the Treasury, Internal Revenue Service, 1111 Constitution Ave., N.W., Washington, D.C. 20224, 202 566-4336

RIN: 1545-AJ12

2522. ● LEASED PROPERTY UNDER SECTION 280F

Legal Authority: 26 USC 7805 Internal Revenue Code of 1986; 26 USC 280F Internal Revenue Code of 1986

CFR Citation: 26 CFR 1

Legal Deadline: None.

Abstract: This regulation provides inclusion amounts for listed property leased after December 31, 1986.

Timetable:

Action	Date	FR Cite
Temporary Regulation	00/00/00	

Small Entity: Not Applicable

Additional Information: LR-1-88

Drafting attorney: Joel Rutstein (202) 566-3297.

Reviewing attorney: Sharon Galm (202) 566-3930.

Treasury attorney: John Parcell (202) 535-6965.

Income Taxes

Agency Contact: Joel Rutstein, Attorney, Department of the Treasury, Internal Revenue Service, 1111 Constitution Avenue, N.W., Washington, D.C. 20224, 202 566-3297

RIN: 1545-AL42

2523. EMPLOYMENT TAX—TO REQUIRE WITHHOLDING OF SOCIAL SECURITY AND RAILROAD RETIREMENT TAX FROM CERTAIN PAYMENTS OF SICK PAY

Legal Authority: 26 USC 7805 Internal Revenue Code of 1986; 26 USC 3121 Internal Revenue Code of 1986; 26 USC 3231 Internal Revenue Code of 1986; PL 97-123, Sec 3

CFR Citation: 26 CFR 31

Legal Deadline: None.

Abstract: The regulations will provide guidance to third parties paying sick pay which is subject to social security or railroad retirement tax, employees receiving the sick pay, and employers of the employees.

Timetable:

Action	Date	FR Cite
Final Action Effective	01/01/82	
NPRM	07/06/82	47 FR 29266
NPRM Comment Period End	09/05/82	
Final Action	06/30/88	

Small Entity: Not Applicable

Additional Information: LR-23-82.

Drafting Attorney: Renay France (202) 566-3459.

Reviewing Attorney: John M. Coulter, Jr. (202) 566-3331.

Treasury Attorney: Paul Strella (202) 535-6965.

Agency Contact: Renay France, Attorney, Department of the Treasury, Internal Revenue Service, 1111 Constitution Ave., N.W., Washington, D.C. 20224, 202 566-3459

RIN: 1545-AC77

2524. ● BACKUP WITHHOLDING

Legal Authority: 26 USC 7805 Internal Revenue Code of 1986; 26 USC 3406 Internal Revenue Code of 1986

CFR Citation: 26 CFR 35a

Legal Deadline: None.

Abstract: This regulation clarifies certain requirements under section 35a.3406-1 regarding backup withholding due to incorrect TIN.

Timetable:

Action	Date	FR Cite
Temporary Regulation	00/00/00	

Small Entity: Not Applicable

Additional Information: LR-6-88

Drafting attorney: Renay France (202) 566-3459.

Reviewing attorney: John Coulter (202) 566-3331.

Treasury attorney: Susan Himes (202) 566-8527.

Income Taxes

Agency Contact: Renay France, Attorney, Department of the Treasury, Internal Revenue Service, 1111 Constitution Avenue, N.W., Washington, D.C. 20224, 202 566-3459

RIN: 1545-AL46

2525. TREATMENT OF REAL ESTATE AGENTS AND DIRECT SELLERS AS NONEMPLOYEES FOR EMPLOYMENT TAX PURPOSES—REPORTING REQUIREMENTS WITH RESPECT TO DIRECT SELLERS

Legal Authority: 26 USC 7805 Internal Revenue Code of 1986; 26 USC 3508 Internal Revenue Code of 1986; 26 USC 3509 Internal Revenue Code of 1986; 26 USC 6041A Internal Revenue Code of 1986

CFR Citation: 26 CFR 1; 26 CFR 31

Legal Deadline: None.

Abstract: The proposed regulations would provide rules for the treatment of real estate agents and direct sellers as independent contractors for employment tax purposes. The proposed rules would also provide guidance for the reporting requirements of sales to direct sellers. The proposed rules would also provide guidance for computing certain employer liability for employment taxes.

Timetable:

Action	Date	FR Cite
NPRM	01/07/86	51 FR 619
NPRM Comment Period End	03/10/86	51 FR 619
Hearing	06/18/86	
Final Action	00/00/00	

Small Entity: Not Applicable

Additional Information: LR-214-82.

Drafting attorney: Robert E. Shaw (202) 566-3297.

Reviewing attorney: John Bromell (202) 566-3297.

Treasury Attorney: Harry Conaway (202) 566-8277.

Agency Contact: Robert E. Shaw, Attorney, Department of the Treasury, Internal Revenue Service, 1111 Constitution Ave., N.W., Washington, D.C. 20224, 202 566-3297

RIN: 1545-AE62

2526. ● ELECTION TO HAVE CERTAIN DIESEL FUEL TAXES IMPOSED ON SALES TO RETAILERS

Legal Authority: 26 USC 7805 Internal Revenue Code of 1986; 26 USC 4041 Internal Revenue Code of 1986

CFR Citation: 26 CFR 48

Legal Deadline: None.

Abstract: The regulations will provide guidance to assist diesel fuel retailers in making an election to have the diesel fuel excise tax collected by the wholesaler at the time the liquid is sold to the retailer.

Timetable:

Action	Date	FR Cite
Temporary Regulation	04/01/88	

Small Entity: Not Applicable

Additional Information: LR-117-87

Drafting Attorney: Lauren G. Shaw (202) 566-3287.

Reviewing Attorney: William A. Jackson (202) 566-3287.

Treasury Attorney: Ellen Aprill (202) 566-2565.

Excise Taxes

Agency Contact: Lauren G. Shaw, Attorney - Advisor, Department of the Treasury, Internal Revenue Service, 1111 Constitution Ave., N.W., Washington, DC 20008, 202 566-3287

RIN: 1545-AL14

2527. TEMPORARY REGULATION EXCISE TAXES ON HEAVY TRUCKS, TRUCK TRAILERS AND SEMITRAILERS, AND TRACTORS SOLD AT RETAIL

Legal Authority: 26 USC 7805 Internal Revenue Code of 1986; 26 USC 4051 Internal Revenue Code of 1986; 26 USC 4052 Internal Revenue Code of 1986; 26 USC 4053 Internal Revenue Code of 1986

CFR Citation: 26 CFR 145

Legal Deadline: None.

Abstract: The regulations will provide guidance to dealers in paying tax on the sale of heavy trucks, trailers, and tractors.

Timetable:

Action	Date	FR Cite
Interim Final Rule	09/00/88	

Small Entity: Not Applicable

Additional Information: LR-142-83.

Drafting attorney: Maurice B. Foley (202) 566-4336.

Reviewing attorney: Ada Rousso (202) 566-3287.

Treasury attorney: Ellen Aprill (202) 566-5453.

Agency Contact: Maurice B. Foley, Attorney, Department of the Treasury, Internal Revenue Service, 1111 Constitution Ave., N.W., Washington, D.C. 20224, 202 566-4336

RIN: 1545-AF79

2528. EXCISE TAX - EXCISE TAX ON HEAVY TRUCKS, TRUCK TRAILERS AND SEMITRAILERS, AND TRACTORS

Legal Authority: 26 USC 4052 Internal Revenue Code of 1986

CFR Citation: 26 CFR 145

Legal Deadline: None.

Abstract: These regulations will define the term "first retail sale" and provide rules relating to the determination if the retail sales price where the tax is paid by the manufacturer and where a long-term lease is treated as a taxable sale.

Timetable:

Action	Date	FR Cite
Final Action	04/01/88	

Small Entity: No

Additional Information: LR-1-86.

Drafting attorney: Maurice B. Foley (202) 566-4336.

Reviewing attorney: Ada Rousso (202) 566-3287.

Treasury attorney: Ellen Aprill (202) 566-2565.

Agency Contact: Maurice B. Foley, Attorney, Department of the Treasury, Internal Revenue Service, 1111 Constitution Ave., NW, Washington, DC 20224, 202 566-4336

RIN: 1545-AI62

2529. EXCISE TAX--COLLECTION OF EXCISE TAX IMPOSED ON THE SALE OR REMOVAL OF GASOLINE

Significance: Regulatory Program

Legal Authority: 26 USC 7805 Internal Revenue Code of 1986; 26 USC 4081 Internal Revenue Code of 1986; 26 USC 4082 Internal Revenue Code of 1986; 26 USC 4101 Internal Revenue Code of 1986

CFR Citation: 26 CFR 48

Legal Deadline: None.

Abstract: The regulations will provide rules relating to excise tax imposed on the sale or removal of gasoline. The regulations will also provide procedural requirements for any required registration and bonding, and obtaining applicable refunds or credits relating to the excise tax.

Timetable:

Action	Date	FR Cite
NPRM	11/18/87	52 FR 44141
hearing	01/05/88	
Final Action	07/00/88	

Small Entity: Not Applicable

Additional Information:

LR-115-86.

Drafting attorney: Timothy J. McKenna (202) 566-3287.

Reviewing attorney: Ada S. Rousso (202) 566-3287.

Treasury attorney: Robert Scarborough (202) 566-4979.

Agency Contact: Timothy J. McKenna, Attorney, Department of the Treasury, Internal Revenue Service, 1111 Constitution Ave., N.W., Washington, D.C. 20224, 202 566-3287

RIN: 1545-AJ09

2530. ● EXCISE TAX ON DIESEL FUEL

Legal Authority: 26 USC 7805 Internal Revenue Code of 1986; 26 USC 4091 to 4093 Internal Revenue Code of 1986

CFR Citation: 26 CFR 48

Legal Deadline: None.

Abstract: This regulation provides guidance on the collection of diesel fuel excise tax under the Revenue Act of 1987.

Timetable:

Action	Date	FR Cite
Temporary Regulation	00/00/00	

Small Entity: Not Applicable

Additional Information: LR-3-88

Drafting attorney: Lauren Shaw (202) 566-3287.

Reviewing attorney: William Jackson (202) 566-3287.

Treasury attorney: Ellen Aprill (202) 566-5453.

Excise Taxes

Agency Contact: Lauren Shaw, Attorney, Department of the Treasury, Internal Revenue Service, 1111 Constitution Avenue, N.W., Washington, D.C. 20224, 202 566-3287

RIN: 1545-AL43

2531. REDUCTION OF THE HEAVY VEHICLE USE TAX FOR FOREIGN-BASED TRUCKS

Legal Authority: 26 USC 7805 Internal Revenue Code of 1986; 26 USC 4481 Internal Revenue Code of 1986

CFR Citation: 26 CFR 41

Legal Deadline: None.

Abstract: This project will address how the heavy vehicle use tax will be imposed on foreign-based trucks at a reduced rate and what proof of payment of the tax must be presented upon entry into the United States.

Timetable:

Action	Date	FR Cite
NPRM	09/04/87	52 FR 33602
Final Action	04/01/88	

Small Entity: Not Applicable

Additional Information: LR-33-87

Drafting Attorney: William A. Jackson (202) 566-3287.

Reviewing Attorney: Ada Rousso (202) 566-3287.

Treasury Attorney: Ellen Aprill (202) 566-2565.

Agency Contact: William A. Jackson, Attorney, Department of the Treasury, Internal Revenue Service, 1111 Constitution Avenue, N.W., Washington, D.C. 20224, 202 566-3287

RIN: 1545-AK98

2532. TRANSITIONAL RULES RELATING TO INDEBTEDNESS TREATED AS PAYMENT ON INSTALLMENT OBLIGATIONS

Legal Authority: 26 USC 7805 Internal Revenue Code of 1986; 26 USC 453C Internal Revenue Code of 1986

CFR Citation: 26 CFR 1

Legal Deadline: None.

Abstract: These regulations will provide guidance to taxpayers in applying a 3-year phase-in transitional rule on the application of section 453C, which treats indebtedness as the receipt of payments on installment obligations.

Timetable:

Action	Date	FR Cite
Temporary Regulation	00/00/00	

Small Entity: Not Applicable

Additional Information: LR-20-87

Drafting attorney: Ewan D. Purkiss (202) 566-3238.

Reviewing attorney: Cynthia Clark (202) 566-3288.

Treasury attorney: Ellen Aprill (202) 566-2565.

Agency Contact: Ewan Purkiss, Attorney, Department of the Treasury, Internal Revenue Service, 1111 Constitution Avenue, N.W., Washington, D.C. 20224, 202 566-3238

RIN: 1545-AK54

2533. INCOME TAX—LOBBYING BY PUBLIC CHARITIES

Legal Authority: 26 USC 7805 Internal Revenue Code of 1986; 26 USC 501(h) Internal Revenue Code of 1986; 26 USC 504 Internal Revenue Code of 1986; 26 USC 4911 Internal Revenue Code of 1986; 26 USC 170(f) Internal Revenue Code of 1986

CFR Citation: 26 CFR 1; 26 CFR 53; 26 CFR 56

Legal Deadline: None.

Abstract: The regulations will provide rules primarily applicable to tax exempt organizations described in section 501(c)(3) that elect to have the provisions of section 501(h) and 4911 apply to their lobbying expenditures.

Timetable:

Action	Date	FR Cite
NPRM	11/05/86	51 FR 40211
NPRM Comment Period End	04/03/87	52 FR 802
Hearing	05/11/87	
Final Action	00/00/00	

Small Entity: Not Applicable

Additional Information: EE-154-78.

Drafting attorney: Jerry P. Walsh Skelly (202) 566-3422.

Reviewing attorney: Paul G. Accettura (202) 566-3544.

Agency Contact: Jerry P. Walsh Skelly, Attorney, Department of the Treasury, Internal Revenue Service, 1111 Constitution Ave., N.W., Washington, D.C. 20224, 202 566-3422

RIN: 1545-AE02

2534. EXCISE TAX—ELECTION TO AGGREGATE LINES OF BUSINESS FOR PURPOSES OF CERTAIN FRINGE BENEFIT EXCLUSIONS

Legal Authority: 26 USC 7805 Internal Revenue Code of 1986; 26 USC 4977 Internal Revenue Code of 1986

BEST COPY AVAILABLE

CFR Citation: 26 CFR 54

Legal Deadline: None.

Abstract: Regulations will provide guidance in the manner of making an election under section 4977. The regulations will also provide rules concerning the requirements for making a section 4977 election.

Timetable:

Action	Date	FR Cite
NPRM	01/07/85	50 FR 836
NPRM Comment Period End	03/08/85	
Hearing See additional information	04/16/85	50 FR 7072
Final Action	06/30/88	

Small Entity: No

Additional Information: EE-139-87

Drafting attorney: Rhonda G. Migdail (202) 566-6212.

Reviewing attorney: Mary Oppenheimer (202) 566-6628.

Treasury attorney: Susan Scherbel (202) 535-6905.

Proposed and temporary regulations under section 4977 were published together with other fringe benefits regulations (LR-216-84) and the subject of public hearings. Additional section 4977 regulations will be provided exclusively in this project.

Agency Contact: Rhonda G. Migdail, Attorney, Department of the Treasury, Internal Revenue Service, 1111 Constitution Avenue, NW, Washington, DC 20224, 202 566-6212

RIN: 1545-AI63

2535. EXCISE TAX – EXCESS DISTRIBUTIONS FROM QUALIFIED RETIREMENT PLANS

Legal Authority: 26 USC 7805 Internal Revenue Code of 1986; 26 USC 4981A Internal Revenue Code of 1986

CFR Citation: 26 CFR 1

Legal Deadline: None.

Abstract: The regulations will provide rules for determining the amount of the excise tax on excess distributions from qualified retirement plans.

Timetable:

Action	Date	FR Cite
NPRM	12/10/87	52 FR 46782
NPRM Comment Period End	02/08/88	52 FR 46782
Final Action	00/00/00	

Small Entity: Undetermined

Additional Information: EE-162-86

Drafting Attorney: Marjorie Hoffman (202) 566-3430.

Reviewing Attorney: Richard J. Wickersham (202) 566-3250.

Treasury Attorneys: Paul Strella/Harry Conaway (202) 566-8277.

Agency Contact: Marjorie Hoffman, Attorney, Department of the Treasury, Internal Revenue Service, 1111 Constitution Ave., N.W., Washington, D.C. 20224, 202 566-3430

RIN: 1545-AI61

2536. EXCISE TAXES RELATING TO REAL ESTATE INVESTMENT TRUSTS AND REGULATED INVESTMENT COMPANIES UNDER THE TAX REFORM ACT OF 1986

Legal Authority: 26 USC 4981 Internal Revenue Code of 1986; 26 USC 4982 Internal Revenue Code of 1986; 26 USC 6011 Internal Revenue Code of 1986; 26 USC 6061 Internal Revenue Code of 1986; 26 USC 6071 Internal Revenue Code of 1986; 26 USC 6151 Internal Revenue Code of 1986; 26 USC 7805 Internal Revenue Code of 1986

CFR Citation: 26 CFR 55

Legal Deadline: None.

Abstract: The regulation would provide guidance pertaining to the excise taxes relating to real estate investment trusts and regulated investment companies under the Tax Reform Act of 1986.

Timetable:

Action	Date	FR Cite
ANPRM	09/01/87	
NPRM	09/09/87	52 FR 33953
ANPRM Comment Period End	10/30/87	
NPRM Comment Period End	11/09/87	52 FR 33953
Final Action	04/01/88	

Small Entity: Not Applicable

Additional Information: LR-104-86.

Drafting attorney: Robert M. Casey (202) 566-3458.

Reviewing attorney: Charles M. Whedbee (202) 566-3458.

Treasury attorney: Don Roçap (202) 566-8278.

Agency Contact: Robert M. Casey, Attorney, Department of the Treasury, Internal Revenue Service, 1111 Constitution Avenue, N.W., Washington, D.C. 20224, 202 566-3458

RIN: 1545-AJ02

2537. EXCISE TAX–DEFINITION OF NEWLY DISCOVERED OIL

Legal Authority: 26 USC 7805 Internal Revenue Code of 1986; 26 USC 4997 Internal Revenue Code of 1986; 26 USC 4991 Internal Revenue Code of 1986; 26 USC 4996 Internal Revenue Code of 1986

CFR Citation: 26 CFR 51

Legal Deadline: None.

Abstract: The regulations would provide guidance on the requirements for the qualification of crude oil as newly discovered oil, as well as a definition of production in "commercial quantities" that affects the net income limitation on windfall profit and the exemption for Alaskan oil.

Timetable:

Action	Date	FR Cite
NPRM	11/05/82	47 FR 50306
NPRM Comment Period End	01/04/83	47 FR 50306
Final Action	00/00/00	

Small Entity: Not Applicable

Additional Information: LR-224-81.

Drafting attorney: David R. Haglund (202) 566-3297.

Reviewing attorney: John B. Bromell (202) 566-3326.

Office of Tax Legislative Counsel (Treasury) reviewing attorney: Bryan Collins (202) 566-2175.

Agency Contact: David R. Haglund, Attorney, Department of the Treasury, Internal Revenue Service, 1111 Constitution Ave., N.W., Washington, D.C. 20224, 202 566-3297

RIN: 1545-AC96

2538. EXCISE TAX–ISSUES ARISING WHERE MULTIPLE PARTIES SHARE IN PRODUCTION, INCLUDING UNITIZATIONS, PARTNERSHIPS, TRUSTS AND ESTATES

Legal Authority: 26 USC 7805 Internal Revenue Code of 1986; 26 USC 4986 to 4998 Internal Revenue Code of 1986

CFR Citation: 26 CFR 51

Legal Deadline: None.

Abstract: These regulations would provide rules relating to production from a unitized property of imputed stripper well crude oil, imputed heavy crude oil, and imputed newly discovered crude oil for purposes of the windfall profit tax. The regulations would provide rules for determining the amount of imputed oil and rules for allocating the imputed oil among the producers of the unitized property.

Timetable:

Action	Date	FR Cite
NPRM	09/30/86	51 FR 34653
NPRM Comment Period End	12/01/86	
Final Action	00/00/00	

Small Entity: Not Applicable

Additional Information: LR-225-81.

Drafting attorney: David R. Haglund (202) 566-3297.

Reviewing attorney: John B. Bromell (202) 566-3326.

Treasury attorney: Bryan Collins (202) 566-2175.

Agency Contact: David R. Haglund, Attorney, Department of the Treasury, Internal Revenue Service, 1111 Constitution Ave., N.W., Washington, D.C. 20224, 202 566-3297

RIN: 1545-AC94

2539. EXCISE TAX--INCREMENTAL TERTIARY OIL

Legal Authority: 26 USC 7805 Internal Revenue Code of 1986; 26 USC 4993 Internal Revenue Code of 1986

CFR Citation: 26 CFR 51

Legal Deadline: None.

Abstract: The regulations would clarify the rules relating to incremental tertiary oil. The regulations provide procedural rules for requesting approval from the Service of tertiary recovery methods which are not already approved under Department of Energy regulations. The regulations also define "project beginning date" and "tertiary injectant".

Timetable:

Action	Date	FR Cite
NPRM	09/10/84	49 FR 35517
NPRM Comment Period End	11/09/84	49 FR 35517
Hearing	07/26/85	
Final Action	06/01/88	

Small Entity: Not Applicable

Additional Information: LR-67-80.

Drafting attorney: Beverly A. Baughman (202) 566-3297.

Reviewing attorney: John B. Bromell (202) 566-3326.

Agency Contact: Beverly A. Baughman, Attorney, Department of the Treasury, Internal Revenue Service, 1111 Constitution Ave., N.W., Washington, D.C. 20224, 202 566-3297

RIN: 1545-AD04

2540. EXCISE TAX--OIL FROM A STRIPPER WELL PROPERTY

Legal Authority: 26 USC 7805 Internal Revenue Code of 1986; 26 USC 4991 Internal Revenue Code of 1986; 26 USC 4992 Internal Revenue Code of 1986; 26 USC 4994 Internal Revenue Code of 1986

CFR Citation: 26 CFR 51

Legal Deadline: None.

Abstract: The proposed regulations provide rules and definitions relating to oil from a stripper well property for purposes of tier 2 oil and exempt stripper well oil.

Timetable:

Action	Date	FR Cite
NPRM	01/20/83	48 FR 2552
NPRM Comment Period End	03/20/83	48 FR 2552
Final Action	00/00/00	

Small Entity: Not Applicable

Additional Information: LR-217-81.

Drafting attorney: David R. Haglund (202) 566-3297.

Reviewing attorney: Walter H. Woo (202) 566-3297.

Office of Tax Legislative Counsel (Treasury) reviewing attorney: Bryan Collins (202) 566-2175.

Agency Contact: David R. Haglund, Attorney, Department of the Treasury, Internal Revenue Service, 1111 Constitution Ave., N.W., Washington, D.C. 20224, 202 566-3297

RIN: 1545-AD01

2541. EXCISE TAX--DEFINITION OF PROPERTY UNDER THE CRUDE OIL WINDFALL PROFIT TAX ACT 1980

Legal Authority: 26 USC 7805 Internal Revenue Code of 1986; 26 USC 4996 Internal Revenue Code of 1986

CFR Citation: 26 CFR 51

Legal Deadline: None.

Abstract: These proposed regulations would provide rules relating to the definition of "property" for purposes of the crude oil windfall profit tax. These regulations are important because the rate of tax depends, in part, on the characteristics of the property from which the crude oil is produced.

Timetable:

Action	Date	FR Cite
NPRM	09/25/86	51 FR 34095
NPRM Comment Period End	11/24/86	51 FR 34095
Hearing	02/25/87	
Final Action	00/00/00	

Small Entity: Not Applicable

Additional Information: LR-34-82.

Drafting attorney: David R. Haglund (202) 566-3297.

Reviewing attorney: John B. Bromell (202) 566-3326.

Office of Tax Legislative Counsel (Treasury) reviewing attorney: Bryan Collins (202) 566-2175.

Agency Contact: David A. Haglund, Attorney, Department of the Treasury, Internal Revenue Service, 1111 Constitution Ave., N.W., Washington, D.C. 20224, 202 566-3297

RIN: 1545-AD08

2542. ELIMINATION OF FORM 941 FILING REQUIREMENT FOR QUARTERS IN WHICH SEASONAL EMPLOYERS PAY NO WAGES

Legal Authority: 26 USC 7805 Internal Revenue Code of 1986

CFR Citation: 26 CFR 31

Legal Deadline: None.

Abstract: Regulations would direct the public to the instructions to Form 941 to find exceptions to the filing requirements of the form for seasonal and intermittent employers with respect to quarters in which no wages were paid.

Timetable:

Action	Date	FR Cite
Final Action	12/31/88	

Small Entity: Not Applicable

Additional Information: LR-57-86.

Drafting attorney: Joel S. Rutstein (202) 566-3297.

Reviewing attorney: John B. Bromell (202) 566-3326.

Agency Contact: Joel S. Rutstein, Attorney, Department of the Treasury, Internal Revenue Service, 1111 Constitution Ave., NW, Washington, DC 20224, 202 566-3297

RIN: 1545-AI56

2543. EXCISE TAX – PART 54 – PROCEDURE AND ADMINISTRATION– PART 301 – FILING OF RETURNS FOR PAYMENT OF PENSION EXCISE TAX ON REVERSIONS OF QUALIFIED PLAN ASSETS

Significance: Agency Priority

Legal Authority: 26 USC 7805 Internal Revenue Code of 1986; 26 USC 4980 Internal Revenue Code of 1986

CFR Citation: 26 CFR 54; 26 CFR 602

Legal Deadline: None.

Abstract: The regulations would provide guidance regarding the payment of the excise tax by employers receiving reversions of qualified plan assets imposed by section 4980 of the Internal Revenue Code of 1986.

Timetable:

Action	Date	FR Cite
NPRM	04/02/87	52 FR 10583
NPRM Comment Period End	06/01/87	52 FR 10583
Final Action	00/00/00	

Small Entity: No

Additional Information: EE-151-86

Drafting Attorney: Suzanne K. Tank (202) 566-3422.

Reviewing Attorney: James L. Brokaw (202) 566-4173.

Office of Tax Legislative Counsel (Treasury) reviewing attorney: Harry J. Conaway (202) 566-8277.

Cross Reference to EE-150-86.

Agency Contact: Suzanne K. Tank, Attorney, Department of the Treasury, Internal Revenue Service, 1111 Constitution Ave., N.W., Washington, D.C. 20224, 202 566-4322

RIN: 1545-AI83

2544. INCOME TAX-AMENDMENTS TO REQUIREMENTS FOR RETURN OF PARTNERSHIP INCOME

Legal Authority: 26 USC 7805 Internal Revenue Code of 1986; 26 USC 6031 Internal Revenue Code of 1986

CFR Citation: 26 CFR 1

Legal Deadline: None.

Abstract: The regulations would provide guidelines for determining when and what information a partnership must provide to its partners. The regulations also provide guidelines for determining what foreign partnerships must file information returns.

Timetable:

Action	Date	FR Cite
NPRM	01/23/86	51 FR 3075
Final Action	08/01/88	

Small Entity: Not Applicable

Additional Information: LR-198-82.

Drafting attorney: Stuart G. Wessler (202) 566-3297.

Reviewing attorney: Walter H. Woo (202) 566-3297.

Treasury attorney: Mary Bennett (202) 566-5815.

Agency Contact: Stuart G. Wessler, Attorney, Department of the Treasury, Internal Revenue Service, 1111 Constitution Ave., N.W., Washington, D.C. 20224, 202 566-3297

RIN: 1545-AE40

2545. NOMINEE REPORTING OF PARTNERSHIP INFORMATION

Legal Authority: 26 USC 7805 Internal Revenue Code of 1986; 26 USC 6031 Internal Revenue Code of 1986

CFR Citation: 26 CFR 1

Legal Deadline: None.

Abstract: These temporary regulations will provide rules relating to nominee reporting of partnership interest which such nominee hold s for another person. The regulations will provide the information that the nominee is required to provide and will also provide the manner in which this information is to be reported to the partnership.

Timetable:

Temporary Regulation	
Temporary Regulation	04/01/88

Small Entity: Not Applicable

Additional Information: LR-155-86.

Drafting attorney: Stuart G. Wessler (202) 566-3297.

Reviewing attorney: Walter H. Woo (202) 566-3297.

Office of Tax Legislative Counsel Reviewing attorney: Greg Marich (202) 566-4979.

Agency Contact: Stuart G. Wessler, Attorney, Department of the Treasury, Internal Revenue Service, 1111 Constitution Avenue, N.W., Washington, D.C. 20224, 202 566-3297

RIN: 1545-AJ97

2546. INFORMATION RETURNS OF BROKERS

Legal Authority: 26 USC 7805 Internal Revenue Code of 1986; 26 USC 6045 Internal Revenue Code of 1986

CFR Citation: 26 CFR 1

Legal Deadline: None.

Abstract: The regulations in this project clarify the definition of the term "commodity" for purposes of broker reporting. Rules are provided for determining whether personal property (including gold and silver) is a commodity. Generally, the term "commodity" is defined as personal property that is deliverable in satisfaction of a regulated futures contract, certain specified personal property that the secretary determines is to be treated as a commodity or any form or quality of or any interest in such personal property. The term "commodity" does not include a security, regulated futures contract, forward contract, or a form of tangible personal property if the gross proceeds from its sale exceed by more than 15 percent its value as a commodity. The rules proposed include alternative methods (the "exact" and "approximate" methods) of tangible personal property valuation.

Timetable:

Action	Date	FR Cite
NPRM	01/05/84	49 FR 646
NPRM Comment Period End	03/05/84	49 FR 646
Hearing	03/28/84	49 FR 645
Final Action	00/00/00	

Small Entity: No

Additional Information: LR-201-83.

Drafting attorney: Arthur E. Davis III (202) 566-3238.

Treasury attorney: Susan Himes (202) 566-8527.

Agency Contact: Arthur E. Davis III, Attorney, Department of the Treasury, Internal Revenue Service, 1111

Constitution Ave., N.W., Washington, D.C. 20224, 202 566-3238

RIN: 1545-AG02

2547. INFORMATION RETURNS OF BROKERS

Legal Authority: 26 USC 7805 Internal Revenue Code of 1986; 26 USC 6045 Internal Revenue Code of 1986

CFR Citation: 26 CFR 1

Legal Deadline: None.

Abstract: The regulations provide a special rule for broker reporting with respect to transactions made through a cash on delivery account (COD). In addition, these regulations make technical corrections to the list of recipients exempted from coverage under the reporting requirement, and expand the class of brokers which qualify for the multiple broker rule.

Timetable:

Action	Date	FR Cite
NPRM	05/29/84	49 FR 22343
NPRM Comment Period End	07/30/84	49 FR 22343
Final Action	00/00/00	

Small Entity: Not Applicable

Additional Information: LR-62-84.

Drafting attorney: Arthur E. Davis III (202) 566-3238.

Treasury attorney: Susan Himes (202) 566-6527.

Agency Contact: Arthur E. Davis III, Attorney, Department of the Treasury, Internal Revenue Service, 1111 Constitution Ave., N.W., Washington, D.C. 20224, 202 566-3238

RIN: 1545-AG52

2548. INFORMATION REPORTING ON REAL ESTATE TRANSACTIONS

Legal Authority: 26 USC 7805 Internal Revenue Code of 1986; 26 USC 6045 Internal Revenue Code of 1986

CFR Citation: 26 CFR 1

Legal Deadline: None.

Abstract: This regulation would propose rules relating to the reporting of real estate transactions

Timetable:

Action	Date	FR Cite
NPRM	04/03/87	52 FR 10774
Hearing	07/22/87	52 FR 23308
Final Action	00/00/00	

Small Entity: Not Applicable

Additional Information: LR-95-86.

Drafting attorney: Arthur E. Davis III (202) 566-3238.

Office of Tax Legislative Counsel (Treasury) reviewing attorney: Patricia McClanahan (202) 566-2926.

Agency Contact: Arthur E. Davis III, Attorney, Department of the Treasury, Internal Revenue Service, 1111 Constitution Ave., N.W., Washington, DC 20224, 202 566-3238

RIN: 1545-AJ25

2549. ● INFORMATION REPORTING ON REAL ESTATE TRANSACTIONS

Legal Authority: 26 USC 7805 Internal Revenue Code of 1986; 26 USC 6045 (e) Internal Revenue Code of 1986

CFR Citation: 26 CFR 1

Legal Deadline: None.

Abstract: This temporary regulations provides guidance with respect to information reporting on real estate transactions.

Timetable:

Action	Date	FR Cite
Temporary Regulation	00/00/00	

Small Entity: Not Applicable

Additional Information: LR-130-87

Drafting attorney: Arthur Davis (202) 566-3238.

Reviewing attorney:

Treasury attorney:

Income Taxes

Agency Contact: Arthur Davis, Attorney, Department of the Treasury, Internal Revenue Service, 1111 Constitution Avenue, N.W., Washington, D.C. 20224, 202 566-3238

RIN: 1545-AL38

2550. INCOME TAX—MORTGAGE INTEREST REPORTING

Legal Authority: 26 USC 7805 Internal Revenue Code of 1986; 26 USC 6050H Internal Revenue Code of 1986

CFR Citation: 26 CFR 1

Legal Deadline: None.

Abstract: The regulations propose rules relating to information reporting of mortgage interest received in a trade or business from individuals, including the persons and interest subject to the reporting requirements.

Timetable:

Action	Date	FR Cite
NPRM	08/20/85	50 FR 33551
NPRM Comment Period End	10/21/85	50 FR 33551
Hearing	01/07/86	50 FR 46674
Final Action	04/01/88	

Small Entity: Not Applicable

Additional Information: LR-214-84.

Drafting attorney: Katherine Lee Wambsgans (202) 566-3288.

Reviewing attorney: Ewan D. Purkiss (202) 566-3238.

Treasury attorney: Reed Shuldiner (202) 566-2175.

Agency Contact: Katherine Lee Wambsgans, Attorney, Department of the Treasury, Internal Revenue Service, 1111 Constitution Ave., N.W., Washington, D.C. 20224, 202 566-3288

RIN: 1545-AG93

2551. FINAL REGULATIONS RELATING TO REPORTS OF FORECLOSURES AND ABANDONMENTS OF SECURITY UNDER THE TAX REFORM ACT OF 1984

Legal Authority: 26 USC 7805 Internal Revenue Code of 1986; 26 USC 6050J Internal Revenue Code of 1986

CFR Citation: 26 CFR 1

Legal Deadline: None.

Abstract: The regulations proposed rules relating to information reporting of foreclosures, abandonments, and other acquisitions of property securing indebtedness, including the persons and property subject to the reporting requirement and the information required to be reported, and when a person has reason to know that property has been abandoned.

Timetable:

Action	Date	FR Cite
NPRM	08/31/84	49 FR 34518
NPRM Comment Period End	10/31/84	49 FR 34518
Final Action	00/00/00	

Small Entity: Not Applicable

Additional Information: LR-181-84.

Drafting attorney: Arthur E. Davis III (202) 566-3238.

Agency Contact: Arthur E. Davis III, Attorney, Department of the Treasury, Internal Revenue Service, 1111 Constitution Ave., N.W., Washington, D.C. 20224, 202 566-3238

RIN: 1545-AG48

2552. ● REPORTING REQUIREMENTS PERTAINING TO RETURNS RELATING TO PERSONS RECEIVING CONTRACTS FROM FEDERAL EXECUTIVE AGENCIES

Legal Authority: 26 USC 7805 Internal Revenue Code of 1986; 26 USC 6050M Internal Revenue Code of 1986

CFR Citation: 26 CFR 1

Legal Deadline: None.

Abstract: This regulation would provide guidance to the heads of Federal executive agencies for purposes of complying with information and reporting requirements prescribed by section 6050M

Timetable:

Action	Date	FR Cite
Temporary regulation	05/02/88	

Small Entity: Not Applicable

Additional Information: LR-161-86

Drafting attorney: Keith E. Stanley (202) 566-3450

Reviewing attorney: Charles M. Whedbee (202) 566-3458

Treasury attorney: Patricia McClanahan (202) 566-8278

Information returns

Agency Contact: Keith E. Stanley, Attorney, Department of the Treasury, Internal Revenue Service, 1111 Constitution Avenue, N.W., Washington, D.C. 20224, 202 566-3458

RIN: 1545-AL33

2553. ● GRANT OF AUTOMATIC EXTENSION OF TIME TO FILE PARTNERSHIP AND TRUST RETURNS

Legal Authority: 26 USC 7805 Internal Revenue Code of 1986; 26 USC 6081 (a) Internal Revenue Code of 1986

CFR Citation: 26 CFR 1

Legal Deadline: None.

Abstract: This temporary regulation grants an automatic extension of time for taxpayers who file partnership and trust returns.

Timetable:

Action	Date	FR Cite
Temporary Regulation	00/00/00	

Small Entity: Not Applicable

Additional Information: LR-131-87

Drafting attorney: Katherine Lee Wambsgans (202) 566-3288.

Reviewing attorney:

Treasury attorney:

Income Taxes

Agency Contact: Katherine Lee Wambsgans, Attorney, Department of the Treasury, Internal Revenue Service, 1111 Constitution Avenue, N.W., Washington, D.C. 20224, 202 566-3288

RIN: 1545-AL37

2554. PROPOSED REGULATIONS UNDER SECTIONS 6111 AND 6709, RELATING TO TAX SHELTER REGISTRATION

Significance: Regulatory Program

Legal Authority: 26 USC 7805 Internal Revenue Code of 1986; 26 USC 6111 Internal Revenue Code of 1986

CFR Citation: 26 CFR 301

Legal Deadline: None.

Abstract: This project will provide rules explaining what investments are tax shelters that must be registered with the Internal Revenue Service. The project will also provide rules relating to the persons required to register tax shelters and to the furnishing of tax shelter registration numbers to investors in tax shelters.

Timetable:

Action	Date	FR Cite
NPRM	08/15/84	49 FR 32728
NPRM Comment Period End	10/15/84	49 FR 32728
Hearing held	01/17/85	
Final Action	00/00/00	

Small Entity: Not Applicable

Additional Information: LR-142-84.

Drafting attorney: Paulette Galanko (202) 566-3288.

Reviewing attorney: Cynthia Clark (202) 566-3288.

Agency Contact: Paulette C. Galanko, Attorney, Department of the Treasury, Internal Revenue Service, 1111 Constitution Ave., N.W., Washington, D.C. 20224, 202 566-3288

RIN: 1545-AG45

2555. TIME AND MANNER OF MAKING QUARTERLY PAYMENTS OF THE RAILROAD UNEMPLOYMENT REPAYMENT TAX (NPRM)

Legal Authority: 26 USC 7805 Internal Revenue Code of 1986; 26 USC 6157 Internal Revenue Code of 1986; 26 USC 6011 Internal Revenue Code of 1986; 26 USC 6071 Internal Revenue Code of 1986; 26 USC 6302 Internal Revenue Code of 1986

CFR Citation: 26 CFR 31

Legal Deadline: None.

Abstract: The regulations will provide rules with respect to the time and manner of making quarterly payments of the railroad repayment tax.

Timetable:

Action	Date	FR Cite
NPRM	11/05/86	
NPRM Comment Period End	01/05/87	
Final Action	06/00/88	

Small Entity: Not Applicable

Additional Information: LR-12-86.

Drafting Attorney: John B. Bromell (202) 566-3297.

Reviewing attorney: John B. Bromell (202) 566-3326.

Treasury attorney: Susan Scherbel (202) 535-6963.

Duplicate of RIN 1545-AI73

Agency Contact: John B. Bromell, Attorney, Department of the Treasury, Internal Revenue Service, 1111 Constitution Ave., N.W., Washington, D.C. 20224, 202 566-3297

RIN: 1545-AI60

2556. MISCELLANEOUS RULES RELATING TO CONSOLIDATED ADMINISTRATIVE AND JUDICIAL PROCEEDINGS TO DETERMINE THE TAX TREATMENT OF PARTNERSHIP ITEMS

Legal Authority: 26 USC 7805 Internal Revenue Code of 1986; 26 USC 6222 Internal Revenue Code of 1986; 26 USC 6223 Internal Revenue Code of 1986; 26 USC 6224 Internal Revenue Code of 1986; 26 USC 6227 Internal Revenue Code of 1986; 26 USC 6230 Internal Revenue Code of 1986; 26 USC 6231 Internal Revenue Code of 1986

CFR Citation: 26 CFR 301

Legal Deadline: None.

Abstract: The proposed regulations would set forth miscellaneous procedural rules for consolidated administrative and judicial proceedings to determine the tax treatment of partnership items. The regulations would provide guidance for various elections under these new procedures and for filing requests for an administrative adjustment.

Timetable:

Action	Date	FR Cite
NPRM	04/18/86	51 FR 13231
NPRM Comment Period End	06/17/86	
Final Action	00/00/00	

Small Entity: Not Applicable

Additional Information: LR-205-82.

Drafting attorney: Robert E. Shaw (202) 566-3297.

Reviewing attorney: Gerald W. Rock (202) 566-3930.

Treasury Attorney: Greg Marich (202) 566-2927.

Agency Contact: Robert E. Shaw, Attorney, Department of the Treasury, Internal Revenue Service, 1111 Constitution Ave., N.W., Washington, D.C. 20224, 202 566-3297

RIN: 1545-AE51

2557. SMALL S CORPORATION EXCEPTION AND DEFINITION OF SUBCHAPTER S ITEM

Legal Authority: 26 USC 7805 Internal Revenue Code of 1986; 26 USC 6241 Internal Revenue Code of 1986; 26 USC 6245 Internal Revenue Code of 1986

CFR Citation: 26 CFR 301; 26 CFR 602; 26 CFR 51

Legal Deadline: None.

Abstract: These regulations will provide a small S corporation exception to the unified corporate audit procedures of subchapter D of chapter 63 of the Internal Revenue Code. These regulations also will define subchapter S items for purposes of the income tax and windfall profit tax.

Timetable:

Action	Date	FR Cite
NPRM	01/30/87	52 FR 3027
NPRM Comment Period End	03/31/87	
Final Action	04/01/88	

Small Entity: Not Applicable

Additional Information: LR-74-86.

Drafting attorney: Stuart G. Wessler (202) 566-3297.

Reviewing attorney: Walter H. Woo (202) 566-3297.

Office of Tax Legislative Counsel Reviewing attorney: Bryan P. Collins (202) 535-6968.

Agency Contact: Stuart G. Wessler, Attorney, Department of the Treasury, Internal Revenue Service, 1111 Constitution Avenue, N.W., Washington, D.C. 20224, 202 566-3297

RIN: 1545-AJ99

2558. TO REQUIRE FINANCIAL INSTITUTIONS TO DEPOSIT ESTIMATED TAX ON TRUSTS AND ESTATES

Legal Authority: 26 USC 7805 Internal Revenue Code of 1986; 25 USC 6302 Internal Revenue Code of 1986

CFR Citation: 26 CFR 1

Legal Deadline: None.

Abstract: The proposed regulations would require certain financial institutions to make through the Federal Tax Deposit system quarterly estimated income tax payments with respect to certain trusts and estates.

Timetable:

Action	Date	FR Cite
NPRM	11/18/87	52 FR 44139
NPRM Comment Period End	01/04/88	52 FR 44140
Final Action	04/01/88	

Small Entity: Not Applicable

Additional Information: LR-81-87

Drafting attorney: John A. Tolleris (202) 566-3829.

Reviewing attorney: John M. Coulter, Jr. (202) 566-3331.

Agency Contact: John A. Tolleris, Attorney, Department of the Treasury, Internal Revenue Service, 1111 Constitution Ave., N.W., Washington, D. C. 20224, 202 566-3829

RIN: 1545-AK35

2559. ELECTRONIC FILING OF NOTICE OF FEDERAL TAX LIEN

Legal Authority: 26 USC 7805 Internal Revenue Code of 1986; 26 USC 6323 Internal Revenue Code of 1986

CFR Citation: 26 CFR 301

Legal Deadline: None.

Abstract: The regulation clarifies that the term "Form 668" as used in section 6323 (f) (3) of the Code includes a notice of magnetic medium where the law of the state in which a notice of Federal tax lien is filed permits such method of filing.

Timetable:

Action	Date	FR Cite
Temporary Regulation	04/01/88	

Small Entity: Not Applicable

Additional Information: LR-18-87

Drafting Attorney: Lauren G. Shaw (202) 566-3287.

Reviewing Attorney: Ada S. Rousso (202) 566-3287.

Treasury Attorney: Patricia McClanahan (202) 566-2926.

Agency Contact: Lauren G. Shaw, Attorney, Department of the Treasury, Internal Revenue Service, 1111 Constitution Avenue, N.W., Washington, D.C. 20224, 202 566-3287

RIN: 1545-AL00

2560. PROPOSED REGULATIONS UNDER THE SPENDING REDUCTION ACT OF 1984, RELATING TO REDUCTION OF TAX OVERPAYMENTS BY THE AMOUNT OF PAST-DUE LEGALLY ENFORCEABLE DEBT OWED TO FEDERAL AGENCY

Legal Authority: 26 USC 7805 Internal Revenue Code of 1986; 31 USC 3720A Internal Revenue Code of 1986

CFR Citation: 26 CFR 301

Legal Deadline: None.

Abstract: These proposed regulations will provide rules relating to the reduction of a taxpayer's overpayment of tax (i.e., tax refund) by the amount of any past-due legally enforceable debt owed to a federal agency by the taxpayer. The regulations explain which debts qualify for offset, and the steps a federal agency must make to refer a debt to the Internal Revenue Service.

Timetable:

Action	Date	FR Cite
NPRM	09/30/85	50 FR 39713
NPRM Comment Period End	11/30/85	50 FR 39713
Final Action	00/00/00	

Small Entity: Not Applicable

Additional Information: LR-291-84.

Drafting attorney: Sharon L. Hall (202) 566-3288.

Reviewing attorney: David Dickinson (202) 566-6655.

Agency Contact: Sharon L. Hall, Attorney, Department of the Treasury, Internal Revenue Service, 1111 Constitution Ave., N.W., Washington, D.C. 20224, 202 566-3288

RIN: 1545-AG95

2561. PROCEDURE AND ADMINISTRATIVE--REDUCTION OF TAX OVERPAYMENTS BY AMOUNT OF PAST DUE LEGALLY ENFORCEABLE DEBT OWED TO FEDERAL AGENCY

Legal Authority: 26 USC 7805 Internal Revenue Code of 1986; 31 USC 3720A Internal Revenue Code of 1986

CFR Citation: 26 CFR 301

Legal Deadline: None.

Abstract: These regulations will amend proposed regulations published September 30, 1985 relating to the reduction of a taxpayer's overpayment of tax by the amount of past-due legally enforceable debt owed to a federal agency by the taxpayer.

Timetable:

Action	Date	FR Cite
NPRM	05/13/87	52 FR 17949
Final Action	00/00/00	

Small Entity: Not Applicable

Additional Information: LR-72-86

Drafting attorney: Sharon L. Hall (202) 566-3288.

Reviewing attorney: David Dickinson (202) 566-6655.

Agency Contact: Sharon L. Hall, Attorney, Department of the Treasury, Internal Revenue Service, 1111 Constitution Avenue, N.W., Washington, D.C. 20224, 202 566-3288

RIN: 1545-AK12

2562. PROCEDURE AND ADMINISTRATION REGULATIONS--MODIFICATIONS OF INTEREST PAYMENTS FOR CERTAIN PERIODS

Legal Authority: 26 USC 7805 Internal Revenue Code of 1986; 26 USC 6611 Internal Revenue Code of 1986; 26 USC 6601 Internal Revenue Code of 1986

CFR Citation: 26 CFR 301

Legal Deadline: None.

Abstract: The regulation would provide rules for determining the period during which interest accrues on an underpayment or an overpayment of tax as provided in sections 6601 and 6611 of the Internal Revenue Code of 1954. The period would be determined, in part, by the dates the return and the claim for refund are filed and by whether they were filed in a way that they can be processed.

Timetable:

Action	Date	FR Cite
NPRM	10/09/84	49 FR 39566
NPRM Comment Period End	12/10/84	
Final Action	06/00/88	

Small Entity: Not Applicable

Additional Information: LR-280-82.

Drafting attorney: Michael J. Grace (202) 566-3288.

Reviewing attorney: Cynthia L. Clark (202) 566-3288.

Agency Contact: Michael J. Grace, Attorney, Department of the Treasury, Internal Revenue Service, 1111 Constitution Ave., N.W., Washington, D.C. 20224, 202 566-3288

RIN: 1545-AF10

2563. PROCEDURE AND ADMINISTRATION REGULATIONS - INCREASED RATE OF INTEREST ON SUBSTANTIAL UNDERPAYMENTS ATTRIBUTABLE TO CERTAIN TAX MOTIVATED TRANSACTIONS

Legal Authority: 26 USC 7805 Internal Revenue Code of 1986; 26 USC 6621 Internal Revenue Code of 1986

CFR Citation: 26 CFR 301

Legal Deadline: None.

Abstract: The regulations provide guidance to taxpayers subject to the increased rate of interest on substantial underpayments attributable to certain tax motivated transactions. The regulations define tax motivated transaction and accounting methods that may result in a substantial distortion of income. The regulations also provide rules for determining the amount of a tax motivated underpayment and the accrual of interest at the increased rate.

Timetable:

Action	Date	FR Cite
NPRM	12/28/84	49 FR 50406
NPRM Comment Period End	02/26/85	49 FR 50406
Final Action	06/00/88	

Small Entity: Not Applicable

Additional Information: LR-180-84.

Drafting attorney: Michael J. Grace (202) 566-3288.

Reviewing attorney: John H. Parcell (202) 566-3336.

Treasury attorney: Patricia A. McClanahan (202) 566-2927.

Agency Contact: Michael J. Grace, Attorney, Department of the Treasury, Internal Revenue Service, 1111 Constitution Ave., N.W., Washington, D.C. 20224, 202 566-3288

RIN: 1545-AG75

2564. TO PROVIDE REGULATIONS RELATING TO ACCELERATED PAYMENT OF ESTIMATED TAXES BY CORPORATIONS

Legal Authority: 26 USC 7805 Internal Revenue Code of 1986; 26 USC 6655 Internal Revenue Code of 1986

CFR Citation: 26 CFR 1

Legal Deadline: None.

Abstract: Rules will provide for acceleration of estimated payments by corporations, new seasonal income exception, and clarify the annualization rules. The amount of estimated tax payments required for all corporations is increased from 80 to 90 percent of current year's tax liability.

Timetable:

Action	Date	FR Cite
NPRM	03/26/84	49 FR 11186
Hearing	06/26/84	
Final Action	12/30/88	

Small Entity: Not Applicable

Additional Information: LR-228-82.

Drafting attorney: Renay France (202) 566-3529.

Reviewing attorney: John M. Coulter, Jr. (202) 566-4473.

Treasury attorney: Marjorie Roberts (202) 566-2927 and Dick Harvey (202) 566-6960.

Agency Contact: Renay France, Attorney, Department of the Treasury, Internal Revenue Service, 1111

Constitution Ave., N.W., Washington, D.C. 20224, 202 566-3829

RIN: 1545-AE37

2565. PENALTY FOR FAILURE TO INCLUDE CORRECT INFORMATION ON INFORMATION RETURNS AND PAYEE STATEMENTS

Legal Authority: 26 USC 6723 Internal Revenue Code of 1986

CFR Citation: 26 CFR 301

Legal Deadline: None.

Abstract: The regulations provide guidance on the penalty for failing to provide correct information on information returns and payee statements

Timetable:

Action	Date	FR Cite
NPRM	09/10/87	52 FR 34358

Next Action Undetermined

Small Entity: No

Additional Information:

LR-142-86.

Drafting Attorney: Renay France (202) 566-3459.

Reviewing Attorney: Sharon Galm (202) 566-3930.

Treasury Attorney: Patricia McClanahan (202) 566-2926.

Agency Contact: Renay France, Attorney, Department of the Treasury, Internal Revenue Service, 1111 Constitution Avenue, N.W., Washington, DC 20224, 202 566-3459

RIN: 1545-AJ29

2566. PROCEDURE AND ADMINISTRATION—PROPERTY SEIZED BY THE INTERNAL REVENUE SERVICE UNDER THE MONEY LAUNDERING CONTROL ACT OF 1986

Legal Authority: 26 USC 7805 Internal Revenue Code of 1986; 26 USC 7103 (b) Internal Revenue Code of 1986

CFR Citation: 26 CFR 405

Legal Deadline: None.

Abstract: This regulation provides guidance with respect to property seized by the Internal Revenue Service under the Money Laundering Control Act of 1986.

Timetable:

Action	Date	FR Cite
Final Action	00/00/00	

Small Entity: Not Applicable

Additional Information: LR-24-87

Drafting Attorney: David Haglund (202) 566-3297.

Agency Contact: David Haglund, Attorney, Department of the Treasury, Internal Revenue Service, 1111 Constitution Avenue, N.W., Washington, DC 20224, 202 566-3297

RIN: 1545-AL04

2567. AMENDMENT OF REGULATIONS TO PERMIT DISCLOSURE OF TAX RETURN INFORMATION BETWEEN FRANCHISEES WHO JOINTLY OPERATE A TAX SERVICE

Legal Authority: 26 USC 7216 Internal Revenue Code of 1986; 26 USC 7805 Internal Revenue Code of 1986

CFR Citation: 26 CFR 1

Legal Deadline: None.

Abstract: Proposal would allow disclosure of tax return information by tax return preparers for the purpose of monitoring quality of return preparation.

Timetable:

Action	Date	FR Cite
NPRM	11/19/85	50 FR 47563
NPRM Comment Period End	12/19/85	
Final Action	12/31/88	

Small Entity: Not Applicable

Additional Information: LR-3-85.

Drafting attorney: Robert M. Casey (202) 566-3458.

Reviewing attorney: Robert J. Mason (202) 566-3463.

Agency Contact: Robert M. Casey, Attorney, Department of the Treasury, Internal Revenue Service, 1111 Constitution Ave., N.W., Washington, D.C. 20224, 202 566-3458

RIN: 1545-AH91

2568. PROCEDURE AND ADMINISTRATION—AMENDMENT OF REGULATIONS RELATING TO THE TIMELY MAILING OF RETURNS, TAXES AND DEPOSITS

Legal Authority: 26 USC 7805 Internal Revenue Code of 1986; 26 USC 7502 Internal Revenue Code of 1986

CFR Citation: 26 CFR 301

Legal Deadline: None.

Abstract: The regulations would amend existing regulations, relating to the timely mailing of documents, to provide for the timely mailing of returns, taxes and deposits.

Timetable:

Action	Date	FR Cite
NPRM	12/11/79	44 FR 71430
NPRM Comment Period End	02/11/80	44 FR 71430
Final Action	00/00/00	

Small Entity: Not Applicable

Additional Information: LR-1406.

Drafting attorney: Katherine Wambsgans (202) 566-3288.

Reviewing attorney: Ewan Purkiss (202) 566-3238.

Office of Tax Legislative Counsel (Treasury) reviewing attorney: unassigned.

Agency Contact: Ewan Purkiss, Attorney, Department of the Treasury, Internal Revenue Service, 1111 Constitution Ave., N.W., Washington, D.C. 20224, 202 566-3238

RIN: 1545-AD42

2569. AMENDMENT OF PROCEDURE AND ADMINISTRATION REGULATIONS UNDER SECTION 7701(B) (DEFINITION OF RESIDENT ALIENS) TO REFLECT SECTION 138 OF THE TAX REFORM ACT OF 1984 (P.L. 98-369)

Legal Authority: 26 USC 7805 Internal Revenue Code of 1986; 26 USC 7701(b) Internal Revenue Code of 1986

CFR Citation: 26 CFR 1; 26 CFR 31; 26 CFR 301

Legal Deadline: None.

Abstract: These regulations provide rules for determining whether an alien individual is a resident or a nonresident alien of the United States.

Timetable:

Action	Date	FR Cite
NPRM	09/10/87	52 FR 34230
NPRM Comment Period End	11/10/87	52 FR 34230
Final Action	12/31/88	

Small Entity: Not Applicable

Additional Information: INTL-55-86.

Drafting attorney: Peter Hanley (202) 566-3499.

Reviewing attorney: Carol Doran Klein (202) 566-6419.

Treasury attorney: Mary Bennett (202) 566-5815.

Agency Contact: Peter J. Hanley, Attorney, Department of the Treasury, Internal Revenue Service, 1111 Constitution Ave., N.W., Washington, D.C. 20224, 202 566-3499

RIN: 1545-AH13

2570. EFFECTIVE DATES AND OTHER QUESTIONS ARISING UNDER EMPLOYEE BENEFIT PROVISIONS OF THE TAX REFORM ACT OF 1984

Legal Authority: PL 98-369, Sec 511 to 561

CFR Citation: 26 CFR 1

Legal Deadline: None.

Abstract: This regulation will provide proposed rules relating to effective dates and other questions arising under the employee benefit provisions of the Tax Reform Act of 1984.

Timetable:

Action	Date	FR Cite
NPRM	02/04/86	51 FR 4391
Hearing	06/26/86	51 FR 15916
Final Action	00/00/00	

Small Entity: Not Applicable

Additional Information: EE-96-85.

Drafting attorney: John T. Ricotta (202) 566-3544.

Reviewing attorney: Michael A. Thrasher (202) 566-3961.

Treasury attorney: Harry Conaway (202) 566-8277.

Agency Contact: John T. Ricotta, Attorney, Department of the Treasury, Internal Revenue Service, 1111 Constitution Ave., N.W., Washington, D.C. 20224, 202 566-3544

RIN: 1545-AI21

2571. INDIAN TRIBAL GOVERNMENTS TREATED AS STATES FOR CERTAIN PURPOSES

Legal Authority: 26 USC 7805 Internal Revenue Code of 1986; 26 USC 7701 Internal Revenue Code of 1986; 26 USC 7871 Internal Revenue Code of 1986

CFR Citation: 26 CFR 301

Legal Deadline: None.

Abstract: The regulations would provide guidance to certain Indian tribal governments as to their treatment as States under designated sections of the Internal Revenue Code of 1954.

Timetable:

Action	Date	FR Cite
NPRM	05/07/84	49 FR 19329
Final Action	00/00/00	

Small Entity: Not Applicable

Additional Information: LR-221-83.

Drafting attorney: Sharon L. Hall (202) 566-3288.

Reviewing attorney: Cynthia L. Clark (202) 566-3288.

Office of Tax Legislative Counsel: Elliot Stern (202) 566-2926.

Agency Contact: Sharon L. Hall, Attorney, Department of the Treasury, Internal Revenue Service, 1111 Constitution Ave., N.W., Washington, D.C. 20224, 202 566-3288

RIN: 1545-AF77

2572. REGULATIONS ON INCOME TAX UNDER THE TAX REFORM ACT OF 1984, RELATING TO BELOW-MARKET LOANS

Significance: Regulatory Program

Legal Authority: 26 USC 7805 Internal Revenue Code of 1986; 26 USC 7872 Internal Revenue Code of 1986

CFR Citation: 26 CFR 1

Legal Deadline: None.

Abstract: These regulations provide guidance to taxpayers who enter into certain below-market interest rate loan transactions. The regulations explain what type of transactions are treated as loans and what type of loans are subject to the provisions of section 7872. If the loan is subject to section 7872, the below-market loan will be recharacterized as an arm's length market-interest rate loan coupled with a payment by the lender to the borrower in an amount generally equal to the amount of imputed interest. The regulations provide rules for determining the amount and the character of the imputed transfers.

Timetable:

Action	Date	FR Cite
NPRM	08/20/85	50 FR 33553
NPRM Comment Period End	10/20/85	50 FR 33553
Hearing	01/09/86	
Final Action	00/00/00	

Small Entity: Not Applicable

Additional Information: LR-165-84.

Drafting attorney: Sharon L. Hall (202) 566-3828.

Reviewing attorney: John Fischer (202) 566-3394.

Agency Contact: Sharon L. Hall, Attorney, Department of the Treasury, Internal Revenue Service, 1111 Constitution Ave., N.W., Washington, D.C. 20224, 202 566-3828

RIN: 1545-AH72

2573. INCOME TAX--MARITIME CAPITAL CONSTRUCTION FUND

Legal Authority: 26 USC 7805 Internal Revenue Code of 1986; 46 USC 1177 Merchant Marine Act of 1936

CFR Citation: 26 CFR 3

Legal Deadline: None.

Abstract: The proposal would provide rules for the income tax treatment with respect to capital construction funds for certain vessels.

Timetable:

Action	Date	FR Cite
NPRM	01/29/76	41 FR 04280
NPRM Comment Period End	03/29/76	41 FR 04280
Hearing	07/07/76	
Final Action	10/01/88	

Small Entity: Not Applicable

Additional Information: LR-149-75.

Drafting attorney: Robert M. Casey (202) 566-3458.

Reviewing attorney: Robert J. Mason (202) 566-3463.

Agency Contact: Robert M. Casey, Attorney, Department of the Treasury, Internal Revenue Service, 1111 Constitution Ave., N.W., Washington D.C. 20224, 202 566-3458

RIN: 1545-AD46

DEPARTMENT OF THE TREASURY (TREAS)
Internal Revenue Service (IRS)

Completed Actions

2574. MISCELLANEOUS AMENDMENTS

Legal Authority: 5 USC 301; 5 USC 552

CFR Citation: 26 CFR 601

Legal Deadline: None.

Abstract: Amends two separate paragraphs in the statement of procedural rules to conform with recent revenue procedures.

Timetable:

Action	Date	FR Cite
Final Action Statement Of Procedural Rules	10/16/87	52 FR 38405

Small Entity: No

Additional Information: LR-9-87

Drafting attorney: George H. Bradley (202) 343-0231.

Reviewing attorney: Charles Whedbee (202) 566-3458.

Agency Contact: George H. Bradley, Staff Assistant, Department of the Treasury, Internal Revenue Service, 1111 Constitution Ave., N.W., Washington, DC 20224, 202 343-0231

RIN: 1545-AJ95

2575. INCOME TAX–UNEARNED OF MINOR CHILDREN

Legal Authority: 26 USC 7805 Internal Revenue Code of 1986; 26 USC 1 (i) Internal Revenue Code of 1986

CFR Citation: 26 CFR 1

Legal Deadline: None.

Abstract: The regulations will provide rules for determining the tax on unearned income of certain minor children.

Timetable:

Action	Date	FR Cite
Final Action T.D. 8158	09/04/87	52 FR 33577

Small Entity: Not Applicable

Additional Information:

LR-112-86.

Drafting attorney: William A. Jackson (202) 566-3287.

Reviewing attorney: Fred E. Grundeman (202) 566-3287.

Treasury attorney: Susan Himes (202) 566-8527.

Agency Contact: William A. Jackson, Attorney, Department of the Treasury, Internal Revenue Service, 1111 Constitution Ave., N.W., Washington, D.C. 20224, 202 566-3287

RIN: 1545-AJ17

2576. SUBSTANTIATION REQUIREMENT FOR MORTGAGE INTEREST CREDIT CERTIFICATES

Legal Authority: 26 USC 25 Internal Revenue Code of 1986

CFR Citation: 26 CFR 1

Legal Deadline: None.

Abstract: The regulation provides compliance rules for MCCs.

Timetable:

Action	Date	FR Cite
Closed without regulations	09/24/87	

Small Entity: Not Applicable

Additional Information: LR-46-87

Drafting Attorney: Robert Beatson (202) 566-3459.

Reviewing attorney: John Coulter (202) 566-3331.

Agency Contact: Robert Beatson, Attorney, Department of the Treasury, Internal Revenue Service, llll Constitution Ave. N.W., Washington, D.C. 20224, 202 566-3459

RIN: 1545-AK34

2577. SUBSTANTIATION REQUIREMENT FOR MORTGAGE INTEREST CREDIT CERTIFICATES

Legal Authority: 26 USC 25 Internal Revenue Code of 1986

CFR Citation: 26 CFR 1

Legal Deadline: None.

Abstract: The regulation provides compliance rules for MCCs.

Timetable:

Action	Date	FR Cite
Closed without regulations	09/24/87	

Small Entity: Not Applicable

Additional Information: LR-47-87

Drafting Attorney: Robert Beatson (202) 566-3459.

Reviewing Attorney: John Coulter (202) 566-3331.

Agency Contact: Robert Beatson, Attorney, Department of the Treasury, Internal Revenue Service, 1111 Constitution Ave., N.W., Washington, D. C. 20224, 202 566-3459

RIN: 1545-AK38

2578. INCOME TAX–NOTICE TO EMPLOYEES OF EARNED INCOME CREDIT

Legal Authority: 26 USC 7805 Internal Revenue Code of 1986; 26 USC 6051 Internal Revenue Code of 1986

CFR Citation: 26 CFR 1

Legal Deadline: None.

Abstract: The regulations would provide the procedures necessary to implement the statutory requirement that employers notify certain employees whose wages are not subject to income tax withholding that they may be eligible for the refundable earned income credit.

Timetable:

Action	Date	FR Cite
Final Action	06/11/87	52 FR 22301

Small Entity: Not Applicable

Additional Information: LR-98-86.

Drafting attorney: Joel S. Rutstein (202) 566-3297.

Reviewing attorney: John B. Bromell (202) 566-3297.

Office of Legislative Counsel attorney: Marjorie Roberts (202) 566-2565.

Duplicate of RIN 1545-AI77

Agency Contact: Joel S. Rutstein, Attorney, Department of the Treasury, Internal Revenue Service, 1111 Constitution Avenue, N.W., Washington, D.C. 20224, 202 566-3297

RIN: 1545-AK00

2579. LOW-INCOME HOUSING CREDIT

Legal Authority: 26 USC 42 Internal Revenue Code of 1986

CFR Citation: 26 CFR 1

Legal Deadline: None.

Abstract: The regulations provide low-income housing credit allocation and reporting rules.

Timetable:

Action	Date	FR Cite
Final Action T.D. 8162	11/03/87	52 FR 42098

Small Entity: Not Applicable

Additional Information: LR-61-87

Drafting attorney: Robert Beatson (202) 566-3459

Reviewing attorney: John Coulter (202) 566-3331

Agency Contact: Robert Beatson, Attorney, Department of the Treasury, Internal Revenue Service, 1111 Constitution Ave., N.W., Washington, D.C. 20224, **202 566-3459**

RIN: 1545-AK39

2580. INCOME TAX REGULATIONS—MORTALITY TABLES TO BE USED TO DETERMINE AMOUNT HELD BY INSURER WITH RESPECT TO A BENEFICIARY

Legal Authority: 26 USC 7805 Internal Revenue Code of 1986; 26 USC 101(d)(2)(B)(ii) Internal Revenue Code of 1986

CFR Citation: 26 CFR 1

Legal Deadline: None.

Abstract: The regulations will prescribe mortality tables to be used to determine the amount held by an insurer with respect to a beneficiary of a life insurance contract.

Timetable:

Action	Date	FR Cite
Final Action T.D. 8161	09/21/87	52 FR 35414

Small Entity: Not Applicable

Additional Information: LR-134-86

Drafting attorney: Sharon L. Hall (202) 566-3288.

Reviewing attorney: John H. Parcell (202) 566-3336.

Agency Contact: Sharon L. Hall, Attorney, Department of the Treasury, Internal Revenue Service, 1111 Constitution Avenue, N.W., Washington, D.C. 20224, **202 566-3288**

RIN: 1545-AK15

2581. TO PROVIDE REGULATIONS RELATING TO THE STATE VOLUME CAP ON PRIVATE ACTIVITY BONDS

Legal Authority: 26 USC 7805 Internal Revenue Code of 1986; 26 USC 103(m) Internal Revenue Code of 1954; 26 USC 0146 Internal Revenue Code of 1986

CFR Citation: 26 CFR 1

Legal Deadline: None.

Abstract: These regulations will provide rules relating to the limitation on the aggregate amount of private activity bonds. The regulations will define the terms private activity bond and state ceiling. The regulations will also provide rules for carrying forward any unused private activity bond limit.

Timetable:

Action	Date	FR Cite
NPRM	10/05/84	49 FR 39344
NPRM Comment Period End	12/04/84	49 FR 39344
Hearing	04/22/85	
Closed without regulations	11/30/87	

Small Entity: Not Applicable

Additional Information: LR-144-84.

Drafting attorney: David Selig (202) 566-3297.

Reviewing attorney: Gerald Rock (202) 566-3294.

Agency Contact: Robert Beatson, Attorney, Department of the Treasury, Internal Revenue Service, 1111 Constitution Ave., N.W., Washington, D.C. 20224, **202 566-3459**

RIN: 1545-AH62

2582. INCOME TAX REGULATIONS—LIMITATIONS ON DEDUCTIONS FOR NONBUSINESS INTEREST

Legal Authority: 26 USC 7805 Internal Revenue Code of 1986; 26 USC 163 Internal Revenue Code of 1986

CFR Citation: 26 CFR 1

Legal Deadline: None.

Abstract: The regulations will provide guidance relating to the disallowance of a deduction for personal interest, including guidance regarding the definitions of qualified residence, qualified residence interest and qualified indebtedness.

Timetable:

Action	Date	FR Cite
Final Action T.D. 8168	12/22/87	52 FR 48407

Small Entity: Not Applicable

Additional Information: LR-136-86

Drafting attorney: Sharon L. Hall (202) 566-3288.

Reviewing attorney: John Fischer (202) 566-3394.

Treasury attorney: Reed Shuldiner (202) 535-6963.

Agency Contact: Sharon L. Hall, Attorney, Department of the Treasury, Internal Revenue Service, 1111 Constitution Avenue, N.W., Washington, D.C. 20224, **202 566-3288**

RIN: 1545-AK16

2583. INCOME TAX—OWNERSHIP CHANGE

Legal Authority: 26 USC 7805 Internal Revenue Code of 1986; 26 USC 382 Internal Revenue Code of 1986

CFR Citation: 26 CFR 1

Legal Deadline: None.

Abstract: The regulations will provide guidance on what constitutes "ownership change" under section 382 of the Internal Revenue Code of 1986 (generally, an "ownership change" is a shift in loss corporate stock ownership (after which the corporation's net operating loss carryovers are limited)).

Timetable:

Action	Date	FR Cite
Final Action T.D. 8149	08/11/87	52 FR 29663

Small Entity: Not Applicable

Additional Information: LR-105-86

Drafting attorneys: Keith E. Stanley (202) 566-3458.

Reviewing attorney: Charles M. Whedbee (202) 566-3458.

Treasury attorney: Thomas Wessel (202) 566-4979.

Agency Contact: Keith Stanley, Attorney, Department of the Treasury, Internal Revenue Service, 1111 Constitution Avenue, N.W., Washington, D.C. 20224, **202 566-3458**

RIN: 1545-AJ08

2584. INCOME TAX - TEMPORARY REGULATIONS ON MINIMUM VESTING STANDARDS

Legal Authority: 26 USC 7805 Internal Revenue Code of 1986; 26 USC 410 Internal Revenue Code of 1986; 26 USC 411 Internal Revenue Code of 1986; PL 99-514, Sec 1113 Tax Reform Act of 1986; PL 99-514, Sec 1141 Tax Reform Act of 1986

CFR Citation: 26 CFR 1

Legal Deadline: Statutory, Feoruary 1, 1988. Deadline set by section 1141 of PL 99-514 "Tax Reform Act of 1986"

Abstract: These temporary regulations will amend existing rules to reflect changes made by section 1113 of the Tax Reform Act of 1986, relating to minimum vesting standards and participation standards for qualified employee plans.

Timetable:

Action	Date	FR Cite
Final Action T.D. 8170	01/06/88	53 FR 238

Small Entity: Not Applicable

Additional Information: EE-73-87

Drafting Attorney: V.A. Moore (202) 566-3422.

Reviewing Attorney: James Brokaw (202) 566-4173.

Treasury Attorney: Harry Conaway (202) 566-8277.

Cross-Reference to EE-167-86

Agency Contact: V.A. Moore, Attorney, Department of the Treasury, Internal Revenue Service, 1111 Constitution Avenue N.W., Washington, D.C. 20224, 202 566-3422

RIN: 1545-AK43

2585. TAXABLE YEARS OF CERTAIN ENTITIES

Legal Authority: 26 USC 7805 Internal Revenue Code of 1986; 26 USC 441 Internal Revenue Code of 1986

CFR Citation: 26 CFR 1

Legal Deadline: None.

Abstract: The regulation would provide guidance to S corporations, personal service corporations and partnerships that must conform their taxable years, in general, to the taxable year of their owners.

Timetable:

Action	Date	FR Cite
Final Action T.D. 8167	12/23/87	52 FR 48524

Small Entity: No

Additional Information: LR-44-87

Drafting attorney: Arthur E. Davis III (202) 566-3238.

Reviewing attorney: Cynthia Clark (202) 566-3288.

Treasury attorney: Richard Harvey (202) 535-6960.

Agency Contact: Arthur E. Davis III, Attorney, Department of the Treasury, Internal Revenue Service, 1111 Constitution Avenue, N.W., Washington, D.C. 20224, 202 566-3238

RIN: 1545-AK61

2586. TAXABLE YEARS OF CERTAIN PARTNERSHIPS (TEMPORARY)

Legal Authority: 26 USC 7805 Internal Revenue Code of 1986; 26 USC 706 (b) Internal Revenue Code of 1986

CFR Citation: 26 CFR 1

Legal Deadline: None.

Abstract: The project provides temporary regulations with respect to the taxable year of certain partnerships.

Timetable:

Action	Date	FR Cite
Final Action T.D. 8169	12/29/87	52 FR 48994

Small Entity: Not Applicable

Additional Information: LR-100-86.

Drafting attorney: Beverly A. Baughman (202) 566-3297.

Reviewing attorney: Walter H. Woo (202) 566-3297.

Treasury reviewer: J. Richard Harvey (202) 566-4902.

Agency Contact: Beverly A. Baughman, Attorney, Department of the Treasury, Internal Revenue Service, 1111 Constitution Ave., N.W., Washington, D.C. 20224, 202 566-3297

RIN: 1545-AJ46

2587. TREATMENT OF SALVAGE AND REINSURANCE IN DETERMINING LOSSES OF PROPERTY AND CASUALTY INSURANCE COMPANIES

Legal Authority: 26 USC 7805 Internal Revenue Code of 1986; 26 USC 832 Internal Revenue Code of 1986

CFR Citation: 26 CFR 1

Legal Deadline: None.

Abstract: The regulations will provide rules relating to the treatment of salvage and reinsurance recoverable in determining the paid and unpaid losses of property and casualty insurance companies.

Timetable:

Action	Date	FR Cite
Final Action T.D. 8171	01/05/88	53 FR 117

Small Entity: Not Applicable

Additional Information: LR-84-87

Drafting attorney: Bill Blagg (202) 566-3238.

Reviewing attorney: Cynthia Clark (202) 566-3288.

Treasury attorney: Don Rocap (202) 566-8278.

Agency Contact: Bill Blagg, Attorney, Department of the Treasury, Internal Revenue Service, 1111 Constitution Avenue, N.W., Washington, D.C. 20224, 202 566-3238

RIN: 1545-AK48

2588. STATUTE OF LIMITATIONS - NATIONALIZED COMPANIES

Legal Authority: 26 USC 7805 Internal Revenue Code of 1986

CFR Citation: 26 CFR 1

Legal Deadline: None.

Abstract: Proposal would define FOGEI and FORI.

Timetable:

Action	Date	FR Cite
Final Action T.D. 8160	09/09/87	52 FR 33930

Small Entity: Not Applicable

Additional Information: INTL-59-86

Drafting Attorney: Richard Chewning (202) 566-3490

Reviewing Attorney: Charles Saverude (202) 566-9060

Office of International Tax Counsel Reviewing Attorney: Steve Shay (202) 566-5046

Agency Contact: Richard Chewning, Attorney-Advisor, Department of the Treasury, Internal Revenue Service, 1111 Constitution Ave., N.W., Washington, D.C. 20224, 202 566-3490

RIN: 1545-AJ75

2589. INCOME TAX—TO REFLECT THE U.S. SUPREME COURT IN U.S. V. VOGEL FERTILIZER CO., HOLDING THAT EACH MEMBER OF STOCKGROUP MUST OWN STOCK IN EACH BROTHER-SISTER CORP

Legal Authority: 26 USC 7805 Internal Revenue Code of 1986; 26 USC 1563(a)(2) Internal Revenue Code of 1986; 26 USC 52 Internal Revenue Code of 1986; 26 USC 414(c) Internal Revenue Code of 1986

CFR Citation: 26 CFR 1

Legal Deadline: None.

Abstract: The regulations relating to the definition of a brother-sister controlled group of corporations are to be amended to conform to the Supreme Court decision in U.S. v. Vogel Fertilizer Company, which held that a person's stock ownership is not taken into account for purposes of the 80% ownership test unless that person owns stock in each brother-sister corporation.

Timetable:

Action	Date	FR Cite
NPRM	11/16/83	48 FR 52081
NPRM Comment Period End	01/16/84	48 FR 52081
Closed without regulations	07/24/87	

Small Entity: Not Applicable

Additional Information: LR-35-82.

Drafting attorney: Michel A. Daze (202) 566-6450.

Reviewing attorney: Charles M. Whedbee (202) 566-3458.

Treasury attorney: Don Rocap (202) 566-8277.

Agency Contact: Michel A. Daze, Attorney, Department of the Treasury, Internal Revenue Service, 1111 Constitution Ave., N.W., Washington, D.C. 20224, 202 566-6456

RIN: 1545-AC59

2590. SUBMISSION OF CERTAIN WITHHOLDING EXEMPTION CERTIFICATES AND ENTITLEMENTS TO ADDITIONAL WITHHOLDING EXEMPTION

Legal Authority: 26 USC 7805 Internal Revenue Code of 1986; 26 USC 3402 (m) Internal Revenue Code of 1986

CFR Citation: 26 CFR 31

Legal Deadline: None.

Abstract: This document provides proposed regulations that relate to the submission of withholding exemption certificates when the total number of withholding exemptions claimed on a certificate exceed 10 and to the requirements that an employee must meet to be entitled to the additional withholding exemption in respect of the standard deduction.

Timetable:

Action	Date	FR Cite
NPRM	12/17/86	51 FR 45132
Final Action T.D. 8164	12/01/87	52 FR 45632

Small Entity: Not Applicable

Additional Information:

LR-144-86.

Drafting Attorney: Laura Ann M. Lauritzen (202) 566-3459.

Reviewing Attorney: John M. Coulter (202) 566-4473.

Treasury Attorney: Patricia McClanahan (202) 566-2929.

Agency Contact: Laura Ann M. Lauritzen, Attorney, Department of the Treasury, Internal Revenue Service, 1111 Constitution Avenue, NW, Washington, DC 20224, 202 566-3459

RIN: 1545-AJ30

2591. TO PROVIDE TEMPORARY REGULATIONS RELATING TO BACKUP WITHHOLDING WHERE THE SERVICE NOTIFIES PAYOR TO WITHHOLD DUE TO AN INCORRECT TAXPAYER IDENTIFICATION NUMBER

Legal Authority: 26 USC 7805 Internal Revenue Code of 1986; 26 USC 3406 Internal Revenue Code of 1986; 26 USC 6676 Internal Revenue Code of 1986

CFR Citation: 26 CFR 35a

Legal Deadline: None.

Abstract: These regulations will prescribe when withholding is required when the Internal Revenue Service notifies the payor of an incorrect taxpayer identification number. The regulations will also describe that no withholding is required if the payee, within 30 days of the Service's notification, certifies under penalties of perjury that the name and taxpayer identification number are correct. If no certification is received within 30 days, backup withholding applies until such certification is received.

Timetable:

Action	Date	FR Cite
Final Action Effective	01/01/86	44 FR 44842
Final Action T.D. 8163	11/23/87	52 FR 44861

Small Entity: Not Applicable

Additional Information: LR-7-84.

Drafting attorney: Renay France (202) 566-3459.

Reviewing attorney: John M. Coulter, Jr. (202) 566-3331.

Treasury attorney: Susan Himes (202) 566-8527.

Agency Contact: Renay France, Attorney, Department of the Treasury, Internal Revenue Service, 1111 Constitution Ave., N.W., Washington, D.C. 20224, 202 566-3459

RIN: 1545-AF90

2592. SALES OF DIESEL AND SPECIAL MOTOR FUEL FROM UNATTENDED LOCATIONS

Legal Authority: 26 USC 7805 Internal Revenue Code of 1986; 26 USC 4041 Internal Revenue Code of 1986

CFR Citation: 26 CFR 48

Legal Deadline: None.

Abstract: This project will address the requirements for nontaxable sales of diesel or special motor fuel from unattended locations and what recordkeeping requirements must be met for such sales.

Timetable:

Action	Date	FR Cite
Final Action T.D. 8154	08/25/87	52 FR 32008

Small Entity: Not Applicable

Additional Information: LR-60-87

Drafting Attorney: William A. Jackson (202) 566-3287.

Reviewing Attorney: Ada Rousso (202) 566-3287.

Treasury Attorney: Moshe Schuldinger (202) 566-2928.

Agency Contact: William A. Jackson, Attorney, Department of the Treasury, Internal Revenue Service, 1111 Constitution Avenue, N.W., Washington, D.C. 20224, 202 566-3287

RIN: 1545-AK99

2593. MANUFACTURERS AND RETAILERS EXCISE TAXES--TAXES ON FUELS, TIRES AND GASOLINE

Legal Authority: 26 USC 4071 Internal Revenue Code of 1986; 26 USC 4041 Internal Revenue Code of 1986; 26 USC 4081 Internal Revenue Code of 1986; 26 USC 6420 Internal Revenue Code of 1986; 26 USC 6427 Internal Revenue Code of 1986

CFR Citation: 26 CFR 48

Legal Deadline: None.

Abstract: The regulations will provide guidance concerning the rates of tax on certain fuels and gasohol. In addition, the regulations will provide guidance concerning the tax on tires.

Timetable:

Action	Date	FR Cite
Final Action Effective	01/01/84	52 FR 31614
NPRM	06/22/85	50 FR 33977
NPRM Comment Period End	10/21/85	
Hearing	01/14/86	
Final Action T.D. 8152	06/21/87	52 FR 31614

Small Entity: Not Applicable

Additional Information: LR-119-83.

Drafting attorney: Margaret O'Connor (202) 566-3287.

Reviewing attorney: Ada S. Rousso (202) 566-3287.

Office of Tax Legislative Counsel (Treasury) reviewing attorney: Mo Schuldinger (202) 566-2928.

Agency Contact: Margaret O'Connor, Attorney, Department of the Treasury, Internal Revenue Service, 1111 Constitution Ave., N.W., Washington, D.C. 20224, 202 566-3287

RIN: 1545-AF58

2594. REDUCTION OF THE HEAVY VEHICLE USE TAX FOR FOREIGN-BASED TRUCKS

Legal Authority: 26 USC 7805 Internal Revenue Code of 1986; 26 USC 4481 Internal Revenue Code of 1986

CFR Citation: 26 CFR 41

Legal Deadline: None.

Abstract: This project will address how the heavy vehicle use tax will be imposed on foreign-based trucks at a reduced rate and what proof of payment of the tax must be presented upon entry into the United States.

Timetable:

Action	Date	FR Cite
Final Action T.D. 8159	09/04/87	52 FR 33583

Small Entity: Not Applicable

Additional Information: LR-32-87

Drafting Attorney: William A. Jackson (202) 566-3287.

Reviewing Attorney: Ada Rousso (202) 566-3287.

Treasury Attorney: Mark Perlis (202) 566-8278.

Agency Contact: William A. Jackson, Attorney, Department of the Treasury, Internal Revenue Service, 1111 Constitution Avenue, N.W., Washington, D.C. 20224, 202 566-3287

RIN: 1545-AK97

2595. ● EXCISE TAX – EXCESS DISTRIBUTIONS FROM QUALIFIED RETIREMENT PLANS

Legal Authority: 26 USC 7805 Internal Revenue Code of 1986; 26 USC 4981A Internal Revenue Code of 1986

CFR Citation: 26 CFR 1

Legal Deadline: None.

Abstract: The regulation will provide rules for determining the amount of the excise distributions from qualified retirement plans.

Timetable:

Action	Date	FR Cite
Final Action	12/10/87	52 FR 96747

Small Entity: Not Applicable

Additional Information: EE-155-86

Drafting Attorney: Marjorie Hoffman (202) 566-3430.

Drafting Attorney: Richard J. Wickersham (202) 566-4621.

Treasury Attorneys: Paul Strella/Harry Conaway (202) 566-8277.

Cross Reference to EE-162-86.

Agency Contact: Marjorie Hoffman, Attorney, Department of the Treasury, Internal Revenue Service, 1111 Constitution Avenue NW, Washington, DC 20224, 202 566-3430

RIN: 1545-AL13

2596. ● EXCISE TAX–EXCESS DISTRIBUTIONS FROM QUALIFIED RETIREMENT PLANS

Legal Authority: 26 USC 7805 Internal Revenue Code of 1986; 26 USC 4981A Internal Revenue Code of 1986

CFR Citation: 26 CFR 1

Legal Deadline: None.

Abstract: The regulations will provide rules for determining the amount of the excise tax on excess distributions from qualified retirement plans.

Timetable:

Action	Date	FR Cite
Final Action T.D. 8165	12/10/87	52 FR 46747

Small Entity: Undetermined

Additional Information: EE-155-86

Drafting attorney: Marjorie Hoffman (202) 566-3430.

Reviewing attorney: Richard J.Wickersham (202) 566-3250.

Treasury attorney: Paul Strella/Harry Conaway (202) 566-8277.

Excise Tax

Agency Contact: Majorie Hoffman, Attorney, Department of the Treasury, Internal Revenue Service, 1111 Constitution Avenue, N.W., Washington, D.C. 20224, 202 566-3430

RIN: 1545-AL22

2597. INFORMATION REPORTING OF ALLOWANCES, OR REIMBURSEMENTS, OR CHARGES FOR TRAVEL AND OTHER EXPENSES OF PUBLIC SECTOR EMPLOYEES AND CERTAIN OTHER PERSONS

Legal Authority: 26 USC 7805 Internal Revenue Code of 1986; 26 USC 6041 Internal Revenue Code of 1986

CFR Citation: 26 CFR 1

Legal Deadline: None.

Abstract: The proposed regulations would make clear that all employers, including the United States, a State, Territory or a political subdivision thereof, and the District of Columbia, are required to report amounts provided to persons in the military or civil service as allowances reimbursements, or charges for traveling and other business expenses, including an allowance for meals and lodging or a per diem allowance in lieu of subsistence, except to the extent that such persons are required to and do account to the employer for such expenses within the meaning of Sec. 1.162-17(b)(4).

Timetable:

Action	Date	FR Cite
Final Action Effective	01/01/86	52 FR 30357
NPRM	01/09/86	51 FR 985
NPRM Comment Period End	03/10/86	51 FR 985
Final Action T.D. 8151	08/04/87	52 FR 30857

Small Entity: Not Applicable

Additional Information: LR-59-85.

Drafting attorney: Renay France (202) 566-3458.

Reviewing attorney: John M. Coulter, Jr. (202) 566-3331.

TLC attorney: Marjorie Roberts (202) 566-3927.

Agency Contact: Renay France, Attorney, Department of the Treasury, Internal Revenue Service, 1111 Constitution Ave., N.W., Washington, D.C. 20224, 202 566-3459

RIN: 1545-AI42

2598. INTEREST ON HOSPITAL INSURANCE TAXES ON WAGES OF STATE AND LOCAL GOVERNMENT EMPLOYEES

Legal Authority: 26 USC 7805 Internal Revenue Code of 1986; 26 USC 6205 Internal Revenue Code of 1986

CFR Citation: 26 CFR 31

Legal Deadline: None.

Abstract: This temporary regulation will permit interest-free adjustments for underpayments of hospital insurance taxes with respect to wages of state and local government employees hired after March 31, 1986.

Timetable:

Action	Date	FR Cite
Closed without regulations	09/13/87	

Small Entity: No

Additional Information: LR-47-86.

Drafting attorney: Laura Ann M. Lauritzen (202) 566-3459.

Reviewing attorney: John M. Coulter Jr., (202) 566-3331.

Treasury attorney: Susan Scherbel (202) 535-6965.

Agency Contact: Laura Ann M. Lauritzen, Attorney, Department of the Treasury, Internal Revenue Service, 1111 Constitution Ave., NW, Washington, DC 20224, 202 566-3459

RIN: 1545-AI45

2599. INTEREST ON HOSPITAL INSURANCE TAXES ON WAGES OF STATE AND LOCAL GOVERNMENT EMPLOYEES

Legal Authority: 26 USC 7805 Internal Revenue Code of 1986; 26 USC 6205 Internal Revenue Code of 1986

CFR Citation: 26 CFR 31

Legal Deadline: None.

Abstract: This regulation will permit interest-free adjustments for underpayments of hospital insurance taxes with respect to wages of State and local government employees hired after March 31, 1986.

Timetable:

Action	Date	FR Cite
Final Action T.D. 8156 published. NPRM determined unnecessary.	09/04/87	52 FR 33581

Small Entity: No

Additional Information: LR-46-86.

Drafting attorney: Laura Ann M. Lauritzen (202) 566-3459.

Reviewing attorney: John M. Coulter, Jr. (202) 566-3331.

Treasury Attorney: Susan Scherbel (202) 535-6965.

Agency Contact: Laura Ann M. Lauritzen, Attorney, Department of the Treasury, Internal Revenue Service, 1111 Constitution Ave., N.W., Washington, D.C. 20224, 202 566-3459

RIN: 1545-AI50

2600. INCOME TAX--DEPOSIT OF ESTIMATED INCOME TAX BY CERTAIN PRIVATE FOUNDATIONS AND TAX-EXEMPT ORGANIZATIONS

Legal Authority: 26 USC 7805 Internal Revenue Code of 1986; 26 USC 6302 Internal Revenue Code of 1986

CFR Citation: 26 CFR 1

Legal Deadline: None.

Abstract: This regulation would provide guidance regarding deposits by certain private foundations and tax-exempt organizations of estimated income taxes. The Tax Reform Act of 1986 requires these organizations to make quarterly estimated tax payments.

Timetable:

Action	Date	FR Cite
NPRM	12/24/86	51 FR 46689
Final Action Effective	01/01/87	52 FR 33808
NPRM Comment Period End	01/23/87	51 FR 46689
Final Action T.D. 8157	09/08/87	52 FR 33808

Small Entity: Not Applicable

Additional Information: LR-132-86.

Drafting attorney: John A. Tolleris (202) 566-3590.

Reviewing attorney: John M. Coulter, Jr. (202) 566-3331.

Agency Contact: John A. Tolleris, Attorney, Department of the Treasury, Internal Revenue Service, 1111 Constitution Avenue, NW, Washington, DC 20224, 202 566-3590

RIN: 1545-AJ43

2601. PROCEDURE AND ADMINISTRATION - ABATEMENT OF INTEREST

Legal Authority: 26 USC 7805 Internal Revenue Code of 1986

CFR Citation: 26 CFR 301

Legal Deadline: None.

Abstract: The regulations will provide guidance on the definition of ministerial act.

Timetable:

Action	Date	FR Cite
Final Action T.D. 8150	08/13/87	52 FR 30162
Temporary Regulation	00/00/00	

Small Entity: Not Applicable

Additional Information: LR-35-87

Drafting attorney: Sharon L. Hall (202) 566-3288.

Reviewing attorney: Cynthia Clark (202) 566-3288.

Agency Contact: Sharon L. Hall, Attorney, Department of the Treasury, Internal Revenue Service, 1111 Constitution Avenue, N.W., Washington, D.C. 20224, 202 566-3288

RIN: 1545-AK70

2602. PENALTY FOR FAILURE TO INCLUDE CORRECT INFORMATION ON INFORMATION RETURNS AND PAYEE STATEMENTS

Legal Authority: 26 USC 6723 Internal Revenue Code of 1986

CFR Citation: 26 CFR 301

Legal Deadline: None.

Abstract: The regulations provide guidance on the penalty for failing to provide correct information on information returns and payee statements.

Timetable:

Action	Date	FR Cite
Final Action Effective	01/01/87	52 FR 34354
Final Action T.D.8155	09/10/87	52 FR 34354

Small Entity: No

Additional Information: LR-141-86

Drafting Attorney: Renay France (202) 566-3459.

Reviewing Attorney: Sharon Galm (202) 566-3930.

Treasury Attorney: Patricia McClanahan (202) 566-2926.

Agency Contact: Renay France, Attorney, Department of the Treasury, Internal Revenue Service, 1111 Constitution Avenue, N.W., Washington, D.C. 20224, 202 566-3459

RIN: 1545-AJ26

2603. INCOME TAX—INVESTMENT CREDIT IN CASE OF PROPERTY USED BY TAX EXEMPT ORGANIZATIONS & GOVERNMENTAL UNITS; PRACTICE & PROCEDURE —DEFINITION OF SERVICE CONTRACTS & OTHER ARRANGEMENTS

Legal Authority: 26 USC 7805 Internal Revenue Code of 1986; 26 USC 48(a)(4) Internal Revenue Code of 1986; 26 USC 48(a)(5) Internal Revenue Code of 1986; 26 USC 7701(e) Internal Revenue Code of 1986

CFR Citation: 26 CFR 301

Legal Deadline: None.

Abstract: Proposal would change the definition of use of property by a tax exempt organization or a governmental unit, for purpose of applying rules relating to the investment tax credit. The regulations would also define service contracts and other arrangements, for purposes of analysis vis a vis leasing arrangements.

Timetable:

Action	Date	FR Cite
Closed without regulations	11/01/87	

Small Entity: Not Applicable

Additional Information: LR-223-78.

Drafting attorney: Robert Beatson (202) 566-3459.

Agency Contact: Robert Beatson, Attorney, Department of the Treasury, Internal Revenue Service, 1111 Constitution Ave., N.W., Washington D.C. 20224, 202 566-3459

RIN: 1545-AA23

[FR Doc. 88-5801 Filed 04-22-88; 8:45 am]

BILLING CODE 4830-01-T

VOL
53

ISS
79

PT
2

AP
25

1988

UMI

federal register

Monday
April 25, 1988

Part XVI

ACTION

Semiannual Regulatory Agenda

ACTION (ACTION)

ACTION

45 CFR Ch. XII

Executive Order 12291, Federal Regulation, Semiannual Agenda of Regulations

AGENCY: ACTION.

ACTION: Publication of semiannual agenda.

SUMMARY: This agenda announces the regulations that ACTION will have under development, revision or review during the next year. The purpose for publishing this agenda is to give notice of any regulatory activity by the Agency in order to allow the public an opportunity to participate in the rulemaking process.

FOR FURTHER INFORMATION CONTACT: The public is encouraged to contact the Agency official listed for the particular agenda item. For other information concerning ACTION regulations or this semiannual agenda, contact Terry T. Campo, General Counsel and Director of Legislative Affairs, ACTION, 806 Connecticut Avenue, NW., Washington, DC 20525, (202) 634-9333.

SUPPLEMENTARY INFORMATION: In accordance with Executive Order 12291, Federal Regulation, and the Regulatory Flexibility Act (5 U.S.C. 605), executive agencies are required to publish in the **Federal Register** semiannual regulatory agendas in April and October of each year.

ACTION has determined that the regulations under consideration will not impose compliance costs or reporting burdens on the public; and that the regulations will not have a significant economic impact on a substantial number of small entities. Accordingly, no Regulatory Analysis is required under 5 U.S.C. 602.

DATED: March 14, 1988.

Donna M. Alvarado,

Director.

ACTION (ACTION) — Prerule Stage

2604. NONDISCRIMINATION IN FEDERALLY ASSISTED PROGRAMS

Legal Authority: 42 USC 2000(d)(1); 42 USC 5057; 42 USC 5060

CFR Citation: 45 CFR 1203

Legal Deadline: None.

Abstract: In accordance with 42 USC 2000(d)(1) ACTION will promulgate regulations implementing provisions of title VI of the Civil Rights Act of 1964, title IX of the Education Amendments of 1972, as amended, and section 417 of the Domestic Volunteer Service Act of 1973, as amended, which prohibit discrimination on the basis of race, color, national origin, religion or sex, in federally assisted programs. Relevant provisions of existing ACTION title VI regulations will be subsumed into this new regulation.

Timetable:

Action	Date	FR Cite
Next Action Undetermined		

Small Entity: No

Agency Contact: Jeanne D. McCamley, Acting Director, Equal Opportunity Staff, Office of Compliance, ACTION, 806 Connecticut Ave., NW, Washington, DC 20525, 202 634-9312

RIN: 3001-AA06

2605. ENFORCEMENT OF NONDISCRIMINATION ON THE BASIS OF HANDICAP IN ACTION PROGRAMS

Legal Authority: 29 USC 794; 42 USC 5057; 42 USC 5060

CFR Citation: 00 CFR None

Legal Deadline: None.

Abstract: In accordance with section 504 of the Rehabilitation Act of 1973, as amended (29 USC 794), ACTION will promulgate implementing regulations which prohibit discrimination on the basis of handicap in federally conducted programs and activities. ACTION regulations prohibiting discrimination on the basis of handicap in federally assisted programs are contained in 45 CFR 1232.

Timetable:

Action	Date	FR Cite
Next Action Undetermined		

Small Entity: No

Agency Contact: Jeanne D. McCamley, Acting Director, Equal Opportunity Staff, Office of Compliance, ACTION, 806 Connecticut Ave., NW, Washington, DC 20525, 202 634-9312

RIN: 3001-AA07

2606. INSPECTION AND COPYING OF RECORDS: RULES FOR COMPLIANCE WITH PUBLIC INFORMATION ACT

Legal Authority: 5 USC 552; 42 USC 4951

CFR Citation: 45 CFR 1215

Legal Deadline: None.

Abstract: In accordance with the Freedom of Information Act, (5 USC 522), the Agency is updating its regulation concerning the release of Agency Information.

Timetable:

Action	Date	FR Cite
Next Action Undetermined		

Small Entity: No

Agency Contact: Kirby McCollum, Director, Administrative Services Division, ACTION, 806 Conn. Ave., NW, Washington, DC 20525, 202 634-9242

RIN: 3001-AA09

2607. NONDISCRIMINATION ON THE BASIS OF AGE IN PROGRAMS OR ACTIVITIES RECEIVING FEDERAL ASSISTANCE FROM ACTION

Legal Authority: 42 USC 6101; 42 USC 4951

CFR Citation: 45 CFR 1221

Legal Deadline: None.

Abstract: In accordance with 42 USC 6101 and 42 USC 4951 ACTION will promulgate regulations implementing provisions of the Age Discrimination Act of 1975, as amended, and Section 417 of the Domestic Volunteer Service Act of 1973, as amended, which prohibits discrimination on the basis of

ACTION **Prerule Stage**

age in programs or activities receiving Federal financial assistance.

Timetable:

Action	Date	FR Cite
Next Action Undetermined		

Small Entity: No

Agency Contact: Jeanne D. McCamley, Acting Director, Equal Opportunity Staff, Office of Compliance, ACTION, 806 Conn. Ave., NW, Washington, DC 20525, 202 634-9312

RIN: 3001-AA10

ACTION (ACTION) **Final Rule Stage**

2608. ● NONPROCUREMENT DEBARMENT AND SUSPENSION

Legal Authority: PL 93-113 42 USC 4951, et seq

CFR Citation: 45 CFR 1229

Legal Deadline: None.

Abstract: In accordance with Executive Order 12549 and OMB guidelines this proposed rule would establish a uniform system of nonprocurement debarment and suspension from programs and activities involving Federal financial and nonfinancial assistance and benefits.

Timetable:

Action	Date	FR Cite
NPRM	10/20/87	52 FR 39015
Final Action	05/26/88	

Small Entity: No

Agency Contact: Margaret McHale, Acting Chief, Grants Branch, ACTION, 806 Connecticut Ave., Washington, DC 20525, 202 634-9150

RIN: 3001-AA14

ACTION (ACTION) **Completed Actions**

2609. SENIOR COMPANION PROGRAM: NON-STIPENDED VOLUNTEERS

CFR Citation: 45 CFR 1207

Completed:

Reason	Date	FR Cite
Final Action	08/26/87	52 FR 32133
Final Action Effective	10/13/87	52 FR 32133

Small Entity: No

Agency Contact: C. Wade Freeman 202 634-9355

RIN: 3001-AA11

2610. FOSTER GRANDPARENT PROGRAM: NON-STIPENDED VOLUNTEERS

CFR Citation: 45 CFR 1208

Completed:

Reason	Date	FR Cite
Final Action	08/26/87	52 FR 32132
Final Action Effective	10/13/87	52 FR 32132

Small Entity: No

Agency Contact: C. Wade Freeman 202 634-9355

RIN: 3001-AA12

2611. ● UNIFORM ADMINISTRATIVE REQUIREMENTS FOR GRANTS AND COOPERATIVE AGREEMENTS TO STATE AND LOCAL GOVERNMENTS

Legal Authority: PL 93-113 42 USC 4951, et seq

CFR Citation: 45 CFR 1234

Legal Deadline: None.

Abstract: In accordance with the Presidential Memorandum, "Uniform Requirements for Grants to State and Local Governments," dated March 12, 1987, this proposed rule would establish uniform requirements for the administration of grants and cooperative agreements and subawards to State, local and Indian tribal governments.

Timetable:

Action	Date	FR Cite
NPRM	06/09/87	52 FR 21819
Final Action	03/11/88	53 FR 8033
Final Action Effective	10/01/88	

Small Entity: No

Agency Contact: Margaret McHale, Acting Chief, Grants Branch, ACTION, 806 Connecticut Avenue, NW, Washington, DC 20525, 202 634-9150

RIN: 3001-AA13

[FR Doc. 88-6197 Filed 04-22-88; 8:45 am]

BILLING CODE 6050-28-T

BEST COPY AVAILABLE

VOL
53

ISS
79

PT
2

AP
25

1988

UMI

BEST COPY AVAILABLE

federal register

Monday
April 25, 1988

Part XVII

Agency for International Development

Semiannual Regulatory Agenda

AGENCY FOR INTERNATIONAL DEVELOPMENT (AID)

INTERNATIONAL DEVELOPMENT COOPERATION AGENCY

Agency for International Development

22 CFR Ch. II

Federal Regulations; Agency Regulatory Agenda Semiannual Summary

AGENCY: Agency for International Development, IDCA.

ACTION: Agency regulations agenda.

SUMMARY: The Agency for International Development (A.I.D.) is publishing this agenda as required by section 5(a) of Executive Order 12291, Federal Regulation (46 FR 13193, February 19, 1981) and by the Regulatory Flexibility Act (Pub. L. 96-354, September 30, 1980). This agenda reports the status of those regulations currently under review and gives A.I.D.'s plan for the issuance of proposed regulations during the next twelve months. It is expected that the information provided in this agenda will enable the public to be more aware of and more effectively participate in A.I.D.'s rulemaking process.

FOR FURTHER INFORMATION CONTACT:

General: For further information on the agenda or the review list, in general, contact: Mr. Fred D. Allen, Office of Information Resources Management, Agency for International Development, Washington, DC 20523, Telephone (703) 875-1573.

Specific: For further information about any particular item on the agenda, contact the individual listed as the contact for that item.

Regulatory Flexibility Act (RFA)

The Agency does not have any rulemaking activity that falls within the requirements of RFA and does not anticipate any during the next reporting period.

Dated: February 24, 1988.

R. T. Rollis, Jr.,

Assistant to the Administrator for Management.

AGENCY FOR INTERNATIONAL DEVELOPMENT (AID) — Proposed Rule Stage

2612. NONDISCRIMINATION IN FEDERALLY ASSISTED PROGRAMS OF THE AGENCY FOR INTERNATIONAL DEVELOPMENT — EFFECTUATION OF TITLE VI OF THE CIVIL RIGHTS ACT OF 1964

Legal Authority: 22 USC 2381

CFR Citation: 22 CFR 209

Legal Deadline: None.

Abstract: The regulation will address the problem of discrimination on the basis of race, color, or national origin in any program or activity receiving assistance from the Agency for International Development. The regulation provides that no person in the United States on the ground of race, color or national origin, be excluded from participation in, be denied the benefits of or be subjected to discrimination under any program or activity receiving Federal financial assistance from AID. The regulation provides procedures for 1) assuring that such discrimination does not occur and 2) effecting compliance. The Agency is not considering any alternatives for addressing the problem. There will be some minor costs in administering the regulation; there are potential benefits to individuals who might otherwise be discriminated against.

Timetable:

Action	Date	FR Cite
Next Action Undetermined		

Small Entity: No

Government Levels Affected: Local, State

Agency Contact: Leticia Peoples, Equal Opportunity Officer, Agency for International Development, Office of Equal Opportunity Programs (EOP), Room 1224 SA - 1, Washington, DC 20523, 202 663-1340

RIN: 0412-AA01

2613. NONDISCRIMINATION ON THE BASIS OF SEX IN EDUCATION PROGRAMS AND ACTIVITIES RECEIVING OR BENEFITTING FROM FEDERAL FINANCIAL ASSISTANCE

Legal Authority: 20 USC 1681 to 1683; 20 USC 1686

CFR Citation: 22 CFR 219, (New)

Legal Deadline: None.

Abstract: This regulation will address the problem of discrimination on the basis of sex in education programs and activities receiving or benefitting from financial assistance from the Agency for International Development. The regulation is intended to implement Title IX of the Education Amendments of 1972, as amended. The regulation provides procedures for 1) assuring that such discrimination does not occur and 2) effecting compliance. The Agency is not considering any alternatives for addressing the problem. There will be some minor costs in administering the regulation; there are potential benefits to individuals who might otherwise be discriminated against.

Timetable:

Action	Date	FR Cite
Next Action Undetermined		

Small Entity: No

Agency Contact: Leticia Peoples, Equal Opportunity Officer, Agency for International Development, Office of Equal Opportunity Programs (EOP), Room 1224 SA - 1, Washington, DC 20523, 202 663-1340

RIN: 0412-AA04

2614. DONATION OF AGRICULTURAL COMMODITIES/PRODUCTS TO ASSIST NEEDY PERSONS OVERSEAS (416 PROGRAM)

Legal Authority: 7 USC 1431; PL 97-253, Sec 110

CFR Citation: 22 CFR 210, (New)

Legal Deadline: None.

Abstract: This regulation sets forth provisions of the Agency for International Development (A.I.D.), acting as an Agent for the USDA/Commodity Credit Corporation (CCC), to carry out part of the responsibilities for selecting, approving,

administering and implementing the Section 416 program of the Agricultural Act of 1949, as amended. This program will assist needy persons overseas and reduce surplus stocks of dairy and wheat products in CCC inventory. The donation of commodities under this new authority will be coordinated with, but not replace, assistance provided under the Agricultural Trade Development and Assistance Act of 1954, as amended, Pub. L. 83-480. The Agency is not considering any alternatives for addressing the problem. There are some minor costs in administering the regulation. The potential benefits will go to needy persons overseas.

Timetable:

Action	Date	FR Cite
Interim Final Rule	05/24/84	49 FR 22024

Next Action Undetermined

Small Entity: No

Agency Contact: Jessie C. Vogler, Program Officer, Agency for International Development, Office of Food for Peace, Bureau for Food for Peace and Voluntary Assistance, Washington, DC 20523, 703 235-9193

RIN: 0412-AA05

2615. TRANSFER OF FOOD COMMODITIES FOR USE IN DISASTER RELIEF AND ECONOMIC DEVELOPMENT AND OTHER ASSISTANCE

Legal Authority: 7 USC 1705; 7 USC 1721 to 1723; 7 USC 1693

CFR Citation: 22 CFR 211

Legal Deadline: None.

Abstract: This regulation prescribes the terms and conditions governing the transfer of agricultural commodities to foreign governments, U.S. voluntary agencies, or intergovernmental organizations. The regulation is being reviewed to assess its current procedures and requirements with an intent to improve its effectiveness and efficiency. There will be internal administrative and operational costs. There are potential benefits to aid-receiving countries.

Timetable:

Action	Date	FR Cite
Begin Review	12/15/83	

Next Action Undetermined

Small Entity: No

Agency Contact: Jessie C. Vogler, Program Officer, Agency for International Development, Office of Food For Peace, Bureau For Food For Peace and Voluntary Assistance, Washington, DC 20523, 703 235-9193

RIN: 0412-AA06

[FR Doc. 88-5086 Filed 04-22-88; 8:45 am]

BILLING CODE 6116-01-T

VOL
53

ISS
79

PT
2

AP
25

1988

UMI

federal register

Monday
April 25, 1988

Part XVIII

Architectural and Transportation Barriers Compliance Board

Semiannual Regulatory Agenda

ARCHITECTURAL AND TRANSPORTATION BARRIERS COMPLIANCE BOARD (ATBCB)

ARCHITECTURAL AND TRANSPORTATION BARRIERS COMPLIANCE BOARD

36 CFR Ch. XI

Unified Agenda of Federal Regulations

AGENCY: Architectural and Transportation Barriers Compliance Board.

ACTION: Submission of Unified Agenda of Federal Regulations.

SUMMARY: The Architectural and Transportation Barriers Compliance Board submits the following agenda of proposed regulatory activities which may be conducted by the agency during the next twelve months. This regulatory agenda may be revised and/or refined by the agency during the coming months as a result of action taken by the Board. In addition to any regulatory actions, the Board may also consider issuing advisory standards and/or policy statements as part of its statutory responsibilities. When appropriate, these standards and policies will also be published in the **Federal Register**.

ADDRESS: U.S. Architectural and Transportation Barriers Compliance Board, 1111 18th Street, NW., Suite 501, Washington, DC 20036.

FOR FURTHER INFORMATION CONTACT: For information concerning Board regulations and proposed actions, contact Mr. Nicholas Chiarkas, General Counsel, 202/653-7834 (voice or TDD).

Thomas E. Harvey,

Chairperson, Architectural and Transportation Barriers Compliance Board.

ARCHITECTURAL AND TRANSPORTATION BARRIERS COMPLIANCE BOARD (ATBCB) — Final Rule Stage

2616. MINIMUM GUIDELINES AND REQUIREMENTS FOR ACCESSIBLE DESIGN

Significance: Agency Priority

Legal Authority: 29 USC 792(b)(7) Rehabilitation Act of 1973, as amended

CFR Citation: 36 CFR 1190

Legal Deadline: None.

Abstract: Specific provisions of the ATBCB Minimum Guidelines and Requirements for Accessible Design have been reserved until sufficient research information and/or field experience is obtained. At present the ATBCB is reviewing comments on the proposed rule to add provisions for leased facilities. In a separate notice of proposed rulemaking, the Board will propose the incorporation of certain technical specifications (including detectable warnings and signage) of the Uniform Federal Accessibility Standards and American National Standards Institute A117.1 (1986) standard into the ATBCB Minimum Guidelines and Requirements for Accessible Design.

Timetable:

ANSI/UFAS Technical Specifications
- NPRM 09/16/87 (52 FR 34955)
- NPRM Comment Period End 11/16/87

Leased Facilities
- NPRM 02/11/87 (52 FR 4352)
- NPRM Public Comment Period End 03/13/87
- Final Action 07/00/88

UFAS Technical Specifications
- Final Action ANSI 09/00/88

Small Entity: No

Additional Information: Phone number of agency contact is voice or TDD.

Government Levels Affected: Federal

Agency Contact: Mark W. Smith, General Attorney, Architectural and Transportation Barriers Compliance Board, 1111 18th Street, NW, Suite 500, Washington, DC 20036, 202 653-7834

RIN: 3014-AA00

2617. PRACTICE AND PROCEDURES FOR COMPLIANCE HEARINGS

Legal Authority: 29 USC 794 Rehabilitation Act of 1973, as amended

CFR Citation: 36 CFR 1150

Legal Deadline: None.

Abstract: The current regulation sets forth procedures to ensure compliance with standards issued under the Architectural Barriers Act of 1968, Pub. L. 90-480, as amended, 42 U.S.C. 4151 et seq. The Board has published an interim rule revising this regulation to provide a 180-day period for informally resolving complaints in place of the previous 90-day period. This interim rule is expected to be published as a final rule. The Board has also published a notice of proposed rulemaking to amend its regulations to allow a rebuttable presumption of jurisdiction in those cases in which jurisdictional information is not timely provided by the responsible persons or agencies.

Timetable:

Action	Date	FR Cite
Interim Final Rule with Request for Comment	05/22/86	51 FR 18788
Interim Final Rule Comment Period End	07/21/86	
NPRM	12/23/87	52 FR 48546
NPRM Comment Period End	02/22/88	

Next Action Undetermined

Small Entity: No

Agency Contact: Mr. Nicholas Chiarkas, General Counsel, Architectural and Transportation Barriers Compliance Board, 1111 18th Street, NW, Washington, DC 20036, 202 653-7834

RIN: 3014-AA03

2618. INFORMATION AVAILABILITY: PROCEDURES (36 CFR, PART 1120)

Legal Authority: 5 USC 552

CFR Citation: 36 CFR 1120, (Revision)

Legal Deadline: Statutory, April 25, 1987.

Abstract: This interim final rule amends the ATBCB's regulations to establish a schedule and system for collecting fees to recover certain direct costs associated with responding to Freedom of Information Act (FOIA) requests as required by the Freedom of Information Reform Act of 1986.

VOL 53 ISS 79 PT 2 APR 25 1988 UMI

ATBCB **Final Rule Stage**

Timetable:

Action	Date	FR Cite
Interim Final Rule	11/10/87	52 FR 43193
Final Action	06/00/88	

Small Entity: No

Agency Contact: Mark W. Smith, General Attorney, Architectural and Transportation Barriers Compliance Board, 1111 18th Street, NW, Washington, DC 20036, 202 653-7834

RIN: 3014-AA04

[FR Doc. 88-5087 Filed 04-22-88; 8:45 am]

BILLING CODE 8820-BP-T

VOL
53

ISS
79

PT
2

AP
25

1988

UMI

federal register

Monday
April 25, 1988

Part XIX

Commission on Civil Rights

Semiannual Regulatory Agenda

COMMISSION ON CIVIL RIGHTS (CCR)

COMMISSION ON CIVIL RIGHTS

45 CFR Ch. VII

Semiannual Agenda of Regulations

AGENCY: Commission on Civil Rights.

ACTION: Publication of semiannual agenda.

SUMMARY: This agenda announces the regulations the U.S. Commission on Civil Rights will have under development during the 6-month period from April 1, 1988 through September 30, 1988. The purpose for publishing this agenda is to give notice of any regulatory activity by the Commission in order to allow the public an opportunity to participate in the rulemaking process.

FOR FURTHER INFORMATION CONTACT:

General: For further information on the agenda in general, contact: William H. Gillers, Solicitor, U.S. Commission on Civil Rights, Room 606, Washington, DC 20425, (202) 376-8514.

Specific: For further information about any particular item on the agenda, contact the individual listed under that item.

SUPPLEMENTARY INFORMATION: In accordance with Executive Order 12291, Federal Regulation, and the Regulatory Flexibility Act (5 U.S.C. 605), executive agencies are required to publish in the **Federal Register** semiannual regulatory agendas in April and October of each year.

The regulations being considered by the Commission are not "major" rules within the meaning of E.O. 12291 and no Regulatory Impact Analysis is required. The Commission has determined that the regulations under consideration will not impose compliance costs or reporting burdens on the public; nor will the regulations have a significant economic impact on a substantial number of small entities. Accordingly, no Regulatory Analysis is required.

William H. Gillers,

Solicitor.

COMMISSION ON CIVIL RIGHTS (CCR) — Proposed Rule Stage

2619. IMPLEMENTATION OF FREEDOM OF INFORMATION REFORM ACT

Significance: Agency Priority

Legal Authority: 42 USC 1975 to 1975f; 5 USC 552

CFR Citation: 45 CFR 704.1, (Revision)

Legal Deadline: Statutory, April 25, 1987.

Abstract: The regulation implements the 1986 statutory amendments to the Freedom of Information Act (FOIA) (5 USC 552). The revised provisions modify the terms of exemption 7 and also establish new procedures regarding the charging and waiving of fees pursuant to a FOIA request.

Timetable:

Action	Date	FR Cite
NPRM	07/00/88	
NPRM Comment Period End	08/00/88	

Small Entity: No

Agency Contact: Willian H. Gillers, Solicitor, Commission on Civil Rights, 1121 Vermont Avenue, NW, Room 606, Washington, DC 20425, 202 376-8514

RIN: 3035-AA00

2620. IMPLEMENTATION OF REHABILITATION ACT OF 1973, PART 504-HANDICAPPED DISCRIMINATION PROHIBITION

Legal Authority: 29 USC 794

CFR Citation: 45 CFR 707

Legal Deadline: None.

Abstract: The proposed regulation provides for the implementation of Section 504 of the Rehabilitation Act of 1973, as amended (29 USC 794), which prohibits discrimination on the basis of handicap, as it applies to programs or activities conducted by the Commission.

Timetable:

Action	Date	FR Cite
NPRM	05/00/88	
NPRM Comment Period End	06/00/88	

Small Entity: No

Agency Contact: William J. Howard, General Counsel, Commission on Civil Rights, 1121 Vermont Avenue, NW, Room 600, Washington, DC 20425, 202 376-8351

RIN: 3035-AA01

[FR Doc. 88-5088 Filed 04-22-88; 8:45am]

BILLING CODE 6335-01-T

VOL 53 ISS 79 PT 2 AP 25 1988 UMI

federal register

Monday
April 25, 1988

Part XX

Environmental Protection Agency

Semiannual Regulatory Agenda

ENVIRONMENTAL PROTECTION AGENCY (EPA)

ENVIRONMENTAL PROTECTION AGENCY

40 CFR Ch. I

[FRL-3338-4]

Regulatory Agenda

AGENCY: Environmental Protection Agency (EPA).

ACTION: Notice.

SUMMARY: EPA revises the Regulatory Agenda semiannually, and it appears in the **Federal Register** each April and October. It provides specific information on the status of regulations that are under development, revision, and review at the Agency. The agenda is published to keep interested parties informed of the progress of EPA regulations.

ADDRESSES: If you want to be on the mailing list for future agendas, please call or write to Bridgette Dent, Regulation Management Branch, EPA, PM-223, Washington, DC 20460, (202) 382-5475.

If you have any suggestions for improving this publication, or need general information about the agenda, please call or write to Angela Tyler, Regulation Management Branch, EPA, PM-223, Washington, DC 20460, (202) 382-7205.

FOR FURTHER INFORMATION CONTACT: For specific information on any item in the agenda, please contact the person listed with each entry.

SUPPLEMENTARY INFORMATION:

Statutes Covered in the Agenda

Asbestos Hazard Emergency Response Act (AHERA)
Atomic Energy Act (AEA)
Clean Air Act (CAA)
Clean Water Act (CWA)
Comprehensive Environmental Response, Compensation, and Liability Act (CERCLA)
Federal Insecticide, Fungicide, and Rodenticide Act (FIFRA)
Federal Food, Drug, and Cosmetics Act (FFDCA)
Hazardous and Solid Waste Amendments (HSWA)
Marine, Protection, Research, and Sanctuaries Act (MPRSA)
Resource Conservation and Recovery Act (RCRA)
Safe Drinking Water Act (SDWA)
Superfund Amendments and Reauthorization Act (SARA)
Toxic Substances Control Act (TSCA)
Water Quality Act of 1987 (WQA)
General - Other Acts (including grant and procurement regulations that cut across several program areas)

Organization of the Agenda

The agenda is organized by statute, and in several cases it combines regulations with differing statutory authorities that have closely-related subject matter. For example, the Asbestos-in-Schools Inspection, Abatement, and Disposal regulation is written under AHERA, but appears with regulations under TSCA.

Within each statutory listing, the regulations are ordered numerically, by section number of the authorizing legislation. For example, all RCRA regulations under section 3001 appear before those under section 3006.

Within each statutory area the entries are further divided into four categories: (1) Prerule Stage; (2) Proposed Rule Stage; (3) Final Rule Stage; and (4) Completed Actions (regulations that EPA is deleting from the agenda because the Agency has completed, withdrawn, or postponed them indefinitely). Detailed information on each of these sections is presented below.

Appendix A includes a list of abbreviations of terms used in this document.

I. Prerulemakings

Prerulemaking actions include activities intended to determine whether or how to initiate rulemaking. These activities include anything that influences or leads to rulemaking, such as advance notices of proposed rulemaking, significant studies or analyses of the possible need for regulatory action, requests for public comment on the need for regulatory action, or important pre-regulatory policy proposals.

This section also includes existing EPA regulations that are now under review. The purpose of such reviews is to determine whether the Agency should revise the rule, rescind it, or leave it unchanged. When finished, the Agency will list these reviews in the completed section of the agenda. If EPA decides to revise or rescind the regulation, the action will appear in the proposed rule section of the next agenda, which will state the timetable for completing the revision or rescission.

For each regulation under review, the agenda provides the title, a short abstract, legal authority, CFR reference, any analysis EPA is preparing, contact person, and the schedule for completing the review. It also indicates the "review authority," which may be different from the regulation's statutory authority. EPA reviews regulations under various mandates, and some reviews satisfy more than one of these mandates. The principal mandates are:

Executive Order 12498 which is intended to establish annually the Administration's Regulatory Program. It defines priority activities that federal departments and agencies will work on during the upcoming year. Its purpose is to minimize duplication and conflict among regulatory activities and enhance public understanding of the Administration's regulatory objectives.

Executive Order 12291 (E.O. 12291) which establishes the general policy that federal departments and agencies should review their regulations to ensure that the costs of the regulations are justified by the benefits of the regulation.

The Regulatory Flexibility Act (RFA) which requires that federal departments and agencies review existing regulations that have a significant economic impact on a substantial number of small entities, including small businesses, small organizations, and small governments, at least once every ten years. EPA invites public comment regarding RFA issues on the list of regulations EPA is reviewing.

Reviews EPA has targeted under the RFA are identified by a "Yes" in the "small entity" category. When the Agency completes reviews of regulations with a significant impact on small entities, the agenda entry includes an abstract that announces the Agency's decision of whether to revise, rescind, or leave the regulation unchanged. This announcement complies with the RFA and EPA's July 16, 1981 plan (46 FR 36930) for reviewing regulations under the Act.

The Paperwork Reduction Act (PRA) which requires federal departments and agencies to review its information collection activities to assure that they need and will use the information and manage it efficiently. They must also

ensure that the information to be collected is of high quality, appropriate for its intended use, and does not already exist at EPA or at some other federal agency. In addition, the PRA requires agencies to review the cost of collecting the information, so that it will be held to a minimum for both the respondent and the agencies.

II. Proposed and Final Rules

EPA generally lists regulations in the agenda once they are within a year of proposal or final action. Very important regulations under development will usually appear even if the scheduled publication dates are more than a year away.

Proposed and final rules appear as: (a) Actions that will create new CFR parts, subparts, or subsections; or (b) actions that revise or amend already existing CFR parts, subparts, or subsections. The word "revision" will appear in parentheses after the title of each regulation undergoing revision. All regulations appearing in the agenda for the first time are marked with bullets (●).

This section includes all "significant" EPA regulations. Some are priority regulations under development that are subject to Executive Order 12498; or the Agency has designated for priority development or revision. These regulations are also subject to certain provisions of E.O. 12291, RFA, and PRA.

However, the listings exclude: (a) Specialized categories of actions (such as EPA approvals of State plans and other actions that do not apply nationally); and (b) routine actions (such as pesticide tolerances and minor amendments to existing rules).

For each proposed and final regulation, the agenda includes:

- Title
- Priority classification (if applicable)
- Legal authority
- CFR reference
- Legal deadline (if applicable)
- Short abstract
- Timetable of existing and scheduled actions
- Reference to small entity impacts (yes, no, or undetermined)
- Additional information (includes the FTS phone number for the Agency contact, the Start Action Request (SAR) number, which is assigned to the regulation for internal tracking purposes, and any other information that is not included in the abstract)
- Agency contact
- Analysis section (if the Agency is preparing a Regulatory Impact Analysis (RIA) and/or an RFA)

III. Completed Actions

These are actions that appeared in the last agenda, which EPA is deleting because they are completed or are no longer under consideration. Information on these regulations and reviews of regulations is less detailed than for those that are still under consideration. Generally, entries include: (1) An explanation of why the Agency is deleting the regulation from the agenda, or (2) the publication date and **Federal Register** citation of the final rule.

Dated: February 29, 1988.

Robert H. Wayland, III,

Deputy Assistant Administrator for Policy Planning and Evaluation.

Appendix A — (Abbreviations)

ANPRM - Advance Notice of Proposed Rulemaking
BAT - Best Available Technology
BCT - Best Conventional Technology
BOD - Biochemical Oxygen Demand
BPT - Best Practicable Technology
CA - Cooperative Agreements
CAG - Carcinogenic Assessment Group
CBOD - Carbonaceous Biochemical Oxygen Demand
CEQ - Council on Environmental Quality
CFR - Code of Federal Regulations
DOE - Department of Energy
EAF - Electric Arc Furnaces
FR - Federal Register
FTS - Federal Telecommunications System
HDE - Heavy-Duty Engine
HDT - Heavy-Duty Truck
HDV - Heavy-Duty Vehicle
ICS - Intermittent Control System
LDT - Light-Duty Truck
LDV - Light-Duty Vehicle
MCL - Maximum Contaminant Level
MCLG - Maximum Contaminant Level Goals
NEPA - National Environmental Policy Act
NESHAPS - National Emission Standards for Hazardous Air Pollutants
NPDES - National Pollutant Discharge Elimination System
NPDWR - National Primary Drinking Water Regulations
NPRM - Notice of Proposed Rulemaking
NRDC - Natural Resources Defense Council
NSO - Nonferrous Smelter Orders
NSPS - New Source Performance Standards
OAQPS - Office of Air Quality Planning and Standards
OPP - Office of Pesticide Programs
OPTS - Office of Pesticides and Toxic Substances
OSHA - Occupational Safety and Health Administration
PCB - Polychlorinated Biphenyls
POTW - Publicly Owned Treatment Works
PSD - Prevention of Significant Deterioration
PSES - Pretreatment Standards for Existing Sources
PSNS - Pretreatment Standards for New Sources
RFA - Regulatory Flexibility Act
RIA - Regulatory Impact Analysis
RIN - Regulation Identifier Number
RMCL - Recommended Maximum Contaminant Level
SAR - Start Action Request
SIC - Standard Industrial Code
SSC - State Superfund Contract
TSS - Total Suspended Solids
UIC - Underground Injection Control
USC - United States Code
VOC - Volatile Organic Chemicals

Federal Insecticide, Fungicide, and Rodenticide Act (FIFRA)—Prerule Stage

Sequence Number	Title	Regulation Identifier Number
2621	SAR No. 2406. Pesticide Applicator Certification Fees for EPA Administered Programs	2070-AB76

EPA

Federal Insecticide, Fungicide, and Rodenticide Act (FIFRA)—Proposed Rule Stage

Sequence Number	Title	Regulation Identifier Number
2622	SAR No. 2444. Procedures for Amending and Repealing Tolerances or Exemptions from Tolerances Under Section 408 and 409 of FFDCA	2070-AB78
2623	SAR No. 2317. Restricted Use Classification for Certain Active Ingredients Used in Termiticides	2070-AB53
2624	SAR No. 2351. Restricted Use Classification for Groundwater Contaminating Pesticides	2070-AB60
2625	SAR No. 2567. Registration Data Requirements for Pesticide Product Performance and Companion Pesticide Assessment Guidelines (Revision)	2070-AB82
2626	SAR No. 2337. Sale of Restricted Use Pesticides to Noncertified Persons	2070-AB48
2627	SAR No. 2446. Regulations on Certification of Pesticide Applicators (Revision)	2070-AB75
2628	SAR No. 2445. Experimental Use Permits (Revision)	2070-AB77
2629	SAR No. 1640. Worker Protection Standards for Agricultural Pesticides (Revision)	2070-AA49

Federal Insecticide, Fungicide, and Rodenticide Act (FIFRA)—Final Rule Stage

Sequence Number	Title	Regulation Identifier Number
2630	SAR No. 1964. Comprehensive Revision of Pesticide Registration and Classification Procedures (Revision)	2070-AA56
2631	SAR No. 2289. Labeling Requirements for Pesticides and Devices (Revision)	2070-AB46
2632	SAR No. 1703. FIFRA Good Laboratory Practice Standards (Revision)	2070-AB68
2633	SAR No. 2336. Reporting Requirements for Risk/Benefits Information	2070-AB50
2634	SAR No. 1747. Registration of Pesticide Producing Establishments (Revision)	2070-AA04
2635	SAR No. 2314. Pesticide Advertising for Unregistered Products	2070-AB47
2636	SAR No. 2554. Policy on Advertising Claims Made for Registered Products	2070-AB86
2637	SAR No. 2013. User Charges for Pesticide Registrations	2070-AB52

Toxic Substances Control Act (TSCA)—Proposed Rule Stage

Sequence Number	Title	Regulation Identifier Number
2638	SAR No. 2549. Asbestos-Containing Materials in Schools; Transport and Disposal Rule(Revision)	2070-AB67
2639	SAR No. 2555. Toxic Chemical "Peak Release" Reporting Rule (Revision)	2070-AB86
2640	Decisions on Test Rules: Proposed Rules	2070-AB07
2641	SAR No. 2563. SARA Section 110 Chemicals Generic Test Rule	2070-AB84
2642	SAR No. 1923. Follow-up Rules on Existing Chemicals	2070-AA58
2643	SAR No. 1976. Follow-up Rules on Non-5(e) New Chemicals	2070-AA59
2644	Chemical Specific Significant New Use Rules to Extend Provisions of Section 5(e) Orders	2070-AB27
2645	SAR No. 2247. Generic Significant New Use Rule for Acrylate Compounds	2070-AB56
2646	Rulemaking Concerning Certain Microbial Products ("Biotechnology")	2070-AB61
2647	SAR No. 2148. Nitrosamines in Metalworking Fluids	2070-AB09
2648	SAR No. 2146. Regulatory Investigation of Formaldehyde	2070-AB14
2649	SAR No. 2150. Polychlorinated Biphenyls (PCBs): Applications for Exemptions from the Ban on Manufacturing, Processing, and Distribution	2070-AB20
2650	SAR No. 2284. Regulatory Investigation of Chlorinated Solvents	2070-AB41
2651	SAR No. 2297. PCB Spill Cleanup Recordkeeping Rule	2070-AB45
2652	SAR No. 2560. Procedures and Criteria for Termination of Polychlorinated Biphenyl Disposal Permits	2070-AB81
2653	SAR No. 2550. PCB Notification and Manifesting Rule	2070-AB83

Toxic Substances Control Act (TSCA)—Final Rule Stage

Sequence Number	Title	Regulation Identifier Number
2654	SAR No. 2245. Negotiated Consent/Procedural Test Rule (Revision)	2070-AB30
2655	SAR No. 1886. TSCA Good Laboratory Practice Standards (Revision)	2070-AB65
2656	Decision on Test Rules: Final Rules	2070-AB94

EPA

Toxic Substances Control Act (TSCA)—Final Rule Stage—Continued

Sequence Number	Title	Regulation Identifier Number
2657	SAR No. 2250. General Regulations on Significant New Use Rules (SNURs) (Revision)	2070-AB26
2658	SAR No. 2375. Procedural Rule for Expedited New Chemical Follow-up	2070-AB67
2659	SAR No. 2562. Recodification of TSCA CFR Section 721	2070-AB85
2660	SAR No. 2561. Proposal to Exempt Certain Microorganisms from PMN Requirements under TSCA 5(h)(4)	2070-AB89
2661	SAR No. 2244. Polychlorinated Biphenyls (PCBs): Manufacturing, Processing, Distribution in Commerce, and Use Prohibitions; Exclusions and Use Authorizations (Revision)	2070-AB25
2662	SAR No. 2296. Action Concerning Commercial and Industrial Use of Asbestos	2070-AB29
2663	SAR No. 2447. PCBs in Electrical Transformers (Revision)	2070-AB74
2664	SAR No. 2178. Section 8 (a) Preliminary Assessment Information Rules	2070-AB06
2665	SAR No. 1139. Section 8(d) Health and Safety Data Reporting Rules	2070-AB11
2666	SAR No. 2129. TSCA Section 8(a) Comprehensive Assessment Information Rule (CAIR)	2070-AB13
2667	SAR No. 2324. User Fees for Processing PMNs	2070-AB54

Toxic Substances Control Act (TSCA)—Completed Actions

Sequence Number	Title	Regulation Identifier Number
2668	SAR No. 2404. SARA Section 313 Toxic Chemical Release Reporting Rule	2070-AB71
2669	SAR No. 2408. Asbestos-Containing Materials in Schools Rule	2070-AB44
2670	Restrictions on Disposal of Drained Electrical Equipment	2070-AB80

Clean Water Act (CWA)—Prerule Stage

Sequence Number	Title	Regulation Identifier Number
2671	SAR No. 2304. Future Effluent Guidelines -- Standards Initiatives	2040-AA90

Clean Water Act (CWA)—Proposed Rule Stage

Sequence Number	Title	Regulation Identifier Number
2672	SAR No. 1649. Effluent Guidelines for Offshore Oil and Gas Extraction Industry (Revision)	2040-AA12
2673	SAR No. 2600. Effluent Guidelines for Nonferrous Metals Forming (Revision)	2040-AB30
2674	SAR No. 2583. Effluent Guidelines for Nonferrous Metals Manufacturing (Phase II) (Revisions)	2040-AB31
2675	SAR No. 2473. Effluent Guidelines for Pesticides Chemicals	2040-AB32
2676	SAR No. 2395. Definition of "Waters of the United States"	2040-AB01
2677	SAR No. 2475. Water Quality Standards--Revision for Indian Tribes	2040-AB36
2678	SAR No. 2493. NPDES Regulatory Revisions	2040-AB38
2679	SAR No. 2525. Interpretation of Provisions of Section 304(1) of the CWA	2040-AB46
2680	SAR No. 2580. Procedural Rules for Class I Administrative Penalty Proceedings under the CWA	2040-AB49
2681	SAR No. 2587. Revisions to Regulations for Modification of Secondary Treatment Requirements for Municipal Discharge into Marine Waters	2040-AB29
2682	SAR No. 2200. NPDES Regulations: Stormwater Application Requirements (Revision)	2040-AA79
2683	SAR No. 2501. NPDES Permit Application Form 2C, Standard Form A, and Short Form A (Revision)	2040-AB39
2684	SAR No. 2162. Sewage Sludge Use and Disposal Regulations	2040-AA74
2685	SAR No. 2515. Citizen Suit Notice Regulation under the CWA	2040-AB50
2686	SAR No. 2189. Comprehensive Revisions to Ocean Dumping Regulations	2040-AA78
2687	SAR No. 2581. Underground Injection Control Program: Hazardous Waste Disposal Injection Restrictions; Effective Dates and Capacity Variances for Selected First Third Wastes	2040-AB47
2688	SAR No. 2342. General Pretreatment Regulations for Existing and New Sources	2040-AA98

EPA

Clean Water Act (CWA)—Final Rule Stage

Sequence Number	Title	Regulation Identifier Number
2689	SAR No. 2300. Guidelines for Classifying Ground Water under the EPA Ground Water Protection Strategy	2040-AA85
2690	SAR No. 1962. Secondary Treatment/Percent Removal Requirements for Combined Sewer Systems	2040-AB13
2691	SAR No. 2163. National Pollutant Discharge Elimination System Sewage Sludge Permit Regulations; State Sludge Management Program Requirements	2040-AA73
2692	SAR No. 2479. Water Quality Planning and Management Grants for Indian Tribes	2040-AB35
2693	SAR No. 1722. Simplifying Construction Grants Regulations (Revision)	2040-AA70
2694	SAR No. 2585. Comprehensive Construction Grant Regulation Revision	2040-AB25
2695	SAR No. 1427. Effluent Guidelines for Pharmaceuticals	2040-AA13
2696	SAR No. 1425. Effluent Guidelines for Gum and Wood (Revision)	2040-AA17
2697	SAR No. 2584. Effluent Guidelines for Ore Mining and Dressing (Placer Mining)	2040-AA65
2698	SAR No. 1410. Effluent Guidelines for Nonferrous Metals: (Phase I) (Revision)	2040-AA96
2699	SAR No. 2212. General Pretreatment Regulations: Response to PIRT (Revision)	2040-AA81
2700	SAR No. 1973. Section 404 State Program Regulations (Revision)	2030-AA00
2701	SAR No. 2140. Ocean Incineration Regulation (Revision)	2040-AA72
2702	Ocean Incineration Site Evaluation, Solicitation, and Designation	2040-AB28

Clean Water Act (CWA)—Completed Actions

Sequence Number	Title	Regulation Identifier Number
2703	SAR No. 2497. Water Quality Standards-Revision	2040-AB34
2704	SAR No. 1415. Effluent Guidelines for Organic Chemicals and Plastics and Synthetic Fibers	2040-AA05
2705	SAR No. 1910. Effluent Guidelines for Adhesives and Sealants	2040-AA30
2706	SAR No. 1969. Effluent Guidelines for Pulp, Paper, and Paperboard (PCB's) (Revision)	2040-AA63
2707	SAR No. 1409. Effluent Guidelines for Leather Tanning (Revision)	2040-AA91
2708	SAR No. 1438. Effluent Guidelines for Aluminum Forming (Revision)	2040-AB33
2709	SAR No. 1866. General Pretreatment Regulations: Removal Credits (Revision)	2040-AB02
2710	SAR No. 1579. Discharge of Oil (Revision)	2040-AA48

Atomic Energy Act (AEA)—Proposed Rule Stage

Sequence Number	Title	Regulation Identifier Number
2711	Environmental Standards for the Management and Disposal of Spent Nuclear Fuel, High-Level and Transuranic Radioactive Wastes	2060-AC30
2712	SAR No. 1727. Environmental Protection Standards for Low-Level Radioactive Waste	2060-AA04
2713	SAR No. 2073. Residual Radioactivity	2060-AB31

Atomic Energy Act (AEA)—Final Rule Stage

Sequence Number	Title	Regulation Identifier Number
2714	SAR No. 1162. Transuranium Elements	2060-AA01
2715	SAR No. 1525. Radiofrequency Radiation Guidance	2060-AA02
2716	SAR No. 1166. Groundwater Protection Standards for Inactive Uranium Tailing Sites	2060-AC03

EPA

Safe Drinking Water Act (SDWA)—Proposed Rule Stage

Sequence Number	Title	Regulation Identifier Number
2717	SAR No. 2489. Revision to Public Water System Supervision (PWSS) State Primacy Requirements	2040-AB26
2718	SAR No. 2426. Revisions to the Safe Drinking Water Act's, Underground Injection Control Regulations	2040-AB27
2719	SAR No. 1755. National Primary Drinking Water Regulations: Synthetic Organic Chemicals and Inorganic Chemicals, Monitoring for Unregulated Contaminants (Phase II, 40 Contaminants)	2040-AA55
2720	SAR No. 2281. National Primary Drinking Water Regulation: Radionuclides	2040-AA94
2721	SAR No. 2340. National Primary Drinking Water Regulations: Disinfection, Disinfectants and Disinfection By-Products (Revision)	2040-AA97
2722	SAR No. 2396. National Primary Drinking Water Regulations: Inorganic and Organic Compounds (Phase V/30 Contaminants)	2040-AB11
2723	National Primary Drinking Water Regulations: Lead and Copper	2040-AB51
2724	SAR No. 2381(PWSS); SAR No. 1972(UIC) Public Water Supply Supervision Program and Underground Injection Control Program: Administrative Enforcement Implementation Procedures	2040-AB07
2725	SAR No. 2378. Public Water System Supervision Program: Ban on Lead in Plumbing	2040-AB05

Safe Drinking Water Act (SDWA)—Final Rule Stage

Sequence Number	Title	Regulation Identifier Number
2726	SAR No. 2440. Indian Rule for the Wellhead Protection Program and Sole Source Aquifer Demonstration Program	2040-AB18
2727	SAR No. 2211. Underground Injection Control Program: Hazardous Waste Disposal Injection Restrictions; Amendments To Technical Requirements for Class I Hazardous Waste Injection Wells	2040-AB03
2728	SAR No. 2376. Criteria for Filtration and Disinfection of Surface Water and Primary Drinking Water Regulations for Microbiological Contaminants	2040-AB24
2729	SAR No. 2131. Underground Injection Control Program on Indian Lands	2040-AA76
2730	SAR No. 2383. SDWA Indian Primacy Regulations	2040-AB04
2731	SAR No. 2405. Criteria for Identifying Critical Aquifer Protection Areas	2040-AB23

Safe Drinking Water Act (SDWA)—Completed Actions

Sequence Number	Title	Regulation Identifier Number
2732	SAR No. 2377. National Primary Drinking Water Regulation: List of Contaminants That May Require Drinking Water Regulations	2040-AB12
2733	SAR No. 1756. Public Water Supply Supervision Program: General Public Notification Requirements and New Lead Public Notice	2040-AB08

Noise Control Act (NCA)—Final Rule Stage

Sequence Number	Title	Regulation Identifier Number
2734	SAR No. 2046. Withdrawal of Products from the Agency's Reports Identifying Major Noise Sources and Withdrawal of Proposed Rules	2060-AB24

EPA

Resource Conservation and Recovery Act (RCRA)—Prerule Stage

Sequence Number	Title	Regulation Identifier Number
2735	SAR No. 2494. Municipal Waste Combustor Ash Management	2050-AC24
2736	SAR No. 2449. Determination on Wastes from the Exploration, Development on Production of Crude Oil, Natural Gas, and Geothermal Energy	2050-AC08
2737	SAR No. 2434. Management of Used Oil	2050-AC17
2738	SAR No. 2572. Determination on Wastes from Combustion of Coal by Electric Utility Power Plants	2050-AC53
2739	SAR No. 2571. Determination on Solid Waste from Selected Metallic Ore Processing Operations	2050-AC54

Resource Conservation and Recovery Act (RCRA)—Proposed Rule Stage

Sequence Number	Title	Regulation Identifier Number
2740	SAR No. 2332. Mandatory Inspections of Hazardous Waste Management Facilities	2050-AB59
2741	SAR No. 2527. New Requirements for State Hazardous Waste Programs	2050-AC51
2742	SAR No. 2524. No-Migration Variance for Restricted Hazardous Waste Land Disposal	2050-AC56
2743	SAR NO. 2174 For further information contact the RCRA/Superfund Identification and Listing of Hazardous Wastes - Wood Preserving and Surface Protection Waste	2050-AC59
2744	SAR No. 2224. Solid Waste Disposal Facility Criteria	2050-AB21
2745	SAR No. 2507. Test Methods for Evaluating Solid Waste (Manual SW846) Incorporation by Reference and Mandatory Good Laboratory Practices	2050-AC32
2746	SAR No. 2510. Guideline for Federal Procurement for Retread Tires	2050-AC52
2747	SAR No. 2062. Identification of Hazardous Wastes by Toxicity Characteristic and Listing of Additional Organic Toxicants	2050-AA78
2748	SAR No. 2068. Sampling and Analysis Methods for Waste Testing	2050-AA82
2749	SAR No. Air Toxicity Characteristic for Hazardous Waste	2050-AC23
2750	SAR No. 2482. Concentration-Based Relisting of Wastes from Chlorinated Aliphatics	2050-AC30
2751	SAR No. 2483. Concentration-Based Relisting of Wastes from Explosives, Inorganic Chemicals, and Iron and Steel Industries	2050-AC31
2752	SAR No. 2080. Liners and Leak Detection for Hazardous Waste Land Disposal Units	2050-AA76
2753	SAR No. 2277. Groundwater Monitoring at Hazardous Waste Facilities	2050-AB20
2754	SAR No. 2303. Location Standards for Hazardous Waste Facilities	2050-AB67
2755	SAR No. 2487. Delay in the Closure Period for Hazardous Waste Management Facilities	2050-AB71
2756	SAR No. 2390. Corrective Action for Solid Waste Management Units (SWMUs) at Hazardous Waste Management Facilities	2050-AB60
2757	SAR No. 2391. Landfill, Surface Impoundment, and Waste Pile Closures for Hazardous Waste Management Facilities	2050-AB81
2758	SAR No. 2453. Emission Controls for Hazardous Waste Incinerators	2050-AB90
2759	SAR No. 2461. Land Disposal Restrictions for Soil and Debris Containing Hazardous Wastes	2050-AC03
2760	SAR No. 2439. Permitting Experimental Facilities Conducting Hazardous Waste Research	2050-AC04
2761	SAR No. 2452. Land Disposal Restrictions for First Third of Scheduled Wastes	2050-AC13
2762	SAR No. 2503. Corrective Action for Releases to Groundwater from Regulated Hazardous Waste Units	2050-AC28
2763	SAR No. 2522. Land Disposal Restriction for Second Third of Scheduled Wastes	2050-AC55
2764	SAR No. 2435. List (Phase 2) of Hazardous Constituents for Groundwater Monitoring	2050-AC05
2765	SAR No. 2158. Compliance Monitoring and Enforcement Requirements for State Hazardous Waste Management Programs	2050-AB01
2766	SAR No. 2544. Trial Burns for Existing Hazardous Waste Incinerators	2050-AC50
2767	SAR No. 2389. Mining Waste Management Under RCRA Subtitle D	2050-AB77
2768	SAR No. 2465. Underground Storage Tanks Containing Hazardous Substances- Financial Responsibility Requirements	2050-AC15

Resource Conservation and Recovery Act (RCRA)—Final Rule Stage

Sequence Number	Title	Regulation Identifier Number
2769	SAR No. 2226. Identification and Listing of Hazardous Wastes - Petroleum Refinery Primary Treatment Sludge	2050-AB70
2770	SAR No. 2157 For further information contact the RCRA/Superfund Identification and Listing of Hazardous Waste - Methyl Bromide	2050-AC60

EPA

Resource Conservation and Recovery Act (RCRA)—Final Rule Stage—Continued

Sequence Number	Title	Regulation Identifier Number
2771	SAR No. 2398. Changes to Interim Status and Permitted Facilities for Hazardous Waste Management; Procedures for Post-Closure Permitting	2050-AC29
2772	SAR No. 2078. Burning of Hazardous Waste in Boilers and Industrial Furnaces	2050-AA72
2773	SAR No. 2207. Disposal of Containerized Liquids in Hazardous Waste Landfills	2050-AB12
2774	SAR No. 2388. Double Liner and Leachate Collection Systems for Hazardous Waste Land Disposal Units	2050-AB76
2775	SAR No. 2436. Statistical Methods for Evaluating Groundwater Monitoring Data from Hazardous Waste Facilities	2050-AB92
2776	SAR No. 2460. Liability Requirements for Hazardous Waste Facilities - Other Instruments	2050-AC19
2777	SAR No. 1805. Permit Modifications for Hazardous Waste Management Facilities	2050-AC22
2778	SAR No. 2397. Permitting Mobile Hazardous Waste Treatment Units and Delisting Hazardous Wastes	2050-AC20
2779	SAR No. 2257. Guidelines for Content in Re-refined Oil Procured by the Federal Government	2050-AB53
2780	SAR No. 2433. Minimum Recovered Materials Content in Paper and Paper Products Procured by the Federal Government	2050-AC18
2781	SAR No. 2202, 2221, and 2256. Underground Storage Tanks - Technical Requirements	2050-AB19
2782	SAR No. 2255. Underground Storage Tanks Containing Petroleum - Financial Responsibility Requirements	2050-AB89
2783	SAR No. 2234. Underground Storage Tanks - State Program Approval	2050-AB31

Resource Conservation and Recovery Act (RCRA)—Completed Actions

Sequence Number	Title	Regulation Identifier Number
2784	Identification and Listing of Hazardous Wastes	2050-AB46
2785	SAR No. 1817. Hazardous Waste Miscellaneous Units	2050-AA23
2786	SAR No. 2273. Liability Requirements for Hazardous Waste Facilities - Corporate Guarantee	2050-AB47
2787	SAR No. 2187. Codification Rule for the 1984 RCRA Amendments	2050-AB58
2788	SAR No. 2011. Guideline for Recovered Materials Content in Paper Products Procured by the Federal Government	2050-AA68

Clean Air Act (CAA)—Prerule Stage

Sequence Number	Title	Regulation Identifier Number
2789	SAR No. 1004. Review of NAAQS for Nitrogen Dioxide	2060-AC06
2790	SAR No. 1001. Review of NAAQS for Carbon Monoxide	2060-AC07
2791	SAR No. 2387. NSPS: Coal Preparation Plants	2060-AB84
2792	SAR No. 2430. NSPS: Asphalt Processing and Asphalt Roofing Manufacturing Plants(Review)	2060-AC21
2793	SAR No. 2430. NSPS: Asphalt Processing and Asphalt Roofing Manufacturing Plants	2060-AC23
2794	SAR No. 2181. Decisions on Regulating Various Air Pollutants	2060-AB56
2795	SAR No. 1869. NESHAPS: Cadmium	2060-AB92
2796	SAR No. 2557. "Guidelines on Air Quality Models" (Revision)	2060-AC43
2797	SAR No. 2214. Fuel and Fuel Additives: Gasoline Lead Content (Revision)	2060-AB60
2798	SAR No. 2365. Fuel and Fuel Additive Health Emissions Effects Testing	2060-AC10
2799	SAR No. 2366. Diesel Fuel Quality standards	2060-AC11

Clean Air Act (CAA)—Proposed Rule Stage

Sequence Number	Title	Regulation Identifier Number
2800	SAR No. 1002. NAAQS for Sulfur Oxides (Revision)	2060-AA61
2801	SAR No. 1919. NAAQS: Lead	2060-AA95
2802	SAR No. 1920. NAAQS: Ozone	2060-AA96
2803	SAR No. 2577. Secondary NAAQS for Particulate Matter (Fine Particles)	2060-AC32
2804	SAR No. 2428. Federal Promulgation of State Implementation Plan to Protect Visibility	2060-AB82
2805	SAR No. 1119. NSPS: Perchloroethylene Dry Cleaning	2060-AA14
2806	SAR No. 1695. NSPS: Solvent Degreasing (111d)	2060-AA33

BEST COPY AVAILABLE

EPA

Clean Air Act (CAA)—Proposed Rule Stage—Continued

Sequence Number	Title	Regulation Identifier Number
2807	SAR No. 2164. NSPS: SOCMI Reactor Processes	2060-AB55
2808	SAR No. 2239. NSPS: Small Boilers	2060-AB95
2809	SAR No. 2424. NSPS: Municipal Waste Combustors	2060-AC26
2810	SAR No. 2535. NSPS: Municipal Landfills	2060-AC42
2811	SAR No. 1685. NESHAPS: Benzene in Coke Oven By-Product Plants	2060-AA42
2812	SAR No. 1686. NESHAPS: Coke Oven Emissions from Coke Oven Charging, Door Leaks, and Topside Leaks on Wet-Coal-Charged Batteries	2060-AA48
2813	SAR No. 1714. NESHAP: Asbestos (Revision)	2060-AB51
2814	SAR No. 2181. NESHAPS: Chromium	2060-AB83
2815	SAR No. 2386. NESHAP: Chromium--Industrial Cooling Towers	2060-AC12
2816	SAR No. 2386. NESHAP: Chromium--Electroplating	2060-AC14
2817	SAR No. 2363. Hazardous Organic NESHAP	2060-AC19
2818	SAR No. 2360. NESHAP: Perchloroethylene Dry Cleaning	2060-AC27
2819	SAR NO. 2484 NESHAP: Ethylene Oxide from Commercial Sterilization	2060-AC28
2820	SAR No. 1695. NESHAP: Organic Solvent Cleaning	2060-AC31
2821	SAR No. 2556. NESHAP: Benzene Reconsideration	2060-AC41
2822	SAR No. 2547. NESHAP: Radionuclides	2060-AC47
2823	SAR No. 2491. PSD Increments for PM10	2060-AC33
2824	SAR No. 2287. Hydrocarbon Standards for Light-Duty Trucks (Revision)	2060-AB85
2825	SAR No. 2384. Decision on Air Pollution Regulatory Strategies for the Gasoline Marketing Industry	2060-AC04
2826	SAR No. 1315. Trading and Banking of Heavy-duty Engine NOx and PM Emission Credits	2060-AC05
2827	SAR No. 2373. Test Procedures for Trap-Equipped Diesel Vehicles and Engines	2060-AC08
2828	SAR No. 2431. Nonconformance Penalties for 1991 through 1994 Model Year Emission Standards for Heavy-Duty Vehicles and Engines	2060-AC39
2829	SAR No. 2136. Emission Performance Warranty Regulations (Revision)	2060-AB53
2830	SAR No. 2215. Fuel and Fuel Additives: Preventative Action Program to Prevent Self-Serve Fuel Switching	2060-AB59
2831	SAR No. 2240. Treatment, Storage, and Disposal Facility Area Source Air Emissions - RCRA Standards	2060-AB94

Clean Air Act (CAA)—Final Rule Stage

Sequence Number	Title	Regulation Identifier Number
2832	SAR No. 2421. PSD Regulations for NOx	2060-AC24
2833	SAR No. 1845. Fugitive Emissions/Surface Coal Mines for Air Quality New Source Review	2060-AA68
2834	SAR No. 1010. NSPS: Solvent Degreasing	2060-AA12
2835	SAR No. 1618. NSPS: Synthetic Organic Chemical Industry: Air Oxidation Process	2060-AA30
2836	SAR No. 1733. NSPS: Distillation Operations	2060-AA35
2837	SAR No. 1736. NSPS: Petroleum Refinery, FCC Regenerators	2060-AA36
2838	SAR No. 1691. NSPS: Polymer and Resin Manufacture	2060-AA37
2839	SAR No. 2028. NSPS: Sewage Treatment Plants (Revision)	2060-AB05
2840	SAR No. 2044. NSPS: Automobile and Light-Duty Truck Coating Operations (Revision)	2060-AB22
2841	SAR No. 2083. NSPS: Fossil Fuel-Fired Steam Generators (Revision)	2060-AB29
2842	SAR No. 2186. NSPS: Cement Plants (Revision)	2060-AB38
2843	SAR No. 2237. NSPS: Polymeric Coating of Supporting Substrates	2060-AB67
2844	SAR No. 1696. NSPS: VOC Emissions from Petroleum Refinery Wastewater Systems	2060-AB81
2845	SAR No. 1928. NSPS: Magnetic Tape Manufacturing	2060-AB88
2846	SAR No. 2559. State Implementation Plans: Approval of Post -1987 Ozone and Carbon Monoxide Plan Revisions for Areas Not Attaining the National Ambient Air Quality Standards NAAQS	2060-AB96
2847	SAR No. 2386. NESHAP: Chromium--Comfort Cooling Towers	2060-AC13
2848	SAR No. 2543. Proposed Policy Statement: Alternative Rural Fugitive Dust Policy for PM10	2060-AC44
2849	SAR No. 2372. Stratospheric Ozone Protection Strategy	2060-AC09
2850	SAR No. 2112. Emission Standards and Test Procedures for Methanol-Fueled New Motor Vehicles	2060-AB28
2851	SAR No. 2318. Control of Excess Evaporative Emissions/Fuel Volatility	2060-AB89
2852	SAR No. 2416. Particulate Emission Standards for Certain 1987 and Later Model Year Light-Duty Diesel Trucks (Revision)	2060-AC18
2853	SAR No. 2143. Small-Volume Manufacturers Certification Procedure (Revision)	2060-AB54
2854	Amendments to Selective Enforcement Auditing Regulations	2060-AC34
2855	SAR No. 2145. Voluntary Aftermarket Parts Certification Regulations (Revision)	2060-AB58

EPA

Clean Air Act (CAA)—Completed Actions

Sequence Number	Title	Regulation Identifier Number
2856	SAR No. 2428. Federal Promulgation of State Implementation Plans to Protect Visibility	2060-AC20
2857	SAR No. 1615. NSPS: Rubber Products Industry-Tire Manufacturing	2060-AA24
2858	SAR No. 2075. NSPS: Industrial Boilers, S02	2060-AB33
2859	SAR No. 2236. NSPS: Surface Coating of Plastic Parts for Business Machines	2060-AB66
2860	SAR No. 2236. NSPS: New Residential Wood Heaters	2060-AB68
2861	SAR No. 2778. Requirements for Preparation, Adoption, and Submittal of Implementation Plans; Approval and Promulgation of Implementation Plans; Surface Coal Mines	2060-AC40
2862	SAR No. 1941. "Guideline on Air Quality Models" (Revision)	2060-AB13
2863	SAR No. 1317. Importation of Motor Vehicles and Motor Vehicle Engines (Revision)	2060-AA54
2864	SAR No. 2290. Removal of Lead from EPA Certification and Test Fuels (Revision)	2060-AB87
2865	SAR No. 2421. PSD Regulations for NOx	2060-AC29
2866	SAR No. 2289. Fuel Economy Test Procedures; Adjustment to Test Results to Account for Test Procedure Changes (light-duty trucks)	2060-AB86

Superfund (CERCLA)—Proposed Rule Stage

Sequence Number	Title	Regulation Identifier Number
2867	SAR No. 2336. Designation of the Extremely Hazardous Substances List as Hazardous Substances	2050-AB62
2868	SAR No. 2429. Reportable Quantities (RQs) for Releases Substances on the Extremely Hazardous Substances List	2050-AC14
2869	SAR No. 2411. Reporting Continuous Releases of Hazardous Substances	2050-AA46
2870	SAR No. 2394. Reporting Exemptions for Federally Permitted Releases of Hazardous Substances	2050-AB82
2871	SAR No. 2538. Planning and Implementing Superfund Off-Site Response Actions	2050-AC35
2872	SAR No. 2400. National Oil and Hazardous Substances Pollution Contingency Plan (NCP)	2050-AA75
2873	SAR No. 2566. Hazard Ranking System for Uncontrolled Hazardous Substance Releases	2050-AB73
2874	SAR No. 5358. National Priorities List for Uncontrolled Hazardous Waste Sites - Update 7	2050-AC16
2875	SAR No. 5357. National Priorities List for Uncontrolled Hazardous Waste Sites - RCRA Sites	2050-AC48
2876	SAR No. 5432. National Priorities List for Uncontrolled Hazardous Waste Sites - Federal Facility Sites	2050-AC57
2877	SAR No. 2455. Arbitration Procedures for Small Superfund Cost Recovery Claims	2050-AC36
2878	SAR No. 2498. Administrative Hearing Procedure for Superfund Claims	2050-AC26
2879	SAR No. 2427. Worker Protection Standards for Hazardous Waste Operations and Emergency Response	2050-AC12
2880	Emergency and Hazardous Chemical Inventory Forms and Community Right-to-Know Reporting Requirements	2050-AC34
2881	SAR No. 2511. Administrative Hearing Procedures for Class I Civil Penalties under CERCLA and the Emergency Planning Community Right to Know Act	2050-AC37

Superfund (CERCLA)—Final Rule Stage

Sequence Number	Title	Regulation Identifier Number
2882	SAR No. 2104. Reportable Quantities (RQs) for Releases of Potential Carcinogens and Other Hazardous Substances	2050-AAB0
2883	SAR No. 2335. Reportable Quantities (RQs) for Releases of Radionuclides	2050-AB60
2884	SAR No. 2459. Reportable Quantities (RQs) for Releases of Methyl Isocyanate (MIC) and Lead; Delisting of Ammonium Thiosulfate	2050-AC21
2885	SAR No. 5433. National Priorities List (NPL) for Uncontrolled Hazardous Wastes Sites - Update 5	2050-AC45
2886	SAR No. 5434. National Priorities List (NPL) for Uncontrolled Hazardous Wastes Sites - Update 6	2050-AC47
2887	SAR No. 2495. Citizen Awards for Information on Criminal Violations under Superfund	2050-AC38
2888	SAR No. 2564. Response Claims Procedures for the Hazardous Substances Superfund	2050-AA90
2889	SAR No. 2401. Technical Assistance Grants to Groups at National Priority List (NPL) Sites	2050-AC10
2890	SAR No. 2464. Reporting Hazardous Substances Activity When Transferring Federal Real Property	2050-AC00
2891	SAR No. 2409. Reimbursement of Local Governments for Emergency Response to Hazardous Substance Releases	2050-AC11
2892	SAR NO. 2419 Trade Secret Claims for Emergency Planning and Community Right-to-Know Information; Trade Secret Disclosures to Health Professionals	2050-AC27
2893	SAR NO. 2512 Administrative Hearing Procedures for Class II Penalties under CERCLA and Emergency Planning and Community Right to Know Act	2050-AC39

EPA

Superfund (CERCLA)—Completed Actions

Sequence Number	Title	Regulation Identifier Number
2894	SAR No. 2457. Withdrawal of Arbitration Procedures and Natural Resource Claims Procedures for the Hazardous Substance Superfund	2050-AC06
2895	SAR No. 2077. National Priorities List (NPL) for Uncontrolled Hazardous Wastes Sites - Updates 3 and 4	2050-AA79
2896	SAR No. 2412. Emergency and Hazardous Chemical Inventory Forms and Community Right to Know Reporting Requirements	2050-AB88

General—Proposed Rule Stage

Sequence Number	Title	Regulation Identifier Number
2897	SAR No. 2551. Environmental Protection Agency Acquisition Regulation (EPAAR); Submission of General Financial and Organizational Information, and Purchasing System Information by Offerors	2030-AA06
2898	SAR No. 2553. Contracting for Expert Services under the Superfund Amendment and Reauthorization Act (SARA) of 1986	2030-AA07
2899	SAR No. 2552. Amending EPA Acquisition Regulation Rules Regarding Disclosure and Use of Information in Proposals	2030-AA08
2900	SAR No. 2196. Denial or Restriction of Disposal Sites (Revision)	2040-AB20
2901	SAR No. 2195. Confidentiality Regulations: Special Rules Governing Certain Information Under FIFRA (Revision)	2020-AA06

General—Final Rule Stage

Sequence Number	Title	Regulation Identifier Number
2902	SAR No. 2410. Program Fraud Civil Remedies	2020-AA11
2903	SAR No. 1825. Regulations for the Federal Claims Collection Act	2020-AA01
2904	SAR No. 2218. Nondiscrimination on the Basis of Age in Programs Receiving Financial Assistant from the EPA (Revision)	2090-AA09
2905	SAR No. 2476. Superfund Assistance Program	2010-AA11
2906	SAR No. 2307. Notice Requirements for Citizen Suits under the SDWA	2020-AA10

General—Completed Actions

Sequence Number	Title	Regulation Identifier Number
2907	SAR No. 2415. Amending regulations implementing the Freedom of Information Reform Act of 1986	2020-AA12
2908	SAR No. 2415. Amending Regulations Implementing the Freedom of Information Reform Act of 1986	2040-AB37

ENVIRONMENTAL PROTECTION AGENCY (EPA) —Federal Insecticide, Fungicide, and Rodenticide Act (FIFRA)

Prerule Stage

2621. PESTICIDE APPLICATOR CERTIFICATION FEES FOR EPA ADMINISTERED PROGRAMS

Legal Authority: 31 USC 9701/FIFRA 4

CFR Citation: 40 CFR 171.12

Legal Deadline: None.

Abstract: This rule is intended to implement a program for assessing fees for certification and training of commercial and private applicators who apply restricted use pesticides. Fees will be collected in States with Federally-administered pesticide certification and training programs, and will cover the costs of administering such programs.

Timetable:

Action	Date	FR Cite
ANPRM	05/00/88	

Small Entity: Undetermined

EPA—FIFRA **Prerule Stage**

Additional Information: SAR No. 2406.

FTS:8-475-9580

Agency Contact: John MacDonald, Environmental Protection Agency, Pesticides and Toxic Substances, (TS-788), Washington, DC 20460, 202 475-9580

RIN: 2070-AB76

ENVIRONMENTAL PROTECTION AGENCY (EPA) —Federal Insecticide, Fungicide, and Rodenticide Act (FIFRA) — Proposed Rule Stage

2622. PROCEDURES FOR AMENDING AND REPEALING TOLERANCES OR EXEMPTIONS FROM TOLERANCES UNDER SECTION 408 AND 409 OF FFDCA

Significance: Regulatory Program

Legal Authority: 21 USC 346a/FFDCA 408; 21 USC 348/FFDCA 409

CFR Citation: 40 CFR 180

Legal Deadline: None.

Abstract: This regulation will set forth procedures by which food additive tolerances, required by section 409 of the Federal Food, Drug and Cosmetic Act (FFDCA), may be amended or revoked. It may include revisions to FIFRA section 3 and FFDCA section 408 regulations to make them consistent with the new regulations.

Timetable:

Action	Date	FR Cite
NPRM	04/00/88	

Small Entity: Undetermined

Additional Information: SAR No. 2444.

FTS:8-557-7700

Agency Contact: Ferial Bishop, Branch Chief, Registration Support and Emergency Response, Environmental Protection Agency, Pesticides and Toxic Substances, (TS-788), Washington, DC 20460, 703 557-7700

RIN: 2070-AB78

2623. RESTRICTED USE CLASSIFICATION FOR CERTAIN ACTIVE INGREDIENTS USED IN TERMITICIDES

Legal Authority: 7 USC 136a /FIFRA 3

CFR Citation: 40 CFR 162.31

Legal Deadline: None.

Abstract: FIFRA requires that pesticides be classified for either general use or restricted to trained, certified pesticide applicators. This rule would classify certain active ingredients in termiticides for restricted use based on the hazards of misuse. Classification for restricted use permits the continued use of certain pesticides which, if used without restrictions, may have adverse effects on human health and the environment.

Timetable:

Action	Date	FR Cite
NPRM	00/00/00	

Small Entity: No

Additional Information: SAR No. 2317.

FTS: 8-557-5096

Agency Contact: James Roelofs, Environmental Protection Agency, Pesticides and Toxic Substances, (TS-767C), Washington, D.C. 20460, 703 557-0064

RIN: 2070-AB53

2624. RESTRICTED USE CLASSIFICATION FOR GROUNDWATER CONTAMINATING PESTICIDES

Significance: Regulatory Program

Legal Authority: 7 USC 136a /FIFRA 3; 7 USC 136d /FIFRA 6; 7 USC 136w /FIFRA 25

CFR Citation: 40 CFR 162.30

Legal Deadline: None.

Abstract: This rule will provide a scheme for identifying pesticides which may pose an unacceptable hazard because of the potential to leach into groundwater. The Agency will propose criteria for classify classifying such pesticides for restricted use. Restricted use pesticides generally may be applied only by state certified applicators.

Timetable:

Action	Date	FR Cite
NPRM	05/00/88	

Small Entity: No

Additional Information: SAR No. 2351.

FTS: 8-557-3942

Agency Contact: David Alexander, Environmental Protection Agency, Pesticides and Toxic Substances, (TS-767c), Washington, DC 20460, 202 557-3942

RIN: 2070-AB60

2625. REGISTRATION DATA REQUIREMENTS FOR PESTICIDE PRODUCT PERFORMANCE AND COMPANION PESTICIDE ASSESSMENT GUIDELINES (REVISION)

Legal Authority: 7 USC 136a /FIFRA 3; 7 USC 136w/FIFRA 25

CFR Citation: 40 CFR 158.160

Legal Deadline: None.

Abstract: The objective in revising the regulations is to make explicit the Agency's requirement of pesticide producers to submit quantitative data on the yield/quality enhancing performance of their pesticides as compared to alternative pesticides. These data will improve the quality and timeliness of benefit analyses the Agency uses in making risk/benefit decisions to regulate pesticides under the Federal Insecticide, Fungicide, and Rodenticide Act (FIFRA). The companion revised guidelines will provide protocols and methodologies for conducting the studies necessary to produce acceptable comparative performance data. Registrants might experience very minor cost increases to register pesticide products. The benefit would be substantial in the form of better and more uniform data on pesticide product performance, for use by Agency analysts and others.

Timetable:

Action	Date	FR Cite
NPRM	09/00/88	

Small Entity: Undetermined

Additional Information: SAR No. 2567.

FTS:8-557-3691

Agency Contact: Bernard A. Schneider, Environmental Protection Agency, Pesticides and Toxic Substances, (TS-

768c), Washington, DC 20460, 703 557-3691

RIN: 2070-AB82

2626. SALE OF RESTRICTED USE PESTICIDES TO NONCERTIFIED PERSONS

Legal Authority: 7 USC 136b /FIFRA 4; 7 USC 136j /FIFRA 12; 7 USC 136w /FIFRA 25

CFR Citation: 40 CFR 162

Legal Deadline: None.

Abstract: This action is intended to develop regulations to allow the sale of restricted use pesticides to persons who are not certified under special circumstances as set forth by Congress in 1978. Regulatory development will be coordinated with the review of state plans under FIFRA Section 4 to determine both need and compatibility with State authorities and programs.

Timetable:

Action	Date	FR Cite
NPRM	04/00/88	

Small Entity: Undetermined

Additional Information: SAR No. 2337.

FTS: 8-382-3949

Agency Contact: Connie Musgrove, Environmental Protection Agency, Pesticides and Toxic Substances, (TS-788), Washington, D.C. 20460, 202 475-9583

RIN: 2070-AB48

2627. REGULATIONS ON CERTIFICATION OF PESTICIDE APPLICATORS (REVISION)

Legal Authority: 7 USC 136a to b/FIFRA 4; 7 USC 136w /FIFRA 25

CFR Citation: 40 CFR 171

Legal Deadline: None.

Abstract: This action is intended to revise existing regulations on certification of pesticide applicators. The current standards and requirements may need to be updated to clarify definitions and to reflect changes in technology and current needs in State programs.

Timetable:

Action	Date	FR Cite
NPRM	09/00/88	

Small Entity: No

Additional Information: SAR No. 2446.

FTS:382-3847

Agency Contact: Maureen Lydon, Environmental Protection Agency, Pesticides and Toxic Substances, (TS-788), Washington, DC 20460, 202 382-3847

RIN: 2070-AB75

2628. EXPERIMENTAL USE PERMITS (REVISION)

Significance: Regulatory Program

Legal Authority: 7 USC 136 /FIFRA 4

CFR Citation: 40 CFR 172

Legal Deadline: None.

Abstract: This proposed revision will amend the existing regulations (40 CFR 172) pertaining to Experimental Use Permits (EUPs) to incorporate the policies set forth in the Office of Science and Technology Policy, which were published in the Federal Register on June 26, 1986 (51 FR 23313). The existing regulations exempt prospective registrants from the requirement of obtaining an EUP if they propose to conduct tests which will involve less than 10 acres of land and less than one surface acre of water. The proposed revision would require them to notify EPA if tests are to involve genetically altered or manipulated microorganisms or nonindigenous pathogenic microorganisms and will describe certain data required to be submitted at the time of notification so that the Agency may determine whether an EUP will be required.

Timetable:

Action	Date	FR Cite
NPRM	12/00/88	

Small Entity: Undetermined

Additional Information: SAR No. 2445.

FTS:8-557-8196

Agency Contact: Henry Jacoby, Environmental Protection Agency, Pesticides and Toxic Substances, (TS-769C), Washington, DC 20460, 703 557-8196

RIN: 2070-AB77

2629. WORKER PROTECTION STANDARDS FOR AGRICULTURAL PESTICIDES (REVISION)

Significance: Regulatory Program

Legal Authority: 7 USC 136a /FIFRA 3; 7 USC 136d /FIFRA 6; 7 USC 136w /FIFRA 25

CFR Citation: 40 CFR 156; 40 CFR 170

Legal Deadline: None.

Abstract: The Worker Protection Standards for Agricultural Pesticides will be revised to reflect new and developing requirements for the registration, reregistration and use of pesticides. The current standards need to be revised in order to increase the scope of coverage, update the provisions, clarify definitions and responsibilities, and improve implementation, compliance, and enforcement.

Timetable:

Action	Date	FR Cite
ANPRM	08/15/84	49 FR 32605
NPRM	05/00/88	

Small Entity: Yes

Additional Information: SAR No. 1640.

FTS: 8-557-7666.

Analysis: Regulatory Impact Analysis; Regulatory Flexibility Analysis

Agency Contact: Patricia Breslin, Environmental Protection Agency, Pesticides and Toxic Substances, (TS-757C), Washington, DC 20460, 703 557-7666

RIN: 2070-AA49

ENVIRONMENTAL PROTECTION AGENCY (EPA) —Federal Insecticide, Fungicide, and Rodenticide Act (FIFRA)

Final Rule Stage

2630. COMPREHENSIVE REVISION OF PESTICIDE REGISTRATION AND CLASSIFICATION PROCEDURES (REVISION)

Significance: Regulatory Program

Legal Authority: 7 USC 136(a) / FIFRA 3

CFR Citation: 40 CFR 162

Legal Deadline: None.

Abstract: These regulations will revise procedures and requirements for the registration, reregistration and classification of pesticide products as restricted use. The revisions are intended to improve the clarity of the existing rule and to integrate into the procedures aspects of the registration process, such as the Registration Standards program, which were initiated since the original regulation was promulgated.

Timetable:

Action	Date	FR Cite
ANPRM	12/26/79	44 FR 76311
NPRM	09/26/84	49 FR 37915
Final Action	04/00/88	

Small Entity: No

Additional Information: SAR No. 1964.

FTS: 8-557-0944.

Analysis: RIA

Agency Contact: Jean Frane, Environmental Protection Agency, Pesticides and Toxic Substances, (TS-767C), Washington, DC 20460, 703 557-0944

RIN: 2070-AA56

2631. LABELING REQUIREMENTS FOR PESTICIDES AND DEVICES (REVISION)

Significance: Regulatory Program

Legal Authority: 7 USC 136a /FIFRA 3; 7 USC 136d /FIFRA 6; 7 USC 136w /FIFRA 25

CFR Citation: 40 CFR 156; 40 CFR 167

Legal Deadline: None.

Abstract: This regulation will revise and expand the labeling requirements for pesticide products and devices. The revisions will provide for pesticide producers a comprehensive description of pesticide labeling requirements, and will result in better quality pesticide labeling for users.

Timetable:

Action	Date	FR Cite
NPRM	09/26/84	49 FR 37959
Final Action	12/00/88	

Small Entity: No

Additional Information: SAR No. 2289.

FTS: 8-557-0944.

Analysis: RIA

Agency Contact: Jean Frane, Environmental Protection Agency, Pesticides and Toxic Substances, (TS-767c), Washington, DC 20460, 703 557-0944

RIN: 2070-AB46

2632. FIFRA GOOD LABORATORY PRACTICE STANDARDS (REVISION)

Legal Authority: 7 USC 136a /FIFRA 3; 7 USC 136w /FIFRA 25; 21 USC 346a; 21 USC 348; 21 USC 371

CFR Citation: 40 CFR 160

Legal Deadline: None.

Abstract: This action will expand the scope of the FIFRA Good Laboratory Practices (GLPs) to include 1) additional types of testing not covered by the current 40 CFR 160 and certain changes from the recent FDA GLP regulation amendments. Specifically, environmental fate, certain other chemistry tests, ecological effects and efficacy (as required by 40 CFR 158.160) are among the types of tests to be added.

Timetable:

Action	Date	FR Cite
NPRM	12/28/87	52 FR 48920
Final Action	11/00/88	

Small Entity: No

Additional Information: SAR No. 1703.

FTS:8-382-7825

Agency Contact: Dan Helfgott, Environmental Protection Agency, Pesticides and Toxic Substances, EN-342, Washington, DC 20460, 202 382-7825

RIN: 2070-AB68

2633. REPORTING REQUIREMENTS FOR RISK/BENEFITS INFORMATION

Legal Authority: 7 USC 136 /FIFRA 6

CFR Citation: 40 CFR 153

Legal Deadline: None.

Abstract: FIFRA Section 6(a)(2) requires that registrants report to EPA additional factual information regarding unreasonable adverse effects of their products. In September 1985, EPA revised its 1979 section 6 (a)(2) enforcement policy by publishing a notice which expanded upon the types of factual information which must be reported and established uniform timeframes for compliance. In response to comments received on this notice, the Agency is revising it to clarify the types of information which registrants must report to EPA.

Timetable:

Enforcement Policy
- Final Action 07/12/79 (44 FR 40716)

Interpretive Rule
- Final Action 08/23/78 (43 FR 37611)

Rule and Policy Statement
- NPRM 08/23/78 (43 FR 37611)
- Final Action 09/20/85 (50 FR 38115)
- Final Action 04/00/88

Small Entity: No

Additional Information: SAR No. 2336.

FTS: 8-557-3942

Agency Contact: David Alexander, Environmental Protection Agency, Pesticides and Toxic Substances, (TS-767C), Washington, D.C. 20460, 703 557-3942

RIN: 2070-AB50

2634. REGISTRATION OF PESTICIDE PRODUCING ESTABLISHMENTS (REVISION)

Legal Authority: 7 USC 136e /FIFRA 7; 7 USC 136w /FIFRA 25

CFR Citation: 40 CFR 167

Legal Deadline: None.

Abstract: This regulation amends the existing regulations on registering establishments that produce pesticides. The regulation implements the Congressional mandate to register establishments that produce active ingredients used in pesticides.

Timetable:

Action	Date	FR Cite
NPRM	07/09/80	45 FR 46100
NPRM	03/25/87	52 FR 9504
Final Action	04/00/88	

Small Entity: No

Additional Information: SAR No. 1747.

FTS: 8-382-7825.

EPA—FIFRA **Final Rule Stage**

Agency Contact: David Hannemann, Environmental Protection Agency, Pesticides and Toxic Substances, (EN-342), Washington, DC 20460, 202 382-7825

RIN: 2070-AA04

2635. PESTICIDE ADVERTISING FOR UNREGISTERED PRODUCTS

Legal Authority: 7 USC 136j /FIFRA 12; 7 USC 136w /FIFRA 25

CFR Citation: 40 CFR 153.12; 40 CFR 166.7

Legal Deadline: None.

Abstract: EPA is proposing to treat as unlawful under FIFRA section 12 or restrict the advertising of certain uses of pesticides authorized for experimental use, emergency use, and special local needs. The proposed policy will also address advertising of other unregistered pesticides and pesticide use patterns. This policy is intended to prevent misuse of pesticides which could cause unreasonable adverse effects on humans or the environment.

Timetable:

Interpretive Rulemaking
Final Action 07/00/88
Policy Statement
NPRM 07/03/86 (51 FR 24393)

Small Entity: No

Additional Information: SAR No. 2314.

FTS: 8-557-9089

Agency Contact: Franklin Gee, Environmental Protection Agency, Pesticides and Toxic Substances, (TS-767C), Washington, D.C. 20460, 703 557-9089

RIN: 2070-AB47

2636. ● POLICY ON ADVERTISING CLAIMS MADE FOR REGISTERED PRODUCTS

Legal Authority: 7 USC 136j /FIFRA 12

CFR Citation: 40 CFR 153

Legal Deadline: None.

Abstract: This rule interprets FIFRA section 12(a)(1)(B) which provides for the regulation of claims made when advertising registered pesticide products. The rule will establish standards for acceptable advertising claims with respect to claims made about the safety of the product.

Timetable:

Action	Date	FR Cite
Final Action	08/00/88	

Small Entity: Undetermined

Additional Information: SAR No. 2554.

FTS:8-557-7749

Agency Contact: Vivian Prunier, Environmental Protection Agency, Pesticides and Toxic Substances, (767c), 202 557-7749

RIN: 2070-AB88

2637. USER CHARGES FOR PESTICIDE REGISTRATIONS

Significance: Regulatory Program

Legal Authority: 31 USC 9701 /Independent Offices Appropriation Act of 1952

CFR Citation: 40 CFR 152 (u); 40 CFR 172

Legal Deadline: None.

Abstract: Under the authority of the Independent Offices Appropriation Act (IOAA) of 1952, the Agency is proposing to establish user fees for processing pesticide registration actions which constitute special services to registrants. The Agency is also considering establishing fees for other special services such as re-registration. The proposed registration fee system would place all or part of the burden of payment for the Agency's services on those who benefit from the service rather than on the Agency.

Timetable:

Action	Date	FR Cite
NPRM	11/26/86	51 FR 42974
Final Action	04/00/88	

Small Entity: No

Additional Information: SAR No. 2013.

FTS: 8-557-1128

Agency Contact: Ken Wetzel, Environmental Protection Agency, Pesticides and Toxic Substances, (TS-757C), Washington, D.C. 20460, 703 557-1128

RIN: 2070-AB52

ENVIRONMENTAL PROTECTION AGENCY (EPA) —Toxic Substances Control Act (TSCA)

Proposed Rule Stage

2638. ● ASBESTOS-CONTAINING MATERIALS IN SCHOOLS; TRANSPORT AND DISPOSAL RULE(REVISION)

Legal Authority: 15 USC 2643 /AHERA

CFR Citation: 40 CFR 763

Legal Deadline: Statutory, October 17, 1987. School asbestos transport and disposal regulations were originally scheduled to be developed and promulgated by October 17, 1987, under a revision to the National Emission Standard for Hazardous Air Pollutants (NESHAP).

Abstract: The Asbestos Hazard Emergency Response Act (AHERA) requires that EPA promulgate regulations which prescribe standards for transportation and disposal of asbestos-containing waste material from schools to protect human health and the environment. Such regulations shall include provisions related to the manner in which transportation vehicles are loaded and unloaded and will assure the physical integrity of containers of asbestos- containing waste material. The management will complete all required regulatory subsections under AHERA.

Timetable:

Action	Date	FR Cite
ANPRM	08/12/86	51 FR 28913
NPRM	04/00/88	
Final Action	05/00/88	

Small Entity: Undetermined

Additional Information: SAR No. 2549.

FTS:8-382-3949

Agency Contact: Stephen Schanamann, Environmental Protection Agency, Pesticides and Toxic Substances, (TS-788A), 202 382-3949

RIN: 2070-AB87

2639. ● TOXIC CHEMICAL "PEAK RELEASE" REPORTING RULE (REVISION)

Legal Authority: 42 USC 11013 /SARA 313

CFR Citation: 40 CFR 372

Legal Deadline: None.

Abstract: This action proposes to add a "peak release" reporting element to the Toxic Chemical Release Inventory Reporting Form. Reporting of releases is of annual aggregate releases to all environmental media. The proposal addresses this issue of obtaining a more specific indication of this frequency and/or duration of releases in order to better assess risks to health and the environment.

Timetable:

Action	Date	FR Cite
NPRM	06/00/88	
Final Action	00/00/00	

Small Entity: Yes

Additional Information: SAR No. 2555.

FTS:8-382-3667

Agency Contact: Michael Shapiro, Environmental Protection Agency, Pesticides and Toxic Substances, (TS-779), 202 382-3667

RIN: 2070-AB86

2640. DECISIONS ON TEST RULES: PROPOSED RULES

Legal Authority: 15 USC 2603 / TSCA 4

CFR Citation: 40 CFR 799

Legal Deadline: Statutory. 12-month statutory deadline for ITC-designated chemicals

Abstract: The following table lists chemicals for which EPA will initiate rulemaking to require testing, obtain testing through negotiated consent orders, or publish a notice which provides the reasons for not doing so. The list includes chemicals which have been designated for priority testing consideration by the Interagency Testing Committee as well as those chemicals (i.e., recommended and non-designated chemicals) for which the 12-month statutory requirement does not apply. The list also includes chemicals or categories of chemicals which have been identified for testing consideration by other EPA program offices and through EPA review processes.

Timetable:

Acid Blue 40 (ITC List 21) (SAR 5385)
NPRM 04/00/89
Acid Blue 45 (ITC list 21) (SAR 5386)
NPRM 04/00/89
Acrylates (SAR 5368)
NPRM 02/00/89
Anthroquinone Dyes (SAR 5367)
NPRM 12/00/89
Aryl Phosphates (ITC List 2)
NPRM 12/00/89
Aryl Phosphates (ITC List 2)(SAR 5369)
ANPRM 12/29/83 (48 FR 57452)
C.I. Disperse Blue 79 (ITC List 19)(SAR 5370)
NPRM 12/00/89
Diisodecyl Phenyl Phosphate (ITC List 17) (SAR 5371)
NPRM 09/00/88
Disperse Blue 56 (ITC List 21) (SAR 5387)
NPRM 04/00/89
Disperse Red 60 (ITC List 21) (SAR 5388)
NPRM 04/00/89
Environmental Monitoring Test Rule (SAR 5372)
NPRM 09/00/88
Ethylbenzene (ITC List 20) (SAR 5373)
NPRM 00/00/00
Ethylene Glycol Ethers Category (SAR 5374)
NPRM 00/00/00
Glycidols (ITC List 3)
NPRM 10/00/88
Glycidols (ITC List 3) (SAR 5375)
ANPRM 12/30/83 (48 FR 57562)
Isopropanol (ITC List 19) (SAR 5376)
NPRM 04/00/88
Methyl Ethyl Ketoxime (ITC List 19) (SAR 5377)
NPRM 09/00/88
Methylolurea (ITC List 12)
NPRM 12/00/89
Methylolurea (ITC List 12) (SAR 5379)
ANPRM 05/21/84 (49 FR 21371)
Nonylphenol (SAR 5380)
NPRM 06/00/88
Oleyamine (Pharmocokinetics (ITC List 13) (SAR 5381)
NPRM 09/00/88
Phenylenediamines (ITC List 6)
NPRM 01/06/86 (51 FR 472)
NPRM 01/14/88 (53 FR 913)
Phenylenediamines (ITC List 6) (SAR 5382)
ANPRM 01/08/82 (47 FR 973)
Tributyl Phosphate (ITC List 19) (SAR 5383)
NPRM 11/12/87 (52 FR 43346)
1,1,1-Tricholourethane (muta/neuro) (ITC List 2) (SAR 5384)
NPRM 01/00/89

Small Entity: No

Additional Information: SEE SAR NUMBER LISTED NEXT TO EACH ACTION

FTS: 8-475-8130.

Agency Contact: Gary Timm, Environmental Protection Agency, Pesticides and Toxic Substances, (TS-788), Washington, DC 20460, 202 475-8130

RIN: 2070-AB07

2641. SARA SECTION 110 CHEMICALS GENERIC TEST RULE

Significance: Regulatory Program

Legal Authority: 15 USC 2603 / TSCA 4

CFR Citation: 40 CFR 790

Legal Deadline: None.

Abstract: The regulation will set forth the policies and procedures to be used in using the TSCA Section 4 testing authority to obtain toxicity and chemical fate testing to fill certain data needs identified in toxicity profiles of chemicals prepared pursuant to Section 110 of the Superfund Amendments and Reauthorization Act.

Timetable:

Action	Date	FR Cite
NPRM	09/00/88	
Final Action	00/00/00	

Small Entity: No

Additional Information: SAR No. 2563.

FTS:8-475-8130

Agency Contact: Gary E. Timm, Environmental Protection Agency, Pesticides and Toxic Substances, (TS-788), Washington, DC 20460, 202 475-8130

RIN: 2070-AB84

2642. FOLLOW-UP RULES ON EXISTING CHEMICALS

Legal Authority: 15 USC 2604 / TSCA 5; 15 USC 2607 / TSCA 8

CFR Citation: 40 CFR 704; 40 CFR 721

Legal Deadline: None.

Abstract: EPA has instituted a program to monitor the commercial development of existing chemicals of concern and/or to gather information to support risk assessments on such chemicals. As these chemicals are identified, EPA will initiate rulemakings under TSCA section 5 and/or 8 to require reporting by the manufacturers, importers and/or processors of these chemicals. Individual proposed or final rules will be published on at least the chemicals listed below.

Timetable:

Epibromohydrin
NPRM 01/02/87 (52 FR 107)
Final Action 10/27/87 (52 FR 41296)
Ethylenediaminetetra (Methylenephosphonic Acid) and Its Salts
NPRM 04/00/88
Hexafluoropropylene Oxide
NPRM 01/02/87 (52 FR 107)
Final Action 10/27/87 (52 FR 41296)
Trichlorobutylene Oxide
NPRM 01/02/87 (52 FR 107)
Final Action 10/27/87 (52 FR 41296)
1-Chloro-2-bromoethane
NPRM 09/04/87 (52 FR 33606)
Final Action 00/00/00

Small Entity: No

Additional Information: SAR No. 1923.

FTS: 8-382-3436.

Agency Contact: Frank Kover, Environmental Protection Agency, Pesticides and Toxic Substances, (TS-778), Washington, DC 20460, 202 382-3436

RIN: 2070-AA58

2643. FOLLOW-UP RULES ON NON-5(E) NEW CHEMICALS

Legal Authority: 15 USC 2604 / TSCA 5; 15 USC 2607 / TSCA 8

CFR Citation: 40 CFR 704; 40 CFR 721

Legal Deadline: None.

Abstract: EPA has instituted a program to follow the commercial development of selected new chemicals that have completed premanufacture notice review. EPA will issue rules on new chemicals of concern as they are identified to require follow-up reporting under TSCA Section 5 or 8, by the manufacturers and processors of the chemicals.

Timetable:

Alkyl, Sulfonic Acid, Ammonium Salt (84-1056)
NPRM 06/11/86 (51 FR 21199)
Final Action 00/00/00

Dinitrophenyl Azo-2,4-Diamino-5-Methoxybenzene Derivatives
NPRM 10/25/84 (49 FR 42960)
Final Action 00/00/00

Diphenyl-2,4,6-Trimethylbenzol Phosphine Oxide (87-585)
NPRM 01/00/89

1-Decanimino-N-Decyl-N-Methyl-N-Oxide (86-556)
NPRM 12/08/87 (52 FR 46496)
Final Action 00/00/00

Small Entity: No

Additional Information: SAR No. 1976.

FTS: 8-382-3771.

Agency Contact: John Bowser, Environmental Protection Agency, Pesticides and Toxic Substances, (TS-794), Washington, D.C. 20460, 202 382-3771

RIN: 2070-AA59

2644. CHEMICAL SPECIFIC SIGNIFICANT NEW USE RULES TO EXTEND PROVISIONS OF SECTION 5(E) ORDERS

Legal Authority: 15 USC 2604 /TSCA 5

CFR Citation: 40 CFR 721

Legal Deadline: None.

Abstract: When the Agency determines that in the absence of adequate safety data, the uncontrolled manufacture, import, processing, distribution, use or disposal of a PMN substance may present an unreasonable risk, it may issue a proposed order under section 5(e) to limit the aforementioned activities. However, section 5(e) orders apply only to the PMN submitter. Once the substance is placed on the TSCA chemical inventory, other persons are free to manufacture, import, or process the substance without controls. Therefore, EPA by rule, designates manufacture, import, or processing of the substances for use without the specified controls as a significant new use. These SNURs ensure that the original submitter is not at a competitive disadvantage and that no uncontrolled activities will occur without an opportunity for prior Agency review.

Timetable:

(84-274) (see additional information for title) (SAR 5407)
NPRM 08/26/85 (50 FR 34505)
Final Action 00/00/00

(85-1176) (see additional information for title) (SAR 5404)
NPRM 00/00/00

(85-544) (see additional information for title) (SAR 5408)
NPRM 00/00/00

(85-564) (see additional information for title) (SAR 5405)
NPRM 00/00/00

(85-703) (see additional information for title) (SAR 5406)
NPRM 06/23/86 (51 FR 22831)
Final Action 00/00/00

Alkyl Aryl Phosphine (83-1023) (SAR 5413)
NPRM 09/20/84 (49 FR 36880)
Final Action 00/00/00

Alkyl Glycoether Acrylic Acid Derivative (84-27) (SAR 5414)
NPRM 12/24/84 (49 FR 49868)
Final Action 00/00/00

Brominated Aryl Alkyl Ether, Ethylated Amino (SAR 5415)
NPRM (83-906/908/909/910) 09/28/84 (49 FR 38303)
Final Action 00/00/00

Certain Acrylate and Methacrylate Chemicals (SAR 5416)
NPRM 03/27/85 (50 FR 12046)
Final Action 00/00/00

Certain Acrylate Chemicals (84-341-344) (SAR 5417)
NPRM 04/04/86 (51 FR 11591)
Final Action 00/00/00

Methylammonium n-Methyldithiocarbamate (84-1042) (SAR 5418)
NPRM 03/24/86 (51 FR 10027)
Final Action 00/00/00

N,N,N'N'-Tetrakis (oxiranylmethyl) (SAR 5420)
NPRM (84-7) 01/13/86 (51 FR 1396)
Final Action 00/00/00

Polyol Polyacrylate (85-718) (SAR 5419)
NPRM 00/00/00

Substituted Benzene, Halogenated (85-612) (SAR 5421)
NPRM 00/00/00

Substituted Benzene, Halogenated (84-560 and 84-704) (SAR 5422)
NPRM 03/18/86 (51 FR 9221)
Final Action 00/00/00

Substituted Bromothiophene (83-769) (SAR 5423)
NPRM 09/28/84 (49 FR 38310)
Final Action 00/00/00

Substituted Methylpyridine (83-237)(SAR 5424)
NPRM 02/06/84 (49 FR 4390)
Final Action 00/00/00

Substituted Polyester Resin (85-395)(SAR 5425)
NPRM 00/00/00

Substituted Tetrafluoro Alkanes (84-105/106/107) (SAR 5426)
NPRM 03/21/85 (50 FR 11384)
Final Action 00/00/00

2-Butenedioic Acid(z), (85-543) (SAR 5427)
NPRM 00/00/00

2-Propenoic Acid-3-Dimethylamino)-2,2-Dimethyl-Propyl (SAR 5428)
NPRM 00/00/00

2-Propenoic Acid, (85-546) (SAR 5429)
NPRM 00/00/00

2-Propenoic Acid, 3,3,5-Trimethylcyclohexylester(85-547) SAR 5430
NPRM 00/00/00

Small Entity: No

Additional Information: SEE SAR NUMBER LISTED NEXT TO EACH ACTION

FTS:8-382-3771.

(85-1176) Alcohols, C1-4, ethers with Polyethylent-polypropylene glycol mono (2-aminopropyl) ether, polymer with maleic anhydride and trimethylolpropane triacrylate

(85-564) Isocyanic acid, polymethylene-polyphenylene ester, polymer with 1,1-methylenebis ;4-isocyanatobenzene; 2-hydroxyethyl acrylate-blocked

(85-703) Poly 2-hydroelectric melamine, polymers with 5-isocyana to 1-isocyanatomethyl-1,3,3-trimethylcyclohexane 2-hydroxyethyl acrylate-blocked

(84-274) Poly(oxy-1,4-butanediyl)-alpha-(1-oxo-2-propenyl) -omega-{(1-oxo-2-propenyl)-oxy}

(85-544) 2-Propenoic Acid, 2-Methyl-7,7,9-Trimethyl-4,13-dioxo- 3,14-Dioxo-t,12-Diazahexadecane,1,16-Diyl Ester

Agency Contact: John Bowser, Environmental Protection Agency, Pesticides and Toxic Substances, (TS-794), Washington, DC 20460, 202 382-3771

RIN: 2070-AB27

2645. GENERIC SIGNIFICANT NEW USE RULE FOR ACRYLATE COMPOUNDS

Legal Authority: 15 USC 2694 /TSCA

CFR Citation: 40 CFR 721

Legal Deadline: None.

Abstract: The generic acrylate significant new use rule may require any person who proposes to manufacture, import, or process an acrylate/methacrylate subject to the category definition contained within the proposed rule to notify EPA at least 90 days in advance of the initiation of a significant new use. The significant new use rule will apply to a subset of acrylates and methacrylates added to the inventory after the effective date of the rule. It will no longer be necessary to issue routine 5(e) orders or chemical specific SNURs for those acrylates covered by the rule.

Timetable:

Action	Date	FR Cite
NPRM	00/00/00	

Small Entity: Undetermined

Additional Information: SAR No. 2247.

FTS: 8-382-3779

Agency Contact: Lynda Priddy, Environmental Protection Agency, Pesticides and Toxic Substances, (TS-794), Washington, D.C. 20460, 202 382-3969

RIN: 2070-AB56

2646. RULEMAKING CONCERNING CERTAIN MICROBIAL PRODUCTS ("BIOTECHNOLOGY")

Significance: Regulatory Program

Legal Authority: 15 USC 2604 /TSCA 5; 15 USC 2607 /TSCA 8

CFR Citation: 40 CFR 704; 40 CFR 720; 40 CFR 721

Legal Deadline: None.

Abstract: Under the authority of the Toxic Substances Control Act, the agency is proposing two separate regulatory actions for manufacturers, importers, and processors of certain microbial products of biotechnology. Under section 5, the Agency is proposing to amend its definition of "small quantities solely for research and development" contained in the Premanufacture Notification (PMN) Rule, thereby requiring persons to submit PMNs prior to testing new microorganisms in the environment. This amendment will require reporting for new microorganisms and will establish a special notification mechanism for experimental releases of microorganisms. EPA also is proposing significant new use notification requirements under section 5(a)(2), which would ensure that EPA will receive for review notices of large scale releases of other microorganisms developed for significant new uses, and will review small-scale environmental releases, possibly with assistance from environmental biosafety committees (EBCs), peer review committees to be sponsored by researchers and accredited by EPA. In addition, the Agency may be proposing (SEE ABSTRACT CONTINUED UNDER THE ADDITIONAL INFORMATION SECTION)

Timetable:

Action	Date	FR Cite
NPRM	07/00/88	
Final Action	00/00/00	

Small Entity: Undetermined

Additional Information: ABSTRACT CONT: section 8(a) reporting requirements for persons who are using microorganisms in the requirements. The primary objective of these actions is to ensure uses of microorganisms in the environment do not affect human health and the environmental in unforeseen and possible harmful ways.

SAR No. 2325 (SNUR for Certain Biotech Products); 2326 (PMN for Certain Biotech Products); 2327 (8(a) for Certain Biotech Products)

FTS:8-382-3856

Analysis: Regulatory Impact Analysis

Agency Contact: Jane Rissler, Environmental Protection Agency, Pesticides and Toxic Substances, TS-794, Washington, DC 20460, 202 382-3856

RIN: 2070-AB61

2647. NITROSAMINES IN METALWORKING FLUIDS

Significance: Regulatory Program

Legal Authority: 15 USC 2605 / TSCA 6

CFR Citation: 40 CFR 747

Legal Deadline: None.

Abstract: The formulation of water-based metalworking fluids with nitrite in combination with alkanolamines may present an unreasonable risk to machinists due to the formulation of nitrosamines, particularly n-nitrosodiethanolamine (NDELA). Recent studies indicate that NDELA is a potent animal carcinogen. EPA may either propose to prohibit the intentional addition of inorganic nitrites to water-containing metalworking fluids that contain amines, refer occupational risks to the Occupational Safety and Health Administration under section 9(a) of TSCA, or initiate other actions.

Timetable:

Action	Date	FR Cite
ANPRM	01/23/84	49 FR 2767

Next Action Undetermined

Small Entity: Yes

Additional Information: SAR No. 2149.

FTS: 8-382-3945.

Analysis: RFA; RIA

Agency Contact: Joseph DeSantis, Environmental Protection Agency, Pesticides and Toxic Substances, (TS-794), Washington, DC 20460, 202 382-3945

RIN: 2070-AB09

2648. REGULATORY INVESTIGATION OF FORMALDEHYDE

Significance: Regulatory Program

Legal Authority: 15 USC 2605 / TSCA 6; 15 USC 2608 / TSCA 9

CFR Citation: 40 CFR 765

Legal Deadline: None.

Abstract: As described in the Federal Register on May 23, 1984, the Agency has been investigating regulatory options for the reduction of three categories of exposure to formaldehyde: 1) residents exposed to formaldehyde emissions from wood products used in the construction of manufactured homes: 2) similarly exposed residents of conventional homes: 3) apparel manufacture employees exposed to formaldehyde released from treated

fabrics. Because OSHA proposed a standard in December 1985 that applies to all occupational exposure, EPA has terminated its investigation with respect to apparel manufacturing employees. Investigation of risks from exposure to formaldehyde emissions from wood products is being conducted in consultation with HUD and CPSC. This investigation may lead to the initiation of various control alternatives, including section 9 referral to other agencies and/ or section 6 regulations.

Timetable:

Action	Date	FR Cite
ANPRM	05/23/84	49 FR 21870
Section 9(d) and Notice of Termination for Apparel Workers	03/19/86	51 FR 9469
Section 9 Report, NPRM, or Statement of No Unreasonable Risk Regarding Wood Products	05/00/89	

Small Entity: Undetermined

Additional Information: SAR No. 2146.

FTS: 8-382-3945.

Analysis: Regulatory Impact Analysis

Agency Contact: Joseph DeSantis, Environmental Protection Agency, Pesticides and Toxic Substances, (TS-794), Washington, DC 20460, 202 382-3945

RIN: 2070-AB14

2649. POLYCHLORINATED BIPHENYLS (PCBS): APPLICATIONS FOR EXEMPTIONS FROM THE BAN ON MANUFACTURING, PROCESSING, AND DISTRIBUTION

Legal Authority: 5 USC 556 / TSCA 6(e)(3)(B)

CFR Citation: 40 CFR 761

Legal Deadline: None.

Abstract: Section 6(e)(3)(b) of TSCA provides that the Administrator may grant, by rule, exemptions from the prohibitions on the manufacture, processing and distribution in commerce of PCBs upon finding (1) that granting the exemption will not pose an unreasonable risk of injury to health or the environment, and (2) that good faith efforts have been made to develop a PCB substitute which does not pose an unreasonable risk of injury to health or the environment.

Timetable:

Action	Date	FR Cite
NPRM	04/00/88	
Final Action	00/00/00	

Small Entity: No

Additional Information: SAR No. 2150.

FTS: 8-382-3935.

Agency Contact: Martin Halper, Environmental Protection Agency, Pesticides and Toxic Substances, (TS-798), Washington, DC 20460, 202 382-3866

RIN: 2070-AB20

2650. REGULATORY INVESTIGATION OF CHLORINATED SOLVENTS

Significance: Regulatory Program

Legal Authority: 15 USC 2605 / TSCA 6; 15 USC 2608 / TSCA 9

CFR Citation: 40 CFR 754

Legal Deadline: None.

Abstract: EPA, in consultation with the Consumer Product Safety Commission, Occupational Safety and Health Administration and Food and Drug Administration, is developing a comprehensive and integrated strategy for a regulatory investigation of methylene chloride and five other chlorinated solvents. In some cases, these chlorinated solvents are competitive and can be easily substituted for each other in a number of uses. The integrated effort is being conducted to reach general agreement on the risks associated with the solvents and to avoid ineffective risk management actions that may occur due to solvent switching or pollutant transfer among media which could be caused by piecemeal regulation. Data are being gathered for six solvents (methylene chloride, perchloroethylene, trichloroethylene, methyl chloroform, carbon tetrachloride, and CFC-113) and their potential substitutes. This regulatory investigation is focused on four major use categories: dry cleaning, metal degreasing, paint stripping and aerosol application. The investigation will determine whether coordinated regulatory controls are needed to eliminate or reduce exposure to these solvents.

Timetable:

Action	Date	FR Cite
ANPRM	10/17/85	50 FR 42037
NPRM	09/00/88	

Small Entity: Undetermined

Additional Information: SAR No. 2284.

FTS: 8-382-3945.

Analysis: Regulatory Impact Analysis

Agency Contact: Joseph DeSantis, Environmental Protection Agency, Pesticides and Toxic Substances, (TS-794), Washington, DC 20460, 202 382-3945

RIN: 2070-AB41

2651. PCB SPILL CLEANUP RECORDKEEPING RULE

Legal Authority: 15 USC 2605(e)(3)(B) / TSCA 6(e)

CFR Citation: 40 CFR 761

Legal Deadline: None.

Abstract: This regulation will require parties responsible for PCB spill clean up to maintain records of the cleanup. The information required to be included in the records will likely be the same as that required in the PCB spills cleanup policy. The recordkeeping requirements will facilitate verification of PCB spill cleanup.

Timetable:

Action	Date	FR Cite
NPRM	09/00/88	
Policy Statement NPRM 04/02/87 (52 FR 10688)		

Small Entity: No

Additional Information: SAR No. 2297.

FTS: 382-3866.

Agency Contact: Martin Halper, Environmental Protection Agency, Pesticides and Toxic Substances, (TS-798), Washington, DC 20460, 202 382-3866

RIN: 2070-AB45

2652. PROCEDURES AND CRITERIA FOR TERMINATION OF POLYCHLORINATED BIPHENYL DISPOSAL PERMITS

Legal Authority: 15 USC 2605/TSCA 6; 5 USC 556 et seq

CFR Citation: 40 CFR 761

Legal Deadline: None.

Abstract: Under section 6(e) of TSCA, the Agency is considering establishing uniform procedures and criteria for the revocation of TSCA disposal permits. The regulation would establish uniform revocation procedures and criteria and thereby ensure fairness in permit revocation proceedings.

Timetable:

Action	Date	FR Cite
NPRM	09/00/88	

Small Entity: Undetermined

Additional Information: SAR No. 2560.

FTS:8-382-3866

Agency Contact: Martin Halper, Environmental Protection Agency, Pesticides and Toxic Substances, (TS-798), Washington, DC 20460, 202 382-3866

RIN: 2070-AB61

2653. PCB NOTIFICATION AND MANIFESTING RULE

Significance: Regulatory Program

Legal Authority: 15 USC 2605/TSCA 6; 15 USC 2607/TSCA 8

CFR Citation: 40 CFR 761

Legal Deadline: None.

Abstract: Under the authority of TSCA, EPA is considering rulemaking which would require that all PCB wastes be manifested for disposal. The purposes of the regulation would be 1) to obtain information about handlers and storers of PCB wastes; and 2) to track shipment of wastes containing PCBs. Issues still under consideration are the scope of the generator's obligation to notify, and whether to exclude small quantities of wastes.

Timetable:

Action	Date	FR Cite
NPRM	09/00/88	

Small Entity: Undetermined

Additional Information: SAR No. 2550.

FTS:8-382-3866

Agency Contact: Martin Halper, Environmental Protection Agency, Pesticides and Toxic Substances, (TS-798), Washington, DC 20460, 202 382-3866

RIN: 2070-AB63

ENVIRONMENTAL PROTECTION AGENCY (EPA) —Toxic Substances Control Act (TSCA)

Final Rule Stage

2654. NEGOTIATED CONSENT/PROCEDURAL TEST RULE (REVISION)

Legal Authority: 15 USC 2603/TSCA 4

CFR Citation: 40 CFR 790

Legal Deadline: None.

Abstract: This amends the test rule development and exemptions procedural rule published October 10, 1984 (49 FR 39776) to allow for rulemaking to be conducted in a single phase (i.e., a proposed rule and a final rule covering both the effects for which testing is necessary and the testing methodology) and adds consent orders as a means of obtaining test data required under Section 4 of TSCA. In addition, this rule will simplify the procedures governing the development and implementation of testing requirements under 2-phase rulemaking, and amend the current procedures governing modification of test standards and schedules for tests required under test rules and testing consent agreements.

Timetable:

Action	Date	FR Cite
Interim Final Rule	05/17/85	50 FR 20652
Interim Final Rule	06/30/86	51 FR 23706
Final Action	12/00/88	

Small Entity: No

Additional Information: SAR No. 2245.

FTS:8-475-8130.

Agency Contact: Gary Timm, Environmental Protection Agency, Pesticides and Toxic Substances, (TS-777), Washington, DC 20460, 202 475-8130

RIN: 2070-AB30

2655. TSCA GOOD LABORATORY PRACTICE STANDARDS (REVISION)

Legal Authority: 15 USC 2603 /TSCA 4

CFR Citation: 40 CFR 792

Legal Deadline: None.

Abstract: This action would expand the scope of the existing rule to include: 1) additional types of testing not covered by the current 40 CFR 792, 2) TSCA section 4 consent agreements, 3) certain changes in the FDA GLP regulation amendment.

Timetable:

Action	Date	FR Cite
NPRM	12/28/87	52 FR 48933
Final Action	11/00/88	

Small Entity: No

Additional Information: SAR No. 1886.

FTS:8-382-7825

Agency Contact: Dan Helfgott, Environmental Protection Agency, Pesticides and Toxic Substances, EN-342, 202 382-7825

RIN: 2070-AB65

2656. ● DECISION ON TEST RULES: FINAL RULES

Legal Authority: 15 USC 2603 /TSCA 4

CFR Citation: 40 CFR 799

Legal Deadline: None.

Abstract: The following table lists chemicals for which EPA has issued proposed test rules and will take final action under TSCA section 4. The Agency defines final action as promulgation of a test rule or withdrawal of a proposed test rule. (See also Decisions on Test Rules: Proposed Rules under RIN: 2070-AB07.)

Timetable:

Alkyl Phthalates (Enviro)(ITC List 1)(SAR 5365)
- Final Action 06/00/88

Anilines (ITC List 4) (SAR 5366)
- ANPRM 01/02/84 (49 FR 108)
- Final Action 04/00/88

Cumene (ITC List 15) (SAR 5390)
- NPRM 05/15/87 (52 FR 7854)
- Final Action 05/00/88

Cyclohexane (ITC List 18) (SAR 5391)
- NPRM 05/20/87 (52 FR 19096)

Cyclohexane(ITC List 18) (SAR 5391)
- Final Action 06/00/88

Diethylene glycol butyl ether acrylate (ITC List 13) (SAR 5392)
ANPRM 11/19/84 (49 FR 45606)
NPRM 04/04/86 (51 FR 27880)
Final Action 05/00/88
Hexafluoropropylene Oxide (ITC List 2) (SAR 5395)
Final Action 04/00/89
Hexafluoropropylene Oxide (ITC List 2) (SAR 5395)
NPRM 12/30/83 (48 FR 57686)
Mercaptobenzoethiazole (ITC List 15) (SAR 5396)
NPRM 11/06/87 (52 FR 53160)
Final Action 07/00/88
Methylcyclopentane (ITC List 16) (SAR 5397)
NPRM 05/15/87 (52 FR 17854)
Final Action 02/05/88 (53 FR 3450)
Methyltert-butyl ether (ITC List 19)(SAR 5378)
Final Action 04/00/88
Octamethylcyclotetrasiloxane (ITC List 15) (SAR 5398)
NPRM 10/30/85 (50 FR 45123)
Final Action 09/00/88
Oleylamine (Test Standards) (ITC List 13) (SAR 5399)
NPRM 08/24/87 (52 FR 31862)
Final Action 04/00/88
OSW Generic Test Rule (SAR 5400)
NPRM 05/29/87 (52 FR 20336)
Final Action 01/14/88 (53 FR 911)
Pentabromoethylebenzene (ITC List 15) (SAR 5401)
NPRM 11/13/85 (50 FR 46785)
Final Action 04/00/88
Triethylene glycol monomethyl, monoethyl (SAR 5402)
NPRM 05/15/86 (51 FR 17883)
Final Action 04/00/88
Vinylidene Chloride (SAR 5403)
NPRM 08/12/86 (51 FR 28840)
Final Action 00/00/00
2,6 Di-tert-butylphenol (ITC List 18)(SAR 5394)
NPRM 06/25/87 (52 FR 23862)
Final Action 04/00/89

Small Entity: No

Additional Information: SEE SAR NUMBER LISTED NEXT TO EACH ACTION

FTS:8-475-8130

Agency Contact: Gary Timm, Environmental Protection Agency, Pesticides and Toxic Substances, (TS-788), 202 475-8130

RIN: 2070-AB94

2657. GENERAL REGULATIONS ON SIGNIFICANT NEW USE RULES (SNURS) (REVISION)

Legal Authority: 15 USC 2604 /TSCA 5

CFR Citation: 40 CFR 721

Legal Deadline: None.

Abstract: Subpart A of part 721 of 40 CFR contains general provisions for Significant New Use Rules (SNURs). The Agency has received comments requesting that the general provisions be modified to revise its hazard communication provisions to make them more compatible with OSHA's Hazard Communication Standard; and to allow manufacturers and processors to seek Agency approval, outside the context of a PMN submission, for risk management measures which are equivalent to those described in a SNUR. Based on comments, EPA has proposed revisions to the general provisions for SNURs.

Timetable:

Action	Date	FR Cite
NPRM	04/22/86	51 FR 15104
Final Action	04/00/88	

Small Entity: No

Additional Information: SAR No. 2250.

FTS:8-382-3771.

Agency Contact: John Bowser/Andrew Cherry, Environmental Protection Agency, Pesticides and Toxic Substances, (TS-794), Washington, DC 20460, 202 382-3771

RIN: 2070-AB26

2658. PROCEDURAL RULE FOR EXPEDITED NEW CHEMICAL FOLLOW-UP

Significance: Regulatory Program

Legal Authority: 15 USC 2604 /TSCA 5

CFR Citation: 40 CFR 721

Legal Deadline: None.

Abstract: This rulemaking would establish criteria and procedures by which certain chemicals could be administratively added to or withdrawn from a list of chemicals subject to section 5(a)(2) of TSCA. This would reduce the time and resources required to regulate individual chemicals under the new chemical follow-up program. This rulemaking would also establish reporting requirements under sections 8(a) and 8(d) for manufacturers and processors of certain chemicals that meet the criteria mentioned above.

Timetable:

Action	Date	FR Cite
NPRM	04/29/87	52 FR 15594
Final Action	09/00/88	

Small Entity: Undetermined

Additional Information: SAR No. 2375.

FTS:8-382-2439

Agency Contact: John Bowser, Environmental Protection Agency, Pesticides and Toxic Substances, TS-794, Washington, DC 20460, 202 382-2439

RIN: 2070-AB67

2659. RECODIFICATION OF TSCA CFR SECTION 721

Legal Authority: 15 USC 2604/TSCA 5

CFR Citation: 40 CFR 721

Legal Deadline: None.

Abstract: Section 721 of 40 CFR contains general provisions for Significant New Use Rules and a list of significant new uses for specific chemical substances. It is the Agency's intent to restructure Part 721 to allow 1) insertion of new generic SNUR triggers, and 2) other reorganization amendments to the SNUR regulations to clarify SNUR requirements.

Timetable:

Action	Date	FR Cite
Final Action	04/00/88	

Small Entity: No

Additional Information: SAR No. 2562.

FTS:8-382-3771

Agency Contact: John Bowser, Environmental Protection Agency, Pesticides and Toxic Substances, (TS-794), Washington, DC 20460, 202 382-3771

RIN: 2070-AB85

2660. ● PROPOSAL TO EXEMPT CERTAIN MICROORGANISMS FROM PMN REQUIREMENTS UNDER TSCA 5(H)(4)

Significance: Regulatory Program

Legal Authority: 15 USC 1504 /TSCA 0005

CFR Citation: 40 CFR 723

Legal Deadline: None.

Abstract: Under the authority of the Toxic Substances Control Act, the Agency will propose to exempt from review new microorganisms used in certain closed and contained systems. The Agency considers it a priority to exempt from consideration organisms that can be shown to meet the statutory requirements under section 5(h)(4) of

TSCA. To meet those requirements, it must be shown that the substances will not present unreasonable risks. EPA is considering public comment received and other evidence concerning use of microorganisms in closed systems and other controlled environments to determine whether those categories satisfy the requirements of section 5(h)(4) of TSCA.

Timetable:

Action	Date	FR Cite
NPRM	06/26/86	51 FR 23313
Final Action	12/00/88	

Small Entity: Yes

Additional Information: SAR No. 2561.

FTS:8-382-3856

Agency Contact: Jane Rissler, Environmental Protection Agency, Pesticides and Toxic Substances, (TS-794), 202 382-3856

RIN: 2070-AB89

2561. POLYCHLORINATED BIPHENYLS (PCBS): MANUFACTURING, PROCESSING, DISTRIBUTION IN COMMERCE, AND USE PROHIBITIONS; EXCLUSIONS AND USE AUTHORIZATIONS (REVISION)

Legal Authority: 5 USC 556 /TSCA 6

CFR Citation: 40 CFR 761

Legal Deadline: None.

Abstract: On July 10, 1984, EPA promulgated a rule for inadvertently generated PCBs and authorizing the limited use of PCBs in heat transfer and hydraulic systems (49 FR 28172). EPA will propose amendments to the July 10 Rule in response to two petitions for judicial review of the Rule. The proposed amendments will be based on EPA evaluation of new information submitted by the petitioners and other interested parties.

Timetable:

Action	Date	FR Cite
NPRM	07/08/87	52 FR 25838
Final Action	04/00/88	

Small Entity: No

Additional Information: SAR No. 2244.

FTS:8-382-3935.

Agency Contact: Martin Halper, Environmental Protection Agency, Pesticides and Toxic Substances, (TS-798), Washington, DC 20460, 202 382-3866

RIN: 2070-AB25

2562. ACTION CONCERNING COMMERCIAL AND INDUSTRIAL USE OF ASBESTOS

Significance: Regulatory Program

Legal Authority: 15 USC 2605 / TSCA 6

CFR Citation: 40 CFR 763

Legal Deadline: None.

Abstract: Asbestos is a known human carcinogen. Persons are exposed to asbestos from releases to the environment during all phases of the lifecycle of asbestos products. Because of the serious risk presented to many people from exposure to asbestos during the lifecycle of asbestos products, EPA has proposed a rule under Section 6 of TSCA to ban certain asbestos products for which substitutes are currently available and to phase out all or most asbestos mining and importation over 10 years.

Timetable:

Action	Date	FR Cite
ANPRM	10/17/79	44 FR 60057
NPRM	01/29/86	51 FR 3738
Final Action	07/00/88	

Small Entity: Yes

Additional Information: SAR No. 2296.

FTS: 382-3862.

Analysis: Regulatory Impact Analysis; Regulatory Flexibility Analysis

Agency Contact: John Rigby, Environmental Protection Agency, Pesticides and Toxic Substances, (TS-794), Washington, DC 20460, 202 382-3862

RIN: 2070-AB29

2563. PCBS IN ELECTRICAL TRANSFORMERS (REVISION)

Legal Authority: 15 USC 2605 /TSCA 6

CFR Citation: 40 CFR 761

Legal Deadline: None.

Abstract: Section 6(e) of TSCA authorizes the Administrator to promulgate rules governing the manufacture, processing and distribution in commerce, use and disposal of PCBs. EPA promulgated a rule, which was published in the Federal Register of July 17, 1985 (50 FR 29170), to amend portions of an existing EPA rule concerning the use of PCBs by placing additional restrictions and conditions on the use of PCB transformers. EPA will propose amendments to the July 17, 1985 rule in response to the terms set forth in a settlement agreement in Mississippi Power Company v. EPA.

Timetable:

Action	Date	FR Cite
NPRM	08/21/87	52 FR 31738
Final Action	06/00/88	

Small Entity: No

Additional Information: SAR No. 2447.

FTS:8-382-3866

Agency Contact: Martin Halper, Environmental Protection Agency, Pesticides and Toxic Substances, TS-798, Washington, DC 20460, 202 382-3866

RIN: 2070-AB74

2564. SECTION 8 (A) PRELIMINARY ASSESSMENT INFORMATION RULES

Legal Authority: 15 USC 2607a / TSCA 8(a)

CFR Citation: 40 CFR 712

Legal Deadline: None.

Abstract: These rules add chemicals to the list of chemicals and designated mixtures subject to the requirements of the TSCA Section 8(a) Preliminary Assessment Information Rule - (40 CFR Part 712). These chemicals are identified by OTS, other EPA offices, and other Agencies, as well as chemicals recommended by the Interagency Testing Committee (ITC) on the TSCA Section 4(e) priority list. Manufacturers and importers are required to submit exposure-related data (EPA Form No. 7710-35) on the chemicals. These data will be used to monitor the levels of production, import and/or processing of these substances and the avenues of human and environmental exposure to these substances. It will also support risk assessment and test rule decisions.

Timetable:

OAQPS/OTS Chemicals PAIR
- NPRM 05/14/87 (52 FR 18250)
- Final Action 04/00/88

Pesticide Inerts
- NPRM 05/14/87 (52 FR 18245)
- Final Action 00/00/00

20th ITC List Chemicals
- Final Action 05/20/87 (52 FR 19027)

21st ITC List Chemicals
Final Action 11/20/87 (52 FR 44826)
22nd ITC List Chemicals
Final Action 05/00/88

Small Entity: No

Additional Information: SAR No. 2178.

FTS: 8-382-3436.

Agency Contact: Frank Kover, Environmental Protection Agency, Pesticides and Toxic Substances, (TS-778), Washington, DC 20640, 202 382-3436

RIN: 2070-AB08

2665. SECTION 8(D) HEALTH AND SAFETY DATA REPORTING RULES

Legal Authority: 15 USC 2607(d)/TSCA 8(d)

CFR Citation: 40 CFR 716

Legal Deadline: None.

Abstract: These rules add chemicals to the list of chemicals and mixture subject to the requirements of the TSCA Section 8(d) Health and Safety Data Reporting Rule. These chemicals are identified by OTS, other EPA offices, other Agencies, as well as chemicals recommended by the Interagency Testing committee (ITC) on the TSCA Section 4(e) Priority List. Manufacturers, importers, and processors of listed substances must submit unpublished health and safety data on those listed substances.

Timetable:

Pesticide Inerts
NPRM 05/14/87 (52 FR 18245)
Final Action 00/00/00
21st ITC List Chemicals
Final Action 11/20/87 (52 FR 44826)
22nd ITC List Chemicals
Final Action 05/00/88

Small Entity: No

Additional Information: SAR No. 1139.

FTS: 8-382-3436.

Docket No. OPTS 84012.

Agency Contact: Frank Kover, Environmental Protection Agency, Pesticides and Toxic Substances, (TS-778), Washington, DC 20460, 202 382-3436

RIN: 2070-AB11

2666. TSCA SECTION 8(A) COMPREHENSIVE ASSESSMENT INFORMATION RULE (CAIR)

Significance: Regulatory Program

Legal Authority: 15 USC 2607(a) / TSCA 8(a)

CFR Citation: 40 CFR 712

Legal Deadline: None.

Abstract: This rule will contain a comprehensive list of questions for industry reporting which will provide necessary information to complete chemical assessments. Each time EPA needs information on a chemical, the Agency will amend the rule to add the chemical. Not all questions will be selected for each chemical added to the rule; only the most relevant questions will be selected for each chemical. The information obtained by this rule will be used by EPA and other Federal Agencies to support assessments of and rulemaking on chemical substances.

Timetable:

Action	Date	FR Cite
NPRM	10/07/86	51 FR 35762
Final Action	06/00/88	

Small Entity: No

Additional Information: SAR No. 2129.

FTS: 8-382-3436.

Agency Contact: Frank Kover, Environmental Protection Agency, Pesticides and Toxic Substances, (TS-778), Washington, DC 20460, 202 382-3436

RIN: 2070-AB13

2667. USER FEES FOR PROCESSING PMNS

Significance: Regulatory Program

Legal Authority: 15 USC 2625 /TSCA 26(B)

CFR Citation: 40 CFR 700

Legal Deadline: None.

Abstract: Section 26(b) of TSCA authorizes EPA, by rule, to require the payment of a fee from any person required to submit data under section 4 or 5 of TSCA. The fee may not exceed $2,500 or, in the case of a small business concern, $100. EPA intends to issue a rule under this authority to require fees for Agency review of premanufacture notices (PMNs) and PMN exemption notices and applications for new chemical substances, and significant new use notices for new and existing chemicals.

Timetable:

Action	Date	FR Cite
NOTICE	07/11/86	51 FR 25250
NPRM	04/20/87	52 FR 12940
Final Action	04/00/88	

Small Entity: No

Additional Information: SAR No. 2324.

FTS: 8-382-3945

Agency Contact: Joseph A. DeSantis, Environmental Protection Agency, Pesticides and Toxic Substances, (TS-794), Washington, D.C. 20460, 202 382-3945

RIN: 2070-AB54

ENVIRONMENTAL PROTECTION AGENCY (EPA) —Toxic Substances Control Act (TSCA)

Completed Actions

2668. SARA SECTION 313 TOXIC CHEMICAL RELEASE REPORTING RULE

Significance: Regulatory Program

CFR Citation: 40 CFR Not applicable

Completed:

Reason	Date	FR Cite
Final Action	02/16/88	53 FR 4500

Small Entity: Undetermined

Agency Contact: Michael Shapiro 202 382-3667

RIN: 2070-AB71

2669. ASBESTOS-CONTAINING MATERIALS IN SCHOOLS RULE

Significance: Regulatory Program

CFR Citation: 40 CFR 763

Completed:

Reason	Date	FR Cite
Final Action	10/30/87	52 FR 41826

Small Entity: Yes

Agency Contact: Michael Stahl 202 382-3934

RIN: 2070-AB44

EPA—TSCA

Completed Actions

2670. RESTRICTIONS ON DISPOSAL OF DRAINED ELECTRICAL EQUIPMENT

CFR Citation: 40 CFR 761.60(b)(4)

Completed:

Reason	Date	FR Cite
Withdrawn	02/01/88	

Small Entity: Yes

Agency Contact: Martin Halper 202 382-3806

RIN: 2070-AB80

ENVIRONMENTAL PROTECTION AGENCY (EPA) —Clean Water Act (CWA)

Prerule Stage

2671. FUTURE EFFLUENT GUIDELINES – STANDARDS INITIATIVES

Significance: Regulatory Program

Legal Authority: 33 USC 1251 /CWA 402, 301, 304, 306, 307, 501

CFR Citation: 40 CFR 400

Legal Deadline: None.

Abstract: EPA will evaluate additional categories of industrial discharges for hazardous or toxic pollutants; identify subcategories based upon production processes, pollutants, and applicable technologies; and determine the extent of the environmental problem and the practicality and efficiency of issuing effluent guidelines. Potential industrial categories for analysis will be selected based on requests from the EPA regional offices, states, and municipalities and from results of internal studies. The Agency will base regulations for these industries, if appropriate, on complex engineering and economic studies to determine wastewater characteristics and treatment capabilities of each industrial category and subcategory.

Timetable:

Action	Date	FR Cite
Next Action Undetermined		

Small Entity: Undetermined

Additional Information: SAR No. 2304.

FTS: 8-382-7137.

Analysis: Regulatory Impact Analysis; Regulatory Flexibility Analysis

Agency Contact: Tom O'Farrell, Environmental Protection Agency, Water, (WH-552), Washington, DC 20460, 202 382-7137

RIN: 2040-AA90

ENVIRONMENTAL PROTECTION AGENCY (EPA) —Clean Water Act (CWA)

Proposed Rule Stage

2672. EFFLUENT GUIDELINES FOR OFFSHORE OIL AND GAS EXTRACTION INDUSTRY (REVISION)

Significance: Regulatory Program

Legal Authority: 33 USC 1311 / CWA 301; 33 USC 1314 / CWA 304; 33 USC 1316 / CWA 306; 33 USC 1317 / CWA 307; 33 USC 1361 / CWA 501

CFR Citation: 40 CFR 435

Legal Deadline: Judicial, December 1985.

Abstract: The Agency will promulgate BAT, BCT and NSPS regulations for drilling fluids and drill cuttings waste streams from offshore oil and gas extraction facilities to limit discharges of pollutants from the offshore segment of the oil and gas extraction point source category.

Timetable:

Action	Date	FR Cite
NPRM	08/26/85	50 FR 34592
NOTICE	11/13/85	50 FR 46784
NOTICE	12/31/85	50 FR 53348
NOTICE	03/00/88	
NOTICE	04/00/88	
BCT Reproposal	12/00/88	
Final Action	03/00/90	

Small Entity: No

Additional Information: SAR No. 1649.

This item was included under RIN 2040-AA89 in the April, 1987 Regulatory Program of the United States Government.

Analysis: Regulatory Impact Analysis; Regulatory Flexibility Analysis

Agency Contact: Dennis Ruddy, Environmental Protection Agency, Water, (WH-552), Washington, DC 20460, 202 382-7131

RIN: 2040-AA12

2673. EFFLUENT GUIDELINES FOR NONFERROUS METALS FORMING (REVISION)

Legal Authority: 33 USC 1311 / CWA 301; 33 USC 1341 / CWA 304; 33 USC 1316 / CWA 306; 33 USC 1317 / CWA 307; 33 USC 1361 / CWA 501

CFR Citation: 40 CFR 471

Legal Deadline: None.

Abstract: The Agency will propose and promulgate amendments to the regulation promulgated August 23, 1985 (50 FR 34242). These amendments will revise BPT, BAT, NSPS and pretreatment standards in the nickel-cobalt and zirconium-hafnium subcategories.

Timetable:

Action	Date	FR Cite
NPRM	03/06/84	49 FR 8112
NPRM Comment Period End	08/23/85	50 FR 34242
Proposed Amendments	04/00/88	
Final Action	12/00/88	

Small Entity: No

Additional Information: SAR No. 2600.

FTS: 8-382-7126

Government Levels Affected: Local, State, Federal

Agency Contact: Ernest P. Hall, Environmental Protection Agency, Water, (WH-552), Washington, DC 20460, 202 382-7126

RIN: 2040-AB30

2674. EFFLUENT GUIDELINES FOR NONFERROUS METALS MANUFACTURING (PHASE II) (REVISIONS)

Legal Authority: 33 USC 1311 / CWA 301; 33 USC 1314 / CWA 304; 33 USC 1316 / CWA 306; 33 USC 1317 / CWA 307; 33 USC 1361 / CWA 501

CFR Citation: 40 CFR 421

Legal Deadline: None.

Abstract: In response to settlement agreements, the Agency will propose and promulgate amendments to the regulation previously promulgated on September 20, 1985 (50 FR 38276). These amendments are in response to settlements arrived with six petitioners and will affect six subcategories, primary beryllium subcategory, primary molybdenum and rhenium subcategory, second molybdenum and vanadium subcategory, secondary precious metals subcategory and secondary tungsten and cobalt subcategory. The amendments will revise BPT, BAT, NSPS and standards pretreatment to limit the discharge of pollutants from these subcategories.

Timetable:

Action	Date	FR Cite
NPRM	12/00/88	
NPRM	12/00/88	
Final Action	12/00/89	

Small Entity: No

Additional Information: SAR No. 2583.

FTS:8-382-7126

Agency Contact: Ernest P. Hall, Environmental Protection Agency, Water, (WH-552), Washington, DC 20460, 202 382-7126

RIN: 2040-AB31

2675. EFFLUENT GUIDELINES FOR PESTICIDES CHEMICALS

Legal Authority: 33 USC 1311 / CWA 301; 33 USC 1314 / CWA 304; 33 USC 1316 / CWA 306; 33 USC 1317 / CWA 307; 33 USC 1361 / CWA 501

CFR Citation: 40 CFR 455

Legal Deadline: Statutory, December 31, 1988.

Abstract: On October 4, 1985 the EPA promulgated a final regulation establishing BAT, NSPS, PSES, PSNS for the pesticide industry under the Clean Water Act. On July 25, 1986 the final regulation was remanded to the EPA by the Eleventh Circuit Court of Appeals in response to a joint motion filed by the Agency and other parties to litigation challenging the regulation. EPA removed the BAT, NSPS, PSNS, and PSES pesticide regulation from the Code of Federal Regulations at the direction of the Court, and informed the public that the regulation is no longer effective (December 15, 1986; 51 FR 44911). The Agency intends to establish new effluent limitation guidelines and standards for the pesticide manufacturers and formulators/packagers industry in a future rulemaking. The BCT limitations published on April 25, 1978 and September 29, 1978, are still effective.

Timetable:

Action	Date	FR Cite
NPRM	12/00/89	
Final Action	06/00/91	
Final Action Effective	09/00/91	

Small Entity: Undetermined

Additional Information: SAR No. 2473.

FTS:8-382-7156

Analysis: Regulatory Impact Analysis; Regulatory Flexibility Analysis

Agency Contact: Thomas Fielding, Environmental Protection Agency, Water, (WH-552), Washington, DC 20460, 202 382-7156

RIN: 2040-AB32

2676. DEFINITION OF "WATERS OF THE UNITED STATES"

Legal Authority: 33 USC 1251 /CWA 303

CFR Citation: 40 CFR 122.2

Legal Deadline: None.

Abstract: This action will revise the definition of "Waters of the United States". It is necessary to replace the existing definition that was suspended in 1980.

Timetable:

Action	Date	FR Cite
NPRM	10/00/88	

Small Entity: No

Additional Information: SAR No. 2395.

FTS:8-475-9524

Agency Contact: Dave Greenburg, Environmental Protection Agency, Water, EN-336, 202 475-9524

RIN: 2040-AB01

2677. WATER QUALITY STANDARDS—REVISION FOR INDIAN TRIBES

Significance: Regulatory Program

Legal Authority: 33 USC 1251 et seq; 33 USC 1313 et seq; 33 USC 1342 et seq; 33 USC 1344 et seq; 33 USC 1378 et seq

CFR Citation: 40 CFR 122; 40 CFR 123; 40 CFR 124; 40 CFR 131; 40 CFR 230; 40 CFR 231; 40 CFR 232; 40 CFR 233

Legal Deadline: Statutory, August 3, 1988.

Abstract: This rule establishes standards and procedures for treatment of Indian Tribes as States for sections 303, 402, and 404. The revised regulation will also incorporate a mechanism to resolve any disputes that might arise from unreasonable consequences if Indian tribes and States adopt differing water quality standards for common bodies of water.

Timetable:

Action	Date	FR Cite
NPRM	07/00/88	
Final Action	09/00/89	

Small Entity: No

Additional Information: SAR No. 2475.

FTS:8-475-7315

Agency Contact: David Sabock, Environmental Protection Agency, Water, (WH-585), Washington, DC 20460, 202 475-7315

RIN: 2040-AB36

2678. NPDES REGULATORY REVISIONS

Legal Authority: 33 USC 1251 /CWA 303

CFR Citation: 40 CFR 122; 40 CFR 123

Legal Deadline: None.

Abstract: This action will revise the NPDES Regulations pursuant to requirements contained in the 1987 Water Quality Act. In addition, several other changes will be made to clarify existing requirements and policies. These revisions will not encompass requirements mandated by Section 406 (sewage sludge) of the 1987 Water Quality Act.

Timetable:

Action	Date	FR Cite
NPRM	10/00/88	

Small Entity: No

Additional Information: SAR No. 2493.

FTS:8-475-9524

Agency Contact: Dave Greenberg, Environmental Protection Agency, Water, (EN-336), Washington, DC 20460, 202 475-9524

RIN: 2040-AB38

2679. ● INTERPRETATION OF PROVISIONS OF SECTION 304(1) OF THE CWA

Legal Authority: 33 USC 1251 /CWA 304(1)

CFR Citation: 40 CFR 122; 40 CFR 123; 40 CFR 130

Legal Deadline: None.

Abstract: This proposed rule will provide the Agency's regulatory interpretation of four provisions of section 304(1) of the Clean Water Act. It will clarify the nature of an individual control strategy under section 304(1) and the use of existing data by States to develop initial lists of waters. Further, it will describe the EPA approval/disapproval process for lists submitted in fulfillment of the requirements of section 304(1). Finally, it will establish the initial submission of lists and individual control strategies by the statutory deadline of February 4, 1989, as a first phase of an ongoing identification and permitting process called for under the water quality provisions of the Clean Water Act.

Timetable:

Action	Date	FR Cite
NPRM	07/00/88	
Final Action	00/00/00	

Small Entity: Undetermined

Additional Information: SAR No. 2525.

FTS:8-475-7718

Agency Contact: Paul Connor, Environmental Protection Agency, Water, EN-336, Washington, DC 20460, 202 475-7718

RIN: 2040-AB46

2680. ● PROCEDURAL RULES FOR CLASS I ADMINISTRATIVE PENALTY PROCEEDINGS UNDER THE CWA

Legal Authority: 33 USC 1363 /CWA 309(g)

CFR Citation: 40 CFR 126

Legal Deadline: None.

Abstract: This rulemaking will convert EPA's Class I CWA administrative penalty procedures from the status of guidance to a final rule. Procedures for the assessment of Class I administrative penalties (maximum penalty of $25,000 with less than APA procedures) were issued as guidance in August 1987. The Agency will propose that guidance in identical form for public comment after internal review.

Timetable:

Action	Date	FR Cite
NPRM	06/00/88	
Guidance		
Final Action 08/17/87 (52 FR 30730)		

Small Entity: No

Additional Information: SAR No. 2580.

FTS:8-475-8187

Agency Contact: Elyse M. DiBiagio-Wood, Environmental Protection Agency, Water, LE-134W, Washington, DC 20460, 202 475-8187

RIN: 2040-AB49

2681. REVISIONS TO REGULATIONS FOR MODIFICATION OF SECONDARY TREATMENT REQUIREMENTS FOR MUNICIPAL DISCHARGE INTO MARINE WATERS

Legal Authority: 33 USC 1311(h)/CWA 301(h)

CFR Citation: 40 CFR 125

Legal Deadline: None.

Abstract: The revisions to the regulations primarily are intended to respond to statutory changes made to sec. 301(h) of the Clean Water Act [33 USC 1311(h)], which governs secondary treatment waivers for municipal discharges into marine waters. The statutory changes to be addressed include, among other things, new requirements for minimum treatment levels and additional requirements for pretreatment programs for certain waiver applicants. In addition, the Agency is considering revising the regulations to address more specifically procedures and requirements for the renewal of secondary treatment waivers. The revised regulations will affect only the limited number of municipal treatment plants which met the 1982 statutory deadline for applying for a secondary treatment waiver.

Timetable:

Action	Date	FR Cite
NPRM	09/00/88	
NPRM Comment Period End	11/00/88	
Final Action	05/00/89	

Small Entity: Undetermined

Additional Information: SAR No. 2587.

FTS:8-475-7134

Agency Contact: Barry Burgan, Environmental Protection Agency, Water, (WH-556F), Washington, DC 20460, 202 475-7134

RIN: 2040-AB29

2682. NPDES REGULATIONS: STORMWATER APPLICATION REQUIREMENTS (REVISION)

Legal Authority: 33 USC 1342 /CWA 402

CFR Citation: 40 CFR 122

Legal Deadline: None.

Abstract: These revisions to the NPDES permit program application requirements for stormwater discharges will reflect the 1987 amendments to the Clean Water Act and will address the deadline for application submission as a result of the recently-rescinded September 1984 stormwater regulations.

Timetable:

Action	Date	FR Cite
NPRM Deadline and Requirements	03/07/85	50 FR 9362
NPRM Reproposed Requirements	08/12/85	50 FR 32548
Final Action Deadline and Requirements	08/29/85	50 FR 35200
NPRM Deadline Extension	10/21/87	52 FR 39240
NPRM Reproposed Requirements	07/00/88	
Final Action Deadline and Requirements	11/00/89	

Small Entity: No

Additional Information: SAR No. 2200.

FTS: 8-475-9537.

Agency Contact: Harry Thron, Environmental Protection Agency, Water, (EN-336), Washington, DC 20460, 202 475-9537

RIN: 2040-AA79

2683. NPDES PERMIT APPLICATION FORM 2C, STANDARD FORM A, AND SHORT FORM A (REVISION)

Legal Authority: 33 USC 1342/CWA 402

CFR Citation: 40 CFR 122

Legal Deadline: None.

Abstract: This action will revise the current NPDES Permit Application Form 2C (industrial), Standard Form A (municipal), and Short Form A (municipal) to reflect amendments to the Clean Water Act and changes in program requirements and emphasis. The new application forms will replace the old versions and enable permit writers to obtain more pertinent information regarding expected discharges and the environmental impact of proposed operations.

Timetable:

Action	Date	FR Cite
NPRM	03/00/89	

Small Entity: No

Additional Information: SAR No. 2501.

FTS:8-475-9527

Agency Contact: William A. Collins, Environmental Protection Agency, Water, (EN-336), Washington, DC 20460, 202 475-9527

RIN: 2040-AB39

2684. SEWAGE SLUDGE USE AND DISPOSAL REGULATIONS

Significance: Regulatory Program

Legal Authority: 33 USC 1345 / CWA 405

CFR Citation: 40 CFR 503

Legal Deadline: Statutory. Proposal November 30, 1986; Final August 31, 1987.

Abstract: The Agency plans to provide technical criteria and management practices by issuing technical sludge regulations under Section 405 of the Clean Water Act as amended by the Water Quality Act of 1987. These regulations will address: distribution and marketing, application of sludge to lands which are used for food and non-food chain crops, ocean disposal, incineration and landfilling. Thirty-one chemicals are currently being evaluated for the various reuse and disposal options.

Timetable:

Action	Date	FR Cite
NPRM	10/00/88	
Final Action	12/00/89	

Small Entity: Undetermined

Additional Information: SAR No. 2162.

FTS: 8-475-7311.

Analysis: Regulatory Impact Analysis

Agency Contact: Alan Rubin, Environmental Protection Agency, Water, WH-585, Washington, DC 20460, 202 475-7311

RIN: 2040-AA74

2685. ● CITIZEN SUIT NOTICE REGULATION UNDER THE CWA

Legal Authority: 33 USC 1355 /CWA 505

CFR Citation: 40 CFR 135

Legal Deadline: None.

Abstract: This regulation will specify on whom the copies of CWA citizen suit complaints and consent decrees should be served, the manner of service, and the addresses of such persons. This rule will amend existing 40 CFR 135.

Timetable:

Action	Date	FR Cite
NPRM	00/00/00	

Small Entity: No

Additional Information: SAR No. 2515.

FTS:8-382-2849

Agency Contact: Elizabeth M. Ojala, Environmental Protection Agency, Water, LE-134W, Washington, DC 20460, 202 382-2849

RIN: 2040-AB50

2686. COMPREHENSIVE REVISIONS TO OCEAN DUMPING REGULATIONS

Significance: Regulatory Program

Legal Authority: 33 USC 1401 et seq /MPRSA

CFR Citation: 40 CFR 220 to 229

Legal Deadline: None.

Abstract: These amendments are necessary to clarify the existing regulations, incorporate program experience, and respond to statutory amendments and the results of two lawsuits. Those lawsuits are the City of New York decision (543 F. Supp.1084), which involved the consideration of the need for ocean dumping and availability and impacts of land-based alternatives, and NWF v. Costle decision (629 F. 2d 118), which involved dredged material issues. Among other things, the statutory amendments to be addressed in the Regulatory Revisions include provisions applicable to the ocean disposal of low-level radioactive waste.

Timetable:

Action	Date	FR Cite
NPRM	06/00/88	
Final Action	08/00/89	

Small Entity: No

Additional Information: SAR No. 2189.

FTS: 8-475-7126

Agency Contact: John Lishman, Environmental Protection Agency, Water, (WH-556F), Washington, DC 20460, 202 475-7126

RIN: 2040-AA78

2687. ● UNDERGROUND INJECTION CONTROL PROGRAM: HAZARDOUS WASTE DISPOSAL INJECTION RESTRICTIONS; EFFECTIVE DATES AND CAPACITY VARIANCES FOR SELECTED FIRST THIRD WASTES

Significance: Regulatory Program

Legal Authority: 42 USC 6924 /RCRA 3004(f) & (g)

CFR Citation: 40 CFR 148

Legal Deadline: None.

Abstract: The Agency is required to prohibit injection of hazardous wastes under sections 3004(f) and (g) by specified deadlines unless (1) the facility demonstrates no migration through a petition or (2) the facility treats the waste to specified levels which reduce the threat to human health. The Administrator may grant variances for up to two years where treatment capacity is unavailable. This rule proposes effective dates for selected first thirds wastes. It also proposes to grant capacity variances for those wastes and extends the statutory prohibitions for two years.

Timetable:

Action	Date	FR Cite
NPRM	04/00/88	
Final Action	09/00/88	

Small Entity: No

Additional Information: SAR No. 2581.

FTS:8-382-5508

Agency Contact: John Atcheson, Environmental Protection Agency, Water, WH-550, Washington, DC 20460, 202 382-5508

RIN: 2040-AB47

2688. GENERAL PRETREATMENT REGULATIONS FOR EXISTING AND NEW SOURCES

Significance: Regulatory Program

Legal Authority: 42 USC 6939 / RCRA 3018; 33 USC 1317 /CWA 307; 33 USC 1342 /CWA 402

CFR Citation: 40 CFR 403

Legal Deadline: Statutory, August 1987.

Abstract: The Agency plans to prepare proposed changes to the General Pretreatment Regulations that address: specific and general discharge prohibitions; controls on spills and batch dischargers and dischargers by liquid waste haulers; industrial user notification requirements; and local limits. These changes will be responsive to the recommendations of the Domestic Sewage Study submitted to Congress February 8, 1986 and are to improve the control of hazardous wastes discharged through sewers to publicly-owned treatment works.

Timetable:

Action	Date	FR Cite
NPRM	06/00/88	

Small Entity: No

Additional Information: SAR No. 2342.

FTS 8-475-9534.

Agency Contact: Marilyn Goode, Environmental Protection Agency, Water, (EN-336), Washington, DC 20460, 202 475-9534

RIN: 2040-AA99

ENVIRONMENTAL PROTECTION AGENCY (EPA) —Clean Water Act (CWA)

Final Rule Stage

2689. GUIDELINES FOR CLASSIFYING GROUND WATER UNDER THE EPA GROUND WATER PROTECTION STRATEGY

Significance: Regulatory Program

Legal Deadline: None.

Abstract: In August 1984, EPA issued a Ground water Protection Strategy to provide objectives to guide the Agency's efforts to protect ground water. One of the major goals announced in the strategy was to achieve greater consistency in decisionmaking among the many EPA programs in protecting ground water. The strategy also indicated that EPA would consider the value and vulnerability of ground water in developing protection and cleanup approaches. The classification guidelines implement these goals by providing technical information that will be useful in the evaluation of the vulnerability and value of a particular ground water unit, and by detailing a classification system that can be incorporated as a factor in program decision-making. Both should lead to greater consistency in decisions and assist in the identification of the most valuable and vulnerable ground waters, so that they receive appropriate attention. The agency will finalize the guidelines based on public comments received.

Timetable:

Action	Date	FR Cite
Draft Guidelines	12/03/86	51 FR 43664
Final Guidelines	05/00/88	

Small Entity: Not Applicable

Additional Information: SAR No. 2300.

FTS: 8-382-7077.

Agency Contact: Marian Mlay, Environmental Protection Agency, Water, Environmental Protection Agency, Office of Ground Water Protection, (WH-550G), 202 382-7077

RIN: 2040-AA85

2690. SECONDARY TREATMENT/PERCENT REMOVAL REQUIREMENTS FOR COMBINED SEWER SYSTEMS

Legal Authority: 33 USC 1311(b)(1)(B) /CWA 301(b)(1)(B); 33 USC 1314(d)(1) /CWA 304(d)(1)

CFR Citation: 40 CFR 133

Legal Deadline: None.

Abstract: In this amendment the Agency will propose a mechanism for permit adjustments for treatment plants served by Combined Sewer Systems similar to that which was recently promulgated (June 3, 1985) for separate sewer systems. The existing regulation requires 85% removal of BOD5 and suspended solids (65% for equivalent treatment) from treatment plants served by combined sewers during dry weather flow conditions. Problems exist in meeting these requirements when plants experience less concentrated influents.

Timetable:

Action	Date	FR Cite
NPRM	09/17/87	52 FR 35210
Final Action	06/00/88	

Small Entity: No

Additional Information: SAR No. 1962.

FTS:8-382-7371.

Agency Contact: Lam Lim, Environmental Protection Agency, Water, (WH-595), 202 382-7371

RIN: 2040-AB13

2691. NATIONAL POLLUTANT DISCHARGE ELIMINATION SYSTEM SEWAGE SLUDGE PERMIT REGULATIONS; STATE SLUDGE MANAGEMENT PROGRAM REQUIREMENTS

Significance: Regulatory Program

Legal Authority: 33 USC 1251(b) /CWA 101(b); 33 USC 1265(j) /CWA 205(j); 33 USC 1313(e) /CWA 303(e); 33 USC 1317(b) /CWA 307(b); 33 USC 1318 /CWA 308; 33 USC 1345 /CWA 405; 33 USC 1361(a) /CWA 501(a); 33 USC 1370 /CWA 510; 42 USC 6905(b) /RCRA 1006(b); 42 USC 6907 /RCRA 1008; 42 USC 6912(a) /RCRA 2002(a); 42 USC 6944 /RCRA 4004; 42 USC 6945 /RCRA 4005; 42 USC 7410 /CAA 110; 42 USC 7411 /CAA 111; ...

CFR Citation: 40 CFR 122; 40 CFR 123; 40 CFR 124; 40 CFR 125

Legal Deadline: Statutory, December 15, 1986. 12/15/86 for state program approval procedures (Water Quality Act of 1987).

Abstract: The agency proposed requiring States to develop and obtain approval for sludge management programs. Included in the proposal were: 1) program approval procedures; and 2) the elements of an approvable State program, including compliance monitoring and enforcement provisions. The agency will be developing revised state program regulations to conform to the new requirements of the Water Quality Act of 1987.

BEST COPY AVAILABLE

Timetable:

Action	Date	FR Cite
NPRM	02/04/86	51 FR 4458
Reproposal	03/09/88	53 FR 7642
Final Action	02/00/89	

Small Entity: No

Additional Information: SAR No. 2163.

FTS:8-475-9517

Agency Contact: Martha Kirkpatrick, Environmental Protection Agency, Water, (EN-336), Washington, DC 20460, 202 475-9517

RIN: 2040-AA73

2692. WATER QUALITY PLANNING AND MANAGEMENT GRANTS FOR INDIAN TRIBES

Significance: Regulatory Program

Legal Authority: 42 USC 1324 /CWA 314

CFR Citation: 40 CFR 35; 40 CFR 130

Legal Deadline: Statutory, August 1988.

Abstract: This regulation will enable Indian Tribes to be treated as states for the following programs: Water Pollution Control Program Grants (Section 106), Water Quality Management Planning Grants Section 205(j), Clean Lakes Implementation Grants (Section 314) and Nonpoint Source Implementation Grants (Section 319). This action is required by the Water Quality Act of 1987.

Timetable:

Action	Date	FR Cite
Interim Final Rule	05/00/88	

Small Entity: No

Additional Information: SAR No. 2479.

FTS:8-475-8637

Agency Contact: Patricia Morris, Environmental Protection Agency, Water, (WH-586), Washington, DC 20460, 202 475-8637

RIN: 2040-AB35

2693. SIMPLIFYING CONSTRUCTION GRANTS REGULATIONS (REVISION)

Legal Authority: 33 USC 1281 / CWA 201

CFR Citation: 40 CFR 35, Appendix A

Legal Deadline: None.

Abstract: A revised interim final regulation describing allowable and unallowable costs for construction grant projects was published February 17, 1984. The Agency is revising that action as a final rule.

Timetable:

Action	Date	FR Cite
NPRM - Previous	11/06/81	46 FR 55220
NPRM	05/12/82	47 FR 20470
Interim Final Rule	05/12/82	47 FR 20450
Interim Final Rule Revised	02/17/84	49 FR 6224
Final Action	05/00/88	

Small Entity: No

Additional Information: SAR No. 1722.

Docket No. G-81-5.

FTS: 8-382-7256.

Agency Contact: Geoffrey Cooper, Environmental Protection Agency, Water, (WH-546), Washington, DC 20460, 202 382-2287

RIN: 2040-AA70

2694. COMPREHENSIVE CONSTRUCTION GRANT REGULATION REVISION

Legal Authority: 33 USC 1281 / CWA 201; CWA 518; CWA Title VI

CFR Citation: 40 CFR 35

Legal Deadline: Statutory, August 5, 1988. Deadline applies only to amendment to 40 CFR Part 35, Subpart J to implement Indian provisions of WQA of 1987.

Abstract: This regulation will amend existing regulations to implement the Water Quality Act of 1987. That Act amended the construction grants program, provided for grants to Indian Tribes under a national set-aside, and added a new Title VI to the CWA for capitalization grants to states for state loan programs.

Timetable:

Action	Date	FR Cite
Interim Final Rule	06/00/88	
Final Action	03/00/89	
Final Action Effective	05/00/89	

Small Entity: No

Additional Information: SAR No. 2585.

FTS:8-382-2287

Agency Contact: Geoffrey Cooper, Environmental Protection Agency, Water, WH-546, Washington, DC 20460, 202 382-2287

RIN: 2040-AB25

2695. EFFLUENT GUIDELINES FOR PHARMACEUTICALS

Legal Authority: 33 USC 1311 / CWA 301; 33 USC 1314 / CWA 304; 33 USC 1316 / CWA 306; 33 USC 1317 / CWA 307; 33 USC 1361 / CWA 501

CFR Citation: 40 CFR 439

Legal Deadline: None.

Abstract: The Agency has not decided to issue NSPS regulations to control the discharge of conventional pollutants from new source direct dischargers in the pharmaceuticals industry. The Agency will finalize BAT and NSPS regulations to control the discharge of the nonconventional pollutant, COD, but no decision has been made when to begin regulation procedures. Therefore, this action will be deleted until a time table for regulation is determined.

Timetable:

Action	Date	FR Cite
NPRM	11/26/82	47 FR 53584
NPRM NSPS	10/27/83	48 FR 49832
Final Action	10/27/83	48 FR 49808
NOTICE	11/01/83	48 FR 50322
NOTICE	01/10/84	49 FR 1190
NPRM BCT Cost	03/09/84	49 FR 8967
NOTICE	04/26/84	49 FR 17978
NOTICE New Data	07/02/84	49 FR 27145
NOTICE	01/31/85	50 FR 4513
NOTICE	05/01/85	50 FR 18486
NOTICE New Data	09/09/85	50 FR 36638

Next Action Undetermined

(BCT)

Final Action 12/16/86 (51 FR 45094)

Small Entity: No

Additional Information: SAR No. 1427.

FTS:8-382-7182.

Analysis: Regulatory Impact Analysis; Regulatory Flexibility Analysis

Agency Contact: Frank Hund, Environmental Protection Agency, Water, (WH-552), Washington, DC 20460, 202 382-7182

RIN: 2040-AA13

2696. EFFLUENT GUIDELINES FOR GUM AND WOOD (REVISION)

Legal Authority: 33 USC 1311 / CWA 301; 33 USC 1314 / CWA 304; 33 USC 1316 / CWA 306; 33 USC 1317 / CWA 307; 33 USC 1361 / CWA 501

CFR Citation: 40 CFR 454

Legal Deadline: None.

Abstract: The Agency has not determined when to publish guidance describing wastewater treatment alternatives and the basis for the exclusion of BAT and pretreatment standards for new and existing sources for the Gum and Wood Industry. Therefore, this entry may not appear in future agendas until a decision is reached.

Timetable:

Action	Date	FR Cite
Interim Final Rule SUBCATEGORIES A-F	07/18/76	41 FR 20511
NPRM SUBCATEGORY G	11/29/79	44 FR 68710
Guidance	00/00/00	

Small Entity: No

Additional Information: SAR No. 1425.

FTS:8-382-7186.

Analysis: Regulatory Impact Analysis; Regulatory Flexibility Analysis

Agency Contact: Richard E. Williams, Environmental Protection Agency, Water, (WH-552), Washington, DC 20460, 202 382-7186

RIN: 2040-AA17

2697. EFFLUENT GUIDELINES FOR ORE MINING AND DRESSING (PLACER MINING)

Significance: Regulatory Program

Legal Authority: 33 USC 1311 / CWA 301; 33 USC 1314 / CWA 304; 33 USC 1316 / CWA 306; 33 USC 1317 / CWA 307; 33 USC 1361 / CWA 501

CFR Citation: 40 CFR 144.103; 40 CFR 144.104; 40 CFR 440.142; 40 CFR 440.144; 40 CFR 440.143; 40 CFR 440.145

Legal Deadline: Judicial, May 9, 1988.

Abstract: The Agency is developing BPT, BCT, and BAT limitations and NSPS for mines and mills that mine gold placer ores and recover gold by gravity separation methods. These limitations will apply to wastewater generated by these operations and are an additional subpart to the Ore Mining and Dressing subcategory for which final regulations were issued on December 3, 1982. In October of 1987 the Agency filed a motion for modification of the Consent Decree to extend the promulgation date. On February 1, the Agency was advised that the Court accepted the revised schedule and the promulgation date for the final amendments is now May 9, 1988.

Timetable:

Action	Date	FR Cite
NPRM	11/20/85	50 FR 47982
Notice new data	02/14/86	51 FR 5563
Notice	04/10/86	51 FR 12344
Notice	03/24/87	52 FR 9414
Final Action	05/00/88	

Small Entity: Yes

Additional Information: SAR No. 2584.

FTS 8-382-7191.

Analysis: Regulatory Flexibility Analysis

Agency Contact: Willis E. Umholtz, Environmental Protection Agency, Water, (WH-552), Washington, DC 20460, 202 382-7191

RIN: 2040-AA65

2698. EFFLUENT GUIDELINES FOR NONFERROUS METALS: (PHASE I) (REVISION)

Legal Authority: 33 USC 1311 /CWA 301; 33 USC 1314 /CWA 304; 33 USC 1316 /CWA 306; 33 USC 1317 /CWA 307; 33 USC 1361 /CWA 501

CFR Citation: 40 CFR 421

Legal Deadline: None.

Abstract: In response to Settlement Agreements, the Agency promulgated amendments to the regulations previously issued on 3/8/84 (49 FR 8742). The first portion of these amendments is in response to a Settlement Agreement (11/27/85) affecting the primary and secondary aluminum subcategories. The recently promulgated amendments for this segment include regulations for BAT, pretreatment, and new source standards to limit the discharge of pollutants from facilities in these subcategories. In response to separate Settlement 6/26/85, EPA will promulgate amendments for the primary tungsten subcategory. These amendments address limitations for BPT, BAT, pretreatment and new source standards to limit the discharge of pollutants from facilities in this subcategory.

Timetable:

Action	Date	FR Cite
NPRM	02/17/83	48 FR 7092
Final Action	03/08/84	49 FR 8742
NOTICE	06/29/84	49 FR 26738
NOTICE	07/24/84	49 FR 29792
NOTICE	03/28/85	50 FR 12252

Primary and Secondary Aluminum

NOTICE 05/20/86 (51 FR 18530)

NOTICE FINAL 07/07/87 (52 FR 25552)

Primary Tungsten

NOTICE 01/22/87 (52 FR 2480)

NOTICE FINAL 12/00/88

Small Entity: No

Additional Information: SAR No. 1410.

FTS: 8-382-7126

Analysis: Regulatory Impact Analysis; Regulatory Flexibility Analysis

Agency Contact: Ernest P. Hall, Environmental Protection Agency, Water, (WH-552), Washington, D.C. 20460, 202 382-7126

RIN: 2040-AA96

2699. GENERAL PRETREATMENT REGULATIONS: RESPONSE TO PIRT (REVISION)

Significance: Regulatory Program

Legal Authority: 33 USC 1317 /CWA 307

CFR Citation: 40 CFR 403

Legal Deadline: None.

Abstract: Revisions to the General Pretreatment Regulations were proposed to address final recommendations of the Pretreatment Implementation Review Task Force (PIRT) and the need for other adjustments to the regulations. The purpose of the rule will be to clarify reporting and compliance monitoring requirements, add flexibility for cities implementing the program and improve procedures for local and state program approval.

Timetable:

Action	Date	FR Cite
NPRM	06/12/86	51 FR 21454
Final Action	00/00/00	

Extension of comment period

Notice 08/21/86 (51 FR 29950)

Small Entity: No

Additional Information: SAR No. 2212.

FTS: 8-475-7054.

Agency Contact: George Utting, Environmental Protection Agency, Water, (EN-336), Washington, DC 20460, 202 475-8328

RIN: 2040-AA81

2700. SECTION 404 STATE PROGRAM REGULATIONS (REVISION)

Significance: Regulatory Program

Legal Authority: 33 USC 1344 / CWA 404

CFR Citation: 40 CFR 124; 40 CFR 232; 40 CFR 233

Legal Deadline: None.

Abstract: Under Section 404(g) of the Clean Water Act, EPA is responsible for approving and overseeing assumption of the 404 "dredge and fill" program by States. In response to comments from the States, EPA is revising its State program regulations (formerly part of the Consolidated Permit Regulations), to provide increased incentives and simplified procedures for State assumption of the Section 404 program.

Timetable:

Action	Date	FR Cite
NPRM	10/02/84	49 FR 39012
Final Action	00/00/00	

Small Entity: No

Additional Information: SAR No. 1973.

FTS: 8-382-5043.

Agency Contact: Lori Williams, Environmental Protection Agency, Administration and Resource Management, Wetland Strategies and State Programs Div., Office of Wetlands Protection, (A-104F), 202 382-5043

RIN: 2030-AA00

2701. OCEAN INCINERATION REGULATION (REVISION)

Significance: Regulatory Program

Legal Authority: 33 USC 1410 / MPRSA

CFR Citation: 40 CFR 220; 40 CFR 227; 40 CFR 228; 40 CFR 234

Legal Deadline: None.

Abstract: The Agency plans to provide specific permitting regulations for the ocean incineration of liquid hazardous and nonhazardous wastes. These regulations will be an independent part of the Ocean Dumping Regulations. The existing Ocean Dumping Regulations provide no specific criteria or standards for the review of ocean incineration permit applications.

Timetable:

Action	Date	FR Cite
NPRM	02/28/85	50 FR 8222

Next Action Undetermined

Small Entity: No

Additional Information: SAR No. 2140.

FTS: 8-382-7166.

Agency Contact: Darrell Brown, Environmental Protection Agency, Water, (WH-556F), Washington, DC 20460, 202 382-7166

RIN: 2040-AA72

2702. OCEAN INCINERATION SITE EVALUATION, SOLICITATION, AND DESIGNATION

Legal Authority: 33 USC 1410 /MPRSA

CFR Citation: 40 CFR 228; 40 CFR 234

Legal Deadline: None.

Abstract: This action is a finalization of a portion of the ocean incineration regulation, which was proposed on February 28, 1985. This rule provides specific criteria for evaluating candidate sites, selecting specific sites and establishes the procedures for designating and listing sites for use after issuance of and under the terms of an ocean incineration permit. Designation of sites is a prerequisite to issuance of a permit for use of a site. Promulgation of this rule will allow the Agency to begin the lengthy process of site evaluation, selection and designation.

Timetable:

Action	Date	FR Cite

Next Action Undetermined

Small Entity: Not Applicable

Additional Information:

FTS:8:382-7166

Agency Contact: Darrell Brown, Environmental Protection Agency, Water, (WH-556), Washington, DC 20460, 202 382-7166

RIN: 2040-AB28

ENVIRONMENTAL PROTECTION AGENCY (EPA) —Clean Water Act (CWA)

Completed Actions

2703. WATER QUALITY STANDARDS-REVISION

CFR Citation: 40 CFR 131

Completed:

Reason	Date	FR Cite
Postponed Indefinitely	03/00/88	

Small Entity: Not Applicable

Agency Contact: David K. Sabock 202 245-3042

RIN: 2040-AB34

2704. EFFLUENT GUIDELINES FOR ORGANIC CHEMICALS AND PLASTICS AND SYNTHETIC FIBERS

Significance: Regulatory Program

CFR Citation: 40 CFR 414; 40 CFR 416

Completed:

Reason	Date	FR Cite
Final Action	11/05/87	52 FR 42522
Final Action Effective	12/21/87	

Small Entity: Yes

Agency Contact: E.H. Forsht 202 382-7190

RIN: 2040-AA05

2705. EFFLUENT GUIDELINES FOR ADHESIVES AND SEALANTS

CFR Citation: 40 CFR 463

Completed:

Reason	Date	FR Cite
Postponed indefinitely	03/25/88	

Small Entity: No

EPA—CWA

Completed Actions

Agency Contact: Elwood Forsht 202 382-7190

RIN: 2040-AA30

2706. EFFLUENT GUIDELINES FOR PULP, PAPER, AND PAPERBOARD (PCB'S) (REVISION)

CFR Citation: 40 CFR 430

Completed:

Reason	Date	FR Cite
Postponed Indefinitely	03/00/88	

Small Entity: No

Agency Contact: Thomas O'Farrell 202 382-7137

RIN: 2040-AA63

2707. EFFLUENT GUIDELINES FOR LEATHER TANNING (REVISION)

CFR Citation: 40 CFR 425

Completed:

Reason	Date	FR Cite
Final Action	03/21/88	53 FR 9176
Final Action Effective	05/04/88	

Small Entity: No

Agency Contact: Rexford R. Gile, Jr. 202 382-7146

RIN: 2040-AA91

2708. EFFLUENT GUIDELINES FOR ALUMINUM FORMING (REVISION)

CFR Citation: 40 CFR 467

Completed:

Reason	Date	FR Cite
Postponed Indefinitely	03/00/88	

Small Entity: Undetermined

Agency Contact: Ernest P. Hall 202 382-7126

RIN: 2040-AB33

2709. GENERAL PRETREATMENT REGULATIONS: REMOVAL CREDITS (REVISION)

CFR Citation: 40 CFR 403.7

Completed:

Reason	Date	FR Cite
Final Action	11/05/87	52 FR 42434

Small Entity: No

Agency Contact: Craig Jakubowics 202 475-9533

RIN: 2040-AB02

2710. DISCHARGE OF OIL (REVISION)

CFR Citation: 40 CFR 110

Completed:

Reason	Date	FR Cite
Final Action	04/02/87	52 FR 10712

Small Entity: No

Agency Contact: Hubert Watters 202 382-2463

RIN: 2040-AA48

ENVIRONMENTAL PROTECTION AGENCY (EPA) —Atomic Energy Act (AEA)

Proposed Rule Stage

2711. ENVIRONMENTAL STANDARDS FOR THE MANAGEMENT AND DISPOSAL OF SPENT NUCLEAR FUEL, HIGH-LEVEL AND TRANSURANIC RADIOACTIVE WASTES

Legal Authority: 42 USC 2201/AEA 161

CFR Citation: 40 CFR 191

Legal Deadline: None.

Abstract: On August 15, 1987, the Agency promulgated generally applicable environmental standards for the management and disposal of spent nuclear fuel, high-level and transuranic radioactive wastes. These Standards applied to management and disposal of such materials generated by activities under the jurisdiction of the Department of Energy or regulated by the Nuclear Regulatory Commission. They established limits for the release of radioactive materials to the environment. Subsequent to promulgation of this rule, several petitions for review were filed and consolidated in the U.S. Court of Appeals for the First Circuit. As of September 23, 1987 the Court vacated and remanded Subpart B of the Standards to the Agency for revision consistent with its ruling.

Timetable:

Action	Date	FR Cite
NPRM	00/00/00	

Small Entity: No

Additional Information:

FTS: 8-475-9633

Agency Contact: Ray Clark, Environmental Protection Agency, Air and Radiation, ANR-460, Washington, DC 20460, 202 475-9633

RIN: 2060-AC30

2712. ENVIRONMENTAL PROTECTION STANDARDS FOR LOW-LEVEL RADIOACTIVE WASTE

Significance: Regulatory Program

Legal Authority: 42 USC 2201/AEA 274/Reorganization Plan 3 of 1970/TSCA/RCRA

CFR Citation: 40 CFR 193

Legal Deadline: None.

Abstract: The Agency intends to set generally applicable standards for the management and disposal of low-level radioactive wastes, possibly to include some natural and accelerator produced radioactive wastes. The Agency is considering criteria for declaring certain wastes as below regulatory concern as part of this activity.

Timetable:

Action	Date	FR Cite
ANPRM	06/31/83	48 FR 39563
NPRM	08/00/88	
Final Action	11/00/90	

Small Entity: Undetermined

Additional Information: SAR No. 1727.

FTS:8-475-9633.

Agency Contact: James M. Gruhlke, Environmental Protection Agency, Air and Radiation, (ANR-460), Washington, DC 20460, 202 475-9633

RIN: 2060-AA04

2713. RESIDUAL RADIOACTIVITY

Significance: Regulatory Program

Legal Authority: 42 USC 2201/AEA 161; 42 USC 2021/AEA 272

CFR Citation: 40 CFR 194

Legal Deadline: None.

Abstract: The Agency is determining what standards and/or guidance is needed to control radiation exposure levels to the public from residual radioactivity after cleanup of sites and facilities where radionuclides were used and where unrestricted use will be allowed. This action may also control radiation exposure levels to the general public from materials contaminated with radionuclides which will be recycled into general commerce.

Timetable:

Action	Date	FR Cite
ANPRM	06/16/86	51 FR 22264
NPRM	04/00/90	
Final Action	04/00/92	

Small Entity: Undetermined

Additional Information: SAR No. 2073.

FTS: 8-475-9620.

Analysis: Regulatory Impact Analysis

Agency Contact: John L. Russell, Environmental Protection Agency, Air and Radiation, ANR-460, Washington, DC 20460, 202 475-9620

RIN: 2060-AB31

ENVIRONMENTAL PROTECTION AGENCY (EPA) —Atomic Energy Act (AEA)

Final Rule Stage

2714. TRANSURANIUM ELEMENTS

Legal Authority: 42 USC 2021(h) /AEA 274(h) /Reorganization Plan No. 3 of 1970

CFR Citation: Not applicable

Legal Deadline: None.

Abstract: This action provides Interim recommendations to Federal Agencies to establish dose rate limits for people exposed to transuranium elements in the general environment.

Timetable:

Action	Date	FR Cite
NPRM	11/30/77	42 FR 60956
Interim Final Rule	00/00/00	

Small Entity: No

Additional Information: SAR No. 1162.

FTS:8-475-9620.

Agency Contact: Allan Richardson, Environmental Protection Agency, Air and Radiation, (ANR-460), Washington, DC 20460, 202 475-9620

RIN: 2060-AA01

2715. RADIOFREQUENCY RADIATION GUIDANCE

Significance: Regulatory Program

Legal Authority: 42 USC 2021(h) /AEA 274(h) /Reorganization Plan No. 3 of 1970

CFR Citation: Not applicable

Legal Deadline: None.

Abstract: This guidance will serve to limit exposure of the general public to radiofrequency (RF) radiation, which may pose a potential health risk. The Agency is considering four alternative approaches to RF radiation guidance, three of which are regulatory and one nonregulatory. Upon Presidential approval of EPA guidance (to federal agencies in the formulation of radiation exposure standards), the pertinent agencies are responsible for implementation.

Timetable:

Action	Date	FR Cite
ANPRM	12/23/82	47 FR 57338
NPRM	07/30/86	51 FR 27318
Final Action	07/00/89	

Small Entity: Undetermined

Additional Information: SAR No. 1525.

FTS: 8-475-9626.

Background Information Reports: a) Biological Effects of Radiofrequency Radiation, b) the Radiofrequency Radiation Environment, c) Analysis of the Radiofrequency Fields Produced by Broadcast Antennas, and d) Analysis of Economic Impact of Federal Radiation Protection Guidance (to Limit Exposure of the Public to Radiofrequency Radiation).

Agency Contact: David E. Janes, Environmental Protection Agency, Air and Radiation, (ANR-461), Washington, DC 20460, 202 475-9626

RIN: 2060-AA02

2716. GROUNDWATER PROTECTION STANDARDS FOR INACTIVE URANIUM TAILING SITES

Significance: Regulatory Program

Legal Authority: 42 USC 2022(a) /AEA 275(a)

CFR Citation: 40 CFR 192

Legal Deadline: None.

Abstract: The Tenth Circuit Court of Appeals has remanded the ground water standards as 40 CFR 192.20(a)(2) and (3). The new standards will replace these remanded standards.

Timetable:

Action	Date	FR Cite
NPRM	09/24/87	52 FR 36000
Final Action	04/00/89	

Small Entity: No

Additional Information: SAR No. 1166.

FTS:8-475-9620

Agency Contact: Kurt Feldmann, Environmental Protection Agency, Air and Radiation, ANR-460, 202 475-9620

RIN: 2060-AC03

ENVIRONMENTAL PROTECTION AGENCY (EPA) —Safe Drinking Water Act (SDWA)

Proposed Rule Stage

2717. REVISION TO PUBLIC WATER SYSTEM SUPERVISION (PWSS) STATE PRIMACY REQUIREMENTS

Legal Authority: 42 USC 300 /SDWA 1417

CFR Citation: 40 CFR 142

Legal Deadline: None.

Abstract: This action will set requirements, application procedures, and administrative process for submission of State program revisions for EPA review and approval and revise the existing primacy regulations

which currently apply only to the process for initial primacy.

Timetable:

Action	Date	FR Cite
NPRM	04/00/88	
Final Action	12/00/88	

Small Entity: No

Additional Information: SAR No. 2469.

FTS:8-382-5522

Agency Contact: Carl Reeverts, Environmental Protection Agency, Water, WH-550-E, Washington, DC 20460, 202 382-5522

RIN: 2040-AB26

2718. REVISIONS TO THE SAFE DRINKING WATER ACT'S, UNDERGROUND INJECTION CONTROL REGULATIONS

Legal Authority: 42 USC 300j-4 /SDWA 1445; 42 USC 300h-1 /SDWA 1422

CFR Citation: 40 CFR 144; 40 CFR 146

Legal Deadline: None.

Abstract: These amendments to the UIC Program clarify the intent of the regulations covering authorization-by-rule requirements at 40 CFR Part 144, Subpart C. These new provisions will clarify how existing injection wells become authorized by rule and when injection is prohibited for failure to comply with authorization- by-rule requirements. EPA will also propose amendments to the noncompliance and program reporting requirements at 40 CFR 144.8; to the mechanical integrity requirements at 40 CFR 144.28(f) and 144.51(p). EPA will also propose definitions for the terms "convert" and "conversion" to help clarify when a well changes status from one well classification to another. Finally, a new regulation will codify SDWA 1445(a)(1) as it applies to the UIC program.

Timetable:

Action	Date	FR Cite
NPRM	06/00/88	
Final Action	03/00/89	

Small Entity: No

Additional Information: SAR No. 2428.

FTS:8-382-5530

Agency Contact: Francoise Brasier, Environmental Protection Agency, Water, WH-550-E, Washington, DC 20460, 202 382-5530

RIN: 2040-AB27

2719. NATIONAL PRIMARY DRINKING WATER REGULATIONS: SYNTHETIC ORGANIC CHEMICALS AND INORGANIC CHEMICALS, MONITORING FOR UNREGULATED CONTAMINANTS (PHASE II, 40 CONTAMINANTS)

Significance: Regulatory Program

Legal Authority: 42 USC 300 / SDWA 1412

CFR Citation: 40 CFR 141

Legal Deadline: Statutory, June 19, 1988.

Abstract: EPA is reproposing maximum contaminant level goals (MCLGs) and proposing National Primary Drinking Water Regulations (NPDWRs) for about 40 synthetic organic chemicals and inorganic chemicals. The NPDWRs consist of proposed maximum contaminants level (MCLs), as well as proposed monitoring, reporting, and public notification requirements for these contaminants. This action proposes the best available technology (BAT) upon which the MCLs are based and BAT for the purposes of issuing variances and exemptions to public water systems. In addition to the NPDWRs for the synthetic organic chemicals and inorganic chemicals, the notice proposes monitoring requirements for other synthetic organic chemicals which are not regulated by NPDWRs or proposed for regulation in this notice.

Timetable:

Action	Date	FR Cite
ANPRM	10/05/83	48 FR 45502
NPRM	11/13/85	50 FR 46936
NPRM MCLs	06/00/88	
Final Action	04/00/89	

Small Entity: Yes

Additional Information: SAR No. 1755.

FTS:8-382-7575.

Analysis: Regulatory Impact Analysis; Regulatory Flexibility Analysis

Agency Contact: Joseph Cotruvo, Environmental Protection Agency, Water, (WH-550), Washington, DC 20460, 202 382-7575

RIN: 2040-AA55

2720. NATIONAL PRIMARY DRINKING WATER REGULATION: RADIONUCLIDES

Significance: Regulatory Program

Legal Authority: 42 USC 300 /SDWA 1412

CFR Citation: 40 CFR 141

Legal Deadline: Statutory, June 19, 1989.

Abstract: EPA will propose Maximum Contaminant Levels Goals (MCLGs) and Primary Drinking Water Standards for radionuclides in drinking water. These radionuclides include radium, uranium, radon, gross alpha, and gross beta and photon emitters.

Timetable:

Action	Date	FR Cite
ANPRM	10/05/83	48 FR 45502
ANPRM	09/30/86	51 FR 34836
NPRM	08/00/88	
Final Action	06/00/89	

Small Entity: Undetermined

Additional Information: SAR No. 2281.

FTS: 8-382-7575.

Analysis: Regulatory Impact Analysis

Agency Contact: Joseph Cotruvo, Environmental Protection Agency, Water, (WH-550-D), Washington, DC 20460, 202 382-7575

RIN: 2040-AA94

2721. NATIONAL PRIMARY DRINKING WATER REGULATIONS: DISINFECTION, DISINFECTANTS AND DISINFECTION BY-PRODUCTS (REVISION)

Significance: Regulatory Program

Legal Authority: 42 USC 300 /SDWA 1412

CFR Citation: 40 CFR 141

Legal Deadline: Statutory, June 19, 1989. This deadline applies only to the disinfection requirements.

Abstract: EPA will propose that all public water systems use disinfection treatment processes; variance criteria will be developed. The Agency will propose MCLGs and MCLs for disinfectants and disinfection by-products.

Timetable:

Action	Date	FR Cite
NPRM	01/00/90	
Final Action	01/00/91	

Small Entity: Undetermined

Additional Information: SAR No. 2340.

FTS: 8-382-7575

Analysis: Regulatory Impact Analysis

Agency Contact: Joseph A. Cotruvo, Environmental Protection Agency, Water, WH-550D, 202 382-7575

RIN: 2040-AA97

2722. NATIONAL PRIMARY DRINKING WATER REGULATIONS: INORGANIC AND ORGANIC COMPOUNDS (PHASE V/30 CONTAMINANTS)

Legal Authority: 42 USC 300 /SDWA 1412

CFR Citation: 40 CFR 141

Legal Deadline: Statutory, June 19, 1989.

Abstract: This rule will set MCLGs and NPDWRs for about 30 inorganic and organic chemicals specified in the SDWA.

Timetable:

Action	Date	FR Cite
ANPRM	10/05/83	48 FR 45502
ANPRM Comment Period End	11/13/85	50 FR 16936
MCLs		
NPRM	06/00/88	
Final Action	07/00/89	

Small Entity: Undetermined

Additional Information: SAR No. 2396.

FTS:8-382-7575

Analysis: Regulatory Impact Analysis

Agency Contact: Joseph Cotruvo, Environmental Protection Agency, Water, WH-550-D, Washington, DC 20460, 202 382-7575

RIN: 2040-AB11

2723. ● NATIONAL PRIMARY DRINKING WATER REGULATIONS: LEAD AND COPPER

Significance: Regulatory Program

Legal Authority: 42 USC 300 SDWA 1412

Legal Deadline: Statutory, June 19, 1989.

Abstract: This rule will set MCLGs and MCL/Monitoring requirements for naturally occuring lead and copper as specified in the SDWA. This rule will also establish a treatment technique requirement for corrosion.

Timetable:

Action	Date	FR Cite
ANPRM	10/05/83	48 FR 45502
NPRM MCLG	11/13/85	50 FR 46936
NPRM MCLGs/MCLs & Treatment Technique	06/30/88	
Final Action	12/30/88	

Small Entity: Undetermined

Additional Information: SAR No. 2810

FTS: 8-382-5508

Agency Contact: Jeanne Briskin, Lead Task Force, Environmental Protection Agency, Water, 401 M Street, SW, Washington, DC 20460, 202 382-5508

RIN: 2040-AB51

2724. PUBLIC WATER SUPPLY SUPERVISION PROGRAM AND UNDERGROUND INJECTION CONTROL PROGRAM: ADMINISTRATIVE ENFORCEMENT IMPLEMENTATION PROCEDURES

Legal Authority: 42 USC 300 / SDWA 1414

CFR Citation: 40 CFR 144; 40 CFR 148

Legal Deadline: None.

Abstract: EPA is required to promulgate regulations to describe procedures for the notice and opportunity for public hearing, and conference with primacy States concerning administrative orders under Section 1414(g) of the Safe Drinking Water Act. The Agency will also amend 40 CFR Part 22 to include PWS penalty assessments.

Timetable:

Action	Date	FR Cite
NPRM	06/00/88	
Final Action	12/00/88	

Small Entity: No

Additional Information: SAR No. 2381(PWSS); SAR No. 1972(UIC)

FTS:8-382-5558

Agency Contact: Don Olson, Environmental Protection Agency, Water, WH-550, Washington, DC 20460, 202 382-5558

RIN: 2040-AB07

2725. PUBLIC WATER SYSTEM SUPERVISION PROGRAM: BAN ON LEAD IN PLUMBING

Legal Authority: 42 USC 300 /SDWA 1422

CFR Citation: 40 CFR 141; 40 CFR 142

Legal Deadline: Statutory, June 19, 1989.

Abstract: EPA has promulgated new public notification requirements regarding lead contamination of drinking water to implement section 1417(a)(2) of the Safe Drinking Water Act (SDWA). The new public notification requirements for lead require public water systems to identify and provide notice to persons who may be affected by lead contamination in their drinking water, where such contamination results from the use of lead in the construction materials of the distribution system. Section 1417(b) provides that the lead public notification requirements in section 1417(a)(2) shall be enforced in all States as of June 19, 1988. EPA is authorized to withhold up to five percent of a State's section 1443(a) public water system supervision program grant if the Agency determines that the State is not enforcing the prohibition and public notice requirements for lead. The existing grant regulations, specifically 40 CFR Part 135, do not need to be changed to accommodate this withholding. EPA will publish a guidance document that will implement this part of the SDWA as soon as it is available.

Timetable:

Action	Date	FR Cite
Guidance	00/00/00	

Small Entity: No

Additional Information: SAR No. 2378.

FTS:8-382-5526

Agency Contact: John Trax, Environmental Protection Agency, Water, Water, WH-550, 202 382-5526

RIN: 2040-AB05

ENVIRONMENTAL PROTECTION AGENCY (EPA) —Safe Drinking Water Act (SDWA)

Final Rule Stage

2726. INDIAN RULE FOR THE WELLHEAD PROTECTION PROGRAM AND SOLE SOURCE AQUIFER DEMONSTRATION PROGRAM

Significance: Regulatory Program

Legal Authority: 42 USC 300j-11/SDWA 1451

CFR Citation: 40 CFR 35

Legal Deadline: Statutory, December 1987.

Abstract: The Safe Drinking Water Act Amendments of 1986 authorize the EPA Administrator to treat Indian tribes as States, where appropriate. EPA is to issue associated regulations by eighteen months after the date of enactment (signed June 19, 1986). The Indian rule for the Wellhead Protection and Sole Source Aquifer Demonstration Programs will allow eligible Indian tribes to apply for and receive grants under these two programs, in the same manner as States.

Timetable:

Action	Date	FR Cite
NPRM	12/09/87	52 FR 46712
Final Action	06/00/88	

Small Entity: No

Additional Information: SAR No. 2440.

FTS:8-382-7077

Agency Contact: Marian Mlay, Environmental Protection Agency, Water, Office of Ground Water Protection, (WH-550G), Washington, DC 20460, 202 382-7077

RIN: 2040-AB18

2727. UNDERGROUND INJECTION CONTROL PROGRAM: HAZARDOUS WASTE DISPOSAL INJECTION RESTRICTIONS; AMENDMENTS TO TECHNICAL REQUIREMENTS FOR CLASS I HAZARDOUS WASTE INJECTION WELLS

Significance: Regulatory Program

Legal Authority: 42 USC 6924 /RCRA 3004(f) and (g)

CFR Citation: 40 CFR 124; 40 CFR 144; 40 CFR 146; 40 CFR 148

Legal Deadline: Statutory, August 8, 1988.

Abstract: This action proposes to amend the regulations governing the underground injection of hazardous wastes in two major areas. Additions to Part 146 propose to impose stricter standards on the construction and operating requirements applicable to owners and operators of Class I wells. New Part 148 would codify EPA's regulatory framework for implementing the land disposal restrictions for injection wells under sections 3004(f) and (g) of RCRA. Amendments to Parts 124 and 144 modify administrative procedures that are applicable to Class I wells.

Timetable:

Action	Date	FR Cite
NPRM	06/27/87	52 FR 32446
Final Action	05/00/88	

Small Entity: No

Additional Information: SAR No. 2211.

FTS:8-382-5508

Analysis: Regulatory Impact Analysis

Agency Contact: John Atcheson, Environmental Protection Agency, Water, WH-550-A, 202 382-5508

RIN: 2040-AB03

2728. CRITERIA FOR FILTRATION AND DISINFECTION OF SURFACE WATER AND PRIMARY DRINKING WATER REGULATIONS FOR MICROBIOLOGICAL CONTAMINANTS

Significance: Regulatory Program

Legal Authority: 42 USC 300 /SDWA 1412

CFR Citation: 40 CFR 141

Legal Deadline: Statutory, December 19, 1987.

Abstract: EPA plans to establish regulations specifying criteria that States will use to determine which surface water systems will be required to install filtration. The regulations will also address performance criteria for filtration systems. The criteria will include disinfection requirements. The regulations will constitute NPDWRs for Giardia, viruses, and other pathogens. The Agency will also set MCLGs for certain microbiological contaminants.

Timetable:

Action	Date	FR Cite
ANPRM	10/05/83	48 FR 45502
NPRM	11/03/87	52 FR 42178
Final Action	00/00/00	

Small Entity: Yes

Additional Information: SAR No. 2376.

FTS:8-382-7575.

Analysis: Regulatory Impact Analysis; Regulatory Flexibility Analysis

Agency Contact: Joseph Cotruvo, Environmental Protection Agency, Water, WH-550-D, 202 382-7575

RIN: 2040-AB24

2729. UNDERGROUND INJECTION CONTROL PROGRAM ON INDIAN LANDS

Significance: Regulatory Program

Legal Authority: 42 USC 300 /SDWA 1422

CFR Citation: 40 CFR 147

Legal Deadline: Statutory, March 19, 1987.

Abstract: EPA is required to prescribe an Underground Injection Control (UIC) Program in States that do not have an approved UIC program. In addition, all Indian lands not under the jurisdiction of an approved State program must be covered by a Federal program. The program is to take into consideration the unique conditions and the Tribal concerns for each nation.

Timetable:

Action	Date	FR Cite
NPRM	05/11/87	52 FR 17684
Final Action	04/00/88	

Small Entity: No

Additional Information: SAR No. 2131.

FTS: 8-382-5558

Agency Contact: Donald M. Olson, Environmental Protection Agency, Water, (WH-550), Washington, DC 20460, 202 382-5558

RIN: 2040-AA76

2730. SDWA INDIAN PRIMACY REGULATIONS

Significance: Regulatory Program

Legal Authority: 42 USC 300h-1/SDWA 1422; 42 USC 300j-11/SDWA 1451

CFR Citation: 40 CFR 35; 40 CFR 141; 40 CFR 142; 40 CFR 143; 40 CFR 144; 40 CFR 145; 40 CFR 146

Legal Deadline: Statutory, December 19, 1987.

Abstract: EPA is required to promulgate final regulations, specifying conditions under which Indian Tribes may be treated as States, be delegated primacy enforcement authorities, and receive grants for both the Underground Injection Control and the Public Water System Supervision programs.

EPA—SDWA

Final Rule Stage

Timetable:

Action	Date	FR Cite
NPRM	07/27/87	52 FR 28112
Final Action	04/00/88	

Small Entity: No

Additional Information: SAR No. 2383.

FTS:8-382-5555

Agency Contact: Al Havinga, Environmental Protection Agency, Water, Office of Drinking Water, WH-550D, 202 382-5555

RIN: 2040-AB04

2731. ● CRITERIA FOR IDENTIFYING CRITICAL AQUIFER PROTECTION AREAS

Significance: Regulatory Program

Legal Authority: 42 USC 300h-6 /SDWA 1451

CFR Citation: 40 CFR 149.1

Legal Deadline: Statutory, June 19, 1987.

Abstract: Section 1427 of the SDWA amendments of 1986 requires EPA to develop a rule to establish criteria for identifying Critical Aquifer Protection Areas (CAPA) within designated sole source aquifers. The amendments authorize EPA to establish grant programs to fund demonstration programs by State or local governments to protect groundwater within CAPAs.

Timetable:

Action	Date	FR Cite
Interim Final Rule	06/19/87	52 FR 23982
Final Action	06/00/88	

Small Entity: No

Additional Information: SAR No. 2405.

FTS:8-382-7077

Agency Contact: Marian Mlay, Environmental Protection Agency, Water, (WH-550G), Washington, DC 20460, 202 382-7077

RIN: 2040-AB23

ENVIRONMENTAL PROTECTION AGENCY (EPA) —Safe Drinking Water Act (SDWA)

Completed Actions

2732. NATIONAL PRIMARY DRINKING WATER REGULATION: LIST OF CONTAMINANTS THAT MAY REQUIRE DRINKING WATER REGULATIONS

Significance: Regulatory Program

CFR Citation: 40 CFR 141

Completed:

Reason	Date	FR Cite
Final Action	01/22/88	53 FR 1892

Small Entity: No

Agency Contact: Joseph Cotruvo 202 382-7575

RIN: 2040-AB12

2733. PUBLIC WATER SUPPLY SUPERVISION PROGRAM: GENERAL PUBLIC NOTIFICATION REQUIREMENTS AND NEW LEAD PUBLIC NOTICE

CFR Citation: 40 CFR 141; 40 CFR 142; 40 CFR 143

Completed:

Reason	Date	FR Cite
Final Action	10/28/87	52 FR 41534

Small Entity: No

Agency Contact: Ralph Langemeier 913 236-2815

RIN: 2040-AB06

ENVIRONMENTAL PROTECTION AGENCY (EPA) —Noise Control Act (NCA)

Final Rule Stage

2734. WITHDRAWAL OF PRODUCTS FROM THE AGENCY'S REPORTS IDENTIFYING MAJOR NOISE SOURCES AND WITHDRAWAL OF PROPOSED RULES

Legal Authority: 42 USC 4904(b)(1) / NCA 5(b)(1); 42 USC 4905(a)(1)/ NCA 6(a)(1)

CFR Citation: 40 CFR Not yet determined

Legal Deadline: None.

Abstract: This action withdraws certain products from the Agency's report identifying major noise sources issued under authority of Section 5(b)(1) of the Noise Control Act of 1972. These products are: Truck Transport Refrigeration Units, Power Lawn Mowers, Pavement Breakers, Rock Drills, Wheel and Crawler Tractors and Buses. This action also withdraws proposed noise regulations for Wheel and Crawler Tractors, and Buses, issued under the authority of Section 6(a)(1) of the Act.

Timetable:

Action	Date	FR Cite
NPRM	12/01/82	47 FR 54108
Final Action	12/00/88	

Small Entity: No

Additional Information: SAR No. 2046.

FTS:8-382-4996

No CFR parts pertain. This action withdraws proposals which were not codified.

Agency Contact: K.E. Feith, Environmental Protection Agency, Air and Radiation, (ANR-443), 202 382-4996

RIN: 2060-AB24

ENVIRONMENTAL PROTECTION AGENCY (EPA) —Resource Conservation and Recovery Act (RCRA)

Prerule Stage

2735. ● MUNICIPAL WASTE COMBUSTOR ASH MANAGEMENT

Significance: Regulatory Program

Legal Authority: 42 USC 6907 /RCRA 1008; 42 USC 6944 /RCRA 4004; 42 USC 6949 /RCRA 4010

CFR Citation: 40 CFR 257; 40 CFR 261; 40 CFR 262

Legal Deadline: None.

Abstract: Based on preliminary data, EPA has determined a need to develop a management scheme for handling and disposing of municipal waste combustor ash. The Agency is considering various options for addressing concerns over fugitive dust emissions and groundwater contamination.

Timetable:

Action	Date	FR Cite
ANPRM	04/00/88	
NPRM	12/00/88	
Final Action	12/00/89	

Small Entity: Yes

Additional Information: SAR No. 2494.

FTS:8-475-7700

Analysis: Regulatory Impact Analysis; Regulatory Flexibility Analysis

Agency Contact: Gerry Dorian, Environmental Protection Agency, Solid Waste and Emergency Response, (WH-565E), 202 475-7700

RIN: 2050-AC24

2736. DETERMINATION ON WASTES FROM THE EXPLORATION, DEVELOPMENT ON PRODUCTION OF CRUDE OIL, NATURAL GAS, AND GEOTHERMAL ENERGY

Significance: Regulatory Program

Legal Authority: 42 USC 6921 /RCRA 3001; 42 USC 6982 /RCRA 8002

CFR Citation: Not yet determined

Legal Deadline: Statutory, June 30, 1988. Consent order 6/30/88

Abstract: EPA has completed studies of drilling fluids, produced waters, and other wastes associated with the exploration, development, and production of oil, natural and gas, and geothermal energy. The studies are in response to section 8002(m) of RCRA and culminated in a Report to Congress in December 1987. EPA will determine whether to regulate these wastes within 6 months of submitting the report, and after public hearings and comment.

Timetable:

Action	Date	FR Cite
Regulatory Determination	06/00/88	

Small Entity: No

Additional Information: SAR No. 2449.

FTS: 8-382-3608

Agency Contact: Dan Derkics, Environmental Protection Agency, Solid Waste and Emergency Response, WH-565, Washington DC 20460, 202 382-3608

RIN: 2050-AC08

2737. MANAGEMENT OF USED OIL

Significance: Regulatory Program

Legal Authority: 42 USC 6921 /RCRA 3001; 42 USC 6925 /RCRA 3005; 42 USC 6930 /RCRA 3010; 42 USC 6935 /RCRA 3014

CFR Citation: 40 CFR 260; 40 CFR 261; 40 CFR 266; 40 CFR 270; 40 CFR 271

Legal Deadline: Statutory, November 8, 1986.

Abstract: EPA has determined not to list recycled oil as a hazardous waste. Furthermore, the 11/19/86 notice 51 FR 41900 delineates the Agency's intention to pursue different strategies to control used oil that is to be recycled and use oil bound for disposal. Used oil bound for disposal may be regulated either under section 6 of TSCA or under a RCRA disposal listing. The 11/19/86 notice states that although some controls on recycling may be promulgated in the interim, comprehensive recycling management rules including standards applicable to the combustion of used oil, will not be issued until the disposal controls are issued. The Agency does not have a more specific schedule for proposing these recycling regulations.

Timetable:

Action	Date	FR Cite
Regulatory Determination	Notice 12/00/88	

Small Entity: Yes

Additional Information: SAR No. 2434.

FTS:8-382-7917

Docket No. 3014

Analysis: Regulatory Impact Analysis; Regulatory Flexibility Analysis

Agency Contact: Robert W. Dellinger, Environmental Protection Agency, Solid Waste and Emergency Response, (WH-565), Washington, DC 20460, 202 382-7917

RIN: 2050-AC17

2738. ● DETERMINATION ON WASTES FROM COMBUSTION OF COAL BY ELECTRIC UTILITY POWER PLANTS

Legal Authority: 42 USC 6921 /RCRA 3001; 42 USC 6982 /RCRA 3002

CFR Citation: 40 CFR Not yet determined

Legal Deadline: Statutory, October 1982.

Abstract: EPA conducted a study of fly ash waste, bottom ash waste, slag waste, flue gas emission control waste and other wastes generated by the combustion of coal by electric utility power plants. The study was in response to Section 8002(n) of RCRA and culminated in a Report to Congress in February 1988. EPA will determine within six months after they submit the report, hold public hearings, and allow for public comment determine whether to regulate these wastes.

Timetable:

Action	Date	FR Cite
Regulatory Determination	Notice 08/00/88	

Small Entity: Undetermined

Additional Information: SAR No. 2572.

FTS:8-382-3608

Agency Contact: Dan Derkics, Environmental Protection Agency, Solid Waste and Emergency Response, (WH-565), 202 382-3608

RIN: 2050-AC53

2739. ● DETERMINATION ON SOLID WASTE FROM SELECTED METALLIC ORE PROCESSING OPERATIONS

Legal Authority: 42 USC 6921 /RCRA 3001; 42 USC 6982 /RCRA 8002

CFR Citation: 40 CFR Undetermined

Legal Deadline: Statutory, October 1983.

Abstract: EPA is presently conducting studies of solid waste from the processing (smelting and refining) of metallic ores in the copper, lead, zinc and zinc oxide, bauxite and aluminum industries. These studies are in response to Section 8002(p) of RCRA and will culminate in a Report to Congress in May 1988. As required by RCRA section 3001(b)(3), the Agency will, after public hearings and public comment, determine within six months of submitting the report whether to

regulate any of these wastes under RCRA Subtitle C.

Timetable:

Regulatory Determination
Notice 11/00/88

Small Entity: Undetermined

Additional Information: SAR No. 2571.

FTS:8-382-3608

Agency Contact: Dan Derkics, Environmental Protection Agency, Solid Waste and Emergency Response, (WH-565), 202 382-3608

RIN: 2050-AC54

ENVIRONMENTAL PROTECTION AGENCY (EPA) —Resource Conservation and Recovery Act (RCRA) — Proposed Rule Stage

2740. MANDATORY INSPECTIONS OF HAZARDOUS WASTE MANAGEMENT FACILITIES

Legal Authority: 42 USC 6925 / RCRA 3007

CFR Citation: Not yet determined

Legal Deadline: None.

Abstract: This action establishes requirements for mandatory inspections of treatment, storage, and disposal facilities for hazardous waste. The regulation establishes the manner, frequency, recordkeeping, and reporting of the inspections.

Timetable:

Action	Date	FR Cite
NPRM	06/00/88	
Final Action	01/00/89	

Small Entity: Undetermined

Additional Information: SAR No. 2332.

FTS: 8-475-9315

Agency Contact: Susan Hodges, Environmental Protection Agency, Solid Waste and Emergency Response, (WH-527), Washington, D.C. 20460, 202 475-9315

RIN: 2050-AB59

2741. ● NEW REQUIREMENTS FOR STATE HAZARDOUS WASTE PROGRAMS

Legal Authority: 42 USC 6905 /RCRA 1006; 42 USC 6912 /RCRA 2002; 42 USC 6926 /RCRA 3006

CFR Citation: 40 CFR 271

Legal Deadline: None.

Abstract: EPA's authority to require capable implementation of a State's hazardous waste management program as a prerequisite to authorization currently is not codified. The current consistency requirements will be revised to provide specific guidance on inconsistent state actions taken without adequate health or environmental rationales.

Timetable:

Action	Date	FR Cite
NPRM	10/00/88	
Final Action	10/00/89	

Small Entity: No

Additional Information: SAR No. 2527.

FTS:8-382-2210

Agency Contact: Lillian Bagus, Environmental Protection Agency, Solid Waste and Emergency Response, (WH-563-B), 202 382-2210

RIN: 2050-AC51

2742. ● NO-MIGRATION VARIANCE FOR RESTRICTED HAZARDOUS WASTE LAND DISPOSAL

Legal Authority: 42 USC 6905 /RCRA 1006; 42 USC 6912(a) /RCRA 2002(a); 42 USC 6921 /RCRA 3001; 42 USC 6924 /RCRA 3004

CFR Citation: 40 CFR 268

Legal Deadline: None.

Abstract: The Agency will propose a regulation that interprets the statutory requirements for making a "no-migration" demonstration that would allow the land disposal of untreated hazardous waste that has been restricted from land disposal. The regulation will define such terms as "no-migration," "responsible degree of certainty," "hazardous constituent," and "unit."

Timetable:

Action	Date	FR Cite
NPRM	07/00/88	
Final Action	07/00/89	

Small Entity: Undetermined

Additional Information: SAR No. 2524.

FTS:8-475-8859

Agency Contact: Laurie Davies, Environmental Protection Agency, Solid Waste and Emergency Response, (WH-565E), 202 475-8859

RIN: 2050-AC56

2743. ● IDENTIFICATION AND LISTING OF HAZARDOUS WASTES - WOOD PRESERVING AND SURFACE PROTECTION WASTE

Significance: Agency Priority

Legal Authority: 42 USC 6905/RCRA 1006; 42 USC 6912(a)/RCRA 2002(a); 42 USC 6921/RCRA 3001; 42 USC 6922/RCRA 3002

CFR Citation: 40 CFR 261

Legal Deadline: Statutory. November 8, 1985 for those wastes containing dioxins.

Abstract: These actions announce EPA's decision whether or not to list a waste as hazardous under RCRA. If a waste is listed as hazardous it will be subject to those requirements contained in 40 CFR Parts 262-266 and Parts 270, 271 and 124.

Timetable:

Action	Date	FR Cite
NPRM	12/00/88	
Final Action	05/00/90	

Small Entity: No

Additional Information: SAR NO. 2174 For further information contact the RCRA/Superfund Hotline (800-424-9346); in the Metropolitan Area (202-382-3000)

Agency Contact: RCRA Hotline, Environmental Protection Agency, Solid Waste and Emergency Response, Environmental Protection Agency, Solid Waste and Emergency Response, Washington, DC 20460, 800 424-9346

RIN: 2050-AC59

2744. SOLID WASTE DISPOSAL FACILITY CRITERIA

Legal Authority: 42 USC 6907a / RCRA 1008a; 42 USC 6944 / RCRA 4004; 42 USC 6949 / RCRA 4010

CFR Citation: 40 CFR 257

Legal Deadline: Statutory, March 31, 1988.

Abstract: The Hazardous and Solid Waste Amendments of 1984 (HSWA) require EPA, by March 31, 1987, to revise the subtitle D criteria for facilities that may receive hazardous household wastes or hazardous wastes from small quantity generators. In response to this statutory mandate, EPA is revising the subtitle D criteria for municipal landfills. At a minimum these criteria must include ground-water monitoring requirements, location standards, and corrective action requirements.

Timetable:

Action	Date	FR Cite
NPRM	04/00/88	
Final Action	12/00/88	

Small Entity: Undetermined

Additional Information: SAR No. 2224.

FTS-382-4489

Analysis: Regulatory Impact Analysis

Agency Contact: Michael Flynn, Environmental Protection Agency, Solid Waste and Emergency Response, (WH-565E), Washington, DC, 202 382-4489

RIN: 2050-AB21

2745. TEST METHODS FOR EVALUATING SOLID WASTE (MANUAL SW846) INCORPORATION BY REFERENCE AND MANDATORY GOOD LABORATORY PRACTICES

Legal Authority: 42 USC 6912 /RCRA 2002

CFR Citation: 40 CFR 261

Legal Deadline: None.

Abstract: This action proposes to update testing methods in the RCRA testing regulations to: a) permit persons to use the latest (3rd) edition of Test Methods for Evaluating Solid Waste (SW-846); and b) require that all testing conducted in support of the RCRA regulatory program follow minimum good laboratory practices and quality assurance procedures.

Timetable:

Action	Date	FR Cite
NPRM	04/00/88	
Final Action	10/00/88	

Small Entity: No

Additional Information: SAR No. 2507.

FTS:8-382-7458

Agency Contact: Denise Zabinski, Environmental Protection Agency, Solid Waste and Emergency Response, (WH-562B), Washington, DC 20460, 202 382-7458

RIN: 2050-AC32

2746. ● GUIDELINE FOR FEDERAL PROCUREMENT FOR RETREAD TIRES

Legal Authority: 42 USC 6912(a) /RCRA 2002(a); 42 USC 6962 /RCRA 6002

CFR Citation: 40 CFR 253

Legal Deadline: None.

Abstract: This action implements Section 6002(e) of RCRA, as amended, which requires EPA (1) to designate items which can be produced with recovered materials and (2) to prepare guidelines to assist procuring agencies in complying with the requirements of Section 6002. Once EPA has designated a procurement item, Section 6002 requires that any procuring agency using appropriated Federal funds to procure that item must purchase such items containing the highest percentage of recovered materials practicable.

Timetable:

Action	Date	FR Cite
NPRM	04/00/88	
Final Action	03/00/89	

Small Entity: Undetermined

Additional Information: SAR No. 2510.

FTS:8-382-4502

Agency Contact: William Sanjour, Environmental Protection Agency, Solid Waste and Emergency Response, (WH-565), 202 382-4502

RIN: 2050-AC52

2747. IDENTIFICATION OF HAZARDOUS WASTES BY TOXICITY CHARACTERISTIC AND LISTING OF ADDITIONAL ORGANIC TOXICANTS

Significance: Regulatory Program

Legal Authority: 42 USC 6921 / RCRA 3001

CFR Citation: 40 CFR 261

Legal Deadline: Statutory, March 8, 1987. Statutory, November 8, 1986 for adding additional characteristics; March 8, 1987 for revising the extraction procedure.

Abstract: The EPA is proposing to amend its hazardous waste identification regulations by introducing a new extraction procedure to be used in the Toxicity Characteristic and by expanding the Toxicity Characteristic to include approximately 38 additional organic toxicants. EPA originally proposed this rule on June 13, 1986 (51 FR 21648); the Agency will repropose the rule.

Timetable:

Action	Date	FR Cite
Final Action (Reproposal)	12/00/88	
NPRM	04/00/88	

Small Entity: Undetermined

Additional Information: SAR No. 2062.

FTS-8-382-8551.

Analysis: RIA and RFA

Agency Contact: Debra Dobkowski, Environmental Protection Agency, Solid Waste and Emergency Response, (WH-562B), Washington, DC 20460, 202 382-8551

RIN: 2050-AA78

2748. SAMPLING AND ANALYSIS METHODS FOR WASTE TESTING

Legal Authority: 42 USC 6921 to 6925 / RCRA 3001 to 3005; 42 USC 6912 / RCRA 2002

CFR Citation: 40 CFR 261

Legal Deadline: None.

Abstract: This action deals with annual updates to the RCRA manual of approved test methods (Test Methods for Evaluating Solid Waste, SW-846). It adds additional approved methods and modifies the existing methods to reflect the latest available performance data.

Timetable:

Action	Date	FR Cite
NPRM	05/00/88	
Final Action	12/00/89	

Small Entity: No

Additional Information: SAR No. 2068.

FTS-8-382-7458.

Agency Contact: Denise Zabinski, Environmental Protection Agency, Solid Waste and Emergency Response, (WH-562B), Washington, DC 20460, 202 382-7458

RIN: 2050-AA82

2749. ● AIR TOXICITY CHARACTERISTIC FOR HAZARDOUS WASTE

Significance: Regulatory Program

Legal Authority: 42 USC 6921 /RCRA 3001

CFR Citation: 40 CFR 261

Legal Deadline: None.

Abstract: EPA will develop procedures to predict the release of volatile organic compounds from wastes. These procedures will be coupled with specific threshold concentrations that are derived from considerations of human health effects as well as persistence in the environment and the ability of compounds to be transported from the disposal site. The Agency will develop a self-implementing test that establishes specific standards which, if exceeded, render a waste a hazardous waste. All wastes exhibiting the hazardous properties above a specified level will be considered hazardous. Evaluations may be performed by the generator, treater, etc.

Timetable:

Action	Date	FR Cite
NPRM	12/00/88	
Final Action	12/00/89	

Small Entity: Yes

Additional Information: SAR No.

FTS:8-475-8551

Analysis: Regulatory Impact Analysis; Regulatory Flexibility Analysis

Agency Contact: Debra Dobknowski, Environmental Protection Agency, Solid Waste and Emergency Response, (WH-562-B), 202 475-8551

RIN: 2050-AC23

2750. CONCENTRATION-BASED RELISTING OF WASTES FROM CHLORINATED ALIPHATICS

Legal Authority: 42 USC 6921 /RCRA 3001

CFR Citation: 40 CFR 261

Legal Deadline: None.

Abstract: This action exempts from regulation any currently listed wastes that are not hazardous because the hazardous constituents are present at levels lower than the concentration levels established by this rule.

Timetable:

Action	Date	FR Cite
NPRM	04/00/88	
Final Action	01/00/89	

Small Entity: No

Additional Information: SAR No. 2482.

FTS:8-475-8679

Agency Contact: Yvonne M. Garbe, Environmental Protection Agency, Solid Waste and Emergency Response, (WH-562B), Washington, DC 20460, 202 475-8679

RIN: 2050-AC30

2751. CONCENTRATION-BASED RELISTING OF WASTES FROM EXPLOSIVES, INORGANIC CHEMICALS, AND IRON AND STEEL INDUSTRIES

Significance: Regulatory Program

Legal Authority: 42 USC 6921 /RCRA 3001

CFR Citation: 40 CFR 261

Legal Deadline: None.

Abstract: This action exempts from regulation any currently listed wastes that are not hazardous because the hazardous constituents are present at levels lower than the concentration levels established by this rule.

Timetable:

Action	Date	FR Cite
NPRM	07/00/88	
Final Action	07/00/89	

Small Entity: No

Additional Information: SAR No. 2483.

FTS:8-475-8551

Agency Contact: Denny Cruz, Environmental Protection Agency, Solid Waste and Emergency Response, (WH-562B), Washington, DC 20460, 202 475-8551

RIN: 2050-AC31

2752. LINERS AND LEAK DETECTION FOR HAZARDOUS WASTE LAND DISPOSAL UNITS

Significance: Regulatory Program

Legal Authority: 42 USC 6924 / RCRA 3004; 42 USC 6925 / RCRA 3005

CFR Citation: 40 CFR 264; 40 CFR 265; 40 CFR 260; 40 CFR 270; 40 CFR 271

Legal Deadline: Statutory, May 8, 1987.

Abstract: EPA has proposed these regulations under the authority of section 3004(a) and 3004(o)(4) of the Resource Conservation and Recovery Act. The regulations will require: 1) new landfills, surface impoundments, waste piles, and land treatment units for the treatment, storage, or disposal of hazardous wastes to utilize an approved leak detection system; 2) double liners and leachate collection systems for waste piles, and certain landfills and surface impoundments; and 3) development of a construction quality assurance program for certain landfills and surface impoundments, as well as final covers at land treatment units. EPA originally proposed this rule on May 29, 1987 (52 FR 20218); the Agency will repropose the rule.

Timetable:

Action	Date	FR Cite
NPRM	05/29/87	52 FR 20218
Final Action (Reproposal)	02/00/89	
NPRM 04/00/88		

Small Entity: No

Additional Information: SAR No. 2080.

FTS-8-382-4682.

Includes previous RINs 2050-AA21, 2050-AA50, and 2050-AA52.

Analysis: Regulatory Impact Analysis

Agency Contact: Paul Cassidy, Environmental Protection Agency, Solid Waste and Emergency Response, (WH-565E), Washington, DC 20460, 202 382-4682

RIN: 2050-AA76

2753. GROUNDWATER MONITORING AT HAZARDOUS WASTE FACILITIES

Legal Authority: 42 USC 6924 /RCRA 3004

CFR Citation: 40 CFR 264

Legal Deadline: None.

Abstract: This action will change the subpart F ground rules monitoring regulation. The following is a summary of the major changes:

o allow site-specific data for groundwater monitoring variances;

o allow flexibility in well installation requirements when access to waste management boundary is difficult;

o clarify definition of waste management area;

o allow a return to detection or compliance monitoring as appropriate;

o allow flexibility in schedules for submittal of information upon approval of Regional Administrator;

o require flow rate and direction determination upon change in ground water gradient;

o clarify monitoring authority of the uppermost aquifer; and

o clarify R.A.'s authority to allow monitoring of a subset of Appendix IX constituents.

Timetable:

Action	Date	FR Cite
NPRM	04/00/88	
Final Action	08/00/88	

Small Entity: No

Additional Information: SAR No. 2277.

FTS-382-7371

Agency Contact: Joe Abe, Environmental Protection Agency, Solid Waste and Emergency Response, (WH-565E), Washington, DC 20460, 202 475-7371

RIN: 2050-AB20

2754. LOCATION STANDARDS FOR HAZARDOUS WASTE FACILITIES

Significance: Regulatory Program

Legal Authority: 42 USC 6924 /RCRA 3004

CFR Citation: 40 CFR 264; 40 CFR 270

Legal Deadline: None.

Abstract: Section 3004(o)(7) of RCRA requires EPA to promulgate standards for the location of hazardous waste treatment, storage, and disposal facilities. Two location standards (floodplain and seismic restrictions) already exist at 40 CFR Part 264.18 and 265.18. Additional standards will specify other criteria for the acceptable location of new, laterally expanding and existing treatment, storage and disposal facilities.

Timetable:

Action	Date	FR Cite
NPRM	04/00/88	
Final Action	04/00/89	

Small Entity: Yes

Additional Information: SAR No. 2909.

FTS:8-382-4656.

Agency Contact: Glen R. Galen, Environmental Protection Agency, Solid Waste and Emergency Response, (WH-565E), Washington, DC 20460, 202 382-4656

RIN: 2050-AB67

2755. DELAY IN THE CLOSURE PERIOD FOR HAZARDOUS WASTE MANAGEMENT FACILITIES

Legal Authority: 42 USC 6924 /RCRA 3004; 42 USC 6925 /RCRA 3005

CFR Citation: 40 CFR 264; 40 CFR 265

Legal Deadline: None.

Abstract: The current regulations require that closure of a hazardous waste unit begin after the final receipt of hazardous wastes. The proposed rule will identify the circumstances under which a unit that ceases to receive hazardous wastes may continue to accept non-hazardous wastes. Amendments will identify conditions for the subsequent use of a unit for non-hazardous waste management and coordination with other closure activities of a hazardous waste management facility. Portions of the closure requirements (Subpart G) will be amended in both parts 264 and 265. These changes will increase the flexibility in the current regulations.

Timetable:

Action	Date	FR Cite
NPRM	04/00/88	
Final Action	09/00/88	

Small Entity: No

Additional Information: SAR No. 2487.

FTS: 8-475-6725

Agency Contact: Sharon Frey, Environmental Protection Agency, Solid Waste and Emergency Response, WH-563, Washington, DC 20460, 202 475-6725

RIN: 2050-AB71

2756. CORRECTIVE ACTION FOR SOLID WASTE MANAGEMENT UNITS (SWMUS) AT HAZARDOUS WASTE MANAGEMENT FACILITIES

Significance: Regulatory Program

Legal Authority: 42 USC 6924 / RCRA 3004(u), 3004(v)

CFR Citation: 40 CFR 264; 40 CFR 270

Legal Deadline: None.

Abstract: These regulations set forth the technical and procedural requirements for conducting corrective action to clean up significant releases to air, surface water, ground water and soil at solid waste management units (SWMUs) at operating, closed, or closing RCRA facilities. The regulations will be used to define the structure of the program, and the requirements for implementing remedial action, remedy selection and corrective measures. Currently, the permitting agencies must make case-by-case decisions on action.

Timetable:

Action	Date	FR Cite
NPRM	04/00/88	
Final Action	01/00/89	

Small Entity: Undetermined

Additional Information: SAR No. 2590.

FTS:8-382-4497

Agency Contact: David Fagan, Environmental Protection Agency, Solid Waste and Emergency Response, WH-563, 202 382-4497

RIN: 2050-AB80

2757. LANDFILL, SURFACE IMPOUNDMENT, AND WASTE PILE CLOSURES FOR HAZARDOUS WASTE MANAGEMENT FACILITIES

Significance: Regulatory Program

Legal Authority: 42 USC 6924 /RCRA 3004

CFR Citation: 40 CFR 264; 40 CFR 265; 40 CFR 270

Legal Deadline: None.

Abstract: These regulations will provide alternate closure options for EPA and authorized states to establish closure and post-closure requirements on a site-specific basis. The regulations address waste and site characteristics, potential pathways of hazardous constituent migration, and health effects. These rules allow for cover systems to be designed base on unique site and waste characteristics. EPA originally proposed this rule on March 19, 1987 (52 FR 8712); the Agency will repropose the rule.

Timetable:

Action	Date	FR Cite
NPRM (Reproposal)	09/00/88	
Final Action	07/00/89	

Small Entity: No

Additional Information: SAR No. 2391.

FTS:8-475-8859

Agency Contact: Lauris Davies, Environmental Protection Agency, Solid Waste and Emergency Response, WH-565E, 202 475-8859

RIN: 2050-AB81

2758. EMISSION CONTROLS FOR HAZARDOUS WASTE INCINERATORS

Significance: Regulatory Program

Legal Authority: 42 USC 6924 / RCRA 3004; 42 USC 6925/RCRA 9005

CFR Citation: 40 CFR 264

Legal Deadline: None.

Abstract: The incinerator standards of Subpart O of Part 264 will be strengthened by proposed additional controls on emissions of metals and residual organic compounds.

Timetable:

Action	Date	FR Cite
NPRM	04/00/88	
Final Action	12/00/88	

Small Entity: No

Additional Information: SAR No. 2453.

FTS:8-382-7935

Analysis: Regulatory Impact Analysis

Agency Contact: Mary Cunningham, Environmental Protection Agency, Solid Waste and Emergency Response, WH-565A, Washington DC 20460, 202 382-7935

RIN: 2050-AB90

2759. LAND DISPOSAL RESTRICTIONS FOR SOIL AND DEBRIS CONTAINING HAZARDOUS WASTES

Legal Authority: 42 USC 6924 /RCRA 3004

CFR Citation: 40 CFR 268

Legal Deadline: Statutory, January 15, 1988.

Abstract: The Agency is investigating the need to set separate treatment standards for soil and debris containing hazardous wastes. By statute, these wastes do not become subject to the Land Disposal Restrictions Rule (51 FR 40572 and 52 FR 25760) for Solvents and Dioxins (RCRA 3004(e)) and the California List (RCRA 3004(d)) until 11/8/88. If necessary, the Agency will further subcategorize the waste streams to provide separate treatment standards applicable to such wastes.

Timetable:

Action	Date	FR Cite
NPRM	12/00/90	
Final Action	10/00/91	

Small Entity: Undetermined

Additional Information: SAR No. 2461.

FTS:8-382-4770

Analysis: Regulatory Impact Analysis

Agency Contact: Stephen Weil, Environmental Protection Agency, Solid Waste and Emergency Response, WH-562B, Washington, DC 20460, 202 382-4770

RIN: 2050-AC03

2760. PERMITTING EXPERIMENTAL FACILITIES CONDUCTING HAZARDOUS WASTE RESEARCH

Legal Authority: 42 USC 6924 / RCRA 3004; 42 USC 6925 / RCRA 3005

CFR Citation: 40 CFR 264; 40 CFR 270

Legal Deadline: None.

Abstract: This proposal will establish special permitting procedures for experimental facilities conducting research and development on the storage, treatment, or disposal of hazardous waste. The regulations would allow experimental facilities considerable flexibility in operating according to an approved research plan, without requiring frequent permit modifications as details of the research changed.

Timetable:

Action	Date	FR Cite
NPRM	09/00/88	
Final Action	09/00/89	

Small Entity: No

Additional Information: SAR No. 2439.

FTS:8-382-7729

Agency Contact: Barbara Foster, Environmental Protection Agency, Solid Waste and Emergency Response, WH-563, 202 382-7729

RIN: 2050-AC04

2761. LAND DISPOSAL RESTRICTIONS FOR FIRST THIRD OF SCHEDULED WASTES

Significance: Regulatory Program

Legal Authority: 42 USC 6924 / RCRA 3004

CFR Citation: 40 CFR 268

Legal Deadline: Statutory, August 8, 1988.

Abstract: This rule establishes land disposal restrictions for the first group of wastes identified by the schedule submitted to the Congress and published May 28, 1986 (51 FR 19300). See related action in the final section.

Timetable:

Action	Date	FR Cite
NPRM	04/08/88	53 FR 11742
Final Action	08/00/88	

Small Entity: Undetermined

Additional Information: SAR No. 2452.

FTS:8-382-4770

Analysis: Regulatory Impact Analysis

Agency Contact: Stephen Weil, Environmental Protection Agency, Solid Waste and Emergency Response, WH-562B, Washington DC 20460, 202 382-4770

RIN: 2050-AC13

2762. CORRECTIVE ACTION FOR RELEASES TO GROUNDWATER FROM REGULATED HAZARDOUS WASTE UNITS

Legal Authority: 42 USC 6924 /RCRA 3004

CFR Citation: 40 CFR 264

Legal Deadline: None.

Abstract: These regulations will amend the technical and procedural requirements for conducting corrective action to clean up significant releases to groundwater from regulated hazardous waste units at operating, closed, or closing RCRA facilities. The regulations will be used to amend the structure of the program and the requirements for implementing remedial action, remedy selection and corrective measures. The requirements for regulated units will be amended to conform to the corrective action requirements for solid waste management units.

Timetable:

Action	Date	FR Cite
NPRM	04/00/88	
Final Action	01/00/89	

Small Entity: No

Additional Information: SAR No. 2503.

FTS:8-382-6785

Analysis: Regulatory Impact Analysis

Agency Contact: Joanne Bahura, Environmental Protection Agency, Solid Waste and Emergency Response, (WH-565-E), Washington, DC 20460, 202 475-6785

RIN: 2050-AC28

2763. ● LAND DISPOSAL RESTRICTION FOR SECOND THIRD OF SCHEDULED WASTES

Legal Authority: 42 USC 6924(g) /RCRA 3004(g); 42 USC 6924(h) /RCRA 3004(h); 42 USC 6924(j) /RCRA 3004(j); 42 USC 6924(k) /RCRA 3004(k); 42 USC 6924(m) /RCRA 3004(m)

CFR Citation: 40 CFR 268

Legal Deadline: Statutory, June 8, 1989.

Abstract: This rule will establish land disposal restrictions for the second third of scheduled hazardous wastes and promulgate treatment standards for these waste streams as required by sections 3004(g) and 3004(m) of RCRA. The schedule was published on May 28, 1986 (51 FR 19300).

Timetable:

Action	Date	FR Cite
NPRM	10/00/88	
Final Action	06/00/89	

Small Entity: Undetermined

Additional Information: SAR No. 2522.

FTS:8-382-4770

Agency Contact: Stephen Weil, Environmental Protection Agency, Solid Waste and Emergency Response, (WH-562B), 202 382-4770

RIN: 2050-AC55

2764. LIST (PHASE 2) OF HAZARDOUS CONSTITUENTS FOR GROUNDWATER MONITORING

Legal Authority: 42 USC 3251 / RCRA 3004

CFR Citation: 40 CFR 264; 40 CFR 270

Legal Deadline: None.

Abstract: The Appendix IX of 40 CFR Part 264 is a list of hazardous constituents presently referenced in 40 CFR Part 264 for use in groundwater monitoring. This proposed amendment would revise the Appendix IX list for the purposes of this use. This amendment would also create a new list for the first part (Detection Monitoring) of the ground water monitoring program. See the related action RIN 2050-AB27.

Timetable:

Action	Date	FR Cite
NPRM	04/00/88	
Final Action	12/00/89	

Small Entity: No

Additional Information: SAR No. 2435.

FTS: 382-4495

Agency Contact: Jerry Garman, Environmental Protection Agency, Solid Waste and Emergency Response, WH-565E, Washington DC 20460, 202 382-4495

RIN: 2050-AC05

2765. COMPLIANCE MONITORING AND ENFORCEMENT REQUIREMENTS FOR STATE HAZARDOUS WASTE MANAGEMENT PROGRAMS

Legal Authority: 49 USC 6926 / RCRA 3006

CFR Citation: 40 CFR 271.15; 40 CFR 271.16

Legal Deadline: None.

Abstract: Regulations governing State Authorization requirements for compliance monitoring and enforcement actions will be revised to reflect the Hazardous and Solid Waste Amendments of 1984. EPA will consider other changes such as requirement for states to have administrative penalty authority.

Timetable:

Action	Date	FR Cite
NPRM	06/00/88	
Final Action	12/00/88	

Small Entity: No

Additional Information: SAR No. 2158.

FTS: 8-475-9325.

Agency Contact: David Levenstein, Environmental Protection Agency, Solid Waste and Emergency Response, (WH-527), Washington, DC 20460, 202 475-9325

RIN: 2050-AB01

2766. ● TRIAL BURNS FOR EXISTING HAZARDOUS WASTE INCINERATORS

Significance: Regulatory Program

Legal Authority: 42 USC 6905 /RCRA 3006; 42 USC 6912 /RCRA 3002; 42 USC 6927 /RCRA 3007; 42 USC 6974 /RCRA 7004

CFR Citation: 40 CFR 270.62(d)

Legal Deadline: None.

Abstract: This rule will clarify the requirements of 40 CFR 270.62(d) which describes procedures for permitting existing hazardous waste incinerator facilities under RCRA. EPA will require submission of trial burn data prior to permit issuance.

Timetable:

Action	Date	FR Cite
NPRM	04/00/88	
Final Action	09/00/88	

Small Entity: No

Additional Information: SAR No. 2544.

FTS:8-382-4775

Agency Contact: David Dellarco, Environmental Protection Agency, Solid Waste and Emergency Response, (WH-563), 202 382-4775

RIN: 2050-AC50

2767. MINING WASTE MANAGEMENT UNDER RCRA SUBTITLE D

Significance: Regulatory Program

Legal Authority: 42 USC 6941 to 6949 /RCRA 4001-4009

CFR Citation: 40 CFR 261

Legal Deadline: None.

Abstract: Based on the first mining waste Report to Congress submitted 12/31/85, comments on the report, and other available information, EPA has determined that regulation of wastes from the extraction and benefication of ores and minerals under Subtitle C of the Resource Conservation and Recovery Act (RCRA) is not warranted at this time (51 FR 24496). Instead, EPA plans to develop a program for mining waste under Subtitle D of RCRA, working with the States to determine the specific nature of their current mining waste activities and their future plans to administer such programs. EPA will propose a set of criteria for the proper disposal of mining wastes under RCRA Subtitle D authority. EPA will also work with other Federal agencies (e.g., DOI, USGS) to avoid duplication in regulatory efforts.

Timetable:

Action	Date	FR Cite
NPRM	12/00/88	
Final Action	04/00/90	

Small Entity: Undetermined

Additional Information: SAR No. 2389.

FTS: 8-382-3608

Agency Contact: Dan Derkics, Environmental Protection Agency, Solid Waste and Emergency Response, WH-565, 202 382-3608

RIN: 2050-AB77

2768. UNDERGROUND STORAGE TANKS CONTAINING HAZARDOUS SUBSTANCES- FINANCIAL RESPONSIBILITY REQUIREMENTS

Significance: Regulatory Program

Legal Authority: 42 USC 6991 /RCRA 9003

CFR Citation: 40 CFR 280

Legal Deadline: Statutory, August 8, 1988.

Abstract: This regulation will establish, under Subtitle I of RCRA (as amended by SARA), requirements for demonstrating financial responsibility for taking corrective action and compensating third parties for bodily injury and property damage caused by releases from underground storage tanks (USTs) containing hazardous substances. An ANPRM is being developed to help gather data (e.g., frequency of releases from such USTs, costs of corrective action and third-party damages, and the regulated community's financial condition and use of financial assurance mechanisms) needed for the development of a proposed rule.

Timetable:

Action	Date	FR Cite
ANPRM	02/19/88	53 FR 3818
NPRM	12/00/88	
Final Action	10/00/89	

Small Entity: Undetermined

Additional Information: SAR No. 2465.

FTS:8-382-7903

Agency Contact: Sammy K. Ng, Environmental Protection Agency, Solid Waste and Emergency Response, (WH-562A), Washington, DC 20460, 202 382-7903

RIN: 2050-AC15

ENVIRONMENTAL PROTECTION AGENCY (EPA) —Resource Conservation and Recovery Act (RCRA)

Final Rule Stage

2769. ● IDENTIFICATION AND LISTING OF HAZARDOUS WASTES - PETROLEUM REFINERY PRIMARY TREATMENT SLUDGE

Significance: Agency Priority

Legal Authority: 42 USC 6905/RCRA 1006; 42 USC 6912(a)/RCRA 2002(a); 42 USC 6921/RCRA 3001; 42 USC 6922/RCRA 3002

CFR Citation: 40 CFR 261

Legal Deadline: Statutory, February 28, 1986.

Abstract: These actions announce EPA's decision whether or not to list a waste as hazardous under RCRA. If a waste is listed as hazardous it will be subject to those requirements contained in 40 CFR Parts 262-266 and Parts 270, 271 and 124.

Timetable:

Action	Date	FR Cite
NPRM	11/12/80	45 FR 74893
Final Action	11/00/88	

Small Entity: No

Additional Information: SAR No. 2226.

RCRA/Superfund Hotline (800-424-9346); in Metropolitan Area (382-3000)

Agency Contact: RCRA/Superfund Hotline, Environmental Protection Agency, Solid Waste and Emergency Response, Washington, DC 20460, 800 424-9346

RIN: 2050-AB70

2770. ● IDENTIFICATION AND LISTING OF HAZARDOUS WASTE - METHYL BROMIDE

Significance: Agency Priority

Legal Authority: 42 USC 6905/RCRA 1006; 42 USC 6912(a)/RCRA 2002(a); 42 USC 6921/RCRA 3001; 42 USC 6922/RCRA 3002

CFR Citation: 40 CFR 261

Legal Deadline: Statutory, February 28, 1986.

Abstract: These actions announce EPA's decision whether or not to list a waste as hazardous under RCRA. If a waste is listed as hazardous it will be subject to those requirements contained in 40 CFR Parts 262-266 and Parts 270, 271 and 124.

Timetable:

Action	Date	FR Cite
NPRM	04/25/85	50 FR 16432
Final Action	04/00/88	

Small Entity: No

Additional Information: SAR No. 2157 For further information contact the RCRA/Superfund Hotline (800-424-9346); in the Metropolitan Area (202-382-3000)

Agency Contact: RCRA/Superfund Hotline, Environmental Protection Agency, Solid Waste and Emergency Response, Washington, DC 20460, 800 424-9346

RIN: 2050-AC60

2771. CHANGES TO INTERIM STATUS AND PERMITTED FACILITIES FOR HAZARDOUS WASTE MANAGEMENT; PROCEDURES FOR POST-CLOSURE PERMITTING

Legal Authority: 42 USC 6912(a) /RCRA 2002(a); 42 USC 6924 /RCRA 3004; 42 USC 6925 /RCRA 3005; 42 USC 6926 /RCRA 3006

CFR Citation: 40 CFR 265; 40 CFR 270; 40 CFR 271

Legal Deadline: None.

Abstract: These regulations will: (1) facilitate modifications at interim status facilities that are necessary to respond to RCRA requirements, and (2) allow the Agency to deny permits for the active life of a facility while a permit decision with respect to the post-closure period remains pending. The portion of the proposed rule dealing with permit modifications is addressed in the permit modifications rulemaking (see RIN 2050-AC22).

Timetable:

Action	Date	FR Cite
NPRM	08/14/87	52 FR 30570
Final Action	07/00/88	

Small Entity: No

Additional Information: SAR No. 2398.

FTS:8-382-4751

Agency Contact: Barbara Foster, Environmental Protection Agency, Solid Waste and Emergency Response, (WH-563), Washington, DC 20460, 202 382-4751

RIN: 2050-AC29

2772. BURNING OF HAZARDOUS WASTE IN BOILERS AND INDUSTRIAL FURNACES

Significance: Regulatory Program

Legal Authority: 42 USC 6924 / RCRA 3004; 42 USC 6925/RCRA 3005

CFR Citation: 40 CFR 266

Legal Deadline: Statutory, November 8, 1986.

Abstract: Burning of hazardous waste in boilers for the purpose of heat recovery is currently exempt from regulation under RCRA. The Hazardous and Solid Waste Amendments of 1984 require the Agency to develop technical standards for the burning of hazardous waste fuels. This regulation will establish standards for controlling emissions of organic compounds, metals, and hydrogen chloride from boilers and industrial furnaces that burn hazardous waste for any purpose, including energy recovery, material recovery, or destruction.

Timetable:

Action	Date	FR Cite
NPRM	05/06/87	52 FR 16982
Final Action	12/00/88	
Supplement		
NPRM 03/00/88		

Small Entity: No

Additional Information: SAR No. 2078.

FTS-8-382-7917.

Contains previous RIN 2050-AA29.

Analysis: Regulatory Impact Analysis

Agency Contact: Dwight Hlustick, Environmental Protection Agency, Solid Waste and Emergency Response, (WH-565A), Washington, DC 20460, 202 382-7917

RIN: 2050-AA72

2773. DISPOSAL OF CONTAINERIZED LIQUIDS IN HAZARDOUS WASTE LANDFILLS

Significance: Regulatory Program

Legal Authority: 42 USC 6924(c) / RCRA 3004(c)

CFR Citation: 40 CFR 260; 40 CFR 264; 40 CFR 265; 40 CFR 271

Legal Deadline: Statutory, February 8, 1986.

Abstract: The Agency has proposed these regulations under the Hazardous and Solid Waste Amendment of 1984. The regulation will 1) minimize the placement of containers holding liquid hazardous waste and free liquids in hazardous waste landfills, 2) minimize the presence of free liquids in containers holding hazardous waste to be disposed of in landfills and 3) prohibit the use of absorbents that biodegrade or release liquids when compressed.

Timetable:

Action	Date	FR Cite
NPRM	12/24/86	51 FR 46824
Final Action	06/00/88	
Notice of Availability of Supplemental Information		
Notice 06/24/87 (52 FR 23695)		

Small Entity: No

Additional Information: SAR No. 2207.

FTS:8-382-4682

Agency Contact: Paul Cassidy, Environmental Protection Agency, Solid Waste and Emergency Response, (WH-565E), Washington, DC 20460, 202 382-4682

RIN: 2050-AB12

2774. DOUBLE LINER AND LEACHATE COLLECTION SYSTEMS FOR HAZARDOUS WASTE LAND DISPOSAL UNITS

Significance: Regulatory Program

Legal Authority: 42 USC 6924(o) /RCRA 3004(o)

CFR Citation: 40 CFR 264; 40 CFR 265; 40 CFR 260; 40 CFR 270; 40 CFR 144

Legal Deadline: Statutory, November 8, 1986.

Abstract: This rule establishes minimum technology requirements (e.g., double liners and leachate collection systems) for new hazardous waste landfills and surface impoundments, as well as lateral expansions and replacements to existing landfills and surface impoundments. This rule will establish standards for these systems enabling unit owners and operators to design and construct systems that will protect human health and the environment.

Timetable:

Action	Date	FR Cite
NPRM	03/26/86	51 FR 10706
Notice of Availability of Information	04/17/87	52 FR 12566
Final Action	06/00/88	

Small Entity: Undetermined

Additional Information: SAR No. 2388.

FTS: 8-382-4654

Agency Contact: Ken Skahn, Environmental Protection Agency, Solid Waste and Emergency Response, WH-565E, 202 382-4654

RIN: 2050-AB76

2775. STATISTICAL METHODS FOR EVALUATING GROUNDWATER MONITORING DATA FROM HAZARDOUS WASTE FACILITIES

Significance: Regulatory Program

Legal Authority: 42 USC 6924 / RCRA 3004

CFR Citation: 40 CFR 264

Legal Deadline: None.

Abstract: EPA previously promulgated regulations for detecting contamination of groundwater at hazardous waste disposal facilities under the Resource Conservation and Recovery Act of 1976 (RCRA). The statistical methods for evaluating the groundwater data have been criticized by industry for a number of reasons. EPA is proposing revisions to the regulations. (See related action in this Agenda section.)

Timetable:

Action	Date	FR Cite
ANPRM	06/20/86	51 FR 22612
NPRM	09/24/87	52 FR 31948
Final Action	06/00/88	

Small Entity: Undetermined

Additional Information: SAR No. 2438.

FTS:8-475-7240

Agency Contact: Jim Brown, Environmental Protection Agency, Solid Waste and Emergency Response, WH-565E, Washinton DC 20460, 202 475-7240

RIN: 2050-AB92

2776. LIABILITY REQUIREMENTS FOR HAZARDOUS WASTE FACILITIES - OTHER INSTRUMENTS

Legal Authority: 42 USC 6901 /RCRA 3004

CFR Citation: 40 CFR 264; 40 CFR 265

Legal Deadline: None.

Abstract: The Agency is considering further revisions to the financial responsibility requirements for liability coverage for third- party bodily injury and property damage resulting from accidental occurrences at hazardous waste treatment, storage, and disposal facilities. The revisions under development are intended to allow greater flexibility in the types of financial instruments that can be used by hazardous waste facility owners and operators who may have encountered difficulties in obtaining insurance or the limited number of other possible instruments to meet liability coverage requirements. Other instruments, such as a non-parent corporate guarantees and letters of credit, are being analyzed for inclusion of this rulemaking.

Timetable:

Action	Date	FR Cite
NPRM	08/25/85	50 FR 33902
Final Action	06/00/88	

Small Entity: No

Additional Information: SAR No. 2460.

FTS:8-382-4780

Agency Contact: Carlos Lago, Environmental Protection Agency, Solid Waste and Emergency Response, (WH-563), Washington, DC 20460, 202 382-4780

RIN: 2050-AC19

2777. PERMIT MODIFICATIONS FOR HAZARDOUS WASTE MANAGEMENT FACILITIES

Significance: Regulatory Program

Legal Authority: 42 USC 6925 /RCRA 3004 and 3005

CFR Citation: 40 CFR 270

Legal Deadline: None.

Abstract: This regulation will amend RCRA procedures (codified at 40 CFR 270.41 and 270.42) for modifying hazardous waste management permits. The rulemaking provides EPA, authorized states, and permittees more flexibility in modifying permits, particularly where modifications will increase public and environmental protection or facilitate compliance with new regulations. At the same time, the regulation will provide for improved public participation in the permit modifications. The proposed rule was developed through regulatory negotiation with representatives of EPA, the states, industry, and public interest groups. RIN 2050-AA37 has been combined with this action.

Timetable:

Action	Date	FR Cite
NPRM	09/23/87	52 FR 35838
Final Action	08/00/88	

Small Entity: No

Additional Information: SAR No. 1805.

FTS 8-382-2223

Agency Contact: Frank McAlister, Section Chief, Permits Policy Section, Permits Branch, Office of Solid Waste, Environmental Protection Agency, Solid Waste and Emergency Response, WH-563, Washington, DC 20460, 202 382-2223

RIN: 2050-AC22

2778. PERMITTING MOBILE HAZARDOUS WASTE TREATMENT UNITS AND DELISTING HAZARDOUS WASTES

Significance: Regulatory Program

Legal Authority: 42 USC 6905 /RCRA 3005

CFR Citation: 40 CFR 260; 40 CFR 265; 40 CFR 270

Legal Deadline: None.

Abstract: This action responds to a petition submitted to EPA by the Hazardous Waste Treatment Council (HWTC). It will establish state-wide permitting procedures for mobile hazardous waste treatment units and will modify hazardous waste delisting procedures, so that hazardous waste treatment residues could be delisted as part of the permitting process. In addition, the petition response solicited comment on HWTC's request that EPA exempt certain treatment technologies from the requirements for hazardous waste management.

Timetable:

Action	Date	FR Cite
NPRM	06/03/87	52 FR 20914
Final Action	06/00/88	

Small Entity: No

Additional Information: SAR No. 2397.

FTS:8-382-2223

Agency Contact: Frank McAlister, Environmental Protection Agency, Solid Waste and Emergency Response, (WH-563), Washington, DC 20460, 202 382-2223

RIN: 2050-AC20

2779. GUIDELINES FOR CONTENT IN RE-REFINED OIL PROCURED BY THE FEDERAL GOVERNMENT

Legal Authority: 42 USC 3251 / RCRA 6002

CFR Citation: 40 CFR Not yet determined

Legal Deadline: None.

Abstract: This action establishes the guidelines for the Federal procurement of re-refined waste lubricating oils and hydraulic fluids. This action will encourage the recovery of waste oil and reduce the environmental threat waste oil represents.

Timetable:

Action	Date	FR Cite
NPRM	10/19/87	52 FR 38838
Final Action	10/00/88	

Small Entity: Undetermined

Additional Information: SAR No. 2257.

FTS-382-4502

Agency Contact: William Sanjour, Environmental Protection Agency, Solid Waste and Emergency Response, (WH-565), Washington, DC 20460, 202 382-4502

RIN: 2050-AB53

2780. MINIMUM RECOVERED MATERIALS CONTENT IN PAPER AND PAPER PRODUCTS PROCURED BY THE FEDERAL GOVERNMENT

Legal Authority: 42 USC 6962 /RCRA 6002

CFR Citation: 40 CFR 250

Legal Deadline: None.

Abstract: This action establishes recommended minimum levels of

recovered materials in paper and paper products procured by the Federal government. The purpose of this action is to encourage the recovery of post-consumer recovered materials and reduce the volume of solid waste.

Timetable:

Action	Date	FR Cite
NPRM	10/06/87	52 FR 37335
Final Action	12/00/88	

Small Entity: No

Additional Information: SAR No. 2433.

FTS:8-382-4502

Agency Contact: William Sanjour, Environmental Protection Agency, Solid Waste and Emergency Response, (WH-565A), Washington, DC 20460, 202 382-4502

RIN: 2050-AC18

2781. UNDERGROUND STORAGE TANKS - TECHNICAL REQUIREMENTS

Significance: Regulatory Program

Legal Authority: 42 USC 6991(b) /RCRA 9003

CFR Citation: 40 CFR 280

Legal Deadline: Statutory. New and Existing Petroleum Tanks (02/08/87), New Chemical Tanks (08/08/87), Existing Chemical Tanks (08/08/88)

Abstract: This regulation will establish, under Subtitle I of RCRA, requirements for release detection, prevention, and corrective action for all underground storage tanks holding petroleum and other regulated substances. Because of the large size of the regulated community, this rule could impact a significant number of small business entities and a Regulatory Flexibility Analysis will be conducted by EPA. Promulgation of this rule, will, for the first time, establish national requirements for storing regulated substances, including petroleum products in underground tanks. It will not apply to underground tanks storing hazardous wastes, which are currently regulated under Subtitle C of RCRA. These regulations will include: performance standards for new tanks; address leak detection and upgrading of existing tanks; and specify response actions to releases.

Timetable:

Action	Date	FR Cite
NPRM	04/17/87	52 FR 12662
Final Action	05/00/88	

Small Entity: Yes

Additional Information: SAR No. 2202, 2221, and 2256.

FTS 8-382-7641

Analysis: Regulatory Impact Analysis; Regulatory Flexibility Analysis

Agency Contact: David O'Brien, Environmental Protection Agency, Solid Waste and Emergency Response, (WH-562A), Washington, DC20460, 202 382-7641

RIN: 2050-AB19

2782. UNDERGROUND STORAGE TANKS CONTAINING PETROLEUM - FINANCIAL RESPONSIBILITY REQUIREMENTS

Significance: Regulatory Program

Legal Authority: 42 USC 6991(b) /RCRA 9003

CFR Citation: 40 CFR 280

Legal Deadline: Statutory, February 8, 1987.

Abstract: This regulation will establish, under Subtitle I of RCRA, requirements for owners and operators to demonstrate financial responsibility for taking corrective action and compensating third parties for bodily injury and property damage caused by sudden and nonsudden accidental releases arising from operating an underground storage tank containing petroleum. These requirements are applicable to all owners and operators, excluding Federal and State entities. The Agency has proposed aggregate levels of coverage for multiple tanks and will allow a variety of mechanisms to provide evidence of financial responsibility.

Timetable:

Action	Date	FR Cite
NPRM	04/17/87	52 FR 12786
Final Action	05/00/88	

Small Entity: Undetermined

Additional Information: SAR No. 2255.

FTS:8-382-7903

Analysis: Regulatory Impact Analysis

Agency Contact: Sammy Ng, Environmental Protection Agency, Solid Waste and Emergency Response, (WH-562A), Washington, DC 20460, 202 382-7903

RIN: 2050-AB89

2783. UNDERGROUND STORAGE TANKS - STATE PROGRAM APPROVAL

Legal Authority: 42 USC 6991(c) /RCRA 9004

CFR Citation: 40 CFR 281

Legal Deadline: None.

Abstract: The Hazardous and Solid Waste Amendments of 1984 (HSWA) allow EPA to approve State underground storage tank programs to operate in lieu of the Federal program. This rule will establish the requirements for States to apply for the EPA approval of such State programs.

Timetable:

Action	Date	FR Cite
NPRM	04/17/87	52 FR 12853
Final Action	05/00/88	

Small Entity: No

Additional Information: SAR No. 2234.

FTS: 382-9724

Agency Contact: Gwen Gebhard, Environmental Protection Agency, Solid Waste and Emergency Response, (WH-562A), Washington, DC 20460, 202 475-9724

RIN: 2050-AB31

BEST COPY AVAILABLE

ENVIRONMENTAL PROTECTION AGENCY (EPA) —Resource Conservation and Recovery Act (RCRA)

Completed Actions

2784. IDENTIFICATION AND LISTING OF HAZARDOUS WASTES

CFR Citation: 40 CFR 261

Completed:

Reason	Date	FR Cite
All action suspended	02/26/88	

Small Entity: No

Agency Contact: RCRA Hotline 800 424-9346

RIN: 2050-AB46

2785. HAZARDOUS WASTE MISCELLANEOUS UNITS

CFR Citation: 40 CFR 264; 40 CFR 260; 40 CFR 270

Completed:

Reason	Date	FR Cite
Final Action	12/10/87	52 FR 46946

Small Entity: No

Agency Contact: Kent Anderson 202 382-4654

RIN: 2050-AA23

2786. LIABILITY REQUIREMENTS FOR HAZARDOUS WASTE FACILITIES - CORPORATE GUARANTEE

CFR Citation: 40 CFR 264; 40 CFR 265

Completed:

Reason	Date	FR Cite
Final Action	11/18/87	52 FR 44314

Small Entity: No

Agency Contact: Carlos Lago 202 382-4780

RIN: 2050-AB47

2787. CODIFICATION RULE FOR THE 1984 RCRA AMENDMENTS

CFR Citation: 40 CFR 260 to 271; 40 CFR 122 to 124

Completed:

Reason	Date	FR Cite
Final Action	12/01/87	52 FR 45788

Small Entity: No

Agency Contact: David Fagan 202 382-4497

RIN: 2050-AB58

2788. GUIDELINE FOR RECOVERED MATERIALS CONTENT IN PAPER PRODUCTS PROCURED BY THE FEDERAL GOVERNMENT

CFR Citation: 40 CFR 250

Completed:

Reason	Date	FR Cite
Final Action	10/06/87	52 FR 37293

Small Entity: No

Agency Contact: William Sanjour 202 382-4502

RIN: 2050-AA68

ENVIRONMENTAL PROTECTION AGENCY (EPA) —Clean Air Act (CAA)

Prerule Stage

2789. REVIEW OF NAAQS FOR NITROGEN DIOXIDE

Significance: Regulatory Program

Legal Authority: 42 USC 7408 / CAA 108; 42 USC 7409 / CAA 109

CFR Citation: 40 CFR 50.11

Legal Deadline: Statutory. Statutory, Review by December 31, 1980 and at 5-year intervals thereafter.

Abstract: EPA is reviewing the health and welfare information that has become available since the last review of the NO2 NAAQS was completed in June 1985. The Agency will revise the standard if needed to protect the public health and welfare.

Timetable:

Action	Date	FR Cite
Complete review of criteria doc. and staff paper	06/00/90	

Small Entity: No

Additional Information: SAR No. 1004.

FTS: 8-629-5656

Analysis: Regulatory Impact Analysis

Agency Contact: Bruce C. Jordan, Environmental Protection Agency, Air and Radiation, MD-15, Research Triangle Park, N.C. 27711, 919 541-5656

RIN: 2060-AC06

2790. REVIEW OF NAAQS FOR CARBON MONOXIDE

Significance: Regulatory Program

Legal Authority: 42 USC 7408 / CAA 108; 42 USC 7409 / CAA 109

CFR Citation: 40 CFR 50.8

Legal Deadline: Statutory. Statutory, Review by December 31, 1980 and at 5-year intervals thereafter.

Abstract: EPA is reviewing the health and welfare information that has become available since the last review of the CO NAAQS was completed in September 1985. The Agency will revise the standard if needed to protect the public health and welfare.

Timetable:

Action	Date	FR Cite
Complete review of criteria document and staff paper	09/00/90	

Small Entity: No

Additional Information: SAR No. 1001.

FTS: 8-629-5656

Analysis: Regulatory Impact Analysis

Agency Contact: Bruce C. Jordan, Environmental Protection Agency, Air and Radiation, MD-15, Research Triangle Park, NC 27711, 919 541-5656

RIN: 2060-AC07

2791. NSPS: COAL PREPARATION PLANTS

Legal Authority: 42 USC 7411 /CAA 111

CFR Citation: 40 CFR 60

Legal Deadline: Statutory. Review every four years.

Abstract: EPA is reviewing the standard to determine if revisions are warranted. The review will assess performance and costs of emission

control systems at coal preparations plants as well as the experience of the industry and control agencies in implementing the standard. EPA will issue a notice in the Federal Register announcing the results of its review.

Timetable:

Action	Date	FR Cite
Begin Review	02/11/85	
End Review	05/00/88	

Small Entity: No

Additional Information: SAR No. 2387.

FTS: 8-629-5602.

Agency Contact: Al Vervaert, Environmental Protection Agency, Air and Radiation, MD-13, 919 541-5602

RIN: 2060-AB84

2792. NSPS: ASPHALT PROCESSING AND ASPHALT ROOFING MANUFACTURING PLANTS(REVIEW)

Legal Authority: 42 USC 7411/CAA 111

CFR Citation: 40 CFR 60

Legal Deadline: Statutory, August 1986.

Abstract: EPA is reviewing this NSPS to determine whether revisions are warranted. The review will assess performance and costs of asphalt processing an asphalt roofing manufacturing plant control systems as well as the experience of the industry and control agencies in implementing the standard. EPA will announce the results of its review in the Federal Register.

Timetable:

Action	Date	FR Cite
Begin Review	08/00/86	
End Review	06/00/88	

Small Entity: No

Additional Information: SAR No. 2430.

FTS:8-629-5425.

Agency Contact: Kenneth Durkee, Chief, Standards Documentation Section, Environmental Protection Agency, Air and Radiation, (MD-13), Research Triangle Park, NC 27711, 919 541-5425

RIN: 2060-AC21

2793. NSPS: ASPHALT PROCESSING AND ASPHALT ROOFING MANUFACTURING PLANTS

Legal Authority: 42 USC 7411 / CAA 111

CFR Citation: 40 CFR 60

Legal Deadline: Statutory, August 1986.

Abstract: EPA is reviewing this NSPS to determine whether revisions are warranted. The review will assess performance and costs of asphalt processing and asphalt roofing manufacturing plant control systems as well as the experience of the industry and control agencies in implementing the standard. EPA will announce the results of its review in the Federal Register.

Timetable:

Action	Date	FR Cite
Begin Review	08/00/86	
End Review	01/00/89	

Small Entity: No

Additional Information: SAR No. 2430.

FTS:8:629-5425

Agency Contact: Kenneth Durkee, Environmental Protection Agency, Air and Radiation, MD-13, Research Triangle Park, NC, 919 541-5595

RIN: 2060-AC23

2794. DECISIONS ON REGULATING VARIOUS AIR POLLUTANTS

Significance: Regulatory Program

Legal Authority: 42 USC 7411/CAA 112

CFR Citation: 40 CFR Not yet determined

Legal Deadline: None.

Abstract: The Agency is reviewing the health effects, sources, emissions to the ambient air, and the public exposure of these pollutants. The Agency will publish decisions regarding whether these pollutants should be controlled as specified air pollutants under the Clean Air Act or under other regulatory mechanisms in order to protect the public health.

Timetable:

Acetaldehyde
- Decision on Regulation 06/00/88
- Decision on Regulation 06/00/88

Ammonia
- Decision on Regulation 04/00/88
- Decision on Regulation 04/00/88

Ethyl Chloride
- Decision on Regulation 07/00/88
- Decision on Regulation 07/00/88

Naphthalene
- Decision on Regulation 04/00/88

Propylene
- Decision on Regulation 08/00/88
- Decision on Regulation 08/00/88

Propylene Oxide
- Decision on Regulation 04/00/88
- Decision on Regulation 04/00/88

Zinc and Zinc Oxide
- Decision on Regulation 08/28/87 (52 FR 32597)

Small Entity: Undetermined

Additional Information: SAR No. 2181.

FTS:8-629-5646

Agency Contact: Robert G. Kellam, Environmental Protection Agency, Air and Radiation, MD-13, Research Triangle Park, NC 27711, 919 541-5646

RIN: 2060-AB56

2795. NESHAPS: CADMIUM

Significance: Regulatory Program

Legal Authority: 42 USC 7412 /CAA 112

CFR Citation: 40 CFR 61

Legal Deadline: None.

Abstract: EPA issued a notice of intent to list cadmium under Section 112 (50 FR 42000). We are investigating emissions of cadmium and techniques that are available to control the emissions from identified source categories. If EPA decides that emission standards are warranted, cadmium will be listed under section 112, and EPA will develop proposed standards.

Timetable:

Action	Date	FR Cite
Decision on whether to regulate	11/00/89	

Small Entity: Undetermined

Additional Information: SAR No. 1869.

FTS:8-629-5602

Agency Contact: Al Vervaert, Environmental Protection Agency, Air and Radiation, (MD-13), Research Triangle Park, NC 27711, 919 541-5602

RIN: 2060-AB92

2796. ● "GUIDELINES ON AIR QUALITY MODELS" (REVISION)

Legal Authority: 42 USC 2475(e)/CAA 165(e)

CFR Citation: 40 CFR 51.24(l); 40 CFR 52.21(m)

Legal Deadline: None.

Abstract: In response to Section 320 of the Clean Air Act, EPA plan to hold the Fourth Conference on Air Quality Modeling in September 1988. Based on

EPA—CAA **Prerule Stage**

input provided to the Agency at or closely following this Conference, the need for ad ·itional revisions to EPA's Guideline on Air Quality Models will be evaluated. If required, an Advance Notice of Proposed Rulemaking (ANPRM) will be developed.

Timetable:

Action	Date	FR Cite
ANPRM	00/00/00	

Small Entity: No

Additional Information: SAR No. 2557.

FTS:8-629-5561

Government Levels Affected: State

Agency Contact: Joseph Tikvart, Environmental Protection Agency, Air and Radiation, Air and Radiation, (MD-14), Research Triangle Park, NC 27711, 919 541-5561

RIN: 2060-AC43

2797. FUEL AND FUEL ADDITIVES: GASOLINE LEAD CONTENT (REVISION)

Significance: Regulatory Program

Legal Authority: 42 USC 7545 /CAA 211; 42 USC 7601(a) /CAA 301(a)

CFR Citation: 40 CFR 80

Legal Deadline: None.

Abstract: EPA is examining information relevant to a ban on the use of lead in gasoline. The Agency is considering a set of alternatives ranging from no regulatory action to a ban. The Agency recently completed a cooperative study with the U.S. Department of Agriculture to assess the effects of a lead ban on farm equipment. A report to Congress is being prepared.

Timetable:

Action	Date	FR Cite
NPRM	03/07/85	50 FR 9386
Announcement of findings and recommendations		
NOTICE	05/00/88	

Small Entity: Yes

Additional Information: SAR No. 2214.

FTS: 8-382-2633.

Analysis: Regulatory Impact Analysis; Regulatory Flexibility Analysis

Agency Contact: Richard Kozlowski, Environmental Protection Agency, Air and Radiation, (EN-397F), Washington, DC 20460, 202 382-2633

RIN: 2060-AB60

2798. FUEL AND FUEL ADDITIVE HEALTH EMISSIONS EFFECTS TESTING

Legal Authority: 42 USC 7545(e) / CAA 211(e)

CFR Citation: 40 CFR 79; 40 CFR 80

Legal Deadline: Statutory, August 7, 1978.

Abstract: The CAA requires that testing protocols be developed to address at a minimum, the possible carcinogenic, mutagenic, and teratogenic effects of fuels and fuel additives as well as their effect on emissions and emission control devices. This action would implement protocols for such testing, which would have to be performed prior to: 1) fuel or additive registration, and 2) introduction of the fuel or additive into the marketplace. Fuels and additives already registered or on sale would also have to undergo testing, as provided for by the CAA.

Timetable:

Action	Date	FR Cite
ANPRM	02/00/89	

Small Entity: Yes

Additional Information: SAR No. 2365.

FTS:8-374-8408

Analysis: Regulatory Flexibility Analysis

Agency Contact: Glenn Passavant, Environmental Protection Agency, Air and Radiation, 2565 Plymouth Road, Ann Arbor, MI 48105, 313 668-8406

RIN: 2060-AC10

2799. DIESEL FUEL QUALITY STANDARDS

Significance: Regulatory Program

Legal Authority: 42 USC 7545 / CAA 211

CFR Citation: 40 CFR 79; 40 CFR 80

Legal Deadline: None.

Abstract: Trap oxidizers, the use of which may be required to meet 1991 and later model-year heavy duty diesel particulate standards, may require the use of low sulfur diesel fuels. In promulgating the particulate standard, EPA promised to examine the need for low-sulfur fuel. In addition, fuel sulfur and aromatics content have been shown to have a direct effect on particulate emissions. This action will determine the costs and benefits of improving diesel fuel quality.

Timetable:

Action	Date	FR Cite
Publish Study	04/00/88	
Workshop	05/00/88	
NPRM	06/00/88	

Small Entity: Yes

Additional Information: SAR No. 2366.

FTS:8-374-8339

Analysis: Regulatory Flexibility Analysis

Agency Contact: Richard Rykowski, Environmental Protection Agency, Air and Radiation, 2565 Plymouth Road, Ann Arbor, MI 48105, 313 668-4339

RIN: 2060-AC11

ENVIRONMENTAL PROTECTION AGENCY (EPA) —Clean Air Act (CAA)

Proposed Rule Stage

2800. NAAQS FOR SULFUR OXIDES (REVISION)

Significance: Regulatory Program

Legal Authority: 42 USC 7409 /CAA 109

CFR Citation: 40 CFR 50.4; 40 CFR 50.5

Legal Deadline: Statutory, December 31, 1980. Statutory, Reviews due by December 31, 1980 and at 5-year intervals thereafter.

Abstract: EPA has reviewed the scientific criteria used as a basis for establishing ambient air quality standards for sulfur oxides. The Agency will revise the standards if and as appropriate to protect public health and welfare.

Timetable:

Action	Date	FR Cite
ANPRM	10/02/79	44 FR 56730
NPRM	04/00/88	
Final Action	04/00/89	

Small Entity: No

Additional Information: SAR No. 1002.

Docket No. OAQPS-79-7.

FTS:8-629-5656.

Analysis: Regulatory Impact Analysis

Agency Contact: Bruce Jordan, Environmental Protection Agency, Air and Radiation, (MD-15), Research Triangle Park, NC 27711, 919 541-5656

RIN: 2060-AA61

2801. NAAQS: LEAD

Significance: Regulatory Program

Legal Authority: 42 USC 7408 / CAA 108; 42 USC 7409 / CAA 109

CFR Citation: 40 CFR 50.12

Legal Deadline: Statutory, December 1980. Statutory, Reviews due by December 1980 and at 5-year intervals thereafter.

Abstract: EPA is reassessing the health and welfare information that has become available since the promulgation of the standard. A staff paper is in preparation for review by the Clean Air Scientific Advisory Committee (CASAC).

Timetable:

Action	Date	FR Cite
CASAC Review	06/00/88	
NPRM	11/00/89	

Small Entity: No

Additional Information: SAR No. 1919.

FTS: 8-629-5656.

Analysis: Regulatory Impact Analysis

Agency Contact: Bruce Jordan, Environmental Protection Agency, Air and Radiation, (MD-15), Research Triangle Park, NC 27711, 919 541-5656

RIN: 2060-AA95

2802. NAAQS: OZONE

Significance: Regulatory Program

Legal Authority: 42 USC 7408 / CAA 108; 42 USC 7409 / CAA 109

CFR Citation: 40 CFR 50.9

Legal Deadline: Statutory, December 31, 1980. Statutory, Reviews due by December 31, 1980 and at 5-year intervals thereafter.

Abstract: EPA is reassessing health and welfare information which has become available since the last revision of the standard. In order to retain a unified regulatory review package in light of the emerging data base on health and welfare effects associated with longer-term averaging times, EPA is considering a continuation of the standard review until such information is published and reviewed in the criteria document. The major issue is whether the new information will indicate that new standards with longer-term averaging times are required to protect public health and welfare.

Timetable:

Action	Date	FR Cite
NPRM	00/00/00	

Small Entity: Undetermined

Additional Information: SAR No. 1920.

FTS: 8-629-5656.

REVIEW AUTHORITY: CAA 109.

Analysis: Regulatory Impact Analysis

Agency Contact: Bruce Jordan, Environmental Protection Agency, Air and Radiation, (MD-15), Research Triangle Park, NC 27711, 919 541-5656

RIN: 2060-AA96

2803. SECONDARY NAAQS FOR PARTICULATE MATTER (FINE PARTICLES)

Significance: Regulatory Program

Legal Authority: 42 USC 7408 /CAA 108; 42 USC 7409 /CAA 109

CFR Citation: 40 CFR 50.7

Legal Deadline: None.

Abstract: On July 1, 1987, EPA issued an ANPRM soliciting public comment on the development of a new secondary (welfare-based) NAAQS for fine particles (those particles less than 2.5 micrometers in aerodynamic diameter). This action represents a continuation of the review process for the secondary standards for particulate matter discussed by the Agency on March 20, 1984 (49 FR 10408). The principal welfare effect to be addressed by such a standard is impairment of visibility. Once a decision on whether and how to proceed is reached, a schedule for further action will be developed.

Timetable:

Action	Date	FR Cite
ANPRM	07/01/87	52 FR 24670
NPRM	00/00/00	

Small Entity: No

Additional Information: SAR No. 2577.

FTS:8-629-5656

Analysis: Regulatory Impact Analysis

Agency Contact: Bruce C. Jordan, Environmental Protection Agency, Air and Radiation, MD-15, Research Triangle Park, NC 27711, 919 541-5656

RIN: 2060-AC32

2804. ● FEDERAL PROMULGATION OF STATE IMPLEMENTATION PLAN TO PROTECT VISIBILITY

Significance: Regulatory Program

Legal Authority: 42 USC 7410 /CAA 110; 42 USC 7491 /CAA 169A

CFR Citation: 40 CFR 52

Legal Deadline: Judicial, August 31, 1988.

Abstract: Section 169A of the CAA requires that State Implementation Plans (SIPs) contain provisions to remedy existing and prevent future visibility impairment in certain national parks and wilderness areas. In 1980, EPA promulgated guideline regulations for States to follow in developing their SIP revisions (40 CFR 51.300-307). Many States failed to submit adequate visibility SIPs and EPA was sued to force the Agency to promulgate SIPs for such States. EPA entered into a consent decree under which a promulgated SIP implementing most of the requirements of the visibility regulations in States that have not submitted adequate SIPs and, under the consent decree, EPA has until August 31, 1988 to propose regulations to deal with existing visibility impairment in four States.

Timetable:

Action	Date	FR Cite
NPRM	03/12/87	52 FR 7802
Final Action	11/24/87	52 FR 45132
NPRM Remedying Existing Impairment	06/00/88	
Final Action Remedying Existing Impairment	04/00/89	

Small Entity: No

Additional Information: SAR No. 2428.

FTS:8-629-5634

Agency Contact: Thompson G. Pace, Environmental Protection Agency, Air and Radiation, (MD-15), Research Triangle Park, NC 27711, 919 541-5634

RIN: 2060-AB82

2805. NSPS: PERCHLOROETHYLENE DRY CLEANING

Legal Authority: 42 USC 7411 /CAA 111

CFR Citation: 40 CFR 60, Subpart OO

Legal Deadline: Statutory, August 1982.

Abstract: Some new issues have arisen, and EPA is deciding whether to go forward with this rule. Some small perchloroethylene facilities may be affected by this standard.

Timetable:

Action	Date	FR Cite
NPRM	11/25/80	45 FR 78174
Decision on need for standard expected by	10/00/88	

Small Entity: Yes

Additional Information: SAR No. 1119.

Docket No. A-79-30.

FTS:8-629-5568.

Agency Contact: Doug Bell, Environmental Protection Agency, Air and Radiation, (MD-13), Research Triangle Park, NC 27711, 919 541-5568

RIN: 2060-AA14

2806. NSPS: SOLVENT DEGREASING (111D)

Legal Authority: 42 USC 7411 / CAA 111

CFR Citation: 40 CFR 60

Legal Deadline: None.

Abstract: This action will require States to control organic solvent cleaners to reduce emissions of specific organic solvents designated under a separate NSPS action (SAR 1010). This action may impact any manufacturing operations that employ organic solvent cleaners to remove grease and oils from parts prior to assembly. Some new issues have arisen and EPA is deciding whether to go forward with this rule.

Timetable:

Decision on whether to regulate NPRM	10/00/88

Small Entity: Yes

Additional Information: SAR No. 1695.

FTS:8-629-5624.

Analysis: RFA

Agency Contact: Doug Bell, Environmental Protection Agency, Air and Radiation, (MD-13), Research Triangle Park, NC 27711, 919 541-5624

RIN: 2060-AA33

2807. NSPS: SOCMI REACTOR PROCESSES

Legal Authority: 42 USC 7411 / CAA 111

CFR Citation: 40 CFR 60

Legal Deadline: None.

Abstract: The scope of the Synthetic Organic Chemical Manufacturing Industry (SOCMI) reactor processes includes all reactor processes (other than air oxidation reactor processes) used to manufacture 173 synthetic organic chemicals produced in quantities of at least 100 million lb/yr. These large-volume chemicals account for about 90 percent of the total domestic chemical production from the SOCMI. The Agency is still considering whether to go forward with this rule.

Timetable:

Action	Date	FR Cite
NPRM	00/00/00	

Small Entity: No

Additional Information: SAR No. 2164.

FTS:8-629-5568.

Agency Contact: Doug Bell, Environmental Protection Agency, Air and Radiation, MD-13, Research Triangle Park, NC 27711, 919 541-5568

RIN: 2060-AB55

2808. NSPS: SMALL BOILERS

Legal Authority: 42 USC 7411 /CAA 111

CFR Citation: 40 CFR 60

Legal Deadline: Judicial. Judicial - NPRM, June 1, 1989, Final September 1, 1990

Abstract: The purpose of this action is to develop new source performance standards for small industrial-commercial-institutional boilers with heat input capacities of 100 millions Btu/hr or less.

Timetable:

Action	Date	FR Cite
NPRM	06/00/89	
Final Action	09/00/90	

Small Entity: Yes

Additional Information: SAR No. 2239.

FTS:8-629-5595

Analysis: Regulatory Flexibility Analysis

Agency Contact: Kenneth Durkee, Environmental Protection Agency, Air and Radiation, (MD-13), Research Triangle Park, NC 27711, 919 541-5595

RIN: 2060-AB95

2809. NSPS: MUNICIPAL WASTE COMBUSTORS

Legal Authority: 42 USC 7411 / CAA 111

CFR Citation: 40 CFR 60

Legal Deadline: None.

Abstract: The EPA has completed a preliminary assessment of air emissions from municipal waste combustors (MWC). Based on this assessment, EPA has concluded that MWC emissions may reasonably be anticipated to contribute to the endangerment of public health and welfare. As a result, EPA issued a notice in the Federal Register (52 FR 25399) that announces its intent to regulate emissions from new and modified MWC under Section 111(b). Pollutants to be regulated will include one or more designated pollutants (pollutants not regulated under Sections 108-110 or 112) thus invoking Section 111(d) which will require States to develop additional emissions standards for existing MWC based on EPA guidelines.

Timetable:

Action	Date	FR Cite
ANPRM	07/07/87	52 FR 21399
ANPRM Comment Period End	10/06/87	52 FR 37335
NPRM	11/00/89	
NPRM Comment Period End	01/00/90	
Final Action	12/00/90	

Small Entity: No

Additional Information: SAR No. 2424.

FTS:8:629-5602

Agency Contact: Alfred E. Vervaert, Environmental Protection Agency, Air and Radiation, MD-13, Research Triangle Park, NC 2771, 919 541-5602

RIN: 2060-AC26

2810. ● NSPS: MUNICIPAL LANDFILLS

Significance: Agency Priority

Legal Authority: 42 USC 7411/CAA 111

CFR Citation: 40 CFR 60

Legal Deadline: None.

Abstract: This rule will regulate emissions from new and modified municipal landfills under Section 111(b). Pollutants to be regulated will include one or more designated pollutants (pollutants not regulated under Section 108 - 110 or 112 of the Act) thus invoking Section 111(d). Section 111(d) will require States to develop emission standards for existing landfills based on EPA guidelines.

Timetable:

Action	Date	FR Cite
NPRM	11/00/89	
Final Action	12/00/90	

Small Entity: Undetermined

Additional Information: SAR No. 2535.

FTS:8-629-5672

Agency Contact: James F. Durham, Environmental Protection Agency, Air and Radiation, Air and Radiation, (MD-13), Research Triangle Park, NC 27711, 919 541-5672

RIN: 2060-AC42

2811. NESHAPS: BENZENE IN COKE OVEN BY-PRODUCT PLANTS

Significance: Regulatory Program

Legal Authority: 42 USC 7412 / CAA 112

CFR Citation: 40 CFR 61

Legal Deadline: Statutory, December 1984. Statutory - Promulgation due 12/00/84

Abstract: This regulation will control benzene emissions generated by the processing of gaseous and liquid streams at coke by-product plants. The emission sources to be controlled include process equipment, storage vessels, and fugitive emissions. The standards may consist of equipment specifications, work practices, design specifications, and emission limits. A supplemental proposal will be published to reevaluate the standard consistent with the court decision in vinyl chloride.

Timetable:

Action	Date	FR Cite
NPRM	06/06/84	49 FR 23528
Final Action	12/00/86	
(Supplemental) NPRM 06/00/88		

Small Entity: No

Additional Information: SAR No. 1685.

FTS:8-629-5625.

Agency Contact: Gilbert Wood, Environmental Protection Agency, Air and Radiation, (MD-13), Research Triangle Park, NC 27711, 919 541-5625

RIN: 2060-AA42

2812. NESHAPS: COKE OVEN EMISSIONS FROM COKE OVEN CHARGING, DOOR LEAKS, AND TOPSIDE LEAKS ON WET-COAL-CHARGED BATTERIES

Significance: Regulatory Program

Legal Authority: 42 USC 7412 / CAA 112

CFR Citation: 40 CFR 61 G

Legal Deadline: Statutory, March 1985. Statutory - Proposal due 3/00/85

Abstract: This regulation will control emissions of coke oven emissions, which have been designated as hazardous under section 112. It will require improved maintenance and operation to limit visible emissions from wet-coal-charged coke oven batteries. The standards may apply to charging and leaks from doors, lids, or offtakes for all existing or new sources. A supplemental proposal will be published to reevaluate the standard consistent with the court decision on vinyl chloride.

Timetable:

Action	Date	FR Cite
NPRM	04/23/87	52 FR 13586
Final Action	10/00/89	
(Supplemental) NPRM 09/00/88		

Small Entity: No

Additional Information: SAR No. 1686.

Docket No. A-79-15.

FTS:8-629-5566.

Agency Contact: Doug Bell, Environmental Protection Agency, Air and Radiation, (MD-13), Research Triangle Park, NC 27711, 919 541-5566

RIN: 2060-AA48

2813. NESHAP: ASBESTOS (REVISION)

Legal Authority: 42 USC 7412 / CAA 112

CFR Citation: 40 CFR 61, Subpart M

Legal Deadline: None.

Abstract: The Agency is considering revising the asbestos NESHAP standard to require the addition of monitoring requirements for asbestos mills, asbestos manufacturing operations and asbestos waste disposal operations. EPA is also considering revising the demolition and renovation standard to require specific recordkeeping and reporting requirements designed to help improve compliance of these sources, which is currently believed to be low.

Timetable:

Action	Date	FR Cite
NPRM	09/00/88	
Final Action	12/00/89	

Small Entity: Undetermined

Additional Information: SAR No. 1714.

FTS 8-629-5625.

Agency Contact: Gilbert Wood, Chief, Standards Support Section, Environmental Protection Agency, Air and Radiation, MD-13, RTP, North Carolina, 919 541-5625

RIN: 2060-AB51

2814. NESHAPS: CHROMIUM

Legal Authority: 42 USC 7412 /CAA 112

CFR Citation: 40 CFR 61

Legal Deadline: None.

Abstract: EPA issued a notice of intent to list total chromium or hexavalent chromium under Section 112 (50 FR 24317). We are further assessing the public health risks of chromium compounds. Also, we are investigating emissions of chromium and techniques that are available to control the emissions from 11 identified source categories. If EPA decides that emission standards are warranted, chromium or hexavalent chromium will be listed under Section 112, and EPA will develop proposed standards. Agency actions on industrial comfort cooling towers and chromium electroplating are described separately in the agenda.

Timetable:

Decision on whether to regulate	NPRM 11/00/88

Small Entity: Undetermined

Additional Information: SAR No. 2181.

FTS: 8-629-5596

Agency Contact: James Crowder, Environmental Protection Agency, Air and Radiation, (MD-13), Research Triangle Park, NC 27711, 919 541-5596

RIN: 2060-AB83

2815. NESHAP: CHROMIUM—INDUSTRIAL COOLING TOWERS

Significance: Regulatory Program

Legal Authority: 42 USC 7412 / CAA 112

CFR Citation: 40 CFR 61

Legal Deadline: None.

Abstract: EPA issued a notice of intent to list total chromium or hexavalent chromium under Section 112 (50 FR 24137). We are further assessing the public health risks of chromium compounds. Preliminary assessment performed by EPA has identified industrial process cooling towers as a source category which the proposal of national emission standards may be warranted. We are presently investigating in detail alternative feasible control options, and the economic, energy, and environmental impacts, and the effect on public health risks that would result from their application. If EPA decides, based on these investigations, that emissions standards are warranted, chromium or hexavalent chromium will be listed under Section 112 and EPA will develop standards.

Timetable:

Action	Date	FR Cite
NPRM	11/00/88	
Final Action	03/00/90	

Small Entity: Undetermined

Additional Information: SAR No. 2386.

FTS-8-629-5602

Agency Contact: Al Vervaert, Environmental Protection Agency, Air and Radiation, MD-13, 919 541-5602

RIN: 2060-AC12

2816. NESHAP: CHROMIUM—ELECTROPLATING

Significance: Regulatory Program

Legal Authority: 42 USC 7412 / CAA 112

CFR Citation: 40 CFR 61

Legal Deadline: None.

Abstract: EPA issued a notice of intent to list chromium or hexavalent chromium under Section 112 (50 FR 24317). We are further assessing the public health risks of chromium compounds. A preliminary assessment performed by EPA has identified chromium electroplating as a source category which emits significant quantities of chromium to the atmosphere and for which the proposal of national emission standards may be warranted. We are presently investigating in detail alternative feasible control options, and the economic, energy, and environmental impacts, and the effect on public health risks that would result from their application. If EPA decides, based on these investigations, that emission standards are warranted, chromium or hexavalent chromium will be listed under Section 112, and standards will be proposed.

Timetable:

Action	Date	FR Cite
NPRM	01/00/89	
Final Action	03/00/90	

Small Entity: Undetermined

Additional Information: SAR No. 2386.

FTS-8-629-5602.

Agency Contact: Al Vervaert, Environmental Protection Agency, Air and Radiation, MD-13, 919 541-5602

RIN: 2060-AC14

2817. HAZARDOUS ORGANIC NESHAP

Significance: Regulatory Program

Legal Authority: 42 USC 7412/CAA 112

CFR Citation: 40 CFR 61

Legal Deadline: None.

Abstract: This potential regulation would control emissions of 1,3-butadiene, ethylene oxide, ethylene dichloride, chloroform, carbon tetrachloride, perchloroethylene, trichloroethylene, and methylene chloride, as hazardous pollutants under Section 112. The potential regulation would cover the production categories and some use categories for these eight pollutants. It would require installation of combustion devices to control process vents and an inspection and monitoring program to control leaks from pumps and valves.

Timetable:

Action	Date	FR Cite
NPRM	11/00/88	
Final Action	03/00/90	

Small Entity: Undetermined

Additional Information: SAR No. 2383.

FTS:8-629-5578

Agency Contact: Doug Bell, Environmental Protection Agency, Air and Radiation, (MD-13), Research Triangle Park, NC 27711, 919 541-5578

RIN: 2060-AC19

2818. NESHAP: PERCHLOROETHYLENE DRY CLEANING

Legal Authority: 42 USC 7412 / CAA 112

CFR Citation: 40 CFR 61

Legal Deadline: None.

Abstract: EPA has issued a notice of intent to list perchloroethylene under Section 112 of the Clean Air Act. The Agency is evaluating the need for regulation of perchloroethylene, and is studying the possibility of requiring carbon absorbers or refrigerated condensers on all dry cleaning machines to effectively reduce perchloroethylene emissions. The standard could apply to all types of machines and may also address auxiliary equipment and safe workplace practices.

Timetable:

Action	Date	FR Cite
NPRM	10/00/88	
Final Action	11/00/89	

Small Entity: Undetermined

Additional Information: SAR No. 2360.

FTS:8-629-5608

Agency Contact: Robert E. Rosensteel, Environmental Protection Agency, Air and Radiation, MD-13, Research Triangle Park, NC 27711, 919 541-5608

RIN: 2060-AC27

2819. NESHAP: ETHYLENE OXIDE FROM COMMERCIAL STERILIZATION

Legal Authority: 42 USC 7412 / CAA 112

CFR Citation: 40 CFR 61

Legal Deadline: None.

Abstract: This potential standard would control ethylene oxide emissions from sterilization chambers. The emission reduction being considered would require add-on controls for sterilizers.

Timetable:

Action	Date	FR Cite
NPRM	10/00/88	
Final Action	11/00/89	

Small Entity: Undetermined

Additional Information: SAR NO. 2484

FTS:8-629-5608

Agency Contact: Robert E. Rosensteel, Environmental Protection Agency, Air and Radiation, MD-13, Research Triangle Park, NC 27711, 919 541-5608

RIN: 2060-AC28

2820. NESHAP: ORGANIC SOLVENT CLEANING

Legal Authority: 42 USC 7412 / CAA 112

CFR Citation: 40 CFR 61

Legal Deadline: None.

Abstract: These potential regulations would apply to organic solvent cleaners (degreasers) and will control emissions of perchloroethylene, methylene chloride, and trichloroethylene from new and existing sources. The emission reduction techniques being considered are combinations of add-on control hardware and improved operating practices.

Timetable:

Action	Date	FR Cite
NPRM	10/00/88	
Final Action	02/00/90	

Small Entity: Undetermined

Additional Information: SAR No. 1695.

FTS:8-629-5609

Agency Contact: Robert E. Rosensteel, Environmental Protection Agency, Air and Radiation, MD-13, Research Triangle Park, NC 27711, 919 541-5608

RIN: 2060-AC31

2821. ● NESHAP: BENZENE RECONSIDERATION

Significance: Regulatory Program

Legal Authority: 42 USC 7412/CAA 112

CFR Citation: 40 CFR 61

Legal Deadline: Judicial, December 2, 1988. The Agency accepted a voluntary remand to publish a NPRM by June 1988 and final action by December 1988.

Abstract: In June 1984, the Agency promulgated a NESHAP for benzene equipment leaks and withdrew proposed NESHAPS for benzene emissions from maleic anhydride plants, ethylbenzene/styrene plants, and benzene storage tanks (49 FR 23478). This action will reevaluate the three withdrawn proposals and the benzene fugitive NESHAP, along with coke oven by-product emission, consistent with the recent court decision on the vinyl chloride NESHAP.

Timetable:

Action	Date	FR Cite
NPRM	06/00/88	
Final Action	12/00/88	

Small Entity: Undetermined

Additional Information: SAR No. 2558.

FTS:8-629-5625

Agency Contact: Gilbert Wood, Environmental Protection Agency, Air and Radiation, Air and Radiation, (MD-13), Research Triangle Park, NC 27711, 919 541-5625

RIN: 2060-AC41

2822. ● NESHAP: RADIONUCLIDES

Significance: Regulatory Program

Legal Authority: 42 USC 7401/CAA 112

CFR Citation: 40 CFR 61

Legal Deadline: Judicial, December 2, 1988. U.S. Court of Appeals has granted EPA's motion to remand radionuclide NESHAPS and decisions not to regulate. EPA is ordered to propose action within 180 days (June 7, 1988), and promulgate final rules within 360 days (December 2, 1988).

Abstract: EPA is addressing the risks to individuals and to populations due to radionuclide emissions to air. This action is taken under the authority of Section 112 of the Clean Air Act. Rulemakings will be performed for the following source categories: Department of Energy facilities, Facilities licensed by the Nuclear Regulatory Commission, Elemental Phosphorous plants, Radon-222 emissions from licensed uranium mill tailings, Coal-fired boilers, uranium fuel cycle facilities, inactive uranium mill tailings, high level radioactive waste, and phosphogypsum piles. Alternatives being considered are either the promulgation of emission standards or work practices or the decision not to regulate. These actions will control the risks due to radionuclide emitted to air from all significant sources.

Timetable:

Action	Date	FR Cite
NPRM	06/00/88	
Final Action	12/00/88	

Small Entity: Undetermined

Additional Information: SAR No. 2547.

FTS:8-475-9610

Agency Contact: Terrence A. McLaughlin, Chief, Env. Stds. Branch, Environmental Protection Agency, Air and Radiation, Environmental Protection Agency, (ANR-460), Washington, DC 20460, 202 475-9610

RIN: 2060-AC47

2823. PSD INCREMENTS FOR PM10

Significance: Regulatory Program

Legal Authority: 42 USC 7476/CAA 166

CFR Citation: 40 CFR 52.21; 40 CFR 51.166

Legal Deadline: Statutory, July 1, 1989.

Abstract: The purpose of this action is to prevent significant deterioration of air quality as measured by the new indicator for particulate matter, PM10. The existing PSD program has particulate matter increments based on the original TSP indicator. The EPA has now promulgated a PM10 NAAQS to replace the original TSP-based particulate matter NAAQS. Therefore, EPA is preparing to revise the PSD program by promulgating PM10 increments in accordance with section 166 of the Clean Air Act.

Timetable:

Action	Date	FR Cite
NPRM	10/00/88	
Final Action	09/00/89	

Small Entity: No

Additional Information: SAR No. 2491.

FTS:8:629-5593

Agency Contact: Daniel DeRoeck, Environmental Protection Agency, Air and Radiation, MD-15, Research Triangle Park, NC 27711, 919 541-5593

RIN: 2060-AC33

2824. HYDROCARBON STANDARDS FOR LIGHT-DUTY TRUCKS (REVISION)

Significance: Regulatory Program

Legal Authority: 42 USC 7521 / CAA 202

CFR Citation: 40 CFR 86

Legal Deadline: None.

Abstract: Through this action, EPA will consider the establishment of more stringent hydrocarbon emission standards for light-duty trucks based upon the belief that very cost-effective hydrocarbon control is available from these vehicles. The new standards for lighter light-duty trucks would be no

more stringent than the existing passenger car standard and an equivalently stringent standard for heavier light-duty trucks.

Timetable:

Action	Date	FR Cite
ANPRM	09/06/86	51 FR 32032
NPRM	09/00/88	

Small Entity: No

Additional Information: SAR No. 2287.

FTS: 8-374-8496.

Agency Contact: J. Anderson, Environmental Protection Agency, Air and Radiation, 2565 Plymouth Road, Ann Arbor, MI 48105, 313 668-4496

RIN: 2060-AB85

2825. DECISION ON AIR POLLUTION REGULATORY STRATEGIES FOR THE GASOLINE MARKETING INDUSTRY

Significance: Regulatory Program

Legal Authority: 42 USC 7521 / CAA 202; 42 USC 7525 / CAA 206

CFR Citation: 40 CFR 86

Legal Deadline: None.

Abstract: Evaporative hydrocarbons emitted during vehicle refueling contribute to the failure of many urban areas to attain the National Ambient Air Quality Standard for ozone. Through this action, if deemed feasible and desirable, EPA will control emissions at the time of refueling.

Timetable:

Action	Date	FR Cite
NPRM	08/19/87	52 FR 31162
Supplemental NPRM	10/00/88	
Final Action	10/00/89	

Small Entity: No

Additional Information: SAR No. 2384.

FTS:8-374-8270

Analysis: Regulatory Impact Analysis

Agency Contact: Phil Carlson, Environmental Protection Agency, Air and Radiation, Environmental Protection Agency, 2565 Plymouth Rd., Ann Arbor, MI 48105, 313 668-4270

RIN: 2060-AC04

2826. TRADING AND BANKING OF HEAVY-DUTY ENGINE NOX AND PM EMISSION CREDITS

Significance: Regulatory Program

Legal Authority: 42 USC 7521 / CAA 202

CFR Citation: 40 CFR 86

Legal Deadline: None.

Abstract: In March 1985 the EPA promulgated NOx and PM emission standards for heavy-duty vehicles and engines. The rulemaking included a provision for emissions averaging for the final stages of standard implementation in order to mitigate the economic impact of the stringent standards. EPA realized that the averaging mechanism could provide more benefits to manufacturers with a broader product line. In order to address this issue, EPA included in the final package a provision to study the potential for mitigating this uneven distribution of benefits through an emissions credit trading program. The study was expanded to include the concept of 'banking' emissions credit. The study has been completed and made available to the public and a technical workshop was held in January 1987. EPA is analyzing the comments received from the public and from the workshop.

Timetable:

Action	Date	FR Cite
NPRM	09/00/88	

Small Entity: No

Additional Information: SAR No. 1315.

FTS: 8-374-8408

Agency Contact: Glenn Passavant, Environmental Protection Agency, Air and Radiation, 2565 Plymouth Road, Ann Arbor, MI 48105, 313 668-4408

RIN: 2060-AC05

2827. TEST PROCEDURES FOR TRAP-EQUIPPED DIESEL VEHICLES AND ENGINES

Legal Authority: 42 USC 7525 / CAA 206

CFR Citation: 40 CFR 86

Legal Deadline: None.

Abstract: The particulate standards for 1991 and later model year Heavy-duty Diesel Engines may require the use of trap-oxidizers for some vehicles and engines. The existing test procedures do not expressly describe how to deal with emissions and fuel economy effects during trap regeneration. If it turns out that trap oxidizers are necessary to comply with the 1991 particulate standards, the agency will develop an appropriate test procedure.

Timetable:

Action	Date	FR Cite
NPRM	00/00/00	

Small Entity: No

Additional Information: SAR No. 2373.

FTS: 8-374-8496

Agency Contact: John Anderson, Environmental Protection Agency, Air and Radiation, 2565 Plymouth Road, Ann Arbor, MI 48105, 313 668-4496

RIN: 2060-AC08

2828. NONCONFORMANCE PENALTIES FOR 1991 THROUGH 1994 MODEL YEAR EMISSION STANDARDS FOR HEAVY-DUTY VEHICLES AND ENGINES

Legal Authority: 42 USC 7524 /CAA 206

CFR Citation: 40 CFR 86

Legal Deadline: None.

Abstract: This action will address the availability of nonconformance penalties (NCPs) and specific upper limits and penalty rates for 1991 through 1994 model year emission standards for heavy-duty vehicles and engines. The availability of NCPs will allow a manufacturer, whose vehicles or engines fail to conform with certain applicable emission standards, but which do not exceed a designated upper limit, to be issued a certificate of conformity upon payment of a monetary penalty. This rule is the third phase of NCP rulemaking. The first, published August 30, 1985 established generic aspects of NCPs. The second, published December 31, 1985, addressed NCPs applicable to 1987 through 1990 model years.

Timetable:

Action	Date	FR Cite
NPRM	09/00/88	

Small Entity: No

Additional Information: SAR No. 2431.

FTS:8-382-2535.

Agency Contact: Richard Babst, Environmental Protection Agency, Air and Radiation, (EN-340-F), Washington, DC 20460, 202 382-2535

RIN: 2060-AC39

VOL 53 ISS 79 PT 2 AP 25 1988 UMI

2829. EMISSION PERFORMANCE WARRANTY REGULATIONS (REVISION)

Legal Authority: 42 USC 7541(b) / CAA 207(b)

CFR Citation: 40 CFR 85

Legal Deadline: None.

Abstract: This rulemaking will address the issue of establishing: (1) test procedures and standards for heavy-duty gasoline vehicles, (2) new standards for light-duty vehicles and light-duty trucks, and (3) alternative dynamometer loadings for the loaded short tests. These amendments are appropriate so that owners of heavy-duty vehicles will have emissions warranty protection and additional owners of light-duty vehicles and trucks will be entitled to warranty protection.

Timetable:

Action	Date	FR Cite
NPRM	00/00/00	

Small Entity: No

Additional Information: SAR No. 2136.

FTS: 8-374-8416.

Agency Contact: James McCargar, Environmental Protection Agency, Air and Radiation, 2625 Plymouth Road, Ann Arbor, MI 48105, 313 668-4416

RIN: 2060-AB53

2830. FUEL AND FUEL ADDITIVES: PREVENTATIVE ACTION PROGRAM TO PREVENT SELF-SERVE FUEL SWITCHING

Legal Authority: 42 USC 7545 /CAA 211; 42 USC 7601(a) /CAA 301(a)

CFR Citation: 40 CFR 80.22; 40 CFR 80.23

Legal Deadline: None.

Abstract: This action will develop a voluntary "Preventative Action Program" to be used by gasoline retailers to help prevent self-serve fuel switching. Retailers will be afforded an affirmative defense to allegations of "allowing" fuel switching if they have effectively implemented this program. This action would also change the language of the fuel switching regulation to prohibit fuel switching in all vehicles designed to use unleaded gasoline, and not just those that still have an "unleaded only" label or fuel inlet restrictor.

Timetable:

Action	Date	FR Cite
NPRM	00/00/00	

Small Entity: Undetermined

Additional Information: SAR No. 2215.

FTS: 8-382-2633

Agency Contact: Richard Kozlowski, Environmental Protection Agency, Air and Radiation, (EN-397F), Washington, DC 20460, 202 382-2633

RIN: 2060-AB59

2831. TREATMENT, STORAGE, AND DISPOSAL FACILITY AREA SOURCE AIR EMISSIONS - RCRA STANDARDS

Significance: Regulatory Program

Legal Authority: 42 USC 6924/RCRA 3004, 3007

CFR Citation: 40 CFR 264, Subparts I to N

Legal Deadline: Statutory, May 1987.

Abstract: The purpose of this action is to investigate the magnitude of the area non-combustion source air emissions from hazardous waste treatment, storage, and disposal facilities and to develop standards for monitoring and control as needed. Area sources include surface impoundments, landfills, waste piles, land treatment operations and waste water treatment facilities. Pollutants to be considered by such standards would include volatile organic compounds, particulate matter, specific toxic substances, or a combination of these. The mandate for standards development under RCRA is to protect human health and the environment.

Timetable:

Action	Date	FR Cite
NPRM	01/00/89	
Final Action	03/00/90	

Small Entity: Undetermined

Additional Information: SAR No. 2240.

FTS:8-629-5672.

Agency Contact: James F. Durham, Environmental Protection Agency, Air and Radiation, (MD-13), Research Triangle Park, NC 27711, 919 541-5672

RIN: 2060-AB94

ENVIRONMENTAL PROTECTION AGENCY (EPA) —Clean Air Act (CAA)

Final Rule Stage

2832. ● PSD REGULATIONS FOR NOX

Significance: Regulatory Program

Legal Authority: 42 USC 1857 /CAA 211

CFR Citation: 40 CFR 51; 40 CFR 52

Legal Deadline: Judicial, October 9, 1989.

Abstract: In March 1986, the Sierra Club, et al., filed suit against EPA for not promulgating regulations pursuant to section 166 of the Clean Air Act for nitrogen oxides (NOx). The court decision issued by the District Court for the Northern District of California on April 1, 1987, requires the EPA to propose regulations by February 9, 1988, and promulgate regulations by October 9, 1988. Work started in November on the development of PSD increment and/or NOx system that would be equally effective as the congressionally set increments for PM and SO2 in order to comply with this court action.

Timetable:

Action	Date	FR Cite
NPRM	02/08/88	53 FR 3698
Final Action	10/00/88	

Small Entity: No

Additional Information: SAR No. 2421.

FTS:8-541-5592

Agency Contact: Gary McCutchen, Environmental Protection Agency, Air and Radiation, MD-15, Research Triangle Park, NC 27711, 919 541-5592

RIN: 2060-AC24

2833. FUGITIVE EMISSIONS/SURFACE COAL MINES FOR AIR QUALITY NEW SOURCE REVIEW

Significance: Regulatory Program

Legal Authority: 42 USC 7410/CAA 110

CFR Citation: 40 CFR 51; 40 CFR 52

Legal Deadline: None.

Abstract: This action would revise EPA's new source requirements for new major stationary sources in PSD and Nonattainment areas. EPA is taking this action to implement a settlement agreement with Chemical Manufacturer's Association and other parties who challenged the regulation amendments promulgated on August 7, 1980. The schedule below covers the issues included in Exhibit A of the Agreement; the Agency is developing a schedule for Exhibit B issues.

Timetable:

Final Action
New Source Review 06/00/88
Surface Coal Mines 10/00/88
NPRM
New Source Review 08/25/83 (49 FR 38742)
Surface Coal Mines 10/24/84 (48 FR 43211)

Small Entity: No

Additional Information: SAR No. 1845.

FTS:8:629-5375.

Agency Contact: David Solomon, Environmental Protection Agency, Air and Radiation, MD-15, Research Triangle Park, NC 27711, 919 541-5375

RIN: 2060-AA68

2834. NSPS: SOLVENT DEGREASING

Legal Authority: 42 USC 7411 / CAA 111

CFR Citation: 40 CFR 60, Subpart JJ

Legal Deadline: Statutory, August 1982.

Abstract: Some new issues have arisen, and EPA is deciding whether to go forward with this rule. A Federal Register notice requesting public participation in information gathering for Organic Solvent Cleaning was published August 10, 1987 (52 FR 29548).

Timetable:

Action	Date	FR Cite
NPRM	06/11/80	45 FR 39766
Decision on whether to regulate		
Final Action	10/00/88	

Small Entity: Yes

Additional Information: SAR No. 1010.

Docket No. OAQPS 78-12.

FTS:8-629-5568.

Analysis: Regulatory Flexibility Analysis

Agency Contact: Doug Bell, Environmental Protection Agency, Air and Radiation, (MD-13), Research Triangle Park, NC 27711, 919 541-5568

RIN: 2060-AA12

2835. NSPS: SYNTHETIC ORGANIC CHEMICAL INDUSTRY: AIR OXIDATION PROCESS

Legal Authority: 42 USC 7411 / CAA 111

CFR Citation: 40 CFR 60, Subpart III

Legal Deadline: None.

Abstract: This regulation will control emissions of volatile organic compounds from the manufacture of synthetic organic chemicals via air oxidation processes. The Agency is still considering whether to go forward with this rule.

Timetable:

Action	Date	FR Cite
NPRM	10/21/83	48 FR 48932
Final Action	00/00/00	

Small Entity: No

Additional Information: SAR No. 1618.

FTS:8-629-5578.

Agency Contact: Doug Bell, Environmental Protection Agency, Air and Radiation, (MD-13), Research Triangle Park, NC 27711, 919 541-5568

RIN: 2060-AA30

2836. NSPS: DISTILLATION OPERATIONS

Legal Authority: 42 USC 7411 / CAA 111

CFR Citation: 40 CFR 60

Legal Deadline: None.

Abstract: This regulation will control emissions of volatile organic compounds from new, modified, and reconstructed distillation facilities at petroleum refineries and synthetic organic chemical plants. New issues have arisen and the Agency is deciding whether to go forward with this rule.

Timetable:

Action	Date	FR Cite
NPRM	12/30/83	48 FR 57538
Final Action	00/00/00	

Small Entity: No

Additional Information: SAR No. 1733.

FTS:8-629-5568.

Agency Contact: Doug Bell, Environmental Protection Agency, Air and Radiation, (MD-13), Research Triangle Park, NC 27711, 919 541-5568

RIN: 2060-AA35

2837. NSPS: PETROLEUM REFINERY, FCC REGENERATORS

Legal Authority: 42 USC 7411 / CAA 111

CFR Citation: 40 CFR 60

Legal Deadline: None.

Abstract: This standard will require control of sulfur dioxide from fluidized catalytic cracking units.

Timetable:

Action	Date	FR Cite
NPRM	11/08/85	50 FR 46464
Final Action	06/00/88	

Small Entity: No

Additional Information: SAR No. 1736.

FTS:8-629-5625.

Agency Contact: Gilbert Wood, Environmental Protection Agency, Air and Radiation, (MD-13), Research Triangle Park, NC 27711, 919 541-5625

RIN: 2060-AA36

2838. NSPS: POLYMER AND RESIN MANUFACTURE

Legal Authority: 42 USC 7411 / CAA 111

CFR Citation: 40 CFR 60

Legal Deadline: Statutory, August 1982. Statutory - Promulgation due 8/00/82

Abstract: This rule will control volatile organic compound (VOC) emissions in exhaust streams from polymerization processes in the manufacture of organic polymers and resins.

Timetable:

Action	Date	FR Cite
NPRM	09/30/87	52 FR 36676
Final Action	01/00/89	

Small Entity: No

Additional Information: SAR No. 1691.

Docket No. A-82-19.

FTS:8-629-5578.

Affected Sectors: Multiple

Agency Contact: Gilbert Wood, Environmental Protection Agency, Air and Radiation, (MD-13), Research Triangle Park, NC 27711, 919 541-5578

RIN: 2060-AA37

2839. NSPS: SEWAGE TREATMENT PLANTS (REVISION)

Legal Authority: 42 USC 7411 / CAA 111

CFR Citation: 40 CFR 60

Legal Deadline: None.

Abstract: EPA has reviewed this standard and determined that revisions to the monitoring, recordkeeping and reporting requirements are warranted. The review assessed the performance and cost of control systems as well as experience in implementing the existing standard. EPA has issued a notice in the Federal Register announcing the results of its review and proposing revisions to the monitoring, recordkeeping and reporting requirements (51 FR 13424).

Timetable:

Action	Date	FR Cite
NPRM	04/18/86	51 FR 43424
Final Action	06/00/88	

Small Entity: No

Additional Information: SAR No. 2028.

FTS: 8-629-5602.

Agency Contact: Al Vervaert, Environmental Protection Agency, Air and Radiation, MD-13, Research Triangle Park, NC 27711, 919 541-5602

RIN: 2060-AB05

2840. NSPS: AUTOMOBILE AND LIGHT-DUTY TRUCK COATING OPERATIONS (REVISION)

Legal Authority: 42 USC 7411 / CAA 111

CFR Citation: 40 CFR 60

Legal Deadline: None.

Abstract: EPA is revising the NSPS for automobile and light-duty truck coating operations which was promulgated in December 1980 to reflect additional operational data of the best demonstrated prime coat system. This revision of the standard does not reflect a change in the basis of the prime coat standard, but a better understanding of the performance of the prime coat system upon which the standard was originally based.

Timetable:

Action	Date	FR Cite
NPRM	07/29/82	47 FR 32743
Final Action	00/00/00	

Small Entity: No

Additional Information: SAR No. 2044.

FTS: 8-629-5625.

Agency Contact: Gilbert Wood, Environmental Protection Agency, Air and Radiation, MD-13, Research Triangle Park, NC 27711, 919 541-5625

RIN: 2060-AB22

2841. NSPS: FOSSIL FUEL-FIRED STEAM GENERATORS (REVISION)

Legal Authority: 42 USC 7411 / CAA 111; 42 USC 7601(a)

CFR Citation: 40 CFR 60

Legal Deadline: None.

Abstract: These revisions to the existing NSPS for large fossil fuel-fired steam generators would establish sulfur dioxide compliance, emission monitoring, and reporting requirements on a 30-day rolling average basis.

Timetable:

Action	Date	FR Cite
NPRM	10/21/83	48 FR 48960
Final Action	00/00/00	

Small Entity: Undetermined

Additional Information: SAR No. 2083.

FTS: 8-629-5251.

Analysis: Regulatory Impact Analysis

Agency Contact: Fred Porter, Environmental Protection Agency, Air and Radiation, MD-13, Research Triangle Park, NC 27711, 919 541-5251

RIN: 2060-AB29

2842. NSPS: CEMENT PLANTS (REVISION)

Legal Authority: 42 USC 7411 /CAA 111; 42 USC 7414 /CAA 114

CFR Citation: 40 CFR 60

Legal Deadline: None.

Abstract: EPA has completed a four-year review of this NSPS. As a result, the Agency intends to revise the monitoring requirements associated with the standard to require installation of continuous opacity monitors on all kilns and clinker coolers subject to the standards after.

Timetable:

Action	Date	FR Cite
NPRM	09/10/85	50 FR 36956
Final Action	06/00/88	

Small Entity: No

Additional Information: SAR No. 2186.

FTS: 8-629-5568

Agency Contact: Doug Bell, Environmental Protection Agency, Air and Radiation, (MD-13), Research Triangle Park, NC 27711, 919 541-5568

RIN: 2060-AB38

2843. NSPS: POLYMERIC COATING OF SUPPORTING SUBSTRATES

Legal Authority: 42 USC 7411 /CAA 111

CFR Citation: 40 CFR 60

Legal Deadline: None.

Abstract: This regulation would limit volatile organic compounds emissions from new, modified, and reconstructed plants that coat polymeric compounds onto supporting substrates.

Timetable:

Action	Date	FR Cite
ANPRM	08/17/84	49 FR 32868
NPRM	04/30/87	52 FR 15906
Final Action	07/00/88	

Small Entity: No

Additional Information: SAR No. 2237.

FTS:8-629-5568.

Agency Contact: Doug Bell, Environmental Protection Agency, Air and Radiation, (MD-13), Environmental Protection Agency, Research Triangle Park, NC 27711, 919 541-5568

RIN: 2060-AB67

2844. NSPS: VOC EMISSIONS FROM PETROLEUM REFINERY WASTEWATER SYSTEMS

Legal Authority: 42 USC 7411 /CAA 111

CFR Citation: 40 CFR 60

Legal Deadline: None.

Abstract: This regulation is intended to limit emissions of volatile compounds from new, modified, and reconstructed refinery wastewater systems.

Timetable:

Action	Date	FR Cite
NPRM	05/04/87	52 FR 16334
Final Action	10/00/88	

Small Entity: No

Additional Information: SAR No. 1696.

FTS: 8-629-5625.

Agency Contact: Gilbert Wood, Environmental Protection Agency, Air

and Radiation, (MD-13), Research Triangle Park, NC 27711, 919 541-5625

RIN: 2060-AB61

2845. NSPS: MAGNETIC TAPE MANUFACTURING

Legal Authority: 42 USC 7411 / CAA 111

CFR Citation: 40 CFR 60

Legal Deadline: None.

Abstract: This regulation is intended to limit emissions of volatile organic compounds from new, modified, and reconstructed magnetic tape manufacturing lines.

Timetable:

Action	Date	FR Cite
NPRM	01/22/86	51 FR 2996
Final Action	05/00/88	

Small Entity: No

Additional Information: SAR No. 1928.

FTS: 8-629-5625.

Agency Contact: Gilbert Wood, Environmental Protection Agency, Air and Radiation, (MD-13), Research Triangle Park, NC 27711, 919 541-5625

RIN: 2060-AB68

2846. ● STATE IMPLEMENTATION PLANS: APPROVAL OF POST -1987 OZONE AND CARBON MONOXIDE PLAN REVISIONS FOR AREAS NOT ATTAINING THE NATIONAL AMBIENT AIR QUALITY STANDARDS NAAQS

Significance: Regulatory Program

Legal Authority: 42 USC 7401 et seq/CAA

CFR Citation: 40 CFR Not yet determined

Legal Deadline: None.

Abstract: The EPA is developing a program to address the likelihood that many areas in the country will not attain the national ambient air quality standards (NAAQS) for ozone and carbon monoxide (CO) by December 31, 1987, the latest date for attainment expressly identified in the Clean Air Act. This notice describes EPA's views about how EPA should interpret the Act so as to bring those areas into attainment, the reasons for that interpretation, and the concrete steps EPA intends to take to implement that interpretation soon and in the long term. The final policy will be an advance notice of how EPA intends, in subsequent rulemakings, to judge the adequacy of State efforts to plan for attainment of the ozone and CO standards.

Timetable:

Action	Date	FR Cite
NPRM	11/24/87	52 FR 45044
Final Action	00/00/00	

Small Entity: Not Applicable

Additional Information: SAR No. 2559.

FTS:8-699-5517

Agency Contact: Brock Nicholson, Environmental Protection Agency, Air and Radiation, MD-15, Research Triangle Park, NC 27711, 919 541-5517

RIN: 2060-AB96

2847. NESHAP: CHROMIUM—COMFORT COOLING TOWERS

Significance: Regulatory Program

Legal Authority: 15 USC 2605; 15 USC 2607

CFR Citation: 40 CFR 749

Legal Deadline: None.

Abstract: EPA issued a notice of intent to list total chromium or hexavalent chromium under Section 112 (50 FR 24317). We are further assessing the public health risks of chromium compounds and investigating emissions of chromium and techniques that are available to control the emissions from identified source categories. Because emissions from cooling towers using chromium chemicals in the recirculating water are predominantly hexavalent, a detailed investigation of the technical feasibility of using chromium substitutes or high efficiency drift eliminators is being conducted. EPA has decided that emissions standards are warranted, and standards will be proposed under Section 6 of TSCA.

Timetable:

Action	Date	FR Cite
Notice of Solicitation	09/15/86	51 FR 32668
NPRM	03/29/88	53 FR 10205
Final Action	04/00/89	

Small Entity: No

Additional Information: SAR No. 2386.

FTS-8-629-5625

Agency Contact: Gilbert Wood, Environmental Protection Agency, Air and Radiation, MD-13, 919 541-5625

RIN: 2060-AC13

2848. ● PROPOSED POLICY STATEMENT: ALTERNATIVE RURAL FUGITIVE DUST POLICY FOR PM10

Significance: Regulatory Program

Legal Authority: 42 USC 7401/CAA

CFR Citation: 40 CFR 50; 40 CFR 52

Legal Deadline: None.

Abstract: Since 1977, EPA has allowed States with rural fugitive dust areas (RFDAs) to discount fugitive dust in developing and enforcing a State Implementation Plan(SIP) for attainment and maintenance of the NAAQS for particulate matter (PM). On July 1, 1987, EPA promulgated revisions to its particulate matter National Ambient Air Quality Standards (NAAQS), 52 FR 24634. In this notice, EPA also solicited comments on alternatives for SIP requirements for RFDAs and on the adequacy of the definitions which are used in identifying RFDAs, and the importance of protecting annual versus 24-hour NAAQS (52 FR 24716). The EPA will issue its decision after considering public comments on the alternatives. The EPA will continue its existing fugitive policy and apply it to implementation of the revised particulate standard until a decision is made.

Timetable:

Action	Date	FR Cite
NPRM	07/01/87	52 FR 24716
Final Action	00/00/00	

Small Entity: Not Applicable

Additional Information: SAR No. 2543.

FTS:8-629-5634

Agency Contact: Thompson G. Pace, Environmental Protection Agency, Air and Radiation, Research Triangle Park, NC 27711, 919 541-5634

RIN: 2060-AC44

2849. STRATOSPHERIC OZONE PROTECTION STRATEGY

Significance: Regulatory Program

Legal Authority: 42 USC 4547 / CAA 157(6)

CFR Citation: 40 CFR Not yet determined

VOL 53 ISS 79 PT 2 APR 25 1988 UMI

Legal Deadline: Judicial, November 1987. Revised proposal by December 1987 and Final action by August 1988

Abstract: This action initiates a comprehensive research effort by EPA to assess issues related protection of the stratosphere, as directed by Part B, Section 157 of the CAA. The plan proposed that EPA enhance its research and analysis, participate in a series of domestic and international workshops related to stratospheric ozone, and arrive at a decision by November, 1987 whether additional regulation, either domestic or international, of stratospheric perturbants, is necessary. The plan also served as a basis for a settlement agreement between EPA and NRDC in a suit brought before the DC Circuit Court.

Timetable:

Action	Date	FR Cite
ANPRM	10/07/80	45 FR 66726
NPRM	12/14/87	52 FR 47486
Final Action	08/00/88	

Small Entity: Undetermined

Additional Information: SAR No. 2372.

FTS: 8-382-4036

Agency Contact: Eileen Claussen, Environmental Protection Agency, Air and Radiation, ANR-445, 202 382-7407

RIN: 2060-AC09

2850. EMISSION STANDARDS AND TEST PROCEDURES FOR METHANOL-FUELED NEW MOTOR VEHICLES

Significance: Regulatory Program

Legal Authority: 42 USC 7521 / CAA 202

CFR Citation: 40 CFR 86

Legal Deadline: None.

Abstract: This rule will develop emission standards and test procedures applicable to methanol-fueled light-duty vehicles, light-duty trucks, heavy-duty engines, and motorcycles. Current regulations apply only to gasoline-fueled and diesel-powered vehicles. The lack of regulations is a hindrance to the development of methanol-fueled vehicles.

Timetable:

Action	Date	FR Cite
ANPRM	04/10/84	49 FR 14244
NPRM	06/29/86	51 FR 30984
Final Action	07/00/88	

Small Entity: Undetermined

Additional Information: SAR No. 2112.

FTS: 8-374-8227.

Agency Contact: Mike Gold, Environmental Protection Agency, Air and Radiation, 2565 Plymouth Road, Ann Arbor, MI 48105, 313 668-4227

RIN: 2060-AB28

2851. CONTROL OF EXCESS EVAPORATIVE EMISSIONS/FUEL VOLATILITY

Significance: Regulatory Program

Legal Authority: 42 USC 7521 /CAA 202; 42 USC 7525 /CAA 206; 42 USC 7545 /CAA 211; 42 USC 7601 /CAA 301(a)

CFR Citation: 40 CFR 86

Legal Deadline: None.

Abstract: In-use motor vehicle evaporative hydrocarbon emissions greatly exceed their applicable EPA emissions standards. A major reason is that the volatility of commercial gasoline is substantially greater than that of the certification test fuel specified by EPA. This rule will consider options to deal with this problem including control of commercial fuel volatility and a change to certification test fuel volatility.

Timetable:

Action	Date	FR Cite
NPRM	08/19/87	52 FR 31274
Final Action	10/00/89	

Small Entity: No

Additional Information: SAR No. 2318.

FTS:8-374-8339

Analysis: Regulatory Impact Analysis

Agency Contact: Richard A. Rykowski, Environmental Protection Agency, Air and Radiation, 2565 Plymouth Road, Ann Arbor, Michigan 48105, 313 668-4339

RIN: 2060-AB89

2852. PARTICULATE EMISSION STANDARDS FOR CERTAIN 1987 AND LATER MODEL YEAR LIGHT-DUTY DIESEL TRUCKS (REVISION)

Legal Authority: 42 USC 7521/CAA 202; 42 USC 7525/CAA 206; 42 USC 7601/CAA 301

CFR Citation: 40 CFR 86

Legal Deadline: None.

Abstract: EPA is considering revising the particulate emission standards for light-duty diesel trucks with a loaded vehicle weight equal to or greater than 3751 pounds. The standard would be relaxed for the 1987-1990 model years, allowing manufacturers to devote their resources to developing particulate trap oxidizer technology. Then in 1991, the standard would be tightened to 0.13 grams per mile which is twice as stringent as the current applicable standard.

Timetable:

Action	Date	FR Cite
NPRM	06/14/87	52 FR 21075
Final Action	05/00/88	

Small Entity: No

Additional Information: SAR No. 2410.

FTS:8-382-2485

Agency Contact: Carol Bengle, Environmental Protection Agency, Air and Radiation, (EN-340F), Washington, DC 20460, 202 382-2485

RIN: 2060-AC18

2853. SMALL-VOLUME MANUFACTURERS CERTIFICATION PROCEDURE (REVISION)

Legal Authority: 42 USC 7525 / CAA 206

CFR Citation: 40 CFR 86

Legal Deadline: None.

Abstract: This action will result in amended rules to provide for certification of emissions compliance by small-volume manufacturers, including commercial importers importing vehicles into the United States. By a separate action, EPA has revised its rules for nonconforming vehicle importation. This action is appropriate to improve the certification regulations and assure compliance with the exhaust emission standards. Current rules for small-volume manufacturers were not specifically intended to apply to conversion of previously manufactured but uncertified configurations. However, increasingly large numbers of manufacturers who import vehicles for resale have applied for EPA certification as an alternative to individual vehicle importation. This will primarily impact businesses involved in importing motor vehicles. The likely impact of these changes will be increased costs to these businesses.

Timetable:

Action	Date	FR Cite
NPRM	03/09/88	53 FR 7676
Final Action	03/00/89	

Small Entity: No

Additional Information: SAR No. 2143.

FTS: 8-374-8444.

Analysis: Regulatory Impact Analysis; Regulatory Flexibility Analysis

Agency Contact: Charlie Cole, Environmental Protection Agency, Air and Radiation, 2625 Plymouth Road, Ann Arbor, MI 48105, 313 668-4444

RIN: 2060-AB54

2854. AMENDMENTS TO SELECTIVE ENFORCEMENT AUDITING REGULATIONS

Legal Authority: 42 USC 7525(b)/CAA 206; 42 USC 7542(a)/CAA 211; 42 USC 7601(a)/CAA 301

CFR Citation: 40 CFR 86

Legal Deadline: None.

Abstract: These amendments would delete the mandatory reporting of manufacturers' internal quality assurance emission test data. Prior to promulgation of this requirement in 1980, many manufacturers voluntarily submitted their internal quality assurance data. The deletion of this requirement is not expected to affect the SEA program, especially since many manufacturers will continue to provide the data voluntarily.

Timetable:

Action	Date	FR Cite
NPRM	09/03/87	52 FR 33560
Final Action	07/00/88	

Small Entity: No

Additional Information:

FTS: 8-382-4104

Agency Contact: Stephen Sinkez, Environmental Protection Agency, Air and Radiation, EN-340-F, 401 M St., SW, Washington, DC 20460, 202 382-4104

RIN: 2060-AC34

2855. VOLUNTARY AFTERMARKET PARTS CERTIFICATION REGULATIONS (REVISION)

Legal Authority: 42 USC 7541(b) /CAA 207(b)

CFR Citation: 40 CFR 85

Legal Deadline: None.

Abstract: The U.S. Court of Appeals for the D.C. Circuit has directed EPA to amend the aftermarket parts certification regulations. There were four specific areas which the Court directed EPA to revisit. EPA was directed to develop better procedures for determining adequate grounds for manufacturer denial of a warranty claim; reconsider inclusion of specialty parts into the certification system; improve the procedure for resolution of warranty cost claims by vehicle manufacturers' against certified parts manufacturers; and labeling for certified parts. Under the proposed regulation, effective with the 1990 model year, emissions testing for EPA's programs involving Certification, Selective Enforcement Audits, and Recalls and for service accumulation for the Certification program for all gasoline-fueled motor vehicles will be performed only with unleaded gasoline test fuel.

Timetable:

Action	Date	FR Cite
NPRM	01/09/87	52 FR 924
Final Action	06/00/88	

Small Entity: Yes

Additional Information: SAR No. 2145.

FTS: 8-374-8316

Analysis: Regulatory Flexibility Analysis

Agency Contact: Mike Sabourin, Environmental Protection Agency, Air and Radiation, Environmental Protection Agency, 2565 Plymouth Road, Ann Arbor, MI 48105, 313 668-4316

RIN: 2060-AB58

ENVIRONMENTAL PROTECTION AGENCY (EPA) —Clean Air Act (CAA)

Completed Actions

2856. FEDERAL PROMULGATION OF STATE IMPLEMENTATION PLANS TO PROTECT VISIBILITY

Significance: Regulatory Program

CFR Citation: 40 CFR 52

Completed:

Reason	Date	FR Cite
RIN CHANGE See same action listed as RIN 2060-AB82	03/01/88	

Small Entity: No

Agency Contact: Thompson G. Pace 919 541-5634

RIN: 2060-AC20

2857. NSPS: RUBBER PRODUCTS INDUSTRY-TIRE MANUFACTURING

CFR Citation: 40 CFR 60, Subpart BBB

Completed:

Reason	Date	FR Cite
Final Action	09/15/87	52 FR 34868

Small Entity: No

Agency Contact: Gilbert Wood 919 541-5625

RIN: 2060-AA24

2858. NSPS: INDUSTRIAL BOILERS, SO2

Significance: Regulatory Program

CFR Citation: 40 CFR 60

Completed:

Reason	Date	FR Cite
Final Action	12/16/87	52 FR 47826

Small Entity: No

Agency Contact: Fred Porter 919 541-5251

RIN: 2060-AB33

2859. NSPS: SURFACE COATING OF PLASTIC PARTS FOR BUSINESS MACHINES

CFR Citation: 40 CFR 60

Completed:

Reason	Date	FR Cite
Final Action	01/29/88	53 FR 2672

Small Entity: Undetermined

EPA—CAA

Completed Actions

Agency Contact: Doug Bell 919 541-5568

RIN: 2060-AB66

2860. NSPS: NEW RESIDENTIAL WOOD HEATERS

Significance: Regulatory Program

CFR Citation: 40 CFR 60

Completed:

Reason	Date	FR Cite
Final Action	02/26/88	53 FR 5860

Small Entity: Yes

Agency Contact: Rick Colyer 919 541-5578

RIN: 2060-AB68

2861. REQUIREMENTS FOR PREPARATION, ADOPTION, AND SUBMITTAL OF IMPLEMENTATION PLANS; APPROVAL AND PROMULGATION OF IMPLEMENTATION PLANS; SURFACE COAL MINES

Significance: Regulatory Program

CFR Citation: 40 CFR 52.21; 40 CFR 51.166; 40 CFR 52.24; 40 CFR 51, Appendix S

Completed:

Reason	Date	FR Cite
RIN CHANGE See same action listed as RIN 2060-AA68	03/01/88	

Small Entity: Undetermined

Agency Contact: David Solomon 919 541-5375

RIN: 2060-AC40

2862. "GUIDELINE ON AIR QUALITY MODELS" (REVISION)

CFR Citation: 40 CFR 51.24(l); 40 CFR 52.21(m)

Completed:

Reason	Date	FR Cite
Final Action	01/06/88	53 FR 342

Small Entity: No

Agency Contact: Joseph Tikvart 919 541-5561

RIN: 2060-AB13

2863. IMPORTATION OF MOTOR VEHICLES AND MOTOR VEHICLE ENGINES (REVISION)

CFR Citation: 40 CFR 85

Completed:

Reason	Date	FR Cite
Final Action	09/25/87	52 FR 36136

Small Entity: Yes

Agency Contact: Zachary Fraser 202 382-2500

RIN: 2060-AA54

2864. REMOVAL OF LEAD FROM EPA CERTIFICATION AND TEST FUELS (REVISION)

CFR Citation: 40 CFR 86

Completed:

Reason	Date	FR Cite
Final Action	01/07/88	53 FR 470

Small Entity: No

Agency Contact: Peter Hutchins 313 668-4340

RIN: 2060-AB67

2865. PSD REGULATIONS FOR NOX

Significance: Regulatory Program

CFR Citation: 40 CFR 52.21; 40 CFR 51.166

Completed:

Reason	Date	FR Cite
RIN CHANGE See same action listed as RIN 2060-AC29	03/01/88	

Small Entity: No

Agency Contact: Eric Noble 919 541-5362

RIN: 2060-AC29

2866. FUEL ECONOMY TEST PROCEDURES; ADJUSTMENT TO TEST RESULTS TO ACCOUNT FOR TEST PROCEDURE CHANGES (LIGHT-DUTY TRUCKS)

CFR Citation: 40 CFR 600

Completed:

Reason	Date	FR Cite
Withdrawn	11/24/87	52 FR 44996

Small Entity: No

Agency Contact: Robert Larson 313 668-4479

RIN: 2060-AB86

ENVIRONMENTAL PROTECTION AGENCY (EPA) —Superfund (CERCLA)

Proposed Rule Stage

2867. DESIGNATION OF THE EXTREMELY HAZARDOUS SUBSTANCES LIST AS HAZARDOUS SUBSTANCES

Significance: Regulatory Program

Legal Authority: 42 USC 9602 /CERCLA 102

CFR Citation: 40 CFR 302

Legal Deadline: None.

Abstract: This rule will propose to designate extremely hazardous substances, as defined in Section 302 of SARA, as hazardous substances pursuant to Section 102 of CERCLA.

Timetable:

Action	Date	FR Cite
NPRM	04/00/88	
Final Action	09/00/88	

Small Entity: No

Additional Information: SAR No. 2336.

RCRA/Superfund Hotline (800-424-9346); in Metropolitan Area (202-382-3000)

Agency Contact: Gerain H. Perry, Environmental Protection Agency, Solid Waste and Emergency Response, (WH-548B), Washington, D.C. 20460, 202 382-5650

RIN: 2050-AB62

2868. REPORTABLE QUANTITIES (RQS) FOR RELEASES SUBSTANCES ON THE EXTREMELY HAZARDOUS SUBSTANCES LIST

Significance: Regulatory Program

Legal Authority: 42 USC 11002 / SARA 302; 42 USC 9602 /CERCLA 102

CFR Citation: 40 CFR 302

Legal Deadline: None.

Abstract: This action will adjust the reportable quantities (RQs) for substances on the Extremely Hazardous Substances List, which EPA has proposed for designation as CERCLA hazardous substances.

Timetable:

Action	Date	FR Cite
NPRM	09/00/88	
Final Action	09/00/89	

Small Entity: No

Additional Information: SAR No. 2429.

FTS:8-382-5650

Agency Contact: Gerain H. Perry, Environmental Protection Agency, Solid Waste and Emergency Response, (WH-548B), Washington, DC 20460, 202 382-5650

RIN: 2050-AC14

2869. REPORTING CONTINUOUS RELEASES OF HAZARDOUS SUBSTANCES

Significance: Agency Priority

Legal Authority: 42 USC 9602 / CERCLA 102

CFR Citation: 40 CFR 302; 40 CFR 355

Legal Deadline: None.

Abstract: The purpose of this action is to clarify the reduced reporting requirements pursuant to Section 103(f)(2) of CERCLA for facilities that have continuous and stable releases of hazardous substances in amounts at or above their reportable quantities.

Timetable:

Action	Date	FR Cite
NPRM	04/00/88	
Final Action	02/00/89	

Small Entity: No

Additional Information: SAR No. 2411.

For further information contact the RCRA/Superfund Hotline (800-424-9346); in Metropolitan Area (202-382-3000)

Agency Contact: Hubert Watters, Environmental Protection Agency, Solid Waste and Emergency Response, WH-548B, Washington, DC 20460, 202 382-2463

RIN: 2050-AA46

2870. REPORTING EXEMPTIONS FOR FEDERALLY PERMITTED RELEASES OF HAZARDOUS SUBSTANCES

Significance: Regulatory Program

Legal Authority: 42 USC 9602 /CERCLA 102

CFR Citation: 40 CFR 117; 40 CFR 302; 40 CFR 355

Legal Deadline: None.

Abstract: In the May 25, 1983 NPRM (48 FR 23552) that proposed to adjust certain reportable quantities (RQs) for releases of hazardous substances, EPA explained the Agency's interpretation of each of the types of releases exempted by the definition of "federally permitted release" in Section 101(10) of CERCLA. Because of the amount of time that has passed and additional analysis undertaken since that NPRM, this action reproposes regulations to clarify the statutory language in Section 101(10) of CERCLA.

Timetable:

Action	Date	FR Cite
NPRM	04/00/88	
Final Action	02/00/89	

Small Entity: No

Additional Information: SAR No. 2394.

RCRA/Superfund Hotline 800-424-9346, in Washington DC 202-382-3000

Agency Contact: Hubert Watters, Environmental Protection Agency, Solid Waste and Emergency Response, WH-548B, 202 382-2463

RIN: 2050-AB82

2871. ● PLANNING AND IMPLEMENTING SUPERFUND OFF-SITE RESPONSE ACTIONS

Significance: Regulatory Program

Legal Authority: 42 USC 9604(c)/CERCLA 104(c); 42 USC 9621(d)(3)/CERCLA 121(d)(3); 33 USC 1321(c)(2)/CWA 311(c)(2)

CFR Citation: 40 CFR 300

Legal Deadline: None.

Abstract: This rule interprets and codifies (1) the requirements of Section 121(d)(3) of the Comprehensive Emergency Response, Compensation, and Liability Act (CERCLA) as amended by the Superfund Amendments and Reauthorization Act of 1986 (SARA) and (2) the revised off-site policy directive (November 13, 1987). Section 121(d)(3) and the directive describe procedures that must be observed when a response action under CERCLA involves off-site transfer of CERCLA wastes resulting from CERCLA decision documents signed after the enactment of SARA. Section 121(d)(3) of SARA specifies that wastes from removal or remedial actions under CERCLA: 1) only be transferred to facilities that are in compliance with Sections 3004 and 3005 of the Resource Conservation and Recovery Act (RCRA), other applicable Federal laws and State laws, and 2) only be transferred to units at hazardous waste land disposal facilities that are not leaking and where releases from other (non-receiving) units at the facility are under a corrective action program.

Timetable:

Action	Date	FR Cite
NPRM	04/00/88	
Final Action	07/00/88	

Small Entity: No

Additional Information: SAR No. 2538.

FTS:8-382-4808

Analysis: Regulatory Impact Analysis

Agency Contact: Elaine Stanley, Director, RCRA Enforcement Division, Environmental Protection Agency, Solid Waste and Emergency Response, 401 M Street, SW, Washington, DC 20460, 202 382-4808

RIN: 2050-AC35

2872. NATIONAL OIL AND HAZARDOUS SUBSTANCES POLLUTION CONTINGENCY PLAN (NCP)

Significance: Regulatory Program

Legal Authority: 33 USC 1321 / CWA 311; 42 USC 9605 / CERCLA 105

CFR Citation: 40 CFR 300

Legal Deadline: Statutory, April 17, 1988.

Abstract: The National Contingency Plan (NCP) is the primary regulation directing government and responsible party response to and cleanup of discharges of oil, and releases of hazardous substances, pollutants and contaminants. The Superfund Amendments and Reauthorization Act

of 1986 mandated that the NCP be revised within 18 months of the date of enactment to incorporate statutory changes.

Timetable:

Action	Date	FR Cite
NPRM	10/00/88	
Final Action	11/00/89	

Small Entity: No

Additional Information: SAR No. 2400.

FTS-8-382-2182.

Agency Contact: Arthur Weissman, Environmental Protection Agency, Solid Waste and Emergency Response, (WH-548D), Washington, DC 20460, 202 382-2182

RIN: 2050-AA75

2873. HAZARD RANKING SYSTEM FOR UNCONTROLLED HAZARDOUS SUBSTANCE RELEASES

Significance: Regulatory Program

Legal Authority: 42 USC 9605(a)(8)(A) / CERCLA 105(a)(8)(A); 42 USC 9605(c) / CERCLA 105(C); 42 USC 9618/CERCLA 116; 42 USC 9625/CERCLA 125

CFR Citation: 40 CFR 300, Appendix A

Legal Deadline: Statutory, April 17, 1988.

Abstract: This action revises the Hazard Ranking System (HRS) which is Appendix A of the National Contingency Plan. The HRS is a system for determining the relative severity of risks among releases of hazardous substances. The HRS is the primary mechanism for establishing the National Priorities List under CERCLA. SARA requires that the HRS be amended to assure, to the extent feasible, that it accurately assesses relative risk to public health and the environment. SARA specifically requires that the HRS take into consideration natural resource damages that may affect the human food chain as well as potential air contamination. The HRS must also appropriately assess human health risks associated with contamination of surface waters for drinking or recreation.

Timetable:

Action	Date	FR Cite
ANPRM	04/09/87	52 FR 11513
NPRM	05/00/88	
Final Action	10/00/88	

Small Entity: No

Additional Information: SAR No. 2506.

FTS: 8-382-4604

Agency Contact: Steve Caldwell, Environmental Protection Agency, Solid Waste and Emergency Response, 202 382-4604

RIN: 2050-AB73

2874. NATIONAL PRIORITIES LIST FOR UNCONTROLLED HAZARDOUS WASTE SITES - UPDATE 7

Significance: Regulatory Program

Legal Authority: 42 USC 9605 /CERCLA 105; 42 USC 9620 /CERCLA 120

CFR Citation: 40 CFR 300.66

Legal Deadline: Statutory. Annual Update.

Abstract: This action revises the National Priorities List (NPL) for uncontrolled hazardous waste sites in the National Contingency Plan (NCP). CERCLA requires that the NPL be revised at least annually. Periodic revisions will allow EPA to include sites on the NPL with known or threatened hazardous substances releases and to delete sites that have been cleaned up. EPA uses the Hazard Ranking System (HRS) to evaluate the sites. The Agency will propose Update 7. See the related actions in the proposed and final rule sections of this Agenda.

Timetable:

Action	Date	FR Cite
NPRM	05/00/88	
Final Action	10/00/88	

Small Entity: No

Additional Information: SAR No. 5358.

FTS:8-382-3412

Agency Contact: Sandra J. Crystall, Environmental Protection Agency, Solid Waste and Emergency Response, (WH-548A), Washington, DC 20460, 202 382-3412

RIN: 2050-AC16

2875. ● NATIONAL PRIORITIES LIST FOR UNCONTROLLED HAZARDOUS WASTE SITES - RCRA SITES

Significance: Regulatory Program

Legal Authority: 42 USC 9605/CERCLA 105; 42 USC 9620/CERCLA 120

CFR Citation: 40 CFR 300.66

Legal Deadline: Statutory. Annual Update

Abstract: This action revises the National Priorities List (NPL) for uncontrolled hazardous waste sites in the National Contingency Plan (NCP). CERCLA requires that the NPL be revised at least annually. Periodic revisions will allow EPA to include sites on the NPL with known or threatened hazardous substances releases an and to delete sites that have been cleaned up. EPA uses the Hazard Ranking System (HRS) to evaluate the sites. The Agency will propose RCRA sites. See the related actions in the proposed and final rules sections of this Agenda.

Timetable:

Action	Date	FR Cite
NPRM	04/00/88	
Final Action	10/00/88	

Small Entity: No

Additional Information: SAR No. 5357.

FTS:8-382-3412

Agency Contact: Sandra J. Crystall, Environmental Protection Agency, Solid Waste and Emergency Response, Environmental Protection Agency, Solid Waste and Emergency Response (WH-548A), Washington, DC 20460, 202 382-3412

RIN: 2050-AC48

2876. ● NATIONAL PRIORITIES LIST FOR UNCONTROLLED HAZARDOUS WASTE SITES - FEDERAL FACILITY SITES

Significance: Regulatory Program

Legal Authority: 42 USC 9605/CERCLA 105; 42 USC 9620/CERCLA 120

CFR Citation: 40 CFR 300.66

Legal Deadline: Statutory. Annual Update.

Abstract: This action revises the National Priorities List (NPL) for uncontrolled hazardous waste sites in the National Contingency Plan (NCP). CERCLA requires that the NPL be revised at least annually. Periodic revisions will allow EPA to include sites on the NPL with known or threatened hazardous substances releases and to delete sites that have been cleaned up. EPA uses the Hazard Ranking System (HRS) to evaluate the sites. The Agency will propose Federal facility sites. See the related actions in the proposed and final rule sections of this Agenda.

Timetable:

Action	Date	FR Cite
NPRM	04/00/88	
Final Action	10/00/88	

Small Entity: No

Additional Information: SAR No. 5432.

FTS:8-382-3412

Agency Contact: Sandra J. Crystall, Environmental Protection Agency, Solid Waste and Emergency Response, Environmental Protection Agency, Solid Waste and Emergency Response (WH-548A), Washington, DC 20460, 202 382-3412

RIN: 2050-AC57

2877. ● ARBITRATION PROCEDURES FOR SMALL SUPERFUND COST RECOVERY CLAIMS

Legal Authority: 42 USC 9607(a)/CERCLA 107(a); 42 USC 9622(h)/SARA 122(h)

CFR Citation: 40 CFR 304

Legal Deadline: None.

Abstract: This regulation will establish and govern the procedures for arbitration of small CERCLA 107(a) cost recovery claims pursuant to the authority granted EPA by SARA 122(h)(2). The regulation will provide a voluntary procedure by which EPA and PRPs at a site may agree to submit a cost recovery claim for resolution by arbitration. Arbitration may be used only when the total response costs for the facility concerned do not exceed $500,000, excluding interest. Arbitration is an alternative dispute resolution technique that should provide a quicker and less costly method of case resolution than traditional litigation and negotiations.

Timetable:

Action	Date	FR Cite
NPRM	06/00/88	
Final Action	03/00/89	

Small Entity: No

Additional Information: SAR No. 2455.

FTS:8-382-3077

Agency Contact: Janice Linett, Attorney/Adviser, Environmental Protection Agency, Solid Waste and Emergency Response, Environmental Protection Agency, Office of Enforcement and Compliance, Monitoring LE-134S, Wash. DC 20460, 202 382-3077

RIN: 2050-AC36

2878. ADMINISTRATIVE HEARING PROCEDURE FOR SUPERFUND CLAIMS

Legal Authority: 42 USC 9612(b) /CERCLA 112(b)

CFR Citation: 40 CFR 305

Legal Deadline: None.

Abstract: Section 112(b)(2) of CERCLA as amended, provides that a person who has made a claim against the Superfund and is dissatisfied with the award by EPA may request an administrative hearing. Such hearings shall be before an administrative law judge. The purpose of this rule would be to establish procedures for conducting administrative hearings. The procedures of this rule would replace the Arbitration procedures, formerly codified at 40 CFR Part 305, revoked as a result of the amendments to section 112.

Timetable:

Action	Date	FR Cite
NPRM	05/00/88	
Final Action	11/00/88	

Small Entity: No

Additional Information: SAR No. 2498.

FTS:8-382-4645

Agency Contact: William D. Ross, Environmental Protection Agency, Solid Waste and Emergency Response, (WH-548E), Washington, DC 20460, 202 382-4645

RIN: 2050-AC26

2879. WORKER PROTECTION STANDARDS FOR HAZARDOUS WASTE OPERATIONS AND EMERGENCY RESPONSE

Legal Authority: 42 USC 9626(f) /SARA Sec 126(f)

CFR Citation: 40 CFR Undetermined

Legal Deadline: Statutory. 90 days after the Department of Labor promulgates standards.

Abstract: The Superfund Amendments and Reauthorization Act of 1986 (SARA) required the Secretary of Labor, within one year of the date of enactment, to promulgate standards for the health and safety protection of employees engaged in hazardous waste operations. SARA requires the Administrator of EPA to promulgate identical standards applicable to employees of State and Local governments in each State (currently 30) that does not have in effect an approved State Plan under Section 18 of the Occupational Safety and Health Act of 1970.

Timetable:

Action	Date	FR Cite
NPRM	04/00/88	
Final Action	09/00/88	

Small Entity: No

Additional Information: SAR No. 2427.

FTS:8-382-6741

Agency Contact: Rodney Turpin, Environmental Protection Agency, Solid Waste and Emergency Response, 201 321-6741

RIN: 2050-AC12

2880. ● EMERGENCY AND HAZARDOUS CHEMICAL INVENTORY FORMS AND COMMUNITY RIGHT-TO-KNOW REPORTING REQUIREMENTS

Significance: Regulatory Program

Legal Authority: 42 USC 11011(b)/SARA 311(b); 42 USC 11012(b)/SARA 312(b)

CFR Citation: 40 CFR 370

Legal Deadline: None.

Abstract: Under Title III of SARA, EPA has authority to establish thresholds below which facilities do not have to report. In the rule published on October 15, 1987, EPA set reporting thresholds for the first two years of reporting. At the same time, the Agency made a commitment to further evaluate the appropriate level for a permanent threshold.

Timetable:

Action	Date	FR Cite
NPRM	01/00/89	
Final Action	09/00/89	

Small Entity: Undetermined

Analysis: Regulatory Impact Analysis; Regulatory Flexibility Analysis

Agency Contact: Kathleen Brody, Program Analyst, Environmental Protection Agency, Solid Waste and Emergency Response, 401 M Street SW, Washington, DC 20460, 202 472-6353

RIN: 2050-AC34

VOL 53 ISS 79 PT 2 APR 25 1988 UMI

EPA—CERCLA Proposed Rule Stage

2881. ● ADMINISTRATIVE HEARING PROCEDURES FOR CLASS I CIVIL PENALTIES UNDER CERCLA AND THE EMERGENCY PLANNING COMMUNITY RIGHT TO KNOW ACT

Legal Authority: 42 USC 9609/SARA 325

CFR Citation: 40 CFR undetermined

Legal Deadline: None.

Abstract: The purpose of the rulemaking is to propose regulations which will govern the conduct of administrative hearings for (1) Class I penalties to be assessed under SARA Section 325(b), and (2) other similar penalties assessed under SARA Section 325(d). The action is expected to have negligible economic impact on consumers industries, or governmental agencies, but will provide the benefit of uniform procedures for assessing penalties.

Timetable:

Action	Date	FR Cite
NPRM	05/00/88	
Final Action	08/00/88	

Small Entity: No

Additional Information: SAR No. 2511.

FTS:8-475-9437

Agency Contact: Frances McChesney, Attorney, Environmental Protection Agency, Solid Waste and Emergency Response, Environmental Protection Agency, 401 M Street, SW, Washginton, DC 20460, 202 475-9437

RIN: 2050-AC37

ENVIRONMENTAL PROTECTION AGENCY (EPA) —Superfund (CERCLA)

Final Rule Stage

2882. REPORTABLE QUANTITIES (RQS) FOR RELEASES OF POTENTIAL CARCINOGENS AND OTHER HAZARDOUS SUBSTANCES

Significance: Regulatory Program

Legal Authority: 42 USC 9602 / CERCLA 102; 33 USC 1321 / CWA 311; 33 USC 1361/CWA 501(a); E.O. No. 11735

CFR Citation: 40 CFR 117; 40 CFR 302

Legal Deadline: Statutory. Legislation imposed a 12/31/86 deadline for proposal and a 4/30/88 deadline for the final rule.

Abstract: In March 1987 the Agency proposed adjusting, where appropriate, the statutory reportable quantities (RQs) for 273 of the hazardous substances identified in Section 101(14) of CERCLA, as amended. Most (269) of these substances have been evaluated for potential carcinogenicity. SARA 202 amends CERCLA 306 to require the Department of Transportation (DOT) to list and regulate as hazardous materials all CERCLA hazardous substances. These regulations require that when these materials are shipped in quantities equal to or greater than their RQs, they be identified as hazardous substances on shipping papers and package markings. DOT promulgated this rule with an effective date of July 1, 1987. The DOT has received several inquiries concerning six frequently transported CERCLA hazardous substances that had their RQs proposed to be upward adjusted in the March 16, 1987 rule. EPA has decided to expedite the final RQ adjustments for these six substances to relieve the regulatory burden on industry.

Timetable:

Action	Date	FR Cite
NPRM	03/16/87	52 FR 8140
for six substances		
Final Action	04/00/88	
for 267 substances		
Final Action	04/00/88	

Small Entity: No

Additional Information: SAR No. 2104.

For further information contact the RCRA/Superfund Hotline (800-424-9346); in Metropolitan D.C. (382-3000).

Agency Contact: Ivette O. Vega, Environmental Protection Agency, Solid Waste and Emergency Response, (WH-548B), Washington, DC 20460, 202 475-7369

RIN: 2050-AA80

2883. REPORTABLE QUANTITIES (RQS) FOR RELEASES OF RADIONUCLIDES

Significance: Regulatory Program

Legal Authority: 42 USC 9602 /CERCLA 102; 33 USC 1321/CWA 311; 33 USC 1361/CWA 501(a)

CFR Citation: 40 CFR 302

Legal Deadline: Statutory. Legislation imposes a 12/31/86 deadline for proposal and a 4/30/88 deadline for the final rule.

Abstract: EPA is adjusting the statutory one-pound reportable quantity (RQ) for radionuclides pursuant to Section 102 of CERCLA. Radionuclides consist of approximately 1,500 radioactive isotopes whose release represents differing degrees of potential harm to human health and the environment. The Agency has proposed individual adjusted RQs for 757 radionuclides, and an RQ of one curie for all of the remaining radionuclides.

Timetable:

Action	Date	FR Cite
NPRM	03/16/87	52 FR 8172
Final Action	04/00/88	

Small Entity: No

Additional Information: SAR No. 2335.

For further information contact the RCRA/Superfund Hotline (800-424-9346); in Metropolitan Area (202-382-3000)

Agency Contact: Pamela Harris, Environmental Protection Agency, Solid Waste and Emergency Response, (WH-548B), Washington, D.C. 20460, 202 475-9814

RIN: 2050-AB60

2884. REPORTABLE QUANTITIES (RQS) FOR RELEASES OF METHYL ISOCYANATE (MIC) AND LEAD; DELISTING OF AMMONIUM THIOSULFATE

Significance: Regulatory Program

Legal Authority: 42 USC 9602 /CERCLA 102; 33 USC 1321/CWA 311; 33 USC 1361/CWA 501(a)

CFR Citation: 40 CFR 117; 40 CFR 302; 40 CFR 116

Legal Deadline: Statutory. April 30, 1988

Abstract: The proposed reportable quantity (RQ) adjustments for methyl isocyanate (MIC) and lead were withdrawn by the Agency on April 4, 1985 (50 FR 13472) and September 29, 1986 (51 FR 34534), respectively. The

BEST COPY AVAILABLE

Agency decided to retain the statutory one-pound RQs for these substances pending further technical analysis. The purpose of this action is to propose and promulgate final RQ adjustments for lead and four lead compounds. The statutory RQ for MIC will be retained until analysis of human data from Bhopal, India is completed. The Agency is proposing to delist ammonium thiosulfate as a CERCLA hazardous substance and to replace the registered trade mark "kelthane" with the generic term, dicofolo.

Timetable:

Action	Date	FR Cite
NPRM	03/02/88	53 FR 6762
Final Action	04/00/88	

Small Entity: No

Additional Information: SAR No. 2459.

RCRA/Superfund Hotline 800-424-9346; in Metropolitan Area 382-3000.

Agency Contact: Gerain H. Perry, Environmental Protection Agency, Solid Waste and Emergency Response, (WH-548B), Washington, DC 20460, 202 382-5650

RIN: 2050-AC21

2885. ● NATIONAL PRIORITIES LIST (NPL) FOR UNCONTROLLED HAZARDOUS WASTES SITES - UPDATE 5

Significance: Regulatory Program

Legal Authority: 42 USC 9605(a)(8)(B)/CERCLA 105(a)(8)(B); 42 USC 9620(d)(2)/CERCLA 120(d)(2)

CFR Citation: 40 CFR 300.66

Legal Deadline: Statutory. Annual Update.

Abstract: This action revises the National Priorities List (NPL) for uncontrolled hazardous waste sites in the National Contingency Plan (NCP). CERCLA requires that the NPL be revised at least annually. Periodic revisions will allow EPA to include sites on the NPL with known or threatened hazardous substances releases and to delete sites that have been cleaned up. EPA uses the Hazard Ranking System (HRS) to evaluate the sites. The Agency will promulgate Update 5. See the related actions in the proposed and final sections of the Agenda.

Timetable:

Update 5

NPRM 06/10/86 (51 FR 21099)
Final Action 06/00/88

Small Entity: No

Additional Information: SAR No. 5433.

FTS:8-382-3412

Agency Contact: Sandra J. Crystall, Environmental Protection Agency, Solid Waste and Emergency Response, Environmental Protection Agency, Solid Waste and Emergency Response (WH-548A), Washington, DC 20460, 202 382-3412

RIN: 2050-AC45

2886. ● NATIONAL PRIORITIES LIST (NPL) FOR UNCONTROLLED HAZARDOUS WASTES SITES - UPDATE 6

Significance: Regulatory Program

Legal Authority: 42 USC 9605(a)(8)(B)/CERCLA 105(a)(8)(B); 42 USC 9620(d)(2)/CERCLA 120(d)(2)

CFR Citation: 40 CFR 300.66

Legal Deadline: Statutory. Annual Update

Abstract: This action revises the National Priorities List (NPL) for uncontrolled hazardous waste sites in the National Contingency Plan (NCP). CERCLA requires that the NPL be revised at least annually. Periodic revisions will allow EPA to include sites on the NPL with known or threatened hazardous substances releases and to delete sites that have been cleaned up. EPA uses the Hazard Ranking System (HRS) to evaluate the sites. The Agency will promulgate Update 6. See the related actions in the proposed and final rule sections of the Agenda.

Timetable:

Action	Date	FR Cite
NPRM	01/22/87	52 FR 2492
Final Action	10/00/88	

Small Entity: No

Additional Information: SAR No. 5434.

FTS:8-382-3412

Agency Contact: Sandra J. Crystall, Environmental Protection Agency, Solid Waste and Emergency Response, Environmental Protection Agency, Solid Waste and Emergency Response (WH-548A), Washington, DC 20460, 202 382-3412

RIN: 2050-AC47

2887. ● CITIZEN AWARDS FOR INFORMATION ON CRIMINAL VIOLATIONS UNDER SUPERFUND

Legal Authority: 42 USC 6909(d)/CERCLA 109(d)

CFR Citation: 40 CFR 303

Legal Deadline: None.

Abstract: This regulation is being promulgated in response to the requirements established by Section 109(c) of the Superfund Amendments and Reauthorization Act (SARA), codified as CERCLA Section 109(d). This statutory provision authorizes the President to pay an award of up to $10,000 to any individual for information leading to the successful prosecution of any person for a criminal violation of the Comprehensive Environmental Response, Compensation, and Liability Act (CERCLA), as amended. Section 109(d) also requires the President to prescribe by regulation criteria for such an award. On January 23, 1987 by Executive Order No. 12580, the President delegated to the Administrator of EPA the authority to promulgate the within regulation, and thereafter to carry out the Section 109(d) award program. This regulation is being promulgated on an interim-final basis in order to permit the more expeditious protection of the public health and the environment, as directed by Congress for this provision of SARA.

Timetable:

Action	Date	FR Cite
Interim Final Rule	04/00/88	
Final Action	10/00/88	

Small Entity: No

Additional Information: SAR No. 2495.

FTS:8-475-9666

Agency Contact: Keith Onsdorff, Senior Attorney - Advisor, Environmental Protection Agency, Solid Waste and Emergency Response, Environmental Protection Agency, 401 M Street SW LE-134, Washington, DC 20460, 202 475-9666

RIN: 2050-AC38

2888. RESPONSE CLAIMS PROCEDURES FOR THE HAZARDOUS SUBSTANCES SUPERFUND

Legal Authority: 42 USC 9612 / CERCLA 112

CFR Citation: 40 CFR 307

Legal Deadline: None.

Abstract: This action prescribes the forms and procedures for persons other than the Government to recover response costs incurred in carrying out the National Contingency Plan.

Timetable:

Action	Date	FR Cite
NPRM	09/00/88	
Final Action	09/00/88	

Small Entity: No

Additional Information: SAR No. 2564.

FTS: 8-382-4645.

Analysis: Regulatory Impact Analysis

Agency Contact: William Ross, Environmental Protection Agency, Solid Waste and Emergency Response, (WH-548E), Washington, DC 20460, 202 382-4645

RIN: 2050-AA90

2889. TECHNICAL ASSISTANCE GRANTS TO GROUPS AT NATIONAL PRIORITY LIST (NPL) SITES

Legal Authority: 42 USC 9617 / SARA 117

CFR Citation: 40 CFR 35

Legal Deadline: None.

Abstract: Superfund Amendments and Reauthorization Act 1986 requires that EPA develop grant regulations for technical assistance for citizen groups. Under Section 117(e) groups of individuals may apply for the technical assistance grants only at NPL sites. The grants are limited to $50,000 per site. This limit may be waived.

Timetable:

Action	Date	FR Cite
ANPRM	06/10/87	52 FR 22244
Interim Final Rule	03/24/88	53 FR 9736
Final Action	06/00/88	

Small Entity: No

Additional Information: SAR No. 2401.

FTS:8-382-2460

Agency Contact: Daphne Gemmill, Environmental Protection Agency, Solid Waste and Emergency Response, WH-548A, Washington DC 20460, 202 382-2460

RIN: 2050-AC10

2890. REPORTING HAZARDOUS SUBSTANCES ACTIVITY WHEN TRANSFERRING FEDERAL REAL PROPERTY

Legal Authority: 42 USC 9601/SARA 120

CFR Citation: 40 CFR 373

Legal Deadline: Statutory, April 17, 1988.

Abstract: Section 120(h) of SARA requires that EPA, in consultation with the General Services Administration, promulgate rules which will require the disclosure of the type and quantity of any hazardous substances that have been stored, released or disposed of on federally owned land when such land is sold or otherwise transferred from the federal domain. This section of SARA also requires that: (1) the agencies holding such land provide, at the time of transfer, a covenant warranting that all remedial actions necessary for protection of human health and the environment have been taken; and (2) any additional action found to be necessary after the transfer will be undertaken by the U.S. EPA is not required to develop rules concerning these latter requirements.

Timetable:

Action	Date	FR Cite
NPRM	01/13/88	53 FR 850
Final Action	04/00/88	

Small Entity: No

Additional Information: SAR No. 2464.

FTS:8-382-5647

Agency Contact: Richard Dailey, Environmental Protection Agency, Solid Waste and Emergency Response, (WH-527), Washington, DC 20460, 202 382-5647

RIN: 2050-AC00

2891. REIMBURSEMENT OF LOCAL GOVERNMENTS FOR EMERGENCY RESPONSE TO HAZARDOUS SUBSTANCE RELEASES

Legal Authority: 42 USC 9623 / SARA 123

CFR Citation: 40 CFR 310

Legal Deadline: Statutory, October 17, 1987.

Abstract: This provision authorizes reimbursement of local governments for costs incurred in providing temporary emergency measures in response to releases of hazardous substances. Reimbursement is limited to $25,000 per incident and is not intended to supplant local funds normally provided for response.

Timetable:

Action	Date	FR Cite
Interim Final Rule	10/21/87	52 FR 39386
Final Action	10/00/89	

Small Entity: No

Additional Information: SAR No. 2409

FTS:8-382-3382

Agency Contact: Karen Z. Burgan, Environmental Protection Agency, Solid Waste and Emergency Response, WH-545B, Washington DC 20460, 202 382-3382

RIN: 2050-AC11

2892. TRADE SECRET CLAIMS FOR EMERGENCY PLANNING AND COMMUNITY RIGHT-TO-KNOW INFORMATION; TRADE SECRET DISCLOSURES TO HEALTH PROFESSIONALS

Legal Authority: 42 USC 11042 /SARA 322; 42 USC 11043 /SARA 323

CFR Citation: 40 CFR 350

Legal Deadline: None.

Abstract: The regulations under Section 322 provide that information submitted under Sections 303, 311, 312 and 313 of Title III the Superfund Amendments and Reauthorization Act of 1986 may be claimed trade secret. Included here will be the methods for making claims of trade secrecy with the Agency, as well as Agency procedures for handling petitions from the public requesting disclosure of information claimed trade secret. The regulations under Section 323 provide that health professionals may under certain circumstances request trade secret information directly from the person making the trade secret claim. Included here will be the procedures for making such a request, and the standards for documents (a statement of need and a confidentiality agreement) which must accompany the request.

EPA—CERCLA

Final Rule Stage

Timetable:

Action	Date	FR Cite
NPRM	10/15/87	52 FR 38312
Final Action	06/00/88	

Small Entity: No

Additional Information: SAR NO. 2419

FTS:8-382-5460

Analysis: Regulatory Impact Analysis

Agency Contact: Beverly Horn, Environmental Protection Agency, Solid Waste and Emergency Response, (LE-132G), Washington, DC 20460, 202 382-5460

RIN: 2050-AC27

2893. ● ADMINISTRATIVE HEARING PROCEDURES FOR CLASS II PENALTIES UNDER CERCLA AND EMERGENCY PLANNING AND COMMUNITY RIGHT TO KNOW ACT

Legal Authority: 42 USC 9609/SARA 325

CFR Citation: 40 CFR 22

Legal Deadline: None.

Abstract: This rule will govern the conduct of administrative hearings for (1) Class II penalties to be assessed under SARA Section 325(b) and (2) other similar penalties assessed under SARA Section 325(c). The rule provides the procedures for these penalty assessments. The action is expected to have negligible economic impact on consumers, industries, or governmental agencies, but will provide the benefit of uniform procedures for assessing penalties.

Timetable:

Action	Date	FR Cite
Interim Final Rule	05/00/88	
Final Action	09/00/88	

Small Entity: No

Additional Information: SAR NO. 2512

FTS:8-475-9437

Agency Contact: Frances McChesney, Attorney, Environmental Protection Agency, Solid Waste and Emergency Response, Environmental Protection Agency, 402 M Street SW, Washington, DC 20460, 202 475-9437

RIN: 2050-AC39

ENVIRONMENTAL PROTECTION AGENCY (EPA) —Superfund (CERCLA)

Completed Actions

2894. WITHDRAWAL OF ARBITRATION PROCEDURES AND NATURAL RESOURCE CLAIMS PROCEDURES FOR THE HAZARDOUS SUBSTANCE SUPERFUND

CFR Citation: 40 CFR 305; 40 CFR 306

Completed:

Reason	Date	FR Cite
Final Action	09/08/87	52 FR 33812

Small Entity: No

Agency Contact: William Ross 202 382-4845

RIN: 2050-AC06

2895. NATIONAL PRIORITIES LIST (NPL) FOR UNCONTROLLED HAZARDOUS WASTES SITES - UPDATES 3 AND 4

Significance: Regulatory Program

CFR Citation: 40 CFR 300.66

Completed:

Reason	Date	FR Cite
Final Action	07/22/87	52 FR 2492

Small Entity: No

Agency Contact: Sandra J. Crystall 202 382-3412

RIN: 2050-AA79

2896. EMERGENCY AND HAZARDOUS CHEMICAL INVENTORY FORMS AND COMMUNITY RIGHT TO KNOW REPORTING REQUIREMENTS

Significance: Regulatory Program

CFR Citation: 40 CFR 370

Completed:

Reason	Date	FR Cite
Final Action	10/15/87	52 FR 38344

Small Entity: No

Agency Contact: Kathleen Brody 202 475-8353

RIN: 2050-AB88

ENVIRONMENTAL PROTECTION AGENCY (EPA) —General

Proposed Rule Stage

2897. ● ENVIRONMENTAL PROTECTION AGENCY ACQUISITION REGULATION (EPAAR); SUBMISSION OF GENERAL FINANCIAL AND ORGANIZATIONAL INFORMATION, AND PURCHASING SYSTEM INFORMATION BY OFFERORS

CFR Citation: 48 CFR 1515; 48 CFR 1552

Legal Deadline: None.

Abstract: General financial and organizational information is only required from offerors in the competitive range. This information does not include information on the offerors purchasing systems. The proposed rule will require that all offerors provide general financial and organizational information, which includes purchasing system information.

Timetable:

Action	Date	FR Cite
NPRM	05/00/88	
Final Action	00/00/00	

Small Entity: Undetermined

Additional Information: SAR No. 2551.

FTS:8:382-5028

PL 98-577 Sec. 302

Agency Contact: Edward N. Chambers, Environmental Protection Agency, Administration and Resource Management, PM-214F, 202 382-5028

RIN: 2030-AA06

EPA—GENERAL — Proposed Rule Stage

2898. ● CONTRACTING FOR EXPERT SERVICES UNDER THE SUPERFUND AMENDMENT AND REAUTHORIZATION ACT (SARA) OF 1986

CFR Citation: 48 CFR 1505; 48 CFR 1506

Legal Deadline: None.

Abstract: The SARA of 1986 authorizes the use of other than competitive procedures when contracting for expert services. These services will be used in preparing or prosecuting a civil or criminal action under the Act. The rule will amend the EPA Acquisition to provide procedures for implementing the provisions of the Act.

Timetable:

Action	Date	FR Cite
NPRM	04/00/88	
Final Action	00/00/00	

Small Entity: No

Additional Information: SAR No. 2553.

FTS:8-475-7024

Agency Contact: Ed Murphy, Contract Analyst, Environmental Protection Agency, Administration and Resource Management, Procurement and Contracts Mgt. Division, (PM-214-F), Washington, DC 20460, 202 382-5034

RIN: 2030-AA07

2899. ● AMENDING EPA ACQUISITION REGULATION RULES REGARDING DISCLOSURE AND USE OF INFORMATION IN PROPOSALS

CFR Citation: 48 CFR 1515

Legal Deadline: None.

Abstract: The Federal Acquisition Regulation (FAR) gives federal agencies, including EPA, the authority to use alternate procedures to release proposals outside the Government for evaluation. The authority, however, must appear in agency acquisition regulations implementing the FAR. The effect of this action is to amend the EPA Acquisition Regulation to permit the use of alternate procedures appearing at FAR 15.413-2.

Timetable:

Action	Date	FR Cite
NPRM	04/00/88	
Final Action	00/00/00	

Small Entity: No

Additional Information: SAR No. 2552.

FTS:8-475-7204

Agency Contact: Ed Murphy, Contract Analyst, Environmental Protection Agency, Administration and Resource Management, Procurement and Contracts Mgt. Division, (PM-214-F), Washington, DC 20460, 202 382-5034

RIN: 2030-AA08

2900. DENIAL OR RESTRICTION OF DISPOSAL SITES (REVISION)

Significance: Regulatory Program

Legal Authority: 33 USC 1344 /CWA 404(c)

CFR Citation: 40 CFR 231

Legal Deadline: None.

Abstract: This action will revise EPA's existing 404(c) regulations, in effect since October 9, 1979. It will amend the procedures to be used when EPA is considering the use of Section 404(c) of the CWA to prevent the discharge of dredged or fill material into a defined area of the waters of the United States. Section 404(c) gives the Administrator authority to prohibit or withdraw the specification of a site as a disposal site or to deny or restrict use of a disposal site. The revisions will reflect our experiences to date under Section 404(c), and more clearly address use of 404(c) in advance of a specific proposed discharge.

Timetable:

Action	Date	FR Cite
NPRM	00/00/00	

Small Entity: No

Additional Information: SAR No. 2196.

FTS: 8-475-7799

Agency Contact: Suzanne Schwartz, Environmental Protection Agency, Water, Office of Wetlands Protection, (A-104F), Washington, DC 20460, 202 475-7799

RIN: 2040-AB20

2901. CONFIDENTIALITY REGULATIONS: SPECIAL RULES GOVERNING CERTAIN INFORMATION UNDER FIFRA (REVISION)

Legal Authority: 5 USC 552 / Freedom of Information Act ; 7 USC 136h / FIFRA 10

CFR Citation: 40 CFR 2.307

Legal Deadline: None.

Abstract: This action would make changes in EPA's procedures for handling business information under FIFRA to reflect amendments to Section 10 of the Act. It would also clarify existing regulations on the treatment of confidential business information under FIFRA.

Timetable:

Action	Date	FR Cite
NPRM	10/00/88	
Final Action	04/00/89	

Small Entity: No

Additional Information: SAR No. 2195.

FTS: 8-382-5460

Agency Contact: Jane Roemer, Environmental Protection Agency, General Counsel and Enforcement Counsel, (LE-132G), Washington, DC 20460, 202 382-5460

RIN: 2020-AA06

ENVIRONMENTAL PROTECTION AGENCY (EPA) —General — Final Rule Stage

2902. PROGRAM FRAUD CIVIL REMEDIES

Legal Authority: 31 USC 3809

CFR Citation: 40 CFR 27

Legal Deadline: Statutory, April 21, 1987.

Abstract: These regulations will implement the Program Fraud Civil Remedies Act of 1986, Pub. L. No 99-509. They (1) establish administrative procedures for imposing civil penalties and assessments against persons who make, submit, or present, or cause to be made, submitted, or presented, false, fictitious, or fraudulent claims or written statements to the Environmental Protection Agency, and (2) specify the hearing and appeal rights of persons subject to allegations of liability for such penalties and assessments.

EPA—GENERAL

Final Rule Stage

Timetable:

Action	Date	FR Cite
NPRM	11/16/87	52 FR 43030
Final Action	04/00/88	

Small Entity: No

Additional Information: SAR No. 2410.

FTS:8-475-6660

Agency Contact: Marla Diamond, Environmental Protection Agency, General Counsel and Enforcement Counsel, (LE-132I), Washington, DC 20460, 202 475-6660

RIN: 2020-AA11

2903. REGULATIONS FOR THE FEDERAL CLAIMS COLLECTION ACT

Legal Authority: 31 USC 3711 et seq.

CFR Citation: 40 CFR 13

Legal Deadline: None.

Abstract: These regulations will set standards for EPA's debt collection actions under the Federal Claims Collection Act.

Timetable:

Action	Date	FR Cite
NPRM	08/25/87	52 FR 32098
Interim Final Rule	04/00/88	

Small Entity: No

Additional Information: SAR No. 1825.

FTS: 8-382-4548.

Agency Contact: Ray Spears, Environmental Protection Agency, General Counsel and Enforcement Counsel, (LE-132G), Washington, DC 20460, 202 382-4548

RIN: 2020-AA01

2904. NONDISCRIMINATION ON THE BASIS OF AGE IN PROGRAMS RECEIVING FINANCIAL ASSISTANT FROM THE EPA (REVISION)

Legal Authority: 42 USC 6101 /Age Discrimination Act of 1979

CFR Citation: 40 CFR 7

Legal Deadline: None.

Abstract: This action is necessary to add age as a basis for nondiscrimination to EPA's Federally-Assisted Nondiscrimination Regulation.

Timetable:

Action	Date	FR Cite
NPRM	01/01/81	46 FR 2306
Final Action	09/00/88	

Small Entity: No

Additional Information: SAR No. 2218.

FTS: 8-382-4567

Agency Contact: Nereid Maxey, Environmental Protection Agency, Office of the Administrator, Office of Civil Rights, (A-105), Washington, DC 20460, 202 382-4567

RIN: 2090-AA09

2905. ● SUPERFUND ASSISTANCE PROGRAM

Legal Authority: 42 USC 9601 /CERCLA 104(c)

CFR Citation: 40 CFR 304

Legal Deadline: None.

Abstract: Under the Comprehensive Environmental Response Compensation and Liability Act (CERCLA), as amended, there are provisions for recovering clean-up costs from responsible parties. In order for the cost recovery provisions to be effective, recipients of Superfund Assistance Agreements must adhere to strict management practices in all aspects of administering the Agreement. Therefore, EPA will issue this regulation to set forth all administrative requirements for Superfund Assistance Agreements.

Timetable:

Action	Date	FR Cite
Interim Final Rule	09/00/88	

Small Entity: No

Additional Information: SAR No. 2476.

FTS:8-382-5268

Agency Contact: Sharon Saile, Grants Policy Specialist, Environmental Protection Agency, Policy Planning and Evaluation, (PM-216), Washington, DC 20460, 202 382-5268

RIN: 2010-AA11

2906. NOTICE REQUIREMENTS FOR CITIZEN SUITS UNDER THE SDWA

Legal Authority: 42 USC 300j-8 /SDWA 1449

CFR Citation: 40 CFR 135

Legal Deadline: None.

Abstract: These regulations will specify on whom the notice of intent to file suit should be served, the manner of service, the addresses of such persons, and the contents of the notice. These regulations are similar to those implementing the notice provisions of the Clean Water Act (CWA) and the Resource Conservation and Recovery Act (RCRA).

Timetable:

Action	Date	FR Cite
NPRM	08/15/86	51 FR 29426
Final Action	05/00/88	

Small Entity: Not Applicable

Additional Information: SAR No. 2307.

FTS:8-382-7706

Agency Contact: Margaret Silver, Environmental Protection Agency, General Counsel and Enforcement Counsel, (LE-132W), Washington, D.C. 20460, 202 382-7706

RIN: 2020-AA10

ENVIRONMENTAL PROTECTION AGENCY (EPA) —General

Completed Actions

2907. AMENDING REGULATIONS IMPLEMENTING THE FREEDOM OF INFORMATION REFORM ACT OF 1986

CFR Citation: 40 CFR 2

Completed:

Reason	Date	FR Cite
Final Action	01/05/88	53 FR 214
Final Action Effective	02/04/88	

Small Entity: No

Agency Contact: Mary K. Adler 202 382-5460

RIN: 2020-AA12

2908. AMENDING REGULATIONS IMPLEMENTING THE FREEDOM OF INFORMATION REFORM ACT OF 1986

CFR Citation: 40 CFR 2

Completed:

Reason	Date	FR Cite
Final Action	01/05/88	53 FR 214

Small Entity: No

Agency Contact: Mary K. Adler 202 382-5460

RIN: 2040-AB37

[FR Doc. 88-6847 Filed 04-22-88; 8:45 am]

BILLING CODE 6560-50-T

VOL
53

ISS
79

PT
2

AP
25

1988

UMI

federal register

Monday
April 25, 1988

Part XXI

Equal Employment Opportunity Commission

Semiannual Regulatory Agenda

EQUAL EMPLOYMENT OPPORTUNITY COMMISSION (EEOC)

EQUAL EMPLOYMENT OPPORTUNITY COMMISSION

29 CFR Ch. XIV

Semiannual Regulatory Agenda

AGENCY: Equal Employment Opportunity Commission.

ACTION: Semiannual regulatory agenda.

SUMMARY: The Equal Employment Opportunity Commission is publishing its semiannual regulatory agenda pursuant to Executive Order No. 12291, 3 CFR Part 127 (1981 Compilation) and the Regulatory Flexibility Act, 5 U.S.C. Chapter 6. The agenda contains all regulations which are scheduled for review or development during the next twelve months.

FOR FURTHER INFORMATION CONTACT: Irene L. Hill, Assistant Legal Counsel for Coordination, Office of the Legal Counsel, Equal Employment Opportunity Commission, 2401 "E" Street, NW., Washington, DC 20507; telephone (202) 634-7581.

SUPPLEMENTARY INFORMATION: The Commission identified fourteen current and projected rulemakings for inclusion in the agenda. Nine are currently under development or review by Commission staff. One is currently in effect as an interim regulation. One of the listings has been published as an NPRM. Three listings have been issued as final regulations.

Signed in Washington, DC, this 26th day of February, 1988.

For the Commission.

Clarence Thomas,

Chairman, Equal Employment Opportunity Commission.

Prerule Stage

Sequence Number	Title	Regulation Identifier Number
2909	Equal Employment in the Federal Government; Processing of Complaints Filed under the Equal Pay Act	3046-AA16

Proposed Rule Stage

Sequence Number	Title	Regulation Identifier Number
2910	Uniform Guidelines on Employee Selection Procedures	3046-AA00
2911	Equal Employment Opportunity in the Federal Government; Individual and Class EEO Complaints Processing	3046-AA11
2912	Procedures for Administrative Exemptions under Section 9 of the Age Discrimination in Employment Act	3046-AA22
2913	Equal Employment Opportunity in the Federal Government: Handicap	3046-AA23
2914	Uniform Guidelines on Employee Selection Procedures	3046-AA24

Final Rule Stage

Sequence Number	Title	Regulation Identifier Number
2915	Coordination of Federal Equal Employment Opportunity Programs	3046-AA10
2916	Equal Employment Opportunity in the Federal Government; Mixed Case Complaints	3046-AA14
2917	Interpretative Bulletin on Employee Benefit Plans	3046-AA16
2918	Enforcement of Nondiscrimination on the Basis of Handicap in Equal Employment Opportunity Commission Programs	3046-AA30
2919	Pension Accruals and Contributions Under ADEA	3046-AA31

Completed Actions

Sequence Number	Title	Regulation Identifier Number
2920	Equal Employment Opportunity in the Federal Government; Remedial Relief under Section 717	3046-AA06
2921	Equal Employment in the Federal Government; Allegations of Reprisal	3046-AA13
2922	Equal Employment Opportunity in the Federal Government; EEO Complaint Processing and EEO Appeals	3046-AA17

EQUAL EMPLOYMENT OPPORTUNITY COMMISSION (EEOC) — Prerule Stage

2909. EQUAL EMPLOYMENT IN THE FEDERAL GOVERNMENT; PROCESSING OF COMPLAINTS FILED UNDER THE EQUAL PAY ACT

Legal Authority: 29 USC 206(d) et seq Equal Pay Act of 1963; 29 USC 204(f) Fair Labor Standards Act of 1938, as amended; 29 USC 206(d) Fair Labor Standards Act of 1938, as amended

CFR Citation: 29 CFR 1613

Legal Deadline: None.

Abstract: Development of procedural regulations for processing Federal sector complaints filed under the Equal Pay Act. Under development.

Timetable:

Action	Date	FR Cite
Next Action Undetermined		

Small Entity: No

Agency Contact: Nicholas M. Inzeo, Assistant Legal Counsel, Legal Services, Office of Legal Counsel, Equal Employment Opportunity Commission, 202 634-6592

RIN: 3046-AA16

EQUAL EMPLOYMENT OPPORTUNITY COMMISSION (EEOC) — Proposed Rule Stage

2910. UNIFORM GUIDELINES ON EMPLOYEE SELECTION PROCEDURES

Significance: Agency Priority

Legal Authority: 42 USC 2000e et seq Title VII of the Civil Rights Act of 1964

CFR Citation: 29 CFR 1607

Legal Deadline: None.

Abstract: UGESP Recordkeeping Provisions. On March 15, 1983, the Commission voted to review those portions of the recordkeeping provisions of the Guidelines which relate to the maintenance of data necessary to determine adverse impact. Pursuant to that vote, the Commission published in the Federal Register a notice seeking public comment in general and on several specific questions about UGESP recordkeeping. 48 Fed. Reg. 34766 (Aug. 1, 1983). Approximately 45 comments were received. The Commission is currently reviewing the comments and is considering further action. On June 12, 1984, the Commission voted to prepare an NPRM concerning certain UGESP recordkeeping requirements. Prior to publication for comment, co-signatories to UGESP will engage in discussion of recommended changes and other affected agencies will be consulted under E.O. 12067.

Timetable:

Action	Date	FR Cite
NPRM	06/00/88	

Small Entity: No

Additional Information: This is included in the Regulatory Program of the United States under the overall RIN 3046-AA24.

Agency Contact: Nicholas Inzeo, Assistant Legal Counsel, Legal Services, Office of Legal Counsel, Equal Employment Opportunity Commission, 202 634-6592

RIN: 3046-AA00

2911. EQUAL EMPLOYMENT OPPORTUNITY IN THE FEDERAL GOVERNMENT; INDIVIDUAL AND CLASS EEO COMPLAINTS PROCESSING

Significance: Agency Priority

Legal Authority: 42 USC 2000e-16 Title VII of the Civil Rights Act; 29 USC 701 Rehabilitation Act of 1973, as amended; 29 USC 621 et seq Age Discrimination in Employment Act

CFR Citation: 29 CFR 1614, (Proposed)

Legal Deadline: None.

Abstract: Comprehensive revision of regulations for processing individual and class EEO complaints in the Federal sector. Under development.

Timetable:

Action	Date	FR Cite
NPRM	00/00/00	

Small Entity: No

Agency Contact: Douglas J. Bielan, Director, Federal Sector Programs, Equal Employment Opportunity Commission, 202 634-6753

RIN: 3046-AA11

2912. PROCEDURES FOR ADMINISTRATIVE EXEMPTIONS UNDER SECTION 9 OF THE AGE DISCRIMINATION IN EMPLOYMENT ACT

Legal Authority: 29 USC 628 Age Discrimination in Employment Act

CFR Citation: 29 CFR 1627.15

Legal Deadline: None.

Abstract: The purpose of the proposed amendment to 29 CFR 1627.15 is to give those covered by the ADEA more specific information about what they should do if they wish to seek an exemption from any or all of the ADEA's prohibitions. The advantage is that the establishment of a specific procedure will facilitate the processing of exemption requests.

Timetable:

Action	Date	FR Cite
Submission of Staff Recommendations to Commission	03/13/84	
Next Action Undetermined		

Small Entity: No

Agency Contact: Joseph N. Cleary, Assistant Legal Counsel, Office of Legal Counsel, Equal Employment Opportunity Commission, 202 634-7643

RIN: 3046-AA22

2913. EQUAL EMPLOYMENT OPPORTUNITY IN THE FEDERAL GOVERNMENT: HANDICAP

Significance: Regulatory Program

Legal Authority: 29 USC 701 et seq Rehabilitation Act of 1973, as amended

CFR Citation: 29 CFR 1613.701 et seq

Legal Deadline: None.

Abstract: The Commission is considering alternative ways of resolving various interpretative issues involving the definition of handicapped persons used in its section 501 regulations. One alternative would be

to amend the definitions in the regulation itself. The purpose of these revisions would be to clarify the scope of the definitions.

Timetable:

Action	Date	FR Cite
Next Action Undetermined		

Small Entity: No

Agency Contact: Richard D. Komer, Legal Counsel, Equal Employment Opportunity Commission, 202 634-6460

RIN: 3046-AA23

2914. UNIFORM GUIDELINES ON EMPLOYEE SELECTION PROCEDURES

Significance: Regulatory Program

Legal Authority: 42 USC 2000e et seq Title VII of the Civil Rights Act of 1964

CFR Citation: 29 CFR 1607

Legal Deadline: None.

Abstract: On March 15, 1983, the Commission voted to review the recordkeeping portions of the Guidelines. During that review process, several questions arose which pertained to the substantive, non-recordkeeping provisions of the Guidelines. Consequently, the Commission decided to review the substantive portions of the Guidelines. The major substantive areas under review are: 1) the purpose of the Guidelines and whether there is still a need for the Guidelines; 2) the theory of adverse impact and the method of determining when such impact is significant; and 3) how to establish test validity. When the review is completed, the Commission will decide whether any regulatory revisions are needed.

Timetable:

Action	Date	FR Cite
Begin Review	10/01/84	
NPRM	05/00/85	

Small Entity: No

Additional Information: This action resulted from splitting previous entry RIN 3046-AA00 Uniform Guidelines on Employee Selection Procedures.

It is included in the Regulatory Program of the United States under overall RIN 3046-AA25.

Agency Contact: Philip Lyons, Special Assistant to the Chairman, Office of the Chairman, Equal Employment Opportunity Commission, 202 634-6700

RIN: 3046-AA24

EQUAL EMPLOYMENT OPPORTUNITY COMMISSION (EEOC) — Final Rule Stage

2915. COORDINATION OF FEDERAL EQUAL EMPLOYMENT OPPORTUNITY PROGRAMS

Legal Authority: EO 12067 Sec 1-303; EO 12067 Sec 1-304

CFR Citation: 29 CFR 1690

Legal Deadline: None.

Abstract: These amendments to 29 CFR 1690 will implement an agreement reached by EEOC and the Department of Justice with the Office of Management and Budget which clarified the sequence to be followed when agencies are required to seek prepublication clearance of equal employment opportunity rules from EEOC under E.O. 12067, DOJ under E.O. 12250, and from OMB under E.O. 12291 and the Paperwork Reduction Act. In addition to clearance by the EEOC under E.O. 12067, equal employment opportunity rules issued under Title VI of the Civil Rights Act of 1964, Title IX of the Education Amendments of 1972, Section 504 of the Rehabilitation Act of 1973, as amended, or any other provision of Federal statutory law which prohibits discrimination under any program or activity receiving Federal financial assistance, require clearance from DOJ under E.O. 12250.

Timetable:

Action	Date	FR Cite
Next Action Undetermined		

Small Entity: No

Agency Contact: Elizabeth M. Thornton, Associate Legal Counsel, Coordination and Guidance Services, Office of Legal Counsel, Equal Employment Opportunity Commission, 202 634-7643

RIN: 3046-AA10

2916. EQUAL EMPLOYMENT OPPORTUNITY IN THE FEDERAL GOVERNMENT; MIXED CASE COMPLAINTS

Legal Authority: 42 USC 2000e-16 Title VII of the Civil Rights Act; 29 USC 701 Rehabilitation Act of 1973, as amended; 29 USC 621 et seq Age Discrimination in Employment Act

CFR Citation: 29 CFR 1613

Legal Deadline: None.

Abstract: Development of procedural regulations for processing complaints of discrimination about personnel actions which are appealable to the Merit Systems Protection Board (mixed case complaints). Staff draft transmitted to Federal agencies for comments, Sept. 1982. Initially published as interim regulations which were effective upon publication. No further action contemplated.

Timetable:

Action	Date	FR Cite
Draft transmitted to agencies	09/00/82	
Interim Final Rule	05/02/83	48 FR 19708
Final Action	04/00/88	

Small Entity: No

Agency Contact: Douglas J. Bielan, Director, Federal Sector Programs, Office of Program Operations, Equal Employment Opportunity Commission, 202 634-6753

RIN: 3046-AA14

2917. INTERPRETATIVE BULLETIN ON EMPLOYEE BENEFIT PLANS

Significance: Agency Priority

Legal Authority: 29 USC 628 The Age Discrimination in Employment Act of 1967

CFR Citation: 29 CFR 1625.10

Legal Deadline: None.

Abstract: In response to a court order, the Commission has published a proposed rule that would require continued pension contributions and accruals for persons working beyond normal retirement age. The court also

ordered publication of a final rule but that part of the order was reversed by the court of appeals. The Commission will further study the issues to determine whether additional rulemaking is appropriate.

Timetable:

Action	Date	FR Cite
Publication of Request for Technical Data	09/15/83	
Completion of Regulatory Impact Analysis	07/24/86	
NPRM	04/02/87	52 FR 10584
Commission to determine if rulemaking appropriate	00/00/00	

Small Entity: Yes

Analysis: Regulatory Impact Analysis

Agency Contact: Joseph N. Cleary, Assistant Legal Counsel, Equal Employment Opportunity Commission, 202 634-7643

RIN: 3046-AA18

2918. ENFORCEMENT OF NONDISCRIMINATION ON THE BASIS OF HANDICAP IN EQUAL EMPLOYMENT OPPORTUNITY COMMISSION PROGRAMS

Significance: Agency Priority

Legal Authority: 29 USC 794

CFR Citation: 29 CFR 1615, (Proposed)

Legal Deadline: None.

Abstract: This proposed regulation provides for the enforcement of section 504 of the Rehabilitation Act of 1973, as amended, which prohibits discrimination on the basis of handicap, as it applies to programs or activities conducted by the Equal Employment Opportunity Commission.

Timetable:

Action	Date	FR Cite
NPRM	11/05/87	52 FR 42450
Final Action	09/00/88	

Small Entity: No

Government Levels Affected: Federal

Agency Contact: Elizabeth M. Thornton, Associate Legal Counsel, Coordination & Guidance Services, Office of Legal Counsel, Equal Employment Opportunity Commission, 202 634-7643

RIN: 3046-AA30

2919. PENSION ACCRUALS AND CONTRIBUTIONS UNDER ADEA

Significance: Agency Priority

Legal Authority: 29 USC 628 The Age Discrimination in Employment Act of 1967; PL 99-509, Sec 9204

CFR Citation: 29 CFR 1625.10

Legal Deadline: Statutory, January 31, 1988.

Abstract: Regulations, as may be necessary, to carry out congressional enactments regarding Pension Accruals and Contributions under ADEA.

Timetable:

Action	Date	FR Cite
NPRM	11/27/87	52 FR 45360
Final Action	00/00/00	

Small Entity: Undetermined

Agency Contact: Joseph N. Cleary, Assistant Legal Counsel, Office of Legal Counsel, Equal Employment Opportunity Commission, 202 634-7643

RIN: 3046-AA31

EQUAL EMPLOYMENT OPPORTUNITY COMMISSION (EEOC) — Completed Actions

2920. EQUAL EMPLOYMENT OPPORTUNITY IN THE FEDERAL GOVERNMENT; REMEDIAL RELIEF UNDER SECTION 717

CFR Citation: 29 CFR 1613

Completed:

Reason	Date	FR Cite
Final Action	10/30/87	52 FR 41919
Final Action Effective	11/30/87	

Small Entity: No

Agency Contact: Nicholas M. Inzeo 202 634-6592

RIN: 3046-AA06

2921. EQUAL EMPLOYMENT IN THE FEDERAL GOVERNMENT; ALLEGATIONS OF REPRISAL

CFR Citation: 29 CFR 1613

Completed:

Reason	Date	FR Cite
Final Action	10/30/87	52 FR 41919
Final Action Effective	11/30/87	

Small Entity: No

Agency Contact: Douglas J. Bielan 202 634-6753

RIN: 3046-AA13

2922. EQUAL EMPLOYMENT OPPORTUNITY IN THE FEDERAL GOVERNMENT; EEO COMPLAINT PROCESSING AND EEO APPEALS

CFR Citation: 29 CFR 1613

Completed:

Reason	Date	FR Cite
Final Action	10/30/87	52 FR 41919
Final Action Effective	11/30/87	

Small Entity: No

Agency Contact: Nicholas M. Inzeo 202 634-6592

RIN: 3046-AA17

[FR Doc. 88-5089 Filed 04-22-88; 8:45 am]

BILLING CODE 6570-06-T

VOL
53

ISS
79

PT
2

AP
25

1988

UMI

federal register

Monday
April 25, 1988

Part XXII

Federal Emergency Management Agency

Semiannual Regulatory Agenda

FEDERAL EMERGENCY MANAGEMENT AGENCY (FEMA)

FEDERAL EMERGENCY MANAGEMENT AGENCY

44 CFR Ch. I

Semiannual Agenda

AGENCY: Federal Emergency Management Agency (FEMA).

ACTION: Semiannual agenda.

SUMMARY: Pursuant to section 5 of Executive Order 12291 ("Federal Regulations") the Federal Emergency Management Agency is publishing its semiannual agenda for FEMA. The agenda lists regulations that will be under development or review during the period April 1, 1988 to March 31, 1989.

ADDRESS: Rules Docket Clerk, Office of General Counsel, Room 840, 500 C Street, SW., Washington, DC 20472.

FOR FURTHER INFORMATION CONTACT: For general information, contact Susan Kantor Bank, Office of General Counsel, Federal Emergency Management Agency, Washington, DC 20472, (202) 646-3973. For additional information about a specific regulation, contact the person listed as the contact point in the agenda.

SUPPLEMENTARY INFORMATION: Executive Order 12291, "Federal Regulations," directs each Executive agency to adopt procedures to improve existing and future regulations. Publication of an agenda of significant regulations is called for at least semiannually in order to give the public adequate notice of agency rulemaking activities; also publication of a regulatory flexibility agenda concerning rules likely to have a significant impact on a substantial number of small entities must be published in accordance with 5 U.S.C. 601 *et seq.*

In fulfillment of requirements imposed by the Executive Order and 5 U.S.C. 601 *et seq.*, this agenda describes current and projected regulations, and regulations which will be under review during the period April 1, 1988 to March 31, 1989. This agenda also contains information on regulations on which action was completed since the last FEMA semiannual agenda published October 26, 1987 at 52 FR 40924.

Public comment on the agenda, including that by State and local governments, is invited and should be submitted to the Rules Docket Clerk.

The agenda is not limited to major or significant rules and contains as much information as possible concerning all FEMA regulations to be published in the next 12 months except for routine flood elevation determinations, listing of eligible communities under the National Flood Insurance Program, listing of suspended communities and similar designations, and organizational and management matters.

Dated: February 29, 1988.

Spence W. Perry,

General Counsel.

Prerule Stage

Sequence Number	Title	Regulation Identifier Number
2923	Nondiscrimination in Federally-Assisted Programs	3067-AA00
2924	Comprehensive Cooperative Agreement (CCA) Policies, Procedures, and Associated Programs	3067-AB18

Proposed Rule Stage

Sequence Number	Title	Regulation Identifier Number
2925	Review and Approval of State and Local Emergency Response Plans	3067-AA76
2926	Radiological Emergency Planning and Preparedness	3067-AA77
2927	Permanent Relocation Assistance	3067-AA84
2928	Flood Insurance Rating System Changes	3067-AA98
2929	Disaster Preparedness Assistance	3067-AB05
2930	Criteria for Hurricane Preparedness Assistance to State and Local Governments	3067-AB11
2931	Flood Insurance Subsidized Rate Change	3067-AB12
2932	National Flood Insurance Program Payment of Flood Insurance for Structures on Land Subject to Imminent Collapse or Subsidence	3067-AB23
2933	National Flood Insurance Program Elevated Building Coverage	3067-AB24
2934	National Flood Insurance Program Elevation Requirements for Manufactured Homes	3067-AB25
2935	Individual and Family Grant Programs	3067-AB26
2936	Disaster Assistance: Subpart J (General Insurance Requirements); Subpart K (Flood Insurance Requirements)	3067-AB28

FEMA

Final Rule Stage

Sequence Number	Title	Regulation Identifier Number
2937	Nondiscrimination on the Basis of Handicap in FEMA	3067-AA42
2938	Temporary Relocation Assistance - Superfund	3067-AA72
2939	Community Disaster Loans	3067-AA95
2940	National Flood Insurance Program Redefinition of Coastal High Hazard Area	3067-AB08
2941	National Flood Insurance Program Changes	3067-AB09
2942	Changes in National Flood Insurance Program Commissions to Insurance Agents	3067-AB10
2943	Civil Defense: State and Local Emergency Management Assistance Program (EMA)	3067-AB14
2944	Nondiscrimination in Federally Assisted Programs on the Basis of Age	3067-AB16
2945	Changes in NFIP Regulations for Write-Your-Own Program	3067-AB17
2946	Federal Crime Insurance Rate Increases	3067-AB27

Completed Actions

Sequence Number	Title	Regulation Identifier Number
2947	Preservation of the Mobilization Base Through the Placement of Procurement and Facilities in Labor Surplus Areas	3067-AA32
2948	Policy Guidance and Delegation of Authorities for Use of Priorities and Allocations to Maximize Domestic Energy Supplies	3067-AA33
2949	Use of Priorities and Allocation Authority for Federal Supply Classification (FSC) Common Use Items (DMO-12)	3067-AA34
2950	General Policies for Strategic and Critical Materials Stockpiling (DMO-11)	3067-AA35
2951	Policy on Use of Government-Owned Industrial Plant Equipment by Private Industry (DMO-10A)	3067-AA36
2952	Policy Guidance for a National Emergency Blood Program	3067-AA37
2953	Emergency Health and Medical Occupations	3067-AA38
2954	National Security Policy Governing Scientific and Engineering Manpower (DMO-5)	3067-AA43
2955	Guidance on Priority Use of Resources in Immediate Post Attack Period (DMO-4)	3067-AA44
2956	Defense Production Priorities and Allocations Authority	3067-AA45
2957	Maintenance of the Mobilization Base	3067-AA46
2958	Dispersion and Protective Construction: Policy, Criteria Responsibilities (DMO-1)	3067-AA47
2959	State Assistance Programs for Training and Education in Comprehensive Emergency Management	3067-AA70
2960	Administrative Requirements for Grants and Cooperative Agreements to State and Local Governments	3067-AA90
2961	Reimbursement of Other Federal Agencies	3067-AA92
2962	Criteria for Earthquake Hazards Reduction Assistance to State and Local Governments	3067-AA99
2963	Federal Crime Insurance Program	3067-AB13

FEDERAL EMERGENCY MANAGEMENT AGENCY (FEMA) — Prerule Stage

2923. NONDISCRIMINATION IN FEDERALLY-ASSISTED PROGRAMS

Legal Authority: 42 USC 2000d-1; 29 USC 794; 20 USC 1682; 42 USC 6103; 42 USC 5151; Reorganization Plan No. 3 of 1978; EO 12127; EO 12148

CFR Citation: 44 CFR 7

Legal Deadline: None.

Abstract: This rule effectuates for FEMA the nondiscrimination requirements of Title VI of the Civil Rights Act of 1964, section 504 of the Rehabilitation Act of 1973, Title IX of the Education Amendments of 1972, and section 311 of the Disaster Relief Act of 1974. A draft regulation is undergoing interagency review. The notice of proposed rulemaking will be issued as soon as interagency clearances are obtained.

Timetable:

Action	Date	FR Cite
Interim Final Rule	09/01/88	
ANPRM	07/01/89	
ANPRM Comment Period End	09/01/88	
NPRM	11/01/88	
NPRM Comment Period End	01/01/89	

Small Entity: No

Agency Contact: John R. Curran, Sr., Director, Office of Personnel & Equal Opportunity, Federal Emergency Management Agency, 500 C Street, SW, Washington, DC 20472, 202 646-3962

RIN: 3067-AA00

2924. COMPREHENSIVE COOPERATIVE AGREEMENT (CCA) POLICIES, PROCEDURES, AND ASSOCIATED PROGRAMS

Legal Authority: 50 USC 2286; 50 USC 2251; 42 USC 5121; 42 USC 5151; 42 USC 7701; 42 USC 4001; PL 95-224; PL 96-295; PL 99-499; PL 93-288; PL 95-124; PL 90-488; PL 93-234; PL 90-577; EO 12148

FEMA **Prerule Stage**

CFR Citation: 44 CFR 305; 44 CFR 302; 44 CFR 360; 44 CFR 301; 5 CFR 900

Legal Deadline: None.

Abstract: The comprehensive aspect of the CCA process itself was not created by legislation or even by regulation; Presidential emphasis on grants consolidation and FEMA policy on integrating programs created the CCA. The cooperative agreement aspect of the CCA process is based on PL 95-224, the Federal Grant and Cooperative Agreement Act of 1977. Cooperative agreements are used when stimulating a public purpose (the multiple programs delivered in each CCA are aimed at stimulating public purposes, primarily civil defense). The Federal Civil Defense Act of 1950, as amended, authorizes the major portion of CCA programs and assistance dollars, and is therefore the major legislative authority underpinning the CCA process. Various Civil Preparedness Guides, primarily CPG 1-38 and CPG 1-3 address the CCA process and associated programs. However, a regulation would provide complete notice to States and interested parties and complete the policy and procedural requirements identified by the Office of General Counsel. Specific quantitative estimates cannot be cited.

Timetable:

Action	Date	FR Cite
ANPRM	04/15/88	
ANPRM Comment Period End	06/15/88	

Small Entity: No

Agency Contact: Nancy J. Holt, Program Analyst, Federal Emergency Management Agency, 500 C Street, SW, Washington, DC 20472, 202 646-3505

RIN: 3067-AB18

FEDERAL EMERGENCY MANAGEMENT AGENCY (FEMA) — Proposed Rule Stage

2925. REVIEW AND APPROVAL OF STATE AND LOCAL EMERGENCY RESPONSE PLANS

Legal Authority: 50 USC App. 225g; EO 12148

CFR Citation: 44 CFR 350

Legal Deadline: None.

Abstract: Updates existing regulation governing policies and procedures for review and approval of State and local emergency plans and preparedness for the offsite effects of a radiological emergency which might occur at a commercial nuclear power plant.

Timetable:

Action	Date	FR Cite
NPRM	03/18/88	
NPRM Comment Period End	05/20/88	

Small Entity: No

Agency Contact: Marshall Sanders, Chief, Program Development Branch, State and Local Programs Directorate, Federal Emergency Management Agency, 500 C Street, SW, Washington, DC 20472, 202 646-4131

RIN: 3067-AA76

2926. RADIOLOGICAL EMERGENCY PLANNING AND PREPAREDNESS

Legal Authority: EO 12148; EO 12241

CFR Citation: 44 CFR 351

Legal Deadline: None.

Abstract: Updates regulations which set out Federal Agency roles and assigns tasks regarding Federal assistance to States and local governments in their radiological emergency planning and preparedness activities connected with radiological accidents at commercial nuclear power plants.

Timetable:

Action	Date	FR Cite
NPRM	05/30/88	
NPRM Comment Period End	07/20/88	

Small Entity: No

Agency Contact: Marshall Sanders, Chief, Program Development Branch, State & Local Programs Directorate, Federal Emergency Management Agency, 500 C Street, SW, Washington, DC 20472, 202 646-4131

RIN: 3067-AA77

2927. PERMANENT RELOCATION ASSISTANCE

Significance: Regulatory Program

Legal Authority: 42 USC 9601 et seq

CFR Citation: 44 CFR 221

Legal Deadline: None.

Abstract: This part prescribes the policies to be followed by the Federal Emergency Management Agency or any State or local government when implementing permanent relocation under the Comprehensive Environmental Response, Compensation and Liability Act of 1980 (CERCLA), as amended.

Timetable:

Action	Date	FR Cite
NPRM	03/14/88	
NPRM Comment Period End	05/16/88	
Final Action	06/03/88	
Final Action Effective	07/05/88	

Small Entity: No

Agency Contact: Charles D. Robinson, Chief, Superfund & Relocation Assistance Br., Disaster Assistance Program, SLPS, Federal Emergency Management Agency, 500 C Street, SW, Washington, DC 20472, 202 646-3805

RIN: 3067-AA84

2928. FLOOD INSURANCE RATING SYSTEM CHANGES

Significance: Regulatory Program

Legal Authority: 42 USC 4001 et seq; EO 12127

CFR Citation: 44 CFR 61

Legal Deadline: None.

Abstract: National Flood Insurance Program premium rating system changes under consideration include a community rating system and a system to use revised FIRM's producing higher rates for existing policyholders, subject to a rate cap. The community rating system would be designed to recognize circumstances within local communities that mitigate or exacerbate the flooding risk, such as the inaction of a community in addressing flood problems or the performance of a community that goes beyond minimum

NFIP floodplain management requirements. The use of revised FIRM's for existing policyholders would replace the current practice of allowing premium rates for such policyholders to be based on the map in existence at the time of construction so long as the construction met the requirements at that time.

Timetable:

Action	Date	FR Cite
ANPRM	07/01/87	52 FR 24482
ANPRM Comment Period End	08/31/87	
NPRM	11/30/88	
NPRM Comment Period End	01/29/89	
Final Action	08/01/89	
Final Action Effective	10/01/89	

Small Entity: No

Agency Contact: Francis V. Reilly, Deputy Administrator, FIA, Federal Emergency Management Agency, 500 C Street, SW, Washington, DC 20472, 202 646-2782

RIN: 3067-AA98

2929. DISASTER PREPAREDNESS ASSISTANCE

Legal Authority: 42 USC 5121 et seq; Reorganization Plan No. 3 of 1978; EO 12148

CFR Citation: 44 CFR 300

Legal Deadline: None.

Abstract: This regulation revises and makes technical corrections to the regulations governing assistance under title II of the Disaster Relief Act of 1974.

Timetable:

Action	Date	FR Cite
Next Action Undetermined		

Small Entity: No

Agency Contact: Gregory S. Jones, Emergency Management Specialist, Federal Emergency Management Agency, Off. of Disaster Assistance Programs, State & Local Programs Directorate, 500 C Street, SW, Washington, DC 20472, 202 646-3668

RIN: 3067-AB05

2930. CRITERIA FOR HURRICANE PREPAREDNESS ASSISTANCE TO STATE AND LOCAL GOVERNMENTS

Significance: Agency Priority

Legal Authority: 42 USC 5131; 50 USC App. 2251 to 2297; EO 12148; EO 12381

CFR Citation: 44 CFR 362

Legal Deadline: None.

Abstract: Under PL 93-288, the Federal Emergency Management Agency provides financial and technical assistance to States and local governments in their hurricane preparedness planning. Except for some instances, FEMA has provided 100 percent funding to designated States that have high risk hurricane hazard areas for the development of population preparedness and property protection studies. This proposed rulemaking will establish a plan for having States share the cost of these activities. These changes to 44 CFR 300.6 will affect only the hurricane preparedness portion of this rule; the earthquake hazards reduction portion will be revised in a separate concurrent rulemaking effort.

Timetable:

Action	Date	FR Cite
NPRM	03/00/88	
NPRM Comment Period End	05/00/88	
Final Action	06/00/88	

Small Entity: Not Applicable

Government Levels Affected: Local, State, Federal

Agency Contact: Richard Krimm, Assistant Associate Director, Office of Natural & Technological Hazards Programs, Federal Emergency Management Agency, 500 C Street, SW, Washington, DC 20472, 202 646-2871

RIN: 3067-AB11

2931. FLOOD INSURANCE SUBSIDIZED RATE CHANGE

Significance: Regulatory Program

Legal Authority: 42 USC 4001 et seq; EO 12127

CFR Citation: 44 CFR 61

Legal Deadline: None.

Abstract: FEMA has determined that there is an imbalance between the general taxpayers and the NFIP policyholders in shouldering the costs of the NFIP that should be rectified by the policyholders, the direct Program beneficiaries, bearing more of the costs. The proposed rule would increase the chargeable (subsidized) premium rates, which apply to all structures in communities participating in the emergency program of the National Flood Insurance Program and to certain structures in communities in the regular program.

Timetable:

Action	Date	FR Cite
NPRM	02/17/88	
NPRM Comment Period End	04/17/88	
Final Action	08/01/88	
Final Action Effective	09/01/88	

Small Entity: No

Agency Contact: Howard Leikin, Special Assistant, Federal Insurance Administration, Federal Emergency Management Agency, 500 C Street, SW, Washington, DC 20472, 202 646-2784

RIN: 3067-AB12

2932. ● NATIONAL FLOOD INSURANCE PROGRAM PAYMENT OF FLOOD INSURANCE FOR STRUCTURES ON LAND SUBJECT TO IMMINENT COLLAPSE OR SUBSIDENCE

Legal Authority: 42 USC 4001 et seq; EO 12127

CFR Citation: 44 CFR 59; 44 CFR 60; 44 CFR 61; 44 CFR 62

Legal Deadline: None.

Abstract: Section 544 of the Housing and Community Development Act of 1987 provides a new benefit to National Flood Insurance Program Policyholders: Payment for demolition or relocation of an insured structure if it is located "along the shore of a lake or other body of water and is certified by appropriate State and local land use authority to be subject to imminent collapse or subsidence as a result of erosion or undermining cause by waves or currents of water exceeding anticipated cyclical levels." FEMA plans to commission an investigation through the National Academy of Sciences (expected to take approximately 15 months) to provide a basis for regulations defining "imminent collapse" certification criteria and erosion zone management measures. In the meantime, FEMA is considering issuing interim administrative

regulations dealing with other aspects of providing new benefits.

Timetable:

Action	Date	FR Cite
NPRM	00/00/00	

Small Entity: No

Agency Contact: Donald F. Collins, Assistant Administrator, Federal Insurance Administration, Federal Emergency Management Agency, 500 C Street, SW, Washington, DC 20472, 202 646-3419

RIN: 3067-AB23

2933. ● NATIONAL FLOOD INSURANCE PROGRAM ELEVATED BUILDING COVERAGE

Legal Authority: 42 USC 4001 et seq; EO 12127

CFR Citation: 44 CFR 61

Legal Deadline: None.

Abstract: A proposed revision to the National Flood Insurance Program regulations would amend the Standard Flood Insurance Policy by making the elevated building coverage limitation, currently applicable to all elevated buildings having enclosures, contents, machinery, building components, equipment, or fixtures below the elevated floor, applicable only to elevated Post-FIRM buildings.

Timetable:

Action	Date	FR Cite
NPRM	03/18/88	
NPRM Comment Period End	05/17/88	
Final Action	07/08/88	
Final Action Effective	10/01/88	

Small Entity: No

Agency Contact: Donald L. Collins, Assistant Administrator, Federal Insurance Administration, Federal Emergency Management Agency, 500 C Street, SW, Washington, DC 20472, 202 646-3419

RIN: 3067-AB24

2934. ● NATIONAL FLOOD INSURANCE PROGRAM ELEVATION REQUIREMENTS FOR MANUFACTURED HOMES

Legal Authority: 42 USC 4001 et seq; EO 12127

CFR Citation: 44 CFR 59; 44 CFR 60

Legal Deadline: None.

Abstract: Revisions to National Flood Insurance Program regulations regarding the elevation of manufactured homes placed in existing mobile home parks and subdivisions in special flood hazard areas that were effective October 1, 1986, were suspended effective June 30, 1987. There are three possible options: (1) lifting the suspension so that the October 1, 1986, revisions go back into effect; (2) continuing the suspension indefinitely; or (3) making some revisions different from the October 1, 1986 revisions.

Timetable:

Action	Date	FR Cite
NPRM	05/31/88	
NPRM Comment Period End	07/30/88	
Final Action	09/01/88	
Final Action Effective	10/01/88	

Small Entity: No

Agency Contact: Michael F. Robinson, Chief, Program Policy & Compliance Div., Federal Insurance Administration, Federal Emergency Management Agency, 500 C Street, SW, Washington, DC 20472, 202 646-2717

RIN: 3067-AB25

2935. ● INDIVIDUAL AND FAMILY GRANT PROGRAMS

Legal Authority: 42 USC 5178

CFR Citation: 44 CFR 205.54

Legal Deadline: None.

Abstract: An amendment is being proposed to exempt grants under the IFG program from the review provisions of Executive Orders 11988, Flood Plain Management and 11990, Protection of Wetlands.

Timetable:

Action	Date	FR Cite
NPRM	06/01/88	
NPRM Comment Period End	10/01/88	
Final Action	12/01/88	
Final Action Effective	01/01/89	

Small Entity: No

Agency Contact: Agnes C. Mravcak, Emergency Management Specialist, Federal Emergency Management Agency, 500 C Street, SW, Washington, DC 20472, 202 646-3660

RIN: 3067-AB26

2936. ● DISASTER ASSISTANCE: SUBPART J (GENERAL INSURANCE REQUIREMENTS); SUBPART K (FLOOD INSURANCE REQUIREMENTS)

Legal Authority: 42 USC 5154; 42 USC 4001

CFR Citation: 44 CFR 205, Subpart J; 44 CFR 205, Subpart K

Legal Deadline: None.

Abstract: To change the rules for general hazard insurance and flood insurance which are required as a condition for receiving Federal assistance under the Disaster Relief Act of 1974, PL 83-288.

Timetable:

Action	Date	FR Cite
ANPRM	11/27/87	52 FR 45365
ANPRM Comment Period End	01/26/88	52 FR 45365
NPRM	05/15/88	
NPRM Comment Period End	07/15/88	
Final Action	10/15/88	

Small Entity: No

Agency Contact: Alex Burns, Program Officer, Federal Emergency Management Agency, 500 C Street, SW, Washington, DC 20472, 202 646-3670

RIN: 3067-AB28

FEDERAL EMERGENCY MANAGEMENT AGENCY (FEMA)

Final Rule Stage

2937. NONDISCRIMINATION ON THE BASIS OF HANDICAP IN FEMA

Legal Authority: 29 USC 794

CFR Citation: 44 CFR 16

Legal Deadline: None.

Abstract: This rule effectuates for FEMA the nondiscrimination requirements of section 504 of the Rehabilitation Act of 1973, as amended in 1978 to include activities conducted directly by Federal agencies. A draft regulation has been prepared and submitted to the Department of Justice and the Equal Employment Opportunity Commission for review.

Timetable:

Action	Date	FR Cite
NPRM	07/02/87	52 FR 25124
NPRM Comment Period End	08/31/87	
Interim Final Rule	05/01/88	
Final Action	07/01/88	

Small Entity: No

Agency Contact: John R. Curran, Sr., Director, Office of Personnel & Equal Opportunity, Federal Emergency Management Agency, 500 C Street, SW, Washington, DC 20472, 202 646-3962

RIN: 3067-AA42

2938. TEMPORARY RELOCATION ASSISTANCE - SUPERFUND

Legal Authority: 42 USC 9601 et seq

CFR Citation: 44 CFR 220

Legal Deadline: None.

Abstract: This part prescribes policy and program guidance to be followed when implementing temporary relocation assistance under the Comprehensive Environmental Response, Compensation and Liability Act, 1980 (CERCLA) Superfund.

Timetable:

Action	Date	FR Cite
NPRM	06/10/86	51 FR 20995
NPRM Comment Period End	08/11/86	
Begin Review	10/01/86	
End Review	04/30/87	
Final Action	03/15/88	
Final Action Effective	04/15/88	

Small Entity: No

Agency Contact: Karen Forbes, Emergency Management Specialist, Federal Emergency Management Agency, Room 701, 500 C Street, SW, Washington, DC 20472, 202 646-3807

RIN: 3067-AA72

2939. COMMUNITY DISASTER LOANS

Legal Authority: 42 USC 5201

CFR Citation: 44 CFR 205, Subpart F

Legal Deadline: None.

Abstract: To provide FEMA policies and procedures for administering the Community Disaster Loan Program under section 414, PL 93-288.

Timetable:

Action	Date	FR Cite
NPRM	04/28/87	52 FR 15348
NPRM Comment Period End	06/29/87	
Final Action	04/00/88	

Small Entity: No

Government Levels Affected: Local

Agency Contact: Gene Morath, Program Officer, Federal Emergency Management Agency, 500 C Street, SW, Washington, DC 20472, 202 646-3683

RIN: 3067-AA95

2940. NATIONAL FLOOD INSURANCE PROGRAM REDEFINITION OF COASTAL HIGH HAZARD AREA

Significance: Regulatory Program

Legal Authority: 42 USC 4001 et seq; EO 12127

CFR Citation: 44 CFR 59

Legal Deadline: None.

Abstract: The proposed rule would modify the definition of "coastal high hazard area" at 44 CFR 59.1 to include the primary frontal dune on barrier islands and other sandy shorelines exposed to the open coast. Including primary frontal dunes in the definition of coastal high hazard areas would recognize their inherent susceptibility to flood and erosion hazards during major coastal storms. Classification of these dunes as VE zones on Flood Insurance Rate Maps would assure that adequate insurance rates are assessed and that the construction standards, appropriate to the hazards, are imposed should new construction on the primary frontal dunes be permitted by State or local ordinances.

Timetable:

Action	Date	FR Cite
NPRM	11/03/87	52 FR 42117
NPRM Comment Period End	01/04/88	52 FR 42117
Final Action	05/01/88	
Final Action Effective	10/01/88	

Small Entity: No

Agency Contact: Brian R. Mrazik, Assistant Administrator, Federal Insurance Administration, Federal Emergency Management Agency, 500 C Street, SW, Washington, DC 20472, 202 646-2766

RIN: 3067-AB08

2941. NATIONAL FLOOD INSURANCE PROGRAM CHANGES

Legal Authority: 42 USC 4001 et seq; EO 12127

CFR Citation: 44 CFR 59; 44 CFR 61; 44 CFR 72

Legal Deadline: None.

Abstract: Possible changes to the NFIP regulations include changes in the standard flood insurance policy, a change to flood plain management standards by specifying criteria under which communities may permit flood plain and floodway developments which would increase base flood elevations and the procedures to be followed in revising maps when these situations occur, a change to flood plain management standards by providing criteria which clarify a community's responsibilities with regard to the maintenance of altered water courses, a change to the procedures for map correction under the provisions of 44 CFR 70.3 by correcting an inconsistency with a subsequent section, and a change in the fee exemption provisions of 44 CFR 72.5 to give the Administrator discretion in waiving fees associated with the review of proposed projects that, when completed, could result in a NFIP map revision.

Timetable:

Action	Date	FR Cite
NPRM	11/03/87	52 FR 42117
NPRM Comment Period End	01/04/88	52 FR 42117
Final Action	05/01/88	
Final Action Effective	10/01/88	

Small Entity: No

BEST COPY AVAILABLE

FEMA

Final Rule Stage

Agency Contact: Donald L. Collins, Assistant Administrator, Federal Insurance Administration, Federal Emergency Management Agency, 500 C Street, SW, Washington, DC 20472, 202 646-3419

RIN: 3067-AB09

2942. CHANGES IN NATIONAL FLOOD INSURANCE PROGRAM COMMISSIONS TO INSURANCE AGENTS

Legal Authority: 42 USC 4001 et seq; EO 12127

CFR Citation: 44 CFR 62

Legal Deadline: None.

Abstract: Changes under consideration would increase the insurance agents' commission on new NFIP policies and decrease the commission on direct bill renewals, resulting in an overall decrease in the average commission.

Timetable:

Action	Date	FR Cite
NPRM	05/20/87	52 FR 18929
NPRM Comment Period End	07/27/87	
Final Action	05/16/88	
Final Action Effective	10/01/88	

Small Entity: No

Agency Contact: Donald L. Collins, Assistant Administrator, Federal Insurance Administration, Federal Emergency Management Agency, 500 C Street, SW, Washington, DC 20472, 202 646-3419

RIN: 3067-AB10

2943. CIVIL DEFENSE: STATE AND LOCAL EMERGENCY MANAGEMENT ASSISTANCE PROGRAM (EMA)

Legal Authority: 50 USC (App) 2253; Reorganization Plan No. 3 of 1978; EO 12148

CFR Citation: 44 CFR 302, (Revision)

Legal Deadline: None.

Abstract: Changes within existing regulation to delete one allocation formula factor.

Timetable:

Action	Date	FR Cite
NPRM	08/26/87	52 FR 32140
NPRM Comment Period End	10/26/87	52 FR 32140
Interim Final Rule	12/30/87	

Next Action Undetermined

Small Entity: No

Government Levels Affected: Local, State

Agency Contact: John McKay, Chief, Emergency Management Systems Development Division, Federal Emergency Management Agency, 500 C Street, SW, Washington, DC 20472, 202 646-4252

RIN: 3067-AB14

2944. NONDISCRIMINATION IN FEDERALLY ASSISTED PROGRAMS ON THE BASIS OF AGE

Legal Authority: 42 USC 6103

CFR Citation: 44 CFR 7, Subpart E

Legal Deadline: None.

Abstract: This rule effectuates for FEMA the nondiscrimination requirements of the Age Discrimination Act of 1975.

Timetable:

Action	Date	FR Cite
NPRM	01/14/88	53 FR 922
NPRM Comment Period End	03/14/88	53 FR 922
Final Action	06/15/88	
Final Action Effective	06/15/88	

Small Entity: No

Agency Contact: Alan Clive, Equal Employment Manager, Federal Emergency Management Agency, 500 C Street, SW, Washington, DC 20472, 202 646-3957

RIN: 3067-AB16

2945. CHANGES IN NFIP REGULATIONS FOR WRITE-YOUR-OWN PROGRAM

Legal Authority: 42 USC 4001 et seq; EO 12127

CFR Citation: 44 CFR 61; 44 CFR 62

Legal Deadline: None.

Abstract: Possible changes to the National Flood Insurance Program regulations governing the Write-Your-Own (WYO) Program include changes in the provisions on investing funds, remitting excess funds, audits of WYO companies, State or municipal taxes, loss adjustment expenses, and termination of WYO arrangements.

Timetable:

Action	Date	FR Cite
NPRM	02/07/88	53 FR 419
NPRM Comment Period End	03/07/88	53 FR 419
Final Action	05/16/88	
Final Action Effective	10/01/88	

Small Entity: No

Agency Contact: Donald L. Collins, Assistant Administrator, FIA, Federal Emergency Management Agency, 500 C Street, SW, Washington, DC 20472, 202 646-3419

RIN: 3067-AB17

2946. ● FEDERAL CRIME INSURANCE RATE INCREASES

Legal Authority: 12 USC 1749bbb-17; EO 12127

CFR Citation: 44 CFR 80; 44 CFR 82; 44 CFR 83

Legal Deadline: None.

Abstract: Proposed revisions to the Federal Crime Insurance Program (FCIP) regulations would increase FCIP rates which apply to both residential and commercial properties located in eligible states. They would also authorize a premium discount and commercial burglary and robbery insurance policies in the form of credits for installation of holdup buttons and alarms protecting safes, and for commercial policies covering robbery away from the premises when the insured has demonstrated that he had entered into a contract with a bonded armored car service for transporting cash from the insured premises to a bank.

Timetable:

Action	Date	FR Cite
NPRM	01/11/88	53 FR 621
NPRM Comment Period End	03/11/88	53 FR 621
Final Action	03/25/88	
Final Action Effective	05/01/88	

Small Entity: No

Agency Contact: Robert J. DeHenzel, Chief, Urban Property Insurance Operations, Federal Emergency Management Agency, 500 C Street, SW, Washington, DC 20472, 202 646-3440

RIN: 3067-AB27

BEST COPY AVAILABLE

FEDERAL EMERGENCY MANAGEMENT AGENCY (FEMA)

Completed Actions

2947. PRESERVATION OF THE MOBILIZATION BASE THROUGH THE PLACEMENT OF PROCUREMENT AND FACILITIES IN LABOR SURPLUS AREAS

CFR Citation: 44 CFR 331

Completed:

Reason	Date	FR Cite
No action expected in next 12 months	02/26/88	

Small Entity: No

Agency Contact: Paul Bryant 202 646-3607

RIN: 3067-AA32

2948. POLICY GUIDANCE AND DELEGATION OF AUTHORITIES FOR USE OF PRIORITIES AND ALLOCATIONS TO MAXIMIZE DOMESTIC ENERGY SUPPLIES

CFR Citation: 44 CFR 330

Completed:

Reason	Date	FR Cite
No action expected in next 12 months	02/26/88	

Small Entity: No

Agency Contact: James Grichar 202 646-3054

RIN: 3067-AA33

2949. USE OF PRIORITIES AND ALLOCATION AUTHORITY FOR FEDERAL SUPPLY CLASSIFICATION (FSC) COMMON USE ITEMS (DMO-12)

CFR Citation: 44 CFR 329

Completed:

Reason	Date	FR Cite
No action expected in next 12 months	02/26/88	

Small Entity: No

Agency Contact: Rita Friga 202 646-3343

RIN: 3067-AA34

2950. GENERAL POLICIES FOR STRATEGIC AND CRITICAL MATERIALS STOCKPILING (DMO-11)

CFR Citation: 44 CFR 328

Completed:

Reason	Date	FR Cite
No action expected in next 12 months	02/26/88	

Small Entity: No

Agency Contact: Carl W. Carson 202 646-3520

RIN: 3067-AA35

2951. POLICY ON USE OF GOVERNMENT-OWNED INDUSTRIAL PLANT EQUIPMENT BY PRIVATE INDUSTRY (DMO-10A)

CFR Citation: 44 CFR 327

Completed:

Reason	Date	FR Cite
No action expected in next 12 months	02/26/88	

Small Entity: No

Agency Contact: James Grichar 202 646-3054

RIN: 3067-AA36

2952. POLICY GUIDANCE FOR A NATIONAL EMERGENCY BLOOD PROGRAM

CFR Citation: 44 CFR 326

Completed:

Reason	Date	FR Cite
No action expected in next 12 months	02/26/88	

Small Entity: No

Agency Contact: Clair Blong 202 646-3052

RIN: 3067-AA37

2953. EMERGENCY HEALTH AND MEDICAL OCCUPATIONS

CFR Citation: 44 CFR 325

Completed:

Reason	Date	FR Cite
No action expected in next 12 months	02/26/88	

Small Entity: No

Agency Contact: Clair Blong 202 646-3544

RIN: 3067-AA38

2954. NATIONAL SECURITY POLICY GOVERNING SCIENTIFIC AND ENGINEERING MANPOWER (DMO-5)

CFR Citation: 44 CFR 324

Completed:

Reason	Date	FR Cite
No action expected in next 12 months	02/26/88	

Small Entity: No

Agency Contact: Henry Hyatt 202 646-3567

RIN: 3067-AA43

2955. GUIDANCE ON PRIORITY USE OF RESOURCES IN IMMEDIATE POST ATTACK PERIOD (DMO-4)

CFR Citation: 44 CFR 323

Completed:

Reason	Date	FR Cite
No action expected in next 12 months	02/26/88	

Small Entity: No

Agency Contact: Clair Blong 202 646-3052

RIN: 3067-AA44

2956. DEFENSE PRODUCTION PRIORITIES AND ALLOCATIONS AUTHORITY

CFR Citation: 44 CFR 322

Completed:

Reason	Date	FR Cite
No action expected in next 12 months	02/26/88	

Small Entity: No

Agency Contact: Rita Friga 202 646-3343

RIN: 3067-AA45

2957. MAINTENANCE OF THE MOBILIZATION BASE

CFR Citation: 44 CFR 321

Completed:

Reason	Date	FR Cite
No action expected in next 12 months	02/26/88	

Small Entity: No

Agency Contact: Rita Friga 202 646-3343

RIN: 3067-AA46

2958. DISPERSION AND PROTECTIVE CONSTRUCTION: POLICY, CRITERIA RESPONSIBILITIES (DMO-1)

CFR Citation: 44 CFR 320

Completed:

Reason	Date	FR Cite
No action expected in next 12 months	02/26/88	

Small Entity: No

Agency Contact: James Grichar 202 646-3054

RIN: 3067-AA47

2959. STATE ASSISTANCE PROGRAMS FOR TRAINING AND EDUCATION IN COMPREHENSIVE EMERGENCY MANAGEMENT

CFR Citation: 44 CFR 360

Completed:

Reason	Date	FR Cite
No action expected in next 12 months	02/26/88	

Small Entity: No

Agency Contact: Robert T. Petersen 301 447-6771

RIN: 3067-AA70

2960. ADMINISTRATIVE REQUIREMENTS FOR GRANTS AND COOPERATIVE AGREEMENTS TO STATE AND LOCAL GOVERNMENTS

CFR Citation: 44 CFR 13

Completed:

Reason	Date	FR Cite
Final Action	03/11/88	53 FR 8034
Final Action Effective	10/01/88	

Small Entity: No

Agency Contact: Arthur Curry 202 646-3718

RIN: 3067-AA90

2961. REIMBURSEMENT OF OTHER FEDERAL AGENCIES

CFR Citation: 44 CFR 205, Subpart I

Completed:

Reason	Date	FR Cite
No action expected in next 12 months	02/26/88	

Small Entity: No

Agency Contact: John F. Guerre 202 646-3875

RIN: 3067-AA92

2962. CRITERIA FOR EARTHQUAKE HAZARDS REDUCTION ASSISTANCE TO STATE AND LOCAL GOVERNMENTS

Significance: Regulatory Program

CFR Citation: 44 CFR 361

Completed:

Reason	Date	FR Cite
Final Action	09/08/87	52 FR 33814
Final Action Effective	10/01/87	52 FR 33814

Small Entity: Not Applicable

Agency Contact: Richard W. Krimm 202 646-2871

RIN: 3067-AA99

2963. FEDERAL CRIME INSURANCE PROGRAM

CFR Citation: 44 CFR 80; 44 CFR 81; 44 CFR 82; 44 CFR 83

Completed:

Reason	Date	FR Cite
Final Action	08/17/87	52 FR 30683
Final Action Effective	09/16/87	52 FR 30683

Small Entity: No

Agency Contact: Robert J. DeHenzel 202 646-3440

RIN: 3067-AB13

[FR Doc. 88-5090 Filed 04-22-88; 8:45 am]

BILLING CODE 6718-01-T

federal register

Monday
April 25, 1988

Part XXIII

Federal Mediation and Conciliation Service

Semiannual Regulatory Agenda

FEDERAL MEDIATION AND CONCILIATION SERVICE (FMCS)

FEDERAL MEDIATION AND CONCILIATION SERVICE

29 CFR Ch. XII

Unified Agenda of Federal Regulations

AGENCY: Federal Mediation and Conciliation Service.

ACTION: Semiannual agenda required by the Regulatory Flexibility Act of 1980.

SUMMARY: The Federal Mediation and Conciliation Service is redrafting one regulation subject to the Regulatory Flexibility Act during the six month period from April to October 1988. That regulation is Arbitration Policy and Practice.

FOR FURTHER INFORMATION CONTACT: Daniel P. Dozier, Legal Counsel, Federal Mediation and Conciliation Service, 2100 K Street, NW., Washington, DC 20427, (202) 653-5305.

Dated: March 11, 1988.

Kay McMurray,

Director.

FEDERAL MEDIATION AND CONCILIATION SERVICE (FMCS) — Proposed Rule Stage

2964. REVIEW OF EXISTING ARBITRATION REGULATION

Significance: Agency Priority

Legal Authority: 29 USC 172; 5 USC 552; 29 USC 173

CFR Citation: 29 CFR 1404

Legal Deadline: None.

Abstract: The Federal Mediation and Conciliation Service is in the process of redrafting its existing Arbitration Services regulation at 29 CFR Part 1404. The Service will have completed its initial draft by April 1988. A proposed rule will be published soon thereafter and public comments solicited.

Timetable:

Action	Date	FR Cite
End Review	10/00/87	
NPRM	05/00/88	

Small Entity: No

Agency Contact: Daniel P. Dozier, Counsel, Federal Mediation and Conciliation Service, 2100 K Street, NW, Washington, DC 20427, 202 653-5305

RIN: 3076-AA01

[FR Doc. 88-6198 Filed 04 22-88; 8:45 am]

BILLING CODE 6732-01-T

VOL 53 ISS 79 PT 2 APR 25 1988 UMI

federal register

Monday
April 25, 1988

Part XXIV

General Services Administration

Semiannual Regulatory Agenda

GENERAL SERVICES ADMINISTRATION (GSA)

GENERAL SERVICES ADMINISTRATION

41 CFR Chs. 101, 105, and 201

48 CFR Ch. 5

Unified Agenda of Federal Regulations

AGENCY: General Services Administration.

ACTION: Semiannual agenda.

SUMMARY: This agenda announces the proposed regulatory actions that GSA plans for the next 12 months and those actions that were completed since October 1987. This agenda was developed under the guidelines in OMB Bulletin 88-1, dated October 7, 1987. GSA's purpose in publishing this agenda is to allow interested persons an opportunity to participate in the rulemaking process.

FOR FURTHER INFORMATION CONTACT: Rodney P. Lantier, Chief, Directives and Correspondence Management Branch (202) 566-0666.

SUPPLEMENTARY INFORMATION: None of the regulations will have an effect on small businesses or other entities. None of the regulations listed are considered major under Executive Order 12291, Federal Regulations.

Dated: February 22, 1988.

T. C. Golden,

Administrator of General Services.

Prerule Stage

Sequence Number	Title	Regulation Identifier Number
2965	Utilization, Donation, and Disposal of Foreign Gifts and Decorations	3090-AC85
2966	FIRMR Improvement Project	3090-AD04
2967	Federal Property Management Regulations; Annual Real Property Inventories	3090-AC74

Proposed Rule Stage

Sequence Number	Title	Regulation Identifier Number
2968	General Services Administration Acquisition Regulation Change Subpart 46.7	3090-AB82
2969	Miscellaneous Changes on the Acquisition of Leasehold Interests in Real Property (GSAR 5-155)	3090-AC59
2970	Contract Closeout Procedures (GSAR 5-96)	3090-AC67
2971	Multiyear Contracts and Contracts with Options (GSAR 5-106)	3090-AC68
2972	Small Business Subcontracting Plans (GSAR 5-122)	3090-AC69
2973	Federal Property Management Regulations; Revises the Reporting Requirements for Real Property	3090-AB31
2974	Prepayment Transportation Audit Procedures	3090-AC92
2975	Revision of Standard Form 1169, U.S. Government Transportation Request	3090-AD12
2976	Revision of Standard Form 1170, Redemption of Unused Tickets	3090-AD13
2977	Update of Governmentwide Policies and Regulations	3090-AB08
2978	Revision of ADPE Reutilization Policies and Procedures Including Instructions for SF 120, Project 86.14A	3090-AC25
2979	Establishment of Policies and Procedures for Federal Agencies' Management of Electronic Recordkeeping, Project 86.83A	3090-AC54
2980	Office Equipment Accessibility for the Handicapped	3090-AD02
2981	Implementation of Title VIII, Paperwork Reduction Reauthorization Act of 1986, P.L. 99-500 Regarding Automatic Data Processing Equipment	3090-AD03
2982	Enforcement of Nondiscrimination on the Basis of Handicap in Federally Conducted Programs	3090-AC46
2983	Nondiscrimination on the Basis of Race, Color, National Origin, and where applicable, sex	3090-AC49

Final Rule Stage

Sequence Number	Title	Regulation Identifier Number
2984	Supply Sources and Related Programs	3090-AA89
2985	General Services Administration Acquisition Regulation, Change Receipt of Proposals and Quotations	3090-AB83
2986	General Services Administration Acquisition Regulation Change Part 501	3090-AB86
2987	Buy American Act - Construction Materials (GSAR 5-131)	3090-AC37
2988	Federal Procurement Data System (FPDS) Reporting Requirements (GSAR 5-113)	3090-AC56
2989	Multiple Award Schedule Program (GSAR 5-38A)	3090-AC61
2990	General Services Administration Acquisition Regulation (GSAR) Proposed Rule, Utility Contracts, GSAR Case 5-65	3090-AD10

GSA

Final Rule Stage—Continued

Sequence Number	Title	Regulation Identifier Number
2991	General Services Administration Acquisition Regulation (GSAR) Acquisition Circular, AC-87-4, Increase in Thresholds for Contracting Office Warrant Program & Imprest Funds Trans	3090-AD11
2992	Revision of Public Voucher for Transportation Charges, Standard Form 1113	3090-AB69
2993	Audit Procedures for Commercial Bills of Lading- Cost-Reimbursement-Type Contracts	3090-AC20
2994	National Defense Stockpile Disposal Regulations	3090-AA40
2995	Reporting of Excess Real Property - Asbestos	3090-AD05
2996	Donation of Personal Property	3090-AA23
2997	Donation of Abandoned and Forfeited Personal Property	3090-AA24
2998	Acquisition and Use of Excess Personal Property	3090-AA30
2999	Utilization, Donation, Sale, Abandonment or Destruction of Hazardous Materials	3090-AA42
3000	Change to Federal Travel Regulations (FTR), FPMR 101-7, Supplement (Unassigned)	3090-AC83
3001	Removal of the Federal Travel Regulations from the Federal Property Management Regulations System	3090-AD19

Completed Actions

Sequence Number	Title	Regulation Identifier Number
3002	General Services Administration Acquisition Regulation; Subcontracting Plan Reporting Requirements; Change 48	3090-AB76
3003	General Services Administration Acquisition Regulation (GSAR), Acquisition Circular, AC-87-3, Monitoring Contractor Compliance with Subcontracting Plans	3090-AD06
3004	General Services Administration Acquisition Regulation (GSAR), Change 47, Implementing FAC 84-25	3090-AD07
3005	General Services Administration Acquisition Regulation (GSAR) Change 49, Prompt Payment Discounts	3090-AD08
3006	General Services Administration Acquisition Regulation (GSAR) Change 50, Revision of GSA Form 300	3090-AD09
3007	Reporting of Excess Real Property - PCB	3090-AC90
3008	Utilization and Disposal of Personal Property	3090-AA45
3009	Federal Travel Regulations (FTR), FPMR 101-7, Supplement 26	3090-AC24
3010	Use of Cash for Official Travel (Temporary Regulation)	3090-AC91
3011	Update of Governmentwide Policies and Regulations regarding Federal Employee use of Government Telephone Systems (87.14A)	3090-AC75
3012	Interim Implementation of Pub. L. 99-500 Title VIII Brooks Act Amendment-Extension of Temporary Regulation	3090-AD01
3013	Federal Advisory Committee Management	3090-AA62

GENERAL SERVICES ADMINISTRATION (GSA)

Prerule Stage

FEDERAL SUPPLY AND SERVICES

2965. UTILIZATION, DONATION, AND DISPOSAL OF FOREIGN GIFTS AND DECORATIONS

Legal Authority: 40 USC 486(c); 5 USC 7342

CFR Citation: 41 CFR 101-49

Legal Deadline: None.

Abstract: This rule updates and revises GSA's policy and procedure concerning the utilization, donation, and disposal of foreign gifts and decorations.

Timetable:

Action	Date	FR Cite
Next Action Undetermined		

Small Entity: No

Government Levels Affected: Federal

Agency Contact: Mr. Stanley M. Duda, Director, Property Management, General Services Administration, General Services ADministration, Property Management Division, Washington, DC 20406, 703 557-1240

RIN: 3090-AC85

OFFICE OF INFORMATION RESOURCES MANAGEMENT

2966. ● FIRMR IMPROVEMENT PROJECT

Significance: Regulatory Program

Legal Authority: 40 USC 486(c); 40 USC 751(f)

CFR Citation: 41 CFR 201

Legal Deadline: None.

Abstract: In response to recommendations by users of the FIRMR to revise the regulation to make it more readable and useful, GSA plans to restructure the FIRMR during the next few years. This restructuring will include: the separation of policies and procedures, the separation of contracting from management and use provisions, the reorganization of FIRMR

contracting provisions for consistency with the Federal Acquisition Regulations, and the reorganization of the FIRMR's management and use provisions into a life cycle format. As the final draft of each subchapter is completed, GSA will seek public comment on the subchapter through a notice of proposed rulemaking. Subchapter E, which deals with acquisition, will be completed first and, if possible, issued as a final rule before publication of the entire FIRMR.

Timetable:

Action	Date	FR Cite
ANPRM	04/00/88	
ANPRM Comment Period End	06/00/88	
NPRM	08/00/88	
Final Action Effective	12/00/89	

Small Entity: Yes

Agency Contact: David Mullins, Chief, Policy Branch, General Services Administration, GSA, IRMS/KMPR, Washington, D.C. 20405, 202 535-7462

RIN: 3090-AD04

PUBLIC BUILDINGS SERVICE

2967. FEDERAL PROPERTY MANAGEMENT REGULATIONS; ANNUAL REAL PROPERTY INVENTORIES

Legal Authority: EO 12411

CFR Citation: 41 CFR 101-3

Legal Deadline: None.

Abstract: This regulation will be reviewed and updated in light of the governmentwide space reduction and utilization improvement initiatives mandated in Executive Order 12411--Government Work Space Management Reform--and FPMR Temporary Regulation D-73-- Quality Workplace Environment.

Timetable:

Action	Date	FR Cite
Next Action Undetermined		

Small Entity: Undetermined

Agency Contact: Judy Maretta, Director, Governmentwide Policy Div., General Services Administration, GSA Office of Governmentwide Real Property, Policy and Oversight (PG), Washington, DC 20405, 202 566-0507

RIN: 3090-AC74

GENERAL SERVICES ADMINISTRATION (GSA) — Proposed Rule Stage

ACQUISITION POLICY

2968. GENERAL SERVICES ADMINISTRATION ACQUISITION REGULATION CHANGE SUBPART 46.7

Legal Authority: 40 USC 486(c) Sec. 205(c), 63 Stat. 390

CFR Citation: 48 CFR 546

Legal Deadline: None.

Abstract: GSA to issue a GSAR amendment to implement and supplement the FAR Subpart 46.7 by providing agency policies and procedures on the use of Warranties.

Timetable:

Action	Date	FR Cite
Next Action Undetermined		

Small Entity: Not Applicable

Agency Contact: Marjorie Ashby, Management Analyst, General Services Administration, GSA Acquisition Policy and Regulations, 18th & F Sts., NW Room 4026, Washington, DC 20405, 202 523-3822

RIN: 3090-AB82

2969. MISCELLANEOUS CHANGES ON THE ACQUISITION OF LEASEHOLD INTERESTS IN REAL PROPERTY (GSAR 5-155)

Legal Authority: 40 USC 486(c)

CFR Citation: 48 CFR 570

Legal Deadline: None.

Abstract: The General Services Administration Acquisition Regulation (GSAR) will be amended to codify in the regulation the revised contract clauses approved for use in lease contracts.

Timetable:

Action	Date	FR Cite
Next Action Undetermined		

Small Entity: No

Government Levels Affected: Federal

Agency Contact: Marjorie Ashby, Management Analyst, General Services Administration, GSA Acquisition Policy and Regulations, 18th & F Streets, NW, Washington, DC 20405, 202 523-3822

RIN: 3090-AC59

2970. CONTRACT CLOSEOUT PROCEDURES (GSAR 5-96)

Legal Authority: 40 USC 486(c)

CFR Citation: 48 CFR 504

Legal Deadline: None.

Abstract: The General Services Administration Acquisition Regulations (GSAR) will be amended to implement one of the recommendations resulting from a Federal Procurement Reform study under Executive Order 12352 by providing agency procedures in Part 504.

Timetable:

Action	Date	FR Cite
Next Action Undetermined		

Small Entity: No

Government Levels Affected: Federal

Agency Contact: Marjorie Ashby, Management Analyst, General Services Administration, GSA Acquisition Policy and Regulations, 18th & F Streets, NW, Washington, DC 20405, 202 523-3822

RIN: 3090-AC67

2971. MULTIYEAR CONTRACTS AND CONTRACTS WITH OPTIONS (GSAR 5-106)

Legal Authority: 40 USC 486(c)

CFR Citation: 48 CFR 517

Legal Deadline: None.

Abstract: The General Services Administration Acquisition Regulation

(GSAR) will be amended to incorporate the deviation from FAR 52.217-1, Limitations of Price and Contractor Qualifications and FAR 52.217-2, Cancellation of Items; and to consider the applicability of FAR Part 17 to Federal Supply Service multiyear contracts and contracts with options.

Timetable:

Action	Date	FR Cite
Next Action Undetermined		

Small Entity: No

Government Levels Affected: Federal

Agency Contact: Marjorie Ashby, Management Analyst, General Services Administration, GSA Acquisition Policy and Regulations, 18th & F Streets, NW, Washington, DC 20405, 202 523-3822

RIN: 3090-AC68

2972. SMALL BUSINESS SUBCONTRACTING PLANS (GSAR 5-122)

Legal Authority: 40 USC 486(c)

CFR Citation: 48 CFR 501; 48 CFR 519

Legal Deadline: None.

Abstract: The General Services Administration Acquisition Regulation (GSAR) will be amended to include information and instructions regarding various types and need for subcontracting plans; and to insert a reference to reflect the applicability of Subpart 519.7 to leases of real property in Section 501.103(b).

Timetable:

Action	Date	FR Cite
Next Action Undetermined		

Small Entity: No

Government Levels Affected: Federal

Agency Contact: Marjorie Ashby, Management Analyst, General Services Administration, GSA Acquisition Policy and Regulations, 18th & F Streets, NW, Washington, DC 20405, 202 523-3822

RIN: 3090-AC69

OFFICE OF THE COMPTROLLER

2973. FEDERAL PROPERTY MANAGEMENT REGULATIONS; REVISES THE REPORTING REQUIREMENTS FOR REAL PROPERTY

Legal Authority: EO 12411

CFR Citation: 41 CFR 101-3

Legal Deadline: None.

Abstract: This regulation revises FPMR 101-3 with changes and additions to the data elements currently collected as part of the World-Wide Real Property Inventory System. It also displays the revised forms to be used when supplying this information. These changes are necessary to monitor government-wide space reduction initiatives mandated by Executive Order 12411 - Government Work Space Management Reforms and Temporary Regulation D-70-Work Space Management Plans.

Timetable:

Action	Date	FR Cite
Next Action Undetermined		

Small Entity: No

Agency Contact: Bobby Daniel, Accounting Specialists, General Services Administration, GSA Office of Governmentwide Real Property, Policy and Oversight(PG), Washington, DC 20405, 202 566-1426

RIN: 3090-AB31

FEDERAL SUPPLY AND SERVICES

2974. PREPAYMENT TRANSPORTATION AUDIT PROCEDURES

Legal Authority: 31 USC 3726; 40 USC 486(c)

CFR Citation: 41 CFR 101

Legal Deadline: None.

Abstract: This proposed rule implements Pub. L. 99-627 relating to prepayment audits of selected transportation bills. This rule also prescribes procedures, conditions, and limitations relevant to any delegation of authority to another agency for the purpose of conducting prepayment audits.

Timetable:

Action	Date	FR Cite
NPRM	04/01/88	

Small Entity: No

Agency Contact: John W. Sandfort, Chief, Regulations, Procedures, and, Review Branch (FWCP), General Services Administration, 18th & F Streets, NW, Washington, DC 20405, 202 786-3065

RIN: 3090-AC92

2975. ● REVISION OF STANDARD FORM 1169, U.S. GOVERNMENT TRANSPORTATION REQUEST

Legal Authority: 31 USC 3726; 40 USC 486(c)

CFR Citation: 41 CFR 101

Legal Deadline: None.

Abstract: The current Standard Form (SF) 1169 Government Transportation Request (GTR) format is not suitable for automated preparation. This rule proposes to make the SF 1169 available in electronic data processing (EDP) format to facilitate form preparation on either a typewriter or an automated printer.

Timetable:

Action	Date	FR Cite
NPRM	04/01/88	

Small Entity: No

Agency Contact: Carolyn West, Transportation Specialist, General Services Administration, GSA/FWCP/R, 18th & F Streets, NW, Washington, D.C. 20405, 202 786-3005

RIN: 3090-AD12

2976. ● REVISION OF STANDARD FORM 1170, REDEMPTION OF UNUSED TICKETS

Legal Authority: 31 USC 3726; 40 USC 486(c)

CFR Citation: 41 CFR 101

Legal Deadline: None.

Abstract: The current Standard Form (SF) 1170, Redemption of Unused Tickets, format is not suitable for automated preparation. This rule proposes to make the SF 1170 available in electronic data processing (EDP) format to facilitate form preparation on either a typewriter or an automated printer.

Timetable:

Action	Date	FR Cite
NPRM	04/01/88	

Small Entity: No

Agency Contact: Carolyn West, Transportation Specialist, General Services Administration, GSA/FWCP/R, 18th & F Streets, NW, Washington, D.C., 202 786-3085

RIN: 3090-AD13

OFFICE OF INFORMATION RESOURCES MANAGEMENT

2977. UPDATE OF GOVERNMENTWIDE POLICIES AND REGULATIONS

Significance: Agency Priority

Legal Authority: 40 USC 486(c); 40 USC 751(f)

CFR Citation: 41 CFR 201-21; 41 CFR 201-23; 41 CFR 201-38; 41 CFR 201-39; 41 CFR 201-41

Legal Deadline: None.

Abstract: This project revises FIRMR Provisions relating to Federal Telecommunications acquisition and management. It will include changes brought about by the Federal Communications Commission Computer II inquiry and the divestiture of AT&T. This regulation will update GSA policies and provisions impacting Government-wide telecommunication management and will specifically address the need for requirements definition and analysis for local and intercity service. It will revise "major change" requirements and state what GSA needs from agencies if GSA is expected to provide services or if GSA is reviewing service for individual agency acquisitions. All obsolete provisions will be eliminated.

Timetable:

Action	Date	FR Cite
NPRM	09/23/87	52 FR 35736
NPRM Comment Period End	11/23/87	52 FR 35736
NPRM FIRMR Amendment	04/01/88	
Final Action Effective	07/00/88	

Small Entity: No

Agency Contact: John F. Stewart, Supervisory Communications Specialist, General Services Administration, Regulations Branch (KMPR), Information Resources Management Service, Washington, DC 20405, 202 566-0194

RIN: 3090-AB08

2978. REVISION OF ADPE REUTILIZATION POLICIES AND PROCEDURES INCLUDING INSTRUCTIONS FOR SF 120, PROJECT 86.14A

Significance: Agency Priority

Legal Authority: 40 USC 486(c); 40 USC 751(f)

CFR Citation: 41 CFR 201 to 33

Legal Deadline: None.

Abstract: This regulation delegates to agencies authority and responsibility for interagency screening of excess and exchange/sale ADPE with an original acquisition cost (OAC) below $1,000,000. A recent analysis of the ADPE reported to GSA for interagency reuse during the last two years revealed that there is a minimum amount of savings to be realized for the reuse of ADPE with an OAC under $1,000,000. Additionally, these savings are further reduced when the costs of nationwide interagency screening are considered.

Timetable:

Action	Date	FR Cite
NPRM	04/01/88	

Small Entity: No

Agency Contact: Phillip R. Patton, Procurement Analyst, General Services Administration, Regulations Branch (KMPR), Information Resources Management Service, Washington DC 20405, 202 566-0194

RIN: 3090-AC25

2979. ESTABLISHMENT OF POLICIES AND PROCEDURES FOR FEDERAL AGENCIES' MANAGEMENT OF ELECTRONIC RECORDKEEPING, PROJECT 86.83A

Legal Authority: 40 USC 486(f); 40 USC 751(f)

CFR Citation: 41 CFR 201-22; 41 CFR 201-34; 41 CFR 201-45

Legal Deadline: None.

Abstract: This project establishes a new Subpart 201-45.2 in the FIRMR to establish governmentwide policies and procedures for the management of electronic recordkeeping. Specifically responsibilities for the creation, maintenance, use, and disposition of electronic records will be prescribed.

Timetable:

Action	Date	FR Cite
NPRM	06/00/88	
NPRM Comment Period End	08/00/88	

Small Entity: No

Government Levels Affected: Federal

Agency Contact: Carolyn A. Thomas, Program Analyst, General Services Administration, Regulations Branch (KMPR), Information Resources Management Service, Washington, DC 20405, 202 566-0194

RIN: 3090-AC54

2980. ● OFFICE EQUIPMENT ACCESSIBILITY FOR THE HANDICAPPED

Significance: Regulatory Program

Legal Authority: 40 USC 486(c); 40 USC 751(f)

CFR Citation: 41 CFR 201

Legal Deadline: Statutory, September 30, 1988.

Abstract: The Rehabilitation Act of 1973, as amended (P.L. 99-506), directs GSA to adopt Governmentwide guidelines on electronic equipment accessibility. GSA will issue a nonmandatory FIRMR bulletin describing procedures agencies should follow in acquiring equipment for employees with disabilities and the types of equipment or strategies that can be used to make this technology more useable by disabled employees. This project will result in regulatory changes to the FIRMR to reflect special procedures managers must follow to ensure equipment accessibility for the disabled.

Timetable:

Action	Date	FR Cite
NPRM	04/00/88	
NPRM Comment Period End	05/00/88	
Final Action	09/00/88	

Small Entity: No

Agency Contact: Phillip R. Patton, Procurement Analyst, General Services Administration, GSA, IRMS/KMPR, Washington, D.C. 20405, 202 566-0194

RIN: 3090-AD02

GSA — Proposed Rule Stage

2981. ● IMPLEMENTATION OF TITLE VIII, PAPERWORK REDUCTION REAUTHORIZATION ACT OF 1986, P.L. 99-500 REGARDING AUTOMATIC DATA PROCESSING EQUIPMENT

Significance: Regulatory Program

Legal Authority: 40 USC 486(c); 40 USC 751(f)

CFR Citation: 41 CFR 201-1; 41 CFR 201-2; 41 CFR 201-23; 41 CFR 201-24

Legal Deadline: None.

Abstract: This regulation implements certain selected portions of the Paperwork Reduction Reauthorization Act of 1986. Among the other changes, it clarifies the applicability of the FIRMR to the management acquisition, and use of various information resources by Federal agencies. The amendment prescribes FIRMR policies and procedures for use in determining whether any particular procurement must be conducted under GSA's exclusive procurement authority. It also streamlines the Delegations Program by establishing uniform procedures, uniform blanket delegations of procurement authority, Agency Procurement Requests for all ADP and telecommunications resources.

Timetable:

Action	Date	FR Cite
NPRM	04/00/88	
NPRM Comment Period End	06/00/88	
Final Action	09/00/88	

Small Entity: No

Agency Contact: Phillip R. Patton, Procurement Analyst, General Services Administration, GSA, IRMS/KMPR, Washington, D.C. 20405, 202 566-0194

RIN: 3090-AD03

OFFICE OF ORGANIZATION AND PERSONNEL

2982. ENFORCEMENT OF NONDISCRIMINATION ON THE BASIS OF HANDICAP IN FEDERALLY CONDUCTED PROGRAMS

Legal Authority: PL 95-602, Sec 119

CFR Citation: 41 CFR 105-8

Legal Deadline: None.

Abstract: The General Services Administration proposes this regulation to implement the above cited laws. These statutes prohibit discrimination on the basis of handicap as it applies to any programs or activities conducted by GSA.

Timetable:

Action	Date	FR Cite
Next Action Undetermined		

Small Entity: No

Additional Information: This proposed rule has been circulated internally and externally for comments. Comments have been received from the Equal Employment Opportunity Commission. We are still waiting for the Department of Justice's approval and comment on the regulation. Employment Opportunity Commission. The Department of Justice's comments on regulation with respect to GSA's role as the Federal Government landlord have been received. Comments regarding the program portion of the regulation have not been received. Comments regarding the program portion of the regulation were received on June 4, 1987 from the Department of Justice (DOJ). Reconciling of comments with Public Building Services and DOJ is presently occurring.

Government Levels Affected: Federal

Agency Contact: Thomas E. Henderson, Equal Employment Specialist (CTC), General Services Administration, General Services Administration, 18th and F Streets, NW, Washington, DC 20405, 202 566-1368

RIN: 3090-AC48

2983. NONDISCRIMINATION ON THE BASIS OF RACE, COLOR, NATIONAL ORIGIN, AND WHERE APPLICABLE, SEX

Legal Authority: 40 USC 476; 42 USC 2000d-1; 20 USC 1681

CFR Citation: 41 CFR 101-8.2

Legal Deadline: None.

Abstract: The General Services Administration proposes this regulation to implement all of the above cited Federal laws. These statutes prohibit discrimination, in whole or in part, so that no person in the United States shall on the grounds of race, color, national origin, or sex be excluded from participation in, be denied the benefits of, or be subject to discrimination under any program activity receiving Federal assistance from the General Services Administration. In addition, the objectives of the regulation are to streamline certain administrative procedural requirements by consolidating prohibitions of discrimination into one regulation and to make requirements clear and convenient for applicants and recipients to comply with, as well as making the regulation manageable for GSA to administer.

Timetable:

Action	Date	FR Cite
Next Action Undetermined		

Small Entity: No

Government Levels Affected: Federal

Agency Contact: Thomas E. Henderson, EEO Specialist, General Services Administration, General Services Administration, 18th and F Streets, NW, Washington, DC 20405, 202 566-1368

RIN: 3090-AC49

GENERAL SERVICES ADMINISTRATION (GSA) — Final Rule Stage

ACQUISITION POLICY

2984. SUPPLY SOURCES AND RELATED PROGRAMS

Legal Authority: 40 USC 486(c)

CFR Citation: 41 CFR 101-26

Legal Deadline: None.

Abstract: Part 101-26 prescribes policies and procedures for the procurement of personal property and nonpersonal services by Federal agencies from established Government supply sources. A number of executive agencies have indicated that this part needs to be revised to update, improve, clarify and streamline these regulations. GSA

officials and representatives from the major executive agencies are developing a draft revision of this part to meet their requirements more adequately.

Timetable:

Action	Date	FR Cite
Final Action	04/29/88	

Small Entity: No

Agency Contact: Robert A. Renner, Supply Systems Analyst, General Services Administration, Regulations and Policy Division (FFY), Washington, DC 20406, 703 557-1256

RIN: 3090-AA89

2985. GENERAL SERVICES ADMINISTRATION ACQUISITION REGULATION, CHANGE RECEIPT OF PROPOSALS AND QUOTATIONS

Legal Authority: 40 USC 486(c) Sec. 205(c), 63 Stat. 390

CFR Citation: 48 CFR 515; 48 CFR 552

Legal Deadline: None.

Abstract: GSA to issue a GSAR amendment which will (1) revise Section 515.411, Receipt of Proposals and Quotations, to require the use of the appropriate Business Service Center for receipt and safeguarding of proposals or quotations (except small purchases) unless an exemption is obtained; (2) amend Part 515 to establish a special Late Proposals provision for Multiple Award Federal Supply Schedules that will preclude an offeror from adding additional items to an offer after the time set for submission of offer; and (3) revise clause 552.210-78, Charges for Packaging and Packing.

Timetable:

Action	Date	FR Cite
NPRM	08/17/87	52 FR 30694

Next Action Undetermined

Small Entity: Not Applicable

Agency Contact: Margorie Ashby, Management Analyst Analyst, General Services Administration, GSA Acquistion Policy and Regulations, 18th & F Sts., NW Room 4026, Washington, DC 20405, 202 523-3822

RIN: 3090-AB83

2986. GENERAL SERVICES ADMINISTRATION ACQUISITION REGULATION CHANGE PART 501

Legal Authority: 40 USC 486(c) Sec. 205(c), 63 Stat. 390

CFR Citation: 48 CFR 501

Legal Deadline: None.

Abstract: To issue a GSAR amendment to implement the requirements of the Competition Enhancement Act of 1984 (Pub. L. 98-577) regarding publicizing proposed regulations in Part 501, General Services Administration Acquisition Regulations System.

Timetable:

Action	Date	FR Cite

Next Action Undetermined

Small Entity: Not Applicable

Agency Contact: Marjorie Ashby, Management Analyst, General Services Administration, GSA Acquisition Policy and Regulations, 18th & F Sts., NW Room 4027, Washington, DC 20405, 202 523-3822

RIN: 3090-AB86

2987. BUY AMERICAN ACT - CONSTRUCTION MATERIALS (GSAR 5-131)

Legal Authority: 40 USC 486(c)

CFR Citation: 48 CFR 525; 48 CFR 552

Legal Deadline: None.

Abstract: The General Services Administration Acquisition Regulation (GSAR) will be amended to add sections that will address the method of evaluation of offers based on the use of non-domestic construction materials in construction contracts.

Timetable:

Action	Date	FR Cite
NPRM	11/03/87	52 FR 42125

Next Action Undetermined

Small Entity: No

Government Levels Affected: Federal

Agency Contact: Marjorie Ashby, Management Analyst, General Services Administration, Washington, DC 20405, 202 523-3822

RIN: 3090-AC37

2988. FEDERAL PROCUREMENT DATA SYSTEM (FPDS) REPORTING REQUIREMENTS (GSAR 5-113)

Legal Authority: 40 USC 486(c)

CFR Citation: 48 CFR 504; 48 CFR 553

Legal Deadline: None.

Abstract: The General Services Administration Acquisition Regulation (GSAR) will be amended to incorporate the material currently in the Procurement Management Information System handbook into the regulation; the handbook provides guidance, procedures, and instructions on the preparation of various recurring procurement reporting requirements.The Federal Procurement Data System provides a comprehensive mechanism for assembling, organizing and presenting contract order, lease, schedule, and placement data for the Federal Government.

Timetable:

Action	Date	FR Cite

Next Action Undetermined

Small Entity: No

Government Levels Affected: Federal

Agency Contact: Marjorie Ashby, Management Analyst, General Services Administration, GSA Acquisition Policy and Regulations, 18th & F Streets, NW, Washington, DC 20405, 202 523-3822

RIN: 3090-AC56

2989. MULTIPLE AWARD SCHEDULE PROGRAM (GSAR 5-38A)

Legal Authority: 40 USC 486(c)

CFR Citation: 48 CFR 515; 48 CFR 538; 48 CFR 552

Legal Deadline: None.

Abstract: The General Services Administration Acquisition Regulation will be amended to revise Section 515.804-3 to add instructions on claiming and granting exemptions to the requirement for submission on cost or pricing data in the multiple award schedule (MAS) contracting process; to add Section 515.804-70 to provide the format of the discount schedule and marketing data sheets to be used in MAS solicitations; to add Part 538 to provide procedures on the GSA schedule contracting process; and to add Section 552.238-70 to provide text of the price reductions clause to be

used in certain MAS solicitations and contracts.

Timetable:

Action	Date	FR Cite
NPRM	09/12/86	51 FR 31344

Next Action Undetermined

Small Entity: No

Government Levels Affected: Federal

Agency Contact: Marjorie Ashby, Management Analyst, General Services Administration, GSA Acquisition Policy and Regulations, 18th & F Streets, NW, Washington, DC 20405, 202 523-3822

RIN: 3090-AC61

2990. ● GENERAL SERVICES ADMINISTRATION ACQUISITION REGULATION (GSAR) PROPOSED RULE, UTILITY CONTRACTS, GSAR CASE 5-65

Legal Authority: 40 USC 486(c)

CFR Citation: 48 CFR 508; 48 CFR 513

Legal Deadline: None.

Abstract: This proposed General Services Administration Acquisition Regulation will revise Part 508 to clarify the Federal Acquisition Regulation definition of utility services, to prescribe policies governing the acquisition of utility services, to prescribe procedures for precontract review for utility contracts, to provide for annual rate reviews, to provide for use of GSA forms for acquiring utility services; and to revise Part 553 to illustrate GSA Forms 1533, Utilities Contract; 1683, Negotiated Electric Utility Contract, and 1684, Technical Provisions (Electric Utility Contract).

Timetable:

Action	Date	FR Cite
NPRM	12/24/87	52 FR 48729
Final Action	04/01/88	

Small Entity: No

Government Levels Affected: Federal

Agency Contact: Marjorie Ashby, Management Analyst, General Services Administration, GSA, Off. of GSA Aquisition Policy and Regs., 18th & F Streets, NW 20405, Washington, D.C., 202 523-3822

RIN: 3090-AD10

2991. ● GENERAL SERVICES ADMINISTRATION ACQUISITION REGULATION (GSAR) ACQUISITION CIRCULAR, AC-87-4, INCREASE IN THRESHOLDS FOR CONTRACTING OFFICE WARRANT PROGRAM & IMPREST FUNDS TRANS

Legal Authority: 40 USC 486(c)

CFR Citation: 48 CFR 501; 48 CFR 513

Legal Deadline: None.

Abstract: This Acquisition Circular temporarily amends Parts 501 and 513 of the General Services Administration Acquisition Regulation (GSAR) to increase the threshold for purchases which require a contracting officer warrant and to increase the threshold for purchases paid through the imprest fund.

Timetable:

Action	Date	FR Cite
NPRM	01/05/88	53 FR 132

Next Action Undetermined

Small Entity: No

Government Levels Affected: Federal

Agency Contact: Marjorie Ashby, Management Analyst, General Services Administration, GSA, Off. of GSA Acquisition Policy & Regs., 18th & F Streets, NW, Washington, D.C. 20405, 202 523-3822

RIN: 3090-AD11

OFFICE OF THE COMPTROLLER

2992. REVISION OF PUBLIC VOUCHER FOR TRANSPORTATION CHARGES, STANDARD FORM 1113

Legal Authority: 31 USC 3726; 40 USC 486(c)

CFR Citation: 41 CFR 101-41

Legal Deadline: None.

Abstract: This rule revises Public Voucher for Transportation Charges, Standard Form 1113, to eliminate various information blocks because certain agency fiscal control numbers are no longer required. This change will reduce the amount of time agencies spend in processing these documents.

Timetable:

Action	Date	FR Cite
Final Action	04/01/88	

Small Entity: No

Agency Contact: Gracie Jones, Transportation Specialist, General Services Administration, Regulations and Procedures Section (FWCP/R), Washington, DC 20405, 202 786-3007

RIN: 3090-AB69

2993. AUDIT PROCEDURES FOR COMMERCIAL BILLS OF LADING-COST-REIMBURSEMENT-TYPE CONTRACTS

Legal Authority: 31 USC 3726; 40 USC 486 (c)

CFR Citation: 41 CFR 101-41

Legal Deadline: None.

Abstract: This rule requires contractors doing business with the United States Government to submit cost reimbursement-type contract commercial bills of lading to GSA for audit.

Timetable:

Action	Date	FR Cite
NPRM	07/05/85	50 FR 27625
Final Action	04/01/88	

Small Entity: No

Agency Contact: Carolyn F. West, Transportation Specialist, General Services Administration, FWCP, Washington, DC 20405, 202 786-3025

RIN: 3090-AC20

FEDERAL PROPERTY RESOURCES SERVICE

2994. NATIONAL DEFENSE STOCKPILE DISPOSAL REGULATIONS

Legal Authority: 50 USC 98; EO 12155

CFR Citation: 41 CFR 101-14.4

Legal Deadline: None.

Abstract: These regulations indicate the procedures for disposing of strategic and critical materials that are excess to National Defense Stockpile needs and have been authorized for disposal by Congress, pursuant to the Stock Piling Act of 1979 50 USC 98 et seq. These regulations will be responsive to public sector, intergovernment and intragovernment comments reflecting on the lack of published regulations governing GSA's stockpile disposal policies and procedures.

Timetable:

Action	Date	FR Cite
Final Action	06/30/88	

Small Entity: No

Public Compliance Cost: Initial Cost: $0; Yearly Recurring Cost: $0; Base Year for Dollar Estimates: 1983

Government Levels Affected: Federal

Agency Contact: J. Wayne Kulig, Assistant Commissioner, General Services Administration, Office of National Defense Stockpile (DN), Washington, DC 20405, 202 535-7671

RIN: 3090-AA40

2995. ● REPORTING OF EXCESS REAL PROPERTY - ASBESTOS

Legal Authority: 40 USC 483(b)

CFR Citation: 41 CFR 101-47.202-2

Legal Deadline: None.

Abstract: 41 CFR 101-47.202-2 is to be amended to require that specific information concerning asbestos contamination be included in all reports of excess real property.

Timetable:

Action	Date	FR Cite
Next Action Undetermined		

Small Entity: Undetermined

Agency Contact: Marjorie L. Lomax, Director, Policy and Planning Division (DRP), General Services Administration, 18th & F Streets, NW, Washington, D.C. 20405, 202 535-7052

RIN: 3090-AD05

FEDERAL SUPPLY AND SERVICES

2996. DONATION OF PERSONAL PROPERTY

Legal Authority: 40 USC 486(c)

CFR Citation: 41 CFR 101-44.000; 41 CFR 101-44.001; 41 CFR 101-44.105; 41 CFR 101-44.106; 41 CFR 101-44.108; 41 CFR 101-44.112; 41 CFR 101-44.118; 41 CFR 101-44.120; 41 CFR 101-44.200; 41 CFR 101-44.204; 41 CFR 101-44.205; 41 CFR 101-44.207; 41 CFR 101-44.208; 41 CFR 101-44.4701; 41 CFR 101-44.4901-123; ...

Legal Deadline: None.

Abstract: This rule updates GSA's policies and procedures concerning the Federal surplus personal property donation program. It would: (1) prescribe new and revised definitions; (2) implement Title IX of the Education Amendments of 1972; (3) change procedures for donating aircraft, drugs, biologicals, and reagents; (4) clarify cannibalization procedures; (5) add additional terms to the State agency distribution documents; (6) clarify that conditional title, not unrestricted title, passes to a donee at the time it takes possession of the property; (7) prohibit reimbursement to State agencies for certain sales expenses; (8) change reporting requirements; and (9) revise eligibility criteria for educational activities. This amendment is necessary to comply with the provisions of Title IX of the Education Amendments of 1972, section 502(a) of Public Law 94-241, and the Congressional Reports Elimination Act of 1980 (Public Law 96-470). Its intent is to increase the efficiency and effectiveness of the donation program.

Timetable:

Action	Date	FR Cite
Next Action Undetermined		

Small Entity: No

Agency Contact: Stanley M. Duda, Director, General Services Administration, Property Management Division (FBP), Washington, DC 20406, 703 557-1240

RIN: 3090-AA23

2997. DONATION OF ABANDONED AND FORFEITED PERSONAL PROPERTY

Legal Authority: 26 USC 5688(a)

CFR Citation: 41 CFR 101-48.2

Legal Deadline: None.

Abstract: This rule would emphasize that all forfeited distilled spirits, wine, or malt beverages donated to eleemosynary institutions are to be used only by their inpatients for medicinal purposes. Allegations of misuse of these donated spirits have created a need for this regulation.

Timetable:

Action	Date	FR Cite
Next Action Undetermined		

Small Entity: No

Agency Contact: Stanley M. Duda, Director, General Services Administration, Property Management Division (FBP), Washington, DC 20406, 703 557-1240

RIN: 3090-AA24

2998. ACQUISITION AND USE OF EXCESS PERSONAL PROPERTY

Legal Authority: 40 USC 486(c)

CFR Citation: 41 CFR 101-43

Legal Deadline: None.

Abstract: A number of miscellaneous changes will be made to clarify procedures for the acquisition and use of excess personal property by federal agencies and other authorized recipients.

Timetable:

Action	Date	FR Cite
Final Action	06/01/88	

Small Entity: No

Agency Contact: Mr. Stanley M. Duda, Director, General Services Administration, Property Management Division (FBP), Washington, DC 20406, 703 557-1240

RIN: 3090-AA30

2999. UTILIZATION, DONATION, SALE, ABANDONMENT OR DESTRUCTION OF HAZARDOUS MATERIALS

Legal Authority: 40 USC 486(c)

CFR Citation: 41 CFR 101-43; 41 CFR 101-44; 41 CFR 101-45; 41 CFR 101-46; 41 CFR 101-48; 41 CFR 101-49

Legal Deadline: None.

Abstract: Revisions and additions to existing rules are proposed to establish a separate regulatory section concerning the utilization, donation, sale, abandonment or destruction of hazardous materials.

Timetable:

Action	Date	FR Cite
Next Action Undetermined		

Small Entity: No

Additional Information: Proposals are to be circulated among Federal agencies on an information basis before rulemaking consideration.

Agency Contact: Mr. Stanley M. Duda, Director, General Services Administration, Property Management

GSA **Final Rule Stage**

Division (FBP), Washington, DC 20406, 703 557-1240

RIN: 3090-AA42

3000. CHANGE TO FEDERAL TRAVEL REGULATIONS (FTR), FPMR 101-7, SUPPLEMENT (UNASSIGNED)

Legal Authority: 5 USC 5724(b)

CFR Citation: 41 CFR 101-7

Legal Deadline: None.

Abstract: FTR change transmitted by GSA Bulletin FPMR A-40, Supplement (Unassigned). FTR change implements new tables for determining the Federal and State marginal tax rate for use in calculating the relocation income tax allowance covering relocation expense reimbursements received during the 1987 tax year.

Timetable:

Action	Date	FR Cite
Final Action	04/00/88	

Small Entity: No

Agency Contact: Audrey E. Rish, Supervisory Traffic Management Specialist, General Services Administration, Regulations and Policy Division (FFY), Washington, DC 20406, 703 557-1253

RIN: 3090-AC93

3001. ● REMOVAL OF THE FEDERAL TRAVEL REGULATIONS FROM THE FEDERAL PROPERTY MANAGEMENT REGULATIONS SYSTEM

Legal Authority: 40 USC 486(c)

CFR Citation: 41 CFR 101-7

Legal Deadline: None.

Abstract: This final rule will remove the Federal Travel Regulations (FTR) from the Federal Property Management Regulations (FPMR) system. This action is necessary in order to establish the FTR as a separate regulatory system. The change should provide a more appropriate means for promulgating travel policies and procedures affecting Federal employees.

Timetable:

Action	Date	FR Cite
Next Action Undetermined		

Small Entity: No

Government Levels Affected: Federal

Agency Contact: Ray Holmes, Supply Systems Analyst, General Services Administration, Crystal Mall Bldg #4, 202 557-7525

RIN: 3090-AD19

GENERAL SERVICES ADMINISTRATION (GSA) — Completed Actions

3002. GENERAL SERVICES ADMINISTRATION ACQUISITION REGULATION; SUBCONTRACTING PLAN REPORTING REQUIREMENTS; CHANGE 48

CFR Citation: 48 CFR 519

Completed:

Reason	Date	FR Cite
Final Action	09/02/87	52 FR 34387
Final Action Effective	09/02/87	52 FR 34387

Small Entity: Not Applicable

Agency Contact: Marjorie Ashby 202 523-3822

RIN: 3090-AB76

3003. ● GENERAL SERVICES ADMINISTRATION ACQUISITION REGULATION (GSAR), ACQUISITION CIRCULAR, AC-87-3, MONITORING CONTRACTOR COMPLIANCE WITH SUBCONTRACTING PLANS

Legal Authority: 40 USC 486(c)

CFR Citation: 48 CFR 519

Legal Deadline: None.

Abstract: This Acquisition Circular temporarily amends Part 519 of the General Services Administration Acquisition Regulation (GSAR), to provide uniform procedures for monitoring contractor compliance with subcontracting plans and for reporting actions under section 211 of Pub L. 95-507.

Timetable:

Action	Date	FR Cite
Final Action	12/16/87	52 FR 47396
Final Action Effective	12/16/87	52 FR 47396

Small Entity: No

Government Levels Affected: Federal

Agency Contact: Marjorie Ashby, Management Analyst, General Services Administration, GSA, Office of Acquisition Policy, 18th & F Streets, Washington, D.C. 20405, 202 523-3822

RIN: 3090-AD06

3004. ● GENERAL SERVICES ADMINISTRATION ACQUISITION REGULATION (GSAR), CHANGE 47, IMPLEMENTING FAC 84-25

Legal Authority: 40 USC 486 (c)

CFR Citation: 48 CFR 507; 48 CFR 508; 48 CFR 552; 48 CFR 553

Legal Deadline: None.

Abstract: The General Services Administration Acquisition Regulation was amended to revise Part 507 to clarify the requirement for use of the Report of Employment Under Commercial Activities clause at 552.207-70 and to modify the reference to a GSA order on the implementation of OMB Circular A-76 Productivity Improvement Program; to revise Part 508 to identify the central printing authority for the General Services Administration (GSA) and to delete section 508.870; to revise section 552.203-70 to modify Alternate II; to revise section 552.207-70 to delete material in the introductory paragraph that repeats the prescriptive language in Part 507; to revise section 553.270-1 to permit modification of the GSA Form 3503, Representations and Certifications, pending a revision to the form, and to revise section 553.270-2 to permit modification of the GSA Forms 3501, Solicitation Provisions (Sealed Bid), and 3502, Solicitation Provisions (Negotiated), pending a revision to the forms.

Timetable:

Action	Date	FR Cite
Final Action	07/01/87	52 FR 28827
Final Action Effective	07/01/87	52 FR 28827

Small Entity: No

Government Levels Affected: Federal

Agency Contact: Marjorie Ashby, Management Analyst, General Services

Administration, GSA, Off. of Acquisition Policy & Regs., 18th & F Streets, NW, Washington, D.C. 20405, 202 523-3822

RIN: 3090-AD07

3005. ● GENERAL SERVICES ADMINISTRATION ACQUISITION REGULATION (GSAR) CHANGE 49, PROMPT PAYMENT DISCOUNTS

Legal Authority: 40 USC 486(c)

CFR Citation: 49 CFR 532; 49 CFR 552

Legal Deadline: None.

Abstract: The General Services Administration Acquisition Regulation was amended to revise sections 532.111(a)(1) and 552.232-8(g) to delete the words "beginning with" and to subordinate the word "from."

Timetable:

Action	Date	FR Cite
Final Action	12/24/87	52 FR 47005
Final Action Effective	12/24/87	52 FR 47005

Small Entity: No

Government Levels Affected: Federal

Agency Contact: Marjorie Ashby, Management Analyst, General Services Administration, GSA, Off. of Acquisition Policy & Regs., 18th & F Streets, NW, Washington, D.C. 20405, 202 523-3822

RIN: 3090-AD06

3006. ● GENERAL SERVICES ADMINISTRATION ACQUISITION REGULATION (GSAR) CHANGE 50, REVISION OF GSA FORM 300

Legal Authority: 40 USC 486(c)

CFR Citation: 48 CFR 553

Legal Deadline: None.

Abstract: The General Services Administration Acquisition Regulation was amended to revise section 553.272(a) to provide for the use of GSA Form 300, Order for Supplies and Services, the GSA Form 300-1, Order for Supplies and Services (pin-feed format), and the GSA Form 300-A(1), Order for Supplies and Services (Continuation) (pin-feed format); to revise section 553.273(a) to provide for the use of the pin-feed format of GSA Form 3025A, Receiving Report; to revise section 553.370-300 to illustrate the latest version of the GSA Form 300, Order for Supplies and Services; to revise section 553.370-300I to provide instructions for completion of the latest revision of GSA Form 300, Order for Supplies and Services, and to revise section 553.370-527 to illustrate the latest version of the GSA Form 527, Contractor's Qualifications and Financial Information.

Timetable:

Action	Date	FR Cite
Final Action	12/24/87	52 FR 47006
Final Action Effective	12/24/87	52 FR 47006

Small Entity: No

Government Levels Affected: Federal

Agency Contact: Marjorie Ashby, Management Analyst, General Services Administration, GSA, Off. of GSA Acquisition Policy & Regs., 18th & F Streets, NW, Washington, D.C. 20405, 202 523-3822

RIN: 3090-AD09

3007. REPORTING OF EXCESS REAL PROPERTY - PCB

CFR Citation: 41 CFR 101-47.202-2(b); 40 CFR 761; 41 CFR 101-47.202-2

Completed:

Reason	Date	FR Cite
Final Action	12/08/87	52 FR 46467
Final Action Effective	12/08/87	52 FR 46467

Small Entity: Undetermined

Agency Contact: Marjorie L. Lomax 202 535-7052

RIN: 3090-AC90

3008. UTILIZATION AND DISPOSAL OF PERSONAL PROPERTY

CFR Citation: 41 CFR 101-42; 41 CFR 101-43; 41 CFR 101-44; 41 CFR 101-45; 41 CFR 101-46; 41 CFR 101-48

Completed:

Reason	Date	FR Cite
Final Action	04/01/88	

Small Entity: No

Agency Contact: Stanley M. Duda 202 557-0807

RIN: 3090-AA45

3009. FEDERAL TRAVEL REGULATIONS (FTR), FPMR 101-7, SUPPLEMENT 26

CFR Citation: 41 CFR 101-7

Completed:

Reason	Date	FR Cite
Final Action	12/21/87	52 FR 48325
Final Action Effective	10/01/87	52 FR 48325

Small Entity: No

Agency Contact: Audrey E. Rish 703 557-1253

RIN: 3090-AC24

3010. USE OF CASH FOR OFFICIAL TRAVEL (TEMPORARY REGULATION)

CFR Citation: 41 CFR 101

Completed:

Reason	Date	FR Cite
Final Action	09/30/87	52 FR 36572
Final Action Effective	09/30/87	52 FR 36572

Small Entity: No

Agency Contact: Betty J. Brown 202 786-3011

RIN: 3090-AC91

3011. UPDATE OF GOVERNMENTWIDE POLICIES AND REGULATIONS REGARDING FEDERAL EMPLOYEE USE OF GOVERNMENT TELEPHONE SYSTEMS (87.14A)

Significance: Regulatory Program

CFR Citation: 41 CFR 201-38

Completed:

Reason	Date	FR Cite
Final Action	11/04/87	52 FR 42292
Final Action Effective	01/04/88	52 FR 42292

Small Entity: No

Agency Contact: Roger W. Walker 202 566-0194

RIN: 3090-AC75

3012. INTERIM IMPLEMENTATION OF PUB. L. 99-500 TITLE VIII BROOKS ACT AMENDMENT-EXTENSION OF TEMPORARY REGULATION

Significance: Agency Priority

CFR Citation: 41 CFR 201-1; 41 CFR 201-2; 41 CFR 201-23; 41 CFR 201-24

Completed:

Reason	Date	FR Cite
Final Action	12/08/87	52 FR 46468
Final Action Effective	12/23/87	52 FR 46468

GSA

Completed Actions

Small Entity: No

Agency Contact: William Loy 202 566-0194

RIN: 3090-AD01

3013. FEDERAL ADVISORY COMMITTEE MANAGEMENT

Significance: Regulatory Program

CFR Citation: 41 CFR 101-6.10

Completed:

Reason	Date	FR Cite
Final Action	12/02/87	52 FR 45926
Final Action Effective	12/02/87	52 FR 45926

Small Entity: No

Agency Contact: Charles F. Howton 202 523-4884

RIN: 3090-AA62

[FR Doc. 88-5091 Filed 04-22-88; 8:45 am]

BILLING CODE 6820-61-T

VOL
53
ISS
79
PT
2
AP
25
1988
UMI

federal register

Monday
April 25, 1988

Part XXV

Merit Systems Protection Board

Semiannual Regulatory Agenda

BEST COPY AVAILABLE

MERIT SYSTEMS PROTECTION BOARD (MSPB)

MERIT SYSTEMS PROTECTION BOARD

5 CFR Ch. II

Regulatory Agenda

AGENCY: Merit Systems Protection Board.

ACTION: Semiannual agenda of regulations.

SUMMARY: The following Merit Systems Protection Board (MSPB) regulations are scheduled for review or development from April 1988 through March 1989. They are submitted herein for publication in the Unified Agenda of Federal Regulations, E.O. 12291. Regulatory action may not be limited to the items listed.

FOR FURTHER INFORMATION CONTACT: Paul D. Mahoney, Assistant to the Executive Director for Management, (202) 653-8900.

Dated: February 9, 1988.

Merit Systems Protection Board.

Daniel R. Levinson,

Chairman.

MERIT SYSTEMS PROTECTION BOARD (MSPB) — Prerule Stage

3014. PART 1206 OPEN MEETINGS

Legal Authority: 5 USC 552b Government in the Sunshine Act

CFR Citation: 5 CFR 1206

Legal Deadline: None.

Abstract: Pursuant to 5 U.S.C. 552b, the Board is required to promulgate regulations, pursuant to notice and receipt of public comment, establishing procedures by which it will conduct open meetings. Such regulations were issued in 44 FR 43448, July 24, 1979. The Board proposes to review these regulations to ensure that they are easily understood by all persons. If indicated by the review, the Board plans to publish these regulations in "plain English."

Timetable:

Action	Date	FR Cite
Begin Review	10/00/87	
End Review	10/00/88	
Final Action	01/00/89	

Small Entity: No

Agency Contact: Michael H. Hoxie, Director, Information Services Division, Merit Systems Protection Board, 1120 Vermont Ave., NW, Washington, DC 20419, 202 653-7200

RIN: 3124-AA06

3015. PART 1203 - HEARING PROCEDURES FOR ORIGINAL JURISDICTION CASES

Legal Authority: 5 USC 1205(a)(4); 5 USC 1205(e); 5 USC 1205(g)

CFR Citation: 5 CFR 1203.1 to 1203.18

Legal Deadline: None.

Abstract: The Board proposes to review the regulations in this Part to ensure that these regulations are easily understood by all persons. If indicated by the review, the Board plans to republish these regulations in "plain English."

Timetable:

Action	Date	FR Cite
Begin Review	10/00/87	
End Review	10/00/88	
Publish regulations in "plain English"	01/00/89	

Small Entity: No

Public Compliance Cost: Initial Cost: $0; Yearly Recurring Cost: $0

Affected Sectors: None

Government Levels Affected: Federal

Agency Contact: Paul D. Mahoney, Assistant to the Executive Director for Management, Merit Systems Protection Board, 1120 Vermont Avenue, NW, Washington, DC 20419, 202 653-8900

RIN: 3124-AA07

3016. PART 1204 - FREEDOM OF INFORMATION ACT

Legal Authority: 5 USC 552

CFR Citation: 5 CFR 1204.1 to 1204.22

Legal Deadline: None.

Abstract: The Board issued interim final regulations in 52 FR 28123, July 28, 1987. The interim regulations became final regulations on December 1, 1987, in 52 FR 45597. The Board proposes to monitor these regulations carefully to ensure that they are easily understood. If indicated by the review, the Board plans to rewrite them in "plain English."

Timetable:

Action	Date	FR Cite
Begin Review	08/00/87	
End Review	10/00/88	
Republish in "plain English"	01/00/89	

Small Entity: No

Public Compliance Cost: Initial Cost: $0; Yearly Recurring Cost: $0

Affected Sectors: None

Government Levels Affected: Federal

Agency Contact: Michael H. Hoxie, Director, Information Services Division, Merit Systems Protection Board, 1120 Vermont Avenue, NW, Washington, DC 20419, 202 653-7200

RIN: 3124-AA08

3017. ENFORCEMENT OF NONDISCRIMINATION ON THE BASIS OF HANDICAP IN PROGRAMS CONDUCTED BY THE MERIT SYSTEMS PROTECTION BOARD

Legal Authority: 29 USC 791

CFR Citation: 5 CFR 1207.1 to 1207.99

Legal Deadline: None.

Abstract: The Board issued proposed regulations in 52 FR 25123, July 2, 1987, and expects to issue final or interim final regulations during July 1988. The Board proposes to monitor these regulations and immediately begin a new review to ensure that these regulations are easily understood by all persons. If indicated by the review, the Board plans to rewrite them in "plain English."

MSPB **Prerule Stage**

Timetable:

Action	Date	FR Cite
Begin Review	10/00/87	
End Review	10/00/88	
Publish Regulations in "plain English"	01/00/89	

Small Entity: No

Public Compliance Cost: Initial Cost: $0; Yearly Recurring Cost: $0

Affected Sectors: None

Government Levels Affected: Federal

Agency Contact: Sara B. Rearden, Acting Director, Equal Employment Division, Merit Systems Protection Board, 1120 Vermont Avenue, NW, Washington, DC 20419, 202 653-6180

RIN: 3124-AA09

3018. PART 1201 - PRACTICES AND PROCEDURES

Legal Authority: 5 USC 1205; 5 USC 7701

CFR Citation: 5 CFR 1201.1 to 1201.199

Legal Deadline: None.

Abstract: The Board proposes to review the regulations in this Part to ensure that these regulations are easily understood by all persons appearing before the Board. If indicated by the review, the Board plans to republish these regulations in "plain English."

Timetable:

Action	Date	FR Cite
Begin Review	10/00/87	
End Review	10/00/88	
Publish Regulations in "plain English"	01/00/89	

Small Entity: No

Public Compliance Cost: Initial Cost: $0; Yearly Recurring Cost: $0

Affected Sectors: None

Government Levels Affected: Federal

Agency Contact: Paul D. Mahoney, Assistant to the Executive Director for Management, Merit Systems Protection Board, 1120 Vermont Avenue, NW, Washington, DC 20419, 202 653-8900

RIN: 3124-AA10

MERIT SYSTEMS PROTECTION BOARD (MSPB) — Final Rule Stage

3019. ENFORCEMENT OF NONDISCRIMINATION ON THE BASIS OF HANDICAP IN PROGRAMS CONDUCTED BY THE MERIT SYSTEMS PROTECTION BOARD

Legal Authority: 29 USC 791

CFR Citation: 5 CFR 1207.1 to 1207.99, (New)

Legal Deadline: None.

Abstract: To effectuate Section 119 of the Rehabilitation, Comprehensive Services, and Developmental Disabilities Amendments of 1978, amending Section 504 of P.L. 95-602.

Timetable:

Action	Date	FR Cite
NPRM	07/02/87	52 FR 25123
NPRM Comment Period End	08/31/87	52 FR 25123
Final Action	07/00/88	
Final Action Effective	07/00/88	

Small Entity: No

Public Compliance Cost: Initial Cost: $0; Yearly Recurring Cost: $0

Affected Sectors: None

Government Levels Affected: Federal

Agency Contact: Sara B. Rearden, Acting Director, Equal Employment Division, Merit Systems Protection Board, 1120 Vermont Avenue, NW, Washington, DC 20419, 202 653-6180

RIN: 3124-AA01

3020. PART 1200 - BOARD ORGANIZATION

Legal Authority: 5 USC 552 Public Information; 5 USC 1205(g) and (i) Authority

CFR Citation: 5 CFR 1200

Legal Deadline: None.

Abstract: Pursuant to 5 U.S.C. 552, the Board provides the public current information regarding the Board's organization and a statement of functions assigned to each organizational unit. Certain title changes and other realignments are planned (or are in process) since January 27, 1986 when the Board's organization was published last (51 FR 3321).

Timetable:

Action	Date	FR Cite
Final Action	05/00/88	
Final Action Effective	05/00/88	

Small Entity: No

Government Levels Affected: Federal

Agency Contact: Paul D. Mahoney, Assistant to the Executive Director for Management, Merit Systems Protection Board, 1120 Vermont Avenue, NW, Washington, DC 20419, 202 653-8900

RIN: 3124-AA04

3021. PART 1205 - PRIVACY ACT

Legal Authority: 5 USC 552a Privacy Act

CFR Citation: 5 CFR 1205

Legal Deadline: None.

Abstract: Pursuant to 5 USC 552a(f), the Board is required to promulgate regulations pursuant to notice and receipt of public comment establishing procedures for responding to individual requests for access to records covered by the Privacy Act; for the amendment of records covered by the Act and for appeals of adverse rulings on such requests; and for fees to be charged for copying requested records. Such regulations were issued in 44 FR 43448, July 24, 1979. The Board proposes to review these regulations to ensure that they are easily understood by all persons. If indicated by the review, the Board plans to publish these regulations in "plain English."

Timetable:

Action	Date	FR Cite
Begin Review	09/00/87	
Final Action	01/00/89	
End Review	10/00/89	

Small Entity: No

MSPB **Final Rule Stage**

Agency Contact: Michael H. Hoxie, Director, Information Services Division, Merit Systems Protection Board, 1120 Vermont Ave., NW, Washington, DC 20419, 202 653-7200

RIN: 3124-AA05

MERIT SYSTEMS PROTECTION BOARD (MSPB) — Completed Actions

3022. ● PART 1201 – PRACTICES AND PROCEDURES

Legal Authority: 5 USC 1205; 5 USC 7701

CFR Citation: 5 CFR 1201.21; 5 CFR 1201.24; 5 CFR 1201.25; 5 CFR 1201.200 to 1201.222

Legal Deadline: None.

Abstract: The Board amended its rules of practice and procedures by eliminating subpart H-Voluntary Expedited Appeals Procedure (VEAP) as a separate alternative for adjudicating Federal employee appeals of personnel actions.

Timetable:

Action	Date	FR Cite
Review Completed	12/15/87	52 FR 47547
Final Action	12/15/87	52 FR 47547
Final Action Effective	12/15/87	52 FR 47547

Small Entity: No

Public Compliance Cost: Initial Cost: $0; Yearly Recurring Cost: $0

Government Levels Affected: Federal

Agency Contact: Paul D. Mahoney, Assistant to the Executive Director for Management, Merit Systems Protection Board, 1120 Vermont Avenue, NW, Washington, DC 20419, 202 653-8900

RIN: 3124-AA11

[FR Doc. 88-5092 Filed 04-22-88; 8:45 am]

BILLING CODE 7400-01-T

VOL 53 ISS 79 PT 2 APR 25 1988 UMI

federal register

Monday
April 25, 1988

Part XXVI

National Aeronautics and Space Administration

Semiannual Regulatory Agenda

NATIONAL AERONAUTICS AND SPACE ADMINISTRATION (NASA)

NATIONAL AERONAUTICS AND SPACE ADMINISTRATION

14 CFR Ch. V

Regulatory Agenda

AGENCY: National Aeronautics and Space Administration.

ACTION: Regulatory agenda.

SUMMARY: This regulatory agenda describes the proposed regulations being considered for development or amendment by NASA, the need and legal basis for the actions being considered, the name and telephone number of a knowledgeable official, whether a regulatory analysis is required, and the status of regulations previously reported.

ADDRESS: Director, General Management Division (Code NPN), Office of Management, NASA Headquarters, Washington, DC 20546.

FOR FURTHER INFORMATION CONTACT: Margaret M. Herring, 202/453-2922.

SUPPLEMENTARY INFORMATION: OMB Bulletin No. 88-1, "Regulatory Program of the United States Government (April 1, 1988 - March 31, 1989) and Unified Agenda of Federal Regulations for April 1988," Executive Order 12291, "Federal Regulation," and NASA Management Instruction 1410.10E, "Federal Register: Delegation of Authority and Requirements for Publication of NASA Documents," require a regulatory agenda of proposed regulations under development and review be published in the **Federal Register** each April and October.

John F. Duggan,

Director, General Management Division.

Proposed Rule Stage

Sequence Number	Title	Regulation Identifier Number
3023	General Provisions Regarding Flight of Reimbursable Payloads Aboard the Space Shuttle	2700-AA14
3024	Space Transportation System; Mementos Aboard Space Shuttle Flights	2700-AA18
3025	Space Transportation System; Nonscientific Payloads	2700-AA19
3026	Major System Acquisitions	2700-AA38
3027	Source Evaluation Board Manual	2700-AA39
3028	Space Transportation System; Reimbursement for Shuttle Services Provided to Non-U.S. Government Users; Reimbursement for Shuttle Services Provided to Civil U.S. Government Users and Foreign Etc	2700-AA45
3029	Delegation of Authority of Certain Civil Rights Functions to the Department of Health, Education, and Welfare	2700-AA47
3030	Payload Specialists for NASA or NASA Related Payloads	2700-AA52
3031	Extraterrestrial Exposure	2700-AA53
3032	Policy Concerning Data Obtained from Space Science Flight Investigations	2700-AA54
3033	Broad Agency Announcements	2700-AA65
3034	Nondiscrimination on the Basis of Sex in Education Programs and Activities Receiving or Benefiting from Assistance by NASA	2700-AA69
3035	Freedom of Information Act Submitter Notice	2700-AA74
3036	National Space Grant College and Fellowship Program	2700-AA75
3037	Policy On The Protection Of Human Subjects	2700-AA76

Final Rule Stage

Sequence Number	Title	Regulation Identifier Number
3038	Space Transportation System; Insurance and Indemnification of NASA Space Vehicle Users	2700-AA00
3039	Space Transportation System; Reimbursement for Spacelab Services	2700-AA01
3040	Tracking and Data Relay Satellite System (TDRSS); Use and Reimbursement Policy for Non-U.S. Government Users	2700-AA29
3041	Emergency Personnel Security Adjudication and Procedures	2700-AA31
3042	Uniform Relocation Assistance and Real Property Acquisition for Federal and Federally-Assisted Programs	2700-AA32
3043	Nondiscrimination in Federally-Assisted Programs of NASA	2700-AA50
3044	Duty-Free Entry of Space Articles	2700-AA62

Completed Actions

Sequence Number	Title	Regulation Identifier Number
3045	Patent Waiver Regulations	2700-AA10
3046	NASA Seal, Insignia, Logotype Insignia, Program and Astronaut Badges, and Flags	2700-AA15
3047	Data and Copyrights	2700-AA40

NASA

Completed Actions—Continued

Sequence Number	Title	Regulation Identifier Number
3048	Availability of Agency Records to Members of the Public	2700-AA42
3049	Release of Information to News and Information Media	2700-AA58
3050	Environmental Quality; Floodplain and Wetlands Management	2700-AA70
3051	Implementation of the Program Fraud Civil Remedies Act of 1986	2700-AA71
3052	Delegation of Authority--To Take Statutory Action for "Liquidated Damage" Assessment Under the Contract Work Hours and Safety Standards Act, and Associated Labor Statute Actions	2700-AA73

NATIONAL AERONAUTICS AND SPACE ADMINISTRATION (NASA) — Proposed Rule Stage

3023. GENERAL PROVISIONS REGARDING FLIGHT OF REIMBURSABLE PAYLOADS ABOARD THE SPACE SHUTTLE

Legal Authority: 42 USC 2473

CFR Citation: 14 CFR 1214, Subpart 1

Legal Deadline: None.

Abstract: Sets forth the general provisions regarding flight of reimbursable payloads aboard the NASA Space Shuttle. Incorporates pricing principles for the Second Phase of STS operations.

Timetable:

Action	Date	FR Cite
NPRM	10/00/88	

Small Entity: No

Additional Information: RIN = 2700-AA13 merged with RIN = 2700-AA14.

Agency Contact: Lowell E. Primm, Office of Space Flight, Code MC, National Aeronautics and Space Administration, NASA Headquarters, Washington, DC 20546, 202 453-2536

RIN: 2700-AA14

3024. ● SPACE TRANSPORTATION SYSTEM; MEMENTOS ABOARD SPACE SHUTTLE FLIGHTS

Legal Authority: 42 USC 2473

CFR Citation: 14 CFR 1214, Subpart 1214.6

Legal Deadline: None.

Abstract: Clarifies policy on carrying mementos aboard Space Shuttle flights and use of both official flight kits and personal preference kits.

Timetable:

Action	Date	FR Cite
NPRM	06/30/88	

Small Entity: No

Agency Contact: Lynn A. Marra, Office of External Relations, Code XM, National Aeronautics and Space Administration, NASA Headquarters, Washington, DC 20546, 202 453-8335

RIN: 2700-AA18

3025. ● SPACE TRANSPORTATION SYSTEM; NONSCIENTIFIC PAYLOADS

Legal Authority: 42 USC 2473

CFR Citation: 14 CFR 1214 "Subpart 16"

Legal Deadline: None.

Abstract: Sets forth the policy on the services provided by NASA for the launch of nonscientific payloads aboard the Space Shuttle.

Timetable:

Action	Date	FR Cite
NPRM	07/31/88	

Small Entity: No

Agency Contact: Kenneth Pedersen, Office of External Relations, Code X, National Aeronautics and Space Administration, NASA Headquarters, Washington, DC 20546, 202 453-8305

RIN: 2700-AA19

3026. MAJOR SYSTEM ACQUISITIONS

Legal Authority: 42 USC 2473(c)(1)

CFR Citation: 48 CFR 00

Legal Deadline: None.

Abstract: Revise and update procedures for major systems acquisition.

Timetable:

Action	Date	FR Cite
NPRM	09/00/88	

Small Entity: Not Applicable

Agency Contact: John E. Horvath, Office of Procurement, Code HS, National Aeronautics and Space Administration, NASA Headquarters, Washington, DC 20546, 202 453-2080

RIN: 2700-AA38

3027. SOURCE EVALUATION BOARD MANUAL

Legal Authority: 42 USC 2473(c)(1)

CFR Citation: 48 CFR 00

Legal Deadline: None.

Abstract: Revise and update procedures for conduct of Source Evaluation Boards.

Timetable:

Action	Date	FR Cite
NPRM	09/00/88	

Small Entity: Not Applicable

Agency Contact: Linda M. Williams, Office of Procurement, Code HS, National Aeronautics and Space Administration, NASA Headquarters, Washington, DC 20546, 202 453-8673

RIN: 2700-AA39

3028. SPACE TRANSPORTATION SYSTEM; REIMBURSEMENT FOR SHUTTLE SERVICES PROVIDED TO NON-U.S. GOVERNMENT USERS; REIMBURSEMENT FOR SHUTTLE SERVICES PROVIDED TO CIVIL U.S. GOVERNMENT USERS AND FOREIGN ETC

Legal Authority: PL 85-568, Sec 203; 72 Stat 429; 42 USC 2473; PL 87-624, Sec 201(b); 76 Stat 421; 47 USC 721(b)

CFR Citation: 14 CFR 1214, Subpart 1; 14 CFR 1214, Subpart 2

Legal Deadline: None.

Abstract: This revision will incorporate provisions for scheduled shared-flight retrieval service and for equitable charging for use of the downweight capability of the shuttle.

Timetable:

Action	Date	FR Cite
NPRM	09/00/88	

Small Entity: No

Additional Information: TITLE CONT: Users Who Have Made Substantial Investment in the STS Program

Agency Contact: Lowell E. Primm, Office of Space Flight, Code MC, National Aeronautics and Space Administration, NASA Headquarters, Washington, DC 20546, 202 453-2536

RIN: 2700-AA45

3029. DELEGATION OF AUTHORITY OF CERTAIN CIVIL RIGHTS FUNCTIONS TO THE DEPARTMENT OF HEALTH, EDUCATION, AND WELFARE

Legal Authority: 42 USC 2473(b)(1), (3), (5), (6), and (14); 14 CFR 1250.111(c)

CFR Citation: 14 CFR 1204.508

Legal Deadline: None.

Abstract: Amends existing NASA regulation to reflect changes in the Federal sector and to include new civil rights laws enacted since the original regulation was published.

Timetable:

Action	Date	FR Cite
NPRM	10/00/88	

Small Entity: No

Agency Contact: Lewin S. Warren, Office of Equal Opportunity Programs, Code U, National Aeronautics and Space Administration, NASA Headquarters, Washington, DC 20546, 202 453-2163

RIN: 2700-AA47

3030. PAYLOAD SPECIALISTS FOR NASA OR NASA RELATED PAYLOADS

Legal Authority: PL 85-568, Sec 203; 42 USC 2473 72 Stat 429 as amended; PL 87-624, Sec 201(b); 47 USC 721(b) 76 Stat 421

CFR Citation: 14 CFR 1214, Subpart 3

Legal Deadline: None.

Abstract: Revises existing regulation to reflect current practices.

Timetable:

Action	Date	FR Cite
NPRM	06/00/88	

Small Entity: No

Agency Contact: Robert A. Schmitz, Office of Space Science and Applications, Code EM, National Aeronautics and Space Administration, NASA Headquarters, Washington, DC 20546, 202 453-1703

RIN: 2700-AA52

3031. EXTRATERRESTRIAL EXPOSURE

Legal Authority: Secs 203, 304, 72 Stat 429, 433; 42 USC 2455; 42 USC 2456; 42 USC 2473; 18 USC 799

CFR Citation: 14 CFR 1211

Legal Deadline: None.

Abstract: Revision updates the existing regulation to conform to current agency practices.

Timetable:

Action	Date	FR Cite
NPRM	06/30/88	

Small Entity: No

Agency Contact: Stephan W. Fogleman, Office of Space Science and Applications, Code EB, National Aeronautics and Space Administration, NASA Headquarters, Washington, DC 20546, 202 453-1530

RIN: 2700-AA53

3032. POLICY CONCERNING DATA OBTAINED FROM SPACE SCIENCE FLIGHT INVESTIGATIONS

Legal Authority: 42 USC 2454

CFR Citation: 14 CFR 1205, Subpart 1

Legal Deadline: None.

Abstract: Amends regulation to reflect current agency practices.

Timetable:

Action	Date	FR Cite
NPRM	06/30/88	

Small Entity: No

Agency Contact: John F. Devlin, Office of Space Science and Applications, Code EPS, National Aeronautics and Space Administration, NASA Headquarters, Washington, DC 20546, 202 453-1630

RIN: 2700-AA54

3033. BROAD AGENCY ANNOUNCEMENTS

Legal Authority: 42 USC 2473(c)(1)

CFR Citation: 48 CFR 00

Legal Deadline: None.

Abstract: NASA implementation of announcements authorized at FAR Subpart 6.1.

Timetable:

Action	Date	FR Cite
NPRM	06/00/88	

Small Entity: No

Agency Contact: W. A. Greene, Office of Procurement, Code HP, National Aeronautics and Space Administration, NASA Headquarters, Washington, DC 20546, 202 453-8923

RIN: 2700-AA65

3034. NONDISCRIMINATION ON THE BASIS OF SEX IN EDUCATION PROGRAMS AND ACTIVITIES RECEIVING OR BENEFITING FROM ASSISTANCE BY NASA

Legal Authority: 20 USC 1681 et seq

CFR Citation: 14 CFR 1253

Legal Deadline: None.

Abstract: This regulation proposes to establish for NASA a set of rules prohibiting sex discrimination in educational programs or activities receiving financial assistance from NASA. Under authority provided by the Education Amendments of 1974, this regulation seeks to ensure that no person in the United States shall, on the basis of sex, be excluded from participation in, be denied benefit of, or otherwise be subject to discrimination under any program or activity receiving

NASA **Proposed Rule Stage**

Federal financial assistance from NASA.

Timetable:

Action	Date	FR Cite
NPRM	10/00/88	

Small Entity: No

Agency Contact: Lewin S. Warren, Office of Equal Opportunity Program, Code U, National Aeronautics and Space Administration, NASA Headquarters, Washington, DC 20546, 202 453-2163

RIN: 2700-AA69

3035. ● FREEDOM OF INFORMATION ACT SUBMITTER NOTICE

Legal Authority: 5 USC 552(a) (3) (B); EO 12600

CFR Citation: 14 CFR 1206

Legal Deadline: None.

Abstract: Formalizes current NASA policy and procedure in providing notice of request pursuant to the Freedom of Information Act to submitters of commercial information, implementing EO 12600.

Timetable:

Action	Date	FR Cite
NPRM	05/00/88	

Small Entity: No

Agency Contact: Pamela J. vonSoosten, Office of General Counsel, Code GK, National Aeronautics and Space Administration, NASA Headquarters, Washington, DC 20546, 202 453-2439

RIN: 2700-AA74

3036. ● NATIONAL SPACE GRANT COLLEGE AND FELLOWSHIP PROGRAM

Legal Authority: PL 100-147

CFR Citation: 14 CFR 1259

Legal Deadline: None.

Abstract: Formalizes and expands upon NASA's policy and procedures for implementing the National Space Grant College and Fellowship Program.

Timetable:

Action	Date	FR Cite
NPRM	09/00/88	

Small Entity: No

Agency Contact: Elaine Schwartz, University Programs Branch, Code XEU, National Aeronautics and Space Administration, NASA Headquarters, Washington, DC 20546, 202 453-8344

RIN: 2700-AA75

3037. ● POLICY ON THE PROTECTION OF HUMAN SUBJECTS

Legal Authority: 42 USC 2451; 45 CFR 46

CFR Citation: 14 CFR 1230

Legal Deadline: None.

Abstract: NASA will be one of a few Federal Agencies to adopt a Model Federal Policy for the Protection of Human Subjects which was prepared by the Office of Science and Technology Policy. This NPRM will implement a Model Federal Policy for the Protection of Human subjects of research conducted, supported or regulated by NASA.

Timetable:

Action	Date	FR Cite
NPRM	12/00/88	

Small Entity: No

Agency Contact: Dr. Arnauld E. Nicogossian, National Aeronautics and Space Administration, Life Sciences Division, Code EB, Office of Space Science and Applications, Washington, DC 20546, 202 453-1530

RIN: 2700-AA76

NATIONAL AERONAUTICS AND SPACE ADMINISTRATION (NASA) — Final Rule Stage

3038. SPACE TRANSPORTATION SYSTEM; INSURANCE AND INDEMNIFICATION OF NASA SPACE VEHICLE USERS

Legal Authority: PL 85-568, Sec 203; 42 USC 2473 Sec 308 of the Space Act as amended; 42 USC 2458(b)

CFR Citation: 14 CFR 1214, Subpart 13

Legal Deadline: None.

Abstract: Describes the policy on when users of the Space Transportation System must obtain financial protection against third-party claims and the conditions under which NASA will provide insurance or indemnification of users. Comments on the proposed rule were received from several individuals.

Timetable:

Action	Date	FR Cite
NPRM	11/10/80	45 FR 74499
Final Action	00/00/00	

Small Entity: No

Agency Contact: Robert J. Wojtal, Office of General Counsel, Code GK, National Aeronautics and Space Administration, NASA Headquarters, Washington, DC 20546, 202 453-2446

RIN: 2700-AA00

3039. SPACE TRANSPORTATION SYSTEM; REIMBURSEMENT FOR SPACELAB SERVICES

Legal Authority: 42 USC 2473

CFR Citation: 14 CFR 1214, Subpart 8

Legal Deadline: None.

Abstract: Describes the policy for Spacelab services provided by NASA to users during the Second Phase of STS operations.

Timetable:

Action	Date	FR Cite
Interim Final Rule	07/30/85	50 FR 30807
Final Action	05/00/88	

Small Entity: No

Agency Contact: Lowell E. Primm, Office of Space Flight, Code MC, National Aeronautics and Space Administration, NASA Headquarters, Washington, DC 20546, 202 453-2536

RIN: 2700-AA01

3040. TRACKING AND DATA RELAY SATELLITE SYSTEM (TDRSS); USE AND REIMBURSEMENT POLICY FOR NON-U.S. GOVERNMENT USERS

Legal Authority: PL 85-568 Sec 203; 42 USC 2473

CFR Citation: 14 CFR 1215

Legal Deadline: None.

Abstract: Annual revision of Appendix A to reflect each Calendar Year rate change for TDRSS services.

Timetable:

Action	Date	FR Cite
Final Action for CY 1988 Rate Change	04/06/87	52 FR 10881
Final Action for CY 1989 Rate Change	05/00/88	

Small Entity: No

Agency Contact: Eugene Ferrick, Office of Space Operations, Code T, National Aeronautics and Space Administration, NASA Headquarters, Washington, DC 20546, 202 453-2043

RIN: 2700-AA29

3041. EMERGENCY PERSONNEL SECURITY ADJUDICATION AND PROCEDURES

Legal Authority: 42 USC 2451 et seq.; 5 USC 552 A; 5 USC 5596; EO 10450; EO 12356; 5 USC 7312; 5 USC 7531 TO 7533

CFR Citation: 14 CFR 1203

Legal Deadline: None.

Abstract: 14 CFR Part 1203 is amended by adding this new Subpart J, "Emergency Personnel Security Adjudication and Procedures." This proposed rule sets forth NASA's personnel security adjudication policy and procedures. The intended effect of this proposed rule is to inform individuals of the procedures within NASA with respect to those individuals whose employment with NASA may not be clearly consistent with the interests of national security.

Timetable:

Action	Date	FR Cite
NPRM	01/23/87	52 FR 2548
Final Action	10/00/88	

Small Entity: No

Agency Contact: Jerome Verba, NASA Security Office, Code NIS, National Aeronautics and Space Administration, NASA Headquarters, Washington, DC 20546, 202 453-2946

RIN: 2700-AA31

3042. ● UNIFORM RELOCATION ASSISTANCE AND REAL PROPERTY ACQUISITION FOR FEDERAL AND FEDERALLY-ASSISTED PROGRAMS

Legal Authority: 42 USC 4601 Note

CFR Citation: 14 CFR 1208

Legal Deadline: None.

Abstract: Designates Department of Transportation (DOT) as lead agency in implementation of Uniform Act.

Timetable:

Action	Date	FR Cite
Interim Final Rule	12/17/87	52 FR 48017
Final Action	09/00/88	

Small Entity: No

Agency Contact: Gitta G. Haber, Facilities Management Office, Code NXG, National Aeronautics and Space Administration, NASA Headquarters, Washington, DC 20546, 202 453-1958

RIN: 2700-AA32

3043. NONDISCRIMINATION IN FEDERALLY-ASSISTED PROGRAMS OF NASA

Legal Authority: Title VI of the Civil Rights Act of 1964 as amended; Section 504 of the Rehabilitation Act of 1973, as amended; Age Discrimination Act of 1975; EO 12250

CFR Citation: 14 CFR 1250

Legal Deadline: None.

Abstract: NASA is revising 14 CFR Part 1250, "Nondiscrimination in Federally-Assisted Programs of NASA," to reflect changes in the NASA organization and processes through which this regulation is implemented. The purpose of this Part is to effectuate the provisions of Title VI of the Civil Rights Act of 1964, as amended.

Timetable:

Action	Date	FR Cite
Final Action	10/00/88	

Small Entity: No

Agency Contact: Lewin S. Warren, Office of Equal Opportunity Programs, Code U, National Aeronautics and Space Administration, NASA Headquarters, Washington, DC 20546, 202 453-2163

RIN: 2700-AA50

3044. DUTY-FREE ENTRY OF SPACE ARTICLES

Legal Authority: PL 98-573 Sec 124; PL 97-446 Sec 116 and Sec 156; 96 Stat 2335 to 2336; 19 USC 1202 note; 96 Stat 2345 to 2346

CFR Citation: 14 CFR 1214 Subpart 15

Legal Deadline: None.

Abstract: Amending 14 CFR Subpart 1214.15 to reflect the changes on the duty-free entry of communication satellites imposed by PL 98-573.

Timetable:

Action	Date	FR Cite
Interim Final Rule	12/00/88	

Small Entity: No

Agency Contact: Robert J. Wojtal, Office of General Counsel, Code GK, National Aeronautics and Space Administration, NASA Headquarters, Washington, DC 20546, 202 453-2446

RIN: 2700-AA62

NATIONAL AERONAUTICS AND SPACE ADMINISTRATION (NASA) — Completed Actions

3045. PATENT WAIVER REGULATIONS

CFR Citation: 14 CFR 1245, Subpart 1

Completed:

Reason	Date	FR Cite
Final Action	11/16/87	52 FR 43748

Small Entity: No

Agency Contact: Robert F. Kempf 202 453-2424

RIN: 2700-AA10

3046. NASA SEAL, INSIGNIA, LOGOTYPE INSIGNIA, PROGRAM AND ASTRONAUT BADGES, AND FLAGS

CFR Citation: 14 CFR 1221, Subpart 1

Completed:

Reason	Date	FR Cite
Final Action	12/02/87	52 FR 45811

Small Entity: No

Agency Contact: Robert Schulman 202 453-8315

RIN: 2700-AA15

3047. DATA AND COPYRIGHTS

CFR Citation: 48 CFR 00

Completed:

Reason	Date	FR Cite
Final Action	12/10/87	52 FR 46765

Small Entity: Not Applicable

Agency Contact: W. A. Greene 202 453-8923

RIN: 2700-AA40

3048. AVAILABILITY OF AGENCY RECORDS TO MEMBERS OF THE PUBLIC

CFR Citation: 14 CFR 1206

Completed:

Reason	Date	FR Cite
Final Action	10/29/87	52 FR 41406

Small Entity: No

Agency Contact: Patricia M. Riep 202 453-8346

RIN: 2700-AA49

3049. RELEASE OF INFORMATION TO NEWS AND INFORMATION MEDIA

CFR Citation: 14 CFR 1213, Subpart 1

Completed:

Reason	Date	FR Cite
Final Action	12/03/87	52 FR 45935

Small Entity: No

Agency Contact: James W. McCulla 202 453-8396

RIN: 2700-AA58

3050. ENVIRONMENTAL QUALITY; FLOODPLAIN AND WETLANDS MANAGEMENT

CFR Citation: 14 CFR 1216

Completed:

Reason	Date	FR Cite
Final Action	03/25/88	53 FR 9759

Small Entity: No

Agency Contact: Lewis E. Andrews 202 453-1972

RIN: 2700-AA70

3051. IMPLEMENTATION OF THE PROGRAM FRAUD CIVIL REMEDIES ACT OF 1986

CFR Citation: 14 CFR 1264

Completed:

Reason	Date	FR Cite
Interim Final Rule	10/22/87	52 FR 39498

Small Entity: No

Agency Contact: Sara Najjar 202 453-2465

RIN: 2700-AA71

3052. DELEGATION OF AUTHORITY--TO TAKE STATUTORY ACTION FOR "LIQUIDATED DAMAGE" ASSESSMENT UNDER THE CONTRACT WORK HOURS AND SAFETY STANDARDS ACT, AND ASSOCIATED LABOR STATUTE ACTIONS

CFR Citation: 14 CFR 1204.509

Completed:

Reason	Date	FR Cite
Final Action	09/22/87	52 FR 35538

Small Entity: No

Agency Contact: Gordon K. Gilson 202 453-2882

RIN: 2700-AA73

[FR Doc. 88-5093 Filed 04-22-88; 8:45 am]

BILLING CODE 7510-01-T

VOL
53
ISS
79
PT
2
AP
25
1988
UMI

federal register

Monday
April 25, 1988

Part XXVII

National Archives and Records Administration

Semiannual Regulatory Agenda

NATIONAL ARCHIVES AND RECORDS ADMINISTRATION (NARA)

NATIONAL ARCHIVES AND RECORDS ADMINISTRATION

36 CFR Ch. XII

Unified Agenda of Federal Regulations

AGENCY: National Archives and Records Administration.

ACTION: Semiannual agenda.

SUMMARY: This agenda announces the proposed regulatory actions that the National Archives and Records Administration (NARA) plans for the next 12 months and those actions that have been completed since October 1987. This agenda was developed under the guidelines in OMB Bulletin No. 88-1, dated October 7, 1987. NARA's purpose in publishing this agenda is to allow interested persons an opportunity to have more comprehensive documentation of NARA's regulatory plans and to provide a systematic means of monitoring regulatory activity in NARA. None of the regulations listed in the agenda are considered major under Executive Order 12291, Federal Regulation.

FOR FURTHER INFORMATION CONTACT: John A. Constance, Chief, Information Management and Directives Branch, (202) 523-3214.

Dated: February 29, 1988.

Don W. Wilson,

Archivist of the United States.

Prerule Stage

Sequence Number	Title	Regulation Identifier Number
3053	Transfers to the National Personnel Records Center	3095-AA15

Proposed Rule Stage

Sequence Number	Title	Regulation Identifier Number
3054	Membership on State Historical Records Advisory Boards	3095-AA20
3055	Restrictions on Access to Archival Records	3095-AA21
3056	Micrographics Records Management	3095-AA22
3057	NARA Implementation of Presidential Records Act	3095-AA24
3058	NARA Standards of Conduct	3095-AA25
3059	Electronic Records Management	3095-AA29
3060	Loans of Original Records for Exhibition Purposes	3095-AA37

Final Rule Stage

Sequence Number	Title	Regulation Identifier Number
3061	Transfers to the National Personnel Records Center	3095-AA16
3062	Enforcement Nondiscrimination on the Basis of Handicap in Federally-conducted Programs	3095-AA35
3063	Implementation of Government-wide Nonprocurement Debarment and Suspension System	3095-AA38

Completed Actions

Sequence Number	Title	Regulation Identifier Number
3064	Uniform Administrative Requirements for Grants and Cooperative Agreements to State and Local Governments	3095-AA23
3065	Statistical Research in Records Containing Personal Information	3095-AA26
3066	Disposition of Federal Records	3095-AA30
3067	NARA Fee Schedule	3095-AA33
3068	Use of NARA Self-service Copiers	3095-AA39

NATIONAL ARCHIVES AND RECORDS ADMINISTRATION (NARA) — Prerule Stage

3053. TRANSFERS TO THE NATIONAL PERSONNEL RECORDS CENTER

Legal Authority: 44 USC 3101

CFR Citation: 36 CFR 1228.154

Legal Deadline: None.

Abstract: Consideration is being given to acceptance of individual earnings and pay cards and comprehensive payrolls in microfiche or computer output microfilm format only.

Timetable:

Action	Date	FR Cite
Begin Review	10/01/87	
End Review	08/00/88	

Small Entity: Not Applicable

Agency Contact: Gregory A. Pomicter, Dir., Field Operations Division (NCF), National Archives and Records Administration, Washington, DC 20408, 202 653-8388

RIN: 3095-AA15

NATIONAL ARCHIVES AND RECORDS ADMINISTRATION (NARA) — Proposed Rule Stage

3054. MEMBERSHIP ON STATE HISTORICAL RECORDS ADVISORY BOARDS

Legal Authority: 44 USC 2505

CFR Citation: 36 CFR 1206

Legal Deadline: None.

Abstract: This regulation will restructure the State Historical Records Advisory Boards and redefine their functions in the grant review process.

Timetable:

Action	Date	FR Cite
NPRM	03/00/89	
NPRM Comment Period End	04/00/89	
Final Action	05/00/89	

Small Entity: Not Applicable

Agency Contact: Nancy Sahli, Acting Dir., Records Program (NP), National Archives and Records Administration, Washington, DC 20408, 202 523-5386

RIN: 3095-AA20

3055. RESTRICTIONS ON ACCESS TO ARCHIVAL RECORDS

Legal Authority: 44 USC 2108(a); 44 USC 2104(a)

CFR Citation: 36 CFR 1256.40

Legal Deadline: None.

Abstract: This rule will add specific agency restrictions on the use of certain accessioned archival records. The restrictions will be in conformity with the Freedom of Information Act.

Timetable:

Action	Date	FR Cite
NPRM	12/00/88	
NPRM Comment Period End	01/00/89	
Final Action	03/00/89	

Small Entity: Not Applicable

Agency Contact: Trudy H. Peterson, Assistant Archivist, Office of National Archives, National Archives and Records Administration, Washington, DC 20408, 202 523-3130

RIN: 3095-AA21

3056. MICROGRAPHICS RECORDS MANAGEMENT

Legal Authority: 44 USC 2907; 44 USC 3302; 44 USC 3312

CFR Citation: 36 CFR 1230

Legal Deadline: None.

Abstract: This rule will update existing regulations on micrographics records management to correct references to Federal and industry micrographics standards.

Timetable:

Action	Date	FR Cite
NPRM	04/00/88	
NPRM Comment Period End	05/00/88	
Final Action	06/00/88	

Small Entity: No

Agency Contact: Adrienne C. Thomas, Dir., Program Policy and Eval. Div. (NAA), National Archives and Records Administration, Washington, DC 20408, 202 523-3214

RIN: 3095-AA22

3057. NARA IMPLEMENTATION OF PRESIDENTIAL RECORDS ACT

Legal Authority: 44 USC 2206

CFR Citation: 36 CFR 1270

Legal Deadline: None.

Abstract: 44 USC 2206 requires that the Archivist promulgate regulations to carry out the Presidential Records Act. The law requires that the regulations provide for:

1. advance public notice of intention to dispose of valueless records;

2. notice to the former President of impending opening of otherwise restrictable records in response to judicial process, a request from the incumbent President, or request from Congress;

3. notice to the former President when disclosure of documents may adversely affect any rights or privileges he may have; and

4. establishment of procedures for consultation between the Archivist and appropriate Federal agencies regarding Presidential records which may be restricted as investigatory records compiled for law enforcement purposes.

Timetable:

Action	Date	FR Cite
NPRM	00/00/00	
NPRM Comment Period End	00/00/00	
Final Action	00/00/00	

Small Entity: No

Agency Contact: Gary Brooks, Act. Dir., Legal Services Staff (NSL), National Archives and Records Administration, Washington, DC 20408, 202 523-3618

RIN: 3095-AA24

3058. NARA STANDARDS OF CONDUCT

Legal Authority: 44 USC 2104(a)

CFR Citation: 36 CFR 1204

Legal Deadline: None.

NARA

Proposed Rule Stage

Abstract: These regulations will establish standards of conduct for NARA employees.

Timetable:

Action	Date	FR Cite
NPRM	04/00/88	
NPRM Comment Period End	06/00/88	
Final Action	06/00/88	

Small Entity: Not Applicable

Agency Contact: Gary Brooks, Act. Designated Agency Ethics Official, National Archives and Records Administration, Washington, DC 20408, 202 523-3618

RIN: 3095-AA25

3059. ELECTRONIC RECORDS MANAGEMENT

Legal Authority: 44 USC 2904; 44 USC 3102

CFR Citation: 36 CFR 1234

Legal Deadline: None.

Abstract: Federal agencies increasingly are recording their policies and authorities electronically. The proposed regulation will provide comprehensive standards for the creation, maintenance, use and disposition of electronic records.

Timetable:

Action	Date	FR Cite
NPRM	00/00/00	
NPRM Comment Period End	00/00/00	
Final Action	00/00/00	

Small Entity: Not Applicable

Agency Contact: Mary Ann Wallace, Director, Agency Services Division (NIA), National Archives and Records Administration, Washington, DC 20408, 202 724-1453

RIN: 3095-AA29

3060. LOANS OF ORIGINAL RECORDS FOR EXHIBITION PURPOSES

Legal Authority: 44 USC 2104a; 44 USC 2109

CFR Citation: 36 CFR 1254

Legal Deadline: None.

Abstract: NARA lends original records for exhibition purposes to qualified institutions that are capable of providing care comparable with that provided at NARA. This regulation will make NARA's existing minimum requirements for security, environmental conditions, lighting, handling and advance notice more conveniently available to potential borrowers. Since loan requests are reviewed in accordance with an established administrative procedure and are subject to existing requirements, no additional costs will be involved.

Timetable:

Action	Date	FR Cite
NPRM	11/00/88	
NPRM Comment Period End	12/00/88	
Final Action	02/00/89	

Small Entity: Not Applicable

Agency Contact: Adrienne C. Thomas, Director, Program Policy and Evaluation Division, National Archives and Records Administration, Washington, DC 20408, 202 523-3214

RIN: 3095-AA37

NATIONAL ARCHIVES AND RECORDS ADMINISTRATION (NARA)

Final Rule Stage

3061. TRANSFERS TO THE NATIONAL PERSONNEL RECORDS CENTER

Legal Authority: 44 USC 3101

CFR Citation: 36 CFR 1228

Legal Deadline: None.

Abstract: As a result of FPM Letter 293-20 which established an Employee Medical Folder (EMF) for all civilian employees, this regulation will be expanded to include the EMF. In addition, a separate request form will be developed similar to the SF 127, Request for Official Personnel Folder.

Timetable:

Action	Date	FR Cite
Final Action	04/00/88	

Small Entity: Not Applicable

Agency Contact: Gregory A. Pomicter, Dir., Field Operations Division (NCF), National Archives and Records Administration, Washington, DC 20408, 202 653-8358

RIN: 3095-AA16

3062. ENFORCEMENT NONDISCRIMINATION ON THE BASIS OF HANDICAP IN FEDERALLY-CONDUCTED PROGRAMS

Legal Authority: 29 USC 794

CFR Citation: 36 CFR 1208

Legal Deadline: None.

Abstract: The National Archives and Records Administration is joining with the Department of Justice and other agencies in the third joint publication of regulations implementing Section 504 of the Rehabilitation Act of 1973, as amended.

Timetable:

Action	Date	FR Cite
NPRM	07/02/87	52 FR 25124
NPRM Comment Period End	08/31/87	52 FR 25124
Final Action	00/00/00	
Final Action Effective	00/00/00	

Small Entity: No

Agency Contact: Adrienne C. Thomas, Dir., Program Policy and Evaluation Div., (NAA), National Archives and Records Administration, Washington, DC 20408, 202 523-3214

RIN: 3095-AA35

3063. IMPLEMENTATION OF GOVERNMENT-WIDE NONPROCUREMENT DEBARMENT AND SUSPENSION SYSTEM

Legal Authority: EO 12549; 44 USC 2104(a)

CFR Citation: 36 CFR 1209

Legal Deadline: Statutory, May 26, 1988.

Abstract: NARA will join other agencies in the voluntary common rule for implementing E.O. 12549. This order calls for the establishment of a system of government-wide nonprocurement and suspension from programs and activities involving Federal financial and nonfinancial assistance and benefits.

NARA

Final Rule Stage

Timetable:

Action	Date	FR Cite
NPRM	10/20/87	52 FR 39015
NPRM Comment Period End	12/21/87	52 FR 39015
Final Action	05/00/88	

Small Entity: No

Agency Contact: Adrienne C. Thomas, Director, Program Policy and Evaluation Division, National Archives and Records Administration, Washington, DC 20408, 202 523-3214

RIN: 3095-AA38

NATIONAL ARCHIVES AND RECORDS ADMINISTRATION (NARA)

Completed Actions

3064. UNIFORM ADMINISTRATIVE REQUIREMENTS FOR GRANTS AND COOPERATIVE AGREEMENTS TO STATE AND LOCAL GOVERNMENTS

CFR Citation: 36 CFR 1207

Completed:

Reason	Date	FR Cite
Final Action	03/11/88	53 FR 8034
Final Action Effective	10/01/88	

Small Entity: Not Applicable

Agency Contact: Adrienne C. Thomas 202 523-3214

RIN: 3095-AA23

3065. STATISTICAL RESEARCH IN RECORDS CONTAINING PERSONAL INFORMATION

CFR Citation: 36 CFR 1256

Completed:

Reason	Date	FR Cite
Final Action	03/03/88	53 FR 6821

Small Entity: No

Agency Contact: Adrienne C. Thomas 202 523-3214

RIN: 3095-AA26

3066. DISPOSITION OF FEDERAL RECORDS

CFR Citation: 36 CFR 1228

Completed:

Reason	Date	FR Cite
Final Action	09/09/87	52 FR 34134
Final Action Effective	10/01/87	52 FR 34134

Small Entity: Not Applicable

Agency Contact: Kenneth F. Rossman 202 724-1457

RIN: 3095-AA30

3067. NARA FEE SCHEDULE

CFR Citation: 36 CFR 1258

Completed:

Reason	Date	FR Cite
Final Action	04/13/88	53 FR 12150

Small Entity: No

Agency Contact: Adrienne C. Thomas 202 523-3214

RIN: 3095-AA33

3068. ● USE OF NARA SELF-SERVICE COPIERS

Legal Authority: 44 USC 2104(a)

CFR Citation: 36 CFR 1254

Legal Deadline: None.

Abstract: NARA has expanded the full use of a debit card system to additional locations and has modified the operation of the system.

Timetable:

Action	Date	FR Cite
Final Action	01/19/88	53 FR 1348
Final Action Effective	01/19/88	53 FR 1348

Small Entity: Not Applicable

Agency Contact: Adrienne C. Thomas, Dir., Program Policy and Eval. Div., National Archives and Records Administration, Washington, DC 20408, 202 523-3214

RIN: 3095-AA39

[FR Doc. 88-5094 Filed 04-22-88; 8:45 am]

BILLING CODE 7515-01-T

VOL
53

ISS
79

PT
2

AP
25

1988

UMI

federal register

Monday
April 25, 1988

Part XXVIII

National Endowment for the Arts

Semiannual Regulatory Agenda

NATIONAL ENDOWMENT FOR THE ARTS (NEA)

NATIONAL FOUNDATION ON THE ARTS AND THE HUMANITIES

National Endowment for the Arts

45 CFR Ch. XI

Semiannual Agenda of Regulations

AGENCY: National Endowment for the Arts.

ACTION: Publication of the semiannual agenda.

SUMMARY: Pursuant to Executive Order 12291 and the Regulatory Flexibility Act (5 U.S.C. 605), the National Endowment for the Arts publishes this regulatory agenda describing agency regulations under development or review.

FOR FURTHER INFORMATION CONTACT: Mr. Frederic R. Kellogg, General Counsel, National Endowment for the Arts, 1100 Pennsylvania Avenue, NW., Washington, DC 20506 or call (202) 682-5418.

Peter J. Basso,

Deputy Chairman for Management, National Endowment for the Arts.

NATIONAL ENDOWMENT FOR THE ARTS (NEA) — Proposed Rule Stage

3069. COLLECTION OF CLAIMS

Significance: Agency Priority

Legal Authority: PL 97-365; 31 USC 3711; 31 USC 3716 to 3718; 5 USC 5514; 5 USC 552a

CFR Citation: 45 CFR 1150

Legal Deadline: None.

Abstract: The proposed rule amends the National Endowment for the Arts regulation for collecting debts. Principally, the amendments implement the Debt Collection Act of 1982 (PL 97-365), which amended the Federal Claims Collection Act of 1966 (31 USC 3711, 3716-3718) to authorize among other things, charging of interest penalties and administrative costs, and the use of administrative offset, private collection agencies and credit agencies by the Government. The amendments also implement government-wide regulations issued by the Department of Justice and the General Accounting Office (49 FR 8889) and Office of Personnel Management (49 FR 27470).

Timetable:

Action	Date	FR Cite
NPRM	06/00/88	
NPRM Comment Period End	07/00/88	

Small Entity: Not Applicable

Agency Contact: Mr. Frederic R. Kellogg, General Counsel, National Endowment for the Arts, Office of the General Counsel, 1100 Pennsylvania Avenue, NW, Washington, DC 20506, 202 682-5418

RIN: 3135-AA01

3070. NONDISCRIMINATION ON THE BASIS OF AGE

Significance: Agency Priority

Legal Authority: 42 USC 6101 et seq

CFR Citation: 45 CFR 1154

Legal Deadline: None.

Abstract: This final rule prohibits discrimination on the basis of age in programs and activities receiving assistance from the National Endowment for the Arts. These regulations are issued pursuant to the requirements of the Age Discrimination Act and consistent with the general government-wide regulations issued by the Department of Health and Human Services.

Timetable:

Action	Date	FR Cite
NPRM	10/02/79	44 FR 56725
NPRM Comment Period End	11/15/79	44 FR 56725

Next Action Undetermined

Small Entity: No

Agency Contact: Mr. Frederic R. Kellogg, General Counsel, National Endowment for the Arts, Office of the General Counsel, 1100 Pennsylvania Avenue, NW, Washington, DC 20506, 202 682-5418

RIN: 3135-AA03

3071. CLAIMS COLLECTION: SALARY OFFSET

Legal Authority: 5 USC 5514; EO 11809 (redesignated EO 12107); 5 CFR 550, Subpart K

CFR Citation: Not yet determined

Legal Deadline: None.

Abstract: This regulation provides procedures for the collection by administrative offset of a federal employee's salary without his/her consent to satisfy certain debts owed to the Federal government. The regulation outlines certain procedural protections that must be accorded to an employee prior to commencing offset.

Timetable:

Action	Date	FR Cite
NPRM	04/00/88	

Small Entity: No

Government Levels Affected: Federal

Agency Contact: Murray R. Welsh, Director, Administrative Services Division, National Endowment for the Arts, 1100 Pennsylvania Ave., NW, Washington, DC 20506, 202 682-5401

RIN: 3135-AA04

NATIONAL ENDOWMENT FOR THE ARTS (NEA)

Completed Actions

3072. NONDISCRIMINATION ON THE BASIS OF RACE, COLOR OR NATIONAL ORIGIN IN PROGRAMS OR ACTIVITIES RECEIVING FEDERAL FINANCIAL ASSISTANCE FROM NEA

Significance: Agency Priority

CFR Citation: 45 CFR 1110

Completed:

Reason	Date	FR Cite
Withdrawn	02/26/88	

Small Entity: Not Applicable

Agency Contact: Mr. Frederic R. Kellogg 202 682-5418

RIN: 3135-AA00

[FR Doc. 88-5095 Filed 04-22-88; 8:45 am]

BILLING CODE 7527-01-T

BEST COPY AVAILABLE

VOL
53

ISS
79

PT
2

AP
25

1988

UMI

federal register

Monday
April 25, 1988

Part XXIX

National Endowment for the Humanities

Semiannual Regulatory Agenda

NATIONAL ENDOWMENT FOR THE HUMANITIES (NEH)

NATIONAL FOUNDATION ON THE ARTS AND THE HUMANITIES

National Endowment for the Humanities

45 CFR Ch. XI

Unified Agenda of Regulations

AGENCY: National Endowment for the Humanities.

ACTION: Publication of the unified agenda of regulations.

SUMMARY: Pursuant to the Regulatory Flexibility Act, Pub. L. 96-354, and Executive Order 12291, "Federal Regulations," dated February 17, 1981, the National Endowment for the Humanities is required to publish in April and October of each year an agenda of proposed regulations that the Endowment has issued or expects to issue and current rules that are under agency review.

FOR FURTHER INFORMATION CONTACT: Mr. Stephen J. McCleary, Deputy General Counsel, National Endowment for the Humanities, 1100 Pennsylvania Avenue, NW., Washington, DC 20506; 202/786-0322.

Lynne V. Cheney,
Chairman.

NATIONAL ENDOWMENT FOR THE HUMANITIES (NEH) — Final Rule Stage

3073. ● NONPROCUREMENT DEBARMENT AND SUSPENSION

Legal Authority: 20 USC 959(a)(1)

CFR Citation: 45 CFR 1169

Legal Deadline: None.

Abstract: This action proposes a common regulation establishing among the Federal agencies a uniform system of nonprocurement debarment and suspension.

Timetable:

Action	Date	FR Cite
NPRM	10/20/87	52 FR 39029
NPRM Comment Period End	12/21/87	
Final Action	05/26/88	

Small Entity: No

Agency Contact: Mr. Stephen J. McCleary, Deputy General Counsel, National Endowment for the Humanities, 1100 Pennsylvania Avenue, NW, Washington, DC 20506, 202 786-0322

RIN: 3136-AA09

NATIONAL ENDOWMENT FOR THE HUMANITIES (NEH) — Completed Actions

3074. STATEMENT FOR THE GUIDANCE OF THE PUBLIC - ORGANIZATION, PROCEDURES AND AVAILABILITY OF INFORMATION

CFR Citation: 45 CFR 1100

Completed:

Reason	Date	FR Cite
Final Action	12/21/87	52 FR 48265
Final Action Effective	12/21/87	

Small Entity: No

Agency Contact: Mr. Stephen J. McCleary 202 786-0322

RIN: 3136-AA03

3075. UNIFORM ADMINISTRATIVE REQUIREMENTS FOR GRANTS AND COOPERATIVE AGREEMENTS TO STATE AND LOCAL GOVERNMENTS (COMMON RULE)

CFR Citation: 45 CFR 1174

Completed:

Reason	Date	FR Cite
Final Action	03/11/88	53 FR 8082
Final Action Effective	10/01/88	53 FR 8034

Small Entity: No

Agency Contact: Stephen J. McCleary 202 786-0322

RIN: 3136-AA08

[FR Doc. 88-6199 Filed 04-22-88; 8:45 am]

BILLING CODE 7536-01-T

VOL 53 ISS 79 PT 2 APR 25 1988 UMI

federal register

Monday
April 25, 1988

Part XXX

National Science Foundation

Semiannual Regulatory Agenda

NATIONAL SCIENCE FOUNDATION (NSF)

NATIONAL SCIENCE FOUNDATION

45 CFR Ch. VI

Federal Regulation; Semiannual Regulations Agenda

AGENCY: National Science Foundation.

ACTION: Publication of semiannual regulations agenda.

SUMMARY: The National Science Foundation (NSF) publishes its semiannual agenda of regulations under development or review as required by Executive Order 12291, Federal Regulation (46 FR 13193, February 17, 1981). This agenda has been prepared in accordance with OMB Bulletin No. 88-1, Unified Agenda of Federal Regulations.

FOR FURTHER INFORMATION CONTACT: For additional information regarding any particular regulatory action contained in the agenda, contact the individual identified as the contact person in the agenda. Comments or inquiries of a general nature about the agenda should be directed to Sukari S. Smith, Office of the General Counsel, National Science Foundation, Washington, DC 20550, (202) 357-9435.

Dated: February 18, 1988.

Sukari S. Smith,

Regulatory Contact.

NATIONAL SCIENCE FOUNDATION (NSF) — Prerule Stage

3076. EFFECTUATION OF TITLE IX OF THE EDUCATION AMENDMENTS OF 1982 (SEX DISCRIMINATION)

Legal Authority: 20 USC 1681; PL 93-568, Sec 901 to 902; PL 93-380, Sec 844

CFR Citation: 45 CFR 620, (New)

Legal Deadline: None.

Abstract: This regulation is to effectuate Title IX of the Education Amendments of 1972, as amended, which prohibits discrimination on the basis of sex in connection with education programs and activities receiving Federal financial assistance from the National Science Foundation. Costs, if any, should be nominal since most NSF recipients are also covered by HHS regulations. Potential benefits are to ensure that any educational program or activity receiving financial assistance from NSF does not, on the basis of sex (1) exclude any person from participation in, (2) deny any person the benefits of, or subject any such person to discrimination under that program or activity.

Timetable:

Action	Date	FR Cite
Clearance with EEOC and Justice under Executive Order 12250	05/01/87	
ANPRM	07/01/87	
ANPRM Comment Period End	09/01/87	

Next Action Undetermined

Small Entity: No

Agency Contact: Brenda Brush, Director, Office of Equal Opportunity, National Science Foundation, 1800 G Street, NW, Washington, DC 20550, 202 357-9819

RIN: 3145-AA06

NATIONAL SCIENCE FOUNDATION (NSF) — Proposed Rule Stage

3077. ENFORCEMENT OF NONDISCRIMINATION ON THE BASIS OF HANDICAP IN NATIONAL SCIENCE FOUNDATION

Legal Authority: 29 USC 794; PL 95-602, Sec 504

CFR Citation: 45 CFR 606, (New); 45 CFR 06

Legal Deadline: None.

Abstract: This regulation provides for the enforcement of Section 504 of the Rehabilitation Act of 1973, as amended, which prohibits discrimination on the basis of handicap, as it applies to programs or activities conducted by the National Science Foundation. Potential costs are not known. Any benefits derived will be to ensure that the handicapped will not be excluded from the participation in, be denied the benefits of, or be subjected to discrimination under any program or activity conducted by the National Science Foundation.

Timetable:

Action	Date	FR Cite
NPRM	00/00/00	

Small Entity: No

Agency Contact: Brenda Brush, Director, Office of Equal Opportunity, National Science Foundation, 1800 G Street, NW, Washington, DC 20550, 202 357-9819

RIN: 3145-AA05

3078. ● AMENDMENTS/ADDITIONS TO 45 CFR PART 670 - CONSERVATION OF ANTARCTIC ANIMALS AND PLANTS ENTITLED "ENFORCEMENT AND HEARING PROCEDURES" (SUBPART K)

Significance: Agency Priority

Legal Authority: 42 USC 1870; 16 USC 2405; 16 USC 2407; 16 USC 2408; 16 USC 2409; 16 USC 2411

CFR Citation: 45 CFR 670.50 (New); 45 CFR 670.60 (New)

Legal Deadline: None.

Abstract: This action will amend this regulation by adding a new Subpart K (45 CFR 670.50 et seq), entitled "Enforcement and Hearing Procedures." The Antarctic Conservation Act of 1978 prohibits certain acts in the Antarctic,

such as the taking of any native mammal or native bird without a valid permit. The new subpart will establish hearing procedures for adjudicating administrative complaints alleging violations of the Act, elaborate and clarify the elements of a violation, and specific other procedures necessary for the enforcement of the Antarctic Conservation Act of 1978.

Timetable:

Action	Date	FR Cite
NPRM	09/30/88	
NPRM Comment Period End	11/30/88	
Final Action	12/31/88	
Final Action Effective	12/31/88	
Public Hearing	00/00/00	

Small Entity: No

Public Compliance Cost: Initial Cost: $0; Yearly Recurring Cost: $0

Government Levels Affected: Federal

Agency Contact: Robert M. Andersen, Deputy General Counsel, National Science Foundation, 1800 G Street, NW, Washington, DC 20550, 202 357-9435

RIN: 3145-AA12

NATIONAL SCIENCE FOUNDATION (NSF) — Final Rule Stage

3079. PATENTS

Legal Authority: 42 USC 1870(a) The Natl. Sci. Found. Act of 1950, as amended; 35 USC 200 et seq The Bayh-Dole Act, as amended

CFR Citation: 45 CFR 650

Legal Deadline: None.

Abstract: The Bayh-Dole Act (34 USC 200 et seq) was amended by Title V of PL 98-620 (98 Stat. 3364, 3368). The Department of Commerce has prepared a Government-wide implementing regulation. The Foundation's Patents regulation (45 CFR 650) conform to it. Because the revision to the NSF Patents regulation will merely echo a Government-wide regulation on which the public will have had an opportunity to comment, the Foundation expects that the revision will be published as a final rule. No additional costs will be imposed on the public as a result of the revision.

Timetable:

Action	Date	FR Cite
Final Action	00/00/00	

Small Entity: No

Additional Information: The notable changes to be made in the revision of the NSF Patents regulation will be: elimination of restrictions on the licensing of NSF-supported inventions by nonprofit organizations, including universities; modification of the criteria and procedures for determining that "exceptional circumstances" warrant restricting a grantee's right to retain principal patent rights to its employees' NSF-supported inventions; and elimination of the Foundation's authority to waive the Government license and "march-in" rights in awards not subject to the Bayh-Dole Act. All these changes are required by amendments to the Bayh-Dole Act.

Agency Contact: John Chester, Intellectual Property Attorney, National Science Foundation, Office of the General Counsel, Room 501, Washington, DC 20550, 202 357-9435

RIN: 3145-AA07

3080. NONPROCUREMENT DEBARMENT AND SUSPENSION

Legal Authority: 42 USC 1870(a); EO 12459

CFR Citation: 45 CFR 620

Legal Deadline: None.

Abstract: The regulations implement section 6 of EO 12459 and set forth criteria and procedures for debarment and suspension of individuals and organizations receiving assistance from the National Science Foundation under its nonprocurement programs and activities.

These regulations are required to be established under the guidelines issued by OMB in the May 29, 1987, Federal Register (52 F.R. 20360).

Timetable:

Action	Date	FR Cite
NPRM	10/21/87	52 FR 39015
NPRM Comment Period End	12/21/87	
Final Action	05/00/88	

Small Entity: Yes

Additional Information: NSF is joining with other executive branch agencies in a voluntary common rulemaking. This effort is being coordinated by OMB.

Agency Contact: Arthur J. Kusinski, Assistant General Counsel, National Science Foundation, 1800 G Street, NW, Room 501, Washington, DC 20550, 202 357-9435

RIN: 3145-AA11

3081. ● UNIFORM ADMINISTRATIVE REQUIREMENTS FOR GRANTS AND COOPERATIVE AGREEMENTS TO STATE AND LOCAL GOVERNMENTS

Legal Authority: 42 USC 1870(a)

CFR Citation: 45 CFR 602

Legal Deadline: None.

Abstract: This regulation implements a common rule, OMB Circular A-102, "Uniform Administrative Requirements for Grants and Cooperative Agreements to State and Local Governments," has been revised and is being published as a common rule by 23 Federal agencies which award grants to State and local governments. This regulation provides uniform fiscal and administrative requirements for proposals submitted by, and grants and cooperative agreements awarded to, State and local governments. This common rule establishes consistency and uniformity among the various Federal agencies in the management of grants and cooperative agreements to State and local governments. Potential costs are not known. The State and local government entities which receive grants from Federal agencies will benefit from the common rule in pre-award, post-award, and after-the-grant phases by having a consistent uniform set of requirements.

Timetable:

Action	Date	FR Cite
NPRM	06/09/87	52 FR 21820
NPRM Comment Period End	08/10/87	
Final Action	03/11/88	
Final Action Effective	10/01/88	

Small Entity: No

Additional Information: NSF is joining with 22 other executive branch agencies

in a voluntary common rulemaking. This effort is being coordinated by OMB.

Government Levels Affected: Local, State, Federal

Agency Contact: Sharon Graham, Grant and Contract Specialist, Division of Grants and Contracts, National Science Foundation, 1800 G Street, NW, Washington, DC 20550, 202 357-7880

RIN: 3145-AA13

[FR Doc. 88-5096 Filed 04-22-88; 8:45 am]

BILLING CODE 7555-01-T

VOL 53 ISS 79 PT 2 APR 25 1988 UMI

federal register

Monday
April 25, 1988

Part XXXI

Office of Management and Budget

Semiannual Regulatory Agenda

OFFICE OF MANAGEMENT AND BUDGET (OMB)

OFFICE OF MANAGEMENT AND BUDGET

5 CFR Ch. III

Federal Regulations; OMB Directives Included in the Semiannual Agenda of Upcoming Activities

AGENCY: Office of Management and Budget.

ACTION: Publication of semiannual agenda.

SUMMARY: The Office of Management and Budget (OMB) is publishing its semiannual agenda of upcoming activities on OMB Circulars and Office of Federal Procurement Policy Letters (OFPP Policy Letters). This action is in accordance with OMB's internal procedures for implementing Executive Order No. 12291. OMB directives are issued under authority derived from several sources including: Subtitles I, II, and V of Title 31, United States Code, Executive Order No. 11541, and other specific authority as cited. The agenda includes actions on issuances which are not regulations, but which are of public interest.

OMB Circulars and OFPP Policy Letters are directives that communicate significant government-wide policy of a continuing nature. For purposes of this agenda, we have included Circulars and Policy Letters which are designed to implement, interpret, or prescribe law or policy, or describe the procedure or practice requirements of an agency. Excluded are directives that outline procedures to be followed in connection with the President's budget and legislative programs, and directives that affect only the internal functions, management, or personnel of Federal agencies.

FOR FURTHER INFORMATION CONTACT: See agency person listed for each entry in the agenda, c/o Office of Management and Budget, Washington, DC 20503. On the overall agenda, contact Darrell A. Johnson (202/395-7250) at the above address.

Darrell A. Johnson,
Assistant Director for Administration.

OFFICE OF MANAGEMENT AND BUDGET (OMB) — Prerule Stage

3082. POLICIES ON GOVERNMENT PUBLICATIONS (CIRCULAR NO. A-3)

Significance: Agency Priority

Legal Authority: 44 USC 1108

CFR Citation: Not applicable

Legal Deadline: None.

Abstract: OMB Circular No. A-3, Government Publications, last revised in May 1985, prescribes policies and procedures for approving funding for government periodicals to fulfill the requirements of 44 USC 1108, and for reporting periodicals and non-recurring publications. This Circular is under review. OMB will consider modifications reflecting current policies on electronic dissemination of information.

Timetable:

Action	Date	FR Cite
Begin Review	10/00/88	

Small Entity: No

Agency Contact: J. Timothy Sprehe, Room 3235 NEOB, Office of Management and Budget, Office of Information and Regulatory Affairs, Washington, DC 20503, 202 395-4814

RIN: 0348-AA77

3083. MAJOR SYSTEM ACQUISITIONS (CIRCULAR NO. A-109)

Legal Authority: PL 93-400; See preamble

CFR Citation: Not applicable

Legal Deadline: None.

Abstract: Some agencies report difficulty working under the Circular. A review, in light of experience gained, is warranted with a goal of revision and simplification while maintaining the current general policy thrust of A-109.

Timetable:

Action	Date	FR Cite
Next Action Undetermined		

Small Entity: Yes

Agency Contact: Robert Cooper, Procurement Analyst, Office of Management and Budget, Office of Federal Procurement Policy, Washington, D.C. 20503, 202 395-3300

RIN: 0348-AA12

3084. PROMPT PAYMENT(CIRCULAR A-125)

Legal Authority: 31 USC 65 et seq; 41 USC 401 et seq; See preamble; 31 USC 3901 et seq

CFR Citation: Not applicable

Legal Deadline: None.

Abstract: The Office of Management and Budget is considering proposing amendments to Circular A-125.

Timetable:

Action	Date	FR Cite
Begin Review	01/01/88	
End Review	06/30/88	
Proposal to revise Circular	12/00/88	

Small Entity: No

Agency Contact: Suzanne Duval, Management Analyst, Credit and Cash Management Branch, Office of Management and Budget, Financial Management Division, Washington, D.C. 20503, 202 395-6107

RIN: 0348-AA67

3085. POLICIES ON MANAGEMENT OF FEDERAL INFORMATION RESOURCES (CIRCULAR NO. A-130)

Significance: Agency Priority

Legal Authority: 44 USC 35; 5 USC 552a; 40 USC 759; 40 USC 487; 31 USC 11

CFR Citation: Not applicable

Legal Deadline: None.

Abstract: OMB Circular No. A-130, Management of Federal Information Resources, issued December 12, 1985, establishes policy for the management of Federal information resources, and provides certain procedural and analytic guidelines for implementing specific aspects of these policies. OMB is reviewing the Circular for consistency with the Computer Security Act of 1987 (PL 100-235), for policies on electronic collection and dissemination of information, and for certain technical adjustments.

OMB **Prerule Stage**

Timetable:

Action	Date	FR Cite
Begin Review	01/00/88	
End Review	10/00/88	

Small Entity: No

Agency Contact: J. Timothy Sprehe, Room 3235 NEOB, Office of Management and Budget, Office of Information and Regulatory Affairs, Washington, DC 20503, 202 395-4814

RIN: 0348-AA76

OFFICE OF MANAGEMENT AND BUDGET (OMB) — Proposed Rule Stage

3086. WRITING AND ADMINISTERING PERFORMANCE WORK STATEMENTS (PART II OF SUPPLEMENT TO CIRCULAR NO. A-76)

Legal Authority: 31 USC 501 et seq; 41 USC 401 et seq

CFR Citation: Not applicable

Legal Deadline: None.

Abstract: This document describes a systematic means for developing Performance Work Statements and Quality Assurance Surveillance plans for Government management of commercial activities. It also includes procedures for contracting personnel who develop, review, award, and administer service contracts.

Timetable:

Action	Date	FR Cite
Draft for Public Comment	05/02/88	
Final Action	07/15/88	
Final Action Effective	08/15/88	

Small Entity: Yes

Agency Contact: David L. Muzio, Dep. Assoc. Adm. for Policy Development, Office of Management and Budget, Office of Federal Procurement Policy, Washington, D.C. 20503, 202 395-6810

RIN: 0348-AA34

3087. PERFORMANCE OF COMMERCIAL ACTIVITIES (CIRCULAR NO. A-76)

Legal Authority: 31 USC 501 et seq; 41 USC 401 et seq

CFR Citation: Not applicable

Legal Deadline: None.

Abstract: OMB Circular No. A-76, last revised in August 1983, sets forth the policy of acquiring commercial products and services from the private sector, and provides guidance on the development of performance work statements and on comparing the cost of Government performance with contractor performance. This Circular is currently under revision to incorporate changes required by Executive Order 12615, and to provide more management flexibility to directly contract certain functions.

Timetable:

Action	Date	FR Cite
Draft for public comment	05/02/88	
Final Action	07/15/88	
Final Action Effective	08/15/88	

Small Entity: Yes

Agency Contact: David L. Muzio, Dep. Assoc. Admin. for Policy Development, Office of Management and Budget, Office of Federal Procurement Policy, Washington, D.C. 20503, 202 395-6810

RIN: 0348-AA45

3088. ● COST PRINCIPLES FOR STATE AND LOCAL GOVERNMENTS (CIRCULAR A-87)

Legal Authority: 64 STAT 832

CFR Citation: Not applicable

Legal Deadline: None.

Abstract: This review will develop proposed changes to update the Circular.

Timetable:

Action	Date	FR Cite
Draft circular published for public comment	12/00/88	

Small Entity: No

Agency Contact: Jimmie Brown, Chief, Financial Systems and Policy Branch, Office of Management and Budget, Financil Management Division, Washington, DC 20503, 202 395-3993

RIN: 0348-AA83

3089. UNIFORM ADMINISTRATIVE REQUIREMENTS FOR GRANTS AND AGREEMENTS WITH INSTITUTIONS OF HIGHER EDUCATION, HOSPITALS, AND OTHER NONPROFIT ORGANIZATIONS (CIRCULAR NO. A-110)

Legal Authority: 31 USC 65 et seq; 41 USC 401 et seq; See preamble

CFR Citation: Not applicable

Legal Deadline: None.

Abstract: An OMB and HHS-chaired task force will review the current requirements of Circular A-110, compare them with the final Circular A-102 and government-wide common rule published in the Federal Register March 11,1988,determine the need for changes to restore uniformity, and propose a revised Circular A-110 and common rule for public comment.

Timetable:

Action	Date	FR Cite
Begin Review	06/15/87	
Invitation for Comments	06/24/87	52 FR 23729
Proposed Revision	10/00/88	

Small Entity: No

Agency Contact: Jonathan D. Breul, Management Analyst, Office of Management and Budget, Financial Management Division, Washington, DC 20503, 202 395-3050

RIN: 0348-AA69

3090. BOARD OF CONTRACT APPEALS - POSITION ALLOCATION PURSUANT TO PUBLIC LAW 95-563 (OFPP POLICY LETTER 79-2, SUPPLEMENT NO. 1)

Legal Authority: 41 USC 401 et seq; See preamble

CFR Citation: 00 CFR None

Legal Deadline: None.

Abstract: The Contract Disputes Act provides for establishment of Boards of Contract Appeals (BCAs) in the various

executive agencies; initial allocation of positions was made by the Administrator, OFPP, based on workload studies of existing BCAs. The Act provides for update of workload studies every three years; update of the Policy Letter appears necessary, due to update of workload studies.

Timetable:

Action	Date	FR Cite
Begin Review	03/01/88	
Draft Policy Letter for Comment	12/01/88	
End Review	03/01/89	

Small Entity: No

Agency Contact: Allen Brown, Acting Associate Administrator for Procurement Law and Legislation, Office of Management and Budget, Office of Federal Procurement Policy, Washington, D.C. 20503, 202 395-3501

RIN: 0348-AA16

OFFICE OF MANAGEMENT AND BUDGET (OMB)

Final Rule Stage

3091. FEDERAL GOVERNMENT USER CHARGES POLICY (CIRCULAR NO. A-25)

Legal Authority: Budget and Accounting Act of 1921; PL 93-344; See preamble

CFR Citation: Not applicable

Legal Deadline: None.

Abstract: General policies for Federal agencies on administering user charges and formulating legislative proposals regarding user charges are set forth in OMB Circular No. A-25. Public comments have been received on a revised draft of the Circular. They are currently being considered.

Timetable:

Action	Date	FR Cite
Draft Published for Comment	07/01/87	52 FR 24890
Public Comment Period End	08/01/87	
Final Publication	07/00/88	

Small Entity: Yes

Agency Contact: Joel Friedman, Financial Economist, Office of Management and Budget, Fiscal Analysis Branch, Budget Review Division, Washington, D.C. 20503, 202 395-4574

RIN: 0348-AA41

3092. INDIRECT COST RATES, AUDIT, AND AUDIT FOLLOWUP AT EDUCATIONAL INSTITUTIONS (CIRCULAR A-88)

Legal Authority: 31 USC 65 et seq; 41 USC 401 et seq; See preamble

CFR Citation: Not applicable

Legal Deadline: None.

Abstract: The review will develop proposed changes to the Circular needed to call for "single audit" of universities.

Timetable:

Action	Date	FR Cite
Published in the Federal Register for Public Comment	11/06/85	50 FR 46244
Circular to be issued	09/30/88	

Small Entity: No

Additional Information: Current policy for independent audits of universities is contained in Circular A-110 "Uniform Administrative Requirements for Grants and Agreements with Institutions of Higher Education, Hospitals, and Other Nonprofit Organizations." The proposed revision will be merged with current policy for Federal audits of universities contained in Circular A-88.

Agency Contact: Jimmie D. Brown, Chief, Financial Systems and Policy Branch, Office of Management and Budget, Financial Management Division, Washington, D.C. 20503, 202 395-6823

RIN: 0348-AA68

3093. STATISTICAL POLICY DIRECTIVES

Legal Authority: 31 USC 1104 Budget & Accounting Procedures Act 1950 (Sec 103); PL 96-511 Paperwork Reduction Act of 1980; See preamble

CFR Citation: Not applicable

Legal Deadline: None.

Abstract: The Directives give general policies for gathering, compiling, analyzing, publishing, and disseminating statistical information by the agencies in the Executive Branch of the Federal Government. A draft Circular was issued for public comment on January 20, 1988. The final Circular is planned for issuance in June 1988.

Timetable:

Action	Date	FR Cite
Draft Circular for Public Comment	01/20/88	53 FR 1542
Final Circular	06/00/88	

Small Entity: No

Agency Contact: Suzann K. Evinger, Statistical Policy Analyst, Office of Management and Budget, Office of Information and Regulatory Affairs, Washington, D.C. 20503, 202 395-3093

RIN: 0348-AA43

3094. CONTROLLING PAPERWORK BURDEN ON THE PUBLIC: REGULATORY CHANGES REFLECTING AMENDMENTS TO THE PAPERWORK REDUCTION ACT

Legal Authority: 44 USC 3502(11); 44 USC 3507; 44 USC Chapter 35

CFR Citation: 5 CFR 1320

Legal Deadline: None.

Abstract: The recently enacted Paperwork Reduction Reauthorization Act of 1986 amended the Paperwork Reduction Act of 1980. The Office of Management and Budget will amend its existing paperwork clearance rules to reflect this legislative change and otherwise to improve the management of Federal paperwork.

Timetable:

Action	Date	FR Cite
NPRM	07/23/87	52 FR 27768
NPRM Comment Period End	09/21/87	
Final Action	04/00/88	

Small Entity: Yes

Agency Contact: Jefferson B. Hill, Chief, Commerce and Lands Branch, Office of Information and Regulatory

Affairs, Office of Management and Budget, 202 395-5897

RIN: 0348-AA71

OFFICE OF MANAGEMENT AND BUDGET (OMB) — Completed Actions

3095. POLICIES ON CONSTRUCTION OF FAMILY HOUSING (CIRCULAR NO. A-18)

Legal Authority: Budget and Accounting Act of 1921; See preamble

CFR Citation: Not yet determined

Legal Deadline: None.

Abstract: OMB Circular A-18 sets forth policies for budgeting, planning, and undertaking the construction of federally-owned housing (exclusive of military barracks) for Federal personnel and for employees of Government contractors. Review of the Circular was completed in January.

Timetable:

Action	Date	FR Cite
End Review	01/01/88	

Small Entity: No

Agency Contact: David F. Baker, Assoc. Admin. for Management Controls, Office of Management and Budget, Office of Federal Procurement Policy, Washington, D.C. 20503, 202 395-7207

RIN: 0348-AA08

3096. POLICY GOVERNING CHARGES FOR RENTAL QUARTERS AND RELATED FACILITIES (CIRCULAR NO. A-45)

Legal Authority: 5 USC 5911(F); EO 11609 (Section 9)

CFR Citation: Not yet determined

Legal Deadline: None.

Abstract: Review of this policy document was completed in January. It continues to be current.

Timetable:

Action	Date	FR Cite
End Review	01/01/88	

Small Entity: No

Agency Contact: David F. Baker, Assoc. Admin. for Mgmt. Controls, Office of Management and Budget, OFPP, 726 Jackson Place, Washington, D.C. 20352, 202 395-7207

RIN: 0348-AA70

3097. UNIFORM REQUIREMENTS FOR ASSISTANCE TO STATE AND LOCAL GOVERNMENTS (CIRCULAR NO. A-102)

Legal Authority: 31 USC 65 et seq; 42 USC 4212 et seq; 41 USC 401 et seq; See preamble

CFR Citation: Not applicable

Legal Deadline: None.

Abstract: The purpose of the review is to develop changes to administrative policies which will further reduce the regulatory burden on State and local governments.

Timetable:

Action	Date	FR Cite
Advance Notice of Policy Review	06/18/84	49 FR 24958
Notice of Proposed Policy	06/19/87	52 FR 21816
Final Action	03/11/88	53 FR 8027

Small Entity: No

Additional Information: On March 12, 1987, the President signed a memorandum directing the 23 grant-making agencies to simultaneously propose common grants management regulations that adopt Governmentwide terms and conditions for grants to State and local governments. Within one year the departments and agencies must issue final common rules.

Agency Contact: Jonathan D. Breul, Management Analyst, Office of Management and Budget, Financial Management Division, Washington, D.C. 20503, 202 395-3050

RIN: 0348-AA11

3098. ● MANAGING FEDERAL CREDIT PROGRAMS (CIRCULAR A-129)

Legal Authority: Budget and Accounting Act of 1921 AS Amended; Debt Collection Act of 1982 As Amended; Deficit Reduction Act of 1984

CFR Citation: Not applicable

Legal Deadline: None.

Abstract: Originally published May 1, 1985, revision clarifies the Circular.

Timetable:

Action	Date	FR Cite
Final Action	06/30/88	
Final Action Effective	06/30/88	

Small Entity: No

Agency Contact: Thomas Stack, Chief Credit and Cash Management Branch, Office of Management and Budget, Financial Management Division, Washington,DC 20503, 202 395-3066

RIN: 0348-AA82

[FR Doc. 88-5802 Filed 04-22-88; 8:45 am]

BILLING CODE 3110-01-T

VOL
53
ISS
79
PT
2
AP
25
1988
UMI

federal register

Monday
April 25, 1988

Part XXXII

Office of Personnel Management

Semiannual Regulatory Agenda

OFFICE OF PERSONNEL MANAGEMENT (OPM)

OFFICE OF PERSONNEL MANAGEMENT

5 CFR Ch. I

Regulatory Agenda

AGENCY: Office of Personnel Management.

ACTION: Semiannual agenda of regulations.

SUMMARY: The following Office of Personnel Management regulations are scheduled for development or review from April 1, 1988, through March 31, 1989. This agenda carries out OPM's responsibilities to publish a semiannual agenda under E.O. 12291, Federal Regulation, and the Regulatory Flexibility Act (5 U.S.C. chapter 6). This publication in the **Federal Register** does not impose a binding obligation on the Office of Personnel Management with regard to any specific item on the agenda. Regulatory action in addition to the items listed is not precluded.

FOR FURTHER INFORMATION CONTACT: JoAnn G. Blackler, (202) 653-7252.

U.S. Office of Personnel Management.

Constance Horner,

Director.

Prerule Stage

Sequence Number	Title	Regulation Identifier Number
3099	Executive Assignment System	3206-AC03
3100	Executive and Management Development	3206-AC12
3101	Suitability – Suitability Disqualification/Rating Actions	3206-AC19
3102	Personnel Security and Related Programs	3206-AC21
3103	Investigations	3206-AB92

Proposed Rule Stage

Sequence Number	Title	Regulation Identifier Number
3104	Performance Management System; Recordkeeping	3206-AB27
3105	Employment (General); Employment Practices	3206-AB41
3106	Employment (General); Time-in-Grade Restrictions	3206-AC01
3107	Appointment, Reassignment, Transfer, and Reinstatement in the Senior Executive Service	3206-AA09
3108	Appointment, Reassignment, Transfer and Reinstatement in the Senior Executive Service (SES Career Appointment by Reinstatement)	3206-AA11
3109	Employment in the Senior Executive Service	3206-AC81
3110	Qualifications Requirements (Medical)	3206-AA91
3111	Removal from the Senior Executive Service; Guaranteed Placement in Other Personnel Systems	3206-AA21
3112	Removal from the Senior Executive Service; Guaranteed Placement in Other Personnel Systems	3206-AA23
3113	Training	3206-AD06
3114	Performance Management System	3206-AD22
3115	Productivity Gainsharing	3206-AC71
3116	Pay Under the General Schedule; Prevailing Rate Systems; Grade and Pay Retention	3206-AC36
3117	Prevailing Rate Systems	3206-AC82
3118	Pay Under Other Systems (Pay Under the Senior Executive Service)	3206-AB29
3119	Pay Administration (General); Severance Pay	3206-AC41
3120	Pay Administration under the FLSA: Compliance	3206-AA40
3121	Processing Garnishment Orders for Child Support and/or Alimony	3206-AB42
3122	Absence and Leave; Restoration of Annual Leave	3206-AD42
3123	Political Activity of Federal Employees	3206-AA47
3124	Employee Responsibilities and Conduct	3206-AB66
3125	Post Employment Conflict of Interest	3206-AB12
3126	Retirement; Credit and Deposits for Military Service	3206-AB73
3127	Retirement; Disability Retirement	3206-AB77
3128	Retirement; Recovery of Annuity Overpayments	3206-AB78
3129	Federal Employees Group Life Insurance	3206-AB80
3130	Federal Employees Health Benefits Program; Technical Corrections	3206-AB83
3131	Federal Employees Health Benefits for Former Spouses of CIA and Foreign Service Employees	3206-AD28
3132	Federal Employees Health Benefits Program/Withdrawal of Carrier and Plan Approval	3206-AD37
3133	Federal Employees Health Benefits Program; Continuation of Enrollment	3206-AB88
3134	Federal Employees Health Benefits Program; Reenrollment of Certain Annuitants	3206-AD23
3135	Federal Employees Health Benefits Program (FEHBP) Plan Advertising in Violation of FEHBP Contract Provisions	3206-AD36
3136	OPM Procurement Regulations	3206-AB28

OPM

Final Rule Stage

Sequence Number	Title	Regulation Identifier Number
3137	Excepted Service -- Schedule B Authority to Appoint and Convert Cooperative Education Students	3206-AD20
3138	Organization of the Government for Personnel Management; Personnel Management in Agencies	3206-AA66
3139	Availability of Official Information	3206-AD05
3140	Procedures for Selecting Candidates for Appointment	3206-AD18
3141	General Recruitment/Placement Principles	3206-AC07
3142	Promotion and Internal Placement	3206-AA90
3143	Reduction in Grade and Removal Based on Unacceptable Performance	3206-AB21
3144	Special Salary Rates for Recruitment and Retention	3206-AD38
3145	Prevailing Rate Systems	3206-AC59
3146	Pay Administration (General); Back Pay	3206-AD39
3147	Pay Administration (General); Overtime Pay Computation	3206-AC99
3148	Pay Administration Under the Fair Labor Standards Act	3206-AD40
3149	Allowances and Differentials; Cost of Living Allowance and Post Differential--Nonforeign Areas	3206-AB34
3150	Absence and Leave; Coverage of D.C. Government Employees	3206-AC47
3151	Absence and Leave; Temporary Leave Transfer Program	3206-AD41
3152	Executive Personnel Financial Disclosure Requirements	3206-AA93
3153	Post Employment Conflict of Interest; 1987 Designation of Certain Positions and Agencies	3206-AD04
3154	Adverse Actions	3206-AC23
3155	Retirement; Underdeductions of Retirement Contributions	3206-AC96
3156	Retirement; Processing Court Orders for Apportionment of Civil Service Retirement System Annuity and Competing Claims for Survivor Benefits	3206-AC93
3157	Retirement; Credit for Service; Food Service Employees of the House of Representatives May Retain CSRS or FERS	3206-AD14
3158	Retirement; Credit for Service; Employees Who Transfer to Airports Authority	3206-AD15
3159	Retirement; Implementing Regulations for Civil Service Retirement Spouse Equity Act of 1984	3206-AB75
3160	Retirement; Deposits for Military Service	3206-AB35
3161	Retirement; Alternative Form of Annuity	3206-AD35
3162	Retirement; Federal Employees' Retirement System Act of 1986	3206-AC94
3163	Continuation of Federal Employees' Group Life Insurance Coverage During Military Service	3206-AD10
3164	Continuation of Health and Life Insurance Coverage During Retirement	3206-AD34
3165	Continuation of Federal Employees Health Benefits and Federal Employees Group Life Insurance Coverage under FERS	3206-AD11
3166	Credit for CHAMPUS Coverage for the Purpose of Continuing an FEHB Enrollment During Retirement	3206-AD26
3167	Federal Employees Health Benefits Program; Registration and Enrollment	3206-AB87
3168	Federal Employees Health Benefits Program; Continuation of Coverage During Military Service	3206-AD24
3169	Computer Security Training	3206-AD43

Completed Actions

Sequence Number	Title	Regulation Identifier Number
3170	Excepted Service -- Schedule A Authority for Employment of Students	3206-AD17
3171	Excepted Service -- Schedule A Authority to Appoint and Convert Presidential Management Interns	3206-AD21
3172	Protection of Privacy and Personnel Records	3206-AA70
3173	Overseas Employment	3206-AA71
3174	Noncompetitive Appointment of Certain Former Overseas Employees	3206-AD16
3175	Restoration to Duty from Military Service and Injury Compensation	3206-AC34
3176	Pay Under the General Schedule; Determining Rate of Basic Pay	3206-AA32
3177	Eligibility of District of Columbia Government Employees for Superior Qualifications Appointments	3206-AD19
3178	Post Employment Conflict of Interest; 1986 Designation of Certain Positions and Agencies	3206-AD00
3179	Adverse Actions (Regulatory Requirements for Taking Adverse Actions Under the Senior Executive Service)	3206-AA50
3180	Retirement; Order of Precedence for Statutory Withholdings from Annuity	3206-AB70
3181	Retirement; Part-time Employees	3206-AC95
3182	Retirement; Credit for Service under CSRS for Certain Service as National Guard Technicians, Cadet Nurse, and Nonappropriated Fund Employees	3206-AD13
3183	Retirement; Law Enforcement Officers and Firefighters	3206-AB09
3184	Civil Service Retirement, FEGLI, and FEHBP Coverage for D.C. Government Employees Hired After September 30, 1987	3206-AD09
3185	Standardization of Terms Used under the Federal Employees Group Life Insurance Program	3206-AD27
3186	An Additional Opportunity for Annuitants to Enroll for Federal Employees' Health Benefits Coverage	3206-AD12

OPM

Completed Actions—Continued

Sequence Number	Title	Regulation Identifier Number
3187	Federal Employees Health Benefits Program; Termination of Enrollment	3206-AB84
3188	Programs for Specific Positions and Examinations (Miscellaneous) Administrative Law Judges	3206-AB91

OFFICE OF PERSONNEL MANAGEMENT (OPM)

Prerule Stage

3099. EXECUTIVE ASSIGNMENT SYSTEM

Legal Authority: 5 USC 1302; 5 USC 3301; 5 USC 3302; 5 USC 3324; EO 10577

CFR Citation: 5 CFR 305

Legal Deadline: None.

Abstract: Review of regulations on executive assignment system (GS-16/18). Regulations need to be reviewed in light of the establishment of the Senior Executive Service, which incorporated most GS-16/18 positions, and delegations to agencies under the CSRA.

Timetable:

Action	Date	FR Cite
Begin Review	03/01/88	
End Review	09/00/88	

Small Entity: No

Agency Contact: Neal Harwood, Personnel Management Specialist, Office of Personnel Management, Office of Executive Personnel, Office of Executive Administration, 1900 E St., NW; Washington, DC 20415, 202 632-4625

RIN: 3206-AC03

3100. EXECUTIVE AND MANAGEMENT DEVELOPMENT

Legal Authority: 5 USC 3397

CFR Citation: 5 CFR 412, Subparts A and E

Legal Deadline: None.

Abstract: Review of executive and management development program authority for possible reconstructing.

Timetable:

Action	Date	FR Cite
Begin Review	02/15/88	
End Review	09/30/88	

Small Entity: No

Agency Contact: Harold Segal, Chief, Policy and Oversight Branch, Office of Personnel Management, Training and Investigations Group, 1121 Vermont Avenue, NW; P.O. Box 7230, Washington, D.C. 20044, 202 632-5574

RIN: 3206-AC12

3101. SUITABILITY – SUITABILITY DISQUALIFICATION/RATING ACTIONS

Legal Authority: 5 USC 3301; 5 USC 3302; 5 USC 7301; EO 10577; EO 11222

CFR Citation: 5 CFR 731, Subparts B and C

Legal Deadline: None.

Abstract: Comprehensive review of suitability standards. Current revision of personnel security program by Presidential task force will likely result in the need for conforming changes in personnel suitability standards.

Timetable:

Action	Date	FR Cite
Begin Review	11/01/85	
End Review	01/01/89	

Small Entity: No

Agency Contact: Frances A. Sclafani, Associate Director, Training and Investigations Group, Office of Personnel Management, 1900 E Street, NW, Washington, DC 20415, 202 632-4428

RIN: 3206-AC19

3102. PERSONNEL SECURITY AND RELATED PROGRAMS

Legal Authority: 5 USC 3301; 5 USC 3302; 5 USC 7312; 50 USC 403; EO 10450; EO 10577

CFR Citation: 5 CFR 732

Legal Deadline: None.

Abstract: Comprehensive review of security standards. Current revision of personnel security program by Presidential task force will likely result in the need for conforming changes in personnel security standards.

Timetable:

Action	Date	FR Cite
Begin Review	11/01/85	
End Review	01/01/89	

Small Entity: No

Agency Contact: Frances A. Sclafani, Associate Director, Training and Investigations Group, Office of Personnel Management, 1900 E Street, NW, Washington, DC 20415, 202 632-4428

RIN: 3206-AC21

3103. INVESTIGATIONS

Legal Authority: PL 93-579; 5 USC 522a

CFR Citation: 5 CFR 736

Legal Deadline: None.

Abstract: Review of Governmentwide background investigations standards. Current revision of personnel security program by Presidential task force will likely result in the need for conforming changes in personnel investigations standards.

Timetable:

Action	Date	FR Cite
Begin Review	11/01/85	
End Review	01/01/89	

Small Entity: No

Agency Contact: Frances A. Sclafani, Associate Director, Training and Investigations Group, Office of Personnel Management, 1900 E Street,

N.W., Washington, D.C. 20415, 202 632-4426

RIN: 3206-AB92

OFFICE OF PERSONNEL MANAGEMENT (OPM) — Proposed Rule Stage

3104. PERFORMANCE MANAGEMENT SYSTEM; RECORDKEEPING

Legal Authority: 5 USC 552; 5 USC 4302a; 5 USC 4312; EO 12107; 5 USC 1103; 5 USC 1104; 5 USC 1302; 5 CFR 7.2; EO 9830; 5 USC 4302

CFR Citation: 5 CFR 293

Legal Deadline: None.

Abstract: This section establishes requirements for the Performance Management System on filing and transfer of performance records. The proposed regulation is a technical change that would bring the OPF subpart into conformance with the EPF subpart, indicating that performance ratings of records, and the performance plans on which they are based, may be filed in either the OPF or the EPF.

Timetable:

Action	Date	FR Cite
NPRM	03/11/88	51 FR 8422
NPRM	04/00/88	
Final Action	06/00/88	

Small Entity: No

Agency Contact: C. Frank Carrick, Chief, Performance Management Division, Office of Personnel Management, Office of Pay and Performance, Personnel Systems and Oversight Group, 1900 E St., NW; Washington, DC 20415, 202 632-7630

RIN: 3206-AB27

3105. EMPLOYMENT (GENERAL); EMPLOYMENT PRACTICES

Legal Authority: 5 USC 3301; 5 USC 3302; 5 USC 3304

CFR Citation: 5 CFR 300

Legal Deadline: None.

Abstract: Clarification of the policy and appeal procedures used in developing and implementing employment practices in the recruitment, measurement and selection of individuals for appointments and promotion within the competitive service. The proposed amendments would remove a non-statutory appeal procedure which was created to provide a simple, streamlined administrative review procedure but which has, instead, become a time-consuming, convoluted process. Additionally, the proposed changes would avoid a duplicative enforcement procedure currently subject to review by OPM and MSPB, which is, more properly, within the sole jurisdiction of the EEOC.

Timetable:

Action	Date	FR Cite
EEOC Coordination	07/01/88	
NPRM	12/00/88	

Small Entity: No

Agency Contact: James S. Green, Associate General Counsel, Office of Personnel Management, Office of the General Counsel, 1900 E Street, NW, Washington, DC 20415, 202 632-5667

RIN: 3206-AB41

3106. EMPLOYMENT (GENERAL); TIME-IN-GRADE RESTRICTIONS

Legal Authority: 5 USC 3301; 5 USC 3302

CFR Citation: 5 CFR 300, Subpart F

Legal Deadline: None.

Abstract: Regulations based on review of time-in-grade restrictions. Regulations will address inconsistencies and clarify certain provisions.

Timetable:

Action	Date	FR Cite
NPRM	07/00/88	

Small Entity: No

Agency Contact: Donald L. Holum, Chief, Staffing Policy Division, Office of Personnel Management, Career Entry Group, 1900 E Street, NW, Washington, D.C. 20415, 202 632-6817

RIN: 3206-AC01

3107. APPOINTMENT, REASSIGNMENT, TRANSFER, AND REINSTATEMENT IN THE SENIOR EXECUTIVE SERVICE

Legal Authority: 5 USC 3392; 5 USC 3393; 5 USC 3394; 5 USC 3397

CFR Citation: 5 CFR 317

Legal Deadline: None.

Abstract: Proposed regulations to govern appointment actions in the SES, including establishment of qualifications standards, agency recruitment and selection procedures for career appointments, operations of OPM Qualifications Review Boards, and completion of the one-year probationary period for career appointees. Regulations are intended to set forth basic staffing requirements to assure compliance with merit system provisions and to implement staffing provisions of Pub. L. 98-615, November 8, 1984.

Timetable:

Action	Date	FR Cite
NPRM	04/00/88	

Small Entity: No

Additional Information: Regulatory Program RIN 3206-AC81 combines this item with RINs 3206-AA21, 3206-AA23, 3206-AB29, and 3206-AA50.

Agency Contact: Neal Harwood, Personnel Management Specialist, Office of Personnel Management, Office of Executive Personnel, Office of Executive Administration, 1900 E St., NW; Washington, DC 20415, 202 632-4625

RIN: 3206-AA09

3108. APPOINTMENT, REASSIGNMENT, TRANSFER AND REINSTATEMENT IN THE SENIOR EXECUTIVE SERVICE (SES CAREER APPOINTMENT BY REINSTATEMENT)

Legal Authority: 5 USC 3593

CFR Citation: 5 CFR 317, Subpart G

Legal Deadline: None.

Abstract: Proposed regulations on reinstatement to an SES career appointment following (a) voluntary separation from SES, or (b) separation from a Presidential appointment of a former SES career appointee. These reinstatements are authorized by law. The regulations set the procedures for implementing the law.

Timetable:

Action	Date	FR Cite
Interim Final Rule	12/05/80	45 FR 80468
NPRM	04/00/88	

Small Entity: No

Agency Contact: Neal Harwood, Personnel Management Specialist, Office of Personnel Management, Office of Executive Personnel, Office of Executive Administration, 1900 E St., NW; Washington, DC 20415, 202 632-4625

RIN: 3206-AA11

3109. EMPLOYMENT IN THE SENIOR EXECUTIVE SERVICE

Significance: Regulatory Program

Legal Authority: 5 USC 3392; 5 USC 3393; 5 USC 3394; 5 USC 3397; 5 USC 1302; 5 USC 3595; 5 USC 3596; 5 USC 5383; 5 USC 5385; 5 USC 7543

CFR Citation: 5 CFR 317; 5 CFR 359; 5 CFR 534; 5 CFR 752

Legal Deadline: None.

Abstract: This is a Regulatory Program entry that combines RINs 3206-AA09, 3206-AA21, 3206-AA23, 3206-AB29, and 3206-AA50.

Timetable:

Action	Date	FR Cite
NPRM	04/00/88	
Analyze comments	06/00/88	

Small Entity: No

Agency Contact: Kirke Harper, Director, Office of Executive Personnel, Office of Executive Administation, Office of Personnel Management, 1900 E St., N.W., Washington, DC 20415, 202 632-4625

RIN: 3206-AC81

3110. QUALIFICATIONS REQUIREMENTS (MEDICAL)

Legal Authority: 5 USC 3301; 5 USC 3304; 5 USC 3312

CFR Citation: 5 CFR 339

Legal Deadline: None.

Abstract: Proposed regulations to clarify procedures for establishing physical requirements for jobs and for documenting and processing disabilities.

Timetable:

Action	Date	FR Cite
NPRM	04/00/88	53 FR 9121
Final Action	07/00/88	

Small Entity: No

Agency Contact: Raleigh Neville, Personnel Staffing Specialist, Office of Personnel Management, Staffing Policy Division, Career Entry Group, 1900 E Street, NW, Washington, DC 20415, 202 632-6817

RIN: 3206-AA91

3111. REMOVAL FROM THE SENIOR EXECUTIVE SERVICE; GUARANTEED PLACEMENT IN OTHER PERSONNEL SYSTEMS

Legal Authority: 5 USC 1302; 5 USC 3594; 5 USC 3596

CFR Citation: 5 CFR 359

Legal Deadline: None.

Abstract: Proposed regulations on (1) the removal of SES career appointees during probation or for less than fully successful executive performance, (2) the removal of other than career appointees, (3) placement rights in other personnel systems of certain SES career appointees. These actions are authorized by law. The regulations establish procedures for implementing previous law and the new Pub. L. 98-615, November 6, 1984.

Timetable:

Action	Date	FR Cite
Interim Final Rule	07/31/79	44 FR 44815
NPRM	04/00/88	

Small Entity: No

Additional Information: Regulatory Program RIN 3206-AC81 combines this item with RINs 3206-AA09, 3206-AA23, 3206-AB29, and 3206-AA50.

Agency Contact: Neal Harwood, Personnel Management Specialist, Office of Personnel Management, Office of Executive Personnel, Office of Executive Administration, 1900 E St., NW; Washington, DC 20415, 202 632-4625

RIN: 3206-AA21

3112. REMOVAL FROM THE SENIOR EXECUTIVE SERVICE; GUARANTEED PLACEMENT IN OTHER PERSONNEL SYSTEMS

Legal Authority: 5 USC 3595; 5 USC 3596

CFR Citation: 5 CFR 359

Legal Deadline: None.

Abstract: Proposed regulations to add a new subpart to implement Pub. L. 97-35, August 13, 1981, as amended by Pub.L. 97-346, October 15, 1982, and Pub. L. 98-615, November 6, 1984, which added provisions to Title 5 to govern SES reduction-in-force actions affecting career executives. Regulations are needed to cover certain areas not in the law, such as notification to employees and retention of records, and to implement the provisions in the law dealing with OPM's responsibility to help place career executives identified for reduction in force and with "fallback" rights following a RIF.

Timetable:

Action	Date	FR Cite
NPRM	04/00/88	

Small Entity: No

Additional Information: Regulatory Program RIN 3206-AC81 combines this item with RINs 3206-AA09, 3206-AA21, 3206-AB29, and 3206-AA50.

Agency Contact: Neal Harwood, Personnel Management Specialist, Office of Personnel Management, Office of Executive Personnel, Office of Executive Administration, 1900 E St., NW; Washington, DC 20415, 202 632-4625

RIN: 3206-AA23

3113. TRAINING

Legal Authority: 5 USC 4118

CFR Citation: 5 CFR 410

Legal Deadline: None.

Abstract: Revision of training regulations to remove obsolete or unessential reporting requirements and remove or modify any other outmoded regulation.

Timetable:

Action	Date	FR Cite
NPRM	04/01/88	

Small Entity: No

Agency Contact: Harold Segal, Chief, Policy and Oversight Branch, Office of Personnel Management, Training and Investigations Group, 1121 Vermont Avenue, NW; P.O. Box 7230, Washington, DC 20044, 202 632-5574

RIN: 3206-AD06

3114. PERFORMANCE MANAGEMENT SYSTEM

Significance: Regulatory Program

Legal Authority: 5 USC Ch 43; 5 USC Ch 45; 5 USC Ch 53; 5 USC Ch 54

CFR Citation: 5 CFR 430

Legal Deadline: None.

Abstract: Establishes requirements for the Performance Management Systems for General Schedule, Prevailing Rate, and SES employees. Regulations will be streamlined to eliminate impediments to management flexibility while still assuring pay-for-performance systems.

Timetable:

Action	Date	FR Cite
NPRM	04/00/88	
Final Action	06/00/88	

Small Entity: No

Agency Contact: C. Frank Carrick, Chief, Performance Management Division, Office of Personnel Management, Office of Pay and Performance, Personnel Systems and Oversight Group, 1900 E St., NW; Washington, DC 20415, 202 632-7630

RIN: 3206-AD22

3115. PRODUCTIVITY GAINSHARING

Significance: Regulatory Program

Legal Authority: 5 USC Ch 45; 5 USC Ch 54

CFR Citation: 5 CFR 451

Legal Deadline: None.

Abstract: The proposed regulation would provide a framework for encouraging agency efforts to establish productivity gainsharing programs.

Timetable:

Action	Date	FR Cite
NPRM	04/00/88	
Final Action	12/00/88	

Small Entity: No

Agency Contact: James P. Hellings, Chief, Policy and Information Division, Systems Innovation and Simplification, Office of Personnel Management, Personnel Systems and Oversight Group, 1900 E St., NW, Washington, DC 20415, 202 653-5835

RIN: 3206-AC71

3116. PAY UNDER THE GENERAL SCHEDULE; PREVAILING RATE SYSTEMS; GRADE AND PAY RETENTION

Legal Authority: 5 USC 5334(a); 5 USC 5338; 5 USC 5365

CFR Citation: 5 CFR 531; 5 CFR 532; 5 CFR 536

Legal Deadline: None.

Abstract: Under current regulations, numerous pay administration problems exist in movements between Federal pay systems. For example, the method of determining entitlement to grade retention in movements between pay systems results in unnecessary expenditures of Federal funds and false expectations for affected employees. Proposed regulations would revise definitions of "promotion" and "demotion" to improve pay administration and minimize the number of employees entitled to grade retention in movements between pay systems.

Timetable:

Action	Date	FR Cite
NPRM	07/00/88	

Small Entity: No

Agency Contact: Jan Karicher, Pay and Benefits Specialist, Office of Personnel Management, Office of Pay and Performance, Personnel Systems and Oversight Group, 1900 E Street, NW; Washington, DC 20415, 202 632-5056

RIN: 3206-AC36

3117. PREVAILING RATE SYSTEMS

Significance: Regulatory Program

Legal Authority: 5 USC 5343; 5 USC 5346

CFR Citation: 5 CFR 532

Legal Deadline: None.

Abstract: Proposed rule changes would revise Monroney regulations so that only non-Department of Defense Federal Wage System positions would be covered. Legislation has removed DOD employees from Monroney.

Timetable:

Action	Date	FR Cite
NPRM	09/00/88	

Small Entity: No

Agency Contact: Jack Pokoyk, Chief, Wage Systems Division, Office of Personnel Management, Personnel Systems and Oversight Group, 1900 E St., NW; Washington, DC 20415, 202 632-7830

RIN: 3206-AC82

3118. PAY UNDER OTHER SYSTEMS (PAY UNDER THE SENIOR EXECUTIVE SERVICE)

Legal Authority: 5 USC 5383; 5 USC 5385

CFR Citation: 5 CFR 534, Subpart D

Legal Deadline: None.

Abstract: Proposed regulations on setting individual basic pay under the SES. Regulations are needed to clarify the intent and application of 5 USC 5383(a) on changes in SES pay rates and to implement provisions in Pub. L. 98-615, November 8, 1984, on aggregate compensation.

Timetable:

Action	Date	FR Cite
NPRM	04/00/88	

Small Entity: No

Additional Information: Regulatory Program RIN 3206-AC81 combines this item with RINs 3206-AA09, 3206-AA21, 3206-AA23, and 3206-AA50.

Agency Contact: Neal Harwood, Personnel Management Specialist, Office of Personnel Management, Office of Executive Personnel, Office of Executive Administration, 1900 E St., NW; Washington, DC 20415, 202 632-4625

RIN: 3206-AB29

3119. PAY ADMINISTRATION (GENERAL); SEVERANCE PAY

Legal Authority: 5 USC 5595; EO 11228

CFR Citation: 5 CFR 550, Subpart G

BEST COPY AVAILABLE

Legal Deadline: None.

Abstract: Proposed regulations would make eligibility for involuntary retirement and severance pay parallel, since the same circumstances give rise to both. Proposed regulations also would clarify severance pay coverage for certain employees serving under time-limited appointments.

Timetable:

Action	Date	FR Cite
NPRM	05/00/88	

Small Entity: No

Agency Contact: Jan Karicher, Pay and Benefits Specialist, Office of Personnel Management, Office of Pay and Performance, Personnel Systems and Oversight Group, 1900 E St., NW; Washington, DC 20415, 202 632-5056

RIN: 3206-AC41

3120. PAY ADMINISTRATION UNDER THE FLSA: COMPLIANCE

Legal Authority: 29 USC 204(f); 5 USC 1103(a)(5)

CFR Citation: 5 CFR 551, Subpart F

Legal Deadline: None.

Abstract: Proposed new regulation covering the FLSA Compliance Program and simplifying the FLSA claims handling process.

Timetable:

Action	Date	FR Cite
NPRM	06/00/88	

Small Entity: No

Agency Contact: Jack Tapping, Personnel Management Specialist, Office of Personnel Management, Personnel and Systems and Oversight Group, Agency Compliance and Evaluation, 1900 E St., NW, Washington, DC 20415, 202 632-4530

RIN: 3206-AA40

3121. PROCESSING GARNISHMENT ORDERS FOR CHILD SUPPORT AND/OR ALIMONY

Legal Authority: 42 USC 659; 42 USC 661 to 662; 15 USC 1673; EO 12105

CFR Citation: 5 CFR 581

Legal Deadline: None.

Abstract: Update regulation in response to ongoing suggestions and corrections, especially changes to Appendix A which contains an obsolete list of agents designated to accept legal process.

Timetable:

Action	Date	FR Cite
NPRM	04/28/86	51 FR 15787
NPRM	09/00/88	

Small Entity: No

Agency Contact: Murray Meeker, Attorney, Office of Personnel Management, Office of the General Counsel, 1900 E Street, NW, Room 7544, Washington, DC 20415, 202 632-5090

RIN: 3206-AB42

3122. ● ABSENCE AND LEAVE; RESTORATION OF ANNUAL LEAVE

Legal Authority: 5 USC 6311

CFR Citation: 5 CFR 630

Legal Deadline: None.

Abstract: As part of a continuing effort to simplify and deregulate the Federal personnel system, the proposed regulations would permit the head of each agency to delegate to an appropriate administrative level within the agency the responsibility for determining that an exigency of the public business has prevented an employee from using annual leave that otherwise would be subject to forfeiture under 5 U.S.C. 6304.

Timetable:

Action	Date	FR Cite
NPRM	04/00/88	
Final Action	07/00/88	

Small Entity: No

Agency Contact: James E. Matteson, Pay and Benefits Specialist, Office of Personnel Management, Office of Pay and Performance Management, Personnel Systems and Oversight Group, 1900 E St., NW., Washington, DC 20415, 202 632-5056

RIN: 3206-AD42

3123. POLITICAL ACTIVITY OF FEDERAL EMPLOYEES

Legal Authority: 5 USC 1308; 5 USC 3301; 5 USC 3302; 5 USC 7301; 5 USC 7321 to 7325; 5 USC 7327; 42 USC 2729; EO 10577 3 CFR, 1954-1958 Comp. p. 218; 5 USC 7701 et seq; EO 12107

CFR Citation: 5 CFR 733

Legal Deadline: None.

Abstract: Prescribes (1) regulations under the Hatch Act and related provisions of law that restrict the political activity of Federal employees; (2) definitional and structural revisions; and (3) possible addition and/or recision of partial exceptions by the Director for municipalities or political subdivisions.

Timetable:

Action	Date	FR Cite
NPRM	12/00/88	

Small Entity: No

Agency Contact: JoAnn Chabot, Attorney, Office of Personnel Management, Office of the General Counsel, 1900 E St., NW, Room 7538, Washington, DC 20415, 202 632-5030

RIN: 3206-AA47

3124. EMPLOYEE RESPONSIBILITIES AND CONDUCT

Legal Authority: EO 11222; PL 95-521

CFR Citation: 5 CFR 735

Legal Deadline: None.

Abstract: Amends portions of final regulation, 5 CFR Part 735, to clarify and update general provisions dealing with employee conduct.

Timetable:

Action	Date	FR Cite
NPRM	06/02/88	
Final Action	10/02/88	

Small Entity: No

Agency Contact: Jane Ley, Staff Attorney, Office of Personnel Management, Office of Government Ethics, P.O. Box 14108, Washington, DC 20044, 202 632-7642

RIN: 3206-AB66

3125. POST EMPLOYMENT CONFLICT OF INTEREST

Legal Authority: 18 USC 207; PL 95-521

CFR Citation: 5 CFR 737

Legal Deadline: None.

Abstract: Proposed technical and conforming regulations to clarify the post employment rules.

Timetable:

Action	Date	FR Cite
NPRM	09/30/88	

Small Entity: No

Agency Contact: Jane Ley, Staff Attorney, Office of Personnel Management, Office of Government Ethics, P.O. Box 14108, Washington, DC 20044, 202 632-7642

RIN: 3206-AB12

3126. RETIREMENT; CREDIT AND DEPOSITS FOR MILITARY SERVICE

Legal Authority: PL 97-253, Sec 306(b); PL 98-94, Sec 1257; PL 98-369, Sec 2205

CFR Citation: 5 CFR 831, Subparts C and U

Legal Deadline: None.

Abstract: Public Laws 97-253, 98-94, and 98-369 amend the provisions of the retirement law that deal with crediting military service and making deposits for military service. Proposed regulations would revise the affected regulations to implement these laws.

Timetable:

Action	Date	FR Cite
NPRM	10/00/88	
Final Action	04/00/89	

Small Entity: No

Agency Contact: Patricia Rochester, Paralegal Specialist, Office of Personnel Management, Office of Retirement and Insurance Policy, Retirement and Insurance Group, 1900 E St., N.W., Washington, D.C. 20415, 202 632-4682

RIN: 3206-AB73

3127. RETIREMENT; DISABILITY RETIREMENT

Legal Authority: 5 USC 8347

CFR Citation: 5 CFR 831, Subpart L

Legal Deadline: None.

Abstract: Comprehensive revision of disability retirement regulations to clarify (1) OPM'S authority to find a disability annuitant recovered from a disability when the annuitant is reemployed in the Federal service in a position equivalent in grade to the one from which he or she retired, and (2) the rules used to determine whether a disability annuitant has been restored to earning capacity.

Timetable:

Action	Date	FR Cite
NPRM	06/00/88	
Final Action	02/00/89	

Small Entity: No

Agency Contact: Gay Gardner, Paralegal Specialist, Office of Personnel Management, Office of Retirement and Insurance Policy, Retirement and Insurance Group, 1900 E St., NW; Washington, DC 20415, 202 632-4682

RIN: 3206-AB77

3128. RETIREMENT; RECOVERY OF ANNUITY OVERPAYMENTS

Legal Authority: 5 USC 8347

CFR Citation: 5 CFR 831, Subpart M

Legal Deadline: None.

Abstract: Proposed regulations to add further guidelines on debt collection activities under the Debt Collection Act of 1982. Current regulations need to be expanded to (1) exclude collections made by Treasury under 31 CFR 210.10 from OPM procedures for recovery of debts, and (2) add provisions for collecting debts due the Civil Service Retirement Fund from a deceased debtor.

Timetable:

Action	Date	FR Cite
NPRM	04/00/88	
Final Action	04/00/89	

Small Entity: No

Agency Contact: Patricia A. Rochester, Paralegal Specialist, Office of Personnel Management, Office of Retirement and Insurance Policy, Retirement and Insurance Group, 1900 E St., N.W.; Washington, D.C. 20415, 202 632-4682

RIN: 3206-AB78

3129. FEDERAL EMPLOYEES GROUP LIFE INSURANCE

Legal Authority: 5 USC 8716

CFR Citation: 5 CFR 870; 5 CFR 871; 5 CFR 872; 5 CFR 873

Legal Deadline: None.

Abstract: Technical and conforming amendments to bring current regulations up to date by correcting reference errors, deleting obsolete provisions, etc.

Timetable:

Action	Date	FR Cite
NPRM	12/00/88	

Small Entity: No

Agency Contact: Bonnie Rose, Pay and Benefits Specialist, Office of Personnel Management, Office of Retirement and Insurance Policy, Retirement and Insurance Group, 1900 E St., NW; Washington, D.C. 20415, 202 632-4634

RIN: 3206-AB90

3130. FEDERAL EMPLOYEES HEALTH BENEFITS PROGRAM; TECHNICAL CORRECTIONS

Legal Authority: 5 USC 8913

CFR Citation: 5 CFR 890

Legal Deadline: None.

Abstract: Technical and conforming amendments to bring current regulations up to date by correcting errors, deleting obsolete provisions, etc.

Timetable:

Action	Date	FR Cite
NPRM	12/00/88	

Small Entity: No

Agency Contact: Barbara Myers, Pay and Benefits Specialist, Office of Personnel Management, Office of Retirement and Insurance Policy, Retirement and Insurance Group, 1900 E St., NW; Washington, DC 20415, 202 632-4634

RIN: 3206-AB83

3131. FEDERAL EMPLOYEES HEALTH BENEFITS FOR FORMER SPOUSES OF CIA AND FOREIGN SERVICE EMPLOYEES

Legal Authority: 5 USC 8913

CFR Citation: 5 CFR 890

Legal Deadline: None.

Abstract: This regulation will implement Sections 302 and 303 of the Intelligence Authorization Act of 1986 and Sections 831 and 832 of the Foreign Relations Authorization Act, Fiscal Years 1988 and 1989. The regulation describes the conditions under which two groups of former spouses of Central Intelligence Agency and Foreign Service employees or former employees previously omitted from spouse equity legislation may enroll in the Federal Employees Health Benefits (FEHB) Program.

Timetable:

Action	Date	FR Cite
NPRM	04/00/88	
Final Action	09/00/88	

Small Entity: No

Agency Contact: Mary Ann Mercer, Pay and Benefits Specialist, Office of Personnel Management, Office of Retirement and Insurance Policy, Retirement and Insurance Group, 1900 E St., NW; Washington, DC 20415, 202 632-4634

RIN: 3206-AD28

3132. ● FEDERAL EMPLOYEES HEALTH BENEFITS PROGRAM/WITHDRAWAL OF CARRIER AND PLAN APPROVAL

Legal Authority: 5 USC 8913

CFR Citation: 5 CFR 890

Legal Deadline: None.

Abstract: Regulations to clarify OPM's minimum standards for a plan's or carrier's participation in FEHB and OPM's right to withdraw approval, with due process.

Timetable:

Action	Date	FR Cite
NPRM	05/00/88	
Final Action	11/00/88	

Small Entity: No

Agency Contact: Mary Ann Mercer, Pay and Benefits Specialist, Office of Personnel Management, Office of Retirement and Insurance Policy, Retirement and Insurance Group, 1900 E St., NW., Washington, DC 20415, 202 632-4634

RIN: 3206-AD37

3133. FEDERAL EMPLOYEES HEALTH BENEFITS PROGRAM; CONTINUATION OF ENROLLMENT

Legal Authority: 5 USC 8913

CFR Citation: 5 CFR 890, Subpart C

Legal Deadline: None.

Abstract: Proposed regulations to reflect established OPM practice of allowing surviving family members to continue FEHBP participation under multiple enrollments in split-award survivor annuity cases. If multiple enrollments are not allowed, certain eligible family members might lose FEHBP coverage.

Timetable:

Action	Date	FR Cite
NPRM	06/00/88	

Small Entity: No

Agency Contact: Eleanor Goodwin, Pay and Benefits Specialist, Office of Personnel Management, Office of Retirement and Insurance Policy, Retirement and Insurance Group, 1900 E St., NW; Washington, DC 20415, 202 632-4634

RIN: 3206-AB88

3134. FEDERAL EMPLOYEES HEALTH BENEFITS PROGRAM; REENROLLMENT OF CERTAIN ANNUITANTS

Legal Authority: 5 USC 8913

CFR Citation: 5 CFR 890, Subpart C

Legal Deadline: None.

Abstract: Proposed regulations to permit reenrollment of annuitants who cancelled FEHB enrollment to enroll in a Health Maintenance Organization or Competitive Medical Plan under a Medicare risk contract and need to return to FEHB coverage.

Timetable:

Action	Date	FR Cite
NPRM	05/00/88	

Small Entity: No

Agency Contact: Barbara Myers, Pay and Benefits Specialist, Office of Personnel Management, Office of Retirement and Insurance Policy, Retirement and Insurance Group, 1900 E St., NW; Washington, DC 20415, 202 632-4634

RIN: 3206-AD23

3135. ● FEDERAL EMPLOYEES HEALTH BENEFITS PROGRAM (FEHBP) PLAN ADVERTISING IN VIOLATION OF FEHBP CONTRACT PROVISIONS

Legal Authority: 5 USC 8913; 40 USC 486(c)

CFR Citation: 48 CFR Ch 16

Legal Deadline: None.

Abstract: Regulations to require any plan that violates the advertising provisions in its Federal Employees Health Benefits Program contract to correct the violation in the media that the advertising occurred.

Timetable:

Action	Date	FR Cite
NPRM	09/00/88	
Final Action	03/00/89	

Small Entity: No

Agency Contact: Mary Ann Mercer, Pay & Benefits Specialist, Office of Personnel Management, Office of Retirement and Insurance Policy, Retirement and Insurance Group, 1900 E St., NW., Washington, DC 20415, 202 632-4634

RIN: 3206-AD36

3136. OPM PROCUREMENT REGULATIONS

Legal Authority: 48 CFR Chapter 1

CFR Citation: 48 CFR 17

Legal Deadline: None.

Abstract: Regulations to implement and supplement the Federal Acquisition Regulations (FAR). The FAR were effective April 1, 1984.

Timetable:

Action	Date	FR Cite
NPRM	00/00/00	

Small Entity: Undetermined

Agency Contact: Robert Lawshe, Chief, Acquisition Division, Office of Personnel Management, Administration Group, 1900 E Street, NW, Washington, DC 20415, 202 632-5476

RIN: 3206-AB28

OFFICE OF PERSONNEL MANAGEMENT (OPM)

Final Rule Stage

3137. EXCEPTED SERVICE – SCHEDULE B AUTHORITY TO APPOINT AND CONVERT COOPERATIVE EDUCATION STUDENTS

Significance: Regulatory Program

Legal Authority: EO 12015

CFR Citation: 5 CFR 213.3202

Legal Deadline: None.

Abstract: Current regulations unnecessarily limit agencies' ability to make full use of cooperative education programs. Changes under consideration would increase program flexibility and effectiveness and eliminate a number of current restrictions.

Timetable:

Action	Date	FR Cite
NPRM	01/22/88	53 FR 1789
Final Action	04/00/88	

Small Entity: No

Agency Contact: Ken Bates, Personnel Staffing Specialist, Office of Personnel Management, Recruiting and Intake Programs Division, Career Entry Group, 1900 E St., NW; Washington, DC 20415, 202 632-0496

RIN: 3206-AD20

3138. ORGANIZATION OF THE GOVERNMENT FOR PERSONNEL MANAGEMENT; PERSONNEL MANAGEMENT IN AGENCIES

Legal Authority: 5 USC 1104; 5 USC 1302; 5 USC 3301; 5 USC 3302; EO 10577

CFR Citation: 5 CFR 230; 5 CFR 250

Legal Deadline: None.

Abstract: Deletes Part 230 and transfers its regulations to Part 250, to maintain parallel structure with 5 U.S.C. Combines material formerly in Part 230 with regulations now found in Part 250 to present all regulations on agencies' authorities for personnel management in a single part of the Code of Federal Regulations. Changes improve the technical integrity of the CFR by eliminating redundancies and improving the efficiency of OPM's regulations. No change in the coverage or substance of affected regulations.

Timetable:

Action	Date	FR Cite
NPRM	05/20/83	48 FR 22728
Final Action	05/30/89	

Small Entity: No

Agency Contact: Walter Townsend, Program Analyst, Office of Personnel Management, Analysis and Evaluation Division, Administration Group, 1900 E St., NW, Washington, DC 20415, 202 653-5341

RIN: 3206-AA68

3139. AVAILABILITY OF OFFICIAL INFORMATION

Legal Authority: 5 USC 552

CFR Citation: 5 CFR 294

Legal Deadline: Statutory, April 25, 1987.

Abstract: Pursuant to the promulgation of new guidelines by the Director of the Office of Management and Budget, the Freedom of Information Reform Act of 1986 requires each agency to specify (a) the schedule of fees applicable to the processing of FOIA requests and (b) procedures and guidelines for determining when fees should be waived or reduced.

Timetable:

Action	Date	FR Cite
Interim Final Rule	04/22/87	52 FR 13215
Final Action	04/00/88	

Small Entity: No

Agency Contact: William C. Duffy, Chief, Information Plans and Policies Division, Office of Personnel Management, Administration Group, 1900 E Street, NW; Room 6410, Washington, DC 20415, 202 632-7714

RIN: 3206-AD05

3140. PROCEDURES FOR SELECTING CANDIDATES FOR APPOINTMENT

Legal Authority: 5 USC 1302; 5 USC 3301; 5 USC 3302

CFR Citation: 5 CFR 302; 5 CFR 333

Legal Deadline: None.

Abstract: Permits agencies to rank and refer candidates for either excepted appointments or appointments outside registers in one of two ways: (1) in the same way as in the competitive service (i.e., numerical scores from 70 to 100, extra points for veterans preference, and rule of three); or (2) referral in order of veterans preference without ranking. (Currently, the first method is required for all excepted appointments, and the second method is required for all appointments outside registers.)

Timetable:

Action	Date	FR Cite
NPRM	12/29/87	52 FR 49023
Final Action	05/00/88	

Small Entity: No

Agency Contact: Tracy Spencer, Personnel Staffing Specialist, Office of Personnel Management, Staffing Policy Division, Career Entry Group, 1900 E St., NW; Washington, DC 20415, 202 632-6817

RIN: 3206-AD18

3141. GENERAL RECRUITMENT/PLACEMENT PRINCIPLES

Legal Authority: 5 USC 1302; 5 USC 3302; 5 USC 3315; 5 USC 8151

CFR Citation: 5 CFR 330; 5 CFR 351

Legal Deadline: None.

Abstract: Proposed regulations based on review of Reemployment Priority List and Displaced Employee Program authorities. Regulations would focus on the need to provide assistance to employees in cutbacks.

Timetable:

Action	Date	FR Cite
NPRM	01/07/88	53 FR 408
Final Action	09/00/88	

Small Entity: No

Agency Contact: Donald L. Holum, Chief, Staffing Policy Division, Office of Personnel Management, Career Entry Group, 1900 E Street, NW, Washington, D.C. 20415, 202 632-6817

RIN: 3206-AC07

3142. PROMOTION AND INTERNAL PLACEMENT

Significance: Regulatory Program

Legal Authority: 5 USC 3301; 5 USC 3302

CFR Citation: 5 CFR 335

Legal Deadline: None.

Abstract: Proposed regulations to revise the Federal Merit Promotion Program to strengthen management rights, and clarify important concepts.

Timetable:

Action	Date	FR Cite
NPRM	11/07/86	51 FR 40436
Analyze comments	02/28/87	

Action	Date	FR Cite
Final Action	04/00/88	

Small Entity: No

Agency Contact: Raleigh M. Neville, Personnel Staffing Specialist, Office of Personnel Management, Staffing Policy Division, Career Entry Group, 1900 E Street, NW, Washington, DC 20415, 202 632-6817

RIN: 3206-AA90

3143. REDUCTION IN GRADE AND REMOVAL BASED ON UNACCEPTABLE PERFORMANCE

Legal Authority: 5 USC 4303; 5 USC 4305

CFR Citation: 5 CFR 432

Legal Deadline: None.

Abstract: Proposed regulations would clarify the procedures agencies must follow in removing or reducing in-grade employees whose performance is unacceptable. These changes are necessary due to changing legal requirements brought about by court decisions and OPM interpretations of 5 U.S.C. chapter 43 requirements.

Timetable:

Action	Date	FR Cite
NPRM	02/23/87	52 FR 5463
Final Action	04/00/88	

Small Entity: No

Agency Contact: Tim Dirks, Chief, Employee Relations Division, Office of Personnel Management, Personnel Systems and Oversight Group, 1900 E Street, NW, Washington, DC 20415, 202 653-8551

RIN: 3206-AB21

3144. ● SPECIAL SALARY RATES FOR RECRUITMENT AND RETENTION

Significance: Regulatory Program

Legal Authority: 5 USC 5303

CFR Citation: 5 CFR 530

Legal Deadline: None.

Abstract: Public Law 100-202 enlarges the scope of 5 U.S.C. 5303 for FY 1988 to cover recruitment and retention problems caused by higher pay in State and local governments or in other pay systems within the executive branch or the Federal Government; remoteness or undesirability of work location or conditions; or other circumstances identified by President (or his designee).

Timetable:

Action	Date	FR Cite
Interim Final Rule	04/00/88	

Small Entity: No

Agency Contact: Clarence Mathews, Chief, Special Rates Branch, Office of Personnel Management, Office of Pay and Performance Management, Personnel Systems and Oversight Group, 1900 E St., NW., Washington, DC 20415, 202 632-4614

RIN: 3206-AD38

3145. PREVAILING RATE SYSTEMS

Legal Authority: 5 USC 5343; 5 USC 5346

CFR Citation: 5 CFR 532

Legal Deadline: None.

Abstract: Proposed rule changes would revise Monroney regulations to limit the use of private sector specialized industry data obtained outside a wage area in setting pay rates for positions in that area.

Timetable:

Action	Date	FR Cite
NPRM	10/08/85	50 FR 40979
Final Action	04/00/88	

Small Entity: No

Agency Contact: Jack Pokoyk, Chief, Wage Systems Division, Office of Personnel Management, Personnel Systems and Oversight Group, 1900 E St., NW; Washington, DC 20415, 202 632-7830

RIN: 3206-AC59

3146. ● PAY ADMINISTRATION (GENERAL); BACK PAY

Significance: Regulatory Program

Legal Authority: 5 USC 5596

CFR Citation: 5 CFR 550

Legal Deadline: None.

Abstract: Public Law 100-202 amended 5 U.S.C. 5596 to provide for the payment of interest in all back pay cases. The interim regulations would establish procedures for implementing this change in law.

Timetable:

Action	Date	FR Cite
Interim Final Rule	04/00/88	
Final Action	07/00/88	

Small Entity: No

Agency Contact: John Cahill, Pay and Benefits Specialist, Office of Personnel Management, Office of Pay and Performance Management, Personnel Systems and Oversight Group, 1900 E St., NW., Washington, DC 20415, 202 632-5056

RIN: 3206-AD39

3147. PAY ADMINISTRATION (GENERAL); OVERTIME PAY COMPUTATION

Legal Authority: 5 USC 5548

CFR Citation: 5 CFR 550, Subpart A

Legal Deadline: None.

Abstract: Final regulations would clearly distinguish between overtime work in excess of 8 hours in a day outside the basic 40-hour workweek and overtime work in excess of 8 hours in a day within the basic 40-hour workweek. This change would correct a recent Comptroller General decision that results in an improper payment for overtime work for employees on unusual work schedules.

Timetable:

Action	Date	FR Cite
NPRM	05/12/87	52 FR 17762
Final Action	04/00/88	

Small Entity: No

Agency Contact: Edward I. Magee, Pay and Benefits Specialist, Office of Personnel Management, Office of Pay and Performance, Personnel Systems and Oversight Group, 1900 E St., NW; Washington, DC 20415, 202 632-5056

RIN: 3206-AC98

3148. ● PAY ADMINISTRATION UNDER THE FAIR LABOR STANDARDS ACT

Legal Authority: 29 USC 204(f)

CFR Citation: 5 CFR 551

Legal Deadline: None.

Abstract: As a result of a recen decision of the Court of Appeals for the Federal Circuit in the case of Lanehart v. Horner, it is necessary to revise the

regulations on pay administration under the Fair Labor Standards Act so as to consider periods of paid absence as "hours of work" for certain employees.

Timetable:

Action	Date	FR Cite
Interim Final Rule	12/16/87	52 FR 47687
Final Action	05/00/88	

Small Entity: No

Agency Contact: James E. Matteson, Pay and Benefits Specialist, Office of Personnel Management, Office of Pay and Performance Management, Personnel Systems and Oversight Group, 1900 E St., NW., Washington, DC 20415, 202 632-5056

RIN: 3206-AD40

3149. ALLOWANCES AND DIFFERENTIALS; COST OF LIVING ALLOWANCE AND POST DIFFERENTIAL—NONFOREIGN AREAS

Legal Authority: 5 USC 5941; EO 10000

CFR Citation: 5 CFR 591, Subpart B

Legal Deadline: None.

Abstract: Comprehensive revision of regulations to reflect revised methodology used to establish nonforeign cost-of-living allowances. (See Alaniz v. Office of Personnel Management, 728 F. 2d 1460 (Fed. Cir. 1984).)

Timetable:

Action	Date	FR Cite
NPRM	10/21/85	50 FR 42531
Final Action	12/00/88	

Small Entity: No

Agency Contact: Allan Hearne, Economist, Office of Pay and Performance, Office of Personnel Management, Personnel Systems and Oversight Group, 1900 E Street, NW, Washington, DC 20415, 202 632-7184

RIN: 3206-AB34

3150. ABSENCE AND LEAVE; COVERAGE OF D.C. GOVERNMENT EMPLOYEES

Legal Authority: 5 USC 6311; DC Law 2-139, as amended

CFR Citation: 5 CFR 630

Legal Deadline: None.

Abstract: Current regulations contain obsolete references to certain D.C. government employees who are no longer covered by chapter 63 of title 5 of the United States Code. Final regulations would delete these obsolete references.

Timetable:

Action	Date	FR Cite
NPRM	02/27/85	50 FR 7922
Final Action	09/00/88	

Small Entity: No

Agency Contact: Frank Derby, Pay and Benefits Specialist, Office of Personnel Management, Office of Pay and Performance, Personnel Systems and Oversight Group, 1900 E St., NW; Washington, DC 20415, 202 632-5056

RIN: 3206-AC47

3151. ● ABSENCE AND LEAVE; TEMPORARY LEAVE TRANSFER PROGRAM

Significance: Regulatory Program

Legal Authority: 5 USC 6311; PL 100-202

CFR Citation: 5 CFR 630

Legal Deadline: None.

Abstract: Public Law 100-202 authorized the Office of Personnel Management to establish a program under which Federal employees may transfer annual leave to other employees who need such leave because of a "personal emergency." The interim regulations would establish the administrative procedures for Federal agencies to permit the transfer of annual leave for this purpose. The statutory authority for this program expires at the end of FY 88.

Timetable:

Action	Date	FR Cite
Interim Final Rule	03/08/88	53 FR 7325
Next Action Pending Legislation	04/00/88	
Expires	09/30/88	

Small Entity: No

Agency Contact: Martha Hoehn, Pay and Benefits Specialist, Office of Personnel Management, Office of Pay and Performance Management, Personnel Systems and Oversight Group, 1900 E St., NW., Washington, DC 20415, 202 632-5056

RIN: 3206-AD41

3152. EXECUTIVE PERSONNEL FINANCIAL DISCLOSURE REQUIREMENTS

Significance: Regulatory Program

Legal Authority: 5 USC App 207(a); PL 95-521

CFR Citation: 5 CFR 735

Legal Deadline: None.

Abstract: Proposed new regulation to supersede portions of 5 CFR Part 735 dealing with confidential financial disclosure for grades below GS-16.

Timetable:

Action	Date	FR Cite
NPRM	12/02/86	51 FR 43359
Analyze comments	05/31/87	
Final Action	04/01/88	

Small Entity: No

Agency Contact: Jane Ley, Staff Attorney, Office of Government Ethics, Office of Personnel Management, P.O. Box 14108, Washington, DC 20044, 202 632-7642

RIN: 3206-AA93

3153. POST EMPLOYMENT CONFLICT OF INTEREST; 1987 DESIGNATION OF CERTAIN POSITIONS AND AGENCIES

Legal Authority: 18 USC 207(b)(1)(c); PL 95-521

CFR Citation: 5 CFR 737

Legal Deadline: None.

Abstract: Final regulation to meet the annual requirement to designate senior employees (for CY 1987) who are subject to the conflict-of-interest provisions of the Ethics in Government Act.

Timetable:

Action	Date	FR Cite
Final Action	07/00/88	

Small Entity: No

Agency Contact: Nancy Janes/Bob Flynn, Staff Attorney/Management Analyst, Office of Personnel Management, Office of Government Ethics, P.O. Box 14108, Washington, DC 20044, 202 632-7642

RIN: 3206-AD04

3154. ADVERSE ACTIONS

Legal Authority: 5 USC 7504; 5 USC 7514

CFR Citation: 5 CFR 752

Legal Deadline: None.

Abstract: Revisions to current regulations would clarify agency authorities and obligations in taking adverse actions by incorporating recent decisions of the courts and further explaining existing policy in regard to agencies and employees' responsibilities and rights in situations involving adverse actions.

Timetable:

Action	Date	FR Cite
NPRM	03/27/87	52 FR 9867
Final Action	04/00/88	

Small Entity: No

Agency Contact: Tim Dirks, Chief, Employee Relations Division, Office of Personnel Management, Personnel Systems and Oversight Group, 1900 E Street, N.W., Washington, D.C. 20415, 202 653-8551

RIN: 3206-AC23

3155. RETIREMENT; UNDERDEDUCTIONS OF RETIREMENT CONTRIBUTIONS

Legal Authority: 5 USC 8347

CFR Citation: 5 CFR 831, Subpart A

Legal Deadline: None.

Abstract: Regulations to establish procedures for correcting errors resulting in underdeductions of civil service retirement contributions. Agencies would be required to submit the agency's contribution and employees would have the option to make a deposit at any time prior to retirement.

Timetable:

Action	Date	FR Cite
NPRM	05/21/87	52 FR 19150
Final Action	06/00/88	

Small Entity: No

Agency Contact: Patricia Rochester, Paralegal Specialist, Office of Personnel Management, Office of Retirement and Insurance Policy, Retirement and Insurance Group, 1900 E St., NW; Washington, DC 20415, 202 632-4682

RIN: 3206-AC96

3156. RETIREMENT; PROCESSING COURT ORDERS FOR APPORTIONMENT OF CIVIL SERVICE RETIREMENT SYSTEM ANNUITY AND COMPETING CLAIMS FOR SURVIVOR BENEFITS

Legal Authority: 5 USC 8347

CFR Citation: 5 CFR 831, Subparts A and Q

Legal Deadline: None.

Abstract: Regulations to establish streamlined procedures for handling court orders for apportionment of civil service retirement annuity and competing claims for survivor benefits.

Timetable:

Action	Date	FR Cite
NPRM	12/30/86	51 FR 47021
Final Action	06/00/88	

Small Entity: No

Agency Contact: Patricia A. Rochester, Paralegal Specialist, Office of Personnel Management, Office of Retirement and Insurance Policy, Retirement and Insurance Group, 1900 E St., NW; Washington, DC 20415, 202 632-4682

RIN: 3206-AC93

3157. RETIREMENT; CREDIT FOR SERVICE; FOOD SERVICE EMPLOYEES OF THE HOUSE OF REPRESENTATIVES MAY RETAIN CSRS OR FERS

Legal Authority: 5 USC 8347; PL 99-500

CFR Citation: 5 CFR 831, Subpart C

Legal Deadline: None.

Abstract: Food service employees of the House of Representatives who lose their Federal jobs but remain employed by the private contractor assuming the House food services operations may elect to retain retirement coverage under CSRS or FERS. OPM must, in consultation with the Architect of the Capitol, prescribe implementing regulations.

Timetable:

Action	Date	FR Cite
Interim Final Rule	02/19/87	52 FR 5069
Final Action	03/29/88	
Final Action Effective	04/28/88	

Small Entity: No

Agency Contact: Harold Siegelman, Paralegal Specialist, Office of Personnel Management, Office of Retirement and Insurance Policy, Retirement and Insurance Group, 1900 E St., NW; Washington, DC 20415, 202 632-4682

RIN: 3206-AD14

3158. RETIREMENT; CREDIT FOR SERVICE; EMPLOYEES WHO TRANSFER TO AIRPORTS AUTHORITY

Legal Authority: 5 USC 8347; PL 99-500

CFR Citation: 5 CFR 831, Subpart C

Legal Deadline: None.

Abstract: The Metropolitan Airports Transfer Act of 1986 provides that any Federal employee who transfers to the Airports Authority and who on the day before the date the lease takes effect is subject to CSRS or FERS may retain that coverage so long as continually employed by the Airports Authority. The regulations implement the new provisions of law.

Timetable:

Action	Date	FR Cite
Interim Final Rule	05/21/87	52 FR 19125
Final Action	03/29/88	
Final Action Effective	04/29/88	

Small Entity: No

Agency Contact: Harold Siegelman, Paralegal Specialist, Office of Personnel Management, Office of Retirement and Insurance Policy, Retirement and Insurance Group, 1900 E St., NW; Washington, DC 20415, 202 632-4682

RIN: 3206-AD15

3159. RETIREMENT; IMPLEMENTING REGULATIONS FOR CIVIL SERVICE RETIREMENT SPOUSE EQUITY ACT OF 1984

Legal Authority: 5 USC 8347; PL 98-615

CFR Citation: 5 CFR 831, Subparts F, Q, and T

Legal Deadline: None.

Abstract: The Civil Service Retirement Spouse Equity Act of 1984 includes provisions for new benefits available to former spouses of deceased Federal employees and provisions governing survivor benefits for current spouses. These regulations are necessary to implement the Act.

Timetable:

Action	Date	FR Cite
Interim Final Rule	05/13/85	50 FR 20064
Interim Final Rule – Revised	09/08/86	51 FR 31927
Final Action	09/00/88	

Small Entity: No

Agency Contact: Harold Siegelman, Paralegal Specialist, Retirement and Insurance Group, Office of Personnel Management, 1900 E Street, NW, Washington, DC 20415, 202 632-4682

RIN: 3206-AB75

3160. RETIREMENT; DEPOSITS FOR MILITARY SERVICE

Legal Authority: 5 USC 8347

CFR Citation: 5 CFR 831, Subpart U

Legal Deadline: None.

Abstract: Final regulations to extend eligibility to make deposits for military service to separated individuals who were prevented from making a timely deposit due to administrative error or misinformation.

Timetable:

Action	Date	FR Cite
Interim Final Rule	05/16/84	49 FR 20631
Final Action	04/00/89	

Small Entity: No

Agency Contact: Patricia Rochester, Paralegal Specialist, Office of Personnel Management, Office of Retirement and Insurance Policy, Retirement and Insurance Group, 1900 E St., NW; Washington, DC 20415, 202 632-4682

RIN: 3206-AB35

3161. ● RETIREMENT; ALTERNATIVE FORM OF ANNUITY

Legal Authority: 5 USC 8347; 5 USC 8461

CFR Citation: 5 CFR 831; 5 CFR 842

Legal Deadline: None.

Abstract: Interim final regulations to implement section 6001 of Public Law 100-203 providing for partial deferral of lump sum payments for retirees who elect an alternative form of annuity.

Timetable:

Action	Date	FR Cite
Interim Final Rule	04/00/88	
Final Action	07/00/88	

Small Entity: No

Agency Contact: Robert M. Rosenblatt, Paralegal Specialist, Office of Personnel Management, Office of Retirement and Insurance Policy, Retirement and Insurance Group, 1900 E St., NW., Washington, DC 20415, 202 632-4682

RIN: 3206-AD35

3162. RETIREMENT; FEDERAL EMPLOYEES' RETIREMENT SYSTEM ACT OF 1986

Legal Authority: 5 USC 8347

CFR Citation: 5 CFR 841 to 846

Legal Deadline: None. New system took effect January 1, 1987.

Abstract: Final regulations to implement the statutory provision for a new Federal Employees' Retirement System and conforming changes to the current Civil Service Retirement System.

Timetable:

Action	Date	FR Cite
Interim Final Rule	12/31/86	51 FR 47185
Interim Final Rule	01/16/87	52 FR 2056
Interim Final Rule	02/11/87	52 FR 4472
Final Action	09/00/88	

Small Entity: No

Agency Contact: Robert M. Rosenblatt, Paralegal Specialist, Office of Personnel Management, Office of Retirement and Insurance Policy, Retirement and Insurance Group, 1900 E St., NW; Washington, DC 20415, 202 632-5560

RIN: 3206-AC94

3163. CONTINUATION OF FEDERAL EMPLOYEES' GROUP LIFE INSURANCE COVERAGE DURING MILITARY SERVICE

Legal Authority: 5 USC 8716

CFR Citation: 5 CFR 870

Legal Deadline: None.

Abstract: Interim regulations, with a period of time provided for comments, to specify that coverage under the Federal Employees' Group Life Insurance Program may now be continued for up to 12 months for an employee who enters the military on active duty or active duty for training in the same way coverage is continued in other types of non-pay status. This change was effected by Public Law 99-335, enacted on June 6, 1986.

Timetable:

Action	Date	FR Cite
Interim Final Rule	04/15/87	52 FR 12133
Final Action	05/00/88	

Small Entity: No

Agency Contact: Barbara Myers, Pay and Benefits Specialist, Office of Personnel Management, Office of Retirement and Insurance Policy, Retirement and Insurance Group, 1900 E St., NW; Washington, DC 20415, 202 632-4634

RIN: 3206-AD10

3164. ● CONTINUATION OF HEALTH AND LIFE INSURANCE COVERAGE DURING RETIREMENT

Legal Authority: 5 USC 8716; 5 USC 8913

CFR Citation: 5 CFR 870; 5 CFR 890

Legal Deadline: None.

Abstract: These regulations would specify that the minimum participation requirements set forth in the FEHB and FEGLI laws for continuing either health benefits or life insurance during retirement must be met as of the commencing date of the affected individual's annuity.

Timetable:

Action	Date	FR Cite
NPRM	02/29/88	53 FR 5964
Final Action	12/00/88	

Small Entity: No

Agency Contact: John Ray, Pay and Benefits Specialist, Office of Personnel Management, Office of Retirement and Insurance Policy, Retirement and Insurance Group, 1900 E St., NW., Washington, DC 20415, 202 632-4634

RIN: 3206-AD34

3165. CONTINUATION OF FEDERAL EMPLOYEES HEALTH BENEFITS AND FEDERAL EMPLOYEES GROUP LIFE INSURANCE COVERAGE UNDER FERS

Legal Authority: 5 USC 8913; 5 USC 8716

CFR Citation: 5 CFR 890; 5 CFR 870

Legal Deadline: None.

Abstract: Regulations to specify that individuals entitled to immediate or survivor annuities under the new Federal Employees Retirement System (FERS) and former spouses entitled to annuity payments under FERS may continue their coverage under the Federal Employees Health Benefits and the Federal Employees Group Life Insurance Programs under the same conditions as apply to individuals under the traditional Civil Service Retirement System. This is provided under Public Law 99-335, enacted on June 6, 1986.

Timetable:

Action	Date	FR Cite
NPRM	10/22/87	52 FR 39493
Final Action	05/00/88	

Small Entity: No

Agency Contact: Mary Ann Mercer, Pay and Benefits Specialist, Office of Personnel Management, Office of Retirement and Insurance Policy, Retirement and Insurance Group, 1900 E St., NW; Washington, DC 20415, 202 632-4634

RIN: 3206-AD11

3166. CREDIT FOR CHAMPUS COVERAGE FOR THE PURPOSE OF CONTINUING AN FEHB ENROLLMENT DURING RETIREMENT

Legal Authority: 5 USC 8913

CFR Citation: 5 CFR 890

Legal Deadline: None.

Abstract: These regulations would clarify OPM's intention to no longer allow credit for time spent under CHAMPUS when considering whether a retiring employee has been enrolled or covered by an FEHB plan for a sufficient period of time prior to retirement. CHAMPUS time would not be credited for individuals retiring on or after January 1, 1993.

Timetable:

Action	Date	FR Cite
NPRM	05/21/87	52 FR 19151
Final Action	04/00/88	

Small Entity: No

Agency Contact: John Ray, Pay and Benefits Specialist, Office of Personnel Management, Office of Retirement and Insurance Policy, Retirement and Insurance Group, 1900 E St., NW; Washington, DC 20415, 202 632-4634

RIN: 3206-AD26

3167. FEDERAL EMPLOYEES HEALTH BENEFITS PROGRAM; REGISTRATION AND ENROLLMENT

Legal Authority: 5 USC 8913

CFR Citation: 5 CFR 890, Subpart C

Legal Deadline: None.

Abstract: Regulations to allow an employee or annuitant to change to self and family coverage if a non-federally employed spouse or former spouse loses non-Federal health insurance coverage under certain conditions.

Timetable:

Action	Date	FR Cite
NPRM	06/12/87	52 FR 22475
Final Action	04/00/88	

Small Entity: No

Agency Contact: Barbara Myers, Pay and Benefits Specialist, Office of Personnel Management, Office of Pay and Benefits Policy, Retirement and Insurance Group, 1900 E St., NW; Washington, DC 20415, 202 632-4634

RIN: 3206-AB87

3168. FEDERAL EMPLOYEES HEALTH BENEFITS PROGRAM; CONTINUATION OF COVERAGE DURING MILITARY SERVICE

Legal Authority: 5 USC 8913

CFR Citation: 5 CFR 890, Subpart C

Legal Deadline: None.

Abstract: Proposed regulations to permit employees who enter military service on active duty or active duty for training to continue their FEHB coverage for up to one year.

Timetable:

Action	Date	FR Cite
NPRM	03/10/88	53 FR 7763
Final Action	07/31/88	

Small Entity: No

Agency Contact: Eleanor Goodwin, Pay and Benefits Specialist, Office of Personnel Management, Office of Retirement and Insurance Policy, Retirement and Insurance Group, 1900 E St., NW; Washington, DC 20415, 202 632-4634

RIN: 3206-AD24

3169. ● COMPUTER SECURITY TRAINING

Legal Authority: PL 100-235

CFR Citation: 5 CFR 930, Subpart C

Legal Deadline: Statutory, July 10, 1988.

Abstract: Regulations for government-wide training requirement in computer security.

Timetable:

Action	Date	FR Cite
Interim Final Rule	07/10/88	

Small Entity: No

Agency Contact: Harold Segal, Chief, Policy and Oversight Branch, Training and Investigations Group, Office of Personnel Management, 1121 Vermont Ave., NW., P.O. Box 7230, Washington, DC 20044, 202 632-5574

RIN: 3206-AD43

OFFICE OF PERSONNEL MANAGEMENT (OPM)

Completed Actions

3170. EXCEPTED SERVICE – SCHEDULE A AUTHORITY FOR EMPLOYMENT OF STUDENTS

CFR Citation: 5 CFR 213

Completed:

Reason	Date	FR Cite
Final Action	09/25/87	52 FR 36009
Final Action Effective	09/25/87	

Small Entity: No

Agency Contact: Tracy Spencer 202 632-6817

RIN: 3206-AD17

3171. EXCEPTED SERVICE – SCHEDULE A AUTHORITY TO APPOINT AND CONVERT PRESIDENTIAL MANAGEMENT INTERNS

CFR Citation: 5 CFR 213.3101; 5 CFR 315.708

Completed:

Reason	Date	FR Cite
Withdrawn	01/31/88	

Small Entity: No

Agency Contact: Ken Bates 202 632-0496

RIN: 3206-AD21

3172. PROTECTION OF PRIVACY AND PERSONNEL RECORDS

CFR Citation: 5 CFR 297

Completed:

Reason	Date	FR Cite
Final Action	01/26/88	53 FR 1997
Final Action Effective	02/25/88	

Small Entity: No

Agency Contact: John Sanet 202 632-4455

RIN: 3206-AA70

3173. OVERSEAS EMPLOYMENT

CFR Citation: 5 CFR 301

Completed:

Reason	Date	FR Cite
Withdrawn	01/25/88	

Small Entity: No

Agency Contact: Ed McHugh 202 632-6817

RIN: 3206-AA71

3174. NONCOMPETITIVE APPOINTMENT OF CERTAIN FORMER OVERSEAS EMPLOYEES

CFR Citation: 5 CFR 315

Completed:

Reason	Date	FR Cite
Final Action	11/16/87	52 FR 38219
Final Action Effective	11/16/87	

Small Entity: No

Agency Contact: Ellen Russell 202 632-6817

RIN: 3206-AD16

3175. RESTORATION TO DUTY FROM MILITARY SERVICE AND INJURY COMPENSATION

CFR Citation: 5 CFR 353

Completed:

Reason	Date	FR Cite
Final Action	01/14/88	53 FR 857
Final Action Effective	02/16/88	

Small Entity: No

Agency Contact: Raleigh Neville 202 632-6817

RIN: 3206-AC34

3176. PAY UNDER THE GENERAL SCHEDULE; DETERMINING RATE OF BASIC PAY

CFR Citation: 5 CFR 531, Subpart B

Completed:

Reason	Date	FR Cite
Withdrawn	01/22/88	

Small Entity: No

Agency Contact: Jan Karicher 202 632-5056

RIN: 3206-AA32

3177. ELIGIBILITY OF DISTRICT OF COLUMBIA GOVERNMENT EMPLOYEES FOR SUPERIOR QUALIFICATIONS APPOINTMENTS

CFR Citation: 5 CFR 531

Completed:

Reason	Date	FR Cite
Withdrawn	02/19/88	53 FR 4986

Small Entity: No

Agency Contact: Tracy Spencer 202 632-6817

RIN: 3206-AD19

3178. POST EMPLOYMENT CONFLICT OF INTEREST; 1986 DESIGNATION OF CERTAIN POSITIONS AND AGENCIES

CFR Citation: 5 CFR 737

Completed:

Reason	Date	FR Cite
Final Action	11/12/87	52 FR 43442
Final Action Effective	11/12/87	

Small Entity: No

Agency Contact: Nancy Janes/Bob Flynn 202 632-7642

RIN: 3206-AD00

3179. ADVERSE ACTIONS (REGULATORY REQUIREMENTS FOR TAKING ADVERSE ACTIONS UNDER THE SENIOR EXECUTIVE SERVICE)

CFR Citation: 5 CFR 752, Subpart F

Completed:

Reason	Date	FR Cite
Final Action	09/14/87	52 FR 34623
Final Action Effective	10/14/87	

Small Entity: No

Agency Contact: Neal Harwood 202 632-4625

RIN: 3206-AA50

3180. RETIREMENT; ORDER OF PRECEDENCE FOR STATUTORY WITHHOLDINGS FROM ANNUITY

CFR Citation: 5 CFR 831, Subpart A

Completed:

Reason	Date	FR Cite
Final Action	08/27/87	52 FR 32287
Final Action Effective	09/28/87	

Small Entity: No

Agency Contact: Ray Kirk 202 632-4682

RIN: 3206-AB70

3181. RETIREMENT; PART-TIME EMPLOYEES

CFR Citation: 5 CFR 831, Subpart A

Completed:

Reason	Date	FR Cite
Final Action	06/12/87	52 FR 22433
Final Action Effective	04/07/86	

Small Entity: No

Agency Contact: Robert Rosenblatt 202 632-4682

RIN: 3206-AC95

3182. RETIREMENT; CREDIT FOR SERVICE UNDER CSRS FOR CERTAIN SERVICE AS NATIONAL GUARD TECHNICIANS, CADET NURSE, AND NONAPPROPRIATED FUND EMPLOYEES

CFR Citation: 5 CFR 831, Subpart C

Completed:

Reason	Date	FR Cite
Final Action	11/09/87	52 FR 43047
Final Action Effective	12/09/87	

Small Entity: No

Agency Contact: Patricia Rochester 202 632-4682

RIN: 3206-AD13

3183. RETIREMENT; LAW ENFORCEMENT OFFICERS AND FIREFIGHTERS

CFR Citation: 5 CFR 831, Subpart I

Completed:

Reason	Date	FR Cite
Final Action	12/17/87	52 FR 47893
Final Action Effective	01/19/88	

Small Entity: No

Agency Contact: Ray Kirk 202 632-4682

RIN: 3206-AB09

3184. CIVIL SERVICE RETIREMENT, FEGLI, AND FEHBP COVERAGE FOR D.C. GOVERNMENT EMPLOYEES HIRED AFTER SEPTEMBER 30, 1987

CFR Citation: 5 CFR 831; 5 CFR 870; 5 CFR 890

Completed:

Reason	Date	FR Cite
Final Action	10/15/87	52 FR 38219
Final Action Effective	10/15/87	

Small Entity: No

Agency Contact: John Ray 202 632-4634

RIN: 3206-AD09

3185. STANDARDIZATION OF TERMS USED UNDER THE FEDERAL EMPLOYEES GROUP LIFE INSURANCE PROGRAM

CFR Citation: 5 CFR 870; 5 CFR 874

Completed:

Reason	Date	FR Cite
Final Action	12/07/87	52 FR 46343
Final Action Effective	01/06/88	

Small Entity: No

Agency Contact: John Ray 202 632-4634

RIN: 3206-AD27

3186. AN ADDITIONAL OPPORTUNITY FOR ANNUITANTS TO ENROLL FOR FEDERAL EMPLOYEES' HEALTH BENEFITS COVERAGE

CFR Citation: 5 CFR 890

Completed:

Reason	Date	FR Cite
Final Action	09/14/87	52 FR 34625
Final Action Effective	09/14/87	

Small Entity: No

Agency Contact: John Ray 202 632-4634

RIN: 3206-AD12

3187. FEDERAL EMPLOYEES HEALTH BENEFITS PROGRAM; TERMINATION OF ENROLLMENT

CFR Citation: 5 CFR 890, Subpart A

Completed:

Reason	Date	FR Cite
Final Action	01/04/88	53 FR 1
Final Action Effective	02/03/88	

Small Entity: No

Agency Contact: Eleanor Goodwin 202 632-4634

RIN: 3206-AB84

3188. PROGRAMS FOR SPECIFIC POSITIONS AND EXAMINATIONS (MISCELLANEOUS) ADMINISTRATIVE LAW JUDGES

CFR Citation: 5 CFR 930, Subpart B

Completed:

Reason	Date	FR Cite
Final Action	09/10/87	52 FR 34201
Final Action Effective	10/13/87	

Small Entity: No

Agency Contact: Craig B. Pettibone 202 632-5677

RIN: 3206-AB91

[FR Doc. 88-5097 Filed 04-22-88; 8:45 am]

BILLING CODE 6325-01-T

VOL 53 ISS 79 PT 2 APR 25 1988 UMI

federal register

Monday
April 25, 1988

Part XXXIII

Panama Canal Commission

Semiannual Regulatory Agenda

PANAMA CANAL COMMISSION (PANAMA)

PANAMA CANAL COMMISSION

35 CFR Ch. I

Unified Agenda of Federal Regulations

AGENCY: Panama Canal Commission.

ACTION: Publication of semiannual agenda of regulations.

SUMMARY: The purpose of this agenda is to report the proposed rulemaking activities of the Panama Canal Commission. This information will allow the public to participate in the rulemaking process.

FOR FURTHER INFORMATION CONTACT: For information about a particular regulatory project, contact the person listed in the subheading "Agency Contact" for that project. For general information, contact Michael Rhode, Jr., Secretary, Panama Canal Commission, 2000 L Street, NW., Suite 550, Washington, DC 20036-4996, (202) 634-6441 TDD; or John L. Haines, Jr., Esquire, General Counsel, Panama Canal Commission, APO Miami 34011-5000.

SUPPLEMENTARY INFORMATION: Executive Order 12291, Federal Regulation, and the Regulatory Flexibility Act, 5 U.S.C. 601, *et seq.* require that executive agencies publish in the Federal Register a semiannual notice of regulations which are under development or review or for which action has been completed. The Panama Canal Commission agenda contains certain regulations which are limited in public impact, but they are included to increase public awareness of Commission activities and to allow for increased public participation in the agency's regulatory review and development process. This agenda was prepared under the guidelines established by OMB Bulletin No. 88-1.

Dated: February 25, 1988.

Michael Rhode, Jr.,

Secretary, Panama Canal Commission.

PANAMA CANAL COMMISSION (PANAMA) — Prerule Stage

3189. TOLLS FOR USE OF CANAL

Significance: Agency Priority

Legal Authority: PL 96-70, Sec 1601

CFR Citation: 35 CFR 133, (Revision)

Legal Deadline: None.

Abstract: Due to operating cost increases, including inflation, since the last toll rate increase (March 1983), the Panama Canal Commission is currently considering increasing the rates of tolls charged vessels transiting the Canal. An approximate 9% increase may be proposed effective in FY 1989 to achieve the Commission's regulatory requirement to recover from users all costs of operating and maintaining the waterway.

Timetable:

Action	Date	FR Cite
Next Action Undetermined		

Small Entity: No

Agency Contact: Michael Rhode, Jr., Secretary, Panama Canal Commission, 2000 L Street NW, Suite 550, Washington, DC 20036-4996, 202 634-6441

RIN: 3207-AA04

3190. ● TOLLS FOR USE OF CANAL RULES FOR MEASUREMENT OF VESSELS

Significance: Agency Priority

Legal Authority: PL 96-70, Sec 1601

CFR Citation: 35 CFR 133.32; 35 CFR 133.34; 35 CFR 135.285(a); 35 CFR 135.352

Legal Deadline: None.

Abstract: The proposed changes correct authority to issue Panama Canal Tonnage Certificate (no financial impact); eliminate the "125 percent of engine room as measured" limitation for ballast rate (negligible negative impact on canal revenues); increase size limitation on manholes to water ballast spaces from 30 to 34 inch diameter, to align our rules with I.M.O's (small negative impact on canal revenues); allow deductible items located in the engine room to be deducted as part of engine room rather than separately, to streamline the method by which propulsion power deduction is determined (negligible impact on canal revenues).

These changes will not impact on most vessels already measured for Panama Canal tonnages. Vessels that qualify for increased deductions may choose to be remeasured.

Timetable:

Action	Date	FR Cite
Next Action Undetermined		

Small Entity: No

Agency Contact: Michael Rhode, Jr., Secretary, Panama Canal Commission, 2000 L Street NW, Suite 550, Washington, DC 20036-4996, 202 634-6441

RIN: 3207-AA17

3191. ● INSPECTION AND REGISTRATION OF VESSELS

Significance: Agency Priority

Legal Authority: 22 USC 3811; EO 12215; 44 USC 3501

CFR Citation: 35 CFR 121.2, (Revision); 35 CFR 121.3, (Revision); 35 CFR 121.41, (Revision); 35 CFR 121.43, (Revision); 35 CFR 121.45, (Revision); 35 CFR 121.47, (Revision); 35 CFR 121.58(a)(b), (Revision); 35 CFR 121.63, (Revision); 35 CFR 121.65(a)(b), (Revision); 35 CFR 121.66, (Revision); 35 CFR 121.67, (Revision); 35 CFR 121.68, (Revision); 35 CFR 121.69, (Revision); 35 CFR 121.70, (Revision); 35 CFR 121.71, (Revision); ...

Legal Deadline: None.

Abstract: The Panama Canal Commission proposes to make procedural changes to bring its regulations into conformity with internal reorganization which changed units responsible for inspection and registration of vessels and to bring vessel equipment requirements into compliance with International Regulations for Preventing Collisions at Sea, 1972.

Timetable:

Action	Date	FR Cite
Next Action Undetermined		

Small Entity: No

Agency Contact: Capt. William V. Clark II, Assistant to Marine Director, (Marine Safety), Panama Canal

PANAMA

Prerule Stage

Commission, Marine Bureau, APO Miami, FL 34011-5000, 202 634-6441

RIN: 3207-AA18

3192. ● DANGEROUS CARGOES RADIO COMMUNICATION

Significance: Agency Priority

Legal Authority: 22 USC 3811; EO 12215

CFR Citation: 35 CFR 113.3(a), (Revision); 35 CFR 113.4(a), (Revision); 35 CFR 113.5, (Revision); 35 CFR 113.21, (Revision); 35 CFR 113.22, (Revision); 35 CFR 113.26(a), (Revision); 35 CFR 113.29(b), (Revision); 35 CFR 113.29(c), (Revision); 35 CFR 113.42, (Revision); 35 CFR 113.43(c), (Revision); 35 CFR 113.45, (Revision); 35 CFR 113.49(b)(c), (Revision); 35 CFR 113.50(c)(e)(1)(2), (Revision); 35 CFR 123.4(a), (Revision)

Legal Deadline: None.

Abstract: The Panama Canal Commission proposes to amend its regulations to make minor technical changes and clarifications.

Timetable:

Action	Date	FR Cite
Next Action Undetermined		

Small Entity: No

Agency Contact: Capt. William V. Clark II, Assistant to Marine Director, (Marine Safety), Panama Canal Commission, Marine Bureau, APO Miami, FL 34011-5000, 202 634-6441

RIN: 3207-AA19

3193. ● ARRIVING AND DEPARTING VESSELS: VARIOUS COMMUNICATION, DOCUMENTATION, SANITATION AND ADMEASUREMENT REQUIREMENTS

Significance: Agency Priority

Legal Authority: 22 USC 3811

CFR Citation: 35 CFR 101.10(e), (Revision); 35 CFR 101.10(f), (Revision)

Legal Deadline: None.

Abstract: The purpose of the proposed changes is to make minor technical corrections by requiring that cargo manifests and loading plans show international Maritime Organization Division in addition to class.

Timetable:

Action	Date	FR Cite
Next Action Undetermined		

Small Entity: No

Agency Contact: Capt. William V. Clark, II, Assistant to Marine Director, (Marine Safety), Panama Canal Commission, Marine Bureau, APO Miami, FL 34011-5000, 202 634-6441

RIN: 3207-AA20

PANAMA CANAL COMMISSION (PANAMA)

Proposed Rule Stage

3194. CLASSIFIED INFORMATION

Legal Authority: EO 12356

CFR Citation: 35 CFR 60, (Revision)

Legal Deadline: None.

Abstract: The Panama Canal Commission proposes to revise 35 CFR 60 which governs its use of security information to incorporate certain provisions of Presidential Executive Order 12356.

Timetable:

Action	Date	FR Cite
NPRM	04/01/88	
Final Action Effective	00/00/00	

Small Entity: No

Agency Contact: Thomas C. Duty, Chief, Administrative Services Division, Panama Canal Commission, APO Miami 34011-5000, 202 634-6441

RIN: 3207-AA01

3195. PANAMA CANAL COMMISSION ACQUISITION REGULATION

Significance: Agency Priority

Legal Authority: 40 USC 486(c)

CFR Citation: 48 CFR Chapter 35

Legal Deadline: None.

Abstract: The proposed regulation sets forth policies and procedures of the Panama Canal Commission for the acquisition of supplies and services, including construction. The regulation implements and supplements the Federal Acquisition Regulation.

Timetable:

Action	Date	FR Cite
NPRM	06/30/88	

Small Entity: Undetermined

Agency Contact: R. D. Morgan, Procurement Executive, Panama Canal Commission, APO Miami 34011-5000, 202 634-6441

RIN: 3207-AA10

PANAMA CANAL COMMISSION (PANAMA)

Final Rule Stage

3196. IMPLEMENTATION OF THE FOI REFORM ACT OF 1986 AND REVISIONS TO THE FEE SCHEDULE OF THE FOIA

Legal Authority: 5 USC 552

CFR Citation: 35 CFR 9A, (Revision)

Legal Deadline: None.

Abstract: The Panama Canal Commission proposes to amend its regulations to implement the Freedom of Information Reform Act of 1986 and to update its fee schedule for Freedom of Information and Privacy Act requests. These proposed changes would identify different types of requestors and bring the fees into conformance with current costs incurred by the agency in processing requests.

PANAMA

Final Rule Stage

Timetable:

Action	Date	FR Cite
Interim Final Rule	08/20/87	
Interim Final Rule Comment Period Ends	10/19/87	
Final Action	05/00/88	

Small Entity: No

Agency Contact: Thomas C. Duty, Chief, Administrative Services Division, Panama Canal Commission, APO Miami 34011, 202 634-6441

RIN: 3207-AA13

3197. EMPLOYEE RESPONSIBILITIES AND CONDUCT

Legal Authority: 22 USC 3622

CFR Citation: 35 CFR 255, (Revision)

Legal Deadline: None.

Abstract: The Panama Canal Commission proposes to amend its regulations to implement the Ethics in Government Act, the Commission's Code of Conduct as approved by its Board of Directors, and supplementary regulations that clarify certain provisions of the Code of Conduct.

Timetable:

Action	Date	FR Cite
NPRM	02/01/88	
Final Action	00/00/00	

Small Entity: No

Agency Contact: Thomas C. Duty, Chief, Administrative Services Division, Panama Canal Commission, APO Miami 34011-5000, 202 634-6441

RIN: 3207-AA16

PANAMA CANAL COMMISSION (PANAMA)

Completed Actions

3198. PRIVACY ACT SYSTEMS OF RECORDS

CFR Citation: 35 CFR 10, (Revisions)

Completed:

Reason	Date	FR Cite
Final Action	12/31/87	52 FR 251

Small Entity: No

Agency Contact: Thomas C. Duty 202 634-6441

RIN: 3207-AA15

[FR Doc. 88-5098 Filed 04-22-88; 8:45 am]

BILLING CODE 3640-04-T

VOL 53 ISS 79 PT 2 APR 25 1988 UMI

federal register

Monday
April 25, 1988

Part XXXIV

Peace Corps

Semiannual Regulatory Agenda

PEACE CORPS (PEACE)

PEACE CORPS

22 CFR Ch. III

Executive Order 12291, Federal Regulations, Semiannual Agenda of Regulations

AGENCY: Peace Corps.

ACTION: Publication of semiannual agenda.

SUMMARY: This agenda announces the regulations the Peace Corps will have under development during the 12-month period from April 1, 1988 through March 31, 1989. The purpose for publishing this agenda is to give notice of any regulatory activity by the Agency in order to allow the public an opportunity to participate in the rulemaking process.

FOR FURTHER INFORMATION CONTACT: The public is encouraged to contact the Agency official listed for the particular agenda item. For other information concerning Peace Corps' regulations or this semiannual agenda, contact Robert Martin, Associate General Counsel, Peace Corps, 806 Connecticut Avenue, NW., Washington, DC 20526, (202) 254-3114.

SUPPLEMENTARY INFORMATION: In accordance with Executive Order 12291, Federal Regulations, and the Regulatory Flexibility Act (5 U.S.C. 605) executive agencies are required to publish in the **Federal Register** semiannual regulatory agendas in April and October of each year.

The regulations being considered by Peace Corps are not "major" rules within the meaning of E.O. 12291 and no Regulatory Impact Analysis is required. Peace Corps has determined that the regulations under consideration will not impose compliance costs or reporting burdens on the public; and that the regulations will not have a significant economic impact on a substantial number of small entities. Accordingly, no Regulatory Analysis is required under 5 U.S.C. 602.

Margaret H. Thome,
Associate Director for Management.

PEACE CORPS (PEACE) — Proposed Rule Stage

3199. EMPLOYEE DISCRIMINATION COMPLAINT PROCEDURE

Legal Authority: 42 USC 2000e-16 Title VII of the Civil Rights Act; 29 USC 701 Rehabilitation Act of 1973, as amended; 29 USC 621 et seq Age Discrimination in Employment Act

CFR Citation: 22 CFR 310

Legal Deadline: None.

Abstract: Comprehensive regulations for processing individual and class EEO complaints of Peace Corps employees. Under development.

Timetable:

Action	Date	FR Cite
NPRM	02/00/89	

Small Entity: Not Applicable

Agency Contact: H. Zeke Rodriguez, Equal Opportunity Manager, Peace Corps, 806 Connecticut Avenue, NW, Washington, DC 20526, 202 254-8320

RIN: 0420-AA01

3200. VOLUNTEER DISCRIMINATION COMPLAINT PROCEDURES

Legal Authority: 42 USC 2000e-16 Title VII of the Civil Rights Act; 29 USC 701 Rehabilitation Act of 1973, as amended; 29 USC 621 et seq Age Discrimination in Employment Act

CFR Citation: 22 CFR 306

Legal Deadline: None.

Abstract: Comprehensive regulations for processing individual and class EEO complaints of Peace Corps Volunteers. Under development.

Timetable:

Action	Date	FR Cite
NPRM	02/00/89	

Small Entity: Not Applicable

Agency Contact: H. Zeke Rodriguez, Equal Opportunity Manager, Peace Corps, 806 Connecticut Avenue, NW, Room M-1107, Washington, DC 20526, 202 254-8320

RIN: 0420-AA02

3201. IMPLEMENTATION OF REHABILITATION ACT OF 1973, PART 504 - HANDICAPPED DISCRIMINATION PROHIBITION

Legal Authority: 29 USC 794

CFR Citation: 22 CFR 311

Legal Deadline: None.

Abstract: The regulation implements section 504 of the Rehabilitation Act of 1973 (29 U.S.C. 794) which prohibits discrimination on the basis of handicap in programs or activities conducted by Executive agencies or the Postal Service.

Timetable:

Action	Date	FR Cite
NPRM	04/30/88	

Small Entity: No

Agency Contact: John Scales, General Counsel, Peace Corps, 806 Connecticut Avenue, NW, Room M-1207, Washington, DC 20526, 202 254-3114

RIN: 0420-AA03

[FR Doc. 88-5099 Filed 04-22-88; 8:45 am]
BILLING CODE 6051-01-T

VOL 53 ISS 79 PT 2 APR 25 1988 UMI

federal register

Monday
April 25, 1988

Part XXXV

Pennsylvania Avenue Development Corporation

Semiannual Regulatory Agenda

PENNSYLVANIA AVENUE DEVELOPMENT CORPORATION (PADC)

PENNSYLVANIA AVENUE DEVELOPMENT CORPORATION

36 CFR Ch. IX

Unified Agenda of Federal Regulations

AGENCY: Pennsylvania Avenue Development Corporation.

ACTION: Unified Agenda of Federal Regulations.

SUMMARY: This document sets forth the Pennsylvania Avenue Development Corporation's regulatory agenda issued under Executive Order 12291 and the Regulatory Flexibility Act. The Agenda lists regulations currently under rulemaking review that PADC expects to have as a final rule during the next twelve months.

FOR FURTHER INFORMATION CONTACT: Talbot J. Nicholas II, Attorney, Office of the General Counsel, Pennsylvania Avenue Development Corporation, Suite 1220 North, 1331 Pennsylvania Avenue, NW., Washington, DC 20004; (202) 724-9088.

Dated: March 16, 1988.

M. J. Brodie,

Executive Director, Pennsylvania Avenue Development Corporation.

PENNSYLVANIA AVENUE DEVELOPMENT CORPORATION (PADC) — Prerule Stage

3202. DEVELOPMENT POLICIES AND PROCEDURES

Legal Authority: 40 USC 875(5)

CFR Citation: 36 CFR 911, (New)

Legal Deadline: None.

Abstract: The Corporation is studying ways to apply past experience to update its Development Policies and Procedures.

Timetable:

Action	Date	FR Cite
Next Action Undetermined		

Small Entity: Undetermined

Agency Contact: Madeleine B. Schaller, Deputy General Counsel, Pennsylvania Avenue Development Corporation, 1331 Pennsylvania Avenue, NW, Suite 1220 North, Washington, DC 20004, 202 724-9088

RIN: 3208-AA06

PENNSYLVANIA AVENUE DEVELOPMENT CORPORATION (PADC) — Proposed Rule Stage

3203. PROCEDURES AND UNIFORM STANDARDS FOR PUBLIC USE OF PARKS AND PLAZAS

Legal Authority: 40 USC 875(5)

CFR Citation: 36 CFR 912

Legal Deadline: None.

Abstract: The Pennsylvania Avenue Development Corporation (PADC) has received an increasing number of requests for public use of parks and plazas within the Pennsylvania Avenue Development Area. The proposed regulations would ensure equality of opportunity for use of PADC parks and plazas while protecting public property, safety, and tranquility.

Timetable:

Action	Date	FR Cite
Next Action Undetermined		

Small Entity: No

Agency Contact: Madeleine B. Schaller, Deputy General Counsel, Pennsylvania Avenue Development Corporation, Suite 1220 North, 1331 Pennsylvania Avenue, NW, Washington, DC 20004, 202 724-9088

RIN: 3208-AA01

PENNSYLVANIA AVENUE DEVELOPMENT CORPORATION (PADC) — Completed Actions

3204. PRIVACY ACT UPDATE; DISCLOSURES OF PERSONAL INFORMATION DURING LITIGATION

CFR Citation: 36 CFR 903

Completed:

Reason	Date	FR Cite
Final Action	10/21/87	52 FR 39223
Final Action Effective	10/13/87	

Small Entity: No

Agency Contact: Talbot J. Nicholas II 202 724-9088

RIN: 3208-AA04

3205. ● UNIFORM RELOCATION ASSISTANCE AND REAL PROPERTY ACQUISITION FOR FEDERAL AND FEDERALLY ASSISTED PROGRAMS

Legal Authority: 42 USC 4601

CFR Citation: 36 CFR 904

Legal Deadline: None.

Abstract: This interim final rule provides for the partial implementation

of the Uniform Relocation Act Amendments of 1987. The Pennsylvania Avenue Development Corporation has determined that it is able to comply with the provisions of the 1987 Amendments and the provisions of the interim final rule on this subject published by DOT at 52 FR 47994 (Dec. 17, 1987). Therefore, after January 19, 1988, PADC will be governed by the DOT Regulations.

Timetable:

Action	Date	FR Cite
Interim Final Rule effective 01/19/88	12/17/87	52 FR 48021

Small Entity: Yes

Additional Information: Until April 2, 1989 the provisions of the prior existing regulations are applicable only to those program activities which were undertaken prior to January 19, 1988, and which therefore were unable to comply with the Surface Transportation and Uniform Relocation Assistance Act of 1987 (42 USC 4601).

Agency Contact: Reginald Robinson, Director, Business Relations, Pennsylvania Avenue Development Corporation, 1331 Pennsylvania Avenue, NW, Suite 1220N, Washington, DC 20004, 202 724-9068

RIN: 3208-AA08

[FR Doc. 88-6928 Filed 04-22-88; 8:45 am]

BILLING CODE 7630-01-T

BEST COPY AVAILABLE

VOL
53
ISS
79
PT
2
AP
25
1988
UMI

federal register

Monday
April 25, 1988

Part XXXVI

Pension Benefit Guaranty Corporation

Semiannual Regulatory Agenda

PENSION BENEFIT GUARANTY CORPORATION (PBGC)

PENSION BENEFIT GUARANTY CORPORATION

29 CFR Ch. XXVI

Agenda of Regulations Under Development

AGENCY: Pension Benefit Guaranty Corporation.

ACTION: Agenda of regulations.

SUMMARY: This document sets forth the Pension Benefit Guaranty Corporation's regulatory agenda issued under Executive Order 12291 and the Regulatory Flexibility Act. The agenda lists regulations that are currently under development or that PBGC expects to have under development during the next twelve months. The effect of this agenda is to advise the public of PBGC's current and future regulatory activities.

ADDRESS: Office of the General Counsel, Code 22500, Pension Benefit Guaranty Corporation, 2020 K Street, NW., Washington, DC 20006.

FOR FURTHER INFORMATION CONTACT: For further information on the agenda in general, contact J. Ronald Goldstein, Attorney, Office of the General Counsel, 202-778-8850. For information about a specific regulation project listed on the agenda, contact the person designated in the agenda for that regulation.

SUPPLEMENTARY INFORMATION: Under the President's Order on Federal Regulation, Executive Order 12291, 46 FR 13193, each agency is required to publish in April and October an agenda of regulations currently or soon to be under development. The Executive Order requires that the agenda also include those currently effective regulations that are being reviewed by the agency pursuant to the Executive Order. The Regulatory Flexibility Act, Pub. L. 96-354, 5 U.S.C. 601, has a similar agenda requirement. Under that law, the agenda must list any regulation that is likely to have a significant economic impact on a substantial number of small entities.

The Office of Management and Budget has issued guidelines (OMB Bulletin No. 88-1) prescribing the form and content of the regulatory agenda. Under those guidelines, the agenda must list all regulatory activities being conducted or reviewed in the next twelve months and provide certain specified information on each regulation. All of the items on this agenda are current or projected rulemakings.

Kathleen P. Utgoff,

Executive Director, Pension Benefit Guaranty Corporation.

PENSION BENEFIT GUARANTY CORPORATION (PBGC) — Proposed Rule Stage

3206. TRANSFERS FROM MULTIEMPLOYER PLANS TO SINGLE-EMPLOYER PLANS

Legal Authority: 29 USC 1302(b)(3); 29 USC 1412; 29 USC 1414

CFR Citation: 29 CFR 2678

Legal Deadline: None.

Abstract: Sections 4232 and 4234 of ERISA prescribe rules governing the transfer of liabilities and assets from a multiemployer plan to a single-employer plan and prohibit certain transfers unless approved by PBGC. The regulation will establish procedures for requesting and criteria for PBGC approval of transfers which require approval and guidelines for satisfying the statutory requirements pertaining to other transfers. The regulation will also establish standards for the PBGC's waiver of a multiemployer plan's contingent liability arising from the transfer of unfunded vested benefits to a single-employer plan.

Timetable:

Action	Date	FR Cite
NPRM	09/00/88	
NPRM Comment Period End	11/00/88	

Small Entity: No

Additional Information: Publication of this proposed regulation has been delayed because of the need to revise the portions dealing with waiver of a multiemployer plan's contingent liability to reflect certain changes in related statutory provisions made by the Single-Employer Pension Plan Amendments Act of 1986.

Agency Contact: Mr. John Foster, Attorney, Pension Benefit Guaranty Corporation, Office of the General Counsel, (22500), 2020 K St., NW, Washington, DC 20006, 202 778-8850

RIN: 1212-AA20

3207. PLAN RULES FOR REDUCTION OR WAIVER OF COMPLETE WITHDRAWAL LIABILITY

Significance: Regulatory Program

Legal Authority: 29 USC 1302(b)(3); 29 USC 1387(b)

CFR Citation: 29 CFR 2647 (Amendment)

Legal Deadline: None.

Abstract: Under section 4207(a) of ERISA, the PBGC has issued a regulation (29 CFR Part 2647) providing for the reduction or waiver of an employer's liability for complete withdrawal upon the employer's resumption of participation under the plan from which it withdrew. The statute also requires the PBGC to prescribe procedures and standards under which multiemployer plans may adopt their own rules abating complete withdrawal liability upon an employer's return to the plan (section 4207(b)).

The purpose of letting plans adopt their own abatement rules is obvious: a specific rule adopted by a plan may well work better under the facts and circumstances of that particular plan than the broad rules adopted by the PBGC. This regulation will permit a plan to fashion the rules it needs to encourage the return of withdrawn employers, while at the same time protecting the plan from the loss of withdrawal liability payments without a compensating resumption of contributions to the plan by a formerly withdrawn employer. The PBGC is unable to (cont)

Timetable:

Action	Date	FR Cite
NPRM	10/00/88	
NPRM Comment Period End	12/00/88	

Small Entity: No

Additional Information: ABSTRACT CONT: quantify the benefits and costs of this regulation because it cannot

predict how many plans will exercise the authority conferred by this regulation.

Agency Contact: Mr. John Foster, Attorney, Pension Benefit Guaranty Corporation, Office of the General Counsel, (22500), 2020 K St., NW, Washington, DC 20006, 202 778-8850

RIN: 1212-AA38

3208. ALLOCATING UNFUNDED VESTED BENEFITS: FULLY FUNDED PLANS

Legal Authority: 29 USC 1302(b)(3); 29 USC 1341(c)

CFR Citation: 29 CFR 2642

Legal Deadline: None.

Abstract: In a notice published in the FEDERAL REGISTER on December 31, 1986 (51 FR 47342), the PBGC issued its interpretation that ERISA section 4211 does not permit the assessment of withdrawal liability against an employer by a multiemployer plan that had no unfunded vested benefits as of the end of the plan year preceding the employer's withdrawal. This interpretation raises certain questions as to the proper manner of applying the allocation methods prescribed in section 4211(b) and (c)(2) by a plan that at one time was fully funded, but is no longer. The PBGC plans to issue a proposed amendment to its regulation on allocating unfunded vested benefits dealing with this issue.

Timetable:

Action	Date	FR Cite
NPRM	12/00/88	
NPRM Comment Period End	02/00/89	

Small Entity: No

Agency Contact: Ms. Deborah Murphy, Attorney, Pension Benefit Guaranty Corporation, Office of the General Counsel, (22500), 2020 K St., NW, Washington, DC 20006, 202 778-8850

RIN: 1212-AA51

3209. PAYMENT OF BENEFITS IN PBGC-TRUSTEED PLANS

Legal Authority: 29 USC 1302(b)(3); 29 USC 1322; 29 USC 1342

CFR Citation: Not yet determined

Legal Deadline: None.

Abstract: When the PBGC assumes trusteeship of a terminated pension plan pursuant to sections 4041 and 4042 of ERISA, it pays benefits to participants pursuant to plan provisions and section 4022 of ERISA. This regulation will contain rules and policies relating to the payment of such benefits. The regulation will enable the PBGC to process and administer PBGC-trusteed plans more efficiently with resultant cost savings. It also will reduce costs to the public and the PBGC by providing payment rules, thereby reducing the number of requests for administrative review.

Timetable:

Action	Date	FR Cite
NPRM	10/00/88	
NPRM Comment Period End	12/00/88	

Small Entity: No

Agency Contact: Mrs. Renae R. Hubbard, Special Counsel, Pension Benefit Guaranty Corporation, Office of the General Counsel, (22500), 2020 K St., NW, Washington, DC 20006, 202 778-8850

RIN: 1212-AA35

3210. EMPLOYER LIABILITY FOR WITHDRAWALS FROM AND TERMINATIONS OF SINGLE-EMPLOYER PLANS: INTEREST RATE

Legal Authority: 29 USC 1302(b); 29 USC 1362 to 1364; 29 USC 1367 to 1368

CFR Citation: 29 CFR 2622

Legal Deadline: None.

Abstract: The PBGC's employer liability regulation incorporates by reference the interest rate charged under section 6601 of the Internal Revenue Code as the interest rate charged, or credited, on late payments, or overpayments, of employer liability. The Tax Reform Act of 1986 significantly changed the way in which the section 6601 rate is established and creates two interest rates: one for underpayments and another, lower rate for overpayments. Because of these changes, the PBGC plans to conduct a new rulemaking proceeding to determine whether it should continue to use the section 6601 interest rates under the employer liability regulation or whether it should adopt a new rate(s) for this purpose.

Timetable:

Action	Date	FR Cite
NPRM	11/00/88	
NPRM Comment Period End	01/00/89	

Small Entity: No

Agency Contact: Ms. Therese Cleary, Attorney, Pension Benefit Guaranty Corporation, Office of the General Counsel, (22500), 2020 K St., NW, Washington, DC 20006, 202 778-8823

RIN: 1212-AA48

PENSION BENEFIT GUARANTY CORPORATION (PBGC) — Final Rule Stage

3211. RULES UNDER SECTIONS 4041A AND 4281 FOR PLANS TERMINATED BY MASS WITHDRAWAL

Legal Authority: 29 USC 1302(b)(3) ERISA; 29 USC 1341A ERISA; 29 USC 1441 ERISA

CFR Citation: 29 CFR 2675

Legal Deadline: None.

Abstract: Section 4041A of ERISA provides rules with respect to the termination of multiemployer plans and the payment of benefits under those plans. Under section 4041A(f)(2), PBGC is authorized to prescribe rules for the administration of those plans that are appropriate to protect the interests of plan participants and beneficiaries or to prevent unreasonable loss to the insurance system. Under section 4281(b), the plan sponsor of a plan that has terminated by mass withdrawal is required annually to determine the value of the plan's nonforfeitable benefits and assets. If the value of the benefits exceeds the value of the assets, the sponsor must amend the plan to eliminate benefits not eligible for PBGC's guarantee under section 4022A(b), to the extent necessary to insure that the plan assets are sufficient

to pay all nonforfeitable benefits. This determination of sufficiency is to be made in accordance with rules prescribed by PBGC. This regulation would establish the rules for administering plans that have terminated by mass withdrawal, including the rules for determining sufficiency in the circumstances described above. The primary purpose (cont)

Timetable:

Action	Date	FR Cite
NPRM	07/07/86	51 FR 24536
NPRM Comment Period End	09/05/86	
Final Action	06/00/88	
Final Action Effective	07/00/88	

Small Entity: No

Additional Information: ABSTRACT CONT: and benefit of this regulation will be to establish rules that encourage the efficient administration of these plans. By thus helping to preserve plan assets, these rules will, in the first instance, benefit plan participants and beneficiaries and secondarily, the multiemployer insurance system and premium payers. PBGC lacks adequate data to be able to quantify these benefits.

Agency Contact: J. Ronald Goldstein, Senior Counsel, Pension Benefit Guaranty Corporation, Office of the General Counsel, (22500), 2020 K St., NW, Washington, DC 20006, 202 778-8850

RIN: 1212-AA19

3212. REDUCTION OR WAIVER OF PARTIAL WITHDRAWAL LIABILITY

Significance: Regulatory Program

Legal Authority: 29 USC 1302(b)(3); 29 USC 1388(e)(3)

CFR Citation: 29 CFR 2646

Legal Deadline: None.

Abstract: Section 4208 of ERISA provides for the reduction or elimination under certain circumstances of an employer's partial withdrawal liability arising from a 70 percent reduction in contribution base units. That section also authorizes the PBGC to prescribe rules for the reduction or elimination of partial withdrawal liability under other conditions. The regulation will provide for the abatement of partial withdrawal liability arising from the cessation of the obligation to contribute under a collective bargaining agreement or with respect to a facility. Section 4208 also requires the PBGC to issue a regulation under which a multiemployer plan may adopt rules for the reduction or elimination of partial withdrawal liability. This regulation will allow plans to ease the statutory partial withdrawal liability rules where, for example, the rules are harmful to the plan because they discourage an employer from increasing its participation under the plan, or where the statutory rules create administrative burdens which outweigh the protections afforded by the rules.

Timetable:

Action	Date	FR Cite
NPRM	06/05/87	52 FR 21319
NPRM Comment Period End	08/04/87	
Final Action	09/00/88	

Small Entity: No

Agency Contact: Ms. Debra Bisco, Attorney, Pension Benefit Guaranty Corporation, Office of the General Counsel, (22500), 2020 K St., NW, Washington, DC 20006, 202 778-8824

RIN: 1212-AA22

3213. ADJUSTMENT OF WITHDRAWAL LIABILITY FOR A WITHDRAWAL SUBSEQUENT TO A PARTIAL WITHDRAWAL

Significance: Regulatory Program

Legal Authority: 29 USC 1302(b)(3); 29 USC 1386(b)

CFR Citation: 29 CFR 2649

Legal Deadline: None.

Abstract: Under section 4206(b) of ERISA, if an employer partially or completely withdraws from a multiemployer plan subsequent to an earlier partial withdrawal from that plan, the employer's liability for the second withdrawal must be reduced by the amount of its liability for the earlier partial withdrawal. The purpose of this credit is to avoid plans double-charging employers for the same unfunded liabilities. Section 4206(b) also requires the PBGC to prescribe regulations adjusting this credit to ensure that the employer's liability for its second withdrawal properly reflects the employer's share of liability with respect to the plan. The need for this adjustment to the credit can be seen from the following example. In a plan that uses the rolling-5 allocation method, an employer's withdrawal liability is based on its last five years' participation in the plan. If an employer's second withdrawal occurs more than five years after its partial withdrawal, the liability for the second withdrawal is based solely on plan participation subsequent to the partial (cont)

Timetable:

Action	Date	FR Cite
NPRM	10/06/87	52 FR 37329
NPRM Comment Period End	12/07/87	
Final Action	10/00/88	

Small Entity: No

Additional Information: ABSTRACT CONT: withdrawal. Thus, there is no double-charging with respect to the old liabilities and no reason to give the employer a credit against its liability for the second withdrawal. However, without this regulation, the employer would get that credit under the statute. There are many other possible situations in which the employer's credit should similarly be reduced in order to ensure equitable treatment of the withdrawing employer vis-a-vis the other employers still contributing to the plan.

This regulation will result in some shifting of liabilities among employers contributing to a multiemployer plan. An employer that has another withdrawal following a partial withdrawal may incur greater liability for the second withdrawal because of the reduction in the credit for the prior partial withdrawal. However, this increase in liability would reduce the unfunded vested benefits allocable to other employers that withdraw thereafter. In the aggregate, the regulation will impose no new costs.

Agency Contact: Ms. Debra Bisco, Attorney, Pension Benefit Guaranty Corporation, Office of the General Counsel, (22500), 2020 K St., NW, Washington, DC 20006, 202 778-8824

RIN: 1212-AA37

3214. DETERMINATION OF WITHDRAWAL LIABILITY FOLLOWING A MERGER

Significance: Regulatory Program

Legal Authority: 29 USC 1302(b)(3); 29 USC 1391(f)

CFR Citation: 29 CFR 2642 (Amendment)

Legal Deadline: None.

Abstract: The merger of two multiemployer plans creates a problem as to how the successor plan's unfunded vested benefits are to be allocated in order to determine withdrawal liability for post-merger withdrawals. Frequently, the two plans will have been using different allocation methods prior to the merger. Even if they were using the same method, if they had different plan years, that would create different allocations.

For this reason, section 4211(f) of ERISA requires the PBGC to issue regulations prescribing rules for the post-merger allocation of unfunded vested benefits. The PBGC proposes to establish rules that parallel the statutory allocation methods: i.e., there would be a presumptive allocation method that would apply to plans unless they chose otherwise, and plans would be permitted to adopt certain modifications to this presumptive method without the PBGC's approval and other more significant modifications with the PBGC's approval. (cont)

Timetable:

Action	Date	FR Cite
NPRM	11/09/87	52 FR 43082
NPRM Comment Period End	01/08/88	
Final Action	11/00/88	

Small Entity: No

Additional Information: ABSTRACT CONT: This regulation will remove a significant impediment to multiemployer plan mergers by eliminating employers' concern and confusion over how their withdrawal liability would be calculated after a merger. Plan mergers are generally to be encouraged since a larger plan is typically a stronger plan because of its broader contribution base, and because portability of benefits is increased. This regulation will impose no new costs.

Agency Contact: Mr. John Foster, Attorney, Pension Benefit Guaranty Corporation, Office of the General Counsel, (22500), 2020 K St., NW, Washington, DC 20006, 202 778-8850

RIN: 1212-AA39

3215. PAYMENT OF PREMIUMS

Significance: Regulatory Program

Legal Authority: 29 USC 1302(b)(3); 29 USC 1306; 29 USC 1307; PL 100-203, Sec 9331

CFR Citation: 29 CFR 2610

Legal Deadline: None.

Abstract: The Pension Protection Act substantially altered the rules pertaining to single-employer plan premiums that are paid to the PBGC. Under the Act, there is a flat per capita charge (increased from that under prior law) plus a new variable rate charge tied to the value of a plan's unfunded vested benefits. The new premium rules are effective for plan years beginning after December 31, 1987.

The PBGC's premium payment regulation establishes the procedures, including the due dates, for the payment of premiums. In order to reduce the costs associated with paying the variable rate assessment, the PBGC plans to adjust the premium due dates so that plans can use the data used for preparing Form 5500 and Schedule B in order to compute unfunded vested benefits for premium purposes. The regulation must also be revised to reflect the new premium rates ($16 per participant plus the variable rate amount) and to prescribe rules for determining a plan's unfunded vested benefits. (The calculation of unfunded vested benefits for premium purposes is not the same as for funding purposes.) (CONT)

Timetable:

Action	Date	FR Cite
Interim Final Rule	06/00/88	
NPRM	07/00/88	
NPRM Comment Period End	09/00/88	

Small Entity: Not Applicable

Additional Information: ABSTRACT CONT:

Because of the need to have rules in place quickly so that plans will have the necessary guidance for paying premiums due during 1988, the PBGC plans to issue an interim final rule. Shortly thereafter the PBGC will issue a notice of proposed rulemaking that will be very similar to the interim rule, but will also raise several new issues not addressed in the interim rule. The interim rule will be in effect until completion of the public rulemaking.

Agency Contact: Mr. Harold Ashner, Attorney, Pension Benefit Guaranty Corporation, Office of the General Counsel, (22500), 2020 K St., NW. Washington, D.C. 20006, 202 778-8823

RIN: 1212-AA53

3216. ● RETIREMENT EQUITY ACT AMENDMENTS - VALUATION OF PLAN BENEFITS

Significance: Regulatory Program

Legal Authority: 29 USC 1302(b)(3); 29 USC 1341

CFR Citation: 29 CFR 2619

Legal Deadline: None.

Abstract: The Retirement Equity Act of 1984 ("REA") requires plans to provide certain benefits, prohibits the elimination of benefit options and certain early retirement benefits and retirement- type subsidies, and mandates the range of interest rates that may be used in calculating the amount of a non-consensual lump sum benefit. The Tax Reform Act of 1986 ("TRA '86") slightly modified the interest rate restrictions and extended them to the calculation of all lump sum benefits.

These rules necessitate several amendments to the PBGC's valuation of benefits regulation (29 CFR Part 2619). The major changes will address the rules on determining the form of benefit to be valued on plan termination and the interest rate rules for lump sum payments in standard terminations.

Because the valuation of benefits is an essential part of the plan termination process, the PBGC plans to issue these amendments both as a notice of proposed rulemaking and as an interim final rule at or about the same time it issues the final distress termination and standard termination regulations. (cont)

Timetable:

Action	Date	FR Cite
Interim Final Rule and NPRM	09/00/88	
NPRM Comment Period End	11/00/88	

Small Entity: No

Additional Information: ABSTRACT CONT:

This project reflects the merger of two items carried in previous agendas: Retirement Equity Act Amendments, RIN 1212-AA36, and Valuation of Plan Benefits (lump sum payments in standard terminations), RIN 1212-AA26. Because of delays in the lump sum amendments, the PBGC determined that it would be more efficient to combine those amendments with the valuation amendments included in the REA project. The portion of the REA project dealing with amendments to the PBGC's Guaranteed Benefits and Allocation of Assets regulations (29 CFR Parts 2613 and 2618) has been deferred, because the need for those amendments was reduced by the enactment of the Pension Protection Act.

Agency Contact: Ms. Deborah Murphy, Attorney, Pension Benefit Guaranty Corporation, Office of the General Counsel, (22500), 2020 K St., NW, Washington, DC 20006, 202 778-8824

RIN: 1212-AA55

3217. DISTRESS TERMINATIONS OF SINGLE-EMPLOYER PLANS

Significance: Regulatory Program

Legal Authority: PL 99-272, Sec 11007; PL 99-272, Sec 11009; PL 100-203, Sec 9312(c) to 9312(d); PL 100-203, Sec 9313(b) to 9313(c); PL 100-203, Sec 9314(a)

CFR Citation: 29 CFR 2616

Legal Deadline: None.

Abstract: The Single-Employer Pension Plan Amendments Act of 1986 substantially revised ERISA section 4041 dealing with the voluntary termination of single-employer pension plans. Under amended section 4041, a plan may voluntarily terminate only if the termination satisfies the statutory conditions for a standard or distress termination. These rules were further modified by the 1987 Pension Protection Act, which increased the benefits that must be provided, or for which the employer maintaining the plan is liable, upon plan termination. Thus, under current law, unless a plan has sufficient assets to satisfy all plan benefit liabilities, it may voluntarily terminate only in a "distress" termination; i.e., a termination in which the plan sponsor and all members of its controlled group are able to demonstrate either such financial hardship or unduly burdensome pension costs that, as a practical matter, they are unable to continue to maintain the plan. CONT.

Timetable:

Action	Date	FR Cite
NPRM	09/02/87	52 FR 33318
NPRM Comment Period End	11/02/87	
Final Action	09/00/88	

Small Entity: No

Additional Information: ABSTRACT CONT:

The statutory rules and procedures for distress terminations are substantially different from the prior rules and procedures for terminating insufficient plans. Therefore, it is necessary to revise the PBGC's plan termination regulations to reflect these new rules and procedures. This regulation covering distress terminations and a companion rule covering standard terminations (to be codified in Part 2617) will replace the PBGC's principal termination regulations on notices of intent to terminate and termination of sufficient plans (existing Parts 2616 and 2617).

Although the notice of proposed rulemaking for this regulation was issued prior to enactment of the Pension Protection Act, the final rule will reflect the relevant statutory changes from that Act.

Agency Contact: J. Ronald Goldstein, Senior Counsel, Pension Benefit Guaranty Corporation, Office of the General Counsel, (22500), 2020 K St., NW, Washington, DC 20006, 202 778-8850

RIN: 1212-AA41

3218. STANDARD TERMINATIONS OF SINGLE-EMPLOYER PLANS

Significance: Regulatory Program

Legal Authority: PL 99-272, Sec 11007; PL 99-272, Sec 11008; PL 100-203, Sec 9311; PL 100-203, Sec 9313(a); PL 100-203, Sec 9313(c); PL 100-203, Sec 9314(a)

CFR Citation: 29 CFR 2617

Legal Deadline: None.

Abstract: Under ERISA Section 4041, as amended by the Single-Employer Pension Plan Amendments Act of 1986 and the Pension Protection Act, absent a showing of financial hardship or unduly burdensome pension costs that would satisfy the requirements for a distress termination, a single-employer plan may be voluntarily terminated only if it is sufficient for all benefit liabilities (i.e., all benefits provided under the plan on the termination date, whether or not vested). This is referred to as a "standard" termination. SEPPAA also modified many of the termination rules and procedures that applied under prior law, both to increase the protections afforded plan participants and beneficiaries and to simplify and expedite the PBGC's processing of these sufficient plan terminations. It is, therefore, necessary to promulgate this new regulation implementing the new rules and procedures for standard terminations. This regulation and its companion regulation covering distress terminations (to be codified in Part 2616) will replace the PBGC's principal termination regulations on notices of intent to terminate and termination of sufficient plans (existing Parts 2616 and 2617) (CONT)

Timetable:

Action	Date	FR Cite
NPRM	09/02/87	52 FR 33318
NPRM Comment Period End	11/02/87	
Final Action	09/00/88	

Small Entity: No

Additional Information: ABSTRACT CONT:

Although the notice of proposed rulemaking for this regulation was issued prior to enactment of the Pension Protection Act, the final rule will reflect the relevant statutory changes from that Act.

Agency Contact: J. Ronald Goldstein, Senior Counsel, Pension Benefit Guaranty Corporation, Office of the General Counsel, (22500), 2020 K St., NW, Washington, DC 20006, 202 778-8850

RIN: 1212-AA47

3219. MISCELLANEOUS SEPPAA AMENDMENTS

Significance: Regulatory Program

Legal Authority: 29 USC 1302(b); 29 USC 1322; 29 USC 1343; 29 USC 1344; 29 USC 1362 to 1364; 29 USC 1367 to 1368; PL 99-272, Sec 11008 to 11011; PL 99-272, Sec 11016; PL 100-203, Sec 9311 to 9314; PL 100-203, Sec 9331

CFR Citation: 29 CFR 2606; 29 CFR 2615; 29 CFR 2622; 29 CFR 2623

Legal Deadline: None.

Abstract: The Single-Employer Pension Plan Amendments Act of 1986

("SEPPAA") and the Pension Protection Act ("PPA") made several changes in Title IV rules and procedures that affect and, in some cases, override portions of several PBGC regulations. For this reason, these regulations - administrative review of agency decisions, benefit reductions in terminated plans, reportable events and employer liability - must be amended to conform them to the current law. For example, because SEPPAA altered the determinations that the PBGC may make with respect to voluntary plan terminations, the list in 29 CFR 2606.1(b) of determinations subject to agency review must be amended. Similarly, SEPPAA contained, for distress terminations, specific benefit cutback rules. These rules differ somewhat from those set forth in 29 CFR Part 2623 and, therefore, conforming amendments to Part 2623 are required. SEPPAA and the PPA significantly changed the rules on employer liability to the PBGC in distress and involuntary terminations. Now, an employer is liable to the PBGC for the total plan underfunding. (CONT)

Timetable:

Action	Date	FR Cite
Final Action	12/00/88	

Small Entity: No

Additional Information: ABSTRACT CONT: i.e., for all unfunded benefit liabilities. Further, the 30 percent of net worth limitation is now relevant only in determining the amount subject to PBGC's statutory lien and the status of PBGC's claim in bankruptcy. The employer liability regulation needs to be amended to reflect these changes.

Agency Contact: Mr. Stephen Schreiber, Attorney, Pension Benefit Guaranty Corporation, Office of the General Counsel, (22500), 2020 K St., NW, Washington, DC 20006, 202 778-8824

RIN: 1212-AA50

PENSION BENEFIT GUARANTY CORPORATION (PBGC) — Completed Actions

3220. ALLOCATING UNFUNDED VESTED BENEFITS

Legal Authority: 29 USC 1302(b)(3); 29 USC 1391(c)

CFR Citation: 29 CFR 2642

Legal Deadline: None.

Abstract: On January 19, 1981, PBGC issued an interim regulation dealing with alternative methods for allocating unfunded vested benefits in multiemployer pension plans. PBGC now plans to re-promulgate that regulation in order to correct ambiguities that have arisen under it, to conform the procedures contained in it to other PBGC regulations, and to reduce the information reporting requirements in the regulation. The regulation will impose no new costs on the public and may reduce costs for plans adopting certain alternative allocation rules by reducing the reporting requirements.

Timetable:

Action	Date	FR Cite
NPRM	09/09/85	50 FR 36603
NPRM Comment Period End	11/08/85	
Final Action	10/26/87	52 FR 39912
Final Action Effective	11/25/87	

Small Entity: No

Agency Contact: Deborah Murphy, Attorney, Pension Benefit Guaranty Corporation, Office of the General Counsel, (22500), 2020 K St., NW, Washington, DC 20006, 202 778-8850

RIN: 1212-AA21

3221. VALUATION OF PLAN BENEFITS IN SINGLE-EMPLOYER PLANS

Legal Authority: 29 USC 1302; 29 USC 1341; 29 USC 1344; 29 USC 1362

CFR Citation: 29 CFR 2619

Legal Deadline: None.

Abstract: This rule would amend PBGC's regulation on Valuation of Plan Benefits in Single-Employer Plans, 29 CFR Part 2619. That regulation sets forth the rules for valuing benefits in terminating plans that are covered by the insurance program under ERISA, which valuation is needed to determine if plan assets are sufficient to provide for plan benefits and to properly allocate assets to those benefits. After review of this regulation pursuant to Executive Order 12291, the PBGC is amending the rules for valuing benefits payable as lump sums upon termination. The effect of this amendment is to prescribe a new standard for the interest rates used to value lump sums that are paid in lieu of annuities, and to require that in valuing involuntary lump sums, pre-retirement mortality is to be disregarded. The amendment is needed to protect recipients of lump sum distributions from loss of benefit value resulting from the use of inappropriate valuation methods.

Timetable:

Action	Date	FR Cite
Merged with RIN 1212-AA36 to form new item, RIN 1212-AA55	01/04/88	

Small Entity: No

Agency Contact: Ms. Deborah Murphy, Attorney, Pension Benefit Guaranty Corporation, Office of the General Counsel, (22500), 2020 K St., NW, Washington, DC 20006, 202 778-8850

RIN: 1212-AA26

3222. RETIREMENT EQUITY ACT AMENDMENTS

Significance: Regulatory Program

Legal Authority: 29 USC 1302(b)(3); 29 USC 1322; 29 USC 1341; 29 USC 1344

CFR Citation: 29 CFR 2613; 29 CFR 2618; 29 CFR 2619

Legal Deadline: None.

Abstract: Part 2613 of the PBGC's regulations defines "nonforfeitable" and "guaranteed" benefits for the purposes of Title IV of ERISA. Part 2618 implements the statutory rules for allocating plan assets to pay benefits upon plan termination. Part 2619 prescribes rules for valuing plan benefits, including rules for determining the form of benefit to be valued. Each of these regulations is effected by the Retirement Equity Act of 1984 ("REA").

REA provides that certain early retirement benefits and retirement-type

subsidies and optional benefit forms will be treated as accrued benefits, and that their elimination will be treated as an impermissible reduction in accrued benefits. These amendments will conform PBGC's regulations to the provisions of REA. The amendments will impose no new costs on plans and may alleviate administrative burdens by providing definitive rules.

Timetable:

Action	Date	FR Cite
Merged with RIN 1212-AA26 to form new item, RIN 1212-AA55	01/04/88	

Small Entity: No

Agency Contact: Mrs. Renae R. Hubbard, Special Counsel, Pension Benefit Guaranty Corporation, Office of the General Counsel, (22500), 2020 K St., NW, Washington, DC 20006, 202 778-8850

RIN: 1212-AA36

3223. THE RETIREMENT EQUITY ACT AMENDMENTS: CASH-OUT LIMITATION

Legal Authority: 29 USC 1302(b); 29 USC 1341; 29 USC 1344; 29 USC 1362; PL 99-272, Sec 11006 to 11009; PL 99-272, Sec 11011

CFR Citation: 29 CFR 2613; 29 CFR 2617; 29 CFR 2619

Legal Deadline: None.

Abstract: The PBGC's guaranteed benefits regulation (29 CFR Part 2613) provides that the PBGC will not pay lump sum benefits under insufficient plans unless the value of the benefit is $1,750 or less. Similarly, the plan sufficiency and valuation of benefits regulations (29 CFR Parts 2617 and 2619) permit plan administrators of terminating sufficient plans to pay lump sum benefits without a participant's consent if the value of the benefit is $1,750 or less. This $1,750 limit corresponds to the "cash-out" provisions in ERISA section 204(d) and Internal Revenue Code section 411(b)(7)(B). These provisions were amended by the Retirement Equity Act of 1984 to raise the cash-out limit to $3,500, in recognition of the effects of inflation on the value of small pension benefits. The PBGC believes that the same consideration supports its raising the lump sum limitation in these several regulations.

Timetable:

Action	Date	FR Cite
NPRM	12/12/86	51 FR 44798
NPRM Comment Period End	02/10/87	
Final Action	12/15/87	52 FR 47561
Final Action Effective	01/14/88	

Small Entity: No

Additional Information: This amendment had previously been included in RIN 1212-AA36, "Retirement Equity Act Amendments". However, that project is large and complex, and therefore, those amendments will not be issued for some time. The PBGC believes that the interest of plan participants is best served by splitting out this one amendment so that it may be issued more quickly.

Agency Contact: Mrs. Renae R. Hubbard, Special Counsel, Pension Benefit Guaranty Corporation, Office of the General Counsel, (22500), 2020 K St., NW, Washington, DC 20006, 202 778-8850

RIN: 1212-AA49

[FR Doc. 88-5100 Filed 04-22-88; 8:45 am]

BILLING CODE 7708-01-T

federal register

Monday
April 25, 1988

Part XXXVII

Railroad Retirement Board

Semiannual Regulatory Agenda

RAILROAD RETIREMENT BOARD (RRB)

RAILROAD RETIREMENT BOARD

20 CFR Ch. II

Semiannual Agenda of Regulations Under Development or Review

AGENCY: Railroad Retirement Board.

ACTION: Agenda of regulations under development or review.

SUMMARY: This agenda contains lists of regulations that the Board is developing or proposes to develop in the next twelve months, and regulations that are scheduled to be reviewed in that period.

ADDRESS: 844 Rush Street, Chicago, Illinois 60611.

FOR FURTHER INFORMATION CONTACT: Steven A. Bartholow, Deputy General Counsel, Railroad Retirement Board, (312) 751-4935, (FTS 386-4935).

SUPPLEMENTARY INFORMATION: Regulations that are routine in nature or pertain solely to internal agency management have not been included in the agenda. Current regulations that are proposed to be modified based on a completed review of the regulations are listed in the agenda.

Dated: February 25, 1988.
By Authority of the Board.
For the Board.

Beatrice Ezerski,
Secretary to the Board.

Proposed Rule Stage

Sequence Number	Title	Regulation Identifier Number
3224	Part 220 Disability Determinations	3220-AA01
3225	Annuity Beginning and Ending Dates	3220-AA13
3226	Evidence Required for Payment	3220-AA14
3227	Eligibility for an Annuity	3220-AA15
3228	Application for Annuity or Lump Sum	3220-AA16
3229	Transfer, Assignment, or Waiver of Payments	3220-AA43
3230	Erroneous Payments	3220-AA44
3231	Sickness Benefits and Maternity Benefits	3220-AA45
3232	Recovery of Debts Owed to the United States Government by Employees	3220-AA49
3233	Employer Status	3220-AA51
3234	Employee Status	3220-AA52
3235	Employment Relation	3220-AA53
3236	Employee Representative	3220-AA55
3237	Disclosure of Information	3220-AA56
3238	Family Relationships	3220-AA57
3239	Computing Employee, Spouse, and Divorced Spouse Annuities	3220-AA58
3240	Survivor Annuity Computations	3220-AA59
3241	Social Security Overall Minimum Annuity	3220-AA60
3242	Deductions on Account of Work	3220-AA61
3243	Paying Social Security Benefits	3220-AA62
3244	Incompetence	3220-AA63

Final Rule Stage

Sequence Number	Title	Regulation Identifier Number
3245	Primary Insurance Amount Determinations	3220-AA02
3246	Enforcement of Nondiscrimination on the Basis of Handicap in Programs or Activities Conducted by the Railroad Retirement Board	3220-AA22
3247	Railroad Employers Reports and Responsibilities	3220-AA25
3248	Creditable Railroad Service	3220-AA26
3249	Creditable Railroad Compensation	3220-AA27

Completed Actions

Sequence Number	Title	Regulation Identifier Number
3250	Initial Determinations Under the Railroad Unemployment Insurance Act and Reviews of and Appeals from such Determinations	3220-AA11

RRB

Completed Actions—Continued

Sequence Number	Title	Regulation Identifier Number
3251	Debt Collection	3220-AA47

RAILROAD RETIREMENT BOARD (RRB)

Proposed Rule Stage

3224. PART 220 DISABILITY DETERMINATIONS

Significance: Regulatory Program

Legal Authority: 45 USC 231f(b)(5)

CFR Citation: 20 CFR 220

Legal Deadline: None.

Abstract: The Board's regulations with respect to disability determinations have not been updated for several years and they are, in certain respects, obsolete. When revised, this regulation should ease the administration of disability benefits and result in greater consistency in disability determinations.

Timetable:

Action	Date	FR Cite
NPRM	06/00/88	

Small Entity: Not Applicable

Affected Sectors: None

Government Levels Affected: Federal

Agency Contact: Grace Koester, Regulations Project Director, Railroad Retirement Board, Bureau of Hearings and Appeals, 844 Rush Street, Chicago, IL 60611, 312 751-4793

RIN: 3220-AA01

3225. ANNUITY BEGINNING AND ENDING DATES

Legal Authority: 45 USC 231f(b)(5)

CFR Citation: 20 CFR 218

Legal Deadline: None.

Abstract: Part 218 is being revised to incorporate changes required as a result of amendments to the Railroad Retirement Act of 1974 made by the Omnibus Budget Reconciliation Act of 1981 and the Railroad Retirement Solvency Act of 1983.

Timetable:

Action	Date	FR Cite
NPRM	09/00/88	

Small Entity: Not Applicable

Affected Sectors: None

Government Levels Affected: Federal

Agency Contact: Thomas W. Sadler, General Attorney, Bureau of Law, Railroad Retirement Board, 844 Rush Street, Chicago, IL 60611, 312 751-4513

RIN: 3220-AA13

3226. EVIDENCE REQUIRED FOR PAYMENT

Legal Authority: 45 USC 231f(b)(5)

CFR Citation: 20 CFR 219

Legal Deadline: None.

Abstract: Part 219 is being revised to incorporate changes required as a result of amendments to the Railroad Retirement Act of 1974 made by the Omnibus Budget Reconciliation Act of 1981 and the Railroad Retirement Solvency Act of 1983.

Timetable:

Action	Date	FR Cite
NPRM	09/00/88	

Small Entity: Not Applicable

Affected Sectors: None

Government Levels Affected: Federal

Agency Contact: Thomas W. Sadler, General Attorney, Bureau of Law, Railroad Retirement Board, 844 Rush Street, Chicago, IL 60611, 312 751-4513

RIN: 3220-AA14

3227. ELIGIBILITY FOR AN ANNUITY

Legal Authority: 45 USC 231f(b)(5)

CFR Citation: 20 CFR 216

Legal Deadline: None.

Abstract: Part 216 is being revised to incorporate changes required as a result of amendments to the Railroad Retirement Act of 1974 made by the Omnibus Budget Reconciliation Act of 1981 and the Railroad Retirement Solvency Act of 1983.

Timetable:

Action	Date	FR Cite
NPRM	09/00/88	

Small Entity: Not Applicable

Affected Sectors: None

Government Levels Affected: Federal

Agency Contact: Thomas W.Sadler, General Attorney, Bureau of Law, Railroad Retirement Board, 844 Rush Street, Chicago, IL 60611, 312 751-4513

RIN: 3220-AA15

3228. APPLICATION FOR ANNUITY OR LUMP SUM

Legal Authority: 45 USC 231f(b)(5)

CFR Citation: 20 CFR 217

Legal Deadline: None.

Abstract: Part 217 is being revised to incorporate changes required as a result of amendments to the Railroad Retirement Act of 1974 made by the Omnibus Budget Reconciliation Act of 1981 and the Railroad Retirement Solvency Act of 1983.

Timetable:

Action	Date	FR Cite
NPRM	10/00/88	

Small Entity: Not Applicable

Affected Sectors: None

Government Levels Affected: Federal

Agency Contact: Thomas W. Sadler, General Attorney, Bureau of Law,

Railroad Retirement Board, 844 Rush Street, Chicago, IL 60611, 312 751-4513

RIN: 3220-AA16

3229. TRANSFER, ASSIGNMENT, OR WAIVER OF PAYMENTS

Legal Authority: 45 USC 231f

CFR Citation: 20 CFR 243; 20 CFR 295; 20 CFR 262.5; 20 CFR 350

Legal Deadline: None.

Abstract: Currently, regulations concerning this subject matter appear in several parts of the Board's regulations. The new Part 243 will bring together or cross-reference the several related regulatory sections.

Timetable:

Action	Date	FR Cite
NPRM	06/00/88	

Small Entity: Not Applicable

Government Levels Affected: State, Federal

Agency Contact: Michael C. Litt, General Attorney, Bureau of Law, Railroad Retirement Board, 844 Rush Street, Chicago, IL 60611, 312 751-4929

RIN: 3220-AA43

3230. ERRONEOUS PAYMENTS

Legal Authority: 45 USC 231f

CFR Citation: 20 CFR 255

Legal Deadline: None.

Abstract: Part 255 is being revised to clarify when and how erroneous payments under the Railroad Retirement Act must be recovered.

Timetable:

Action	Date	FR Cite
NPRM	02/00/89	

Small Entity: Not Applicable

Agency Contact: Thomas W. Sadler, General Attorney, Bureau of Law, Railroad Retirement Board, 844 Rush Street, Chicago, IL 60611, 312 751-4513

RIN: 3220-AA44

3231. SICKNESS BENEFITS AND MATERNITY BENEFITS

Legal Authority: 45 USC 362; 45 USC 355

CFR Citation: 20 CFR 335

Legal Deadline: None.

Abstract: Part 335 will be amended to delete obsolete provisions and to simplify and clarify the language of that part.

Timetable:

Action	Date	FR Cite
NPRM	10/00/88	

Small Entity: Not Applicable

Agency Contact: Walter Witkovich, Regulations and Legal Specialist, Bureau of Law, Railroad Retirement Board, 844 Rush Street, Chicago, IL 60611, 312 751-4750

RIN: 3220-AA45

3232. RECOVERY OF DEBTS OWED TO THE UNITED STATES GOVERNMENT BY EMPLOYEES

Legal Authority: 5 USC 5514(b)(1)

CFR Citation: 20 CFR 361

Legal Deadline: None.

Abstract: The Railroad Retirement Board is proposing regulations to provide for the administration of its authority under the Debt Collection Act of 1982, 5 USC 5514, to recover debts owed to the United States by installment collections from the current pay account of Federal employees.

Timetable:

Action	Date	FR Cite
NPRM	01/05/88	53 FR 143
NPRM Comment Period End	05/04/88	53 FR 143
Final Action	07/00/88	

Small Entity: No

Government Levels Affected: Federal

Agency Contact: Thomas W. Sadler, General Attorney, Bureau of Law, Railroad Retirement Board, 844 Rush Street, Chicago, IL 60611, 312 751-4513

RIN: 3220-AA49

3233. EMPLOYER STATUS

Legal Authority: 45 USC 231f; 45 USC 362(l)

CFR Citation: 20 CFR 202

Legal Deadline: None.

Abstract: The Board's regulations with respect to Employer Status have not been updated in recent years and may, in some respects, be obsolete. Part 202 will be amended to conform it to current law, delete obsolete provisions, and to simplify and clarify the language of this part.

Timetable:

Action	Date	FR Cite
NPRM	00/00/00	

Small Entity: Not Applicable

Affected Sectors: 40 Railroad Transportation

Government Levels Affected: State, Federal

Agency Contact: Thomas W. Sadler, General Attorney, Bureau of Law, Railroad Retirement Board, 844 Rush Street, Chicago, IL 60611, 312 751-4513

RIN: 3220-AA51

3234. EMPLOYEE STATUS

Legal Authority: 45 USC 231f; 45 USC 362(l)

CFR Citation: 20 CFR 203

Legal Deadline: None.

Abstract: The Board's regulations with respect to Employee Status have not been updated in recent years and may, in some respects, be obsolete. Part 203 will be amended to conform it to current law, delete obsolete provisions, and to simplify and clarify the language of this part.

Timetable:

Action	Date	FR Cite
NPRM	02/00/89	

Small Entity: Not Applicable

Affected Sectors: 40 Railroad Transportation

Government Levels Affected: State, Federal

Agency Contact: Thomas W. Sadler, General Attorney, Bureau of Law, Railroad Retirement Board, 844 Rush Street, Chicago, IL 60611, 312 751-4513

RIN: 3220-AA52

3235. EMPLOYMENT RELATION

Legal Authority: 45 USC 231f

CFR Citation: 20 CFR 204

Legal Deadline: None.

Abstract: The Board's regulations with respect to Employment Relation have not been updated in recent years and may, in some respects, be obsolete. Part 204 will be amended to conform it to current law, delete obsolete provisions,

and to simplify and clarify the language of this part.

Timetable:

Action	Date	FR Cite
NPRM	02/00/89	

Small Entity: Not Applicable

Affected Sectors: 40 Railroad Transportation

Government Levels Affected: State, Federal

Agency Contact: Thomas W. Sadler, General Attorney, Bureau of Law, Railroad Retirement Board, 844 Rush Street, Chicago, IL 60611, 312 751-4513

RIN: 3220-AA53

3236. EMPLOYEE REPRESENTATIVE

Legal Authority: 45 USC 231f; 45 USC 362(l)

CFR Citation: 20 CFR 205

Legal Deadline: None.

Abstract: The Board's regulations with respect to Employee Representative have not been updated in recent years and may, in some respects, be obsolete. Part 205 will be amended to conform it to current law, delete obsolete provisions, and to simplify and clarify the language of this part.

Timetable:

Action	Date	FR Cite
NPRM	02/00/89	

Small Entity: Not Applicable

Affected Sectors: 40 Railroad Transportation

Government Levels Affected: State, Federal

Agency Contact: Thomas W. Sadler, General Attorney, Bureau of Law, Railroad Retirement Board, 844 Rush Street, Chicago, IL 60611, 312 751-4513

RIN: 3220-AA55

3237. ● DISCLOSURE OF INFORMATION

Legal Authority: 45 USC 231f(b)(5)

CFR Citation: 20 CFR 200; 20 CFR 262

Legal Deadline: None.

Abstract: The Railroad Retirement Board (Board) proposes to amend 20 CFR Part 200 to move sections of Part 262 into Part 200 to place these regulations more appropriately under General Administration.

Timetable:

Action	Date	FR Cite
NPRM	02/00/89	

Small Entity: Not Applicable

Agency Contact: Thomas W. Sadler, General Attorney, Bureau of Law, Railroad Retirement Board, 844 Rush Street, Chicago, IL 60611, 312 751-4513

RIN: 3220-AA56

3238. ● FAMILY RELATIONSHIPS

Legal Authority: 45 USC 231f(b)(5)

CFR Citation: 20 CFR 222

Legal Deadline: None.

Abstract: The Railroad Retirement Board (Board) proposes to add 20 CFR Part 222 to define any family relationship requirements needed to establish eligibility and entitlement for any monthly annuity or lump-sum payment under the Railroad Retirement Act of 1974.

Timetable:

Action	Date	FR Cite
NPRM	03/00/89	

Small Entity: Not Applicable

Agency Contact: Thomas W. Sadler, General Attorney, Bureau of Law, Railroad Retirement Board, 844 Rush Street, Chicago, IL 60611, 312 751-4513

RIN: 3220-AA57

3239. ● COMPUTING EMPLOYEE, SPOUSE, AND DIVORCED SPOUSE ANNUITIES

Legal Authority: 45 USC 231f(b)(5)

CFR Citation: 20 CFR 226

Legal Deadline: None.

Abstract: The Railroad Retirement Board's regulations on the computation of employee, spouse, and divorced spouse annuities must be updated to conform to the Railroad Retirement Act of 1974 and to amendments to the Act made by the Omnibus Budget Reconciliation Act of 1981 and the Railroad Solvency Act of 1983.

Timetable:

Action	Date	FR Cite
NPRM	06/00/89	

Small Entity: Not Applicable

Agency Contact: Karl T. Blank, General Attorney, Bureau of Law, Railroad Retirement Board, 844 Rush Street, Chicago, IL 60611, 312 751-4941

RIN: 3220-AA58

3240. ● SURVIVOR ANNUITY COMPUTATIONS

Legal Authority: 45 USC 231f(f)(5)

CFR Citation: 20 CFR 228

Legal Deadline: None.

Abstract: The Railroad Retirement Board (Board) proposes to add 20 CFR Part 228 to describe how survivor annuities are computed in accordance with the Railroad Retirement Act of 1974, and amendments to that Act made in 1981 and 1983.

Timetable:

Action	Date	FR Cite
NPRM	07/00/89	

Small Entity: Not Applicable

Agency Contact: Thomas W. Sadler, General Attorney, Bureau of Law, Railroad Retirement Board, 844 Rush Street, Chicago, IL 60611, 312 751-4513

RIN: 3220-AA59

3241. ● SOCIAL SECURITY OVERALL MINIMUM ANNUITY

Legal Authority: 45 USC 231f(b)(5)

CFR Citation: 20 CFR 229

Legal Deadline: None.

Abstract: The Railroad Retirement Board (Board) proposes to add 20 CFR Part 229 to describe when the social security overall minimum annuity computation applies and how it is computed for retirement annuities under the Railroad Retirement Act of 1974.

Timetable:

Action	Date	FR Cite
NPRM	08/00/89	

Small Entity: Not Applicable

Agency Contact: Thomas W. Sadler, General Attorney, Bureau of Law, Railroad Retirement Board, 844 Rush Street, Chicago, IL 60611, 312 751-4513

RIN: 3220-AA60

3242. ● DEDUCTIONS ON ACCOUNT OF WORK

Legal Authority: 45 USC 231f(b)(5)

CFR Citation: 20 CFR 230

VOL 53 ISS 79 PT 2 AP 25 1988 UMI

RRB — Proposed Rule Stage

Legal Deadline: None.

Abstract: The Railroad Retirement Board (Board) proposes to amend 20 CFR Part 230 to explain how annuity deductions on account of work are assessed in accordance with current law.

Timetable:

Action	Date	FR Cite
NPRM	07/00/89	

Small Entity: Not Applicable

Agency Contact: Thomas W. Sadler, General Attorney, Bureau of Law, Railroad Retirement Board, 844 Rush Street, Chicago, IL 60611, 312 751-4513

RIN: 3220-AA61

3243. ● PAYING SOCIAL SECURITY BENEFITS

Legal Authority: 45 USC 231f(b)(5)

CFR Citation: 20 CFR 235

Legal Deadline: None.

Abstract: The Railroad Retirement Board (Board) proposes to add 20 CFR Part 235 to describe when and to whom the Board pays social security benefits as required by the Railroad Retirement Act of 1974.

Timetable:

Action	Date	FR Cite
NPRM	02/00/89	

Small Entity: Not Applicable

Agency Contact: Thomas W. Sadler, General Attorney, Bureau of Law, Railroad Retirement Board, 844 Rush Street, Chicago, IL 60611, 312 751-4513

RIN: 3220-AA62

3244. ● INCOMPETENCE

Legal Authority: 45 USC 231f(b)(5)

CFR Citation: 20 CFR 266

Legal Deadline: None.

Abstract: The Railroad Retirement Board (Board) proposes to amend 20 CFR Part 266 to incorporate certain internal procedures not currently contained in this Part.

Timetable:

Action	Date	FR Cite
NPRM	05/00/89	

Small Entity: Not Applicable

Agency Contact: Thomas W. Sadler, General Attorney, Bureau of Law, Railroad Retirement Board, 844 Rush Street, Chicago, IL 60611, 312 751-4513

RIN: 3220-AA63

RAILROAD RETIREMENT BOARD (RRB) — Final Rule Stage

3245. PRIMARY INSURANCE AMOUNT DETERMINATIONS

Legal Authority: 45 USC 231f(b)(5)

CFR Citation: 20 CFR 225

Legal Deadline: None.

Abstract: The computation of benefits under the Railroad Retirement Act of 1974 is quite complex and is not easily understood by beneficiaries. This proposed regulation would explain primary insurance amount determinations in a manner that will enable claimants and beneficiaries to more easily understand this phase of benefit computations.

Timetable:

Action	Date	FR Cite
NPRM	09/07/83	48 FR 40390
Final Action	05/00/88	

Small Entity: Not Applicable

Affected Sectors: None

Government Levels Affected: Federal

Agency Contact: Karl T. Blank, General Attorney, Bureau of Law, Railroad Retirement Board, 844 Rush Street, Chicago, IL 60611, 312 751-4941

RIN: 3220-AA02

3246. ENFORCEMENT OF NONDISCRIMINATION ON THE BASIS OF HANDICAP IN PROGRAMS OR ACTIVITIES CONDUCTED BY THE RAILROAD RETIREMENT BOARD

Legal Authority: 29 USC 791; 29 USC 792; 29 USC 794 Rehabilitation Act of 1973; 42 USC 4151 to 4157; EO 12067; EO 12250; PL 95-602, Sec 119

CFR Citation: 20 CFR 365; 28 CFR 41; 28 CFR 41.3(f); 28 CFR 41.5(b)(2); 28 CFR 41.31; 28 CFR 41.32; 28 CFR 41.51; 28 CFR 41.56 to 41.58; 29 CFR 1613; 41 CFR 101-19.600 to 101-19.607

Legal Deadline: None.

Abstract: This regulation provides for the enforcement of Section 504 of the Rehabilitation Act of 1973, as amended (29 USC 794), which prohibits discrimination on the basis of handicap, as it applies to programs or activities conducted by the Railroad Retirement Board.

Timetable:

Action	Date	FR Cite
NPRM	12/15/87	52 FR 47601
NPRM Comment Period End	02/16/88	52 FR 47601
Final Action	04/00/88	

Small Entity: Not Applicable

Additional Information: The CFR citation was changed from 364 to 365. Part 364 was used to develop a regulation covering Use of Penalty Mail to Assist in the Location and Recovery of Missing Children. 52 FR 527, 01/07/87.

Affected Sectors: None

Government Levels Affected: Federal

Agency Contact: Michael C. Litt, General Attorney, Bureau of Law, Railroad Retirement Board, 844 Rush Street, Chicago, IL 60611, 312 751-4929

RIN: 3220-AA22

3247. RAILROAD EMPLOYERS REPORTS AND RESPONSIBILITIES

Legal Authority: 45 USC 231f(b)(5) to 231f(b)(6); 45 USC 231h; 45 USC 231l

CFR Citation: 20 CFR 209

Legal Deadline: None.

Abstract: The Railroad Retirement Board proposes to amend 20 CFR 209 to comply with changes required by the Railroad Retirement Solvency Act of 1983.

Timetable:

Action	Date	FR Cite
NPRM	01/23/87	52 FR 2553
NPRM Comment Period End	02/23/87	52 FR 2553
Final Action	04/00/88	

RRB **Final Rule Stage**

Small Entity: Not Applicable

Affected Sectors: None

Agency Contact: Ann T. Alden, Chief of Coverage and Procedures, Railroad Retirement Board, Compensation and Certification, 844 Rush Street, Chicago, IL 60611, 312 751-3369

RIN: 3220-AA25

3248. CREDITABLE RAILROAD SERVICE

Legal Authority: 45 USC 231(d) to 231(f); 45 USC 231(i); 45 USC 231f(b)(5)

CFR Citation: 20 CFR 210

Legal Deadline: None.

Abstract: The Railroad Retirement Board proposes to amend 20 CFR 210 to comply with changes required by the Railroad Retirement Solvency Act of 1983.

Timetable:

Action	Date	FR Cite
NPRM	01/23/87	52 FR 2553
NPRM Comment Period End	02/23/87	52 FR 2553
Final Action	04/00/88	

Small Entity: Not Applicable

Affected Sectors: None

Government Levels Affected: Federal

Agency Contact: Ann T. Alden, Chief of Coverage and Procedures, Railroad Retirement Board, Compensation and Certification, 844 Rush Street, Chicago, IL 60611, 312 751-3369

RIN: 3220-AA26

3249. CREDITABLE RAILROAD COMPENSATION

Legal Authority: 45 USC 231f

CFR Citation: 20 CFR 211

Legal Deadline: None.

Abstract: The Railroad Retirement Board proposes to amend 20 CFR 211 to comply with the changes required by the Railroad Retirement Solvency Act of 1983.

Timetable:

Action	Date	FR Cite
NPRM	01/23/87	52 FR 2553
NPRM Comment Period End	02/23/87	52 FR 2553
Final Action	04/00/88	

Small Entity: Not Applicable

Affected Sectors: None

Government Levels Affected: Federal

Agency Contact: Ann T. Alden, Chief of Coverage and Procedures, Railroad Retirement Board, Compensation and Certification, 844 Rush Street, Chicago, IL 60611, 312 751-3369

RIN: 3220-AA27

RAILROAD RETIREMENT BOARD (RRB) — Completed Actions

3250. INITIAL DETERMINATIONS UNDER THE RAILROAD UNEMPLOYMENT INSURANCE ACT AND REVIEWS OF AND APPEALS FROM SUCH DETERMINATIONS

CFR Citation: 20 CFR 320; 20 CFR 340

Completed:

Reason	Date	FR Cite
Final Action	01/28/88	53 FR 2485
Final Action Effective	03/01/88	53 FR 2485

Small Entity: Not Applicable

Agency Contact: Steven A. Bartholow 312 751-4935

RIN: 3220-AA11

3251. DEBT COLLECTION

CFR Citation: 4 CFR 102.13; 20 CFR 200

Completed:

Reason	Date	FR Cite
Final Action	10/29/87	52 FR 41558
Final Action Effective	10/29/87	52 FR 41558

Small Entity: Not Applicable

Agency Contact: Stanley Jay Shuman 312 751-4568

RIN: 3220-AA47

[FR Doc. 88-5101 Filed 04-22-88; 8:45 am]

BILLING CODE 7905-01-T

VOL
53

ISS
79

PT
2

AP
25

1988

UMI

federal register

Monday
April 25, 1988

Part XXXVIII

Selective Service System

Semiannual Regulatory Agenda

SELECTIVE SERVICE SYSTEM (SSS)

SELECTIVE SERVICE SYSTEM

32 CFR Ch. XVI

Regulatory Agenda

AGENCY: Selective Service System.

ACTION: Regulatory agenda.

SUMMARY: The purpose of this agenda is to report the proposed rulemaking activities of the Selective Service System that might affect the processing of registrants under the Military Selective Service Act (50 U.S.C. App. 451 *et seq.*). This information will allow the public to participate in the System's decision-making at an early stage.

FOR FURTHER INFORMATION CONTACT: Henry N. Williams, General Counsel, Selective Service System, Washington, DC 20435, telephone (202) 724-1167.

SUPPLEMENTARY INFORMATION: The agenda is published in accord with the requirements of E.O. 12291. Selective Service Regulations appear in 32 CFR Chapter XVI.

Dated: February 10, 1988.

Samuel K. Lessey Jr.,

Director of Selective Service.

SELECTIVE SERVICE SYSTEM (SSS) — Prerule Stage

3252. SELECTIVE SERVICE REGULATIONS

Legal Authority: 50 USC App. 451 et seq Military Selective Service Act

CFR Citation: 32 CFR Chapter XVI

Legal Deadline: None.

Abstract: Various sections of 32 CFR Chapter XVI will be revised to increase clarity of expression or change procedures for registrant processing.

Timetable:

Action	Date	FR Cite
Next Action Undetermined		

Small Entity: No

Government Levels Affected: Federal

Agency Contact: Henry N. Williams, General Counsel, Selective Service System, 1023 31st Street, NW, Washington, DC 20435, 202 724-1167

RIN: 3240-AA01

[FR Doc. 88-5102 Filed 04-22-88; 8:45 am]

BILLING CODE 6015-01-T

federal register

Monday
April 25, 1988

Part XXXIX

Small Business Administration

Semiannual Regulatory Agenda

BEST COPY AVAILABLE

SMALL BUSINESS ADMINISTRATION (SBA)

SMALL BUSINESS ADMINISTRATION

13 CFR Ch. I

Improving Government Regulations; Semiannual Agenda

AGENCY: Small Business Administration.

ACTION: Publication of the semiannual agenda of regulations under review or development by the Small Business Administration.

SUMMARY: This is SBA's 18th semiannual agenda of regulations. Although not a regulatory Agency, SBA has attempted to draft agendas that met both the criteria and the spirit of the regulatory review process. This agenda is published pursuant to Executive Order 12291 and the Regulatory Flexibility Act, 5 U.S.C. 601 *et seq.*, Pub. L. 96-354, effective January 1, 1981.

FOR FURTHER INFORMATION CONTACT: For further information on agenda items, the public is encouraged to contact the individual Agency official listed for the particular item.

For information concerning SBA overall Regulatory Review and Development Program or general semiannual agenda questions, contact Martin D. Teckler, Deputy General Counsel, Small Business Administration, 1441 L Street, NW., Washington, DC 20416, 202/653-6644.

SUPPLEMENTARY INFORMATION: The SBA agenda will contain many regulations which are limited in public impact, but they are included to increase public knowledge of all SBA regulatory activities and allow for increased public participation in the review and development process.

Public comments on SBA's previous agendas have been general, and all were positive. None were directed at specific contents, nor were any changes suggested or recommended.

The agenda format has four parts. Part I, Pre-Rulemakings, includes investigations and reviews to be conducted prior to deciding whether or not to propose a rule or rule change. Part II, Proposed Rules, includes rulemaking which will be proposed during the six-month period covered by the agenda. Part III, Final Rules, includes proposed rules which will be finalized during the period covered by the agenda. Part IV, Completed Actions, includes regulations completed or withdrawn, and reviews completed since the preceding agenda.

Publication of this agenda does not impose any binding obligation on SBA with regard to any specific item in the agenda. Additional regulatory action not listed on the agenda is not precluded.

Dated: March 3, 1988.

James Abdnor,

Administrator.

Prerule Stage

Sequence Number	Title	Regulation Identifier Number
3253	Definition of Small Business for Dredging	3245-AB23
3254	Size Standards: Timber Industry	3245-AB34
3255	Small Business Size Standards: Hazards Waste Treatment	3245-AB53
3256	Small Business Size Standards: Naval Architecture and Marine Engineering	3245-AB54
3257	Small Business Size Standards: Ship Hull Cleaning	3245-AB55
3258	Small Business Size Standards: Mobile and Modular Building	3245-AB56
3259	Small Business Size Standards: Refuse Systems and Surveying and Mapping	3245-AB61

Proposed Rule Stage

Sequence Number	Title	Regulation Identifier Number
3260	Certificate of Competency	3245-AA74
3261	Size Standards, Export Trading Companies	3245-AA83
3262	Small Business Investment Company Regulations: Compliance Audits	3245-AB07
3263	Minority Small Business	3245-AB26
3264	Small Business Investment Companies	3245-AB29
3265	Small Business Lending Companies	3245-AB30
3266	Minority Small Business and Capital Ownership Development Assistance	3245-AB31
3267	Small Business Institutes - Counseling Fees	3245-AB32
3268	Loans to State and Local Development Companies	3245-AB35
3269	Nondiscrimination in Federally-Assisted Programs	3245-AB36
3270	Nondiscrimination in Financial Assistance Programs	3245-AB37
3271	User Fees for SBA Programs	3245-AB44
3272	Procurement: Subcontracting Limitations	3245-AB62
3273	Revolving Line of Credit	3245-AB65

SBA

Final Rule Stage

Sequence Number	Title	Regulation Identifier Number
3274	Surety Bond Guarantee Regulations	3245-AA20
3275	Civil Rights Compliance: Discrimination on the Basis of Handicap	3245-AA21
3276	Size Standards; Travel Agencies	3245-AA58
3277	Regulations Applying Small Business Size Standards	3245-AA84
3278	Size Standard: Real Estate Agents	3245-AA88
3279	Loans to State and Local Development Companies	3245-AB10
3280	Small Business Investment Companies	3245-AB12
3281	Small Business Development Centers	3245-AB17
3282	Small Business Size Standards; Modification of Size Standards to Make Existing Size Standards Compatible with New Standard Industrial Classification System (SIC)	3245-AB19
3283	Program Fraud Civil Remedies Regulations	3245-AB27
3284	Small Business Size Standards for Construction and Surveying Services Industries and Subcontracting Limitations	3245-AB38
3285	Business Loans; Small Business Lending Companies	3245-AB40
3286	Uniform Administrative Requirements for Grants and Cooperative Agreements to State and Local Governments; Proposed Revision of Circular A-102	3245-AB41
3287	Business Loan Policy	3245-AB48
3288	Small Business Size Standards: Residual Size Standards	3245-AB57
3289	Small Business Size Standards: Nonmanufacturers	3245-AB58
3290	Small Business Size Standards: Aircraft, Guided Missiles, and Space Vehicle Research and Development	3245-AB59
3291	Small Disadvantaged Business Status Appeals Procedures	3245-AB63

Completed Actions

Sequence Number	Title	Regulation Identifier Number
3292	Size Standards: Construction	3245-AA95
3293	Small Business Size Standards: Commercial Fishing	3245-AB00
3294	Size Standards; Certain Retail and Service Industries	3245-AB03
3295	Size Rule for Small Business Innovation Research Program Time of Size Determination	3245-AB15
3296	Procurement Assistance: User Fees for PASS	3245-AB20
3297	Freedom of Information Act Fee and Fee Waivers Regulations	3245-AB25
3298	Loans to State and Local Development Companies	3245-AB33
3299	Size Standards: Manufacturing	3245-AB43
3300	Standards of Conduct	3245-AB46
3301	Delegation of Authority to Conduct Program Activities in Field Offices	3245-AB47
3302	Administrative Claims Under Federal Tort Claims Act	3245-AB49
3303	Debt Collection	3245-AB50
3304	Disaster Home Loans; Debt Collection	3245-AB51
3305	Small Business Investment Companies	3245-AB52
3306	Small Business Size Standards: Regular Dealers	3245-AB60
3307	Debt Collection; Income Tax Refund Offset	3245-AB64
3308	Small Business Investment Companies	3245-AB66

SMALL BUSINESS ADMINISTRATION (SBA) — Prerule Stage

3253. DEFINITION OF SMALL BUSINESS FOR DREDGING

Significance: Regulatory Program

Legal Authority: 15 USC 632(a); 15 USC 634(b)(6)

CFR Citation: 13 CFR 121

Legal Deadline: Judicial, November 3, 1986. This change is in response to an order from the District Court for the District of Columbia which set aside the current dredging size standard ($13.5 million) but left in place the previous size standard ($9.5 million).

Abstract: To clarify for the public and others who use SBA size standards that as of November 3, 1986, the applicable size standard for the dredging industry will be $9.5 million average annual receipts.

Timetable:

Action	Date	FR Cite
Interim Final Rule	12/08/86	51 FR 44036
Begin Review	10/15/87	

SBA — Prerule Stage

Action	Date	FR Cite
End Review	04/00/88	
Final Action	05/00/88	

Small Entity: Yes

Agency Contact: Gary Jackson, Director, Size Standards Staff, Small Business Administration, 1441 L Street, N.W., Room 601, Washington, D.C. 20416, 202 653-6373

RIN: 3245-AB23

3254. SIZE STANDARDS: TIMBER INDUSTRY

Legal Authority: 15 USC 634(b)(6)

CFR Citation: 13 CFR 121

Legal Deadline: None.

Abstract: Study related to natural resources sales program to determine whether rule change is needed.

Timetable:

Action	Date	FR Cite
Begin Review	10/15/87	
End Review	04/00/88	

Small Entity: Yes

Agency Contact: Gary Jackson, Director, Size Standards Staff, Small Business Administration, 1441 L Street, N.W., Room 601, Washington, D.C. 20416, 202 653-6373

RIN: 3245-AB34

3255. ● SMALL BUSINESS SIZE STANDARDS: HAZARDS WASTE TREATMENT

Legal Authority: 15 USC 634(b)(6)

CFR Citation: 13 CFR 121

Legal Deadline: None.

Abstract: Study of hazardous waste treatment industry.

Timetable:

Action	Date	FR Cite
Begin Review	03/01/88	
End Review	07/00/88	

Small Entity: Yes

Agency Contact: Gary Jackson, Director, Size Standards Staff, Small Business Administration, 1441 L Street, N.W., Room 601, Washington, DC 20416, 202 653-6373

RIN: 3245-AB53

3256. ● SMALL BUSINESS SIZE STANDARDS: NAVAL ARCHITECTURE AND MARINE ENGINEERING

Legal Authority: 15 USC 634(b)(6)

CFR Citation: 13 CFR 121

Legal Deadline: None.

Abstract: Study of Naval architecture and Marine engineering for size standards purposes.

Timetable:

Action	Date	FR Cite
Begin Review	01/15/88	
End Review	06/00/88	

Small Entity: Yes

Agency Contact: Gary Jackson, Director, Size Standards Staff, Small Business Administration, 1441 L Street, N.W., Room 601, Washington, DC 20416, 202 653-6373

RIN: 3245-AB54

3257. ● SMALL BUSINESS SIZE STANDARDS: SHIP HULL CLEANING

Legal Authority: 15 USC 634(b)(6)

CFR Citation: 13 CFR 121

Legal Deadline: None.

Abstract: Review Ship Hull Cleaning Industry for Size Standards purposes.

Timetable:

Action	Date	FR Cite
Begin Review	01/15/88	
End Review	07/00/88	

Small Entity: Yes

Agency Contact: Gary Jackson, Director, Size Standards Staff, Small Business Administration, 1441 L Street, N.W., Room 601, Washington, DC 20416, 202 653-6373

RIN: 3245-AB55

3258. ● SMALL BUSINESS SIZE STANDARDS: MOBILE AND MODULAR BUILDING

Legal Authority: 15 USC 634(b)(6)

CFR Citation: 13 CFR 121

Legal Deadline: None.

Abstract: Review of mobile and modular building industry for size standards purposes.

Timetable:

Action	Date	FR Cite
Begin Review	01/15/88	
End Review	06/00/88	

Small Entity: Yes

Agency Contact: Gary Jackson, Director, Size Standards Staff, Small Business Administration, 1441 L Street, N.W., Room 601, Washington, DC 20416, 202 653-6373

RIN: 3245-AB56

3259. ● SMALL BUSINESS SIZE STANDARDS: REFUSE SYSTEMS AND SURVEYING AND MAPPING

Legal Authority: 15 USC 634(b)(6)

CFR Citation: 13 CFR 121

Legal Deadline: None.

Abstract: Review of refuse systems and surveying and mapping industries for size standard purposes.

Timetable:

Action	Date	FR Cite
Begin Review	04/00/88	
End Review	10/00/88	

Small Entity: Yes

Agency Contact: Gary Jackson, Director, Size Standards Staff, Small Business Administration, 1441 L Street, N.W., Room 601, Washington, DC 20416, 202 653-6373

RIN: 3245-AB61

SMALL BUSINESS ADMINISTRATION (SBA) — Proposed Rule Stage

3260. CERTIFICATE OF COMPETENCY

Legal Authority: 15 USC 634(b)(6)

CFR Citation: 13 CFR 125.5

Legal Deadline: None.

Abstract: Overall revision to Certificate of Competency regulations.

Timetable:

Action	Date	FR Cite
NPRM	05/00/88	

Small Entity: Yes

Agency Contact: Robert Moffitt, Deputy Associate Administrator for, Procurement Assistance, Small Business Administration, 1441 L Street, NW, Room 626, Washington, DC 20416, 202 653-6582

RIN: 3245-AA74

3261. SIZE STANDARDS, EXPORT TRADING COMPANIES

Significance: Regulatory Program

Legal Authority: 15 USC 634(b)(6); 15 USC 632

CFR Citation: 13 CFR 121

Legal Deadline: None.

Abstract: Propose size standard for Export Trading Companies.

Timetable:

Action	Date	FR Cite
NPRM	04/00/88	

Small Entity: Yes

Agency Contact: Gary Jackson, Director, Size Standards Staff, Small Business Administration, 1441 L Street, NW, Washington, DC 20416, 202 653-6373

RIN: 3245-AA83

3262. SMALL BUSINESS INVESTMENT COMPANY REGULATIONS: COMPLIANCE AUDITS

Legal Authority: 15 USC 687(b)

CFR Citation: 13 CFR 107

Legal Deadline: None.

Abstract: Establishment of new system of periodic compliance audits of small business investment companies by independent certified public accountants.

Timetable:

Action	Date	FR Cite
NPRM	08/00/88	
NPRM Comment Period End	09/00/88	

Small Entity: No

Agency Contact: Daniel Peyser, Counsel to the Inspector General, Small Business Administration, 1441 L Street, NW, Room 1018, Washington, DC 20416, 202 653-6370

RIN: 3245-AB07

3263. MINORITY SMALL BUSINESS

Legal Authority: 15 USC 634(b)(6)

CFR Citation: 13 CFR 124

Legal Deadline: None.

Abstract: Regulations governing the participation of Indian tribes in the Section 8(a) program.

Timetable:

Action	Date	FR Cite
NPRM	04/00/88	
NPRM Comment Period End	06/00/88	

Small Entity: Yes

Agency Contact: Wilfredo Gonzalez, Associate Administrator/Minority Small, Business/Capital Ownership Development, Small Business Administration, 1441 L Street, N.W., Room 602, Washington, D.C. 20416, 202 653-6407

RIN: 3245-AB26

3264. SMALL BUSINESS INVESTMENT COMPANIES

Legal Authority: 15 USC 634(b)(6)

CFR Citation: 13 CFR 107

Legal Deadline: None.

Abstract: Major revision to Part 107 of title 13 governing Small Business Investment Companies. The regulation will cover changes to ownership or control of a licensee, definition of private capital, deposits and investments of idle funds, other permissible financing, leverage for Section 301(d) SBICs, definition of small business concerns, control of small concern, operational requirements, cost of money, funds to licensee, conflicts of interest redemption provisions, commitments, and the purchase, sale or guarantee of securities evidencing leverage.

Timetable:

Action	Date	FR Cite
NPRM	04/00/89	

Small Entity: No

Agency Contact: John Werner, Director, Office of Investment, Small Business Administration, 1441 L Street,N.W., Room 806, Washington, DC 20416, 202 653-6584

RIN: 3245-AB29

3265. SMALL BUSINESS LENDING COMPANIES

Legal Authority: 15 USC 634(b)(6)

CFR Citation: 13 CFR 120.302

Legal Deadline: None.

Abstract: Cancellation of participation authority of Small Business Lending Companies that have not been active for five years or more.

Timetable:

Action	Date	FR Cite
NPRM	06/00/88	

Small Entity: Yes

Agency Contact: Danny J. Gibb, Director, Office of Financial Institutions, Small Business Administration, 1441 L Street, N.W., Room 804, Washington, DC 20416, 202 653-2585

RIN: 3245-AB30

3266. MINORITY SMALL BUSINESS AND CAPITAL OWNERSHIP DEVELOPMENT ASSISTANCE

Legal Authority: 15 USC 634(b)(6)

CFR Citation: 13 CFR 124

Legal Deadline: None.

Abstract: Technical corrections to the regulation governing minority small business and capital ownership development. Substantive changes to provisions on program eligibility.

Timetable:

Action	Date	FR Cite
NPRM	05/00/88	

Small Entity: Yes

Agency Contact: Edward Neal, Deputy Associate Administrator/MSB-COD, Small Business Administration, 1441 L Street, N.W., Room 602, Washington, D.C. 20416, 202 653-6407

RIN: 3245-AB31

3267. SMALL BUSINESS INSTITUTES - COUNSELING FEES

Legal Authority: 15 USC 634(b)(6)

CFR Citation: 13 CFR 129

Legal Deadline: None.

Abstract: User fees for training conducted by SBA cosponsors under Section 8(b)(1) of the Small Business Act for training (management and/or technical), and for training and

counseling provided by Small Business Institutes.

Timetable:

Action	Date	FR Cite
Next Action Undetermined		

Small Entity: Yes

Additional Information: The Small Business Administration is prohibited under the FY 88 Continuing Resolution on Appropriations, PL 100-202, from using appropriated funds to establish or increase user fees. Therefore, no action will be taken on this rule during this fiscal year. Actions after this fiscal year will depend upon FY 89 Appropriations legislation.

Agency Contact: John Cox, Associate Administrator for Business, Development, Small Business Administration, 1441 L Street, N.W., Room 317, Washington, D.C. 20416, 202 653-6881

RIN: 3245-AB32

3268. LOANS TO STATE AND LOCAL DEVELOPMENT COMPANIES

Legal Authority: 15 USC 634(b)(6)

CFR Citation: 13 CFR 108

Legal Deadline: None.

Abstract: Complete revision of the Section 502 local development company rules.

Timetable:

Action	Date	FR Cite
NPRM	10/00/88	

Small Entity: Yes

Agency Contact: LeAnn Oliver, Financial Analyst, Small Business Administration, 1441 L Street, N.W., Room 720, Washington, D.C. 20416, 202 653-6416

RIN: 3245-AB35

3269. NONDISCRIMINATION IN FEDERALLY-ASSISTED PROGRAMS

Legal Authority: 15 USC 634(b)(6)

CFR Citation: 13 CFR 112

Legal Deadline: None.

Abstract: Technical amendment to SBA's current regulation to clarify that if recipients of assistance under any of SBA's programs are found to have discriminated, SBA is authorized to take certain actions such as withholding further assistance.

Timetable:

Action	Date	FR Cite
NPRM	03/00/89	

Small Entity: Yes

Agency Contact: George Robinson, Director, Equal Employment Opportunity & Compliance, Small Business Administration, 1441 L Street, N.W., Room 501, Washington, D.C. 20416, 202 653-6050

RIN: 3245-AB36

3270. NONDISCRIMINATION IN FINANCIAL ASSISTANCE PROGRAMS

Legal Authority: 15 USC 634(b)(6)

CFR Citation: 13 CFR 113

Legal Deadline: None.

Abstract: Technical amendment to SBA's current regulation to clarify that if a beneficiary of one of SBA's financial assistance programs is found to have discriminated, SBA is authorized to take certain actions such as withholding further assistance or accelerating a loan.

Timetable:

Action	Date	FR Cite
NPRM	03/00/89	

Small Entity: Yes

Agency Contact: George Robinson, Director, Equal Employment Opportunity & Compliance, Small Business Administration, 1441 L Street, N.W., Room 501, Washington, D.C. 20416, 202 653-6050

RIN: 3245-AB37

3271. USER FEES FOR SBA PROGRAMS

Legal Authority: 15 USC 687(c); 15 USC 687d; 15 USC 687g; 15 USC 694a; 15 USC 694b; 5 USC App 1; 15 USC 632(a); 15 USC 634(b)(6); 15 USC 637(a); 15 USC 631; 15 USC 637(b); 15 USC 636(i); 15 USC 636(j); PL 93-113

CFR Citation: 13 CFR 101; 13 CFR 107; 13 CFR 115; 13 CFR 121; 13 CFR 124; 13 CFR 125; 13 CFR 129

Legal Deadline: None.

Abstract: Establishment or modification of user fees for the following: use of SBA's Office of Advocacy database, guaranty of debentures issued by Small Business Investment Companies, guaranty of surety bonds, appeals of size determinations and and standard industrial classification code designations, application to the Minority Small Business (Section 8(a)) Program, training sponsored by the Service Corps of Retired Executives (SCORE), SBA's Office of Women's Business Ownership, and SBA's Office of Veterans Affairs, counseling by Small Business Institutes and application for a Certificate of Competency.

Timetable:

Action	Date	FR Cite
Next Action Undetermined		

Small Entity: Yes

Additional Information: The Small Business Administration is prohibited under the FY 88 Continuing Resolution on Appropriations, PL 100-202, from using appropriated funds to establish or increase user fees. Therefore, no action will be taken on this rule during this fiscal year. Actions after this fiscal year will depend upon FY 89 Appropriations legislation.

Agency Contact: Ramona Powell, Attorney Adviser, Small Business Administration, 1441 L Street, N.W., Room 722, Washington, DC 20416, 202 653-6437

RIN: 3245-AB44

3272. ● PROCUREMENT: SUBCONTRACTING LIMITATIONS

Legal Authority: PL 99-591; PL 99-661; 15 USC 634(b)(6)

CFR Citation: 13 CFR 125

Legal Deadline: None.

Abstract: Guidelines for application of subcontracting limitations imposed by Public Laws 99-591 and 99-661.

Timetable:

Action	Date	FR Cite
NPRM	08/00/88	

Small Entity: Yes

Agency Contact: Monika E. Harrison, Associate Administrator for Procurement, Assistance, Small Business Administration, 1441 L Street, N.W., Room 600, Washington, DC 20416, 202 653-6635

RIN: 3245-AB62

SBA **Proposed Rule Stage**

3273. ● REVOLVING LINE OF CREDIT

Significance: Regulatory Program

Legal Authority: 15 USC 634(b)(6)

CFR Citation: 13 CFR 120

Legal Deadline: None.

Abstract: Rule would establish a pilot program for the creation of an SBA-guaranteed revolving line of credit.

Timetable:

Action	Date	FR Cite
NPRM	07/00/88	

Small Entity: No

Agency Contact: Charles R. Hertzberg, Deputy Associate Administrator, Financial Assistance Division, Small Business Administration, 1441 L Street, N.W., Room 804, Washington, DC 20416, 202 653-6574

RIN: 3245-AB65

SMALL BUSINESS ADMINISTRATION (SBA) — Final Rule Stage

3274. SURETY BOND GUARANTEE REGULATIONS

Legal Authority: 15 USC 634(b)(6); 15 USC 694b(d)

CFR Citation: 13 CFR 115

Legal Deadline: None.

Abstract: Revision of the existing regulations for SBA's Surety Bond Guarantee Program. These changes will allow SBA to vary the percentage of its guarantee depending upon SBA's experience with the surety company requesting the guarantee. It also makes the fee which SBA charges for its guarantee negotiable.

Timetable:

Action	Date	FR Cite
ANPRM	08/19/83	48 FR 37658
ANPRM Comment Period End	10/19/83	
NPRM	08/21/85	50 FR 33766
NPRM Comment Period End	10/21/85	
Final Action Effective	05/00/88	

Small Entity: Yes

Agency Contact: Howard F. Huegel, Director, Office of Special Guarantees, Small Business Administration, 4040 N. Fairfax Drive, Arlington, VA 22203, 703 235-2900

RIN: 3245-AA20

3275. CIVIL RIGHTS COMPLIANCE: DISCRIMINATION ON THE BASIS OF HANDICAP

Legal Authority: 42 USC 2000d-1

CFR Citation: 13 CFR 136

Legal Deadline: None.

Abstract: Prohibition of discrimination in SBA programs on the basis of handicap.

Timetable:

Action	Date	FR Cite
NPRM	07/02/84	49 FR 27164
NPRM Comment Period End	10/30/84	
Final Action	04/00/88	

Small Entity: No

Agency Contact: George H. Robinson, Director, Small Business Administration, Office of EEO&C, 1441 L Street, NW, Washington, DC 20416, 202 653-6050

RIN: 3245-AA21

3276. SIZE STANDARDS; TRAVEL AGENCIES

Significance: Regulatory Program

Legal Authority: 15 USC 632; 15 USC 634(b)(6)

CFR Citation: 13 CFR 121

Legal Deadline: None.

Abstract: Review of Size Standards necessitated by GSA awards of travel contracts resulted in decision to modify proposed standard.

Timetable:

Action	Date	FR Cite
NPRM	07/30/86	51 FR 27192
NPRM Comment Period End	09/29/86	
Final Action Effective	04/00/88	

Small Entity: Yes

Agency Contact: Gary Jackson, Director, Size Standards Staff, Small Business Administration, 1441 L Street, NW, Room 601, Washington, DC 20416, 202 653-6373

RIN: 3245-AA58

3277. REGULATIONS APPLYING SMALL BUSINESS SIZE STANDARDS

Significance: Regulatory Program

Legal Authority: 15 USC 632(a)

CFR Citation: 13 CFR 121

Legal Deadline: None.

Abstract: Revision of substantive rules governing compliance with small business size standards.

Timetable:

Action	Date	FR Cite
NPRM	06/31/87	52 FR 32870
NPRM Comment Period End	10/30/87	
Final Action	06/00/88	

Small Entity: Yes

Agency Contact: David R. Kohler, Associate General Counsel, Small Business Administration, 1441 L Street, NW, Room 706, Washington, DC 20416, 202 653-6660

RIN: 3245-AA84

3278. SIZE STANDARD: REAL ESTATE AGENTS

Significance: Regulatory Program

Legal Authority: 15 USC 634(b)(6)

CFR Citation: 13 CFR 121

Legal Deadline: None.

Abstract: Establishing a size standard for the real estate agents industry for the first time.

Timetable:

Action	Date	FR Cite
Interim Final Rule	07/03/85	50 FR 27418
Final Action	06/00/88	

Small Entity: Yes

Agency Contact: Gary Jackson, Director, Size Standards Staff, Small Business Administration, 1441 L Street,

NW, Room 601, Washington, DC 20416, 202 653-6373

RIN: 3245-AA88

3279. LOANS TO STATE AND LOCAL DEVELOPMENT COMPANIES

Significance: Agency Priority

Legal Authority: PL 99-272, Sec 18008

CFR Citation: 13 CFR 108

Legal Deadline: None.

Abstract: Rules for conducting a two year pilot program through which debentures guaranteed under section 503 of the Small Business Investment Act and interests in pools of debentures issued under section 504 of that Act are sold to investors through public sale or private placement.

Timetable:

Action	Date	FR Cite
Public comment period ends	08/05/86	
Interim Final Rule	07/23/87	52 FR 27672
Interim Final Rule	07/23/87	52 FR 27672
NPRM Comment Period End	09/21/87	
Final Action	04/00/88	

Small Entity: Yes

Agency Contact: LeAnn Oliver, Financial Analyst, Small Business Administration, 1441 L Street, NW, Room 720, Washington, DC 20416, 202 653-6416

RIN: 3245-AB10

3290. SMALL BUSINESS INVESTMENT COMPANIES

Significance: Agency Priority

Legal Authority: 15 USC 320

CFR Citation: 13 CFR 107

Legal Deadline: Statutory, June 7, 1986.

Abstract: Establishment of mechanism for selling to the public certificates of interest backed by pools of SBIC guaranteed debentures and of a system of registration of such sales.

Timetable:

Action	Date	FR Cite
Interim Final Rule	06/12/86	51 FR 21484
Final Action	10/00/88	

Small Entity: Yes

Agency Contact: Robert G. Lineberry, Deputy Associate Administrator/Investment, Small Business Administration, 1441 L Street, NW, Room 808, Washington, DC 20416, 202 653-6848

RIN: 3245-AB12

3281. SMALL BUSINESS DEVELOPMENT CENTERS

Significance: Agency Priority

Legal Authority: PL 96-302; PL 98-395

CFR Citation: 13 CFR 129

Legal Deadline: None.

Abstract: Comprehensive regulations governing the Small Business Development Center Program.

Timetable:

Action	Date	FR Cite
NPRM	10/23/86	51 FR 37580
Comment period extended to 1/21/87	11/24/86	51 FR 42255
NPRM Comment Period End	12/22/86	

Next Action Undetermined

Small Entity: Yes

Additional Information: The Fiscal Year (FY) 1988 Continuing Resolution on Appropriations prohibits the Small Business Administration from using appropriated funds to adopt or implement any rules or regulations for the Small Business Development Center program. Therefore, no action will be taken on this rule during this fiscal year. Actions after this fiscal year will depend upon FY 89 Appropriations legislation.

Agency Contact: Janice Wolf, Deputy Associate Administrator for Business Development, Small Business Administration, 1441 L Street, NW, Room 317, Washington, DC 20416, 202 653-6768

RIN: 3245-AB17

3282. SMALL BUSINESS SIZE STANDARDS; MODIFICATION OF SIZE STANDARDS TO MAKE EXISTING SIZE STANDARDS COMPATIBLE WITH NEW STANDARD INDUSTRIAL CLASSIFICATION SYSTEM (SIC)

Significance: Regulatory Program

Legal Authority: 15 USC 637(a); 15 USC 634(b)(6)

CFR Citation: 13 CFR 121

Legal Deadline: None. This deadline was created by OMB's publication of comprehensive changes to the Standard Industrial Classification Code System, effective 1/1/87.

Abstract: The SBA is modifying its size standards to conform with the newly revised SIC system which has been revised by the Office of Management and Budget effective January 1, 1987.

Timetable:

Action	Date	FR Cite
Interim Final Rule	01/06/87	52 FR 397
Final Action	04/00/88	

Small Entity: Yes

Agency Contact: Gary Jackson, Director, Size Standards Staff, Small Business Administration, 1441 L Street, N.W., Room 601, Washington, D.C. 20416, 202 653-6373

RIN: 3245-AB19

3283. PROGRAM FRAUD CIVIL REMEDIES REGULATIONS

Legal Authority: PL 99-501, Sec 6103

CFR Citation: 13 CFR 141

Legal Deadline: Statutory, April 21, 1987.

Abstract: Regulations implementing the Program Fraud Civil Remedies

Timetable:

Action	Date	FR Cite
NPRM	05/21/87	52 FR 19156
NPRM Comment Period End	06/22/87	52 FR 19156
Final Action	04/00/88	

Small Entity: No

Agency Contact: Patricia R. Forbes, Chief Counsel for Legislation, Small Business Administration, 1441 L Street, N.W., Room 722, Washington, D.C. 20416, 202 653-6573

RIN: 3245-AB27

3284. SMALL BUSINESS SIZE STANDARDS FOR CONSTRUCTION AND SURVEYING SERVICES INDUSTRIES AND SUBCONTRACTING LIMITATIONS

Significance: Regulatory Program

Legal Authority: PL 99-591; PL 99-661

CFR Citation: 13 CFR 121

Legal Deadline: None.

Abstract: Rule to amend size standards for the construction industry division (except heavy construction, not

elsewhere classified, and dredging), and for the surveying services industry. Will also set subcontracting limitations for construction industries in 8(a) and set-aside programs. Size standard amendments and subcontracting limitations are made pursuant to requirements in PL 99-591 and PL 99-661.

Timetable:

Action	Date	FR Cite
ANPRM	03/17/87	52 FR 08261
ANPRM Comment Period End	04/16/87	52 FR 08261
NPRM	12/17/87	52 FR 47937
NPRM Comment Period End	02/16/88	
Final Action	06/00/88	
Final Action Effective	06/00/88	

Small Entity: Yes

Agency Contact: Gene VanArsdale, Director, Office of Procurement Policy and Liaison, Small Business Administration, 1441 L Street, N.W., Room 600, Washington, D.C. 20416, 202 653-6568

RIN: 3245-AB36

3285. BUSINESS LOANS; SMALL BUSINESS LENDING COMPANIES

Legal Authority: 15 USC 634(b)(6)

CFR Citation: 13 CFR 120

Legal Deadline: None.

Abstract: This proposed rule change would treat a Small Business Lending Company (SBLC) as other lenders which participate with the Small Business Administration in making SBA guaranteed loans. It would also clarify that an SBLC could participate in the secondary market and could assemble pools comprised of SBA guaranteed portions of loans made by others as well as pools of loans it has generated.

Timetable:

Action	Date	FR Cite
NPRM	05/21/87	52 FR 19155
NPRM Comment Period End	06/22/87	52 FR 19155
Final Action	10/00/88	

Small Entity: Yes

Agency Contact: Danny Gibb, Director, Office of Financial Institutions, Small Business Administration, 1441 L Street, N.W., Room 800, Washington, D.C. 20416, 202 653-2585

RIN: 3245-AB40

3286. UNIFORM ADMINISTRATIVE REQUIREMENTS FOR GRANTS AND COOPERATIVE AGREEMENTS TO STATE AND LOCAL GOVERNMENTS; PROPOSED REVISION OF CIRCULAR A-102

Legal Authority: 15 USC 634(b)(6)

CFR Citation: 13 CFR 143

Legal Deadline: None.

Abstract: The regulation establishes a uniform administrative rule for the Small Business Administration's cooperative agreements and State grants.

Timetable:

Action	Date	FR Cite
NPRM	06/09/87	52 FR 21824
NPRM Comment Period End	08/10/87	52 FR 21820
Final Action	04/00/88	

Small Entity: Yes

Agency Contact: Patricia R. Forbes, Chief Counsel for Legislation, Small Business Administration, 1441 L Street, N.W., Room 722, Washington, D.C. 20416, 202 653-6573

RIN: 3245-AB41

3287. ● BUSINESS LOAN POLICY

Significance: Regulatory Program

Legal Authority: 15 USC 634(b)(6); 15 USC 636(a); 15 USC 636(h)

CFR Citation: 13 CFR 120

Legal Deadline: None.

Abstract: Would permit SBA to suspend or revoke privilege of lenders, brokers, dealers and registered holders to sell or otherwise deal in section 7(a) secondary market loan or pool certificates for significant violations of secondary market rules and regulations and for certain other offenses. Would also clarify disclosure requirements and modify requirements for pool assembler eligibility.

Timetable:

Action	Date	FR Cite
NPRM	11/04/87	52 FR 42305
NPRM Comment Period End	12/04/87	52 FR 42305
Final Action	04/00/88	

Small Entity: Yes

Agency Contact: Alan S. Mandel, Assistant Deputy Associate Administrator, for Financial Assistance, Small Business Administration, 1441 L Street, N.W., Room 804, 202 653-6906

RIN: 3245-AB48

3288. ● SMALL BUSINESS SIZE STANDARDS: RESIDUAL SIZE STANDARDS

Legal Authority: 15 USC 632(a); 15 USC 634(b)(6)

CFR Citation: 13 CFR 121

Legal Deadline: None.

Abstract: Establishes size standard for industries for which no size standard has been previously established.

Timetable:

Action	Date	FR Cite
Interim Final Rule	04/00/88	

Small Entity: Yes

Agency Contact: Gary Jackson, Director, Size Standards Staff, Small Business Administration, 1441 L Street, N.W., Room 601, Washington, DC 20416, 202 653-6373

RIN: 3245-AB57

3289. ● SMALL BUSINESS SIZE STANDARDS: NONMANUFACTURERS

Significance: Agency Priority

Legal Authority: 15 USC 632(a); 15 USC 634(b)(6)

CFR Citation: 13 CFR 121

Legal Deadline: None.

Abstract: Establishes size standard for nonmanufacturers.

Timetable:

Action	Date	FR Cite
Interim Final Rule	04/00/88	

Small Entity: Yes

Agency Contact: Gary Jackson, Director, Size Standards Staff, Small Business Administration, 1441 L Street, N.W., Room 601, Washington, DC 20416, 202 653-6373

RIN: 3245-AB58

SBA — Final Rule Stage

3290. ● SMALL BUSINESS SIZE STANDARDS: AIRCRAFT, GUIDED MISSILES, AND SPACE VEHICLE RESEARCH AND DEVELOPMENT

Significance: Agency Priority

Legal Authority: 15 USC 632(a); 15 USC 634(b)(6)

CFR Citation: 13 CFR 121

Legal Deadline: None.

Abstract: Establishes small business size standard for aircraft, guided missiles and space vehicles.

Timetable:

Action	Date	FR Cite
Interim Final Rule	04/00/88	

Small Entity: Yes

Agency Contact: Gary Jackson, Director, Size Standards Staff, Small Business Administration, 1441 L Street, N.W., Room 601, Washington, DC 20416, 202 653-6373

RIN: 3245-AB59

3291. ● SMALL DISADVANTAGED BUSINESS STATUS APPEALS PROCEDURES

Significance: Agency Priority

Legal Authority: 15 USC 634(b)(6); PL 99-66, Sec 1207(a)

CFR Citation: 13 CFR 121

Legal Deadline: None.

Abstract: Procedural rules to be used whenever SBA is asked to make a determination concerning disadvantaged status of a small business concern.

Timetable:

Action	Date	FR Cite
Interim Final Rule	04/00/88	

Small Entity: Yes

Agency Contact: Wilfredo Gonzalez, Associate Administrator for Minority Small, Business & Capital Ownership Development, Small Business Administration, 1441 L Street, N.W., Room 602, Washington, DC 20416, 202 653-6407

RIN: 3245-AB63

SMALL BUSINESS ADMINISTRATION (SBA) — Completed Actions

3292. SIZE STANDARDS: CONSTRUCTION

Significance: Regulatory Program

Legal Authority: 15 USC 634(b)(6)

CFR Citation: 13 CFR 121

Legal Deadline: None.

Abstract: Establishing an updated size standard for the construction industry.

Timetable:

Action	Date	FR Cite
Begin Review	10/15/86	
End Review	11/30/87	
Merged with AB38	02/22/88	

Small Entity: Yes

Additional Information: Construction industry size standard along with other size standards has been reviewed and is proposed to be amended pursuant to PL 99-591 and PL 99-661. Thus, the subject matters of RIN AA95 is more appropriately addressed in RIN AB38.

Agency Contact: Gary Jackson, Director, Size Standards Staff, Small Business Administration, 1441 L Street, NW, Room 601, Washington, DC 20416, 202 653-6373

RIN: 3245-AA95

3293. SMALL BUSINESS SIZE STANDARDS: COMMERCIAL FISHING

Significance: Regulatory Program

Legal Authority: 15 USC 634(b)(6); 15 USC 632

CFR Citation: 13 CFR 121

Legal Deadline: None.

Abstract: Size standard for commercial fishing firms.

Timetable:

Action	Date	FR Cite
Interim Final Rule	04/15/85	50 FR 15411
Withdrawn	01/15/88	

Small Entity: Yes

Additional Information: Interim final rule was retroactive to cover El Nino disaster. Rule is no longer necessary and, therefore, has been withdrawn.

Agency Contact: Gary Jackson, Director, Size Standards Staff, Small Business Administration, 1441 L Street, NW, Room 601, Washington, DC 20416, 202 653-6373

RIN: 3245-AB00

3294. SIZE STANDARDS; CERTAIN RETAIL AND SERVICE INDUSTRIES

Significance: Regulatory Program

Legal Authority: 15 USC 634(b)(6); 15 USC 632

CFR Citation: 13 CFR 121

Legal Deadline: None.

Abstract: To review and revise, as necessary, the small business size standards for certain retail and service industries.

Timetable:

Action	Date	FR Cite
Begin Review	10/15/86	
End Review	10/05/87	

Small Entity: Yes

Agency Contact: Gary Jackson, Director, Size Standards Staff, Small Business Administration, 1441 L Street, NW, Room 601, Washington, DC 20416, 202 653-6373

RIN: 3245-AB03

3295. SIZE RULE FOR SMALL BUSINESS INNOVATION RESEARCH PROGRAM TIME OF SIZE DETERMINATION

Legal Authority: 15 USC 632; 15 USC 638

CFR Citation: 13 CFR 121.7

Legal Deadline: None.

Abstract: Establishing the time a firm's size will be determined at the time of award of the funding agreement.

Timetable:

Action	Date	FR Cite
NPRM	08/10/87	52 FR 29532
NPRM Comment Period End	09/09/87	
Final Action	11/03/87	52 FR 42093
Final Action Effective	11/03/87	52 FR 42093

Small Entity: Yes

Agency Contact: Richard Shane, Associate Administrator for Innovation, Research and Technology, Small Business Administration, 1441 L Street, NW, Room 500, Washington, DC 20416, 202 653-7875

RIN: 3245-AB15

3296. PROCUREMENT ASSISTANCE: USER FEES FOR PASS

Legal Authority: 15 USC 634(b)(6)

CFR Citation: 13 CFR 125

Legal Deadline: None.

Abstract: Increase user fee for PASS system to recoup costs of program.

Timetable:

Action	Date	FR Cite
NPRM	08/25/87	52 FR 32017
NPRM Comment Period End	09/24/87	
Final Action	12/22/87	52 FR 48391
Final Action	12/22/87	52 FR 48391
Final Action	02/01/88	53 FR 4008
Final Action Effective	02/01/88	53 FR 4008

Small Entity: No

Additional Information: 2/1/88 final rule amended 12/22/87 final rule to reduce fee from $50 to $24 pursuant to PL 100-202, prohibiting SBA from using appropriated funds to impose or increase user fees.

Agency Contact: Monika Harrison, Associate Administrator for Procurement, Assistance, Small Business Administration, 1441 L Street, N.W., Room 600, Washington, D.C. 20416, 202 653-6635

RIN: 3245-AB20

3297. FREEDOM OF INFORMATION ACT FEE AND FEE WAIVERS REGULATIONS

Legal Authority: 15 USC 634(b)(6)

CFR Citation: 13 CFR 102.6

Legal Deadline: Statutory, April 26, 1987.

Abstract: Amendments to Fee and Fee Waiver provisions to conform to the Freedom of Information Reform Act of 1986.

Timetable:

Action	Date	FR Cite
NPRM	05/18/87	52 FR 18570
NPRM Comment Period End	06/17/87	
Final Action	12/16/87	52 FR 47699
Final Action Effective	12/16/87	52 FR 47699

Small Entity: No

Agency Contact: Nicholas Kalcounos, Director, Freedom of Information/Privacy Acts, Small Business Administration, 2100 K Street, N.W., Room 300, Washington, D.C. 20416, 202 653-6460

RIN: 3245-AB25

3298. LOANS TO STATE AND LOCAL DEVELOPMENT COMPANIES

Legal Authority: 15 USC 634(b)(6)

CFR Citation: 13 CFR 108

Legal Deadline: None.

Abstract: Institution of a 2 percent guarantee fee for debentures sold by development companies through the 504 program.

Timetable:

Action	Date	FR Cite
Withdrawn	12/30/87	

Small Entity: Yes

Additional Information: The Small Business Administration is prohibited under the FY 88 Continuing Resolution on Appropriations from using appropriated funds to establish or increase user fees. Therefore, this rule, which would impose a user fee, has been withdrawn.

Agency Contact: LeAnn Oliver, Financial Analyst, Small Business Administration, 1441 L Street, N.W., Room 720, Washington, D.C. 20416, 202 653-6986

RIN: 3245-AB33

3299. SIZE STANDARDS: MANUFACTURING

Legal Authority: 15 USC 634(b)(6)

CFR Citation: 13 CFR 121

Legal Deadline: None.

Abstract: To review and revise, as necessary, the small business size standards for certain manufacturing industries.

Timetable:

Action	Date	FR Cite
Begin Review	10/15/86	
End Review	10/05/88	

Small Entity: Yes

Agency Contact: Gary Jackson, Director, Size Standards Staff, Small Business Administration, 1441 L Street, N.W., Room 601, Washington, D.C. 20416, 202 653-6373

RIN: 3245-AB43

3300. ● STANDARDS OF CONDUCT

Legal Authority: 15 USC 634; EO 11222

CFR Citation: 13 CFR 105

Legal Deadline: None.

Abstract: Amends 13 CFR 105.511(g) to provide that financial disclosure statements required to be filed by EO 11222 may be disclosed to individuals who must have access to them in order to carry out responsibilities established by law.

Timetable:

Action	Date	FR Cite
Final Action	09/16/87	52 FR 34895
Final Action Effective	09/16/87	52 FR 34895

Small Entity: No

Agency Contact: Martin D. Teckler, Deputy General Counsel, Small Business Administration, 1441 L Street, N.W., Room 700, Washington, DC 20416, 202 653-6644

RIN: 3245-AB46

3301. ● DELEGATION OF AUTHORITY TO CONDUCT PROGRAM ACTIVITIES IN FIELD OFFICES

Legal Authority: 15 USC 633; 15 USC 687; 5 USC 552; PL 93-386, Sec 5(b)(11); 15 USC 634

CFR Citation: 13 CFR 101

Legal Deadline: None.

Abstract: Increases the authority of the Branch Manager in Sacramento to approve or decline section 7(a) Guaranty Business Loans to $500,000. Increases the authority of the Assistant Branch Manager for Finance and Investment in Sacramento to approve direct and immediate participation section 7(a) Business Loans up to $250,000 and to decline the same type of loans to $350,000.

Timetable:

Action	Date	FR Cite
Final Action Effective	09/09/87	52 FR 35411
Final Action	09/21/87	52 FR 35411

Small Entity: No

Agency Contact: Georgia K. Cannady, Editor, Administrative Information Branch, Small Business Administration, 1441 L Street, N.W., Room 200, Washington, DC 20416, 202 653-8538

RIN: 3245-AB47

3302. ● ADMINISTRATIVE CLAIMS UNDER FEDERAL TORT CLAIMS ACT

Significance: Regulatory Program

Legal Authority: 15 USC 634(b)(1); 15 USC 634(b)(6); 28 USC 2672

CFR Citation: 13 CFR 114

Legal Deadline: None.

Abstract: Permits SBA to indemnify an employee who suffers an adverse judgment, verdict, or monetary award. When the conduct gives rise to the verdict, judgment or award was taken within the scope of such individual's employment and when indemnification is in the interest of the SBA.

Timetable:

Action	Date	FR Cite
Final Action	08/28/87	52 FR 32533
Final Action Effective	08/28/87	52 FR 32533

Small Entity: No

Agency Contact: Eric S. Benderson, Associate General Counsel, Small Business Administration, 1441 L Street, N.W., Room 716, Washington, DC 20416, 202 653-6509

RIN: 3245-AB49

3303. ● DEBT COLLECTION

Significance: Regulatory Program

Legal Authority: 15 USC 634(b)(6)

CFR Citation: 13 CFR 140

Legal Deadline: None.

Abstract: Amendment makes regulations consistent with Office of Personnel Management regulations. Permits SBA to collect debts of employees of other Federal agencies via salary offset and makes other technical corrections.

Timetable:

Action	Date	FR Cite
Final Action	01/21/88	53 FR 1606

Small Entity: No

Agency Contact: Martin D. Teckler, Deputy General Counsel, Small Business Administration, 1441 L Street, N.W., Room 700, Washington, DC 20416, 202 653-6644

RIN: 3245-AB50

3304. ● DISASTER HOME LOANS; DEBT COLLECTION

Legal Authority: 15 USC 634(b)(6)

CFR Citation: 13 CFR 144

Legal Deadline: None.

Abstract: These regulations govern a one-time program to permit the prepayment at a discount of certain outstanding disaster home loans and provide for a methodology for computing the discounted value of the loan to be paid. Prepayment of disaster home loans is in keeping with the budgetary initiative of this Administration. A favorable monetary return can be obtained from these loans by prepayment at a discount.

Timetable:

Action	Date	FR Cite
NPRM	07/10/87	52 FR 26019
NPRM Comment Period End	08/10/87	52 FR 26019
Final Action	08/20/87	52 FR 31526
Final Action Effective	08/20/87	52 FR 31526

Small Entity: No

Agency Contact: James W. Hammersley, Financial Analyst, Small Business Administration, 1441 L Street, N.W., Room 800-C, Washington, DC 20416, 202 653-5954

RIN: 3245-AB51

3305. ● SMALL BUSINESS INVESTMENT COMPANIES

Legal Authority: 15 USC 687(c); 15 USC 687b (b)

CFR Citation: 13 CFR 107

Legal Deadline: None.

Abstract: Rule would increase examination fees imposed upon small business investment companies.

Timetable:

Action	Date	FR Cite
NPRM	08/04/87	52 FR 28842
NPRM Comment Period End	10/03/87	52 FR 33598
Withdrawn	12/30/87	

Small Entity: No

Additional Information: Proposed rule withdrawn due to upcoming major changes in SBIC examination program. Rule no longer fits program.

Agency Contact: John L. Werner, Director, Office of Investment, Small Business Administration, 1441 L Street, N.W., Room 808, Washington, DC 20416, 202 653-6584

RIN: 3245-AB52

3306. ● SMALL BUSINESS SIZE STANDARDS: REGULAR DEALERS

Legal Authority: 15 USC 634(b)(6)

CFR Citation: 13 CFR 121

Legal Deadline: None.

Abstract: Review of regular dealers for size standards purposes.

Timetable:

Action	Date	FR Cite
Begin Review	10/15/87	
Final Action	01/05/88	

Small Entity: Yes

Agency Contact: Gary Jackson, Director, Size Standards Staff, Small Business Administration, 1441 L Street, N.W., Room 601, Washington, DC 20416, 202 653-6373

RIN: 3245-AB60

3307. ● DEBT COLLECTION; INCOME TAX REFUND OFFSET

Legal Authority: 31 USC 3720A; 15 USC 634(b)(6)

CFR Citation: 13 CFR 140

Legal Deadline: None.

Abstract: The Budget Reconciliation Act of 1987 extends authority of the Secretary of the Treasury to offset the income tax refund due a taxpayer who has a delinquent debt obligation to the Federal Government under section 2653 of the Deficit Reduction Act. Therefore, SBA republished this regulation which was scheduled to expire on December 31, 1987. The text is identical to that published in 51 FR 42547, November 25, 1986.

SBA

Completed Actions

Timetable:

Action	Date	FR Cite
Final Action Effective	01/01/88	53 FR 4112
Final Action	02/12/88	53 FR 4112

Small Entity: No

Agency Contact: Fred Hanus, Financial Analyst, Small Business Administration, 1441 L Street, N.W., Room 813, Washington, DC 20416, 202 653-6900

RIN: 3245-AB64

3308. ● SMALL BUSINESS INVESTMENT COMPANIES

Legal Authority: 15 USC 687(c); 15 USC 687b(b)

CFR Citation: 13 CFR 107

Legal Deadline: None.

Abstract: Rule would increase examination fees imposed upon small business investment companies.

Timetable:

Action	Date	FR Cite
ANPRM	06/04/87	
Withdrawn See Additional Information	12/15/87	

Small Entity: No

Additional Information: See AB52.

Agency Contact: John L. Werner, Director, Office of Investment, Small Business Administration, 1441 L Street, N.W., Room 806, Washington, DC 20416, 202 653-6584

RIN: 3245-AB66

[FR Doc. 88-5803 Filed 04-22-88; 8:45 am]

BILLING CODE 8025-01-T

VOL
53

ISS
79

PT
2

AP
25

1988

UMI

federal register

Monday
April 25, 1988

Part XL

Tennessee Valley Authority

Semiannual Regulatory Agenda

TENNESSEE VALLEY AUTHORITY (TVA)

TENNESSEE VALLEY AUTHORITY

18 CFR Ch. XIII

Regulatory Agenda

AGENCY: Tennessee Valley Authority (TVA).

ACTION: Regulatory agenda.

SUMMARY: As a nonregulatory agency, TVA originates very few regulations. However, TVA has two regulations under development and has published final rules with regard to four other regulations. TVA has also published a notice of intent with regard to a seventh regulation. TVA is therefore publishing a regulatory agenda in voluntary compliance with Executive Order No. 12291.

FOR FURTHER INFORMATION CONTACT: For further information please contact the persons listed.

W. F. Willis,

General Manager.

TENNESSEE VALLEY AUTHORITY (TVA) — Proposed Rule Stage

3309. PROTECTION OF ARCHAEOLOGICAL RESOURCES

Legal Authority: 16 USC 470aa to 470ll

CFR Citation: 18 CFR 1312

Legal Deadline: None.

Abstract: The planned regulations will implement provisions of the Archaeological Resources Protection Act of 1979 by providing protection of archaeological resources on public lands in TVA custody and control. TVA will seek to protect such resources through permits authorizing excavation or removal of resources, through civil penalties for unauthorized excavation or removal, through preservation of archaeological resource collections and data, and through assuring confidentiality of information about resources when disclosure would threaten the resources. The planned regulations will supplement existing uniform regulations by assigning specific responsibilities within TVA.

Timetable:

Action	Date	FR Cite
NPRM	00/00/00	

Small Entity: No

Agency Contact: Maxwell D. Ramsey, Program Manager, Cultural Resources, Tennessee Valley Authority, 238 Natural Resources Building, Norris, TN 37828, 615 632-1585

RIN: 3316-AA02

3310. ALTERNATIVE PROGRAM FOR SHARING PATENT-RELATED INCOME

Legal Authority: 15 USC 3710, amended by PL 99-502

CFR Citation: 18 CFR Not yet determined

Legal Deadline: Statutory, October 1988.

Abstract: Pursuant to new section 14 of the Stevenson-Wydler Act, TVA has elected to promulgate regulations providing for an alternative program for sharing royalties and other patent-related income with its employee-inventors.

Timetable:

Action	Date	FR Cite
ANPRM	01/14/87	52 FR 1469
NPRM	00/00/00	

Small Entity: No

Agency Contact: George F. Dilworth, Jr., Manager of Technology Utilization, Tennessee Valley Authority, 400 West Summit Hill Drive, W12 D134 C-K, Knoxville, TN 37902, 615 632-2871

RIN: 3316-AA05

3311. ● NONDISCRIMINATION ON THE BASIS OF SEX IN FEDERALLY ASSISTED EDUCATIONAL PROGRAMS

Legal Authority: 20 USC 1682; 16 USC 831 to 831dd

CFR Citation: 18 CFR Not yet determined

Legal Deadline: None.

Abstract: This regulation implements 20 USC 1681 which assures nondiscrimination on the basis of sex in educational programs or activities receiving financial assistance from Federal agencies.

Timetable:

Action	Date	FR Cite
NPRM	10/00/88	

Small Entity: No

Agency Contact: Wesley H. Motley, Chief, Program Asistance and Evaluation, Tennessee Valley Authority, E5 B30, 400 West Summit Hill Drive, Knoxville, TN 37902, 615 632-2865

RIN: 3316-AA13

TENNESSEE VALLEY AUTHORITY (TVA) — Completed Actions

3312. ● REVISIONS TO FREEDOM OF INFORMATION ACT (FOIA) REGULATIONS

Legal Authority: 5 USC 552; 16 USC 831 to 831dd

CFR Citation: 18 CFR 1301.1

Legal Deadline: None.

Abstract: This rule revises one exemption from disclosure under the FOIA set out in TVA's regulations in order to conform that exemption with changes made by the Freedom of Information Reform Act of 1986. This rule also redesignates the positions responsible for handling and determining initial requests and administrative appeals under the FOIA to reflect TVA organizational changes.

Timetable:

Action	Date	FR Cite
NPRM	08/28/87	52 FR 32573
Final Action	01/07/88	53 FR 405
Final Action Effective	02/08/88	

Small Entity: No

Agency Contact: Craven Crowell, Manager, Office of Governmental and Public Affairs, Tennessee Valley Authority, E12 C31, 400 West Summit Hill Drive, Knoxville, TN 37902, 615 632-6315

RIN: 3316-AA09

3313. ● UNIFORM RELOCATION ASSISTANCE AND REAL PROPERTY ACQUISITION FOR FEDERAL AND FEDERALLY ASSISTED PROGRAMS

Legal Authority: 42 USC 4601; 42 USC 4601 note; 16 USC 831 to 831dd

CFR Citation: 18 CFR 1306

Legal Deadline: None.

Abstract: The Uniform Relocation Act Amendments of 1987 provide for a single governmentwide rule (uniform regulations) implementing Titles I and II of the Uniform Relocation Assistance and Real Property Acquisition Policies Act of 1970, as amended. The uniform regulations applicable to those titles are contained in Subpart A and Subparts C through G of 49 CFR Part 24. Under the regulations that TVA published, relocation assistance for TVA program activities undertaken after January 19, 1988 are governed by those subparts.

Timetable:

Action	Date	FR Cite
Interim Final Rule	12/17/87	52 FR 48019
Final Action	12/17/87	52 FR 48019
Final Action Effective	04/02/88	

Small Entity: No

Agency Contact: Edward S. Christenbury, General Counsel, Tennessee Valley Authority, E11 B33, 400 West Summit Hill Drive, Knoxville, Tennessee 37902, 615 632-2241

RIN: 3316-AA10

3314. ● ADMINISTRATIVE COST RECOVERY

Legal Authority: 16 USC 831 to 831dd; 31 USC 9701

CFR Citation: 18 CFR 1310.2(c); 18 CFR 1310.3(d)

Legal Deadline: None.

Abstract: Hunters at the Tennessee Valley Authority's (TVA) Land Between The Lakes (LBL) are required to hold a State hunting license for the State in which they are hunting (Kentucky or Tennessee) and a hunter use permit from TVA for which TVA charges a fee. Because of the large number of people desiring to hunt turkey at LBL, TVA has decided to limit participation in the turkey hunts during peak use days of the hunting season by random selection of applicants for special quota turkey hunt permits. The $2 application fee for LBL quota turkey hunt permits will recover administrative costs associated with processing forms, conducting a drawing, and notifying applicants of rejection or selection.

Timetable:

Action	Date	FR Cite
NPRM	12/16/87	52 FR 47728
Final Action	02/02/88	53 FR 2826
Final Action Effective	02/02/88	53 FR 2826

Small Entity: No

Agency Contact: Elizabeth E. Thach, Director, Land Between The Lakes, Tennessee Valley Authority, Golden Pond, KY 42231, 502 924-5602

RIN: 3316-AA11

3315. ● PROTECTION OF ARCHAEOLOGICAL RESOURCES; UNIFORM REGULATIONS

Legal Authority: 16 USC 470aa to 470ll

CFR Citation: 18 CFR 1312.16(a)(1); 18 CFR 1312.16(a)(2)

Legal Deadline: None.

Abstract: This rule amends the standards for civil penalty amounts in the uniform regulations of 18 CFR Part 1312, to include determination of archaeological value.

Timetable:

Action	Date	FR Cite
NPRM	03/31/87	52 FR 10342
Final Action	12/16/87	52 FR 47720
Final Action Effective	03/15/88	

Small Entity: No

Agency Contact: Maxwell D. Ramsey, Program Manager, Cultural Resources, Tennessee Valley Authority, 238 Natural Resources Building, Norris, Tennessee 37828, 615 632-1585

RIN: 3316-AA12

[FR Doc. 88-5804 Filed 04-22-88; 8:45 am]

BILLING CODE 8120-02-T

VOL
53
ISS
79
PT
2
AP
25
1988
UMI

federal register

Monday
April 25, 1988

Part XLI

Veterans Administration

Semiannual Regulatory Agenda

VETERANS ADMINISTRATION (VA)

VETERANS ADMINISTRATION

38 CFR Ch. I

Agenda of Federal Regulations

AGENCY: Veterans Administration.

ACTION: Publication of agenda of regulations.

SUMMARY: This agenda announces the regulations that the Veterans Administration will have under review, development, or revision during the 12-month period from April 1988 to April 1989. The purpose in publishing this Agency's regulatory development activities is to allow all interested persons the opportunity to participate in the rulemaking process.

ADDRESSES: Interested persons are invited to comment on the regulations listed in the agenda by contacting the individual agency contact listed for each regulation, or by writing to: Paperwork Management and Regulations Service (731), Veterans Administration, 810 Vermont Avenue, NW., Washington, DC 20420.

FOR FURTHER INFORMATION CONTACT: 38 CFR: M'Liz McLendon, (202) 233-3770; 48 CFR, Chapter 8: Sunny Huff, (202) 233-4240.

SUPPLEMENTARY INFORMATION: Executive Order 12291, Federal Regulation, and the Regulatory Flexibility Act (Pub. L. 96-354) require that executive agencies publish in the **Federal Register** in April and October of each year an agenda of regulations under development and review.

The Veterans Administration has no regulations considered major under the terms of Executive Order 12291; however, all of this Agency's proposed rules and current rules under review, except those considered to be internal agency policy management or routine regulations, have been listed in accordance with section 5(a) of the Executive Order.

This agenda incorporates those categories of information required pursuant to 5 U.S.C. 602(a) and 610(c) of the Regulatory Flexibility Act.

This agenda has been prepared in accordance with OMB Bulletin 88-1.

Dated: February 25, 1988.
By direction of the Administrator.

David A. Cox,
Associate Deputy Administrator for Management.

Proposed Rule Stage

Sequence Number	Title	Regulation Identifier Number
3316	Community Residential Care	2900-AB32
3317	Disposition of Veteran's Personal Funds and Effects on Facility upon Death, or Discharge, or Unauthorized Absence, and of Funds and Effects Found on Facility	2900-AB61
3318	Confidential Quality Assurance Program Records and Documents	2900-AC27
3319	Veterans Administration Health Professional Scholarship Program	2900-AC66
3320	Contract Medical Care	2900-AC69
3321	Automobile Allowance and Adaptive Equipment Eligibility; Devices to Overcome the Handicap of Deafness	2900-AD08
3322	Grants to States for State Extended Care Facilities	2900-AD16
3323	Employee Fiduciaries	2900-AB50
3324	1. Veterans Services Officer to Select and Appoint or Recommend for Appointment the Person or Legal Entity to Receive Veterans Administration Benefits in a Fiduciary Capacity 2. Direct Payment	2900-AB75
3325	1. Payment to the Wife or Husband of an Incompetent Veteran 2. Legal Custodian	2900-AB76
3326	Increased Coverage for Servicemen's and Veteran's Group Life Insurance	2900-AC06
3327	Computation of Entitlement Under Chapter 31	2900-AC08
3328	Nonduplication - Federal Programs	2900-AC41
3329	Providing an Initial Evaluation for a Veteran not Residing in a State	2900-AC46
3330	Veterans Education; Federal Equal Opportunity Laws	2900-AC52
3331	Procedural Due Process	2900-AC54
3332	Systemic Diseases, et al	2900-AC57
3333	Extension of Time Limit for Claims	2900-AC61
3334	Compliance with Civil Rights Provisions	2900-AC72
3335	Training Outside of State Under 38 CFR 21.130	2900-AC73
3336	Veterans Education; Amendments Needed to Implement Pub. L. 99-576	2900-AC76
3337	Extension of the Independent Living Services Program	2900-AC82
3338	Suspension of Individual Employees of Manufactured Home Dealers	2900-AC83
3339	Loans to Purchase Manufactured Homes	2900-AC85
3340	VA Home Loan Credit Standards; New SAH Grant	2900-AC90
3341	Veterans Education; Effect of Internal VA Reorganization	2900-AD04
3342	Definition of Fraud	2900-AD19
3343	Veterans Education; Homeless Claimants	2900-AD21
3344	Veterans Education; Increase in Rates Payable in the EATP	2900-AD23
3345	Due Process	2900-AD27
3346	Homeless Claimants for Vocational Rehabilitation	2900-AD28
3347	Placing Use of the Vocational Rehabilitation Panel on a Discretionary Basis	2900-AD29
3348	Assumption of VA Guaranteed Loans	2900-AD30
3349	Processing of VA Appraisals by Designated Lenders	2900-AD31
3350	Qualification Requirements for VA Fee Appraisers	2900-AD32
3351	Requirements for Nonsupervised Automatic Lenders	2900-AD33

VA

Proposed Rule Stage—Continued

Sequence Number	Title	Regulation Identifier Number
3352	Allowable Fees and Charges for VA Guaranteed Loans	2900-AD34
3353	Full Disclosure of Beneficiary's Income and Assets	2900-AD35
3354	Payment of Guaranty Claims	2900-AD39
3355	Appeals Regulations and Rules of Practice- Status of Legal Interns, Law Students and Paralegals	2900-AC11
3356	Appeals Regulations and Rules of Practice - Hearing Date	2900-AC88
3357	Appeals Regulations and Rules of Practice; Cutoff Date for Acceptance of Evidence	2900-AD14
3358	Equal Access to Justice; Procedural Rules	2900-AC33
3359	Nondiscrimination on the Basis of Sex Under Federally Assisted Education Programs and Activities	2900-AB51
3360	Nondiscrimination on the Basis of Handicap in Federally Assisted Programs and Activities	2900-AB87
3361	Effect of General Counsel Opinions	2900-AB22
3362	Claims Under the Federal Tort Claims Act	2900-AD15
3363	Protection of Archaeological Resources	2900-AC26
3364	Parking Fees at VA Medical Facilities	2900-AD05
3365	Disclosure of Confidential Commercial Information	2900-AD09

Final Rule Stage

Sequence Number	Title	Regulation Identifier Number
3366	Use of Community Nursing Home Facilities	2900-AB21
3367	Reservists Education; New Education Program for Members of the Selected Reserve	2900-AB69
3368	Investments by Legal Custodians	2900-AB77
3369	1. Veterans Services Officer's Action When Veteran's Estate Equals or Exceeds $1,500 2. Determination of Value of Estate; 38 USC 3203(b)(1)	2900-AB78
3370	Employment Services for Certain Eligible Veterans	2900-AB89
3371	Amendment of Forfeiture Regulations	2900-AC01
3372	Interest and Penalties on Untimely Submission of Funding Fees by Lenders	2900-AC03
3373	1. Apportionment of Benefits to Dependents 2. Payment of Cost of Veteran's Maintenance in Institution 3. Recommendation for Payment	2900-AC10
3374	Use of Credit Reports for Refinancing and Rescheduling of VA-Guaranteed Loans and Claim Submissions	2900-AC19
3375	Evaluations for Diplopia (Double Vision)	2900-AC50
3376	Vocational Rehabilitation Panel	2900-AC75
3377	Veterans Education; Amendments to VEAP Required by the Veterans Benefits Improvement and Health Care Authorization Act of 1986	2900-AC81
3378	Improvements in Veterans' Benefits	2900-AC99
3379	Homeless Claimants	2900-AD00
3380	Loan Guaranty: Increase in Maximum Allowable Amount the VA Will Reimburse a Loan Holder for Legal Services Incurred in Terminating a Loan	2900-AD01
3381	Veterans Education; Revision of Delimiting Dates	2900-AD02
3382	Veterans Education; Clarification of Administrative Error	2900-AD22
3383	Veterans Education; Clarification of Mitigating Circumstances	2900-AD24
3384	Acquisition Regulations Relating to Cost Comparisons	2900-AC37
3385	Veterans Administration Acquisition Regulation - Consulting Service	2900-AC66
3386	Veterans Administration Acquisition Regulation - Construction and Architect-Engineer Contracts	2900-AC67
3387	Enforcement of Nondiscrimination on the Basis of Handicap in VA Programs	2900-AA87
3388	Recognition of Organizations, Representatives, Agents, and Attorneys	2900-AC89
3389	Standards Implementing the Program Fraud Civil Remedies Act	2900-AC92
3390	Nonprocurement Debarment and Suspension	2900-AD06
3391	Uniform Relocation Assistance Act for Real Property Acquisition and Federally Assisted Programs	2900-AD37
3392	Release of VA Lists of Names and Addresses and Penalty Procedures for Unauthorized Use	2900-AC83

Completed Actions

Sequence Number	Title	Regulation Identifier Number
3393	Bereavement Counseling	2900-AC68
3394	Transportation of Claimants and Beneficiaries	2900-AD07

BEST COPY AVAILABLE

Completed Actions—Continued

Sequence Number	Title	Regulation Identifier Number
3395	Acquisition of Property	2900-AB34
3396	Temporary Program of Vocational Training for Certain New Pension Recipients	2900-AB53
3397	Veterans Education; All Volunteer Force Educational Assistance Program	2900-AB70
3398	Payments to Dependents of Veterans in Training	2900-AC18
3399	Veterans Education; Deficiency Course Measurement	2900-AC42
3400	Veterans Mortgage Life Insurance - Maximum Amount of Insurance	2900-AC43
3401	Veterans Education; Disenrollment from VEAP and Other Technical Amendments	2900-AC49
3402	Nomenclature and Descriptive Terms for Mental Disorders	2900-AC60
3403	Decrease in Amount of Time VA Will Allow Loan Holder to Begin Terminating Defaulted Loan	2900-AC71
3404	Election of Benefits	2900-AC74
3405	Veterans Education; Entitlement Charges for Overpayments Under VEAP	2900-AC77
3406	Veterans Education; Transfer of Entitlement Under 38 USC Ch. 107	2900-AC78
3407	Certification of Continued Eligibility	2900-AC79
3408	Veterans Education; Nonpunitive Grades	2900-AC80
3409	Dependents' Education; Effect of the 85-15% Ratio Requirement	2900-AD03
3410	Evaluation of Hearing Loss	2900-AD10
3411	Frequency of Payment of Improved Pension	2900-AD20
3412	Veterans Education; Amendments to Veterans' Job Training Act	2900-AD25
3413	Veterans Education; Administrative Review for Employers	2900-AD38
3414	Veterans Administration Acquisition Regulation - Specifications	2900-AC38
3415	Standards for Claims Collection; Committee on Waivers and Compromises	2900-AC96
3416	Uniform Administrative Requirements for Grants and Cooperative Agreements to State and Local Governments	2900-AC97
3417	Fees Charged When Responding to Requests for Records	2900-AB18
3418	Exemptions from Public Access to Agency Records	2900-AC94
3419	Veterans Administration Acquisition Regulation - Small Business Concerns	2900-AC36

VETERANS ADMINISTRATION (VA)

Proposed Rule Stage

DEPARTMENT OF MEDICINE AND SURGERY

3316. COMMUNITY RESIDENTIAL CARE

Legal Authority: 38 USC 630

CFR Citation: 38 CFR 17.51h to 17.51q

Legal Deadline: None.

Abstract: These regulations will clarify the legal status of the Community Residential Care program, setting standards and criteria for health and safety, facility resources, guidelines for costs of care, conditions under which the agency may cease referrals to non-complying facilities.

Timetable:

Action	Date	FR Cite
NPRM	03/25/88	53 FR 9778
NPRM Comment Period End	04/25/88	53 FR 9778
Final Action	12/00/88	

Small Entity: No

Agency Contact: James R. Kelly, Chief, Community Care Programs, Veterans Administration, Department of Medicine & Surgery (181), 810 Vermont Avenue, NW, Washington, DC 20420, 202 233-3692

RIN: 2900-AB32

3317. DISPOSITION OF VETERAN'S PERSONAL FUNDS AND EFFECTS ON FACILITY UPON DEATH, OR DISCHARGE, OR UNAUTHORIZED ABSENCE, AND OF FUNDS AND EFFECTS FOUND ON FACILITY

Legal Authority: 38 USC 210c

CFR Citation: 38 CFR 12.0 to 12.24

Legal Deadline: None.

Abstract: Section 208 of Public Law 94-581 provides that unclaimed property or funds and effects left by a dependent or survivor of a veteran receiving medical care at a VA facility as a CHAMPVA beneficiary will be disposed of in the same or similar manner as such property left by a veteran. Also, estates of dependents or survivors of a veteran who dies intestate and without legal heirs while a patient in any VA facility or any hospital, while being furnished care or treatment therein by the VA will escheat to the U.S. Government. Some of these regulations have not been updated since 1948, therefore, editorial changes will be made which will not affect policy.

Timetable:

Action	Date	FR Cite
NPRM	12/00/88	

Small Entity: No

Agency Contact: Paul Tryhus, Medical Administration Program Specialist, Veterans Administration, Department of Medicine & Surgery (136F), 810 Vermont Avenue, NW, Washington, DC 20420, 202 233-2504

RIN: 2900-AB61

3318. CONFIDENTIAL QUALITY ASSURANCE PROGRAM RECORDS AND DOCUMENTS

Legal Authority: 38 USC 3305; 38 USC 4151; 38 USC 4152

CFR Citation: 38 CFR 17.500 to 17.540

Legal Deadline: None.

Abstract: Final regulations implementing 38 USC 3305 were made effective Oct. 22, 1982. Those regulations govern the VA's QA (quality assurance) program activities and records and documents which are made confidential and privileged. Sec. 3305 prohibits the VA from designating any QA program activity, for the purpose of confidentiality, unless such activity has been specified in regulation. PL 99-166 amends 38 USC 4151 and 4152 to require that QA program activities include an evaluation of the quality of surgical care in DM&S, as evidenced by outcome measures of mortality and morbidity; a report to Congress indicating deficiencies in the quality of care is required. 38 USC 3305 was amended to clarify that aggregate statistical data is not to be made confidential provided individuals are not identified. The existing regulations do not include a description of the VA Medical District Initiated Peer Review Organization (MEDIPRO) program which is an integral element of the quality assurance program. No alternatives are being considered. There are no potential costs to the action. The benefits would be in the form of programmatic improvements.

Timetable:

Action	Date	FR Cite
NPRM	00/00/00	

Small Entity: No

Agency Contact: Robert Lubran, Health System Specialist, Department of Medicine and Surgery (10Q), Veterans Administration, 810 Vermont Avenue, NW, Washington, DC 20420, 202 233-2500

RIN: 2900-AC27

3319. VETERANS ADMINISTRATION HEALTH PROFESSIONAL SCHOLARSHIP PROGRAM

Significance: Regulatory Program

Legal Authority: 38 USC 4141 to 4146

CFR Citation: 38 CFR 17.600

Legal Deadline: None.

Abstract: Current regulations set forth requirements for awarding scholarships to students receiving academic training in the disciplines of medicine, osteopathy, and nursing, and if needed by the VA, students in other specified health care disciplines. Regulations are being amended to include requirements for awarding scholarships to students in disciplines currently specified as well as to students in all title 38 health care disciplines. Proposed regulations also revise the method for determining length of service obligation for part-time student participants.

Timetable:

Action	Date	FR Cite
NPRM	05/01/88	

Small Entity: No

Agency Contact: Stuart Mount, Acting Chief, Policies and Procedures Div., Medical Administration Service (136F), Veterans Administration, Department of Medicine & Surgery, 810 Vermont Avenue NW, Washington, DC 20420, 202 233-2143

RIN: 2900-AC69

3320. CONTRACT MEDICAL CARE

Significance: Regulatory Program

Legal Authority: PL 99-576

CFR Citation: 38 CFR 17.50b; 38 CFR 17.87

Legal Deadline: None.

Abstract: The VA and the Department of Health and Human Services will be proposing to amend applicable regulations to permit the VA to pay for authorized or private hospital care in amounts based on the rates allowed by Medicare under the prospective payment system. This step will help ensure that payments made by the VA are consistent with those made by the largest Federal health care program for similar services in the community.

Timetable:

Action	Date	FR Cite
NPRM	05/01/88	
Final Action	07/01/88	

Small Entity: No

Agency Contact: Stuart Mount, Acting Chief, Policies and Procedures Div., Medical Administration Service (136F), Veterans Administration, Department of Medicine & Surgery, 810 Vermont Avenue NW, Washington, DC 20420, 202 233-2143

RIN: 2900-AC69

3321. AUTOMOBILE ALLOWANCE AND ADAPTIVE EQUIPMENT ELIGIBILITY; DEVICES TO OVERCOME THE HANDICAP OF DEAFNESS

Legal Authority: 38 USC 1901; 38 USC 1902; 38 USC 1903; 38 USC 617(b)

CFR Citation: 38 CFR 3.807; 38 CFR 3.808; 38 CFR 17.115d; 38 CFR 17.119

Legal Deadline: None.

Abstract: This proposal would amend the VA adjudication and medical regulations concerning the automobile allowance and adaptive equipment eligibility for certain severely disabled individuals. These amendments are necessary to implement provisions of law and to properly divide regulatory responsibility for these programs consistent with agency organizational and functional alignments. The effect of these amendments will be to extend automobile adaptive equipment eligibility for certain severely disabled persons, more clearly define program responsibility, and more accurately describe prerequisites for obtaining devices for assisting in overcoming the handicap of deafness (including telecaptioning television decoders).

Timetable:

Action	Date	FR Cite
NPRM	07/00/88	

Small Entity: No

Agency Contact: Frederick Downs (121)(for Part 17); Robert M. White (211B) (for Part 3), Veterans Administration, 810 Vermont Avenue, NW, Washington, DC 20420, 202 233-2011

RIN: 2900-AD08

3322. ● GRANTS TO STATES FOR STATE EXTENDED CARE FACILITIES

Legal Authority: 38 USC 5031 to 5037

CFR Citation: 38 CFR 17.177; 38 CFR 17.171, App A

Legal Deadline: None.

Abstract: The existing regulation contains construction standards which need updating. Construction standards in 38 CFR 17.177 have not been revised in 20 years and contain obsolete information. Construction standards are

being revised to place more emphasis on the use of State and local codes and regulations. Also, the veteran population in 38 CFR 17.171 Appendix A needs updating to reflect the current veteran population.

Timetable:

Action	Date	FR Cite
NPRM	09/30/88	

Small Entity: No

Agency Contact: F. Brent Baker, Chief, State Home Construction Grants, Off. of Geriatrics and Extended Care (182C), Veterans Administration, 810 Vermont Avenue, NW, Washington, DC 20420, 202 233-3854

RIN: 2900-AD16

DEPARTMENT OF VETERANS BENEFITS

3323. EMPLOYEE FIDUCIARIES

Legal Authority: 38 USC 210

CFR Citation: 38 CFR 0.735-21

Legal Deadline: None.

Abstract: The existing regulation falls under the general rules of conduct for employees. The intended change will bar most employees from becoming fiduciaries for beneficiaries of VA benefits and establish an exemption to the bar under a limited number of circumstances such as when the employee is a close relative.

Timetable:

Action	Date	FR Cite
NPRM	06/00/88	

Small Entity: No

Agency Contact: William B. Saliski, Jr., Program Analyst, Veterans Administration, Department of Veterans Benefits (273), 810 Vermont Avenue, NW, Washington, DC 20420, 202 233-2091

RIN: 2900-AB50

3324. 1. VETERANS SERVICES OFFICER TO SELECT AND APPOINT OR RECOMMEND FOR APPOINTMENT THE PERSON OR LEGAL ENTITY TO RECEIVE VETERANS ADMINISTRATION BENEFITS IN A FIDUCIARY CAPACITY 2. DIRECT PAYMENT

Legal Authority: 38 USC 3202(a)

CFR Citation: 38 CFR 13.55; 38 CFR 13.56

Legal Deadline: None.

Abstract: 38 CFR 13.55 authorizes the VSO to select and appoint a fiduciary and defines the types of payees authorized to receive payments in fiduciary cases. The intended change updates the authority language to more closely reflect changes to 38 USC 3202; removes gender specific terminology and reference to mental illness; and, further clarifies the types of payees available for selection.

38 CFR 13.56 defines classes of beneficiaries who may be paid directly. The intended change clarifies the conditions for direct payment.

Timetable:

Action	Date	FR Cite
NPRM	08/00/88	

Small Entity: No

Agency Contact: William B. Saliski, Jr., Program Analyst, Veterans Administration, Department of Veterans Benefits (273), 810 Vermont Avenue, NW, Washington, DC 20420, 202 233-2091

RIN: 2900-AB75

3325. 1. PAYMENT TO THE WIFE OR HUSBAND OF AN INCOMPETENT VETERAN 2. LEGAL CUSTODIAN

Legal Authority: 38 USC 3202

CFR Citation: 38 CFR 13.57; 38 CFR 13.58

Legal Deadline: None.

Abstract: 38 CFR 13.57 specifies types of VA benefits that may be paid to spouse payee. The intended change broadens the class of payments to include VA insurance.

38 CFR 13.58 explains in part duties expected of a legal custodian. The intended change will clarify the custodian's authority to purchase a burial agreement for the incompetent beneficiary.

Timetable:

Action	Date	FR Cite
NPRM	06/00/88	

Small Entity: No

Agency Contact: William B. Saliski, Jr., Program Analyst, Veterans Administration, Department of Veterans Benefits (273), 810 Vermont Avenue, NW, Washington, DC 20420, 202 233-2091

RIN: 2900-AB76

3326. INCREASED COVERAGE FOR SERVICEMEN'S AND VETERAN'S GROUP LIFE INSURANCE

Legal Authority: 38 USC 767; 38 USC 777; PL 99-166, Sec 401

CFR Citation: 38 CFR 9.1 to 9.8, (Revision); 38 CFR 9.16, (Revision); 38 CFR 9.22, (Revision); 38 CFR 9.27, (Revision); 38 CFR 9.36, (Revision)

Legal Deadline: None.

Abstract: Section 401 of PL 99-166 increases the maximum amount of coverage available under the Servicemen's and Veteran's Group Life Insurance programs to $50,000. It also extends eligibility for Veteran's Group Life Insurance to members of the Individual Ready Reserves and Inactive National Guard. Regulations are being amended to reflect these changes.

Timetable:

Action	Date	FR Cite
NPRM	07/00/88	

Small Entity: No

Agency Contact: Paul F. Koons, Assistant Director for Insurance, Department of Veterans Benefits (29), Veterans Administration, Veterans Administration Insurance Center, P.O. Box 8079, Philadelphia, PA 19101, 215 951-5360

RIN: 2900-AC06

3327. COMPUTATION OF ENTITLEMENT UNDER CHAPTER 31

Legal Authority: 38 USC 1505

CFR Citation: 38 CFR Not yet determined

Legal Deadline: None.

Abstract: To establish a specific method for determining entitlement changes under chapter 31. In view of the number of education and training programs now authorized under title 38, a specific statement of chapter 31 policy for determining entitlement changes is needed.

Timetable:

Action	Date	FR Cite
NPRM	07/00/88	

Small Entity: No

Agency Contact: Morris Triestman, Rehabilitation Consultant, Policy and Program Development, Veterans Administration, Department of Veterans Benefits (226), 810 Vermont Avenue, NW, Washington, DC 20420, 202 233-2086

RIN: 2900-AC08

3328. NONDUPLICATION - FEDERAL PROGRAMS

Legal Authority: 38 USC 1508(f)

CFR Citation: 38 CFR 21.22; 38 CFR 21.264

Legal Deadline: None.

Abstract: A veteran eligible for assistance under the vocational rehabilitation program (chapter 31, title 38 USC) and under the all volunteer force educational assistance program (chapter 30, title 38 USC) may elect to pursue a program of education under chapter 30 as a part of a vocational rehabilitation program under chapter 31. A veteran making such an election would only receive benefits otherwise payable under chapter 30.

Timetable:

Action	Date	FR Cite
NPRM	07/01/88	

Small Entity: No

Agency Contact: Morris Triestman, Rehabilitation Consultant, Policy and Program Development, Veterans Administration, Department of Veterans Benefits (226), 810 Vermont Avenue, NW, Washington, DC 20420, 202 233-2086

RIN: 2900-AC41

3329. PROVIDING AN INITIAL EVALUATION FOR A VETERAN NOT RESIDING IN A STATE

Legal Authority: 38 USC 111; 38 USC 1506

CFR Citation: 38 CFR 21.100; 38 CFR 21.376

Legal Deadline: None.

Abstract: An initial evaluation is provided each veteran requesting assistance under the vocational rehabilitation program. The purpose of the initial evaluation is to determine eligibility and entitlement to vocational rehabilitation and plan a program of vocational rehabilitation for eligible veterans. The initial evaluation is provided by VA counseling psychologists in the United States. Since interpersonal discussion is the essence of counseling, providing an initial evaluation to a veteran residing overseas by a VA counselor located in this country poses logistical and other problems. We are proposing that current regulations be amended to allow for greater flexibility in providing initial evaluations to veterans not residing in a state, including those veterans residing overseas. The alternatives to the present system include, but are not limited to contracting with qualified counseling staff located in the area in which the veteran resides, to conduct a part of the evaluation. All decisions as to eligibility for services would continue to be made by VA staff.

Timetable:

Action	Date	FR Cite
NPRM	06/00/88	

Small Entity: No

Agency Contact: Morris Triestman, Rehabilitation Consultant, Policy and Program Development, Veterans Administration, Department of Veterans Benefits (226), 810 Vermont Avenue, NW, Washington, DC 20420, 202 233-2086

RIN: 2900-AC46

3330. VETERANS EDUCATION; FEDERAL EQUAL OPPORTUNITY LAWS

Legal Authority: 42 USC 2000d; 20 USC 1681; 29 USC 794; 42 USC 6101

CFR Citation: 38 CFR 21.4300; 38 CFR 21.4301; 38 CFR 21.4302; 38 CFR 21.4304; 38 CFR 21.4305; 38 CFR 21.4306; 38 CFR 21.4307; 38 CFR 21.4135

Legal Deadline: None.

Abstract: The VA is proposing to rescind several regulations. These regulations concern the implementation of Title VI, Civil Rights Act of 1964 in the education programs which the VA administers. The regulations either conflict with or repeat unnecessarily other regulations which deal with the implementation of that Act. Rescinding these regulations will eliminate any confusion in the public's perception of the way the VA is implementing this Act.

Timetable:

Action	Date	FR Cite
NPRM	09/00/88	

Small Entity: No

Agency Contact: June C. Schaeffer, Assistant Director for Educational Policy, Veterans Administration, Department of Veterans Benefits (225), 810 Vermont Avenue, NW, Washington, DC 20420, 202 233-2092

RIN: 2900-AC52

3331. PROCEDURAL DUE PROCESS

Legal Authority: 38 USC 210(c)

CFR Citation: 38 CFR 3.103; 38 CFR 3.105; 38 CFR 3.109; 38 CFR 3.110; 38 CFR 3.114

Legal Deadline: None.

Abstract: These changes expand the procedural due process provided to beneficiaries, especially when benefits are proposed to be reduced or terminated. There is also a clarification of the effective date rule applicable to liberalizing laws or administrative issues.

Timetable:

Action	Date	FR Cite
NPRM	05/01/88	

Small Entity: No

Agency Contact: Robert M. White, Chief, Regulations Staff, Veterans Administration, Department of Veterans Benefits (211B), 810 Vermont Avenue, NW, Washington, DC 20420, 202 233-3005

RIN: 2900-AC54

3332. SYSTEMIC DISEASES, ET AL

Legal Authority: 38 USC 355

CFR Citation: 38 CFR 4.16; 38 CFR 4.29; 38 CFR 4.30; 38 CFR 4.88a

Legal Deadline: None.

Abstract: These changes clarify temporary total disability awards based on hospitalization, unemployability ratings in psychiatric cases, and provide new schedules for rating numerous systemic diseases including acquired immune deficiency syndrome (AIDS).

Timetable:

Action	Date	FR Cite
NPRM	05/01/88	

Small Entity: No

Agency Contact: Robert M. White, Chief, Regulations Staff, Veterans Administration, Department of Veterans Benefits (211B), 810 Vermont Avenue, NW, Washington, DC 20420, 202 233-3005

RIN: 2900-AC57

3333. EXTENSION OF TIME LIMIT FOR CLAIMS

Legal Authority: 38 USC 3013

CFR Citation: 38 CFR 21.32

Legal Deadline: None.

Abstract: Under current rules a veteran's request for assistance under the vocational rehabilitation program may be adversely affected if the veteran fails to timely provide information requested by the VA even if the VA did not inform the veteran of the time limits for providing the information requested. The VA is proposing to change these rules to extend the period during which evidence may be submitted if the VA did not inform the veteran of the time limits for submitting the requested information.

Timetable:

Action	Date	FR Cite
NPRM	06/00/88	

Small Entity: No

Agency Contact: Morris Triestman, Rehabilitation Consultant, Policy and Program Development, Veterans Administration, Department of Veterans Benefits (226), 810 Vermont Avenue, NW, Washington, DC 20420, 202 233-2886

RIN: 2900-AC81

3334. COMPLIANCE WITH CIVIL RIGHTS PROVISIONS

Legal Authority: 38 USC 1515

CFR Citation: 38 CFR 21.324

Legal Deadline: None.

Abstract: Compliance with civil rights provisions require that payment of benefits to veterans be terminated upon a finding that a veteran is attending a facility which has been found in non-compliance with applicable provisions of Part 18, Nondiscrimination in Federally Assisted Programs of the Veterans Administration. We propose to amend 38 CFR 21.324 to reflect this new requirement. This proposed regulatory amendment includes the provisions of RIN 2900-AC40, which was withdrawn from the Agenda.

Timetable:

Action	Date	FR Cite
NPRM	06/00/88	

Small Entity: No

Additional Information: 2900-AC40, Reduction or Termination Dates of Subsistence Allowance, has been merged with this RIN.

Agency Contact: Morris Triestman, Rehabilitation Consultant, Policy and Program Development, Veterans Administration, Department of Veterans Benefits (226), 810 Vermont Avenue, NW, Washington, DC 20420, 202 233-5449

RIN: 2900-AC72

3335. TRAINING OUTSIDE OF STATE UNDER 38 CFR 21.130

Legal Authority: 38 USC 1514

CFR Citation: 38 CFR 21.130

Legal Deadline: None.

Abstract: The provision of training outside a state is subject to certain limitations not applicable to training pursued within the United States. The VA is proposing to amend these provisions in the case of veterans who wish to become employed outside the United States. The purpose of the change is to help assure that vocational rehabilitation services lead to suitable employment given the special problems inherent in providing vocational rehabilitation programs outside the United States.

Timetable:

Action	Date	FR Cite
NPRM	06/00/88	

Small Entity: No

Agency Contact: Morris Triestman, Rehabilitation Consultant, Policy and Program Development, Veterans Administration, Department of Veterans Benefits (226), 810 Vermont Avenue, NW, Washington, DC 20420, 202 233-2886

RIN: 2900-AC73

3336. VETERANS EDUCATION; AMENDMENTS NEEDED TO IMPLEMENT PUB. L. 99-576

Legal Authority: PL 99-576

CFR Citation: 38 CFR 21.1022; 38 CFR 21.3022; 38 CFR 21.3046; 38 CFR 21.4022; 38 CFR 21.4100; 38 CFR 21.4101; 38 CFR 21.4102; 38 CFR 21.4104; 38 CFR 21.4136; 38 CFR 21.4137; 38 CFR 21.4138; 38 CFR 21.4230; 38 CFR 21.4231; 38 CFR 21.4232; 38 CFR 21.4233; ...

Legal Deadline: None.

Abstract: The Veterans' Benefits Improvement and Health-Care Authorization Act of 1986 contains several provisions which affect the administration of Dependents' Educational Assistance and benefits provided under the Vietnam Era GI Bill. The most important provisions include a change to the way in which the VA must measure certain courses which do not lead to a standard college degree; a change in the way the eligibility period is determined for some spouses eligible to receive Dependents' Educational Assistance; and a change to the provision governing receipt of benefits under the Vietnam Era GI Bill and other education programs administered by the VA.

Timetable:

Action	Date	FR Cite
NPRM	06/01/88	

Small Entity: No

Agency Contact: June C. Schaeffer, Assistant Director for Educational Policy, Veterans Administration, Department of Veterans Benefits (225), 810 Vermont Avenue, NW, Washington, DC 20420, 202 233-2092

RIN: 2900-AC76

3337. EXTENSION OF THE INDEPENDENT LIVING SERVICES PROGRAM

Legal Authority: 38 USC 1520; PL 99-576

CFR Citation: 38 CFR 21.160; 38 CFR 21.162; 38 CFR 21.294

Legal Deadline: None.

Abstract: The program of independent living services has been extended through FY 89. The current rules governing this program are amended to incorporate the statutory extension of the program, and make other changes to simplify and improve program administration. These proposed changes reflect, in part, reductions in reporting

requirements previously required under the law.

Timetable:

Action	Date	FR Cite
NPRM	03/21/88	53 FR 9125
NPRM Comment Period End	04/19/88	53 FR 9125
Final Action	09/30/88	

Small Entity: No

Agency Contact: Morris Triestman, Rehabilitation Consultant, Policy and Program Development, Veterans Administration, Department of Veterans Benefits (225), 810 Vermont Avenue, NW, Washington, DC 20420, 202 233-2886

RIN: 2900-AC82

3338. SUSPENSION OF INDIVIDUAL EMPLOYEES OF MANUFACTURED HOME DEALERS

Legal Authority: 38 USC 210(c); 38 USC 1803(c)(1); 38 USC 1819(g)

CFR Citation: 38 CFR 36.4235

Legal Deadline: None.

Abstract: Present regulations authorize the Administrator to refuse to guarantee loans to purchase manufactured homes from dealers determined by the Administrator to have engaged in contracts of sale or methods or practices which are unfair or prejudicial to veteran purchasers. It is proposed to amend this regulation to also authorize suspension of individual employees of manufactured home dealers who engage in unfair or prejudicial practices.

Timetable:

Action	Date	FR Cite
NPRM	05/00/88	

Small Entity: No

Agency Contact: George D. Moerman, Assistant Director for Loan Policy, Veterans Administration, Department of Veterans Benefits (264), 810 Vermont Avenue, NW, Washington, DC 20420, 202 233-3042

RIN: 2900-AC83

3339. LOANS TO PURCHASE MANUFACTURED HOMES

Legal Authority: 38 USC 210(c); 38 USC 1803(c)(1); 38 USC 1819(g)

CFR Citation: 38 CFR 36.4202; 38 CFR 36.4204; 38 CFR 36.4222; 38 CFR 36.4232; 38 CFR 36.4263

Legal Deadline: None.

Abstract: A number of regulatory changes will be proposed for the VA manufactured home loan program. VA would conform to HUD's practices on certifications, invoicing and volume rebates. Lenders would be permitted to file claims upon receipt of VA's resale price and thereafter retain the profit or loss which results from subsequent sale of the home. Broader insurance coverage would be required to cover missing items at repossession. Actual freight costs would be allowed in the invoice, and the amounts and items which could be included in the loan would be revised.

Timetable:

Action	Date	FR Cite
NPRM	00/00/00	

Small Entity: No

Agency Contact: George D. Moerman, Assistant Director for Loan Policy, Veterans Administration, Department of Veterans Benefits (264), 810 Vermont Avenue, NW, Washington, DC 20420, 202 233-3042

RIN: 2900-AC85

3340. VA HOME LOAN CREDIT STANDARDS; NEW SAH GRANT

Legal Authority: 38 USC 210(c); 38 USC 1803(c)(1); 38 USC 1819(g); PL 99-576

CFR Citation: 38 CFR 4200 et seq.; 38 CFR 4300 et seq.; 38 CFR 4400 et seq.

Legal Deadline: None.

Abstract: Regulations will be amended to implement the requirements of Public Law 99-576. The new law adds a new specially adapted housing grant purpose and requires that VA home loan credit standards be in regulatory form.

Timetable:

Action	Date	FR Cite
NPRM	00/00/00	

Small Entity: No

Agency Contact: George D. Moerman, Assistant Director for Loan Policy, Veterans Administration, Department of Veterans Benefits (264), 810 Vermont Avenue, NW, Washington, DC 20420, 202 233-3042

RIN: 2900-AC90

3341. VETERANS EDUCATION; EFFECT OF INTERNAL VA REORGANIZATION

Legal Authority: 38 USC 212

CFR Citation: 38 CFR 2.76; 38 CFR 2.80; 38 CFR 2.81; 38 CFR 2.82; 38 CFR 2.96; 38 CFR 21.74; 38 CFR 21.98; 38 CFR 21.100; 38 CFR 21.162; 38 CFR 21.222; 38 CFR 21.254; 38 CFR 21.256; 38 CFR 21.258; 38 CFR 21.292; 38 CFR 21.382; ...

Legal Deadline: None.

Abstract: The Vocational Rehabilitation and Counseling Service and the Education Service within the Department of Veterans Benefits of the VA have been merged. Many regulations make specific reference to either the Director, Education Service or the Director, Vocational Rehabilitation and Counseling. The amended regulations will replace all references to the Director, Education Service, and the Director, Vocational Rehabilitation and Counseling Service, with reference to the Director, Vocational Rehabilitation and Education Service.

Timetable:

Action	Date	FR Cite
NPRM	09/00/88	

Small Entity: No

Agency Contact: June C. Schaeffer, Assistant Director for Educational Policy, Department of Veterans Benefits (225), Veterans Administration, 810 Vermont Avenue, NW, Washington, DC 20420, 202 233-2092

RIN: 2900-AD04

3342. ● DEFINITION OF FRAUD

Legal Authority: 38 USC 210(c)

CFR Citation: 38 CFR 3.1

Legal Deadline: None.

Abstract: The definition of fraud, except for forfeiture purposes, is being placed in the general definitions section and includes acts of omission as well as acts of commission. This action will allow a finding of fraud in certain cases where a beneficiary receives or retains benefits based on a knowing failure to provide necessary information. This is a new proposal based on comments the agency received on its original proposal under RIN 2900-AC01.

Timetable:

Action	Date	FR Cite
NPRM	05/01/88	

Small Entity: No

Agency Contact: Robert M. White, Chief, Regulations Staff, Department of Veterans Benefits (211B), Veterans Administration, 810 Vermont Avenue, NW, Washington, DC 20420, 202 357-6504

RIN: 2900-AD19

3343. ● VETERANS EDUCATION; HOMELESS CLAIMANTS

Legal Authority: 38 USC 1671; 38 USC 3003

CFR Citation: 38 CFR 21.1030; 38 CFR 21.4139

Legal Deadline: None.

Abstract: The Homeless Eligibility Clarification Act provides that benefits under laws administered by the VA may not be denied an applicant on the grounds that the applicant does not have a mailing address. The VA must implement this provision of law by amending regulations dealing with claims for benefits under some of the education programs administered by the VA.

Timetable:

Action	Date	FR Cite
NPRM	05/00/88	

Small Entity: No

Agency Contact: June C. Schaeffer, Assistant Director for Educational Policy, and Program Administration (225), Veterans Administration, Department of Veterans Benefits, 810 Vermont Avenue, NW, Washington, DC 20420, 202 233-2092

RIN: 2900-AD21

3344. ● VETERANS EDUCATION; INCREASE IN RATES PAYABLE IN THE EATP

Legal Authority: 10 USC 2143; 10 USC 2144

CFR Citation: 38 CFR 21.5820; 38 CFR 21.5822

Legal Deadline: None.

Abstract: The law provides that rates of subsistence allowance and educational assistance payable under the Educational Assistance Test Program shall be adjusted annually based upon the average actual cost of attendance at public institutions of higher education in the 12-month period since the rates were last adjusted. After consultation with the Department of Education, the Department of Defense has concluded that these rates should be increased by 6 percent for the 1987-88 school year. Accordingly, the VA will propose amending the regulations dealing with these rates.

Timetable:

Action	Date	FR Cite
NPRM	06/01/88	

Small Entity: No

Agency Contact: June C. Schaeffer, Assistant Director for Educational Policy, and Program Administration (225), Veterans Administration, Department of Veterans Benefits, 810 Vermont Avenue, NW, Washington, DC 20420, 202 233-2092

RIN: 2900-AD23

3345. ● DUE PROCESS

Legal Authority: 38 USC 210(c)

CFR Citation: 38 CFR 21.420

Legal Deadline: None.

Abstract: The VA is proposing to bring procedures for informing veterans of changes in payments for dependents into conformity with the decision of the courts. Under the proposed change, the VA will provide 60 days advance notice if the veteran loses benefits being paid for a dependent in certain cases.

Timetable:

Action	Date	FR Cite
NPRM	07/00/88	

Small Entity: No

Agency Contact: Morris Triestman, Rehabilitation Consultant, Department of Veterans Benefits (226), Veterans Administration, 810 Vermont Avenue, NW, Washington, DC 20420, 202 233-2886

RIN: 2900-AD27

3346. ● HOMELESS CLAIMANTS FOR VOCATIONAL REHABILITATION

Legal Authority: PL 99-570, Sec 11007

CFR Citation: 38 CFR 21.33

Legal Deadline: None.

Abstract: The Homeless Eligibility Clarification Act provides that benefits under laws administered by the VA may not be denied an applicant because the applicant does not have a mailing address and requires the VA establish a method of delivery of benefits checks. The VA is proposing that checks be delivered to the agent cashier at the VA regional office in these cases, and be released to the veteran upon presentation of proper identification.

Timetable:

Action	Date	FR Cite
NPRM	06/00/88	

Small Entity: No

Agency Contact: Morris Triestman, Rehabilitation Consultant, Department of Veterans Benefits (226), Veterans Administration, 810 Vermont Avenue, NW, Washington, DC 20420, 202 233-2886

RIN: 2900-AD28

3347. ● PLACING USE OF THE VOCATIONAL REHABILITATION PANEL ON A DISCRETIONARY BASIS

Legal Authority: 38 USC 1504(a); 38 USC 1505(a); 38 USC 1506(a); 38 USC 1520

CFR Citation: 38 CFR 21.62; 38 CFR 21.74; 38 CFR 21.76; 38 CFR 21.52; 38 CFR 21.53

Legal Deadline: None.

Abstract: Under current provisions, use of the Vocational Rehabilitation Panel is required in certain instances. The role of the Panel is to assist in helping seriously disabled veterans successfully pursue a rehabilitation program. The requirement for consultation was a sound policy when the vocational rehabilitation program was substantially revised and broadened in 1980. As staff have gained experience with the new policies which resulted from the revision of the rehabilitation program in 1980, the need for consultation in every case has decreased. Current field experience indicates that placing use of the Panel on a discretionary basis is in the interest of the veteran and the government.

Timetable:

Action	Date	FR Cite
NPRM	06/00/88	

Small Entity: No

Agency Contact: Morris Triestman, Rehabilitation Consultant, Department of Veterans Benefits (226), Veterans Administration, 810 Vermont Avenue,

NW, Washington, DC 20420, 202 233-3886

RIN: 2900-AD29

3348. ● ASSUMPTION OF VA GUARANTEED LOANS

Legal Authority: 38 USC 210(c); 38 USC 1802(b); PL 100-198

CFR Citation: 38 CFR 36.4300; 38 CFR 36.4200

Legal Deadline: None.

Abstract: Pub. L. 100-198 requires that assumers of VA loans committed to on or after March 1, 1988, meet certain criteria, including credit underwriting, before the assumption may take place. The proposed regulations will place the requirements of the law into regulatory form and will, as required by the law, set timeliness standards for processing assumed loans and the maximum that may be charged for the processing.

Timetable:

Action	Date	FR Cite
NPRM	00/00/00	

Small Entity: No

Agency Contact: Raymond Brodie, Assistant Director for Loan Management, Department of Veterans Benefits (261), Veterans Administration, 810 Vermont Avenue, NW, Washington, DC 20420, 202 233-3668

RIN: 2900-AD30

3349. ● PROCESSING OF VA APPRAISALS BY DESIGNATED LENDERS

Legal Authority: 38 USC 210(c); PL 100-198; 38 USC 1810; 38 USC 1810(b)(5); 38 USC 1831

CFR Citation: 38 CFR 36.4300

Legal Deadline: None.

Abstract: Pub. L. 100-198 requires the publication of regulations authorizing certain lenders to process appraisals on VA guaranteed loans. Such lenders will determine the value of the property, based on an appraisal by an appraiser selected by the VA, without VA's approval or review of the appraisal. The regulations will set the criteria for being a designated lender and the procedures to follow.

Timetable:

Action	Date	FR Cite
NPRM	00/00/00	

Small Entity: No

Agency Contact: Walter Burke, Assistant Director for Construction, and Valuation, Veterans Administration, Department of Veterans Benefits (262), 810 Vermont Avenue, NW, Washington, DC 20420, 202 233-2691

RIN: 2900-AD31

3350. ● QUALIFICATION REQUIREMENTS FOR VA FEE APPRAISERS

Legal Authority: 38 USC 210(c); 38 USC 1831; PL 100-198

CFR Citation: 38 CFR 4339

Legal Deadline: None.

Abstract: Pub. L. 100-198 requires that certain standards for being designated as a VA fee appraiser be published in regulatory form. The standards are to include the successful completion of a written test, submission of a sample appraisal, certification of an appropriate number of years of experience as an appraiser, and submission of recommendations from other appraisers. In the past, such requirements have been published in administrative issues other than regulations.

Timetable:

Action	Date	FR Cite
NPRM	00/00/00	

Small Entity: No

Agency Contact: Walter Burke, Assistant Director for Construction, and Valuation, Veterans Administration, Department of Veterans Benefits (262), 810 Vermont Avenue, NW, Washington, DC 20420, 202 233-2691

RIN: 2900-AD32

3351. ● REQUIREMENTS FOR NONSUPERVISED AUTOMATIC LENDERS

Legal Authority: 38 USC 210(c); 38 USC 1802(d)

CFR Citation: 38 CFR 4300; 38 CFR 4200

Legal Deadline: None.

Abstract: The VA may grant lenders the authority to process loans on the automatic basis if they meet requirements set by the VA. Currently, these requirements are published in administrative issues with release to program participants. The proposed regulations will place the requirements in regulatory form to ensure proper notice. The requirements will include minimums for such items as working capital, experience of the firm and/or principal officers and its underwriters. These regulations will apply to lenders such as mortgage bankers who are not already under supervision by State or Federal entities.

Timetable:

Action	Date	FR Cite
NPRM	00/00/00	

Small Entity: No

Agency Contact: George D. Moerman, Assistant Director for Loan Policy, Department of Veterans Benefits (264), Veterans Administration, 810 Vermont Avenue, NW, Washington, DC 20420, 202 233-3042

RIN: 2900-AD33

3352. ● ALLOWABLE FEES AND CHARGES FOR VA GUARANTEED LOANS

Legal Authority: 38 USC 210(c); 38 USC 1803(c)

CFR Citation: 38 CFR 4312; 38 CFR 4254

Legal Deadline: None.

Abstract: VA regulations allow the veteran obtaining a VA guaranteed loan to pay the lender making the loan a one percent origination fee (one percent) to cover the processing of the loan. Any other discount points required by the lender are to be paid by someone other than the veteran except in those cases where it is specifically allowed, such as refinancing loans. This regulation would clarify the instances in which a veteran may or may not pay discount points. This regulation change would also clarify that discount points may not be paid by the veteran (except when specifically allowed) to anyone, including the lender, seller or other concerned party.

Timetable:

Action	Date	FR Cite
NPRM	00/00/00	

Small Entity: No

Agency Contact: George D. Moerman, Assistant Director for Loan Policy, Department of Veterans Benefits (264), Veterans Administration, 810 Vermont

Avenue, NW, Washington, DC 20420, 202 233-3042

RIN: 2900-AD34

3353. ● FULL DISCLOSURE OF BENEFICIARY'S INCOME AND ASSETS

Legal Authority: PL 99-576, Sec 505

CFR Citation: 38 CFR Not yet determined

Legal Deadline: None.

Abstract: Federally appointed fiduciaries are not required, except under very specific circumstances, to divulge non-VA income and assets that the fiduciary may be holding on behalf of incompetent VA beneficiaries. It is difficult to determine whether the fiduciary is using the beneficiary's VA assets appropriately unless placed in the context of total income and assets available. The purpose of this regulation is to lessen the potential for fraud, waste and abuse.

Timetable:

Action	Date	FR Cite
NPRM	06/00/88	

Small Entity: No

Agency Contact: William Saliski, Jr., Program Analyst, Department of Veterans Benefits (273), Veterans Administration, 810 Vermont Avenue, NW, Washington, DC 20420, 202 233-2091

RIN: 2900-AD35

3354. ● PAYMENT OF GUARANTY CLAIMS

Significance: Regulatory Program

Legal Authority: 38 USC 210(c); 38 USC 1803(c)(1); PL 100-196

CFR Citation: 38 CFR 36.4319; 38 CFR 36.4320; 38 CFR 36.4321

Legal Deadline: None.

Abstract: Regulations will be amended to implement the new requirements for payment of claims. Under the new formulas, VA will exclude from theguaranty claim payment the interest which accrues during periods of forbearance granted at VA's request, and when the veteran files for bankruptcy. As a result, we expect that a number of cases which would result in the lender being required to dispose of the property will instead result in VA acquiring the property and paying a smaller claim. The adjustment in a VA-requested forbearance or bankruptcy situation will only be made if doing so will result in VA offering to acquire the property when the property would otherwise not be acquired by the VA. In cases where VA is at fault for the delay in foreclosure, for example, a failure to provide bidding instructions in a timely manner, VA will also exclude from the calculation as to whether or not VA will acquire the property interest which accrues during the period of delay, but will allow such interest in the computation of the guaranty claim.

Timetable:

Action	Date	FR Cite
NPRM	09/30/88	
Final Action	01/30/89	

Small Entity: Undetermined

Agency Contact: Raymond L. Brodie, Assistant Director for Loan Management, Loan Guaranty Service, Veterans Administration, 810 Vermont Avenue NW., Washington, DC 20420, 202 233-3668

RIN: 2900-AD39

BOARD OF VETERANS APPEALS

3355. APPEALS REGULATIONS AND RULES OF PRACTICE- STATUS OF LEGAL INTERNS, LAW STUDENTS AND PARALEGALS

Legal Authority: 38 USC 3401; 38 USC 3404; 38 USC 4005(b)(2)

CFR Citation: 38 CFR 19.152, (Revision)

Legal Deadline: None.

Abstract: The regulation will be amended to clarify the status of attorneys to be employed by service organizations and to allow legal interns, law students and paralegals to work with these attorneys who are presenting appeals in any capacity.

Timetable:

Action	Date	FR Cite
NPRM	04/30/88	

Small Entity: No

Agency Contact: Jan Donsbach, Special (Legal) Assistant, Board of Veterans Appeals (01C), Veterans Administration, 810 Vermont Avenue, NW, Washington, DC 20420, 202 233-2978

RIN: 2900-AC11

3356. APPEALS REGULATIONS AND RULES OF PRACTICE - HEARING DATE

Legal Authority: 38 USC 4002; 38 USC 4005A

CFR Citation: 38 CFR 19.159, (Revision)

Legal Deadline: None.

Abstract: This regulation will be revised to provide an appellant or representative a 60-day period in which to reschedule a hearing date. The revision will remedy scheduling conflicts created by multiple requests for a change of hearing date from the same appellant and/or representative, without abridging the appellant's right to due process.

Timetable:

Action	Date	FR Cite
NPRM	04/30/88	

Small Entity: No

Agency Contact: Jan Donsbach, Special (Legal) Assistant, Board of Veterans Appeals (01C), Veterans Administration, 810 Vermont Avenue, NW, Washington, DC 20420, 202 233-2978

RIN: 2900-AC88

3357. ● APPEALS REGULATIONS AND RULES OF PRACTICE; CUTOFF DATE FOR ACCEPTANCE OF EVIDENCE

Legal Authority: 38 USC 4004; 38 USC 4005

CFR Citation: 38 CFR 19.174

Legal Deadline: None.

Abstract: This regulation will be amended to specify a cutoff date for the acceptance of additional evidence, requests for hearings or changes of representation once an appeal is transferred to the Board of Veterans Appeals.

Timetable:

Action	Date	FR Cite
NPRM	00/00/00	

Small Entity: No

Agency Contact: Jan Donsbach, Special Legal Assistant (01C), Board of Veterans Appeals, Veterans Administration, 810 Vermont Avenue,

NW, Washington, DC 20420, 202 233-2978

RIN: 2900-AD14

BOARD OF CONTRACT APPEALS/CONTRACT APPEALS BOARD

3358. EQUAL ACCESS TO JUSTICE; PROCEDURAL RULES

Legal Authority: 5 USC 504 The Equal Access to Justice Act; PL 99-80

CFR Citation: 38 CFR 1.790

Legal Deadline: None.

Abstract: The Equal Access to Justice Act provides for the award of attorney fees and other expenses to eligible individuals and entities who are parties to appeals before the Board of Contract Appeals. An eligible party may receive an award when it prevails over the Government, unless the Government's position was substantially justified or special circumstances make an award unjust. This document describes the standards for eligibility and the procedures for application and processing by the Board.

Timetable:

Action	Date	FR Cite
NPRM	10/00/88	
Final Action	00/00/00	

Small Entity: Not Applicable

Government Levels Affected: Federal

Agency Contact: Sally Pfund, Legal Assistant, Board of Contract Appeals (09), Veterans Administration, 810 Vermont Avenue, NW, Washington, DC 20420, 202 275-0430

RIN: 2900-AC33

OFFICE OF EQUAL OPPORTUNITY

3359. NONDISCRIMINATION ON THE BASIS OF SEX UNDER FEDERALLY ASSISTED EDUCATION PROGRAMS AND ACTIVITIES

Significance: Regulatory Program

Legal Authority: 20 USC 1681 et seq; 38 USC 210(a); EO 12250; EO 12067

CFR Citation: 38 CFR 18

Legal Deadline: None.

Abstract: To establish standards and procedures for enforcing Title IX of the Education Amendments of 1972 in educational programs and activities receiving Federal financial assistance from the VA. Title IX prohibits discrimination on the basis of sex. There are no alternatives to the issuance of the regulations. Participants, potential participants and the public in general will benefit from Federally assisted programs provided free from prohibited discrimination based on sex.

This originally appeared as a proposed rule in the Federal Register of April 25, 1979 (44 FR 24320). Because of the extended time frame due to internal agency consultation with the Department of Justice, the VA is planning to repropose these regulations.

Timetable:

Action	Date	FR Cite
NPRM	06/00/88	

Small Entity: Undetermined

Agency Contact: Rodney J. Cash, Equal Opportunity Specialist, Veterans Administration, Office of Equal Opportunity (06A), 810 Vermont Avenue, NW, Washington, DC 20420, 202 233-2150

RIN: 2900-AB51

3360. NONDISCRIMINATION ON THE BASIS OF HANDICAP IN FEDERALLY ASSISTED PROGRAMS AND ACTIVITIES

Legal Authority: 29 USC 794

CFR Citation: 38 CFR 18.423(c); 38 CFR 18.401 to 18.426, App A

Legal Deadline: None.

Abstract: To incorporate a reference to the Uniform Federal Accessibility Standards (UFAS) and update the list of Federal financial assistance programs administered by the VA. The existing regulations require that new construction and alteration of facilities be made in an accessible manner. The regulations provide that new construction or alteration of facilities in conformance with the American National Standard Specifications for Making Building and Facilities Accessible to, and Usable by, the Physically Handicapped (ANSI A117.1-1961 (B 1971)) shall constitute compliance with the accessibility requirements for new construction and alteration of facilities. The proposed revision will replace the current standard with the UFAS, published under the Architectural Barriers Act of 1968. Because some facilities subject to the accessibility requirements of section 504 of the Rehabilitation Act of 1973 are also subject to the accessibility requirements of the Architectural Barriers Act, this proposal would eliminate any potential conflict between standards enforced under the two statutes.

Timetable:

Action	Date	FR Cite
NPRM	06/01/88	

Small Entity: No

Agency Contact: Rodney J. Cash, Equal Opportunity Specialist, Veterans Administration, Office of Equal Opportunity (06A), 810 Vermont Avenue, NW, Washington, DC 20420, 202 233-2150

RIN: 2900-AB87

OFFICE OF THE GENERAL COUNSEL

3361. EFFECT OF GENERAL COUNSEL OPINIONS

Legal Authority: 38 USC 210(c)(1); 38 USC 4004(c)

CFR Citation: 38 CFR 14.507; 38 CFR 2.6; 38 CFR 3101

Legal Deadline: None.

Abstract: This regulation would clarify the effect of General Counsel opinions with respect to binding and precedential legal interpretations. No alternatives are being considered. The change will assist VA personnel in understanding the effect of General Counsel opinions. It will benefit the public by enhancing the accessibility of General Counsel opinions.

Timetable:

Action	Date	FR Cite
NPRM	03/15/88	53 FR 8471
NPRM Comment Period End	04/14/88	53 FR 8471
Final Action	08/31/88	

Small Entity: No

Agency Contact: Andrew J. Mullen, Deputy Assistant General Counsel, Veterans Administration, Office of the General Counsel (022A), 810 Vermont Avenue, NW, Washington, DC 20420, 202 233-2448

RIN: 2900-AB22

3362. ● CLAIMS UNDER THE FEDERAL TORT CLAIMS ACT

Legal Authority: 28 USC 2671 to 2680

CFR Citation: 38 CFR 14.600 to 14.610

Legal Deadline: None.

Abstract: This proposal updates VA regulations prescribing procedures for the filing, consideration, and disposition of administrative tort claims under the Federal Tort Claims Act. No alternatives are being considered. The changes will assist the public and VA personnel in understanding VA procedures and modifications in the law as a result of judicial decisions.

Timetable:

Action	Date	FR Cite
NPRM	06/30/88	

Small Entity: No

Agency Contact: E. Douglas Bradshaw, Jr., Deputy Assistant General Counsel, Office of the General Counsel (021B), Veterans Administration, 810 Vermont Avenue, NW, Washington, DC 20420, 202 233-2153

RIN: 2900-AD15

OFFICE OF FACILITIES

3363. PROTECTION OF ARCHAEOLOGICAL RESOURCES

Legal Authority: 16 USC 470ff Archaeological Resources Protection Act

CFR Citation: 38 CFR 27

Legal Deadline: None.

Abstract: The Act requires that Federal land managers promulgate rules and regulations consistent with Uniform Regulations as may be appropriate to carry out his/her function and authorities under the Act to protect archaeological resources on Federal lands. This rule making will enable the VA to protect archaeological resources on VA-managed public lands by issuing permits for authorized excavations and/or removal of archaeological resources, by imposing civil penalties for unauthorized excavation, removal, alteration, damage or defacement of archaeological resources, by providing for the preservation of archaeological collections and data, and by ensuring confidentiality of information about archaeological resources when disclosure would threaten the resources.

Timetable:

Action	Date	FR Cite
NPRM	00/00/00	

Small Entity: No

Affected Sectors: None

Agency Contact: Gjore J. Mollenhoff, Historic Preservation Officer, Office of Facilities (086B), Veterans Administration, 810 Vermont Avenue, NW, Washington, DC 20420, 202 233-3447

RIN: 2900-AC26

3364. PARKING FEES AT VA MEDICAL FACILITIES

Legal Authority: 38 USC 5009; 38 USC 210; PL 99-576

CFR Citation: 38 CFR 1.300 to 1.303

Legal Deadline: None.

Abstract: The Veterans' Benefits Improvement and Health-Care Authorization Act of 1986, Pub. L. 99-576, Sec. 223, Parking Facilities, amends 38 U.S.C. 5009, and provides for the establishment and collection of parking fees at certain VA medical facilities, with the deposit of fees collected into a Revolving Fund. The law provides that fees shall not be charged for the accommodation of any vehicle used to transport, to or from a medical facility a veteran or eligible person seeking examination or treatment, or, a volunteer worker in connection with such worker performing services for the benefit of veterans or eligible persons receiving care at a medical facility. The proposed regulation will provide definitions to be used in implementing the law, including a definition of the term "volunteer worker;" provide for the terms and conditions under which such parking will be provided; and establish a methodology for determining reasonable parking charges to be established by the Administrator at affected medical facilities.

Timetable:

Action	Date	FR Cite
NPRM	03/18/88	53 FR 8934
NPRM Comment Period End	04/18/88	53 FR 8934
Final Action	00/00/00	

Small Entity: No

Agency Contact: Donald E. Johnson, Chief, Real Property Program Management Division (084A), Veterans Administration, 810 Vermont Avenue, NW, Washington, DC 20420, 202 233-5026

RIN: 2900-AD05

OFFICE OF INFORMATION MANAGEMENT AND STATISTICS

3365. DISCLOSURE OF CONFIDENTIAL COMMERCIAL INFORMATION

Legal Authority: 5 USC 552(b)(4); EO 12600

CFR Citation: 38 CFR 1.554

Legal Deadline: None.

Abstract: Executive Order 12600, Predisclosure Notification Procedures for Confidential Commercial Information, establishes certain mandatory and uniform procedures for handling Freedom of Information Act (FOIA) requests for records which may contain confidential commercial information, protected by FOIA exemption (5 U.S.C. 552(b)(4)). The Executive Order requires the notification and designation procedures be established in agency regulations. Accordingly, the revision to 38 CFR 1.554 will comply with the requirements of the Executive Order.

Timetable:

Action	Date	FR Cite
NPRM	06/30/88	

Small Entity: No

Agency Contact: Donald R. Howell, Management Analyst, Office of Info. Mgmt. and Statistics (733), Veterans Administration, 810 Vermont Avenue, NW, Washington, DC 20420, 202 233-3648

RIN: 2900-AD09

VETERANS ADMINISTRATION (VA)

Final Rule Stage

DEPARTMENT OF MEDICINE AND SURGERY

3366. USE OF COMMUNITY NURSING HOME FACILITIES

Legal Authority: 38 USC 620

CFR Citation: 38 CFR 17.51a

Legal Deadline: None.

Abstract: Existing regulations that permit an extension to an approved 6-month period of Community Nursing Home Care at VA expense are not definitive enough regarding the circumstances of an unusual nature which provide the impetus for granting such extensions. The proposed change will correct that deficiency.

Timetable:

Action	Date	FR Cite
NPRM	06/11/87	52 FR 22351
NPRM Comment Period End	07/10/87	52 FR 22351
Final Action	04/30/88	

Small Entity: No

Agency Contact: James R. Kelly, Patient Treatment Service, Department of Medicine and Surgery (181), Veterans Administration, 810 Vermont Avenue, NW, Washington, DC 20420, 202 233-3692

RIN: 2900-AB21

DEPARTMENT OF VETERANS BENEFITS

3367. RESERVISTS EDUCATION; NEW EDUCATION PROGRAM FOR MEMBERS OF THE SELECTED RESERVE

Legal Authority: 10 USC 2131 et seq

CFR Citation: 38 CFR 21

Legal Deadline: None.

Abstract: A new education program for members of the Selected Reserve has been established by law. Regulations are needed so that the new program may be properly administered.

Timetable:

Action	Date	FR Cite
NPRM	11/17/87	52 FR 44054
NPRM Comment Period End	12/18/87	52 FR 44054
Final Action	07/00/88	

Small Entity: Undetermined

Agency Contact: June C. Schaeffer, Assistant Director for Educational Policy, Veterans Administration, Department of Veterans Benefits (225), 810 Vermont Avenue, NW, Washington, DC 20420, 202 233-2092

RIN: 2900-AB69

3368. INVESTMENTS BY LEGAL CUSTODIANS

Legal Authority: 38 USC 3202

CFR Citation: 38 CFR 13.103

Legal Deadline: None.

Abstract: The regulation gives Federally appointed legal custodian fiduciaries authority to invest surplus VA funds in savings bonds, or interest or dividend-paying accounts in State or Federally insured institutions. The intended regulation will give authority for investments in pre-need burial plans.

Timetable:

Action	Date	FR Cite
NPRM	09/02/87	52 FR 33248
NPRM Comment Period End	10/05/87	
Final Action	05/31/88	

Small Entity: No

Agency Contact: William B. Saliski, Jr., Program Analyst, Veterans Administration, Department of Veterans Benefits (273), 810 Vermont Avenue, NW, Washington, DC 20420, 202 233-2091

RIN: 2900-AB77

3369. 1. VETERANS SERVICES OFFICER'S ACTION WHEN VETERAN'S ESTATE EQUALS OR EXCEEDS $1,500 2. DETERMINATION OF VALUE OF ESTATE; 38 USC 3203(B)(1)

Legal Authority: 38 USC 3203(b)(1); PL 98-543, Sec 402

CFR Citation: 38 CFR 13.108; 38 CFR 13.109

Legal Deadline: None.

Abstract: 38 CFR 13.108 defines the VSO's action and responsibility when a veteran is subject to discontinuance of payments under 38 USC 3203(b)(1). The intended change simplifies the title, updates the language of subsection (a) and further defines the VSO responsibilities regarding waiver of discontinuance under PL 98-543. 38 CFR 13.109 defines estate for purposes of the $1,500 limitation. The intended change further defines assets and incorporates two new exclusions on the basis of PL 98-543 and an unpublished General Counsel's opinion.

Timetable:

Action	Date	FR Cite
NPRM	09/02/87	52 FR 33248
NPRM Comment Period End	10/05/87	
Final Action	05/31/88	

Small Entity: No

Agency Contact: William B. Saliski, Jr., Program Analyst, Veterans Administration, Department of Veterans Benefits (273), 810 Vermont Avenue, NW, Washington, DC 20420, 202 233-2091

RIN: 2900-AB78

3370. EMPLOYMENT SERVICES FOR CERTAIN ELIGIBLE VETERANS

Legal Authority: 38 USC 1501; 38 USC 1502; 38 USC 1505(b); 38 USC 1516; 38 USC 1517

CFR Citation: 38 CFR 21.47; 38 CFR 21.51; 38 CFR 21.73; 38 CFR 21.250

Legal Deadline: None.

Abstract: The VA has determined that employment assistance may be provided a veteran eligible for chapter 31, if the veteran though trained and qualified for suitable employment, has an employment handicap that prevents him or her from obtaining such employment, even if he or she is not a prior participant in a vocational rehabilitation program. It has previously been held that eligibility for employment services was limited to veterans who were current or prior participants under chapter 31.

Timetable:

Action	Date	FR Cite
NPRM	02/02/88	53 FR 2855
NPRM Comment Period End	03/03/88	
Final Action	06/30/88	

Small Entity: No

Agency Contact: Morris Triestman, Rehabilitation Consultant, Policy and Program Development, Veterans Administration, Department of Veterans Benefits (226), 810 Vermont Avenue,

NW, Washington, DC 20420, 202 233-2800

RIN: 2900-AB89

3371. AMENDMENT OF FORFEITURE REGULATIONS

Legal Authority: 38 USC 210(c)

CFR Citation: 38 CFR 3.901; 38 CFR 3.902; 38 CFR 3.904; 38 CFR 3.905

Legal Deadline: None.

Abstract: These amendments affect death benefits and apportionments in forfeiture cases as well as the form of notice sent to individuals when forfeiture proceedings have been instituted. The definition of fraud previously proposed under this RIN is being reproposed separately based on comments the agency received.

Timetable:

Action	Date	FR Cite
NPRM	11/18/86	51 FR 41644
NPRM Comment Period End	12/17/86	51 FR 41644
Final Action	05/01/88	
Final Action Effective	06/00/88	

Small Entity: No

Agency Contact: Robert M. White, Chief, Regulations Staff, Veterans Administration, Department of Veterans Benefits (211B), 810 Vermont Avenue, NW, Washington, DC 20420, 202 233-3005

RIN: 2900-AC01

3372. INTEREST AND PENALTIES ON UNTIMELY SUBMISSION OF FUNDING FEES BY LENDERS

Legal Authority: 38 USC 210(c); 38 USC 1803(c)(1)

CFR Citation: 38 CFR 36.4254; 38 CFR 36.4312

Legal Deadline: None.

Abstract: Public Law 97-253, the Omnibus Budget Reconciliation Act of 1982 (38 U.S.C. 1829) establishes that a funding fee will be collected on VA loans but the law does not establish any time limits within which it must be paid to the VA. Current VA Loan Guaranty procedures allow lenders up to 60 days from the loan closing date to remit loan funding fees and this delay in their collection and deposit has resulted in a significant amount of potential interest lost to the Federal government. The proposed regulation would require lenders to submit the fees to the VA within a 15 day period from the loan closing date and would implement penalty charges and interest assessments on delinquent submissions. Adoption of this regulation should improve collection timeliness and result in the collection of the interest income that is currently being lost as well as income from interest and penalty charges.

Timetable:

Action	Date	FR Cite
NPRM	10/31/87	52 FR 37973
NPRM Comment Period End	11/12/87	52 FR 37973
Final Action	00/00/00	

Small Entity: No

Agency Contact: George D. Moerman, Assistant Director for Loan Policy, Department of Veterans Benefits (264), Veterans Administration, 810 Vermont Avenue, NW, Washington, DC 20420, 202 233-3042

RIN: 2900-AC03

3373. 1. APPORTIONMENT OF BENEFITS TO DEPENDENTS 2. PAYMENT OF COST OF VETERAN'S MAINTENANCE IN INSTITUTION 3. RECOMMENDATION FOR PAYMENT

Legal Authority: 38 USC 210; 38 USC 3202; 38 USC 3203; PL 98-543, Sec 402

CFR Citation: 38 CFR 13.70; 38 CFR 13.71; 38 CFR 13.74

Legal Deadline: None.

Abstract: 38 CFR 13.70 defines the conditions under which the Veterans Services Officer may recommend an apportionment of benefits to dependents. The proposed amendment will clarify these conditions. The amendment will also remove a reference to mental illness as the sole criteria for a rating of incompetency.

38 CFR 13.71 is to be amended to make clear that the signing of an institutional award agreement does not waive an institution's right to claim payments under 38 USC 641. This action is the result of an unpublished General Counsel opinion.

38 CFR 13.74 is based on the provisions of 38 USC Sec. 3203(b) (1)(A); however, where the law refers to more than one type of institutional care, the regulation refers only to instances of hospitalization. This would seem to preclude application of the regulation when veterans are in State run nursing homes or other institutions operated by the United States or a political subdivision. The VA, therefore, proposes to correct this defect by substituting the terms "institution" and "institutionalization" where appropriate.

Timetable:

Action	Date	FR Cite
NPRM	01/05/87	52 FR 300
NPRM Comment Period End	02/05/87	52 FR 300
Final Action	05/31/88	

Small Entity: No

Government Levels Affected: State

Agency Contact: William Saliski, Jr., Program Analyst, Veterans Administration, Department of Veterans Benefits (273), 810 Vermont Avenue, NW, Washington, DC 20420, 202 233-2091

RIN: 2900-AC10

3374. USE OF CREDIT REPORTS FOR REFINANCING AND RESCHEDULING OF VA-GUARANTEED LOANS AND CLAIM SUBMISSIONS

Legal Authority: 38 USC 210(c)(1); 38 USC 1803(c)(1); 38 USC 1819(g)

CFR Citation: 38 CFR 36.4200; 38 CFR 36.4300

Legal Deadline: None.

Abstract: OMB Circular A-129 requires agencies managing Federal credit programs to obtain credit reports for all new applicants, when refinancing, and when loans are rescheduled in order to verify the information presented in the application. The circular further provides that rescheduling or reamortization shall be permitted only when it is in the best interest of the Government and where the agency has determined that recovery of all or a portion of the amount owed is reasonably assured. Credit reports must also be required in connection with claims on defaulted guaranteed loans to facilitate agency determinations of the next collection steps to be pursued. These revisions will enable VA to better determine whether a proposed loan reamortization is in the best interest of the government and will facilitate improvements in debt collection practices.

VA

Final Rule Stage

Timetable:

Action	Date	FR Cite
NPRM	05/28/87	52 FR 19891
NPRM Comment Period End	06/26/87	52 FR 19891
Final Action	04/00/88	

Small Entity: No

Agency Contact: George D. Moerman, Assistant Director for Loan Policy, Veterans Administration, Department of Veterans Benefits (264), 810 Vermont Avenue, NW, Washington, DC 20420, 202 233-3042

RIN: 2900-AC19

3375. EVALUATIONS FOR DIPLOPIA (DOUBLE VISION)

Legal Authority: 38 USC 355

CFR Citation: 38 CFR 4.77; 38 CFR 4.88a

Legal Deadline: None.

Abstract: The present rating schedule for double vision is based on use of the Motor Field Chart which is an outdated testing method. This change provides a method for evaluating double vision based on the current testing method using the Goldmann Perimeter.

Timetable:

Action	Date	FR Cite
NPRM	06/27/87	52 FR 32318
NPRM Comment Period End	09/28/87	
Final Action	05/01/88	

Small Entity: No

Agency Contact: Robert M. White, Chief, Regulations Staff, Veterans Administration, Department of Veterans Benefits (211B), 810 Vermont Avenue, NW, Washington, DC 20420, 202 233-3005

RIN: 2900-AC58

3376. VOCATIONAL REHABILITATION PANEL

Legal Authority: 38 USC 1504(a)

CFR Citation: 38 CFR 21.62; 38 CFR 21.53; 38 CFR 21.198

Legal Deadline: None.

Abstract: The VA reviews all cases in which findings of infeasibility for vocational rehabilitation or termination of rehabilitation programs is being considered for seriously disabled veterans. These reviews are currently conducted by the Vocational Rehabilitation Panel, a multidisciplinary advisory group. The Panel forwards its recommendations to the counseling psychologist who may accept or reject these recommendations. The VA proposes to reassign this review responsibility to the Vocational Rehabilitation and Counseling Officer, the counseling psychologist's immediate supervisor. Program experience indicates that this change will improve program administration and maintain quality of service for seriously disabled veterans.

Timetable:

Action	Date	FR Cite
NPRM	01/15/88	53 FR 1042
NPRM Comment Period End	02/12/88	53 FR 1042
Final Action	05/01/88	

Small Entity: No

Agency Contact: Morris Triestman, Rehabilitation Consultant, Policy and Program Development, Veterans Administration, Department of Veterans Benefits (226), 810 Vermont Avenue, NW, Washington, DC 20420, 202 233-2886

RIN: 2900-AC75

3377. VETERANS EDUCATION; AMENDMENTS TO VEAP REQUIRED BY THE VETERANS BENEFITS IMPROVEMENT AND HEALTH CARE AUTHORIZATION ACT OF 1986

Legal Authority: PL 99-576

CFR Citation: 38 CFR 21.5021; 38 CFR 21.5030; 38 CFR 21.5041; 38 CFR 21.5052; 38 CFR 21.5064; 38 CFR 21.5100; 38 CFR 21.5131; 38 CFR 21.5138; 38 CFR 21.5022; 38 CFR 21.5040; 38 CFR 21.5042; 38 CFR 21.5054; 38 CFR 21.5072; 38 CFR 21.5132; 38 CFR 21.5145

Legal Deadline: None.

Abstract: The Veterans' Benefits Improvement and Health-Care Authorization Act of 1986 contains several provisions which affect VEAP (Post-Vietnam Era Veterans' Educational Assistant Program). The most important changes include provision of apprenticeship and other on-job training in this program; extension of the veteran's period of eligibility if he or she is disabled during the eligibility period; and closing of VEAP to new enrollments. This proposal will implement the law.

Timetable:

Action	Date	FR Cite
NPRM	02/12/88	53 FR 4186
NPRM Comment Period End	03/14/88	53 FR 5433
Final Action	06/00/88	

Small Entity: Yes

Agency Contact: June Schaeffer, Assistant Director for Educational Policy, Veterans Administration, Department of Veterans Benefits (225), 810 Vermont Avenue, NW, Washington, DC 20420, 202 233-2092

RIN: 2900-AC81

3378. IMPROVEMENTS IN VETERANS' BENEFITS

Legal Authority: 38 USC 210(c)

CFR Citation: 38 CFR 3.22; 38 CFR 3.23; 38 CFR 3.271; 38 CFR 3.272; 38 CFR 3.309; 38 CFR 3.342; 38 CFR 3.343; 38 CFR 3.383; 38 CFR 3.384; 38 CFR 3.501; 38 CFR 3.557; 38 CFR 3.800; 38 CFR 3.809a

Legal Deadline: None.

Abstract: These changes implement legislation that extended improved eligibility and entitlement criteria for certain veterans' benefits and define the term "hardship" for considering the exclusion of a child's income in pension cases.

Timetable:

Action	Date	FR Cite
NPRM	10/05/87	52 FR 37170
NPRM Comment Period End	11/04/87	
Final Action	05/01/88	

Small Entity: No

Agency Contact: Robert M. White, Chief, Regulations Staff, Department of Veterans Benefits (211B), Veterans Administration, 810 Vermont Avenue, NW, Washington, DC 20420, 202 233-3005

RIN: 2900-AC99

3379. HOMELESS CLAIMANTS

Legal Authority: 38 USC 210(c); 38 USC 3003; 38 USC 3020

CFR Citation: 38 CFR 3.159

Legal Deadline: None.

Abstract: These changes provide instructions for processing the claims of homeless individuals to ensure the delivery of benefits to such persons for

whom no established mailing address is available.

Timetable:

Action	Date	FR Cite
NPRM	06/18/87	52 FR 23318
NPRM Comment Period End	07/20/87	52 FR 23318
Final Action	05/01/88	

Small Entity: No

Agency Contact: Robert M. White, Chief, Regulations Staff, Department of Veterans Benefits (211B), Veterans Administration, 810 Vermont Avenue, NW, Washington, DC 20420, 202 233-3005

RIN: 2900-AD00

3380. LOAN GUARANTY: INCREASE IN MAXIMUM ALLOWABLE AMOUNT THE VA WILL REIMBURSE A LOAN HOLDER FOR LEGAL SERVICES INCURRED IN TERMINATING A LOAN

Legal Authority: 38 USC 210(c); 38 USC 1803(c)(1); 38 USC 1819(g)

CFR Citation: 38 CFR 36.4276(b); 38 CFR 36.4313(b)

Legal Deadline: None.

Abstract: Presently a maximum of $350 may be included for trustee's fees and legal services allowable on claims under guaranty on defaulted VA guaranteed loans. In some areas this fee structure is insufficient to allow loan holders to secure the services of experienced legal counsel necessary to complete foreclosure action in a timely manner. The proposed maximum would be increased from $350 to $700.

Timetable:

Action	Date	FR Cite
NPRM	01/19/88	53 FR 1378
NPRM Comment Period End	02/16/88	53 FR 1378
Final Action	00/00/00	

Small Entity: No

Agency Contact: Raymond Brodie, Assistant Director for Loan Management, Department of Veterans Benefits (261), Veterans Administration, 810 Vermont Avenue, NW, Washington, DC 20420, 202 233-3688

RIN: 2900-AD01

3381. VETERANS EDUCATION; REVISION OF DELIMITING DATES

Legal Authority: 38 USC 1662; 38 USC 3103

CFR Citation: 38 CFR 21.1042

Legal Deadline: None.

Abstract: The VA has determined that veterans who were affected by the liberalization of 38 CFR 3.12(d) have a delimiting period under ch. 34 which begins on the date the VA makes an administrative decision finding that the veteran's discharge was not dishonorable. The appropriate regulations governing delimiting dates will be amended to reflect this opinion.

Timetable:

Action	Date	FR Cite
NPRM	01/11/88	53 FR 620
NPRM Comment Period End	02/10/88	
Final Action	00/00/00	

Small Entity: No

Agency Contact: June C. Schaeffer, Assistant Director for Educational Policy, Department of Veterans Benefits (225), Veterans Administration, 810 Vermont Avenue, NW, Washington, DC 20420, 202 233-2092

RIN: 2900-AD02

3382. ● VETERANS EDUCATION; CLARIFICATION OF ADMINISTRATIVE ERROR

Legal Authority: 38 USC 3012; 38 USC 3013

CFR Citation: 38 CFR 21.4135

Legal Deadline: None.

Abstract: The law provides that the VA will not create an overpayment against the account of a veteran or eligible person if the overpayment is created as a result of an erroneous award of benefits based solely upon administrative error or error in judgment. Increasingly, users of the regulations have relieved veterans of overpayments when the overpayments resulted from administrative errors by third parties such as school officials rather than from such errors in the award of benefits by the VA. This is contrary to the way in which the law has been implemented for several decades. Accordingly, the VA is amending the regulation which implements this provision of law for the education programs which the VA administers.

Timetable:

Action	Date	FR Cite
NPRM	12/08/87	52 FR 46494
NPRM Comment Period End	01/07/88	52 FR 46494
Final Action	05/00/88	

Small Entity: No

Agency Contact: June C. Schaeffer, Assistant Director for Educational Policy, and Program Administration (225), Veterans Administration, Department of Veterans Benefits, 810 Vermont Avenue, NW, Washington, DC 20420, 202 233-2092

RIN: 2900-AD22

3383. ● VETERANS EDUCATION; CLARIFICATION OF MITIGATING CIRCUMSTANCES

Legal Authority: 38 USC 1780

CFR Citation: 38 CFR 21.4136; 38 CFR 21.4137

Legal Deadline: None.

Abstract: The law requires that the VA not pay a veteran for a course from which he or she withdraws without mitigating circumstances. When he or she withdraws with mitigating circumstances, the veteran is paid through the date of withdrawal. In the course of administering the various veterans' education programs the VA has established a policy of considering the circumstances surrounding a withdrawal during a drop-add period to have been mitigating. The VA is considering stating this policy explicitly in the appropriate regulations.

Timetable:

Action	Date	FR Cite
NPRM	02/26/88	53 FR 5806
NPRM Comment Period End	03/29/88	53 FR 5806
Final Action	00/00/00	

Small Entity: No

Agency Contact: June C. Schaeffer, Assistant Director for Educational Policy, and Program Administration (225), Veterans Administration, Department of Veterans Benefits, 810 Vermont Avenue, NW, Washington, DC 20420, 202 233-2092

RIN: 2900-AD24

OFFICE OF ACQUISITION AND MATERIEL MANAGEMENT

VA

Final Rule Stage

3384. ACQUISITION REGULATIONS RELATING TO COST COMPARISONS

Legal Authority: 38 USC 210; 40 USC 486c

CFR Citation: 48 CFR 807, (Revision); 48 CFR 852, (Revision)

Legal Deadline: None.

Abstract: This proposed VA Acquisition Regulation provides coverage regarding contracting aspects of OMB Circular A-76 cost comparison.

Timetable:

Action	Date	FR Cite
NPRM	02/22/88	53 FR 5201
NPRM Comment Period End	03/23/88	53 FR 5201
Final Action	06/00/88	

Small Entity: Undetermined

Agency Contact: Chris A. Figg, Chief, Policy Division, Veterans Administration, Office of Acquisition and Materiel Management (93), 810 Vermont Avenue, NW, Washington, DC 20420, 202 233-4340

RIN: 2900-AC37

3385. VETERANS ADMINISTRATION ACQUISITION REGULATION - CONSULTING SERVICE

Legal Authority: 38 USC 210; 40 USC 486c

CFR Citation: 48 CFR 837

Legal Deadline: None.

Abstract: This Veterans Administration regulation provides coverage regarding contracting aspects of OMB Circular A-120 consulting services.

Timetable:

Action	Date	FR Cite
Final Action	06/00/88	

Small Entity: Not Applicable

Agency Contact: Chris Figg, Supply Management Representative, Veterans Administration, Office of Acquisition and Materiel Management (93), 810 Vermont Avenue, NW, Washington, DC 20420, 202 233-4340

RIN: 2900-AC86

3386. VETERANS ADMINISTRATION ACQUISITION REGULATION - CONSTRUCTION AND ARCHITECT-ENGINEER CONTRACTS

Legal Authority: 38 USC 210; 40 USC 486c

CFR Citation: 48 CFR 836

Legal Deadline: None.

Abstract: This proposed Veterans Administration regulation will update and clarify construction contracting procedures and clauses.

Timetable:

Action	Date	FR Cite
Interim Final Rule	01/21/88	53 FR 1630
Final Action	07/00/88	

Small Entity: Yes

Agency Contact: Marsha J. Grogan, Supply Management Representative, Veterans Administration, Office of Acquisition and Materiel Management (93), 810 Vermont Avenue, NW, Washington, DC 20420, 202 233-4340

RIN: 2900-AC87

OFFICE OF EQUAL OPPORTUNITY

3387. ENFORCEMENT OF NONDISCRIMINATION ON THE BASIS OF HANDICAP IN VA PROGRAMS

Legal Authority: 29 USC 794

CFR Citation: 38 CFR 15

Legal Deadline: None.

Abstract: Provides for the enforcement of section 504 of the Rehabilitation Act of 1973, as amended, as it applies to programs or activities conducted by the VA. Section 504 prohibits discrimination on the basis of handicap. There is no other alternative to the issuance of this regulation since it implements a legislative mandate. Qualified handicapped individuals will be assured of equal participation in programs or activities conducted by the VA.

Timetable:

Action	Date	FR Cite
NPRM	07/02/87	52 FR 25124
NPRM Comment Period End	08/31/87	52 FR 25124
Final Action	09/00/88	

Small Entity: No

Agency Contact: Rodney J. Cash, Equal Opportunity Specialist, Veterans Administration, Office of Equal Opportunity (06A), 810 Vermont Avenue, NW, Washington, DC 20420, 202 233-3150

RIN: 2900-AA87

OFFICE OF THE GENERAL COUNSEL

3388. RECOGNITION OF ORGANIZATIONS, REPRESENTATIVES, AGENTS, AND ATTORNEYS

Legal Authority: 38 USC 210(c)(1); 38 USC 3401 to 3404

CFR Citation: 38 CFR 14.627 to 14.637

Legal Deadline: None.

Abstract: This proposal includes definitions; requirements for recognition of organizations by the VA; requirements for recognition of representatives, agents, and attorneys; powers of attorney; use of paralegals, law clerks, and law students; and requirements for space and office facilities.

Timetable:

Action	Date	FR Cite
NPRM	03/18/87	52 FR 8472
NPRM Comment Period End	04/17/87	52 FR 8472
Final Action	00/00/00	

Small Entity: No

Agency Contact: Andrew J. Mullen, Deputy Assistant General Counsel, Veterans Administration, Office of the General Counsel (022A), 810 Vermont Avenue, NW, Washington, DC 20420, 202 233-2440

RIN: 2900-AC89

3389. STANDARDS IMPLEMENTING THE PROGRAM FRAUD CIVIL REMEDIES ACT

Legal Authority: PL 99-509 6101-6104, 100 Stat. 1874

CFR Citation: 38 CFR 42

Legal Deadline: Statutory, April 21, 1987.

Abstract: These regulations would implement the Program Fraud Civil Remedies Act, which the Veterans Administration must promulgate by April 21, 1987. The regulations would permit the VA to bring administrative proceedings against persons who knowingly make, present, or submit false claims or statements against the Agency under $150,000 in value. The VA could, under the regulations, recover up to twice the amount of the false claims or statements plus impose a civil penalty or up to $5,000 for each separate false claim. The regulations would proscribe specific procedures

when the VA receives allegations of a false claim: an investigation by the VA Inspector General, a review of the investigation by the General Counsel or designee, referral to the Attorney General, and action by the reviewing official if approved by the Attorney General. The person found liable could request a hearing before an Administrative Law Judge with all the due process protections under the Administrative Procedure Act. The person could appeal to the VA Administrator and then to the U.S. District Court. All penalties could be set off (contd)

Timetable:

Action	Date	FR Cite
NPRM	05/05/87	52 FR 16409
NPRM Comment Period End	06/04/87	52 FR 16409
Final Action	04/01/88	

Small Entity: Yes

Additional Information: ABSTRACT CONTD: against any amount due the person liable from the Government, except Federal tax refunds. All recoveries would be deposited in the U.S. Treasury.

Agency Contact: Audley Hendricks, Assistant General Counsel, Office of General Counsel (023), Veterans Administration, 810 Vermont Avenue, NW, Washington, DC 20420, 202 233-3071

RIN: 2900-AC92

OFFICE OF CONGRESSIONAL AND INTERGOVERNMENTAL AFFAIRS

3390. NONPROCUREMENT DEBARMENT AND SUSPENSION

Legal Authority: EO 12549; 38 USC 210

CFR Citation: 38 CFR 44.100 to 44.505

Legal Deadline: None.

Abstract: There has been a system in place for governmentwide debarment and suspension of contractors (procurement) that defraud the Federal government or otherwise fail to meet their contractual obligations. No similar system exists for grantees or other entities that participate in government programs. The VA is participating in a governmentwide implementation of EO 12549 by issuing regulations on Nonprocurement Debarment and Suspension, consistent with OMB guidelines published on February 21, 1986 (51 FR 6372).

Timetable:

Action	Date	FR Cite
NPRM	10/20/87	52 FR 39026
NPRM Comment Period End	12/21/87	52 FR 39026
Final Action	05/26/88	

Small Entity: Yes

Agency Contact: Gail A. Gompf, Director, Intergovernmental Affairs (61), Veterans Administration, Office of Congressional and Intergovernmental Affairs, 810 Vermont Avenue, NW, Washington, DC 20420, 202 233-3116

RIN: 2900-AD06

OFFICE OF FACILITIES

3391. ● UNIFORM RELOCATION ASSISTANCE ACT FOR REAL PROPERTY ACQUISITION AND FEDERALLY ASSISTED PROGRAMS

Legal Authority: 42 USC 4601; PL 100-17

CFR Citation: 38 CFR 25

Legal Deadline: Statutory, April 2, 1989.

Abstract: The Uniform Relocation Assistance Act Amendments of 1987, established a governmentwide single rule to be published at a single location in the Code of Federal Regulations. The VA is one of 17 Federal agencies that has its own rule currently located in 38 CFR Part 25. The VA is taking part in the common rule to provide for the single rule goal. On December 17, 1987, an interim final rule was published to provide a transition from the existing governmentwide rule and to provide a means for Federal programs to implement the explicit, nondiscretionary provisions of the 1987 amendments.

Timetable:

Action	Date	FR Cite
Interim Final Rule	12/17/87	52 FR 48022
Final Action	00/00/00	

Small Entity: No

Agency Contact: Alan Maurer, Special Programs Officer, Office of Facilities (081A), Veterans Administration, 810 Vermont Avenue, NW, Washington, DC 20420, 202 233-3398

RIN: 2900-AD37

OFFICE OF INFORMATION MANAGEMENT AND STATISTICS

3392. RELEASE OF VA LISTS OF NAMES AND ADDRESSES AND PENALTY PROCEDURES FOR UNAUTHORIZED USE

Legal Authority: 38 USC 3301(f)

CFR Citation: 38 CFR 1.519

Legal Deadline: None.

Abstract: The VA is amending the existing regulations concerning VA lists of names and addresses and is also proposing administrative procedures to use when these lists are used for purposes not authorized by law. This action results from the need to amend the regulations to reflect current procedures, organizational changes, and concern expressed by veterans and some service organizations regarding unsolicited mail. The proposed regulatory amendments will allow the VA to enforce its statutory duty to protect the privacy of information concerning veterans and their dependents, establish procedures to suspend recipients who misuse VA name and address lists of veterans/ dependents, and give advance notice to recipients of what constitutes an authorized/unauthorized use of veterans/ dependents names and address lists, thereby protecting the due process rights of any recipient before penalties are enforced.

Timetable:

Action	Date	FR Cite
NPRM	03/19/87	52 FR 8624
NPRM Comment Period End	04/20/87	52 FR 8624
Final Action	12/00/88	

Small Entity: No

Agency Contact: LaVerne Butler, Management Analyst (723B), Veterans Administration, Office of Information Mgmt. & Statistics, 810 Vermont Avenue, NW, Washington, DC 20420, 202 233-2545

RIN: 2900-AC63

3393. BEREAVEMENT COUNSELING

CFR Citation: 38 CFR 17.60f

Completed:

Reason	Date	FR Cite
Final Action	03/07/88	53 FR 7185
Final Action Effective	03/07/88	

Small Entity: No

Agency Contact: Stuart Mount 202 233-2143

RIN: 2900-AC68

3394. TRANSPORTATION OF CLAIMANTS AND BENEFICIARIES

CFR Citation: 38 CFR 17.100

Completed:

Reason	Date	FR Cite
Final Action	01/22/88	53 FR 1755
Final Action Effective	01/22/88	53 FR 1755

Small Entity: No

Agency Contact: Stuart E. Mount 202 233-2504

RIN: 2900-AD07

3395. ACQUISITION OF PROPERTY

CFR Citation: 38 CFR 36.4320; 38 CFR 36.4319(f); 38 CFR 36.4321(a); 38 CFR 36.4300

Completed:

Reason	Date	FR Cite
Final Action	01/19/88	53 FR 1349
Final Action Effective	02/18/88	53 FR 1349

Small Entity: No

Agency Contact: Raymond Brodie 202 233-3668

RIN: 2900-AB34

3396. TEMPORARY PROGRAM OF VOCATIONAL TRAINING FOR CERTAIN NEW PENSION RECIPIENTS

Significance: Regulatory Program

CFR Citation: 38 CFR 21.6001 to 21.6420, (New)

Completed:

Reason	Date	FR Cite
Final Action	02/16/88	53 FR 4396
Final Action Effective	02/01/85	53 FR 4396

Small Entity: No

Agency Contact: Morris Triestman 202 233-2886

RIN: 2900-AB53

3397. VETERANS EDUCATION; ALL VOLUNTEER FORCE EDUCATIONAL ASSISTANCE PROGRAM

CFR Citation: 38 CFR 21

Completed:

Reason	Date	FR Cite
Final Action	01/22/88	53 FR 1756
Final Action Effective	10/19/84	53 FR 1756

Small Entity: Undetermined

Agency Contact: June C. Schaeffer 202 233-2092

RIN: 2900-AB70

3398. PAYMENTS TO DEPENDENTS OF VETERANS IN TRAINING

CFR Citation: 38 CFR 21.260; 38 CFR 21.322

Completed:

Reason	Date	FR Cite
Final Action	11/03/87	52 FR 42113
Final Action Effective	11/03/87	52 FR 42113

Small Entity: No

Agency Contact: Morris Triestman 202 233-2886

RIN: 2900-AC18

3399. VETERANS EDUCATION; DEFICIENCY COURSE MEASUREMENT

CFR Citation: 38 CFR 21.1045

Completed:

Reason	Date	FR Cite
Final Action	02/26/88	53 FR 5769
Final Action Effective	02/09/88	

Small Entity: No

Agency Contact: June C. Schaeffer 202 233-2092

RIN: 2900-AC42

3400. VETERANS MORTGAGE LIFE INSURANCE - MAXIMUM AMOUNT OF INSURANCE

CFR Citation: 38 CFR 8a.2, (Revision); 38 CFR 8a.3, (Revision); 38 CFR 8a.4, (Revision)

Completed:

Reason	Date	FR Cite
Final Action	12/24/87	52 FR 48681
Final Action Effective	12/24/87	52 FR 48681

Small Entity: No

Agency Contact: Paul F. Koons 215 951-5360

RIN: 2900-AC43

3401. VETERANS EDUCATION; DISENROLLMENT FROM VEAP AND OTHER TECHNICAL AMENDMENTS

CFR Citation: 38 CFR 21.5001; 38 CFR 21.5052; 38 CFR 21.5062; 38 CFR 21.5130; 38 CFR 21.5131

Completed:

Reason	Date	FR Cite
Final Action	01/11/88	53 FR 616
Final Action Effective	11/03/87	

Small Entity: No

Agency Contact: June C. Schaeffer 202 233-2092

RIN: 2900-AC49

3402. NOMENCLATURE AND DESCRIPTIVE TERMS FOR MENTAL DISORDERS

CFR Citation: 38 CFR 4.125; 38 CFR 4.126; 38 CFR 4.127; 38 CFR 4.128; 38 CFR 4.129; 38 CFR 4.130; 38 CFR 4.131; 38 CFR 4.132

Completed:

Reason	Date	FR Cite
Final Action	01/04/88	53 FR 21
Final Action Effective	02/03/88	53 FR 21

Small Entity: No

Agency Contact: Robert M. White 202 233-3005

RIN: 2900-AC60

3403. DECREASE IN AMOUNT OF TIME VA WILL ALLOW LOAN HOLDER TO BEGIN TERMINATING DEFAULTED LOAN

CFR Citation: 38 CFR 36.4319(f)

Completed:

Reason	Date	FR Cite
Final Action	02/19/88	53 FR 4977
Final Action Effective	03/21/88	53 FR 4977

Small Entity: No

Agency Contact: Raymond L. Brodie 202 233-3668

RIN: 2900-AC71

3404. ELECTION OF BENEFITS

CFR Citation: 38 CFR 21.21

Completed:

Reason	Date	FR Cite
Final Action	01/14/88	53 FR 879
Final Action Effective	10/28/86	

Small Entity: No

Agency Contact: Morris Triestman 202 233-2886

RIN: 2900-AC74

3405. VETERANS EDUCATION; ENTITLEMENT CHARGES FOR OVERPAYMENTS UNDER VEAP

CFR Citation: 38 CFR 21.5076

Completed:

Reason	Date	FR Cite
Final Action	11/25/87	52 FR 45181
Final Action Effective	09/02/87	52 FR 45181

Small Entity: No

Agency Contact: June C. Schaeffer 202 233-2092

RIN: 2900-AC77

3406. VETERANS EDUCATION; TRANSFER OF ENTITLEMENT UNDER 38 USC CH. 107

CFR Citation: 38 CFR 21.5743

Completed:

Reason	Date	FR Cite
Final Action	01/22/88	53 FR 1779
Final Action Effective	11/08/85	53 FR 1779

Small Entity: No

Agency Contact: June C. Schaeffer 202 233-2092

RIN: 2900-AC78

3407. CERTIFICATION OF CONTINUED ELIGIBILITY

CFR Citation: 38 CFR 3.500(v); 38 CFR 3.652; 38 CFR 3.158

Completed:

Reason	Date	FR Cite
Final Action	11/09/87	52 FR 43062
Final Action Effective	12/09/87	52 FR 43062

Small Entity: No

Agency Contact: Robert M. White 202 233-3005

RIN: 2900-AC79

3408. VETERANS EDUCATION; NONPUNITIVE GRADES

CFR Citation: 38 CFR 21.4135

Completed:

Reason	Date	FR Cite
Final Action	10/08/87	52 FR 37614
Final Action Effective	09/14/87	52 FR 37614

Small Entity: No

Agency Contact: June Schaeffer 202 233-2092

RIN: 2900-AC80

3409. DEPENDENTS' EDUCATION; EFFECT OF THE 85-15% RATIO REQUIREMENT

CFR Citation: 38 CFR 21.4201

Completed:

Reason	Date	FR Cite
Final Action	12/01/87	52 FR 45633
Final Action Effective	10/30/87	52 FR 45633

Small Entity: No

Agency Contact: June C. Schaeffer 202 233-2092

RIN: 2900-AD03

3410. EVALUATION OF HEARING LOSS

CFR Citation: 38 CFR 4.84b; 38 CFR 4.85; 38 CFR 4.86a; 38 CFR 4.87; 38 CFR 4.87a

Completed:

Reason	Date	FR Cite
Final Action	11/18/87	52 FR 44117
Final Action Effective	12/18/87	52 FR 44117

Small Entity: No

Agency Contact: Robert M. White 202 233-3005

RIN: 2900-AD10

3411. ● FREQUENCY OF PAYMENT OF IMPROVED PENSION

CFR Citation: 38 CFR 3.30

Legal Deadline: None.

Timetable:

Action	Date	FR Cite
Final Action	03/11/88	53 FR 7902
Final Action Effective	03/11/88	

Small Entity: No

Agency Contact: Robert M. White, Veterans Administration, 202 233-5493

RIN: 2900-AD20

3412. ● VETERANS EDUCATION; AMENDMENTS TO VETERANS' JOB TRAINING ACT

Legal Authority: PL 100-77, Sec 901

CFR Citation: 38 CFR 21.4632

Legal Deadline: None.

Abstract: The Stewart B. McKinney Homeless Assistance Act of 1987 contains provisions which extend the deadline for a veteran to apply for training under the Veterans' Job Training Act, and which extend the deadline for beginning the job training program to June 30, 1988. The regulation which states these two deadlines should be amended to reflect these new provisions of law.

Timetable:

Action	Date	FR Cite
Final Action Effective	07/22/87	53 FR 4848
Final Action	02/18/88	53 FR 4848

Small Entity: No

Agency Contact: June C. Schaeffer, Assistant Director for Educational Policy, and Program Administration (225), Veterans Administration, Department of Veterans Benefits, 810 Vermont Avenue, NW, Washington, DC 20420, 202 233-2092

RIN: 2900-AD25

3413. ● VETERANS EDUCATION; ADMINISTRATIVE REVIEW FOR EMPLOYERS

Legal Authority: 38 USC 212(a); PL 98-77

CFR Citation: 38 CFR 2.66a; 38 CFR 21.4622; 38 CFR 21.4624; 38 CFR 21.4632; 38 CFR 21.4634; 38 CFR 21.4646

Legal Deadline: None.

VA

Completed Actions

Abstract: There are several regulations dealing with approval and withdrawal of approval of training programs under the Veterans Job Training Act. These have provided that only the Director of the VA's Vocational Rehabilitation and Education Service may review a decision concerning approval or withdrawal of approval made by the Director of a VA field station. Such a decision made by the Director of the Vocational Rehabilitation and Education Service could only be reviewed by the Deputy Chief Benefits Director for Program Management. Some employers have sought additional administrative review of decisions not to approve training programs. Some have also sought review of decisions concerning payments made to them under the Act. The appropriate regulations are amended to provide employers with the same case review as that provided to veterans, namely, appeal to the Board of Veterans Appeals.

Timetable:

Action	Date	FR Cite
NPRM	05/28/87	52 FR 19890
NPRM Comment Period End	06/26/87	52 FR 19890
Final Action Effective	02/12/88	
Final Action	03/07/88	53 FR 7183

Small Entity: No

Agency Contact: June C. Schaeffer, Assistant Director Education, Policy and, Program Administration (225), Veterans Administration, Department of Veterans Benefits, 810 Vermont Avenue, NW, Washington, DC 20420, 202 233-2092

RIN: 2900-AD38

3414. VETERANS ADMINISTRATION ACQUISITION REGULATION - SPECIFICATIONS

CFR Citation: 48 CFR 810, (New); 48 CFR 836, (Revision)

Completed:

Reason	Date	FR Cite
Final Action	03/07/88	53 FR 7183
Final Action Effective	02/12/88	

Small Entity: Yes

Agency Contact: Marsha J. Grogan 202 233-4340

RIN: 2900-AC38

3415. STANDARDS FOR CLAIMS COLLECTION; COMMITTEE ON WAIVERS AND COMPROMISES

CFR Citation: 38 CFR 1.900 to 1.954; 38 CFR 1.957; 38 CFR 1.963a

Completed:

Reason	Date	FR Cite
Final Action	11/03/87	52 FR 42104
Final Action Effective	12/03/87	

Small Entity: No

Agency Contact: Peter T. Mulhern 202 233-3405

RIN: 2900-AC96

3416. UNIFORM ADMINISTRATIVE REQUIREMENTS FOR GRANTS AND COOPERATIVE AGREEMENTS TO STATE AND LOCAL GOVERNMENTS

CFR Citation: 38 CFR 43.1 to 43.52

Completed:

Reason	Date	FR Cite
Final Action	03/11/88	53 FR 8034
Final Action Effective	10/01/88	

Small Entity: No

Agency Contact: Gail A. Gompf 202 233-3116

RIN: 2900-AC97

3417. FEES CHARGED WHEN RESPONDING TO REQUESTS FOR RECORDS

CFR Citation: 38 CFR 1.526; 38 CFR 1.555; 38 CFR 1.577(f)

Completed:

Reason	Date	FR Cite
Final Action	03/31/88	53 FR 10375
Final Action Effective	05/02/88	

Small Entity: No

Agency Contact: Donald R. Howell 202 233-3648

RIN: 2900-AB18

3418. EXEMPTIONS FROM PUBLIC ACCESS TO AGENCY RECORDS

CFR Citation: 38 CFR 1.554(a)(7)

Completed:

Reason	Date	FR Cite
Final Action	03/23/88	53 FR 9442
Final Action Effective	10/27/86	

Small Entity: No

Agency Contact: Donald R. Howell 202 233-3648

RIN: 2900-AC94

3419. VETERANS ADMINISTRATION ACQUISITION REGULATION - SMALL BUSINESS CONCERNS

CFR Citation: 48 CFR 819, (Revision)

Completed:

Reason	Date	FR Cite
Final Action	12/04/87	52 FR 46082
Final Action Effective	11/24/87	52 FR 46082

Small Entity: Yes

Agency Contact: Chris Figg 202 233-4340

RIN: 2900-AC36

[FR Doc. 88-5103 Filed 04-22-88; 8:45 am]

BILLING CODE 8320-01-T

BEST COPY AVAILABLE

VOL
53
ISS
79
PT
2
AP
25
1988
UMI

federal register

Monday
April 25, 1988

Part XLII

Department of Defense
General Services Administration
National Aeronautics and Space Administration

Federal Acquisition Regulation; Semiannual Regulatory Agenda

DEPARTMENT OF DEFENSE/GENERAL SERVICES ADMINISTRATION NATIONAL AERONAUTICS AND SPACE ADMINISTRATION (FAR)

DEPARTMENT OF DEFENSE/GENERAL SERVICES ADMINISTRATION NATIONAL AERONAUTICS AND SPACE ADMINISTRATION (FAR)

DEPARTMENT OF DEFENSE/GENERAL SERVICES ADMINISTRATION/NATIONAL AERONAUTICS AND SPACE ADMINISTRATION

48 CFR Ch. I

Semiannual Agenda

AGENCIES: Department of Defense (DOD), General Services Administration (GSA), and National Aeronautics and Space Administration (NASA).

ACTION: Semiannual agenda.

SUMMARY: This agenda provides summary descriptions of regulations being developed by the Civilian Agency Acquisition Council and the Defense Acquisition Regulatory Council, in compliance with Executive Order 12291, Federal Regulation. This agenda is being published to allow interested persons an opportunity to participate in the rulemaking process.

The FAR Secretariat has attempted to list all regulations pending at the time of publication, except for minor and routine or repetitive actions, however, unanticipated requirements may result in the issuance of regulations that are not included in this agenda. There is no legal significance to the omission of an item from this listing. Also, the dates shown for the steps of each action are estimated and are not commitments to act on or by the dates shown.

FOR FURTHER INFORMATION CONTACT: Margaret A. Willis, FAR Secretariat, (202) 523-4755.

SUPPLEMENTARY INFORMATION: DOD, GSA, and NASA, under their several statutory authorities, jointly issue and maintain the Federal Acquisition Regulation (FAR) and prescribe the FAR system. Revisions to the FAR are made through periodic issuance of Federal Acquisition Circulars (FAC's). None of the regulations listed in this agenda are considered major under Executive Order 12291, Federal Regulation.

Dated: March 8, 1988.

Harry S. Rosinski,

Acting Director, Office of Federal Acquisition and Regulatory Policy.

Proposed Rule Stage

Sequence Number	Title	Regulation Identifier Number
3420	Amendment to Federal Acquisition Regulation (FAR Case 87-43)	9000-AC06

Final Rule Stage

Sequence Number	Title	Regulation Identifier Number
3421	Federal Acquisition Regulation (FAR) - Federal Acquisition Circular 84-10(FAR Case 85-32)	9000-AA00
3422	Federal Acquisition Regulation (FAR) - Federal Acquisition Circular 84-9	9000-AA01
3423	Federal Acquisition Regulation (FAR) - Federal Acquisition Circular 84-11(FAR Case 85-38)	9000-AA02
3424	Amendment to Federal Acquisition Regulation (FAR Case 84-53)	9000-AA24
3425	Amendment to Federal Acquisition Regulation (FAR Case 84-45)	9000-AA29
3426	Amendment to Federal Acquisition Regulation (FAR Case 85-16)	9000-AA35
3427	Federal Acquisition Regulation (FAR) FAR Case 85-63	9000-AA49
3428	Federal Acquisition Regulation (FAR) - FAR Case 85-32	9000-AA68
3429	Federal Acquisition Regulation (FAR) - FAR Case 85-43	9000-AA69
3430	Federal Acquisition Regulation (FAR) - FAR Case 85-47	9000-AA73
3431	Amendment to Federal Acquisition Regulation (FAR Case 86-12)	9000-AA97
3432	Amendment to Federal Acquisition Regulation (FAR Case 86-18)	9000-AB03
3433	Amendment to Federal Acquisition Regulation (FAR Case 86-23)	9000-AB08
3434	Amendment to Federal Acquisition Regulation (FAR Case 86-24)	9000-AB09
3435	Amendment to Federal Acquisition Regulation (FAR Case 86-32)	9000-AB17
3436	Amendment to Federal Acquisition Regulation (FAR Case 86-33)	9000-AB18
3437	Amendment to Federal Acquisition Regulation (FAR Case 86-34)	9000-AB19
3438	Amendment to Federal Acquisition Regulation (FAR Case 86-35)	9000-AB20
3439	Amendment to Federal Acquisition Regulation (FAR Case 86-51)	9000-AB37
3440	Amendment to Federal Acquisition Regulation (FAR Case 86-54)	9000-AB40
3441	Amendment to Federal Acquisition Regulation (FAR Case 86-58)	9000-AB44
3442	Amendment to Federal Acquisition Regulation (FAR Case 86-64)	9000-AB50
3443	Amendment to Federal Acquisition Regulation (FAR Case 86-68)	9000-AB53
3444	Amendment to Federal Acquisition Regulation (FAR Case 86-67)	9000-AB54
3445	Amendment to Federal Acquisition Regulation (FAR Case 86-69)	9000-AB55

FAR

Final Rule Stage—Continued

Sequence Number	Title	Regulation Identifier Number
3446	Amendment to Federal Acquisition Regulation (FAR Case 86-52)	9000-AB60
3447	Amendment to Federal Acquisition Regulation (FAR Case 86-57)	9000-AB61
3448	Amendment to Federal Acquisition Regulation (FAR Case 87-13)	9000-AB73
3449	Amendment to Federal Acquisition Regulation (FAR Case 87-14)	9000-AB74
3450	Amendment to Federal Acquisition Regulation (FAR Case 87-15)	9000-AB75
3451	Amendment to Federal Acquisition Regulation (FAR Case 87-16)	9000-AB76
3452	Amendment to Federal Acquisition Regulation (FAR Case 87-12)	9000-AB79
3453	Amendment to Federal Acquisition Regulation (FAR Case 87-18)	9000-AB80
3454	Amendment to Federal Acquisition Regulation (FAR Case 87-19)	9000-AB81
3455	Amendment to Federal Acquisition Regulation (FAR Case 87-22)	9000-AB82
3456	Amendment to Federal Acquisition Regulation (FAR Case 87-24)	9000-AB83
3457	Amendment to Federal Acquisition Regulation (FAR Case 87-25)	9000-AB84
3458	Amendment to Federal Acquisition Regulation (FAR Case 87-33)	9000-AB88
3459	Amendment to Federal Acquisition Regulation (FAR Case 87-34)	9000-AB97
3460	Amendment to Federal Acquisition Regulation (FAR Case 87-36)	9000-AB99
3461	Amendment to Federal Acquisition Regulation (FAR Case 87-37)	9000-AC00
3462	Amendment to Federal Acquisition Regulation (FAR Case 87-39)	9000-AC02
3463	Amendment to Federal Acquisition Regulation (FAR Case 87-41)	9000-AC04
3464	Amendment to Federal Acquisition Regulation (FAR Case 87-42)	9000-AC05
3465	Amendment to Federal Acquisition Regulation (FAR Case 87-45)	9000-AC08
3466	Amendment to Federal Acquisition Regulation (FAR Case 87-47)	9000-AC10
3467	Amendment to Federal Acquisition Regulation (FAR Case 87-48)	9000-AC11
3468	Amendment to Federal Acquisition Regulation (FAR Case 87-49)	9000-AC12
3469	Amendment to Federal Acquisition Regulation (FAR Case 87-50)	9000-AC13
3470	Amendment to Federal Acquisition Regulation (FAR Case 87-51)	9000-AC14
3471	Amendment to Federal Acquisition Regulation (FAR Case 87-52)	9000-AC15
3472	Amendment to Federal Acquisition Regulation (FAR Case 87-53)	9000-AC16
3473	Amendment to Federal Acquisition Regulation (FAR Case 87-54)	9000-AC17

Completed Actions

Sequence Number	Title	Regulation Identifier Number
3474	Amendment to Federal Acquisition Regulation (FAR Case 83-7)	9000-AA12
3475	Amendment to Federal Acquisition Regulation (FAR Case 84-31)	9000-AA26
3476	Federal Acquisition Regulation (FAR) - FAR Case 85-75	9000-AA61
3477	Amendment to Federal Acquisition Regulation (FAR Case 84-30)	9000-AA93
3478	Amendment to Federal Acquisition Regulation (FAR Case 85-25)	9000-AA95
[1]3479	Amendment to Federal Acquisition Regulation (FAR Case 86-31)	9000-AB16
3480	Amendment to Federal Acquisition Regulation (FAR Case 86-59)	9000-AB45
3481	Amendment to the Federal Acquisition Regulation (FAR Case 86-65)	9000-AB51
3482	Amendment to Federal Acquisition Regulation (FAR Case 87-30)	9000-AB65
3483	Amendment to Federal Acquisition Regulation (FAR Case 87-31)	9000-AB66
3484	Amendment to Federal Acquisition Regulation (FAR Case 87-32)	9000-AB87
3485	Amendment to Federal Acquisition Regulation (FAR Case 87-26)	9000-AB93
3486	Amendment to Federal Acquisition Regulation (FAR Case 87-27)	9000-AB94
3487	Amendment to Federal Acquisition Regulation (FAR Case 87-28)	9000-AB95
3488	Amendment to Federal Acquisition Regulation (FAR Case 87-29)	9000-AB96
3489	Amendment to Federal Acquisition Regulation (FAR Case 87-35)	9000-AB98
3490	Amendment to Federal Acquisition Regulation (FAR Case 87-38)	9000-AC01
3491	Amendment to Federal Acquisition Regulation (FAR Case 87-40)	9000-AC03
3492	Amendment to Federal Acquisition Regulation (FAR Case 87-44)	9000-AC07
3493	Amendment to Federal Acquisition Regulation (FAR Case 87-46)	9000-AC09

DEPARTMENT OF DEFENSE/GENERAL SERVICES ADMINISTRATION NATIONAL AERONAUTICS AND SPACE ADMINISTRATION (FAR)

Proposed Rule Stage

3420. ● AMENDMENT TO FEDERAL ACQUISITION REGULATION (FAR CASE 87-43)

Legal Authority: 40 USC 486(c); 10 USC Chapter 137; 42 USC 2473(c)

CFR Citation: 48 CFR 30; 48 CFR 31

Legal Deadline: None.

Abstract: To invite comments concerning the development of changes to the FAR on the allowability of costs incident to mergers and other business combinations.

Timetable:

Action	Date	FR Cite
ANPRM	10/26/87	52 FR 41474
NPRM	00/00/00	

Small Entity: No

Agency Contact: Margaret A. Willis, FAR Secretariat, DOD/GSA/NASA (FAR), GSA (VRS-FAR Secretariat), 18th & F Streets, NW, Washington, DC 20405, 202 523-4755

RIN: 9000-AC06

DEPARTMENT OF DEFENSE/GENERAL SERVICES ADMINISTRATION NATIONAL AERONAUTICS AND SPACE ADMINISTRATION (FAR)

Final Rule Stage

3421. FEDERAL ACQUISITION REGULATION (FAR) - FEDERAL ACQUISITION CIRCULAR 84-10(FAR CASE 85-32)

Legal Authority: 40 USC 486 (c); 42 USC 2473 (c); 10 USC Chapter 137

CFR Citation: 48 CFR 7; 48 CFR 15; 48 CFR 19; 48 CFR 34; 48 CFR 52

Legal Deadline: Statutory, May 1, 1985.

Abstract: (1) Implement Sec. 1213 of Pub. L. 98-525 and Sec. 201 of Pub. L. 98-577 by (a) requiring that the contracting officer, prior to contracting, review the acquisition history of the supplies or services and the description of the supplies, and (b) specifying new requirements applicable to planning for the solicitation of a major system production contract; (2) Implement Sec. 1245 of Pub. L. 98-525 and Sec. 501 of Pub. L. 98-577 by specifying that offerors/contractors (a) are required to distribute costs within contracts on a basis that ensures that unit prices of supplies are in proportion to the item's base cost, (b) may be required to identify supplies that they will not manufacture or to which they will not contribute significant value, and (c) are required to flow the requirement down to subcontractors; (3) Implement Sec. 1216 of Pub. L. 98-525 and Sec. 204 of Pub. L. 98-577 by requiring offerors/contractors in certain acquisitions to certify that the prices offered for those items of supply that the contractor offers for sale to the public are no higher than any lower price charged to any other customer during the preceding 60 days, or submit a written justification for any (cont)

Timetable:

Action	Date	FR Cite
Interim Final Rule	07/03/85	50 FR 27560
Final Action FAR Case 85-23, Small Business Subcontracting Policy	07/29/86	51 FR 27114
Final Action FAR Case 85-28, Integrity of Unit Prices	07/29/86	51 FR 27114
Final Action FAR Case 85-11, Definition of Major System	07/29/86	51 FR 27114
Final Action FAR Case 85-30, Planning for Future Competition	07/29/86	51 FR 27114
Final Action	00/00/00	

Small Entity: Undetermined

Additional Information: ABSTRACT CONT: differences; (4) Implement Sec. 402 of Pub. L. 98-577 by (a) widening the area where subcontracting possibilities are considered to exist, (b) further specifying the types of acquisitions that are to be considered for contracting and subcontracting with small and small disadvantaged business concerns, and (c) stating the policy of the United States that its prime contractors establish procedures to ensure timely payments to small and small disadvantaged subcontractors; and (5) Implement Sec. 1211 of Pub. L. 98-525 and Sec. 102 of Pub. L. 98-577 by specifying a definition of "major system."

Agency Contact: Margaret A. Willis, FAR Secretariat, DOD/GSA/NASA (FAR), GSA (VRS-FAR Secretariat), 18th & F Streets, NW, Washington, DC 20405, 202 523-4755

RIN: 9000-AA00

3422. FEDERAL ACQUISITION REGULATION (FAR) - FEDERAL ACQUISITION CIRCULAR 84-9

Legal Authority: 40 USC 486(c); 42 USC 2473(c); 10 USC Chapter 137

CFR Citation: 48 CFR 12; 48 CFR 33; 48 CFR 52

Legal Deadline: None.

Abstract: To revise the FAR to comply with revised Department of Justice advice concerning the General Accounting Office (GAO) "stay" provisions in 31 U.S.C. 3553(c) and (d) and the GAO "damages" provision in 31 U.S.C. 3554(c) regarding payment of costs of filing and pursuing a protest and preparing the bid and proposal.

Timetable:

Action	Date	FR Cite
Interim Final Rule	06/20/85	50 FR 25680
Final Action	00/00/00	

Small Entity: Undetermined

Agency Contact: Margaret A. Willis, FAR Secretariat, DOD/GSA/NASA (FAR), GSA (VRS-FAR Secretariat), 18th & F Streets, NW, Washington, DC 20405, 202 523-4755

RIN: 9000-AA01

3423. FEDERAL ACQUISITION REGULATION (FAR) - FEDERAL ACQUISITION CIRCULAR 84-11(FAR CASE 85-38)

Legal Authority: 40 USC 486(c); 42 USC 2473(c); 10 USC Chapter 137

CFR Citation: 48 CFR 3; 48 CFR 7; 48 CFR 9; 48 CFR 14; 48 CFR 15; 48 CFR 52

Legal Deadline: Statutory, May 1, 1985.

Abstract: To revise the FAR to (1) Prohibit contractors and subcontractors from asserting or agreeing to unreasonable restrictions on direct sales by subcontractors to the Government; (2) Prescribe policies, procedures, and a solicitation provision for gathering and using information from offerors to assist the Government in planning the most advantageous quantities in which supplies should be purchased; and (3) Prescribe policies, procedures, and a solicitation provision regarding the establishment and enforcement of qualification requirements for sources and products.

Timetable:

Action	Date	FR Cite
Interim Final Rule	09/30/85	50 FR 35474
Final Action FAR Case 85-37 Unreasonable Restrictions on Subcontractor Sales	07/29/86	51 FR 27114
Final Action FAR Case 85-36 Economic Order Quantities	08/12/87	52 FR 30074
Final Action	00/00/00	

Small Entity: Undetermined

Agency Contact: Margaret A. Willis, FAR Secretariat, DOD/GSA/NASA (FAR), GSA (VRS-FAR Secretariat), 18th & F Streets, NW, Washington, DC 20405, 202 523-4755

RIN: 9000-AA02

3424. AMENDMENT TO FEDERAL ACQUISITION REGULATION (FAR CASE 84-53)

Legal Authority: 40 USC 486(c); 10 USC Chapter 137; 42 USC 2473(c)

CFR Citation: 48 CFR 22

Legal Deadline: None.

Abstract: Amend the Federal Acquisition Regulation to bring the FAR into conformance with section 8(b)(7) of the Small Business Act with the award of a contract to a small business pending final determination of its eligibility for award under the Walsh-Healey Public Contracts Act.

Timetable:

Action	Date	FR Cite
Final Action	00/00/00	

Small Entity: Undetermined

Agency Contact: Margaret A. Willis, FAR Secretariat, DOD/GSA/NASA (FAR), GSA (VRS-FAR Secretariat), 18th & F Streets, NW, Washington, DC 20405, 202 523-4755

RIN: 9000-AA24

3425. AMENDMENT TO FEDERAL ACQUISITION REGULATION (FAR CASE 84-45)

Legal Authority: 40 USC 486(c); 10 USC Chapter 137; 42 USC 2473(c)

CFR Citation: 48 CFR 3

Legal Deadline: None.

Abstract: Amend the Federal Acquisition Regulation to implement OFPP Letter 84-1 on Federally Funded Research and Development Centers.

Timetable:

Action	Date	FR Cite
Final Action	00/00/00	

Small Entity: Undetermined

Agency Contact: Margaret A. Willis, FAR Secretariat, DOD/GSA/NASA (FAR), GSA (VRS-FAR Secretariat), 18th & F Steets, NW, Washington, DC 20405, 202 523-4755

RIN: 9000-AA29

3426. AMENDMENT TO FEDERAL ACQUISITION REGULATION (FAR CASE 85-16)

Legal Authority: 40 USC 486(c); 10 USC Chapter 137; 42 USC 2473(c)

CFR Citation: 48 CFR 14; 48 CFR 52

Legal Deadline: None.

Abstract: Amend the Federal Acquisition Regulation to provide guidance under the rules of sealed bidding with respect to acceptable evidence in establishing the date of mailing of a late bid.

Timetable:

Action	Date	FR Cite
NPRM	03/22/85	50 FR 11522
NPRM Comment Period End	05/21/85	
Final Action	00/00/00	

Small Entity: No

Agency Contact: Margaret A. Willis, FAR Secretariat, DOD/GSA/NASA (FAR), GSA (VRS-FAR Secretariat), 18th & F Streets, NW, Washington, DC 20405, 202 523-4755

RIN: 9000-AA35

3427. FEDERAL ACQUISITION REGULATION (FAR) FAR CASE 85-63

Legal Authority: 40 USC 486 (c); 10 USC Chapter 137; 42 USC 2473 (c)

CFR Citation: 48 CFR 31

Legal Deadline: Statutory, April 7, 1986.

Abstract: Amend the FAR to provide that any cost made specifically unallowable under FAR 31.205, Selected costs, cannot be allowed under any other section of FAR Subpart 31.2, Contracts with Commercial Organizations.

Timetable:

Action	Date	FR Cite
NPRM	04/30/87	52 FR 15884
NPRM Comment Period End	06/29/87	
Final Action	00/00/00	

Small Entity: No

Agency Contact: Margaret A. Willis, FAR Secretariat, DOD/GSA/NASA (FAR), GSA (VRS - FAR Secretariat), 18th & F Streets, NW, Washington, DC 20405, 202 523-4755

RIN: 9000-AA49

3428. FEDERAL ACQUISITION REGULATION (FAR) - FAR CASE 85-32

Legal Authority: 40 USC 486(c); 10 USC Chapter 137; 42 USC 2473(c)

CFR Citation: 48 CFR 15; 48 CFR 52

Legal Deadline: Statutory, October 18, 1986. October 18, 1986 (Public Law 99-500) May 1, 1985 (Public Law 98-577)

Abstract: Amend the FAR to implement Sec. 926 of Public Law 99-500 and Sec. 204 of Public Law 98-577, by requiring offerors in certain noncompetitive acquisitions to certify that prices offered for spare or repair parts that the contractor offers for sale to the public are no higher than the lowest commercial price at which such parts were sold during the most recent regular monthly, quarterly, or other period (but not less than 30 days) in duration for which sales data are reasonably available, or submit a written justification for any differences.

Timetable:

Action	Date	FR Cite
Interim Final Rule	07/03/85	50 FR 27560
Final Action	00/00/00	

Small Entity: No

Agency Contact: Margaret A. Willis, FAR Secretariat, DOD/GSA/NASA (FAR), GSA (VRS - FAR Secretariat), 18th & F Streets, NW, Washington, DC 20405, 202 523-4755

RIN: 9000-AA68

3429. FEDERAL ACQUISITION REGULATION (FAR) - FAR CASE 85-43

Legal Authority: 40 USC 486(c); 10 USC Chapter 137; 42 USC 2473(c)

CFR Citation: 48 CFR 47; 48 CFR 52

Legal Deadline: None.

Abstract: Amend the FAR to alleviate inequities in contract clauses regarding FOB origin.

Timetable:

Action	Date	FR Cite
NPRM	11/22/85	50 FR 48332
NPRM Comment Period End	01/21/86	
Final Action	00/00/00	

Small Entity: No

Agency Contact: Margaret A. Willis, FAR Secretariat, DOD/GSA/NASA (FAR), GSA (VRS - FAR Secretariat), 18th & F Streets, NW, Washington, DC 20405, 202 523-4755

RIN: 9000-AA69

3430. FEDERAL ACQUISITION REGULATION (FAR) - FAR CASE 85-47

Legal Authority: 40 USC 486(c); 10 USC Chapter 137; 42 USC 2473(c)

CFR Citation: 48 CFR 27; 48 CFR 52

Legal Deadline: Statutory, November 1, 1985.

Abstract: Amend the FAR to implement Pub L 98-525 and Pub L 98-577 concerning the validation of restrictive markings on technical data delivered by a contractor to the Government.

Timetable:

Action	Date	FR Cite
NPRM	10/03/85	50 FR 40416
NPRM Comment Period End	01/09/86	50 FR 45442
Final Action	00/00/00	

Small Entity: No

Agency Contact: Margaret A. Willis, FAR Secretariat, DOD/GSA/NASA (FAR), GSA (VRS - FAR Secretariat), 18th & F Streets, NW, Washington, DC 20405, 202 523-4755

RIN: 9000-AA73

3431. AMENDMENT TO FEDERAL ACQUISITION REGULATION (FAR CASE 86-12)

Legal Authority: 40 USC 486(c); 42 USC 2473(c); 10 USC Chapter 137

CFR Citation: 48 CFR 53

Legal Deadline: None.

Abstract: To amend the Federal Acquisition Regulation to revise Standard Form 1417 to eliminate unnecessary delays in securing solicitation documents by requiring construction contractors to obtain a certified check or cashiers check.

Timetable:

Action	Date	FR Cite
Final Action	00/00/00	

Small Entity: No

Agency Contact: Margaret A. Willis, FAR Secretariat, DOD/GSA/NASA (FAR), GSA (VRS-FAR Secretariat), 18th & F Streets, NW, Washington, DC 20405, 202 523-4755

RIN: 9000-AA97

3432. AMENDMENT TO FEDERAL ACQUISITION REGULATION (FAR CASE 86-18)

Legal Authority: 40 USC 486(c); 42 USC 2473(c); 10 USC Chapter 137

CFR Citation: 48 CFR 8

Legal Deadline: None.

Abstract: To amend the Federal Acquisition Regulation to clarify Federal Prison Industries' priority status in the acquisition of services.

Timetable:

Action	Date	FR Cite
NPRM	06/12/86	51 FR 21496
NPRM Comment Period End	08/11/86	
Final Action	00/00/00	

Small Entity: Undetermined

Agency Contact: Margaret A. Willis, FAR Secretariat, DOD/GSA/NASA (FAR), GSA (VRS-FAR Secretariat), 18th & F Streets, NW, Washington, DC 20405, 202 523-4755

RIN: 9000-AB03

3433. AMENDMENT TO FEDERAL ACQUISITION REGULATION (FAR CASE 86-23)

Legal Authority: 40 USC 486(c); 42 USC 2473(c); 10 USC Chapter 137

CFR Citation: 48 CFR 13; 48 CFR 19; 48 CFR 20; 48 CFR 52

Legal Deadline: None.

Abstract: To amend the Federal Acquisition Regulation to provide for the use of small purchase procedures in awarding set-aside contracts between $10,000 and $25,000.

Timetable:

Action	Date	FR Cite
NPRM	05/26/86	51 FR 23396
NPRM Comment Period End	07/28/86	
Final Action	00/00/00	

Small Entity: No

Agency Contact: Margaret A. Willis, FAR Secretariat, DOD/GSA/NASA (FAR), GSA (VRS-FAR Secretariat), 18th & F Streets, NW, Washington, DC 20405, 202 523-4755

RIN: 9000-AB06

3434. AMENDMENT TO FEDERAL ACQUISITION REGULATION (FAR CASE 86-24)

Legal Authority: 40 USC 486(c); 42 USC 2473(c); 10 USC Chapter 137

CFR Citation: 48 CFR 19; 48 CFR 52

Legal Deadline: None.

Abstract: To amend the Federal Acquisition Regulation to clarify in the small business set-aside notice that an acquisition is to be made only from a small business concern furnishing a product manufactured in the U.S., its territories, or possessions, Puerto Rico, or the Trust Territory of the Pacific Islands.

Timetable:

Action	Date	FR Cite
NPRM	07/29/86	51 FR 27129
NPRM Comment Period End	09/29/86	
Final Action	00/00/00	

Small Entity: No

Agency Contact: Margaret A. Willis, FAR Secretariat, DOD/GSA/NASA (FAR), GSA (VRS-FAR Secretariat), 18th & F Streets, NW, Washington, DC 20405, 202 523-4755

RIN: 9000-AB09

3435. AMENDMENT TO FEDERAL ACQUISITION REGULATION (FAR CASE 86-32)

Legal Authority: 40 USC 486(c); 42 USC 2473(c); 10 USC Chapter 137

CFR Citation: 48 CFR 15; 48 CFR 53

Legal Deadline: None.

Abstract: To amend the Federal Acquisition Regulation to ensure that the contracting officer and the authorized representative have access to all the data which impacts contract price.

Timetable:

Action	Date	FR Cite
NPRM	06/26/86	51 FR 23396
NPRM Comment Period End	08/25/86	
Final Action	00/00/00	

Small Entity: No

Agency Contact: Margaret A. Willis, FAR Secretariat, DOD/GSA/NASA (FAR), GSA (VRS-FAR Secretariat), 18th & F Streets, NW, Washington, DC 20405, 202 523-4755

RIN: 9000-AB17

3436. AMENDMENT TO FEDERAL ACQUISITION REGULATION (FAR CASE 86-33)

Legal Authority: 40 USC 486(c); 42 USC 2473(c); 10 USC Chapter 137

CFR Citation: 48 CFR 48; 48 CFR 52

Legal Deadline: None.

Abstract: To amend the Federal Acquisition Regulation to incorporate changes to provide improved value engineering coverage.

Timetable:

Action	Date	FR Cite
NPRM	09/02/86	51 FR 31197
NPRM Comment Period End	10/02/86	
Final Action	00/00/00	

Small Entity: No

Agency Contact: Margaret A. Willis, FAR Secretariat, DOD/GSA/NASA (FAR), GSA (VRS-FAR Secretariat), 18th & F Streets, NW, Washington, DC 20405, 202 523-4755

RIN: 9000-AB18

3437. AMENDMENT TO FEDERAL ACQUISITION REGULATION (FAR CASE 86-34)

Legal Authority: 40 USC 486(c); 42 USC 2473(c); 10 USC Chapter 137

CFR Citation: 48 CFR 30

Legal Deadline: None.

Abstract: To amend the Federal Acquisition Regulation to delete the requirement to use state rates in discounting certain self-insured losses to present value.

Timetable:

Action	Date	FR Cite
NPRM	07/08/86	51 FR 24788
NPRM Comment Period End	09/08/86	
Final Action	00/00/00	

Small Entity: No

Agency Contact: Margaret A. Willis, FAR Secretariat, DOD/GSA/NASA (FAR), GSA (VRS-FAR Secretariat), 18th & F Streets, NW, Washington, DC 20405, 202 523-4755

RIN: 9000-AB19

3438. AMENDMENT TO FEDERAL ACQUISITION REGULATION (FAR CASE 86-35)

Legal Authority: 40 USC 486(c); 42 USC 2473(c); 10 USC Chapter 137

CFR Citation: 48 CFR 30

Legal Deadline: None.

Abstract: To amend the Federal Acquisition Regulation to increase the minimum acquisition cost criterion for capitalization purposes from $1,000 to $1,500.

Timetable:

Action	Date	FR Cite
NPRM	07/09/86	51 FR 24971
NPRM Comment Period End	09/08/86	
Final Action	00/00/00	

Small Entity: No

Agency Contact: Margaret A. Willis, FAR Secretariat, DOD/GSA/NASA (FAR), GSA (VRS-FAR Secretariat), 18th & F Streets, NW, Washington, DC 20405, 202 523-4755

RIN: 9000-AB20

3439. AMENDMENT TO FEDERAL ACQUISITION REGULATION (FAR CASE 86-51)

Legal Authority: 40 USC 486(c); 10 USC Chapter 137; 42 USC 2473(c)

CFR Citation: 48 CFR 14; 48 CFR 15; 48 CFR 32; 48 CFR 52

Legal Deadline: None.

Abstract: To amend the FAR regarding penalties charged under DOD contracts for submission of defective cost or pricing data and interest charged from the date of overpayment on all Government contracts in defective pricing cases.

Timetable:

Action	Date	FR Cite
Final Action	00/00/00	

Small Entity: Undetermined

Agency Contact: Margaret A. Willis, FAR Secretariat, DOD/GSA/NASA (FAR), GSA (VRS-FAR Secretariat), 18th & F Streets, NW, Washington, DC 20405, 202 523-4755

RIN: 9000-AB37

3440. AMENDMENT TO FEDERAL ACQUISITION REGULATION (FAR CASE 86-54)

Legal Authority: 40 USC 486(c); 10 USC Chapter 137; 42 USC 2473(c)

CFR Citation: 48 CFR 15

Legal Deadline: None.

Abstract: To amend the FAR to permit the use of letter requests for proposals for sole source acquisitions.

Timetable:

Action	Date	FR Cite
NPRM	10/15/86	51 FR 36777
NPRM Comment Period End	12/15/86	
Final Action	00/00/00	

Small Entity: No

Agency Contact: Margaret A. Willis, FAR Secretariat, DOD/GSA/NASA (FAR), GSA (VRS-FAR Secretariat), 18th & F Streets, NW, Washington, DC 20405, 202 523-4755

RIN: 9000-AB40

3441. AMENDMENT TO FEDERAL ACQUISITION REGULATION (FAR CASE 86-58)

Legal Authority: 40 USC 486(c); 10 USC Chapter 137; 42 USC 2473(c)

CFR Citation: 48 CFR 52

Legal Deadline: None.

Abstract: To amend the FAR to (1) clarify service of protest requirements and (2) provide for designation of officials or locations where an information copy of the protest must be delivered.

Timetable:

Action	Date	FR Cite
NPRM	11/25/86	51 FR 42805
NPRM Comment Period End	01/26/87	
Final Action	00/00/00	

Small Entity: No

Agency Contact: Margaret A. Willis, FAR Secretariat, DOD/GSA/NASA (FAR), GSA (VRS-FAR Secretariat), 18th & F Streets, NW, Washington, DC 20405, 202 523-4755

RIN: 9000-AB44

3442. AMENDMENT TO FEDERAL ACQUISITION REGULATION (FAR CASE 86-64)

Legal Authority: 40 USC 486(c); 10 USC Chapter 137; 42 USC 2473(c)

CFR Citation: 48 CFR 13

Legal Deadline: None.

Abstract: To amend the FAR to implement OMB Circular A-125 and EO 12352, Task Group 5, Module 7, regarding Fast Pay procedures.

Timetable:

Action	Date	FR Cite
NPRM	12/09/86	51 FR 44410
NPRM Comment Period End	02/09/87	
Final Action	00/00/00	

Small Entity: No

Agency Contact: Margaret A. Willis, FAR Secretariat, DOD/GSA/NASA (FAR), GSA (VRS-FAR Secretariat), 18th & F Streets, NW, Washington, DC 20405, 202 523-4755

RIN: 9000-AB50

3443. AMENDMENT TO FEDERAL ACQUISITION REGULATION (FAR CASE 86-68)

Legal Authority: 40 USC 486(c); 10 USC Chapter 137; 42 USC 2473(c)

CFR Citation: 48 CFR 45; 48 CFR 52

Legal Deadline: None.

Abstract: To amend the FAR to provide a clearer statement of what constitutes special versus general purpose test equipment.

Timetable:

Action	Date	FR Cite
NPRM	02/09/87	52 FR 4086
NPRM Comment Period End	04/10/87	
Final Action	00/00/00	

Small Entity: No

Agency Contact: Margaret A. Willis, FAR Secretariat, DOD/GSA/NASA (FAR), GSA (VRS-FAR Secretariat), 18th & F Streets, NW, Washington, DC 20405, 202 523-4755

RIN: 9000-AB53

3444. AMENDMENT TO FEDERAL ACQUISITION REGULATION (FAR CASE 86-67)

Legal Authority: 40 USC 486(c); 10 USC Chapter 137; 42 USC 2473(c)

CFR Citation: 48 CFR 9; 48 CFR 52

Legal Deadline: None.

Abstract: To amend the FAR to clarify what constitutes a "qualification requirement" and to whom or what it applies.

Timetable:

Action	Date	FR Cite
NPRM	02/09/87	52 FR 4082
NPRM Comment Period End	04/10/87	
Final Action	00/00/00	

Small Entity: No

Agency Contact: Margaret A. Willis, FAR Secretariat, DOD/GSA/NASA (FAR), GSA (VRS-FAR Secretariat), 18th & F Streets, NW, Washington, DC 20405, 202 523-4755

RIN: 9000-AB54

3445. AMENDMENT TO FEDERAL ACQUISITION REGULATION (FAR CASE 86-69)

Legal Authority: 40 USC 486(c); 10 USC Chapter 137; 42 USC 2473(c)

CFR Citation: 48 CFR 15; 48 CFR 31; 48 CFR 52

Legal Deadline: None.

Abstract: To amend the FAR to include more specific regulatory coverage concerning the termination of overfunded defined benefit pension plans and the resultant employer withdrawal of excess pension fund assets.

Timetable:

Action	Date	FR Cite
NPRM	02/09/87	52 FR 4084
NPRM Comment Period End	04/10/87	
Final Action	00/00/00	

Small Entity: No

Agency Contact: Margaret A. Willis, FAR Secretariat, DOD/GSA/NASA (FAR), GSA (VRS-FAR Secretariat), 18th & F Streets, NW, Washington, DC 20405, 202 523-4755

RIN: 9000-AB55

3446. AMENDMENT TO FEDERAL ACQUISITION REGULATION (FAR CASE 86-52)

Legal Authority: 40 USC 486(c); 10 USC Chapter 137; 42 USC 2473(c)

CFR Citation: 48 CFR 17; 48 CFR 52

Legal Deadline: None.

Abstract: To amend the FAR to clarify when agencies should evaluate offers for option quantities in awarding the basic contract and when exercise of an option will satisfy the requirements of full and open competition contained in Part 6 of the FAR.

Timetable:

Action	Date	FR Cite
NPRM	10/28/86	51 FR 39456
NPRM Comment Period End	12/29/86	
Final Action	00/00/00	

Small Entity: No

Agency Contact: Margaret A. Willis, FAR Secretariat, DOD/GSA/NASA (FAR), GSA (VRS-FAR Secretariat), 18th & F Streets, NW, Washington, DC 20405, 202 523-4755

RIN: 9000-AB60

FAR

Final Rule Stage

3447. AMENDMENT TO FEDERAL ACQUISITION REGULATION (FAR CASE 86-57)

Legal Authority: 40 USC 486(c); 10 USC Chapter 137; 42 USC 2473(c)

CFR Citation: 48 CFR 7

Legal Deadline: None.

Abstract: To amend the FAR to require contracting officers to address in acquisition plans how subcontract competition will be sought, promoted, and sustained throughout an acquisition.

Timetable:

Action	Date	FR Cite
NPRM	10/28/86	51 FR 39456
NPRM Comment Period End	12/29/86	
Final Action	00/00/00	

Small Entity: No

Agency Contact: Margaret A. Willis, FAR Secretariat, DOD/GSA/NASA (FAR), GSA (VRS-FAR Secretariat), 18th & F Streets, NW, Washington, DC 20405, 202 523-4755

RIN: 9000-AB61

3448. AMENDMENT TO FEDERAL ACQUISITION REGULATION (FAR CASE 87-13)

Legal Authority: 40 USC 486(c); 10 USC Chapter 137; 42 USC 2473(c)

CFR Citation: 48 CFR 5; 48 CFR 13; 48 CFR 19; 48 CFR 52

Legal Deadline: Statutory, April 16, 1987.

Abstract: To amend the Federal Acquisition Regulation to (1) raise the threshold for publicizing proposed acquisitions, other than sole source acquisitions, from $10,000 to $25,000, (2) require posting of notices of solicitations expected to exceed $10,000 but not to exceed $25,000, and (3) raise the limitation for small business, small purchase set-asides from $10,000 to $25,000.

Timetable:

Action	Date	FR Cite
Interim Final Rule	06/09/87	52 FR 21885
Comment Period End	08/10/87	52 FR 21885
Final Action	00/00/00	

Small Entity: No

Agency Contact: Margaret A. Willis, FAR Secretariat, DOD/GSA/NASA (FAR), GSA (VRS-FAR Secretariat), 18th & F Streets, NW, Washington, DC 20405, 202 523-4755

RIN: 9000-AB73

3449. AMENDMENT TO FEDERAL ACQUISITION REGULATION (FAR CASE 87-14)

Legal Authority: 40 USC 486(c); 10 USC Chapter 137; 42 USC 2473(c)

CFR Citation: 48 CFR 6

Legal Deadline: Statutory, April 16, 1987.

Abstract: To amend the Federal Acquisition Regulation to expand the authority for DoD and NASA to contract without providing for full and open competition if the supplies or services being contracted for are available from only one or a limited number of responsible sources.

Timetable:

Action	Date	FR Cite
Interim Final Rule	06/09/87	52 FR 21885
Comment Period End	08/10/87	52 FR 21885
Final Action	00/00/00	

Small Entity: No

Agency Contact: Margaret A. Willis, FAR Secretariat, DOD/GSA/NASA (FAR), GSA (VRS-FAR Secretariat), 18th & F Streets, NW, Washington, DC 20405, 202 523-4755

RIN: 9000-AB74

3450. AMENDMENT TO FEDERAL ACQUISITION REGULATION (FAR CASE 87-15)

Legal Authority: 40 USC 486(c); 10 USC Chapter 137; 42 USC 2473(c)

CFR Citation: 48 CFR 15

Legal Deadline: Statutory, April 16, 1987.

Abstract: To amend the FAR requirements regarding the prevention of unit price distortions and identification of supplies that offerors will not manufacture, so that for DoD and NASA, they no longer will apply to commercial items where the price is based on an established catalog or market price.

Timetable:

Action	Date	FR Cite
Interim Final Rule	06/09/87	52 FR 21885
Comment Period End	08/10/87	52 FR 21885
Final Action	00/00/00	

Small Entity: No

Agency Contact: Margaret A. Willis, FAR Secretariat, DOD/GSA/NASA (FAR), GSA (VRS-FAR Secretariat), 18th & F Streets, NW, Washington, DC 20405, 202 523-4755

RIN: 9000-AB75

3451. AMENDMENT TO FEDERAL ACQUISITION REGULATION (FAR CASE 87-16)

Legal Authority: 40 USC 486(c); 10 USC Chapter 137; 42 USC 2473(c)

CFR Citation: 48 CFR 15; 48 CFR 52

Legal Deadline: Statutory, April 16, 1987.

Abstract: To amend the FAR to require contracting officers to use quality as well as cost or price as an evaluation factor in procurements.

Timetable:

Action	Date	FR Cite
Interim Final Rule	06/09/87	52 FR 21885
Comment Period End	08/10/87	52 FR 21885
Final Action	00/00/00	

Small Entity: No

Agency Contact: Margaret A. Willis, FAR Secretariat, DOD/GSA/NASA (FAR), GSA (VRS-FAR Secretariat), 18th & F Streets, NW, Washington, DC 20405, 202 523-4755

RIN: 9000-AB76

3452. AMENDMENT TO FEDERAL ACQUISITION REGULATION (FAR CASE 87-12)

Legal Authority: 40 USC 486(c); 10 USC Chapter 137; 42 USC 2473(c)

CFR Citation: 48 CFR 5; 48 CFR 6; 48 CFR 35

Legal Deadline: None.

Abstract: To amend the Federal Acquisition Regulation pertaining to research and development contracting procedures.

Timetable:

Action	Date	FR Cite
NPRM	05/06/87	52 FR 17280
NPRM Comment Period End	07/06/87	

Action	Date	FR Cite
Final Action	00/00/00	

Small Entity: No

Agency Contact: Margaret A. Willis, FAR Secretariat, DOD/GSA/NASA (FAR), GSA (VRS-FAR Secretariat), 18th & F Streets, NW, Washington, DC 20405, 202 523-4755

RIN: 9000-AB79

3453. AMENDMENT TO FEDERAL ACQUISITION REGULATION (FAR CASE 87-18)

Legal Authority: 40 USC 486(c); 10 USC Chapter 137; 42 USC 2473(c)

CFR Citation: 48 CFR 31

Legal Deadline: None.

Abstract: To amend the Federal Acquisition Regulation to clarify allowability policy concerning trade, business, technical and professional activity costs.

Timetable:

Action	Date	FR Cite
NPRM	05/13/87	52 FR 18158
NPRM Comment Period End	07/13/87	
Final Action	00/00/00	

Small Entity: No

Agency Contact: Margaret A. Willis, FAR Secretariat, DOD/GSA/NASA (FAR), GSA (VRS-FAR Secretariat), 18th & F Streets, NW, Washington, DC 20405, 202 523-4766

RIN: 9000-AB80

3454. AMENDMENT TO FEDERAL ACQUISITION REGULATION (FAR CASE 87-19)

Legal Authority: 40 USC 486(c); 10 USC Chapter 137; 42 USC 2473(c)

CFR Citation: 48 CFR 31

Legal Deadline: None.

Abstract: To amend the Federal Acquisition Regulation to clarify the allowability of extraordinary compensation and certain organization costs incurred in connection with mergers and other business combinations.

Timetable:

Action	Date	FR Cite
NPRM	05/13/87	52 FR 18158
NPRM Comment Period End	07/13/87	
Final Action	00/00/00	

Small Entity: No

Agency Contact: Margaret A. Willis, FAR Secretariat, DOD/GSA/NASA (FAR), GSA (VRS-FAR Secretariat), 18th & F Streets, NW', Washington, DC 20405, 202 523-4755

RIN: 9000-AB81

3455. AMENDMENT TO FEDERAL ACQUISITION REGULATION (FAR CASE 87-22)

Legal Authority: 40 USC 486(c); 10 USC Chapter 137; 42 USC 2473(c)

CFR Citation: 48 CFR 15; 48 CFR 52

Legal Deadline: None.

Abstract: To amend the Federal Acquisition Regulation to incorporate amendments to the Truth in Negotiations Act required by Section 952 of the Defense Acquisition Improvement Act of 1986 (Pub. L. 99-500).

Timetable:

Action	Date	FR Cite
NPRM	07/14/87	52 FR 26446
NPRM Comment Period End	09/14/87	
Final Action	00/00/00	

Small Entity: No

Agency Contact: Margaret A. Willis, FAR Secretariat, DOD/GSA/NASA (FAR), GSA (VRS-FAR Secretariat), 18th & F Streets, NW, Washington, DC 20405, 202 523-4755

RIN: 9000-AB82

3456. AMENDMENT TO FEDERAL ACQUISITION REGULATION (FAR CASE 87-24)

Legal Authority: 40 USC 486(c); 10 USC Chapter 137; 42 USC 2473(c)

CFR Citation: 48 CFR 9; 48 CFR 44; 48 CFR 52

Legal Deadline: None.

Abstract: To amend the Federal Acquisition Regulation concerning debarment and suspension procedures.

Timetable:

Action	Date	FR Cite
NPRM	07/31/87	52 FR 28642
NPRM Comment Period End	09/28/87	
Final Action	00/00/00	

Small Entity: No

Agency Contact: Margaret A. Willis, FAR Secretariat, DOD/GSA/NASA (FAR), GSA (VRS-FAR Secretariat), 18th & F Streets, NW, Washington, DC 20405, 202 523-4755

RIN: 9000-AB83

3457. AMENDMENT TO FEDERAL ACQUISITION REGULATION (FAR CASE 87-25)

Legal Authority: 40 USC 486(c); 10 USC Chapter 137; 42 USC 2473(c)

CFR Citation: 48 CFR 47; 48 CFR 52

Legal Deadline: None.

Abstract: To amend the Federal Acquisition Regulation concerning guaranteed maximum shipping weights and dimensions.

Timetable:

Action	Date	FR Cite
NPRM	08/21/87	52 FR 31722
NPRM Comment Period End	10/20/87	
Final Action	00/00/00	

Small Entity: No

Agency Contact: Margaret A. Willis, FAR Secretariat, DOD/GSA/NASA (FAR), GSA (VRS-FAR Secretariat), 18th & F Streets, NW, Washington, DC 20405, 202 523-4755

RIN: 9000-AB84

3458. AMENDMENT TO FEDERAL ACQUISITION REGULATION (FAR CASE 87-33)

Legal Authority: 40 USC 486(c); 10 USC Chapter 137; 42 USC 2473(c)

CFR Citation: 48 CFR 31

Legal Deadline: None.

Abstract: To amend the Federal Acquisition Regulation to delete certain language affecting severance pay.

Timetable:

Action	Date	FR Cite
NPRM	09/17/87	52 FR 35191
Final Action	00/00/00	

Small Entity: No

Agency Contact: Margaret A. Willis, FAR Secretariat, DOD/GSA/NASA (FAR), GSA (VRS-FAR Secretariat), 18th & F Streets, NW, Washington, DC 20405, 202 523-4755

RIN: 9000-AB88

FAR **Final Rule Stage**

3459. ● AMENDMENT TO FEDERAL ACQUISITION REGULATION (FAR CASE 87-34)

Legal Authority: 40 USC 486(c); 10 USC Chapter 137; 42 USC 2473(c)

CFR Citation: 48 CFR 29; 48 CFR 52

Legal Deadline: None.

Abstract: To amend the FAR to implement agency agreements with the State of New Mexico that provide for use of "Nontangible Transaction Certificates" by Government cost reimbursement contractors when they purchase tangible property.

Timetable:

Action	Date	FR Cite
NPRM	09/24/87	52 FR 35996
Final Action	00/00/00	

Small Entity: No

Agency Contact: Margaret A. Willis, FAR Secretariat, DOD/GSA/NASA (FAR), GSA (VRS-FAR Secretariat), 18th & F Streets, NW, Washington, DC 20405, 202 523-4755

RIN: 9000-AB97

3460. ● AMENDMENT TO FEDERAL ACQUISITION REGULATION (FAR CASE 87-36)

Legal Authority: 40 USC 486(c); 10 USC Chapter 137; 42 USC 2473(c)

CFR Citation: 48 CFR 45

Legal Deadline: None.

Abstract: To amend the FAR to clarify the property records maintenance responsibilities of contractors in possession of Government property.

Timetable:

Action	Date	FR Cite
NPRM	10/07/87	52 FR 37595
Final Action	00/00/00	

Small Entity: No

Agency Contact: Margaret A. Willis, FAR Secretariat, DOD/GSA/NASA (FAR), GSA (VRS-FAR Secretariat), 18th & F Streets, NW, Washington, DC 20405, 202 523-4755

RIN: 9000-AB99

3461. ● AMENDMENT TO FEDERAL ACQUISITION REGULATION (FAR CASE 87-37)

Legal Authority: 40 USC 486(c); 10 USC Chapter 137; 42 USC 2473(c)

CFR Citation: 48 CFR 14; 48 CFR 15; 48 CFR 52; 48 CFR 53

Legal Deadline: None.

Abstract: To amend the FAR to provide a simplified contract format and allow annual submission of contractor's representations and certifications.

Timetable:

Action	Date	FR Cite
NPRM	10/27/87	52 FR 41390
Final Action	00/00/00	

Small Entity: Undetermined

Agency Contact: Margaret A. Willis, FAR Secretariat, DOD/GSA/NASA (FAR), GSA (VRS-FAR Secretariat), 18th & F Streets, NW, Washington, DC 20405, 202 523-4755

RIN: 9000-AC00

3462. ● AMENDMENT TO FEDERAL ACQUISITION REGULATION (FAR CASE 87-39)

Legal Authority: 40 USC 486(c); 10 USC Chapter 137; 42 USC 2473(c)

CFR Citation: 48 CFR 14; 48 CFR 19; 48 CFR 52

Legal Deadline: None.

Abstract: To amend the FAR to implement amendments made to sections 8 and 15 of the Small Business Act by section 921, Pub. L. 99-661. The revisions (i) adopt the statutory prohibition against award of set-aside and 8(a) contracts at a price exceeding fair market price; (ii) require that a fair proportion of Government contracts within each industrial category be awarded to small business concerns; and (iii) implement statutory restrictions concerning the extent of subcontracting permitted under set-aside and 8(a) contracts.

Timetable:

Action	Date	FR Cite
Interim Final Rule	10/14/87	52 FR 38188
Final Action	00/00/00	

Small Entity: No

Agency Contact: Margaret A. Willis, FAR Secretariat, DOD/GSA/NASA (FAR), GSA (VRS-FAR Secretariat), 18th & F Streets, NW, Washington, DC 20405, 202 523-4755

RIN: 9000-AC02

3463. ● AMENDMENT TO FEDERAL ACQUISITION REGULATION (FAR CASE 87-41)

Legal Authority: 40 USC 486(c); 10 USC Chapter 137; 42 USC 2473(c)

CFR Citation: 48 CFR 53

Legal Deadline: None.

Abstract: To amend the FAR to prescribe and illustrate the latest edition of Standard Form 1409, Abstract of Offers, and Standard Form 1409A, Abstract of Offers-Continuation Sheet.

Timetable:

Action	Date	FR Cite
Final Action	00/00/00	

Small Entity: No

Agency Contact: Margaret A. Willis, FAR Secretariat, DOD/GSA/NASA (FAR), GSA (VRS-FAR Secretariat), 18th & F Streets, NW, Washington, DC 20405, 202 523-4755

RIN: 9000-AC04

3464. ● AMENDMENT TO FEDERAL ACQUISITION REGULATION (FAR CASE 87-42)

Legal Authority: 40 USC 486(c); 10 USC Chapter 137; 42 USC 2473(c)

CFR Citation: 48 CFR 5

Legal Deadline: None.

Abstract: To amend the FAR to make optional the synopsizing of advance notices of interest in research and development fields, and to clarify the purpose of such notices.

Timetable:

Action	Date	FR Cite
NPRM	11/05/87	52 FR 42519
Final Action	00/00/00	

Small Entity: No

Agency Contact: Margaret A. Willis, FAR Secretariat, DOD/GSA/NASA (FAR), GSA (VRS-FAR Secretariat), 18th & F Streets, NW, Washington, DC 20405, 202 523-4755

RIN: 9000-AC05

3465. ● AMENDMENT TO FEDERAL ACQUISITION REGULATION (FAR CASE 87-45)

Legal Authority: 40 USC 486(c); 10 USC Chapter 137; 42 USC 2473(c)

CFR Citation: 48 CFR 31

Legal Deadline: None.

Abstract: To amend the FAR to make allowable reasonable costs incurred to promote American aerospace exports at domestic and international exhibits.

Timetable:

Action	Date	FR Cite
NPRM	12/03/87	52 FR 46043
Final Action	00/00/00	

Small Entity: No

Agency Contact: Margaret A. Willis, FAR Secretariat, DOD/GSA/NASA (FAR), GSA (VRS-FAR Secretariat), 18th & F Streets, NW, Washington, DC 20405, 202 523-4755

RIN: 9000-AC08

3466. ● AMENDMENT TO FEDERAL ACQUISITION REGULATION (FAR CASE 87-47)

Legal Authority: 40 USC 486(c); 10 USC Chapter 137; 42 USC 2473(c)

CFR Citation: 48 CFR 14

Legal Deadline: None.

Abstract: To amend the FAR to clarify the existing coverage concerning delegation of authority to make determinations allowing withdrawal of bids.

Timetable:

Action	Date	FR Cite
Final Action	00/00/00	

Small Entity: No

Agency Contact: Margaret A. Willis, FAR Secretariat, DOD/GSA/NASA (FAR), GSA (VRS-FAR Secretariat), 18th & F Streets, NW, Washington, DC 20405, 202 523-4755

RIN: 9000-AC10

3467. ● AMENDMENT TO FEDERAL ACQUISITION REGULATION (FAR CASE 87-48)

Legal Authority: 40 USC 486(c); 10 USC Chapter 137; 42 USC 2473(c)

CFR Citation: 48 CFR 7

Legal Deadline: None.

Abstract: To amend the FAR to change the basis for making a cost comparison study from the $100,000 dollar threshold to the threshold of 10 full-time equivalents as defined and prescribed in OMB Circular A-76.

Timetable:

Action	Date	FR Cite
Final Action	00/00/00	

Small Entity: No

Agency Contact: Margaret A. Willis, FAR Secretariat, DOD/GSA/NASA (FAR), GSA (VRS-FAR Secretariat), 18th & F Streets, NW, Washington, DC 20405, 202 523-4755

RIN: 9000-AC11

3468. ● AMENDMENT TO FEDERAL ACQUISITION REGULATION (FAR CASE 87-49)

Legal Authority: 40 USC 486(c); 10 USC Chapter 137; 42 USC 2473(c)

CFR Citation: 48 CFR 13

Legal Deadline: None.

Abstract: To amend the FAR to provide for a determinable delivery date vice a definite calendar date for purchase orders.

Timetable:

Action	Date	FR Cite
Final Action	00/00/00	

Small Entity: No

Agency Contact: Margaret A. Willis, FAR Secretariat, DOD/GSA/NASA (FAR), GSA (VRS-FAR Secretariat), 18th & F Streets, NW, Washington, DC 20405, 202 523-4755

RIN: 9000-AC12

3469. ● AMENDMENT TO FEDERAL ACQUISITION REGULATION (FAR CASE 87-50)

Legal Authority: 40 USC 486(c); 10 USC Chapter 137; 42 USC 2473(c)

CFR Citation: 48 CFR 7; 48 CFR 10

Legal Deadline: None.

Abstract: To amend the FAR to include Governmentwide policies and procedures regarding the use of acquisition streamlining efforts to more efficiently and effectively use resources to develop, produce, or display quality systems.

Timetable:

Action	Date	FR Cite
NPRM	01/04/88	53 FR 100
Final Action	00/00/00	

Small Entity: No

Agency Contact: Margaret A. Willis, FAR Secretariat, DOD/GSA/NASA (FAR), GSA (VRS-FAR Secretariat), 18th & F Streets, NW, Washington, DC 20405, 202 523-4755

RIN: 9000-AC13

3470. ● AMENDMENT TO FEDERAL ACQUISITION REGULATION (FAR CASE 87-51)

Legal Authority: 40 USC 486(c); 10 USC Chapter 137; 42 USC 2473(c)

CFR Citation: 48 CFR 28; 48 CFR 37; 48 CFR 52

Legal Deadline: None.

Abstract: To amend the FAR to prescribe uniform procedures regarding nonpersonal services contracts for health care services.

Timetable:

Action	Date	FR Cite
NPRM	01/27/88	53 FR 2464
Final Action	00/00/00	

Small Entity: No

Agency Contact: Margaret A. Willis, FAR Secretariat, DOD/GSA/NASA (FAR), GSA (VRS-FAR Secretariat), 18th & F Streets, NW, Washington, DC 20405, 202 523-4755

RIN: 9000-AC14

3471. ● AMENDMENT TO FEDERAL ACQUISITION REGULATION (FAR CASE 87-52)

Legal Authority: 40 USC 486(c); 10 USC Chapter 137; 42 USC 2473(c)

CFR Citation: 48 CFR 14; 48 CFR 15; 48 CFR 52

Legal Deadline: None.

Abstract: To amend the FAR to eliminate conflicting instructions regarding the proper Uniform Contract Format location for provisions and clauses incorporated by reference.

Timetable:

Action	Date	FR Cite
Final Action	00/00/00	

Small Entity: No

Agency Contact: Margaret A. Willis, FAR Secretariat, DOD/GSA/NASA (FAR), GSA (VRS-FAR Secretariat), 18th & F Streets, NW, Washington, DC 20405, 202 523-4755

RIN: 9000-AC15

FAR — Final Rule Stage

3472. ● AMENDMENT TO FEDERAL ACQUISITION REGULATION (FAR CASE 87-53)

Legal Authority: 40 USC 486(c); 10 USC Chapter 137; 42 USC 2473(c)

CFR Citation: 48 CFR 52

Legal Deadline: None.

Abstract: To amend the FAR to eliminate GSA's Business Service Centers' addresses, telephone numbers, and areas of service which frequently require updating.

Timetable:

Action	Date	FR Cite
Final Action	00/00/00	

Small Entity: No

Agency Contact: Margaret A. Willis, FAR Secretariat, DOD/GSA/NASA (FAR), GSA (VRS-FAR Secretariat), 18th & F Streets, NW, Washington, DC 20405, 202 523-4755

RIN: 9000-AC16

3473. ● AMENDMENT TO FEDERAL ACQUISITION REGULATION (FAR CASE 87-54)

Legal Authority: 40 USC 486(c); 10 USC Chapter 137; 42 USC 2473(c)

CFR Citation: 48 CFR 32; 48 CFR 33

Legal Deadline: None.

Abstract: To amend the FAR to clarify the policy of the Government concerning demands for payment of contract debts owed to the Government.

Timetable:

Action	Date	FR Cite
NPRM	01/28/88	53 FR 2577
Final Action	00/00/00	

Small Entity: No

Agency Contact: Margaret A. Willis, FAR Secretariat, DOD/GSA/NASA (FAR), GSA (VRS-FAR Secretariat), 18th & F Streets, NW, Washington, DC 20405, 202 523-4755

RIN: 9000-AC17

DEPARTMENT OF DEFENSE/GENERAL SERVICES ADMINISTRATION NATIONAL AERONAUTICS AND SPACE ADMINISTRATION (FAR)

Completed Actions

3474. AMENDMENT TO FEDERAL ACQUISITION REGULATION (FAR CASE 83-7)

Legal Authority: 40 USC 486(c); 10 USC Chapter 137; 42 USC 2473(c)

CFR Citation: 48 CFR 22

Legal Deadline: None.

Abstract: Amend the Federal Acquisition Regulation to provide Governmentwide acquisition policy with respect to labor standards for contracts involving construction.

Timetable:

Action	Date	FR Cite
NPRM	11/03/86	51 FR 39965
NPRM Comment Period End	02/02/87	
Final Action	02/18/88	53 FR 4934

Small Entity: No

Agency Contact: Margaret A. Willis, FAR Secretariat, DOD/GSA/NASA (FAR), GSA (VRS-FAR Secretariat), 18th & F Streets, NW, Washington, DC 20405, 202 523-4755

RIN: 9000-AA12

3475. AMENDMENT TO FEDERAL ACQUISITION REGULATION (FAR CASE 84-31)

Legal Authority: 40 USC 486(c); 10 USC Chapter 137; 42 USC 2473(c)

CFR Citation: 48 CFR 32

Legal Deadline: None.

Abstract: Amend the Federal Acquisition Regulation to implement the Debt Collection Act.

Timetable:

Action	Date	FR Cite
Withdrawn	07/31/87	

Small Entity: No

Agency Contact: Margaret A. Willis, FAR Secretariat, DOD/GSA/NASA (FAR), GSA (VRS-FAR Secretariat), 18th & F Streets, NW, Washington, DC 20405, 202 523-4755

RIN: 9000-AA26

3476. FEDERAL ACQUISITION REGULATION (FAR) - FAR CASE 85-75

Legal Authority: 40 USC 486(c); 10 USC Chapter 137; 42 USC 2473(c)

CFR Citation: 48 CFR 45; 48 CFR 52

Legal Deadline: None.

Abstract: Amend the FAR to clarify the contractor's responsibility for Government-furnished property under service contracts performed at Government installations.

Timetable:

Action	Date	FR Cite
NPRM	02/21/86	51 FR 6360
NPRM Comment Period End	04/22/86	
Final Action	01/11/88	53 FR 660

Small Entity: No

Agency Contact: Margaret A. Willis, FAR Secretariat, DOD/GSA/NASA (FAR), GSA (VRS - FAR Secretariat), 18th & F Streets, NW, Washington, DC 20405, 202 523-4755

RIN: 9000-AA61

3477. AMENDMENT TO FEDERAL ACQUISITION REGULATION (FAR CASE 84-30)

Legal Authority: 40 USC 486(c); 42 USC 2473(c); 10 USC Chapter 137

CFR Citation: 48 CFR 32; 48 CFR 52

Legal Deadline: None.

Abstract: To amend the Federal Acquisition Regulation to adopt as Subpart 32.9, Prompt Payment, the provisions of the Prompt Payment Act (Pub. L. 97-177) and the related OMB Circular A-125 "Prompt Payment" and attachments 1 and 2 of that Circular.

Timetable:

Action	Date	FR Cite
NPRM	03/18/87	52 FR 8576
NPRM Comment Period End	05/18/87	
Final Action	02/08/88	53 FR 3688

Small Entity: No

Agency Contact: Margaret A. Willis, FAR Secretariat, DOD/GSA/NASA (FAR), GSA (VRS-FAR Secretariat), 18th & F Streets, NW, Washington, DC 20405, 202 523-4755

RIN: 9000-AA93

3478. AMENDMENT TO FEDERAL ACQUISITION REGULATION (FAR CASE 85-25)

Legal Authority: 40 USC 486(c); 42 USC 2473(c); 10 USC Chapter 137

CFR Citation: 48 CFR 1

Legal Deadline: None.

Abstract: To amend the Federal Acquisition Regulation to provide uniform guidance concerning ratification of unauthorized commitments.

Timetable:

Action	Date	FR Cite
NPRM	03/18/86	51 FR 9429
NPRM Comment Period End	05/19/86	
Final Action	02/08/88	53 FR 3688

Small Entity: No

Agency Contact: Margaret A. Willis, FAR Secretariat, DOD/GSA/NASA (FAR), GSA (VRS-FAR Secretariat), 18th & F Streets, NW, Washington, DC 20405, 202 523-4755

RIN: 9000-AA95

3479. AMENDMENT TO FEDERAL ACQUISITION REGULATION (FAR CASE 86-31)

Legal Authority: 40 USC 486(c); 42 USC 2473(c); 10 USC Chapter 137

CFR Citation: 48 CFR 1; 48 CFR 15; 48 CFR 30; 48 CFR 31; 48 CFR 52; 48 CFR 53

Legal Deadline: None.

Abstract: To amend the Federal Acquisition Regulation to incorporate the Cost Accounting Standards and certain rules and regulations promulgated by the CAS Board under Pub. L. 91-379.

Timetable:

Action	Date	FR Cite
NPRM	06/03/86	51 FR 20238
NPRM Comment Period End	08/04/86	
Final Action	09/22/87	52 FR 35612

Small Entity: No

Agency Contact: Margaret A. Willis, FAR Secretariat, DOD/GSA/NASA (FAR), GSA (VRS-FAR Secretariat), 18th & F Streets, NW, Washington, DC 20405, 202 523-4755

RIN: 9000-AB16

3480. AMENDMENT TO FEDERAL ACQUISITION REGULATION (FAR CASE 86-59)

Legal Authority: 40 USC 486(c); 10 USC Chapter 137; 40 USC 2473(c)

CFR Citation: 48 CFR 14

Legal Deadline: None.

Abstract: To amend the FAR to clarify that contracting offices may require written requests for the release of lists of prospective bidders furnished copies of plans and specifications on construction contracts.

Timetable:

Action	Date	FR Cite
NPRM	11/19/86	51 FR 41897
NPRM Comment Period End	01/20/87	
Final Action	01/11/88	53 FR 660

Small Entity: No

Agency Contact: Margaret A. Willis, FAR Secretariat, DOD/GSA/NASA (FAR), GSA (VRS-FAR Secretariat), 18th & F Streets, NW 20405, Washington, DC 20405, 202 523-4755

RIN: 9000-AB45

3481. AMENDMENT TO THE FEDERAL ACQUISITION REGULATION (FAR CASE 86-65)

Legal Authority: 40 USC 486(c); 10 USC Chapter 137; 42 USC 2473(c)

CFR Citation: 48 CFR 52

Legal Deadline: None.

Abstract: To amend the FAR to remove the $100,000 limitation on the amount the contracting officer is authorized to withhold on a cost reimbursement contract to protect the Government's interest pending final cost settlement.

Timetable:

Action	Date	FR Cite
NPRM	01/02/87	52 FR 226
NPRM Comment Period End	03/03/87	
Withdrawn	10/07/87	

Small Entity: No

Agency Contact: Margaret A. Willis, FAR Secretariat, DOD/GSA/NASA (FAR), GSA (VRS-FAR Secretariat), 18th & F Streets, NW, Washington, DC 20405, 202 523-4755

RIN: 9000-AB51

3482. AMENDMENT TO FEDERAL ACQUISITION REGULATION (FAR CASE 87-30)

Legal Authority: 40 USC 486(c); 10 USC Chapter 137; 42 USC 2473(c)

CFR Citation: 48 CFR 42

Legal Deadline: None.

Abstract: To amend the Federal Acquisition Regulation concerning visits to contractor facilities.

Timetable:

Action	Date	FR Cite
Final Action	01/11/88	53 FR 660

Small Entity: No

Agency Contact: Margaret A. Willis, FAR Secretariat, DOD/GSA/NASA (FAR), GSA (VRS-FAR Secretariat), 18th & F Streets, NW, Washington, DC 20405, 202 523-4755

RIN: 9000-AB85

3483. AMENDMENT TO FEDERAL ACQUISITION REGULATION (FAR CASE 87-31)

Legal Authority: 40 USC 486(c); 10 USC Chapter 137; 42 USC 2473(c)

CFR Citation: 48 CFR 29

Legal Deadline: None.

Abstract: To amend the Federal Acquisition Regulation to include federal tax exemptions other than for manufacturers or special fuels excise taxes.

Timetable:

Action	Date	FR Cite
Final Action	01/11/88	53 FR 660

Small Entity: No

Agency Contact: Margaret A. Willis, FAR Secretariat, DOD/GSA/NASA (FAR), GSA (VRS-FAR Secretariat), 18th & F Streets, NW, Washington, DC 20405, 202 523-4755

RIN: 9000-AB86

3484. AMENDMENT TO FEDERAL ACQUISITION REGULATION (FAR CASE 87-32)

Legal Authority: 40 USC 486(c); 10 USC Chapter 137; 42 USC 2473(c)

CFR Citation: 48 CFR 25

Legal Deadline: None.

Abstract: To amend the Federal Acquisition Regulation to revise the European Economic Community list.

Timetable:

Action	Date	FR Cite
Final Action	01/11/88	53 FR 660

Small Entity: No

Agency Contact: Margaret A. Willis, FAR Secretariat, DOD/GSA/NASA (FAR), GSA (VRS-FAR Secretariat), 18th & F Streets, NW, Washington, DC 20405, 202 523-4755

RIN: 9000-AB87

3485. ● AMENDMENT TO FEDERAL ACQUISITION REGULATION (FAR CASE 87-26)

Legal Authority: 40 USC 486(c); 10 USC Chapter 137; 42 USC 2473(c)

CFR Citation: 48 CFR 33

Legal Deadline: None.

Abstract: To amend the FAR to reflect a recent Brooks Act revision to give the GSBCA authority to determine its own jurisdiction.

Timetable:

Action	Date	FR Cite
Final Action	01/11/88	53 FR 660

Small Entity: No

Agency Contact: Margaret A. Willis, FAR Secretariat, DOD/GSA/NASA (FAR), GSA (VRS-FAR Secretariat), 18th & F Streets, NW, Washington, DC 20405, 202 523-4755

RIN: 9000-AB93

3486. ● AMENDMENT TO FEDERAL ACQUISITION REGULATION (FAR CASE 87-27)

Legal Authority: 40 USC 486(c); 10 USC Chapter 137; 42 USC 2473(c)

CFR Citation: 48 CFR 22; 48 CFR 52

Legal Deadline: None.

Abstract: To amend the FAR to include the DOL reporting requirements related to special disabled veterans and veterans of the Vietnam era.

Timetable:

Action	Date	FR Cite
Final Action	01/11/88	53 FR 660

Small Entity: No

Agency Contact: Margaret A. Willis, FAR Secretariat, DOD/GSA/NASA (FAR), GSA (VRS-FAR Secretariat), 18th & F Streets, NW, Washington, DC 20405, 202 523-4755

RIN: 9000-AB94

3487. ● AMENDMENT TO FEDERAL ACQUISITION REGULATION (FAR CASE 87-28)

Legal Authority: 40 USC 486(c); 10 USC Chapter 137; 42 USC 2473(c)

CFR Citation: 48 CFR 22

Legal Deadline: None.

Abstract: To amend the FAR to delete the applicability to Eniwetok and Kwajalein Atoll from the Contract Work Hours Safety Standards Act.

Timetable:

Action	Date	FR Cite
Final Action	01/11/88	53 FR 660

Small Entity: No

Agency Contact: Margaret A. Willis, FAR Secretariat, DOD/GSA/NASA (FAR), GSA (VRS-FAR Secretariat), 18th & F Streets, NW, Washington, DC 20405, 202 523-4755

RIN: 9000-AB95

3488. ● AMENDMENT TO FEDERAL ACQUISITION REGULATION (FAR CASE 87-29)

Legal Authority: 40 USC 486(c); 10 USC Chapter 137; 42 USC 2473(c)

CFR Citation: 48 CFR 7

Legal Deadline: None.

Abstract: To amend the FAR to conform with the policy presently set forth in the supplement to OMB Circular A-76 (revised Aug. 83) Part I, Chapter 2, Section I, Appeals of Cost Comparisons, Paragraph 6a which specifies a period of 15 to 30 working days for the public review period.

Timetable:

Action	Date	FR Cite
Final Action	01/11/88	53 FR 660

Small Entity: No

Agency Contact: Margaret A. Willis, FAR Secretariat, DOD/GSA/NASA (FAR), GSA (VRS-FAR Secretariat), 18th & F Streets, NW, Washington, DC 20405, 202 523-4755

RIN: 9000-AB96

3489. ● AMENDMENT TO FEDERAL ACQUISITION REGULATION (FAR CASE 87-35)

Legal Authority: 40 USC 486(c); 10 USC Chapter 137; 42 USC 2473(c)

CFR Citation: 48 CFR 28

Legal Deadline: None.

Abstract: To amend the FAR to provide contracting officers with additional situations where consideration may be given to the waiver of noncompliance with bid guarantee requirements.

Timetable:

Action	Date	FR Cite
Final Action	01/11/88	53 FR 660

Small Entity: No

Agency Contact: Margaret A. Willis, FAR Secretariat, DOD/GSA/NASA (FAR), GSA (VRS-FAR Secretariat), 18th & F Streets, NW, Washington, DC 20405, 202 523-4755

RIN: 9000-AB98

3490. ● AMENDMENT TO FEDERAL ACQUISITION REGULATION (FAR CASE 87-38)

Legal Authority: 40 USC 486(c); 10 USC Chapter 137; 42 USC 2473(c)

CFR Citation: 48 CFR 52

Legal Deadline: None.

Abstract: To amend the FAR to clarify the types of contractor cost and financial information which are to be made available to the contracting officer for conducting examinations and audits incurred for payment purposes.

Timetable:

Action	Date	FR Cite
Withdrawn	11/23/87	

Small Entity: No

Agency Contact: Margaret A. Willis, FAR Secretariat, DOD/GSA/NASA (FAR), GSA (VRS-FAR Secretariat), 18th & F Streets, NW, Washington, DC 20405, 202 523-4755

RIN: 9000-AC01

3491. ● AMENDMENT TO FEDERAL ACQUISITION REGULATION (FAR CASE 87-40)

Legal Authority: 40 USC 486(c); 10 USC Chapter 137; 42 USC 2473(c)

CFR Citation: 48 CFR 8

Legal Deadline: None.

Abstract: To amend the FAR to raise to $1,000 per line item the current $500 threshold for justification of orders placed at other than the lowest price under Multiple Award schedules.

Timetable:

Action	Date	FR Cite
Final Action	01/11/88	53 FR 660

Small Entity: No

Agency Contact: Margaret A. Willis, FAR Secretariat, DOD/GSA/NASA (FAR), GSA (VRS-FAR Secretariat), 18th & F Streets, NW, Washington, DC 20405, 202 523-4755

RIN: 9000-AC03

3492. ● AMENDMENT TO FEDERAL ACQUISITION REGULATION (FAR CASE 87-44)

Legal Authority: 40 USC 486(c); 10 USC Chapter 137; 42 USC 2473(c)

CFR Citation: 48 CFR 26

Legal Deadline: None.

Abstract: To amend the FAR to add FAR Part 26 (no text at FAR level) to facilitate agency needs to promulgate additional agency level socioeconomic coverage within Subchapter D, Socioeconomic Programs.

Timetable:

Action	Date	FR Cite
Final Action	01/11/88	53 FR 660

Small Entity: No

Agency Contact: Margaret A. Willis, FAR Secretariat, DOD/GSA/NASA (FAR), GSA (VRS-FAR Secretariat), 18th & F Streets, NW, Washington, DC 20405, 202 523-4755

RIN: 9000-AC07

3493. ● AMENDMENT TO FEDERAL ACQUISITION REGULATION (FAR CASE 87-46)

Legal Authority: 40 USC 486(c); 10 USC Chapter 137; 42 USC 2473(c)

CFR Citation: 48 CFR 3

Legal Deadline: None.

Abstract: To amend the FAR to require the use of a certificate of independent price determination in certain overseas procurements.

Timetable:

Action	Date	FR Cite
NPRM	01/04/88	53 FR 100
Final Action	01/11/88	53 FR 660

Small Entity: No

Agency Contact: Margaret A. Willis, FAR Secretariat, DOD/GSA/NASA (FAR), GSA (VRS-FAR Secretariat), 18th & F Streets, NW, Washington, DC 20405, 202 523-4755

RIN: 9000-AC09

[FR Doc. 88-5805 Filed 04-22-88; 8:45 am]

BILLING CODE 6820-61-T

VOL 53 ISS 79 PT 2 APR 25 1988 UMI

federal register

Monday
April 25, 1988

Part XLIII

Commodity Futures Trading Commission

Semiannual Regulatory Agenda

COMMODITY FUTURES TRADING COMMISSION (CFTC)

COMMODITY FUTURES TRADING COMMISSION

17 CFR Ch. I

Regulatory Flexibility Agenda

AGENCY: Commodity Futures Trading Commission.

ACTION: Publication of regulatory flexibility agenda.

SUMMARY: The Commodity Futures Trading Commission, in accordance with the requirements of the Regulatory Flexibility Act, is publishing a semiannual agenda of significant rules which the Commission expects to propose or promulgate over the next year. The Commission welcomes comments from small entities and others on the agenda.

ADDRESS: Comments should be sent to: Commodity Futures Trading Commission, 2033 K Street, NW., Washington, DC 20581 (202) 254-7360.

SUPPLEMENTARY INFORMATION: The Regulatory Flexibility Act, 5 U.S.C. 601, *et seq.* ("RFA"), sets forth a number of requirements for agency rulemaking. Among other things, the RFA requires that:

(a) During the months of October and April of each year, each agency shall publish in the **Federal Register** a regulatory flexibility agenda which shall contain:

(1) A brief description of the subject area of any rule which the agency expects to propose or promulgate which is likely to have a significant economic impact on a substantial number of small entities;

(2) A summary of the nature of any such rule under consideration for each subject area listed in the agenda pursuant to paragraph (1), the objectives and legal basis for the issuance of the rule, and an approximate schedule for completing action on any rule for which the agency has issued a general notice of proposed rulemaking; and

(3) The name and telephone number of an agency official knowledgeable concerning the items listed in paragraph (1).

5 U.S.C. 602(a). Accordingly, the Commission has prepared an agenda of significant rules which it presently expects may be considered during the course of the next year, irrespective of their potential impact on small entities.[1] In addition, the agenda lists rulemaking actions which have been completed since the October 1987 agenda was prepared.

The Commission's agenda represents its best estimate of significant rules which will be considered over the next twelve months.[2] In this regard, section 602(d) of the RFA, 5 U.S.C. 602(d), provides: "Nothing in [section 602] precludes an agency from considering or acting on any matter not included in a regulatory flexibility agenda or requires an agency to consider or act on any matter listed in such agenda."

The Commission is publishing its April 1988 Regulatory Flexibility Agenda as part of the Unified Agenda of Federal Regulations. The Unified Agenda of Federal Regulations is coordinated by the Office of Management and Budget pursuant to Executive Order 12291. While participation by executive agencies in the Agenda is mandatory, independent agencies, such as the Commission, participate in the Unified Agenda on a voluntary basis.

The Commission's April 1988 Regulatory Flexibility Agenda is set forth below.

Issued in Washington, DC on February 25, 1988, by the Commission.

Jean A. Webb,

Secretary of the Commission.

Prerule Stage

Sequence Number	Title	Regulation Identifier Number
3494	Regulation of Hybrid and Related Instruments	3038-AA58

Final Rule Stage

Sequence Number	Title	Regulation Identifier Number
3495	Regulations Permitting the Grant, Offer and Sale of Options on Physical Commodities (Dealer Options)	3038-AA03
3496	Minimum Financial and Related Reporting Requirements for Futures Commission Merchants	3038-AA10
3497	Regulations governing Commission review of certain actions of registered futures associations	3038-AA57

[1] The Commission has published its definition of small entity to be used by the Commission in connection with rulemaking proceedings. 47 FR 18618 (April 30, 1982). Pursuant to those definitions, the Commission is not required to list many of the agenda items contained in this regulatory flexibility agenda. *See* 5 U.S.C. 602(a)(1). Moreover, the Commission has previously certified, pursuant to section 605 of the RFA, 5 U.S.C. 605, that certain items contained in this agenda will not have a significant economic impact on a substantial number of small entities. Accordingly, listing of an event in this regulatory flexibility agenda should not, in any event, be taken as a determination that a rule, when proposed or promulgated, will in fact require a regulatory flexibility analysis. However, the Commission hopes that the publication of an agenda which includes significant rules, regardless of their potential impact on small entities, may serve the public generally by providing an early and meaningful opportunity to participate in and comment on the formulation of new or revised regulations.

[2] In addition to publishing the regulatory flexibility agenda, the Commission also makes available to the public, on a monthly basis, a calendar listing rules that the Commission intends to consider that month.

CFTC

Completed Actions

Sequence Number	Title	Regulation Identifier Number
3498	Revision of Federal Speculative Position Limits	3038-AA52
3499	Activities of Self-Regulatory Organization Governing Members who Possess Material, Non-Public Information	3038-AA53
3500	Exemption from registration as a commodity trading advisor	3038-AA54

COMMODITY FUTURES TRADING COMMISSION (CFTC) — Prerule Stage

3494. ● REGULATION OF HYBRID AND RELATED INSTRUMENTS

Legal Authority: 17 USC 2; 17 USC 6c; 17 USC 12a

CFR Citation: 17 CFR 34

Legal Deadline: None.

Abstract: The Commodity Futures Trading Commission staff has received inquiries concerning the applicability of the Commodity Exchange Act and Commission regulations to instruments that appear to possess, in varying combinations, characteristics of forward contracts, futures contracts, option contracts, debt instruments, bank deposits, and other interests. The Commission is seeking comments concerning a proposed regulatory framework that would clarify the status of such instruments and permit, by exemption and subject to certain conditions, specified hybrid option instruments to be traded other than on a designated contract market. The Commission is also seeking comments concerning a proposed no-action position with respect to certain commercial commodity contracts.

Timetable:

Action	Date	FR Cite
ANPRM	12/11/87	52 FR 47022
ANPRM Comment Period End	04/11/88	

Small Entity: No

Agency Contact: Susan C. Ervin, Chief Counsel, Division of Trading and Markets, Commodity Futures Trading Commission, 2033 K Street N.W., Washington, D.C. 20581, 202 254-8955

RIN: 3038-AA58

COMMODITY FUTURES TRADING COMMISSION (CFTC) — Final Rule Stage

3495. REGULATIONS PERMITTING THE GRANT, OFFER AND SALE OF OPTIONS ON PHYSICAL COMMODITIES (DEALER OPTIONS)

Legal Authority: 7 USC 6c(b); 7 USC 6c(d); 7 USC 12a(5)

CFR Citation: 17 CFR 1; 17 CFR 3; 17 CFR 32

Legal Deadline: None.

Abstract: Congress has directed the Commission to issue regulations permitting grantors and futures commission merchants to grant, offer and sell so-called "dealer options" on certain physical commodities subject to certain conditions specified by statute and such other uniform and reasonable requirements as the Commission may prescribe. At present, the only persons who may lawfully grant dealer options are United States domiciles who, on May 1, 1978, were in the business of buying, selling, producing or otherwise using that commodity. The Commission has reproposed rules, principally concerning registration of dealer option-grantors, requirements for the segregation of customer funds, disclosure to customers and prospective customers, and minimum financial requirements. The Commission intends to re-evaluate the proposed rules in light of regulatory changes that have occurred since 1980.

Timetable:

Action	Date	FR Cite
NPRM	12/20/78	43 FR 59396
NPRM	04/27/81	46 FR 23469
ANPRM	03/18/85	50 FR 10788
Final Action	09/30/88	

Small Entity: No

Affected Sectors: Multiple

Agency Contact: Robert H. Rosenfeld, Esquire, Commodity Futures Trading Commission, Division of Trading and Markets, 2033 K Street, NW, Washington, DC 20581, 202 254-8955

RIN: 3038-AA03

3496. MINIMUM FINANCIAL AND RELATED REPORTING REQUIREMENTS FOR FUTURES COMMISSION MERCHANTS

Legal Authority: 7 USC 6c; 7 USC 6f; 7 USC 6g; 7 USC 12a

CFR Citation: 17 CFR 1.12; 17 CFR 1.17

Legal Deadline: None.

Abstract: The Commission adopted two amendments to its minimum financial and related requirements for futures commission merchants (FCMs). One amendment will preserve the one-day grace period for debit/ deficit accounts unless the account had been in debit/deficit status on the previous business day and the previous day's debit or deficit was not timely satisfied

BEST COPY AVAILABLE

in its entirety by the deposit of new funds. The second amendment is an enhancement of the financial early warning system which requires an FCM to notify its designated self-regulatory organization and the Commission immediately when it determines that an account it is carrying is undermargined by an amount which exceeds its adjusted net capital. The Commission also reproposed a rule to clarify the requirements for and treatment of a guaranteed account.

Timetable:

Action	Date	FR Cite
NPRM	06/25/80	45 FR 42633
NPRM	12/01/80	45 FR 79498
NPRM	08/05/85	50 FR 31612
NPRM	07/29/87	52 FR 28281
NPRM Comment Period End	09/28/87	52 FR 28281
Final Action	09/30/88	

Small Entity: No

Additional Information: Two final rules published 7/29/87, 52 FR 28246 and 52 FR 28248. Effective date: 8/28/87. Guaranteed account rule reproposed on 7/29/87, 52 FR 28281.

Agency Contact: Lawrence Patent or Gary Miller, Assoc. Chief Counsel and Asst. Chief Acct., Commodity Futures Trading Commission, Division of Trading and Markets, 2033 K Street, NW, Washington, DC 20581, 202 254-8955

RIN: 3038-AA10

3497. REGULATIONS GOVERNING COMMISSION REVIEW OF CERTAIN ACTIONS OF REGISTERED FUTURES ASSOCIATIONS

Legal Authority: 7 USC 21(h); 7 USC 21(i); 7 USC 21(o)(2); 7 USC 12a(5)

CFR Citation: 17 CFR 3

Legal Deadline: None.

Abstract: The Commission has statutory authority to review the actions of registered futures associations such as the National Futures Association. Such actions include registration decisions, membership decisions and decisions in disciplinary actions. The Commission currently reviews registration decisions by the National Futures Association pursuant to Subpart F of 17 CFR Part 3. Section 107 of the Futures Trading Act of 1986 mandates that the Commission develop regulations relating to notice of membership decisions and decisions in disciplinary actions made by registered futures associations and to expedited consideration by the Commission of a motion to stay the effect of a decision by a registered futures association pending the Commission review of the decision. The Commission intends to propose rules to govern its review of actions by self regulatory organizations in light of this Congressional mandate and the need to assure that review by the Commission is fair, expeditious and consistent with the policies of self-regulation.

Timetable:

Action	Date	FR Cite
NPRM	03/31/88	
Final Action	06/30/88	

Small Entity: No

Agency Contact: James C. Bohling, Esq., Office of the General Counsel, Commodity Futures Trading Commission, 2033 K St. N.W., Washington, D.C. 20581, 202 254-9880

RIN: 3038-AA57

COMMODITY FUTURES TRADING COMMISSION (CFTC) — Completed Actions

3498. REVISION OF FEDERAL SPECULATIVE POSITION LIMITS

CFR Citation: 17 CFR 150.1; 17 CFR 150.2; 17 CFR 150.3; 17 CFR 150.4; 17 CFR 150.5; 17 CFR 150.10; 17 CFR 150.11; 17 CFR 150.12; 17 CFR 150.6, 150.7, (new)

Completed:

Reason	Date	FR Cite
Final Action	10/20/87	52 FR 38914
Final Action Effective	12/21/87	

Small Entity: No

Agency Contact: Paul M. Architzel 202 254-6990

RIN: 3038-AA52

3499. ACTIVITIES OF SELF-REGULATORY ORGANIZATION GOVERNING MEMBERS WHO POSSESS MATERIAL, NON-PUBLIC INFORMATION

CFR Citation: 17 CFR 1

Completed:

Reason	Date	FR Cite
Final Action	12/29/87	52 FR 48974
Final Action Effective	03/28/88	52 FR 48974

Small Entity: No

Agency Contact: De'Ana Hamilton Brown 202 254-8955

RIN: 3038-AA53

3500. EXEMPTION FROM REGISTRATION AS A COMMODITY TRADING ADVISOR

CFR Citation: 17 CFR 3.16(a)(3); 17 CFR 4.6; 17 CFR 4.12; 17 CFR 4.14; 17 CFR 4.21; 17 CFR 4.22; 17 CFR 4.33; 17 CFR 140.95

Completed:

Reason	Date	FR Cite
Final Action	11/02/87	52 FR 41975

Small Entity: No

Agency Contact: Barbara Stern Gold 202 254-8955

RIN: 3038-AA54

[FR Doc. 88-5104 Filed 04-22-88; 8:45 am]

BILLING CODE 6351-01-T

federal register

Monday
April 25, 1988

Part XLIV

Consumer Product Safety Commission

Semiannual Regulatory Agenda

CONSUMER PRODUCT SAFETY COMMISSION (CPSC)

CONSUMER PRODUCT SAFETY COMMISSION

16 CFR Ch. II

Regulatory Flexibility Act; Semiannual Regulatory Flexibility and Unified Agendas

AGENCY: Consumer Product Safety Commission.

ACTION: Publication of regulatory flexibility and unified agendas.

SUMMARY: The Regulatory Flexibility Act (RFA) requires each Federal agency to publish twice each year a regulatory flexibility agenda listing the rules expected to be proposed or promulgated which are likely to have a significant economic impact on a substantial number of small entities, including small businesses, small organizations, and small governmental units. In this document, the Commission publishes its semiannual regulatory flexibility agenda.

Additionally, although not required to do so, the Commission has elected to comply voluntarily with those provisions of Executive Order 12291 which require executive agencies to publish an agenda of regulatory actions expected to be under development or review by the agency during the succeeding 12 months and which further provide that such an agenda may be combined with an agency's regulatory flexibility agenda published in accordance with the RFA.

DATE: The Commission welcomes comments on each subject area of the agenda, particularly from small entities. Written comments concerning the agenda should be received in the Office of the Secretary by June 30, 1988.

ADDRESS: Comments on the regulatory flexibility agenda should be sent to the Office of the Secretary, Consumer Product Safety Commission, Washington, DC 20207, telephone (301) 492-6800, and should be titled "Regulatory Flexibility Agenda."

FOR FURTHER INFORMATION CONTACT: For further information on the agenda in general, contact: Allen F. Brauninger, Office of the General Counsel, Consumer Product Safety Commission, Washington, DC 20207, telephone (301) 492-6980. For further information regarding a particular item on the agenda, consult the individual listed in the column headed "Contact" for that particular item.

SUPPLEMENTARY INFORMATION: The Regulatory Flexibility Act, 5 U.S.C. 601-612, contains several provisions intended to reduce unnecessary and disproportionate regulatory requirements on small businesses, small governmental organizations, and other small entities. Section 602 of the Act, 5 U.S.C. 602, requires each agency to publish twice each year a regulatory flexibility agenda containing a brief description of the subject area of any rule expected to be proposed or promulgated which is likely to have a "significant economic impact" on a "substantial number" of small entities. The agency must also provide a summary of the nature of the rule, the objectives and legal basis for the rule, and a schedule for acting on each rule for which the agency has issued a notice of proposed rulemaking. The Regulatory Flexibility Agenda shall also contain the name and address of the agency official knowledgeable about the items listed. Further, agencies are required to provide notice of their agendas to small entities and to solicit their comments by direct notification or by inclusion in publications likely to be obtained by such entities.

In addition, President Reagan's Executive Order 12291 requires executive agencies to publish, twice each year, a regulatory agenda of proposed regulations under development or current regulations under review and further states that such an agenda may be combined with an agenda published under the RFA. While the Commission, as an independent regulatory agency, is not required to follow Executive Order 12291, the Commission is complying voluntarily with those provisions concerning publication of a regulatory agenda.

The regulatory flexibility agenda published below lists, for a 12-month period, the regulatory activities expected to be under development or review. These include all such activities, not only those which may have a significant economic impact on a substantial number of small entities.

The agenda contains a brief description and summary of each regulatory activity, including the objectives and legal basis for each; an approximate schedule of target dates, subject to revision, for the development or completion of each activity; and the name and telephone number of a knowledgeable agency official concerning particular items on the agenda. All agency contacts have the same address: Consumer Product Safety Commission, Washington, DC 20207.

Dated: March 24, 1988.

Sadye E. Dunn,

Secretary, Consumer Product Safety Commission.

Prerule Stage

Sequence Number	Title	Regulation Identifier Number
3501	Rule review	3041-AA20
3502	Requirements for the special packaging of household substances; revision of test protocol for child resistant packaging	3041-AA22
3503	Rule review	3041-AA24
3504	Rule review	3041-AA25
3505	Petition HP 84-1. Petition to request amendment to the regulations on electrical toys to exempt electronic video games	3041-AA41
3506	All-Terrain Vehicles	3041-AA53
3507	Petition HP 87-1 requesting a ban of certain household products containing more than 0.01 percent tremolite	3041-AA63

CPSC

Prerule Stage—Continued

Sequence Number	Title	Regulation Identifier Number
3508	Petition CP 87-1 requesting development of a product safety rule for kerosene heaters and requiring a label to warn against flare-up	3041-AA68
3509	Petition PP 87-2 requesting that certain effervescent acetaminophen tablets be exempted from Poison Prevention Packaging Act regulations requiring child-resistant packaging	3041-AA69
3510	Petition PP 87-4 requesting that certain unflavored aspirin in powder form be exempted from Poison Prevention Packaging Act regulations requiring child-resistant packaging	3041-AA70
3511	Petition PP 87-3 requesting that certain medroxyprogesterone acetate tablets be exempted from Poison Prevention Packaging Act regulations requiring child-resistant packaging	3041-AA71
3512	Possible standard or ban to address injuries to children caused by children playing with lawn darts	3041-AA72
3513	Requirements to make cigarette lighters child resistant	3041-AA73
3514	Poison Prevention Packaging Act requirements for certain conjugated estrogens, proposed amendment of exemption	3041-AA74
3515	Petition CP 87-5 requesting a warning label on hot air paint removal tools	3041-AA75
3516	Method for identifying toys and other articles intended for children under 3 years of age which present choking, aspiration, or ingestion hazards because of small parts	3041-AA76

Proposed Rule Stage

Sequence Number	Title	Regulation Identifier Number
3517	Petition HP 85-1. Petition requesting ban of household products containing methylene chloride	3041-AA58
3518	Household substances containing methylene chloride; status as hazardous substances; proposed rule	3041-AA59

Final Rule Stage

Sequence Number	Title	Regulation Identifier Number
3519	Petition CP 86-2 requesting a consumer product safety standard for bunk beds	3041-AA66

Completed Actions

Sequence Number	Title	Regulation Identifier Number
3520	Federal Hazardous Substances Act regulations for first aid labeling of products containing 10 percent or more of benzene, toluene, xylene, or petroleum distillates	3041-AA52
3521	Petition PP 85-2. Petition for rule to make disposable lighters child-resistant	3041-AA56
3522	Petition CP 86-1 requesting issuance of rule to address tip-over hazards of mobile television carts and related products for use in schools, institutions, and government agencies	3041-AA60
3523	Petition HP 86-1 requesting issuance of a rule to require labeling of disposable diapers	3041-AA61
3524	Petition PP 87-1 requesting that certain conjugated estrogens be exempted from Poison Prevention Packaging Act regulations requiring child-resistant packaging	3041-AA65
3525	Petition HP 87-2 to request amendment to the CPSC small parts regulation for items intended for children under three years of age	3041-AA67

3501. RULE REVIEW

Legal Authority: 5 USC 610 Regulatory Flexibility Act; 15 USC 1193 Flammable Fabrics Act; 15 USC 1194 Flammable Fabrics Act; 15 USC 2079 Consumer Product Safety Act

CFR Citation: 16 CFR 1608; 16 CFR 1610; 16 CFR 1611; 16 CFR 1615; 16 CFR 1616; 16 CFR 1630; 16 CFR 1631; 16 CFR 1632

Legal Deadline: Statutory, December 31, 1990.

Abstract: On February 2, 1984, the Commission published a Federal Register notice listing eight (8) rules and standards issued under the Flammable Fabrics Act and soliciting comments on those rules. The Commission will review these rules under the provisions of the Regulatory Flexibility Act to determine if the rules should be revoked, amended, or continued in effect without change. The staff expects to submit a draft report on the economic impact of these rules on small businesses by August 31, 1988, for consideration by the Commission.

Timetable:

Action	Date	FR Cite
Notice to solicit comments	02/02/84	49 FR 4103
Public Comment Period Ends	04/02/84	49 FR 4103
End Review	09/00/88	

Small Entity: Yes

Agency Contact: Allen Brauninger, Attorney, Consumer Product Safety Commission, Office of General Counsel, Washington, DC 20207, 301 492-6980

RIN: 3041-AA20

3502. REQUIREMENTS FOR THE SPECIAL PACKAGING OF HOUSEHOLD SUBSTANCES; REVISION OF TEST PROTOCOL FOR CHILD RESISTANT PACKAGING

Legal Authority: 15 USC 1472 Poison Prevention Packaging Act; 15 USC 1473 Poison Prevention Packaging Act

CFR Citation: 16 CFR 1700.20

Legal Deadline: None.

Abstract: On January 19, 1983, the Commission published an Advance Notice of Proposed Rulemaking soliciting comments on ways to amend the existing requirements for child-resistant packaging to improve the effectiveness and efficiency of these requirements. In June, 1985, the Commission staff completed testing to determine the feasibility of using some of the alternate procedures for evaluation of child-resistant packaging described in the ANPR. In August 1987, the Commission considered the comments received in response to the ANPR and the staff's recommendations regarding revision of existing requirements for child-resistant packaging. The Commission directed the staff to prepare draft proposals to amend the test protocols used to evaluate the effectiveness of child-resistant packaging. The staff is preparing a briefing package concerning specific revisions to the child test protocol and the adult test protocol. The staff anticipates that it will transmit the briefing package to the Commission in May 1988.

Timetable:

Action	Date	FR Cite
ANPRM	01/19/83	48 FR 2389
ANPRM Comment Period End	03/21/83	48 FR 2389
Staff sends briefing package to Commission	05/00/88	

Small Entity: Undetermined

Agency Contact: Virginia A. White, Project Manager, Consumer Product Safety Commission, Office of Program Management and Budget, Washington, DC 20207, 301 492-6554

RIN: 3041-AA22

3503. RULE REVIEW

Legal Authority: 5 USC 610 Regulatory Flexibility Act; 15 USC 1471 Poison Prevention Packaging Act

CFR Citation: 16 CFR 1700; 16 CFR 1701; 16 CFR 1702; 16 CFR 1704

Legal Deadline: Statutory, December 31, 1990.

Abstract: The Commission plans to publish a Federal Register notice listing four (4) rules and standards issued under the Poison Prevention Packaging Act and soliciting comments on those rules. The Commission will review these rules under the provisions of the Regulatory Flexibility Act to determine if the rules should be revoked, amended, or continued in effect without change.

Timetable:

Action	Date	FR Cite
Next Action Undetermined		

Small Entity: Yes

Agency Contact: Allen Brauninger, Attorney, Consumer Product Safety Commission, Office of General Counsel, Washington, DC 20207, 301 492-6980

RIN: 3041-AA24

3504. RULE REVIEW

Legal Authority: 5 USC 610 Regulatory Flexibility Act; 15 USC 1261 Federal Hazardous Substances Act

CFR Citation: 16 CFR 1500; 16 CFR 1501; 16 CFR 1505; 16 CFR 1507; 16 CFR 1508; 16 CFR 1509; 16 CFR 1510; 16 CFR 1511; 16 CFR 1512

Legal Deadline: Statutory, December 31, 1990.

Abstract: On February 22, 1984, the Commission published a Federal Register notice listing nine (9) rules and standards issued under the Federal Hazardous Substances Act and soliciting comments on those rules. The Commission will review these rules under provisions of the Regulatory Flexibility Act to determine if the rules should be revoked, amended, or continued in effect without change.

Timetable:

Action	Date	FR Cite
Notice to solicit comments	02/22/84	49 FR 6504
Public Comment Period Ends	04/23/84	49 FR 6504
Next Action Undetermined		

Small Entity: Yes

Agency Contact: Allen Brauninger, Attorney, Consumer Product Safety Commission, Office of General Counsel, Washington, DC 20207, 301 492-6980

RIN: 3041-AA25

3505. PETITION HP 84-1. PETITION TO REQUEST AMENDMENT TO THE REGULATIONS ON ELECTRICAL TOYS TO EXEMPT ELECTRONIC VIDEO GAMES

Legal Authority: 15 USC 1261 Federal Hazardous Substances Act; 15 USC 1262 Federal Hazardous Substances Act

CFR Citation: 16 CFR 1505

Legal Deadline: None.

Abstract: In correspondence dated December 21, 1983, the Consumer Electronic Group of the Electronic Industries Association petitioned the Commission to amend the regulation on electrical toys to exempt electronic video games from coverage. The staff is preparing a briefing package on this petition, and expects to transmit the briefing package to the Commission after July 1, 1988. If the Commission grants the petition, it will proceed to develop a proposed exemption to the standard.

Timetable:

Action	Date	FR Cite
Staff sends briefing package to Commission	07/00/88	

Small Entity: Undetermined

Agency Contact: Elaine Tyrrell, Project Manager, Consumer Product Safety Commission, Office of Program Management and Budget, Washington, DC 20207, 301 492-6554

RIN: 3041-AA41

3506. ALL-TERRAIN VEHICLES

Significance: Agency Priority

Legal Authority: 15 USC 2051 et seq Consumer Product Safety Act; 15 USC 1262(f) Federal Hazardous Substances Act

CFR Citation: 00 CFR None

Legal Deadline: None.

Abstract: On May 31, 1985, the Commission published an advance notice of proposed rulemaking (ANPR) to announce its preliminary determination that an unreasonable risk of injury may be associated with all-terrain vehicles. An all-terrain vehicle (ATV) is a three- or four-wheeled motorized machine, designed for off-road use, and intended to be ridden by one person. On December 18, 1986, the Commission directed its staff to: (1) continue to work with the industry to develop voluntary performance standards and do the technical work required to issue a NPRM, (2) prepare a letter to state governors, the Department of the Interior, and other appropriate federal agencies stressing the importance of ATV safety, (3) update the ATV safety alert and conduct Clearinghouse activities on ATV safety, (4) develop a program to provide all warnings necessary to advise consumers of the risks associated with ATVs and how to minimize them, (5) prepare a letter advising the Specialty Vehicle Institute of America (SVIA) of the Commission's displeasure at the progress to date in developing voluntary standards, and (6) prepare a letter asking that (cont.)

Timetable:

Action	Date	FR Cite
ANPRM	05/31/85	50 FR 23139
ANPRM Comment Period End	09/30/85	50 FR 31391

Next Action Undetermined

Small Entity: Undetermined

Additional Information: ABSTRACT CONT. ATV manufacturers voluntarily cease marketing ATVs intended for use by children under 12 years of age. Letters were sent to the Governors of the fifty states on January 28, 1987, and to Federal agencies on February 26, 1987. A letter setting forth the Commission's concern about progress in developing voluntary standards for ATVs was sent to SVIA on March 30, 1987. The Consumer Alert on ATVs was updated and made available to the public on May 7, 1987. In accordance with a preliminary consent decree filed on December 30, 1987, with the U.S. District Court of the District of Columbia in U.S. v. American Honda Motor Co. et al. (Civil Action No. 87-3525 SS), the Commission has provided a draft of a proposed safety standard for ATVs to manufacturers. The preliminary consent decree provides that manufacturers will attempt in good faith to reach agreement on a voluntary standard for ATVs acceptable to the Commission within four months of the Court's approval of a final consent decree.

Agency Contact: Nick Marchica, Chairman, ATV Task Force, Consumer Product Safety Commission, Office of the Executive Director, Washington, D. C. 20207, 301 492-6550

RIN: 3041-AA53

3507. PETITION HP 87-1 REQUESTING A BAN OF CERTAIN HOUSEHOLD PRODUCTS CONTAINING MORE THAN 0.01 PERCENT TREMOLITE

Legal Authority: 15 USC 1261(q)(1)(B) Federal Hazardous Substances Act; 5 USC 553(e) Administrative Procedure Act

CFR Citation: 16 CFR 1500

Legal Deadline: None.

Abstract: On October 14, 1986, Mr. Mark Germine petitioned the Commission to ban: consumer products that contain limestone, including lawn and garden limestones, both granular and pulverized; sand products, including play sand; and consumer gravel products; if such products contain more than 0.01 percent of tremolite. Mr. Germine bases his request for a ban on a concern that tremolite in these products is carcinogenic and causes mesothelioma. The staff will prepare a briefing package for consideration by the Commission in deciding whether to grant or deny the petition. If the Commission grants the petition, it will begin a rulemaking proceeding under the Federal Hazardous Substances Act.

Timetable:

Action	Date	FR Cite
Staff sends briefing package to Commission	00/00/00	

Small Entity: Undetermined

Agency Contact: Sandra Eberle, Program Manager, Office of Program Management and Budget, Consumer Product Safety Commission, Washington, D.C. 20207, 301 492-6554

RIN: 3041-AA63

3508. PETITION CP 87-1 REQUESTING DEVELOPMENT OF A PRODUCT SAFETY RULE FOR KEROSENE HEATERS AND REQUIRING A LABEL TO WARN AGAINST FLARE-UP

Legal Authority: 5 USC 553(e) Administrative Procedure Act; 15 USC 2056 Consumer Product Safety Act; 15 USC 2058 Consumer Product Safety Act; 15 USC 2076 Consumer Product Safety Act

CFR Citation: 00 CFR None

Legal Deadline: None.

Abstract: On September 19, 1986, the Commission received a petition from the National Kerosene Heater Association (NKHA). The association requested that the Commission initiate proceeding under the Consumer Product Safety Act to develop a kerosene heater rule containing requirements to limit nitrogen dioxide emissions of kerosene heaters and all of the requirements for kerosene heaters now contained in UL Standard 647. At about the same time, the International Association of Fire

Chiefs (IAFC) requested the Commission to require the kerosene heater industry to provide notice and warning labels on all kerosene heaters sold in the United States alerting the consumer that unvented portable kerosene heaters are subject to spontaneous and uncontrollable flare-up with flames extending outside the cabinet. The staff is preparing a briefing package on these requests for consideration by the Commission. If the Commission grants the petition from NKHA or the request from IAFC, it will begin a rulemaking proceeding under the Consumer Product Safety Act.

Timetable:

Action	Date	FR Cite
Staff sends briefing package to Commission	00/00/00	

Small Entity: Undetermined

Agency Contact: L. James Sharman, Fire Programs Officer, Consumer Product Safety Commission, Office of Program Management and Budget, Washington, D.C. 20207, 301 492-6554

RIN: 3041-AA68

3509. PETITION PP 87-2 REQUESTING THAT CERTAIN EFFERVESCENT ACETAMINOPHEN TABLETS BE EXEMPTED FROM POISON PREVENTION PACKAGING ACT REGULATIONS REQUIRING CHILD-RESISTANT PACKAGING

Legal Authority: 5 USC 553(e) Administrative Procedure Act; 15 USC 1471 et seq. Poison Prevention Packaging Act

CFR Citation: 16 CFR 1700.14

Legal Deadline: None.

Abstract: A petition dated April 21, 1987, from Miles Laboratories, Inc. requested the Commission to increase the present exemption from special packaging requirements for effervescent acetaminophen tablets from an acetaminophen content of less than 10 percent to one of not more than 15 percent. In April, 1988, the staff will send a briefing package to the Commission with recommendations for action on the petition. If the Commission grants the petition, it will initiate a rulemaking proceeding under the Poison Prevention Packaging Act.

Timetable:

Action	Date	FR Cite
Staff sends briefing package to Commission	04/00/88	

Small Entity: Undetermined

Agency Contact: Virginia White, Project Manager, Consumer Product Safety Commission, Office of Program Management and Budget, Washington, D.C. 20207, 301 492-6554

RIN: 3041-AA70

3510. PETITION PP 87-4 REQUESTING THAT CERTAIN UNFLAVORED ASPIRIN IN POWDER FORM BE EXEMPTED FROM POISON PREVENTION PACKAGING ACT REGULATIONS REQUIRING CHILD-RESISTANT PACKAGING

Legal Authority: 5 USC 553(e) Administrative Procedure Act; 15 USC 1471 et seq. Poison Prevention Packaging Act

CFR Citation: 16 CFR 1700.14

Legal Deadline: None.

Abstract: A petition dated May 20, 1987, from Block Drug Company requested the Commission to increase the present exemption from special packaging requirements for unflavored aspirin preparations in powder form which are packaged in unit doses from 13 grains per unit dose to 15.4 grains per unit dose. In April, 1988, the staff will send a briefing package to the Commission with recommendations for action on the petition.

Timetable:

Action	Date	FR Cite
Staff sends briefing package to Commission	04/00/88	

Small Entity: Undetermined

Agency Contact: Virginia White, Project Manager, Consumer Product Safety Commission, Office of Program Management and Budget, Washington, D.C. 20207, 301 492-6554

RIN: 3041-AA69

3511. PETITION PP 87-3 REQUESTING THAT CERTAIN MEDROXYPROGESTERONE ACETATE TABLETS BE EXEMPTED FROM POISON PREVENTION PACKAGING ACT REGULATIONS REQUIRING CHILD-RESISTANT PACKAGING

Legal Authority: 5 USC 553(e) Administrative Procedure Act; 15 USC 1471 et seq. Poison Prevention Packaging Act

CFR Citation: 16 CFR 1700.14

Legal Deadline: None.

Abstract: A petition dated April 27, 1987, Ayerst Laboratories asked the Commission to exempt from special packaging requirements for oral prescription drugs, medroxyprogesterone acetate tablets when dispensed in mnemonic packages containing no more than 100 milligrams of the drug. If the Commission grants the petition, it will initiate a rulemaking proceeding under the Poison Prevention Packaging Act. In April, 1988, the staff will send a briefing package to the Commission with recommendations for action on the petition.

Timetable:

Action	Date	FR Cite
Staff sends briefing package to Commission	04/00/88	

Small Entity: Undetermined

Agency Contact: Virginia White, Project Manager, Consumer Product Safety Commission, Office of Program Management and Budget, Washington, D.C. 20207, 301 492-6554

RIN: 3041-AA71

3512. POSSIBLE STANDARD OR BAN TO ADDRESS INJURIES TO CHILDREN CAUSED BY CHILDREN PLAYING WITH LAWN DARTS

Legal Authority: 15 USC 1261 to 1262 Federal Hazardous Substances Act; 15 USC 2056 to 2058 Consumer Product Safety Act

CFR Citation: 16 CFR 1500.18(a)(4); 16 CFR 1500.86(a)(3)

Legal Deadline: None.

Abstract: The Commission has been considering options to address deaths and injuries to children which have resulted from children playing with lawn darts. Lawn darts intended for use by children are banned by a regulation issued under the Federal Hazardous Substances Act. However, an

exemption to this rule allows the sale of lawn darts which are labeled with warnings that the articles are not toys and should not be used by children, are accompanied with instructions for safe use, and are not sold in toy stores or store departments which deal primarily in toys or other children's articles. On October 20, 1987, the Commission published an ANPR describing regulatory alternatives under consideration to address risks of death and injury to children associated with lawn darts. These alternatives included: (1) issuing additional mandatory requirements for labeling of lawn darts, instructions to accompany those articles, and marketing practices which the Commission had previously asked the industry to adopt on a voluntary basis; or (2) banning all lawn darts. The ANPR stated that before selecting any regulatory option, the Commission would consider the extent to which the lawn (cont)

Timetable:

Action	Date	FR Cite
ANPRM	10/20/87	52 FR 38935
ANPRM Comment Period End	12/21/87	52 FR 38935

Next Action Undetermined

Small Entity: Undetermined

Additional Information: ABSTRACT CONT: dart industry adopted on a voluntary basis five specific suggestions for changes to labels, instructions, and marketing practices; and whether any additional voluntary action or mandatory requirements could be expected to protect consumers from unreasonable risks of injury associated with lawn darts. On March 2, 1988, the Commission directed the staff to draft a proposed rule to require additional labeling of lawn darts, information and instructions to accompany lawn darts, and limitations on the marketing of lawn darts.

Agency Contact: Elaine Tyrrell, Project Manager, Office of Program Management and Budget, Consumer Product Safety Commission, Washington, DC 20207, 301 492-6554

RIN: 3041-AA72

3513. ● REQUIREMENTS TO MAKE CIGARETTE LIGHTERS CHILD RESISTANT

Legal Authority: 15 USC 2051 et seq Consumer Product Safety Act; 15 USC 1261 et seq Federal Hazardous Substances Act; 15 USC 1471 et seq Poison Prevention Packaging Act

CFR Citation: Not yet determined

Legal Deadline: None.

Abstract: On March 3, 1988, the Commission published an Advance Notice of Proposed Rulemaking (ANPRM) to announce its preliminary determination that unreasonable risks of death and injury may be associated with cigarette lighters because they are not sufficiently resistant to operation by children. The ANPRM summarized information currently available to the Commission about the various types of lighters sold to consumers, risks of death and injury associated with fires started by children playing with lighters, and a voluntary standard applicable to lighters. The ANPRM discussed regulatory alternatives under consideration by the Commission and solicited information from the public about the product, risks of injury, and regulatory alternatives described in the Notice. The Commission also invited interested persons to submit an existing standard or an offer to develop or modify a voluntary standard to address the risks of injury identified in the ANPRM.

Timetable:

Action	Date	FR Cite
ANPRM	03/03/88	53 FR 6833
ANPRM Comment Period End	05/02/88	53 FR 6833

Small Entity: Undetermined

Agency Contact: L. James Sharman, Fire Programs Officer, Consumer Product Safety Commission, Office of Program Management and Budget, Washington, D. C. 20207, 301 492-6554

RIN: 3041-AA73

3514. ● POISON PREVENTION PACKAGING ACT REQUIREMENTS FOR CERTAIN CONJUGATED ESTROGENS, PROPOSED AMENDMENT OF EXEMPTION

Legal Authority: 5 USC 553 Administrative Procedure Act; 15 USC 1471 et seq Poison Prevention Packaging Act

CFR Citation: 16 CFR 1700.14

Legal Deadline: None.

Abstract: On December 22, 1987, the Commission proposed to amend a regulation which exempts conjugated estrogen tablets in certain mnemonic packages from requirements for child-resistant packaging. The proposed amendment would increase the amount of the drug allowed in each non-child-resistant package from 26.5 milligrams to 32 milligrams.

Timetable:

Action	Date	FR Cite
NPRM	12/22/87	52 FR 48452
NPRM Comment Period End	02/22/88	52 FR 48452
Staff sends briefing package to Commission	04/00/88	

Small Entity: Undetermined

Agency Contact: Virginia White, Project Manager, Consumer Product Safety Commission, Office of Program Management and Budget, Washington, D. C. 20207, 301 492-6554

RIN: 3041-AA74

3515. ● PETITION CP 87-5 REQUESTING A WARNING LABEL ON HOT AIR PAINT REMOVAL TOOLS

Legal Authority: 15 USC 2056 Consumer Product Safety Act; 15 USC 2076 Consumer Product Safety Act

CFR Citation: 16 CFR 1200; 16 CFR 1400

Legal Deadline: None.

Abstract: On August 6, 1987, the Greater St. Louis Lead Poisoning Prevention Council petitioned the Commission to require manufacturers of all hot air paint removal tools to place a warning label on the tool that specifically warns the users of the dangers of lead fumes and lead dust when removing paint with this tool. The Council bases its request on reports of high blood lead levels in children and adults associated with the use of air paint removal tools in the rehabilitation of residences which have paint with high lead levels. The staff will prepare a briefing package for consideration by the Commission deciding whether to grant or deny the petition. If the Commission grants the petition, it will begin rulemaking under the Consumer Product Safety Act.

Timetable:

Action	Date	FR Cite
Staff sends briefing package to Commission	00/00/00	

Small Entity: Undetermined

Agency Contact: Sandra Eberle, Program Manager, Consumer Product Safety Commission, Office of Program Management and Budget, Washington, D. C. 20207, 301 492-6554

RIN: 3041-AA75

3516. ● METHOD FOR IDENTIFYING TOYS AND OTHER ARTICLES INTENDED FOR CHILDREN UNDER 3 YEARS OF AGE WHICH PRESENT CHOKING, ASPIRATION, OR INGESTION HAZARDS BECAUSE OF SMALL PARTS

Legal Authority: 15 USC 1261 to 1262 Federal Hazardous Substance Act

CFR Citation: 16 CFR 1501

Legal Deadline: None.

Abstract: The Commission has a regulation applicable to toys and other articles intended for children under three years old that prescribes a test cylinder to determine if articles, or detachable parts of such articles, present a choking hazard to young children. Articles or components which fit within the test cylinder are banned. Although this regulation has been in effect for several years, choking incidents involving young children continue to occur. The Commission has established a project to gather information about the nature and causes of these incidents and to make recommendations for any additional measures needed to reduce injuries and deaths from such incidents, including modification of the small parts test cylinder. The Commission expects to publish an ANPRM in May 1988 to solicit comment on ways to address choking hazards to young children, including specific modifications of the test cylinder requested in a petition from the Consumer Federation of America and the New York Attorney General's Office.

Timetable:

Action	Date	FR Cite
ANPRM	05/00/88	
ANPRM Comment Period End	07/00/88	

Small Entity: Undetermined

Agency Contact: Elaine A. Tyrrell, Project Manager, Consumer Product Safety Commission, Office of Program Management and Budget, Washington, D.C. 20207, 301 492-6554

RIN: 3041-AA76

CONSUMER PRODUCT SAFETY COMMISSION (CPSC) — Proposed Rule Stage

3517. PETITION HP 85-1. PETITION REQUESTING BAN OF HOUSEHOLD PRODUCTS CONTAINING METHYLENE CHLORIDE

Legal Authority: 15 USC 1261(q)(1)(B) Federal Hazardous Substances Act; 15 USC 1262(a) Federal Hazardous Substances Act

CFR Citation: 16 CFR 1500

Legal Deadline: None.

Abstract: On September 3, 1985, the Consumer Federation of America (CFA) petitioned the Commission to begin a proceeding for issuance of a rule under provisions of section 3(a) of the Federal Hazardous Substances Act (FHSA) to declare that household products containing methylene chloride are hazardous substances. By letter dated December 20, 1985, CFA amended the petition to also request that a proceeding be initiated to declare household products containing methylene chloride to be "banned hazardous substances" under provisions of section 2(q)(1)(B) of the FHSA upon issuance of the rule to classify such products as hazardous substances. Methylene chloride is a solvent used in paint strippers, spray paints, and other consumer products. On August 20, 1986, the Commission proposed a rule to declare household products containing methylene chloride to be hazardous substances. This had the effect of granting CFA's first request. In August 1987, the Commission determined that there was insufficient controversy to warrant a rulemaking proceeding and issued a statement of enforcement policy stating the Commission's view that (cont.)

Timetable:

Action	Date	FR Cite
NPRM	08/20/86	51 FR 29778
NPRM Comment Period End	10/20/86	51 FR 29778
Policy published	09/14/87	52 FR 34698

Next Action Undetermined

Small Entity: Undetermined

Additional Information: CONT household products that contain methylene chloride and that expose consumers to significant levels of methylene chloride are hazardous substances and subject to the FHSA's labeling requirements. If the Commission grants the remainder of CFA's petition, it will publish an advance notice of proposed rulemaking under the provisions of the FHSA.

Agency Contact: Sandra Eberle, Program Manager, Consumer Product Safety Commission, Office of Program Management and Budget, Washington, D.C. 20207, 301 492-6554

RIN: 3041-AA58

3518. HOUSEHOLD SUBSTANCES CONTAINING METHYLENE CHLORIDE; STATUS AS HAZARDOUS SUBSTANCES; PROPOSED RULE

Legal Authority: 15 USC 1261 Federal Hazardous Substances Act; 15 USC 1262 Federal Hazardous Substances Act

CFR Citation: 16 CFR 1500.12(a)(2)

Legal Deadline: None.

Abstract: On August 20, 1986, the Commission proposed a rule to declare that household products containing methylene chloride are hazardous substances under the Federal Hazardous Substances Act. These products include some paint strippers and spray paints. The Commission's concern arises from animal tests showing that methylene chloride is a carcinogen by inhalation and studies

indicating a significant human exposure as a result of reasonably foreseeable use of products containing methylene chloride. The initiation of this rulemaking proceeding granted one part of a petition (HP 85-1) from the Consumer Federation of America. The staff provided an analysis of the comments on the proposed rule to the Commission in June 1987. In August 1987, the Commission determined that there was insufficient controversy over the status of methylene chloride as a hazardous substance; therefore, the Commission suspended the rulemaking and issued a statement of enforcement policy stating the Commission's view that household products that contain methylene chloride and that expose consumers to significant levels of methylene chloride are (cont.)

Timetable:

Action	Date	FR Cite
NPRM	06/20/86	51 FR 29778
NPRM Comment Period End	10/20/86	51 FR 29778
Policy published	09/14/87	52 FR 34698

Next Action Undetermined

Small Entity: Undetermined

Additional Information: ABSTRACT CONT: subject to the FHSA's labeling requirements.

Agency Contact: Sandra Eberle, Program Manager, Consumer Product Safety Commission, Office of Program Management and Budget, Washington, D.C. 20207, 301 492-6554

RIN: 3041-AA59

CONSUMER PRODUCT SAFETY COMMISSION (CPSC) — Final Rule Stage

3519. PETITION CP 86-2 REQUESTING A CONSUMER PRODUCT SAFETY STANDARD FOR BUNK BEDS

Legal Authority: 5 USC 553(e) Administrative Procedure Act; 15 USC 1261 Federal Hazardous Substances Act; 15 USC 1262 Federal Hazardous Substances Act; 15 USC 2056 Consumer Product Safety Act; 15 USC 2058 Consumer Product Safety Act; 15 USC 2079(d) Consumer Product Safety Act

CFR Citation: Not yet determined

Legal Deadline: None.

Abstract: In correspondence dated August 26, 1986, the Consumer Federation of America petitioned the Commission to begin a proceeding to issue a consumer product safety standard for bunk beds. The petition alleges that unreasonable risks of death or injury to children are associated with bunk beds in that (1) supporting structures for mattresses can be inadequate to prevent the mattress from falling on children, (2) guardrails can be positioned far enough above the upper surface of the mattress to allow a child's body to slip between the guardrail and the mattress, resulting in head entrapment and strangulation, and (3) the absence of a guardrail on the side of the bed next to a wall can result in entrapment of a child's head or chest between the mattress and the wall, causing strangulation. If the petition is granted, the Commission will begin a rulemaking proceeding under either the Consumer Product Safety Act or the Federal Hazardous Substances Act. The staff briefed the Commission on this petition on November 5, 1987.

Timetable:

Action	Date	FR Cite
Final Action Commission Decision on Petition	05/00/88	

Small Entity: Undetermined

Agency Contact: Elaine Tyrrell, Project Manager, Consumer Product Safety Commission, Office of Program Management and Budget, Washington, DC 20207, 301 492-6554

RIN: 3041-AA66

CONSUMER PRODUCT SAFETY COMMISSION (CPSC) — Completed Actions

3520. FEDERAL HAZARDOUS SUBSTANCES ACT REGULATIONS FOR FIRST AID LABELING OF PRODUCTS CONTAINING 10 PERCENT OR MORE OF BENZENE, TOLUENE, XYLENE, OR PETROLEUM DISTILLATES

CFR Citation: 16 CFR 1500.14(b)(3)

Completed:

Reason	Date	FR Cite
Final Action	02/03/88	53 FR 3014
Final Action Effective	03/04/88	53 FR 3014

Small Entity: Undetermined

Agency Contact: Virginia A. White 301 492-6554

RIN: 3041-AA52

3521. PETITION PP 85-2. PETITION FOR RULE TO MAKE DISPOSABLE LIGHTERS CHILD-RESISTANT

CFR Citation: 00 CFR Not Yet Determined

Completed:

Reason	Date	FR Cite
Final Action Petition Granted	12/31/87	

Small Entity: Undetermined

Agency Contact: L. J. Sharman 301 492-6554

RIN: 3041-AA56

3522. PETITION CP 86-1 REQUESTING ISSUANCE OF RULE TO ADDRESS TIP-OVER HAZARDS OF MOBILE TELEVISION CARTS AND RELATED PRODUCTS FOR USE IN SCHOOLS, INSTITUTIONS, AND GOVERNMENT AGENCIES

CFR Citation: 00 CFR Not Yet Determined

Completed:

Reason	Date	FR Cite
Final Action Petition denied	02/25/88	

Small Entity: Undetermined

Agency Contact: Stan Morrow 301 492-6554

RIN: 3041-AA60

3523. PETITION HP 86-1 REQUESTING ISSUANCE OF A RULE TO REQUIRE LABELING OF DISPOSABLE DIAPERS

CFR Citation: 00 CFR Not Yet Determined

Completed:

Reason	Date	FR Cite
Final Action Petition denied	02/09/88	

Small Entity: Undetermined

Agency Contact: L. James Sharman 301 492-6554

RIN: 3041-AA61

3524. PETITION PP 87-1 REQUESTING THAT CERTAIN CONJUGATED ESTROGENS BE EXEMPTED FROM POISON PREVENTION PACKAGING ACT REGULATIONS REQUIRING CHILD-RESISTANT PACKAGING

CFR Citation: 16 CFR 1700.14

Completed:

Reason	Date	FR Cite
Final Action Petition Granted	11/24/87	

Small Entity: Undetermined

Agency Contact: Virginia White 301 492-6554

RIN: 3041-AA65

3525. PETITION HP 87-2 TO REQUEST AMENDMENT TO THE CPSC SMALL PARTS REGULATION FOR ITEMS INTENDED FOR CHILDREN UNDER THREE YEARS OF AGE

CFR Citation: 16 CFR 1501.4

Completed:

Reason	Date	FR Cite
Final Action Petition denied	02/03/88	

Small Entity: Undetermined

Agency Contact: Elaine Tyrrell 301 492-6554

RIN: 3041-AA67

[FR Doc. 88-7898 Filed 04-22-88; 8:45 am]

BILLING CODE 6355-01-T

VOL 53 ISS 79 PT 2 APR 25 1988 UMI

federal register

Monday
April 25, 1988

Part XLV

Farm Credit Administration

Semiannual Regulatory Agenda

FARM CREDIT ADMINISTRATION (FCA)

FARM CREDIT ADMINISTRATION

12 CFR Ch. VI

Unified Agenda of Federal Regulations

AGENCY: Farm Credit Administration.

ACTION: Department Unified Agenda of Regulations and review list.

SUMMARY: The Farm Credit Administration (FCA), as an independent regulatory agency in voluntary compliance with Executive Order 12291, sets forth the following agenda of regulations which it will have under development and review during the period of April 1988 through October 1988.

FOR FURTHER INFORMATION CONTACT: Cindy R. Nicholson, Office of General Counsel, Farm Credit Administration, 1501 Farm Credit Drive, McLean, Virginia 22102-5090, (703-883-4020).

SUPPLEMENTARY INFORMATION: The Regulatory Flexibility Act (5 U.S.C. 601, *et seq.*), contains several provisions intended to reduce unnecessary and disproportionate regulatory requirements on small entities. Farm Credit Administration regulations which apply to Farm Credit System banks and associations do not and will not have a substantial impact on small entities. None of the entities regulated by the FCA fall within the definition of small entities in the Regulatory Flexibility Act. While many associations through which banks lend are smaller in size than their banks, they are not independently operated, as they are closely supervised by the banks, which must approve most of their operating policies. The associations rely exclusively on their supervising banks for their source of funds. Furthermore, the associations do not compete with each other since, as with their supervising banks, each serves only a particular geographic area.

While FCA is an independent agency exempt from Executive Order 12291, we believe that participating in this joint publication will further the public interest by including FCA in a single source of information concerning current and projected rulemaking and reviews of existing regulations.

Dated: February 25, 1988.

David A. Hill,

Secretary, Farm Credit Administration Board.

Prerule Stage

Sequence Number	Title	Regulation Identifier Number
3526	Examinations	3052-AA89
3527	Collateral Issues	3052-AA91
3528	Receivers	3052-AA92
3529	FCA Organization	3052-AA93
3530	Eligibility to Borrow – BCs	3052-AA94
3531	FLB Lending Authorities	3052-AA95
3532	Secondary Market	3052-AA96
3533	Funding Corporation	3052-AA97
3534	Assistance Corporation	3052-AA98
3535	Debt Collection Act	3052-AB02
3536	Insurance	3052-AB03
3537	Civil Money Penalties	3052-AB05

Proposed Rule Stage

Sequence Number	Title	Regulation Identifier Number
3538	Part 602 - Releasing Information	3052-AA05
3539	Director Compensation	3052-AA09
3540	Funding and Fiscal Affairs; Capital Adequacy	3052-AA79
3541	Capital Corporation	3052-AA87
3542	Capital Adequacy Related	3052-AA88
3543	Mergers/Consolidations	3052-AB00
3544	Loan Policies and Operations	3052-AB04

Final Rule Stage

Sequence Number	Title	Regulation Identifier Number
3545	Part 606 - Enforcement of Nondiscrimination on the Basis of Handicap in Programs or Activities Conducted by the Farm Credit Administration	3052-AA67

FCA

Final Rule Stage—Continued

Sequence Number	Title	Regulation Identifier Number
3546	Disclosure to Shareholders	3052-AB01

Completed Actions

Sequence Number	Title	Regulation Identifier Number
3547	Cooperative Eligibility	3052-AA11
3548	Loans Outside of Bank's Territory - Banks for Cooperatives	3052-AA13
3549	Methods of Financing	3052-AA36
3550	Obligations Eligible for Discount or Purchase	3052-AA37
3551	Overall Review of 12 CFR Parts 611 - 618	3052-AA48
3552	Banks for Cooperatives	3052-AA51
3553	Part 614 - Loan Policies and Operations Subpart Q – Banks for Cooperatives Financing International Trade	3052-AA52
3554	Part 615 - Funding and Fiscal Affairs	3052-AA60
3555	Part 612; Personnel Administration; Standards of Conduct for Directors, Officers and Employees of System Institutions	3052-AA61
3556	Part 624-Farm Credit System Regulatory Accounting Practices; Temporary Regulations	3052-AA62
3557	Loan Policies and Operations; Borrower Rights	3052-AA63
3558	Interest Rates	3052-AA64
3559	Disclosure to Shareholders; Accounting and Reporting Requirements	3052-AA66
3560	Loan Policies and Operations; Loss-Sharing Agreements	3052-AA90

FARM CREDIT ADMINISTRATION (FCA) — Prerule Stage

3526. EXAMINATIONS

Legal Authority: PL 92-181; 12 USC 2243; 12 USC 2244; 12 USC 2252(a)(10); 12 USC 2250; 12 USC 2216 to 2216k; 12 USC 2183; 12 USC 2182; 12 USC 2091; 12 USC 2031; PL 100-233

CFR Citation: 12 CFR 611; 12 CFR 617

Legal Deadline: None.

Abstract: Review various regulations regarding examination authorities to eliminate duplication of existing regulations and repetition of statutory requirements.

Timetable:

Action	Date	FR Cite
Next Action Undetermined		

Small Entity: No

Additional Information: ADDITIONAL AGENCY CONTACT: Cindy R. Nicholson, Paralegal Specialist, Office of General Counsel, Farm Credit Administration, 1501 Farm Credit Drive, McLean, Virginia 22102-5090 (703) 883-4020

Agency Contact: Steve Smith, Staff Assistant, Office of Examination, Farm Credit Administration, 1501 Farm Credit Drive, McLean, VA 22102-5090, 703 883-4172

RIN: 3052-AA89

3527. ● COLLATERAL ISSUES

Legal Authority: PL 92-181; PL 100-233

CFR Citation: 12 CFR Not yet determined

Legal Deadline: Statutory, July 5, 1988.

Abstract: Implement Agricultural Credit Act of 1987

Timetable:

Action	Date	FR Cite
Next Action Undetermined		

Small Entity: No

Additional Information: ADDITIONAL AGENCY CONTACT: Cindy R. Nicholson, Paralegal Specialist, Office of General Counsel, Farm Credit Administration, 1501 Farm Credit Drive, McLean, VA 703-883-4020

Agency Contact: Alan Glenn, Credit Examiner, Special Examination Division, Farm Credit Administration, 1501 Farm Credit Drive, McLean, Virginia 22102-5090, 703 883-4225

RIN: 3052-AA91

3528. ● RECEIVERS

Legal Authority: PL 92-181; PL 100-233

CFR Citation: 12 CFR Not yet determined

Legal Deadline: Statutory, July 5, 1988.

Abstract: Revise due to Agricultural Credit Act of 1987

Timetable:

Action	Date	FR Cite
Next Action Undetermined		

Small Entity: No

Additional Information: ADDITIONAL AGENCY CONTACT: Cindy R. Nicholson, Paralegal Specialist, Office of General Counsel, Farm Credit Administration, 1501 Farm Credit Drive, McLean, VA 22102-5090 703-883-4020

Agency Contact: Eldon Stoehr, Field Division A Chief, Office of Examinations, Farm Credit Administration, 1501 Farm Credit Drive, McLean, Virginia 22102-5090, 703 883-4251

RIN: 3052-AA92

3529. ● FCA ORGANIZATION

Legal Authority: PL 92-181; PL 100-233

CFR Citation: 12 CFR Not yet determined

Legal Deadline: Statutory, July 5, 1988.

Abstract: Revise due to Agricultural Credit Act of 1987

Timetable:

Action	Date	FR Cite

Next Action Undetermined

Small Entity: No

Additional Information: ADDITIONAL AGENCY CONTACT: Cindy R. Nicholson, Paralegal Specialist, Office of General Counsel, Farm Credit Administration, 1501 Farm Credit Drive, McLean, Virginia 22102-5090 (703) 883-4020

Agency Contact: Charles Row, Chief, Human Resources Division, Farm Credit Administration, 1501 Farm Credit Drive, McLean, Virginia 22102-5090, 703 883-4135

RIN: 3052-AA93

3530. ● ELIGIBILITY TO BORROW – BCS

Legal Authority: PL 92-181; PL 100-233

CFR Citation: 12 CFR Not yet determined

Legal Deadline: Statutory, July 5, 1988.

Abstract: Revise due to Agricultural Credit Act of 1987

Timetable:

Action	Date	FR Cite

Next Action Undetermined

Small Entity: No

Additional Information: ADDITIONAL AGENCY CONTACT: Cindy R. Nicholson, Paralegal Specialist, Office of General Counsel, Farm Credit Administration, 1501 Farm Credit Drive, McLean, Virginia 22102-5090 (703) 883-4020

Agency Contact: Dennis Carpenter, Senior Credit Specialist, Financial Analysis & Standards Division, Farm Credit Administration, 1501 Farm Credit Drive, McLean, Virginia 22102-5090, 703 883-4498

RIN: 3052-AA94

3531. ● FLB LENDING AUTHORITIES

Legal Authority: PL 92-181; PL 100-233

CFR Citation: 12 CFR Not yet determined

Legal Deadline: Statutory, July 5, 1988.

Abstract: Revise due to Agricultural Credit Act of 1987

Timetable:

Action	Date	FR Cite

Next Action Undetermined

Small Entity: No

Additional Information: ADDITIONAL AGENCY CONTACT: Cindy R. Nicholson, Paralegal Specialist, Office of General Counsel, Farm Credit Administration, 1501 Farm Credit Drive, McLean, Virginia 22101-5090 (703) 883-4020

Agency Contact: Dennis Carpenter, Senior Credit Specialist, Financial Analysis & Standards Division, Farm Credit Administration, 1501 Farm Credit Drive, McLean, Virginia 22102-5090, 703 883-4498

RIN: 3052-AA95

3532. ● SECONDARY MARKET

Legal Authority: PL 92-181; PL 100-233

CFR Citation: 12 CFR Not yet determined

Legal Deadline: Statutory, July 5, 1988.

Abstract: Implement Agricultural Credit Act of 1987

Timetable:

Action	Date	FR Cite

Next Action Undetermined

Small Entity: No

Additional Information: ADDITIONAL AGENCY CONTACT: Cindy R. Nicholson, Paralegal Specialist, Office of General Counsel, Farm Credit Administration, 1501 Farm Credit Drive, McLean, Virginia 22102-5090 (703) 883-4020

Agency Contact: George Irwin, Assistant Deputy Director, Office of Analysis & Supervision, Farm Credit Administration, 1501 Farm Credit Drive, McLean, Virginia 22102-5090, 703 883-4050

RIN: 3052-AA96

3533. ● FUNDING CORPORATION

Legal Authority: PL 92-181; PL 100-233

CFR Citation: 12 CFR Not yet determined

Legal Deadline: Statutory, July 5, 1988.

Abstract: Implement Agricultural Credit Act of 1987

Timetable:

Action	Date	FR Cite

Next Action Undetermined

Small Entity: No

Additional Information: ADDITIONAL AGENCY CONTACT: Cindy R. Nicholson, Paralegal Specialist, Office of General Counsel, Farm Credit Administration, 1501 Farm Credit Drive, McLean, Virginia 22102-5090 (703) 883-4020

Agency Contact: Alan Glenn, Credit Examiner, Special Examination Division, Farm Credit Administration, 1501 Farm Credit Drive, McLean, Virginia 22102-5090, 703 883-4225

RIN: 3052-AA97

3534. ● ASSISTANCE CORPORATION

Legal Authority: PL 92-181; PL 100-233

CFR Citation: 12 CFR Not yet determined

Legal Deadline: Statutory, July 5, 1988.

Abstract: Implement Agricultural Credit Act of 1987

Timetable:

Action	Date	FR Cite

Next Action Undetermined

Small Entity: No

Additional Information: ADDITIONAL AGENCY CONTACT: Cindy R. Nicholson, Paralegal Specialist, Office of General Counsel, Farm Credit Administration, 1501 Farm Credit Drive, McLean, Virginia 22102-5090 (703) 883-4020

Agency Contact: Alan Glenn, Credit Examiner, Special Examination Division, Farm Credit Administration, 1501 Farm Credit Drive, McLean, Virginia 22102-5090, 703 883-4225

RIN: 3052-AA98

FCA **Prerule Stage**

3535. ● DEBT COLLECTION ACT

Legal Authority: 12 USC 2252(a)(10)

CFR Citation: 12 CFR Not yet determined

Legal Deadline: None.

Abstract: GAO and Justice have issued standards for issuance of regulations

Timetable:

Action	Date	FR Cite
Next Action Undetermined		

Small Entity: No

Additional Information: ADDITIONAL AGENCY CONTACT: Cindy R. Nicholson, Paralegal Specialist, Office of General Counsel, Farm Credit Administration, 1501 Farm Credit Drive, McLean, Virginia 22102-5090 (703) 883-4020

Agency Contact: Rob Brammer, Chief, Budget & Accounting Division, Farm Credit Administration, 1501 Farm Credit Drive, McLean, Virginia 22102-5090, 703 883-4122

RIN: 3052-AB02

3536. ● INSURANCE

Legal Authority: PL 92-181; PL 100-233

CFR Citation: 12 CFR Not yet determined

Legal Deadline: Statutory, July 5, 1988.

Abstract: Revise due to Agricultural Credit Act of 1987

Timetable:

Action	Date	FR Cite
Next Action Undetermined		

Small Entity: No

Additional Information: ADDITIONAL AGENCY CONTACT: Cindy R. Nicholson, Paralegal Specialist, Office of General Counsel, Farm Credit Administration, 1501 Farm Credit Drive, McLean, Virginia 22102-5090 (703) 883-4020

Agency Contact: Dennis Carpenter, Senior Credit Specialist, Financial Analysis & Standards Division, Farm Credit Administration, 1501 Farm Credit Drive, McLean, Virginia 22102-5090, 703 883-4498

RIN: 3052-AB03

3537. ● CIVIL MONEY PENALTIES

Legal Authority: PL 92-181; PL 100-233

CFR Citation: 12 CFR Not yet determined

Legal Deadline: Statutory, July 5, 1988.

Abstract: Revise due to Agricultural Credit Act of 1987

Timetable:

Action	Date	FR Cite
Next Action Undetermined		

Small Entity: No

Additional Information: ADDITIONAL AGENCY CONTACT: Cindy R. Nicholson, Paralegal Specialist, Office of General Counsel, Farm Credit Administration, 1501 Farm Credit Drive, McLean, Virginia 22102-5090 (703) 883-4020

Agency Contact: Kathleen Eyer, Chief, Supervision Division, Farm Credit Administration, 1501 Farm Credit Drive, McLean, Virginia 22102-5090, 703 883-4455

RIN: 3052-AB05

FARM CREDIT ADMINISTRATION (FCA) **Proposed Rule Stage**

3538. PART 602 - RELEASING INFORMATION

Legal Authority: PL 92-181; PL 99-205; 12 USC 2252(a)(10)

CFR Citation: 12 CFR 602.200 to 602.245; 12 CFR 617.7080; 12 CFR 618.8300 to 618.8350

Legal Deadline: None.

Abstract: Clarify existing policies and procedures with respect to the release of information and/or documents obtained in or resulting from the conduct of official business by employees of the Farm Credit Administration and the Farm Credit System.

Timetable:

Action	Date	FR Cite
Next Action Undetermined		

Small Entity: No

Additional Information: ADDITIONAL AGENCY CONTACT: Cindy R. Nicholson, Paralegal Specialist, Office of General Counsel, Farm Credit Administration 1501 Farm Credit Drive, McLean, Virginia 22102-5090 (703) 883-4020

Agency Contact: Nancy Lynch, Senior Attorney, Office of General Counsel, Farm Credit Administration, 1501 Farm Credit Drive, McLean, VA 22102-5090, 703 883-4020

RIN: 3052-AA05

3539. DIRECTOR COMPENSATION

Legal Authority: PL 92-181; PL 96-592; 12 USC 2211; 12 USC 2252(a)(10); PL 99-205

CFR Citation: 12 CFR 611.1020(d)

Legal Deadline: None.

Abstract: Agricultural Credit Act of 1987 requires revision to FCA regulations to ensure the rights of shareholders to obtain a copy of the district board policy regarding compensation of district directors and also to inspect and copy the supporting records.

Timetable:

Action	Date	FR Cite
NPRM	11/09/87	52 FR 43081
NPRM Comment Period End	01/08/88	52 FR 43081
Next Action Undetermined		

Small Entity: No

Additional Information: ADDITIONAL AGENCY CONTACT: Cindy R. Nicholson, Paralegal Specialist, Office of General Counsel, Farm Credit Administration, 1501 Farm Credit Drive, McLean, Virginia 22102-5090 (703) 883-4020

Agency Contact: Dennis Carpenter, Senior Credit Specialist, Financial Analysis & Standards Division, Farm Credit Administration, 1501 Farm Credit Drive, McLean, VA 22102-5090, 703 883-4498

RIN: 3052-AA09

3540. FUNDING AND FISCAL AFFAIRS; CAPITAL ADEQUACY

Legal Authority: 12 USC 2154; 12 USC 2243; 12 USC 2252(a)(10); PL 99-205; PL 100-233

CFR Citation: 12 CFR 615.5200; 12 CFR 615.5202; 12 CFR 615.5204; 12 CFR 615.5206; 12 CFR 615.5208; 12 CFR 615.5210; 12 CFR 615.5212; 12 CFR 615.5213; 12 CFR 615.5214

Legal Deadline: Statutory, May 5, 1988.

Abstract: Regulations to ensure adequate capital is maintained by Farm Credit System institutions.

Timetable:

Action	Date	FR Cite
ANPRM	02/17/88	53 FR 4642
ANPRM Comment Period End	03/01/88	53 FR 4642

Next Action Undetermined

Small Entity: No

Additional Information: ADDITIONAL AGENCY CONTACT: Cindy R. Nicholson, Paralegal Specialist, Office of General Counsel, Farm Credit Administration, 1501 Farm Credit Drive, McLean, Virginia 22102-5090 (703) 883-4020

Agency Contact: William Dunn, Chief, Financial Analysis & Standards Division, Farm Credit Administration, 1501 Farm Credit Drive, McLean, VA 22102-5090, 703 883-4489

RIN: 3052-AA79

3541. CAPITAL CORPORATION

Legal Authority: PL 99-205; PL 100-233

CFR Citation: 12 CFR 611.1142(h)

Legal Deadline: None.

Abstract: Revision regarding the criteria pursuant to which the Farm Credit System Capital Corporation may assess Farm Credit System institutions and require System institutions to purchase the Corporation's capital stock and debt obligations.

Timetable:

Action	Date	FR Cite
NPRM	04/24/87	52 FR 13694

Next Action Undetermined

Small Entity: No

Additional Information: FOR ADDITIONAL INFORMATION CONTACT: Cindy R. Nicholson, Paralegal Specialist, Office of General Counsel, Farm Credit Administration 1501 Farm Credit Drive, McLean, Virginia 22102-5090 (703) 883-4020

Agency Contact: Gary Norton, Senior Attorney, Office of General Counsel, Farm Credit Administration, 1501 Farm Credit Drive, McLean, Virginia 22102-5090, 703 883-4020

RIN: 3052-AA97

3542. CAPITAL ADEQUACY RELATED

Legal Authority: PL 99-205; 12 USC 2252(a)(10); 12 USC 2154; 12 USC 2243; PL 100-233

CFR Citation: 12 CFR 614.4270; 12 CFR 614.4280; 12 CFR 614.4320; 12 CFR 614.4330; 12 CFR 615.5320; 12 CFR 615.5330; 12 CFR 615.5335; 12 CFR 615.5340; 12 CFR 615.5350; 12 CFR 615.5360; 12 CFR 615.5370

Legal Deadline: Statutory, May 5, 1988.

Abstract: Revisions to various regulations relating to capital adequacy and minimal capital requirements for Farm Credit System institutions.

Timetable:

Action	Date	FR Cite
ANPRM	02/17/88	53 FR 4642
ANPRM Comment Period End	03/01/88	53 FR 4642

Next Action Undetermined

Small Entity: No

Additional Information: ADDITIONAL AGENCY CONTACT: Cindy R. Nicholson, Paralegal Specialist, Office of General Counsel, Farm Credit Administration, 1501 Farm Credit Drive, McLean, Virginia 22102-5090 (703) 883-4020

Agency Contact: William Dunn, Chief, Financial Analysis & Standards Division, Farm Credit Administration, 1501 Farm Credit Drive, McLean, Virginia 22102-5090, 703 883-4489

RIN: 3052-AA88

3543. ● MERGERS/CONSOLIDATIONS

Legal Authority: PL 92-181; PL 100-233

CFR Citation: 12 CFR 611

Legal Deadline: Statutory, July 5, 1988.

Abstract: Due to 1987 legislation, major changes will be required to implement merger and restructuring provisions.

Timetable:

Action	Date	FR Cite
ANPRM	02/16/88	53 FR 4416
ANPRM Comment Period End	02/29/88	53 FR 4416

Next Action Undetermined

Small Entity: No

Additional Information: ADDITIONAL AGENCY CONTACT: Cindy R. Nicholson, Paralegal Specialist, Office of General Counsel, Farm Credit Administration, 1501 Farm Credit Drive, McLean, Virginia 22102-5090 (703) 883-4020

Agency Contact: James Thies, Assistant Chief, Financial Analysis & Standards Division, Farm Credit Administration, 1501 Farm Credit Drive, McLean, Virginia 22102-5090, 703 883-4475

RIN: 3052-AB00

3544. ● LOAN POLICIES AND OPERATIONS

Legal Authority: PL 92-181; PL 100-233

CFR Citation: 12 CFR 614

Legal Deadline: Statutory, May 5, 1988.

Abstract: Implement Agricultural Credit Act of 1987 which establishes new borrower rights and procedures for the restructuring of loans from System institutions and requires issuance of regulations requiring System institutions to cooperate in certain State mediation programs.

Timetable:

Action	Date	FR Cite
ANPRM	02/16/88	53 FR 4417
ANPRM Comment Period End	02/29/88	53 FR 4417

Next Action Undetermined

Small Entity: No

Additional Information: ADDITIONAL AGENCY CONTACT: Cindy R. Nicholson, Paralegal Specialist, Office of General Counsel, Farm Credit Administration, 1501 Farm Credit Drive, McLean, Virginia 22102-5090 (703) 883-4020

Agency Contact: Nancy Lynch, Senior Attorney, Office of General Counsel, Farm Credit Administration, 1501 Farm

Credit Drive, McLean, Virginia 22102-5090, 703 883-4020

RIN: 3052-AB04

FARM CREDIT ADMINISTRATION (FCA) — Final Rule Stage

3545. PART 606 - ENFORCEMENT OF NONDISCRIMINATION ON THE BASIS OF HANDICAP IN PROGRAMS OR ACTIVITIES CONDUCTED BY THE FARM CREDIT ADMINISTRATION

Legal Authority: 12 USC 2252(a)(10); PL 92-181; 29 USC 794; PL 99-205

CFR Citation: 12 CFR 606.601-699

Legal Deadline: None.

Abstract: Provide enforcement of section 504 of the Rehabilitation Act of 1973 to prohibit discrimination on the basis of handicap, as it applies to the programs or activities conducted by the Farm Credit Administration.

Timetable:

Action	Date	FR Cite
NPRM	12/18/85	50 FR 51540
NPRM Comment Period End	02/17/86	50 FR 51540

Next Action Undetermined

Small Entity: No

Additional Information: ADDITIONAL AGENCY CONTACT: Cindy R. Nicholson, Paralegal Specialist, Office of General Counsel, Farm Credit Administration, 1501 Farm Credit Drive, McLean, Virginia 22102-5090 (703) 883-4020

Agency Contact: Nancy E. Lynch, Senior Attorney, Office of General Counsel, Farm Credit Administration, 1501 Farm Credit Drive, McLean, VA 22102-5090, 703 883-4020

RIN: 3052-AA67

3546. ● DISCLOSURE TO SHAREHOLDERS

Legal Authority: PL 92-181; PL 99-205; 12 USC 2252(a)(9); 12 USC 2252(a)(10); PL 100-233, Sec 424

CFR Citation: 12 CFR 620.3

Legal Deadline: Statutory, February 5, 1988.

Abstract: Relates to shareholder disclosure of problem loans from the reporting institution to its senior officers, directors and their immediate families and affiliated organizations.

Timetable:

Action	Date	FR Cite
Interim Final Rule	02/05/88	53 FR 3334

Next Action Undetermined

Small Entity: No

Additional Information: ADDITIONAL AGENCY CONTACT: Cindy R. Nicholson, Paralegal Specialist, Office of General Counsel, Farm Credit Administration, 1501 Farm Credit Drive, McLean, Virginia 22102-5090 (703) 883-4020

Agency Contact: Dorothy Acosta, Senior Attorney, Office of General Counsel, Farm Credit Administration, 1501 Farm Credit Drive, McLean, Virginia 22102-5090, 703 883-4020

RIN: 3052-AB01

FARM CREDIT ADMINISTRATION (FCA) — Completed Actions

3547. COOPERATIVE ELIGIBILITY

CFR Citation: 12 CFR 613.3110

Completed:

Reason	Date	FR Cite
Withdrawn See RIN AA94	02/23/88	

Small Entity: No

Agency Contact: Cindy R. Nicholson 703 883-4020

RIN: 3052-AA11

3548. LOANS OUTSIDE OF BANK'S TERRITORY - BANKS FOR COOPERATIVES

CFR Citation: 12 CFR 614.4080

Completed:

Reason	Date	FR Cite
Withdrawn See RIN AA94	02/23/88	

Small Entity: No

Agency Contact: Cindy R. Nicholson 703 883-4020

RIN: 3052-AA13

3549. METHODS OF FINANCING

CFR Citation: 12 CFR 614.4600

Completed:

Reason	Date	FR Cite
Withdrawn 1987 legislation mandates reprioritizing of regulations.	02/23/88	

Small Entity: No

Agency Contact: Cindy R. Nicholson 703 883-4020

RIN: 3052-AA36

3550. OBLIGATIONS ELIGIBLE FOR DISCOUNT OR PURCHASE

CFR Citation: 12 CFR 614.4610

Completed:

Reason	Date	FR Cite
Withdrawn 1987 legislation mandates reprioritizing of regulations.	02/23/88	

Small Entity: No

Agency Contact: Cindy R. Nicholson 703 883-4020

RIN: 3052-AA37

3551. OVERALL REVIEW OF 12 CFR PARTS 611 - 618

CFR Citation: 12 CFR 611.1010(c); 12 CFR 611.1140; 12 CFR 612.2110; 12 CFR 612.2120(b); 12 CFR 612.2080; 12 CFR 612.2090; 12 CFR 613.3020(c); 12 CFR 613.3040; 12 CFR 613.3110(a)(4); 12 CFR 613.3110(b)(2); 12 CFR 614.4015; 12 CFR 614.4051; 12 CFR 614.4070; 12 CFR 614.4130; 12 CFR 614.4160(c); ...

Completed:

Reason	Date	FR Cite
Withdrawn 1987 legislation mandates reprioritizing of regulations.	02/23/88	

Small Entity: No

Agency Contact: Gary L. Norton 703 883-4020

RIN: 3052-AA48

3552. BANKS FOR COOPERATIVES

CFR Citation: 12 CFR 614.4354

Completed:

Reason	Date	FR Cite
Withdrawn See RIN AA94	02/23/88	

Small Entity: No

Agency Contact: Cindy R. Nicholson 703 883-4020

RIN: 3052-AA51

3553. PART 614 - LOAN POLICIES AND OPERATIONS SUBPART Q -- BANKS FOR COOPERATIVES FINANCING INTERNATIONAL TRADE

CFR Citation: Not yet determined

Completed:

Reason	Date	FR Cite
Withdrawn See RIN AA94	02/23/88	

Small Entity: No

Agency Contact: Cindy R. Nicholson 703 883-4020

RIN: 3052-AA52

3554. PART 615 - FUNDING AND FISCAL AFFAIRS

CFR Citation: 12 CFR 615.5135; 12 CFR 615.5136; 12 CFR 615.5140; 12 CFR 615.5141; 12 CFR 615.5142; 12 CFR 615.5144; 12 CFR 615.5130

Completed:

Reason	Date	FR Cite
Withdrawn 1987 legislation mandates reprioritizing of regulations.	02/23/88	

Small Entity: No

Agency Contact: Cindy R. Nicholson 703 883-4020

RIN: 3052-AA60

3555. PART 612; PERSONNEL ADMINISTRATION; STANDARDS OF CONDUCT FOR DIRECTORS, OFFICERS AND EMPLOYEES OF SYSTEM INSTITUTIONS

CFR Citation: 12 CFR 612.2150

Completed:

Reason	Date	FR Cite
Withdrawn 1987 legislation mandates reprioritizing of regulations.	02/23/88	

Small Entity: No

Agency Contact: Dorothy J. Acosta 703 883-4020

RIN: 3052-AA81

3556. PART 624-FARM CREDIT SYSTEM REGULATORY ACCOUNTING PRACTICES; TEMPORARY REGULATIONS

CFR Citation: 12 CFR 624.100; 12 CFR 624.101; 12 CFR 624.102; 12 CFR 624.103; 12 CFR 624.104; 12 CFR 624.110; 12 CFR 624.111; 12 CFR 624.112; 12 CFR 624.113; 12 CFR 624.114

Completed:

Reason	Date	FR Cite
Final Action	11/16/87	52 FR 43733
Final Action Effective	12/21/87	52 FR 48673

Small Entity: No

Agency Contact: Thomas Dalton 703 883-4460

RIN: 3052-AA82

3557. LOAN POLICIES AND OPERATIONS; BORROWER RIGHTS

CFR Citation: 12 CFR 614.4440 to 614.4442

Completed:

Reason	Date	FR Cite
Final Action	11/25/87	52 FR 45161
Final Action Effective	02/02/88	53 FR 2825

Small Entity: No

Agency Contact: Nancy Lynch 703 883-4020

RIN: 3052-AA83

3558. INTEREST RATES

CFR Citation: 12 CFR 614.4270 to 614.4321

Completed:

Reason	Date	FR Cite
Withdrawn 1987 legislation mandates reprioritizing of regulations.	02/23/88	

Small Entity: No

Agency Contact: Nancy Lynch 703 883-4020

RIN: 3052-AA84

3559. DISCLOSURE TO SHAREHOLDERS; ACCOUNTING AND REPORTING REQUIREMENTS

CFR Citation: 12 CFR 620; 12 CFR 621

Completed:

Reason	Date	FR Cite
Final Action	02/05/88	53 FR 3335
Final Action Effective	03/08/88	53 FR 7340

Small Entity: No

Agency Contact: Dorothy Acosta 703 883-4020

RIN: 3052-AA86

3560. ● LOAN POLICIES AND OPERATIONS; LOSS-SHARING AGREEMENTS

Legal Authority: 12 USC 2183; 12 USC 2199; 12 USC 2202; 12 USC 2243; 12 USC 2244; 12 USC 2252(a)(10); 12 USC 2012(22); 12 USC 2053; 12 USC 2072(18); 12 USC 2093(15); 12 USC 2122(18); 12 USC 2216g

CFR Citation: 12 CFR 614.4341

Legal Deadline: Statutory, January 11, 1988.

Abstract: Relates to the reversal of previously accrued financial assistance under Farm Credit System loss-sharing agreements. The amendment

implements provisions of the Agricultural Credit Act of 1987 and will facilitate the conversion of certain accounts payable of contributing banks into accounts payable of the Financial Assistance Corporation.

Timetable:

Action	Date	FR Cite
Final Action Effective	01/11/88	53 FR 775
Final Action	01/13/88	53 FR 775

Small Entity: No

Additional Information: ADDITIONAL AGENCY CONTACT: Cindy R. Nicholson, Paralegal Specialist, Office of General Counsel, Farm Credit Administration, 1501 Farm Credit Drive, McLean, Virginia 22102-5090 (703) 883-4020

Agency Contact: Gary Norton, Senior Attorney, Office of General Counsel, Farm Credit Administration, 1501 Farm Credit Drive, McLean, Virginia 22102-5090, 703 883-4020

RIN: 3052-AA90

[FR Doc. 88-5105 Filed 04-22-88; 8:45 am]

BILLING CODE 6705-01-T

BEST COPY AVAILABLE

VOL
53

ISS
79

PT
2

AP
25

1988

UMI

federal register

Monday
April 25, 1988

Part XLVI

Federal Communications Commission

Semiannual Regulatory Agenda

FEDERAL COMMUNICATIONS COMMISSION (FCC)

FEDERAL COMMUNICATIONS COMMISSION

47 CFR Ch. I

Unified Agenda of Federal Regulations; April 1988

AGENCY: Federal Communications Commission.

ACTION: Publication of the Unified Agenda of Federal Regulations.

SUMMARY: Twice a year, the Commission publishes a list in the Unified Agenda of those major items and other significant proceedings under development or review that pertain to the Regulatory Flexibility Act. The agenda also provides the CFR Citations and Legal Authorities which govern these proceedings. The Regulatory Flexibility Act (94 Stat. 1167: 5 U.S.C. 605) includes notations on the applicability of the Regulatory Flexibility Act to each item.

The Unified Agenda is published in the **Federal Register** in April and October of each year.

ADDRESS: Federal Communications Commission, 1919 M Street, NW., Washington, DC 20554.

FOR FURTHER INFORMATION CONTACT: Tenecia Moncrief, Office of Managing Director, (202) 632-3906.

SUPPLEMENTARY INFORMATION:

Unified Agenda of Major and Other Significant Proceedings.

The Commission encourages public participation in the FCC rulemaking process. To help keep the public informed of significant rulemaking proceedings, the Commission has prepared an agenda of important proceedings now in progress. OMB publishes the Unified Agenda in the **Federal Register** in April and October of each year.

The following terms may be helpful in understanding the status of the proceedings included in this report:

A Docket Number - is assigned to a proceeding if the Commission has issued either a Notice of Proposed Rulemaking or a Notice of Inquiry in regard to the matter under consideration. Since January 1, 1978, the Commission has used docket numbers which consist of the last two digits of the calendar year in which the docket was established plus a sequential number which begins at 1 with the first docket initiated during a calendar year (e.g., Docket 80-1 or Docket 83-1). The abbreviation for the responsible Bureau usually precedes the docket number, as in "Docket 79-164." When a docket number consists of only five digits (e.g., Docket 29622), this indicates that the docket was established before January 1, 1978.

Notice of Inquiry (NOI) - issued by the Commission when it is seeking information on a broad subject or trying to generate ideas on a given topic. A comment period is specified during which all interested parties may submit comments.

Notice of Proposed Rulemaking (NPRM) - issued by the Commission when it is proposing a specific change to the FCC Rules and Regulations. Before any changes are actually made, interested parties may submit written comments on the proposals.

Memorandum Opinion and Order (MO&O) - issued by the Commission to deny a petition for rulemaking, conclude an inquiry, modify a decision, or deny a petition for reconsideration of a decision.

Rulemaking (RM) Number - assigned to a proceeding after the appropriate Bureau/Office has reviewed a petition for rulemaking, but before the Commission has taken action on the petition.

Report & Order (R&O) - issued by the Commission to state a new or amended rule or state that the FCC Rules will not be changed.

H. Walker Feaster,

Acting Secretary, Federal Communications Commission.

COMMON CARRIER BUREAU—Prerule Stage

Sequence Number	Title	Regulation Identifier Number
3561	Jurisdictional Separations Procedures: Petitions for Reconsideration of Items in Order Reflected in the New Part 36 Separation Manual	3060-AE05
3562	Jurisdictional Separations Procedures: Central Office Equipment Category 3, Local Switching Equipment	3060-AE06

COMMON CARRIER BUREAU—Proposed Rule Stage

Sequence Number	Title	Regulation Identifier Number
3563	Cellular Radio Licensing Procedures for Small Markets	3060-AD38
3564	In the Matter of Revision of Part 21 of the Commission's Rules, CC Docket No. 86-128	3060-AD71
3565	Jurisdictional Separations	3060-AD93
3566	Application of Access Charges with regard to Providers of Enhanced Services	3060-AE01
3567	Deregulation of Certain Basic Services	3060-AE02
3568	Regulatory Policies and International Telecommunications: Notice of Inquiry and Proposed Rulemaking	3060-AE03
3569	Jurisdictional separations procedures: Reconsideration of the decision to exclude access revenues from the allocation of marketing expenses	3060-AE07

FCC

COMMON CARRIER BUREAU—Proposed Rule Stage—Continued

Sequence Number	Title	Regulation Identifier Number
3570	Jurisdictional Separation Procedures: Central Office Equipment (Circuit Equipment) and Cable and Wire Facilities	3060-AE14

COMMON CARRIER BUREAU—Final Rule Stage

Sequence Number	Title	Regulation Identifier Number
3571	Satellite Communications	3060-AD70

COMMON CARRIER BUREAU—Completed Actions

Sequence Number	Title	Regulation Identifier Number
3572	MTS and WATS Market Structure Amendment of Part 67/Establishment of Joint Board	3060-AD89

OFFICE OF ENGINEERING AND TECHNOLOGY—Prerule Stage

Sequence Number	Title	Regulation Identifier Number
3573	900 MHz G/NG Fixed	3060-AD55

OFFICE OF ENGINEERING AND TECHNOLOGY—Proposed Rule Stage

Sequence Number	Title	Regulation Identifier Number
3574	216 - 225 MHz Allocations	3060-AC91
3575	DORCMA/SEIA-REMOTE CONTROL/SECURITY DEVICES	3060-AC96
3576	Public Safety National Plan	3060-AD66
3577	LTTS Reallocation	3060-AD67
3578	Part 15 Review (Auditory Assistance and Iggulton Petitions to be Disposed of Concurrent with this Action)	3060-AD68
3579	900 MHz Reserve Reconsideration	3060-AD91
3580	EIA Petition for Extension of Time for 46/49 MHz	3060-AD95
3581	EIA Petition for Cordless Telephone Allocation at 900 MHz	3060-AD97
3582	Alternative Type Acceptance Procedure	3060-AD99
3583	Verification of Parts 73, 74, and Devices	3060-AE00
3584	Scanning Receiver Labelling	3060-AE18

OFFICE OF ENGINEERING AND TECHNOLOGY—Final Rule Stage

Sequence Number	Title	Regulation Identifier Number
3585	Cellular Flexibility	3060-AE15

FCC

OFFICE OF ENGINEERING AND TECHNOLOGY—Completed Actions

Sequence Number	Title	Regulation Identifier Number
3586	Reconsideration of Third & Order re 1-40 GHz	3060-AD96

MASS MEDIA BUREAU—Proposed Rule Stage

Sequence Number	Title	Regulation Identifier Number
3587	Technical Deregulation: Part 73: TV	3060-AD58
3588	Section 73.37(e): Petition for Reconsideration	3060-AD63
3589	Foreign Clears: Ct. Remand: Minority Preference	3060-AD72
3590	Broadcast EEO: Reconsideration	3060-AD73
3591	FM Technical Clean-up: Reconsideration	3060-AD74
3592	Main Studio Location	3060-AD75
3593	Noncommercial Broadcast: Issues-Programs Lists	3060-AD76
3594	Radio Multiple Ownership & Cross Ownership Rules	3060-AD78
3595	Satellite Television Stations	3060-AD79
3596	Radio Reading Services	3060-AD80
3597	Daytimers Issues	3060-AD85
3598	AM Expanded Band: Domestic	3060-AD92
3599	Wireless Cameras	3060-AE10
3600	FM Translators: Moody Bible	3060-AE11
3601	FM/TV Directional Antenna	3060-AE12
3602	Channels 14/69 Interference: NOI/NPRM	3060-AE13
3603	FM Translators:NOI/NPRM	3060-AE23
3604	Advanced Television Systems	3060-AE24

MASS MEDIA BUREAU—Completed Actions

Sequence Number	Title	Regulation Identifier Number
3605	AM Daytimers: Daylight Savings Time	3060-AD77
3606	Broadcast Call Signs	3060-AD81
3607	UHF Impact Policy/Carroll Doctrine	3060-AD83

PRIVATE RADIO BUREAU—Proposed Rule Stage

Sequence Number	Title	Regulation Identifier Number
3608	Wireline Common Carriers - Operation of SMRS	3060-AD54
3609	Revision and reorganization of Aviation rules (Part 87)	3060-AE08
3610	Multiple Address Systems	3060-AE09
3611	Multiple Address Systems	3060-AE20
3612	Revision and reorganization of Aviation Rules (Pt. 87)	3060-AE21

FCC

PRIVATE RADIO BUREAU—Final Rule Stage

Sequence Number	Title	Regulation Identifier Number
3613	Part 90 Review - Subparts M&S incl. ASNA pet., Subpart S Wait List	3060-AD69
3614	Special Emergency Radio Private Carriers	3060-AE19

PRIVATE RADIO BUREAU—Completed Actions

Sequence Number	Title	Regulation Identifier Number
3615	External Frequency Controls	3060-AD53

FEDERAL COMMUNICATIONS COMMISSION (FCC) —COMMON CARRIER BUREAU

Prerule Stage

3561. JURISDICTIONAL SEPARATIONS PROCEDURES: PETITIONS FOR RECONSIDERATION OF ITEMS IN ORDER REFLECTED IN THE NEW PART 36 SEPARATION MANUAL

Significance: Agency Priority

Legal Authority: 47 USC 221(c); 47 USC 403; 47 USC 410

CFR Citation: 47 CFR 36

Abstract: With the issuance of this Order inviting comments and requests for data we are seeking comments on the appropriate subcategorization and allocation of Central Office Equipment (Circuit Equipment) Investment and Cable & Wire Facilities investment. We will use the data to calculate the effects of alternative allocators and examine the need for changes in the jurisdictional separations procedures for this investment.

Timetable:

Action	Date	FR Cite
Order Inviting Comments	05/07/86	51 FR 21000
Recommended Decision and Order	04/08/87	52 FR 15354
R&O	05/01/87	52 FR 17228
Order Inviting Comments	06/01/88	52 FR 43206

Small Entity: Yes

Additional Information: CC Docket No. 80-286

Agency Contact: Michael Wilson, Federal Communications Commission, 1919 M Street, N.W., Washington, D.C. 20554, 202 632-7500

RIN: 3060-AE05

3562. JURISDICTIONAL SEPARATIONS PROCEDURES: CENTRAL OFFICE EQUIPMENT CATEGORY 3, LOCAL SWITCHING EQUIPMENT

Significance: Agency Priority

Legal Authority: 47 USC 221(c); 47 USC 403; 47 USC 410

CFR Citation: 47 CFR 36

Abstract: With the issuance of this Order inviting comments and requests for Data we are seeking further comments on the development of other relative use allocators, including Switched Minutes of Use (SMOU) to allocate Central Office Equipment investment included in the Local Switching Equipment Category in the Part 36 Separations Manual.

Timetable:

Action	Date	FR Cite
Order Inviting Comments	05/07/86	51 FR 21000
R&O	05/01/87	52 FR 17228

Joint Board

Recommended Decision and Order 04/08/87 (52 FR 15354)

Request for Data (Joint Board)

Order Inviting Comments 06/01/88 (52 FR 25263)

Small Entity: Yes

Additional Information: CC Docket 80-286

Agency Contact: Michael Wilson, Federal Communications Commission, 1919 M Street, N.W., Washington, D.C. 20554, 202 632-7500

RIN: 3060-AE06

FEDERAL COMMUNICATIONS COMMISSION (FCC) —COMMON CARRIER BUREAU

Proposed Rule Stage

3563. CELLULAR RADIO LICENSING PROCEDURES FOR SMALL MARKETS

Significance: Agency Priority

Legal Authority: 47 USC 151; 47 USC 301; 47 USC 303; 47 USC 307; 47 USC 308; 47 USC 309

CFR Citation: 47 CFR 22.900

Abstract: Modification of licensing procedures for cellular mobile radio

systems in smaller markets to make cellular radio service available more rapidly.

Timetable:

Action	Date	FR Cite
R&O	07/16/86	
FNPRM	10/16/86	
R&O	06/00/88	

Small Entity: Yes

Additional Information: cc 85-388

Agency Contact: G. Goldstein, Attorney, Federal Communications Commission, 1919 M Street, N.W., Washington, D.C. 20554, 202 632-6450

RIN: 3060-AD38

3564. IN THE MATTER OF REVISION OF PART 21 OF THE COMMISSION'S RULES, CC DOCKET NO. 86-128

Significance: Agency Priority

Legal Authority: 47 USC 4(i); 47 USC 303(r); 47 USC 154(i); 47 USC 303; 47 USC 4; 5 USC 553

CFR Citation: 47 CFR 21

Abstract: Make licensing procedure as efficient as possible for carriers and FCC staff, update and simplify the rules to reflect recent changes in the industry and the introduction of new communication services; and to eliminate those requirements that appear to be no longer necessary. By replacing a two-step licensing process with a one-step licensing process and eliminating unnecessary regulations, the burden on small businesses (applicants) will be substantially reduced, delays in implementing services will be minimized and service will be provided to the public in the most efficient and expeditious manner possible.

Timetable:

Action	Date	FR Cite
ANPRM	04/11/87	
R&O	06/01/88	

Small Entity: Yes

Agency Contact: Geraldine A. Matise, Attorney, Federal Communications Commission, 1919 M Street, N.W., Room 6010, Washington, D.C. 20554, 202 634-1841

RIN: 3060-AD71

3565. JURISDICTIONAL SEPARATIONS

Significance: Agency Priority

Legal Authority: 47 USC 410; 47 USC 154(i); 47 USC 154(j); 47 USC 201 to 205; 47 USC 218

CFR Citation: 47 CFR 36; 47 CFR 69

Legal Deadline: None.

Abstract: This proceeding concerns the allocation between the state and federal jurisdictions of the costs of special access lines (including those used with WATS service) that carry significant amounts of both interstate and intrastate traffic.

Timetable:

Action	Date	FR Cite
NPRM	06/01/88	

Small Entity: Not Applicable

Agency Contact: Claudia Pabo, Federal Communications Commission, 1919 M Street, N.W., Washington, D.C., 202 632-4047

RIN: 3060-AD93

3566. APPLICATION OF ACCESS CHARGES WITH REGARD TO PROVIDERS OF ENHANCED SERVICES

Significance: Agency Priority

Legal Authority: 47 USC 154; 47 USC 201 to 205; 47 USC 218; 47 USC 403

CFR Citation: 47 CFR 69.2; 47 CFR 69.5; 47 CFR 69.105; 47 CFR 69.106; 47 CFR 69.107; 47 CFR 69.108; 47 CFR 69.111; 47 CFR 69.112

Abstract: Enhanced service providers currently have an exemption from interstate access charges. The NPRM proposes to eliminate that exemption and have enhanced service providers pay the same interstate access charges that other service providers pay now.

Timetable:

Action	Date	FR Cite
NPRM	06/01/88	
NPRM Comment Period End	06/27/88	
Order	06/00/88	

Small Entity: Yes

Agency Contact: Ruth Milkman, Federal Communications Commission, 1919 M Street, N.W., Washington, D.C. 20554, 202 632-6363

RIN: 3060-AE01

3567. DEREGULATION OF CERTAIN BASIC SERVICES

Significance: Agency Priority

Legal Authority: 47 USC 151; 47 USC 154(i); 47 USC 154(j); 47 USC 201; 47 USC 202; 47 USC 203; 47 USC 204; 47 USC 205; 47 USC 218; 47 USC 220; 47 USC 303(g); 47 USC 303(r); 47 USC 403; 47 USC 404; 5 USC 553

CFR Citation: 47 CFR 1.48; 47 CFR 1.49; 47 CFR 1.419

Abstract: Proposed reduction of regulation for certain basic services offered by dominant carriers based on a service-by-service analysis of competition. Contract services and packet switched services are targeted for such potential deregulation.

Timetable:

Action	Date	FR Cite
NPRM	01/09/87	
NPRM Comment Period End	04/10/87	
FNPRM	06/00/88	

Small Entity: Yes

Additional Information: CC Docket 86-421

Agency Contact: Melanie Haratunian, Federal Communications Commission, 1919 M Street, N.W., Washington, D.C. 20554, 202 632-4047

RIN: 3060-AE02

3568. REGULATORY POLICIES AND INTERNATIONAL TELECOMMUNICATIONS: NOTICE OF INQUIRY AND PROPOSED RULEMAKING

Significance: Agency Priority

Legal Authority: 47 USC 151; 47 USC 154; 47 USC 201 to 205; 47 USC 214; 47 USC 218 to 222; 47 USC 301; 47 USC 302

CFR Citation: 47 CFR 63.01; 47 CFR 63.701; 47 CFR 68.226; 47 CFR 63.703; 47 CFR 63.10; 47 CFR 63.702; 47 CFR 68.01; 47 CFR 69.01

Abstract: This Notice of Inquiry and Propose Rulemaking asks whether the public interest requires that the Commission consider the telecommunications policies of foreign governments in the formulation of its regulatory policies concerning the provision of telecommunications services and goods within the United States and the provision of services between the United States and foreign countries. The Notice proposes certain information gathering measures designed to increase the Commission's knowledge of the extent of participation

in the US market by foreign companies and service providers.

Timetable:

Action	Date	FR Cite
NPRM	01/30/87	
NPRM Comment Period End	05/22/87	
R&O	06/00/88	

Small Entity: Yes

Agency Contact: William J. Kirsch, Special Counsel for International Policy, Federal Communications Commission, 1919 M Street, N.W. Room 544, Washington, D.C. 20554, 202 632-4047

RIN: 3060-AE03

3569. JURISDICTIONAL SEPARATIONS PROCEDURES: RECONSIDERATION OF THE DECISION TO EXCLUDE ACCESS REVENUES FROM THE ALLOCATION OF MARKETING EXPENSES

Significance: Agency Priority

Legal Authority: 47 USC 221(c); 47 USC 403; 47 USC 410

CFR Citation: 47 CFR 36; 47 CFR 69

Abstract: With the issuance of this order we are addressing the petitions for reconsideration filed by parties urging the FCC to reconsider its decision to exclude access revenues from the allocation factor for marketing expenses. We also are initiating a further proceeding to re-examine the separations treatment of marketing expenses.

Timetable:

Action	Date	FR Cite
Order Inviting Comments	05/07/86	51 FR 21000
R&O	05/01/87	52 FR 17228

(RD&O) (Joint Board)

Recommended Decision and Order 04/08/87 (52 FR 15354)

Joint Board

R&O 04/01/86

Recon. & Supp. NPRM

MO&O 09/01/87 (52 FR 32937)

Small Entity: Yes

Additional Information: CC Docket 78-72 CC Docket 80-286 CC Docket 86-297

Agency Contact: Michael Wilson, Federal Communications Commission, 1919 M Street, N.W., Washington, D.C. 20554, 202 632-7500

RIN: 3060-AE07

3570. JURISDICTIONAL SEPARATION PROCEDURES: CENTRAL OFFICE EQUIPMENT (CIRCUIT EQUIPMENT) AND CABLE AND WIRE FACILITIES

Significance: Agency Priority

Legal Authority: 47 USC 221(c); 47 USC 403; 47 USC 410

CFR Citation: 47 CFR 36; 47 CFR 69

Abstract: With the issuance of this order we are addressing the petitions for reconsideration of the FCC Report and Order released May 1, 1987. The FCC Order adopted the Federal State Joint Board's recommendations regarding the jurisdictional separations treatment of revenue accounting expenses in account 662 and procedures prescribed in the new Separations Manual which will conform to the new USOA.

Timetable:

Action	Date	FR Cite
Order Inviting Comments	05/07/86	51 FR 21000
R&O	05/01/87	52 FR 17228
MO&O	06/00/88	

Small Entity: Yes

Additional Information: CC Docket No. 78-72 CC Docket No. 80-286 CC Docket No. 86-297

Agency Contact: Michael Wilson, Federal Communications Commission, 1919 M Street, N.W., Washington, D.C. 20554, 202 632-7500

RIN: 3060-AE14

FEDERAL COMMUNICATIONS COMMISSION (FCC) —COMMON CARRIER BUREAU

Final Rule Stage

3571. SATELLITE COMMUNICATIONS

Significance: Agency Priority

Legal Authority: 47 USC 303; 47 USC 553

CFR Citation: 47 CFR 25

Legal Deadline: None.

Abstract: The Commission seeks to develop a record & to solicit comments on the proposed rules. These proposed rules are designed to implement recommendations made by the joint industry/government Advisory Committee on 2 degree satellite spacing; and they will codify basic applications requirements for satellite services. The proposed rules would apply to all entities including small entities who seek authorization under Part 25 of the Commission's rules to construct and operate Fixed-Satellite communications facilities. The proposed rules would establish operational and technical procedures designed to alleviate adjacent satellite interference and may increase the reporting and cost burdens on all satellite licensees. The rules codifying basic applications requirements are codifications of existing policies. Will impose no additional burdens, and may, in fact, reduce the burden by eliminating several current requirements. In order to be effective, these rules must apply to all licensees and thus there is no significant alternative.

Timetable:

Action	Date	FR Cite
ANPRM	09/01/87	52 FR 6175
ANPRM Comment Period End	11/01/87	
Final Action	12/00/88	
Final Action Effective	02/00/89	

Small Entity: Yes

Agency Contact: Rosalee Gorman or Fern Jarmulnek, Staff Attorneys, Federal Communications Commission, 2025 M Street, N.W., Room 6324, Washington, D.C. 20554, 202 634-1624

RIN: 3060-AD70

FEDERAL COMMUNICATIONS COMMISSION (FCC) —COMMON CARRIER BUREAU

Completed Actions

3572. MTS AND WATS MARKET STRUCTURE AMENDMENT OF PART 67/ESTABLISHMENT OF JOINT BOARD

Significance: Agency Priority

CFR Citation: 47 CFR 67; 47 CFR 69

Completed:

Reason	Date	FR Cite
Withdrawn	04/01/87	

Small Entity: Yes

Agency Contact: Cindy Work 202 632-6363

RIN: 3060-AD89

FEDERAL COMMUNICATIONS COMMISSION (FCC) —OFFICE OF ENGINEERING AND TECHNOLOGY

Prerule Stage

3573. 900 MHZ G/NG FIXED

Significance: Agency Priority

Legal Authority: 47 USC 303

CFR Citation: 47 CFR 2; 47 CFR 74; 47 CFR 94

Abstract: Development of operating rules and sharing arrangement for use of the 932-935 and 941-943 MHz bands for G/NG fixed services.

Timetable:

Action	Date	FR Cite
NPRM	11/25/86	
R&O	06/30/88	

Small Entity: Yes

Additional Information: 82-243

Agency Contact: Rodney Small, Federal Communications Commission, 2025 M St., NW, Rm. 7332, Washington, DC 20554, 202 653-8116

RIN: 3060-AD55

FEDERAL COMMUNICATIONS COMMISSION (FCC) —OFFICE OF ENGINEERING AND TECHNOLOGY

Proposed Rule Stage

3574. 216 - 225 MHZ ALLOCATIONS

Significance: Agency Priority

Legal Authority: 47 USC 303

CFR Citation: 47 CFR 2

Abstract: Proceeding to reallocate frequencies in the 216 - 225 MHz band including reallocation of 220 - 225 MHz from amateur to Land Mobile Services.

Timetable:

Action	Date	FR Cite
NPRM	12/31/84	
NPRM	12/31/86	
R&O	06/01/88	

Small Entity: Yes

Additional Information: Gen. 87-14

Agency Contact: Fred Thomas, Federal Communications Commission, 2025 M St., N.W., Rm. 7320, Washington, D.C. 20554, 202 653-8112

RIN: 3060-AC91

3575. DORCMA/SEIA-REMOTE CONTROL/SECURITY DEVICES

Significance: Agency Priority

Legal Authority: 47 USC 302

CFR Citation: 47 CFR 15.201 to 215

Abstract: Review and overhaul of technical standards for remote control and security devices in Part 15. Initiated by petitions for rulemaking filed by Door Operator and Remote Control Manufactures association, the Security Equipment Industry Association, and Transcience Industries.

Timetable:

Action	Date	FR Cite
NPRM	10/22/86	
R&O	06/01/88	

Small Entity: Yes

Additional Information: 86-442

Agency Contact: John Reed, Federal Communications Commission, 2025 M St., N.W., Rm. 8302, Washington, D.C. 20554, 202 653-7313

RIN: 3060-AC96

3576. PUBLIC SAFETY NATIONAL PLAN

Significance: Agency Priority

Legal Authority: 47 USC 4(i); 47 USC 303(r)

CFR Citation: 47 CFR 90

Abstract: Phase III of a project to meet spectrum allocation needs of the public safety community.

Timetable:

Action	Date	FR Cite
NPRM	09/01/87	
R&O	06/01/88	

Small Entity: Yes

Additional Information: 87-112

Agency Contact: Fred Thomas, Federal Communications Commission, 2025 M Street, N.W., Room 7130, Washington, D.C. 20554, 202 653-8112

RIN: 3060-AD66

3577. LTTS REALLOCATION

Significance: Agency Priority

Legal Authority: 47 USC 4(i); 47 USC 303(r)

CFR Citation: 47 CFR 2; 47 CFR 74

Abstract: Response to petition from Chadborne and Parke requesting secondary allocation of frequencies to the local transmission service.

Timetable:

Action	Date	FR Cite
NPRM	09/01/87	
R&O	06/01/88	

Small Entity: Yes

Additional Information: 87-136

Agency Contact: Ray LaForge, Federal Communications Commission, 2025 M Street, N.W., Room 7328, Washington, D.C. 20554, 202 653-8117

RIN: 3060-AD67

3578. PART 15 REVIEW (AUDITORY ASSISTANCE AND IGGULTON PETITIONS TO BE DISPOSED OF CONCURRENT WITH THIS ACTION)

Significance: Agency Priority

Legal Authority: 47 USC 301; 47 USC 302; 47 USC 303; 47 USC 4(i)

CFR Citation: 47 CFR 15

Abstract: A comprehensive revision of Part 15 which proposes to allow marketing and use of a greater variety of devices, and to reduce the regulatory burden on the public.

Timetable:

Action	Date	FR Cite
NPRM	10/02/87	
NPRM public comment period	05/09/88	
Report and Order	12/00/88	

Small Entity: Yes

Additional Information: Docket 87-389

Agency Contact: John Reed, Federal Communications Commission, 2025 M Street, N.W., Room 7122, Washington, D.C. 20554, 202 653-7313

RIN: 3060-AD68

3579. 900 MHZ RESERVE RECONSIDERATION

Significance: Agency Priority

Legal Authority: 47 USC 301

CFR Citation: 47 CFR 2

Abstract: In this MO&O, the Commission will address eight petitions for reconsideration of frequency allocations made in the R&O in this proceeding. Principal issues are: (1) a request to allocate an additional 2 MHz to public safety, (2) a request to reallocate the general purpose mobile radio service instead to private land mobile, and (3) a request from aeronautical interests to delete the L-band allocation for mobile-satellite service and retain the band exclusively for aeronautical mobile-satellite (R) service.

Timetable:

Action	Date	FR Cite
MO&O	06/01/88	

Small Entity: Yes

Additional Information: 84-1231, 84-1233, and 84-1234

Agency Contact: Julie Knapp, Federal Communications Commission, 2025 M Street, N.W., Washington, D.C. 20554, 202 653-8108

RIN: 3060-AD91

3580. EIA PETITION FOR EXTENSION OF TIME FOR 46/49 MHZ

Significance: Agency Priority

Legal Authority: 47 USC 301

CFR Citation: 47 CFR 15

Abstract: The Electronic Industry Association has requested an extension of time from February 1989 to February 1994 to continue manufacture of cordless telephones on government frequencies at 46/49 MHz under Part 15.

Timetable:

Action	Date	FR Cite
order	06/00/88	

Small Entity: Yes

Additional Information: RM-5320

Agency Contact: Julie Knapp, Federal Communications Commission, 2025 M Street, N.W., Washington, D.C. 20554, 202 653-8108

RIN: 3060-AD95

3581. EIA PETITION FOR CORDLESS TELEPHONE ALLOCATION AT 900 MHZ

Significance: Agency Priority

Legal Authority: 47 USC 301

CFR Citation: 47 CFR 2

Abstract: The Electronic Industries Association has petitioned the Commission seeking an allocation of 4 MHz for cordless telephones in the 800/900 MHz land mobile reserve.

Timetable:

Action	Date	FR Cite
order	06/00/88	

Small Entity: Yes

Additional Information: RM-4780

Agency Contact: Julie Knapp, Federal Communications Commission, 2025 M Street, N.W., Washington, D.C. 20554, 202 653-8108

RIN: 3060-AD97

3582. ALTERNATIVE TYPE ACCEPTANCE PROCEDURE

Significance: Agency Priority

Legal Authority: 47 USC 4(i); 47 USC 303(r)

CFR Citation: 47 CFR 2; 47 CFR 22; 47 CFR 90

Abstract: That proceeding in Docket No. 85-171 proposed a new technique that would allow maximum flexibility in getting innovative new equipment designs into the marketplace. This proposal will be a new approach to solve some of the technical and administrative problems identified in Docket 85-171.

Timetable:

Action	Date	FR Cite
NPRM	03/31/86	
R&O	12/30/86	

Small Entity: Yes

Additional Information: 85-171

Agency Contact: Ken Nichols, Federal Communications Commission, 7435 Oakland Mills Road, Guilford, MD 21045, 301 725-1585

RIN: 3060-AD99

3583. VERIFICATION OF PARTS 73, 74, AND DEVICES

Significance: Agency Priority

Legal Authority: 47 USC 302; 47 USC 303

CFR Citation: 47 CFR 73; 47 CFR 74; 47 CFR 78

Abstract: Proposal for relaxation of the rules to change the equipment authorization procedure for certain devices subject to Parts 73, 74, and 78 from notification to the less burdensome verification procedure.

Timetable:

Action	Date	FR Cite
NPRM	09/30/87	
NPRM	01/29/88	
Report and Order	12/30/88	

Small Entity: Yes

Agency Contact: George Harenberg, Federal Communications Commission,

FCC—OET — Proposed Rule Stage

2025 M Street, N.W., Washington, D.C. 20554, 202 653-8107

RIN: 3060-AE00

3584. ● SCANNING RECEIVER LABELLING

Significance: Agency Priority

Legal Authority: 47 USC 301; 47 USC 302; 47 USC 303; 47 USC 4(i)

CFR Citation: 47 CFR 15

Abstract: Consideration of a petition requesting changes to Part 15 to require scanner manufacturers to label their receivers to alert users that it is not legal to listen to certain transmissions taking place on specified bands.

Timetable:

Action	Date	FR Cite
NPRM	06/01/88	

Small Entity: Yes

Agency Contact: Paul Marrangoni, Federal Communications Commission, 2025 M St., N.W. Rm. 7336, Washington, D.C. 20554, 202 653-8107

RIN: 3060-AE18

FEDERAL COMMUNICATIONS COMMISSION (FCC) —OFFICE OF ENGINEERING AND TECHNOLOGY — Final Rule Stage

3585. CELLULAR FLEXIBILITY

Significance: Agency Priority

Legal Authority: 47 USC 303

CFR Citation: 47 CFR 22

Abstract: Proceeding will investigate approach to relax technical standards for new cellular spectrum at 800 MHZ in order to provide flexibility to licensees for implementation of new technologies and new service offerings.

Timetable:

Action	Date	FR Cite
NPRM	06/30/87	
R&O	09/30/88	

Small Entity: Yes

Additional Information: 84-1231

Agency Contact: Julius Knapp, Federal Communications Commission, 2025 M Street, N.W., Washington, D.C. 20554, 202 653-8108

RIN: 3060-AE15

FEDERAL COMMUNICATIONS COMMISSION (FCC) —OFFICE OF ENGINEERING AND TECHNOLOGY — Completed Actions

3586. RECONSIDERATION OF THIRD & ORDER RE 1-40 GHZ

Significance: Agency Priority

CFR Citation: 47 CFR 21; 47 CFR 74; 47 CFR 94

Completed:

Reason	Date	FR Cite
Final Action	09/30/87	

Small Entity: Yes

Agency Contact: Julie Knapp 202 653-8108

RIN: 3060-AD96

FEDERAL COMMUNICATIONS COMMISSION (FCC) —MASS MEDIA BUREAU — Proposed Rule Stage

3587. TECHNICAL DEREGULATION: PART 73: TV

Legal Authority: 47 USC 154; 47 USC 303

CFR Citation: 47 CFR 73.685; 47 CFR 73.688; 47 CFR 73.691; 47 CFR 73.698; 47 CFR 73.699

Abstract: Review and elimination of unnecessary technical regulations which govern broadcast television.

Timetable:

Action	Date	FR Cite
NPRM	03/00/88	
R&O	00/00/00	

Small Entity: Yes

Agency Contact: Bernard Gorden, Federal Communications Commission, 202 632-9660

RIN: 3060-AD58

3588. SECTION 73.37(E): PETITION FOR RECONSIDERATION

Legal Authority: 47 USC 307

CFR Citation: 47 CFR 73.37(e)

Abstract: On October 31, 1985, the Commission adopted a Report and Order deleting the non-technical AM application acceptance criteria in Section 73.37(e) of the Commission's Rules. Reconsideration Requested.

Timetable:

Action	Date	FR Cite
NPRM	02/13/85	
R&O	10/31/85	
MO&O	00/00/00	

Small Entity: Yes

Additional Information: mm-077 NPRM mm-85-39 R&O

Agency Contact: Jonathan David, Federal Communications Commission, 202 632-6955

RIN: 3060-AD63

3589. FOREIGN CLEARS: CT. REMAND: MINORITY PREFERENCE

Significance: Agency Priority

Legal Authority: 47 USC 307

CFR Citation: 47 CFR 73.3571

Abstract: Remand from the Court of Appeals of Commission decision regarding new stations to be established on Foreign Class I-A AM clear channels.

Timetable:

Action	Date	FR Cite
R&O	04/26/85	
MO&O	02/03/86	
FNPRM	07/28/87	
2nd R&O	06/01/88	

Small Entity: Yes

Additional Information: mm-84-281 mm-84-281(a)

Agency Contact: Vicki Assevero, Federal Communications Commission, 202 632-7792

RIN: 3060-AD72

3590. BROADCAST EEO: RECONSIDERATION

Significance: Agency Priority

Legal Authority: 47 USC 154; 47 USC 303

CFR Citation: 47 CFR 73.2080

Abstract: The Commission has adopted new Equal Employment Opportunity (EEO) rules and reporting requirements for broadcasters that emphasize a licensee's overall EEO efforts rather than the numerical composition of its workforce. Reconsideration requested.

Timetable:

Action	Date	FR Cite
NPRM	11/14/85	
Interim Final Rule	10/31/86	
R&O	04/16/87	
MO&O	06/00/88	

Small Entity: Yes

Additional Information: mmb-298 NPRM mm-85-350 FNPRM

Agency Contact: Marcia Glauberman, Federal Communications Commission, 202 632-6302

RIN: 3060-AD73

3591. FM TECHNICAL CLEAN-UP: RECONSIDERATION

Significance: Agency Priority

Legal Authority: 47 USC 154; 47 USC 303

CFR Citation: 47 CFR 73.211; 47 CFR 73.206; 47 CFR 73.207; 47 CFR 73.213

Abstract: On September 10, 1987, the FCC amended its rules to provide a specific method for classifying FM stations according to effective transmitting power and antenna height, and increased the accuracy in the procedures for predicting FM station coverage and calculating distances between FM stations. Also, Section 73.213 was simplified to only permit modifications that do not increase the potential for interference. Reconsideration has been requested.

Timetable:

Action	Date	FR Cite
NPRM	04/03/86	
R&O	09/10/87	
MO&O	06/01/88	

Small Entity: Yes

Additional Information: mmb-311 NPRM

Agency Contact: Jay Jackson, Federal Communications Commission, 202 632-9660

RIN: 3060-AD74

3592. MAIN STUDIO LOCATION

Significance: Agency Priority

Legal Authority: 47 USC 154(i)

CFR Citation: 47 CFR 73.1125; 47 CFR 73.1130

Abstract: The Commission will reconsider whether it should modify its requirements that every broadcast station locate its public inspection file in the community of license and maintain a local or toll-free telephone number. The Commission will also consider whether it should exempt noncommercial education stations from the amended main studio rule.

Timetable:

Action	Date	FR Cite
NPRM	10/16/86	
R&O	04/16/87	
MO&O	06/01/88	

Small Entity: Yes

Additional Information: mmb-410 NPRM mmb-86-406

Agency Contact: Eileen Huggard, Federal Communications Commission, 202 632-7792

RIN: 3060-AD75

3593. NONCOMMERCIAL BROADCAST: ISSUES-PROGRAMS LISTS

Significance: Agency Priority

Legal Authority: 47 USC 154; 47 USC 303

CFR Citation: 47 CFR 73.3527

Abstract: The Commission will consider adopting a Report and Order to conform noncommercial stations issues/programs list public file requirement with that applicable to commercial stations.

Timetable:

Action	Date	FR Cite
NPRM	12/29/85	
R&O	06/01/88	

Small Entity: Yes

Additional Information: mm-83-670(b) mmb-418 NPRM

Agency Contact: Barbara A. Kreisman, Federal Communications Commission, 202 632-7792

RIN: 3060-AD76

3594. RADIO MULTIPLE OWNERSHIP & CROSS OWNERSHIP RULES

Significance: Agency Priority

Legal Authority: 47 USC 154; 47 USC 303

CFR Citation: 47 CFR 73.3555

Abstract: The Commission has proposed to relax a portion of the "duoploy" rule as it applies to AM and FM station ownership. The Commission also has proposed to relax a section of the one-to-a-market" rule to permit combinations of AM, FM, and UHF television stations in the top fifty markets. Under the proposed rule, common ownership of radio-television combinations would be considered on a case-by-case basis.

Timetable:

Action	Date	FR Cite
NPRM	01/15/87	
R&O	06/00/88	

Small Entity: Yes

Additional Information: mmb-414 NPRM

Agency Contact: Andrew J. Rhodes, Federal Communications Commission, 202 632-7792

RIN: 3060-AD78

3595. SATELLITE TELEVISION STATIONS

Significance: Agency Priority

Legal Authority: 47 USC 154; 47 USC 303

CFR Citation: 47 CFR 73.614

Abstract: The FCC proposes to: (1) eliminate authorization of satellites in urban areas of larger markets, allowing them only in rural areas that cannot economically support a full service operation; and (2) either remove restrictions limiting locally originated programming or, in the alternative, establishing a cap on the amount of programming originated once satellite operation has been justified. Also, the FCC seeks comment as to how urban and rural areas should be defined.

Timetable:

Action	Date	FR Cite
NPRM	01/15/87	
R&O	06/00/88	

Small Entity: Yes

Additional Information: mmb-421 NPRM

Agency Contact: Scott Roberts, Federal Communications Commission, 202 632-6302

RIN: 3060-AD79

3596. RADIO READING SERVICES

Significance: Agency Priority

Legal Authority: 47 USC 154; 47 USC 303; 47 USC 403

CFR Citation: 47 CFR 73.593

Abstract: On 1/16/87 the Commission adopted a Notice of Inquiry seeking comments on appropriate costs to be imposed by non-commercial educational radio stations for radio reading services for the visually impaired. The Commission will consider issuance of a policy statement regarding this matter.

Timetable:

Action	Date	FR Cite
NPRM	01/16/87	
Policy Statement	06/01/88	

Small Entity: Yes

Additional Information: RM-5434(PRB) RM-5509 NOI

Agency Contact: Vicki Assevero, Federal Communications Commission, 202 632-7792

RIN: 3060-AD80

3597. DAYTIMERS ISSUES

Significance: Agency Priority

Legal Authority: 47 USC 303; 47 USC 307(b)

CFR Citation: 47 CFR 73.21

Abstract: Further Notice of Proposed Rulemaking to explore implications of authorizing nighttime operation by AM daytime-only stations on U.S. clear channels.

Timetable:

Action	Date	FR Cite
NPRM	04/29/87	
R&O	04/29/87	
FNPRM	06/00/88	

Small Entity: Yes

Agency Contact: Louis Stephens, Federal Communications Commission, 202 632-6955

RIN: 3060-AD85

3598. AM EXPANDED BAND: DOMESTIC

Significance: Agency Priority

Legal Authority: 47 USC 154; 47 USC 303

CFR Citation: 47 CFR 73

Abstract: Inquiry into domestic issues resulting from expansion of the Am broadcasting band.

Timetable:

Action	Date	FR Cite
FNOI	06/01/88	
NPRM	00/00/00	

Small Entity: Yes

Agency Contact: Freda Thyden, Federal Communications Commission, 2025 M Street, N.W., Washington, D.C. 20554, 202 632-7792

RIN: 3060-AD92

3599. WIRELESS CAMERAS

Significance: Agency Priority

Legal Authority: 47 USC 303

CFR Citation: 47 CFR 74.602; 47 CFR 74.604; 47 CFR 74.636; 47 CFR 74.637; 47 CFR 74.802

Abstract: Proposal to permit low power wireless cameras to operate on vacant UHF and VHF TV channels.

Timetable:

Action	Date	FR Cite
FNPRM	05/04/87	
R&O	00/00/00	

Small Entity: Yes

Additional Information: MM-85-36(a)

Agency Contact: Hank Van Deursen, Federal Communications Commission, 2025 M Street, N.W., Washington, D.C. 20554, 202 632-9660

RIN: 3060-AE10

3600. FM TRANSLATORS: MOODY BIBLE

Significance: Agency Priority

Legal Authority: 47 USC 303

CFR Citation: 47 CFR 74.1231

Abstract: This proceeding addresses the possible use of satellite and microwave facilities to deliver signals to noncommercial FM translators that are owned and operated by the primary noncommercial FM stations.

Timetable:

Action	Date	FR Cite
NPRM	04/03/86	
R&O	06/01/88	

Small Entity: Yes

Additional Information: mmb-311 RM-5219

Agency Contact: Eugenia R. Hull, Federal Communications Commission, 2025 M Street, N.W., Washington, D.C. 20554, 202 632-6302

RIN: 3060-AE11

3601. FM/TV DIRECTIONAL ANTENNA

Significance: Agency Priority

Legal Authority: 47 USC 303

CFR Citation: 47 CFR 73.316; 47 CFR 73.211

Abstract: Proposal for routine use of directional antennas to accommodate short-spaced transmitter/antenna locations.

Timetable:

Action	Date	FR Cite
NPRM	06/01/88	
R&O	00/00/00	

Small Entity: Yes

FCC—MMB **Proposed Rule Stage**

Agency Contact: Bernard Gorden, Federal Communications Commission, 2025 M Street, N.W., Washington, D.C. 20554, 202 632-9660

RIN: 3060-AE12

3602. CHANNELS 14/69 INTERFERENCE: NOI/NPRM

Significance: Agency Priority

Legal Authority: 47 USC 154; 47 USC 304

CFR Citation: 47 CFR 73

Abstract: This proceeding addresses the problem of interference from TV stations on Channels 14 and 69 to land mobile operations on adjacent channels, including a proposal that all applications for CP's for new stations be required to meet spacing criteria or, in the alternative, be permitted to resolve interference problems through private agreement.

Timetable:

Action	Date	FR Cite
NOI/NPRM	06/01/88	
FNPRM/R&O	00/00/00	

Small Entity: Yes

Agency Contact: Louis Whitsett, Federal Communications Commission, 2025 M Street, N.W., Washington, D.C. 20554, 202 632-7702

RIN: 3060-AE13

3603. ● FM TRANSLATORS:NOI/NPRM

Significance: Agency Priority

Legal Authority: 47 USC 303

CFR Citation: 47 CFR 74.1202; 47 CFR 74.1203; 47 CFR 74.1231; 47 CFR 74.1232; 47 CFR 74.1235

Abstract: This proceeding will provide a comprehensive reexamination of the Commission's FM translator rules.

Timetable:

Action	Date	FR Cite
NPRM	00/00/00	
R&O	00/00/00	

Small Entity: Yes

Agency Contact: Marcia Glauberman, Federal Communications Commission, 202 632-6302

RIN: 3060-AE23

3604. ● ADVANCED TELEVISION SYSTEMS

Significance: Agency Priority

Legal Authority: 47 USC 151; 47 USC 154; 47 USC 303

CFR Citation: 47 CFR 73

Abstract: This is a wide ranging proceeding into advanced TV systems, including: systems now under development, compatibility with existing TV systems, and the public interest implications for TV broadcast service in the United States.

Timetable:

Action	Date	FR Cite
NOI	07/16/87	
NPRM	00/00/00	
R&O	00/00/00	

Small Entity: Yes

Additional Information: RM-5811 NOI

Agency Contact: Steven Kaminer, Federal Communications Commission, 202 632-5414

RIN: 3060-AE24

FEDERAL COMMUNICATIONS COMMISSION (FCC) —MASS MEDIA BUREAU

Completed Actions

3605. AM DAYTIMERS: DAYLIGHT SAVINGS TIME

Significance: Agency Priority

CFR Citation: 47 CFR 73.99

Completed:

Reason	Date	FR Cite
Final Action R&O	10/31/87	

Small Entity: Yes

Agency Contact: Lou Stephens 202 632-6955

RIN: 3060-AD77

3606. BROADCAST CALL SIGNS

Significance: Agency Priority

CFR Citation: 47 CFR 73.3550

Completed:

Reason	Date	FR Cite
Final Action R&O	10/20/87	

Small Entity: Yes

Agency Contact: Sharon Briley 202 632-6302

RIN: 3060-AD81

3607. UHF IMPACT POLICY/CARROLL DOCTRINE

Significance: Agency Priority

CFR Citation: 47 CFR 73

Completed:

Reason	Date	FR Cite
Final Action Report and Policy Statement adopted	11/24/87	

Small Entity: Yes

Agency Contact: Judith Herman 202 632-6302

RIN: 3060-AD83

FEDERAL COMMUNICATIONS COMMISSION (FCC) —PRIVATE RADIO BUREAU

Proposed Rule Stage

3608. WIRELINE COMMON CARRIERS - OPERATION OF SMRS

Legal Authority: 47 USC 154(i); 47 USC 303(r)

CFR Citation: 47 CFR 90.603

Abstract: The FCC has proposed amending Subparts M & S of Part 90 of its rules governing private land mobile radio to permit wireline common carriers to be eligible to apply for a license in the Specialized Mobile Radio Service.

Timetable:

Action	Date	FR Cite
NPRM	01/03/86	51 FR 2910
NPRM Comment Period End	07/03/86	
R&O	07/00/88	

Small Entity: Yes

Agency Contact: Gay Ludington, Federal Communications Commission, 202 634-2443

RIN: 3060-AD54

3609. REVISION AND REORGANIZATION OF AVIATION RULES (PART 87)

Significance: Agency Priority

Legal Authority: 47 USC 154(i); 47 USC 303(r)

CFR Citation: 47 CFR 87

Abstract: NPRM proposes to reorganize and revise the rules for the aviation services. Includes proposals regarding aeronautical advisor stations, making greater use of 25 and 50 MHz channels, and licensing of Civil Air Patrol.

Timetable:

Action	Date	FR Cite
NPRM	06/10/87	52 FR 26360
NPRM Comment Period End	10/21/87	
R&O	06/00/88	

Small Entity: Yes

Agency Contact: M. Cesaitis, Federal Communications Commission, 2025 M Street, N.W., Washington, D.C. 20554, 202 632-7175

RIN: 3060-AE08

3610. MULTIPLE ADDRESS SYSTEMS

Significance: Agency Priority

Legal Authority: 47 USC 154(i); 47 USC 303(r)

CFR Citation: 47 CFR 94

Abstract: The FCC has proposed to reexamine rules and policies governing 900 MHz multiple address system (MAS) operations. A number of rule sections are proposed for revision and clarification.

Timetable:

Action	Date	FR Cite
NPRM	01/15/87	52 FR 4161
NPRM Comment Period End	04/07/87	
R&O	06/01/88	

Small Entity: Yes

Agency Contact: Herb Zeiler/Molly Nichols, Federal Communications Commission, 2025 M Street, N.W., Washington, D.C. 20554, 202 634-2443

RIN: 3060-AE09

3611. ● MULTIPLE ADDRESS SYSTEMS

Significance: Agency Priority

Legal Authority: 47 USC 154(i); 47 USC 303(r)

CFR Citation: 47 CFR 94

Abstract: The FCC has proposed to reexamine rules and policies governing 900 MHz multiple address system (MAS) operations. A number of rule sections are proposed for revision and clarification.

Timetable:

Action	Date	FR Cite
NPRM	01/15/87	52 FR 4161
NPRM Comment Period End	05/29/87	
R&O	06/01/88	

Small Entity: Yes

Agency Contact: Herb Zeiler, Federal Communications Commission, 202 634-2443

RIN: 3060-AE20

3612. ● REVISION AND REORGANIZATION OF AVIATION RULES (PT. 87)

Significance: Agency Priority

Legal Authority: 47 USC 154(i); 47 USC 303(r)

CFR Citation: 47 CFR 87

Abstract: NPRM proposes to reorganize and revise the rules for the aviation services. Includes proposals regarding aeronautical advisory stations, making greater use of 25 and 50 MHz channels, and licensing of Civil Air Patrol.

Timetable:

Action	Date	FR Cite
NPRM	06/10/87	52 FR 26360
NPRM Comment Period End	12/21/87	
R&O	06/00/88	

Small Entity: Yes

Agency Contact: M. Cesaitis, Federal Communications Commission, 202 632-7175

RIN: 3060-AE21

FEDERAL COMMUNICATIONS COMMISSION (FCC) —PRIVATE RADIO BUREAU

Final Rule Stage

3613. PART 90 REVIEW - SUBPARTS M&S INCL. ASNA PET., SUBPART S WAIT LIST

Significance: Agency Priority

Legal Authority: 47 USC 154(i); 47 USC 303(r)

CFR Citation: 47 CFR 90.364; 47 CFR 90.627

Abstract: NPRM proposes to permit greater flexibility and enhanced service options for SMR licensees and end users. Includes proposals regarding loading standards, waiting list procedures and eligibility requirements.

Timetable:

Action	Date	FR Cite
ANPRM	10/16/86	51 FR 45025
ANPRM Comment Period End	02/20/87	
NPRM	04/03/87	
R&O	06/00/88	

FCC—PRB **Final Rule Stage**

Small Entity: Yes

Agency Contact: Nia Cresham, Federal Communications Commission, 202 634-2443

RIN: 3060-AD69

3614. ● SPECIAL EMERGENCY RADIO PRIVATE CARRIERS

Significance: Agency Priority

Legal Authority: 47 USC 154(i); 47 USC 303(r)

CFR Citation: 47 CFR 90.35

Abstract: The FCC has proposed that commercial entities be eligible to obtain a license to directly offer private carrier service to medical service to Special Emergency Radio Service eligibles.

Timetable:

Action	Date	FR Cite
NPRM	08/04/87	52 FR 35281
NPRM Comment Period End	11/16/87	
R&O	06/00/88	

Small Entity: Yes

Agency Contact: Irene Bleiweiss, Federal Communications Commission, 202 634-2443

RIN: 3060-AE19

FEDERAL COMMUNICATIONS COMMISSION (FCC) —PRIVATE RADIO BUREAU

Completed Actions

3615. EXTERNAL FREQUENCY CONTROLS

CFR Citation: 47 CFR 90.203

Completed:

Reason	Date	FR Cite
Final Action R&O adopted	12/15/87	52 FR 47569

Small Entity: Yes

Agency Contact: Rockie Patterson 202 634-6497

RIN: 3060-AD53

[FR Doc. 88-5806 Filed 04-22-88; 8:45 am]

BILLING CODE 6712-01-T

VOL
53

ISS
79

PT
2

AP
25

1988

UMI

federal register

Monday
April 25, 1988

Part XLVII

Federal Deposit Insurance Corporation

Semiannual Regulatory Agenda

FEDERAL DEPOSIT INSURANCE CORPORATION (FDIC)

FEDERAL DEPOSIT INSURANCE CORPORATION

12 CFR Ch. III

Semiannual Agenda of Regulations

AGENCY: Federal Deposit Insurance Corporation.

ACTION: Publication of semiannual agenda of regulations.

SUMMARY: The Federal Deposit Insurance Corporation ("FDIC") is hereby publishing items for the April 1988 Regulatory Agenda. The agenda contains information about FDIC's current and projected rulemakings, existing regulations under review, and completed rulemakings.

FOR FURTHER INFORMATION CONTACT: Persons identified under regulations listed in the agenda. The address for all FDIC staff identified in the agenda is Federal Deposit Insurance Corporation, 550 17th Street, NW., Washington, DC 20429.

SUPPLEMENTARY INFORMATION: Twice each year, the FDIC publishes an agenda of regulations to inform the public of its regulatory actions and to enhance public participation in the rulemaking process. Publication of the agenda is in accordance with both the Regulatory Flexibility Act (5 U.S.C. 601 *et seq.*) and the FDIC statement of policy entitled "Development and Review of FDIC Rules and Regulations" (44 FR 31007, May 30, 1979; 44 FR 32353, June 6, 1979; 44 FR 76858, December 28, 1979; 49 FR 7288, February 28, 1984).

The FDIC amends its regulations under the general rulemaking authority prescribed in section 9 of the Federal Deposit Insurance Act (12 U.S.C. 1819) and under specific authority granted by the Act and other statutes.

Interested persons may petition the FDIC for the issuance, amendment or repeal of any regulation by submitting a written petition to the Executive Secretary, Federal Deposit Insurance Corporation, Washington, DC 20429. Petitioners should include complete and concise statements of their interest in the subject matter and reasons why the petitions should be granted.

Dated: February 10, 1988.

Federal Deposit Insurance Corporation.

Hoyle L. Robinson,

Executive Secretary.

Prerule Stage

Sequence Number	Title		Regulation Identifier Number
3616	12 CFR 309	Disclosure of Information	3064-AA65
3617	12 CFR 311	Rules Governing Public Observation of Meetings of the Corporation's Board of Directors	3064-AA66
3618	12 CFR 330	Clarification and Definition of Deposit Insurance Coverage	3064-AA68

Proposed Rule Stage

Sequence Number	Title		Regulation Identifier Number
3619	12 CFR 308	Rules of Practice and Procedures	3064-AA64
3620	12 CFR 346	Foreign Banks	3064-AA78
3621	12 CFR 344	Securities Recordkeeping and Confirmations	3064-AA30
3622	12 CFR 335	Securities of Insured Nonmember Banks	3064-AA45
3623	12 CFR 303	Applications, Requests, Submittals, Delegations of Authority, and Notices of Acquisition of Control	3064-AA90
3624	12 CFR 324	Agricultural Loan Loss Amortization	3064-AA87

Final Rule Stage

Sequence Number	Title		Regulation Identifier Number
3625	12 CFR 338	Fair Housing	3064-AA81

Completed Actions

Sequence Number	Title		Regulation Identifier Number
3626	12 CFR 310	Privacy Act Regulations	3064-AA91
3627	12 CFR 332	Powers Inconsistent with Purposes of Federal Deposit Insurance Law	3064-AA29

FDIC

Completed Actions—Continued

Sequence Number	Title	Regulation Identifier Number
3628	12 CFR 337 Unsafe and Unsound Banking Practices	3064-AA80
3629	12 CFR 325 Capital Maintenance	3064-AA82
3630	12 CFR 350 Disclosure of Financial and Other Information by FDIC-Insured State Nonmember Banks	3064-AA83
3631	12 CFR 304 Reporting Requirements on Deposits Placed by Deposit Brokers and Depository Institutions	3064-AA88
3632	12 CFR 346 Foreign Banks	3064-AA89
3633	12 CFR 308 Rules of Practice and Procedures: Subpart B – Rules of Practice Generally	3064-AA64
3634	12 CFR 346 Foreign Banks	3064-AA78

FEDERAL DEPOSIT INSURANCE CORPORATION (FDIC) — Prerule Stage

3616. DISCLOSURE OF INFORMATION

Legal Authority: 5 USC 552; 12 USC 1819

CFR Citation: 12 CFR 309

Legal Deadline: None.

Abstract: Part 309 sets forth the basic policies of the FDIC regarding the information it maintains and the procedures for obtaining access to such information.

This regulation has been selected for review under the FDIC's Regulation Review Program.

Timetable:

Action	Date	FR Cite
End Review	00/00/00	

Small Entity: No

Agency Contact: James R. Dudine, Chief, Special Activities Section, Division of Bank Supervision, Federal Deposit Insurance Corporation, Washington, DC 20429, 202 898-6750

RIN: 3064-AA65

3617. RULES GOVERNING PUBLIC OBSERVATION OF MEETINGS OF THE CORPORATION'S BOARD OF DIRECTORS

Legal Authority: 5 USC 552b; 12 USC 1819

CFR Citation: 12 CFR 311

Legal Deadline: None.

Abstract: Part 311 implements the policy of the "Government in the Sunshine Act," section 552b of Title 5, United States Code, which is to provide the public with as much information as possible regarding the decision-making processes of certain Federal agencies, including the FDIC, while preserving the rights of individuals and the ability of the agency to carry out its responsibilities.

This regulation has been selected for review under the FDIC's Regulation Review Program.

Timetable:

Action	Date	FR Cite
End Review	00/00/00	

Small Entity: No

Agency Contact: Hoyle L. Robinson, Executive Secretary, Federal Deposit Insurance Corporation, Washington, DC 20429, 202 898-3813

RIN: 3064-AA66

3618. CLARIFICATION AND DEFINITION OF DEPOSIT INSURANCE COVERAGE

Legal Authority: 12 USC 1813; 12 USC 1817; 12 USC 1821; 12 USC 1822

CFR Citation: 12 CFR 330

Legal Deadline: None.

Abstract: Part 330 provides for the determination by the FDIC of the insured depositors of an insured bank and the amount of their insured deposit accounts. It sets forth the rules for determining the insurance coverage of deposit accounts maintained by depositors.

This regulation has been selected for review under the FDIC's Regulation Review Program.

Timetable:

Action	Date	FR Cite
End Review	00/00/00	

Small Entity: No

Agency Contact: J. William Via, Jr., Counsel, Legal Division, Federal Deposit Insurance Corporation, Washington, DC 20429, 202 898-3733

RIN: 3064-AA68

BEST COPY AVAILABLE

FEDERAL DEPOSIT INSURANCE CORPORATION (FDIC)

Proposed Rule Stage

3619. ● RULES OF PRACTICE AND PROCEDURES

Legal Authority: 5 USC 504; 12 USC 1819; 12 USC 1972; 15 USC 78w

CFR Citation: 12 CFR 308

Legal Deadline: None.

Abstract: The FDIC is preparing for public comment revisions to Part 308 of FDIC's rules and regulations which governs the conduct of administrative proceedings before the FDIC. The changes will include a reorganization of existing sections of Part 308, revisions of some sections that existed previously, and the addition of new sections. The purpose of the revised regulation is to secure a just, orderly, and speedy determination of administrative proceedings before the FDIC. The revised Part 308 is a result of the review conducted under FDIC's Regulation Review Program.

Timetable:

Action	Date	FR Cite
NPRM	02/24/88	53 FR 5392
NPRM Comment Period End	04/25/88	
Final Action	06/00/88	

Small Entity: No

Agency Contact: John V. Thomas, Senior Attorney, Legal Division, Federal Deposit Insurance Corporation, Washington, DC 20429, 202 898-7275

RIN: 3064-AA64

3620. ● FOREIGN BANKS

Legal Authority: 12 USC 1815; 12 USC 1817; 12 USC 1819; 12 USC 1820; 12 USC 3103; 12 USC 3104; 12 USC 3108

CFR Citation: 12 CFR 346

Legal Deadline: None.

Abstract: The FDIC is preparing for public comment revisions to Part 346 of its rules and regulations which sets out the rules governing FDIC-insured branches of foreign banks. The rules relate to: policy regarding the operation of insured and noninsured branches by a foreign bank; pledge of assets; and asset maintenance. The revised Part 346 is a result of the review conducted under FDIC's Regulation Review Program.

Timetable:

Action	Date	FR Cite
NPRM	04/00/88	

Small Entity: No

Agency Contact: Charles V. Collier, Assistant Director, Division of Bank Supervision, Federal Deposit Insurance Corporation, Washington, DC 20429, 202 898-6850

RIN: 3064-AA78

3621. SECURITIES RECORDKEEPING AND CONFIRMATIONS

Legal Authority: 12 USC 1817; 12 USC 1818; 12 USC 1819

CFR Citation: 12 CFR 344

Legal Deadline: None.

Abstract: The FDIC expects to propose an amendment to 12 CFR Part 344, which governs an insured nonmember bank's recordkeeping and confirmation requirements for securities transactions. The proposed amendment would expand an existing exception under Part 344 for low activity. The exception would be increased to allow banks which effect an average of fewer than 1,000 securities transactions per year to be exempt from certain recordkeeping and written policymaking requirements. The current "low-activity" threshold is 200 transactions per year. The amendment is needed to eliminate unnecessary paperwork burden and is intended to reduce the impact of FDIC's regulation on insured nonmember banks that engage in a low number of securities transactions per year.

Timetable:

Action	Date	FR Cite
NPRM	04/00/88	

Small Entity: No

Agency Contact: John F. Harvey, Chief, Review Unit, Division of Bank Supervision, Federal Deposit Insurance Corporation, Washington, DC 20429, 202 898-6762

RIN: 3064-AA30

3622. SECURITIES OF INSURED NONMEMBER BANKS

Legal Authority: 12 USC 1819 Federal Deposit Insurance Act; 15 USC 78l(i) Securities Exchange Act of 1934

CFR Citation: 12 CFR 335

Legal Deadline: None.

Abstract: The Securities Exchange Act of 1934 requires the FDIC to issue regulations substantially similar to regulations of the Securities and Exchange Commission, or publish reasons for not doing so. The staff is currently preparing such conforming amendments for public comment based on recent rulemaking actions by the Commission.

Timetable:

Action	Date	FR Cite
NPRM	04/00/88	

Small Entity: No

Agency Contact: Lawrence H. Pierce, Securities Activities Officer, Division of Bank Supervision, Federal Deposit Insurance Corporation, Washington, DC 20429, 202 898-6885

RIN: 3064-AA45

3623. ● APPLICATIONS, REQUESTS, SUBMITTALS, DELEGATIONS OF AUTHORITY, AND NOTICES OF ACQUISITION OF CONTROL

Legal Authority: 12 USC 1817(j)(13); 12 USC 1819; PL 99-570, Sec 1360

CFR Citation: 12 CFR 303

Legal Deadline: None.

Abstract: The FDIC is preparing for public comment amendments to section 303.4 of Part 303 of its regulations to implement certain amendments to the Change in Bank Control Act of 1986. Under the planned proposal, the FDIC may waive the newspaper publication or comment solicitation requirements of the regulation, or may act on a proposed change in control prior to the expiration of the comment period. The planned proposal also provides that the FDIC may shorten the public comment period to a period of not less than 10 days.

Timetable:

Action	Date	FR Cite
NPRM	04/00/88	

Small Entity: No

Agency Contact: Claude A. Rollin, Attorney, Legal Division, Federal Deposit Insurance Corporation, Washington, DC 20429, 202 898-3905

RIN: 3064-AA90

3624. ● AGRICULTURAL LOAN LOSS AMORTIZATION

Legal Authority: 12 USC 1823(j); 12 USC 1819

CFR Citation: 12 CFR 324

Legal Deadline: Statutory, November 9, 1987.

FDIC **Proposed Rule Stage**

Abstract: The FDIC approved an interim rule which establishes eligibility requirements and application procedures for FDIC-insured state nonmember banks in distressed agricultural regions of the country that are interested in amortizing farm loan losses. The FDIC is requesting comments from the public prior to adopting a final regulation.

Timetable:

Action	Date	FR Cite
Interim Rule	11/02/87	52 FR 41966
Interim Rule Effective	11/09/87	
Interim Rule Comment Period End	01/08/88	
Interim Rule Terminates	06/30/88	

Small Entity: No

Agency Contact: William C. Crothers, Examination Specialist, Division of Bank Supervision, Federal Deposit Insurance Corporation, Washington, DC 20429, 202 898-6906

RIN: 3064-AA87

FEDERAL DEPOSIT INSURANCE CORPORATION (FDIC) — Final Rule Stage

3625. FAIR HOUSING

Legal Authority: 12 USC 1817; 12 USC 1818; 12 USC 1819; 12 USC 1820; 15 USC 1691 et seq; 42 USC 3605; 42 USC 3608

CFR Citation: 12 CFR 338

Legal Deadline: None.

Abstract: The FDIC is preparing final amendments to its fair housing regulation, 12 CFR Part 338, which applies to insured state nonmember banks. The amendments would eliminate home-equity loans, as well as home improvement, maintenance and repair loans from the data-gathering requirement. Accordingly, the data-gathering requirement would then only apply to home purchase, construction and refinancing loans. The FDIC believes that the amendments would reduce the paperwork burden on the banking industry without impairing enforcement of fair housing lending laws.

Timetable:

Action	Date	FR Cite
NPRM	08/18/87	52 FR 30928
NPRM Comment Period End	10/19/87	
Final Action	04/00/88	

Small Entity: No

Agency Contact: Patricia A. McCormick, Fair Lending Analyst, Office of Consumer Affairs, Federal Deposit Insurance Corporation, Washington, DC 20429, 202 898-3533

RIN: 3064-AA81

FEDERAL DEPOSIT INSURANCE CORPORATION (FDIC) — Completed Actions

3626. ● PRIVACY ACT REGULATIONS

Legal Authority: 5 USC 552a

CFR Citation: 12 CFR 310

Legal Deadline: None.

Abstract: The FDIC is amending the title of a Privacy Act system of records listed as exempt by regulation (12 CFR 310.13(a)) from certain provisions of the Privacy Act in order to reflect a name change made to the system as amended. The Bank and Proposed Bank Irregularity Records System will be retitled the Financial Institutions Investigative and Enforcement Records System.

Timetable:

Action	Date	FR Cite
Final Action	03/08/88	53 FR 7339
Final Action Effective	05/23/88	

Small Entity: No

Agency Contact: Robert E. Feldman, Assistant Executive Secretary, Federal Deposit Insurance Corporation, Washington, DC 20429, 202 898-3811

RIN: 3064-AA91

3627. POWERS INCONSISTENT WITH PURPOSES OF FEDERAL DEPOSIT INSURANCE LAW

Legal Authority: 12 USC 1816; 12 USC 1818(a); 12 USC 1818(b); 12 USC 1819; 12 USC 1821(f); 12 USC 1828(j)(2)

CFR Citation: 12 CFR 332

Legal Deadline: None.

Abstract: The FDIC has withdrawn its proposed amendments to Part 332 of its regulations which would have, among other things, prohibited insured banks, subject to certain exceptions, from directly engaging in real estate development activities or insurance underwriting activities and would have established certain restrictions on the indirect conduct of such activities.

Timetable:

Action	Date	FR Cite
ANPRM	09/12/83	48 FR 40900
ANPRM Comment Period End	11/14/83	48 FR 40900
NPRM	12/13/84	49 FR 48552
NPRM Comment Period End	02/11/85	49 FR 48552
NPRM- Revised	06/07/85	50 FR 23964
Revised NPRM Comment Period Begin	06/07/85	50 FR 23964
Revised NPRM Comment Period End	07/22/85	
Withdrawn	12/22/87	52 FR 48447

Small Entity: No

Agency Contact: Pamela E. F. LeCren, Senior Attorney, Legal Division, Federal Deposit Insurance Corporation, Washington, DC 20429, 202 898-3730

RIN: 3064-AA29

3628. UNSAFE AND UNSOUND BANKING PRACTICES

Legal Authority: 12 USC 1819; 12 USC 1828; PL 97-320, Sec 442

CFR Citation: 12 CFR 337

Legal Deadline: None.

Abstract: The FDIC amended its regulations governing the securities activities of certain subsidiaries of insured nonmember banks and the affiliate relationships of insured nonmember banks with certain securities companies. The amendments: (1) delete the requirement that the offices of securities subsidiaries and affiliates must be accessed through a separate entrance from that used by the bank, (2) delete the prohibition against securities subsidiaries and affiliates sharing a common name or logo with the bank, and (3) establish a number of affirmative disclosure requirements to the effect that securities recommended, offered or sold by or through a securities subsidiary or affiliate are not FDIC insured deposits unless otherwise indicated and that such securities are not obligations of, nor are guaranteed by the bank.

Timetable:

Action	Date	FR Cite
NPRM	04/09/87	52 FR 11492
NPRM Comment Period End	05/11/87	
Final Action	12/14/87	52 FR 47379
Final Action Effective	12/14/87	

Small Entity: No

Agency Contact: Pamela E. F. LeCren, Senior Attorney, Legal Division, Federal Deposit Insurance Corporation, Washington, DC 20429, 202 898-3730

RIN: 3064-AA80

3629. CAPITAL MAINTENANCE

Legal Authority: 12 USC 1815; 12 USC 1816; 12 USC 1818; 12 USC 1819; 12 USC 1828; 12 USC 3907; 12 USC 3909

CFR Citation: 12 CFR 325

Legal Deadline: None.

Abstract: The FDIC amended its capital regulation by revising the definitions of the terms "assets classified loss," "subordinated note or debenture" and "total assets." The amendments also allow the FDIC to include in primary and secondary capital any capital instrument or account that has the characteristics of capital. Also included is a safety and soundness test regarding the terms and conditions affecting capital instruments. Finally, limits are set on when the FDIC may deny mergers solely because a capital deficiency would exist in the resulting entity.

Timetable:

Action	Date	FR Cite
NPRM	04/10/87	52 FR 11660
NPRM Comment Period End	06/09/87	
Final Action	11/02/87	52 FR 41969
Final Action Effective	12/02/87	

Small Entity: No

Agency Contact: Robert F. Storch, Planning and Program Development Specialist, Division of Bank Supervision, Federal Deposit Insurance Corporation, Washington, DC 20429, 202 898-6903

RIN: 3064-AA82

3630. DISCLOSURE OF FINANCIAL AND OTHER INFORMATION BY FDIC-INSURED STATE NONMEMBER BANKS

Legal Authority: 12 USC 1817; 12 USC 1819

CFR Citation: 12 CFR 350

Legal Deadline: None.

Abstract: The FDIC has adopted a new Part 350 to its rules and regulations that requires FDIC-insured state-chartered banks that are not members of the Federal Reserve System and FDIC-insured state-licensed branches of foreign banks to prepare, and make available on request, annual disclosure statements consisting of (1) required financial data comparable to specified schedules in call reports filed for the previous two year-ends, (2) information that the FDIC may require of particular organizations, and (3) other optional information.

Timetable:

Action	Date	FR Cite
NPRM	06/23/87	52 FR 23554
NPRM Comment Period End	08/24/87	
Final Action	12/31/87	53 FR 49377
Final Action Effective	02/01/88	

Small Entity: No

Agency Contact: William P. Carley, Planning and Program Development Specialist, Division of Bank Supervision, Federal Deposit Insurance Corporation, Washington, DC 20429, 202 898-6903

RIN: 3064-AA83

3631. ● REPORTING REQUIREMENTS ON DEPOSITS PLACED BY DEPOSIT BROKERS AND DEPOSITORY INSTITUTIONS

Legal Authority: 5 USC 552; 12 USC 1817 to 1820

CFR Citation: 12 CFR 304

Legal Deadline: None.

Abstract: The FDIC amended Part 304 of its rules and regulations to change from monthly to quarterly the frequency with which each FDIC-insured bank with combined fully insured brokered deposits and fully insured deposits placed directly by depository institutions in excess of either the bank's total capital and reserves or five percent of the bank's total deposits must report their holdings of such deposits to the FDIC.

Timetable:

Action	Date	FR Cite
Final Action	12/21/87	52 FR 48183
Final Action Effective	01/20/88	

Small Entity: No

Agency Contact: Robert F. Storch, Planning and Program Development Specialist, Division of Bank Supervision, Federal Deposit Insurance Corporation, Washington, DC 20429, 202 898-6903

RIN: 3064-AA88

3632. ● FOREIGN BANKS

Legal Authority: 12 USC 1815; 12 USC 1817; 12 USC 1819; 12 USC 1820; 12 USC 3103; 12 USC 3104; 12 USC 3108

CFR Citation: 12 CFR 346

Legal Deadline: None.

Abstract: The FDIC amended Part 346 of its rules and regulations in order to extend the time for compliance by insured branches of foreign banks for operating within prescribed limits of country exposures. The rule extends the deadline for compliance 180 days, until June 14, 1988.

Timetable:

Action	Date	FR Cite
Final Action Effective	12/17/87	
Final Action	12/30/87	52 FR 49156

Small Entity: No

Agency Contact: Charles V. Collier, Assistant Director, Division of Bank Supervision, Federal Deposit Insurance Corporation, Washington, DC 20429, 202 898-6850

RIN: 3064-AA89

3633. RULES OF PRACTICE AND PROCEDURES: SUBPART B – RULES OF PRACTICE GENERALLY

Legal Authority: 5 USC 504; 12 USC 1819; 12 USC 1972; 15 USC 78w

CFR Citation: 12 CFR 308

Legal Deadline: None.

Abstract: Subpart B to Part 308 prescribes rules of practice and procedures followed by the FDIC in hearings pursuant to the provisions of the Federal Deposit Insurance Act or other applicable law pertaining to involuntary termination of the insured status of any bank; issuance of cease-and-desist orders against any nonmember bank or its official; assessment of civil penalties against a bank or its official; issuance of orders that remove or suspend from office a director or officer of an insured nonmember bank; disapproval of a proposed acquisition of control of an insured nonmember bank; and imposition of sanctions upon a municipal securities dealer or a person associated with such a dealer.

This regulation was selected for review under the FDIC's Regulation Review Program. The review has been completed and a revised regulation is under development.

Timetable:

Action	Date	FR Cite
Begin Review	04/15/87	
End Review	10/30/87	

Small Entity: No

Agency Contact: John V. Thomas, Senior Attorney, Legal Division, Federal Deposit Insurance Corporation, Washington, DC 20429, 202 898-7275

RIN: 3064-AA64

3634. FOREIGN BANKS

Legal Authority: 12 USC 1815; 12 USC 1817; 12 USC 1819; 12 USC 1820; 12 USC 3103; 12 USC 3104; 12 USC 3108

CFR Citation: 12 CFR 346

Legal Deadline: None.

Abstract: Part 346 sets out the rules governing FDIC-insured branches of foreign banks. It implements the insurance provisions of section 6 of the International Banking Act of 1978 (12 USC 3104). The rules relate to: policy regarding the operation of insured and noninsured branches by a foreign bank; pledge of assets; and asset maintenance.

This regulation was selected for review under the FDIC's Regulation Review Program. The review has been completed and a revised regulation is under development.

Timetable:

Action	Date	FR Cite
Begin Review	06/02/87	
End Review	12/17/87	

Small Entity: No

Agency Contact: Charles V. Collier, Assistant Director, Division of Bank Supervision, Federal Deposit Insurance Corporation, Washington, DC 20429, 202 898-6850

RIN: 3064-AA78

[FR Doc. 88-5106 Filed 04-22-88; 8:45 am]

BILLING CODE 6714-01-T

VOL
53

ISS
79

PT
2

AP
25

1988

UMI

federal register

Monday
April 25, 1988

Part XLVIII

Federal Energy Regulatory Commission

Semiannual Regulatory Agenda

FEDERAL ENERGY REGULATORY COMMISSION (FERC)

DEPARTMENT OF ENERGY

Federal Energy Regulatory Commission

18 CFR Ch. I

Semiannual Regulatory Agenda

AGENCY: Federal Energy Regulatory Commission, DOE.

ACTION: Semiannual regulatory agenda.

SUMMARY: In response to Office of Management and Budget Bulletin No. 88-1, the Federal Energy Regulatory Commission voluntarily submits information about rulemakings under development. Of the 30 rulemakings listed, 22 are current and projected rulemakings and 8 are completed actions.

DATES: The dates provided represent goals, not commitments, and may be revised due to shifts in workload, changes in priorities, or extensive public comments. See various dates listed for each specific rulemaking.

ADDRESS: Federal Energy Regulatory Commission, 825 North Capitol Street, NE., Washington, DC 20426.

FOR FURTHER INFORMATION CONTACT: Person listed for each specific rulemaking.

Lois D. Cashell,

Acting Secretary.

FEDERAL ENERGY REGULATORY COMMISSION (FERC) — Proposed Rule Stage

3635. FEES FOR HYDROPOWER PROJECTS

Legal Authority: 31 USC 9701 Independent Offices Appropriations Act; 16 USC 803 Federal Power Act; 42 USC 7101 to 7352 DOE Organization Act; EO 12009

CFR Citation: 18 CFR 381

Legal Deadline: None.

Abstract: The rulemaking would establish a fee for services performed by the Commission under the FPA for hydropower projects. The rule would cover permits, licenses and exemptions. Docket No. RM83-33-000

Timetable:

Action	Date	FR Cite
NPRM	00/00/00	

Small Entity: No

Agency Contact: Michael A. Stosser, Assistant General Counsel, Rulemaking and Legislative Analysis, Federal Energy Regulatory Commission, 825 North Capitol Street, NE, Washington, DC 20426, 202 357-5597

RIN: 1902-AA48

3636. ● REGULATIONS GOVERNING BIDDING PROGRAMS

Significance: Agency Priority

Legal Authority: 42 USC 7101 to 7352 (1982); 3 CFR 1978 Comp., p.142; 31 USC 9701 (1982); 16 USC 7919 to 8252 (1982); 16 USC 2601 to 2645 (1982)

CFR Citation: 18 CFR 35; 18 CFR 293

Legal Deadline: None.

Abstract: The Commission proposes to adopt regulations which would authorize state regulatory authorities and nonregulated electric utilities to implement bidding procedures as a means of establishing rates for power purchases from qualifying facilities (QFs) under section 210 of PURPA. (Docket No. RM88-5-000).

Timetable:

Action	Date	FR Cite
Next Action Undetermined		

Small Entity: Not Applicable

Agency Contact: Michael A. Stosser, Assistant General Counsel, Rulemaking and Legislative Analysis, Federal Energy Regulatory Commission, 825 North Capitol Street, NE, Washington, DC 20426, 202 357-5597

RIN: 1902-AA98

3637. ● REGULATIONS GOVERNING INDEPENDENT POWER PRODUCERS

Significance: Agency Priority

Legal Authority: PL 99-509 Title III, Subtitle C, Sec. 3401; 42 USC 7101 to 7352 (1982); 3 CFR 1978 Comp., p.142; 5 USC 551 to 557 (1982); 15 USC 717 to 717w (1982); 16 USC 791a to 828c (1982); 15 USC 3301 to 3432 (1982); 16 USC 2601 to 2645 (1982); 49 USC 1 to 27 (1976)

CFR Citation: 18 CFR 38; 18 CFR 385

Legal Deadline: None.

Abstract: The Commission is proposing to streamline regulation of a class of non-traditional utility suppliers, called independent power producers (IPPS). The proposed regulations would: (1) authorize rates for IPPS to be determined through competition or rate negotiation subject to a price cap, thereby freeing IPPS from cost-based ratemaking while ensuring rates fall within the zone of reasonableness; (2) authorize IPPS to file rate schedules without having to provide extensive cost support; (3) exempt IPPS from cost-related accounting, reporting and recordkeeping requirements; (4) streamline the corporate and financial regulation of IPPS; (5) provide the blanket prior authorizations to engage in certain corporate activities; and (6) adopt and advance certification procedure to qualify as an IPP. (Docket No. RM88-4-000).

Timetable:

Action	Date	FR Cite
Next Action Undetermined		

Small Entity: Not Applicable

Agency Contact: Michael A. Stosser, Assistant General Counsel, Rulemaking and Legislative Analysis, Federal Energy Regulatory Commission, 825 North Capitol Street, NE, Washington, DC 20426, 202 357-5597

RIN: 1902-AA99

3638. ● ADMINISTRATIVE DETERMINATION OF FULL AVOIDED COSTS, RATES FOR SALES OF POWER TO QUALIFYING FACILITIES AND INTERCONNECTION FACILITIES

Significance: Agency Priority

Legal Authority: PL 99-495; 42 USC 7101 to 7352 (1982); 3 CFR 1978 Comp., p.142; 31 USC 9701 (1982); 16 USC 791a to 825r (1982); 16 USC 2601 to 2645 (1982)

CFR Citation: 18 CFR 292

Legal Deadline: None.

Abstract: The Commission is proposing to amend its regulations governing purchases and sales of electricity between electric utilities and qualifying

cogeneration facilities and qualifying small power production facilities (QFs). (Docket No. RM 88-6-000).

Timetable:

Action	Date	FR Cite
Next Action Undetermined		

Small Entity: Not Applicable

Agency Contact: Michael A. Stosser, Assistant General Counsel, Rulemaking and Legislative Analysis, Federal Energy Regulatory Commission, 825 North Capitol Street, NE, Washington, DC 20426, 202 357-5597

RIN: 1902-AB00

3639. ● STANDARDS OF CONDUCT

Significance: Agency Priority

Legal Authority: EO 11272

CFR Citation: 18 CFR 3c

Legal Deadline: None.

Abstract: This rulemaking proceeding would update and revise the Commission's Standards of Conduct for employees and Commissioners. (RM88-8-000.)

Timetable:

Action	Date	FR Cite
Next Action Undetermined		

Small Entity: Not Applicable

Agency Contact: Michael A. Stosser, Assistant General Counsel, Rulemaking and Legislative Analysis, Federal Energy Regulatory Commission, 825 North Capitol Street, NE, Washington, DC 20426, 202 357-5597

RIN: 1902-AB01

3640. ● RELICENSING REGULATIONS UNDER THE FEDERAL POWER ACT

Significance: Agency Priority

Legal Authority: 16 USC 791a to 825r

CFR Citation: 18 CFR 4; 18 CFR 16

Legal Deadline: None.

Abstract: This proposed rule revises requirements for new licenses and nonpower licenses for projects subject to sections 14 and 15 of the Federal Power Act and proposes new requirements for new licenses for projects that are not subject to sections 14 and 15 of the Federal Power Act. This proposed rule includes Docket No. RM87-7-000, "Information to be Made Available by Hydroelectric Licensees Under Section 4(a) of the Electric Consumers Protection Act of 1986." (Docket No. RM87-33-000.)

Timetable:

Action	Date	FR Cite
Next Action Undetermined		

Small Entity: Not Applicable

Agency Contact: Michael A. Stosser, Assistant General Counsel, Rulemaking and Legislative Analysis, Federal Energy Regulatory Commission, 825 North Capitol Street, NE, Washington, DC 20426, 202 357-5597

RIN: 1902-AB02

3641. ● OPTIONAL CERTIFICATES

Significance: Agency Priority

Legal Authority: 15 USC 717f

CFR Citation: 18 CFR 157

Legal Deadline: None.

Abstract: The rulemaking will consider revision of the Commission's regulations with respect to reservation fees and environmental considerations for optional certificates for new service under section 7 of the Natural Gas Act. (Docket No. RM 99-11-000).

Timetable:

Action	Date	FR Cite
Next Action Undetermined		

Small Entity: Not Applicable

Agency Contact: Michael A. Stosser, Assistant General Counsel, Rulemaking and Legislative Analysis, Federal Energy Regulatory Commission, 825 North Capitol Street, NE, Washington, DC 20426, 202 357-5597

RIN: 1902-AB03

FEDERAL ENERGY REGULATORY COMMISSION (FERC) — Final Rule Stage

3642. CALCULATION OF CASH WORKING CAPITAL ALLOWANCE FOR PUBLIC UTILITIES

Significance: Agency Priority

Legal Authority: 16 USC 791a to 828c

CFR Citation: 18 CFR 35

Legal Deadline: None.

Abstract: The proposed rule would provide that the cash working capital requirements of a public utility that files an electric rate schedule will be presumed to be zero dollars, and thus will not affect the utility's rate base, unless the utility shows there is a significant difference between the time it pays certain current operating expenses and the time it receives revenues from ratepayers. The proposed rule would establish a threshold standard that must be met to support a cash working capital adjustment to a utility's rate base, the expense elements to be considered in calculating cash working capital adjustments to rate base, and criteria applicable to studies submitted in support of a request for an adjustment to rate base. Docket No. RM84-9-000.

Timetable:

Action	Date	FR Cite
NPRM	04/05/84	49 FR 14384
NPRM Comment Period End	06/04/84	
Final Action	05/00/88	

Small Entity: No

Agency Contact: Michael A. Stosser, Assistant General Counsel, Rulemaking and Legislative Analysis, Federal Energy Regulatory Commission, 825 North Capitol Street, NE, Washington, DC 20426, 202 357-5597

RIN: 1902-AA33

3643. HYDROELECTRIC APPLICANTS SEEKING BENEFITS UNDER THE PUBLIC UTILITY REGULATORY POLICIES ACT OF 1978 ON PROJECTS LOCATED AT A NEW DAM OR DIVERSION. PETITION ALLEGING COMMITMENT OF (CONT)

Significance: Agency Priority

Legal Authority: 16 USC 791a to 825r (1982) Federal Power Act; 16 USC 2601 to 2645 (1982) Pub. Utility Reg. Pol. Act of 1978; 42 USC 7101 to 7352 (1982) Dept. of Energy Organization Act; EO 12009, 3 CFR 142 (1978)

CFR Citation: 18 CFR 4; 18 CFR 292; 18 CFR 375

Legal Deadline: None.

Abstract: This interim rule prescribes the form in which a petition alleging commitment of substantial monetary resources prior to the enactment of the Electric Consumers Protection Act of 1986 (ECPA) will be filed and processed. This petition, if granted, would except from some of the provisions of section 8 of ECPA a hydroelectric project that impounds or diverts the water of a natural watercourse by means of a new dam or diversion, for which benefits under section 210 of the Public Utility Regulatory Policies Act of 1978 (PURPA) are sought, if application for license or exemption for the project is filed between October 16, 1986 and April 16, 1988. This interim rule will be merged into a final rule in Docket No. RM87-13-000. This docket number (RM87-8-000) will be terminated. Docket No. RM87-8-000.

Timetable:

Action	Date	FR Cite
Interim Final Rule	02/20/87	52 FR 5276
Final Action	00/00/00	

Small Entity: No

Additional Information: TITLE CONT: Substantial Monetary Resources.

Agency Contact: Michael A. Stosser, Assistant General Counsel, Rulemaking and Legislative Analysis, Federal Energy Regulatory Commission, 825 North Capitol Street, NE, Washington, DC 20426, 202 357-5597

RIN: 1902-AA78

3644. INFORMATION THAT EXISTING HYDROELECTRIC LICENSEES MUST MAKE AVAILABLE UPON NOTICE OF THEIR INTENTION TO FILE FOR AN APPLICATION FOR A NEW LICENSE

Significance: Agency Priority

Legal Authority: 16 USC 791a to 825r Federal Power Act; PL 99-495 Electric Consumers Protection Act of 1986; 42 USC 7101 to 7352 (1982) Dept. of Energy Organization Act; EO 12009, 3 CFR 1978 Comp., p.142

CFR Citation: 18 CFR 16

Legal Deadline: None.

Abstract: This interim rule prescribes the information that an existing hydroelectric licensee must make available to the public upon notifying the Commission whether or not it intends to file an application for new license. Revisions to this rule are being prepared in Docket No. RM87-33-000 and the record is incorporated in that docket. Docket No. RM87-7-000.

Timetable:

Action	Date	FR Cite
Interim Final Rule	03/30/87	52 FR 11035
Final Action	00/00/00	

Small Entity: No

Agency Contact: Michael A. Stosser, Assistant General Counsel, Rulemaking and Legislative Analysis, Federal Energy Regulatory Commission, 825 North Capitol Street, NE, Washington, DC 20426, 202 357-5597

RIN: 1902-AA88

3645. INQUIRY INTO ALLEGED ANTICOMPETITIVE PRACTICES RELATING TO MARKETING AFFILIATES OF INTERSTATE PIPELINES

Significance: Agency Priority

Legal Authority: 15 USC 717 to 717w (1982) Natural Gas Act; 15 USC 3301 to 3432 (1982) Natural Gas Policy Act of 1978

CFR Citation: Not applicable

Legal Deadline: None.

Abstract: The notice of inquiry seeks information about allegations of anticompetitive activity related to the relationship between interstate pipelines and their marketing affiliates. The notice of inquiry also seeks information on how to ensure competitive business practices by pipelines and their marketing affiliates in the natural gas sales and transportation markets. The notice of proposed rulemaking, issued June 2, 1987, proposed standards of conduct and reporting requirements to prevent undue discrimination by a pipeline in favor of its marketing affiliate. A draft final rule was discussed by the Commission on January 27, 1988. Docket No. RM87-5-000.

Timetable:

Action	Date	FR Cite
Notice of Inquiry	11/14/86	51 FR 41982
NPRM	06/06/87	52 FR 21578
NPRM Comment Period End	07/23/87	52 FR 21578
Final Action	00/00/00	

Small Entity: No

Additional Information: Although the Commission discussed the draft final rule on January 27, 1988, no vote was taken.

Agency Contact: Michael A. Stosser, Assistant General Counsel, Rulemaking and Legislative Analysis, Federal Energy Regulatory Commission, 825 North Capitol Street, NE, Washington, DC 20426, 202 357-5597

RIN: 1902-AA90

3646. NATURAL GAS DATA COLLECTION SYSTEM

Significance: Agency Priority

Legal Authority: 42 USC 7102 to 7352, (1982); EO 12009, 3 CFR 142 (1978); 5 USC 551 to 557, (1982); 15 USC 717 to 717w, (1982); 16 USC 791 to 828c, (1982); 15 USC 3301 to 3402, (1982); 16 USC 2601 to 2645, (1982)

CFR Citation: 18 CFR 154; 18 CFR 157; 18 CFR 260; 18 CFR 284

Legal Deadline: None.

Abstract: The rule proposes to amend the Commission's regulations to establish the Natural Gas Data Collection System through the adoption of FERC Form No. 591. FERC Form No. 591 requires natural gas pipelines to submit various data, rate filings and certificate applications to the Commission on 9-track magnetic tape. In addition, FERC Form No. 591 revises the data presently submitted by natural gas pipelines to reflect the Commission's current regulatory responsibilities. This revision results in the filing of much of the same data at the same time as presently, eliminates data presently filed and requires the submission of data in more detail or more frequently than presently filed. Docket No. RM-87-17-000.

Timetable:

Action	Date	FR Cite
NPRM	07/07/87	52 FR 25530
NPRM Comment Period End	09/06/87	52 FR 25530
Final Action	00/00/00	

Small Entity: Not Applicable

Agency Contact: Michael A. Stosser, Assistant General Counsel, Rulemaking and Legislative Analysis, Federal Energy Regulatory Commission, 825 North Capitol Street, NE, Washington, DC 20426, 202 357-5597

RIN: 1902-AA94

3647. PROCEDURES FOR THE ASSESSMENT OF CIVIL PENALTIES UNDER SECTION 31 OF THE FEDERAL POWER ACT

Significance: Agency Priority

Legal Authority: 42 USC 7102 to 7352, (1982); EO 12009, 3 CFR 1978 Comp., p.142; 5 USC 551 to 557, (1982); 15 USC 717 to 717w, (1982); 16 USC 791 to 828c, (1982); 15 USC 3301 to 3402, (1982); 16 USC 2601 to 2645, (1982)

CFR Citation: 18 CFR 385

Legal Deadline: None.

Abstract: The Federal Energy Regulatory Commission is issuing a notice of proposed rulemaking establishing procedures for the assessment of civil penalties pursuant to section 12 of the Electric Consumers Protection Act of 1986, which amended and added a new section 31 to the Federal Power Act. Docket No. RM87-24-000.

Timetable:

Action	Date	FR Cite
NPRM	08/03/87	52 FR 29216
NPRM Comment Period End	10/05/87	52 FR 29216
Final Action	00/00/00	

Small Entity: Not Applicable

Agency Contact: Michael A. Stosser, Assistant General Counsel, Rulemaking and Legislative Analysis, Federal Energy Regulatory Commission, 825 North Capitol Street, NE, Washington, DC 20426, 202 357-5597

RIN: 1902-AA96

3648. REGULATION OF NATURAL GAS PIPELINES AFTER PARTIAL WELLHEAD DECONTROL

Significance: Agency Priority

Legal Authority: 42 USC 7102 to 7352 (1982); EO 12009, 3 CFR 1978 Comp., p.142; 5 USC 551 to 557, (1982); 15 USC 717 to 717w, (1982); 16 USC 791 to 828c, (1982); 15 USC 3301 to 3402, (1982); 16 USC 2601 to 2645, (1982)

CFR Citation: 18 CFR 2; 18 CFR 284.10; 18 CFR 284.8; 18 CFR 284.9; 18 CFR 2.104; 18 CFR 2.105

Legal Deadline: None.

Abstract: Order No. 500 required that producers submit an offer of take-or-pay credits to an open access pipeline in order to make the pipeline's gas eligible for transportation (unless the pipeline and producer agree to a different arrangement); it also adopted a policy on passthrough mechanisms for take-or-pay buyout and buydown costs, repromulgated the contract demand conversion option of Order No. 436, and adopted a policy on gas inventory charges. Order Nos. 500-A, 500-B, and 500-C made changes to the crediting provisions and extended certain deadlines. Docket No. RM87-34-000.

Timetable:

Action	Date	FR Cite
Interim Final Rule	08/07/87	

Next Action Undetermined

Small Entity: No

Additional Information: See Order Explaining Crediting (Oct. 16, 1987) and 0-500, 0-500-B, and 0-500-C themselves for more details.

Agency Contact: Susan J. Court, Associate General Counsel, Gas and Oil, Federal Energy Regulatory Commission, 825 North Capitol Street, NE, Washington, DC 20426, 202 357-8448

RIN: 1902-AA97

3649. ● IMPLEMENTATION OF SECTION 6 OF THE ELECTRIC CONSUMER PROTECTION ACT OF 1986; HYDROELECTRIC APPLICANTS WITH NEW DAM OR DIVERSION PROJECTS SEEKING BENEFITS UNDER PURPA (1978)

Significance: Agency Priority

Legal Authority: 16 USC 791a to 824r (1982); 16 USC 2601 to 2645 (1982); 42 USC 7101 to 7352 (1982); EO 12009, 3 CFR 1978 Comp., p.142; 31 USC 9701 (1982)

CFR Citation: 18 CFR 4; 18 CFR 292; 18 CFR 375

Legal Deadline: None.

Abstract: The final rule would promulgate regulations governing applicants for hydroelectric licenses and exemptions that seek benefits under section 210 of the Public Utility Regulatory Policies Act of 1978 (PURPA). In so doing, the final rule will implement section 6 of the Electric Consumer's Protection Act of 1986 (ECPA) which sets forth three new environmental requirements that must be satisfied before a hydroelectric project at a new dam or diversion can obtain PURPA benefits. (Docket No. RM87-13-000.)

Timetable:

Action	Date	FR Cite
NPRM	10/05/87	52 FR 38460
NPRM Comment Period End	11/16/87	52 FR 38460
Final Action	00/00/00	

Small Entity: Not Applicable

Agency Contact: Michael A. Stosser, Assistant General Counsel, Rulemaking and Legislative Analysis, Federal Energy Regulatory Commission, 825 North Capitol Street, NE, Washington, DC 20425, 202 357-5597

RIN: 1902-AB04

3650. ● FILING FEES UNDER INDEPENDENT OFFICES APPROPRIATIONS ACT OF 1952

Significance: Agency Priority

Legal Authority: 31 USC 9701 Independent Offices Appropriation Act of 1952

CFR Citation: 18 CFR 3; 18 CFR 4; 18 CFR 157; 18 CFR 292; 18 CFR 375; 18 CFR 381

Legal Deadline: None.

Abstract: The rulemaking proceeding will establish several new filing fees pursuant to the Independent Offices Appropriations Act of 1952 and will revise certain existing filing fees and procedures. (Docket No. RM87-26-000.)

Timetable:

Action	Date	FR Cite
NPRM	11/05/87	52 FR 43612
NPRM Comment Period End	12/14/87	52 FR 43612
Final Action	00/00/00	

Small Entity: Not Applicable

Agency Contact: Michael A. Stosser, Assistant General Counsel, Rulemaking and Legislative Affairs, Federal Energy Regulatory Commission, 825 North Capitol Street, NE, Washington, DC 20426, 202 357-5597

RIN: 1902-AB05

FEDERAL ENERGY REGULATORY COMMISSION (FERC)

Completed Actions

3651. REVISION OF FERC RULES OF PRACTICE, SEPARATION OF FUNCTIONS AND EX PARTE RULES FOR TRIAL-TYPE PROCEEDINGS

CFR Citation: 18 CFR 385.2201; 18 CFR 385.2202

Completed:

Reason	Date	FR Cite
No action expected in the next 12 months.	02/26/88	

Small Entity: No

Agency Contact: Michael A. Stosser 202 357-5597

RIN: 1902-AA31

3652. LIST OF UNITS OF PROPERTY FOR USE IN ACCOUNTING FOR ADDITIONS AND RETIREMENTS OF REACTOR PLANT EQUIPMENT

CFR Citation: 18 CFR 116

Completed:

Reason	Date	FR Cite
Final Action	11/18/87	52 FR 45167
Final Action Effective	11/28/87	52 FR 45167

Small Entity: No

Agency Contact: Michael A. Stosser 202 357-5597

RIN: 1902-AA43

3653. AMENDMENTS TO UNIFORM SYSTEM OF ACCOUNTS TO REVISE ACCOUNTING RETIREMENT FOR NUCLEAR FUEL

CFR Citation: 18 CFR 101

Completed:

Reason	Date	FR Cite
No action expected in next 12 months	02/26/88	

Small Entity: No

Agency Contact: Michael A. Stosser 202 357-5597

RIN: 1902-AA52

3654. EXEMPTION FROM THE LICENSING REQUIREMENTS OF PART I OF THE FEDERAL POWER ACT OF CERTAIN CATEGORIES OF SMALL HYDROELECTRIC POWER PROJECTS WITH AN INSTALLED CAPACITY OF 5 MW OR LESS

CFR Citation: 18 CFR 4.109; 18 CFR 4.110; 18 CFR 4.111; 18 CFR 4.112

Completed:

Reason	Date	FR Cite
Final Action	10/20/87	52 FR 39628
Final Action Effective	10/20/87	52 FR 39628

Small Entity: Undetermined

Agency Contact: Michael A. Stosser 202 357-5597

RIN: 1902-AA59

3655. ACCOUNTING AND RATEMAKING TREATMENT FOR NUCLEAR PLANT DECOMMISSIONING COSTS

CFR Citation: 18 CFR 35; 18 CFR 101; 18 CFR 141

Completed:

Reason	Date	FR Cite
No action expected in next 12 months	02/26/88	

Small Entity: No

Agency Contact: Michael A. Stosser 202 357-5597

RIN: 1902-AA64

3656. NOI - REGULATION OF ELECTRICITY SALES - FOR RESALES AND TRANSMISSION SERVICE

CFR Citation: 18 CFR 290; 18 CFR 35

Completed:

Reason	Date	FR Cite
No action expected in the next 12 months.	02/26/88	

Small Entity: No

Agency Contact: Michael A. Stosser 202 357-5597

RIN: 1902-AA68

3657. REGULATION OF NATURAL GAS PIPELINES AFTER PARTIAL WELLHEAD DECONTROL; PART D

Significance: Agency Priority

CFR Citation: 18 CFR 154

Completed:

Reason	Date	FR Cite
No action expected in the next 12 months.	02/26/88	

Small Entity: No

Agency Contact: Michael A. Stosser 202 357-5597

RIN: 1902-AA70

3658. ABANDONMENT OF SALES AND PURCHASES OF NATURAL GAS UNDER EXPIRED, TERMINATED, OR MODIFIED CONTRACTS

Significance: Agency Priority

CFR Citation: 18 CFR 157; 18 CFR 284

Completed:

Reason	Date	FR Cite
Final Action	02/05/88	53 FR 4121
Final Action Effective	04/12/88	53 FR 4121

Small Entity: No

Agency Contact: Michael A. Stosser 202 357-5597

RIN: 1902-AA81

3659. NATURAL GAS RATE DESIGN

CFR Citation: Not yet determined

Completed:

Reason	Date	FR Cite
No action expected in the next 12 months	02/26/88	

Small Entity: No

Agency Contact: Michael A. Stosser 202 357-5597

RIN: 1902-AA82

3660. FEES FOR HYDROELECTRIC PROJECT APPLICATIONS TO REIMBURSE FISH AND WILDLIFE AGENCIES

Significance: Agency Priority

CFR Citation: 18 CFR 4; 18 CFR 11; 18 CFR 375

Completed:

Reason	Date	FR Cite
Final Action	12/16/87	52 FR 48398
Final Action Effective	01/21/88	52 FR 48398

Small Entity: Undetermined

Agency Contact: Michael A. Stosser 202 357-5597

RIN: 1902-AA84

3661. REGULATIONS IMPLEMENTING THE NATIONAL ENVIRONMENTAL POLICY ACT OF 1969

Significance: Agency Priority

CFR Citation: 18 CFR 2; 18 CFR 380

Completed:

Reason	Date	FR Cite
Final Action	12/10/87	52 FR 47897
Final Action Effective	01/19/88	52 FR 47897

Small Entity: Not Applicable

Agency Contact: Michael A. Stosser 202 357-5597

RIN: 1902-AA91

3662. REVISION OF FREEDOM OF INFORMATION ACT RULES

Significance: Agency Priority

CFR Citation: 18 CFR 3; 18 CFR 361; 18 CFR 388

Completed:

Reason	Date	FR Cite
Final Action	01/20/88	53 FR 1469
Final Action Effective	02/19/88	53 FR 1469

Small Entity: Not Applicable

Agency Contact: Michael A. Stosser 202 357-5597

RIN: 1902-AA92

3663. GENERIC DETERMINATION OF RATE OF RETURN ON COMMON EQUITY FOR PUBLIC UTILITIES

Significance: Agency Priority

CFR Citation: 18 CFR 37

Completed:

Reason	Date	FR Cite
Final Action	02/05/88	53 FR 3342
Final Action Effective	02/01/88	53 FR 3342

Small Entity: Not Applicable

Agency Contact: Michael A. Stosser 202 357-5597

RIN: 1902-AA93

3664. REVISIONS TO THE PURCHASED GAS ADJUSTMENT REGULATIONS

Significance: Agency Priority

CFR Citation: 18 CFR 154; 18 CFR 282; 18 CFR 375; 18 CFR 381

Completed:

Reason	Date	FR Cite
Final Rule issued in RM86-14-000	11/10/87	52 FR 43854

Small Entity: Not Applicable

Agency Contact: Michael A. Stosser 202 357-5597

RIN: 1902-AA95

[FR Doc. 88-5107 Filed 04-22-88; 8:45 am]

BILLING CODE 6717-01-T

VOL
53

ISS
79

PT
2

AP
25

1988

UMI

federal register

Monday
April 25, 1988

Part XLIX

Federal Home Loan Bank Board

Semiannual Regulatory Agenda

FEDERAL HOME LOAN BANK BOARD (FHLBB)

FEDERAL HOME LOAN BANK BOARD

12 CFR Ch. V

[No. 88-89]

Agenda of Federal Regulations

AGENCY: Federal Home Loan Bank Board.

ACTION: Publication of agenda items.

SUMMARY: The Federal Home Loan Bank Board is hereby publishing items for the "April Unified Agenda of Federal Regulations."

ADDRESS: Information Services Division, Office of the Secretariat, Federal Home Loan Bank Board, 1700 G Street, NW., Washington, DC 20552.

FOR FURTHER INFORMATION CONTACT: See persons listed below for specific agenda items.

By the Federal Home Loan Bank Board.

John F. Ghizzoni,

Assistant Secretary.

FEDERAL HOME LOAN BANK BOARD (FHLBB) — Final Rule Stage

3665. CONSERVATORS AND RECEIVERS

Legal Authority: 12 USC 1464; 12 USC 1724(d); 12 USC 1729; PL 99-120, Sec 6

CFR Citation: 12 CFR 547; 12 CFR 548; 12 CFR 549; 12 CFR 563.8-3, (proposed new section); 12 CFR 563.39(a); 12 CFR 569a; 12 CFR 569b, (proposed new Part); 12 CFR 569c, (proposed new Part)

Legal Deadline: None.

Abstract: The Board is proposing extensive revisions to its regulations governing the conservatorship and receivership of associations chartered by the Board or the accounts of which that are insured by the Federal Savings and Loan Insurance Corporation. The Board will unify the appointment of receiver procedures for state and federal institutions; adopt procedures for appointment of receivers under section 406(c)(1)(B) of the National Housing Act; and address the priorities in liquidation and participation interests in liquidation, which are absent from or inadequately covered in the present regulations. The Board is also proposing that its regulations cover topics such as the effect of the receivership appointment on executory contracts, employment agreements, certain "Golden Parachute" agreements, participation agreements, repurchase agreements, and on agreements relating to secured and unsecured borrowings by an insured institution, including agreements providing for prepayment or default penalties. The proposed regulations provide for new rules of general applicability in the areas previously mentioned, clarify existing provisions, and reorganize and recodify all the (cont)

Timetable:

Action	Date	FR Cite
NPRM	11/08/85	50 FR 48970
Publication of Board Action	11/27/85	50 FR 48970
NPRM Comment Period End	01/22/86	
Final Action	00/00/00	

Small Entity: No

Additional Information: ABSTRACT CONT: regulations governing conservatorships and receiverships.

There are no alternatives being considered by the Board in lieu of the proposed regulation that would have less impact on small institutions, consistent with the intended result, than the concerns expressed in the supplementary information to the proposed rule and the existing statutory requirements concerning receiverships and conservatorships.

The potential costs and benefits of the proposed regulation on the industry have not been quantified.

Agency Contact: Lawrence W. Hayes, Deputy General Counsel for FSLIC, O.G.C., Federal Home Loan Bank Board, 1700 G St. NW, Washington, DC 20552, 202 377-6428

RIN: 3068-AA07

3666. LOANS TO ONE BORROWER

Legal Authority: 12 USC 1421 to 1429; 12 USC 1464(c); 12 USC 1724 to 1730

CFR Citation: 12 CFR 563.9-3

Legal Deadline: None.

Abstract: The Bank Board proposes to amend its regulation pertaining to loans to one borrower in a number of ways, most significantly to reduce the amount of aggregate loans to one borrower that may be made by an institution the accounts of which are insured by the FSLIC. The proposal is intended to reduce risk to insured institutions and the FSLIC without depriving institutions of appropriate operational flexibility. To this end, the Board invites comment on all aspects of the proposal.

The Bank Board is soliciting comment on possible alternatives to the rule as proposed in addressing the concerns expressed above.

The potential costs and benefits of the proposed regulation on the industry have not been quantified.

The proposed rule would apply equally to all insured institutions.

Timetable:

Action	Date	FR Cite
NPRM	08/15/86	51 FR 30225
Publication of Board Action	08/25/86	51 FR 30225
NPRM Comment Period End	10/24/86	51 FR 30225
Final Action	00/00/00	

Small Entity: Yes

Analysis: Regulatory Flexibility Analysis

Agency Contact: Daniel G. Lonergan, Staff Attorney, Regulations and Legislation Division, Office of General Counsel, Federal Home Loan Bank Board, 1700 G Street, NW, Washington, DC 20552, 202 377-6458

RIN: 3068-AA19

3667. REGULATORY CAPITAL REQUIREMENTS OF INSURED INSTITUTIONS

Legal Authority: 12 USC 1726

CFR Citation: 12 CFR 563.3-10; 12 CFR 563.13

Legal Deadline: None.

Abstract: The Bank Board is proposing to amend its regulation setting the regulatory capital requirements for institutions insured by the Federal Savings and Loan Insurance Corporation by changing the method of computing the annual calculation of industry profits; by deleting the provision concerning the effect upon base liabilities of acquisitions and sales of less than substantially all of the liabilities of an insured institution (branch sales); and by amending the earnings-based accounts regulation to conform that regulation's provisions establishing regulatory capital thresholds to the current regulatory capital requirements. The proposed rule would apply equally to all insured institutions.

There are no alternatives that would be less burdensome than the proposal in addressing the concerns expressed above.

The potential costs and benefits of the proposed regulation on the industry have not been quantified.

Timetable:

Action	Date	FR Cite
NPRM	06/25/87	52 FR 23845
NPRM Comment Period End	08/24/87	52 FR 23845
Final Action	00/00/00	

Small Entity: No

Analysis: Regulatory Flexibility Analysis

Agency Contact: Jerilyn Rogin, Staff Attorney, Regulations and Legislation Division, Office of General Counsel, Federal Home Loan Bank Board, 1700 G Street, NW, Washington, DC 20552, **202 377-7018**

RIN: 3068-AA22

3668. SETTLEMENT OF INSURANCE; FEDERAL SAVINGS AND LOAN INSURANCE CORPORATION

Legal Authority: 12 USC 1724 to 1730g

CFR Citation: 12 CFR 564.2; 12 CFR 564.9

Legal Deadline: None.

Abstract: The Bank Board is proposing to amend its regulations pertaining to the settlement of insurance on accounts held jointly. The Bank Board proposes to delete the current requirement that each co-owner of a joint account must personally execute a signature card for the account in order for the account to be separately insured. The Bank Board believes the current rule may have caused hardship to depositors and added to the recordkeeping burden on institutions without appreciably reducing the risks of fraudulent claims of entitlement to separate joint account insurance coverage. The Bank Board also is proposing to consolidate provisions of its regulations governing joint accounts and to clarify the provisions affecting joint accounts established by intermediaries.

There are no alternatives that would be less burdensome than the rule in addressing the concerns expressed above.

The potential costs and benefits of the proposed regulation on the industry have not been quantified.

Timetable:

Action	Date	FR Cite
NPRM	07/10/87	52 FR 26017
NPRM Comment Period End	09/08/87	52 FR 26017
Final Action	00/00/00	

Small Entity: No

Analysis: Regulatory Flexibility Analysis

Agency Contact: Deborah Dakin, Assistant Director, Regulations and Legislation Division, Office of General Counsel, Federal Home Loan Bank Board, 1700 G Street, NW, Washington, DC 20552, **202 377-6445**

RIN: 3068-AA23

3669. BANK SECRECY ACT COMPLIANCE PROCEDURES

Significance: Agency Priority

Legal Authority: 31 CFR 103; 12 USC 1464; 12 USC 1730; PL 99-570, Sec 1359; 31 USC 5311 to 5322

CFR Citation: 12 CFR 563.17-7

Legal Deadline: Statutory, April 27, 1987. Section 1359 of the Anti-Drug Abuse Act of 1986, Pub.L.No. 99-570, required establishment of a Bank Secrecy Act compliance program by April 27, 1987.

Abstract: The Bank Board is proposing to amend for purposes of clarification, its recently adopted regulation which requires insured institutions to establish and maintain procedures to assure and monitor compliance with the requirements of the Bank Secrecy Act ("BSA"), including the Currency and Foreign Transactions Reporting Act and the implementing regulations of the U.S. Department of the Treasury, 31 CFR Part 103. The proposed rule sets forth in greater detail the elements required to be in a BSA compliance program, in particular, the requirements of BSA compliance testing and continuing education. The proposed rule would apply equally to all insured institutions.

The proposed rule for BSA compliance programs establishes a minimum system for verifying and encouraging compliance with the BSA in accordance with Congressional concern. Alternatively, the Bank Board could have required an in-depth audit of insured institutions' compliance by independent auditors. The Bank Board believes that such an alternative would have been less flexible and more restrictive for insured institutions. (cont)

Timetable:

Action	Date	FR Cite
NPRM	05/08/87	52 FR 17406
NPRM Comment Period End	07/07/87	52 FR 17406
Final Action	00/00/00	

Small Entity: No

Additional Information: 9. Abstract Cont:

The potential costs and benefits of the proposed regulation on the industry have not been quantified.

Analysis: Regulatory Flexibility Analysis

Agency Contact: C. Dawn Causey, Attorney, Office of Enforcement, Federal Home Loan Bank Board, 1700 G Street, NW, Washington, DC 20552, **202 653-2624**

RIN: 3068-AA24

3670. CORPORATE GOVERNANCE, PARTS III AND IV

Legal Authority: 12 USC 1464; 12 USC 2609

CFR Citation: 12 CFR 501.12, (new section); 12 CFR 543.10-5; 12 CFR 544.9-2, (new section); 12 CFR 544.10-5; 12 CFR 545.2; 12 CFR 545.3; 12 CFR 545.12; 12 CFR 545.21; 12 CFR 454.32; 12 CFR 545.33; 12 CFR 545.34; 12 CFR 545.46; 12 CFR 545.74; 12 CFR 545.91; 12 CFR 545.95; ...

Legal Deadline: None.

Abstract: The Bank Board is proposing extensive revisions to its regulations regarding the corporate governance of Federal associations in order to update and clarify these regulations. Due to the magnitude of the revisions, the Bank Board has presented the proposal in

parts, issued separately for public comment. The proposed regulations would reorganize portions of Subchapter C (the regulations for federally chartered associations) and amend and add sections to provide a more cohesive and complete body of rules for the corporate governance of Federal associations. Part I, previously proposed, would provide definitions and rules for the organization and incorporation of Federal associations. Part II, also previously proposed, would contain provisions regarding the corporate structure and governing processes for Federal stock associations and Federal mutual associations. Part III proposes revisions to the rules governing operations of and charter conversion from and to Federal associations. Part IV proposes provisions regarding conservatorships, receiverships, trust powers, miscellaneous provisions, Board rulings, and statements of policy. The (cont)

Timetable:

Action	Date	FR Cite
NPRM	07/09/87	52 FR 25870
NPRM Comment Period End	02/01/88	52 FR 42116
Final Action	00/00/00	

Small Entity: No

Additional Information: CFR citation (cont'd) 12 CFR 545.114, 12 CFR 545.121, 12 CFR 545.123, 12 CFR 545.131, 12 CFR 546.1, 12 CFR 546.2, 12 CFR 546.3, 12 CFR 546.4, 12 CFR 546.5, 12 CFR 546.6, 12 CFR 546.7, 12 CFR 546.8, 12 CFR 546.9, 12 CFR 546.10, 12 CFR 546.11, and 12 CFR 551.

Abstract Cont: proposed rule would apply equally to all insured institutions.

There are no alternatives that would be less burdensome than the proposal in addressing the concerns expressed above.

The potential costs and benefits of the proposed regulation on the industry have not been quantified.

Analysis: Regulatory Flexibility Analysis

Agency Contact: Kathleen M. Ulrich, Staff Attorney, Corporate and Securities Division, Office of General Counsel, Federal Home Loan Bank Board, 1700 G Street, NW, Washington, DC 20552, 202 377-7049

RIN: 3068-AA25

3671. ADJUSTABLE-RATE MORTGAGE HOME LOAN DISCLOSURES

Legal Authority: 12 USC 1724 to 1730; 12 USC 3801 et seq; 12 CFR 226.17; 12 CFR 226.19

CFR Citation: 12 CFR 545.33; 12 CFR 563.9-9

Legal Deadline: None.

Abstract: The Bank Board proposed to amend its regulations regarding the disclosures and notices that lenders must give to borrowers concerning adjustable-rate mortgage ("ARM") home loans. The proposed rule would retain the Bank Board's current regulations concerning the timing for disclosures and continue to allow the use of the ARMs Handbook, but would require additional disclosure of specific information concerning the ARM program being offered to the consumer. The revision would clarify the Bank Board's regulation and would implement the uniform disclosure of ARMs recommended by the Federal Financial Institutions Examination Council on August 12, 1986. In addition, the proposal would consolidate and clarify existing Bank Board regulations on disclosures and notices for all loans. The proposed rule would apply equally to all insured institutions.

There are no alternatives that would be less burdensome than the proposed rule in addressing the concerns expressed above.

The potential costs and benefits of the proposed regulation on the industry have not been quantified.

Timetable:

Action	Date	FR Cite
NPRM	02/05/87	52 FR 3665
NPRM Comment Period End	03/09/87	52 FR 3665
Final Action	00/00/00	

Small Entity: No

Analysis: Regulatory Flexibility Analysis

Agency Contact: Stephen D. Johnson, Attorney/Advisor, Division of Consumer and Civil Rights, Office of Community Investment, Federal Home Loan Bank Board, 1700 G Street, NW, Washington, DC 20552, 202 653-2692

RIN: 3068-AA26

3672. ACCOUNTING POLICY RELATING TO ACQUISITION, DEVELOPMENT AND CONSTRUCTION LOANS

Legal Authority: Notice to Practitioners on ADC Loans, CPA Letter, Feb 10, 1986

CFR Citation: 12 CFR 571.17

Legal Deadline: None.

Abstract: The Bank Board proposed to amend its statement of accounting policy relating to acquisition, development and construction ("ADC") loans used by all institutions the accounts of which are insured by the Federal Savings and Loan Insurance Corporation ("FSLIC") or affiliates thereof when preparing reports or financial statements for filing with the Bank Board or the FSLIC. The amendments relate to the recent "Notice to Practitioners" issued by the American Institute of Certified Public Accountants, which superseded two prior notices issued in November 1983 and November 1984, and to the public position regarding the effective date of the recent notice taken by the Chief Accountant of the Securities and Exchange Commission. By proposing this amendment to its statement of policy, the Bank Board is adhering to its policy that insured institutions are expected to apply the guidance of the accounting profession for determining whether a transaction characterized as an ADC loan is in fact a loan or whether, in substance, it is a real estate investment or a joint venture. The proposed rule would apply equally to all insured institutions. (cont)

Timetable:

Action	Date	FR Cite
NPRM	03/13/87	52 FR 7887
NPRM Comment Period End	05/12/87	52 FR 7887
Final Action	00/00/00	

Small Entity: No

Additional Information:

There are no alternatives that would be less burdensome than the proposed rule in addressing the concerns expressed above.

The potential costs and benefits of the proposed regulation on the industry have not been quantified.

Analysis: Regulatory Flexibility Analysis

Agency Contact: Deborah Dakin, Assistant Director, Regulations and Legislation Division, Office of General

Counsel, Federal Home Loan Bank Board, 1700 G Street, NW, Washington, DC 20552, 202 377-6445

RIN: 3068-AA27

3673. INSURANCE TERMINATION PROVISIONS

Legal Authority: 12 USC 1464; 12 USC 1727; 12 USC 1730

CFR Citation: 12 CFR 565

Legal Deadline: None.

Abstract: The Bank Board is reviewing a number of issues relating to the extent to which institutions insured by the Federal Savings and Loan Insurance Corporation ("FSLIC") that terminate their insured status in connection with transfers by operation of law must pay a final insurance premium to the FSLIC. As part of its review, the Bank Board is soliciting public comment to ascertain whether to issue a proposal in this area. On October 7, 1986, the Bank Board adopted a clarifying amendment to the definition of "transfers" set forth in its statement of policy regarding mergers and transfers of assets. (12 CFR 571.5(a)). However, as the clarification indicates, the interpretation did not specifically address the separate issues of whether an insured institution undertaking a transfer of assets and liabilities by operation of law in which the surviving entity is not FSLIC-insured must pay a final insurance premium to the FSLIC, and if so, the amount of such payment. The Bank Board has been reviewing this so-called "exit premium" issue on an ongoing basis and as yet has made no final determination with respect to this matter.

Timetable:

Action	Date	FR Cite
ANPRM	05/08/87	52 FR 17408
ANPRM Comment Period End	07/07/87	52 FR 17408
Final Action	00/00/00	

Small Entity: No

Additional Information: ABSTRACT CONT: In view of the continued importance of this issue as it relates to the financial condition of the FSLIC insurance fund, the Bank Board is hereby soliciting public comment on this subject.

Since the proposal is only an advance notice of proposed rulemaking, the potential costs and benefits of a proposed regulation on the industry have not been quantified.

Agency Contact: John A. Buchman, Assistant Deputy Director, Corporate and Securities Division, Office of General Counsel, Federal Home Loan Bank Board, 1700 G Street, NW, Washington, DC 20552, 202 377-6963

RIN: 3068-AA28

3674. INDEMNIFICATION OF DIRECTORS, OFFICERS AND EMPLOYEES OF FEDERAL HOME LOAN BANKS

Legal Authority: 5 USC 553

CFR Citation: 12 CFR 522.72

Legal Deadline: None.

Abstract: The Bank Board is proposing to amend its regulations governing the indemnification of directors, officers, and employees of the Federal Home Loan Banks ("FHL Banks"). This amendment would clarify that expenses incurred by FHL Bank directors, officers, and employees in connection with litigation are to be reimbursed as they are incurred, but that, by majority vote of its board of directors, a FHL Bank could require repayment of expenses that it finds to have been beyond the scope of the Bank Board's indemnification regulation. The proposal applies only to directors, officers, and employees of the FHL Banks, none of which falls within the definition of a "small financial institution" given by the Small Business Administration.

There are no alternatives that would be less burdensome than the proposal in addressing the concerns expressed above.

The potential costs and benefits of the proposal on the industry have not been quantified.

Timetable:

Action	Date	FR Cite
NPRM	04/16/87	52 FR 12425
NPRM Comment Period End	06/15/87	52 FR 12425
Final Action	00/00/00	

Small Entity: No

Analysis: Regulatory Flexibility Analysis

Agency Contact: Joan Van Berg, Attorney, Regulations and Legislation Division, Office of General Counsel, Federal Home Loan Bank Board, 1700 G Street, NW, Washington, DC 20552, 202 377-7023

RIN: 3068-AA30

3675. ● ISSUANCE AND FORM OF STOCK IN FEDERAL HOME LOAN BANKS

Legal Authority: 12 USC 1426

CFR Citation: 12 CFR 522.10

Legal Deadline: None.

Abstract: The Bank Board proposed to amend its regulations to authorize the capital stock of a Federal Home Loan Bank ("Bank") to be put in uncertificated or book entry form. Currently, the Bank Board's regulations provide for Bank stock to be issued in certificated form only, but on the basis of an earlier legal opinion by the Bank Board's Office of General Counsel some Banks are now using uncertificated stock. The amendment would clarify a Bank's authority both to issue uncertificated stock and to convert certificated stock to book entry form. Any member, however, would be entitled to stock in certificated form upon written request.

Other than the current rule relating to issuance of certificated stock, which would be amended by the proposal, the Bank Board has no rules prescribing the manner in which the existence of Bank stock may be evidenced.

The potential costs and benefits of the proposed regulation on the industry have not been quantified.

Timetable:

Action	Date	FR Cite
NPRM	08/05/87	52 FR 29030
NPRM Comment Period End	10/05/87	52 FR 29030
Final Action	00/00/00	

Small Entity: No

Analysis: Regulatory Flexibility Analysis

Agency Contact: Richard L. Little, Associate General Counsel, Corporate and Securities Division, Office of General Counsel, Federal Home Loan Bank Board, 1700 G Street, N. W. 20552, 202 377-6447

RIN: 3068-AA43

FHLBB **Final Rule Stage**

3676. ● AVAILABILITY AND CHARACTER OF RECORDS

Legal Authority: 5 USC 552; 12 USC 552; 12 USC 1421 et seq; 12 USC 1725; PL 99-570

CFR Citation: 12 CFR 505.4

Legal Deadline: None.

Abstract:

The Bank Board proposed to amend its public access to information regulations on fees and fee waivers in order to comply with the Freedom of Information Reform Act of 1986 ("FOI Reform Act"). The Bank Board's regulations are issued in conformance with Office of Management and Budget ("OMB") guidelines and schedule of fees. Pursuant to the FOI Reform Act and the final OMB guidelines, the Bank Board proposes to set fees to recover the full direct costs incurred by the Bank Board in searching for, reviewing, and duplicating documents in response to FOIA requests. New fees are established for manual search, computer search, and review of records. In compliance with the FOI Reform Act, requesters are classified into four categories for the purposes of making fee assessments; commercial use requesters; educational and noncommercial scientific institution requesters; representatives of the news media; and all other requesters.

There are no alternatives that would be less burdensome than the proposed rule in addressing the concerns expressed above.

The potential costs and benefits of the proposed regulation

Timetable:

Action	Date	FR Cite
NPRM	11/27/87	52 FR 45346
NPRM Comment Period End	12/28/87	52 FR 45346
Final Action	00/00/00	

Small Entity: No

Additional Information:

ABSTRACT CONT:

on the industry have not been quantified.

Analysis: Regulatory Flexibility Analysis

Agency Contact: William Van Leuton, Assistant General Counsel, Office of General, Counsel, Federal Home Loan Bank Board, 1700 G Street, N. W., Washington, D. C. 20552, 202 377-6773

RIN: 3068-AA51

FEDERAL HOME LOAN BANK BOARD (FHLBB) **Completed Actions**

3677. ● DEFINITION OF REGULATORY CAPITAL

Legal Authority: 12 USC 1464; 12 USC 1726

CFR Citation: 12 CFR 500 to 591, (revision of Chapter V); 12 CFR 541.17; 12 CFR 541.20; 12 CFR 545.115; 12 CFR 561.13; 12 CFR 563.17-4; 12 CFR 563.23-1; 12 CFR 563.23-2; 12 CFR 563.23-3; 12 CFR 563c.14; 12 CFR 570.4; 12 CFR 570.11; 12 CFR 570.12

Legal Deadline: None.

Abstract:

The Bank Board amended its regulations in May 1987, to require that all financial statements issued by insured institutions, including statements of condition required pursuant to 12 CFR 545.115, and all financial reports filed with the Bank Board shall be prepared in accordance with generally accepted accounting principles. The rule also substituted the term "regulatory capital" for "regulatory net worth" and defined "regulatory capital" to mean the sum of equity capital as determined in accordance with generally accepted accounting principles plus certain other items as determined appropriate by the Bank Board based on risk analysis reporting. The Bank Board has delayed the effective date of this final rule until January 1, 1989.

The potential costs and benefits of this delay of the effective date of the final rule on the industry have not been quantified.

Timetable:

Action	Date	FR Cite
Final Action	05/15/87	52 FR 18340
Final Action Effective	01/01/89	52 FR 39068

Small Entity: No

Analysis: Regulatory Flexibility Analysis

Agency Contact: Christina M. Gattuso, Acting Regulatory, Counsel, Regulations and Legislation, Division, Office of General Counsel, Federal Home Loan Bank Board, 1700 G Street, N. W., Washington, D. C. 20552, 202 377-6649

RIN: 3068-AA12

3678. APPRAISAL POLICIES AND PRACTICES OF INSURED INSTITUTIONS AND SERVICE CORPORATIONS

Legal Authority: 12 USC 1421 to 1429; 12 USC 1437; 12 USC 1724 to 1730

CFR Citation: 12 CFR 563.17-1a, (new section); 12 CFR 571.1b, (new section)

Legal Deadline: None.

Abstract: The Bank Board is proposing to adopt a rule and a statement of policy pertaining to appraisal policies and practices of insured institutions and service corporations of such institutions. The proposed rule is intended to codify the standards to be used by insured institutions and service corporations, as well as examiners and supervisory staff, in determining compliance with the appraisal requirements of 12 CFR 563.17-1 and 563.17-2. The proposed rule and policy statement address the same four components of the Bank Board's appraisal standards and reporting requirements addressed in R-41c as clarified: management policies, appraisal management, appraisal content, and related considerations. This proposed rule, however, has been designed to clarify and simplify the R-41c guidelines. The proposed rule would apply equally to all insured institutions.

There are no alternatives that would be less burdensome than the rule in addressing the concerns expressed above.

The potential costs and benefits of the proposed regulation on the industry have not been quantified.

Timetable:

Action	Date	FR Cite
NPRM	05/15/87	52 FR 18386
NPRM Comment Period End	09/01/87	52 FR 27219
Withdrawn	10/20/87	52 FR 39070

Small Entity: No

Analysis: Regulatory Flexibility Analysis

Agency Contact: Joan Van Berg, Attorney, Regulations and Legislation Division, Office of General Counsel, Federal Home Loan Bank Board, 1700 G Street, NW, Washington, DC 20552, 202 377-7023

RIN: 3068-AA35

3679. CLASSIFICATION OF ASSETS

Significance: Agency Priority

Legal Authority: 12 USC 1464; 12 USC 1726; 12 USC 1730

CFR Citation: 12 CFR 561.15; 12 CFR 561.16c; 12 CFR 563.13; 12 CFR 563.17-2; 12 CFR 571.1a

Legal Deadline: Statutory, January 7, 1988. The Competitive Equality Banking Act of 1987, Pub. L. No. 100-86, 101 Stat. 552, requires the Bank Board to promulgate final regulations regarding classification of assets by January 7, 1988.

Abstract:

The Bank Board amended its regulations governing the classification of assets of insured institutions pursuant to the mandate of the Competitive Equality Banking Act of 1987 ("CEBA"). CEBA requires the Bank Board to establish an asset classification system consistent with the asset classification practices of the Federal banking agencies. The final rule broadens the scope of the existing rule and ensures the use of broader, but judicious, examiner discretion in the classification of assets, consistent with the asset classification practices of the bank regulatory agencies. Specifically, the final rule employs the existing classification categories of Substandard, Doubtful, and Loss, but alters the consequences of these classifications with respect to valuation allowance requirements and their effect on capital. Assets classified Substandard are no longer to be treated as scheduled items. Moreover, under this final rule, the Bank Board no longer requires institutions to establish specific valuation allowances for assets classified Doubtful. With respect to assets classified Substandard or Doubtful, if the examiner concludes that the valuation allowances established by the

Timetable:

Action	Date	FR Cite
NPRM	05/15/87	52 FR 18369
Publication of Board Action	05/15/87	52 FR 18369
NPRM Comment Period End	09/01/87	52 FR 27218
Final Action Effective	12/31/87	53 FR 338
Final Action	01/06/88	53 FR 338

Small Entity: No

Additional Information: Abstract Cont: institutions are inadequate, the examiner will determine the need for, and extent of, any increase necessary in the insured institution's general valuation allowances, subject to review by the Principal Supervisory Agent or his designee. For the portion of assets classified Loss, the Bank Board will continue to require institutions either to establish specific allowances for losses of 100 percent of the amount classified, or charge off such amount. The final rule also requires insured institutions to classify their own assets and to establish prudent general valuation allowances. Consistent with CEBA, the final rule deletes the Bank Board's scheduled item regulation, thus broadening the scope of the classification of assets regulation to encompass those assets formerly deemed scheduled items.

There are no alternatives that would be less burdensome than the rule in addressing the concerns expressed above.

The potential costs and benefits of the regulation on the industry have not been quantified.

Analysis: Regulatory Flexibility Analysis

Agency Contact: Daniel G. Lonergan, Staff Attorney, Regulations and Legislation Division, Office of General Counsel, Federal Home Loan Bank Board, 1700 G Street, NW, Washington, DC 20552, 202 377-6458

RIN: 3068-AA37

3680. REGULATIONS REQUIRED BY THE COMPETITIVE EQUALITY BANKING ACT OF 1987

Significance: Agency Priority

Legal Authority: PL 100-86

CFR Citation: 12 CFR 500 to 591

Legal Deadline: Statutory, January 7, 1988. The Competitive Equality Banking Act of 1987, PL 100-86, 101 Stat. 552, requires the Bank Board to adopt certain regulations identified in this advance notice of proposed rulemaking by January 7, 1988.

Abstract:

The Bank Board issued a rulemaking to inform the public of its intention to promulgate regulations required by the Competitive Equality Banking Act of 1987 ("CEBA"). Within 2 to 6 months of the date of CEBA's enactment, the Bank Board was required to issue regulations or guidelines in the following areas: qualified thrift lender test; classification of assets; appraisals; uniform generally accepted accounting principles; gain and loss deferrals; capital forebearance; minimum capital requirements; procedures setting time limits for approval or disapproval of applications submitted to Bank Board; and asset disposition. The Bank Board requested comment on these areas and others to assist in implementing the requirements of the CEBA. Additionally, the Bank Board solicited comment on the possible promulgation of other regulations not covered by this notice as well as amendments to existing regulations that may be necessary to implement the provisions of the CEBA the most effective way.

Timetable:

Action	Date	FR Cite
ANPRM	09/04/87	52 FR 33595
ANPRM Comment Period End	10/05/87	52 FR 33595
Final Action Mandatory regulations required by CEBA adopted by the Bank Board.	01/06/88	53 FR 312
Final Action Effective	01/07/88	53 FR 312

Small Entity: No

Agency Contact: Christina M. Gattuso, Acting Regulatory Counsel, Regulations and Legislation Division, Office of General Counsel, Federal Home Loan Bank Board, 1700 G Street, NW, Washington, DC 20552, 202 377-6649

RIN: 3068-AA36

BEST COPY AVAILABLE

3681. ● ORGANIZATION AND OPERATION

Legal Authority: 12 USC 1421 et seq; 12 USC 1724 et seq; 18 USC 207; 42 USC 8101 et seq

CFR Citation: 12 CFR 522.90

Legal Deadline: None.

Abstract:

The Bank Board adopted amendments making minor modifications to the organizational structure of the Federal Home Loan Bank System's Office of Regulatory Policy, Oversight and Supervision ("ORPOS"). ORPOS was established pursuant to regulation in July 1986, that became effective in September 1986. The primary purpose of this amendment is to add an Executive Director as the head of ORPOS. The potential costs and benefits of the regulation on the industry have not been quantified.

Timetable:

Action	Date	FR Cite
Final Action	10/09/87	52 FR 37763
Final Action Effective	10/09/87	52 FR 37763

Small Entity: No

Agency Contact: Randy W. Thomas, Legal Counsel, Office of Regulatory Policy, Oversight and, Supervision, Federal Home Loan Bank System, Federal Home Loan Bank Board, 900 19th Street, N. W., Washington, D. C. 20006, 202 778-2524

RIN: 3068-AA40

3682. ● OPERATIONS, DEFINITIONS

Legal Authority: 12 USC 1421 et seq; 12 USC 1724 et seq

CFR Citation: 12 CFR 501.10; 12 CFR 501.11; 12 CFR 583.5

Legal Deadline: None.

Abstract:

The Bank Board amended and consolidated its regulations on officers as agents by delegating to the Principal Supervisory Agents ("PSA") at each Federal Home Loan Bank, authority to designate Supervisory Agents ("SA") to assist in the performance of duties delegated by the Bank Board and the FSLIC. This change is being implemented to increase administrative efficiency and relieve the Bank Board of a time-consuming, routine procedure. The designation of a SA by a PSA will be immediately communicated, in writing, accompanied by the individual's resume and statement of qualifications, to the Secretary of the Board, the Director of the Office of Regulatory Policy, Oversight and Supervision and the Director of the Office of District Banks. The designation of the PSA and Director of Agency Functions, or equivalent position, at each Federal Home Loan Bank remains the responsibility of the Bank Board.

The potential costs and benefits of the regulation on the industry have not been quantified.

Timetable:

Action	Date	FR Cite
Final Action	01/15/88	53 FR 1003
Final Action Effective	01/15/88	53 FR 1003

Small Entity: No

Agency Contact: Randy Thomas, Legal Counsel, Office of Regulatory Policy, Oversight and, Supervision, Federal Home Loan Bank System, Federal Home Loan Bank Board, 900 19th Street, N. W., Washington, D. C. 20006, 202 778-2524

RIN: 3068-AA44

3683. ● OPERATIONS

Legal Authority: 12 USC 1421 et seq; 12 USC 1724 et seq

CFR Citation: 12 CFR 563.45

Legal Deadline: None.

Abstract:

The Bank Board amended its regulations on Annual Report disclosure requirements by expanding the authority delegated to the Principal Supervisory Agent. This expansion of authority will establish a shorter decision process and enable the agency to respond more quickly and efficiently to annual report disclosure waiver requests and review of annual report disclosure reports requiring preapproval.

The potential costs and benefits of the regulation on the industry have not been quantified.

Timetable:

Action	Date	FR Cite
Final Action	01/15/88	53 FR 1004
Final Action Effective	01/15/88	53 FR 1004

Small Entity: No

Agency Contact: Robyn Dennis, Financial Analyst, Office of Regulatory Policy, Oversight and, Supervision, Federal Home Loan Bank System, Federal Home Loan Bank Board, 900 19th Street, N. W., Washington, D. C. 20006, 202 778-2560

RIN: 3068-AA45

3684. ● ACQUISITION OF SECURITIES OF CONVERTING AND CONVERTED INSURED INSTITUTIONS

Legal Authority: 12 USC 1421 et seq; 12 USC 1724 et seq; 15 USC 78c; 15 USC 78l to 78n; 15 USC 78w

CFR Citation: 12 CFR 563b.3; 12 CFR 563b.8

Legal Deadline: None.

Abstract:

The Bank Board amended its regulations pertaining to the processing of applications involving offers to acquire or acquisitions of securities of converting and converted institutions whose accounts are insured by the FSLIC. The Bank Board amended its regulations to authorize the General Counsel, or his designee, to grant approval of any application to offer to acquire or acquire the beneficial ownership of more than ten percent of any class of an equity security of a recently converted insured institution, submitted under section 563b.3 (i) (3) of the FSLIC regulations which does not raise a significant issue of law or policy. The Bank Board also amended its regulations to specify where such applications are to be filed.

The potential costs and benefits of the regulation on the industry have not been quantified.

Timetable:

Action	Date	FR Cite
Final Action	11/03/87	52 FR 42091
Final Action Effective	12/03/87	52 FR 42091

Small Entity: No

Agency Contact: Steven J. Gray, Attorney, Corporate and Securities Division, Office of, General Counsel, Federal Home Loan Bank Board, 1700 G Street, N. W., Washington, D. C. 20552, 202 377-7506

RIN: 3068-AA46

3685. ● APPLICATIONS PROCESSING GUIDELINES

Significance: Agency Priority

Legal Authority: 12 USC 1728; 12 USC 1729; 12 USC 1730; 12 USC 1730a; PL 100-86, Sec 410

CFR Citation: 12 CFR 571.12, (new section)

Legal Deadline: Statutory, October 9, 1987. The Competitive Equality Banking Act of 1987, PL 100-86, 101 Stat. 552, requires the Bank Board to promulgate applications processing guidelines to take effect on October 9, 1987.

Abstract: The Bank Board adopted a policy statement that promulgates guidelines concerning processing of applications filed with the Bank Board. This policy statement sets forth maximum time periods for approval of completed applications filed with the Bank Board. The guidelines provide that each completed application filed with the Bank Board or the FSLIC (other than an application submitted under 12 USC 1730a, concerning holding company indebtedness) shall be deemed to be approved as of the end of the period prescribed by such guidelines unless the Bank Board or the FSLIC approves or disapproves the application before the end of the period.

There are no alternatives that would be less burdensome than the rule in addressing the concerns expressed above.

The potential costs and benefits of the regulation on the industry have not been quantified.

Timetable:

Action	Date	FR Cite
Final Action Effective	10/09/87	52 FR 39064
Final Action Comments on the policy statement must be received by 12/09/87.	10/20/87	52 FR 39064

Small Entity: No

Analysis: Regulatory Flexibility Analysis

Agency Contact: John A. Buchman, Assistant Deputy Director, Corporate and Securities Division, Office of, General Counsel, Federal Home Loan Bank Board, 1700 G Street, N. W., Washington, D. C. 20552, 202 377-6963

RIN: 3068-AA47

3686. ● CAPITAL FORBEARANCE

Significance: Agency Priority

Legal Authority: 12 USC 1462; 12 USC 1464; 12 USC 1729; 12 USC 1818; 12 USC 1821; PL 100-86, Sec 404; PL 100-86, Sec 416

CFR Citation: 12 CFR 563.9-3; 12 CFR 563.47, (new section)

Legal Deadline: Statutory, January 7, 1988. The Competitive Equality Banking Act of 1987, PL 100-86, 101 Stat. 552, requires the Bank Board to promulgate final regulations no later than January 7, 1988.

Abstract: The Bank Board adopted regulations to implement section 404 of the Competitive Equality Banking Act of 1987, which provides that the Bank Board shall establish a program of capital forbearance for well-managed, viable Federal associations and FSLIC-insured institutions if certain requirements are met. The regulation sets forth the requirements that institutions must meet to obtain forbearance under this program, the procedures for requesting forbearance, the procedures under which an applicant's Principal Supervisory Agent will consider such requests, the effect of forbearance, and the termination of a grant of forbearance.

There are no alternatives that would be less burdensome than the rule in addressing the concerns expressed above.

The potential costs and benefits of the regulation on the industry have not been quantified.

Timetable:

Action	Date	FR Cite
Final Action Effective	01/01/88	53 FR 354
Final Action	01/06/88	53 FR 354

Small Entity: No

Analysis: Regulatory Flexibility Analysis

Agency Contact: Jerome L. Edelstein, Acting Deputy Director, Regulations and Legislation Division, Office, of General Counsel, Federal Home Loan Bank Board, 1700 G Street, N. W., Washington, D. C. 20552, 202 377-7057

RIN: 3068-AA48

3687. ● APPRAISAL POLICIES AND PRACTICES OF INSURED INSTITUTIONS AND SERVICE CORPORATIONS

Significance: Agency Priority

Legal Authority: 12 USC 1421 et seq; 12 USC 1724 et seq; PL 100-86, Sec 402

CFR Citation: 12 CFR 563.17-1a, (new section); 12 CFR 571.1b, (new section)

Legal Deadline: Statutory, January 7, 1988. The Competitive Equality Banking Act of 1987, PL 100-86, 101 Stat. 552, requires the Bank Board to promulgate final regulations no later than January 7, 1988.

Abstract: The Bank Board adopted a final rule and a statement of policy pertaining to appraisal policies and practices of institutions insured by the FSLIC and their service corporations consistent with the requirements of the Competitive Equality Banking Act of 1987 ("CEBA"). This rule requires the management of insured institutions and service corporations to develop and implement prudent appraisal policies and procedures. The Bank Board also adopted a statement of policy to accompany the rule. The statement of policy sets forth certain appraisal standards that the Bank Board recommends to management for consideration in the development of the appraisal policies and procedures required by the rule.

There are no alternatives that would be less burdensome than the rule in addressing the concerns expressed above.

The potential costs and benefits of the regulation on the industry have not been quantified.

Timetable:

Action	Date	FR Cite
Final Action	01/06/88	53 FR 372
Final Action Effective	01/07/88	53 FR 372

Small Entity: No

Analysis: Regulatory Flexibility Analysis

Agency Contact: Joan S. Van Berg, Attorney, Regulations and Legislation Division, Office, of General Counsel, Federal Home Loan Bank Board, 1700 G Street, N. W., Washington, D. C. 20552, 202 377-7023

RIN: 3068-AA49

3688. ● ACQUISITION OF CONTROL OF INSURED INSTITUTIONS; PROCEDURAL REQUIREMENTS

Legal Authority: 12 USC 1730; 12 USC 1730a

CFR Citation: 12 CFR 574.6

Legal Deadline: None.

Abstract:

The Bank Board revised the procedural requirements applicable to applications, notices, and rebuttal filings filed pursuant to 12 CFR Part 574 by changing certain filing procedures, modifying the time frames for public notification, and revising the time frames that apply to the FSLIC's determination that an application or notice is sufficient. The amendments are intended to expedite the processing of filings under 12 CFR Part 574 and to simplify the calculation of critical dates in the processing of applications and notices. In particular, the amendments are intended to conform various time frames employed in 12 CFR Part 574 as closely as practicable to the FSLIC's recently adopted general guidelines for processing applications. See 52 FR 39064 (Oct. 20, 1987), to be codified at, 12 CFR 571.12. These guidelines address such issues as multiple filings, automatic approval time frames, and the exclusion of FSLIC- assisted cases from automatic approval time frames.

The potential costs and benefits of the regulation on the industry have not been quantified.

Timetable:

Action	Date	FR Cite
Final Action	12/23/87	52 FR 48519
Final Action Effective	12/23/87	52 FR 48519

Small Entity: No

Agency Contact: Kevin A. Corcoran, Deputy Director for, Corporate, Corporate and Securities Division, Office of General Counsel, Federal Home Loan Bank Board, 1700 G Street, N. W., Washington, D. C. 20552, 202 377-6962

RIN: 3068-AA50

3689. ● FEDERAL SAVINGS AND LOAN INSURANCE CORPORATION INDUSTRY ADVISORY COMMITTEE

Legal Authority: 12 USC 1421 et seq; PL 100-86, Sec 302

CFR Citation: 12 CFR 514, (new part)

Legal Deadline: None.

Abstract:

On August 10, 1987, the Federal Savings and Loan Insurance Corporation Recapitalization Act of 1987 (the "Recapitalization Act") was enacted into law as part of the Competitive Equality Banking Act of 1987. The Recapitalization Act created a new advisory committee, to be called the Federal Savings and Loan Insurance Corporation Industry Advisory Committee ("Advisory Committee") by which means the savings and loan industry will become involved in the efforts to strengthen the FSLIC. The Bank Board adopted regulations that established the minimum procedures defining the responsibilities of its members. These regulations also established the method of operation and administration of the Advisory Committee. Although these regulations were effective immediately, the Bank Board solicited post-promulgation comment on these regulations for possible subsequent amendment.

The potential costs and benefits of the regulation on the industry have not been quantified.

Timetable:

Action	Date	FR Cite
Final Action Comments to be received on or before 11/30/87.	10/30/87	52 FR 41700
Final Action Effective	10/30/87	52 FR 41700

Small Entity: No

Agency Contact: Charles J. Szlenker, Attorney, Office of General Counsel, Federal Home Loan Bank Board, 1700 G Street, N. W., Washington, D. C. 20552, 202 377-6664

RIN: 3068-AA52

3690. ● TROUBLED DEBT RESTRUCTURING

Significance: Agency Priority

Legal Authority: 12 USC 1461 et seq; 12 USC 1724 et seq; PL 100-86, Sec 402

CFR Citation: 12 CFR 563.23-4, (new section); 12 CFR 571.18, (new section)

Legal Deadline: Statutory, January 7, 1988. The Competitive Equality Banking Act of 1987, PL 100-86, 101 Stat. 552, requires the Bank Board to promulgate final regulations no later than January 7, 1988.

Abstract:

The Bank Board amended its regulations governing institutions insured by the FSLIC by adopting a rule and statement of policy to clarify that insured institutions have been permitted and may continue to account for troubled debt restructurings ("TDRs") in accordance with generally accepted accounting principles. The rule states that the Bank Board may permit institutions to restructure troubled loans in compliance with Statements 5 and 15 of the Financial Accounting Standards Board and to account for the effects of such restructurings as provided in those statements. The policy statement summarizes the accounting principles applicable to TDRs and sets forth reporting requirements for institutions that engage in such restructuring.

There are no alternatives that would be less burdensome than the rule in addressing the concerns expressed above.

The potential costs and benefits of the regulation on the industry have not been quantified.

Timetable:

Action	Date	FR Cite
Final Action Effective	12/31/87	53 FR 385
Final Action	01/06/88	53 FR 385

Small Entity: No

Analysis: Regulatory Flexibility Analysis

Agency Contact: Deborah Dakin, Assistant Director, Regulations and Legislation Division, Office, of General Counsel, Federal Home Loan Bank Board, 1700 G Street, N. W., Washington, D. C. 20552, 202 377-6445

RIN: 3068-AA53

3691. ● INDIVIDUAL REGULATORY CAPITAL REQUIREMENTS; CAPITAL DIRECTIVES

Significance: Agency Priority

Legal Authority: 12 USC 1437; 12 USC 1464; 12 USC 1725; 12 USC 1726; 12 USC 1730; 12 USC 1736; 12 USC 3907 et seq; PL 100-86, Sec 406

CFR Citation: 12 CFR 563.13; 12 CFR 563.14, (new section); 12 CFR 563.14-1, (new section)

Legal Deadline: None.

Abstract:

The Bank Board adopted rules to implement its authority to set and enforce regulatory capital requirements for all institutions the accounts of which are insured by the FSLIC. The Bank Board adopted these regulations pursuant to the authority granted it by section 406 of the Competitive Equality Banking Act of 1987 ("CEBA") and

pursuant to the Bank Board's general authority to promulgate regulations under 12 USC 1437, 1725, and 1736. These regulations implement the authority granted the Bank Board and the FSLIC by section 406 of CEBA to vary the minimum regulatory capital requirements of an individual insured institution as may be necessary or appropriate in light of the particular circumstances of the insured institution. The regulations also establish procedures for implementing the authority granted by section 406 to issue a directive and enforce a plan for increasing an individual insured institution's capital level.

There are no alternatives that would be less burdensome than the rule in addressing the concerns expressed above.

The potential costs and benefits of the regulation on the industry have not been quantified.

Timetable:

Action	Date	FR Cite
Final Action	01/06/88	53 FR 363
Final Action Effective	02/05/88	53 FR 363

Small Entity: No

Analysis: Regulatory Flexibility Analysis

Agency Contact: Donald G. Edwards, Director, Financial and, Quantitative Analysis, Office of Policy and, Economic Research, Federal Home Loan Bank Board, 1700 G Street, N. W., Washington, D. C. 20552, 202 377-6914

RIN: 3068-AA55

3692. ● QUALIFIED THRIFT LENDER TEST; SAVINGS AND LOAN HOLDING COMPANY AMENDMENTS; FEDERAL HOME LOAN BANK ADVANCES

Significance: Agency Priority

Legal Authority: 12 USC 1425a; 12 USC 1430; 12 USC 1464; 12 USC 1730a; 12 USC 1813; PL 100-86, Sec 104; PL 100-86, Sec 105

CFR Citation: 12 CFR 525.1; 12 CFR 583.6; 12 CFR 583.27, (new section); 12 CFR 584.2; 12 CFR 584.2a, (new section); 12 CFR 584.2-1; 12 CFR 584.2-2

Legal Deadline: Statutory, January 1, 1988. The Competitive Equality Banking Act of 1987, PL 100-86, 101 Stat. 552, requires the Bank Board to adopt a final regulation regarding QTL to take effect on January 1, 1988.

Abstract:

The Bank Board amended its regulations governing savings and loan holding companies to implement the qualified thrift lender test enacted in the Competitive Equality Banking Act of 1987 ("CEBA"). The CEBA amended section 408 of the National Housing Act, 12 USC 1730a, also commonly known as the Savings and Loan Holding Company Act, to provide that the current exemption from the nonthrift activity restrictions for unitary savings and loan holding companies will be available only where the subsidiary institution meets the new qualified thrift lender test. The CEBA also amended section 10 of the Federal Home Loan Bank Act, 12 USC 1430, to reduce the eligibility for advances from the Federal Home Loan Banks of member institutions that do not meet the qualified thrift lender ("QTL") test. This regulation sets forth the new QTL test, which requires that an insured institution must maintain 60 percent of its tangible assets in housing and housing related investments in order for the institution to have QTL status. The regulation also implements new statutory limitations on eligibility for advances and permissible holding company

Timetable:

Action	Date	FR Cite
Final Action Effective	01/01/88	53 FR 312
Final Action	01/06/88	53 FR 312

Small Entity: No

Additional Information:

ABSTRACT CONT:activities where an institution fails to maintain its QTL status.

There are no alternatives that would be less burdensome than the rule in addressing the concerns expressed above.

The potential costs and benefits of the regulation on the industry have not been quantified.

Analysis: Regulatory Flexibility Analysis

Agency Contact: Christina M. Gattuso, Acting Regulatory, Counsel, Regulations and Legislation, Division, Office of General Counsel, Federal Home Loan Bank Board, 1700 G Street, N. W., Washington, D. C. 20552, 202 377-6649

RIN: 3068-AA56

3693. ● ASSESSMENTS BY THE FINANCING CORPORATION, FSLIC INSURANCE PREMIUMS, BOOK-ENTRY PROCEDURE FOR FINANCING CORPORATION SECURITIES, AND OFFICE OF FINANCE FUNCTIONS

Significance: Agency Priority

Legal Authority: 12 USC 1421 et seq; 12 USC 1724 et seq; PL 100-86, Sec 302; PL 100-86, Sec 304; PL 100-86, Sec 305

CFR Citation: 12 CFR 522.81; 12 CFR 563.15; 12 CFR 563.16; 12 CFR 592, (new part)

Legal Deadline: None.

Abstract:

On August 10, 1987, the Federal Savings and Loan Insurance Corporation Recapitalization Act of 1987 ("Recapitalization Act") was enacted into law. The Recapitalization Act authorizes the Bank Board to charter a corporation known as the Financing Corporation. The Financing Corporation will issue debt securities in the capital markets, and with the net proceeds thereof, it will purchase capital instruments to be issued by the FSLIC. The Bank Board adopted regulations to clarify the manner in which the Financing Corporation will exercise its assessment authority and to make minor conforming technical amendments to the regulations concerning FSLIC insurance premiums. Additionally, the Bank Board adopted rules regarding book-entry procedure for Financing Corporation securities. Finally, the Bank Board amended a procedural rule governing the responsibilities of the Office of Finance of the Federal Home Loan Bank System so as to reflect the responsibilities of that office with regard to the Financing Corporation's activities.

There are no alternatives that would be less burdensome than the rule in addressing the

Timetable:

Action	Date	FR Cite
Final Action Comments to be received on or before 10/05/87.	09/03/87	52 FR 33399
Final Action Effective	09/03/87	52 FR 33399

Small Entity: No

Additional Information:

ABSTRACT CONT:concerns expressed above.

The potential costs and benefits of the regulation on the industry have not been quantified.

Analysis: Regulatory Flexibility Analysis

Agency Contact: K. Diane Boyle, Manager, Special Projects, Division, Office of Finance, Federal Home, Loan Bank System, Federal Home Loan Bank Board, 655 15th Street, N. W., Washington, D. C. 20005, 202 272-4978

RIN: 3068-AA57

3694. ● UNIFORM ACCOUNTING STANDARDS

Significance: Agency Priority

Legal Authority: 12 USC 1461 et seq; 12 USC 1724 et seq; 15 USC 78a et seq; PL 100-86, Sec 402

CFR Citation: 12 CFR 561.13; 12 CFR 563.23-1; 12 CFR 563.23-3; 12 CFR 563c.11

Legal Deadline: Statutory, December 31, 1987. The Competitive Equality Banking Act of 1987, PL 100-86, 101 Stat. 552, requires the Bank Board to promulgate final regulations regarding uniform accounting standards by December 31, 1987.

Abstract:

The Bank Board amended its regulations applicable to all institutions the accounts of which are insured by the FSLIC pertaining to the definition of regulatory capital. First, the final rule delays the effective date of the definition of regulatory capital regulation ("DRC Regulation"), from January 1, 1988 to January 1, 1989 in order to implement a phase-in of uniform accounting standards. Second, the rule revises the DRC regulation by eliminating treatment of certain items under risk analysis reporting and substituting treatment under generally accepted accounting principles ("GAAP"). The DRC regulation, as amended by this rule, would begin the phase-in to GAAP on January 1, 1989; such phase-in would end on December 31, 1993, at which time insured institutions would be required to report virtually all components of regulatory capital in accordance with GAAP or the regulatory accounting practices employed by commercial banks.

The Competitive Equality Banking Act of 1987 required the Bank Board to issue regulations prescribing "uniformly applicable accounting standards to be used by all insured institutions

Timetable:

Action	Date	FR Cite
Final Action	01/06/88	53 FR 324
Final Action Effective	01/01/89	53 FR 324

Small Entity: No

Additional Information:

ABSTRACT CONT: for the purpose of measuring compliance with any rule or regulation" promulgated by the Bank Board or the FSLIC "to the same degree that generally accepted accounting principles are used to determine compliance with rules and regulations of the Federal banking agencies".

There are no alternatives that would be less burdensome than the rule in addressing the concerns expressed above.

The potential costs and benefits of the regulation on the industry have not been quantified.

Analysis: Regulatory Flexibility Analysis

Agency Contact: Christina M. Gattuso, Acting Regulatory, Counsel, Regulations and Legislation, Division, Office of General Counsel, Federal Home Loan Bank Board, 1700 G Street, N. W., Washington, D. C. 20552, 202 377-6649

RIN: 3068-AA58

[FR Doc. 88-5108 Filed 04-22-88; 8:45 am]

BILLING CODE 6725-01-T

VOL 53 ISS 79 PT 2 APR 25 1988 UMI

federal register

Monday
April 25, 1988

Part L

Federal Maritime Commission

Semiannual Regulatory Agenda

FEDERAL MARITIME COMMISSION (FMC)

FEDERAL MARITIME COMMISSION

46 CFR Ch. IV

Unified Regulatory Agenda

AGENCY: Federal Maritime Commission.

ACTION: Unified Agenda of Federal Regulations.

SUMMARY: Pursuant to section 5 of E.O. 12291 and the Regulatory Flexibility Act (5 U.S.C. 601 *et seq.*), the Commission anticipates having under consideration during the period from April 1, 1988 to March 31, 1989 actions in the areas listed below.

FOR FURTHER INFORMATION CONTACT: For further information concerning Commission rulemaking proceedings or the status of any matter listed below, contact: Joseph C. Polking, Secretary, 1100 L Street, NW., Washington, DC 20573, (202) 523-5725.

SUPPLEMENTARY INFORMATION: Section 602 of the Regulatory Flexibility Act (5 U.S.C. 602) requires the publication of an agenda of items for which regulatory agencies may propose or promulgate a rule which is likely to have a significant economic impact on a substantial number of small entities. Section 5 of Executive Order 12291 also requires executive agencies to publish a regulatory agenda; the Commission voluntarily complies with this section. The agendas include information on regulatory activities being conducted or reviewed during the succeeding 12 months by the Commission.

The following is the Commission's Unified Regulatory Agenda. The agenda does not necessarily include all petitions for rulemakings which are under staff review.

In addition, the Commission is publishing a compilation of the status of pending rulemaking proceedings and a listing of rules that have become final since the publication of the most recent regulatory agenda (October, 1987). This list will be made available to the press and interested groups.

Joseph C. Polking,
Secretary.

Prerule Stage

Sequence Number	Title	Regulation Identifier Number
3695	Public Information - Freedom of Information Act	3072-AA12
3696	Costs of Proceedings	3072-AA45
3697	Information Required for Section 18 Study	3072-AA50
3698	Independent Action - Miscellaneous Provisions	3072-AA53
3699	Information Form for Agreements: Miscellaneous Amendments	3072-AA55
3700	Automated Tariff Filing	3072-AA61
3701	Common and Contract Carriage - Miscellaneous Provision	3072-AA63
3702	Index of Documents for Agreements	3072-AA64
3703	User Fees to Recover Agency Costs	3072-AA70
3704	Tariff Publication of Free Time and Detention Charges Applicable to Carrier Equipment Interchanged With Shippers or Their Agents (Docket 85-19)	3072-AA73
3705	Financial Responsibility of Passenger Vessel Operators for Non-Performance	3072-AA78
3706	Independent Action - Miscellaneous Provisions	3072-AA83
3707	Rates Quoted Subject to Booking	3072-AA86
3708	Financial Reports of Vessel Operating Common Carriers by Water in the Domestic Offshore Trades	3072-AA93
3709	Service Contract Provisions; Most Favored Shippers and Liquidated Damages Clauses	3072-AA95
3710	Practices of Common Carriers Regarding Payment of Inland Divisions Petition for Rulemaking	3072-AA99
3711	Service Contracts - Most Favored Shipper and Liquidated Damages Provisions - Petition for Rulemaking	3072-AB00
3712	Practices of Ocean Common Carriers Regarding Effective Date of Rate Changes	3072-AB04
3713	Section 16 Exemption of agreement between or among parent or its subsidiaries	3072-AB06

Final Rule Stage

Sequence Number	Title	Regulation Identifier Number
3714	Foreign-to-Foreign Agreements; Exemption	3072-AB03
3715	Truck Detention Charges at West Coast Ports	3072-AB07

FMC

Completed Actions

Sequence Number	Title	Regulation Identifier Number
3716	Regulation of Agreements of Domestic Carriers - Miscellaneous Amendments	3072-AA68
3717	Miscellaneous Amendments to Regulations Implementing Section 19 of the Merchant Marine Act of 1920	3072-AA75
3718	Public Information - Miscellaneous Amendments	3072-AA84
3719	Conference Service Contract Authority	3072-AA87
3720	Terminal Agreements and Leases - Exculpatory Provisions	3072-AA92
3721	Service Contract Record Retention and Production of Documents	3072-AA97
3722	Access to Any Record of Identifiable Personal Information	3072-AB05

FEDERAL MARITIME COMMISSION (FMC)

Prerule Stage

3695. PUBLIC INFORMATION - FREEDOM OF INFORMATION ACT

Legal Authority: 5 USC 552(b)(4); 46 USC app 841(a)

CFR Citation: 46 CFR 503

Legal Deadline: None.

Abstract: Amendments to current rules governing treatment of FOIA requests will provide for notification to filers of "business confidential" information to permit responses before a decision to release or not to release information requested under the Act.

Timetable:

Action	Date	FR Cite
End Review	06/00/88	

Small Entity: No

Agency Contact: Joseph C. Polking, Secretary, Federal Maritime Commission, 1100 L Street, NW, Washington, DC 20573, 202 523-5725

RIN: 3072-AA12

3696. COSTS OF PROCEEDINGS

Significance: Agency Priority

Legal Authority: 5 USC 553; 46 USC app 1716; 46 USC app 1717(a)(4)

CFR Citation: 46 CFR 502

Legal Deadline: Statutory, September 20, 1989.

Abstract: Section 18(a)(4) of the Shipping Act requires the Commission to collect and analyze data concerning the impact of the Act on the costs of major types of regulatory proceedings before the Commission. This action will provide the regulations needed to obtain this information.

Timetable:

Action	Date	FR Cite
End Review	06/00/88	

Small Entity: No

Agency Contact: Joseph C. Polking, Secretary, Federal Maritime Commission, 1100 L Street, NW, Washington, DC 20573, 202 523-5725

RIN: 3072-AA45

3697. INFORMATION REQUIRED FOR SECTION 18 STUDY

Significance: Agency Priority

Legal Authority: 5 USC 553; 46 USC app 1714; 46 USC app 1716; 46 USC app 1717(a)

CFR Citation: 46 CFR (New)

Legal Deadline: Statutory, September 20, 1989. Legal deadline applies to information to be compiled, not necessarily by a rulemaking.

Abstract: Section 18(a) of the Shipping Act of 1984 requires the Commission to collect information concerning the impact of the Act upon the international ocean shipping industry for a period of 5 years ending on March 20, 1989. To the extent such data are not available, this review will consider Commission rules or orders to develop such information from the regulated industry.

Timetable:

Action	Date	FR Cite
Begin Review	09/01/84	
End Review	06/00/88	

Small Entity: No

Agency Contact: Joseph C. Polking, Secretary, Federal Maritime Commission, 1100 L Street, NW, Washington, DC 20573, 202 523-5725

RIN: 3072-AA50

3698. INDEPENDENT ACTION - MISCELLANEOUS PROVISIONS

Legal Authority: 46 USC 553; 46 USC app 1704; 46 USC app 1709; 46 USC app 1716

CFR Citation: 46 CFR 572

Legal Deadline: None.

Abstract: Section 5(b)(8) of the Shipping Act of 1984 requires that conference members be allowed to take independent rate action under certain conditions. The Commission is considering a rule to require accurate reporting and to clarify other situations with regard to this statutory right.

Timetable:

Action	Date	FR Cite
Begin Review	01/25/85	
End Review	03/00/88	

Next Action Undetermined

Small Entity: No

Agency Contact: Joseph C. Polking, Secretary, Federal Maritime Commission, 1100 L Street, NW, Washington, DC 20573, 202 523-5725

RIN: 3072-AA53

3699. INFORMATION FORM FOR AGREEMENTS: MISCELLANEOUS AMENDMENTS

Legal Authority: 5 USC 553; 46 USC app 1703 to 1705; 46 USC app 1716

CFR Citation: 46 CFR 572.405; 46 CFR 572, Appendix A

Legal Deadline: None.

Abstract: The information form that must accompany certain types of agreements filed under 46 CFR Part 572 may need to be amended to ensure Commission jurisdiction and to show the affiliates of the filing parties.

Timetable:

Action	Date	FR Cite
Begin Review	01/25/85	
End Review	09/00/88	

Small Entity: No

Agency Contact: Joseph C. Polking, Secretary, Federal Maritime Commission, 1100 L Street, NW, Washington, DC 20573, 202 523-5725

RIN: 3072-AA55

3700. AUTOMATED TARIFF FILING

Significance: Agency Priority

Legal Authority: 5 USC 553; 46 USC app 816; 46 USC app 817; 46 USC app 841a; 46 USC app 1707; 46 USC app 1708; 46 USC app 1715; 46 USC app 1716; 46 USC app 1717

CFR Citation: 46 CFR 515; 46 CFR 550; 46 CFR 580

Legal Deadline: None.

Abstract: The Commission is considering the development of a fully automated system whereby tariff matters can be made available to the public and to the Commission through automatic data processing in order to reduce paperwork and other burdens. An Industry Advisory Committee is assisting the Commission in the project.

Timetable:

Action	Date	FR Cite
Begin Review	09/01/84	
Notice of Intent to form Advisory Committee	04/12/85	50 FR 14453
Notice of Second Meeting	05/19/86	51 FR 18376
Notice of Third Meeting	10/21/86	51 FR 37347
Notice of Inquiry on System Functionality	12/22/87	52 FR 48504
End Review	01/00/89	

Small Entity: Undetermined

Agency Contact: Joseph C. Polking, Secretary, Federal Maritime Commission, 1100 L Street, NW, Washington, DC 20573, 202 523-5725

RIN: 3072-AA61

3701. COMMON AND CONTRACT CARRIAGE - MISCELLANEOUS PROVISION

Legal Authority: 5 USC 553; 46 USC app 801; 46 USC app 841a; 46 USC app 1702; 46 USC app 1716

CFR Citation: 46 CFR 510; 46 CFR 515; 46 CFR 525; 46 CFR 550; 46 CFR 552; 46 CFR 553; 46 CFR 560; 46 CFR 572; 46 CFR 580

Legal Deadline: None.

Abstract: This review will attempt to clarify the status of common carriers vis-a-vis contract carriers and provide reasonable regulations for operations by common carriers subject to the shipping statutes.

Timetable:

Action	Date	FR Cite
Begin Review	01/25/85	
End Review	12/00/88	

Small Entity: No

Agency Contact: Joseph C. Polking, Secretary, Federal Maritime Commission, 1100 L Street, NW, Washington, DC 20573, 202 523-5725

RIN: 3072-AA63

3702. INDEX OF DOCUMENTS FOR AGREEMENTS

Legal Authority: 5 USC 553; 46 USC app 1703 to 1706; 46 USC app 1709; 46 USC app 1712; 46 USC app 1714; 46 USC app 1716; 46 USC app 1717

CFR Citation: 46 CFR 572.704

Legal Deadline: None.

Abstract: Section 572.704 of Title 46 Code of Federal Regulations requires agreement parties who are required to file minutes to maintain an index of certain reports, studies and documents used for certain decisions, and to file such an index quarterly with the Commission. This requirement is being considered along with requirements to file minutes and other reports and with record retention provisions.

Timetable:

Action	Date	FR Cite
Begin Review	01/25/85	
End Review	09/00/86	

Next Action Undetermined

Small Entity: No

Agency Contact: Joseph C. Polking, Secretary, Federal Maritime Commission, 1100 L Street, NW, Washington, DC 20573, 202 523-5725

RIN: 3072-AA64

3703. USER FEES TO RECOVER AGENCY COSTS

Significance: Agency Priority

Legal Authority: 5 USC 552 to 553

CFR Citation: 46 CFR 503.43

Legal Deadline: None.

Abstract: The Commission is reviewing existing fees for services in order to determine whether they are adequate to recover costs.

Timetable:

Action	Date	FR Cite
Begin Review	01/25/85	
End Review	06/00/86	

Small Entity: No

Agency Contact: Joseph C. Polking, Secretary, Federal Maritime Commission, 1100 L Street, NW, Washington, DC 20573, 202 523-5725

RIN: 3072-AA70

3704. TARIFF PUBLICATION OF FREE TIME AND DETENTION CHARGES APPLICABLE TO CARRIER EQUIPMENT INTERCHANGED WITH SHIPPERS OR THEIR AGENTS (DOCKET 85-19)

Legal Authority: 5 USC 553; 46 USC app 817(a); 46 USC app 841a; 46 USC app 844; 46 USC app 1707; 46 USC app 1708; 46 USC app 1709; 46 USC app 1716

CFR Citation: 46 CFR 550.5; 46 CFR 580.5; 46 CFR 580.7

Legal Deadline: None.

Abstract: Docket 85-19 - Clarification of requirement that terms and conditions, including free time and detention, governing use of carrier-provided equipment by shippers or their agents be published in tariffs and service contracts. (Formal Rulemaking)

Timetable:

Action	Date	FR Cite
NPRM	08/08/85	50 FR 32097
NPRM Comment Period End	09/23/85	50 FR 32097
Final Action	01/01/88	
End Review	06/00/88	

Small Entity: No

Agency Contact: Joseph C. Polking, Secretary, Federal Maritime Commission, 1100 L Street, NW, Washington, DC 20573, 202 523-5725

RIN: 3072-AA73

3705. FINANCIAL RESPONSIBILITY OF PASSENGER VESSEL OPERATORS FOR NON-PERFORMANCE

Legal Authority: 5 USC 553; 46 USC app 817e; 46 USC app 841a; 46 USC app 1716

CFR Citation: 46 CFR 540

Legal Deadline: None.

Abstract: Review would attempt to develop a formula for the amount of bond required to ensure financial responsibility of passenger vessel operators for non-performance.

Timetable:

Action	Date	FR Cite
Begin Review	01/10/86	
End Review	12/00/88	

Small Entity: No

Agency Contact: Joseph C. Polking, Secretary, Federal Maritime Commission, 1100 L Street, NW, Washington, DC 20573, 202 523-5725

RIN: 3072-AA78

3706. INDEPENDENT ACTION - MISCELLANEOUS PROVISIONS

Legal Authority: 5 USC 553; 46 USC app 1701 to 1707; 46 USC app 1709 to 1710; 46 USC app 1712; 46 USC app 1714 to 1717; 46 USC app 1718

CFR Citation: 46 CFR 572; 46 CFR 580

Legal Deadline: None.

Abstract: Review would attempt to analyze certain conference practices to ensure that they do not unduly inhibit the right of individual members to take independent action as provided by the Shipping Act of 1984.

Timetable:

Action	Date	FR Cite
Begin Review	01/10/86	
End Review	06/01/88	

Small Entity: No

Agency Contact: Joseph C. Polking, Secretary, Federal Maritime Commission, 1100 L Street, NW, Washington, DC 20573, 202 523-5725

RIN: 3072-AA83

3707. RATES QUOTED SUBJECT TO BOOKING

Legal Authority: 5 USC 553; 46 USC app 812; 46 USC app 814 to 815; 46 USC app 817(a); 46 USC app 820; 46 USC app 833a; 46 USC app 841a; 46 USC app 843 to 847; 46 USC app 1702 to 1705; 46 USC app 1707; 46 USC app 1709; 46 USC app 1712; 46 USC app 1714 to 1716; 46 USC app 1718

CFR Citation: 46 CFR 550; 46 CFR 580

Legal Deadline: None.

Abstract: Review would determine the necessity of regulations governing the parties of quoting rates subject to booking. Related to FMC Spec. Dkt. 1343.

Timetable:

Action	Date	FR Cite
Begin Review	02/14/86	
End Review	12/00/88	

Small Entity: Undetermined

Agency Contact: Joseph C. Polking, Secretary, Federal Maritime Commission, 1100 L Street, NW, Washington, DC 20573, 202 523-5725

RIN: 3072-AA86

3708. FINANCIAL REPORTS OF VESSEL OPERATING COMMON CARRIERS BY WATER IN THE DOMESTIC OFFSHORE TRADES

Legal Authority: 5 USC 553; 46 USC app 817(a); 46 USC app 820; 46 USC app 841a; 46 USC app 843; 46 USC app 844; 46 USC app 845a; 46 USC app 847

CFR Citation: 46 CFR 522

Legal Deadline: None.

Abstract: Current rule providing for domestic rate-making and justification methodology is being reviewed to determine if requirements can be made less stringent.

Timetable:

Action	Date	FR Cite
Begin Review	01/09/86	
End Review	12/00/88	

Small Entity: No

Agency Contact: Joseph C. Polking, Secretary, Federal Maritime Commission, 1100 L Street, NW, Washington, DC 20573, 202 523-5725

RIN: 3072-AA93

3709. SERVICE CONTRACT PROVISIONS; MOST FAVORED SHIPPERS AND LIQUIDATED DAMAGES CLAUSES

Legal Authority: 5 USC 553; 46 USC app 1707(c)

CFR Citation: 46 CFR 580

Legal Deadline: None.

Abstract: The Commission is reviewing the service contract regulations to determine the legality of permitting clauses involving liquidated damages or most favored shippers.

Timetable:

Action	Date	FR Cite
Petition for rulemaking	01/22/87	52 FR 2443
Begin Review	01/22/87	52 FR 2443
Extend time for comments	02/11/87	52 FR 4384
End Review	06/00/88	

Small Entity: Undetermined

Agency Contact: Joseph C. Polking, Secretary, Federal Maritime Commission, 1100 L Street, NW, Washington, DC 20573, 202 523-5725

RIN: 3072-AA95

3710. PRACTICES OF COMMON CARRIERS REGARDING PAYMENT OF INLAND DIVISIONS PETITION FOR RULEMAKING

Significance: Agency Priority

Legal Authority: 5 USC 553; 46 USC app 1709; 46 USC app 1716

CFR Citation: 46 CFR IV

Legal Deadline: None.

Abstract: This petition for rulemaking seeks a requirement that ocean common carriers timely pay over inland divisions to surface carriers participating in through movements.

Timetable:

Action	Date	FR Cite
Notice of Filing of Petition for Rulemaking	06/25/87	52 FR 23890
End Review	03/00/88	

Next Action Undetermined

Small Entity: Undetermined

Agency Contact: Joseph C. Polking, Secretary, Federal Maritime

Commission, 1100 L Street, NW, Washington, DC 20573, 202 523-5725

RIN: 3072-AA99

3711. SERVICE CONTRACTS - MOST FAVORED SHIPPER AND LIQUIDATED DAMAGES PROVISIONS - PETITION FOR RULEMAKING

Significance: Agency Priority

Legal Authority: 5 USC 553; 46 USC app 1707; 46 USC app 1716

CFR Citation: 46 CFR 581

Legal Deadline: None.

Abstract: This Petition for rulemaking seeks a regulation prohibiting most favored shipper clauses and de minimis liquidated damage clauses in service contracts.

Timetable:

Action	Date	FR Cite
Notice of Filing of Petition for Rulemaking	01/22/87	52 FR 2443
Extend Time for Comments to 02/27/87	02/11/87	52 FR 4384
End Review	06/00/88	

Small Entity: Undetermined

Agency Contact: Joseph C. Polking, Secretary, Federal Maritime Commission, 1100 L Street, NW, Washington, DC 20573, 202 523-5725

RIN: 3072-AB00

3712. ● PRACTICES OF OCEAN COMMON CARRIERS REGARDING EFFECTIVE DATE OF RATE CHANGES

Significance: Agency Priority

Legal Authority: 5 USC 553; 46 USC app 1707

CFR Citation: 46 CFR 580

Legal Deadline: None.

Abstract: Requested rule would state that tariff rates and rules may not be applicable to cargo that is received by the carrier or its agent prior to the effective date of the tariff provision.

Timetable:

Action	Date	FR Cite
Petition for Rulemaking	12/30/87	52 FR 49205
End Review	06/00/88	

Small Entity: Undetermined

Agency Contact: Joseph C. Polking, Secretary, Federal Maritime Commission, 1100 L Street, NW, Washington, DC 20573, 202 523-5725

RIN: 3072-AB04

3713. ● SECTION 16 EXEMPTION OF AGREEMENT BETWEEN OR AMONG PARENT OR ITS SUBSIDIARIES

Significance: Agency Priority

Legal Authority: 5 USC 553; 46 USC app 1715

CFR Citation: 46 CFR 572.301

Legal Deadline: None.

Abstract: Requested action would exempt agreements by, between, or among ocean common carriers or marine terminal operators and their subsidiaries.

Timetable:

Action	Date	FR Cite
Petition for Rulemaking	12/28/87	52 FR 48879
Enlargement of Scope	01/28/88	53 FR 2537
End Review	06/00/88	

Small Entity: Undetermined

Agency Contact: Joseph C. Polking, Secretary, Federal Maritime Commission, 1100 L Street, NW, Washington, DC 20573, 202 523-5725

RIN: 3072-AB06

FEDERAL MARITIME COMMISSION (FMC) — Final Rule Stage

3714. ● FOREIGN-TO-FOREIGN AGREEMENTS; EXEMPTION

Significance: Agency Priority

Legal Authority: 5 USC 553; 46 USC app 1701 to 1707; 46 USC app 1710; 46 USC app 1712; 46 USC app 1714 to 1717

CFR Citation: 46 CFR 572

Legal Deadline: None.

Abstract: The action would exempt certain foreign-to-foreign agreements on contiguous trades from notice, waiting period, and information requirements of the Shipping Act of 1984. Docket No. 87-24.

Timetable:

Action	Date	FR Cite
NPRM	12/08/87	52 FR 46501
NPRM Comment Period End	02/08/88	52 FR 46501
Final Action	09/00/88	

Small Entity: No

Agency Contact: Joseph C. Polking, Secretary, Federal Maritime Commission, 1100 L Street, NW, Washington, DC 20573, 202 523-5725

RIN: 3072-AB03

3715. ● TRUCK DETENTION CHARGES AT WEST COAST PORTS

Significance: Agency Priority

Legal Authority: 5 USC 553; 46 USC app 816; 46 USC app 841a; 46 USC app 1709; 46 USC app 1716

CFR Citation: 46 CFR 530

Legal Deadline: None.

Abstract: Requested action would set truck detention charges at the Ports of Los Angeles, Long Beach, San Francisco, Oakland and San Diego, California.

Timetable:

Action	Date	FR Cite
Petition for Rulemaking	11/30/87	52 FR 45499
Enlargement of time for comments to February 22, 1988	12/29/87	52 FR 49086
Further Enlargement to March 7, 1988	02/19/88	53 FR 5041
Final Action	06/00/88	

Small Entity: Undetermined

Agency Contact: Joseph C. Polking, Secretary, Federal Maritime Commission, 1100 L St., NW, Washington, DC 20573, 202 523-5725

RIN: 3072-AB07

FEDERAL MARITIME COMMISSION (FMC)

Completed Actions

3716. REGULATION OF AGREEMENTS OF DOMESTIC CARRIERS - MISCELLANEOUS AMENDMENTS

Legal Authority: 5 USC 553; 46 USC app 801 et seq

CFR Citation: 46 CFR 558 to 569

Legal Deadline: None.

Abstract: The Shipping Act, 1916, after amendment by the Shipping Act of 1984, applies only to domestic operations. In order to properly implement the 1984 Act, the Commission made the essential, limiting changes to its domestic regulations of agreements within the deadline established by the 1984 Act. This review will now determine what further, substantive changes in the domestic agreements may be desirable. (Docket No. 87-9)

Timetable:

Action	Date	FR Cite
Begin Review	01/25/85	
NPRM	05/04/87	52 FR 16282
NPRM Comment Period End	06/03/87	52 FR 16282
Supplemental NPRM	08/11/87	52 FR 29708
Final Action	11/17/87	52 FR 43906
Final Action Effective	12/17/87	52 FR 45960

Small Entity: No

Agency Contact: Joseph C. Polking, Secretary, Federal Maritime Commission, 1100 L Street, NW, Washington, DC 20573, 202 523-5725

RIN: 3072-AA68

3717. MISCELLANEOUS AMENDMENTS TO REGULATIONS IMPLEMENTING SECTION 19 OF THE MERCHANT MARINE ACT OF 1920

Legal Authority: 5 USC 553; 46 USC app 876(1)(b); 46 USC app 1714; 46 USC app 1716

CFR Citation: 46 CFR 585

Legal Deadline: None.

Abstract: Review would determine necessity of updating the regulations to implement Section 19 of the Merchant Marine Act of 1920.

Timetable:

Action	Date	FR Cite
Begin Review	01/10/86	
Withdrawn	01/01/88	
End Review	06/01/88	

Small Entity: No

Agency Contact: Joseph C. Polking, Secretary, Federal Maritime Commission, 1100 L Street, NW, Washington, DC 20573, 202 523-5725

RIN: 3072-AA75

3718. PUBLIC INFORMATION - MISCELLANEOUS AMENDMENTS

Legal Authority: 5 USC 552; 5 USC 552a; 5 USC 552b; 5 USC 553; EO 12356

CFR Citation: 46 CFR 503

Legal Deadline: None.

Abstract: Review would determine need to update regulations relating to Freedom of Information, Privacy and Sunshine Acts.

Timetable:

Action	Date	FR Cite
Begin Review	07/00/86	
Withdrawn Separate proceedings Amended FOIA and Privacy Regs	01/01/88	
End Review	03/01/88	

Small Entity: Undetermined

Agency Contact: Joseph C. Polking, Secretary, Federal Maritime Commission, 1100 L Street, NW, Washington, DC 20573, 202 523-5725

RIN: 3072-AA84

3719. CONFERENCE SERVICE CONTRACT AUTHORITY

Significance: Agency Priority

Legal Authority: 5 USC 553; 46 USC app 1701 to 1707; 46 USC app 1709 to 1710; 46 USC app 1712; 46 USC app 1714 to 1717

CFR Citation: 46 CFR 572

Legal Deadline: None.

Abstract: Clarifies steamship conference authority over the use of service contracts under the Shipping Act of 1984 (Docket No. 86-16).

Timetable:

Action	Date	FR Cite
NPRM	05/02/86	51 FR 16354
NPRM Comment Period End	07/01/86	51 FR 16354
Final Action	03/09/88	53 FR 7520
Final Action Effective	06/07/88	53 FR 7521

Small Entity: Undetermined

Agency Contact: Joseph C. Polking, Secretary, Federal Maritime Commission, 1100 L Street, NW, Washington, DC 20573, 202 523-5725

RIN: 3072-AA87

3720. TERMINAL AGREEMENTS AND LEASES - EXCULPATORY PROVISIONS

Significance: Agency Priority

Legal Authority: 46 USC app 801; 46 USC app 814; 46 USC app 816 to 817; 46 USC app 833a; 46 USC app 841a; 46 USC app 1701 to 1707; 46 USC app 1709; 46 USC app 1715 to 1716

CFR Citation: 46 CFR 515; 46 CFR 516, (New); 46 CFR 558; 46 CFR 559; 46 CFR 560; 46 CFR 572

Legal Deadline: None.

Abstract: Review would determine whether further regulations are needed with regard to exculpatory provisions in terminal agreements and leases. (Docket No. 86-32).

Timetable:

Action	Date	FR Cite
Petition Noticed in Federal Register	07/10/86	51 FR 25101
Begin Review	08/10/86	
Petition Noticed in Federal Register	12/24/86	51 FR 46694
End Review	11/00/87	
Withdrawn Proceeding Discontinued	01/15/88	

Small Entity: Undetermined

Agency Contact: Joseph C. Polking, Secretary, Federal Maritime Commission, 1100 L Street, NW, Washington, DC 20573, 202 523-5725

RIN: 3072-AA92

3721. SERVICE CONTRACT RECORD RETENTION AND PRODUCTION OF DOCUMENTS

Legal Authority: 5 USC 553; 46 USC app 1702; 46 USC app 1703; 46 USC app 1704; 46 USC app 1705; 46 USC app 1707; 46 USC app 1709; 46 USC app 1712; 46 USC app 1714; 46 USC app 1715; 46 USC app 1716; 46 USC app 1718

CFR Citation: 46 CFR 580

Legal Deadline: None.

Abstract: Docket No. 86-29 - Will require carriers employing service contracts to keep records in U.S. and make them available to FMC upon request.

FMC **Completed Actions**

Timetable:

Action	Date	FR Cite
NPRM	11/13/86	51 FR 41132
Correction	12/01/86	51 FR 43267
NPRM Comment Period End	02/13/87	52 FR 1938
Final Action	09/09/87	52 FR 33936
Final Action Effective	11/09/87	52 FR 33936

Small Entity: Undetermined

Agency Contact: Joseph C. Polking, Secretary, Federal Maritime Commission, 1100 L Street, NW, Washington, DC 20573, 202 523-5725

RIN: 3072-AA97

3722. ● ACCESS TO ANY RECORD OF IDENTIFIABLE PERSONAL INFORMATION

Significance: Agency Priority

Legal Authority: 5 USC 552; 5 USC 552a; 5 USC 552b; 5 USC 553; EO 12356

CFR Citation: 46 CFR 503

Legal Deadline: None.

Abstract: Regulation would create further exemptions from the Privacy Act. Docket No. 87-23

Timetable:

Action	Date	FR Cite
NPRM	12/02/87	52 FR 45835
NPRM Comment Period End	01/04/88	52 FR 45835
Final Action	02/11/88	53 FR 4027
Final Action Effective	03/14/88	53 FR 4027

Small Entity: No

Agency Contact: Joseph C. Polking, Secretary, Federal Maritime Commission, 1100 L Street, NW, Washington, DC 20573, 202 523-5725

RIN: 3072-AB05

[FR Doc. 88-5109 Filed 04-22-88; 8:45 am]

BILLING CODE 6730-01-T

VOL 53 ISS 79 PT 2 APR 25 1988 UMI

federal register

Monday
April 25, 1988

Part LI

Federal Reserve System

Semiannual Regulatory Agenda

FEDERAL RESERVE SYSTEM (FRS)

FEDERAL RESERVE SYSTEM

12 CFR Ch. II

Notice of Semiannual Regulatory Flexibility Agenda

AGENCY: Board of Governors of the Federal Reserve System.

ACTION: Semiannual agenda.

SUMMARY: The Board is issuing this Agenda under the Regulatory Flexibility Act and the Board's Statement of Policy Regarding Expanded Rulemaking Procedures. The Board anticipates having under consideration regulatory matters as indicated below during the period from April 1 through October 1, 1988. The next Semiannual Agenda will be published in October 1988.

DATE: Comments about the form or content of the Agenda may be submitted any time during the next six months.

ADDRESS: Comments should be addressed to William W. Wiles, Secretary of the Board, Board of Governors of the Federal Reserve System, Washington, DC 20551.

FOR FURTHER INFORMATION CONTACT: A staff contact for each item is indicated with the regulatory description below.

SUPPLEMENTARY INFORMATION: The Board is publishing its April 1988 Agenda as part of the April 1988 Unified Agenda of Federal Regulations, which is coordinated by the Office of Management and Budget under Executive Order 12291. Participation by the Board in the Unified Agenda is on a voluntary basis.

The Board's Agenda is divided into three sections. The first, Proposed Rule Stage, reports on matters the Board may consider for public comment during the next six months. The second section, Final Rule Stage, reports on matters that have been proposed and are under Board consideration. A third section, Completed Actions, reports on regulatory matters the Board has completed or is not expected to consider further.

A dot (●) preceding an entry indicates a new matter that was not a part of the Board's previous Agenda, and which the Board has not completed.

Barbara R. Lowrey,

Associate Secretary of the Board.

Proposed Rule Stage

Sequence Number	Title	Regulation Identifier Number
3723	Regulation: C - Home Mortgage Disclosure	7100-AA85
3724	Regulation: E - Electronic Fund Transfers	7100-AA77
3725	Regulation: H - Membership of State Banking Institutions in the Federal Reserve System	7100-AA68
3726	Regulation: H - Membership of State Banking Institutions in the Federal Reserve System	7100-AA86
3727	Regulation: K - International Banking Operations	7100-AA67
3728	Regulation: P - Minimum Security Devices and Procedures for Federal Reserve Banks and State Member Banks	7100-AA59
3729	Regulation: T - Credit by Brokers and Dealers	7100-AA72
3730	Regulation: T - Credit by Brokers and Dealers	7100-AA80
3731	Regulation: Y - Bank Holding Companies and Change in Bank Control	7100-AA41
3732	Regulation: Y - Bank Holding Companies and Change in Bank Control	7100-AA87

Final Rule Stage

Sequence Number	Title	Regulation Identifier Number
3733	Regulation: D - Reserve Requirements of Depository Institutions (Docket Number: R-0571)	7100-AA62
3734	Regulation: K - International Banking Operations (Docket Number: R-0550)	7100-AA58
3735	Regulation: Q - Interest on Deposits (Docket Number R-0514)	7100-AA56
3736	Regulation: Y - Bank Holding Companies and Change in Bank Control (Docket Number: R-0537)	7100-AA52
3737	Regulation: Y - Bank Holding Companies and Change in Bank Control and Regulation H - Membership of State Banking Institutions (Docket Number: R-0616)	7100-AA88
3738	Regulation: Y - Bank Holding Companies and Change in Bank Control (Docket Number: R-0614)	7100-AA89
3739	Regulation: Y - Bank Holding Companies and Change in Bank Control (Docket Number: R-0567)	7100-AA66
3740	Regulation: Z - Truth in Lending (Docket Number R-0625)	7100-AA91
3741	Regulation: CC - Availability of Funds and Collection of Checks and Regulation J - Collection of Checks and Other Items and Transfers of Funds (Docket Number: R-0620)	7100-AA90
3742	Further Proposals to Reduce Risks on Large-Dollar Wire Transfer Systems (Docket Numbers: R-0591 and R-0592)	7100-AA76
3743	Rules Regarding Availability of Information (Docket Number: R-0601)	7100-AA73

FRS

Completed Actions

Sequence Number	Title	Regulation Identifier Number
3744	Regulation: F - Securities of State Member Banks (Docket Number: R-0609)	7100-AA82
3745	Regulation: T - Credit by Brokers and Dealers (Docket Number R-0611)	7100-AA71
3746	Regulation: U - Credit by Banks for the Purpose of Purchasing or Carrying Margin Stocks (Docket Number: R-0609)	7100-AA83
3747	Regulation: Y - Bank Holding Companies and Change in Bank Control (Docket Number: R-0536)	7100-AA51
3748	Regulation: Z - Truth in Lending (Docket Number R-0545)	7100-AA50
3749	Regulation: Z - Truth in Lending (Docket Number: R-0613)	7100-AA81
3750	Proposed Guidelines Regarding the Bank Bribery Act (Docket Number: R-0603)	7100-AA84

FEDERAL RESERVE SYSTEM (FRS)

Proposed Rule Stage

3723. ● REGULATION: C - HOME MORTGAGE DISCLOSURE

Legal Authority: 12 USC 2804, Home Mortgage Disclosure Act of 1975

CFR Citation: 12 CFR 203

Abstract: During the next month the Board will consider proposing amendments to Regulation C to implement Title V, section 565 of the Housing and Community Development Act of 1987. Section 565 amends the Home Mortgage Disclosure Act to bring within its coverage mortgage banking subsidiaries of bank holding companies and savings and loan holding companies, as well as savings and loan service corporations. The proposed regulatory amendments would implement this expansion in coverage and clarify and simplify the regulation where necessary. It is not anticipated that the proposal will have a significant economic impact on a substantial number of small institutions.

Timetable:

Action	Date	FR Cite
Board will consider proposed revisions to Regulation C	04/00/89	

Small Entity: No

Agency Contact: John Wood, Senior Attorney, Federal Reserve System, Division of Consumer and Community Affairs, 202 452-2412

RIN: 7100-AA85

3724. REGULATION: E - ELECTRONIC FUND TRANSFERS

Legal Authority: 15 USC 1693 et seq Electronic Fund Transfer Act

CFR Citation: 12 CFR 205

Abstract: During the next six months, the Board will conduct a review of Regulation E, which implements the Electronic Fund Transfer Act, and establishes the basic rights, liabilities, and responsibilities of consumers who use electronic fund transfer services and of financial institutions that offer these services (whether or not these institutions hold the consumer's account). The review will consider whether any provisions of the regulation are in need of updating and whether any substantive changes are necessary because of technological developments. The Board will also consider whether to make any legislative recommendations for statutory changes.

Public comment will be requested on any regulatory proposals that may be developed following the review. It is not anticipated that revisions would have significant impact on a substantial number of small banks.

Timetable:

Action	Date	FR Cite
Board will consider revisions to Regulation E during the next six months	10/00/88	

Small Entity: No

Agency Contact: Dolores S. Smith, Assistant Director, Federal Reserve System, Division of Consumer and Community Affairs, 202 452-2412

RIN: 7100-AA77

3725. REGULATION: H - MEMBERSHIP OF STATE BANKING INSTITUTIONS IN THE FEDERAL RESERVE SYSTEM

Legal Authority: 12 USC 321

CFR Citation: 12 CFR 208.8(e)

Abstract: The Board will consider issuing for comment an amendment to Regulation H designed to provide a decrease of approximately 20,000 burden hours in paperwork, as requested by the Office of Management and Budget. The regulation would be amended to raise the exemption from various record-keeping requirements in Regulation H for securities transactions, conducted by banks, from 200 to 1,000 transactions per year for customers over the prior three-calendar-year period, exclusive of transactions in U.S. government and federal agency obligations. This action would diminish burdens on smaller state member banks; therefore, the amendment would have no adverse effect on small banks.

This issue will be presented to the Board upon promulgation by the Department of the Treasury of final regulations concerning government securities transactions.

Timetable:

Action	Date	FR Cite
Board will consider amending Regulation H within the next six months	10/00/88	

Small Entity: No

Agency Contact: Robert S. Plotkin, Assistant Director, Federal Reserve System, Div. of Banking Supervision and Regulation, 202 452-2782

RIN: 7100-AA68

3726. ● REGULATION: H - MEMBERSHIP OF STATE BANKING INSTITUTIONS IN THE FEDERAL RESERVE SYSTEM

Legal Authority: 12 USC 248; 12 USC 321 to 338; 12 USC 486; 12 USC 1814; 12 USC 3907; 12 USC 3909

CFR Citation: 12 CFR 208.17

Abstract: The Board will consider issuing for comment an amendment to Regulation H designed to facilitate the fullest possible dissemination of publicly available information regarding the condition of state member banks. The amendment would require such banks to make available upon request their year-end reports of condition or other suitable documents describing their condition. The proposal is not likely to have a significant economic impact on a substantial number of small banks since it would impose no new reporting requirements, but simply require banks to make existing documents available to members of the public.

Timetable:

Action	Date	FR Cite
Board will consider amending Regulation H within the next two months	04/00/88	

Small Entity: No

Agency Contact: Stephen L. Siciliano, Special Assistant to the General Counsel, Federal Reserve System, Legal Division, 202 452-3920

RIN: 7100-AA86

3727. REGULATION: K - INTERNATIONAL BANKING OPERATIONS

Legal Authority: 12 USC 601 et seq

CFR Citation: 12 CFR 211

Abstract: The Board will consider an amendment to its regulation governing the establishment of foreign operating subsidiaries by member banks. The amendment would eliminate the requirement in section 211.3(b)(9) of Regulation K that a member bank's operating subsidiary be established only where required by local law or regulation. The revision is intended to promote the efficiency of member banks' foreign operations. Because the revision would remove a restriction, it is not anticipated that comment will be requested.

The proposal would not have a significant economic impact on a substantial number of small businesses because it affects only U.S. banks operating abroad.

Timetable:

Action	Date	FR Cite
Final Action by	10/00/88	

Small Entity: No

Agency Contact: Kathleen O'Day, Senior Counsel, Federal Reserve System, Legal Division, 202 452-3786

RIN: 7100-AA67

3728. REGULATION: P - MINIMUM SECURITY DEVICES AND PROCEDURES FOR FEDERAL RESERVE BANKS AND STATE MEMBER BANKS

Legal Authority: 12 USC 1881 to 1884

CFR Citation: 12 CFR 216

Abstract: During the next six months, the Board will conduct a zero-based review of Regulation P, which implements the Bank Protection Act of 1968, and establishes minimum security standards for Federal Reserve banks and for state member banks. The review will consider whether any provisions of the regulation are outdated and whether any substantive changes are necessary because of new technological developments. The regulation will also be reorganized and revised for simplicity and clarity. Public comment will be requested following the zero-based review. It is not anticipated that the revised regulation will have a significant impact on a substantial number of small banks.

Timetable:

Action	Date	FR Cite
Board will consider revisions to Regulation P	07/00/88	

Small Entity: No

Agency Contact: Barbara Lowrey, Associate Secretary, Federal Reserve System, Office of the Secretary, 202 452-3742

RIN: 7100-AA69

3729. REGULATION: T - CREDIT BY BROKERS AND DEALERS

Legal Authority: 15 USC 78g Securities Exchange Act of 1934, as amended; 15 USC 78w Securities Exchange Act of 1934, as amended

CFR Citation: 12 CFR 220

Abstract: During the next four months the Board may consider proposing amendments to Regulation T to accommodate settlement and clearance of foreign securities in accounts covered by Regulation T. A request has been made that amendments be proposed because of the growing internationalization of the securities markets. It is not anticipated that any proposals in this area would affect a significant portion of the overall lending activities of a substantial number of small firms.

Timetable:

Action	Date	FR Cite
Board may review proposal to amend Regulation T	08/00/88	

Small Entity: No

Agency Contact: Laura Homer, Securities Credit Officer, Federal Reserve System, Div. of Banking Supervision and Regulation, 202 452-2781

RIN: 7100-AA72

3730. REGULATION: T - CREDIT BY BROKERS AND DEALERS

Legal Authority: 15 USC 78g Securities Exchange of 1934, as amended; 15 USC 78w Securities Exchange of 1934, as amended

CFR Citation: 12 CFR 220

Abstract: During 1988 the Board may review a proposal made by a broker-dealer to amend the definition of "OTC margin bond" in Regulation T. The purpose would be to permit marginability of foreign sovereign debt securities.

It is not anticipated that this proposal will affect a significant portion of the overall lending activities of a substantial number of small firms.

FRS

Proposed Rule Stage

Timetable:

Action	Date	FR Cite
Board may review proposal to amend Regulation T	04/00/88	

Small Entity: No

Agency Contact: Laura Homer, Securities Credit Officer, Federal Reserve System, Div. of Banking Supervision and Regulation, 202 452-2781

RIN: 7100-AA80

3731. REGULATION: Y - BANK HOLDING COMPANIES AND CHANGE IN BANK CONTROL

Legal Authority: 12 USC 1843 Bank Holding Company Act; 12 USC 1844(b) Bank Holding Company Act

CFR Citation: 12 CFR 225

Abstract: A provision of Regulation Y permits a state bank subsidiary of a bank holding company to engage through a nonbank subsidiary in any activity that is permissible under state law for the bank subsidiary itself, subject to the same limits as if the bank engages in the activity directly. (A similar rule applies to national bank subsidiaries regarding activities permissible for such banks under federal law.) The Board received comments on this provision in connection with its general request for comments in May 1983 regarding the proposed revision of Regulation Y. Some of the commenters challenged the Board's authority to issue this provision, although it has been part of Regulation Y since 1971. In taking final action on the revision of Regulation Y, the Board deferred consideration of the comments on this provision and allowed the existing rule to remain in effect in the interim (49 FR 794, January 5, 1984).

The Board plans to review this provision of the regulation in the near future in connection with the Board's rulemaking regarding real estate investment activities (see Docket Number R-0537 and R-0616). A determination to reverse the rule (CONT)

Timetable:

Action	Date	FR Cite
Board requested comments	05/25/83	48 FR 23520
Board allows existing rule to remain in effect	01/05/84	49 FR 794
Board will review further by	10/00/88	

Small Entity: Yes

Additional Information: ABSTRACT CONT: could have an adverse impact on many small banks that are subsidiaries of holding companies because they might be required to restructure their nonbanking activities or to take other action.

Agency Contact: J. Virgil Mattingly, Deputy General Counsel, Legal Division, Federal Reserve System, 202 452-3430

RIN: 7100-AA41

3732. ● REGULATION: Y - BANK HOLDING COMPANIES AND CHANGE IN BANK CONTROL

Legal Authority: 12 USC 1843

CFR Citation: 12 CFR 225

Abstract: In the near future, the Board will consider proposing for comment amendments to Regulation Y to implement the limitations on grandfathered nonbank banks and industrial banks set forth in the Competitive Equality Banking Act of 1987 (CEBA). The limitations in CEBA on nonbank banks include restrictions on new activities, joint-marketing with affiliates, annual growth, and overdrafts. Only the overdraft restriction applies to industrial banks.

The overdraft restriction requires nonbank banks and industrial banks to keep records of their affiliates' transactions in order to measure overdrafts. Because the overdraft restriction is required by CEBA, small entities cannot be exempted from this recordkeeping requirement.

Timetable:

Action	Date	FR Cite
Board will consider revisions to Regulation Y	04/00/88	

Small Entity: Yes

Agency Contact: Elaine Boutilier, Senior Attorney, Federal Reserve System, Legal Division, 202 452-2418

RIN: 7100-AA87

FEDERAL RESERVE SYSTEM (FRS)

Final Rule Stage

3733. REGULATION: D - RESERVE REQUIREMENTS OF DEPOSITORY INSTITUTIONS (DOCKET NUMBER: R-0571)

Legal Authority: 12 USC 248(k); 12 USC 461(a)

CFR Citation: 12 CFR 204

Abstract: In May 1986, the Board issued for comment rules to clarify the definition of "deposit" in Regulation D to include the interest or liability associated with a borrowing in the form of certain sales of assets and related transactions by a depository institution (51 FR 16855, May 7, 1986). These transactions include a sale of assets that involves a full guarantee by the institution that, in effect, substitutes the institution's credit standing for that of the ultimate borrower and in which the institution retains the risk of borrower default after the asset is sold.

Further, the regulation currently treats obligations of an affiliate as deposits of the depository institution to the extent the proceeds are provided to the depository institution. The Board proposes to exclude proceeds received from a sale of assets without recourse to the affiliate. The proposal also would clarify the application of Regulation D to certain of these transactions involving organizations effectively controlled by the depository institution even though not formally affiliated. Finally, the proposal would (CONT)

Timetable:

Action	Date	FR Cite
Board proposed revisions to Regulation D	05/07/86	51 FR 16855
Comment period extended	07/10/86	51 FR 25069
Further Board action by	04/00/88	

Small Entity: No

Additional Information: ABSTRACT CONT: clarify how the Board measures the "maturity" of an obligation for the purposes of Regulation D. The proposal requests comment on any alternatives that the public believes may be preferable to the Board's proposed amendments. Suggested alternatives will be considered when comments are analyzed.

The proposed rule would apply to all depository institutions. It is not anticipated that the proposal will have a negative impact on the ability of small depository institutions to attract deposits.

The Board will review the comments and take further action within the next two months.

Agency Contact: John Harry Jorgenson, Senior Attorney, Federal Reserve System, Legal Division, 202 452-3778

RIN: 7100-AA62

3734. REGULATION: K - INTERNATIONAL BANKING OPERATIONS (DOCKET NUMBER: R-0550)

Legal Authority: 12 USC 611 et seq

CFR Citation: 12 CFR 211

Abstract: In August 1985, the Board published for comment proposed regulations that would restrict lending by an Edge Corporation to its affiliates where the Edge Corporation is not subject to the restrictions of section 23A of the Federal Reserve Act (12 USC 371c) because it is not owned by a U.S. insured bank (50 FR 35238, August 30, 1985). In taking this action, the Board noted the increasing number of owners of Edge Corporations that are not subject to federal banking supervision and the potential adverse effects that might result from such affiliations, such as the impairment of the Edge's ability to act as an impartial arbiter of credit. The Board requested comment on the effect of the proposal on existing Edge Corporations, especially those owned by foreign banks and whether any exemptions from the restrictions are appropriate.

It is not expected that the proposal would have a significant economic impact on a substantial number of small businesses, because it applies only to organizations involved in international banking. (CONT)

Timetable:

Action	Date	FR Cite
Board proposed revisions to Regulation K	08/30/85	50 FR 35238
Further Board action by	10/00/88	

Small Entity: No

Additional Information: ABSTRACT CONT: The Board will review the comments and take further action within the next six months.

Agency Contact: Kathleen O'Day, Senior Counsel, Federal Reserve System, Legal Division, 202 452-3786

RIN: 7100-AA58

3735. REGULATION: Q - INTEREST ON DEPOSITS (DOCKET NUMBER R-0514)

Legal Authority: 12 USC 371b

CFR Citation: 12 CFR 217

Abstract: In January 1986, the Board issued for comment proposals to clarify, update, and simplify the advertising provisions of Regulation Q (51 FR 1379, January 13, 1986). The revisions incorporate and supersede the proposals of March 1984 concerning advertising of split-rate deposits and IRA/Keogh (HR 10) Plan accounts. The proposal is not expected to have a significant adverse effect on small banks.

The Board will review the comments and is expected to take further action within the next four months.

It is also anticipated that the Board will consider at that time various options with regard to providing written disclosures to consumers about their accounts.

Timetable:

Action	Date	FR Cite
Board proposed revisions	01/13/86	51 FR 1379
Further Board action by	06/00/88	

Small Entity: No

Agency Contact: Patrick J. McDivitt, Attorney, Federal Reserve System, Legal Division, 202 452-3818

RIN: 7100-AA56

3736. REGULATION: Y - BANK HOLDING COMPANIES AND CHANGE IN BANK CONTROL (DOCKET NUMBER: R-0537)

Legal Authority: 12 USC 1841 Bank Holding Company Act; 12 USC 221 Federal Reserve Act; 12 USC 3901 International Lending Supervision Act of 1983

CFR Citation: 12 CFR 225

Abstract: In December 1986, the Board requested public comment on a proposal to permit bank holding companies to engage in real estate investment activities within certain limits (52 FR 543, January 7, 1987). The proposed limits are designed to ensure that conduct of the activity does not result in unsafe or unsound practices, unfair competition, conflicts of interest or other adverse effects.

The Board requested public comment on a number of specific items, including whether real estate investment activities may be deemed to be closely related to banking and a proper incident thereto for purposes of section 4(c)(8) of the Bank Holding Company Act; whether the proposed limits on the size, scope and manner in which the activity would be conducted are appropriate; whether nonbank companies owned by holding company banks should be permitted or prohibited from conducting these activities; and whether the Board should establish special capital requirements for bank holding companies that control banks directly engaged in these activities.

The proposal, if adopted, would permit bank holding (CONT)

Timetable:

Action	Date	FR Cite
ANPRM	01/31/85	50 FR 4519
Board issues proposal for public comment	01/07/87	52 FR 543
Further Board action during the next six months	10/00/88	

Small Entity: No

Additional Information: ABSTRACT CONT: companies to engage in limited real estate investment activities that bank holding companies are not now permitted to conduct and would not impose more burdensome requirements on bank holding companies than are currently applicable. Moreover, the proposal includes provisions designed

VOL 53 ISS 79 PT 2 AP 25 1988 UMI

to permit small bank holding companies to participate meaningfully in the proposed activities. The proposal does not impose any limitations on the direct real estate investment activities of holding company banks.

The Board will review the comments and is expected to take further action within the next six months.

Agency Contact: J. Virgil Mattingly, Deputy General Counsel, Federal Reserve System, Legal Division, 202 452-3430

RIN: 7100-AA52

3737. ● REGULATION: Y - BANK HOLDING COMPANIES AND CHANGE IN BANK CONTROL AND REGULATION H - MEMBERSHIP OF STATE BANKING INSTITUTIONS (DOCKET NUMBER: R-0616)

Legal Authority: 12 USC 1843 (c)(8); 12 USC 371c; 12 USC 3901

CFR Citation: 12 CFR 225.13(b)(1); 12 CFR 225, Appendix; 12 CFR 208.14

Abstract: In November 1987, the Board requested comment regarding whether, in evaluating proposals submitted under section 3 of the Bank Holding Company Act, the Board should consider the impact of real estate activities of the bank to be acquired by the bank holding company on the financial condition of the bank and bank holding company, and, where appropriate, should prohibit banks and savings banks that are acquired by bank holding companies from directly engaging in real estate investment and development activities (52 FR 42301, November 4, 1987). The Board also requested comment on whether member banks in the Federal Reserve System that are not in a bank holding company should be made subject to the interaffiliate lending restrictions of section 23A of the Federal Reserve Act in their dealings with real estate investment and development subsidiaries of the bank. Finally, the Board requested comment regarding whether the Board should impose special capital requirements on real estate subsidiaries of banks in a bank holding company, under the Board's authority in the International Lending Supervision Act. These three proposals supplement the Board's earlier request for comment in (CONT)

Timetable:

Action	Date	FR Cite
Board requested public comment	11/04/87	52 FR 42301
Further Board action by	10/00/88	

Small Entity: No

Additional Information: ABSTRACT CONT: December 1986 regarding whether the Board should permit bank holding companies to engage in real estate investment activities.

This proposal is not expected to have a significant economic impact on small companies because the Board believes that very few small banks are currently engaged in real estate investment and development activities, and bank holding companies are not generally permitted to engage in these activities.

Following review of public comment the Board is expected to take further action within the next six months.

Agency Contact: Scott G. Alvarez, Senior Counsel, Federal Reserve System, Legal Division, 202 452-3583

RIN: 7100-AA88

3738. ● REGULATION: Y - BANK HOLDING COMPANIES AND CHANGE IN BANK CONTROL (DOCKET NUMBER: R-0614)

Legal Authority: 12 USC 1843 (c)(8)

CFR Citation: 12 CFR 225.25 (b)(9)

Abstract: In September 1987, the Board requested public comment regarding whether the Board should authorize bank holding companies to acquire thrift institutions as a general matter under section 4(c)(8) of the Bank Holding Company Act (52 FR 36041, September 25, 1987). The Board currently permits bank holding companies to acquire thrift institutions only if the thrift is failing or has failed, and the acquisition is likely to result in revitalization of the thrift. The Board has requested comment regarding whether changes in the economic and regulatory environment, in particular, the expansion of the powers of thrifts and the growth in state initiatives authorizing interstate banking, justify revisions of the Board's policy and the authorization of thrift acquisitions by bank holding companies. The Board also requested comment on what, if any, conditions the Board should impose on bank holding companies seeking to acquire thrifts in order to assure that the public benefits of the acquisition do not outweigh the adverse effects.

The Board's proposal, if adopted, is not expected to impose a substantial economic burden on small bank holding (CONT)

Timetable:

Action	Date	FR Cite
Board requested public comment	09/25/87	52 FR 36041
Further Board action by	06/00/88	

Small Entity: No

Additional Information: ABSTRACT CONT: companies because this action, if taken, would permit all bank holding companies to acquire thrift institutions, and would not impose different requirements on companies based on their size.

The Board will review the public comments and is expected to take further action within the next four months.

Agency Contact: Michael J. O'Rourke, Senior Attorney, Federal Reserve System, Legal Division, 202 452-3288

RIN: 7100-AA89

3739. REGULATION: Y - BANK HOLDING COMPANIES AND CHANGE IN BANK CONTROL (DOCKET NUMBER: R-0567)

Legal Authority: 12 USC 3907; 12 USC 3901 International Lending Supervision Act of 1983

CFR Citation: 12 CFR 225, Appendix A

Abstract: In January 1986, the Board proposed to amend its Capital Adequacy Guidelines by adding a risk-based capital measure to supplement existing ratios of primary and total capital to total assets. Based in part on comments received in response to that earlier proposal the Board, in conjunction with the other federal bank regulatory agencies and the Bank of England, published a revised capital proposal in February 1987, which would have established minimum risk-based capital standards applicable to commercial banking organizations in the United States and the United Kingdom. Implementation of the U.S./U.K. proposal was deferred to

BEST COPY AVAILABLE

enlist the participation of additional countries in the development of a broader international risk-based capital framework.

On January 27, 1987, the Board requested public comment on a revised capital guidelines proposal, in lieu of the U.S./U.K. measure, that is based upon a risk-based capital framework developed jointly during the past year by supervisory authorities from 12 major industrial countries. (A Federal Register cite is not yet available.) (CONT)

Timetable:

Action	Date	FR Cite
Board requested comment	01/31/86	51 FR 3976
Board requests comment on revised proposal	02/19/87	52 FR 5119
Board requests comment on revised proposal	03/24/87	52 FR 9304
Board requested comment on revised proposal	01/27/88	
Further Board action by	12/00/88	

Small Entity: No

Additional Information: ABSTRACT CONT: The newly proposed risk-based capital framework consists of a revised definition of capital, a system for assigning assets and off-balance sheet items to risk categories, and a schedule for establishing minimum risk-based capital ratios (7.25 percent by year-end 1990, and 8.0 percent by year-end 1992). The proposal also provides for transitional arrangements and a phase-in period to facilitate adoption and implementation of the measure. This proposal has been designed to take account of those practices which have been engaged in primarily by larger banking organizations. Moreover, the major parts of the proposal have been structured to apply generally only to bank holding companies with assets of $150 million or more. Consequently, the proposal is not likely to have a significant economic impact on smaller banking organizations.

The Board will review the comments on its revised proposal and will coordinate with other federal banking agencies with respect to the issuance of parallel guidelines or regulations implementing the proposal. Further action is expected by year-end 1988.

Agency Contact: Michael J. O'Rourke, Senior Attorney, Federal Reserve System, Legal Division, 202 452-3288

RIN: 7100-AA66

3740. ● REGULATION: Z - TRUTH IN LENDING (DOCKET NUMBER R-0625)

Legal Authority: 15 USC 1604, as amended, Truth in Lending Act

CFR Citation: 12 CFR 226

Abstract: In December 1987, the Board proposed amending Regulation Z to require more disclosures about home equity lines secured by a consumer's principal dwelling much earlier in the credit process and in a standard format (52 FR 48702, December 24, 1987). Creditors would have to give additional information about the terms and conditions of a home equity plan. In the case of variable-rate loans, creditors would have to give more information about the variable-rate feature, as well as an historical table showing the effects of index changes on interest rates over a fifteen-year period. In cases where the interest rate has been adjusted, creditors also would have to provide more variable-rate information on or with the first periodic statement that is sent to consumers. Finally, creditors would have to provide consumers with a brochure that describes home equity loans. Most home equity plans contain complex terms and conditions and are riskier than the typical open-end credit plan because of the risk to the consumer's home in the event of default. The Board is concerned that consumers are not receiving sufficient information about the terms and conditions of (CONT)

Timetable:

Action	Date	FR Cite
Board proposed amendment	12/24/87	52 FR 48702
Further Board action by	04/00/88	

Small Entity: Yes

Additional Information: ABSTRACT CONT: these plans in a meaningful and timely fashion. The Board believes that adoption of the proposal will enable consumers to better understand a home equity plan before they contract for a particular product.

If the Board adopts this proposal, small banks and other small businesses engaged in home equity lending could incur some additional costs, including costs to revise and reprint disclosure forms and to acquire and distribute home equity education pamphlets. Before taking any final action, the Board would consider appropriate steps to minimize the burdens and costs of compliance with the final rule. The Board will review the public comments and is expected to take further action within the next two months.

Agency Contact: Sharon Bowman, Attorney, Federal Reserve System, Division of Consumer and Community Affairs, 202 452-3667

RIN: 7100-AA91

3741. ● REGULATION: CC - AVAILABILITY OF FUNDS AND COLLECTION OF CHECKS AND REGULATION J - COLLECTION OF CHECKS AND OTHER ITEMS AND TRANSFERS OF FUNDS (DOCKET NUMBER: R-0620)

Legal Authority: 12 USC 4001 et seq

CFR Citation: 12 CFR 229; 12 CFR 210

Abstract: In December 1987, the Board proposed for public comment a new rule, Regulation CC, to implement the Expedited Funds Availability Act (52 FR 47112, December 11, 1987). The proposal sets out the requirements that banks and other depository institutions make funds deposited into accounts available according to specified time schedules and that institutions disclose their funds availability policies to their customers. The proposed regulation also establishes rules to speed the return of unpaid checks. The Board proposed to amend its existing Regulation J, which governs the collection of checks by Federal Reserve Banks, to conform to the new regulation. The proposed Regulation CC and the amendments to Regulation J would apply to all depository institutions, regardless of size, except that small institutions that do not hold transaction accounts would be exempt from the availability, disclosure, and payment of interest requirements.

In related actions, (Docket Numbers R-0621 and R-0622), the Board requested comment on new Federal Reserve Bank services to assist institutions in complying with the new regulations (CONT)

BEST COPY AVAILABLE

FRS Final Rule Stage

Timetable:

Action	Date	FR Cite
Board proposed new rule	12/11/87	52 FR 47112
Further Board action by	05/31/88	

Small Entity: Yes

Additional Information: ABSTRACT CONT: and on long-range proposals to improve the payments mechanism.

The Board will review the public comments and is expected to take further action within the next three months. The new rule will take effect on September 1, 1988.

Agency Contact: Joseph R. Alexander, Senior Attorney, Federal Reserve System, Legal Division, 202 452-2489

RIN: 7100-AA90

3742. FURTHER PROPOSALS TO REDUCE RISKS ON LARGE-DOLLAR WIRE TRANSFER SYSTEMS (DOCKET NUMBERS: R-0591 AND R-0592)

Legal Authority: 12 USC 221 et seq

CFR Citation: 00 CFR None

Abstract: In December 1986, the Board requested comment on several proposals that would refine its policy statement on payment system risk (51 FR 45042, December 16, 1986). The proposals included modifying automated clearing house transactions to reduce risks (R-0591) and various proposals to charge a fee for daylight overdrafts as a way of reducing risks associated with them (R-0592). It is not expected that these actions will have a significant economic impact on a substantial number of small entities, because small entities do not usually participate in large-dollar wire transfer systems. In December 1987, following review of public comments, the Board approved changes in the automated clearing house mechanism to reduce risk (52 FR 49086, December 29, 1987). Action on pricing of daylight overdrafts (Docket No. R-0592) is expected in the Fall of 1988.

Further, the Board will be conducting a zero-based review of its risk reduction policy during 1988.

Timetable:

Action	Date	FR Cite
Board requested comment	12/16/86	51 FR 45042
Board adopted proposal in part	12/29/87	52 FR 49086
Further Board action by	11/00/88	

Small Entity: No

Agency Contact: Edward C. Ettin, Deputy Director, Federal Reserve System, Division of Research and Statistics, 202 452-3368

RIN: 7100-AA76

3743. RULES REGARDING AVAILABILITY OF INFORMATION (DOCKET NUMBER: R-0601)

Legal Authority: 5 USC 552; 12 USC 248(i); 12 USC 248(e)

CFR Citation: 12 CFR 261

Abstract: The Board's Rules Regarding Availability of Information are intended in part to fulfill the requirement of section 552 of Title 5 of the United States Code that every Federal agency shall publish in the Federal Register how the public may obtain information, make submittals or requests, and obtain decisions; how the agency's functions are channeled and determined; its rules of procedure and descriptions of forms available and the places where they may be obtained. The Board is reviewing public comments that have been received and will determine whether to issue as a final rule a proposed revision that simplifies and improves these rules. The revision, issued for public comment in April 1987, reorganizes the rules into appropriate subparts, and clarifies the procedures for requesting access to documents and information, the processing and disposition of such requests, and the procedures regarding the discretionary release of confidential information (52 FR 13458, April 23, 1987).

It is not expected that the proposal, if adopted, will have a significant economic impact on a substantial number of (CONT)

Timetable:

Action	Date	FR Cite
Board requested comment	04/23/87	52 FR 13458
Board will consider adoption of final rules by	04/00/88	

Small Entity: No

Additional Information: ABSTRACT CONT: small entities that would be subject to the regulation.

Agency Contact: Stephen L. Siciliano, Special Assistant to the General Counsel, Federal Reserve System, Legal Division, 202 452-3920

RIN: 7100-AA73

FEDERAL RESERVE SYSTEM (FRS) — Completed Actions

3744. REGULATION: F - SECURITIES OF STATE MEMBER BANKS (DOCKET NUMBER: R-0609)

Legal Authority: 15 USC 78g Securities Exchange of 1934

CFR Citation: 12 CFR 206; 12 CFR 208

Abstract: In August 1987, the Board issued for comment a proposal to amend Regulation F to require publicly held state member banks to file information with the Board on the forms nonbanking entities use to file with the Securities and Exchange Commission ("SEC") (52 FR 30690, August 17, 1987). Pursuant to section 12(i) of the Securities Exchange Act of 1934, the Board is mandated to issue disclosure regulations that are substantially identical to the SEC's disclosure regulations under that Act, or to publish reasons why the Board's rules are not substantially identical to those of the SEC.

In December 1987, following review of public comments the Board rescinded Regulation F and amended Regulation H (Membership of State Banking Institutions in the Federal Reserve System) to require the above information. The amendment also permits state member banks with no foreign offices and total assets of $150 million or less to substitute financial statements from quarterly reports of condition filed with the Board for the financial statements normally required on SEC Form 10-Q.

Adoption of the proposal is not expected to have a (CONT)

Timetable:

Action	Date	FR Cite
Board requested comment	06/17/87	52 FR 30690
Board adopted a proposal	12/31/87	52 FR 49374

Small Entity: No

Additional Information: ABSTRACT CONT: significant economic impact, since only 36 banks are presently subject to Regulation F. The proposal would impose an audit requirement upon state member banks, but this burden is minimal because 33 of the banks currently subject to Regulation F presently receive annual audits.

Agency Contact: Walter McEwen, Attorney, Federal Reserve System, Legal Division, 202 452-3321

RIN: 7100-AA82

3745. REGULATION: T - CREDIT BY BROKERS AND DEALERS (DOCKET NUMBER R-0611)

Legal Authority: 15 USC 78g Securities Exchange Act of 1934, as amended; 15 USC 78w Securities Exchange Act of 1934, as amended

CFR Citation: 12 CFR 220

Abstract: In August 1987, the Board requested comment on a proposed amendment to Regulation T that would permit broker-dealers to facilitate the exercise of valuable employee stock options by employees. In lieu of the securities to be received upon exercise of the option, the proposed amendment would allow the broker-dealer to accept a fully-endorsed employee stock option and instructions to the employer to deliver the securities to the broker-dealer. In December 1987, following review of public comments, the Board approved the amendment with a slight change in wording (52 FR 48804, December 18, 1987).

It is not anticipated that this proposal will affect a significant portion of the overall lending activities of a substantial number of small firms.

Timetable:

Action	Date	FR Cite
Board proposed an amendment to Regulation T	08/26/87	52 FR 32138
Board adopted an amendment to Regulation T	12/18/87	52 FR 48804

Small Entity: No

Agency Contact: Laura Homer, Securities Credit Officer, Federal Reserve System, Div. of Banking Supervision and Regulation, 202 452-2781

RIN: 7100-AA71

3746. REGULATION: U - CREDIT BY BANKS FOR THE PURPOSE OF PURCHASING OR CARRYING MARGIN STOCKS (DOCKET NUMBER: R-0608)

Legal Authority: 15 USC 78g Securities Exchange of 1934, as amended; 15 USC 78w Securities Exchange of 1934, as amended

CFR Citation: 12 CFR 221

Abstract: In August 1987, the Board requested comment on a proposed amendment to Regulation U that would exempt banks making loans of $100,000 or under from the requirement that Form FR U-1 must be executed, and amend the form to reflect this change (52 FR 29701, August 11, 1987). The purpose is to reduce the paperwork burden associated with the preparation of Form FR U-1 which is currently required whenever a bank makes a loan secured by "margin stock."

Following review of public comments, the Board approved the amendment in substantially the form proposed (52 FR 35683, September 23, 1987).

It is anticipated that this proposal will reduce paperwork burden on small banks and, therefore, will have no adverse economic impact on a substantial number of small entities.

Timetable:

Action	Date	FR Cite
Board proposed an amendment to Regulation U	08/11/87	52 FR 29701
Board adopted amendment to Regulation U	09/23/87	52 FR 35683
Board adopted amendment to Regulation U	09/23/87	52 FR 35683

Small Entity: No

Agency Contact: Laura Homer, Securities Credit Officer, Federal Reserve System, Div. of Banking Supervision and Regulation, 202 452-2781

RIN: 7100-AA83

3747. REGULATION: Y - BANK HOLDING COMPANIES AND CHANGE IN BANK CONTROL (DOCKET NUMBER: R-0536)

Legal Authority: 12 USC 1841 et seq Bank Holding Company Act

CFR Citation: 12 CFR 225

Abstract: In January 1985, the Board requested comment as to whether it should permit bank holding companies that own nonbank banks to provide them with internal administrative services and to establish management interlocks with them (50 FR 2057, January 15, 1985). ("Nonbank banks" are institutions that are chartered as banks but either do not accept demand deposits or do not make commercial loans.) The Board took this action to resolve a number of questions that had been raised regarding the appropriate scope of relationships between nonbank banks and their affiliates. It is likely that any action the Board might take would primarily affect larger bank holding systems and would relax a requirement or prohibition. Therefore, it is expected that any Board action would not have a significant economic impact on a substantial number of small entities.

The Board suspended further consideration of nonbank bank applications by bank holding companies, pending a definitive resolution, through pending litigation, of the status of nonbank banks. However, in view of the redefinition of the term "bank" in the recently enacted Competitive Equality Banking Act of (CONT)

Timetable:

Action	Date	FR Cite
Board requested comment	01/15/85	50 FR 2057
No further action by the Board is expected	04/00/88	

Small Entity: No

Additional Information: ABSTRACT CONT: 1987, no further action by the Board is expected on this matter.

Agency Contact: J. Virgil Mattingly, Deputy General Counsel, Federal

Reserve System, Legal Division, 202 452-3430

RIN: 7100-AA51

3748. REGULATION: Z - TRUTH IN LENDING (DOCKET NUMBER R-0545)

Legal Authority: 15 USC 1604, as amended, Truth in Lending Act

CFR Citation: 12 CFR 226

Abstract: In November 1986, the Board proposed that creditors make more extensive disclosure of the variable rate feature in transactions secured by a consumer's home. The proposal called for disclosure about variable rate loans early in the credit shopping process and at subsequent times prior to payment adjustments. Following the review of public comments and further analysis, the Board adopted a final rule in December 1987 (52 FR 48665, December 18, 1987). The amendments require that creditors provide consumers general descriptive material about adjustable rate mortgages as well as provide a disclosure describing the adjustable rate mortgage programs in which the consumer expresses an interest. This disclosure would include an example showing the effect of historical change in a creditor's index over a 15-year period on the payments and balance on a $10,000 loan. The initial and maximum interest rates and payments for a $10,000 loan also would be stated. Finally, the amendments require annual notice of interest rate adjustments and prior notice of payment adjustments.

The Board developed the disclosure amendments in (CONT)

Timetable:

Action	Date	FR Cite
Board proposed amendment	05/15/85	50 FR 20221
Revised proposal issued for comment	11/24/86	51 FR 42241
Board adopted the proposal	12/18/87	52 FR 48665

Small Entity: Yes

Additional Information: ABSTRACT CONT: consultation with the other federal agencies currently imposing separate and differing disclosure obligations on creditors. The Board believes that adoption of the amendments as the uniform federal disclosure requirements for adjustable rate mortgage loans will improve the information consumers receive and eliminate the burden on creditors caused by the overlapping federal requirements. In addition, the amendments reflect certain changes designed to minimize the burdens and costs of compliance that may result from revising and reprinting forms and changing procedures to comply with the requirements.

Agency Contact: Michael Bylsma, Senior Attorney, Federal Reserve System, Division of Consumer and Community Affairs, 202 452-3667

RIN: 7100-AA50

3749. REGULATION: Z - TRUTH IN LENDING (DOCKET NUMBER: R-0613)

Legal Authority: PL 100-86 Competitive Equality Banking Act of 1987

CFR Citation: 12 CFR 226

Abstract: In September 1987, the Board published for comment a proposal to amend Regulation Z to implement section 1204 of the Competitive Equality Banking Act (CEBA), which requires creditors to include a maximum interest rate ceiling in adjustable rate mortgage loans that are secured by a dwelling. Section 1204 of CEBA became effective on December 9, 1987.

In November 1987, following the review of public comments and further analysis, the Board adopted a final rule (52 FR 43178, November 9, 1987). The regulatory amendment -- section 226.30 of Regulation Z -- requires creditors to include a maximum interest rate ceiling in all dwelling-secured consumer credit obligations entered into on or after December 9, 1987 that are subject to the Truth in Lending Act -- both open and closed end credit -- and that contractually allow for interest rate adjustments during the term of the obligation.

The proposal is not expected to have a significant economic impact on a substantial number of small banks.

Timetable:

Action	Date	FR Cite
Board issued for comment a proposed amendment to Regulation Z	09/15/87	52 FR 34811
Board adopted a final rule amending Regulation Z	11/09/87	52 FR 43178

Small Entity: No

Agency Contact: Adrienne Hurt, Staff Attorney, Federal Reserve System, Division of Consumer and Community Affairs, 202 452-2412

RIN: 7100-AA81

3750. PROPOSED GUIDELINES REGARDING THE BANK BRIBERY ACT (DOCKET NUMBER: R-0603)

Legal Authority: 18 USC 215(d) Bank Bribery Amendments Act of 1985

CFR Citation: 00 CFR None

Abstract: As required by the Bank Bribery Amendments Act of 1985, the Board, in May 1987, issued for public comment proposed guidelines that encourage all state member banks and bank holding companies to adopt internal codes of conduct of written policies or amend their present codes of conduct or policies to describe the prohibitions contained in the Bank Bribery Act. The Bank Bribery Act prohibits anyone, including a financial institution's employees, officers, directors, agents or attorneys, from corruptly soliciting or accepting anything of value in connection with the business of the financial institution. The Board's guidelines also identify situations that, in the opinion of the Board, may not constitute violations of the Bank Bribery Act. The proposed guidelines are not expected to have a significant impact on small banking entities.

In October 1987 following review of the public comments, the Board adopted the guidelines without any significant change (52 FR 39277, October 21, 1987).

Timetable:

Action	Date	FR Cite
Board requested comment	05/22/87	52 FR 19396
Board adopted guidelines	10/21/87	52 FR 39277

Small Entity: No

Agency Contact: Herbert A. Biern, Assistant Director, Federal Reserve System, Div. of Banking Supervision and Regulation, 202 452-2620

RIN: 7100-AA84

[FR Doc. 88-5110 Filed 04-22-88; 8:45 am]

BILLING CODE 6210-01-T

VOL
53

ISS
79

PT
2

AP
25

1988

UMI

federal register

Monday
April 25, 1988

Part LII

Federal Trade Commission

Semiannual Regulatory Agenda

FEDERAL TRADE COMMISSION (FTC)

FEDERAL TRADE COMMISSION

16 CFR Ch. I

Semiannual Regulatory Agenda

AGENCY: Federal Trade Commission.

ACTION: Semiannual regulatory agenda.

SUMMARY: The following agenda of Commission proceedings is published in accordance with section 22(d)(1) of the Federal Trade Commission Act, 15 U.S.C. 57b-3(d)(1), and section 610(c) of the Regulatory Flexibility Act, 5 U.S.C. 610(c). Each projected event reflects the FTC staff's assessment of events that it expects will occur in the listed proceedings during the coming year. No Commission determination on the need for or the substance of a trade regulation rule or any other procedural option should be inferred from the projected events included in this agenda.

Several agenda items concern proceedings that may affect a substantial number of small businesses as that term is used in the Regulatory Flexibility Act. Whether any such proceeding will result in a rule which is likely to have a significant economic impact on such entities depends upon final Commission determinations on the need for and the substance of a trade regulation rule.

Except for notice of completed actions, the information in this agenda represents the judgment of Commission staff, based upon information now available. These views should not be regarded as a final staff position, nor should they be attributed to the Commission itself. The Commission will address the issues presented on the rulemaking record in the final consideration of each proceeding.

Agenda items include the projected timing of certain future actions. In most instances the dates of future events are listed by month, not a specific day. Further details may be obtained from the agency contact responsible for a particular proceeding. Discovery of new information, change of circumstances, or changes in the law may alter the information set forth in this agenda.

FOR FURTHER INFORMATION CONTACT: Further details may be obtained from the agency contact responsible for a particular proceeding.

By direction of the Commission.

Emily H. Rock,

Secretary.

Prerule Stage

Sequence Number	Title	Regulation Identifier Number
3751	Cooling-Off Period for Door-to-Door Sales	3084-AA18
3752	Mail Order Merchandise	3084-AA19
3753	Informal Dispute Settlement Procedures	3084-AA30
3754	Fair Packaging and Labeling Rules	3084-AA35

Proposed Rule Stage

Sequence Number	Title	Regulation Identifier Number
3755	Review of the Funeral Industry Practices Rule	3084-AA05
3756	Amendment to Trade Regulation Rule Concerning Preservation of Consumers Claims and Defenses ("Holder-in-Due Course Rule")	3084-AA08
3757	Review of the Premerger Notification Rules and Report Form	3084-AA23
3758	Games of Chance in the Food Retailing and Gasoline Industries Rule	3084-AA24
3759	Review of Content Disclosure Requirements for Textile, Wool, and Fur Products	3084-AA29

Final Rule Stage

Sequence Number	Title	Regulation Identifier Number
3760	Ophthalmic Practice Rules	3084-AA03
3761	Proprietary Vocational and Home Study Schools	3084-AA11
3762	Retail Food Store Advertising and Marketing Practices	3084-AA17
3763	Appliance Labeling Rule -- Energy Policy and Conservation Act	3084-AA26

FEDERAL TRADE COMMISSION (FTC)

Prerule Stage

3751. COOLING-OFF PERIOD FOR DOOR-TO-DOOR SALES

Legal Authority: 15 USC 41 et seq Federal Trade Commission Act

CFR Citation: 16 CFR 429

Abstract: The rule states that sellers of consumer goods or services with a purchase price of $25.00 or more who sell away from their place of business must furnish to the buyer certain information regarding the buyer's right to cancel sales within three business days and must give the buyer a full refund of any down payment upon the buyer's cancellation. The rule requires a seller to furnish the buyer with a complete receipt or copy of a contract, along with a notice informing the buyer of the right to cancel the transaction, and to furnish the buyer with a completed Notice of Cancellation. The rule is intended to benefit consumers by permitting them to reflect on their purchase and the terms of any contract, to compare the purchase with offerings of other sellers, and to ascertain the accuracy of any representations made. The resulting costs to sellers include the costs associated with cancellation (processing cancelled orders, returning downpayments, retrieving delivered goods, and returning traded-in merchandise) and the additional cost of printing the required cancellation notices. Since the rule affects all door-to-door sellers, it may have a significant economic effect on a (cont)

Timetable:

Action	Date	FR Cite
Begin Reg Flex Act Review	03/03/83	48 FR 9032
Commission Consideration of Staff Recommendations	04/28/87	
NPRM	08/10/87	52 FR 29539
End Reg Flex Review	08/12/87	52 FR 29507
Commission Consideration of Staff Recommendations	05/00/88	
Final Action	08/00/88	

Small Entity: Undetermined

Additional Information: ABSTRACT CONT: substantial number of small entities. The Commission has completed its review of the rule in accordance with Section 610 of the Regulatory Flexibility Act. Staff has explored non-substantive changes in the notices required by the rule. Staff also has studied possible exemptions for sales of automobiles at public auctions and sales of arts and crafts at fairs. The Commission has issued an NPRM soliciting comment on changes in the notice requirement and possible exemptions from the rule.

Agency Contact: Lewis Franke, Federal Trade Commission, Division of Enforcement, Bureau of Consumer Protection, Washington, DC 20580, 202 326-3009

RIN: 3084-AA18

3752. MAIL ORDER MERCHANDISE

Legal Authority: 15 USC 41 et seq Federal Trade Commission Act

CFR Citation: 16 CFR 435

Abstract: The Commission's rule concerning mail order merchandise was promulgated on October 22, 1975. The rule requires mail order sellers to possess a reasonable basis for any claims made concerning shipping date or, in the absence of any specifically stated date, to ship the ordered merchandise within thirty (30) days of receipt of an order. In the event of delays in shipment, the rule establishes notification procedures whereby buyers have the option either to agree to the delay or to cancel the order and receive a prompt refund. The Commission's rule is designed to address a number of significant consumer problems described on the record of the rulemaking proceeding, including failure to deliver ordered merchandise, unexplained delays in delivery, failure to make prompt (or any) refunds upon cancellation of an order, and inability to obtain responses to inquiries about pending orders. The rule enables consumers to obtain ordered merchandise within a reasonable time period or, if delays occur, to cancel the order and obtain a prompt refund, so that losses due to undelivered merchandise, delays, and inadequate or nonexistent refunds can be avoided. By subjecting sellers (cont)

Timetable:

Action	Date	FR Cite
Rule Promulgated	10/22/75	40 FR 49492
Begin Reg Flex Act Review	10/20/83	
End Reg Flex Review	06/10/86	51 FR 20991
Commission Consideration of Staff Recommendations (if appropriate)	07/00/88	

Small Entity: Undetermined

Additional Information: ABSTRACT CONT: who solicit orders they cannot fill within a reasonable time to the risk of cancellation, the rule may provide competitive benefits, since buyers may shift their business to more efficient merchants. Costs relating to the rule may include the cost of establishing a system for monitoring and recording orders, deliveries, delays, cancellations, consents to delays, and refunds; the costs of complying with the rule's notification requirements regarding delays (printing, postage, etc.); the cost of processing refunds; and additional inventory costs. Pursuant to Sec. 610 of the Regulatory Flexibility Act, the Commission has reviewed this rule and determined that it has not had a significant economic impact on a substantial number of small entities. In addition, the staff is considering whether the rule should be amended to cover orders placed by telephone or other electronic means. Whether changes to the rule will be proposed will not be determined until the staff's review has been completed.

Agency Contact: Raymond L. Rhine, Federal Trade Commission, Division of Enforcement, Bureau of Consumer Protection, Washington, DC 20580, 202 326-2973

RIN: 3084-AA19

3753. INFORMAL DISPUTE SETTLEMENT PROCEDURES

Legal Authority: 15 USC 2309; 15 USC 2310(a)(2) Magnuson-Moss Warranty--FTC Improvements Act

CFR Citation: 16 CFR 703

Abstract: The Magnuson-Moss Warranty Act, enacted on January 4, 1975, requires that the Federal Trade Commission promulgate a rule prescribing the minimum requirements for any informal dispute settlement procedure which is incorporated into the terms of a written warranty subject to the Act. Because warrantors are not required to incorporate such procedures into warranties, the rule applies only to warrantors who choose to do so. The

present rule sets forth detailed procedural, recordkeeping, and reporting requirements for dispute settlement mechanisms designed to insure their fairness. To assess whether any changes are needed, the Commission conducted a regulatory negotiation process in which an advisory committee was charged to recommend to the Commission revisions to the rule that would facilitate the Congressional (cont)

Timetable:

Action	Date	FR Cite
Promulgation of Original Rule	12/31/75	
Initial Notice of Intent to Form Advisory Committee	02/12/86	51 FR 5205
Convene Advisory Committee	09/23/86	
Facilitator Report to Commission	12/10/87	
Commission Consideration of Facilitator Report	05/00/88	

Small Entity: No

Additional Information: ABSTRACT CONT: objective of encouraging warrantors to establish and participate in informal dispute settlement mechanisms. The committee met for the last time on June 17, 1987, and failed to reach a consensus on rule revisions. The Commission and its staff will continue to monitor the impact of the current informal dispute settlement procedures rule.

Agency Contact: Gary Laden, Federal Trade Commission, Division of Marketing Practices, Federal Trade Commission, Washington, DC 20580, 202 326-3118

RIN: 3084-AA30

3754. ● FAIR PACKAGING AND LABELING RULES

Legal Authority: 16 USC 1333

CFR Citation: 16 CFR 300

Legal Deadline: None.

Abstract: The Fair Packaging and Labeling Act, 15 USC 1453-1455, was passed in 1966 to eliminate consumer confusion and deception and to enable consumers to obtain accurate information as to the quantity of package contents and to facilitate value comparisons. The FTC has enforcement responsibility over package disclosures placed on "consumer commodities" as defined in the FPLA. The Commission has begun a review of its rules implementing the FPLA in accordance with the Regulatory Flexibility Act. The purpose of this review is limited to determining whether the FPLA rules should be continued without change, or should be amended or rescinded in order to minimize any significant economic impact the rules may have on a substantial number of small entities.

Timetable:

Action	Date	FR Cite
Begin Reg Flex Review	12/24/87	52 FR 48716
End Reg Flex Review	06/00/88	

Small Entity: Undetermined

Agency Contact: James Mills, Federal Trade Commission, Division of Enforcement, Bureau of Consumer Protection, Washington, D.C. 20580, 202 326-3036

RIN: 3084-AA36

FEDERAL TRADE COMMISSION (FTC) — Proposed Rule Stage

3755. REVIEW OF THE FUNERAL INDUSTRY PRACTICES RULE

Legal Authority: 15 USC 45; 15 USC 46(g); 15 USC 57(a)

CFR Citation: 16 CFR 453

Abstract: The funeral industry practices rule, which became effective on April 30, 1984, seeks to increase consumer access to accurate information about prices and legal requirements prior to and at the time of purchase of funeral goods and services. The Rule: (1) requires funeral directors to provide consumers with itemized pre-sale disclosures; (2) prohibits misrepresentation of legal and cemetery requirements and the preservative or protective value of embalming, caskets, and vaults; (3) prohibits funeral directors from requiring a casket for cremations, or any other tie-in arrangements; (4) prohibits funeral directors from charging for goods and services not specifically ordered, such as embalming, unless required by law; and (5) requires funeral directors to give, on request, price information over the telephone. The Rule provides that no later than four years after its effective date, the Commission will begin a rulemaking to determine whether the Rule should be amended or terminated. The staff is preparing recommendations for a Notice of Proposed Rulemaking and preparing for that proceeding.

Timetable:

Action	Date	FR Cite
Rule Promulgated	09/24/82	47 FR 42260
Begin Review	01/00/87	
ANPRM	12/09/87	52 FR 46706
NPRM	05/00/88	
Commission Consideration of Staff Recommendations	06/00/89	

Small Entity: Yes

Agency Contact: Raouf M. Abdullah, Federal Trade Commission, Division of Service Industry Practices, Bureau of Consumer Protection, Washington, D.C. 20580, 202 326-3024

RIN: 3084-AA05

3756. AMENDMENT TO TRADE REGULATION RULE CONCERNING PRESERVATION OF CONSUMERS CLAIMS AND DEFENSES ("HOLDER-IN-DUE COURSE RULE")

Legal Authority: 15 USC 45 Federal Trade Commission Act; 15 USC 57(a) Federal Trade Commission Act

CFR Citation: 16 CFR 433

Abstract: The objective of the proposed amendment is to ensure that a purchaser's duty to pay is not separated from sellers' duty to perform when consumer sales are financed by third party creditors or purchase money lenders. The original rule requires sellers to ensure that credit contracts used in consumer installment sales and purchase money loans contain a provision that makes any holder of the contract subject to all legal claims and

defenses related to the sale transaction which the buyer may have against the seller. The proposed amendment would extend to creditors the obligation to ensure that credit contracts contain the required provision. Benefits from the proposed amendments may include improvement in the retail market due to increased scrutiny by creditors of the sellers with whom they do business and availability to consumers of additional claims and defenses against creditors. Some creditors may have increased costs associated with screening contracts and monitoring the reputations of retailers with whom they deal. Alternatives considered by the Commission include: rejection of the amendment; postponement of decision pending additional information on (cont)

Timetable:

Action	Date	FR Cite
Notice of Proposed Amendment	11/18/75	40 FR 53530
Rule & Statement of Basis & Purpose	11/18/75	40 FR 53506
Final Notice of Proposed Amendment	02/05/76	41 FR 5305
Guidelines on TRR	05/14/76	41 FR 20022
Statement of Enforcement Policy	06/16/76	41 FR 34594
Open End Consumer Credit Contracts	09/16/77	42 FR 46509
Presiding Officer's Report	02/16/78	43 FR 6810
Staff Report	11/24/78	43 FR 54950
Tentative Cmsn Approval and Request for Comment	11/15/79	44 FR 65771
Commission Consideration of Staff Recommendations	10/00/88	

Small Entity: Undetermined

Additional Information: ABSTRACT CONT: compliance with the original rule; adoption of the amendment extending the rule to creditors and also making additional technical amendments. The amendment would shift some compliance costs from small businesses to creditors that control the contract form. Otherwise, because the existing rule already applies to retail sellers, the amendment should have no appreciable effect on other small businesses.

Agency Contact: Jonathan D. Jerison, Federal Trade Commission, Division of Credit Practices, Bureau of Consumer Protection, Washington, DC 20580, 202 326-3223

RIN: 3084-AA08

3757. REVIEW OF THE PREMERGER NOTIFICATION RULES AND REPORT FORM

Significance: Agency Priority

Legal Authority: 15 USC 18a Clayton Act

CFR Citation: 16 CFR 801; 16 CFR 802; 16 CFR 803; 16 CFR 803, (Apendix)

Abstract: The Premerger Notification Rules and the Antitrust Improvements Act Notification and Report Form were adopted pursuant to Section 7A of the Clayton Act. Section 7A requires firms of a certain size contemplating mergers or acquisitions of a specified size to file notification with the Federal Trade Commission (FTC) and the Department of Justice (DOJ) and to wait a designated period before consummating the transaction. It also requires the FTC, with the concurrence of the Assistant Attorney General for Antitrust, to promulgate rules requiring that notification be in a form and contain information necessary to enable the FTC and DOJ to determine whether the proposed acquisition may, if consummated, violate the antitrust laws. These rules are continually reviewed in order to improve the program's effectiveness and reduce the paperwork burden on the business community. In February 1987, the Commission promulgated nine amendments, most of which were designed to reduce the burden of notification. In May 1987, the Commission promulgated an amendment to require that acquisitions by partnerships be reported by persons controlling the partnerships. (cont)

Timetable:

Action	Date	FR Cite
Begin Review	09/30/81	
NPRM – Controlled Issuers	09/24/85	50 FR 38742
NPRM – Partnership Control	03/06/87	52 FR 7095
Final Action – Partnership Control	05/29/87	52 FR 20058
NPRM – De Minimis Exemption	06/00/88	
Final Action – Controlled Issuers	07/00/88	
NPRM – Sequential Transactions	10/00/88	
Final Action – De Minimis Exemption	10/00/88	

Small Entity: No

Additional Information: ABSTRACT CONT: In fiscal year 1988 the Commission expects to take final action on the proposal to raise the controlled issuer threshold in Section 802.20(b) and to propose rules concerning acquisitions of small percentages of an issuer's voting securities and acquisitions involving dependent sequential transactions.

Agency Contact: Roberta S. Baruch, Deputy Assistant Director, Federal Trade Commission, Bureau of Competition, Washington, DC 20580, 202 326-3300

RIN: 3084-AA23

3756. GAMES OF CHANCE IN THE FOOD RETAILING AND GASOLINE INDUSTRIES RULE

Legal Authority: 15 USC 45 Federal Trade Commission Act; 15 USC 57(a) Federal Trade Commission Act

CFR Citation: 16 CFR 419

Abstract: The Commission's trade regulation rule concerning games of chance became effective on October 17, 1969. The rule establishes requirements for food and gasoline retailers in conducting and advertising games of chance by requiring disclosure of odds-of-winning and prize information in broadcast and print advertisements, as well as in point of sale information. In January, 1983, the Commission granted a temporary partial exemption to allow supermarkets and gas stations to advertise their games on radio and television without disclosing full information on prizes and odds-of-winning. In addition, the Commission

also published an advance notice of proposed rulemaking on whether to make the broadcast exemption permanent. Finally, the Commission has proposed to reduce the recordkeeping requirements of the rule from three years to one year in keeping with the goals of the Paperwork Reduction Act, and requested public comment on other possible areas where amendments to the rule may be appropriate. The rule benefits consumers by allowing contestants to enter games of chance with full knowledge of all material information to enable equal competition for (cont)

Timetable:

Action	Date	FR Cite
Promulgation of Original Rule	08/19/69	34 FR 13302
ANPRM	01/04/83	48 FR 265
Temporary Partial Exemption	01/10/83	48 FR 1046
NPRM	04/00/88	
Hearings Begin	06/00/88	
Staff Report	10/00/88	
Presiding Officer Report	11/00/88	

Small Entity: Undetermined

Additional Information: ABSTRACT CONT: prizes. The major costs to industry are the possible burdensomeness of the electronic media disclosure and recordkeeping provisions of the rule, both of which have been reconsidered. The Commission will issue an NPRM in early 1988 to consider amendments that would reduce the burden of the rule's recordkeeping and disclosure requirements.

Agency Contact: John M. Mendenhall, Federal Trade Commission, Cleveland Regional Office, Suite 500- Mall Building, 118 St. Clair Ave, Cleveland, Ohio 44114, 216 522-4207

RIN: 3084-AA24

3759. REVIEW OF CONTENT DISCLOSURE REQUIREMENTS FOR TEXTILE, WOOL, AND FUR PRODUCTS

Legal Authority: 15 USC 68b(d); 15 USC 70j; 15 USC 69f(b)

CFR Citation: 16 CFR 300, (Wool); 16 CFR 301, (Fur); 16 CFR 303, (Textile)

Abstract: The Wool Products Labeling Act of 1939 Requires all wool products to bear a label showing the percentage of wool, recycled wool, and non-wool fibers contained in the product and the name of the manufacturer or other distributor. The Textile Fiber Products Identification Act requires each household textile product to bear a label showing the percentage of each fiber contained in the product, using the appropriate generic name for the fiber, and the name of the manufacturer or distributor. Advertisements for textile products must also show the required information if any mention of fiber content is made. Both acts require disclosure of country of origin. The Fur Products Labeling Act requires that all furs and fur products be labeled, invoiced, and advertised to show the true name of the animal that produced the fur, whether the fur is used, dyed, or imported, and the name of the manufacturer or distributor. The three acts, as well as the Commission's rules implementing them, apply to manufacturers, distributors, and retailers of textile, wool, and fur products. (cont)

Timetable:

Action	Date	FR Cite
Begin Review	10/30/86	
NPRM -- Recordkeeping	03/00/88	
Final Action -- Recordkeeping	09/00/88	

Small Entity: Undetermined

Additional Information: ABSTRACT CONT: The Commission's staff has reviewed the information collection requirements contained in the several regulations under the three acts to determine whether the statutory objectives can be accomplished at a reduced public burden. As a result of this review, amendments to the rules' recordkeeping requirements will be proposed.

Agency Contact: James Mills, Federal Trade Commission, 202 326-3035

RIN: 3084-AA29

FEDERAL TRADE COMMISSION (FTC) — Final Rule Stage

3760. OPHTHALMIC PRACTICE RULES

Legal Authority: 15 USC 45 Federal Trade Commission Act; 15 USC 57(a) Federal Trade Commission Act

CFR Citation: 16 CFR 456, (Revision)

Abstract: In January, 1985, The Commission Published an NPRM seeking public comment on a proposed trade regulation rule that would have the effect of superseding certain state-imposed restrictions on the forms of practice and other business aspects of the delivery of eye care to consumers. The hearings have been completed and the reports required by the Commission's rules have been submitted. On February 10, 1988, the Commission voted to promulgate a trade regulation rule that would prohibit certain state restrictions on optometrists' commercial practices. The rule would remove four state restrictions, including those that ban optometrists from having offices in shopping centers. The Commission also voted to continue requiring eye doctors to give consumers their eyeglass prescriptions automatically. The recommended rule would also prohibit the following state restrictions: (1) limitations on the number of branch offices that optometrists may own or operate; (2) prohibitions on the practice of optometry in commercial locations, such as shopping malls; (3) prohibitions on employer-employee or other affiliations between optometrists and persons who are not (cont)

Timetable:

Action	Date	FR Cite
ANPRM	12/01/80	45 FR 79823
ANPRM Comment Period End	02/02/81	
NPRM	01/04/85	50 FR 598
NPRM Comment Period End	04/05/85	
Staff Report	11/17/86	51 FR 43217
Presiding Officer Report	11/26/86	51 FR 43217
Oral Presentations to the Commission	01/29/88	
Commission Decision to Issue Amended Rule	02/10/88	

Action	Date	FR Cite
Final Rule Published	05/00/88	
Final Rule Effective	11/00/88	

Small Entity: Undetermined

Additional Information: ABSTRACT CONT: optometrists; and (4) prohibitions on the use of trade names by optometrists. The Commission directed the staff to prepare final rule language and a statement of basis and purpose as soon as possible for final issuance.

Government Levels Affected: Local, State

Agency Contact: Renate Kinsheck, Federal Trade Commission, Division of Service Industry Practices, Bureau of Consumer Protection, Washington, DC 20580, 202 326-3287

RIN: 3084-AA03

3761. PROPRIETARY VOCATIONAL AND HOME STUDY SCHOOLS

Legal Authority: 15 USC 45 Federal Trade Commission Act; 15 USC 57(a) Federal Trade Commission Act

CFR Citation: 16 CFR 438, (New)

Abstract: In 1979, the Second Circuit Court of Appeals set aside the rule as originally issued by the Commission, citing problems with some of the remedies that the rule provided to purchasers of proprietary vocational training. Late in 1987, the Staff forwarded recommendations as to how the Commission should respond to the Court's decision. Alternatives include terminating the rule or issuing a revised rule. Alternatives to rulemaking include case-by-case enforcement, and FTC intervention before other state and federal agencies having jurisdiction over vocational schools to prevent deceptive practices. The rule may benefit consumers by enabling them to avoid expenditures on inappropriate courses and increasing the effectiveness of the vocational school industry in training and placing people in productive jobs. The cooling-off, track record disclosures, and refund components of the rule variations under consideration would impose real social costs on schools covered (cont)

Timetable:

Action	Date	FR Cite
NPRM	08/15/74	39 FR 29385
Final Action previously published	12/18/78	43 FR 60796
Rule set aside & remanded by Court	12/13/79	
New Staff Recommendation published	07/10/81	46 FR 35668
Commission Consideration of Staff Recommendations	03/00/88	
Interim Final Rule	05/00/88	

Small Entity: Yes

Additional Information: ABSTRACT CONT: including administrative costs associated with processing and collecting and disseminating information. Price increases may result from these costs as well as the possibility of paying out increased refunds. The rule should be most costly to schools that use unfair or deceptive practices to induce students to enroll in their courses. Schools that do not use these practices may not incur significant cost increases. The rule seeks to deter deceptive sales practices by requiring schools to provide material information to prospective students, and to provide students with contractual remedies which they can use to protect themselves when necessary. Most of the 6,000 schools that would be affected by the rule are small businesses.

Agency Contact: Walter Gross, Federal Trade Commission, Division of Service Industry Practices, Bureau of Consumer Protection, Washington, DC 20580, 202 326-3319

RIN: 3084-AA11

3762. RETAIL FOOD STORE ADVERTISING AND MARKETING PRACTICES

Legal Authority: 15 USC 41 et seq Federal Trade Commission Act

CFR Citation: 16 CFR 424

Abstract: The Commission's Rule on Retail Food Store Advertising and Marketing Practices states that it is a violation of Section 5 of the Federal Trade Commission Act for grocery stores to advertise products at a particular price unless such products are in stock and conspicuously and readily available for sale at the advertised price during the effective period of the advertisement. If a store runs out of advertised products, it is in violation of the rule even if the store noted the limitations on availability in its advertisement and even if the store provides rainchecks or substitute items. The rule is intended to benefit consumers by ensuring that advertised items are available, that advertising-induced purchasing trips are not fruitless, and that store prices accurately reflect the prices appearing in the ads. The rule may cause costs to be incurred in maintaining sufficient inventory to meet anticipated demand, and costs associated with the monitoring of price changes, changing marked prices, training employees to comply with the rule and keeping records to prove compliance. (cont)

Timetable:

Action	Date	FR Cite
Comment on Reg Flex Act Review	12/00/83	
ANPRM	12/10/84	49 FR 48059
ANPRM Comment Period End	02/08/85	
NPRM	10/24/85	50 FR 43224
NPRM Comment Period End	01/24/86	
Hearings End	04/02/86	
Rebuttal Period Ends	05/19/86	
Staff Report	12/17/86	
Presiding Officer Report	01/20/87	52 FR 2115
Comment Period on Reports	03/24/87	
Commission Consideration of Staff Recommendations	05/00/88	

Small Entity: Yes

Additional Information: ABSTRACT CONT: The rule may also discourage the advertising of certain kinds of products, such as perishables or goods that are available to the store only in limited supply. The staff concluded from a careful review of the rule's effects that the costs the rule imposes on consumers in the form of higher grocery prices significantly exceeds its benefits. Consequently, staff recommended that the rule be modified so that a store could comply with the

rule by clearly and adequately disclosing in its advertisements that there are limitations on availability, or by offering rainchecks or substitute items if supplies run out. The staff concluded that modifying the rule in this way will maintain any benefits it provides to consumers while substantially reducing its costs. The Commission published an NPRM in October, 1985. The hearings have been completed, and the Staff Report published. The staff has sent its recommendations to the Commission for its consideration.

Agency Contact: Walter Gross, Federal Trade Commission, Division of Service Industry Practices, Bureau of Consumer Protection, Washington, DC 20580, 202 326-3319

RIN: 3084-AA17

3763. APPLIANCE LABELING RULE – ENERGY POLICY AND CONSERVATION ACT

Legal Authority: 42 USC 6294 National Energy Conservation Policy Act; PL 94-163 Energy Policy and Conservation Act, Sec 324, 1975

CFR Citation: 16 CFR 305

Abstract: The Energy Policy and Conservation Act (EPCA) required the Commission to consider labeling rules for the disclosure of energy information, based on standard test procedures prescribed by the Department of Energy, for at least 13 categories of major household appliances. The Commission adopted a labeling rule for seven appliance categories: (1) refrigerators and refrigerator- freezers; (2) freezers; (3) dishwashers; (4) clothes washers; (5) water heaters; (6) room air conditioners; and (7) furnaces. The Commission exempted five other categories of appliances. In 1987, the Commission amended the rule to include central air conditioners and heat pumps and to include two new types of furnace under the rule's coverage. (cont)

Timetable:

Action	Date	FR Cite
NPRM (Air Conditioners)	08/11/80	45 FR 53340
NPRM (Furnaces)	07/24/81	46 FR 38105
Begin Reg Flex Act Review	04/08/85	50 FR 13820
Final Action (Air Cond. & Furn.)	12/10/87	52 FR 46888
End Reg Flex Review	03/00/88	
NPRM (comprehensive review)	03/00/88	
Final Action (comprehensive review)	11/00/88	

Small Entity: Undetermined

Additional Information: ABSTRACT CONT:

Since the Commission's rule implements the statutory directives in EPCA, most of the costs imposed on industry members may not be attributable to the rule. The rule applies mainly to manufacturers of household appliances, but does impose some burdens on distributors and retailers. Some of these entities may be small businesses pursuant to Section 610 of the Regulatory Flexibility Act. Therefore, the Commission has reviewed the rule to determine whether it has had a significant economic impact on a substantial number of small entities and, if so, whether the rule should be amended. As a result of this review, several amendments will be proposed. These amendments would make the disclosure scheme more effective for consumers while reducing the paperwork burden estimate by some 5%.

Agency Contact: James Mills, Federal Trade Commission, Division of Enforcement, Bureau of Consumer Protection, Washington, DC 20580, 202 326-3035

RIN: 3084-AA26

[FR Doc. 88-6848 Filed 04-22-88; 8:45 am]

BILLING CODE 6750-01-T

VOL 53 ISS 79 PT 2 APR 25 1988 UMI

federal register

Monday
April 25, 1988

Part LIII

Interstate Commerce Commission

Semiannual Regulatory Agenda

INTERSTATE COMMERCE COMMISSION (ICC)

INTERSTATE COMMERCE COMMISSION

49 CFR Ch. X

[Ex Parte No. 420 (Sub-No. 141)]

Semiannual Regulatory Agenda

AGENCY: Interstate Commerce Commission.

ACTION: Notice of semiannual regulatory agenda to be part of a Unified Agenda of Federal Regulations.

SUMMARY: Pursuant to OMB Bulletin No. 88-1, issued under section 6(b) of E.O. 12291 to implement the provisions of section 5 of the Executive Order concerning Regulatory Agendas, the Commission is publishing an agenda of (1) current and projected rulemakings, and (2) existing regulations being reviewed to determine whether to propose modifications through rulemaking. Listed below are the regulatory actions to be developed or reviewed during the next 12 months. Following each rule identified is a brief description of the rule including its purpose and legal basis.

FOR FURTHER INFORMATION CONTACT: A contact person is identified for each of the rules listed below.

SUPPLEMENTARY INFORMATION: A list of proceedings appears below containing information about subject areas in which the Commission is currently conducting rulemaking proceedings or may institute such proceedings in the near future. It also contains information about existing regulations being reviewed to determine whether to propose modifications through rulemaking.

The agenda also identifies regulations likely to have a significant economic impact on a substantial number of "small entities." Accordingly, this information will satisfy the requirements of section 602 of the Regulatory Flexibility Act, 5 U.S.C. 602.

Finally, this agenda will comprise part of a Unified Agenda of Federal Regulations compiled by the Office of Management and Budget which is to be published in a single issue of the **Federal Register** in April 1988. The purpose of the Unified Agenda is to provide the public with more comprehensive documentation of the Federal government's current regulatory plans, and to provide a systematic means of monitoring regulatory activity in each agency.

This notice is issued pursuant to 49 U.S.C. 10321 and 5 U.S.C. 553.

Decided: January 25, 1988.

By the Commission, Chairman Gradison, Vice Chairman Andre, Commissioners Sterrett, Lamboley, and Simmons.

Noreta R. McGee,
Secretary.

INTERSTATE COMMERCE COMMISSION (ICC) — Prerule Stage

3764. REVIEW OF CAR-HIRE REGULATION, EX PARTE NO. 334 (SUB-NO. 6)

Legal Authority: 49 USC 10321; 49 USC 10706; 49 USC 10734; 49 USC 11122; 5 USC 553

CFR Citation: 49 CFR 1033; 49 CFR 1036

Legal Deadline: None.

Abstract: The Commission is considering whether regulation of railroad car-hire charges (except charges for boxcars) should be retained, modified, or eliminated.

Timetable:

Action	Date	FR Cite
ANPRM	04/29/85	50 FR 16724
ANPRM Comment Period End	08/28/85	50 FR 27031
Supplemental Comment Period	02/07/86	50 FR 52972
Comments under Internal Review	00/00/00	

Small Entity: No

Additional Information: This proceeding embraces the proposals and record developed in Zone of Reasonableness for Car-Hire Charges, Ex Parte No. 334 (Sub-No. 5), RIN 3120-AA13. In a related proceeding, Ex Parte No. 334 (Sub-No. 7), Suspension of Car-Hire Updates, all further updates of car-hire charges have been suspended pending completion of Review of Car-Hire Regulation, Ex Parte No. 334 (Sub-No. 6). Notice of suspension appeared at 51 FR 263 on 01/03/86.

Agency Contact: Joseph H. Dettmar, Deputy Director, Rail Section, Interstate Commerce Commission, Room 2144, Washington, DC 20423, **202 275-7245**

RIN: 3120-AA13

3765. EXEMPTION OF DEMURRAGE FROM REGULATION, EX PARTE NO. 462

Significance: Agency Priority

Legal Authority: 49 USC 10505; 49 USC 10750; 49 USC 11121 to 11122; 5 USC 553

CFR Citation: 49 CFR 1033

Legal Deadline: None.

Abstract: The Commission is considering whether to exempt in whole or in part rail demurrage from regulation.

Timetable:

Action	Date	FR Cite
ANPRM	12/18/85	50 FR 51565
ANPRM Comment Period End	01/17/86	50 FR 51565
Extension of Public Comment Period	01/21/86	51 FR 2740
Comment Period End	03/18/86	51 FR 2740
Internal Review of Comments	00/00/00	

Small Entity: No

Agency Contact: Joseph H. Dettmar, Deputy Director, Rail Section, Interstate Commerce Commission, Room 2144, Washington, DC 20423, **202 275-7245**

RIN: 3120-AB35

3766. CLASS EXEMPTION FOR RAIL CONSTRUCTION, EX PARTE NO. 392 (SUB-NO. 3)

Significance: Agency Priority

Legal Authority: 49 USC 10321; 49 USC 10505; 49 USC 10901; 5 USC 553; 5 USC 559; 5 USC 704

CFR Citation: 49 CFR 1150.35

ICC **Prerule Stage**

Legal Deadline: None.

Abstract: The Commission is considering whether to exempt from regulation all applications under 49 USC 10901 for construction and operation of new lines of railroad.

Timetable:

Action	Date	FR Cite
ANPRM	06/02/87	52 FR 20632
ANPRM Comment Period End	07/02/87	52 FR 20632
Comments under evaluation	00/00/00	

Small Entity: No

Agency Contact: Joseph H. Dettmar, Deputy Director, Rail Section, Interstate Commerce Commission, Room 2144, Washington, DC 20423, 202 275-7278

RIN: 3120-AB50

INTERSTATE COMMERCE COMMISSION (ICC) — Proposed Rule Stage

3767. ADOPTION OF UNIFORM RAIL COSTING SYSTEM FOR DETERMINING VARIABLE COST FOR JURISDICTIONAL THRESHOLD AND SURCHARGE PURPOSES (URCS), EX PARTE NO. 431

Significance: Agency Priority

Legal Authority: 49 USC 10705(a); 49 USC 10709

CFR Citation: Not yet determined

Legal Deadline: None.

Abstract: Develops new cost methodology applicable to the rail industry as mandated in the 1976 4-R Act and the 1980 Staggers Rail Act.

Timetable:

Action	Date	FR Cite
NPRM	01/31/83	48 FR 4562
NPRM Comment Period End	09/28/83	48 FR 25290
Decision to hold in abeyance until further notice	11/13/84	49 FR 45080
Draft notice of study being prepared	00/00/00	

Small Entity: Yes

Additional Information: Ex Parte No. 431 has been held in abeyance pending the development of cost accounting principles by the Railroad Accounting Principles Board. These principles were published on September 1, 1987, and included a recommendation that further research be performed into certain identified subject areas of the Uniform Railroad Costing System before the system is implemented. This is to be done within 18 months of the Board's report.

Agency Contact: William T. Bono, Chief, Section of Cost Development, Interstate Commerce Commission, 12th & Constitution Avenue, NW, Washington, DC 20423, 202 275-7354

RIN: 3120-AA63

3768. ELECTRONIC FILING OF TARIFFS, EX PARTE NO. 444

Legal Authority: 49 USC 10321; 49 USC 10762; 49 USC 10708; 49 USC 10761; 5 USC 553

CFR Citation: 49 CFR 1312

Legal Deadline: None.

Abstract: Commission regulations require filing of tariffs in printed form. Regulations proposed which will permit carriers to file tariffs electronically. Comments on proposed rules sought from interested parties.

Timetable:

Action	Date	FR Cite
ANPRM	03/08/83	48 FR 18861
ANPRM Comment Period End	06/22/83	
NPRM	10/22/87	52 FR 39549
NPRM Comment Period End	02/19/88	52 FR 39549
Replies to comment due	03/10/88	53 FR 5022
Comments under evaluation	00/00/00	

Small Entity: Undetermined

Agency Contact: Charles E. Langyher, III, Chief, Section of Tariffs, Interstate Commerce Commission, Bureau of Traffic, Washington, DC 20423, 202 275-7739

RIN: 3120-AA99

3769. RAIL GENERAL EXEMPTION AUTHORITY - MISCELLANEOUS PROCESSED AND MANUFACTURED COMMODITIES

Legal Authority: 49 USC 10505

CFR Citation: 49 CFR 1039

Legal Deadline: None.

Abstract: 49 USC 10505 requires that the Commission exempt from regulation the movement by rail of traffic for which it finds continued regulation no longer necessary to serve the Nation's transportation policy objectives and to protect shippers from abuse of market power by the railroads. In examining the transportation characteristics and markets of various commodities moving by rail, there appear to be many products for which sufficient competition exists among transportation alternatives so that regulation may no longer be necessary. Exemption of such commodities should provide increased rate and service flexibility for railroads to meet shippers' needs and to compete more effectively for the subject traffic. Anticipated benefits include lower rates and improved service, at a possible "cost" of increased price instability and competition to alternative transport firms.

Timetable:

Action	Date	FR Cite
NPRM	05/00/88	

Small Entity: Undetermined

Agency Contact: Robert Lundy, Economist, Interstate Commerce Commission, Washington, DC 20423, 202 275-6853

RIN: 3120-AB08

3770. PRACTICES OF MOTOR COMMON CARRIERS OF HOUSEHOLD GOODS (REVISION OF OPERATIONAL REGULATIONS), EX PARTE NO. MC-19 (SUB-NO. 36)

Legal Authority: 49 USC 11110

CFR Citation: 49 CFR 1056

Legal Deadline: None.

Abstract: This proceeding involves a plenary review of the household goods

regulations in which the Commission invites public comment and proposals which would minimize the regulatory burden on movers to the maximum extent consistent with the protection of individual shippers.

Timetable:

Action	Date	FR Cite
ANPRM	10/26/83	48 FR 49561
ANPRM Comment Period End	01/12/84	48 FR 49561
NPRM	06/00/88	
NPRM Comment Period End	07/00/88	

Small Entity: Yes

Agency Contact: Patricia M. Schulze, Transportation Industry Analyst, Interstate Commerce Commission, OCCA, Washington, DC 20423, 202 275-7841

RIN: 3120-AB17

3771. RATE GUIDELINES-NON-COAL PROCEEDINGS, EX PARTE NO. 347 (SUB NO. 2)

Significance: Agency Priority

Legal Authority: 49 USC 10301; 49 USC 10321; 49 USC 10326; 49 USC 10701a; 49 USC 10704; 49 USC 10707; 49 USC 11701; 5 USC 553

CFR Citation: 00 CFR None

Legal Deadline: None.

Abstract: Proposal to adopt maximum rate reasonableness guidelines for captive non-coal commodities. Request for comments on alternative guidelines for small shippers including small coal shippers.

Timetable:

Action	Date	FR Cite
Notice of proposed policy stmt.	05/22/86	51 FR 18811
Notice of Intent to Participate due	06/02/86	
Comments due	07/21/86	
Begin Review	07/24/87	
End Review	09/30/87	
Comments under internal evaluation	04/00/88	

Small Entity: Undetermined

Agency Contact: Ronald S. Young, Director, Bureau of Accounts, Interstate Commerce Commission, 12th & Constitution Ave., NW, Washington, DC 20423, 202 275-7565

RIN: 3120-AB41

3772. CLASS EXEMPTION FOR THE CONSTRUCTION OF CONNECTING TRACKS UNDER 49 USC 10901, EX PARTE NO. 392 (SUB-NO. 2)

Significance: Agency Priority

Legal Authority: 5 USC 553; 49 USC 10321; 49 USC 10901; 49 USC 10505

CFR Citation: 49 CFR 1150

Legal Deadline: None.

Abstract: The Commission proposes to exempt from the prior approval requirements of 49 U.S.C. 10901, the construction of rail connecting tracks, except those construction projects that would result in a major market extension as defined at 49 CFR 1180.3(c).

Timetable:

Action	Date	FR Cite
NPRM	07/24/86	51 FR 26563
NPRM Comment Period End	08/25/86	
Internal review of comments	00/00/00	

Small Entity: No

Agency Contact: Joseph H. Dettmar, Deputy Director, Rail Section, Interstate Commerce Commission, Washington, DC 20423, 202 275-7245

RIN: 3120-AB43

3773. COST RATIO FOR RECYCLABLES - COMPLIANCE PROCEDURES, EX PARTE NO. 394 (SUB-NO. 3)

Significance: Agency Priority

Legal Authority: 49 USC 10321; 49 USC 10731; 5 USC 553

CFR Citation: 49 CFR 1134; 49 CFR 1135; 49 CFR 1145

Legal Deadline: None.

Abstract: The Commission is proposing rules that will establish procedures by which the Commission annually will (a) announce the revenue-to-variable cost ratio required by 49 USC 10731(e) to apply for the following calendar year; (b) monitor and take necessary action to ensure continued compliance by the railroads with 49 USC 10731(e); and (c) prohibit further rate increases, including those authorized under 49 USC 10707a(a)-(d), on recyclables having revenue/variable cost ratios in excess of the statutory cap level until such rates fall to below the cap level or the statutory cap level increases by Commission order.

Timetable:

Action	Date	FR Cite
ANPRM	06/16/86	51 FR 21780
Extension of time for filing comments on ANPRM; new date: 10/15/86	08/12/86	51 FR 28847
ANPRM Comment Period End	09/15/86	51 FR 21780
NPRM	04/23/87	52 FR 13482
NPRM Comment Period End	07/22/87	52 FR 13482
Comments under evaluation	00/00/00	

Small Entity: No

Agency Contact: Joseph H. Dettmar, Deputy Director, Rail Section, Interstate Commerce Commission, Room 2144, Washington, DC 20423, 202 275-7245

RIN: 3120-AB47

3774. ● ENVIRONMENTAL DOCUMENTATION IN RAIL PROCEEDINGS, EX PARTE NO. 55 (SUB-NO. 22A)

Significance: Agency Priority

Legal Authority: 49 USC 10321; 49 USC 10505; 49 USC 10903 to 10906; 16 USC 1247(d); 42 USC 4332; 5 USC 553; 5 USC 559

CFR Citation: 49 CFR 1105

Legal Deadline: None.

Abstract: The Commission is considering whether to modify its procedures to increase certain environmental notice periods and the information included in those notices. The modifications would also require service of environmental notices on designated parties, would substitute a revamped environmental notice for the former report requirement, and would reclassify some categories of actions for which environmental analyses are required.

Timetable:

Action	Date	FR Cite
NPRM	00/00/00	

Small Entity: No

Agency Contact: Joseph H. Dettmar, Deputy Director, Rail Section, Interstate

ICC **Proposed Rule Stage**

Commerce Commission, Room 2144, Washington, DC 20423, 202 275-7245

RIN: 3120-AB53

INTERSTATE COMMERCE COMMISSION (ICC) — Final Rule Stage

3775. REVISION OF ACCOUNTING AND REPORTING REQUIREMENTS FOR MOTOR CARRIERS OF PROPERTY, DOCKET NO. 38904

Significance: Agency Priority

Legal Authority: 49 USC 11142

CFR Citation: 49 CFR 1207; 49 CFR 1249

Legal Deadline: None.

Abstract: This rule would eliminate all the Commission's accounting and reporting rules for Class I and II common and contract motor carriers of property.

Timetable:

Action	Date	FR Cite
NPRM	02/21/85	50 FR 7201
NPRM Comment Period End	04/08/85	
Final Action	03/31/87	52 FR 10382
Final Action Stayed	05/01/87	
Action on Petition for Reconsideration	05/00/88	

Small Entity: No

Additional Information: Petitions filed on 38904 granted by the Commission; Decision decided May 1, 1987, stayed pending administrative review.

Agency Contact: Andrew J. Lee, Assistant Chief, Interstate Commerce Commission, Section of Accounting and Reporting, 12th & Constitution Avenue, NW, Washington, DC 20423, 202 275-7510

RIN: 3120-AA84

INTERSTATE COMMERCE COMMISSION (ICC) — Completed Actions

3776. TRANSFERS OF OPERATING RIGHTS, EX PARTE NO. MC-111 (SUB-NO. 1)

Significance: Agency Priority

CFR Citation: 49 CFR 1045.11; 49 CFR 1132; 49 CFR 1133; 49 CFR 1141; 49 CFR 1151

Completed:

Reason	Date	FR Cite
Final Action	02/18/88	53 FR 4851
Final Action Effective	03/02/88	

Small Entity: Yes

Agency Contact: Paul Schach 202 275-7977

RIN: 3120-AA81

3777. ● CLASS EXEMPTION FOR THE ACQUISITION AND OPERATION OF RAIL LINES UNDER 49 U.S.C. 10901, EX PARTE NO. 392 (SUB-NO. 1)

Significance: Agency Priority

Legal Authority: 49 USC 10321; 49 USC 10505; 49 USC 10901; 5 USC 553

CFR Citation: 49 CFR 1150.32 to 1150. 34

Legal Deadline: None.

Abstract: The Commission is considering modifying its class exemption procedures for acquisitions and operations under 49 U.S.C. 10901. Concern has been expressed that these procedures may not provide adequate notice and opportunity to comment under some circumstances. The Commission is requesting comments on whether to expand the 7-day effective date for notices of exemptions to 30 days and whether to expand the amount of information required to be submitted with the notice.

Timetable:

Action	Date	FR Cite
NPRM	10/06/87	52 FR 37350
NPRM Comment Period End	12/07/87	52 FR 42466
Interim Final Rule	02/17/88	53 FR 4625
Final Action	02/29/88	52 FR 5981

Small Entity: No

Agency Contact: Joseph H. Dettmar, Deputy Director, Rail Section, Interstate Commerce Commission, Room 2144, Washington, DC 20423, 202 275-7245

RIN: 3120-AB38

3778. EXEMPTION OF RAIL LINE ABANDONMENTS OR DISCONTINUANCES; OFFERS OF FINANCIAL ASSISTANCE, EX PARTE NO. 274 (SUB-NO. 16)

Significance: Agency Priority

CFR Citation: 49 CFR 1152.27; 49 CFR 1152.50; 49 CFR 1011.2; 49 CFR 1011.8; 49 CFR 1152.25

Completed:

Reason	Date	FR Cite
Final Action	12/22/87	52 FR 48440
Final Action Effective	01/21/88	52 FR 48440

Small Entity: No

Agency Contact: Joseph H. Dettmar 202 275-7245

RIN: 3120-AB49

3779. REVISION OF TARIFF REGULATIONS; COMPUTER DETERMINATION OF MILEAGES, NO. 37321 (SUB-NO. 1)

CFR Citation: 49 CFR 1312

Completed:

Reason	Date	FR Cite
Final Action Notice of final rule.	10/22/87	52 FR 39536

Reason	Date	FR Cite
Final Action Effective	11/21/87	52 FR 39536

Small Entity: No

Agency Contact: Lawrence Herzig 202 275-6887

RIN: 3120-AB51

[FR Doc. 88-5111 Filed 04-22-88; 8:45 am]

BILLING CODE 7035-01-T

VOL 53 ISS 79 PT 2 APR 25 1988 UMI

federal register

Monday
April 25, 1988

Part LIV

National Credit Union Administration

Semiannual Regulatory Agenda

BEST COPY AVAILABLE

NATIONAL CREDIT UNION ADMINISTRATION (NCUA)

NATIONAL CREDIT UNION ADMINISTRATION

12 CFR Ch. VII

Semiannual Agenda of Regulations

AGENCY: National Credit Union Administration (NCUA).

ACTION: Semiannual agenda of regulations.

SUMMARY: Pursuant to its ongoing policy of reviewing regulations, NCUA is publishing a list of current and projected rulemaking, reviews of existing regulations, and completed actions as of January 31, 1988. NCUA will also include this agenda in the "Unified Agenda of Federal Regulations."

DATE: This information is current as of January 31, 1988.

ADDRESS: National Credit Union Administration, 1776 G Street, NW., Washington, DC 20456.

FOR FURTHER INFORMATION CONTACT: On a particular regulation, contact the person(s) named in the listing for that regulation at the above address.

SUPPLEMENTARY INFORMATION: The purpose of this agenda is to enable credit unions and the public to follow regulatory development and review at NCUA and to enable interested parties to more effectively participate in that process. The agenda is divided into three parts: (1) Actions completed since the last agenda; (2) actions proposed but not completed; and (3) actions planned but not yet proposed to the NCUA Board. Interpretive Rulings and Policy Statements (IRPS) and Guidelines promulgated by NCUA are also included in the agenda.

The agenda is published pursuant to NCUA Interpretive Ruling and Policy Statement IRPS 87-2 ("Developing and Reviewing Government Regulations") (52 FR 35231). The Regulatory Flexibility Act (5 U.S.C. 601, *et seq.*) does not require independent executive agencies such as NCUA to publish their agenda, but NCUA has voluntarily decided to do so by including this agenda in the Office of Management and Budget's next publication of its "Unified Agenda of Federal Regulations."

Approved by the NCUA Board this 10th day of February, 1988.

Becky Baker,

Secretary of the Board.

Prerule Stage

Sequence Number	Title	Regulation Identifier Number
3780	Reserves	3133-AA12
3781	Nondiscrimination Requirements	3133-AA17
3782	Refund of Interest	3133-AA36
3783	Definitions	3133-AA47
3784	Loan Participation	3133-AA49
3785	Purchase, Sale and Pledge of Eligible Obligations	3133-AA50
3786	Federal Credit Unions Acting as Depositories and Financial Agents of the Government	3133-AA53
3787	Records Preservation Programs	3133-AA56
3788	Liquidations	3133-AA65
3789	Corporate Credit Unions	3133-AA68
3790	Fidelity Bond and Insurance Coverage for Federal Credit Unions	3133-AA79
3791	Share, Share Draft and Share Certificate Accounts	3133-AA82
3792	Liquidation Priorities and Adjudication of Claims	3133-AA84
3793	Investment and Deposit Activities	3133-AA87
3794	Regulations Required by the Competitive Equality Banking Act of 1987 ("CEBA")	3133-AA88
3795	Federal Credit Union Field of Membership and Chartering Policy	3133-AA89

Proposed Rule Stage

Sequence Number	Title	Regulation Identifier Number
3796	Rules of Board Procedure	3133-AA39
3797	Operational Procedures for Share Draft Programs; Federally Insured State Chartered Credit Unions	3133-AA42
3798	Other Applications	3133-AA44
3799	Compensation of Officials	3133-AA51
3800	Employee Responsibility and Conduct	3133-AA64
3801	Mortgage-Backed Obligations	3133-AA73

VOL 53 ISS 79 PT 2 AP 25 1988 UMI

NCUA

Completed Actions

Sequence Number	Title	Regulation Identifier Number
3802	Establishment of a Cash Fund	3133-AA34
3803	Community Development Revolving Loan Program for Credit Unions	3133-AA37
3804	Financial and Statistical and Other Reports	3133-AA46
3805	Borrowed Funds From Natural Persons	3133-AA54
3806	Proposed IRPS 87-1 – Request for Comments on Proposed Guidelines Regarding Bank Bribery Law	3133-AA77
3807	Conflict of Interest Provisions	3133-AA81
3808	Interpretive Ruling and Policy Statement 87-2 – Developing and Reviewing Government Regulations	3133-AA83
3809	Description of Office, Disclosure of Official Records – Availability of Information, Promulgation of Regulations	3133-AA85
3810	Credit Practices	3133-AA86

NATIONAL CREDIT UNION ADMINISTRATION (NCUA) — Prerule Stage

3780. RESERVES

Legal Authority: 12 USC 1762; 12 USC 1766; 12 USC 1789

CFR Citation: 12 CFR 702.1; 12 CFR 702.2

Legal Deadline: None.

Abstract: NCUA has asked for suggestions from the public on whether assets other than loans--primarily investments--should be provided for in reserves. No decision has been made on amending the regulations in this regard.

Timetable:

Action	Date	FR Cite
ANPRM	10/19/87	52 FR 38771
ANPRM Comment Period End	02/05/88	
Review of comments Summary of comments presented to NCUA Board	06/00/88	

Small Entity: No

Additional Information: ADDITIONAL AGENCY CONTACT: Michael Riley, Director, Office of Examination and Insurance, (202) 357-1065.

Agency Contact: Robert Fenner, General Counsel, National Credit Union Administration, Office of General Counsel, 1776 G Street, NW, Washington, DC 20456, 202 357-1030

RIN: 3133-AA12

3781. NONDISCRIMINATION REQUIREMENTS

Legal Authority: 12 USC 1757; 12 USC 1759; 12 USC 1766; 12 USC 1786; 12 USC 1789; 24 USC 3601 to 3610; 24 USC 1981; 15 USC 1601 et seq

CFR Citation: 12 CFR 701.31

Legal Deadline: None.

Abstract: This regulation sets forth prohibitions against discrimination by Federal credit unions in making real estate related loans and appraisals. The regulation also sets forth guidelines for compliance with the Fair Housing Act and court decisions rendered thereunder.

Timetable:

Action	Date	FR Cite
Proposal to NCUA Board Staff plans to present a proposal by September 1988	09/00/88	

Small Entity: No

Agency Contact: Hattie M. Ulan, Attorney, National Credit Union Administration, Office of General Counsel, 1776 G Street, NW, Washington, DC 20456, 202 357-1030

RIN: 3133-AA17

3782. REFUND OF INTEREST

Legal Authority: 12 USC 1766(a); 12 USC 1761b(9)

CFR Citation: 12 CFR 701.24

Legal Deadline: None.

Abstract: This Section provides the framework on FCU's making interest payment refunds to members who paid interest on loans during a dividend period. The NCUA Board has proposed simplifying and clarifying it.

Timetable:

Action	Date	FR Cite
NPRM Comment Period End	02/08/87	
NPRM	12/09/87	52 FR 46601
Summary to NCUA Board Staff will present summary of comments by June 1988	06/00/88	

Small Entity: No

Agency Contact: Hattie M. Ulan, Staff Attorney, National Credit Union Administration, Office of General Counsel, 1776 G Street, NW, Washington, DC 20456, 202 357-1030

RIN: 3133-AA36

3783. DEFINITIONS

Legal Authority: 12 USC 1752(5); 12 USC 1757(6); 12 USC 1766(a)

CFR Citation: 12 CFR 700.1

Legal Deadline: None.

Abstract: This Section sets forth basic definitions applicable in all NCUA regulations. The definitions will be reviewed for need, accuracy and clarity.

Timetable:

Action	Date	FR Cite
Staff Review Proposal will be presented to the NCUA Board by Sept. 1988	09/00/88	

Small Entity: No

Agency Contact: Hattie M. Ulan, Staff Attorney, National Credit Union Administration, Office of General Counsel, 1776 G Street, NW, Washington, DC 20456, 202 357-1030

RIN: 3133-AA47

3784. LOAN PARTICIPATION

Legal Authority: 12 USC 1757; 12 USC 1766; 12 USC 1789

CFR Citation: 12 CFR 701.22

Legal Deadline: None.

Abstract: This Section sets forth definitions and requirements for Federal credit unions wishing to participate in making loans with other credit unions, credit organizations, or financial organizations. The regulation will be reviewed to determine if the power can be expanded and simplified.

Timetable:

Action	Date	FR Cite
Staff review Staff plans to present a proposal to the Board by June 1988	05/00/88	

Small Entity: No

Agency Contact: Roy DeLoach, National Credit Union Administration, Office of General Counsel, 1776 G Street, NW, Washington, DC 20456, 202 357-1030

RIN: 3133-AA49

3785. PURCHASE, SALE AND PLEDGE OF ELIGIBLE OBLIGATIONS

Legal Authority: 12 USC 1757; 12 USC 1766; 12 USC 1789

CFR Citation: 12 CFR 701.23

Legal Deadline: None.

Abstract: This Section sets forth definitions and requirements for Federal credit unions that wish to purchase, sell, or pledge a loan or group of loans. The Section will be reviewed to determine whether it is needed, and whether it can be simplified.

Timetable:

Action	Date	FR Cite
Staff review Review continues. Proposal to the NCUA Board by September 1988	09/00/88	

Small Entity: No

Agency Contact: Roy DeLoach, National Credit Union Administration, Office of General Counsel, 1776 G Street, NW, Washington, DC 20456, 202 357-1030

RIN: 3133-AA50

3786. FEDERAL CREDIT UNIONS ACTING AS DEPOSITORIES AND FINANCIAL AGENTS OF THE GOVERNMENT

Legal Authority: 12 USC 1757; 12 USC 1766; 12 USC 1767; 12 USC 1787; 12 USC 1789

CFR Citation: 12 CFR 701.37-2

Legal Deadline: None.

Abstract: This Section sets out the authority for and requirements of federally-insured credit unions when they serve as depositories and financial agents of the United States Government. It also lists the functions credit unions may perform in this capacity.

Timetable:

Action	Date	FR Cite
Proposal to NCUA Board -- staff plans to present a proposal by September 1988	09/00/88	

Next Action Undetermined

Small Entity: No

Agency Contact: Julie Tamulaviz, Staff Attorney, National Credit Union Administration, Office of General Counsel, 1776 G Street, NW, Washington, DC 20456, 202 357-1030

RIN: 3133-AA53

3787. RECORDS PRESERVATION PROGRAMS

Legal Authority: 12 USC 1766; 12 USC 1789

CFR Citation: 12 CFR 749

Legal Deadline: None.

Abstract: This Part mandates that Federal credit unions maintain a records preservation program. It sets forth program implementation procedures and also lists what records must be stored. Staff is reviewing this Part to determine whether it can be deleted, updated, or simplified.

Timetable:

Action	Date	FR Cite
Staff review -- a proposal will be presented to the Board by September 1988	09/00/88	

Small Entity: No

Agency Contact: Hattie M. Ulan, Staff Attorney, National Credit Union Administration, Office of General Counsel, 1776 G Street, NW, Washington, DC 20456, 202 357-1030

RIN: 3133-AA56

3788. LIQUIDATIONS

Legal Authority: 12 USC 1766(a); 12 USC 1786; 12 USC 1789

CFR Citation: Not yet determined

Legal Deadline: None.

Abstract: The present Involuntary Liquidation Manual is outdated. A new draft Involuntary Liquidation Manual has been written and is being circulated for comments within the Agency.

Timetable:

Action	Date	FR Cite
Staff review Review continues; a prop. to NCUA Board is expected in 1988	09/00/88	

Small Entity: No

Agency Contact: Timothy Hornbrook/Allan Meltzer, Director of Risk Management/Assistant General Counsel, National Credit Union Administration, Office of Examination

and Insurance, 1776 G Street, NW, Washington, DC 20456, 202 357-1065

RIN: 3133-AA65

3789. CORPORATE CREDIT UNIONS

Legal Authority: 12 USC 1762; 12 USC 1766(a); 12 USC 1781; 12 USC 1789

CFR Citation: 12 CFR 704

Legal Deadline: None.

Abstract: A task force has undertaken a comprehensive review of NCUA's role in the corporate credit union system.

Timetable:

Action	Date	FR Cite
Staff review Review continues	06/00/88	

Small Entity: No

Agency Contact: D. Michael Riley or Nicholas Veghts, Office of Examination and Insurance, National Credit Union Administration, 1776 G Street, NW, Washington, DC 20456, 202 357-1065

RIN: 3133-AA68

3790. FIDELITY BOND AND INSURANCE COVERAGE FOR FEDERAL CREDIT UNIONS

Legal Authority: 12 USC 1761a; 12 USC 1761b; 12 USC 1766(s); 12 USC 1766(h); 12 USC 1789(A)(11)

CFR Citation: 12 CFR 701.20

Legal Deadline: None.

Abstract: NCUA is proposing to revise and update 12 C.F.R. 701.20, and to conform the Section to provisions of the Competitive Equality Banking Act of 1987.

Timetable:

Action	Date	FR Cite
NPRM	11/12/87	52 FR 43340
NPRM Comment Period End	01/08/88	52 FR 43340
Proposal to NCUA Board -- Staff plans to present a proposal by June 1988	06/00/88	

Small Entity: No

Agency Contact: Allan Meltzer, Assistant General Counsel, National Credit Union Administration, 1776 G Street, NW, Washington, DC 20456, 202 357-1030

RIN: 3133-AA79

3791. ● SHARE, SHARE DRAFT AND SHARE CERTIFICATE ACCOUNTS

Legal Authority: 12 USC 1752; 12 USC 1757; 12 USC 1759; 12 USC 1766; 12 USC 1782; 12 USC 1789

CFR Citation: 12 CFR 701.35

Legal Deadline: None.

Abstract: An FCU's payment of dividends on share, share draft and share certificate accounts is limited to available earnings and cannot be guaranteed in advance. In light of problems which NCUA has encountered with certain liquidated credit unions, staff is considering recommending to the Board that a statement to this effect be included in NCUA's share account regulations.

Timetable:

Action	Date	FR Cite
Next Action Undetermined		

Small Entity: No

Agency Contact: Roy DeLoach, Staff Attorney, National Credit Union Administration, Office of General Counsel, 1776 G Street, NW, Washington, DC 20456, 202 357-1030

RIN: 3133-AA82

3792. ● LIQUIDATION PRIORITIES AND ADJUDICATION OF CLAIMS

Legal Authority: 12 USC 1787

CFR Citation: 00 CFR None

Legal Deadline: None.

Abstract: Staff is studying two liquidation issues: priority of payout and the administrative procedure for adjudicating creditor claims.

Timetable:

Action	Date	FR Cite
Next Action Undetermined		

Small Entity: No

Agency Contact: Allan Meltzer, Assistant General Counsel, National Credit Union Administration, Office of General Counsel, 1776 G Street, NW, Washington, DC 20456, 202 357-1030

RIN: 3133-AA84

3793. ● INVESTMENT AND DEPOSIT ACTIVITIES

Legal Authority: 12 USC 1757; 12 USC 1766

CFR Citation: 12 CFR 703

Legal Deadline: None.

Abstract: NCUA staff is undertaking a comprehensive review of FCU investment authority in light of changes in the marketplace, e.g., increased availability of mutual funds geared primarily toward FCU's new instruments based on permissible FCU investments, new investment structures, statutory expansions of FCU investment authority.

Timetable:

Action	Date	FR Cite
Staff Review -- Staff plans to present a prop. to the Board by Sept. 1988	09/00/88	

Small Entity: No

Agency Contact: Timothy McCollum, Assistant General Counsel, National Credit Union Administration, Office of General Counsel, 1776 G Street, NW, Washington, DC 20456, 202 357-1030

RIN: 3133-AA87

3794. ● REGULATIONS REQUIRED BY THE COMPETITIVE EQUALITY BANKING ACT OF 1987 ("CEBA")

Legal Authority: 12 USC 1766(a); PL 100-86

CFR Citation: 00 CFR None

Legal Deadline: None.

Abstract: CEBA amended the Federal Credit Union Act in numerous ways which will require implementing or conforming amendments; permitting second mortgage and home improvement loans in excess of 15 years; permitting FCU's to pledge assets to secure deposits made by public units; clarifying NCUA's prohibition and removal providing guidance on use of conservatorship authority.

Timetable:

Action	Date	FR Cite
Next Action Undetermined		

Small Entity: No

Agency Contact: Timothy P. McCollum, Assistant General Counsel, National Credit Union Administration,

NCUA **Prerule Stage**

Office of General Counsel, 1776 G Street, NW, Washington, DC 20456, 202 357-1030

RIN: 3133-AA88

3795. ● FEDERAL CREDIT UNION FIELD OF MEMBERSHIP AND CHARTERING POLICY

Legal Authority: 12 USC 1752; 12 USC 1753

CFR Citation: 00 CFR None

Legal Deadline: None.

Abstract: The NCUA Board is conducting a comprehensive review of its policies on chartering new Federal credit unions and amendments to the charters of existing Federal credit unions, so as to ensure NCUA policy is implemented fairly and consistently.

Timetable:

Action	Date	FR Cite
Begin Review	08/29/87	52 FR 36429

Next Action Undetermined

Small Entity: No

Agency Contact: Hattie M. Ulan, Staff Attorney, National Credit Union Administration, Office of General Counsel, 1776 G Street, NW, Washington, DC 20456, 202 357-1030

RIN: 3133-AA89

NATIONAL CREDIT UNION ADMINISTRATION (NCUA) **Proposed Rule Stage**

3796. RULES OF BOARD PROCEDURE

Legal Authority: 12 USC 1752a(d)

CFR Citation: 12 CFR 791

Legal Deadline: None.

Abstract: This regulation sets forth the rules of procedure governing how the NCUA Board will conduct its business. Staff has been studying ways to clarify and simplify these procedures.

Timetable:

Action	Date	FR Cite
NPRM	02/19/88	53 FR 4996
NPRM Comment Period End	05/09/88	
Proposal to NCUA Board -- Staff plans to present a proposal by June 1988	06/00/88	

Small Entity: No

Agency Contact: Rosemary Brady, Assistant Executive Director, National Credit Union Administration, 1776 G Street, NW, Washington, DC 20456, 202 357-1100

RIN: 3133-AA39

3797. OPERATIONAL PROCEDURES FOR SHARE DRAFT PROGRAMS; FEDERALLY INSURED STATE CHARTERED CREDIT UNIONS

Legal Authority: 12 USC 1766(a); 12 USC 1785(f)(1)

CFR Citation: 12 CFR 761

Legal Deadline: None.

Abstract: The Part provides the framework for federally-insured state-chartered credit unions' offering share draft accounts. It may be unnecessary.

Timetable:

Action	Date	FR Cite
NPRM	02/10/88	
NPRM Comment Period End	05/09/88	
Proposal to NCUA Board Staff will present a proposal by May 1988	05/00/88	

Small Entity: No

Agency Contact: Hattie M. Ulan, Staff Attorney, National Credit Union Administration, Office of General Counsel, 1776 G Street, NW, Washington, DC 20456, 202 357-1030

RIN: 3133-AA42

3798. OTHER APPLICATIONS

Legal Authority: 12 USC 1766(a)

CFR Citation: 12 CFR 701.5

Legal Deadline: None.

Abstract: This Section specifies the manner in which applications, requests, or submittals to NCUA, not addressed in other sections of the NCUA Regulations, are to be presented to the Agency. NCUA has proposed to repeal 12 C.F.R. 701.5 as unnecessary.

Timetable:

Action	Date	FR Cite
NPRM	12/11/87	52 FR 47014
NPRM Comment Period End	02/09/88	52 FR 47014
Proposal to NCUA Board Staff will present a proposal by June 1988.	06/09/88	

Small Entity: No

Agency Contact: Julie Tamulevix, Staff Attorney, National Credit Union Administration, Office of General Counsel, 1776 G Street, NW, Washington, DC 20456, 202 357-1030

RIN: 3133-AA44

3799. COMPENSATION OF OFFICIALS

Legal Authority: 12 USC 1761; 12 USC 1761a; 12 USC 1766; 12 USC 1789

CFR Citation: 12 CFR 701.33

Legal Deadline: None.

Abstract: Staff is studying ways to minimize FCU officials having to suffer loss or risk law suit as a result of serving in that capacity.

Timetable:

Action	Date	FR Cite
NPRM	02/10/88	
NPRM Comment Period End	05/09/88	
Proposal to the NCUA Board Staff plans to present a proposal to the Board by May 1988	05/00/88	

Small Entity: No

Agency Contact: Roy DeLoach, Staff Attorney, National Credit Union Administration, Office of General Counsel, 1776 G Street, NW, Washington, DC 20456, 202 357-1030

RIN: 3133-AA51

3800. EMPLOYEE RESPONSIBILITY AND CONDUCT

Legal Authority: EO 11222; 5 CFR 735.104; 12 USC 1766

CFR Citation: 12 CFR 792

Legal Deadline: None.

Abstract: The primary purpose of this change would be to collect in one place the rules governing NCUA employees. Legal and regulatory requirements concerning NCUA employee ethics are currently found in Part 792 of the NCUA Regulations, the NCUA Examiner's Guide, the Office of Personnel Management's Regulations, and various Federal statutes. This rule would not affect credit unions.

Timetable:

Action	Date	FR Cite
NPRM	10/20/87	52 FR 38926
NPRM Comment Period End	12/21/87	52 FR 38926
Proposal to the NCUA Board Staff will present a proposal by June 1988	06/00/88	

Small Entity: No

Additional Information: Additional Agency Contact: Rosemary Brady, Assistant Executive Director, Office of the Board (202) 357-1100.

Agency Contact: James J. Engel, Deputy General Counsel, National Credit Union Administration, Office of General Counsel, 1776 G Street, NW, Washington, DC 20456, 202 357-1030

RIN: 3133-AA64

3801. MORTGAGE-BACKED OBLIGATIONS

Legal Authority: 12 USC 1757(15); 12 USC 1766; 12 USC 1789

CFR Citation: Not applicable

Legal Deadline: None.

Abstract: Pursuant to Section 107(15) of the FCU Act (12 USC 1757(15)), the NCUA Board is considering establishing implementing guidelines for FCU investment in mortgage-backed and mortgage-related obligations.

Timetable:

Action	Date	FR Cite
ANPRM	07/27/87	52 FR 27994
NPRM	07/27/87	52 FR 27994
NPRM Comment Period End	09/18/87	52 FR 27994
Proposal to NCUA Board Staff plans to present a proposal by May 1988	05/00/88	

Small Entity: No

Additional Information: Additional contact: Steven R. Bisker, Assistant General Counsel, telephone (202) 357-1030.

Agency Contact: D. Michael Riley, Director, Office of Examination and Insurance, National Credit Union Administration, 1776 G Street, NW, Washington, DC 20456, 202 357-1065

RIN: 3133-AA73

NATIONAL CREDIT UNION ADMINISTRATION (NCUA) — Completed Actions

3802. ESTABLISHMENT OF A CASH FUND

Legal Authority: 12 USC 1757(12)

CFR Citation: 12 CFR 701.10

Legal Deadline: None.

Abstract: This section sets forth FCU authority for cashing checks and money orders. NCUA has proposed to repeal Section 701.10 as unnecessary and to amend Section 748.0(b) to include the crime of embezzlement.

Timetable:

Action	Date	FR Cite
NPRM	11/12/87	52 FR 43342
NPRM Comment Period End	01/11/88	
Final Action Effective	02/10/88	
Final Action	02/18/88	53 FR 4844

Small Entity: No

Agency Contact: Roy DeLoach, National Credit Union Administration, Office of General Counsel, 1776 G Street, NW, Washington, DC 20456, 202 357-1030

RIN: 3133-AA34

3803. COMMUNITY DEVELOPMENT REVOLVING LOAN PROGRAM FOR CREDIT UNIONS

Legal Authority: 12 USC 1766; 42 USC 9822 (note); 12 USC 1759; 12 USC 1766(f); 42 USC 2981; 42 USC 2985(e)

CFR Citation: 12 CFR 705

Legal Deadline: None.

Abstract: This Part was required by a statutory transfer of this program to NCUA from the Department of Health and Human Services.

Timetable:

Action	Date	FR Cite
NPRM	04/09/87	52 FR 12427
NPRM Comment Period End	06/19/87	52 FR 12427
Final Action	09/16/87	52 FR 34891
Final Action Effective	09/16/87	52 FR 34891

Small Entity: No

Additional Information: Anticipate final rule by October 1, 1987.

Agency Contact: Hattie M. Ulan, Staff Attorney, National Credit Union Administration, Office of General Counsel, 1776 G Street, NW, Washington, DC 20456, 202 357-1030

RIN: 3133-AA37

3804. FINANCIAL AND STATISTICAL AND OTHER REPORTS

Legal Authority: 12 USC 1756; 12 USC 1766; 12 USC 1782; 12 USC 1789

CFR Citation: 12 CFR 701.13

Legal Deadline: None.

Abstract: The NCUA Board repealed this rule, which required Federal credit unions to file semiannual call reports and any other reports required by the NCUA. These same requirements are presently found in 741.10 of NCUA regulations.

Timetable:

Action	Date	FR Cite
Final Action	11/12/87	52 FR 43318
Final Action Effective	11/12/87	52 FR 43318

Small Entity: No

Agency Contact: Hattie M. Ulan, Staff Attorney, National Credit Union Administration, Office of General Counsel, 1776 G Street, NW, Washington, DC 20456, 202 357-1030

RIN: 3133-AA48

3805. BORROWED FUNDS FROM NATURAL PERSONS

Legal Authority: 12 USC 1757; 12 USC 1766; 12 USC 1789

CFR Citation: 12 CFR 701.38

Legal Deadline: None.

Abstract: The NCUA Board reviewed this regulation and determined that no change was needed.

Timetable:

Action	Date	FR Cite
Final Action	12/09/87	52 FR 46385
Final Action Effective	12/09/87	52 FR 46385

Small Entity: No

Agency Contact: Julie Tamuleviz, Staff Attorney, National Credit Union Administration, Office of General Counsel, 1776 G Street, NW, Washington, DC 20456, 202 357-1030

RIN: 3133-AA54

3806. PROPOSED IRPS 87-1 – REQUEST FOR COMMENTS ON PROPOSED GUIDELINES REGARDING BANK BRIBERY LAW

Legal Authority: 18 USC 215

CFR Citation: 00 CFR None

Legal Deadline: None.

Abstract: The Bank Bribery Amendments Act of 1985 requires that Federal agencies with responsibility for regulating financial institutions establish joint guidelines to assist financial institution officials in complying with the law. The final IRPS is a modified version of the guidelines developed by the Interagency Bank Fraud Group.

Timetable:

Action	Date	FR Cite
Final guidelines are expected by	09/30/87	52 FR 23089
Final Action	10/14/87	52 FR 38821
Final Action Effective	10/14/87	52 FR 38821

Small Entity: No

Agency Contact: John K. Ianno, Staff Attorney, Office of General Counsel, National Credit Union Administration, 1776 G Street, NW, Washington, DC 20456, 202 357-1030

RIN: 3133-AA77

3807. CONFLICT OF INTEREST PROVISIONS

Legal Authority: 12 USC 1766; 12 USC 1789

CFR Citation: 12 CFR 701.27; 12 CFR 701.38; 12 CFR 703.4; 12 CFR 721.2

Legal Deadline: None.

Abstract: This amendment was primarily designed to make the definition of the term "immediate family members" identical wherever it appears in NCUA's Rules and Regulations. The amendment also added a new clarifying definition, "senior management employee," to NCUA regulations.

Timetable:

Action	Date	FR Cite
NPRM	07/29/87	52 FR 28274
NPRM Comment Period End	09/21/87	
Final Action	11/13/87	52 FR 43568
Final Action Effective	11/13/87	52 FR 43568

Small Entity: No

Agency Contact: James J. Engel, Deputy General Counsel, National Credit Union Administration, 1776 G Street, NW, Washington, DC 20456, 202 357-1030

RIN: 3133-AA81

3808. ● INTERPRETIVE RULING AND POLICY STATEMENT 87-2 – DEVELOPING AND REVIEWING GOVERNMENT REGULATIONS

CFR Citation: 00 CFR None

Legal Deadline: None.

Abstract: This policy statement sets forth NCUA's procedures for developing and reviewing regulations. These procedures are intended to insure compliance with the Regulatory Flexibility Act of 1980 and the Paperwork Reduction Act of 1980, and reflect the NCUA Board's policy of minimizing the regulatory burden on FCU's. IRPS 87-2 supersedes IRPS 81-4.

Timetable:

Action	Date	FR Cite
Final Action	06/18/87	52 FR 35231

Small Entity: No

Agency Contact: Julie Tamuleviz, Staff Attorney, National Credit Union Administration, Office of General Counsel, 1776 G Street, NW, Washington, DC 20456, 202 357-1030

RIN: 3133-AA83

3809. ● DESCRIPTION OF OFFICE, DISCLOSURE OF OFFICIAL RECORDS – AVAILABILITY OF INFORMATION, PROMULGATION OF REGULATIONS

Legal Authority: 12 USC 1766; 12 USC 1789; 5 USC 552

CFR Citation: 12 CFR 790

Legal Deadline: None.

Abstract: These amendments were required by recent amendments to the Freedom of Information Act concerning Exemption 7 of the FOIA (relating to law enforcement records), and the provisions of the FOIA concerning fees and fee waivers.

Timetable:

Action	Date	FR Cite
Final Action	07/27/87	52 FR 27985

Small Entity: No

Agency Contact: Hattie M. Ulan, Staff Attorney, National Credit Union Administration, Office of General Counsel, 1776 G Street, NW, Washington, DC 20456, 202 357-1030

RIN: 3133-AA85

3810. ● CREDIT PRACTICES

Legal Authority: 15 USC 57a(f)

CFR Citation: 12 CFR 706

Legal Deadline: None.

Abstract: The Credit Practices Rule was necessary because the Competitive Equality Banking Act of 1987, Pub. L. 100-86, amended the Trade Commission Act to transfer to NCUA from the Federal Trade Commission the power to

VOL 53 ISS 79 PT 2 AP 25 1988 UMI

declare activities of FCU's unfair or deceptive trade practices. Part 706 is substantially similar to the Federal Trade Commission's rule, 16 C.F.R. 444, which Federal credit unions have complied with since 1985.

Timetable:

Action	Date	FR Cite
Final Action	12/09/87	52 FR 46385

Small Entity: Undetermined

Agency Contact: Julie Tamulevix, Staff Attorney, National Credit Union Administration, Office of General Counsel, 1776 G Street, NW, Washington, DC 20456, 202 357-1030

RIN: 3133-AA86

[FR Doc. 88-5112 Filed 04-22-88; 8:45 am]

BILLING CODE 7535-01-T

VOL
53

ISS
79

PT
2

AP
25

1988

UMI

federal register

Monday
April 25, 1988

Part LV

Nuclear Regulatory Commission

Semiannual Regulatory Agenda

NUCLEAR REGULATORY COMMISSION (NRC)

NUCLEAR REGULATORY COMMISSION

10 CFR Ch. I

Regulatory Agenda

AGENCY: Nuclear Regulatory Commission.

ACTION: Semiannual publication of NRC regulatory agenda.

SUMMARY: The Nuclear Regulatory Commission (NRC) is publishing its semiannual Regulatory Agenda in accordance with Pub. L. 96-354, "the Regulatory Flexibility Act," and Executive Order 12291, "Federal Regulations." The agenda is a compilation of all rules on which the NRC has recently completed action or has proposed, or is considering action. This issuance updates any action occurring on rules since publication of the last semiannual agenda on October 26, 1987.

ADDRESSES: Comments on any rule in the agenda may be sent to the Secretary of the Commission, U.S. Nuclear Regulatory Commission, Washington, DC 20555, Attention: Docketing and Service Branch. Comments may also be hand delivered to Room 1131, 1717 H Street, NW., Washington, DC, between 7:30 a.m. and 4:15 p.m. Comments received on rules for which the comment period has closed will be considered if it is practical to do so, but assurance of consideration cannot be given except as to comments received on or before the closure dates specified in the agenda.

The agenda and any comments received on any rule listed in the agenda are available for public inspection, and copying at a cost of six cents per page, at the Nuclear Regulatory Commission's Public Document Room, 1717 H Street, NW., Washington, DC 20555.

FOR FURTHER INFORMATION CONTACT: For further information concerning NRC rulemaking procedures or the status of any rule listed in this agenda, contact David L. Meyer, Chief, Rules and Procedures Branch, Division of Rules and Records, Office of Administration and Resources Management, U.S. Nuclear Regulatory Commission, Washington, DC 20555, Telephone (301) 492-7086. Persons outside the Washington, DC metropolitan area may call toll-free: (800) 368-5642. For further information on the substantive content of any rule listed in the agenda, contact the individual listed under the heading "Agency Contact" for that rule.

SUPPLEMENTARY INFORMATION: Although publication of the agenda is only required semiannually in April and October, the NRC has chosen to update and publish its agenda each quarter. However, the information contained in this semiannual publication is updated to reflect any action which has occurred on rules since publication of the last NRC semiannual agenda on October 26, 1987.

Organization of the Agenda

Rules in this agenda are divided into four groups: (1) The Prerule Stage, which includes all rules which will be published in the **Federal Register** as advance notices of proposed rulemaking, (2) the Proposed Rule Stage, which includes all unpublished rules and published advance notices of proposed rulemaking on which the NRC expects to take action, (3) Final Rule Stage, which includes all rules which have been published in the **Federal Register** as proposed rules and on which the NRC plans to take final action, and (4) Completed Actions, which include all rules which have been finally promulgated or withdrawn since publication of the last semiannual agenda.

Within each group, the rules are ordered from lowest to highest 10 CFR part, and when more than one rule appears under the same part, the rules are arranged within the part according to the date of most recent publication. If a rule contains changes to more than one 10 CFR part, the rule is listed under the lowest affected part.

The information in this agenda has been updated through February 29, 1988. The date included under the heading "timetable," for next scheduled action indicates the date the rule is scheduled to be published in the **Federal Register**. The date is considered tentative and is not binding on the Commission or its staff. This Regulatory Agenda is intended to provide increased notice and opportunity for public participation in the NRC rulemaking process. The NRC may, however, consider or act on any rulemaking even if it is not included in the Regulatory Agenda.

The NRC agenda lists 64 rulemaking actions. Of these, no rulemaking item is considered to be priority or major as defined in section 1(b) of Executive Order 12291.

Dated at Bethesda, Maryland this 22nd day of February 1988.

For the Nuclear Regulatory Commission.

Donnie H. Grimsley,

Director, Division of Rules and Records, Office of Administration and Resources Management.

Prerule Stage

Sequence Number	Title	Regulation Identifier Number
3811	Radioactive Waste Below Regulatory Concern; Generic Rulemaking	3150-AC35

NRC

Proposed Rule Stage

Sequence Number	Title	Regulation Identifier Number
3812	Comprehensive Quality Assurance in Medical Use and a Standard of Care	3150-AC42
3813	Degree Requirement for Senior Operators at Nuclear Power Plants	3150-AC26
3814	+ Definition of High-Level Radioactive Waste (HLW) in 10 CFR Part 60	3150-AB89
3815	Enforcement of Nondiscrimination on the Basis of Handicap in Federal Assisted Programs	3150-AC64
3816	Revision of Definition of Meeting	3150-AC78
3817	+ Criteria for Licensing the Long-Term Custody and Maintenance of Uranium Mill Tailings Sites	3150-AC56
3818	Amendment to Clarify Equivalent Control Capacity for Standby Liquid Control Systems (SLCS)	3150-AC72
3819	Licensee Announcement of Inspectors	3150-AC73
3820	Early Site Permits; Standard Design Certifications; and Combined Licenses for Nuclear Power Reactors	3150-AC61
3821	+ Elimination of Inconsistencies between NRC Regulations and EPA Standards	3150-AC03
3822	Revised Rules of Practice for Domestic Licensing Proceedings	3150-AB66
3823	Availability of Official Records	3150-AC07
3824	Negotiated Rulemaking on the Submission and Management of Records and Documents Related to the Licensing of a Geologic Repository for the Disposal of High Level Waste	3150-AC44
3825	Storage of Spent Nuclear Fuel in NRC Approved Casks at Civilian Nuclear Power Reactor Sites	3150-AC76
3826	+ Deletion of Part 11 Requirements for Renewal of "R" Clearances	3150-AC58
3827	+ Residual Radioactive Contamination Limits for Decommissioning	3150-AC21
3828	+ Safety Related and Important to Safety in 10 CFR Part 50	3150-AB88
3829	Transportation Regulations: Compatibility With the International Atomic Energy Agency	3150-AC41
3830	Regulation of Uranium Enrichment Facilities	3150-AC71

Final Rule Stage

Sequence Number	Title	Regulation Identifier Number
3831	Issuance or Amendment of Power Reactor License or Permit Following Initial Decision	3150-AC15
3832	Revision to Ex Parte and Separation of Functions Rules Applicable to Formal Adjudicatory Proceedings	3150-AC18
3833	Rules of Practice for Domestic Licensing Proceedings-- Procedural Changes in Hearing Process	3150-AC22
3834	+ General Requirements for Decommissioning Nuclear Facilities	3150-AA40
3835	Procedures Involving the Equal Access to Justice Act: Implementation	3150-AA01
3836	+ Modifications to the NRC Hearing Process (Limited Interrogatories and Factual Basis for Contentions)	3150-AA05
3837	+ Licensing Requirements for the Storage of Spent Fuel and High- Level Radioactive Waste	3150-AB70
3838	Retention Periods for Records	3150-AB43
3839	+ Standards for Protection Against Radiation	3150-AA38
3840	+ Emergency Preparedness for Fuel Cycle and Other Radioactive Materials Licensees	3150-AA41
3841	+ Informal Hearing Procedures for Materials Licenses Proceedings	3150-AB83
3842	Controls of Aerosols and Gases	3150-AC60
3843	Basic Quality Assurance in Radiation Therapy	3150-AC65
3844	Acceptance Criteria for Emergency Core Cooling System (ECCS) for Light Water Nuclear Power Reactors	3150-AA44
3845	+ Primary Reactor Containment Leakage Testing for Water-Cooled Power Reactors	3150-AA86
3846	+ Station Blackout	3150-AB38
3847	+ Codes and Standards for Nuclear Power Plants	3150-AC29
3848	Backfit Requirement for Senior Operators at Nuclear Power Plants	3150-AC63
3849	+ Table S-3, Addition of Radon-222 and Technetium-99 Radiation Values and Addition of Appendix B, "Table S-3 Explanatory Analysis"	3150-AA31
3850	+ Part 51; Conforming Amendments	3150-AC04
3851	+ Criteria and Procedures for Emergency Access to Non-federal and Regional Low-Level Waste Disposal Facilities	3150-AC24
3852	Safeguards Requirements for Fuel Facilities Possessing Formula Quantities of Strategic Special Nuclear Material	3150-AC62
3853	+ Criteria for an Extraordinary Nuclear Occurrence	3150-AB01
3854	Disposal of Low-Level Radioactively Contaminated Waste Oil from Nuclear Power Plants	3150-AC14
3855	+ Proposed Revisions to the Criteria and Procedures for the Reporting of Defects and Noncompliance	3150-AA89
3856	+ Safety Requirements for Industrial Radiographic Exposure Devices	3150-AC12
3857	Diagnostic Misadministration Report Form	3150-AC69
3858	Alternative Methods for Leakage Rate Testing	3150-AC54
3859	Amendment to Assign NRC Sole Authority for Approving Onsite Low-Level Waste Disposal	3150-AC57

NRC

Completed Actions

Sequence Number	Title	Regulation Identifier Number
3860	Reconsideration of Enforcement Provision Involving Reopening Closed Cases	3150-AC79
3861	Relocation of Office of Nuclear Reactor Regulation	3150-AC77
3862	Update of Freedom of Information Act Procedures and Other Minor Amendments	3150-AC50
3863	+ Fee Schedule Change for NRC "U" and "Q" Access Authorizations	3150-AC59
3864	Completeness and Accuracy of Information Provided to the Commission	3150-AC45
3865	Regional Nuclear Materials Licensing for the United States Navy	3150-AC55
3866	Revision of List of Non-Agreement States in Region III	3150-AC70
3867	+ Uranium Mill Tailings Regulations: Ground Water Protection and Other Issues	3150-AB56
3868	+ Broad Scope Modification of General Design Criterion 4 Requirements For Protection Against Dynamic Effects of Postulated Pipe Ruptures	3150-AC05
3869	Consideration of Emergency Planning Rule Changes to Deal With Lack of Governmental Cooperation in Offsite Emergency Planning	3150-AC36
3870	Change of Region I Address	3150-AC68
3871	Revision of Headquarters Office Locations	3150-AC74
3872	Relocation of NRC Offices—NMSS and GPA	3150-AC75
3873	Minor Nomenclature Amendments	3150-AC67
3874	General Criteria for Security Personnel	3150-AC66

NUCLEAR REGULATORY COMMISSION (NRC) — Prerule Stage

3811. RADIOACTIVE WASTE BELOW REGULATORY CONCERN; GENERIC RULEMAKING

Legal Authority: 42 USC 2201

CFR Citation: 10 CFR 2; 10 CFR 20

Abstract: The advance notice of proposed rulemaking seeks comments on a proposal to amend NRC regulations to address disposal of radioactive wastes that contain sufficiently low quantities of radionuclides that their disposal does not need to be regulated as radioactive.

The NRC has already published a policy statement providing guidance for filing petitions for rulemaking to exempt individual waste streams (August 29, 1986; 51 FR 30639). It is believed that generic rulemaking could provide a more efficient and effective means of dealing with disposal of wastes below regulatory concern. Generic rulemaking would supplement the policy statement which was a response to Section 10 of the Low- Level Radioactive Waste Policy Amendment Act of 1985 (Pub. L. 99-240). The public will be asked to comment on 14 questions. The ANPRM requests public comment on several alternative approaches the NRC could take. Public comment will help to determine whether and how NRC should proceed on the matter.

Timetable:

Action	Date	FR Cite
ANPRM	12/02/86	51 FR 43367
ANPRM Comment Period End	03/02/87	51 FR 43367

Next Action Undetermined

Small Entity: Undetermined

Agency Contact: Stanley Neuder, Nuclear Regulatory Commission, Office of Nuclear Regulatory Research, Washington, DC 20555, 301 492-3737

RIN: 3150-AC35

NUCLEAR REGULATORY COMMISSION (NRC) — Proposed Rule Stage

3812. COMPREHENSIVE QUALITY ASSURANCE IN MEDICAL USE AND A STANDARD OF CARE

Legal Authority: 42 USC 2111; 42 USC 2201; 42 USC 5841

CFR Citation: 10 CFR 35

Abstract: The Nuclear Regulatory Commission is considering amendments to its regulations governing the use of byproduct material for radiation therapy. In addition to current requirements, the contemplated amendments would require licensees that offer teletherapy or brachtherapy services to implement a comprehensive quality assurance program to reduce the chance of misadministrations. The advance notice requests comment on the extent to which additional radiopharmaceutical quality assurance requirements are needed and seek recommendations on several questions being addressed in the comprehensive rulemaking effort.

VOL 53 ISS 79 PT 2 AP 25 1988 UMI

Timetable:

Action	Date	FR Cite
ANPRM	10/02/87	52 FR 36949
ANPRM Comment Period End	12/31/87	52 FR 36949
NPRM	09/03/88	
Final Action	12/30/89	

Small Entity: Yes

Agency Contact: Anthony Tse, Nuclear Regulatory Commission, Office of Nuclear Regulatory Research, Washington, DC 20555, 301 492-3797

RIN: 3150-AC42

3813. DEGREE REQUIREMENT FOR SENIOR OPERATORS AT NUCLEAR POWER PLANTS

Legal Authority: 42 USC 2201

CFR Citation: 10 CFR 50; 10 CFR 55

Abstract: The Commission is considering an amendment to its regulations to require that applicants for a senior operator license of a nuclear power plant hold a baccalaureate degree in engineering or a related science from an accredited institution after January 1, 1991. Other baccalaureate degrees from an accredited institution may be accepted on a case-by-case basis. This contemplated rulemaking action is due to a Commission decision to enhance the levels of engineering and accident management expertise on shift. The Commission is also considering issuing a policy statement concurrently with this rule related to utility implementation of the rule.

The staff analysis of comments on the ANPRM has been completed and options for rulemaking and/or policy statements to address degree requirements and training for accident management have been developed.

Timetable:

Action	Date	FR Cite
ANPRM	05/31/86	51 FR 19561
ANPRM Comment Period End	09/29/86	
NPRM	08/05/88	
Final Action	08/05/89	

Small Entity: No

Agency Contact: Morton Fleishman, Nuclear Regulatory Commission, Office of Nuclear Regulatory Research, Washington, DC 20555, 301 492-3794

RIN: 3150-AC26

3814. + DEFINITION OF HIGH-LEVEL RADIOACTIVE WASTE (HLW) IN 10 CFR PART 60

Legal Authority: 42 USC 10101

CFR Citation: 10 CFR 60

Abstract: The proposed rulemaking seeks to revise the definition of HLW in Part 60 to reflect certain changes in the legal definition of HLW contained in the Nuclear Waste Policy Act of 1982. A revision of the definition of HLW would affect DOE'S plans for a geologic repository, costs of waste disposal for certain waste generators, and the development of new technologies and facilities to dispose of certain type of wastes. A definition of HLW which clearly identifies these highly radioactive waste needing permanent isolation would benefit the radioactive waste management system. NRC staff time for processing this rule is estimated to be 4 staff years. Alternatives to rulemaking would be to take no action or request Congress to amend the NWPA. The rulemaking would eliminate uncertainty and reduce costs for the public, industry, and NRC.

Timetable:

Action	Date	FR Cite
ANPRM	02/27/87	52 FR 5992
ANPRM Comment Period End	06/29/87	52 FR 16403
NPRM	04/30/88	
Final Action	10/31/88	

Small Entity: No

Agency Contact: Clark Prichard/Frank Costanzi, Nuclear Regulatory Commission, Office of Nuclear Regulatory Research, Washington, DC 20555, 301 492-3801

RIN: 3150-AB69

3815. ● ENFORCEMENT OF NONDISCRIMINATION ON THE BASIS OF HANDICAP IN FEDERAL ASSISTED PROGRAMS

Legal Authority: 42 USC 2201; 42 USC 5841

CFR Citation: 10 CFR 4

Abstract: The proposed rule would amend regulations concerning the enforcement of section 504 of the Rehabilitation Act of 1973, as amended, in Federally assisted programs or activities to include a cross reference to the Uniform Federal Accessibility Standards (UFAS). This action is necessary because some facilities subject to the new construction or alteration requirements under section 504 are also subject to the Architectural Barriers Act. Therefore, reference to UFAS by all government agencies would diminish the possibility that recipients of Federal financial assistance would face conflicting enforcement standards.

Timetable:

Action	Date	FR Cite
Next Action Undetermined		

Small Entity: No

Agency Contact: Edward E. Tucker, Nuclear Regulatory Commission, Office of Small and Disadvantaged Business, Utilization /Civil Rights, 301 492-7697

RIN: 3150-AC64

3816. ● REVISION OF DEFINITION OF MEETING

Legal Authority: 42 USC 2201; 42 USC 5841

CFR Citation: 10 CFR 9

Abstract: The proposed rule would return the definition of "meeting" to its pre-1985 wording. The proposal is based on a study of comments submitted on an interim final rule published on May 21, 1985 (50 FR 20889) and the 1987 recommendations and report of the American Bar Association (ABA). Since the pre-1985 wording of the definition of meeting is fully adequate to permit the types of non-Sunshine Act discussions that the NRC believes would be useful, the proposal calls for the NRC to reinstitute its pre-1985 definition of meeting, with the intention of conducting its non-Sunshine Act discussions in accordance with the guidelines recommended by the ABA.

Timetable:

Action	Date	FR Cite
Next Action Undetermined		

Small Entity: No

Agency Contact: Peter Crane, Nuclear Regulatory Commission, Office of the

General Counsel, Washington, DC 20555, 202 634-1465

RIN: 3150-AC78

3817. + CRITERIA FOR LICENSING THE LONG-TERM CUSTODY AND MAINTENANCE OF URANIUM MILL TAILINGS SITES

Legal Authority: 42 USC 5841; 42 USC 5842; 42 USC 5846

CFR Citation: 10 CFR 40

Abstract: The proposed rule would provide procedures to license a custodian for the post-closure, long-term control of uranium mill tailings sites required by the Uranium Mill Tailings Radiation Control Act of 1978 (UMTRCA). This amendment would establish a general license for long-term possession and control of uranium mill tailings by the Department of Energy, other designated Federal agencies, or States when applicable. The general license would be formulated so that it would become effective for a particular site upon written NRC approval of a site-specific surveillance and maintenance plan. No impact to the public or industry is expected as a result of this proposed action.

Timetable:

Action	Date	FR Cite
NPRM	05/30/88	
Final Action	12/30/88	

Small Entity: No

Agency Contact: Mark Haisfield, Nuclear Regulatory Commission, Office of Nuclear Regulatory Research, Washington, DC 20555, 301 492-3877

RIN: 3150-AC56

3818. ● AMENDMENT TO CLARIFY EQUIVALENT CONTROL CAPACITY FOR STANDBY LIQUID CONTROL SYSTEMS (SLCS)

Legal Authority: 42 USC 2136

CFR Citation: 10 CFR 50

Abstract: The proposed rule would clarify the Commission's regulations pertaining to boiling water reactors (BWR). The current regulations require that all boiling water reactors must have a standby liquid control system (SLCS) with a minimum flow capacity and boron content equivalent in control capacity to 86 gallons per minute (gpm) of 13 weight percent of sodium pentaborate solution. In January 1985, a generic letter was issued to all appropriate licensees that provided clarification of the phrase "equivalent in control capacity" contained in section 50.62 (c) (4). This letter provided the basis for the flow and weight percent of sodium pentaborate decahydrate requirements and described how equivalency could be achieved for smaller plants. The NRC staff considers the contents of the generic letter to be technically correct and desired that this position be established in the regulations.

Timetable:

Action	Date	FR Cite
NPRM	04/28/88	

Small Entity: No

Agency Contact: William R. Pearson, Nuclear Regulatory Commission, Office of Nuclear Regulatory Research, Washington, DC 20555, 301 492-3764

RIN: 3150-AC72

3819. ● LICENSEE ANNOUNCEMENT OF INSPECTORS

Legal Authority: 42 USC 2201; 42 USC 5841

CFR Citation: 10 CFR 50

Abstract: The Nuclear Regulatory Commission is proposing to amend its regulations to ensure that the presence of NRC inspectors on power reactor sites is not announced to licensee and contractor personnel without the expressed request to do so by the inspector. This change would allow the NRC inspector, who is badged at the facility, to observe ongoing activities as they are naturally occurring without licensee or contractor personnel having advanced notice of the inspection.

Timetable:

Action	Date	FR Cite
NPRM	04/00/88	

Small Entity: No

Agency Contact: George Barber, Nuclear Regulatory Commission, Office of Nuclear Reactor Regulation, Washington, DC 20555, 301 492-8324

RIN: 3150-AC73

3820. EARLY SITE PERMITS; STANDARD DESIGN CERTIFICATIONS; AND COMBINED LICENSES FOR NUCLEAR POWER REACTORS

Legal Authority: 42 USC 2133; 42 USC 2201; 42 USC 2232; 42 USC 2233; 42 USC 2236; 42 USC 2239; 42 USC 2282; 42 USC 5841; 42 USC 5842; 42 USC 5846

CFR Citation: 10 CFR 52

Abstract: The Nuclear Regulatory Commission is considering adding a new part to its regulations to improve the reactor licensing process. The proposed rule would provide for the issuance of early site permits, standard design certifications, and combine construction permits and conditional operating licenses for nuclear power reactors. These procedural reforms are intended to improve the quality, effectiveness, and efficiency of nuclear power plant licensing without detracting from protection of the public health and safety or the public's ability to participate in the licensing process. They are designed to implement as much of the Commission's proposed "Nuclear Power Plant Standardization and Licensing Act of 1987" as is permissible under its existing statutory authority. The proposed legislation is based on an earlier proposal that was developed by the Commission's Regulatory Reform Task Force. If licensing reform legislation is ultimately enacted, the rules can be modified to implement that legislation fully.

Timetable:

Action	Date	FR Cite
NPRM	04/00/88	
Final Action	12/00/88	

Small Entity: No

Agency Contact: Steven Crockett, Nuclear Regulatory Commission, Office of the General Counsel, Washington, DC 20555, 202 634-1465

RIN: 3150-AC61

3821. + ELIMINATION OF INCONSISTENCIES BETWEEN NRC REGULATIONS AND EPA STANDARDS

Legal Authority: 42 USC 10101

CFR Citation: 10 CFR 60

Abstract: The Nuclear Waste Policy Act of 1982 directs NRC to promulgate criteria for the licensing of HLW geologic repositories. Section 121 (c) of this act states that these criteria must

VOL 53 ISS 79 PT 2 AP 25 1988 UMI

be consistent with standards to be developed by EPA for the disposal of HLW in deep geologic repositories. The proposed rule is needed in order to eliminate several inconsistencies with the EPA standards, thus fulfilling the statutory requirements.

Because the NWPA directs NRC to eliminate inconsistencies between Part 60 and the EPA standard, the alternatives to the proposed action are limited by statute.

The public, industry, and NRC will benefit from eliminating inconsistencies in Federal HLW regulations. NRC resources needed would be several staff years but will not include contract resources.

Because the Federal Court invalidated the EPA standards, action on this rule, which is in response to the EPA standards is undetermined.

Timetable:

Action	Date	FR Cite
NPRM	06/19/86	51 FR 22288
NPRM Comment Period End	08/18/86	51 FR 22288

Next Action Undetermined

Small Entity: No

Agency Contact: Frank Costanzi/Clark Prichard, Nuclear Regulatory Commission, Office of Nuclear Regulatory Research, Washington, DC 20555, 301 492-3610

RIN: 3150-AC03

3822. REVISED RULES OF PRACTICE FOR DOMESTIC LICENSING PROCEEDINGS

Legal Authority: 42 USC 2201; 42 USC 2231; 42 USC 2241; 42 USC 5841; 5 USC 552

CFR Citation: 10 CFR 0; 10 CFR 1; 10 CFR 2; 10 CFR 9; 10 CFR 50

Abstract: The Nuclear Regulatory Commission has deferred further consideration of this proposal which would have revised the Commissions's procedural rules governing the conduct of all adjudicatory proceedings, with the exception of export licensing proceedings. The proposed rule would comprehensively restate current practice , retitle the hearing office, and revise and reorganize the Commission's procedural rules. The changes in this proposed rule would enable the Commission to render decisions in a more timely fashion and reduce the burden and expense to the parties participating in the proceedings.

Timetable:

Action	Date	FR Cite

Next Action Undetermined

Small Entity: No

Agency Contact: B. Paul Cotter, Jr., Nuclear Regulatory Commission, Atomic Safety and Licensing Board Panel, Washington, DC 20555, 301 492-7787

RIN: 3150-AB66

3823. AVAILABILITY OF OFFICIAL RECORDS

Legal Authority: 42 USC 2201; 42 USC 5841

CFR Citation: 10 CFR 2

Abstract: The proposed amendment would conform the NRC's regulations pertaining to the availability of official records to existing case law and agency practice. The amendment would reaffirm that the terms of 10 CFR 2.790 (c) provide submitters of information a qualified right to have their information returned upon request. This amendment informs the public of three exceptions to the right to withdraw pursuant to 10 CFR 2.790 (c) of the NRC's regulations, i.e., information submitted in a rulemaking proceeding that subsequently forms the basis for the final rule, information which has been made available to an advisory committee or was received at an advisory committee meeting, and information that is subject to a pending Freedom of Information Act request.

Timetable:

Action	Date	FR Cite

Next Action Undetermined

Small Entity: No

Agency Contact: Paul Bollwerk, Nuclear Regulatory Commission, Office of the General Counsel, Washington, DC 20555, 202 634-3224

RIN: 3150-AC07

3824. NEGOTIATED RULEMAKING ON THE SUBMISSION AND MANAGEMENT OF RECORDS AND DOCUMENTS RELATED TO THE LICENSING OF A GEOLOGIC REPOSITORY FOR THE DISPOSAL OF HIGH LEVEL WASTE

Legal Authority: 42 USC 10101

CFR Citation: 10 CFR 2; 10 CFR 60

Abstract: The Nuclear Waste Policy Act (NWPA) provides three years for the NRC to reach a decision on construction authorization for a high level waste repository. In order for the NRC to be able to make its decision within the allotted time, ready access to all pertinent records must be assured to all parties in the licensing proceeding. The DOE has committed to develop an electronic information management system to be used for the licensing proceeding. The NRC staff intends to use the process of negotiated rulemaking to develop a proposed rule that would revise the Commission's discovery procedure and motion practice in 10 CFR Part 2 for the high level waste licensing proceeding.

This rule would require the DOE license application and all supporting records to be provided in a standardized electronic format. All parties to the licensing proceeding would be required to submit all relevant data to this system. In turn all parties would have access to the data base.

Timetable:

Action	Date	FR Cite
NPRM	07/08/88	
Final Action	10/14/88	

Small Entity: Undetermined

Agency Contact: Francis Cameron, Nuclear Regulatory Commission, Office of General Counsel, Washington, DC 20555, 301 492-1623

RIN: 3150-AC44

3825. ● STORAGE OF SPENT NUCLEAR FUEL IN NRC APPROVED CASKS AT CIVILIAN NUCLEAR POWER REACTOR SITES

Legal Authority: 42 USC 10153; 42 USC 10198

CFR Citation: 10 CFR 2; 10 CFR 51; 10 CFR 72

Abstract: The proposed rule is in response to the Nuclear Waste Policy Act (NWPA) section 218 (a) which states in part, that the Secretary of DOE shall establish a demonstration program, in cooperation with the private sector, for dry storage of spent nuclear fuel at civilian nuclear power reactor sites, with the objective of establishing one or more technologies that the Commission may, by rule, approve for use at sites of civilian

nuclear power reactors. The NWPA also requires that the NRC establish procedures for the licensing of any technology approved by the Commission under section 218(a) for use at the site of any civilian nuclear power reactor.

The staff anticipates a significant increase in the demand for use of dry spent fuel storage casks starting in the early 1990s, thus processing of this proposed rule would be timely. NRC resources requirements are anticipated to be about two staff years.

Timetable:

Action	Date	FR Cite
NPRM	06/30/88	
Interim Final Rule	04/29/89	

Small Entity: No

Agency Contact: William R. Pearson, Nuclear Regulatory Commission, Office of Nuclear Regulatory Research, Washington, DC 20555, 301 492-3764

RIN: 3150-AC76

3826. + DELETION OF PART 11 REQUIREMENTS FOR RENEWAL OF "R" CLEARANCES

Legal Authority: 42 USC 2201; 42 USC 5841

CFR Citation: 10 CFR 11

Abstract: The current regulations require licensees to renew "R" clearances every 5 years. This level of clearance corresponds to the "L" clearances used by NRC and DOE which do not require renewal. Because of this equivalence, the renewal requirement for the"R" level licensee clearance is deemed unnecessary. This rulemaking would delete that requirement from Part 11. The timetable for this rule has been placed on hold pending publication of Executive Order 10450, "Security Requirements for Government Employees".

Timetable:

Action	Date	FR Cite
Next Action Undetermined		

Small Entity: No

Agency Contact: Sandra D. Frattali, Nuclear Regulatory Commission, Office of Nuclear Regulatory Research, Washington, DC 20555, 301 492-3773

RIN: 3150-AC58

3827. + RESIDUAL RADIOACTIVE CONTAMINATION LIMITS FOR DECOMMISSIONING

Legal Authority: 42 USC 2201; 42 USC 5841

CFR Citation: 10 CFR 20

Abstract: The proposed rule would establish residual radioactive contamination limits (including induced and other volumetric radioactivity as well as removable and fixed surface contamination) which must be met before structures and lands with residual radioactive contamination below these limits would be eligible for release without regulatory restrictions from a radioactivity standpoint.

The proposed amendments were considered necessary to provide licensees with quantitative criteria to use during decommissioning relative to cleanup and decontamination of structures and lands.

Alternatives to rulemaking would be continued reliance on the issuance of criteria as guidance. However, the current criteria are incomplete, decisions on implementation and compliance are often required on a case-by-case basis, and criteria issued by guidance may not be enforced in the manner of legally binding regulations. The proposed rule would relieve the administrative burden on NRC and licensees while providing a consistent and enforceable basis for agency action. NRC resource requirements

Timetable:

Action	Date	FR Cite
Next Action Undetermined		

Small Entity: Undetermined

Additional Information: ABSTRACT CONT: were estimated at approximately 2 staff-years and a $237,000 research contract which is ongoing at PNL. Staff is participating in an EPA-organized interagency working group developing Federal guidance on this subject; however, this activity has been dormant since January 1987.

The timetable for this rule is on hold pending the EDO decision on the staff's recommended action to terminate this rule.

Agency Contact: Dr. Stanley Neuder, Nuclear Regulatory Commission, Office of Nuclear Regulatory Research, Washington, DC 20555, 301 492-3737

RIN: 3150-AC21

3828. + SAFETY RELATED AND IMPORTANT TO SAFETY IN 10 CFR PART 50

Legal Authority: 42 USC 5841; 42 USC 5842; 42 USC 5846

CFR Citation: 10 CFR 50

Abstract: The Nuclear Regulatory Commission proposes to clarify its regulations on the use of the terms "important to safety" and "safety related" by adding definitions of these two terms and of "facility licensing documents" to 10 CFR Part 50 and by discussing how these definitions will be applied in NRC licensing reviews. Significant issues concerning the meaning of these terms as they are used in this part have arisen in Commission licensing proceedings. This proposed rule would define those terms and clarify the nature and extent of their effect on quality assurance requirements, thereby resolving these issues.

Rulemaking was chosen as the method of resolving this issue as a result of the Commission's directive to resolve the issue by rulemaking contained in the Shoreham licensing decision (CLI-84-9, 19 NRC 1323, June 5, 1984).

A position paper requesting approval of the staff proposed definitions and additional guidance from the Commission was signed by the EDO on May 29, 1986. In addition to rulemaking, the position paper discusses the alternative of the Commission(cont)

Timetable:

Action	Date	FR Cite
Next Action Undetermined		

Small Entity: No

Additional Information: ABSTRACT CONT: issuing a policy statement concerning the definitions and their usage.

Since the proposed rule is only clarifying existing requirements, their is no impact on the public or the industry as a result of this rulemaking. It is anticipated that the NRC will expend 3.2 to 4.4 staff years in developing the final rule over a two year period. The manpower and time frame will depend upon guidance from the Commission

regarding the extent to which 10 CFR usage of the terms is to be consistent, i.e., 10 CFR Part 50 only or all of 10 CFR. The timetable for this rule is on hold based on a decision by the Commission.

Agency Contact: Jerry N. Wilson, Nuclear Regulatory Commission, Office of Nuclear Regulatory Research, Washington, DC 20555, 301 492-3729

RIN: 3150-AB88

3829. TRANSPORTATION REGULATIONS: COMPATIBILITY WITH THE INTERNATIONAL ATOMIC ENERGY AGENCY

Legal Authority: 42 USC 2073; 42 USC 2093; 42 USC 2111; 42 USC 2232; 42 USC 2233; 42 USC 2273; 42 USC 5842

CFR Citation: 10 CFR 71

Abstract: The proposed rule, would in conjunction with a corresponding rule change by the U.S. Department of Transportation, make the United States Federal regulations for the safe transportation of radioactive material consistent with those of the International Atomic Energy Agency (IAEA). The IAEA regulations can be found in IAEA Safety Series No. 6 "Regulations for the Safe Transport of Radioactive Material," 1985 Edition.

Consistency in transportation regulations throughout the world facilitates the free movement of radioactive materials between countries for medical, research, industrial, and nuclear fuel cycle purposes. Consistency of transportation regulations throughout the world also contributes to safety by concentrating the efforts of the world's experts on a single set of safety standards and guidance (those of the IAEA) from which individual countries can develop their domestic regulations. Perhaps as important, the accident experience of every country that bases it domestic regulations on those of the IAEA can be applied by every other country with consistent regulations to improve its safety program. The action will be handled as(cont)

Timetable:

Action	Date	FR Cite
NPRM	04/30/88	
Final Action	01/30/89	

Small Entity: No

Additional Information: ABSTRACT CONT: as a routine updating of NRC transportation regulations. There is no reasonable alternative to rulemaking action. These changes should result in a minimal increase in costs to affected licensees. Proposed changes to 10 CFR Part 71, based on current IAEA regulations, will be issued for public comments. The task will be scheduled over a 2 year interval ending June 1989 and will consume 2-3 staff years of effort depending on the number and difficulty of conflicts to be resolved.

Agency Contact: Donald R. Hopkins, Nuclear Regulatory Commission, Office of Nuclear Regulatory Research, Washington, DC 20555, 301 492-3784

RIN: 3150-AC41

3830. ● REGULATION OF URANIUM ENRICHMENT FACILITIES

Legal Authority: 42 USC 2201; 42 USC 5841

CFR Citation: 10 CFR 76

Abstract: The Nuclear Regulatory Commission is considering an amendment to its regulations to create a new part that would pertain to uranium enrichment facilities. The construction and operation of these facilities are currently licensed under the NRC regulations for other production and utilization facilities (e.g., nuclear power plants) in 10 CFR Part 50. The advance notice of proposed rulemaking seeks comments on whether a separate set of regulations for uranium licensing is desirable.

Timetable:

Action	Date	FR Cite
Next Action Undetermined		

Small Entity: No

Agency Contact: Arthur T. Clark, Nuclear Regulatory Commission, Office of Nuclear Material Safety and, Safeguards, Washington, DC 20555, 301 492-4205

RIN: 3150-AC71

NUCLEAR REGULATORY COMMISSION (NRC) — Final Rule Stage

3831. ISSUANCE OR AMENDMENT OF POWER REACTOR LICENSE OR PERMIT FOLLOWING INITIAL DECISION

Legal Authority: 42 USC 2201; 42 USC 2231; 42 USC 2241; 42 USC 5841

CFR Citation: 10 CFR 2

Abstract: The proposed rule would amend the Commission's "immediate effectiveness' regulation that specifies when an initial adjudicatory decision authorizing the issuance or amendment of a license or permit becomes effective. The proposed rule would (1) remove the existing provision governing the effectiveness of initial decisions regarding power reactor construction permits and (2) revise the Commission's existing practice regarding "effectiveness reviews" for full-power operating licenses. The proposed rule also would delete language in the existing regulation emanating from Three Mile Island-related regulatory policies, action upon which now has been completed.

The proposed rule would supersede two prior proposed rules entitled "Possible Amendments to "Immediate Effectiveness Rules," published May 22, 1980 (45 FR 43279). and "Commission Review Procedures for Power Reactor Construction Permits; Immediate Effectiveness Rule," published October 25, 1982 (47 FR 47260).

Timetable:

Action	Date	FR Cite
NPRM	02/04/87	51 FR 3442
NPRM Comment Period End	04/06/87	51 FR 3442
Final Action	04/00/88	

Small Entity: No

Agency Contact: Paul Bollwerk, Nuclear Regulatory Commission, Office of the General Counsel, Washington, DC 20555, 202 634-3224

RIN: 3150-AC15

3832. REVISION TO EX PARTE AND SEPARATION OF FUNCTIONS RULES APPLICABLE TO FORMAL ADJUDICATORY PROCEEDINGS

Legal Authority: 5 USC 554 (d); 5 USC 557(d)

CFR Citation: 10 CFR 0; 10 CFR 2

Abstract: The proposed rule would amend the Commission's regulations dealing with ex parte communications and separation of adjudicatory and nonadjudicatory functions in formal adjudicatory proceedings by updating the agency's rules of practice and incorporating requirements imposed by the Government in the Sunshine Act. Changes are proposed in both the form and the substance of the existing rules to clarify their meaning and to aid agency adjudicatory officials in maintaining effective communication with NRC staff personnel and persons outside the agency while at the same time ensuring that proceedings will be conducted fairly and impartially. This proposed rule supersedes a prior proposed rule entitled, "Ex Parte Communications and Separation of Adjudicatory and Non Adjudicatory Functions," (3150-AA00) published March 7, 1979 (44 FR 12428).

Timetable:

Action	Date	FR Cite
NPRM	03/26/86	51 FR 10393
NPRM Comment Period End	06/26/86	51 FR 19067
Final Action	04/00/88	

Small Entity: No

Agency Contact: Paul Bollwerk, Nuclear Regulatory Commission, Office of the General Counsel, Washington, DC 20555, 202 634-3224

RIN: 3150-AC18

3833. RULES OF PRACTICE FOR DOMESTIC LICENSING PROCEEDINGS– PROCEDURAL CHANGES IN HEARING PROCESS

Legal Authority: 42 USC 2201; 42 USC 2231; 42 USC 2241; 42 USC 5841

CFR Citation: 10 CFR 2

Abstract: The Nuclear Regulatory Commission (NRC) is considering amendments to its rules of practice which address the following aspects of the hearing process: admission contentions, discovery against NRC staff, use of cross examination plans, timing of motions for summary disposition and limitations on matters and issues that may be included in proposed findings of fact or conclusions of law, or in an appellate brief submitted by a person who does not have the burden of proof or who has only a limited interest in the proceedings. These proposals were initially developed by the Regulatory Reform Task Force and published for public comment, together with a number of other proposals, as suggestions for procedural changes in the licensing of nuclear power plants. (49 FR 14698; April 12, 1984). The Commission has decided not to proceed with the April 1984 proposals, except to the extent that they were included in this proposed rule. Therefore, the April 1984 proposals have been deleted from the regulatory agenda.

The NRC is also considering related amendments on the process of intervention that were developed by Commissioner

Timetable:

Action	Date	FR Cite
NPRM	07/03/86	51 FR 24356
NPRM Comment Period End	10/17/86	51 FR 31340
Final Action	07/00/88	

Small Entity: No

Additional Information: ABSTRACT CONT: Asselstine. The staff is analyzing public comments received on the proposals and expects to forward a recommendation for the Commission's consideration.

Agency Contact: Jane R. Mapes, Nuclear Regulatory Commission, Office of the General Counsel, Washington, DC 20555, 301 492-6142

RIN: 3150-AC22

3834. + GENERAL REQUIREMENTS FOR DECOMMISSIONING NUCLEAR FACILITIES

Legal Authority: 42 USC 2201

CFR Citation: 10 CFR 30; 10 CFR 40; 10 CFR 50; 10 CFR 51; 10 CFR 70; 10 CFR 72

Abstract: The proposed rule would provide assurance that licensees fulfill their responsibility to dispose of licensed material including any associated contamination when they cease licensed activity. The proposed rule would also provide the applicant or licensee with appropriate regulatory guidance to decommission a nuclear facility. The issue is addressed through rulemaking to assure that funds for decommissioning will be available and the decommissioning will be carried out in an orderly manner. The Commission has indicated a need for this rulemaking in other previous rulemakings.

The major cost impact of the proposed rule would involve proper planning at all stages of nuclear facility operation. Proper planning includes providing for (1) financial assurance that funding will be available for decommissioning, (2) maintenance of records that could affect decommissioning, and (3) careful(cont)

Timetable:

Action	Date	FR Cite
ANPRM	03/13/78	43 FR 10370
NPRM	02/11/85	50 FR 5600
NPRM Comment Period End	07/12/85	50 FR 23025
Final Action	04/30/88	

Small Entity: Yes

Additional Information: ABSTRACT CONT: planning of procedures at the time of decommissioning. For non-reactor facilities affected by financial assurance requirements, it is estimated that the major impact will result in an aggregate expenditure of 21 staff-years ($1.6 million) spread over 5 years (or $320,000 per year).

For the approximately 110 power reactors estimated to be affected (i.e., those with operating licenses and those under construction which are at least two-thirds complete) plus 75 research and test reactors, it is estimated that the major impact will result in an aggregate expenditure of 3.8 staff-years ($288,000) spread over 3 years. These expenditures will ensure that adequate measures have been taken to protect the health and safety of occupational workers, the public, and the environment within the confines of optimum cost benefit consideration.

Agency Contact: Keith G. Steyer/Frank Cardile, Nuclear Regulatory Commission, Office of Nuclear Regulatory Research, Washington, DC 20555, 301 492-3824

RIN: 3150-AA40

3835. PROCEDURES INVOLVING THE EQUAL ACCESS TO JUSTICE ACT: IMPLEMENTATION

Legal Authority: 5 USC 504

CFR Citation: 10 CFR 1; 10 CFR 2

Abstract: The proposed rule would implement the Equal Access to Justice Act (EAJA) by providing for the payment of fees and expenses to certain eligible individuals and businesses that prevail in agency adjudications when the agency's position is determined not to have been substantially justified. This proposed regulation is modelled after rules issued by the Administrative Conference of the United States (ACUS) and have been modified to conform to NRC's established rules of practice. The proposed rule would further the EAJA's intent to develop government-wide, "uniform" agency regulations and would describe NRC procedures and requirements for the filing and disposition of EAJA applications. A draft final rule was sent to the Commission in June 1982, but Commission action was suspended pending a decision by the Comptroller General on the availability of funds to pay awards to intervenor parties. This issue was also the subject of litigation in Business and Professional People for the Public Interest v. NRC, 793 F. 2d 1366 (D.C. Cir. 1986). This litigation is being evaluated to determine what if any changes may be necessary in the proposed rule. (cont)

Timetable:

Action	Date	FR Cite
NPRM	10/28/81	46 FR 53189
NPRM Comment Period End	11/28/81	46 FR 53189

Next Action Undetermined

Small Entity: No

Additional Information: ABSTRACT CONT:

Additionally, in August 1985, the President signed into law an enactment renewing the EAJA after its expiration under a statutory sunset requirement. This legislation, Pub. L. No. 99-80 revises the EAJA and these revisions are being evaluated to determine whether further conforming changes may be necessary in the proposed rule.

Agency Contact: Paul Bollwerk, Nuclear Regulatory Commission, Office of the General Counsel, Washington, DC 20555, 202 634-3224

RIN: 3150-AA01

3836. + MODIFICATIONS TO THE NRC HEARING PROCESS (LIMITED INTERROGATORIES AND FACTUAL BASIS FOR CONTENTIONS)

Legal Authority: 42 USC 2239

CFR Citation: 10 CFR 2

Abstract: The proposed rule would expedite conduct of NRC adjudicatory proceedings by requiring intervenors in formal NRC hearings to set forth the facts on which contentions are based and the sources or documents used to establish those facts and limit the number of interrogatories that a party may file in an NRC proceeding. The proposed rule would expedite the hearing process by, among other things, requiring intervenors to set forth at the outset the facts upon which their contention is based and the supporting documentation to give other parties early notice of intervenor's case so as to afford opportunity for early dismissal of contentions where there is no factual dispute. Expediting the hearing process should ultimately provide cost savings to all participants in the process. The content of this rule is being considered as part of the regulatory reform rulemaking package.

Timetable:

Action	Date	FR Cite
NPRM	06/08/81	46 FR 30349

Next Action Undetermined

Small Entity: No

Agency Contact: Trip Rothschild, Nuclear Regulatory Commission, Regulatory Reform Task Force, Washington, DC 20555, 202 634-1461

RIN: 3150-AA05

3837. + LICENSING REQUIREMENTS FOR THE STORAGE OF SPENT FUEL AND HIGH- LEVEL RADIOACTIVE WASTE

Legal Authority: 42 USC 2021; 42 USC 2071; 42 USC 2073; 42 USC 2077; 42 USC 2093; 42 USC 2095; 42 USC 2099; 42 USC 2111; 42 USC 2201; 42 USC 2232; 42 USC 2233; 42 USC 2234; 42 USC 2236; 42 USC 2237; 42 USC 2282

CFR Citation: 10 CFR 2; 10 CFR 19; 10 CFR 20; 10 CFR 21; 10 CFR 51; 10 CFR 70; 10 CFR 72; 10 CFR 73; 10 CFR 75; 10 CFR 150

Abstract: The proposed rule would revise existing regulations to establish specific licensing requirements for the storage of spent nuclear fuel and high-level radioactive waste in a monitored retrievable storage installation (MRS). This revision is intended to ensure that the Commission has in place the appropriate regulations to fulfill the requirements contained in the Nuclear Waste Policy Act of 1982 concerning the licensing of facilities which could be part of the MRS program.

Paragraph (d) of Section 141 of the NWPA requires that any monitored retrievable storage installation pursuant to Section 141 be licensed by the Commission. The Commission could await further development of the MRS option before proposing its MRS rules. However, this approach could result in unnecessary delay in reviewing a license application if Congress authorizes construction of an MRS.

There is no appropriate alternative to rulemaking, the vehicle used by NRC to establish its licensing procedures.

Timetable:

Action	Date	FR Cite
NPRM	05/27/86	51 FR 19106
NPRM Comment Period End	06/25/86	51 FR 21560
Final Action	04/30/88	

Small Entity: No

Additional Information:

The basic requirements for storage of spent fuel in an independent spent fuel storage installation (ISFSI) currently codified in 10 CFR Part 72 are not being changed, thus no incremental impact on NRC, industry, or the health and safety of the public is anticipated.

Agency Contact: Keith Steyer/Charles Nilsen, Nuclear Regulatory Commission, Office of Nuclear Regulatory Research, Washington, DC 20555, 301 492-3624

RIN: 3150-AB70

3838. RETENTION PERIODS FOR RECORDS

Legal Authority: 42 USC 2201

CFR Citation: 10 CFR 4; 10 CFR 11; 10 CFR 21; 10 CFR 25; 10 CFR 30; 10 CFR 31; 10 CFR 32; 10 CFR 34; 10 CFR 35; 10 CFR 40; 10 CFR 50; 10 CFR 60; 10 CFR 61; 10 CFR 70; 10 CFR 71; ...

Abstract: This proposed rule would establish a specific retention period for certain NRC-required records. It would also provide a uniform standard acceptable to the NRC for the condition of a record throughout a specified retention period. Further, the rule would

BEST COPY AVAILABLE

establish throughout NRC regulations, with some exceptions, uniform retention periods of three years, five years, ten years, and the life of a license. This rule would bring NRC regulations into compliance with the Office of Management and Budget's (OMB) regulation (5 CFR 1320.6) that requires a specified retention period for each required record. It also implements NRC's 1982 commitment to OMB to establish a record retention period of determinable length for each required record.

Amending twenty one parts of NRC regulations to specify clearly what records to retain, how long to retain them, and the condition of a record useful for NRC inspection, will be mutually beneficial to applicants and licensees and to the NRC.

Recordkeeping labor for NRC's approximately 6,700 licensees who would be affected by the rule can be divided into four functions: (1) preparing the report, (2) storing the report, (3)

Timetable:

Action	Date	FR Cite
NPRM	10/28/87	52 FR 41442
NPRM Comment Period End	12/28/87	52 FR 41442
Final Action	04/30/88	

Small Entity: No

Additional Information: ABSTRACT CONT: files, and (4) retrieving the report information.

The principal savings to the licensee, dispersed over the period licensed, would be in physical storage space and associated storage equipment and materials. The burden of recordkeeping would be reduced approximately 10 percent annually for these licensees by the proposed rule. An estimated 466,323 hours associated with recordkeeping or $28,000,000 annually would be saved. Preparing and publishing this rule would cost NRC approximately 3000 hours of staff time at $60 per hour for an estimated total of $180,000

Agency Contact: Brenda Jo. Shelton, Nuclear Regulatory Commission, Office of Administration and Resources, Management, Washington, DC 20555, 301 492-6132

RIN: 3150-AB43

3839. + STANDARDS FOR PROTECTION AGAINST RADIATION

Legal Authority: 42 USC 2073; 42 USC 2093; 42 USC 2095; 42 USC 2111; 42 USC 2133; 42 USC 2134; 42 USC 2201; 42 USC 2273; 42 USC 5841; 42 USC 5842

CFR Citation: 10 CFR 20

Abstract: Radiation protection philosophy and technology have changed markedly since the present Part 20 was promulgated nearly thirty years ago. Since Part 20 contains the NRC standards for protection against radiation that are used by all licensees and affects exposures of workers and members of the public, it should be the most basic of the NRC regulations. However, because the present Part 20 has become outdated, most radiation protection actions occur through licensing actions independent of Part 20. A complete revision is necessary to provide better assurance of protection against radiation; establish a clear health protection basis for the limits; reflect current information on health risk, dosimetry, and radiation protection practices and experience; provide NRC with a health protection base from which it may consider other regulatory actions taken to protect public health; be consistent with recommendations of world authorities (ICRP); and apply these standards to all licensees in a consistent manner.

Alternatives to the complete revision considered were no action

Timetable:

Action	Date	FR Cite
ANPRM	03/20/80	45 FR 18023
ANPRM Comment Period End	06/18/80	45 FR 18023
NPRM	12/20/85	50 FR 51992
NPRM Comment Period End	09/12/86	51 FR 1092
Final Action	07/30/89	

Small Entity: Yes

Additional Information: ABSTRACT CONT: delay for further guidance, and partial revision of the standards. These were rejected as ignoring scientific advancements being unresponsive to international and national guidance correcting only some of the recognized problems with the present Part 20.

Benefits would include updating the regulations which reflect contemporary scientific knowledge and radiation protection philosophy, implementing regulations which reflect the ICRP risk-based rationale, reducing lifetime doses to individuals receiving the highest exposures; implementing provisions for summation of doses from internal and external exposures; providing clearly identified dose limits for the public; providing an understandable health-risk base for protection, and placing constraints on collective dose evaluations at levels where risks are trifles.

Agency Contact: Harold Peterson, Nuclear Regulatory Commission, Office of Nuclear Regulatory Research, Washington, DC 20555, 301 492-3738

RIN: 3150-AA38

3840. + EMERGENCY PREPAREDNESS FOR FUEL CYCLE AND OTHER RADIOACTIVE MATERIALS LICENSEES

Legal Authority: 42 USC 2201; 42 USC 5841

CFR Citation: 10 CFR 30; 10 CFR 40; 10 CFR 70

Abstract: The proposed rule would require about 30 fuel cycle and other radioactive materials licensees to submit an emergency plan that would, among other actions, require the notification of local authorities in case of an accident and that the licensee recommend protective actions for the public. The proposed rule is intended to further protect the public from accidental exposure to radiation. The affected licensees are those whose possession limits indicate the potential for an accident that could deliver a radiation dose offsite exceeding one rem effective dose equivalent or 5 rems to the thyroid or could cause a soluble uranium inhalation of 2 milligrams (a chemical toxicity hazard).

Currently, the proposed requirements are, for the most part, required by order. However, the Commission decided that a regulation was needed for the long term. The cost of the rule to licensees was estimated to be between $26,000 and $73,000 per year per licensee. The cost to NRC is estimated to be $4,000 per year per licensee. The NRC will expend about 2 staff-years of effort to promulgate the rule.

Timetable:

Action	Date	FR Cite
ANPRM	06/03/81	46 FR 29712
ANPRM Comment Period End	08/03/81	46 FR 29712
NPRM	04/20/87	52 FR 12921
NPRM Comment Period End	07/20/87	52 FR 12921
Final Action	04/30/88	

Small Entity: No

Analysis: Regulatory Impact Analysis

Agency Contact: Michael Jamgochian, Nuclear Regulatory Commission, Office of Nuclear Regulatory Research, Washington, DC 20555, 301 492-3918

RIN: 3150-AA41

3841. + INFORMAL HEARING PROCEDURES FOR MATERIALS LICENSES PROCEEDINGS

Legal Authority: 42 USC 2201; 42 USC 2111

CFR Citation: 10 CFR 30; 10 CFR 32; 10 CFR 33; 10 CFR 34; 10 CFR 35; 10 CFR 40; 10 CFR 70; 10 CFR 71; 10 CFR 50; 10 CFR 61; 10 CFR 72

Abstract: This proposed rule, being prepared at Commission direction, would provide comprehensive treatment of hearing procedures to be implemented by the Commission for materials licensing proceedings. In addition, the proposed rule would encompass the objective of the proposed rule, "Jurisdiction of Adjudicatory Boards," identified as 3150-AA53, which has been deleted from OMB's Unified Agenda. There are no reasonable alternatives to rulemaking for implementing these informal hearing procedures. The procedures are expected to reduce the economic burden imposed on a participant in a proceeding.

Timetable:

Action	Date	FR Cite
NPRM	05/29/87	52 FR 20089
NPRM Comment Period End	08/26/87	52 FR 27821
Final Action	04/00/88	

Small Entity: No

Agency Contact: Paul Bollwerk, Nuclear Regulatory Commission, Office of the General Counsel, Washington, DC 20555, 202 634-3224

RIN: 3150-AB83

3842. CONTROLS OF AEROSOLS AND GASES

Legal Authority: 42 USC 5841

CFR Citation: 10 CFR 35

Abstract: The proposed rule is in response to PRM-35-6 which requests that the Commission remove the requirements in Part 35 that radioactive aerosols be administered in rooms that are at negative pressure relative to surrounding rooms. The petitioner states that the imposition of the negative room pressure requirement could have an adverse impact on the delivery of health care to certain patients with pulmonary disease and that this requirement is unnecessary to protect workers and public health and safety. The staff agrees and has developed a proposed rule change to remove the negative room pressure requirement for aerosols.

Timetable:

Action	Date	FR Cite
NPRM	12/16/87	52 FR 47726
NPRM Comment Period End	01/15/88	52 FR 47726
Final Action	07/31/88	

Small Entity: No

Agency Contact: Alan Roecklein, Nuclear Regulatory Commission, Office of Nuclear Regulatory Research, Washington, DC 20555, 301 492-3740

RIN: 3150-AC60

3843. ● BASIC QUALITY ASSURANCE IN RADIATION THERAPY

Legal Authority: 42 USC 2111; 42 USC 2201; 42 USC 5841

CFR Citation: 10 CFR 35

Abstract: The Nuclear Regulatory Commission is proposing to amend its regulations concerning the medical use of byproduct material. The proposed amendments would require its medical licensees to implement certain quality assurance steps that would reduce the chance of therapy misadministrations. The proposed action is necessary to provide for improved patient safety and serve as a basis for enforcement action in case of a therapy misadministration. The proposed amendment, which is intended to reduce the potential for and severity of therapy misadministrations would primarily affect hospitals, clinics, and individual physicians.

Timetable:

Action	Date	FR Cite
NPRM	10/02/87	52 FR 36942
NPRM Comment Period End	12/01/87	52 FR 36942
Final Action	07/30/88	

Small Entity: No

Agency Contact: Anthony Tse, Nuclear Regulatory Commission, Office of Nuclear Regulatory Research, Washington, DC 20555, 301 492-3797

RIN: 3150-AC65

3844. ACCEPTANCE CRITERIA FOR EMERGENCY CORE COOLING SYSTEM (ECCS) FOR LIGHT WATER NUCLEAR POWER REACTORS

Legal Authority: 42 USC 2132; 42 USC 2133; 42 USC 2134; 42 USC 2201; 42 USC 2232; 42 USC 2233; 42 USC 2236; 42 USC 2239; 42 USC 2282; 42 USC 5841; 42 USC 5842; 42 USC 5846

CFR Citation: 10 CFR 50

Abstract: The proposed rule would amend regulations concerning acceptance criteria for emergency core cooling systems (ECCS) by allowing the use of realistic methods to demonstrate that an ECCS would protect the nuclear reactor core during a loss-of-coolant accident. This action is proposed because research has shown that calculations performed under current requirements greatly underestimate the ability of the ECCS to protect the core. This restricts the operation of some nuclear reactors unnecessarily and increases the costs of generating electricity. The proposed rule would allow use of the best information currently available to demonstrate that the ECCS would protect the reactor core during a loss-of-coolant accident.

Use of the proposed acceptance criteria could result in a 5 percent power upgrade for affected plants. The present value of energy replacement cost savings resulting from a potential upgrade would range from 13 to $147 million dollars depending on the location and age of a specific plant.

The proposed rule would apply to all applicants for and (cont)

Timetable:

Action	Date	FR Cite
ANPRM	12/06/76	43 FR 57157
ANPRM Comment Period End	02/05/79	43 FR 57157

VOL 53 ISS 79 PT 2 AP 25 1988 UMI

Action	Date	FR Cite
NPRM	03/03/87	52 FR 6334
NPRM Comment Period End	07/17/87	52 FR 6334
Final Action	06/15/88	

Small Entity: No

Additional Information: ABSTRACT CONT: holders of construction permits for light water reactors.

Because the proposed rule represents a significant change in a regulatory requirement, the staff prepared and issued on May 15, 1987, a summary of ECCS research performed over the last 10 years which identifies the technical basis for the proposed rule. A regulatory guide was also prepared and issued on April 2, 1987. This guide provides a definition of what constitutes an acceptable best estimate model and acceptable methods of performing the uncertainty evaluation. The estimated cost to the NRC of this rulemaking is 2-3 staff years and $200,000.

The only option to rulemaking considered by the staff was the continued use of the current licensing approach. At best, this is viewed as an interim solution because two separate calculations are required to meet the requirements of the current regulation and staff conditions for use of the licensing approach and continued use of the approach risks case-by-case litigation.

Agency Contact: Harry Tovmassian, Nuclear Regulatory Commission, Office of Nuclear Regulatory Research, Washington, DC 20555, 301 492-3586

RIN: 3150-AA44

3845. + PRIMARY REACTOR CONTAINMENT LEAKAGE TESTING FOR WATER-COOLED POWER REACTORS

Legal Authority: 42 USC 2133; 42 USC 2134; 42 USC 5841

CFR Citation: 10 CFR 50

Abstract: The proposed rule would update and revise the 1973 criteria for preoperational and periodic pressure testing for leakage of primary containment boundaries of water-cooled power reactors. Problems have developed in application and interpretation of the existing rule. These result from changes in testing technology, test criteria, and a relevant national standard that needs to be recognized.

The revision is urgently needed to resolve continuing conflicts between licensees and NRC inspectors over interpretations, current regulatory practice is no longer being reflected accurately by the existing rule, and endorsement in the existing regulation of an obsolete national standard that was replaced in 1981.

The benefits anticipated include elimination of inconsistencies and obsolete requirements, and the addition of greater usefulness and a higher confidence in the leak-tight integrity of containment system boundaries under post-loss of coolant accident conditions. The majority of the effort needed by NRC to issue the rule has already been expended. (cont)

Timetable:

Action	Date	FR Cite
NPRM	10/29/86	51 FR 39538
NPRM Comment Period End	04/24/87	52 FR 2416
Final Action	06/15/88	

Small Entity: No

Additional Information: ABSTRACT CONT:

A detailed analysis of costs, benefits, and occupational exposures is available in the Public Document Room, and indicates possible savings to industry of $14 million to $300 million and an increase in occupational exposure of less than one percent per year per plant due to increased testing.

Agency Contact: Gunter Arndt, Nuclear Regulatory Commission, Office of Nuclear Regulatory Research, Washington, DC 20555, 301 492-3945

RIN: 3150-AA86

3846. + STATION BLACKOUT

Legal Authority: 42 USC 2133; 42 USC 2134; 42 USC 2201; 42 USC 5841

CFR Citation: 10 CFR 50

Abstract: This proposed rule would require licensees of light water nuclear power plants to ensure that these plants are capable of withstanding a total loss of alternating current (AC) electrical power (called station blackout) to the essential and nonessential switchgear buses for a specified duration. A draft regulatory guide was issued at the same time as the proposed rule to provide guidance on how to determine the duration.

The proposed requirements were developed in response to information generated by the Commission's study of Unresolved Safety Issue A-44, Station Blackout. The proposed rule is intended to provide further assurance that a loss of both off-site and emergency on-site electric AC power systems will not adversely affect the public health and safety.

A regulatory analysis has been prepared for the proposed rule. The estimated public risk reduction is 145,000 person-rem over 25 years, and the estimated total cost for industry to comply with the proposed rule is $60 million. This results in an overall cost benefit ratio of about 2,400 person-rem per million dollars.

Timetable:

Action	Date	FR Cite
NPRM	03/21/86	51 FR 9629
NPRM Comment Period End	06/19/86	51 FR 9892
Final Action	04/30/88	

Small Entity: Not Applicable

Additional Information: ABSTRACT CONT:

The alternatives to this proposed rule are to take no action or to provide only guidance for plants to be able to cope with a station blackout period for a specified period. To take no action would not yield any reduction in public risk from station blackout events. To provide guidance only, since there is presently no requirement for nuclear power plants to be able to cope with a total loss of AC power, would not result in any basis for enforcement. The proposed rule is the recommended alternative based on its enforceability and, in part, on the favorable cost/benefit ratio.

Agency Contact: Alan Rubin/A.W. Serkiz, Nuclear Regulatory Commission, Office of Nuclear Regulatory Research, Washington, DC 20555, 301 492-8303

RIN: 3150-AB36

3847. + CODES AND STANDARDS FOR NUCLEAR POWER PLANTS

Legal Authority: 42 USC 5841; 42 USC 5842; 42 USC 5846

CFR Citation: 10 CFR 50

Abstract: The Commission proposes to amend its regulations to incorporate by reference the Winter 1984 Addenda, Summer 1985 Addenda, Winter 1985 Addenda, and 1986 Edition of Section III, Division 1, of the American Society of Mechanical Engineers Boiler and Pressure Vessel Code (ASME Code), and the Winter 1983 Addenda, Summer 1984 Addenda, Winter 1984 Addenda, Summer 1985 Addenda, Winter 1985 Addenda, and 1986 Edition of Section XI, Division 1 of the ASME Code. A limitation is placed on the use of paragraph IWB-3640 as contained in the Winter 1983 Addenda and Winter 1984 Addenda of Section XI, Division 1. This limitation requires that for certain types of welds, IWB-3640 be used as modified by the Winter 1985 Addenda. The sections of the ASME Code being incorporated provide rules for the construction of light-water-cooled nuclear power plant components and specify requirements for inservice inspection of those components. Adoption of these amendments would permit the use of improved methods for construction and inservice inspection of nuclear power plants.

Timetable:

Action	Date	FR Cite
NPRM	06/26/87	52 FR 24015
NPRM Comment Period End	08/25/87	52 FR 24015
Final Action	04/30/88	

Small Entity: No

Agency Contact: Gilbert C. Millman, Nuclear Regulatory Commission, Office of Nuclear Regulatory Research, Washington, DC 20555, 301 492-3872

RIN: 3150-AC29

3848. ● BACKFIT REQUIREMENT FOR SENIOR OPERATORS AT NUCLEAR POWER PLANTS

Legal Authority: 42 USC 2201; 42 USC 5841

CFR Citation: 10 CFR 50

Abstract: The Nuclear Regulatory Commission is considering an amendment to its rule concerning the backfitting of nuclear power plants. This rulemaking action is necessary to bring the existing backfitting rule into unambiguous conformance with the decision of the United States Court of Appeals for the District of Columbia in the Union of Concerned Scientist, et al. v. U.S. Nuclear Regulatory Commission (Nos. 85-1757 and 86-1219 (August 4, 1987)). The rulemaking is intended to clarify when economic factors may be considered in making a decision as to whether or not a backfit requirement is imposed on a nuclear power plant.

Timetable:

Action	Date	FR Cite
NPRM	09/10/87	52 FR 34223
NPRM Comment Period End	10/13/87	52 FR 34223
Final Action	04/00/88	

Small Entity: No

Agency Contact: Steven F. Crockett, Nuclear Regulatory Commission, Office of the General Counsel, Washington, DC 20555, 202 634-1465

RIN: 3150-AC63

3849. + TABLE S-3, ADDITION OF RADON-222 AND TECHNETIUM-99 RADIATION VALUES AND ADDITION OF APPENDIX B, "TABLE S-3 EXPLANATORY ANALYSIS"

Legal Authority: 42 USC 2011; 42 USC 4321

CFR Citation: 10 CFR 51

Abstract: The proposed rule provides a narrative explanation of the numerical values established in Table S-3, "Table of Uranium Fuel Cycle Environmental Data," that appears in the Commission's environmental protection regulations. The proposed rule describes the basis for the values contained in Table S-3, the significance of the uranium fuel cycle data in the table, and the conditions governing the use of the table. The proposed rule would also modify or eliminate reference to the enrichment value of U-235 and the average level of fuel irradiation. The narrative explanation also addresses important fuel cycle impacts and the cumulative impacts of the nuclear fuel cycle for the whole nuclear power industry so that it may be possible to consider these impact generically rather than repeatedly in individual licensing proceedings, thus reducing litigation time and costs for both NRC and applicants.

The proposed rule regarding revision of Section 51.51 and the addition of Appendix B was published for public review and comment on March 4, 1981 (46 FR 15154). The final rulemaking

Timetable:

Action	Date	FR Cite
NPRM	03/04/81	46 FR 15154
NPRM Comment Period End	05/04/81	46 FR 15154
Final Action	12/00/88	

Small Entity: No

Additional Information: ABSTRACT CONT: was deferred pending the outcome of a suit (Natural Resources Defense Council, et al. v. NRC, No. 74-186) in the U.S. Circuit Court of Appeals. The U.S. Court of Appeals (D.C. Circuit decision of April 27, 1982, invalidated the entire Table S-3 rule. The Supreme Court reversed this decision on June 6, 1983.

The proposed rule to provide a narrative explanation for Table S-3 has been revised to reflect new developments and the passage of time while the rulemaking was deferred. Final action on the Table S-3 rule was held in abeyance until new values for radon- 222 and technetium-99 could be added to the table and covered in the narrative explanation. The rule is being reissued as a proposed rule because the scope has been extended to include radiation values for radon-222 and technetium-99 and the narrative explanation has been extensively revised from that published on March 4, 1981 (46 FR 15154)

The Staff's estimate is that the completion of a final Table S-3 rule covering the new values for radon-222 and technetium-99, and the revised narrative explanation will be completed in 1989.

Agency Contact: William Pearson, Nuclear Regulatory Commission, Office of Nuclear Regulatory Research, Washington, DC 20555, 301 492-3764

RIN: 3150-AA31

3850. + PART 51; CONFORMING AMENDMENTS

Legal Authority: 42 USC 10101

CFR Citation: 10 CFR 51; 10 CFR 60

Abstract: The proposed rule would provide procedures for performing an environmental review of High Level Waste geologic repositories. Part 51 contains no provisions for the environmental review of a license application for a HLW repository. The Nuclear Waste Policy Act of 1982 established requirements for

environmental reviews which are at variance with the environmental review which NRC performs in licensing other types of nuclear facilities. The issue must be addressed in order to avoid delay in the U.S. HLW Program. The proposed rule would benefit the public, industry, and NRC by clarifying licensing procedures, thus avoiding case determinations and possible litigation during HLW geologic repository licensing. Minor revisions to Part 60 will be necessary to conform to the environmental requirements of the NWPA. Alternatives are to take no action, issue an ANPRM, or ask Congress for additional legislation.

Timetable:

Action	Date	FR Cite
NPRM	03/15/88	
Final Action	03/15/89	

Small Entity: No

Agency Contact: James R. Wolf, Nuclear Regulatory Commission, Office of the General Counsel, Washington, DC 20555, 301 492-1641

RIN: 3150-AC04

3851. + CRITERIA AND PROCEDURES FOR EMERGENCY ACCESS TO NON-FEDERAL AND REGIONAL LOW-LEVEL WASTE DISPOSAL FACILITIES

Legal Authority: 42 USC 2021

CFR Citation: 10 CFR 62

Abstract: The proposed rule would establish procedures and criteria for fulfilling NRC's responsibilities associated with action on requests by low-level radioactive waste generators, or State officials on behalf of those generators, for emergency access to operating, non-Federal or regional, low level radioactive waste disposal facilities under Section 6 of the Low-Level Radioactive Waste Policy Amendments Act of 1985 (LLRWPAA). Section 6 of the LLRWPAA authorizes the NRC to grant emergency access to any non-Federal low-level waste disposal facility, if necessary, to eliminate the immediate and serious threat to the public health and safety of the common defense and security, provided the threat cannot be mitigated by any alternative.

Timetable:

Action	Date	FR Cite
NPRM	12/15/87	52 FR 47578
NPRM Comment Period End	02/12/88	52 FR 47578
Final Action	06/31/88	

Small Entity: Yes

Agency Contact: Janet Lambert, Nuclear Regulatory Commission, Office of Nuclear Regulatory Research, Washington, DC 20555, 301 492-3904

RIN: 3150-AC24

3852. ● SAFEGUARDS REQUIREMENTS FOR FUEL FACILITIES POSSESSING FORMULA QUANTITIES OF STRATEGIC SPECIAL NUCLEAR MATERIAL

Legal Authority: 42 USC 2073; 42 USC 2167; 41 USC 2201; 42 USC 5841; 42 USC 5844

CFR Citation: 10 CFR 73

Abstract: In a staff requirements memorandum dated June 8, 1987, the Commission directed the staff to publish a proposed rule within 120 days which would implement improved safeguards requirements based on the findings of a review team which compared DOE and NRC safeguards programs (SECY 87-28). Primary focus is in the following areas: (1) security system performance evaluations, (2) night firing qualifications for guards, (3) 100 percent entrance searches, (4) armed guards at material access area control points, (5) two protected area fences, and (6) revision of the design basis threat.

Timetable:

Action	Date	FR Cite
NPRM	12/31/87	52 FR 49418
NPRM Comment Period End	03/30/88	52 FR 49418
Final Action	10/30/88	

Small Entity: No

Agency Contact: Dr. Sandra D. Frattali, Nuclear Regulatory Commission, Office of Nuclear Regulatory Research, Washington, DC 20555, 301 492-3773

RIN: 3150-AC62

3853. + CRITERIA FOR AN EXTRAORDINARY NUCLEAR OCCURRENCE

Legal Authority: 42 USC 2201; 42 USC 2210; 42 USC 5841; 42 USC 5842

CFR Citation: 10 CFR 140

Abstract: The final rule will revise the ENO criteria to eliminate the problems that were encountered in the Three Mile Island ENO determination. It is desirable to get revised criteria in place in the event they are needed.

There are no alternatives to this rulemaking, as the current ENO criteria are already embodied in Subpart E of 10 CFR Part 140. The only way to modify these criteria, as this rule seeks to do through rulemaking.

There is no impact on public health or safety. The ENO criteria provide legal waivers of defenses. Industry (insurers and utilities) claims that a reduction in the ENO criteria could cause increases in insurance premiums. The final rule would also be responsive to PRM-140-1.

It is estimated that approximately 1.0 staff year of NRC time will be required to process the final rule. No contract funding is anticipated.

Timetable:

Action	Date	FR Cite
NPRM	04/09/85	50 FR 13978
NPRM Comment Period End	09/06/85	
Final Action	04/30/88	

Small Entity: No

Agency Contact: Harold Peterson, Nuclear Regulatory Commission, Office of Nuclear Regulatory Research, Washington, DC 20555, 301 492-3738

RIN: 3150-AB01

3854. DISPOSAL OF LOW-LEVEL RADIOACTIVELY CONTAMINATED WASTE OIL FROM NUCLEAR POWER PLANTS

Legal Authority: 42 USC 2201; 42 USC 2167; 42 USC 2073

CFR Citation: 10 CFR 20

Abstract: The proposed rule, which is being initiated in partial response to a petition filed by Edison Electric Institute and Utility Nuclear Waste Management Group (PRM-20-15, dated July 31, 1984), would amend NRC regulations to allow onsite incineration of waste oil at nuclear power plants subject to specified conditions. Currently, the only approved disposal method for low-level, radioactively contaminated waste oil from nuclear power plants involves absorption or solidification, transportation to, and

burial at a licensed disposal site. There is a clear need to allow, for very low activity level wastes, the use of alternative disposal methods which are most cost effective from a radiological health and safety standpoint and which conserve the limited disposal capacity of low-level waste burial sites.

Increased savings to both the public and the industry could thereby be achieved without imposing additional risk to the public health and safety. There would be, in a mature reactor economy, an estimated industry-wide economic savings of approximately $5 million to $18 million per year if such a rule

Timetable:

Action	Date	FR Cite
NPRM	03/01/88	
Final Action	12/30/88	

Small Entity: No

Additional Information: ABSTRACT CONT: were promulgated.

Alternatives to this rulemaking action are to maintain the status quo or to wait until the Environmental Protection Agency develops standards on acceptable levels of radioactivity which may be released to the environment on an unrestricted basis. It is estimated that approximately 1-2 staff-years will be required to process this rule.

Agency Contact: Catherine R. Mattsen, Nuclear Regulatory Commission, Office of Nuclear Regulatory Research, Washington, DC 20555, 301 492-3638

RIN: 3150-AC14

3855. + PROPOSED REVISIONS TO THE CRITERIA AND PROCEDURES FOR THE REPORTING OF DEFECTS AND NONCOMPLIANCE

Legal Authority: 42 USC 2201; 42 USC 2282; 42 USC 5841; 42 USC 5846

CFR Citation: 10 CFR 21; 10 CFR 50

Abstract: This proposed rule would amend Part 21 and sec. 50.55(e), both of which require the reporting of safety defects by licensees. In addition, Part 21 requires reporting by non-licensees. This proposed amendment was prompted by TMI Action Plan Task II, J.4, and NRC staff experience with Part 21 and section 50.55 (e) reporting. The main objectives of the rulemaking effort are: (1) elimination of duplicate evaluation and reporting of safety defects; (2) consistent threshold for safety defect reporting in Part 21 and section 50.55(e); (3) establishment of consistent and uniform content of reporting under Part 21 and section 50.55 (e) and (4) establishment of time limits within which a defect must be evaluated and reported.

Approximately 500 reports are submitted to the Commission annually under Part 21. Approximately 1500 reports are submitted to the Commission annually under section 50.55 (e). These reports identify both plant-specific and generic safety for further NRC regulatory action. Under current rules, these reports have formed the basis for NRC issuance of numerous NRC information notices and bulletins. (cont)

Timetable:

Action	Date	FR Cite
NPRM	03/01/88	
Final Action	09/11/88	

Small Entity: No

Additional Information: ABSTRACT CONT:

Alternatives to this rulemaking approach which were considered, varied from establishment of a single rule for all reporting of safety defects and operating reactors events to maintaining status quo for defect reporting. All alternatives were rejected since they would not substantially improve the current safety defect reporting situation.

Current costs of reporting under Part 21 and section 50.55 (e) are estimated at $10.08 million annually for industry and 1.74 million annually for NRC evaluations. It is anticipated that the industry reporting burden should be reduced by $1.93 million; while NRC burden should remain the same. Additional industry burden, though minimal, is anticipated in the area of reissuing procedures for reporting and record keeping.

The Commission disapproved this proposed rule on 10/20/86 and provided direction to the staff to revise the proposed rulemaking.

Agency Contact: William R. Jones, Nuclear Regulatory Commission, Office of Analysis and Evaluation of, Operational Data, Washington, DC 20555, 301 492-4488

RIN: 3150-AA68

3856. + SAFETY REQUIREMENTS FOR INDUSTRIAL RADIOGRAPHIC EXPOSURE DEVICES

Legal Authority: 42 USC 2111; 42 USC 2201; 42 USC 2232; 42 USC 2233

CFR Citation: 10 CFR 34

Abstract: The proposed rule would amend the present regulations to establish performance standards for industrial radiography exposure devices. Overexposures of radiographers (and occasionally the general public) are more than double that of other radiation workers and have been a concern to the NRC for some time. Approximately 25-35% of the radiography overexposures are associated with equipment malfunction. The issue of safety requirements for these devices is a primary concern since the devices use relatively high intensity, high energy gamma-ray emitting sources with the potential for serious overexposures. Although a consensus standard for radiographic exposure devices was published in 1981, (American National Standard. N432) it is not clear that all manufacturers are adopting the standard.

The alternatives considered were to (1) take no action at this time, (2) amend the regulations to require performance standards for radiographic devices plus a requirement for radiographers to wear alarm dosimeters and simultaneously issue a regulatory guide endorsing the consensus standard, supplemented by such other performance standards deemed necessary, plus a requirement (cont)

Timetable:

Action	Date	FR Cite
NPRM	02/15/88	
Final Action	08/15/88	

Small Entity: Yes

Additional Information: ABSTRACT CONT: for radiographers to wear alarm dosimeters.

The proposed rule would require licensees to modify radiographic devices to meet the performance standards through design changes and quality control procedures. Cost of incorporating the proposed changes are estimated to be a one-time cost $1,600 per licensee to purchase alarm dosimeters and $250.00 per year per licensee to replace existing devices with devices that meet the requirements

environmental reviews which are at variance with the environmental review which NRC performs in licensing other types of nuclear facilities. The issue must be addressed in order to avoid delay in the U.S. HLW Program. The proposed rule would benefit the public, industry, and NRC by clarifying licensing procedures, thus avoiding case determinations and possible litigation during HLW geologic repository licensing. Minor revisions to Part 60 will be necessary to conform to the environmental requirements of the NWPA. Alternatives are to take no action, issue an ANPRM, or ask Congress for additional legislation.

Timetable:

Action	Date	FR Cite
NPRM	03/15/88	
Final Action	03/15/89	

Small Entity: No

Agency Contact: James R. Wolf, Nuclear Regulatory Commission, Office of the General Counsel, Washington, DC 20555, 301 492-1641

RIN: 3150-AC04

3851. + CRITERIA AND PROCEDURES FOR EMERGENCY ACCESS TO NON-FEDERAL AND REGIONAL LOW-LEVEL WASTE DISPOSAL FACILITIES

Legal Authority: 42 USC 2021

CFR Citation: 10 CFR 62

Abstract: The proposed rule would establish procedures and criteria for fulfilling NRC's responsibilities associated with action on requests by low-level radioactive waste generators, or State officials on behalf of those generators, for emergency access to operating, non-Federal or regional, low level radioactive waste disposal facilities under Section 6 of the Low-Level Radioactive Waste Policy Amendments Act of 1985 (LLRWPAA). Section 6 of the LLRWPAA authorizes the NRC to grant emergency access to any non-Federal low-level waste disposal facility, if necessary, to eliminate the immediate and serious threat to the public health and safety of the common defense and security, provided the threat cannot be mitigated by any alternative.

Timetable:

Action	Date	FR Cite
NPRM	12/15/87	52 FR 47578
NPRM Comment Period End	02/12/88	52 FR 47578
Final Action	08/31/88	

Small Entity: Yes

Agency Contact: Janet Lambert, Nuclear Regulatory Commission, Office of Nuclear Regulatory Research, Washington, DC 20555, 301 492-3904

RIN: 3150-AC24

3852. ● SAFEGUARDS REQUIREMENTS FOR FUEL FACILITIES POSSESSING FORMULA QUANTITIES OF STRATEGIC SPECIAL NUCLEAR MATERIAL

Legal Authority: 42 USC 2073; 42 USC 2167; 41 USC 2201; 42 USC 5841; 42 USC 5844

CFR Citation: 10 CFR 73

Abstract: In a staff requirements memorandum dated June 8, 1987, the Commission directed the staff to publish a proposed rule within 120 days which would implement improved safeguards requirements based on the findings of a review team which compared DOE and NRC safeguards programs (SECY 87-28). Primary focus is in the following areas: (1) security system performance evaluations, (2) night firing qualifications for guards, (3) 100 percent entrance searches, (4) armed guards at material access area control points, (5) two protected area fences, and (6) revision of the design basis threat.

Timetable:

Action	Date	FR Cite
NPRM	12/31/87	52 FR 49418
NPRM Comment Period End	03/30/88	52 FR 49418
Final Action	10/30/88	

Small Entity: No

Agency Contact: Dr. Sandra D. Frattali, Nuclear Regulatory Commission, Office of Nuclear Regulatory Research, Washington, DC 20555, 301 492-3773

RIN: 3150-AC62

3853. + CRITERIA FOR AN EXTRAORDINARY NUCLEAR OCCURRENCE

Legal Authority: 42 USC 2201; 42 USC 2210; 42 USC 5841; 42 USC 5842

CFR Citation: 10 CFR 140

Abstract: The final rule will revise the ENO criteria to eliminate the problems that were encountered in the Three Mile Island ENO determination. It is desirable to get revised criteria in place in the event they are needed.

There are no alternatives to this rulemaking, as the current ENO criteria are already embodied in Subpart E of 10 CFR Part 140. The only way to modify these criteria, as this rule seeks to do through rulemaking.

There is no impact on public health or safety. The ENO criteria provide legal waivers of defenses. Industry (insurers and utilities) claims that a reduction in the ENO criteria could cause increases in insurance premiums. The final rule would also be responsive to PRM-140-1.

It is estimated that approximately 1.0 staff year of NRC time will be required to process the final rule. No contract funding is anticipated.

Timetable:

Action	Date	FR Cite
NPRM	04/09/85	50 FR 13978
NPRM Comment Period End	09/06/85	
Final Action	04/30/88	

Small Entity: No

Agency Contact: Harold Peterson, Nuclear Regulatory Commission, Office of Nuclear Regulatory Research, Washington, DC 20555, 301 492-3738

RIN: 3150-AB01

3854. DISPOSAL OF LOW-LEVEL RADIOACTIVELY CONTAMINATED WASTE OIL FROM NUCLEAR POWER PLANTS

Legal Authority: 42 USC 2201; 42 USC 2167; 42 USC 2073

CFR Citation: 10 CFR 20

Abstract: The proposed rule, which is being initiated in partial response to a petition filed by Edison Electric Institute and Utility Nuclear Waste Management Group (PRM-20-15, dated July 31, 1984), would amend NRC regulations to allow onsite incineration of waste oil at nuclear power plants subject to specified conditions. Currently, the only approved disposal method for low-level, radioactively contaminated waste oil from nuclear power plants involves absorption or solidification, transportation to, and

burial at a licensed disposal site. There is a clear need to allow, for very low activity level wastes, the use of alternative disposal methods which are most cost effective from a radiological health and safety standpoint and which conserve the limited disposal capacity of low-level waste burial sites.

Increased savings to both the public and the industry could thereby be achieved without imposing additional risk to the public health and safety. There would be, in a mature reactor economy, an estimated industry-wide economic savings of approximately $5 million to $18 million per year if such a rule

Timetable:

Action	Date	FR Cite
NPRM	03/01/88	
Final Action	12/30/88	

Small Entity: No

Additional Information: ABSTRACT CONT: were promulgated.

Alternatives to this rulemaking action are to maintain the status quo or to wait until the Environmental Protection Agency develops standards on acceptable levels of radioactivity which may be released to the environment on an unrestricted basis. It is estimated that approximately 1-2 staff-years will be required to process this rule.

Agency Contact: Catherine R. Mattsen, Nuclear Regulatory Commission, Office of Nuclear Regulatory Research, Washington, DC 20555, 301 492-3638

RIN: 3150-AC14

3855. + PROPOSED REVISIONS TO THE CRITERIA AND PROCEDURES FOR THE REPORTING OF DEFECTS AND NONCOMPLIANCE

Legal Authority: 42 USC 2201; 42 USC 2282; 42 USC 5841; 42 USC 5846

CFR Citation: 10 CFR 21; 10 CFR 50

Abstract: This proposed rule would amend Part 21 and sec. 50.55(e), both of which require the reporting of safety defects by licensees. In addition, Part 21 requires reporting by non-licensees. This proposed amendment was prompted by TMI Action Plan Task II, J.4, and NRC staff experience with Part 21 and section 50.55 (e) reporting. The main objectives of the rulemaking effort are: (1) elimination of duplicate evaluation and reporting of safety defects; (2) consistent threshold for safety defect reporting in Part 21 and section 50.55(e); (3) establishment of consistent and uniform content of reporting under Part 21 and section 50.55 (e) and (4) establishment of time limits within which a defect must be evaluated and reported.

Approximately 500 reports are submitted to the Commission annually under Part 21. Approximately 1500 reports are submitted to the Commission annually under section 50.55 (e). These reports identify both plant-specific and generic safety for further NRC regulatory action. Under current rules, these reports have formed the basis for NRC issuance of numerous NRC information notices and bulletins. (cont)

Timetable:

Action	Date	FR Cite
NPRM	03/01/88	
Final Action	09/11/88	

Small Entity: No

Additional Information: ABSTRACT CONT:

Alternatives to this rulemaking approach which were considered, varied from establishment of a single rule for all reporting of safety defects and operating reactors events to maintaining status quo for defect reporting. All alternatives were rejected since they would not substantially improve the current safety defect reporting situation.

Current costs of reporting under Part 21 and section 50.55 (e) are estimated at $10.08 million annually for industry and 1.74 million annually for NRC evaluations. It is anticipated that the industry reporting burden should be reduced by $1.93 million; while NRC burden should remain the same. Additional industry burden, though minimal, is anticipated in the area of reissuing procedures for reporting and record keeping.

The Commission disapproved this proposed rule on 10/20/86 and provided direction to the staff to revise the proposed rulemaking.

Agency Contact: William R. Jones, Nuclear Regulatory Commission, Office of Analysis and Evaluation of, Operational Data, Washington, DC 20555, 301 492-4488

RIN: 3150-AA68

3856. + SAFETY REQUIREMENTS FOR INDUSTRIAL RADIOGRAPHIC EXPOSURE DEVICES

Legal Authority: 42 USC 2111; 42 USC 2201; 42 USC 2232; 42 USC 2233

CFR Citation: 10 CFR 34

Abstract: The proposed rule would amend the present regulations to establish performance standards for industrial radiography exposure devices. Overexposures of radiographers (and occasionally the general public) are more than double that of other radiation workers and have been a concern to the NRC for some time. Approximately 25-35% of the radiography overexposures are associated with equipment malfunction. The issue of safety requirements for these devices is a primary concern since the devices use relatively high intensity, high energy gamma-ray emitting sources with the potential for serious overexposures. Although a consensus standard for radiographic exposure devices was published in 1981, (American National Standard. N432) it is not clear that all manufacturers are adopting the standard.

The alternatives considered were to (1) take no action at this time, (2) amend the regulations to require performance standards for radiographic devices plus a requirement for radiographers to wear alarm dosimeters and simultaneously issue a regulatory guide endorsing the consensus standard, supplemented by such other performance standards deemed necessary, plus a requirement (cont)

Timetable:

Action	Date	FR Cite
NPRM	02/15/88	
Final Action	08/15/88	

Small Entity: Yes

Additional Information: ABSTRACT CONT: for radiographers to wear alarm dosimeters.

The proposed rule would require licensees to modify radiographic devices to meet the performance standards through design changes and quality control procedures. Cost of incorporating the proposed changes are estimated to be a one-time cost $1,600 per licensee to purchase alarm dosimeters and $250.00 per year per licensee to replace existing devices with devices that meet the requirements

of the consensus standard. Determination of the benefits to be derived from the proposed rule are difficult to determine on a monetary basis but the potential hazards that might be averted include radiation sickness, injury, and even death. NRC resources required for processing this rule to final publication are estimated to be 0.4 person-years.

Agency Contact: Donald O. Nellis, Nuclear Regulatory Commission, Office of Nuclear Regulatory Research, Washington, DC 20555, 301 492-3628

RIN: 3150-AC12

3857. ● DIAGNOSTIC MISADMINISTRATION REPORT FORM

Legal Authority: 42 USC 2201; 42 USC 5841

CFR Citation: 10 CFR 35

Abstract: The final rule amends the regulations governing the medical use of byproduct material to specify the form that is to be used by NRC medical licensees to report diagnostic misadministrations. The rule is intended to inform licensees that the form contemplated in the revision to these regulations (see the Federal Register of October 16, 1986; 51 FR 36932) has been developed and is now available for use.

Timetable:

Action	Date	FR Cite
Interim Final Rule	04/00/88	

Small Entity: No

Agency Contact: Norman L. McElroy, Nuclear Regulatory Commission, Office of Nuclear Materials Safety and, Safeguards, Washington, DC 20555, 301 427-4108

RIN: 3150-AC69

3858. ALTERNATIVE METHODS FOR LEAKAGE RATE TESTING

Legal Authority: 42 USC 2201; 42 USC 5841

CFR Citation: 10 CFR 50

Abstract: The Nuclear Regulatory Commission proposes a limited amendment to its regulations to clarify a question of interpretation in regard to leakage testing of containments of light-water cooled nuclear power plants. This proposed amendment would explicitly permit the continued use of a statistical data analysis technique that the NRC has considered to be an acceptable method of calculating containment leakage rates. Rulemaking is the only acceptable alternative for resolving this issue because the regulations specify the methods the NRC finds acceptable for calculation leakage rates. Because the proposed rule would simply make another method of calculating leakage rates available to the industry, there is no economic impact likely to result from this action.

Timetable:

Action	Date	FR Cite
NPRM	02/29/88	53 FR 5985
NPRM Comment Period End	03/30/88	
Final Action	08/15/88	

Small Entity: No

Agency Contact: E. Gunter Arndt, Nuclear Regulatory Commission, Office of Nuclear Regulatory Research, Washington, DC 20555, 301 492-3945

RIN: 3150-AC54

3859. AMENDMENT TO ASSIGN NRC SOLE AUTHORITY FOR APPROVING ONSITE LOW-LEVEL WASTE DISPOSAL

Legal Authority: 42 USC 2201; 42 USC 2021; 42 USC 5841

CFR Citation: 10 CFR 150

Abstract: This rulemaking would establish NRC's sole authority for approving onsite disposal of low-level waste at all NRC licensed reactors and at Part 70 fuel cycle facilities. There is a need to amend section 150.15 to authorize one agency (NRC) to regulate all onsite disposal of low-level waste in order to provide a more comprehensive regulatory review procedure of all onsite waste management activities and to avoid unnecessary duplication of effort. Uniform review procedures by the NRC will provide for greater health hazard at a later date after the site is decommissioned.

Timetable:

Action	Date	FR Cite
NPRM	02/28/88	
Final Action	02/28/89	

Small Entity: No

Agency Contact: John Stewart, Nuclear Regulatory Commission, Office of Nuclear Regulatory Research, Washington, DC 20555, 301 492-3618

RIN: 3150-AC57

NUCLEAR REGULATORY COMMISSION (NRC) — Completed Actions

3860. ● RECONSIDERATION OF ENFORCEMENT PROVISION INVOLVING REOPENING CLOSED CASES

Legal Authority: 42 USC 2201; 42 USC 5841

CFR Citation: 10 CFR 2

Abstract: The final rule modifies the NRC's general statement of policy and procedure for enforcement actions. The modification is necessary to clarify the policy on reopening closed enforcement actions. The policy statement is modified to make it clear that a decision to reopen a case is to be made on a case-by-case basis.

Timetable:

Action	Date	FR Cite
Final Action	03/23/88	53 FR 9429

Small Entity: No

Agency Contact: James Lieberman, Nuclear Regulatory Commission, Office of Enforcement, Washington, DC 20555, 301 492-0741

RIN: 3150-AC79

3861. ● RELOCATION OF OFFICE OF NUCLEAR REACTOR REGULATION

Legal Authority: 42 USC 2201; 42 USC 5841

CFR Citation: 10 CFR 4; 10 CFR 15; 10 CFR 19; 10 CFR 20; 10 CFR 21; 10 CFR 50; 10 CFR 53; 10 CFR 55; 10 CFR 73; 10 CFR 75; 10 CFR 81; 10 CFR 140; 10 CFR 150; 10 CFR 170

Abstract: The final rule amends the NRC's regulations to indicate that its Office of Nuclear Reactor Regulation has relocated at the agency's new office building located at One White Flint

North, 11555 Rockville Pike, Rockville, Maryland. The final rule also indicates this relocation by revising the address for the personal delivery of communications and reports to the NRC's Document Control Desk. These amendments are being made to inform NRC licensees and members of the public of the relocation.

Timetable:

Action	Date	FR Cite
Final Action Effective	02/29/88	
Final Action	03/01/88	53 FR 6137

Small Entity: No

Agency Contact: Donnie H. Grimsley, Nuclear Regulatory Commission, Office of Administration and Resources, Management, Washington, DC 20555, 301 492-7211

RIN: 3150-AC77

3862. UPDATE OF FREEDOM OF INFORMATION ACT PROCEDURES AND OTHER MINOR AMENDMENTS

Legal Authority: 42 USC 2201; 42 USC 5841; 5 USC 552; 31 USC 9701; 5 USC 552a; 5 USC 552b

CFR Citation: 10 CFR 2; 10 CFR 9

Abstract: The final rule revised Parts 2 and 9 to reflect changes in the Freedom of Information Act. This action is being taken to comply with Pub. L. 99-570 "Freedom of Information Reform Act of 1986," signed into law by the President on October 1986. These amendments also reflect current NRC organizational structure, current agency practice and delegation. The revision will also reduce the repetition of statutory requirements.

Timetable:

Action	Date	FR Cite
NPRM	08/06/87	52 FR 29197
NPRM Comment Period End	08/26/87	52 FR 29197
Final Action	12/31/87	52 FR 49350
Final Action Effective	02/01/88	52 FR 49350

Small Entity: No

Agency Contact: Donnie H. Grimsley, Nuclear Regulatory Commission, Office of Administration and Resources, Management, Washington, DC 20555, 301 492-7211

RIN: 3150-AC50

3863. + FEE SCHEDULE CHANGE FOR NRC "U" AND "Q" ACCESS AUTHORIZATIONS

Legal Authority: 42 USC 2201; 42 USC 2273; 42 USC 5841

CFR Citation: 10 CFR 11; 10 CFR 25

Abstract: The final rule increases the fees for NRC "U" and "Q" access authorizations charged to NRC licensees and others applying for access authorizations which require full field background investigations. The final amendments also require that the title of the NRC point of contact, in the event a request for an individual's access authorization is withdrawn or cancelled, be changed to read Chief, Personnel Security Branch, NRC Division of Security. The final amendments are in response to the Office of Personnel Management's Notification of an increase in cost to conduct background investigations.

Timetable:

Action	Date	FR Cite
Final Action	11/20/87	52 FR 44593

Small Entity: No

Agency Contact: Duane G. Kidd, Nuclear Regulatory Commission, Office of Administration and Resources Management, Washington, DC 20555, 301 492-4124

RIN: 3150-AC59

3864. COMPLETENESS AND ACCURACY OF INFORMATION PROVIDED TO THE COMMISSION

Legal Authority: 42 USC 2201; 42 USC 2021a; 42 USC 5841; 42 USC 5851; 42 USC 10141; 42 USC 2273; 42 USC 2201(o)

CFR Citation: 10 CFR 30; 10 CFR 40; 10 CFR 50; 10 CFR 55; 10 CFR 60; 10 CFR 61; 10 CFR 70; 10 CFR 71; 10 CFR 72; 10 CFR 150

Abstract: The final rule requires all licensees and applicants for licenses to provide the Commission with complete and accurate information, to provide for disclosure of information identified by licensees as significant for licensed activities and to define those circumstances when inaccurate or incomplete information will be considered by the Commission as material false statements.

Timetable:

Action	Date	FR Cite
Final Action Effective	02/01/87	52 FR 49362
NPRM	03/11/87	52 FR 7432
NPRM Comment Period End	04/10/87	52 FR 7432
Final Action	12/31/87	52 FR 49362

Small Entity: No

Agency Contact: Mary Wagner, Nuclear Regulatory Commission, Office of the General Counsel, Washington, DC 20555, 301 492-1683

RIN: 3150-AC45

3865. REGIONAL NUCLEAR MATERIALS LICENSING FOR THE UNITED STATES NAVY

Legal Authority: 42 USC 5841

CFR Citation: 10 CFR 30; 10 CFR 40; 10 CFR 70

Abstract: The final rule amends provisions concerning the domestic licensing of source, byproduct, and special nuclear materials. The final rule is intended to provide information about the further implementation of NRC's decentralized licensing program. This amendment implements another phase of the process by transferring the newly consolidated U.S. Navy license to Region II. The final rule does not have any cost impact on NRC, the licensee or the public.

Timetable:

Action	Date	FR Cite
Final Action	10/16/87	52 FR 38391
Final Action Effective	12/01/87	52 FR 38391

Small Entity: No

Agency Contact: George J. Deegan, Nuclear Regulatory Commission, Office of Nuclear Material, Safety and Safeguards, Washington, DC 20555, 301 427-4114

RIN: 3150-AC55

3866. ● REVISION OF LIST OF NON-AGREEMENT STATES IN REGION III

Legal Authority: 42 USC 2201; 42 USC 5841

CFR Citation: 10 CFR 30; 10 CFR 40; 10 CFR 70

Abstract: The final rule amends the Commission's regulations to reflect the removal of Illinois and Iowa from the list of non-Agreement States in Region

III because Iowa became an Agreement State in 1986 and Illinois became an Agreement State in 1987. These amendments are necessary to inform the public and affected licensees of the change in status of the two States.

Timetable:

Action	Date	FR Cite
Final Action	12/18/87	52 FR 48092
Final Action Effective	12/18/87	52 FR 48092

Small Entity: No

Agency Contact: Donnie H. Grimsley, Nuclear Regulatory Commission, Office of Administration and Resources, Management, Washington, DC 20555, 301 492-7211

RIN: 3150-AC70

3867. + URANIUM MILL TAILINGS REGULATIONS: GROUND WATER PROTECTION AND OTHER ISSUES

Legal Authority: 42 USC 2201; 42 USC 5841; 42 USC 7901 Note

CFR Citation: 10 CFR 40

Abstract: The final rule incorporates groundwater standards established by the Environmental Protection Agency for uranium mill tailings into NRC regulations. This action is necessary to make NRC regulations conform to EPA standards as required by the Uranium Mill Tailings Radiation Control Act.

Timetable:

Action	Date	FR Cite
ANPRM	11/26/84	49 FR 46425
ANPRM Comment Period End	03/01/85	50 FR 2293
NPRM	07/08/86	51 FR 24697
NPRM Comment Period End	09/08/86	51 FR 24697
Final Action	11/13/87	52 FR 43553
Final Action Effective	12/14/87	52 FR 43553

Small Entity: No

Agency Contact: Kitty S. Dragonette, Nuclear Regulatory Commission, Office of Nuclear Material Safety and Safeguards, Washington, DC 20555, 301 427-4500

RIN: 3150-AB56

3868. + BROAD SCOPE MODIFICATION OF GENERAL DESIGN CRITERION 4 REQUIREMENTS FOR PROTECTION AGAINST DYNAMIC EFFECTS OF POSTULATED PIPE RUPTURES

Legal Authority: 42 USC 2201; 42 USC 5845

CFR Citation: 10 CFR 50

Abstract: The final broad scope modification of General Design Criterion 4 (GDC 4) allows demonstration of piping integrity by analyses to serve as a basis for excluding consideration of dynamic effects associated with pipe ruptures. A final rule published April 11, 1986 (51 FR 12502) was limited to the primary loops of pressurized water reactors (PWRs), whereas this final rule covers all high energy piping in all light water reactors (LWRs). The modification permits the general but selective removal of pipe whip restraints and jet impingement shields from operating plants, plants under construction, and future plant designs, but will not impact other design requirements for containment design or ECCS performance. Alternative equipment qualification requirements developed by industry based on leak-before-break may be submitted to the NRC for review and approval in a limited number of applications.

Timetable:

Action	Date	FR Cite
NPRM	07/23/86	51 FR 26393
NPRM Comment Period End	09/22/86	51 FR 26393
Final Action	10/26/87	52 FR 41288
Final Action Effective	11/27/87	52 FR 41288

Small Entity: No

Agency Contact: John A. O'Brien, Nuclear Regulatory Commission, Office of Nuclear Regulatory Research, Washington, DC 20555, 301 443-7854

RIN: 3150-AC05

3869. CONSIDERATION OF EMERGENCY PLANNING RULE CHANGES TO DEAL WITH LACK OF GOVERNMENTAL COOPERATION IN OFFSITE EMERGENCY PLANNING

Legal Authority: 42 USC 2201; 42 USC 5841

CFR Citation: 10 CFR 50

Abstract: The final rule in limited circumstances, allows a full power nuclear plant operation to begin when there is a lack of State or local government cooperation in offsite emergency planning. In earlier regulations, the Commission published revised emergency planning regulations which required that emergency plans be developed by licensees in cooperation with State and local governments. Although the Commission acknowledged the possibility that some governments might not cooperate, the Commission premised the new rules on a coordinated effort among all parties. Because this coordination has proved impossible to achieve in a few isolated cases, this final rulemaking is intended to cover those cases not contemplated by the 1980 amendments.

Timetable:

Action	Date	FR Cite
NPRM	03/06/87	52 FR 6980
NPRM Comment Period End	06/04/87	52 FR 6980
Final Action	11/03/87	52 FR 42078
Final Action Effective	12/03/87	52 FR 42078

Small Entity: No

Agency Contact: Peter Crane, Nuclear Regulatory Commission, Office of the General Counsel, Washington, DC 20555, 301 634-1465

RIN: 3150-AC36

3870. ● CHANGE OF REGION I ADDRESS

Legal Authority: 42 USC 2201; 42 USC 5841

CFR Citation: 10 CFR 1; 10 CFR 20; 10 CFR 30; 10 CFR 40; 10 CFR 55; 10 CFR 70; 10 CFR 73

Abstract: The final rule would amend the Commission's regulations to reflect the change of address for its Region I Office. The amendments are necessary to inform the public and affected licensees of the change in address.

Timetable:

Action	Date	FR Cite
Final Action	02/10/88	53 FR 3861
Final Action Effective	02/10/88	53 FR 3861

Small Entity: No

Agency Contact: Donnie H. Grimsley, Nuclear Regulatory Commission, Office of Administration and Resources,

Management, Washington, DC 20555, 301 492-7211

RIN: 3150-AC68

3871. ● REVISION OF HEADQUARTERS OFFICE LOCATIONS

Legal Authority: 42 USC 2201; 42 USC 5841

CFR Citation: 10 CFR 1

Abstract: The final rule amends NRC regulations pertaining to its statement of organization and general information to amend the name of one of its Headquarters Office Buildings and to add two new office locations to its list of offices. The amendment is being made to inform NRC licensees and members of the public of these changes.

Timetable:

Action	Date	FR Cite
Final Action	01/22/88	53 FR 1744
Final Action Effective	01/22/88	53 FR 1744

Small Entity: No

Agency Contact: Donnie H. Grimsley, Nuclear Regulatory Commission, Office of Administration and Resources, Management, Washington, DC 20555, 301 492-7211

RIN: 3150-AC74

3872. ● RELOCATION OF NRC OFFICES--NMSS AND GPA

Legal Authority: 42 USC 2201; 42 USC 5841

CFR Citation: 10 CFR 30; 10 CFR 40; 10 CFR 60; 10 CFR 61; 10 CFR 70; 10 CFR 72; 10 CFR 74

Abstract: The final rule amends the NRC's regulations to indicate that its Office of Nuclear Material Safety and Safeguards has relocated at the agency's new office building located at One White Flint North, 11555 Rockville Pike, Rockville, Maryland. In addition, the final rule announces that portions of the Office of Governmental and Public Affairs--the State, Local, and Indian Tribe Programs and International Programs--have also relocated at One White Flint North. These amendments are being made to inform NRC licensees and members of the public of these relocations.

Timetable:

Action	Date	FR Cite
Final Action	02/12/88	53 FR 4109

Small Entity: No

Agency Contact: Donnie H. Grimsley, Nuclear Regulatory Commission, Office of Administration and Resources, Management, Washington, DC 20555, 301 492-7211

RIN: 3150-AC75

3873. ● MINOR NOMENCLATURE AMENDMENTS

Legal Authority: 42 USC 2201; 42 USC 5841

CFR Citation: 10 CFR 150

Abstract: The final rule amends the Commission's regulations to correct an oversight that was made when a final rule regarding the NRC's organizational structure was recently published in the Federal Register. The amendment corrects references to a now defunct of the agency and informs the public and affected licensees of the nomenclature changes.

Timetable:

Action	Date	FR Cite
Interim Final Rule	10/30/87	
Final Action	10/30/87	52 FR 41699
Final Action Effective	10/30/87	52 FR 41699

Small Entity: No

Agency Contact: Donnie H. Grimsley, Nuclear Regulatory Commission, Office of Administration and Resources, Management, Washington DC 20555, 301 492-7211

RIN: 3150-AC67

3874. ● GENERAL CRITERIA FOR SECURITY PERSONNEL

Legal Authority: 42 USC 2073; 42 USC 2167; 42 USC 2201; 42 USC 5841; 42 USC 5844

CFR Citation: 10 CFR 73

Abstract: The final rule is in response to the outstanding request made in PRM-73-6 submitted by Wisconsin Electric Power Company, et al, which requested several changes in the qualifications for armed security personnel set out in 10 CFR Part 73, Appendix B. The petition was partially denied on September 3, 1987 (52 FR 33428). The final rule will grant that part of the petition which requested deletion of a scheduling link between the timing of the medical examination and the physical fitness test given at least annually to all armed security personnel. The amendment results in no impact on NRC resources and a cost savings to those licensees adversely impacted by the current requirement that all armed security personnel be subjected to an annual physical fitness test which must be preceded within 30 days by a medical examination.

Timetable:

Action	Date	FR Cite
Final Action	01/07/88	53 FR 403
Final Action Effective	02/08/88	53 FR 403

Small Entity: No

Agency Contact: William R. Lahs, Nuclear Regulatory Commission, Office of Nuclear Regulatory Research, Washington, DC 20555, 301 492-3774

RIN: 3150-AC66

[FR Doc. 88-5113 Filed 04-22-88; 8:45 am]

BILLING CODE 7590-01-T

VOL
53

ISS
79

PT
2

AP
25

1988

UMI

federal register

Monday
April 25, 1988

Part LVI

Securities and Exchange Commission

Semiannual Regulatory Agenda

SECURITIES AND EXCHANGE COMMISSION (SEC)

SECURITIES AND EXCHANGE COMMISSION

17 CFR Ch. II

[Release Nos. 33-6757, 34-25404, 35-24592, 39-2147, IC-16294, IA-1107; File No. S7-3-88]

Regulatory Flexibility Agenda and Rules Scheduled for Review

AGENCY: Securities and Exchange Commission.

ACTION: Publication of regulatory flexibility agenda and rules scheduled for review.

SUMMARY: The Securities and Exchange Commission is today publishing an agenda of its open and anticipated rulemaking actions, pursuant to Chapter Six of the Administrative Procedure Act and Office of Management and Budget Bulletin 88-1. The agenda is a general announcement to the public intended to provide advance notice of rulemaking actions which may have a significant economic impact on a substantial number of small entities. The Commission invites questions and public comment on individual agenda entries.

DATE: Public Comments are due by June 30, 1988.

ADDRESSES: Persons wishing to submit written views should file three copies with Jonathan G. Katz, Secretary, Securities and Exchange Commission, 450 5th Street, NW., Room 6184, Stop 6-9, Washington, DC 20549. All submissions should refer to File No. S7-3-88, and will be available for public inspection at the Commission's Public Reference Room, Room 1026, at the same address.

FOR FURTHER INFORMATION CONTACT: William J. Atkinson, Office of Economic Analysis, Securities and Exchange Commission, 450 5th Street, NW., Room 10215, Stop 10-5, Washington, DC 20549 (202-272-7100). Additional names of persons to contact are identified with each entry.

SUPPLEMENTARY INFORMATION: The Regulatory Flexibility Act ("RFA") (Pub. L. No. 96-354, 94 Stat. 1164 [September 19, 1980]) requires each federal agency during April and October of each year to publish in the **Federal Register** a regulatory flexibility agenda identifying rules which the agency expects to propose or adopt which are likely to have a significant economic impact on a substantial number of small entities (the "significant impact criterion").[1]

The RFA also requires the Commission to publish a plan for the periodic review of all rules issued by the agency which have or will have a significant economic impact on a substantial number of small entities.[2] The Commission published such a plan in 1981.[3] The plan provides for the review of all rules in effect on January 1, 1981 within ten years of that date and for the review of all rules adopted thereafter within ten years of their adoption as final rules. The RFA further requires publication each year of a list of those rules which are to be reviewed during the succeeding twelve months.[4]

The Commission's continuing review of its rules, begun before the effective date of the statute (January 1, 1981), extends beyond the requirements of the RFA. Consequently, some rules listed in this part of the agenda may not be subject to RFA review requirements. The Commission is identifying them here in order to inform the public of its intention to review them. The agenda also identifies the rulemaking actions which have been completed (or withdrawn) since the last RFA release was approved by the Commission on August 28, 1987.[5]

The statute specifically provides that the agenda does not preclude the Commission from considering or acting on any matter not included, nor is the Commission required to consider or act on any matter which is included.[6] Furthermore, the inclusion of a rule in the Commission's agenda reflects only the staff's preliminary judgment that the rule, if adopted or as it exists, may have a significant economic impact on a substantial number of small entities.[7] This preliminary judgment may be changed upon further analysis.

The Commission's entries to the April 1988 Unified Agenda of Federal Regulations are listed below. The Commission's agenda includes new entries as well as items carried over from the October 1987 publication. New entries are marked with an asterisk. Copies of this preamble and a list of the entries (which includes next action dates and identifies a staff contact) are available from the Commission's Office of Public Affairs (Room 1015). The agenda also is available for inspection and copying in the Public Reference Room (Room 1026) (File S7-3-88), as noted above.

The Commission invites public comment on the individual entries in its agenda of rulemaking actions and rules scheduled for review in the next twelve months.

Dated: March 1, 1988.

By the Commission.

Jonathan G. Katz,

Secretary.

Prerule Stage

Sequence Number	Title	Regulation Identifier Number
3875	17 CFR 210.9-03(7)(e) Financial Statement Disclosure by Bank Holding Companies About Loans to Related Parties	3235-AB45
3876	17 CFR 210 Proposed Additions to Rules and Guide for Disclosures concerning Reserves for Unpaid Claims and Claim Adjustment Expenses of Property - Casualty Underwriters	3235-AC44
3877	17 CFR 240.3a12-10 Exemption of Sales of Certain Interests and Participations Issued in Connection with H.R. 10 Plans from Section 15(a)	3235-AC16

[1] 5 U.S.C. 602(a).

[2] 5 U.S.C. 610(a).

[3] Securities Act Release No. 6302 (June 24, 1981) [46 FR 33287].

[4] 5 U.S.C. 610(c).

[5] Securities Act Release No. 6732 (October 28, 1987) [52 FR 41228].

[6] 5 U.S.C. 602(d).

[7] The agenda relies on the definitions of the term "small entity" for purposes of the RFA which were adopted by the Commission for the various categories of regulated entities. *See* Securities Act Release No. 6360 (January 28, 1982) [47 FR 5215].

SEC

Prerule Stage—Continued

Sequence Number	Title	Regulation Identifier Number
3878	17 CFR 240.17Ad-8 Rule 17Ad-8 of the Securities Exchange Act	3235-AC29
3879	17 CFR 240.15c2-10 Rule 15c2-10	3235-AC94
3880	17 CFR CFR 270.6c-10 Proposed Rule 6c-10 under the Investment Company Act of 1940	3235-AD18
3881	17 CFR 12d3-1 Proposed Amendments to Rule 12d3-1 under the Investment Company Act of 1940	3235-AD19

Proposed Rule Stage

Sequence Number	Title	Regulation Identifier Number
3882	17 CFR 240.13e-2 Acquisitions of Substantial amounts of Securities and Related Activities during and following a Tender Offer for those Securities	3235-AA50
3883	17 CFR 240.16a-1 to 240.16a-11 Reports of Directors, Officers and Principal Stockholders	3235-AB14
3884	17 CFR 239.16b Form S-8 Registration Statement under the Securities Act of 1933	3235-AB79
3885	00 CFR Not yet determined Rulemaking for Operational Edgar System	3235-AC48
3886	17 CFR 230 Rule 153 Definition of Preceded by a prospectus as used in Section 5(b)(2) in relation to Certain Transactions	3235-AC61
3887	17 CFR 210 Facilitation of Multinational Securities Offerings	3235-AC64
3888	17 CFR 230.144A Proposed Rule for Limited Resales of Securities	3235-AC65
3889	17 CFR 230 Classification of Small Issuers for Reporting Purposes	3235-AC66
3890	17 CFR 230.701 Rules 701, 702, 703 and Form 701	3235-AC82
3891	17 CFR 230.501 Regulation D	3235-AC83
3892	17 CFR 270.3a-7 Two-Tier Real Estate Companies	3235-AC84
3893	17 CFR 270.17f-5 Rule 17f-5 under the Investment Company Act of 1940	3235-AC85
3894	17 CFR 229.303 Management's Discussion and Analysis of Financial Condition and Operations	3235-AD03
3895	17 CFR 230.144 Section 16(a) Compliance	3235-AD04
3896	17 CFR 240.13a-10 Reporting Requirements for Change in Fiscal Year End	3235-AD05
3897	17 CFR 240.13d-1 Regulation 13D-G	3235-AD09
3898	17 CFR 200.81 Publication of Interpretative and No-Action Letters and Other Written Communications	3235-AD10
3899	17 CFR 230.134 Communications not Deemed a Prospectus	3235-AD22
3900	00 CFR Not yet determined Rule Governing Foreign Offerings of Securities without Registration under the Securities Act of 1933	3235-AD23
3901	17 CFR 230.465 Automatically Effective Post -Effective Amendments for Acquisitions by certain Limited Partnerships	3235-AD24
3902	17 CFR 240 Disclosure of Block Repurchases by an Issues or Affiliate	3235-AD25
3903	17 CFR 240.10b-21 Proposed Rule 10b-21 of the Securities Exchange Act of 1934 - Short Sales in Connection with a Public Offering	3235-AC95
3904	17 CFR 230.180 Amendment to Rule 180 – Exemption from Registration of Certain Interests and Participations in Certain H.R. 10 Plans	3235-AA08
3905	17 CFR 270.11a-3 Proposed Rules 11a-3 and 11c-1 Under the Investment Company Act	3235-AA14
3906	00 CFR Not yet determined Mutual Fund Governance	3235-AA44
3907	17 CFR 270.17j-1 Rule 17j-1 under the Investment Company Act of 1940	3235-AA68
3908	17 CFR 240.14a-1 to 240.14a-102 Revision of Investment Company Proxy Rules	3235-AA69
3909	17 CFR 239.14 Prospectus Simplification Amendments to Form N-2	3235-AB40
3910	17 CFR 275.206(3)-3 Method for Compliance with Section 206(3) of the Investment Advisers Act of 1940 with respect to Certain Transactions	3235-AB74
3911	17 CFR 270.3a-6 Proposed Rule 3a-6 under the Investment Company Act(the "ICA")	3235-AC03
3912	17 CFR 275.206(4)-1 Advertising by Investment Advisers	3235-AC09
3913	17 CFR 270.12b-1 Proposed amendments to Rules 12b-1 and 17d-3 under the Investment Company Act of 1940	3235-AC11
3914	17 CFR 270.10f-3 Exemption of Acquisition of Securities During the Existence of Underwriting Syndicate	3235-AC26
3915	17 CFR 270.12d3-2 Proposed Rule 12d3-2under the Investment Company Act	3235-AC36
3916	00 CFR Not yet determined Advertising by Unit Investment Trusts	3235-AC70
3917	17 CFR 230.139a Information that Broker-Dealers may Disseminate about Investment Companies	3235-AD20
3918	17 CFR 275. Revisions to the registration and the annual supplement forms used by Investment Advisers	3235-AD21

SEC

Final Rule Stage

Sequence Number	Title	Regulation Identifier Number
3919	17 CFR 210.5-02 Proposals Regarding Industry Segment and Other Interim Financial Reporting Matters, Management's Discussion and Analysis, and Off Balance Sheet Financing Disclosures	3235-AB15
3920	17 CFR 210 Request for Comments on "Opinion Shopping"	3235-AC02
3921	17 CFR 210 Independent Accountants - Mandatory Peer Review	3235-AC79
3922	17 CFR 230.433 Prospectus delivery requirements in firm commitment underwritten offerings of securities made for cash (Rule 433)	3235-AC80
3923	17 CFR 240.14a-1 Facilitating Shareholder Communications	3235-AC81
3924	17 CFR 240.14a-1 Facilitating Shareholder Communications	3235-AD07
3925	17 CFR 229.401 Elimination of Filing Requirements for Preliminary Proxy Material Under Certain Circumstances; Rule 14a-8 Shareholder Proposals	3235-AD08
3926	17 CFR 270.3a-4 Proposed Rule 3a-4 – Individualized Investment Management Services	3235-AA12
3927	17 CFR 270.17g-1 Proposed Amendment to Rule 17g-1 Under the Investment Company Act	3235-AA16
3928	17 CFR 239.16 Simplification of Registration Statements Filed by Unit Investment Trusts	3235-AA47
3929	17 CFR 230.134 Disclosure of Security Ratings in Registration Statements of Money Market Funds	3235-AC24
3930	17 CFR 274.11A N-1A Technical Amendments	3235-AC25
3931	17 CFR 230.174 Rule 174 Amendment - Prospectus Delivery During Quiet Period	3235-AC34
3932	17 CFR 275.204-2(a) Revision of Certain Investment Adviser Recordkeeping Rules	3235-AC97

Completed Actions

Sequence Number	Title	Regulation Identifier Number
3933	17 CFR 229 Proposed Rule Amendments Concerning Disclosure of Inflation-adjusted Information	3235-AC78
3934	17 CFR 240.3a12-8 Rule 3a12-8 of the Securities Exchange Act of 1934	3235-AC88
3935	17 CFR 239.15A Revisions to Expense-Related Disclosure Requirements of Form N-1A	3235-AB73
3936	17 CFR 275.206(4)-4 Disclosure of Legal and Disciplinary Proceedings	3235-AC06
3937	17 CFR 210.6-07 Accounting for Distribution Expenses	3235-AC07
3938	17 CFR 270 Standardized Formula for Calculating Investment Company Performance Data in Advertisements	3235-AC08
3939	17 CFR 270.24f-3 Registration Under The Securities Act of 1933 of an Indefinite Number of Certain Investment Company Securities	3235-AC10
3940	17 CFR 270.6c-9 Exemption for the offer or sale of debt securities and non-voting preferred stock in the United States by foreign banks and subsidiaries organized to finance the operations of foreign banks	3235-AC37
3941	17 CFR 270.19b-1 Rule 19b-1 under the Investment Company Act	3235-AC99

SECURITIES AND EXCHANGE COMMISSION (SEC) — Prerule Stage

Accounting Rules

3875. FINANCIAL STATEMENT DISCLOSURE BY BANK HOLDING COMPANIES ABOUT LOANS TO RELATED PARTIES

Legal Authority: 15 USC 77f; 15 USC 77g; 15 USC 77h; 15 USC 77j; 15 USC 77s(a); 15 USC 77a(25); 15 USC 77a(26); 15 USC 78l; 15 USC 78m; 15 USC 78n; 15 USC 78o(d); 15 USC 78w(a)

CFR Citation: 17 CFR 210.9-03(7)(e)

Legal Deadline: None.

Abstract: The staff is considering whether to recommend that the Commission propose amendments to its rules in Article 9 of Regulations S-X requiring disclosure by bank holding companies about loans to related parties. Assertions have been made that accumulation of the required information may be unreasonably costly.

Timetable:

Action	Date	FR Cite
Next Action Undetermined		

Small Entity: No

Agency Contact: Jeffrey Jones, Professional Accounting Fellow, Securities and Exchange Commission, 450 5th Street, NW, Washington, DC 20549, 202 272-2130

RIN: 3235-AB45

3876. PROPOSED ADDITIONS TO RULES AND GUIDE FOR DISCLOSURES CONCERNING RESERVES FOR UNPAID CLAIMS AND CLAIM ADJUSTMENT EXPENSES OF PROPERTY - CASUALTY UNDERWRITERS

Legal Authority: 15 USC 77F; 15 USC 77G; 15 USC 77H; 15 USC 77J; 15 USC 77S; 15 USC 78L; 15 USC 78M; 15 USC 78N; 15 USC 78O; 15 USC 78W; 15 USC 79E; 15 USC 79N; 15 USC 79F; 15 USC 80A-8; 15 USC 80A-29

CFR Citation: 17 CFR 210

Legal Deadline: None.

Abstract: The staff is considering whether to recommend that the Commission propose additions to the rules and guides concerning the underwriting and loss reserving experience of property - casualty underwriters. The proposed disclosures would be intended to assist investors in understanding and evaluating companies' reserving practices, the effect on reported income of adjustments to reserves established in prior periods and in comparing those practices and adjustments among entities.

Timetable:

Action	Date	FR Cite
Next Action Undetermined		

Small Entity: Undetermined

Agency Contact: Jeffrey C. Jones, Professional Accounting Fellow, Securities and Exchange Commission, Office of the Chief Accountant, 450 5th Street N.W., Washington, D.C. 20549, 202 272-2130

RIN: 3235-AC44

Securities Markets and Securities Industry Rules

3877. EXEMPTION OF SALES OF CERTAIN INTERESTS AND PARTICIPATIONS ISSUED IN CONNECTION WITH H.R. 10 PLANS FROM SECTION 15(A)

Legal Authority: 15 USC 78c(a)(12); 15 USC 78o; 15 USC 78w; 15 USC 77c(a)(12); 15 USC 77s(a)

CFR Citation: 17 CFR 240.3a12-10; 17 CFR 230.180

Legal Deadline: None.

Abstract: The proposed rule would specify certain conditions under which persons engaged in the sale of interests and participation issued in connection with certain tax-qualified retirement plans ("H.R.10" or "Keogh" plans) would not be required to register as broker-dealers under Section 15(a) of the Securities Exchange Act of 1934. In 1981, the Commission adopted Rule 180 under the Securities Act of 1933 exempting from the registration requirements of that Act interests and participations issued in connection with H.R. 10 plans. The proposed rule provides a parallel exemption from broker-dealer registration for sales of such interests and participations in H.R. 10 plans. As an alternative the staff could consider granting no-action or exemptive requests on a case-by-case basis. However, such procedure would be inefficient and needlessly expensive for both the public and the Commission staff. In addition, the Commission is proposing to amend Rule 180 to clarify that, under paragraph (a)(3)(ii) of that Rule, the employer only needs to obtain investment advice prior to the investment of plan assets. This proposal codifies a previous staff position.

Timetable:

Action	Date	FR Cite
Next Action Undetermined		

Small Entity: Undetermined

Agency Contact: Susan J. Walters, Branch Chief, Legal Interpretations, Securities and Exchange Commission, Division of Market Regulation, 450 5th Street, N.W., Washington, D.C. 20549, 202 272-2417

RIN: 3235-AC16

3878. RULE 17AD-8 OF THE SECURITIES EXCHANGE ACT

Legal Authority: 15 USC 17b; 15 USC 78g-1; 15 USC 78w(a)

CFR Citation: 17 CFR 240.17Ad-8

Legal Deadline: None.

Abstract: Rule 17Ad-8 requires a registered clearing agency, at the request of an issuer, to provide the issuer with a "securities position listing." A securities position listing is a list of the clearing agency's participants on whose behalf the clearing agency holds the issuer's securities as well as participants' positions as of a specified date. The Rule further provides that the clearing agency may charge a reasonable fee for providing the list.

Timetable:

Action	Date	FR Cite
Next Action Undetermined		

Small Entity: No

Agency Contact: Thomas C. Etter, Jr., Attorney, Securities and Exchange Commission, Division of Market Regulation, 450 Fifth Street, N.W., Washington, DC 20549, 202 272-2782

RIN: 3235-AC29

3879. RULE 15C2-10

Legal Authority: 15 USC 78b; 15 USC 78k-1; 15 USC 78o(c)(1); 15 USC 78o(c)(2); 15 USC 78w(a)

CFR Citation: 17 CFR 240.15c2-10

Legal Deadline: None.

Abstract: The Division of Market Regulation is preparing a draft release that would solicit comment on a rule that would govern the operation of proprietary securities trading systems that are not operated as facilities of a national securities association or exchange.

Timetable:

Action	Date	FR Cite
NPRM Comment Period End	10/30/87	
Next Action Undetermined		

Small Entity: No

Agency Contact: William M. Harter, Attorney, Securities and Exchange Commission, Division of Market Regulation, 450 Fifth St., N.W., Washington, D.C. 20549, 202 272-2414

RIN: 3235-AC94

Investment Management Rules

3880. ● PROPOSED RULE 6C-10 UNDER THE INVESTMENT COMPANY ACT OF 1940

Legal Authority: 15 USC 80a-6(c); 15 USC 80a-22(c); 15 USC 80a-37

CFR Citation: 17 CFR CFR 270.6c-10

Legal Deadline: None.

Abstract: The Commission will consider whether to propose rule 6c-10 under the act to allow Investment Companies to charge deferred sales loads including contingent deferred sales loads, under certain conditions. These actions would eliminate the need for Investment Companies to file applications for exemptive relief to impose deferred loads.

VOL 53 ISS 79 PT 2 AP 25 1988 UMI

SEC — Prerule Stage

Timetable:

Action	Date	FR Cite
Next Action Undetermined		

Small Entity: Undetermined

Additional Information: Proposed rule 6c-10 was formerly included with the proposed amendments to rules 12b-1 and 17d-3 under the Investment Company Act. Proposed rule 6c-10 has been split from that entry to comprise a separate item on the agenda.

Agency Contact: Rochelle G. Kauffman, Staff Attorney, Securities and Exchange Commission, Division of Investment Management, 450 5th Street, N.W., Washington, D. C. 20549, 202 272-2048

RIN: 3235-AD18

3881. ● PROPOSED AMENDMENTS TO RULE 12D3-1 UNDER THE INVESTMENT COMPANY ACT OF 1940

Legal Authority: 15 USC 80a-6(c); 15 USC 80a-37

CFR Citation: 17 CFR 12d3-1

Legal Deadline: None.

Abstract: The Commission is considering whether to propose amendments to Rule 12d3-1 under the Investment Company Act of 1940, which provides exemptive relief from the Act's prohibition against investment company acquisitions of securities issued by persons engaged in certain securities-related businesses. If adopted, the proposed amendments would expand the exemptive relief provided by the rule to permit, under certain conditions, investment companies to acquire equity securities issued by persons organized outside the United States that are engaged in securities related businesses.

Timetable:

Action	Date	FR Cite
Next Action Undetermined		

Small Entity: Undetermined

Agency Contact: Jack W. Murphy, Special Counsel, Securities and Exchange Commission, Division of Investment Management, 450 5th Street, N.W., Washington, D. C. 20549, 202 272-2048

RIN: 3235-AD19

SECURITIES AND EXCHANGE COMMISSION (SEC) — Proposed Rule Stage

Disclosure Rules

3882. ACQUISITIONS OF SUBSTANTIAL AMOUNTS OF SECURITIES AND RELATED ACTIVITIES DURING AND FOLLOWING A TENDER OFFER FOR THOSE SECURITIES

Legal Authority: 15 USC 78c(b); 15 USC 78m(e); 15 USC 78n(d); 15 USC 78w(a); 15 USC 78o(c); 15 USC 78t(b)

CFR Citation: 17 CFR 240.13e-2; 17 CFR 240.14d-11

Legal Deadline: None.

Abstract: In 1986, the Commission published a release seeking public comment on three concepts relating to corporate takeovers. On October 1, 1987, the Commission issued a release proposing the first issue discussed in the concept release. Rules 13e-2 and 14d-11 would require that, subject to certain exceptions, purchases, offers to purchase, arrangements or understandings to purchase and solicitations of offers to sell securities undertaken during and shortly after a tender offer that would increase any person's ownership of the class of securities subject to the tender offer by 10% or more of the class be made in compliance with the statutory provisions and rules applicable to tender offers. The proposed rules would apply to all persons from the formal commencement of a tender offer until 10 business days after the scheduled expiration date. A proposed rule, also, would subject a bidder to the same requirements from the time it commenced a tender offer by public announcement until it either formally commenced a tender offer by some other means or 30 business days after it made a subsequent public announcement (cont)

Timetable:

Action	Date	FR Cite
ANPRM	07/31/86	51 FR 28096
ANPRM Comment Period End	12/01/86	
NPRM	10/01/87	

Next Action Undetermined

Small Entity: Undetermined

Additional Information: ABSTRACT CONT:stating that it had determined not to continue with the tender offer.

Agency Contact: David A. Sirignano, Chief, Office of Tender Offers, Securities and Exchange Commission, Division of Corporation Finance, 450 5th Street, NW, Washington, DC 20549, 202 272-3097

RIN: 3235-AA50

3883. REPORTS OF DIRECTORS, OFFICERS AND PRINCIPAL STOCKHOLDERS

Legal Authority: 15 USC 78m(d); 15 USC 78p(a); 15 USC 78p(b); 15 USC 78p(c); 15 USC 78p(e); 15 USC 78w(a)

CFR Citation: 17 CFR 240.16a-1 to 240.16a-11; 17 CFR 240.16b-1 to 240.16b-11; 17 CFR 240.16c-1 to 240.16c-3; 17 CFR 240.16e-1; 17 CFR 240.13d-3; 17 CFR 240.14d-1; 17 CFR 229.403; 17 CFR 249.103; 17 CFR 249.104; 17 CFR 240.12h-2

Legal Deadline: None.

Abstract: The Commission will review the existing rules and reporting forms intended to implement the provisions of Section 16 of the Securities Exchange Act. Section 16 seeks to deter misuse of inside information by imposing certain periodic and transactional reporting requirements on the officers, directors and principal beneficial shareholders of companies registered under that Act as well as certain limitations on equity transactions by those persons. Over the years the Commission has adopted a number of rules to clarify the applicability of Section 16's requirements to particular circumstances. The Commission will examine their current suitability in light of the purposes of the statute.

Timetable:

Action	Date	FR Cite
Next Action Undetermined		

Small Entity: Undetermined

Additional Information: ABSTRACT CONT: The Commission believes that these actions will result in savings to persons subject to these provisions with no reduction in investor protection. This initiative is a consolidation of five projects that were previously listed separately in the October 1983 agenda.

Agency Contact: Brian J. Lane, Special Counsel, Office of Disclosure Policy, Securities and Exchange Commission, Division of Corporation Finance, 450 5th Street, NW, Washington, DC 20549, 202 272-2589

RIN: 3235-AB14

3884. FORM S-8 REGISTRATION STATEMENT UNDER THE SECURITIES ACT OF 1933

Legal Authority: 15 USC 77f; 15 USC 77g; 15 USC 77j; 15 USC 77s(a); 15 USC 78l; 15 USC 78m; 15 USC 78n; 15 USC 78w(a)

CFR Citation: 17 CFR 239.16b

Legal Deadline: None.

Abstract: The Commission will consider whether to revise the disclosure requirements under the federal securities laws relating to registration under the securities Act of 1933 of securities to be offered to employees of an issuer pursuant to certain plans. Such registration currently is made on Form S-8 (17 CFR 239.16b). The Commission staff is developing proposals in this area and considering alternative approaches to the problem of reducing burdens while ensuring the availability of sufficient information to employees, particularly where they already have access to much of the required information under ERISA. In the context of this rulemaking, Form S-8 will be fully reviewed for purposes of the Regulatory Flexibility Act.

Timetable:

Action	Date	FR Cite
Next Action Undetermined		

Small Entity: Undetermined

Agency Contact: Larisa Dobriansky, Special Counsel, Office of Disclosure Policy, Securities and Exchange Commission, Division of Corporation Finance, 450 5th Street, N.W., Washington, D.C. 20549, 202 272-2589

RIN: 3235-AB79

3885. RULEMAKING FOR OPERATIONAL EDGAR SYSTEM

Significance: Agency Priority

Legal Authority: 15 USC 77a to 77aa; 15 USC 78a to 78ii; 15 USC 79 to 79z-6; 15 USC 77aaa to 77bbb; 15 USC 80a-1 to 80a-52

CFR Citation: Not yet determined

Legal Deadline: None.

Abstract: This rulemaking encompasses the changes necessary to mandate and accommodate electronic filing in the operational Edgar system, as well as to update the rules to take advantage of the efficiencies of electronic filing and processing.

Timetable:

Action	Date	FR Cite
ANPRM	07/02/86	51 FR 24155
ANPRM Comment Period End	09/05/86	
NPRM	08/31/88	
NPRM Comment Period End	10/31/88	
Final Action	01/31/89	

Small Entity: Undetermined

Agency Contact: Sarah A. Miller, Special Counsel, Office of Disclosure Policy, Securities and Exchange Commission, Division of Corporation Finance, 450 5th Street, N.W., Washington, D.C. 20549, 202 272-2589

RIN: 3235-AC48

3886. RULE 153 DEFINITION OF PRECEDED BY A PROSPECTUS AS USED IN SECTION 5(B)(2) IN RELATION TO CERTAIN TRANSACTIONS

Legal Authority: 15 USC 77e

CFR Citation: 17 CFR 230

Legal Deadline: None.

Abstract: The prospectus delivery requirement for certain transactions effectuated on a national securities exchange may be satisfied by delivery to the exchange. The Commission will consider whether this procedure should be available for certain transactions on the NASDAQ Inter Dealer Quotation System.

Timetable:

Action	Date	FR Cite
Next Action Undetermined		

Small Entity: Undetermined

Agency Contact: John Reynolds, Special Counsel, Office of Small Business Policy, Securities and Exchange Commission, Division of Corporation Finance, 450 5th Street, N.W., Washington, D.C. 20549, 202 272-2644

RIN: 3235-AC61

3887. FACILITATION OF MULTINATIONAL SECURITIES OFFERINGS

Legal Authority: 15 USC 77e; 15 USC 77f; 15 USC 77g; 15 USC 77j; 15 USC 77s(a); 15 USC 77ddd; 15 USC 77eee; 15 USC 77fff; 15 USC 78c(b); 15 USC 78j; 15 USC 78l; 15 USC 78m; 15 USC 78w; 15 USC 78x

CFR Citation: 17 CFR 210; 17 CFR 230; 17 CFR 239; 17 CFR 240; 17 CFR 249; 17 CFR 260

Legal Deadline: None.

Abstract: In order to facilitate simultaneous multinational securities offerings among, initially, the United States, Canada and the United Kingdom, appropriate criteria are being sought to reconcile differences in disclosure standards, financial statement requirements and distribution systems. The Commission issued a concept release in February 1985 addressing numerous regulatory issues raised by multinational offerings. At that time, the Commission published for comment two conceptual approaches to facilitating such offerings--a "common prospectus" approach and a "reciprocal" approach. The Commission's staff is currently in the process of developing the reciprocal prospectus approach, which involves reciprocal recognition and use of home country disclosure documents. It is likely that initially the proposal will focus on debt offerings of certain issuers, limited rights offerings and exchange offers.

Timetable:

Action	Date	FR Cite
ANPRM	02/28/85	50 FR 9281
ANPRM Comment Period End	07/15/85	

Next Action Undetermined

Small Entity: Undetermined

Agency Contact: Carl T. Bodolus, Chief, Office of International Corporate Finance, Securities and Exchange Commission, Division of Corporation Finance, 450 5th Street, N.W., Washington, D.C. 20549, 202 272-3246

RIN: 3235-AC64

3888. PROPOSED RULE FOR LIMITED RESALES OF SECURITIES

Legal Authority: 15 USC 77d(1); 15 USC 77d(3); 15 USC 77s(a)

CFR Citation: 17 CFR 230.144A

Legal Deadline: None.

Abstract: The staff is considering whether to recommend that the Commission publish for comment two alternative versions of a new rule that would provide a safe harbor exemption from the registration requirements of the Securities Act of 1933 for resales of securities to institutional investors if certain conditions are met. The first version would require that the issuer of such securities be a reporting company or that the securities be investment grade, non-convertible debt or preferred securities, while the second version would be available for resales of any securities, debt or equity, of reporting or non-reporting companies.

Timetable:

Action	Date	FR Cite

Next Action Undetermined

Small Entity: Undetermined

Agency Contact: William E. Morley, Special Counsel, Office of Chief Counsel, Securities and Exchange Commission, Division of Corporation Finance, 450 5th Street, N.W., Washington, D.C. 20549, 202 272-2573

RIN: 3235-AC65

3889. CLASSIFICATION OF SMALL ISSUERS FOR REPORTING PURPOSES

Legal Authority: 15 USC 78l; 15 USC 78m

CFR Citation: 17 CFR 230; 17 CFR 240; 17 CFR 244; 17 CFR 260

Legal Deadline: None.

Abstract: Other appropriate criteria are being sought to establish the threshold level for companies to enter into the Securities Exchange Act of 1934 reporting system which would complement or be substituted for the present size criteria of 500 shareholders and total assets of $5 million.

Timetable:

Action	Date	FR Cite
ANPRM	07/08/86	51 FR 25369
ANPRM Comment Period End	09/30/86	
NPRM	02/01/88	

Next Action Undetermined

Small Entity: Undetermined

Agency Contact: Richard K. Wulff, Chief, Office of Small Business Policy, Securities and Exchange Commission, Division of Corporation Finance, 450 5th Street, N.W., Washington, D.C. 20549, 202 272-2644

RIN: 3235-AC66

3890. RULES 701, 702, 703 AND FORM 701

Legal Authority: 15 USC 77c(b); 15 USC 77s(a)

CFR Citation: 17 CFR 230.701; 17 CFR 230.702; 17 CFR 230.703; 17 CFR 239.701

Legal Deadline: None.

Abstract: The proposed rules and form would provide an exemption from the registration requirements of the Securities Act of 1933 for offers and sales of Securities pursuant to certain employment contracts and employee benefit plans of non-reporting companies. Since some cost is involved in registration, the proposed rules would provide some relief to small issuers.

Timetable:

Action	Date	FR Cite
NPRM	08/05/87	52 FR 29033
NPRM Comment Period End	09/15/87	
Final Action	01/29/88	
Final Action Effective	03/15/88	

Next Action Undetermined

Small Entity: Yes

Agency Contact: John Reynolds, Special Counsel, Office of Small Business Policy, Securities and Exchange Commission, Division of Corporation Finance, 450 5th Street, N.W., Washington, D.C. 20549, 202 272-2644

RIN: 3235-AC82

3891. REGULATION D

Significance: Agency Priority

Legal Authority: 15 USC 77b(15); 15 USC 77c(b); 15 USC 77d(2); 15 USC 77d(b); 15 USC 77s(a); 15 USC 77s(c)

CFR Citation: 17 CFR 230.501; 17 CFR 230.502; 17 CFR 230.503; 17 CFR 230.504; 17 CFR 230.505; 17 CFR 230.506

Legal Deadline: None.

Abstract: The proposed revisions would add to the number of persons who would qualify as accredited investors, raise the dollar ceiling for certain exempt offerings and make general technical changes to the regulation which provides three different exemptions from the registration requirements of the Securities Act of 1933. By widening the scope of the exemptions, the proposed revisions would aid smaller businesses that would be able to raise needed capital without registering under the Securities Act.

Timetable:

Action	Date	FR Cite
NPRM	01/12/87	
NPRM Comment Period End	03/15/87	
Final Action	01/31/88	

Next Action Undetermined

Small Entity: Yes

Agency Contact: Karen O'Brien, Attorney Advisor, Office of Small Business Policy, Securities and Exchange Commission, Division of Corporation Finance, 450 5th Street, N.W., Washington, D.C. 20549, 202 272-2644

RIN: 3235-AC83

3892. TWO-TIER REAL ESTATE COMPANIES

Legal Authority: 15 USC 80a-6(c)

CFR Citation: 17 CFR 270.3a-7; 17 CFR 270.6c-11

Legal Deadline: None.

Abstract: The regulation will be designed to codify numerous exemptions from the provisions of the Investment Company Act of 1940 ("Act") granted to two-tier real estate limited partnerships. Exemptions from the Act pursuant to Section 6(c) of the Act have generally been granted where: 1) the two-tier partnership invests in limited partnerships engaged in the development and building of housing

for low and moderate income persons; 2) the limited partnership interests are sold only to suitable investors; and 3) requirements for fair dealing by the general partner of the issuer with the limited partners of the issuer are included in the basic organizational documents of the partnership. The regulation will reduce the number of exemptive relief applications received by the Office of Investment Company Regulation requesting exemptions for two-tier real estate limited partnerships.

Timetable:

Action	Date	FR Cite
Next Action Undetermined		

Small Entity: Undetermined

Agency Contact: Jack W. Murphy, Special Counsel, Securities and Exchange Commission, Division of Investment Management, 450 5th Street, N.W., Washington, D.C. 20549, 202 272-2048

RIN: 3235-AC84

3893. RULE 17F-5 UNDER THE INVESTMENT COMPANY ACT OF 1940

Legal Authority: 15 USC 80a-17(f); 15 USC 80a-6(c); 15 USC 80a-37(a)

CFR Citation: 17 CFR 270.17f-5

Legal Deadline: None.

Abstract: Rule 17f-5 permits U.S. registered Investment Companies to maintain certain Securities and other assets in the custody of an "Eligible Foreign Custodian," as that term is defined in the rule. In response to comments that the present definition of Eligible Foreign Custodian and other provisions of the rule are too restrictive, the Commission is considering whether to propose amendments to the rule.

Timetable:

Action	Date	FR Cite
Next Action Undetermined		

Small Entity: No

Agency Contact: Rochelle G. Kauffman, Staff Attorney, Securities and Exchange Commission, Division of Investment Management, 450 5th Street, N.W., Washington, D.C. 20549, 202 272-2048

RIN: 3235-AC85

3894. MANAGEMENT'S DISCUSSION AND ANALYSIS OF FINANCIAL CONDITION AND OPERATIONS

Legal Authority: 15 USC 78w(a)

CFR Citation: 17 CFR 229.303

Legal Deadline: None.

Abstract: The Commission has solicited public comment on issues relating to Management's Discussion and Analysis of financial condition and operations as required by Item 303 of Regulation S-K. This requirement is the subject of recommendations from members of the accounting profession calling for a more specific approach to requiring disclosure of business risks and uncertainties, as well as additional board of director scrutiny and independent auditor association with these disclosures. The Commission will review comments received to determine whether future rulemaking is appropriate.

Timetable:

Action	Date	FR Cite
ANPRM	04/24/87	52 FR 13715
ANPRM Comment Period End	06/23/87	
Next Action Undetermined		

Small Entity: Undetermined

Agency Contact: Brian J. Lane, Special Counsel, Office of Disclosure Policy, Securities and Exchange Commission, Division of Corporation Finance, 450 5th Street, N.W., Washington, D. C. 20549, 202 272-2589

RIN: 3235-AD03

3895. SECTION 16(A) COMPLIANCE

Legal Authority: 15 USC 78p

CFR Citation: 17 CFR 230.144; 17 CFR 239.300; 17 CFR 240.16a-1; 17 CFR 249.103; 17 CFR 249.104; 17 CFR 249.308a; 17 CFR 249.310

Legal Deadline: None.

Abstract: The Commission has perceived substantial non-compliance with Section 16(a) of the Securities Exchange Act of 1934. To address the problem, the Commission is considering proposing rules to insure that required information is disclosed, either by the reporting person or the registered companies.

Timetable:

Action	Date	FR Cite
Next Action Undetermined		

Small Entity: Yes

Agency Contact: Brian Lane, Special Counsel, Securities and Exchange Commission, Division of Corporation Finance, 450 5th St., N.W., Washington, D.C. 20549, 202 272-2589

RIN: 3235-AD04

3896. REPORTING REQUIREMENTS FOR CHANGE IN FISCAL YEAR END

Legal Authority: 15 USC 78n; 15 USC 78w

CFR Citation: 17 CFR 240.13a-10; 17 CFR 240.13a-13; 17 CFR 240.14a-3; 17 CFR 240.15d-10; 17 CFR 240.15d-13; 17 CFR 249.308

Legal Deadline: None.

Abstract: The Commission staff is developing proposals to revise Rules 13a-10 and 15d-10 that would change, under certain circumstances, the reporting form to be used and the period for which audited financial statements are required to be filed where an issuer changes its fiscal year end. Also, proposals that would revise rules governing quarterly reporting are being developed. The proposals would close a reporting and clarify interim and quarterly reporting requirements when an issuer changes its fiscal year-end. The proposals also would permit an issuer, under certain circumstances, to utilize the reporting format of Form 10-1 for reporting on certain interim periods.

Timetable:

Action	Date	FR Cite
Next Action Undetermined		

Small Entity: Undetermined

Agency Contact: Barbara J. Green, Attorney Fellow, Office of Disclosure Policy, Securities and Exchange Commission, Division of Corporation Finance, 450 5th Street, N.W., Washington, D.C. 20549, 202 272-2589

RIN: 3235-AD05

3897. REGULATION 13D-G

Legal Authority: 15 USC 78a

CFR Citation: 17 CFR 240.13d-1; 17 CFR 240.13d-2

BEST COPY AVAILABLE

Legal Deadline: None.

Abstract: The Commission will consider proposing revision of Regulation 13D-G to close certain disclosure gaps, to make the disclosure more meaningful and to broaden the pool of persons allowed to use the short-form beneficial ownership report on Schedule 13G so as to lessen the costs and burdens of compliance.

Timetable:

Action	Date	FR Cite
Next Action Undetermined		

Small Entity: Undetermined

Agency Contact: David A. Sirignano, Chief, Office of Tender Offers, Securities and Exchange Commission, Division of Corporation Finance, 450 5th Street, N.W., Washington, D.C. 20549, 202 272-3097

RIN: 3235-AD09

3898. PUBLICATION OF INTERPRETATIVE AND NO-ACTION LETTERS AND OTHER WRITTEN COMMUNICATIONS

Legal Authority: 15 USC 77s; 15 USC 77sss; 15 USC 78w; 15 USC 79t; 15 USC 80a-37; 15 USC 80b-11; 5 USC 552

CFR Citation: 17 CFR 200.81

Legal Deadline: None.

Abstract: The Commission is proposing amendments to Rule 81 of the Commission's regulations on Information and Requests, which would provide for immediate publication of interpretative and no-action letters written by the Commission's staff at the time such letters are sent or given to the requesting party, unless temporary confidential treatment is granted.

Timetable:

Action	Date	FR Cite
NPRM	09/08/87	52 FR 35115
NPRM Comment Period End	10/19/87	
Next Action Undetermined		

Small Entity: Not Applicable

Agency Contact: Michael G. Hyatte, Special Counsel, Securities and Exchange Commission, Division of Corporation Finance, 450 5th Street, N.W., Washington, D.C. 20549, 202 272-2573

RIN: 3235-AD10

3899. ● COMMUNICATIONS NOT DEEMED A PROSPECTUS

Legal Authority: 15 USC 77b; 15 USC 77s

CFR Citation: 17 CFR 230.134

Legal Deadline: None.

Abstract: The Commission will consider proposing amendments to Rule 134 of the Commission's rules and regulations under the Securities Act of 1933 that would permit direct participation programs such as state limited partnerships to include additional information in their Rule 134 tombstone advertisements.

Timetable:

Action	Date	FR Cite
Next Action Undetermined		

Small Entity: Undetermined

Agency Contact: William E. Morley, Chief Counsel, Securities and Exchange Commission, Division of Corporation Finance, 450 5th Street, N.W., Washington, D.C. 20549, 202 272-2573

RIN: 3235-AD22

3900. ● RULE GOVERNING FOREIGN OFFERINGS OF SECURITIES WITHOUT REGISTRATION UNDER THE SECURITIES ACT OF 1933

Legal Authority: 15 USC 77a et seq

CFR Citation: Not yet determined

Legal Deadline: None.

Abstract: The extraterritorial reach of Section 5 of the Securities Act of 1933 has become of critical importance with the development of major markets abroad and the growth of transnational investment. As a result of these developments, the Commission staff is re-evaluating the question of the proper scope of the registration requirements. The staff is currently developing a proposal for a safe harbor rule which would set forth specified non-exclusive conditions under which the Commission would not seek to apply the registration provisions. In general, under this approach the registration provisions would apply when an offer or sale of securities takes place in the United States--a territorial approach.

Timetable:

Action	Date	FR Cite
Next Action Undetermined		

Small Entity: Undetermined

Agency Contact: Carl Bodolus, Chief, Securities and Exchange Commission, Division of Corporation Finance, 450 5th Street, N.W., Washington, D.C. 20549, 202 272-3246

RIN: 3235-AD23

3901. ● AUTOMATICALLY EFFECTIVE POST -EFFECTIVE AMENDMENTS FOR ACQUISITIONS BY CERTAIN LIMITED PARTNERSHIPS

Legal Authority: 15 USC 77h(c); 15 USC 77s

CFR Citation: 17 CFR 230.465

Legal Deadline: None.

Abstract: The Commission will consider proposing a new Rule 465 to provide for the automatic effectiveness upon filing with the Commission of post-effective amendments that reflect acquisitions by specified limited partnerships. The proposal is intended to address the practical difficulties associated with acquisition related interruptions in sales efforts by sponsors of limited partnerships.

Timetable:

Action	Date	FR Cite
Next Action Undetermined		

Small Entity: Yes

Agency Contact: Alexander G. Shtofman, Special Counsel, Securities and Exchange Commission, Division of Corporation Finance, 450 5th Street, N.W., Washington, D.C. 20549, 202 272-2589

RIN: 3235-AD24

3902. ● DISCLOSURE OF BLOCK REPURCHASES BY AN ISSUES OR AFFILIATE

Legal Authority: 15 USC 78m; 15 USC 78w(a)

CFR Citation: 17 CFR 240; 17 CFR 249

Legal Deadline: None.

Abstract: The staff is developing proposals to require either pre - or post transactional disclosure of issuer or affiliate repurchases of securities of the issuers over a certain threshold percentage. The staff has yet to

determine the appropriate percentage level.

Timetable:

Action	Date	FR Cite
Next Action Undetermined		

Small Entity: Undetermined

Agency Contact: Sarah Miller, Special Counsel, Securities and Exchange Commission, Division of Corporation Finance, 450 5th Street, N.W., Washington, D.C. 20549, 202 272-2589

RIN: 3235-AD25

Securities Markets and Securities Industry Rules

3903. PROPOSED RULE 10B-21 OF THE SECURITIES EXCHANGE ACT OF 1934 - SHORT SALES IN CONNECTION WITH A PUBLIC OFFERING

Legal Authority: 15 USC 78b; 15 USC 78c; 15 USC 78i(a)(6); 15 USC 78j(a); 15 USC 78j(b); 15 USC 78o(c); 15 USC 78w(a); 15 USC 78dd(a)

CFR Citation: 17 CFR 240.10b-21

Legal Deadline: None.

Abstract: Proposed Rule 10b-21 would prohibit a person who effects short sales of an equity security during the period between the filing of a registration statement relating to the same class of equity securities and the commencement of the public offering of such equity securities from covering such short sales with securities purchased from an underwriter or broker or dealer participating in the public offering of such equity securities. The proposed rule is designed to prevent manipulative short selling by market participants in anticipation of underwritten public offerings.

Timetable:

Action	Date	FR Cite
NPRM	05/20/87	52 FR 102
NPRM Comment Period End	07/27/87	

Next Action Undetermined

Small Entity: Undetermined

Agency Contact: Nancy J. Burke, Branch Chief, Securities and Exchange Commission, Division of Market Regulation, 450 Fifth St., N.W., Washington, D.C. 20549, 202 272-2880

RIN: 3235-AC95

Investment Management Rules

3904. AMENDMENT TO RULE 180 -- EXEMPTION FROM REGISTRATION OF CERTAIN INTERESTS AND PARTICIPATIONS IN CERTAIN H.R. 10 PLANS

Legal Authority: 15 USC 77c(a)(2); 15 USC 77s(a)

CFR Citation: 17 CFR 230.180

Legal Deadline: None.

Abstract: Rule 180 provides an exemption from the registration requirements of the Securities Act for interests and participations issued in connection with certain qualified H.R. 10 plans. In order for interests in funding media issued to plans established by financially inexperienced employers to qualify for the rule's exemption, the rule, as adopted, requires those employers to obtain financial advice from an independent expert prior to adopting the H.R. 10 plan. Among other things, the Commission is considering proposing an amendment to Rule 180 that would codify a present "no-action" position regarding the situation where a financially unsophisticated employer has already established a plan for its employees without obtaining advice from an independent expert, and intends either to change the funding medium or add another funding medium to the choices already available to employees. The issuer of the funding medium in such a case would be in compliance with the rule if the issuer has reasonable grounds to believe and, after having made reasonable inquiry, does believe, that an independent financial expert reviewed the funding medium prior to the investment of the (cont)

Timetable:

Action	Date	FR Cite
Next Action Undetermined		

Small Entity: Undetermined

Additional Information: ABSTRACT CONT: plan's assets in that funding medium. The type of amendment being considered would impose no additional compliance cost, and would increase the flexibility of existing plans and the number of investment choices available to participating employees.

Agency Contact: Jack W. Murphy, Special Counsel, Securities and Exchange Commission, Division of Investment Management, 450 Fifth Street, N. W. (Stop 5-2), Washington, DC 20549, 202 272-2048

RIN: 3235-AA08

3905. PROPOSED RULES 11A-3 AND 11C-1 UNDER THE INVESTMENT COMPANY ACT

Legal Authority: 15 USC 80a-6(c); 15 USC 80a-11(a); 15 USC 80a-37

CFR Citation: 17 CFR 270.11a-3; 17 CFR 270.11c-1

Legal Deadline: None.

Abstract: The proposed rules would exempt certain persons from the requirements of Section 11(a) of the Investment Company Act. That section prohibits any registered open-end investment company and its principal underwriter from making an offer to a shareholder to exchange his security for another security on any basis other than the relative net asset values of the respective securities to be exchanged, unless the terms have been submitted to and approved by the Commission or comply with rules the Commission may prescribe. Section 11(c) states in part that the terms of any offer of exchange involving the securities of registered unit investment trusts must also be submitted to and approved by the Commission or comply with rules the Commission may prescribe. Proposed rule 11a-3 would permit a mutual fund or its principal underwriter to make certain exchange offers to its own shareholders or to shareholders of another fund in the same family of funds. Proposed rule 11c-1 would permit a unit investment trust or its sponsor to make certain exchange offers to unitholders of the same series or another series of the same trust or to unit holders of another unit investment trust

Timetable:

Action	Date	FR Cite
NPRM	12/23/86	51 FR 47260
NPRM Comment Period End	03/31/88	

Next Action Undetermined

Small Entity: Undetermined

Additional Information: ABSTRACT CONT: having the same sponsor. By codifying standards for a variety of exchanges, these proposed rules are intended to significantly reduce the number of exemptive applications filed with the Commission under Section 11.

Analysis: Regulatory Flexibility Analysis

Agency Contact: Brian P. Kindelan, Attorney, Securities and Exchange Commission, Division of Investment Management, 450 5th Street, NW (Stop 5-2), Washington, DC 20549, 202 272-2048

RIN: 3235-AA14

3906. MUTUAL FUND GOVERNANCE

Legal Authority: 15 USC 80a-6(c); 15 USC 80a-37

CFR Citation: Not yet determined

Legal Deadline: None.

Abstract: On December 10, 1982, the Commission issued an advance concept release (Investment Company Act Release No. 12888, (47 FR 56509)) soliciting public comment on whether the Commission should propose rules or recommend legislation which would provide for an alternative form of mutual fund governance. Specifically, this release requests comment on whether mutual funds should be exempted from shareholder voting and/or director requirements under the Investment Company Act of 1940 (the "Act") and, if so, whether conditions could be fashioned which would adequately insure against loss of investor protection. Although such changes might be effected through rulemaking, the Commission has indicated that, in its preliminary judgment, changes of this magnitude should be effected through legislative rather than administrative action. Since the costs and benefits of providing for an alternative scheme of mutual fund governance cannot be estimated at the present time, the release solicits specific comment on the costs and benefits which would result from such changes. Extension of comment period until April 18, 1983 was announced in Investment Company Act Release No. 13012 (cont)

Timetable:

Action	Date	FR Cite
ANPRM	12/10/82	47 FR 56509
Extended Comment Period to 4/18/83	02/07/83	48 FR 6354
ANPRM Comment Period End	04/18/83	48 FR 6354

Next Action Undetermined

Small Entity: Undetermined

Additional Information: ABSTRACT CONT: (February 7, 1983) 48 FR 6354.

Agency Contact: Jack W. Murphy, Special Counsel, Securities and Exchange Commission, Division of Investment Management, 450 5th Street, NW (Stop 5-2), Washington, DC 20549, 202 272-2048

RIN: 3235-AA44

3907. RULE 17J-1 UNDER THE INVESTMENT COMPANY ACT OF 1940

Legal Authority: 15 USC 80a-17(j); 15 USC 80a-37(a)

CFR Citation: 17 CFR 270.17j-1

Legal Deadline: None.

Abstract: Rule 17j-1 requires every access person of a registered investment company, or of an investment adviser of or principal underwriter for the investment company to report to the investment company certain of his securities transactions. The Commission is considering whether to propose an amendment to this rule which would reduce the reporting requirement for investment company directors who are interested persons with respect to the investment company by reason of their affiliation with a registered broker-dealer. Members of the industry have characterized these reporting requirements as unnecessarily burdensome in some instances. Any such rule amendment would have the effect of lessening the reporting requirements currently imposed by the rule. As a result, the staff believes that the costs, which should be insignificant, of complying with any amendment would be significantly less than the benefits it would provide. The Commission is also considering whether to amend Rule 12 j-1 to define specified acts as fraudulent, deceptive or manipulative or to require certain minimum standards to be set forth on a company's code of ethics. (con't)

Timetable:

Action	Date	FR Cite

Next Action Undetermined

Small Entity: Undetermined

Agency Contact: Jack W. Murphy, Special Counsel, Securities and Exchange Commission, Division of Investment Management, 450 5th Street, N.W. (Stop 5-2), Washington, D.C. 20549, 202 272-3038

RIN: 3235-AA68

3908. REVISION OF INVESTMENT COMPANY PROXY RULES

Legal Authority: 15 USC 78n; 15 USC 78w; 15 USC 80a-20; 15 USC 80a-37

CFR Citation: 17 CFR 240.14a-1 to 240.14a-102; 17 CFR 240.14b-1; 17 CFR 240.14c-1 to 240.14c-101; 17 CFR 270.20a-1; 17 CFR 270.20a-2; 17 CFR 270.20a-3

Legal Deadline: None.

Abstract: Absent an exception, every solicitation of a proxy, authorization or consent in respect of any security with respect to which a registered investment company is the issuer, is subject to rules adopted pursuant to the Securities Exchange Act of 1934 and the Investment Company Act of 1940 concerning solicitations of proxies. Solicitations to which the rules apply may not commence unless each person solicited is furnished or has previously been furnished with a proxy statement containing specified information prepared in accordance with certain rules and the material has been filed with the Commission. The existing proxy rules were adopted in piecemeal fashion and have been the subject of frequent changes. This has led to certain duplicative and, in certain cases, complex requirements. To the extent that a proxy statement contains repetitive material or is overly complicated and difficult to read, it may not effectively perform its intended function of communicating meaningful information to security holders in order that they may make informed voting decisions. In order to update the proxy regulations and, in doing so, improve the (cont)

Timetable:

Action	Date	FR Cite
Next Action Undetermined		

Small Entity: Undetermined

Additional Information: ABSTRACT CONT: readability of proxy statements and eliminate unnecessary disclosure costs, the Commission has commenced a comprehensive review of the proxy regulations as they relate to investment companies. There does not currently exist a basis upon which to quantify the reduced costs and burdens of such action on those registrants affected. Since the action will apply to all registered investment companies soliciting proxies, unless the solicitation is excepted, the Action is expected to have a significant impact on a substantial number of small entities. However, the contemplated revisions are still in the developmental stage and have not yet been formally proposed by the Commission. Thus, the extent of the revision actually proposed and the attendant reductions in costs and burdens are as yet largely unknown, but are anticipated to be significant.

Agency Contact: Dorothy M. Donohue, Attorney, Securities and Exchange Commission, Division of Investment Management, 450 5th Street, NW (Stop 5-2), Washington, DC 20549, 202 272-7317

RIN: 3235-AA69

3909. PROSPECTUS SIMPLIFICATION AMENDMENTS TO FORM N-2

Legal Authority: 15 USC 80a-8 Investment Company; 15 USC 77g Securities Act; 15 USC 77j Securities Act

CFR Citation: 17 CFR 239.14; 17 CFR 274.11a-1

Legal Deadline: None.

Abstract: Form N-2 is the registration statement form under the Investment Company Act of 1940 and the Securities Act of 1933 for closed-end management investment companies other than small business investment companies and companies which issue periodic payment plan certificates or which are sponsors or depositors of companies issuing such certificates. Included within the registration statement are the companies' prospectuses used in offering their securities to the public. The Commission believes a simplified prospectus is necessary because current prospectuses have become too cumbersome for the average investor to understand and because current requirements result in the disclosure of much information that is not necessarily material to an investment decision. Simplification will, therefore, make disclosure easier for investors to understand and reduce the costs and burdens of of preparing and distributing prospectuses. Accordingly, the Commission is proposing a new form N-2A that most likely would be structured as a three-part form, one part of which would be a new simplified prospectus. There does not currently exist (cont)

Timetable:

Action	Date	FR Cite
Next Action Undetermined		

Small Entity: Undetermined

Additional Information: ABSTRACT CONT: a basis upon which to quantify the reduced costs and burdens of such action on those registrants affected. The contemplated amendments are still in the developmental stage and have not yet been formally proposed by the Commission. Thus, the extent of the simplification of investment companies' prospectuses actually proposed and the attendant reductions in costs and burdens are as yet largely unknown, but are expected to reduce the cost of registration for both the industry and government.

Agency Contact: Debra J. Kertzman, Attorney, Securities and Exchange Commission, 450 5th Street, NW (Stop 5-2), Washington, DC 20549, 202 272-2107

RIN: 3235-AB40

3910. METHOD FOR COMPLIANCE WITH SECTION 206(3) OF THE INVESTMENT ADVISERS ACT OF 1940 WITH RESPECT TO CERTAIN TRANSACTIONS

Legal Authority: 15 USC 80b-11(a)

CFR Citation: 17 CFR 275.206(3)-3

Legal Deadline: None.

Abstract: Section 206(3) of the Investment Advisers Act of 1940 makes it unlawful for any investment adviser, by use of the mail or any means or instrumentality of interstate commerce, directly or indirectly, knowingly to effect a securities transaction (a) with a client while acting as principal or (b) for a client while acting as broker for a person other than such client, without disclosing in writing to such client before the completion of the transaction the capacity on which he is acting and obtaining the consent of the client to the transaction. The Commission is considering whether to propose a rule that would provide a nonexclusive method for compliance with the provisions of Section 206(3) of the Investment Advisers Act of 1940 in connection with purchases of securities from an underwriting syndicate for an advisory client under specified conditions. Because the proposed rule is still in the developmental stages, its potential effect on small entities and its potential costs and benefits as a whole are unknown at this time.

Timetable:

Action	Date	FR Cite
Next Action Undetermined		

Small Entity: Undetermined

Agency Contact: John McGuire, Attorney, Securities and Exchange Commission, Investment Management, 450 5th Street, N.W. (Stop 5-2), Washington, D.C. 20549, 202 272-2107

RIN: 3235-AB74

3911. PROPOSED RULE 3A-6 UNDER THE INVESTMENT COMPANY ACT(THE "ICA")

Legal Authority: 15 USC 80a-6(c); 15 USC 80a-37(a)

CFR Citation: 17 CFR 270.3a-6

Legal Deadline: None.

Abstract: The Commission is considering whether to propose a rule that would provide exemptive relief from all provisions of the ICA to limited purpose finance subsidiaries that own or hold mortgage-backed securities. This would obviate the necessity of these subsidiaries filing applications for exemptive relief.

Timetable:

Action	Date	FR Cite
Next Action Undetermined		

Small Entity: Undetermined

Agency Contact: Brian P. Kindelan, Attorney, Securities and Exchange Commission, Division of Investment Management, 450 5th Street, N.W. (Stop

5-2), Washington, D.C. 20549, 202 272-2048

RIN: 3235-AC03

3912. ADVERTISING BY INVESTMENT ADVISERS

Legal Authority: 15 USC 80b-6(4)

CFR Citation: 17 CFR 275.206(4)-1

Legal Deadline: None.

Abstract: Rule 206(4)-1 contains a wide range of restrictions on advertising by investment advisers including prohibitions on the use of testimonials. The rule was adopted in 1962 and has not been revised since. The Commission is considering whether to amend the rule in a manner which would permit greater flexibility to investment advisers in their advertising and protect the investing public from potential abuse. Because the proposed amendments to the rule are still in the developmental stages, the potential effect on small entities and its potential costs and benefits as a whole are uncertain at this time.

Timetable:

Action	Date	FR Cite
Next Action Undetermined		

Small Entity: Undetermined

Agency Contact: Robert E. Plaze, Special Counsel, Securities and Exchange Commission, Division of Investment Management, 450 5th Street, N.W. (Stop 5-2), Washington, D.C. 20549, 202 272-2098

RIN: 3235-AC09

3913. PROPOSED AMENDMENTS TO RULES 12B-1 AND 17D-3 UNDER THE INVESTMENT COMPANY ACT OF 1940

Legal Authority: 15 USC 80a-12(b); 15 USC 80a-17(d); 15 USC 80a-37

CFR Citation: 17 CFR 270.12b-1; 17 CFR 270.17d-3

Legal Deadline: None.

Abstract: The Commission will consider whether to propose amendments to Rule 12b-1 under the Investment Company Act to redefine the circumstances under which investment companies may finance distribution out of fund assets. The Commission will also consider whether to propose amendments to Rule 17d-3 to allow affiliated investment companies to jointly finance distribution Activities under certain conditions.

Timetable:

Action	Date	FR Cite
Next Action Undetermined		

Small Entity: Undetermined

Agency Contact: Jack W. Murphy, Special Counsel, Securities and Exchange Commission, Division of Investment Management, 450 5th Street, N.W. (Stop 5-2), Washington, D.C. 20549, 202 272-2048

RIN: 3235-AC11

3914. EXEMPTION OF ACQUISITION OF SECURITIES DURING THE EXISTENCE OF UNDERWRITING SYNDICATE

Legal Authority: 15 USC 80a-10(f); 15 USC 80a-37(a); 15 USC 80a-6(c)

CFR Citation: 17 CFR 270.10f-3

Legal Deadline: None.

Abstract: The conditions in existing Rule 10f-3, which allow purchases from affiliated underwriters during the existence of an underwriting syndicate, may no longer be appropriate in today's financial markets. The Commission is investigating possible alternative provisions and soliciting comment on these alternatives.

Timetable:

Action	Date	FR Cite
ANPRM	01/29/86	51 FR 4386
ANPRM Comment Period End	04/07/86	51 FR 4386

Next Action Undetermined

Small Entity: Undetermined

Agency Contact: Ann M. Glickman, Special Counsel, Securities and Exchange Commission, Division of Investment Management, 450 Fifth Street, NW (Stop 5-2), Washington, DC 20549, 202 272-2048

RIN: 3235-AC28

3915. PROPOSED RULE 12D3-2UNDER THE INVESTMENT COMPANY ACT

Legal Authority: 15 USC 80a-6(c); 15 USC 80a-37

CFR Citation: 17 CFR 270.12d3-2

Legal Deadline: None.

Abstract: The Commission is considering whether to propose a rule that would set forth the conditions under which registered investment companies may engage in repurchase agreement transactions with persons engaged in securities related businesses.

Timetable:

Action	Date	FR Cite
Next Action Undetermined		

Small Entity: Undetermined

Agency Contact: Brian Kindelan, Attorney, Securities and Exchange Commission, Division of Investment Management, 450 Fifth Street, N.W. (Stop 5-2), Washington, DC 20549, 202 272-2048

RIN: 3235-AC36

3916. ADVERTISING BY UNIT INVESTMENT TRUSTS

Legal Authority: 15 USC 77j; 15 USC 77s; 15 USC 80a-37(a)

CFR Citation: Not yet determined

Legal Deadline: None.

Abstract: Currently unit investment trusts advertise their performance by means of an "estimated current return" which shows estimated cash flow. However, because there is no uniform method of computing the estimated current return, they cannot be compared by prospective investors. This rulemaking project will endeavor to create such a uniform method. A uniform method of computation will permit investors to make more informed investment decisions by enabling them to compare the performance of different trusts.

Timetable:

Action	Date	FR Cite
Next Action Undetermined		

Small Entity: No

Government Levels Affected: Federal

Agency Contact: Diane C. Blizzard, Securities and Exchange Commission, Securities and Exchange Commission, 450 5th Street, N.W., Washington, D.C. 20549, 202 272-2107

RIN: 3235-AC70

VOL 53 ISS 79 PT 2 AP 25 1988 UMI

3917. ● INFORMATION THAT BROKER-DEALERS MAY DISSEMINATE ABOUT INVESTMENT COMPANIES

Legal Authority: 15 USC 775(a)

CFR Citation: 17 CFR 230.139a

Legal Deadline: None.

Abstract: The Commission is considering proposing a rule that would provide a safe harbor under Section 5 of the Securities Act of 1933 for broker-dealer publications that contain information about investment companies whose shares are available through the broker-dealer.

Timetable:

Action	Date	FR Cite
Next Action Undetermined		

Small Entity: Undetermined

Agency Contact: Diane C. Blizzard, Attorney, Securities and Exchange Commission, Division of Investment Management, 450 5th Street, N.W., Washington, D.C. 20549, 202 272-2107

RIN: 3235-AD20

3918. ● REVISIONS TO THE REGISTRATION AND THE ANNUAL SUPPLEMENT FORMS USED BY INVESTMENT ADVISERS

Legal Authority: 15 USC 78o(b)(1); 15 USC 78w(a); 15 USC 80b-3; 15 USC 80b-4; 15 USC 80b-6A; 15 USC 80b-11; 15 USC 80b-1

CFR Citation: 17 CFR 275.; 17 CFR 279.

Legal Deadline: None.

Abstract: The Commission is considering a proposal that would revise the Amendment and updating requirements and procedures for an advisers registration form and annual report. The Commission would propose such revisions in order to facilitate the review of investment adviser registration forms and resolve certain administrative difficulties.

Timetable:

Action	Date	FR Cite
Next Action Undetermined		

Small Entity: Undetermined

Agency Contact: John McGuire, Attorney, Securities and Exchange Commission, Division of Investment Management, 450 5th Street, N.W., Washington, D.C. 20549, 202 272-2107

RIN: 3235-AD21

SECURITIES AND EXCHANGE COMMISSION (SEC) — Final Rule Stage

Accounting Rules

3919. PROPOSALS REGARDING INDUSTRY SEGMENT AND OTHER INTERIM FINANCIAL REPORTING MATTERS, MANAGEMENT'S DISCUSSION AND ANALYSIS, AND OFF BALANCE SHEET FINANCING DISCLOSURES

Legal Authority: 15 USC 77f; 15 USC 77g; 15 USC 77h; 15 USC 77j; 15 USC 77s(a); 15 USC 77aa(25) to 77aa(26); 15 USC 78l; 15 USC 78m; 15 USC 78o(d); 15 USC 78w(a); 15 USC 79e(b); 15 USC 79n; 15 USC 79t(a); 15 USC 80a-8; 15 USC 80-29

CFR Citation: 17 CFR 210.5-02; 17 CFR 210.10-01; 17 CFR 210.11-02; 17 CFR 229.303

Legal Deadline: None.

Abstract: The Commission proposed amendments to require (1) presentation of certain industry segment information for interim periods; (2) a discussion of reportable segments in management's discussion and analysis; and (3) modifications of other miscellaneous interim reporting requirements. The release also provides advance notice of possible future rulemaking regarding (1) additional segment reporting disclosures and (2) uniform disclosure of off balance sheet financing arrangements. The proposals are designed to enhance analysis of financial information. They may entail some new recordkeeping but any such costs have not been determined. The Commission's interim reporting rules will be reviewed as a part of this action.

Timetable:

Action	Date	FR Cite
NPRM	02/15/84	49 FR 6737
NPRM Comment Period End	05/15/84	

Next Action Undetermined

Small Entity: Undetermined

Additional Information: This entry replaces the following three entries from the October 1983 agenda. RIN 3235-AA53 -- Off Balance Sheet Obligations. RIN 3235-AA54 -- Segment Information. RIN 3235-AA55 -- Quarterly Financial Reporting.

Agency Contact: John W. Albert, Assistant Chief Accountant, Securities and Exchange Commission, 450 5th Street, NW, Washington, DC 20549, 202 272-2130

RIN: 3235-AB15

3920. REQUEST FOR COMMENTS ON "OPINION SHOPPING"

Legal Authority: 15 USC 77f; 15 USC 77g; 15 USC 77h; 15 USC 77j; 15 USC 77s; 15 USC 78l; 15 USC 78m; 15 USC 78n; 15 USC 78o; 15 USC 78w; 15 USC 79e; 15 USC 79n; 15 USC 79t; 15 USC 80a-8; 15 USC 80a-29

CFR Citation: 17 CFR 210; 17 CFR 249

Legal Deadline: None.

Abstract: The Commission requested comments on proposed amendments to Forms 8-K and N-SAR and Regulation S-K related to a change in a registrant's certifying accountant. Certain amendments to Form clarify the circumstances in which registrants are deemed to have N-SAR were adopted by the Commission on November 24, 1987. The remaining proposals would clarify the circumstances in which registrants are deemed to have bad disagreements with their former auditors and provide for more complete disclosure of potential opinion shopping situations and the circumstances surrounding the change in accountants.

Timetable:

Action	Date	FR Cite
ANPRM	07/01/85	50 FR 28219
ANPRM Comment Period End	10/09/85	50 FR 28219
NPRM	06/16/87	52 FR 24019
NPRM Comment Period End	09/24/87	52 FR 24019
Final Action	03/31/88	

Next Action Undetermined

Small Entity: Undetermined

Agency Contact: Robert E. Burns, Chief Counsel, Office of Chief Accountant, Securities and Exchange Commission, Office of the Chief Accountant, 450 5th Street, NW, Washington, D.C. 20549, 202 272-2130

RIN: 3235-AC02

Disclosure Rules

3921. INDEPENDENT ACCOUNTANTS - MANDATORY PEER REVIEW

Legal Authority: 15 USC 77f; 15 USC 77g; 15 USC 77h; 15 USC 77j; 15 USC 77s(a); 15 USC 77aa(25) to 77aa(26); 15 USC 78l; 15 USC 78m; 15 USC 78o(d); 15 USC 78w(a); 15 USC 79e(b); 15 USC 79n; 15 USC 79t(a); 15 USC 80a-8; 15 USC 80a-29

CFR Citation: 17 CFR 210

Legal Deadline: None.

Abstract: The Commission has proposed amendments to its rules that would require accountants' reports included in Commission filings be signed by an independent accountant who has undergone a peer review of its accounting and audit practice within the past three years.

Timetable:

Action	Date	FR Cite
NPRM	04/01/87	52 FR 11665
NPRM Comment Period End	09/01/87	52 FR 11665
Final Action	03/31/88	

Next Action Undetermined

Small Entity: Undetermined

Agency Contact: John A. Heyman, Professional Accounting Fellow, Securities and Exchange Commission, Office of the Chief Accountant, 450 5th Street, N.W., Washington, D.C. 20549, 202 272-2130

RIN: 3235-AC79

3922. PROSPECTUS DELIVERY REQUIREMENTS IN FIRM COMMITMENT UNDERWRITTEN OFFERINGS OF SECURITIES MADE FOR CASH (RULE 433)

Legal Authority: 15 USC 77b(10); 15 USC 77s(a); 15 USC 77j(a)(4); 15 USC 77j(d)

CFR Citation: 17 CFR 230.433

Legal Deadline: None.

Abstract: The Commission proposed two alternative versions of a new Rule 433 that would provide a safe harbor from the requirement to deliver a final prospectus prior to or contemporaneously with a confirmation of sale in a firm commitment offering of securities for cash. Both proposals would permit, if all conditions of the rule are satisfied, the sending of a final prospectus no later than five business days after a confirmation of sale is sent to an investor in such an offering.

Timetable:

Action	Date	FR Cite
NPRM	08/06/87	52 FR 29206
NPRM Comment Period End	10/05/87	

Next Action Undetermined

Small Entity: Yes

Agency Contact: Sarah A. Miller, Special Counsel, Office of Disclosure Policy, Securities and Exchange Commission, Division of Corporation Finance, 450 5th Street, N.W., Washington, D.C. 20549, 202 272-2589

RIN: 3235-AC80

3923. FACILITATING SHAREHOLDER COMMUNICATIONS

Legal Authority: 15 USC 78l; 15 USC 78n; 15 USC 78q; 15 USC 78w(a)

CFR Citation: 17 CFR 240.14a-1; 17 CFR 240.14a-13; 17 CFR 240.14b-1; 17 CFR 240.14b-2; 17 CFR 240.14c-1; 17 CFR 240.14c-7

Legal Deadline: None.

Abstract: In order to avoid duplicative forwarding of proxy soliciting material to employee benefit plan participants who are beneficial owners and excessive recordkeeping burdens for both brokers and banks and to save costs for registrants, the Commission is proposing amendments that would exclude, under certain circumstances, certain employee benefit plan participants from the shareholder communications rules. The alternatives proposed include: (1) an optional exclusion on the part of registrant if certain prerequisites are satisfied; (2) a mandatory exclusion without any trigger mechanism; and (3) a mandatory exclusion with a trigger mechanism.

Timetable:

Action	Date	FR Cite
NPRM	03/27/87	52 FR 11083
NPRM Comment Period End	05/07/87	
Further public comment requested	06/19/87	52 FR 23855
Extended comment period will end	08/10/87	

Next Action Undetermined

Small Entity: No

Agency Contact: Sarah A. Miller, Special Counsel, Office of Disclosure Policy, Securities and Exchange Commission, Division of Corporation Finance, 450 5th Street, N.W., Washington, D.C. 20549, 202 272-2589

RIN: 3235-AC81

3924. FACILITATING SHAREHOLDER COMMUNICATIONS

Legal Authority: 15 USC 78l; 15 USC 78n; 15 USC 78q; 15 USC 78w(a)

CFR Citation: 17 CFR 240.14a-1; 17 CFR 240.14a-13; 17 CFR 240.14b-1; 17 CFR 240.14b-2; 17 CFR 240.14c-1; 17 CFR 240.14c-7

Legal Deadline: None.

Abstract: The Commission is proposing amendments to the shareholder communications rules that would require a registrant to exclude under certain circumstances, employee benefit plan participants from the operation of the proxy processing provisions with respect to securities of a registrant held in nominee name pursuant to the plan. The proposed amendments also would exclude plan participants from a registrant's request for a list of beneficial owners under certain circumstances. The proposed amendments are intended to avoid duplicative mailing of proxy materials to plan participants, to achieve the most efficient means of communicating with such plan participants and to realize cost savings for registrants in connection with proxy processing obligations and requesting beneficial ownership lists. In addition to these proposed amendments, the Commission

is considering various alternatives including an optional exclusion of plan participants from the shareholder communications rules if certain prerequisites are satisfied, making one or both of the exclusions from the proxy processing and direct communications systems mandatory and an automatic across-the-board (cont')

Timetable:

Action	Date	FR Cite
NPRM	06/19/87	52 FR 23855
NPRM Comment Period End	08/10/87	

Next Action Undetermined

Small Entity: No

Additional Information: ABSTRACT (CONT') mandatory exclusion.

Agency Contact: Barbara J. Green, Attorney Fellow, Office of Diclosure Policy, Securities and Exchange Commission, Division of Corporation Finance, 450 5th Street, N.W., Washington, D.C. 20549, 202 272-2589

RIN: 3235-AD07

3925. ELIMINATION OF FILING REQUIREMENTS FOR PRELIMINARY PROXY MATERIAL UNDER CERTAIN CIRCUMSTANCES; RULE 14A-8 SHAREHOLDER PROPOSALS

Legal Authority: 15 USC 78n; 15 USC 78w(a)

CFR Citation: 17 CFR 229.401; 17 CFR 240.14a-3; 17 CFR 240.14a-6; 17 CFR 240.14a-8; 17 CFR 240.14a-101; 17 CFR 240.14c-3; 17 CFR 240.14c-5; 17 CFR 240.14c-101; 17 CFR 270.20a-1

Legal Deadline: None.

Abstract: The Commission is proposing to eliminate the filing of preliminary proxy and information statements under certain circumstances. The proposed amendments are intended to decrease filing burdens on registrants and reduce administrative costs incurred by the Commission in processing such preliminary material. The Commission also is proposing amendments to Rule 14a-8, the shareholder proposal Rule including deleting the limitation on inclusion of a shareholder proposal in a registrant's proxy material where the proponent delivers written proxy materials to holders of more than 25% of a class of the registrant's securities. As alternatives, the Commission is considering modifying or clarifying the 25% limitation.

Timetable:

Action	Date	FR Cite
NPRM	06/04/87	52 FR 22334
NPRM Comment Period End	07/27/87	

Next Action Undetermined

Small Entity: Yes

Agency Contact: Barbara J. Green, Attorney Fellow, Office of Disclosure Policy, Securities and Exchange Commission, Division of Corporation Finance, 450 5th Street, N.W., Washington, D.C. 20549, 202 272-2589

RIN: 3235-AD08

Investment Management Rules

3926. PROPOSED RULE 3A-4 – INDIVIDUALIZED INVESTMENT MANAGEMENT SERVICES

Legal Authority: 15 USC 80a-6(c); 15 USC 80a-37(a)

CFR Citation: 17 CFR 270.3a-4

Legal Deadline: None.

Abstract: In Investment Company Act Release No. 11391 (October 10, 1980) (45 FR 69479) the Commission proposed for public comment Rule 3a-4, which would deem investment management services providing their clients with individualized treatment not to be investment companies for purposes of the Act. The rule provides a "safe harbor" for any investment manager providing its clients with treatment based on the needs and goals of each client. Under such circumstances, regulation of investment management services under the Act appears unnecessary. The proposed rule was intended to clarify the Commission's position on the question of "mini-accounts" by providing a safe harbor for certain investment management services and thereby provide some certainty to the public. The Commission does not expect any final action taken on the proposal to significantly affect the cost of providing investment management services. The public comment letters on the proposal have been reviewed and alternatives for final action are being considered.

Timetable:

Action	Date	FR Cite
NPRM	10/10/80	45 FR 69479
NPRM Comment Period End	01/31/81	45 FR 69479

Next Action Undetermined

Small Entity: Undetermined

Additional Information: NPRM is Release No. IC-11391 (10/10/80)

Agency Contact: Jack W. Murphy, Special Counsel, Securities and Exchange Commission, Division of Investment Management, 450 5th Street, NW (Stop 5-2), Washington, DC 20549, 202 272-2048

RIN: 3235-AA12

3927. PROPOSED AMENDMENT TO RULE 17G-1 UNDER THE INVESTMENT COMPANY ACT

Legal Authority: 15 USC 80a-6(c); 15 USC 80a-17(g); 15 USC 80a-37(a)

CFR Citation: 17 CFR 270.17g-1

Legal Deadline: None.

Abstract: The Commission is considering whether to adopt an amendment to Rule 17g-1 under the Investment Company Act. The amendment was proposed for public comment in Investment Company Act Release No. 11193 (June 2, 1980) (45 FR 38407). Rule 17g-1 requires every registered investment company to provide and maintain a bond against larceny and embezzlement covering officers and employees of the company. In some circumstances, the officers and employees of a company's depositor, trustee, investment adviser or other manager and various affiliates of such persons, because they have access to the company's assets, function as officers and employees of the investment company. The proposed amendment to the rule would clarify the scope of the rule by explicitly requiring the bonding of such persons. The principal cost associated with this rule would be the cost of a bond. That cost would vary according to the persons required to be bonded by the rule. In this regard, before adopting any amendment to the rule, the Commission will carefully consider what persons should be bonded to protect investors adequately, weighing the benefits of the protection against the cost of a bond.

Timetable:

Action	Date	FR Cite
Next Action Undetermined		

Small Entity: Undetermined

Agency Contact: Jack W. Murphy, Special Counsel, Securities and Exchange Commission, Division of Investment Management, 450 5th Street, NW (Stop 5-2), Washington, DC 20549, 202 272-2048

RIN: 3235-AA16

3928. SIMPLIFICATION OF REGISTRATION STATEMENTS FILED BY UNIT INVESTMENT TRUSTS

Legal Authority: 15 USC 80a-8; 15 USC 77g; 15 USC 77j

CFR Citation: 17 CFR 239.16; 17 CFR 274.12

Legal Deadline: None.

Abstract: On May 14, 1985, the Commission issued a release (Investment Company Act Release NO.14513 (50 FR 21282) soliciting public comment on proposed Form N-7, a form for registration of unit Investment Trusts and their securities under the Investment Act of 1940 and the Securities Act of 1933, and certain related rules and rule amendments. The Commission also published staff guidelines for the preparation of Form N-7. The proposed form would establish a two-part format for disclosure to prospective investors consisting of a simplified prospectus that can be use to satisfy the prospectus delivery requirements of the Securities Act of 1933 and a statement of additional information that would be available to prospective investors upon request and without charge. The Commission is proposing Form N-7 in order to (I) integrate the reporting and disclosure requirements of the Securities Act of 1933 and the investment trusts in one document; (II) codify in the form and guidelines the disclosure standards that have been developed for unit investment trusts; and (III) shorten and simplify the prospectus while making available on request more extensive information not of routine(cont)

Timetable:

Action	Date	FR Cite
NPRM	05/23/85	
NPRM Comment Period End	12/31/87	50 FR 21282
Next Action Undetermined		

Small Entity: Yes

Additional Information: ABSTRACT CONT: interest to most investor.

Agency Contact: Jay Gould, Attorney, Securities and Exchange Commission, Division of Investment Management, 450 5th Street, NW (Stop 5-2), Washington, DC 20549, 202 272-3040

RIN: 3235-AA47

3929. DISCLOSURE OF SECURITY RATINGS IN REGISTRATION STATEMENTS OF MONEY MARKET FUNDS

Legal Authority: 15 USC 77(g); 15 USC 77(i); 15 USC 77(s)(a)

CFR Citation: 17 CFR 230.134; 17 CFR 230.436; 17 CFR 230.482

Legal Deadline: None.

Abstract: The Commission proposed amendments to Rules 134, 436, and 482 under the Securities Act of 1933 on March 14, 1986. The amendments would, if adopted, permit certain investment companies to use in their statutory and omitting prospectuses security ratings assigned by a nationally recognized statistical rating organization (NRSRO) without first obtaining the NRSRO'S consent to being named pursuant to Section 7 of the Securities Act. The Commission is now considering whether to adopt such amendments.

Timetable:

Action	Date	FR Cite
NPRM Comment Period End	05/16/86	51 FR 9838
Next Action Undetermined		

Small Entity: Undetermined

Agency Contact: Robert E. Plaze, Special Counsel, Securities and Exchange Commission, Division of Investment Management, 450 Fifth Street, N.W. (Stop 5-2), Washington, D.C. 20549, 202 272-2107

RIN: 3235-AC24

3930. N-1A TECHNICAL AMENDMENTS

Legal Authority: 15 USC 580a-8(b)

CFR Citation: 17 CFR 274.11A

Legal Deadline: None.

Abstract: The Commission is considering several modifications to Form N1A which would reduce the number of copies that must be filed with the Commission, clarify the operation of item 15(c) of the Statement of Additional information with respect to series companies, and confirm the procedures for requesting the statement of additional information to those contained in Forms N-3 and N-4.

Timetable:

Action	Date	FR Cite
Next Action Undetermined		

Small Entity: Undetermined

Agency Contact: John McGuire, Staff Attorney, Securities and Exchange Commission, Division of Investment Management, 450 Fifth street, N. W., Washington, DC 20549, 202 272-2107

RIN: 3235-AC25

3931. RULE 174 AMENDMENT - PROSPECTUS DELIVERY DURING QUIET PERIOD

Legal Authority: 15 USC 77s; 15 USC 77d

CFR Citation: 17 CFR 230.174

Legal Deadline: None.

Abstract: The Commission intends to adopt amendments to Rule 174 under the Securities Act of 1933 that would reduce or eliminate under certain circumstances the 40 or 90 day delivery period during which dealers must deliver a prospectus in after market transactions in registered securities following a public offering.

Timetable:

Action	Date	FR Cite
NPRM	12/29/86	51 FR 46874
NPRM Comment Period End	03/01/87	51 FR 46874
Final Action	04/04/88	

Small Entity: Undetermined

Agency Contact: Larisa Dobriansky, Special Counsel, Office of Disclosure Policy, Securities and Exchange Commission, Division of Corporation Finance, 450 Fifth Street, N.W., Washington, D.C. 20549, 202 272-2589

RIN: 3235-AC34

3932. REVISION OF CERTAIN INVESTMENT ADVISER RECORDKEEPING RULES

Legal Authority: 15 USC 80b-4(2); 15 USC 80b-6(4)

SEC **Final Rule Stage**

CFR Citation: 17 CFR 275.204-2(a); 17 CFR 275.204-2(e)

Legal Deadline: None.

Abstract: Under the books and records rules of the Investment Advisers Act of 1940, investment advisers are permitted to advertise but are not required to maintain their advertisements nor the worksheets used to calculate the performance information in advertisements. We are proposing a rule that would require these documents to be kept. If the rule is proposed and adopted, Commission inspectors would be able to examine these advertisements and the worksheets used to calculate performance information in advertisements which would aid the Commission's efforts to eliminate fraudulent and misleading advertisements by investment advisers.

Timetable:

Action	Date	FR Cite
NPRM	09/01/87	
NPRM Comment Period End	12/29/87	
Final Action	04/30/88	

Small Entity: Yes

Agency Contact: Dorothy M. Donohue, Attorney, Securities and Exchange Commission, Division of Investment Management, 450 Fifth Street, N.W., Washington, D.C. 20549, 202 272-2107

RIN: 3235-AC97

SECURITIES AND EXCHANGE COMMISSION (SEC) — Completed Actions

3933. PROPOSED RULE AMENDMENTS CONCERNING DISCLOSURE OF INFLATION-ADJUSTED INFORMATION

CFR Citation: 17 CFR 229; 17 CFR 249

Completed:

Reason	Date	FR Cite
Final Action	08/06/87	52 FR 30917
Final Action Effective	09/17/87	52 FR 30917

Small Entity: No

Agency Contact: James R. Bradow 202 272-2130

RIN: 3235-AC78

3934. RULE 3A12-8 OF THE SECURITIES EXCHANGE ACT OF 1934

CFR Citation: 17 CFR 240.3a12-8

Completed:

Reason	Date	FR Cite
Final Action Adopted second proposed alternative amendment	10/29/87	52 FR 42277

Small Entity: No

Agency Contact: David Underhill 202 272-2375

RIN: 3235-AC88

3935. REVISIONS TO EXPENSE-RELATED DISCLOSURE REQUIREMENTS OF FORM N-1A

CFR Citation: 17 CFR 239.15A; 17 CFR 274.11A

Completed:

Reason	Date	FR Cite
Final Action	02/04/88	53 FR 3192
Final Action Effective	05/01/88	

Small Entity: No

Agency Contact: John McGuire 202 272-2107

RIN: 3235-AB73

3936. DISCLOSURE OF LEGAL AND DISCIPLINARY PROCEEDINGS

CFR Citation: 17 CFR 275.206(4)-4

Completed:

Reason	Date	FR Cite
Final Action	09/25/87	52 FR 36915
Final Action Effective	10/02/87	52 FR 36915

Small Entity: Undetermined

Agency Contact: Debra J. Kertzman 202 272-2107

RIN: 3235-AC06

3937. ACCOUNTING FOR DISTRIBUTION EXPENSES

CFR Citation: 17 CFR 210.6-07

Completed:

Reason	Date	FR Cite
Final Action June 12, 1987 adopted financial statements.	06/18/87	52 FR 23170

Small Entity: No

Agency Contact: Debra Kertzman 202 272-2107

RIN: 3235-AC07

3938. STANDARDIZED FORMULA FOR CALCULATING INVESTMENT COMPANY PERFORMANCE DATA IN ADVERTISEMENTS

CFR Citation: 17 CFR 270

Completed:

Reason	Date	FR Cite
Final Action	02/02/88	53 FR 3868

Small Entity: Undetermined

Agency Contact: Robert E. Plaze 202 272-2107

RIN: 3235-AC08

3939. REGISTRATION UNDER THE SECURITIES ACT OF 1933 OF AN INDEFINITE NUMBER OF CERTAIN INVESTMENT COMPANY SECURITIES

CFR Citation: 17 CFR 270.24f-3

Completed:

Reason	Date	FR Cite
Final Action	12/31/88	52 FR 8302

Small Entity: Undetermined

Agency Contact: Diane C. Blizzard 202 272-2107

RIN: 3235-AC10

3940. EXEMPTION FOR THE OFFER OR SALE OF DEBT SECURITIES AND NON-VOTING PREFERRED STOCK IN THE UNITED STATES BY FOREIGN BANKS AND SUBSIDIARIES ORGANIZED TO FINANCE THE OPERATIONS OF FOREIGN BANKS

CFR Citation: 17 CFR 270.6c-9; 17 CFR 274.304

Completed:

Reason	Date	FR Cite
Final Action Final Amendments adopted-effective 12/04/87	11/04/87	52 FR 42280
Final Action Effective	12/04/87	52 FR 42280

Small Entity: No

Agency Contact: Ann M. Glickman 202 272-2048

RIN: 3235-AC37

3941. RULE 19B-1 UNDER THE INVESTMENT COMPANY ACT

CFR Citation: 17 CFR 270.19b-1

Completed:

Reason	Date	FR Cite
Final Action Final Rule Amendments Adopted	11/05/87	52 FR 42426
Final Action Effective	11/05/87	52 FR 42426

Small Entity: Undetermined

Agency Contact: Brian M. Kaplowitz 202 272-3038

RIN: 3235-AC99

[FR Doc. 88-5114 Filed 04-22-88; 8:45 am]

BILLING CODE 8010-01-T

SUBJECT INDEX TO THE UNIFIED AGENDA OF FEDERAL REGULATIONS

Sequence Number

A

Accounting:
- Accountants, peer review ... 3921
- Accrual basis ... 750
- Airline uniform system ... 1992
- Automated clearing house ... 2067
- Banks, uniform standards ... 3694
- Bills of lading ... 2993
- Bonds ... 2069, 2070
- Colleges and universities ... 575
- Cost principles ... 3088
- Emission standards ... 2854
- Farm Credit System ... 3556
- Grants audit ... 586
- Job training audit ... 1405
- Loans ... 3672
- Motor carriers ... 3775
- Nuclear fuel retirement ... 3653
- Rail costing system ... 3767
- Reclamation actions ... 2068
- State and local governments ... 422, 584, 3088
- Treasury checks ... 2068

Advertising:
- Airline tickets ... 1546
- American viticultural areas ... 2082
- Athletes and athletic events ... 2073
- Distilled spirits ... 2073, 2086, 2091
- Food store practices ... 3762
- Games of chance ... 3758
- Health benefits program, Federal employees ... 3135
- Interest on deposits ... 3735
- Investment companies ... 3912, 3938
- Light (Lite), use of word ... 2086
- Malt beverages ... 2073, 2086, 2090, 2091
- Ophthalmic goods and services ... 3760
- Pesticide product registration ... 2636
- Pesticides restriction ... 2635
- Political ... 2185
- Wine ... 2071, 2073, 2075, 2086, 2091

Advisory Committee Management, Federal ... 3013

Age, nondiscrimination ... 431, 1061, 1306, 1566, 2607, 2904, 2923, 2944

Agricultural commodities:
- Biological residues ... 134
- Cotton ... 5, 6, 12, 14, 18, 23, 27, 29, 35, 37, 46, 47, 52, 69
- Dairy products ... 38, 2614
- Disaster relief ... 2615
- Fruits and vegetables ... 58
- Grain ... 5, 11, 18, 23, 26, 36, 45, 52
- Honey ... 2, 17, 49
- Inspection ... 1, 104, 105, 107, 113, 114, 115, 116, 117, 133, 134, 136, 140, 141, 142, 143, 148, 149, 151
- Milk and milk products ... 38, 43, 56, 57
- Overseas donations ... 154
- Peanuts ... 8, 10, 16, 22, 32, 39, 40
- Rice ... 5, 18, 19, 23, 24, 48, 52
- Safety and sanitation ... 142
- Soybeans ... 53
- Speculative position ... 3498
- Sugar beets and sugarcane ... 21, 33, 55
- Sugar imports, quota system ... 152, 153
- Supply regulation ... 88
- Tobacco ... 9, 15, 28, 30, 31, 41, 42, 44, 54
- Wheat ... 4, 5, 18, 20, 23, 25, 50, 52, 2614
- Wool and mohair ... 3, 34

Agriculture:
- Alien farmworkers ... 1350, 1407
- Grain handling facilities ... 1519
- Loans ... 81, 89

Agriculture—Continued
- Migrant and seasonal farmworkers ... 1381, 1385, 1388
- Plant pests and diseases ... 58
- Relocation assistance ... 208

Aid to families with dependent children:
- Administrative involvement ... 843
- Aliens ... 840, 847, 867
- Cooperative agreements ... 850
- Deficit Reduction Act ... 858
- Eligibility ... 98, 859
- Essential persons ... 866
- Foster care payments ... 592, 853
- Health coverage ... 849
- OASDI lump sum and monthly payments treatment ... 609
- Payments, scope of ... 842
- Policy consistency ... 860
- Quality control system ... 862
- Refugees, costs for assistance ... 854
- Scoring system ... 851
- State practice-quality control ... 856
- Tax refund offset process ... 852
- Utility payments ... 857

AIDS, acquired immune deficiency syndrome ... 624, 694, 1498, 3332

Air carriers:
- Accounts and reports ... 1983, 1992, 1993
- Agreements and applications ... 1578
- Aviation exemption ... 1575
- Cargo ... 1540, 1544
- Certification ... 1750
- Charters ... 1541, 1549, 2018
- Customs duties and inspection ... 2121
- Employee benefits ... 1392
- Financial information ... 2007
- Flammability standards ... 1721
- Flight restrictions ... 1554, 1673, 1710
- Foreign ... 1557, 1573, 1695, 2017
- Handicapped persons, nondiscrimination ... 1548
- Immigration ... 1352
- Insurance for taxi operators ... 1572
- Passengers ... 1549, 1554, 1568
- Seats ... 1981
- Security ... 1695
- Service defaults, consumer protection ... 1538
- Subsidy claims ... 1574, 1990

Air pollution control:
- Air pollutants ... 2794
- Air quality models ... 2796, 2862
- Ambient air quality standards:
  - Carbon monoxide ... 2790, 2846
  - Dust, rural fugitive ... 2848
  - Nitrogen dioxide ... 2789
  - Ozone ... 2825, 2846
- Asbestos ... 2662, 2813
- Asphalt roofing manufacturing plants ... 2792, 2793
- Benzene ... 2811, 2821
- Boilers ... 2808
- Butadiene ... 2817
- Cadmium ... 2795
- Carbon monoxide ... 2846
- Carbon tetrachloride ... 2817
- Cement plants ... 2842
- Chemicals, manufactured ... 2833
- Chemicals, synthetic organic ... 2807
- Chloroform ... 2817
- Chromium ... 2814, 2815, 2816, 2847
- Coal mines, surface ... 2861
- Coal preparation plants ... 2791

Sequence Number

Air pollution control—Continued
Coke oven batteries ... 2812
Diesel fuel ... 2799, 2827
Dust, rural fugitive ... 2848
Emission standards ... 2828, 2854
Environmental protection ... 2866
Ethylene dichloride ... 2817
Ethylene oxide ... 2817, 2819
Fuel and fuel additives ... 2798
Fuel switching prevention ... 2830
Gasoline ... 2797, 2829, 2851, 2864
Hazardous substances:
Air toxicants, waste ... 2867
Radionuclides ... 2883
Heavy-duty engine gasoline vehicle emission ... 2826
Hydrocarbon ... 2824, 2825, 2851
Imported motor vehicles ... 2853
Lead ... 2801
Magnetic tape ... 2845
Methanol-fueled vehicles ... 2850
Methylene chloride ... 2817, 2820
Motor vehicles ... 2825, 2840, 2850, 2863
Municipal landfills ... 2810
Municipal waste combustors ... 2809
National parks ... 2804
Nitrogen oxides ... 2832, 2865
Noise control ... 1722, 1753, 1768, 1769, 1799, 2734
Nuclear fuel ... 2711
Nuclear power plants ... 3842
Oil and gas operations in the OCS ... 1190, 1194
Organic solvent cleaners ... 2806, 2820
Ozone ... 2802, 2846, 2849
Parks ... 2856
Particulates ... 2799, 2803, 2823, 2827, 2848, 2852, 2860
Perchloroethylene ... 2805, 2817, 2818, 2820
Petroleum refinery wastewater systems ... 2844
Radioactive wastes ... 2711
Radionuclides ... 2822
Sewage treatment plants ... 2839
Solvent degreasing ... 2834
Sterilization chambers ... 2819
Sulfur dioxide ... 2837, 2841, 2858
Sulfur oxides ... 2800
Technical standards for corrective action ... 2756
Toxic chemicals ... 2639
Transuranium elements ... 2714
Trichloroethylene ... 2817, 2820
Turbine-engine powered airplanes ... 1759
Vehicle certification ... 2855
Vehicles and engines ... 2828
Volatile organic compounds ... 2749, 2835, 2836, 2838, 2843, 2845, 2857, 2859
Waste facilities ... 2831
Wilderness areas ... 2804, 2856
Air transportation:
Pilots and other personnel standards ... 1697, 1699, 1703, 1735, 1765
Traffic control systems ... 1719, 1778
Aircraft:
Airspace review ... 1713, 1714, 1793
Airworthiness directives and standards ... 1693, 1700, 1701, 1704, 1705, 1706, 1707, 1708, 1717, 1730, 1733, 1734, 1737, 1738, 1741, 1742, 1745, 1762, 1763, 1770, 1779, 1781, 1782, 1784, 1785, 1786, 1787, 1794, 1795, 1796, 1798, 1802, 1805
Airworthiness review ... 1751, 1752, 1771
Altitude reporting capability ... 1776
Army airfields, use of ... 399
Balloons ... 1740, 1805
Certification ... 1749
Cessna finance petition ... 1801
Continental control area ... 1776
Customs user fees ... 2122
Design standards ... 1728
Eglin Air Force Base area ... 1793
Flammability standards ... 1721
Flight plan ... 1696, 1790

Sequence Number

Aircraft—Continued
Flight restrictions ... 1673, 1710
Foreign repair stations ... 1764
Fuel system modification records ... 1803
Fuel venting and exhaust-emission ... 1759
Fuel-tank access panels ... 1728
Grand Canyon National Park area ... 1777
Helicopters ... 1718, 1744, 1788, 1799
High altitude flyover noise standard ... 1753
Immigration ... 1349
Jet route actions ... 1702
Kites ... 1740
Leasing USAF aircraft to nongovernment organizations ... 414
Liability insurance for foreign missions ... 1529
Navy airport traffic area ... 1714
Noise standards ... 1720, 1753, 1768, 1769, 1783, 1799
Parts and products ... 1698
Pilots and other personnel standards:
Airman training and certification ... 1735
Drug and alcohol use, control of ... 1724, 1727
Flight attendants ... 1694, 1723
Flight crewmembers certification ... 1806
Flight engineers skills ... 1703
Medical standards and certification ... 1697
Pilots and flight instructors certification ... 1699
Recreation pilots and annual flight review, certification ... 1765
Ultralight airman certification ... 1691
Propeller-driven small airplanes ... 1768
Registration of titles and security documents ... 1709
Repair station requirements ... 1715
Restricted areas ... 1793
Restrictions on landing at energy nuclear sites ... 531
Rockets, unmanned ... 1740
Rotorcraft ... 1732, 1737, 1743, 1754, 1760, 1766, 1767, 1779, 1780
Safety:
Air carrier, certification and operations ... 1700
Air taxi operations ... 1701
Airspace review recommendations, national ... 1730
Airspace system, exemption of regulations ... 1734
ATC transponders, system tests ... 1705
Bird impact and lightning protection ... 1706
Cabin fire protection ... 1693
Cabins, pressurized ... 1756
Cockpit voice recorder ... 1775
Crash-resistant fuel systems ... 1717, 1761
Crashworthiness program ... 1728, 1763
Emergency evacuation systems ... 1792
Emergency exits ... 1725, 1726, 1757, 1772
Engine control systems ... 1785
Engine fuel and induction systems ... 1741
Fatigue integrity of small airplanes ... 1782
Firefighting, rescue, and airport refueling ... 1798
Flight data recorder ... 1775
Flight rules ... 1704, 1794, 1796
Instruments or equipment, inoperative ... 1779
Low-fuel-quantity alerting system ... 1787
Maintenance agreements ... 1742
Nighttime VFR weather minimums ... 1784
Occupant restraint systems in rotorcraft ... 1767
Operational regulations ... 1738
Power source for public address system ... 1770
Propulsion system, safer ... 1733
Radar service ... 1804
Seats ... 1760, 1763, 1981
Subsonic airplanes, high altitude operation ... 1707
Takeoff trust control system, automatic ... 1802
Transport category airworthiness ... 1781
Ultralight airman certification ... 1691
Voice communication radios, antiblocking devices ... 1745
Wet and contaminated runways, takeoff on ... 1786
Wind shear equipment requirements ... 1762
Security control ... 1755
Seizure and forfeiture of alien ... 1319
Smoking notices to passengers ... 1550

Sequence Number

Aircraft—Continued
Supersonic noise compliance....1722
Terminal control areas....1774
Traffic control systems....1758, 1773, 1778
Transponder requirements....1748, 1776
Turbojet noise compliance....1722
Ultralights....1691, 1692, 1708, 1739
Weather conditions....1711
Airlines:
Accounts and reports....1992
Baggage liability notices....1555
Countersign notices to passengers....1556
Direct flights....1543
Electronic filing....1547
Employee benefits....1392
Government contractors....547
Handicapped persons, nondiscrimination....1548
Interstate transportation....1571
Mail rates, zones for....1569
Passengers air fare....1989
Price advertising....1546
Reports, confidentiality....1993
Ticket agents, unfair and deceptive practice....1542
Ticket escrow/bond protection....1539
Time and mileage guides....1567
Traffic control systems....1773
Travel promotion fees....370
Travelers, prohibit age discrimination....1570
Airports:
Airspace review....1713
Delays, elimination of....1719
Global positioning system....1712
Heliports....1791
Jet route actions....1702
Noise compatibility planning....1791
Passenger ceiling policy....1716
Personnel security access....1729
Security systems....1729
Terminal control areas....1712, 1736, 1774, 1789, 1800
Traffic control systems....1773, 1778
Washington Dulles International....1716
Washington Metropolitan....1716
Weather conditions....1711
Airspace:
Airspace review recommendations, national....1730
Nuclear facilities, prohibited areas....1718
Objects affecting navigable....1731
Offshore review....1746
Reclassification....1747
Regulations, nonsignificant....1797
Terminal control areas....1736
Airworthiness directives....1795, 1805
Alaska:
Chugach National Forest....169
Fish and wildlife conservation....169
Fishery management plan....304
Historic preservation....1120
Land use, National Forest....164
Marine mammals....1097
Migratory birds, subsistence take....1081
National parks....1117, 1133
Native cemetery sites....1120
Native claims....848, 1170
Salmon fishing, reporting requirements....306
Supplemental security income program....620
Timber use....179
Trans-Alaska pipeline liability fund....1057
Watershed, Petersburg....188
Alcohol and alcoholic beverages:
Alcohol abuse....584
Athletes and athletic events....2073
Beer....2076, 2092
Brandy treated with wood....2078
Caloric content, labeling and advertising....2086
Distilled spirits....2073, 2076, 2077, 2081, 2084, 2086, 2091, 2097

Sequence Number

Alcohol and alcoholic beverages—Continued
Grape....2088
Malt beverages....2073, 2086, 2090, 2091
Recordkeeping requirements....2074
Vodka, standard of identity....2083
Whiskies, straight....2097
Wine....2071, 2072, 2073, 2076, 2077, 2081, 2082, 2085, 2086, 2087, 2091
Aliens:
Agricultural workers, special....1338, 1350
Agriculture employment....1384, 1385, 1407
Aid to families with dependent children....847
Asylum procedures....1325
Border patrol sectors....1341
Certificate of Citizenship....1343
Children, adopted....1343
Classification....1333
Criminals....1356
Deportation....1325, 1356
Documentary requirements....1340, 1361
Employment....1314, 1357, 1360
Entry, unlawful....1345
Extension of stay....1320
Fathers, equal treatment....1347
Felony and misdemeanor....1339
Financial assistance....1337
Fines Office, National....1322
Housing....841
Housing assistance....804
Immigration....1349
Immigration service officers....1328, 1329
Information, verification of....1321
International organizations and families....1348
Juveniles, detention and release....1335
Labor certification process....1397
Legalization....867
Marriage fraud....1331
Medicaid....840, 847
Medicare eligibility....756
Narcotics traffickers....1356
Nonimmigrant classes....1320, 1344, 1346, 1348, 1351, 1359, 1361
Parole....1341
Passport validity....1359
Permanent residence....1330
Police clearances....1358
Refugees....861
Residence....1358
School enrollment....1329
Seizure and forfeiture....1319
Status adjustment....1342
Surety bonds....1332
Transportation lines contracts....1352
User fees....1317
Visa waiver pilot program....1346, 1347
Visitors for business and pleasure....1344
All Volunteer Force....3328
All-terrain vehicle safety....3506
America, Take Pride in....1059
American viticultural areas....2082
Animal welfare:
Antarctic....3078
Cats....60
Dogs....60
Drugs....673, 678, 683, 693
Exotic....121
Guinea pigs and hamsters....60
Horses and burros, wild and free roaming....165
Humane and healthful transport....1085
Nonhuman primates....60
Standards....60
Terms and regulations....61
Antidumping duties....246, 250, 252
Antitrust mergers or acquisitions, review of....3757
Archeological resources, protection....209, 3309, 3315, 3363

Sequence Number

Archives and records:
- Copiers, use of self-service ... 3068
- Credit unions ... 3787
- Disposition of Federal records ... 3066
- Electronic records management ... 2979, 3059
- Employee Medical Folder ... 3061
- Exhibition loans ... 3060
- Fees for reproduction of material ... 3067
- Freedom of Information Act ... 3055, 3067
- Inspection and copying ... 2606
- Medical record request form ... 3061
- Microfiche/microfilm ... 3053
- Micrographics management ... 3056
- National Personnel Records Center ... 3053, 3061
- Patent and Trademark Office ... 359
- Presidential Records Act ... 3057
- Restrictions on access ... 3055
- State Historical Records Advisory Boards ... 3054
- Statistical research ... 3065

Armed forces:
- Aircraft, leasing to nongovernment organizations ... 414
- Arsenals, Army sale to U.S. companies ... 393
- Certificates of separation ... 415
- Claims ... 411
- Education, dependent children ... 382
- Environmental impact ... 409
- Financial responsibility ... 413
- Firearms and weapons ... 400
- Hotline program ... 390
- Information service ... 397
- Information system, AF visual ... 416
- Investigative service ... 388
- Metrication program ... 384
- Military law ... 396, 412
- Military reservations ... 400, 405
- Offshore military activities ... 392
- Pay allotments, voluntary ... 385
- Public affairs ... 410
- Scientific and technical papers ... 377
- Selective service regulation ... 3252
- Uniform reserve, training and retirement ... 394

Armed Forces Information Council ... 397

Arms and munitions:
- Armor piercing ammunition, restrictions ... 2094
- Arsenals, Army sale to U.S. companies ... 393
- Firearms dealers, recordkeeping ... 2095
- Gun Control Act amendments ... 2093
- International traffic regulations ... 1535

Astronauts ... 3046

Atlantic sea scallops ... 289

Authority delegations:
- Bank acquisitions of control ... 3623
- Business, small ... 3301
- Civil rights ... 3029
- Damages, assessment of liquidated ... 3052
- Domestic energy supplies ... 2948
- Heads of offices, HUD ... 1013
- Maritime Defense Zone Commanders ... 1680
- Motor carrier safety ... 1875
- Oil and gas inspection and enforcement ... 1275
- Urban mass transportation ... 1978
- Vessel measurement ... 1676
- Vessels inspection review ... 1684

Automobile liability insurance ... 1529

B

Bank deposit insurance:
- Clarification and definition ... 3618
- Law, powers inconsistent with Federal ... 3627
- Rules of practice and procedure ... 3633

Banks, banking:
- Accounting standards, uniform ... 3694
- Acquisition of control, disapproval ... 3633
- Acquisition of control, notices ... 3623

Sequence Number

Banks, banking—Continued
- Adjustable-rate disclosures ... 3671
- Administrative proceedings ... 3619, 3633
- Agricultural loans ... 2112, 2118
- Applications processing guidelines ... 3685
- Appraisal policies and practices ... 3678, 3687
- Assets ... 3679
- Automated clearing house ... 2067
- Bank holding companies ... 3731, 3732, 3736, 3737, 3738, 3739, 3747, 3750
- Book-entry procedure ... 3693
- Book-entry securities of GNMA ... 1003
- Bribery Act ... 3750
- Capital forbearance ... 3686
- Capital maintenance ... 3629
- Capital ratios, minimum ... 2103
- Capital requirements and directives ... 3691
- Cease-and-desist orders, issuance of ... 3633
- Civil penalties, assessment of ... 3633
- Collection of checks ... 3741
- Collective investment funds ... 2099, 2105
- Conservators and receivers ... 3665
- Consolidations ... 2107
- Construction loans ... 3672
- Control, change in ... 3731, 3736, 3739, 3747
- Corporate activities ... 2111, 3670
- Credit ... 3729, 3730, 3745, 3746
- Credit programs, Federal ... 3098
- Credit unions ... 3606
- Crime reporting ... 2113
- Debt restructuring, troubled ... 3600
- Delegations of authority ... 3623
- Depository institutions, reserve requirements ... 3733
- Electronic fund transfers ... 3724
- Equality Banking Act ... 3680

Farm credit:
- Accounting practices ... 3556, 3559
- Agricultural loan loss amortization ... 3624
- Assistance corporation ... 3534
- Borrower rights ... 3530, 3557
- Capital ... 3540, 3541, 3542
- Civil money penalties ... 3537
- Collateral issues ... 3527
- Compensation of District Director Board members ... 3539
- Cooperatives, banks for ... 3547, 3548, 3552, 3553
- Debt collection ... 3535
- Disclosure to shareholders ... 3546, 3559
- Examinations ... 3526
- Funding corporation ... 3533
- Funding and fiscal affairs ... 3540
- Handicapped, nondiscrimination ... 3545
- Information, release of ... 3538
- Insurance ... 3536
- Interest rates ... 3558
- Investment policies ... 3554
- Lending authorities ... 3531
- Loans ... 3544, 3548, 3549, 3550, 3553, 3557, 3560
- Loss-sharing agreements ... 3560
- Mergers and consolidations ... 3543
- Organization ... 3529
- Personnel administration ... 3555
- Receivers ... 3528
- Regulatory approval review ... 3551
- Secondary market ... 3532
- Standards of conduct ... 3555

FDIC meetings of the Board of Directors ... 3617

Federal deposit insurance law ... 3627

Federal home loan banks ... 3665, 3666, 3667, 3668, 3669, 3670, 3671, 3672, 3673, 3674, 3675, 3676, 3677, 3678, 3679, 3680, 3681, 3682, 3683, 3684, 3685, 3686, 3687, 3688, 3689, 3690, 3691, 3692, 3693, 3694

Federal Reserve System ... 3627, 3726

Fees for disclosures ... 2062

Fiduciary powers of National Banks ... 2099, 2105

Sequence Number

Banks, banking—Continued
Financial corporation assessments....3693
Financial disclosure....2102, 2115, 3630, 3875
Foreign....2061, 3620, 3627, 3632, 3634, 3940
Foreign country loans....2102
Foreign missions....1531
FSLIC industry advisory committees....3689
Hearing rules for administrative hearings....2100
Home loan disclosures....3671
Home mortgage disclosure....3723
Housing....3625
Indemnification of directors, etc....3674
Information....3616, 3743
Insurance....3618, 3627, 3631, 3633, 3634, 3668, 3678, 3693
Insurance termination....3673
Interest on deposits....3735
International operations....3727, 3734
Investigative and enforcement records system....3626
Investment securities regulations....2116
Lending limits....2108, 2118
Litigation....2101
Loans....3666
Membership....3725
Mergers....2107
Mortgage-backed....1004, 2116
Mortgages....3748
Municipal securities....3633
Name or logo, common....3628
National banks....3627
Nonmember....3621, 3622, 3624, 3627, 3630
Oil and gas loans....2118
Organization and operation....3681, 3682, 3683
Practice and procedure....3619, 3628, 3633, 3688
Public observation of meetings....3617
Purchase and assumption....2107
Real estate....2117, 3627, 3736
Recordkeeping and confirmations....3621
Records....3676
Regulatory capital....3667, 3677
Removal or suspension orders....3633
Reporting requirements....2063, 3631
Savings banks, federally chartered....3627
Savings and loan....3665, 3667, 3668, 3692
Secrecy Act....2061, 2062, 2063, 2064, 3669
Securities....2102, 2104, 3621, 3622, 3684
Security devices and procedures....2113, 3728
State banks....3624, 3627, 3726, 3737, 3744
Stock issuance....3675
Subsidiary activities....3627
Supervision of operations....2106
Surety business....3627
Thrift lender test, qualified....3692
Truth-in-lending....3740, 3748, 3749
Unsafe and unsound practices....3628
Wire transfer systems, risk on large-dollar....3742
Barges, rules on carrying dangerous cargo....1609
Black lung program....664, 1245
Boats:
Casualty reporting for recreational....1589
Dealers, requirements for first purchase list....1658
Transporters, specialized equipment....1812
Bridges:
Aliens....1345
Inspection standards....1858
Truck size and weight....1863
Buildings:
Fall protection standards....1510
Handicapped access....228, 2616, 2617
Platforms, safety standards....1506
Business, small:
Acquisition regulation....3424
Aircraft....3290
Capital ownership development assistance....3266
Certificate of competency....3260, 3419
Compliance audits of small investment companies....3262

Sequence Number

Business, small—Continued
Counseling fees....3267
Credit, revolving line of....3273
Development centers....3281
Disadvantaged status appeals procedure....3291
Dredging industry size....3253
Fees for SBA programs....3271
Fraud civil remedies regulations, program....3283
Grants and cooperative agreements....3286
Indian tribes....3263
Investment companies....3262, 3264, 3280, 3305, 3306
Lending companies....3265, 3285
Loans....3266, 3279, 3285, 3287, 3298, 3301
Manufacturer or regular dealer....1386
Manufacturing industry size....3299
Minority....3263, 3266
Missiles, guided....3290
Mobile and modular building....3258
Nondiscrimination....3269
Nonmanufacturers....3289
PASS system user fees....3296
Refuse systems, surveying, and mapping....3259
Regular dealers....3306
Research....3295
Ship hull cleaning....3257
Size standards....3255, 3256, 3257, 3258, 3259, 3277, 3282, 3284, 3288, 3289, 3290, 3295, 3306
Space vehicle research and development....3290
Subcontracting plans....2972
Timber industry....193, 3254
Travel agency size....3276
Business and industry:
American vendors....1529
Funeral industry practice rule....3755
Pipelines and marketing affiliates....3645
Uranium mill sites, radon standards for inactive....3849

C

Cadastral survey, public lands....1290
Cash management:
Automated clearing house....2067
Bonds....2069, 2070
Funding techniques for Federal programs....2066
Treasury checks....2068
Chemicals:
Acrylate/methacrylate....2645
Benzene....1472
Carcinogens....1468
Comprehensive assessment information rule....2666
Ethylene dibromide....1504
Fees for processing premanufacture notices....2667
Formaldehyde....1522, 2648
Glycol ethers....1492
Hazardous substances:
Acute air toxicants....2667
Ethylene oxide....1516
Methylene chloride....1495
Volatile organic compounds....2635
Health and safety reporting rule....2665
Inorganic and organic....2722
Methylene chloride....2650
New use rules....2659
Peak release reporting rule....2639
Polychlorinated Biphenyls....2649, 2661
Preliminary assessment information rule....2664
Specific significant new use rules....2644
Test rules....2640, 2656
Toxic substances....2658
Toxic substances follow-up rules....2642, 2643
Toxicity profiles....2641
1,3-Butadiene....1491
4,4'-Methylenedianiline....1478
Children:
Abduction, international....1530

Sequence Number

Children—Continued
Adoption and foster care information 603
Aid to families with dependent 98
Alien, adopted 1343
Bunk bed safety standard 3519
Child support:
Arrears, retroactive 855
Collections distribution 846
Enforcement audit regulations 845
Enforcement program 868
Payments, disregard of 864
Choking incidents, small parts regulation 3525
Cigarette lighters, child-resistant 3513
Education:
Federally-impacted areas 443, 447
Handicapped 488, 495, 496, 497
Refugees 428
Food distribution program 95
Foster Grandparent Program 2610
Handicapped 597
Head Start program 594, 596, 597, 599, 600, 601, 606
Household substances, resistant packaging 3502
Labor law 1374
Lawn darts ban 3512
Lead fumes and dust 3515
Lighters, child-resistant disposable 3521
Medical support enforcement 863
Packaging, child-resistant 3502, 3509, 3510, 3511, 3524
Parent locator service 1395
Runaway and homeless 593
Toys for children under 3 years of age 3516
Welfare services 592
Cigarette papers and tubes 2080
Citizenship and naturalization:
Agricultural workers, special 1338, 1350, 1365
Aliens 1333, 1354
Asylum procedures 1325, 1362
Border patrol sectors 1341
Certificate of Citizenship 1343
Children, adopted alien 1343
Deportation proceedings 1356
Direct mail of applications 1364
Documentary requirements 1323, 1326, 1340, 1356, 1361
English language test 1318
Entry, unlawful 1345
Fathers, equal treatment 1347
Felony and misdemeanor 1339
Financial assistance 1337
Fines Office, National 1322
Foreign licensed attorneys 1313
Immigration 1349
Immigration user fees 1355
Information, verification of 1321
International organizations and families 1348
Juveniles, detention and release 1335
Marriage fraud 1331
Nonimmigrant classes 1320, 1340, 1344, 1346, 1348, 1351, 1356, 1359, 1361
Passport validity 1359
Police clearances 1358
Public use forms 1336
Relative petitions 1324
Residence 1330, 1337, 1358, 1363
Seizure and forfeiture of conveyances 1353
Status adjustment 1342
Surety bonds 1332
Transportation lines contracts 1352
Visa waiver pilot program 1346
Visitors for business and pleasure 1344
Civil defense:
Common use items 2949
Comprehensive cooperative agreement 2924
Defense production priorities 2956
Dispersal of facilities 2958
Earthquake hazards reduction program 2962

Sequence Number

Civil defense—Continued
Emergency blood program 2952
Emergency health and medical occupations 2953
Energy supplies, domestic 2948
Industrial plant equipment 2951
Mobilization base 2947, 2957
National oil and hazardous substances pollution 2872
Priority use of resources 2955
Radiological emergency 2925, 2926
State and local emergency management assistance 2943
Strategic and critical materials 2950
Training and education, emergency management 2959
Civil Remedies Act, Program Fraud 216, 373, 374, 514, 561, 579, 582, 888, 1058, 1315, 1373, 1526, 1582, 2902, 3051, 3283, 3389
Civil rights:
Authority delegations 3029
Burden of proof 1067
Complaint procedure 3199, 3200
Equal employment opportunity 2910, 2914
Fair housing 1010
Federally-assisted programs 3043
Nondiscrimination 2612, 3275
Program Fraud Civil Remedies Act 514, 1058, 1315, 3389
Remedial relief to complainant 2920
Transportation, Department of 1563, 1963
Veterans education 3334
Claims:
Administrative offset 886
Alaska Native 848
Arts, National Endowment of the 3069
Collection regulation 550
Commodity Credit Corporation 7
Community right-to-know information 2892
Consumers, preservation of 3756
Education, Department of 421
Environmental Superfund 2877, 2878, 2903
Fishermen's Protective Act 1525
Indian judgement funds 1184
Interest and penalties 3251
Maritime Administration 1579
Mining 1283
National contingency plan for hazardous wastes 2888
National Education Association 3071
Negligent HUD inspection 904
Policies and procedures 411
Program Fraud Civil Remedies Act 373, 374, 1526, 2902, 3051
Reclamation actions 2068
Small Business Administration employees 3302
Social security disability 616
Trade secrets for emergency planning 2892
Trans-Alaska pipeline liability fund 1057
Veterans 3333, 3415
Veterans Administration 3362
Coal:
Abandoned 1247
Definition of "valid existing rights" 1216
Environmental issues 1303
Experimental practices 1253
Exploration 1213, 1279
Federal lands program 1215
Hearings and appeals 1066, 1071
Mine waste disposal 1219, 1220
Rate guidelines for small shippers 3771
Support facilities 1211
Surface mining 1209, 1219, 1221, 1222, 1225, 1229, 1232, 1233, 1234, 1237, 1243, 1245, 1246, 1250
Valuation for royalty purposes 1197
Coastal zone management:
Estuarine reserve research system 319
Outer Continental Shelf 283
State programs, federally-approved 320
Colleges and universities 3092
Commercial space transportation:
Information requirements 1581

Sequence Number

Commercial space transportation—Continued
Insurance, third-party liability....1559
Launch safety review....1581
Licensing procedures....1581
Mission review....1581
National security and foreign policy issues....1581
Rocket launches, prohibition by statute....1559
Commodity futures:
Agriculture commodities....3498
Associations....3497
Capital charge for adjusted net....3496
Commission merchants....3496
Dealer options....3495
Debit/deficit accounts....3496
Financial reporting requirements....3496
Guaranteed accounts....3496
Hybrid and related instruments....3494
Information regulations....3499
Registration exemption....3500
Repurchase agreements....3496
Common carriers:
Agreement exemption....3713
Electronic distance systems....3779
Maritime carriers....3701
Motor carriers....3770, 3775, 3776
Ocean, timely payment....3710
Railroads....3764, 3765, 3767, 3769, 3773
Rate changes....3712
Rate guidelines for non-coal commodities....3771
Vessels....3708
Water carriers....3776
Communications:
Address systems, multiple....3610, 3611
Aeronautical advisor stations....3609
Aeronautical mobile-satellite....3579
AM:
Application criteria....3588
Clear channels, foreign class I-A....3589
Daytime-only operator....3605
Expanded band, domestic....3598
Aviation rules....3609, 3612
Basic services, deregulation....3567
Bible, Moody....3600
Broadcast....3586, 3590, 3596, 3606
Cable interests....3586
Cable and wire facilities....3561
Cellular....3563, 3585
Civil Air Patrol....3609
Consumer bands, open up....3578
Contract services....3567
Cordless telephones....3580, 3581
Daytimers issues....3597
Devices, authorization....3583
Electronic Industries Association....3580, 3581
Emergency radio private carriers....3614
Emission limits, re-establish....3578
Enhanced services....3566
Equipment....3562, 3582
FM:
Technical clean-up....3591
Translators....3600, 3603
TV....3601
Foreign class I-A AM clear channels....3589
Frequencies....3577, 3580, 3615
Interference problems....3602
Interstate....3565, 3566
Jurisdictional separations....3561, 3562, 3565, 3569, 3570
Land mobile radio services....3581, 3608, 3615
Licensing....3563, 3564, 3613
Lifeline assistance program....3572
Market expenses....3569
Mobile-satellite service....3579
MTS and WATS market structure....3572
Nighttime operation....3597
Noncommercial broadcast stations....3593

Sequence Number

Communications—Continued
Operating rules....3573
Packet switched services....3567
Private land mobile radio services....3574, 3579
Public safety national plan....3576, 3579
Radio multiple ownership and cross ownership rules....3594
Receiver labeling....3584
Remote control security devices....3575
Revenue accounting expenses....3570
Satellite:
Communications....3571
Duty-free entry....3044
Microwave....3600
Television stations....3595
Tracking and data relay....3040
Spectrum allocation....3576
Studio location requirements, main....3592
Subscriber line services....3572
Technical deregulations....3587
Telephone companies....3572
TV....3587, 3601, 3604
UHF....3574, 3607
Wireless cameras....3599
Wireline common carriers....3608
Community development:
Block grant programs....572, 584, 872, 874, 987, 988, 991, 996, 997, 1001
Buildings, design and construction....228
Cities, small....989
Credit union program....3803
Debt settlement....84
Development policies and procedures....3202
Emergency shelter grants....999
Employees....232
Environmental protection....231, 872, 874, 883
Escrow accounts for contractors....997
Financial assistance....228, 231, 232, 235, 237, 238
Flood insurance program....231
Food commodities for disaster relief....2615
Housing loans for elderly or handicapped....955
Indians, block grants....992
Management standards....230
Neighborhood conservation....998
Nonrelocation....237
Parks and plazas....3203
Private sector loans sale....236
Project modification....238
Property....229, 230, 239
Public works impact areas....233, 234
Rental rehabilitation....994
Rural....67
Unfair competition....235
Urban development action grants....989
Work study program....990
Computer technology:
Information processing standards:
Cartridge and cassette tape drives....262
Codes of aquifer names and geographic units....255
Computer system input/output interface....269
Data encryption....274
Data terminal equipment interface....260
Dictionary system....254
Electronic business data exchange....263
Flexible disk cartridge....260, 261, 273
Generalized markup language....268
Magnetic tape....257, 258, 259, 261
Open system interconnection procurement....270
Portable operating system environments....267
Programmer's hierarchical interactive graphics system....265
Programming languages....256, 264, 271, 272
Microfiche/microfilm....3053
Microfilm computer output....3053
Semiconductor chip products....2128

Sequence Number

Confidential business information:
Commercial, disclosure of....3365
Federal Reserve Board....3743
Fishery statistics....323
Freedom of information....3695
Information....2901
Litigation....2101
Predisclosure notification....218, 1371
Construction:
Asbestos....1464, 1633
Buildings....228, 3360
Clean Water Act....2694
Concrete and masonry standards....1506
Education facilities, higher....477
Energy performance standards....523, 525
Excavation safety standards....1509
Family housing....3095
Highways....1861, 1872
Housing....90
Labor standards....1382, 3474
Rail connecting tracts....3772
Railroads....3766
Scaffolds....1512
Tunnels and shafts....1511
Consumer protection:
Air carrier service defaults....1538
Airline countersign notices....1556
All-terrain vehicles....3506
Appliances, energy information....3763
Aspirins....3510
Bunk beds safety standard....3519
CAB rules review....1545
Child-resistant packaging....3502, 3514
Cigarette lighters, child-resistant....3513
Claims and defenses....3756
Diapers hazards....3523
Effervescent acetaminophen tablets....3509
Electric power....3640, 3649
Electronic video games....3505
Energy efficiency....518, 524, 527
Estrogen tablets....3514
Estrogens, conjugated....3524
Fair packaging and labeling rules....3754
First aid products....3520
Flammable Fabrics Act....3501
Food store advertising....3762
Fruit or vegetable juice beverages....690
Funeral industry....3755
Games of chance advertisements....3758
Hazardous Substances Act....3504
Inspection....143
Interstate land sales registration....924
Kerosene heaters....3508
Lawn darts ban....3512
Lead fumes and dust....3515
Lighters, disposable....3521
Mail order merchandise....3752
Meat and meat products...59, 106, 107, 108, 109, 110, 111, 112, 113, 114, 115, 116, 119, 131, 133, 134, 136, 139, 140, 141, 142, 144, 150
Medroxyprogesterone acetate tablets....3511
Methylene chloride....3517, 3518
Ophthalmic practice rules (eyeglasses)....3760
Paint removal tools, hot air....3515
Pharmaceuticals....671
Physical commodities....3495
Poison Prevention Packaging Act....3503, 3514
Poultry and poultry products...108, 109, 110, 113, 114, 134, 138, 141, 149, 151
Premerger notification....3757
Sales, door-to-door....3751
Small parts, child use....3525
Tamper-resistant packaging....691
Television carts....3522
Textile, wool, and fur products....3759

Sequence Number

Consumer protection—Continued
Tire quality grading standards....1893
Toys for children under 3 years of age....3516
Tremolite....3507
Truth-in-lending....3748
Vocational and home study schools....3761
Warranties....3753
Cotton:
Acreage allowance....18
Extra long staple....14, 29
Loan program....6, 35
Price support program....12, 37, 46, 47, 69
Program provisions....5, 23, 52
Supply....12, 14, 27, 37, 47
Upland program....47
Countervailing duties....246, 250, 252
Credit:
Brokers and dealers....3729, 3745
Management of Federal programs....3098
Mortgages....3748
Truth-in-lending....3740, 3746
Credit unions:
Adjudication of claims....3792
Applications....3798
Bank Bribery Act....3806
Board procedures....3796
Borrowed funds....3805
Cash fund....3802
Chartering policy....3795
Checks and money orders....3802
Community development program....3803
Compensation of officials....3799
Competitive Equality Banking Act....3794
Conflict of interest....3807
Conservatorships and liquidations....3788
Corporate....3789
Credit practices....3810
Definition of regulations....3783
Depositories and financial agents....3786
Employee responsibility and conduct....3800
Fidelity bond and insurance....3790
Financial and statistical reports....3804
Government regulations....3808
Home improvement loans....3794
Interest, refund of....3782
Investment and deposit activities....3793
Liquidation priorities....3792
Loans....3784, 3785
Membership policy....3795
Mortgage-backed obligations....3801
Nondiscrimination requirements....3781
Policies....3808
Real estate loans and appraisals....3781
Records disclosure....3809
Records preservation program....3787
Reserves....3780
Second mortgage loans....3794
Share draft program....3791, 3797
Trade practices, unfair or deceptive....3810
Crime:
Criminal intelligence systems....1369
Environmental Superfund....2887, 2893
Immigration service officers....1328
Insurance....2946
Insurance program, Federal....2963
International child abduction, civil aspects of....1530
Justice information systems....1370
Program Fraud Civil Remedies Act....1526, 3051
Real estate settlement kickbacks....897
Vehicle theft prevention....1941
Cultural resource management....1287
Customs duties and inspection:
Air ambulance operators....2126
Air commerce regulations....2121

Sequence Number

Customs duties and inspection—Continued
Air overseas military personnel charters....1541
Airlines electronic....1547
Bill of lading....2127
Cargo....1540, 1544
Communication satellites....3044
Country of origin marking....2120
Customs brokers....2122, 2130
Electronic filing of tariffs....3768
Entry documentation filing....2125
Harbor maintenance fee....2124
Maritime carriers:
Automated tariff filing....3700
Equipment interchanged....3704
Semiconductor chip products....2128
Shipments, entry of consolidated....2123
Space articles....3044
Stores, duty-free....2119
Unfair and deceptive practice....1542
User fees....2122, 2129

D

Debt collection:
Acquisition regulation....3475
Administrative offset....886
Arts, National Endowment of the....3069
Disaster home loans....3304
Education, Department of....420, 421
Energy, Department of....550
Environmental Protection Agency....2903
Farm credit....3535
Income tax refund offset....3307
Maritime Administration....1585
Railroad retirement....3232, 3251
Salary offset....3303
Veterans....3374, 3415
Defense Management, President's Blue Ribbon Commission on....383
Defense Production Act....248, 2948, 2949, 2956
Disaster assistance:
Agricultural commodities....2615
Community loans....2939
Emergency food assistance....97
Flood....2928, 2936, 2940, 2941, 2945
Hurricane preparedness....2930
Preparedness....2929
Unemployment....1390
Diseases:
AIDS, acquired immune deficiency syndrome....624, 694, 1498, 3332
Black lung....664, 1245
Bloodborne infectious....1498
End-stage renal....753, 761, 828
Ethylene dibromide exposure....1504
Hepatitis B....1498
Plant....58
Rare, development of drugs for....676
Swine identification....59, 106, 150
Systemic, disability awards....3332
Drug Price Competition and Patent Term Restoration Act....677
Drugs:
Abbreviated application procedures....677
Abuse....584
Adverse experiences....675
Alien traffickers....1356
Animal welfare....673, 678, 683, 693
Communities, drug-free....467
Drivers....1849
Fees for review of applications....684
Merchant Marine personnel....1597, 1600
Money laundering....2063
Over-the-counter....670
Packaging, tamper-resistant....691
Patent term loss....686
Railroad personnel....1961
Rare diseases and conditions....676
Review process....1537

Sequence Number

Drugs—Continued
Schools and communities, drug-free....467
Veterinary and human, exports....669
Dulles International Airport, Washington....1716

E

Earthquake hazards reduction program....2962
Economic development:
Grants, revolving loan fund....241
Hazardous substance liability....240
Education:
Accrediting agencies and associations....466, 475
Administrative regulations....419
All Volunteer Force....3328
Assessment....435
Assistance, institutional eligibility....474
Career development....501
Claims collection....421
Disabilities program....604
Drug-free schools....467
Emergency management....2959
Family Rights and Privacy Act....424
Federal-State relationship agreements....476
Federally-impacted areas....443, 447
Fees for adversary adjudications....512
Financial assistance....477
Follow Through program....446
Foreign gifts, disclosure of....464
Foreign institution eligibility....451
Foreign language program....457, 468
Foreign periodicals program....471
Foreign residence requirement....417
Grantee suspension and debarment....423
Grants....1168
Guaranteed student loans....451, 461, 465
Handicapped....429, 488, 489, 490, 491, 493, 495, 496, 497, 498, 499, 503, 504, 506, 507, 508, 509, 510
Head Start program....594, 595, 596, 597, 599, 600, 601, 606
Health Education Assistance Loan (HEAL) program....696
Health manpower....703, 705, 708, 714
Hearings, due process regulations....513
Higher Education Act....455, 456, 458, 472, 474, 479
Independent living centers....492
Indians....444, 445, 1149, 1151, 1152, 1158, 1160, 1167, 1168, 1169
Industry projects....494
Intergovernmental review....511
Language institutes, intensive summer....462
Language resources centers program....470
Library resources program....434, 438, 439, 440, 442
Loans....472
Minority science program....478
National accrediting agencies and associations....466
National assessment....435
National direct student loan program....483, 484
National resources centers....481
Nondiscrimination....430, 2613, 3034, 3076, 3359
Nurses:
Anesthetists....706
Practitioner training....697
Opportunities centers program....454
Partnerships....432
Paul Douglas Teacher Scholarship program....480
Payment in lieu of taxes....447
Pell grant program....485
Perkins loan program....483, 483
Personnel....452
Postsecondary....474
Refugee children....428
Regional educational laboratories....437
Regulations, amendments....426
Rehabilitation services....490, 492, 494, 501
Research....436, 437, 500, 501, 508
Robert C. Byrd Honors Scholarship program....456
Schools and institutions....474

BEST COPY AVAILABLE

VOL 53 ISS 79 PT 2 AP 25 1988 UMI

Sequence Number

Education—Continued
Space grant college and fellowship program....3036
State and local governments....422
Student assistance....456, 459, 460, 469, 473, 482
Student incentive grants....486
Surplus real property....418
Talent search program....453
Teachers....441, 455, 480
Territories, treatment of....473
Universities audit....3092
Veterans:
Assistance test program....3344
Deficiency course measurement....3399
Delimiting dates....3381
Dependents assistance and benefits....3409
Disenrollment....3401
Entitlement....3327, 3405, 3406
Equal opportunity....3330
Homeless claimants....3343
Mitigating circumstances....3383
New programs....3397
Nonpunitive grades....3408
On-job training....3412
Overpayments....3382
Selected reserve....3367
Vocational rehabilitation program....3328, 3329, 3341, 3346
Vocational and home study schools....3761
Vocational rehabilitation services program....487, 493, 502
Woodsy Owl....161
Elderly:
Air travelers....1570
Equal employment opportunity....2912
Food distribution program....95
Housing....955
Nondiscrimination....2607
Senior Companion Program....2609
Electric power plants:
National Forest System lands....174
Resales and transmission service....3656
Emergency food assistance program....97
Emergency medical service:
Blood program, National....2952
Health and medical occupations....2953
Emergency shelter grant program....1002
Employee benefit plans:
Airline deregulation....1392
Broker-dealers bonding requirements....1425
Civil penalties....1418
Civil sanctions....1424
Distress terminations of single-employer....3217
Domestic relations orders....1412
Employee contributions....1423
FERS Thrift Savings Fund:
Bonding rules....1414, 1416, 1426
Civil penalties....1417
Fiduciary responsibility....1415
Income tax reduction of accrued benefits....2223, 2448
Individual account plans....1421
Individual benefit reporting and recordkeeping....1419, 1420
Investment advisers bonding requirements....1425
Loans to participants....1422
Plan assets definition....1423
Securities....1411, 3924
Single-employer plans....3218
Top Hat plans....1410
Transaction exemption procedure, prohibited....1413
Employment:
Affirmative action....1375
Age discrimination....2912
Aliens:
Agriculture workers....1381, 1384, 1385, 1407
Nonimmigrant temporary....1327
Permanent....1397
Unlawful....1314
Arts and humanities, workers employed under....1383

Sequence Number

Employment—Continued
Children:
Industries and occupations....1374
Labor law....1374
Schooling....1374
Time periods....1374
Convicts....1871
Disabled veterans....1376
Discrimination....2920
Eligibility certification and verification....1357
Employee selection procedures....2910, 2914
Employees, nonimmigrant....1327
Enforcement....1360
Equal opportunity....574, 1387, 2910, 2915
Executive, administrative, or professional....1377
Handicapped....1379, 2913
Homeworkers in certain industries....1380
Immigration, unfair....1309
Job training....1393, 1399, 1405, 1409
Nonimmigrant temporary....1327
Overseas locations, hazardous....1387
Public employment service....1391
Senior Community Service....1403
State employment....1334, 1357
Trade adjustment assistance....1408
Veterans....3370
Wage rates on Public and Indian housing project....1037
War hazards compensation....1387
Worker adjustment program....1398
Endangered and threatened wildlife:
Colorado squawfish....1095
Corps of Engineers....401
Critical habitat....1087, 1088, 1089, 1090, 1092, 1096
Delist....1089
Endangered Species Act....1078, 1096
International trade....1100
List, reclassify, or delist....1088, 1090, 1091, 1093, 1096
Marine Mammal Protection Act....1078
Marine species....287
Nashville crayfish....1076
Raptor propagation and falconry....1099
Wild fauna....1100
Wildlife, captive bred....1075
Yellowfin madtom....1094
Energy:
Abandonment policy....3658
Appliance efficiency standards....518
Appliance Energy Conservation Act, National....519
Assistance, low-income home....584
Civil penalties....3647
Commercial and Apartment Conservation Service....528
Conservation program, State....526
Conservation standards....522
Consumer products conservation program....529
Efficiency test procedures....521, 524, 527
Electric power....3636, 3637, 3638, 3640, 3642, 3649, 3654, 3655, 3656
Federal buildings and facilities, energy costs....517
Fees....3650
Hearings, rules of practice....3651
Hydroelectric....3640, 3643, 3644, 3649, 3660
Hydropower projects....3635
Information labeling on appliances....3763
Inspector General Cooperation....560
New buildings....520, 523, 525
Optional certificates....3641
Research grants, award policies and procedures....532
Residential Conservation Service....528
Sources, control of hazardous....1476
Supplies, domestic....2948
Environmental impact statements....404, 409, 1975, 2858
Environmental protection:
Biotechnology....62
Cement and concrete containing fly ash....1014
Coal unsuitability criteria....1303

Sequence Number

Environmental protection—Continued
Commodity fumigation....2012
Deepwell injection of hazardous waste....2727
Domestic sewage study....2688
Double liner and leachate waste collection system....2774
Dredge and fill program by States....2700, 2900
Electrical equipment....2670
Emission standards....2828
Flood insurance program....231
Flood plain management....3050
Good laboratory practice standards....2632
Groundwater contamination....2744
Hazardous waste management....2777, 2785
Highwall policy, mining....1239
Information....3661
Landfill surface closures....2757
Methylene chloride....2650
Mining activities....1241
Motor carrier financial responsibility....1860
National Forest System....175
Natural resource damage assessment....1304
Nuclear facilities, decommissioning criteria....3834
Ocean incineration....2702
Oils and hydraulic fluids waste....2779
Particulates....2803, 2823
Permit applications....404
Radioactive materials....2711, 2712
Radon....3849
Railroads....3774
Sewage sludge use and disposal....2684
Space programs....3050
Superfund assistance program....2905
Underground injection control....2729
Waste disposal permit applications....2683
Waste pile closures....2757
Wetlands....2700, 2900, 3050
Wilderness areas....175
Woodsy Owl....161
Equal access to justice:
Adversary adjudications....512
Attorney fees....1366
Board of Contract Appeals....3358
Health and Human Services, Department of....589
Nuclear Regulatory Commission....3835
Equal employment opportunity:
Age discrimination....2912, 2923
Appeals....2922
Attorney's fees, costs, and backpay....2920
Benefit plans....2917
Broadcast industry....3590
Complaint procedure....2911, 3199, 3200
Discrimination procedures....2909, 2916, 2921
Employee selection procedures....2910, 2914
Federal sector....2909, 2911, 2913, 2916, 2921
Handicapped....2913, 2918, 2923, 2937
Nondiscrimination....2918, 2982, 2983
Outer Continental Shelf....1201
Pension accruals and contributions....2919
Program guidelines....1367
Recordkeeping regulations....2910
Rules, prepublication clearance....2915
Transportation....1552, 1963
Exports:
Certificates of reviews....247
Cotton....46, 47, 69
Drugs, veterinary and human....669
Fish and wildlife markings....338
Natural gas, short-term....537
Petroleum products....251
Rice....48
Short supply regulations....251
Statistics....226, 227
Eye care goods and services....3760

Sequence Number

F

Farms:
Debt collection....3535
Family....91
Farmland Protection Policy Act....212
Income support....47, 48, 50
Inventory....211
Loans....88
Migrant and seasonal workers....1388
Federal Acquisition Regulations (FAR), see Government contracts or procurement and specific subject....3421
Federal Advisory Committee Management....3013
Federal employees:
Absence and leave....3122, 3150, 3151
Adverse actions....3154
Allowances and differentials....3149
Candidates for appointment....3140
Career management program....1316
Computer security....3169
Conduct and responsibilities....3124
Conflict of interest....3125, 3153, 3178
Discrimination procedures....2909, 2916, 2920, 2921
District of Columbia employees....3177
Employee benefit plans....2917
Employment....3105, 3106, 3173
Equal employment opportunity....2909, 2911, 2913, 2916, 2921, 2922
Excepted service....3137, 3170, 3171
Executive and management development....3100
Financial disclosure requirements....3152
Foreign service....3131
Freedom of Information Act....3139
Garnishment orders....3121
Government telephone systems use....3011
Group life insurance....3129, 3163, 3184, 3185
Health benefits....3130, 3131, 3132, 3133, 3134, 3135, 3164, 3165, 3166, 3167, 3168, 3184, 3186, 3187
Investigations....3103
Management....3138
Medical folders....3061
Merit System Protection Board....3014, 3015, 3018, 3020, 3021, 3022
Microfiche/microfilm....3053
Military service....3126, 3160, 3163, 3175
Overseas, noncompetitive appointment....3174
Patent policy, uniform....357
Pay administration....3119, 3120, 3146, 3147, 3148
Pension accruals and contributions....2919
Performance....3114, 3116, 3143, 3176
Political activity....3123
President Management Interns....3171
Prevailing rate system....3117, 3145
Privacy Act....3021, 3172
Productivity gainsharing....3115
Programs for specific positions and examinations....3188
Promotion and internal placement....3142
Qualifications requirements, medical....3110
Records....3104, 3172
Recruitment/placement principles....3141
Retirement:
Annuity, alternative form....3161
Annuity, statutory withholdings, order of precedence....3180
Annuity overpayments....3128
Bonding rules....1414, 1416, 1428
Civil penalties....1417
Credit for service....3157, 3158, 3182
Disability regulations....3127
Exclusions....3184
Fiduciary responsibility....1415
Firefighters....3183
Health benefits coverage under FERS....3165
Health and life insurance....3164
Law enforcement officers....3183
Military service....3160
New system, FERS....3162

Sequence Number

Federal employees—Continued
Retirement—Continued
Part-time employees....3181
Spouse Equity Act....3159
Survivor benefits....3156
Thrift Savings Fund....1414, 1415, 1416, 1417, 1426
Underdeductions of contributions....3155
Salary rates for recruitment and retention....3144
Security adjudication and procedures....3041
Security interests....3102
Senior Executive Service...3099, 3107, 3108, 3109, 3111, 3112, 3118, 3179
Spouses of CIA employees, former....3131
Standards of conduct....556, 1055, 3058, 3197, 3300, 3323, 3639
Student employment....3137, 3170
Suitability....3101
Suspension and removal....3041
Time-in-grade restrictions....3106
Training....3113, 3169
Federal Information Processing Standards (FIPS)...254, 255, 256, 257, 258, 259, 260, 261, 262, 263, 264, 265, 266, 267, 268, 269, 270, 271, 272, 273, 274

Federally-assisted programs:
Affirmative action....1552
Automatic data processing equipment and services....576
Equal employment opportunity rules....2915
Nondiscrimination:
Age....431, 1061, 1306, 2607, 2904, 2923, 2944, 3070
Basis of race, color, or national origin....2604, 2612, 2983, 3072
Basis of sex...430, 1060, 2604, 2613, 2983, 3034, 3043, 3076, 3311, 3359
Handicapped...217, 428, 564, 1005, 1009, 1307, 1553, 2605, 2620, 2918, 2923, 2937, 2962, 3019, 3062, 3077, 3201, 3246, 3275, 3360, 3387, 3815
Justice Assistance Act....1368
Real estate related loans and appraisals....3781
Small Business Administration....3269, 3270
Uniform administrative and enforcement procedures....1458
Uniform requirement....555, 1018, 1463, 3042, 3205, 3313, 3391
Fees:
Abandoned mine....1226
Adjudications, Nuclear Regulatory Commission....3635
Admission into U.S. inspection....1317
Adversary adjudications....512
Archival records, reproduction of....3067
Attorneys and consultants....1366
Bank Secrecy Act data disclosure....2062
Coast Guard....1587, 1599
Commodities, agricultural....1
Customs....2122, 2129
Deep seabed mining permits....337
Drug applications, new....684
Energy regulations....3650
Equal Access to Justice Act....3358
Farmers....82
Federal policy....3091, 3139
Foreign fishing poundage and permits....300, 345
Foreign mission liability insurance....1529
Government National Mortgage Association....1004
Harbor maintenance....2124
Health and Human Services, Department of....573
Hunting and fishing licenses....1102, 3314
Hydroelectric projects....3635, 3660
Immigration....1349, 1355
Land registration....923
Marine fishery permits and stamps....275
Maritime Commission recovery costs for services....3703
National Forest System lands....166, 177, 204
Panama Canal....3189
Parking at VA medical facilities....3364
Patent....364
Pesticide premanufacture notice processing....2667
Pesticide registration processing....2637
Railroads, car-hire charges....3764
Records requests....3417

Sequence Number

Fees—Continued
Schedule of charges....885, 2907, 2908, 3862
Small business....3267, 3271, 3296
Social Security Administration....657
Trademark automated search system....368
Transportation, Department of:
Travel promotion....370
Trucks, Rocky Mountain National Park....1109
VA trustee and legal services....3380
Financial assistance:
Aliens, disqualification....1337
Certification of non-delinquency....1047
Community development....232, 235, 237, 238
Cost principles for State and Local government....3088
Debarment and suspension....1560, 2606, 3073
Energy Department....542, 552
Estuarine reserve research system....319
Flood insurance....231
Handicapped access to buildings....228
Housing, ineligible aliens....884
Minority business enterprise....1560, 1584
Railroads....3778
Small Business Administration....3270
State and local governments....554
Financial Privacy Act....1372
Fire prevention:
Diaper hazards....3523
Flammable Fabrics Act....3501
Forest system lands....157
Kerosene heaters....3508
Lighters, child-resistant disposable....3521
Vessels....1627
Fireworks regulations....2079
Fish and Seafood Promotion Act....297
Fisheries:
Alaska groundfish....288, 309, 328, 350, 354
Alaska high seas salmon....289, 293
Alaska salmon....293, 306
American lobster....290, 298, 343, 355
Atlantic billfish....296
Atlantic bluefin tuna....307
Atlantic sea scallops....289, 310, 349
Atlantic surf clam....278
Atlantic swordfish....308, 353
Bering Sea and Aleutian Islands....302, 304
Bluefin tuna....307
Bluefish....282
Bottomfish and seamount groundfish....294, 348
Clams....278
Coastal migratory pelagic resources....313
Conservation and management statistics....323
Coral, precious....303
Crabs....302, 304
Drum, red....305, 341
Exclusive economic zone....282, 296, 305, 306
Fish processing and fish tender vessel operations....1590
Flounder....286
Groundfish...279, 280, 288, 294, 301, 302, 308, 328, 342, 348, 350, 352, 354
Halibut....302, 330
Interjurisdictional....334
King crab....304
King mackerel....313
Klamath River Basin....1084
Lobster....290, 298, 331, 333, 340, 343, 355
Mackerel....295
Management councils, regional....285, 296, 314
Management plans...277, 278, 279, 280, 281, 282, 286, 289, 290, 291, 294, 295, 296, 298, 299, 302, 303, 304, 305, 308, 309, 310, 313, 315, 331, 333, 340, 341, 343, 344, 346, 348, 351, 352, 353, 355
Marine fishery user fees....275
Marine mammals, incidental taking....1077
Marking requirements....338
Northeast multispecies....279, 346

VOL 53 ISS 79 PT 2 APR 25 1988 UMI

Sequence Number

Fisheries—Continued
- Observer on domestic fishing vessels....311
- Ocean quahog....278
- Pacific Coast groundfish....280, 301, 352
- Pacific halibut....330
- Pollack....342
- Product standards....284, 339
- Red drum, Gulf of Mexico....305, 341
- Red snapper....332
- Reef fish, Gulf of Mexico....332
- Salmon....288, 293, 306, 315, 344
- Scallops, Atlantic sea....289, 349
- Scallops....310
- Seafood marketing councils....297
- Shrimp, Gulf of Mexico....312
- Shrimp....351
- Slipper lobster....331, 333
- Snapper-grouper....281, 314
- Spiny lobster....299, 331, 333, 340
- Summer flounder....286
- Swordfish....291, 308, 353
- Tanner crab....304
- Tuna, bluefin....307
- Tuna, yellowfin....326
- Western Pacific Region....294, 303, 340, 348
- Yellowfin tuna....326

Fishermen's Protective Act....1525

Fishing:
- Black sea bass fishing gear, Mid-Atlantic....290
- Bluefin tuna, Gulf of Mexico....307
- Coral, precious....303
- Crawfishing....1124
- Crayfish and conch....1123
- Foreign, poundage and permit fees....300, 345
- Foreign....292, 325
- Groundfish landing....301
- Halibut quotas for domestic fisherman....330
- Handline, Puerto Rico....296
- Indian fishing....1180
- Porpoise mortality standards....347
- Pot gear, restrict use....354
- Recreational limit....296, 331
- Sport fishing....1083, 1106, 1108, 1140, 1142
- Tournament reporting, mandatory....296
- Tuna skipper standards....347
- Vessels, observer policy on domestic....311

Flags....3046

Flood insurance....231, 873, 2928, 2931, 2932, 2933, 2934, 2935, 2936, 2939, 2940, 2941, 2942, 2945

Flood plain management....863, 2935, 3050

Food:
- Color additives....685
- Disaster relief....2615
- Distribution program....95, 96
- Emergency assistance program....97
- Women, infants, and children (WIC)....102

Food stamp program:
- Accountability, system for....94
- Administration and management....100
- Aid to families with dependent children....98
- Appeal process....101
- Application, simplified....99
- Benefits, standardized....99
- Eligibility factors....100
- Issuance loss liability....94
- Policy consistency....860
- Waiver simplification....93

Foreign missions:
- American vendors....1529
- Automobile liability insurance....1528
- Banking services....1531

Foreign policy....1581

Foreign relations:
- Agricultural commodities....2614, 2615
- Aircraft liability insurance....1529

Foreign relations—Continued
- American vendors....1529
- Arms traffic regulations....1535
- Automobile liability insurance....1529
- Banks....3632, 3634
- Exchange visitor program....417
- Fishing, Atlantic bluefin tuna restrictions....307
- Fishing....345
- Fishing poundage and permit fees....300
- Foreign direct investment....220, 222, 223, 225
- Gifts and decorations....558, 2965
- International banking operations....3727, 3734
- International child abduction....1530
- Liability insurance fees....1529
- Live animal important....120
- Maritime carriers....3714
- Navigation....1685
- Nonimmigrant temporary....1327
- Rotorcraft....1754
- Securities....3893, 3900
- Seizure and forfeiture....1319
- Telecommunications....3568
- Trademark applications....361
- Travel promotion fees....370
- Vessel liability insurance....1529

Foreign trade:
- Antidumping duties....246, 250, 252
- Bank loans....3548, 3553
- Certificates of review....247
- Countervailing duties....246, 250, 252
- Firms and industries....249
- Fish and wildlife markings....338
- National security....253
- Ocean carriers expenses survey....221
- Petroleum products....251
- Ports of entry....244
- Shipper's export declaration....227
- Short supply regulations....251
- Statistics....228, 227
- Surveys of international trade....219, 224
- Unfair practices....250
- Watch quota allocations....245
- Zones....244

Forests:
- Appeals....176
- Applications, special use....166
- Bicycles....168
- Cabin authorizations....163, 201
- Carts, wheeled....168
- Fish and wildlife conservation....169
- Fossil collecting prohibition....195
- Grazing fees....177, 204
- Hang gliders....168
- Hydroelectric uses....174
- Indian allotments....194
- Insignia, official Forest Service....156
- Land exchange....170
- Law enforcement....157, 160
- Mechanical transport definition....168
- Minerals....171, 173, 175, 183, 184, 198
- Off-road vehicles use....167
- Private lands within....164
- Recreation areas....159, 199
- Resource management plans....155, 200
- Rights-of-way....182
- Scenic and historic trail symbols....203
- Ski areas....178
- Small tracts....183
- Smokey Bear....158

Timber sales:
- Bidding, control of skewed....192
- Contractors, debarment and suspension....197, 202
- Contracts....172, 1284, 1285
- Debarment hearings....1298

Sequence Number

Forests—Continued
Timber sales—Continued
Defaulted....201
Export and purchase volumes....1277
Financial security....187
Free use....179
Government buyout....198
Lumber price index trends....186
Payments, downpayment requirements....185
Payments, periodic....190
Public benefit....181
Rates....180
Small business set-aside program....193
Title records, National....189
Water conveyance systems, easements for....182
Water supplies, protection of municipal....191
Wildlife protection....162
Woodsy Owl....161
Fraud Civil Remedies Act, Program...216, 373, 374, 514, 561, 579, 582, 888, 1058, 1315, 1373, 1526, 1582, 2902, 3051, 3283, 3389
Freedom of information:
Archival records....3055
Business confidential information....1371, 3695
Commercial, submitter notice....3035
Commercial information disclosure....3365
Credit unions....3809
Federal employees, availability of information....3139
Fee schedule of charges...551, 573, 885, 1561, 2110, 2606, 2618, 2619, 2907, 2908, 3048, 3067, 3198, 3297, 3417, 3743, 3809, 3862
Law enforcement records....3809
Plain English rewrite of regulations....3016
Policies for disclosure....781, 3312, 3616
Predisclosure notification procedures....218
Public access to VA records....3418
Public information....448, 3662, 3823
Records and testimony....1056
Release of adverse information to news media....449

G

Games of chance advertisements....3758
Government buildings and facilities:
Accessibility standards for handicapped....3360
Army airfield certification and use....399
Energy performance standards for new....523, 525
Methodology for life cycle energy costing....517
Military reservations....400, 405
Public access rules....405
Rental quarters, charges for....3096
Safety....405
Government contracts:
Abstract of offers standard form....3463
Acquisition regulations...425, 544, 1015, 1017, 1048, 1052, 1103, 1311, 2897, 2899, 2990, 2991, 3003, 3005, 3006, 3448
Aerospace exports....3465
Audits....1461, 3490
Benefit pension plans....3445
Bids....3426, 3466, 3480, 3489
Bills of lading....2993
Board of Contract Appeals....3090, 3358
Business service centers....3472, 3485
Buy American Act....2987
Certificate of competency....3260
Certificate of independent price determination....3493
Clauses and solicitation provisions....214
Closeout procedures....2970
Commercial activities....372, 3004, 3427
Competition in Contracting Act....1460, 3449
Construction....3084, 3386
Consulting services....3385
Contractor airlines....547
Cost:
Accounting standards....3479
Acquisition....3438
Appeals of comparisons....3488
Commercial activities....3086, 3087

Sequence Number

Government contracts—Continued
Cost—Continued
Comparison study....3467
Contracting officer....3481
Data....3435
Mergers and other business combinations....3420
Policy....3453
Reimbursement-type....2993, 3459
Data and copyrights....3047
Debarment and suspension...242, 386, 548, 581, 887, 1051, 1459, 1534, 1580, 2608, 3063, 3073, 3080, 3390, 3456
Debt Collection Act....3475
Delivery date....3468
Direct sales by subcontractors....3423
Domestic and international exhibits....3465
Drug free workplace policy....538
Engineering coverage....3436
Eniwetok and Kwajalein Atoll....3487
Equipment....3443
European Economic Community list....3484
Expert services....2898
Fast pay procedures....3442
Federal-aid procedures....1822
Financial assistance rules:
Cooperative agreements....552
Non-competitive award basis....546
FOB origin....3429
Format simplification....3461, 3471
Government-furnished property....3476
Health care services....3470
Imprest fund purchases....2991
Indian Self-Determination Act....717
Insurance....3437
Invoice receipt....3084
Labor standards....1382, 3474
Labor surplus areas....2947
Mergers and other business combinations....3454
Metrication program for DOD....384
Minority Business Enterprise....1564
Multiple award schedule program....2989, 3491
Multiyear and options....2971
Nondiscrimination....1311, 1375
Overseas procurements....3493
Patent....539, 557
Payment....3422, 3473
Policies and procedures....408
Prices....3428, 3451
Prison Industries' priority status....3432
Procurement Management Information System (PMIS)....2988
Procurement regulations....3136
Prompt Payment Act....3005, 3084, 3477
Property records maintenance....3460
Proposals and quotations receipt....2985
Protest requirements....3441
Publicizing proposed regulations....2986
Qualification requirements....3423, 3444
Ratification....3478
Reimbursement for services or resources of other Federal agencies....2961
Representations and certifications....3461
Research and development....543, 3425, 3452, 3464
Severance pay....3458
Shipping weights and dimensions....3457
Small business:
Disadvantaged....3002
Eligibility....1048, 3424
Set-asides....3434, 3448, 3462
Small purchases....3433
Socioeconomic coverage....3492
Sole source proposals....3440
Solicitations....3431, 3448
Source evaluation....215, 553, 3027, 3450
Stay and damages provisions....3422
Subcontracting....545, 549, 3002, 3003, 3446

VOL 53 ISS 79 PT 2 AP 25 1988 UMI

Sequence Number

Government contracts—Continued
Supplies....3006, 3421, 3423
System acquisitions....3026, 3469
Tax exemptions....3483
Technical data, restrictive markings....3430
Timber sales....96, 202
Transportation, Department of....1576
Truth in Negotiations Act....3455
Utility services....2990
Veterans, special disabled....3486
Visits to contractor facilities....3482
Warranties, policies and procedures....1577, 2968, 2991
Government procurement:
Acquisition regulations...1049, 1533, 2969, 2970, 2971, 2972, 2988, 2980, 3195
Administrative revisions....3419
Agency announcements....3033
Automatic data processing equipment....2981
Career management program....1316
Cement and concrete containing fly ash....1014
Common use items....2949
Cost comparisons....3384
Debarment and suspension....879, 887, 2808, 3073
Ethics regulation....1050, 1305
Financial and organizational information....2897
Fraudulent practices....879
Labor surplus areas preference....1406
Minority Business Enterprise....1564
Oils and hydraulic fluids waste....2779
Paper and paper products....2780, 2788
Payment....3422
Personal property....2984
Planning....3384
Reporting requirements....2988
Retread tires....2746
Small business....2972, 3419
Specifications....3414
Stay and damages provisions....3422
Subcontract competition....3447
Subcontracting....3272
Supplies or services....3421
System acquisition....3083
Telecommunications resources....2981
Government property:
Arsenals, Army sale to U.S. companies....393
Contractor acquisition standards....541
Energy management regulation....540
Foreign gifts and decorations....558, 2965
HUD-owned, all-cash public sales....879, 936
Industrial plant equipment....2951
Personal:
Acquisition and use of excess....2998
Distilled spirits....2997
Exchange/sale of ADP equipment....2978
Policies and procedures....2984, 2996
Report of excess....2978
Utilization and disposal....3008
Real:
Annual inventories....2967
Asbestos contamination....2995
Excess reporting....2995, 3007
Leasehold interests....2969
Space reduction initiatives....2967, 2973
World-wide real property inventory system....2973
Soil surveys....210
Telephone systems use by employees....3011
Government publications:
Equal employment opportunity rules....2915
Handicapped, nondiscrimination....3062
Policies....3082
Grain:
Acreage allowance....18
Price support program....11, 36, 45
Program provisions....5, 23, 52
Supply....26, 45

Sequence Number

Grants:
Audits....1461
College and university recipients....575
Community development block grants....872, 874, 968, 996, 1001
Community Housing Resource Board regulations....1012
Construction grants regulations, simplification....2693
Debarment, suspension....887
Economic enterprises, Indian....1162
Education:
Handicapped....496
Indian....1152, 1168
Institutions of higher....3089
Emergency shelter....999, 1002
Energy award policies and procedures....532
Fish and wildlife restoration....1102
Flood protection....2935
Geriatrics, faculty training....612
Hawaiian organizations....602, 605
Health research....721
Hospitals....1016, 1532, 3089
Housing development program....952
Impact assistance, State legalization....871
Indian tribal governments....602, 1583, 2611, 3075
Management and operation of public transportation services....1972
National Endowment for the Arts....1383
National Library of Medicine....722
Nehemiah housing opportunity....898
Nonprofit organizations....1016, 1532, 3089
Nurses....709
Nutrition services for aged....602
Public assistance program....865
Public Health Service....714, 719
Refugee health programs....667
Residential rental rehabilitation....994
Revolving loan funds....241
Rural....73
Self-help technical assistance....71
Single Audit Act....556
State and local governments...1018, 1536, 1583, 2611, 3075, 3266, 3416
Transportation, public....1973
Uniform administrative requirements...243, 427, 554, 585, 1016, 1018, 1054, 1462, 1532, 1536, 1583, 2611, 2960, 3064, 3075, 3081, 3089, 3092, 3286, 3416
Universities....1016, 1532
Urban....988
VA home loan credit standards....3340
Grape-growing regions....2082
Grazing:
Fees....177, 204
Indian land....1172
National Forest System lands....165, 177, 194, 204
Policy changes....1297
Gun Control Act amendments....2093

H

Handicapped:
Air travelers....1548
Architectural barriers, removal of....505
Building access....228, 2616, 2617
Children....488, 496
Construction of buildings to accommodate....3360
Developmental disabilities program....607
Education....489, 495, 498, 499, 503, 507, 509
Employment under certification....1379
Equal employment opportunity....2913
Grants....497
Housing....955
Independent living rehabilitation....491, 504
Nondiscrimination...429, 564, 1005, 1009, 1376, 1553, 1562, 2605, 2620, 2923, 2937, 2982, 3017, 3019, 3062, 3077, 3201, 3246, 3275, 3360, 3387, 3545, 3815
Office equipment accessibility....2980
Regional resource and Federal centers program....506

Sequence Number

Handicapped—Continued
Rehabilitation services....490
Research fellowship and training program....510
Training personnel for education of....489, 507
Hawaiian Exclusive Zone....327
Hazardous materials:
Acetylene....1501
Aluminum cylinders safety problems....2015
Asbestos....2638, 2995
Barges carrying dangerous cargos....1609
Benzene....2821
Cement and concrete containing fly ash....1014
Cost recovery claims....2877
Criminal violations....2887
Disposition....2999
Electrical equipment....2670
Emergency planning....2881, 2893
Emergency response actions....2871
Fireworks....2010
Formaldehyde....926
Fumigation....2012
Gas detection and monitoring....1991
Gas pipeline corrosion....2014
Gases, liquified petroleum....1501
Highway routing standards....1982
Hydrogen....1501
Lead solders, flux and pipes used for public water systems....2725
Lead-based paint....880
Liquids, flammable and combustible....1501
Metallic ore solid waste....2739
Methyl bromide....2770
Microorganisms....2660
Molten sulfur....2033
Motor carrier inspection and communication....1848
Municipal landfill pollutants....2810
Oxygen....1501
Packaging standards for transport....2016
Particulates....2848
Penalties....2893
Pipeline safety standards....1991, 2000, 2001, 2002, 2003, 2013, 2014
Polychlorinated biphenyl....2652
Radioactive....1982, 2034, 2035
Radionuclides....2822
Railroad shippers....2037
Registration....2625
Registration of shippers and carriers....1980
Respiratory protection....1469, 1470
Toxic chemicals....2639
Transportation safety....1630, 1984, 1985, 1986, 1987, 1988, 1994, 1995, 1998, 2004, 2005, 2006, 2020, 2021, 2022, 2023, 2024, 2025, 2026, 2027, 2028, 2029, 2039, 2040
Uranium hexafluoride....2030
Wood preserving and surface protection waste....2743
Hazardous substances:
Actinolite....1464
Air oxidation process....2835
Air pollution....2864, 2866
Air toxicants, waste....2867
Ammonium thiosulfate....2884
Anthophyllite....1464
Asbestos....1464, 2638, 2662, 2669, 2813
Benzene....1472, 2811, 2821
Carcinogens, potential carcinogens....2882
Carcinogens....1468, 2868
Chemicals, manufactured....2833
Chemicals, synthetic organic....2807
Child-resistant packaging....3502
Chlorinated aliphatics....2750
Chromium....2814, 2815, 2816, 2847
Civil penalties....2881
Coke oven batteries....2812
Cost recovery claims....2877
Criminal violations....2887
Damage to natural resources....1044, 1045, 1046
Dredge and fill program by States....2700, 2900

Sequence Number

Hazardous substances—Continued
Emergency and hazardous chemical inventory forms....2880, 2896
Emergency planning....2881, 2893
Emergency response actions....2871
Employee exposure and medical records....1505
Estrogens, conjugated....3524
Ethylene dibromide....1504
Federally permitted releases....2870
First aid products:
Benzene....3520
Petroleum distillates....3520
Toluene....3520
Flammable Fabrics Act....3501
Glycol ethers....1492
Good laboratory practice standards....2655
Hazard ranking system....2873
Hydrocarbon emissions....2824
Kerosene heaters....3508
Lead....2801, 2884
Liability....240
Metallic ore solid waste....2739
Metalworking fluids with nitrite....2647
Methyl bromide....2770
Methyl isocyanate....2884
Methylene chloride....1495, 3517, 3518
Microorganisms....2660
Municipal landfill pollutants....2810
National priorities list....2873, 2875, 2885, 2886, 2895
Nitrogen dioxide emissions from kerosene heaters....3508
Nitrogen oxides....2832
Notification of continuous release....2869
Nuclear spent fuel and high-level radioactive waste....3837
Ocean dumping....2686
Oil pollution prevention....1304, 1631
Organic polymers and resins....2838
Organic solvent cleaners....2806
Paint strippers containing methylene chloride....3518
Particulates....2848
Penalties....2893
Perchloroethylene....2805
Pesticide registration....2630
Pollution contingency plan....2872
Priorities list....2876
Radiation....2713
Radioactive materials....535, 3814, 3840
Radiofrequency radiation....2715
Radionuclides....2720, 2822, 2883
Registration....2634
Respiratory protection....1469, 1470
Rubber....2857
Rules and regulations review....3504
Safety....2866
Sewage treatment plants....2839
Small parts, child use....3525
Solvent degreasing....2834
Spray paints containing methylene chloride....3518
Sulfur dioxide....2837, 2841, 2858
Sulfur oxides....2800
Toxic chemicals....2639
Toxic substances, chronically....2882
Toxicants, chronic....2868
Transuranium elements....2714
Tremolite....1464, 3507
Underground storage tanks....2768
Volatile organic compounds....2835, 2836, 2844, 2857
Wood preserving and surface protection waste....2743
1,3-Butadiene....1491
2,4-D Pesticide industries....2750
4,4'-Methylenedianiline....1478
Hazardous waste:
Air toxicity....2749
Aqueous hazardous waste discharged to sewers....2688
Asbestos....2638
Burning standards for waste fuels....2772

VOL 53 ISS 79 PT 2 APR 25 1988 UMI

Sequence Number

Hazardous waste—Continued
Chlorinated aliphatics....2750
Coal combustion by electric power plants....2738
Containerized liquids in landfills....2773
Deepwell injection....2727
Domestic sewage study....2688
Emergency access to low-level disposal sites....3851
Emergency response....1515, 2879, 2891
Experimental facilities conducting research and development, permits....2760
Explosives....2751
Facilities, liability requirements....2776
Flood plain and seismic restrictions for treatment, storage, and disposal facilities....2754
General performance requirements:
Deep mines....2785
Facilities engaging in research activities....2785
Open detonation units....2785
Salt mines....2785
Silos....2785
Thermal treatment units....2785
Groundwater....2762, 2764, 2775
Identification and listing....2743, 2747, 2748, 2770, 2784
Incineration, ocean....2701
Incinerators, emission controls....2758
Incinerators, trial burns....2766
Industrial wastewater dischargers standards initiatives....2671
Inorganic chemicals....2751
Iron....2751
Laboratory practices....2745
Land disposal:
Facilities technology requirements....2787
Liner and leak detection regulation....2752
Restrictions....2742, 2763
Leather tanning wastewater dischargers....2707
Location standards for treatment, storage and disposal facilities 2754
Metallic ore solid waste....2739
Methyl bromide....2770
Methyl isocyanate and lead....2884
Municipal waste combustor ash....2735
National priorities list....2875, 2885, 2886
Ocean....2701
Oils, management of waste....2737
Oils and hydraulic fluids waste....2779
Owners/operators of treatment and disposal facilities....2786
Permit program....2771, 2777
Petroleum products in underground storage tanks....2781
Petroleum sludge....2769
Post consumer recovered material....2788
Pretreatment regulations....2709
Priorities list....2876
Radioactive materials....535, 2712, 2822, 3814
Response claims procedures for National contingency plan....2888
Sites, uncontrolled....2874
Soil and debris, treatment and disposal....2759
Solid waste....2744, 2745
State program requirements....2741, 2765
Statistics for detecting groundwater contamination, monitoring, and standards issues....2753
Technical standards for corrective action....2756
Test methods....2748
Toxicity characteristic modification....2747
Treatment units, mobile....2778
Underground injection control....2687, 2729
Underground storage tanks....2781, 2783
Waste facilities....2831
Wood preserving and surface protection waste....2743
2,4-D Pesticide industries....2750
Head Start program....572, 594, 595, 596, 597, 606
Health:
Abortion....666
AIDS....894, 3332
Alcohol abuse....584
Assistance to persons unable to pay....716

Sequence Number

Health—Continued
Blindness, determining disability....615
Block grants....576, 600
Blood and blood products....672
Clinical laboratories....732
Community health centers....699, 700
Competitive medical plans....730, 794
Drug abuse....584
Education....705
Education improvements....714
Emergency and medical occupations....2953
Family planning....666
Formula grants....606
Fraud and abuse....588
Group health plans, continuation coverage....2398
Head Start program....594, 595, 596
Home health agencies....839
Hospital research and development....563
Human research subjects, protection of....680
Indians....715
Information collection requirements....799
Inpatient care....729
Insurance....762
Laboratory practices, good....692
Maintenance organizations....730, 794
Manpower....704
Medical insurance, supplementary....795
Mental....584
Mentally retarded....801
National Service Corps....702
Organ procurement, certification of....837
Pain, evaluation of....615
Pharmaceuticals....671
Populations, unserved....700
Radiation:
Accidental exposure....3840
Protection standards....3839
Radiation therapy....3843
Refugees....667
Research....720, 721
Teaching facilities....714
Uniformed services....371, 376, 379, 380
Health care:
Alternate sanctions for ESRD facilities....812
Ambulatory surgical centers....770
CHAMPUS....740
Civil money penalties....566, 568
Confidentiality of information....701
Disclosure and correction of information....701
End-stage renal disease program....828, 829
Fire safety standards....806
Home and community-based services....738
Home health agencies and hospices....805, 839
Hospices....736, 737
Hospitals....740
Hospitals outpatient services....704
Long term care survey....817
Mentally retarded....824
Patient confidentiality....810
Patient and program protection....569
Peer review organizations....827
Uniform procedures....3470
Veterans....3316, 3366
Health hazards:
Actinolite....1464
Aerosols and gases....3842
Air pollutants....2794
Air quality models....2796
Anthophyllite....1464
Asbestos....1464, 2838, 2662
Back injuries....1465
Benzene....1472, 2821
Bloodborne infectious diseases....1498
Cadmium....1499

Sequence Number

Health hazards—Continued
CAG carcinogens....2747
Carbon monoxide....2790
Carcinogens....1468, 1476, 1522, 2798
Chromium....2814, 2815, 2816, 2847
Color additive yellow no. 6....2091
Deepwell injection of hazardous waste....2727
Domestic sewage study....2688
Double liner and leachate waste collection system....2774
Ethylene dibromide....1504
Ethylene oxide....1518, 2819
Formaldehyde....926, 1522, 2848
Fruit or vegetable juice beverages....690
Fuel and fuel additives....2798
Glycol ethers....1492
Groundwater contamination....2744
Infant formula recalls....679
Inorganic and organic compounds....2722
Landfill surface closures....2757
Lead....1516, 2725, 2801
Menstrual tampons....681
Methylene chloride....1495, 2850
Microorganisms....2660
Municipal landfill pollutants....2810
Municipal waste combustors....2809
Nitrogen dioxide....2789
Nitrogen oxides....2865
Nuclear power reactors....3820
Organic solvent cleaners....2820
Ozone....2802
Particulates....2803, 2823, 2827, 2860
Perchloroethylene....2818
Pesticides....2747
Radiation....2713
Radioactive materials....2711, 3842, 3854
Radiofrequency radiation....2715
Radionuclides....2822
Sulfur oxides....2800
Transuranium elements....2714
Tremolite....1464
Underground injection....2730
Waste pile closures....2757
1,3-Butadiene....1491
4,4'-Methylenedianiline....1478
Health Maintenance Organizations (HMOs)....566, 755, 762, 782, 809, 827

Health manpower:
Anesthetists....760
Bloodborne infectious disease exposure....1498
Education....703, 710
Geriatric education program....682, 698
HEAL program....696, 708
Loans....702
Medicine and pediatrics....695
Mental....704
National Service Corps....702
Nurses:
Anesthetists....706
Grants....709
Practitioner training program....697
Student loan program....711
Physicians:
Incentive plans....567
Liability....765
Occupational therapy....763
Rural practitioners....571
Shortage area....713
Student loan programs....707, 712, 714
Trade secret disclosures....2892
Unfit practitioners....569
VA scholarship program....3319
Hearings and appeals:
Aliens....1314
Antarctic animals and plants....3078
Assessment conference....1224

Sequence Number

Hearings and appeals—Continued
Audit of federally funded grants....1461
Cost comparisons on contracts....3488
Dates for reschedule....3356
Due process regulations....513
Equal employment opportunity....2922
Food stamp programs....101
Fraud penalties and assessment....374
Groundwater protection....2716
Health and human services....590, 591
Hydroelectric power projects....3654
Indian affairs....718, 1052, 1062, 1065, 1182
Information in administrative proceedings....1064
Interior Department....1070, 1072
Medicare appeals rights....742
Merit System Protection Board....3015
Mineral Management Service....1193
National Forest System....176
NRC domestic licensing....3833
Nuclear Regulatory Commission....3836, 3841
Practice and procedures....2100
Public housing grievance....1038
Public lands....1063, 1069
Public water supervision program....2724, 2733
Railroad unemployment insurance....3250
Rural health manpower....571
Superfund claims....2878
Surface coal mining....1066, 1071
Timber sales debarment....1298
Unemployment compensation....1404
Uniform rules of practice....3651
Veterans Administration....3355, 3357
Heliports, noise compatibility planning....1791
Highways:
Acceleration of projects....1853
Administration of negotiated contracts....1828
Air quality procedures....1968
Aliens....1345
Approval and project authorization....1827
Beautification....1870
Bridges....1858
Cargo preference requirements....1859
Construction engineering costs....1837
Construction of federal-aid projects....1835
Construction and maintenance....1861, 1872
Environmental impacts, procedures for considering....1912
Equal employment opportunity....1825, 1826
Erosion and sediment control on project....1854
Federal-aid contract procedures....1822
General materials requirements for federal-aid construction work 1821
Interim Guide for design of pavement structures....1824
Labor and employment....1829, 1871
Motor carrier safety:
Daytime running lights....1878
Delegations of authority....1875
Disqualification of drivers....1811
Employee safety and health standards....1847
Fitness of owners and operators....1845
General....1840
Hazardous materials communication....1848
Hours of service....1865
Inspection, repair, and maintenance....1843
Noise emission standards....1823
Occupant crash protection....1905
Paperwork burdens....1810
Parts and accessories....1844
Railroad grade crossings....1852
Traffic control devices....1839
Truck rear underride protection....1898
Truck size and weight....1813, 1815, 1838, 1842, 1863, 1864, 1866
Truck splash and spray suppression devices....1841
Outdoor advertising....1870
Physical construction authorization....1874

Sequence Number

Highways—Continued
Property management and disposal....1832
Railroad work reimbursement....1857
Railroad-highway projects....1855
Rate guidelines for non-coal commodities....3771
Right-of-way regulations....1831
Safety, rail-highway grade crossings....1960
Safety standards, commercial vehicle conspicuity....1895
Sign erection standards....1874
Signs, luminaries and traffic signals....1856
Speed limit enforcement....1551, 1820
State federal-aid highway and safety funds....1836
Traffic control devices....1809, 1830, 1833
Transfer of interstate construction funds....1869
Utility use of freeway right-of-ways, longitudinal....1867
Historic preservation:
Alaska Native cemetery sites....1120
Archeological collection....1137
Certifications for tax benefits....1119
Corps of Engineers....403
National register of historic places....1135, 1136
Reporting and recordkeeping requirements....1118
Soil conservation program....209
Historical Records Advisory Boards, State....3054
Homeless Housing Act....381, 1002
Homeworkers, industrial:
Buttons and buckles....1380
Gloves and mittens....1380
Handkerchiefs....1380
Jewelry....1380
Knitted outerwear....1380
Women's apparel....1380
Honey:
Loans....49
Price support program....2, 17, 49
Hospitals:
Ambulatory surgical services....808
Bad debt payment....838
Clinical diagnostic laboratory services....728
Clinical laboratories....732
Fire safety standards....806
Hospices....736
Insurance....947, 948, 977
Malpractice insurance....748
Nursing facilities....751
Outpatient ambulatory surgical rates....834
Outpatient services....764
Payment rate....735
Periodic interim payments....833
Physicians, incentive plans....567
Household appliances:
Central air conditioners....518
Clothes dryers....516, 518
Clothes washers....516, 518
Dishwashers....516, 518, 529
Energy efficiency....516, 518, 521, 522, 524, 527
Freezers....518, 521
Furnaces....518
Home heating equipment....518
Humidifiers and dehumidifiers....518
Kitchen ranges and ovens....518
Refrigerators and refrigerator-freezers....518, 521
Room air conditioners....518
Television sets....518
Water heaters....518, 522, 524
Housing:
Aliens....891
Assistance....1006, 1020, 1031
Block grant activities and projects....889, 991
Book-entry securities of GNMA....1003
Building product standards....960
Community development....874, 988, 990, 991, 998, 1001
Community Resource Board....1012
Construction....63, 3095
Conveyance of properties....984

Sequence Number

Housing—Continued
Cost containment procedures....1036, 1041
Credit needs....65
Credit union loans and appraisals....3781
Criminal and civil penalties....897
Debarment suspension....879
Debt settlement....84, 1021
Demonstration program....930
Development grant program....952
Discriminatory practices....1010
Elderly....920, 955, 956, 980, 1022
Emergency homeownership counseling....908
Emergency shelter grants....999
Employees, maintenance and technical....890
Environmental review procedures....874, 889
Fair....1006, 1007, 1008, 1010, 1011
Fees, GNMA....1004
Flexible subsidy program....895
Flood disaster protection....873
Flood plain management....883
FNMA security, definition....875
Fraudulent practices....879
Grants....71, 73, 898
Grievance hearings....1038
Handicapped....920, 955, 956, 980
Homeless Housing Act....930, 1002
Indian....890, 1027, 1036, 1037, 1041, 1042
Insurance....77, 899, 902, 939, 1035
Interprogram transfers....919
Labor....1019
Lead-based paint hazard elimination....880
Lease terms, prohibited....942
Litigation expenses....1034
Loans...64, 65, 67, 70, 72, 73, 74, 75, 83, 84, 92, 900, 902, 905, 920, 956, 972, 980
Low-income, very....90
Manufactured:
Construction and safety...66, 896, 925, 926, 935, 982, 983, 984, 985, 986
Design inspection system....929
Energy conservation standards....927
Flood insurance elevation requirements....2934
Loans....68
Procedural and enforcement system....916, 928
Property standards....933
Thermal energy requirements....902
VA....3338, 3339
Mobility of certificate holders....978
Mortgage insurance...876, 893, 894, 903, 907, 912, 915, 940, 944, 946, 962, 965, 966, 971, 975
Mortgage-backed....1004
Multifamily:
Amortization schedule system....87
Borrowers and grant recipients....76, 85
Insurance....941, 969, 974
Loans....86
Management and disposition....950
Security servicing....86
Subsidy billing procedures....913
Tenants participation....931
Negligent HUD inspection....904
Obsolete regulations....877
Property standards....934
Protection plans....938
Public...890, 919, 976, 1020, 1021, 1022, 1023, 1024, 1025, 1028, 1030, 1031, 1032, 1033, 1035, 1037, 1041, 1043
Real estate settlement services....897
Rent supplement program....943, 951, 953, 976
Rental rehabilitation....872, 889, 995
Replacement for demolition....1023
Review of applications for assistance....917
Rural....67, 70, 72, 73, 75, 80, 989
Security servicing....64
Self-help technical assistance....71

Sequence Number

Housing—Continued
Shared housing arrangements....954
Single person occupancy limits....1029
Single-family...78, 79, 905, 909, 910, 911, 939, 940, 967, 970, 971, 972, 974
State agency amendments....942
Subsidies....70, 932, 945, 1043
Tenants....981, 1038, 1040
Titles....906, 968
Troubled projects....895
Turnkey III ownership opportunity....1026
Underwriters certification....959
Urban....988, 1029
Urban homesteading....993
Utilities, metering....1039
Veterans....3340, 3400
Voucher regulation....918
Wage rates....1037
Water supply systems....934
Wetlands, protection....883
Housing assistance:
Aliens, ineligible....884
Allocation of funds....917
Displaced families....976
Evictions from subsidized and HUD-own projects....961
Fair....1006
Foreclosure sales....921
Mortgage payments, temporary....937
Multifamily management and disposition....950
Procedures....922
Public housing administrative fees....979
Rent....976, 979
Rental rehabilitation....994
Review of applications....917
Voucher program....957, 979
Housing standards:
Building products:
Aluminum windows, etc....892
Carpets in bathrooms and kitchens....962
Grademarking of plywood....958
Mat formed particleboard....960
Siding and roofing materials....896
Steel door systems....963
Water piping, lead standards....935, 961
Construction....925, 986, 3095
Hurricane preparedness assistance....2930
Hydropower projects....3635

I

Imports:
Animals....115
Beer....2076
Country of origin marking....2120
Distilled spirits....2076
Firms and industries....249
Fish and wildlife markings....338
Fruits and vegetables....58
Injurious....1073
Inspection....105, 117
Marine mammals....326
Meat and meat products....105, 117
Motor vehicles....2853, 2863
National security....253
Natural gas, short-term....537
Poultry and poultry products....105, 117, 146
Salmonidae....1074
Semiconductor chip products....2128
Statistics....226
Sugar quota system....152, 153
Wine....2076
Yellowfin tuna....326
Indians:
American group....1145
Appeals....1052, 1145, 1165, 1182
Aquifer demonstration program....2726

Sequence Number

Indians—Continued
Archaeological collection....1137
Big Cypress National Preserve....1129
Business and finance....1162, 1164, 1171, 1185, 1186
Cattle pool, revolving....1155
Clean Water Act....2694
Community development block grants....992
Education....444, 445, 1149, 1151, 1152, 1158, 1160, 1167, 1168, 1169
Electric....1174
Enrollment:
Cherokee, Eastern Band....1144
Cow Creek Band....1153
Mission, San Pasqual Band....1183
Financial assistance....1147, 1148, 1154, 1156
Fishing....1180
Food distribution program....96
Gaming management contracts....1163
Gas royalties....1204
Government contracts....717
Grants....1161
Health service....715
Hearings and appeals....1062, 1065
Homesteading....194
Housing....890, 1027, 1036, 1037, 1041, 1042
Judgement funds....1153, 1184
Land....1062, 1159, 1172, 1173, 1175, 1176, 1177, 1179, 1187, 1189, 1232
Law enforcement....1181
Law and order....1166
Life estates and future interests....1175
Mineral resources....1159, 1179, 1189
Minority small business regulations....3263
Money accounts program, individual....1157
National Forest System lands....194
Oil and gas....1178, 1179
Oil royalties....1203
Police....1146
Primacy enforcement authority....2730
Public land allotments....1264
Public water system supervision....2730
Road construction....1188
San Carlos irrigation project....1174
School boards....1150
School equalization program....1151
Social services program....1147, 1148
Tribes, small....1161
Trust funds....848
Underground injection control....2729, 2730
Water quality standards....2677
Wellhead protection program....2726
Wills....1068
Industrial Classification System (SIC)....3282
Industry:
Adhesives and sealants....2705
Asbestos....1464
Chemicals, synthetic organic....2835, 2836
Commercial fishing....1634, 3293
Construction, size standard....3292
Export trading companies, size standard....3261
Homeworkers, employment in certain industries....1380
Lead exposure standards....1516
Logging....1475
Oil and gas....1471, 2672
Pharmaceutical....2695
Real estate agencies, size standard....3278
Retail and service, size standard....3294
Seafood....297
Information:
Air Force visual systems....416
American forces service....397
Commodity futures....3499
Criminal justice systems....1370
Electronic records management....3050
Environmental....3661
Federal Reserve Board....3743

VOL 53 ISS 79 PT 2 APR 25 1988 UMI

Sequence Number

Information—Continued
Form of agreements....3699
Hydroelectric licenses....3844
International ocean shipping....3697
Mortgages....3748
National Archives records, statistical....3065
News and information media....3049
Organization, procedures, and availability....3074
Patent disclosure....362
Patent and Trademark Office....359
Personal, disclosure during litigation....3204
Policies....3085
Public, statement for guidance of the....3074
Resource management....3085
Scientific and technical papers....377
Security classified....1312, 3194
Trade secret claims....2892
VA lists of names and addresses....3392
Information Resources Management Regulations, Federal (FIRMR) 2966, 2977, 3012
Insurance:
Air taxi operators....1572
Aircraft foreign mission....1529
Automobiles foreign missions....1529
Bank deposits....3618
Commercial space transportation....1559
Credit unions....3786, 3797
Crime, Federal program....2963
Crime....2946
Farm credit....3536
Federal bank deposit law....3627, 3634
Flood....231, 873, 2928, 2931, 2932, 2933, 2934, 2935, 2936, 2939, 2940, 2941, 2942, 2945
Health....762
Hospitals....947, 977
Housing....876, 899, 902
Intermediate care facilities....949
Medical, supplementary....795
Motor carrier industry....1807
Motor vehicle....1923
Nursing homes....949
Old-age, survivors, and disability....609, 610, 611, 612, 613, 616, 617, 621, 635, 638, 640, 641, 644, 645, 647, 648, 657, 658, 661
Railroad retirement....3245
Savings and loan....3665, 3667
Space vehicle users....3036
Surety contracts, Federal bonds....2070
Vessels....2054, 2057
Veterans....3325, 3328, 3400
International:
Air transportation....1555
Arms traffic regulations....1535
Telecommunications....3568
Trade....219
Trade surveys....224
Wills....1524
International Pacific Halibut Commission....330
Inventions:
Class patent waivers....559
Education Department....515
Federal employees....357
Government-owned, licenses....358
Income sharing....3310
Nonprofit organizations....3079
Policy, uniform....357
Investments:
Accounting....3913
Advertisements....3912, 3938
Advertising....3916
Audits....3262
Bank holding companies....3736
Bonds....3927
Broker-dealer dissemination of information....3917
Commodity futures....3494, 3495, 3496
Disclosure requirements....3876, 3902

Sequence Number

Investments—Continued
Distribution expenses....3937
Electronic filing and processing....3885
Financial condition....3920
Financial reporting....3875, 3919, 3936, 3937
Foreign....3893, 3940
Foreign direct surveys....220, 222, 223
Housekeeping amendments....3930
Investment advisers....3910, 3936
Investment companies....3883, 3905, 3909, 3911, 3913, 3915, 3927
Investment management services....3926
Minority-owned foreign....225
Money market funds....3929
Mortgage-related securities....3911
Mutual fund governance....3906
Partnerships....3901
Prospectus....3899, 3909, 3931, 3935
Proxies....3906
Real estate....3796, 3852
Registration....3877, 3928
Registration forms....3918
Reporting requirements....3883, 3907
Sales load charges....3880
Securities....2104, 3621, 3878, 3881, 3884, 3904, 3906, 3910, 3914, 3924, 3939
Tender offer rule amendments....3852
Underwriters, casualty....3876

J

Job Corps program....1393
Job search program....1406
Job Training Partnership Act....1375, 1393, 1405, 1409

L

Labeling:
Alcoholic-free, use of term....2090
Appliances, energy information....3763
Brandy treated with wood....2078
Caloric content on alcoholic beverages....2086
Cereal beverage, use of term....2090
Cholesterol content of food....686
Color additive yellow no. 6....2091
Communications scanning receivers....3564
Diaper ingestion and flammability hazards....3523
Distilled spirits....2073, 2086, 2091, 2098
Fair rules....3754
First aid products....3520
Fish and wildlife containers or packages....1086
Fruit or vegetable juice beverages....690
Grape....2072, 2088
Light (Lite), use of word....2086
Malt beverages....2073, 2086, 2090, 2091
Meat and meat products....110, 112, 130, 136, 139, 147
Menstrual tampons....681
Near beer, use of term....2090
Non-alcoholic, use of term....2090
Nutrition and health of food....687
Paint removal tools, hot air....3515
Pesticides requirements....2631
Poultry and poultry products....110
Sulfiting agents....674
Textile, wool, and fur products....3759
Tobacco manufacturers identification....2096
Toys for children under 3 years of age....3516
Whiskies, straight....2097
Wine....2071, 2072, 2073, 2075, 2082, 2086, 2089, 2091
Labor:
Aliens....1384, 1397, 1407
Appeal rights....1404
Claims for compensation....1378
Convicts....1871
Election provisions....1428
Employee benefit plans....1410, 1411, 1412, 1419, 1420, 1421, 1422,

Sequence Number

Labor—Continued
1423, 1424
Exposure monitoring 1467
Financial Privacy Act 1372
Financial reports, labor organizations 1427
Fraud Civil Remedies Act 1373
Health hazards, methylene chloride 1495
Homeworkers in certain industries 1380
Income and eligibility verification system 1395
Job Corps 1393
Job service complaint system 1388
Job training 1393, 1399, 1405, 1409
Medical surveillance program 1466
Migrant and seasonal farmworkers 1388
Public employment service 1391
Reporting and disclosure 1428
Scientific and engineering 2954
Single-employer pension plans 3217
South Africa 1527
Surplus areas 1394, 1406
Trade adjustment assistance 1408
Wages 1019, 1377, 1382
Worker adjustment program 1398
Laboratory practice, good 692
Land:
Abandoned 1247
Coal mining, surface 1215
Erodible highly 51
Farm, inventory of prime and unique 211
Hazardous waste 2773
Hazardous waste disposal 2752
Hearings and appeals 1069
Indian 1159, 1172, 1173, 1176, 1177, 1187
Interstate sales registration 878, 924
Private sector sale 236
Production on highly erodible 51
Radioactive materials residue, annotation of records 533
Registration fees 923
Rights-of-way 1173
Soil surveys on Federal 210
Surface mining 1217
Underground storage tanks 2781
Wetland conservation programs 51
Law:
Arbitration regulation 2964
Attorney's fees, costs, and backpay in EEO cases 2920
Civil money penalties for assistants at cataract surgery 577
Claims and tort litigation 411
Criminal intelligence systems 1369
Debarment and suspension 242, 887, 1051
Energy policy 560
Federal deposit insurance 3627
Grantee suspension and debarment 423
Immigration service officers 1328
International child abduction 1530
IRS, due diligence standards 2060
Legal opinions of General Counsel 3361
Litigation 2101, 3204
Military personnel 412
Safe Drinking Water Act 2906
Suspension and debarment 69
Voting rights 1308
Law enforcement:
Aliens 1322, 1335, 1339, 1340, 1345
Antarctic animals and plants 3078
Border patrol sectors 1341
Child support 845, 846, 855, 868
Fish and wildlife markings 338
Foreign trade 250
Forest system lands 157, 160
HMOs and medical plan penalties 566
Indian affairs 1181
Indian police 1146
Indian reservations 1166
Mine safety 1248

Sequence Number

Law enforcement—Continued
Money laundering 2063
Nuclear Regulatory Commission 3860
Passport validity 1359
Real estate 897
Social Security Administration 662
Speed limits 1551
Surface coal mining permits 1235
Libraries 434, 438, 439, 440, 442
Loans:
Adjustment grants 241
Agricultural loss amortization 2112
Below market interest-rate 2572
Community disasters 2939
Cotton 6, 35
Credit unions 3782, 3784, 3785
Debt settlement 84
Employee benefit plans 1422
Farm credit institutions 3544
Farm loss amortization 3624
Farm ownership 88
Farmers 81, 82, 89, 92
Health education assistance loans 708
Health manpower 705
Health professions student loan programs 707
Health Service Corps 702
Honey crops 49
Housing 64, 65, 67, 74, 83, 92, 905, 972
Housing for the elderly or handicapped 955
Housing program, rural 70, 72, 73
Indian 1168
Interest-free 2572
Peanut crops 8
Private sector sale 236
Rural housing 75
State and local 3268, 3279, 3298
Student 483, 484
Sugar beets and sugarcane crops 21, 55
Toxic wastes, liability 240
VA funding fees 3372
VA home loan credit standards 3340
VA payment of guaranty claims 3354
VA-guaranteed, use of credit reports for refinancing 3374
VA-guaranteed loan foreclosures 3395
Veterans 3403
Lobbying, grassroots 2185
Lobsters:
American 290, 343, 355
Management plans 298, 299, 331, 333
Recreational limit 331
Recreational season 333
Slipper 331, 333, 340
Spiny 299, 331, 333, 340
Trap removal 333
Logo, Take Pride in America 1059

M

Mail order merchandise 3752
Mail rates 1569
Manpower training programs:
Job Corps 1393
Job Training Partnership Act 1405, 1409
Marine resources:
Channel Islands sanctuary 321
Cordell Bank sanctuary 336
Endangered and threatened 1251
Estuarine reserve research system 319
Fishery statistics 323
Flower Garden Banks sanctuary 317
Injurious 1073
Key Largo sanctuary 316
Looe Key sanctuary 318
Marine Mammal Protection Act 1078
Marine mammals 276, 326

VOL 53 ISS 79 PT 2 AP 25 1988 UMI

Sequence Number

Marine resources—Continued
Permits for taking marine species 287
Point Reyes-Farallon Island sanctuary 322
Sanctuary program regulations 335
Whales, humpback 327
Maritime academies and colleges 2044
Maritime carriers:
Agreement exemption 3713
Common carriers 3710
Common and contract carriage 3701
Cost of proceedings 3696
Foreign-to-foreign agreements 3714
Independent rate action 3698
Index of documents for agreements 3702
Information form for agreements 3699
International ocean shipping 3697
Merchant marine 3717
Passenger vessel operators 3705
Personal information access 3722
Rate changes 3712
Rates quoted subject to booking 3707
Recordkeeping requirements 3721
Regulation of agreements of domestic 3716
Review conference practices 3706
Service contracts 3709, 3711, 3721
Steamship conference contract authority 3719
Tariffs 3700, 3704
Terminal agreements 3720
Truck detention charges 3715
Maritime vessels:
Cargo preference 1494, 2045, 2046, 2047, 2052, 2053, 2056, 2058
Construction fund 2050
Construction-differential subsidy 2042
Defense Zone Commanders 1680
Subsidies 2046, 2049, 2051, 2052
U.S.- flag 2045, 2046, 2053
War risk insurance 2059
Worldwide service 2052
Marketing:
Drugs, veterinary and human 869
Food stores 3762
Honey 49
Members of Exchange Governing Boards 3499
Pipelines 3645
Meat and meat products:
Administrative regulations 103
Bacon 125
Binders 124
Biological residues 134
Exemptions 123
Foreign country certification 120
Ham 116
Imports 105, 117
Inspection 105, 107, 113, 114, 115, 116, 117, 133, 136, 140, 141, 142, 143
Labeling 110, 112, 130, 136, 139, 147
Lite sausage standard 131
Net weight 128
Packaging 137
Pork 139
Port irradiation 122
Restructured 114, 135
Safety and sanitation 142
Salmonella and other bacteria 108, 109
Sausages 132, 140
Scales and weights 206
Steaks 144
Sulfonamide and antibiotic residues 118, 148
Swine identification 59, 106, 111, 150
Trichina detection methods 127, 129
Turkey ham products 126
Violations 145
Water system approval 118
Weight statements 137

Sequence Number

Medicaid:
Aliens 840, 847
Assets, revaluation of 798
Conforming amendments 791
Cost of living increases, treatment of 797
Criminal investigation, withholding payment 587
Deficit Reduction Act provisions 794
Definitions 821
Eligibility 725, 726, 743, 776, 802, 807, 859
Groups, eligibility 758
Health Maintenance Organizations (HMOs) 762
Home health agencies 745, 788
Hospice case management 737
Income and eligibility verification 841
Inpatient hospital 789
Intermediate care facilities 822
Mentally retarded 824
Organ procurement certification 837
Overpayments 813
Patient confidentiality 816
Payments 790
Pregnant women, children, and newborn children 823
Provider agreement and supplier participation 745
Providers and suppliers 779
Reporting and recordkeeping requirements 793
Sanction regulations 583
Skilled nursing facilities 822
Spenddown 727
State plan requirements 811
State share of financial participation 790
Survey and certification procedures 820
Transfer of assets 799
Medical devices 1451, 1469, 1470
Medicare:
Aliens eligibility 756
Alternate sanctions for ESRD facilities 826
Ambulatory surgical centers 770
Appeals 742, 776
Assets, revaluation of 798
Case processing standards 844
Cataract surgery, civil penalties 577
CHAMPUS 740
Civil money penalties 565, 568
College of American Pathologists Laboratory 746
Comparable services limitation 774
Conforming amendments 791
Cost reports/intermediary payment 724
Costs or charges provisions 792
Criminal or civil remedies, anti-kickback 570
Dialysis bloodlines 775
Dialysis filters and other dialysis supplies 835
Dialysis services, outpatient maintenance 810
Economic index 769, 785, 830
End-stage renal disease 753, 761
Fraudulent and abusive practices 768
Groups, eligibility of coverage 757
Health Maintenance Organizations (HMOs) 755, 762
Hemophilia clotting coverage 803
Hepatitis B vaccine coverage 803
Home and community-based services 738, 777
Home health agencies 739, 754, 788, 818, 819, 839
Home health aide training 818
Hospital insurance 796
Hospitals bad debt payment 838
Hospitals outpatient services 764
Immunosuppressive drugs 814
Income and eligibility 580
Inpatient hospital 773, 789, 800, 832
Inpatient hospital services 771
Interest expense and suspension of payments 749
Kidneys sent to foreign countries 741
Liability 733
Long-term care facilities 815
Medical education costs 734

Sequence Number

Medicare—Continued
Medical equipment, durable....786
Medical services....752
Nurse anesthetists, payment for....760
Organ procurement certification....837
Parenteral and enteral nutritional therapy....826
Patient confidentiality....816
Patient personal funds, services not chargeable....787
Patient rights....818
Peer review organization....767
Photon absorptiometry....761
Physician anesthesia services....784
Physicians....731, 763, 765
Poor quality care, denial of payments....744
Procedural policy....724
Prospective payment system....768
Provider agreement....745
Providers and suppliers....779
Radiologist services....783
Rates....831
Reasonable charge limitations....804
Sanction regulations....583
Skilled nursing facilities....772, 825
Specialists, payments for....723
Supplementary medical insurance....780, 831, 836
Surgical procedures, preprocedure review....747
Survey and certification procedures....820
X-ray service coverage....803
Medicine, National Library of....722
Mental disorders....3402
Mental health services....584
Micrographics records management....3056
Migrant and seasonal farmworkers....1388
Military law:
Air Force personnel....412
Army General Counsel's honors program....398
Military personnel:
All Volunteer Force....3328
Army General Counsel's honors program....398
Benefits, coordination of....378
Certificates of separation....415
CHAMPUS....371, 376, 379, 380, 389
Civilian health and medical program....371, 376, 379, 380, 389
Education, dependent children....382
Financial responsibility....413
Health insurance, voluntary....396
Medical and dental care....406, 407
Overseas air charter tariffs....1541
Pay allotments, voluntary....385
Selective service regulations....3252
Uniform reserve, training and retirement....394
Mine safety and health:
Air quality....1437, 1442
Asbestos....1431
Backfilling and grading....1222
Blasting units, multiple-shot....1443
Brakes, automatic on equipment....1439
Electrical standards....1434, 1435, 1455
Employee certification....1438
Equipment....1429, 1445, 1453
Escapeways and escape facilities....1456
Explosives....1436, 1447, 1449
Face equipment....1440
Hazard communication....1432
Individual civil penalties....1248
Lamps, electric....1441
Loading, hauling, and dumping....1448
Performance standard roads....1230
Plan approvals....1454
Protective devices, respiratory....1451
Radiation standards....1450
Reports and records....1430
Roof control....1452
Safety standards....1444
Spillways, engineering standards....1241

Sequence Number

Mine safety and health—Continued
Training in SCSR's, hands-on....1457
Underground mining....1218, 1240, 1255
Ventilation....1446
Violations, pattern of....1433
Warning devices, automatic on equipment....1439
Mineral resources:
Deep seabed mining....337
Disposal from forest lands....171, 198
Forests locatable....175
Geothermal....1268, 1276
Hydrogen sulfide operations....1273
Indian land....1159, 1176, 1177, 1189, 1232
Leasing....1192, 1280, 1296
Licenses....173
Mining claims....1115, 1281, 1282, 1283
Mountaintop removal....1252
National parks....1115, 1116, 1125, 1132
Nonmineral entries on mineral lands....1262
Offshore leasing....1192
Oil and gas:
Indian owned....1178
Management of non-Federal....1114
Onshore site security....1295
Royalty-in-kind crude oil....1206
Transportation....1191
Oil and gas leasing....283, 1268, 1270, 1274, 1292
Onshore oil and gas....1198, 1205, 1271, 1278, 1294
Outer Continental Shelf...283, 1192, 1194, 1195, 1196, 1199, 1201, 1202, 1206
Program revisions....1212
Proprietary data and information....1207
Rights-of-way....1266
Royalties....1193, 1203, 1204
Supplemental sales....1200
Surface coal mining...1209, 1211, 1219, 1221, 1225, 1229, 1231, 1232, 1233, 1237, 1245, 1246, 1250
Trespass violations....1291
Water from oil and gas wells....1272
Mineral royalties....1193, 1197, 1203, 1204, 1206
Mines:
Abandoned....1226, 1227
Air pollution control....2861
Air quality....1437, 1442
Backfilling and grading....1222, 1223
Blasting units, multiple-shot....1443
Brakes, automatic on equipment....1439
Coal...1208, 1209, 1213, 1214, 1215, 1221, 1228, 1229, 1232, 1233, 1236, 1237, 1245, 1246, 1253, 1279, 1430, 1438, 1442, 1443, 1455
Control and ownership....1234
Deep seabed....337
Definition of "valid existing rights"....1216
Electrical standards....1434, 1435, 1455
Employee certification....1438
Equipment....1429, 1445, 1453
Escapeways and escape facilities....1456
Explosives....1436, 1447, 1449
Farmland, operations on prime....1242
Hearings and appeals....1066, 1071
Highwall policy....1239
Individual civil penalties....1248
Inspection....1243, 1244
Instead of zero....1443
Lamps, electric....1441
Legal and financial commitment....1233
Loading, hauling, and dumping....1448
Mountaintop removal....1252
Ownership information....1237
Performance standard roads....1230
Permits....1210, 1214, 1228, 1235, 1236, 1238, 1253
Plan approvals....1454
Protection of endangered and threatened species....1251
Protective devices, respiratory....1451
Radiation standards....1450

VOL 53 ISS 79 PT 2 APR 25 1988 UMI

Sequence Number

Mines—Continued
Reports and records....1430
Roof control....1452
Spillways, engineering standards....1241
Surface mining...1208, 1209, 1211, 1214, 1217, 1221, 1227, 1228, 1229, 1231, 1232, 1233, 1236, 1237, 1240, 1243, 1244, 1246, 1247, 1249, 1250, 1254, 1256
Termination of jurisdiction....1229
Training in SCSR's, hands-on....1457
Underground mining....1218, 1240, 1255
Unsuitability petition process....1250
Ventilation....1446
Violations, pattern of....1433
Warning devices, automatic on equipment....1439
Waste regulatory program....1220, 2767
Minority Business Enterprise....1560, 1564, 1584
Monuments and memorials....1123
Mortgage insurance:
Carpets in bathrooms and kitchens....962
Flood disaster protection....873
Foreclosures or deeds-in-lien of foreclosure....964
Multifamily:
Fees to third parties....969
Rental housing....912
Penalty for lack of documentation....903
Residential energy conservation measures....975
Single-family:
Adjustable rate mortgages....966
Allegany Reservation....939
Borrower eligibility....971
Premiums....965, 970
Retention period for claim records....893
Solar energy system....975
Veterans....3400
Mortgages:
Cash public sales....936
Claims, denial of resubmission....901
Claims processing on defaults....911
Conveyance of properties....964
Credit union investment....3801
Eligibility requirements....894
Escrow account assignment option....914
FNMA security, definition....875
Foreclosure relief....973
Increased costs....975
Insurance....915, 940, 941, 944, 946
Insurances claims....899
Mortgages....3748
Payment, partial....973
Property....230
Securities....1004
Temporary assistance payments....937
Titles....906, 968
Underwriters certification....959
Motor carriers:
Accounting and reporting....3775
Cargo preference requirements....1859
Drivers....1849, 1851
Electronic distance systems....3779
Employee safety and health standards....1847
Environmental restoration....1860
Financial responsibility....1807
Hours of service....1865
Household goods....3770
Interstate regulations....3768
Operating rights....3776
Parts and accessories....1844
Private....1817
Safety:
Blood alcohol concentration standard....1814
Fitness of owners and operators....1845
Private carriers....1817
Speed limit enforcement....1820
State regulations....1808
Stock purchase audits....1970

Sequence Number

Motor carriers—Continued
Trucks:
Driver qualification....1819, 1834
Financial responsibility....2000
Rear underride protection....1898
Size and weight....1813, 1815, 1842, 1864, 1866, 1873
Splash and spray suppression devices....1841
Uranium hexafluoride packaging safety....2030
Motor vehicles:
All-terrain vehicles....3506
Automobile:
Anthropomorphic test dummies....1898
Brake fluids....1939
Bumper standards....1891, 1892
Coating operations....2840
Depreciation and investment tax credit....2414
Fuel economy standards....1879, 1927
Headlamp concealment devices....1948
Liability insurance for foreign missions....1529
Methylene chloride hazard....1495
Occupant crash protection....1905, 1918, 1947
Roof crush resistance....1884
Theft prevention standard, petitions for exemptions....1941
Tires....1890, 1893, 1936
Window systems....1938
Buses....1921, 1966, 1967, 1971, 1976
Customs users fees....2122
Diesel fuel....2799
Economy standards....1940
Emission requirements....2863
Fuel switching prevention....2830
Heavy-duty gasoline vehicles....2826, 2829
Hydrocarbon emissions....2825
Imported certification procedure....2853
Insurer reporter requirements....1923
Light-duty vehicles....2824, 2829, 2864
Methanol-fueled....2850
Off-road vehicles....167, 1299
Particulates....2827
Safety standards:
Anthropomorphic test dummies....1896, 1914
Boat transporters....1612
Brake fluids....1939
Brake systems....1901, 1908, 1911, 1932, 1946
Bumpers, pedestrian protection....1897
Child restraint systems....1935, 1951
Compact vans/station wagons....1902
Crashworthiness ratings....1894
Daytime running lights....1878
Fuel system integrity....1888, 1950
Glazing materials....1915, 1925
Head restraints....1906
Headlamp concealment devices....1948
Hydrocarbon....2851
Lamps, reflective devices, and associated equipment...1882, 1934, 1937
Motorcycle helmets....1944, 1952
Occupant crash protection...1887, 1889, 1905, 1907, 1918, 1924, 1933, 1942, 1947, 1949
Power brake regulations....1956
Rearview mirror systems....1909, 1910, 1930
Roof crush resistance....1884
School buses....1880, 1885, 1928
Seats....1881, 1929, 1931
Side impact protection....1876, 1900
Splash and spray suppression devices....1926
Steering control rearward displacement....1943
Stopping-distance consumer information....1886, 1945
Test, ball drop....1920
Test dummies....1916, 1917, 1919
Theft prevention....1913, 1922
Tires....1877, 1890, 1899, 1903, 1936
Trailer stability, heavy....1904
Window systems....1938

Sequence Number

Motor vehicles—Continued
Seizure and forfeiture of alien....1319
Trucks:
Boat transporters....1812
Impact protection for driver from steering control system....1883
Occupant crash protection....1905
Rear bumpers....2036
Size and weight....1812, 1838, 1846, 1850, 1863
Tractor semitrailer-trailer....1850

N

National Library of Medicine....722
National monuments and memorials....1122
National parks:
Alaska....1117, 1133
Big Cypress National Preserve....1129
Concessions....1117
Contract acquisition regulations....1103
Employment practices, discrimination....1139
Hawaii Volcanoes....1105
Indian use and occupancy....1129
Land appraisals....1143
Mineral resources....1115, 1116, 1125, 1132
Noise control....1126
Non-Federal lands regulations....1138
Prohibition of surface coal mining....1216
Protection, resource and visitor....1104
Public services, discrimination....1139
Recreation and recreation areas:
Aircraft....1133
Boating....1110
Fishing....1105, 1106, 1108, 1112, 1124, 1131, 1140, 1142
Gold panning....1130
Hunting....1111
Motorboats....1133
Off-road vehicles....1113, 1121
Snowmobiles....1121, 1133
Target practice....1127, 1128
Rocky Mountain....1109
Springfield Armory Museum closure....1141
Trucking regulations....1109
National Personnel Records Center....3053, 3061
National Petroleum Reserve....1268
National security:
Commercial space transportation....1581
Dispersal of facilities....2958
Imported articles....253
Investigative service....388
Scientific and engineering manpower....2954
Scientific and technical papers....377
National Wildlife Refuges....1101
Natural resources:
Alaska land management....1301
Archeological....3309, 3315
Coastal zone management....283
Damage assessment....1044, 1045, 1046, 1304
Endangered and threatened wildlife....287
Estuarine reserve research system....319
Hydrogen sulfide operations....1273
Marine sanctuary program....316, 317, 318, 321, 322, 335, 336
Mineral resources....1272, 1280
Outer Continental Shelf....283
Project permits, Corps of Engineers....402
Timber sales....1277, 1284, 1285, 1298
Wetlands....3050
Navigation:
Chesapeake Bay....1688
Inland waterway....1689
San Joaquin and Sacramento Rivers....1689
System....1685
News and information media....3049
Noise control:
National parks....1126
Pavement breakers....2734
Power lawn mowers....2734

Sequence Number

Noise control—Continued
Rock drills....2734
Tractors and buses....2734
Truck transport refrigeration units....2734
Nuclear decommissioning costs....2472
Nuclear fuel....3849
Nuclear materials:
Human reliability program....530
Licensing....3865
Medical use of byproducts....3843, 3857
Radiation therapy....3843
Safeguards....3852
Uranium mill tailings....3817
Nuclear power plants:
Access authorizations....3863
Aerosols and gases, controls of....3842
Aircraft, restrictions....531
Backfit requirement....3848
Biological emergency....2925
Codes and standards....3847
Construction....3830
Decommissioning....3655, 3834
Degree requirements....3813
Emergency preparedness....3840, 3869
Fee schedule change....3863
Human reliability program....530
Leaking rate testing....3858
Licensing....3820, 3822, 3830, 3864, 3865, 3866
Nuclear occurrence....3853, 3853
Personnel:
Clearances, R....3826
Radiation....3839
Security criteria....3874
Pipe ruptures....3868
Radiation safety requirements....3842
Radioactive materials....3827, 3854
Radioactive waste....2822
Radiological emergency....2926
Records retention periods....3838
Reporting requirements....3855
Safety related and important to safety regulations....3828
Station blackout....3846
Uniform system of accounts....3652
Uranium enrichment facilities....3830
Uranium mill tailings, disposal of....3817, 3867
Waste disposal, low-level....3859
Nuclear power reactors:
Emergency core cooling system....3844
Equipment, retirement units....3652
Inspectors....3819
Leakage testing....3845, 3858
Licenses and permits....3819, 3820, 3831, 3833, 3865
Liquid control systems....3818
Office of Nuclear Reactor Regulation....3861
Radiation safety requirements....3842
Radioactive waste....535
Storage of spent nuclear fuel....3825
Nuclear waste:
Disposal of low-level....3859
Geologic repositories....3821, 3824, 3850
Radioactive....535, 536, 3811, 3814, 3827, 3854
Spent nuclear fuel....536, 3825
Uranium mill tailings....533, 3817
Nuclear weapons....530, 1718
Nursing homes....949

O

Occupational health and safety:
Acetylene....1501
Actinolite....1464
Agricultural pesticides....2829
Air compressed....1490
Air contaminant concentrations....1470
Anthophyllite....1464

Sequence Number

Occupational health and safety—Continued
Asbestos ... 1464, 1517
Atmospheres, explosive and other dangerous ... 1493
Back injuries ... 1465
Benzene ... 1472
Bloodborne infectious diseases ... 1498
Cadmium ... 1499
Carcinogens ... 1468, 1478
Cargo handling ... 1477, 1494
Concrete and masonry construction ... 1506
Confined space ... 1474
Crane or derrick suspended platforms ... 1513
Electrical safety ... 1479, 1507
Employees exposure and medical records ... 1505
Energy sources (lockout/tagout) ... 1476
Equipment ... 1481, 1486, 1489, 1520
Ethylene dibromide ... 1504
Ethylene oxide ... 1518
Excavations ... 1509
Face, head, eye, and foot protection ... 1486
Fall protection ... 1473, 1482, 1483, 1510
Formaldehyde ... 1522, 2648
Gases ... 1501
Glycol ethers ... 1492
Grain handling facilities ... 1519
Hazard communication ... 1496
Hazardous waste operations ... 1515
Hydrogen ... 1501
Ladders and similar climbing devices ... 1497
Lead ... 1516
Lifting manual ... 1465
Liquids, flammable and combustible ... 1501
Logging ... 1475
Longshoring ... 1477
Marine operations protection ... 1481
Methylene chloride hazard alert ... 1495
Motor vehicles ... 1481
Nuclear facilities decommissioning ... 3834
Nuclear power plants ... 3842
Oil and gas well drilling and servicing ... 1471
Oxygen ... 1501
Perchloroethylene ... 2818
Platforms, powered ... 1508
Power presses ... 1521
Pulp, paper, and paperboard mills ... 1480
Respiratory protective devices ... 1469, 1470
Safety testing/certification ... 1520
Scaffolds ... 1484, 1512
Shipyard access and egress ... 1485
Shipyard employment ... 1502
Shipyard surface preparation ... 1523
Stairways and ladders ... 1514
Steel erections ... 1482
Surfaces, walking and working ... 1497
Toxic substances ... 1500, 1503
Transuranium elements ... 2714
Tremolite ... 1464
Tunnels and shafts ... 1511
Welding, cutting, and brazing ... 1487
Welding, cutting, and heating ... 1488
1,3-Butadiene ... 1491
4,4'-Methylenedianiline ... 1478
Ocean incineration and dumping regulation ... 2701
Off-road vehicles ... 167, 1259, 1299
Offshore drilling units, mobile ... 1622, 1669
Oil and gas:
Cooperative agreement ... 1275
Fees, rentals, and royalties ... 1269
Forest Service lands ... 184
Leases ... 283, 1269, 1270
Management of non-Federal ... 1114
Mineral agreements for Indian owned ... 1178
Natural gas data collection system ... 3646
Offshore extraction industry ... 2672
Onshore site security ... 1295

Sequence Number

Oil and gas—Continued
Optional certificates ... 3641
Outer Continental Shelf ... 283, 1190, 1206
Pipelines ... 3645, 3664
Radioactive materials ... 3854
Rate design for natural gas ... 3659
Royalty management ... 1275
Royalty-in-kind crude oil ... 1206
Short-term exports and imports ... 537
Transportation allowance ... 1191
Well drilling and servicing standards ... 1471
Wellhead decontrol ... 3648, 3657
Old-age, survivors, and disability insurance:
Adjudication claims ... 616
Adjustments in benefits ... 613
Administrative law judges ... 650, 664
Aid to families with dependent children ... 609
Aliens ... 632
Appeals council ... 625
Benefits during appeals ... 644
Blindness ... 635
Cardiovascular system, medical criteria ... 610
Compliance with Federal law ... 646
Consultative examinations, cancelled ... 634
Consultative examinations, medical evidence ... 641
Death ... 638
Dependency test for adopted great-grandchildren ... 665
Determinations and decisions ... 635
Disability ... 635, 648
Down Syndrome ... 655
Entitlement ... 621
Federal employees, newly hired ... 640
Federal judges, coverage of earnings ... 640
Illiteracy and inability to communicate in English ... 622
Information and records available to the public ... 619
Listing of impairments ... 622
Medical criteria ... 612, 623, 624
Medical professionals qualifications ... 661
Overpayments ... 617, 654
Rehabilitation services ... 647
Representatives of claimants ... 657
Respiratory system, medical criteria ... 611
Social security number cards ... 631, 632
State and local government employees ... 636
Vocational factors ... 630
Wages ... 628
Windfall benefits elimination ... 658
Work evaluations ... 633, 663
Ophthalmic goods and services ... 3760
Organization and functions:
Defense Department ... 383, 387, 388, 390, 395
Defense Nuclear Agency ... 391
Farm Credit Administration ... 3529
Federal home loan banks ... 3681, 3682, 3683
Housing and Urban Development ... 1013
Nuclear Regulatory Commission ... 3616, 3861, 3870, 3871, 3872, 3873
Outer Continental Shelf:
Air quality regulations ... 1190, 1194
Coastal zone management ... 283
Crane design inspection ... 1604
Inspection of facilities ... 1596, 1673
Navigation aids ... 1612
Occupational health and safety ... 1596
Offshore evacuation procedures ... 1674
Oil and gas:
Operations ... 1199
Royalty-in-kind ... 1206
Ozone ... 2846, 2849

P

Packaging:
Aspirins ... 3510
Child-resistant ... 3502, 3509, 3510, 3511, 3524
Drugs, over-the-counter ... 691

Sequence Number

Packaging—Continued
Effervescent acetaminophen tablets....3509
Estrogen tablets....3514
Estrogens, conjugated....3524
Fair rules....3754
Fish and wildlife....1086
Hazardous materials standards....2016
Household substances, child resistant....3502
Meat and meat products....137
Medroxyprogesterone acetate tables....3511
Menstrual tampons....681
Poison Prevention Packaging Act....3503, 3509, 3510, 3511, 3514
Poultry and poultry products....137
Tobacco manufacturers identification....2096
Uranium hexafluoride....2030
Paleontological resources....1288
Paperwork Reduction Act....1810, 2981, 3094
Parks, public use standards....3203
Patents:
Attorneys and agents....365
Biological materials....360
Class waivers, rights in inventions....559
Energy Department policy....539
Federal employees....357
Fees....364
General, Education Department....515
Government Policy....3045
Government-wide regulation....3079
Income sharing....3310
Information disclosure....362
Interference cases....369
Plants, variety naming requirements....367
Policy, uniform....357
Practice changes....366
Regulated products....686
Semiconductor chip products....363
Waivers....557, 3045
Peanuts:
Poundage quota....10, 22
Price support program....6, 16, 22, 32, 39, 40
Pensions:
Cash-out limitation....3223
Civil sanctions....1424
Distress terminations....3217
Domestic relations orders....1412
Employer liability....3210
Individual account plans....1421
Plan assets:
Allocation and distribution....3222
Definition....1423
Plan benefits, valuation of....3216, 3221
Premiums payment....3215
Securities....1411
Single-employer plans....2223, 2448, 3206, 3210, 3215, 3217, 3218, 3219
Trusteed plans, payment of benefits....3209
Vested benefits, allocating unfunded....3208, 3220
Withdrawal liability:
Adjustment of....3213
Following merger....3214
Mass....3211
Waivers....3207, 3212
Personnel Records Center, National....3053, 3061
Pesticides:
Advertising restriction....2635, 2636
Certification of applicators....2621, 2627
Chemical effluent guidelines....2675
Good laboratory practice standards....2632, 2655
Groundwater protection....2624
Hazard communication....2657
Labeling requirements....2631
Negotiated consent/procedural test rule....2654
Registration....2625, 2630, 2634
Reporting requirements....2633, 2658
Sale of restricted use pesticides....2626
Spills cleanup policy....2651

Sequence Number

Pesticides—Continued
Termiticides, restricted use....2623
User fees....2637, 2667
Workers protection standards....2629
Petroleum Reserve, National....1268
Pipeline safety standards:
Aluminum cylinders....2015
Corrosion determinations....2014
Damage prevention program....2002
Design of gas pipelines....2008
Gas detection and monitoring....1991
Gas gathering line definition....1996
Gas and liquid welding....2013
Inspectors, certification of State....2038
Liability fund....1057
Line marking and public education....1997
Maps and records of location....2003
Operation and maintenance procedures....2000
Operator qualifications....1999
Pressure....2001, 2031, 2032
Reporting safety-related conditions....2019
Shippers....2037
Training guidelines....1994
Transportation....2041
Plants:
Antarctic....3078
Diseases and pests....58
Endangered and threatened....1087, 1088, 1089, 1090, 1091, 1092, 1093, 1096, 1100
Patent applications....367
Protection and quarantine....58
Protection of rare....1286
Plazas, public use standards....3203
Poison Prevention Packaging Act....3503, 3509, 3510, 3511, 3514
Political advertising....2185
Postal service mail order merchandise....3752
Poultry and poultry products:
Administrative regulations....103
Annual reports....205
Binders....124
Biological residues....134
Broilers....151
Cornish game hens....151
Foreign country certification....120
Identification....149
Imports....105, 117, 146
Inspection....105, 113, 114, 117, 138, 141, 146, 149, 151
Labeling....110
Packaging....137
Restructured....114, 135
Salmonella and other bacteria....108, 109
Scales and weights....206
Turkey ham products....126
Water system approval....118
Weight statements....137
President's Blue Ribbon Commission on Defense Management....383
Presidential documents:
Former Presidents:
Restricted records....3057
Rights or privileges....3057
Presidential Records Act....3057
Procedures for consultation....3057
Public notice of disposal....3057
Semiconductor Chip Protection Act....363
Price support program:
Cotton....12, 37, 46, 47, 69
Grain....11, 36, 45
Honey....2, 17, 49
Milk and milk products....43, 56, 57
Peanuts....8, 16, 22, 32, 39, 40
Rice....19, 48
Sugar beets and sugarcane....21, 33, 55
Tobacco....9, 15, 30, 41, 42, 44
Wheat....4, 20, 50

VOL 53 ISS 79 PT 2 AP 25 1988 UMI

Sequence Number

Price support program—Continued
Wool and mohair....3, 34
Privacy:
Appeals process....213
Family educational rights....424
Financial Privacy Act....1372
Maritime personnel....3722
National Archives records, statistical....3065
Personal information disclosure....3204
Personnel records, Federal....1053, 3172
Records....562, 3021, 3198, 3626
Regulation and implementation....450
VA lists of names and addresses....3392
Property:
Federal-aid highway program....1832
Hazardous substance liability....240
Historic preservation....209, 403, 1136
Industrial plant equipment....2951
Management standards....229, 230
Public assistance program....662, 665
Public broadcasting....574
Public employment service....1391
Public health....689
Public lands:
Acreage limitation....1257, 1280
Alaska....1301
Archeological resources, protection....3309, 3315, 3363
Automated records system....1261
Cadastral survey....1290
Classification....1293
Cultural resource management....1287
Exchanges....1263
Geothermal....1276
Grazing administration....1297
Hearings and appeals....1063
Hydrogen sulfide operations....1273
Indian allotments....1264
Leases, permits, and easements....1302
Mineral resources....1280, 1291
Mining claims....1115, 1281
National Park Service appraisals....1143
Nonmineral entries on mineral lands....1262
Off-road vehicles....1259
Oil and gas leasing....1268, 1274, 1292
Onshore oil and gas....1278, 1294
Paleontological resources....1288
Rare plants protection....1286
Recreation and recreation areas....1259, 1267, 1289, 1300
Right-of-use....1258
Rights-of-way....1265, 1266
Surface mining....1256
Title records, National Forest System....189
Ultralight vehicle use....1259
Unauthorized use....1291
Water from oil and gas wells....1272
Public radio....574
Public telecommunications....574
Public works impact program....233, 234

R

Radiation....3812, 3839
Radio, public....574
Radioactive materials....533, 535, 536, 3811, 3829, 3851
Radiological emergency....2925, 2926
Rail-highway grade crossings....1960
Railroad employees:
Debts owed to the U.S. Government....3232
Incompetence....3244
Sickness and maternity benefits....3231
Unemployment insurance....3250
Railroad retirement:
Annuity:
Application....3228
Dates, beginning and ending....3225
Deductions on account of work....3242

Sequence Number

Railroad retirement—Continued
Annuity—Continued
Divorced spouse computations....3239
Eligibility....3227
Employee computations....3239
Evidence required for payment....3228
Family relationships....3238
Social security benefits....3241, 3243
Spouse computations....3239
Survivor computations....3240
Creditable service....3248, 3249
Debt collection....3251
Disability determinations....3224
Employee representative....3236
Employer status....3233, 3234
Employment relation....3235
Erroneous payments....3230
Insurance amount determinations....3245
Lump-sum payment....3228
Reports and responsibilities....3247
Transfer or assignment of payments....3249
Railroads:
Aliens....1345
Car-hire charges....3764
Class exemptions....3777
Commodities....3769
Commuter rail service....1562
Construction....3766
Demurrage exemption....3765
Economic impact on small entities....1959
Environmental documentation....3774
Federal-aid highway funds....1857
Financial assistance....3778
Information disclosure....3237
Line abandonments or discontinuances....3778
Minority business enterprise....1958
Rail connecting tracks....3772
Rail costing system....3767
Recyclables cost rate....3773
Safety:
Alcohol and drug use....1961
Cabooses....1957
Locomotive cab safety....1955
Power brakes regulation....1956
Radio communication....1953
Rail-highway grade crossing....1960
Small railroads....1954
Tank-car tanks repair and detection of flaws....2011
Tank-car tanks shell thickness....2037
Range management and improvement....165
Real property acquisition:
Leasehold interests....2969
Uniform policies and procedures....208, 555, 1463, 3042, 3205, 3313, 3391
Use and disposition standards....229
Reclamation performance standards....1221
Recreation and recreation areas:
Aircraft....1133
All-terrain vehicles....3506
Boating....1110
Fishing....1106, 1108, 1112, 1131, 1140, 1142
Gold panning....1130
Horse rental facilities....1122
Hunting....1082, 1111, 3314
Migratory bird hunting....1079, 1080
Motorboats....1126, 1133
Off-road vehicles....1107, 1113, 1121, 1259
Public lands management....1289
Public Purposes Act leases....1267
Ski areas....178
Snowmobiles....1121, 1133
Target practice....1127, 1128
Ultralight vehicle use....1259
Use authorizations....1300

BEST COPY AVAILABLE

Sequence Number

Refugees:
Aid to families with dependent children....854
Cash and assistance....861
Employment services and employment....861
Health programs....867
Job search....861
Medical assistance....861
Resettlement program....861
Support services....861
Relocation assistance:
Education and training....1862
Environmental response....2927, 2938
Permanent....2927
Superfund....2938
Uniform policies and procedures....208, 555, 881, 1000, 1463, 1818, 1820, 1868, 1874, 3042, 3205, 3313, 3391
Reporting and recordkeeping requirements:
Air carrier service segment and charter data....2018
Archaeologic and Historic Preservation Act....1118
Archaeological collection....1137
Asbestos contamination in excess real property....2995
Automobile liability insurance....1528
Bank deposits by brokers and depository institutions....3631
Bank securities transactions....3621
Chemical inventory, emergency and hazardous....2880
Chemical manufacturers and processors....2658
Cigarette papers and tubes....2080
Coal mine accidents....1430
Commercial alcohol proprietors....2074
Common carriers....3708
Credit unions....3787, 3804
Defense contractors, controlled materials program....248
Emergency and hazardous chemical inventory forms....2896
Emission standards....2854
Employee benefit plans....1419, 1420
Federal agencies responsibilities....3084
Firearms dealers....2095
Foreign direct investments....225
Fuel sales....2592
Futures Commission merchants....3496
Games of chance advertising....3758
Hazardous substances....2870
International ocean shipping....3697
Investment companies....3883, 3907, 3919, 3932
Labor organizations....1427
Labor standards in South Africa....1527
Land records, uranium mill tailings....533
Maritime carriers....3702, 3721
Micrographics records management....3056
Money order purchases....2063
Mortgage insurance....903
Motor carriers....3775
Motor vehicle insurer....1923
Nuclear power plants....3855
Nuclear Regulatory Commission....3838
Pacific Coast groundfish landing to States....301
Pesticides risk/benefits information....2633
Power producers, independent....3637
Premerger notification....3757
Procurement data system....2988
Public land records....1261
Railroad retirement....3247
Salmon fishing, Alaska....306
Sewage treatment and disposal....2839
Sulfur dioxide....2841
Surveys of U.S. trade in services with foreign persons....224
Swordfish landing, mandatory dealer reporting....308
Toxic chemical release inventory....2639
Uniform guidelines on employee selection....2910
VA confidential quality assurance....3318
VA independent living services....3337
Waste treatment facilities inspections....2740
World-wide real property inventory system....2973
Research:
Acquisition regulation....3425

Sequence Number

Research—Continued
Biotechnology....62, 2646
Education....500
Educational laboratories....437
Estuarine reserve programs....319
Ethical problems....534
Fishing vessels, scientific foreign....325
Grant award policies and procedures, energy....532
Handicapped education....508, 510
Health....720
Hospitals....563
Human subjects, protection....534, 680, 882, 3037
Key Largo marine sanctuary....316
Motor vehicle bumpers, pedestrian protection....1897
National Archives records, statistical....3065
Public Health Service grants....719
Training....501
Revenue sharing....2065
Rice:
Acreage allowance....18
Price support program....19, 48
Program provisions....5, 23
Supply....19, 24, 48
Royalties:
Crude oil....1206
Income sharing....3310
Woodsy Owl....161
Rural development....67, 84
Rural housing....70, 72

S

Safety:
All-terrain vehicles....3506
Animal drugs....693
Blood and blood products....672, 694
Boats, retail purchasers....1658
Bunk bed standards....3519
Buses....1967, 1976
Chemical waste incineration at sea....1656
Child-resistant packaging....3502, 3509
Commercial space transportation....1581
Drugs, over-the-counter....670
Fireworks....2079
First aid products labeling....3520
Fishing vessels, foreign....292
Grain handling facilities....1519
Hazardous materials....1984, 1985, 1986, 1987, 1988, 1995, 2004, 2005, 2006, 2020, 2021, 2022, 2023, 2024, 2025, 2026, 2027, 2028, 2029, 2039, 2040
Hydrogen sulfide operations....1273
Liquefied natural gas waterfront facility....1683
Motor carrier:
Disqualification of drivers....1811
Employee safety and health standards....1847
Fitness of owners and operators....1845
General....1840
Hazardous materials communication....1848
Hours of service....1865
Inspection, repair, and maintenance....1843
Lighting and marking system....1895
Noise emission standards....1823
Parts and accessories....1844
Railroad grade crossings....1852
Traffic control devices....1839
Truck rear underride protection....1896
Truck size and weight....1815, 1842, 1864, 1866
Truck splash and spray suppression devices....1841
Motor vehicles:
Anthropomorphic test dummies....1898
Brake systems....1901, 1908, 1911, 1932, 1946
Bumpers, pedestrian protection....1897
Compact vans/station wagons....1902
Crashworthiness ratings....1894
Daytime running lights....1878

Sequence Number

Safety—Continued
Motor vehicles—Continued
Fuel system integrity....1888
Motorcycle helmets....1944
Occupant crash protection....1887, 1933
Rearview mirror systems....1909, 1910, 1930
School buses....1880, 1885
Seats....1881, 1929, 1931
Splash and spray suppression devices....1926
Steering control rearward displacement....1943
Stopping-distance consumer information....1886, 1945
Tires....1877, 1899, 1903
Trailer stability, heavy....1904
Nuclear facilities....3834
Nuclear power....3820, 3828, 3855
Pharmaceuticals....671
Pipeline standards....1996
Radiation....3840
Radiographic exposure devices, industrial....3858
Rail-highway grade crossings....1960
Railroads....1953, 1955, 1956, 1957
Television carts....3522
Transportation of hazardous materials....2016
Vessels....1623, 1653
Savings and loan insurance....3665, 3667, 3668
Scallops, Atlantic sea....289
Schools:
Asbestos reinspection rule....2600
Asbestos transport and disposal....2638
Drug-free....467
Federally-impacted areas....443
Food distribution program....95
Foreign student enrollment....1329
Indian....444, 1149, 1151, 1160
Maritime....2044
Nautical....1614
Star program....433
Vocational and home study....3761
Seafood:
Fish....284, 329, 339
Interstate and foreign commerce....338
Scallops, Atlantic sea....289
Shrimp....324
Seafood Marketing Councils....297
Seals and insignia....156, 158, 161, 3046
Seashores:
Cape Hatteras....1107
Cape Lookout....1113
Fire Island....1134
Securities:
Accountants, peer review....3921
Acquisition....3914
Advertising....3916
Bonds and notes, U.S....2069
Book-entry securities of GNMA....1003
Classification of small issuers....3889
Crime reporting....2113
Disclosure requirements....2104, 2107, 3876, 3884, 3895, 3897, 3928, 3929, 3930
Electronic filing and processing....3885
Employee benefit plans....1411
Excise taxes....3941
Exemptions....3904, 3934
Federal home loan banks....3884
Federal National Mortgage Association....875
Filing requirements....3925
Financial condition....3894, 3898, 3920
Foreign....3729, 3893, 3900, 3940
Futures commission merchants....3496
Inflation-adjusted information....3933
Information and requests....3898
Investment companies....2114, 3905, 3932, 3936, 3941
Listing position....3878
Mortgage-backed....1004, 2116, 3911
Multinational offerings....3887

Sequence Number

Securities—Continued
Mutual fund governance....3906
Nonmember banks, insured....3622
Partnerships....3901
Prospectus....3886, 3922
Proxies....3906, 3925
Public offerings....3903
Real estate....3892
Recordkeeping and confirmations....2109, 3621
Registration....3890, 3891, 3926, 3939
Reports of investment companies....3883
Repurchase agreements....3915
Resales....3888
Security devices....2113
Shareholder communications....3923, 3924
Short sales regulation....3903
Small business surety bond guarantee....3274
State banks....3744
Tender offer rule amendments....3882
Trading system....3879
Underwriters, casualty....3876
Wire transfer systems....3742
Security measures:
Adjudication and procedures....1312, 3041
Air traffic....1755
Criminal intelligence systems....1369
Defense industrial personnel....375
Merchant vessels....1687
Nuclear materials....3852
Onshore oil and gas sites....1295
Panama Canal information....3194
Rental control security devices....3575
Selective service system....3252
Semiconductor Chip Protection Act....363
Senior Community Service employment program....1403
Shipyard standards:
Access and egress....1485
Atmospheres, explosive and other dangerous....1493
Fall protection....1483
Scaffolds....1484
Surface preparation and preservation....1523
Signs and symbols, scenic and historic trails....203
Slogan, Take Pride in America....1959
Smokey Bear....158
Snow surveys....207
Soil surveys on Federal land....210
Space programs:
Agency announcements....3033
Communication satellites....3044
Environmental quality....3050
Extraterrestrial exposure....3031
Grant college and fellowship program....3036
Human subjects, protection....3037
Payload specialists....3030
Science flight investigations....3032
Space articles....3044
Tracking and data relay satellite system....3040
Space science flight investigations....3032
Space Shuttle:
Flight of reimbursable payloads....3023
Mementos aboard....3024
Nonscientific payloads....3025
Services, reimbursement for....3028
Space Transportation System:
Insurance and indemnification....3038
Space Shuttle....3023, 3024, 3025, 3028
Spacelab services....3039
Spacelab....3039
Standards:
Air, compressed....1490
Aircraft fire protection....1721
Animal welfare....60
Appliances, energy efficiency....518
Asbestos, occupational exposure....1464

Sequence Number

Standards—Continued
Blindness, determining disability....615
Blood and blood products....672, 694
Buildings:
Concrete and masonry....1506
Crane and derrick suspended platforms....1513
Handicapped access....228, 2617
Bunk beds....3519
Cadmium....1499, 2795
Coal surface mining....1222
Commercial fishing industry size....3293
Community residential care program....3316
Computer technology information processing:
Cartridge and cassette tape drives....262
Codes of aquifer names and geographic units....255
Computer system input/output interface....269
Data encryption....274
Data terminal equipment interface....266
Dictionary system....254
Electronic business data exchange....263
Flexible disk cartridge....260, 261, 273
Generalized markup language....268
Magnetic tape....257, 258, 259, 261
Open systems interconnection procurement....270
Portable operating system environments....267
Programmer's hierarchical interactive graphics system....265
Programming languages....256, 264, 271, 272
Confined space....1474
Construction industry size....3292
Double liner and leachate waste collection system....2774
Dredging industry size....3253
Electrical....1434, 1435, 1455, 1479, 1507
Electronic records management....3059
Energy conservation....522
Energy performance for new buildings....520, 523, 525
Energy sources....1476
Equipment....1445, 1453, 1486, 1520
Excavation safety....1509
Explosives....1436, 1447
Export trading companies, size standard....3261
Fall protection....1473, 1482, 1483, 1510
Food and color additives....685
Formaldehyde....1522
Glycol ethers....1492
Grain handling facilities....1519
Grape....2088
Hazardous materials....2016
Hopper dredges....1657
Housing:
Manufactured homes....925, 982, 983, 984, 985, 986
Property....934
Housing building products:
Grademarking of plywood....958
Mat formed particle board....960
Water piping, lead standards....961
Industrial Classification System (SIC)....3282
IRS, tax practitioners....2060
Labor....1382, 1527
Ladders and similar climbing devices....1497
Lead....1516
Loading, hauling, and dumping....1448
Logging industry safety....1475
Longshoring health and safety....1477
Manufacturing industry size....3299
Meat and meat products....131
Micrographic records management....3056
Mills, pulp, paper, and paperboard....1480
Motor vehicle passenger car fuel economy....1927
Motor vehicle safety:
Anthropomorphic test dummies....1898
Brake systems....1901, 1908, 1911, 1932, 1946
Bumpers, pedestrian protection....1897
Child restraint systems....1951
Compact vans/station wagons....1902
Crashworthiness ratings....1894

Sequence Number

Standards—Continued
Motor vehicle safety—Continued
Fuel system integrity....1888, 1950
Glazing materials....1925
Lighting and marking system....1895
Motorcycle helmets....1944, 1952
Occupant crash protection....1887, 1907, 1924, 1933, 1949
Rearview mirror systems....1909, 1910, 1930
School buses....1880, 1885, 1928
Seats....1881, 1929, 1931
Splash and spray suppression devices....1926
Steering control rearward displacement....1943
Stopping-distance consumer information....1886, 1945
Theft prevention standard, petitions for exemptions....1941
Tires....1877, 1899, 1903
Trailer stability, heavy....1904
Municipal waste combustors....2809
Ocean incineration permit applications....2701
Oil and gas well drilling and servicing....1471
Pain, evaluation of....615
Parks, public use....3203
Pharmaceutical manufacturing point source category....2695
Platforms, powered....1508
Plazas, public use....3203
Poison Prevention Packaging Act....3503
Power presses....1521
Property management....229
Radiation....1450, 3839
Radiographic exposure devices, industrial....3856
Rail-highway grade crossings....1960
Real estate agencies size standard....3278
Remote control security devices....3575
Respirator devices....668
Retail and service industry size....3294
Scaffolds....1484, 1512
Seafood:
Fish....284, 329, 339
Shrimp....324
Seashore zoning....1134
Shipyard....1483, 1485, 1493, 1523
Small business size....3277, 3282, 3284
Stairways and ladders....1514
Steel erections....1482
Surface and underground mining....1240
Surfaces, walking and working....1497
Timber industry....3254
Toxic substances exposure limit....1500
Toys, electrical....3505
Traffic control devices....1830
Travel agency size....3276
Trucks:
Rear underride protection....1896
Size and weight....1864
Splash and spray suppression devices....1841
Tunnels and shafts....1511
Uranium mill sites, radon....3849
VA home loan credit....3340
Video games, electronic....3505
Vodka, identity for....2083
Water quality....2677, 2678, 2692, 2703
Welding, cutting, and brazing....1487
Welding, cutting, and heating....1488
Whiskies, identity of straight....2097
Wine and distilled spirits....2077
Wood stoves, particulates....2860
4,4'-Methylenedianiline....1478
State Historical Records Advisory Boards....3054
States:
Adoption....592, 598, 870
Alaska land management....1301
Aliens....1407
Appeal rights, unemployment compensation....1404
Block grants....572, 578, 584
Checks....865, 2066

Sequence Number

States—Continued
Child support case closures....870
Child welfare services....592
Civil defense....2924, 2943
Clean Water Act....2694
Coastal zone management....320
Commercial and Apartment Conservation Service....528
Community development block grant programs....967
Cost principles....3088
Credit unions....3797
Dependent care planning and development....608
Disabilities program....604
Education....495
Emergency management....2943, 2959
Emergency response plans....2925
Emergency shelter grant program....1002
Employment agencies....1334, 1357
Employment security agencies....1390
Energy conservation program....526
Environmental protection....2700, 2900
Federal-aid highway and safety funds....1836
Food distribution program....95
Food stamp program....94, 101
Foster care and adoption....603
Foster care payments....592, 853
Grants, uniform requirements....554, 1054, 1462, 2611, 3064, 3081
Groundfish landing reporting....301
Hazardous waste programs....2741
Historic preservation....1135
Housing block grant activities and projects....889
Hurricane preparedness assistance....2930
Impact assistance grants, legalization....871
Independent living rehabilitation services....491
Indian tribes, enforcement authority....2730
Interstate IV-D cases....869
Job Training Partnership Act....1405
Medicaid share of financial participation....766
Mining waste regulatory program....2767
Motor carrier safety regulations....1806
Municipal waste combustors....2809
Native Hawaiian loan fund demonstration project....605
Old-age, survivors, and disability insurance....636
Public assistance programs....865
Public water system supervision....2717
Radiological emergency....2925, 2926
Relocation assistance....2927
Residential Energy Conservation Service....528
Residential rental rehabilitation....994
Resources, policy on priority use....2955
Revenue sharing....2065
Sludge management....2691
Speed limit enforcement....1551
Student incentive grants....456
Surface mining....1249, 1256
Tax credit reductions....1400
Unemployment....1389, 1395, 1396, 1401
Uniform requirements for assistance....243, 1018, 3097
Vocational rehabilitation services program....487, 502
Water quality standards....2677
Waters of the United States, definition....2676
Women, infants, and children (WIC)....102
Statistics:
Fishery conservation and management....323
Foreign trade....226, 227
Labor surplus areas....1394, 1406
Policy directives....3093
Strategic and critical materials:
Civil defense....2950
Cobalt....337
Copper....337
Manganese....337
National Defense disposal....2994
Nickel....337
Stockpiling, National Defense....2994

Sequence Number

Studies:
Hazardous waste treatment industry....3255
Naval architecture and marine engineering....3256
Sugar beets and sugarcane:
Loans....21, 55
Price support program....21, 33, 55
Sunshine Act....3617, 3718, 3832
Supplemental security income program:
Adjudication claims....616
Adjustments in benefits....613
Administrative law judges....650
AFDC program....609
AIDS payment of benefits....660
Alaskan Natives....620
Aliens....627
Appeals council....625
Benefits during appeals....644
Blindness, presumptive....660
Blindness....635
Compliance with Federal law....646
Consultative examinations, cancelled....634
Consultative examinations, medical evidence....641
Dependency test for adopted great-grandchildren....665
Determinations and decisions....635, 639
Disability....635, 648, 660
Disabled, employment opportunities....628
Income....643
Law judges....664
Medical payments to States....642
Medical professionals qualifications....661
Overpayments....614, 645, 654
Pass through under State provisions....656
Payment of benefits due deceased....629
Property held in trust....618
Reductions, suspensions, and terminations....637
Rehabilitation services....647
Representatives of claimants....651, 657
Resource limits for conditional payments....659
Resources, definition of....652
Spousal computation....649
State supplementation, optional....653
Work evaluations....633, 663
Surveys:
Foreign direct investment....220, 222, 223, 225
Foreign ocean carriers expenses....221
Health long term care....817
Snow....207
Soil....210
Trade in services with foreign persons....224

T

Taxes:
Accounting for long-term contracts....2239
Administration and procedure....2361, 2560
Alaska Native corporations....2518
Aliens....2273, 2276
Allocation and apportionment of expenses....2485
Allowance of deductions....2409
Alternative minimum tax....2158
Annuities, nondiscrimination....2216
Apportionment of expenses....2266
Assessable penalties....2354, 2355
Backup withholding....2324, 2591
Banking....2250, 2476
Bankruptcy reorganizations....2207
Below-market loans....2572
Bonds....2133, 2134, 2181, 2183, 2184, 2299, 2300, 2397, 2507
Bonus payments, reporting of....2132
Book income adjustment....2160, 2161
Branch profits tax....2275, 2488
Business rules....2221
C Corporations....2306
Capital cost recovery....2401
Capital gain....2297

Sequence Number

Taxes—Continued
Cash or deferred arrangements....2211
Cash method of accounting....2458
Certificates of deposit....2341
Charitable contributions deduction....2189, 2190
Church, integrated auxiliary....2337
Compensation, deferred....2379
Consolidated returns....2309, 2515
Contracts from Federal executive agencies....2343
Contributions, deduction for charitable....2404
Corporate income tax....2137, 2138, 2139, 2143, 2164, 2173, 2195, 2199, 2200, 2206, 2207, 2209, 2280, 2293, 2306, 2310, 2312, 2314, 2315, 2370, 2376, 2378, 2417, 2418, 2419, 2420, 2421, 2422, 2425, 2426, 2427, 2432, 2433, 2435, 2437, 2451, 2509, 2510, 2514, 2516, 2518, 2557, 2564, 2589
Cost recovery system....2135
Credits....2373
Customs limitation on property....2501
Definitions....2186, 2228, 2229, 2571
Depletion deductions....2251, 2477
Depreciation....2414
Diesel fuel....2325, 2526, 2530
Distilled spirits products....2081, 2084
Domestic relations....2382
Dual resident companies....2150
Election and due date statements....2423
Electronic filing....2335, 2348, 2559
Employee benefit plans....2168, 2225
Employee plans....2166, 2210, 2217, 2219, 2222, 2223, 2226, 2231, 2322, 2338, 2393, 2394, 2405, 2406, 2438, 2439, 2440, 2441, 2442, 2443, 2444, 2445, 2446, 2448, 2450, 2452, 2453, 2454, 2570
Employees, highly compensated....2229
Employer matching contributions....2213
Employment taxes....2405, 2525, 2542, 2555
Energy tax credit....2375
Entity leasing, tax-exempt....2403
Environmental....2329
Estate tax....2252, 2253, 2316, 2317, 2319, 2406, 2519, 2520, 2521
Excise tax....2194, 2326, 2327, 2329, 2330, 2332, 2334, 2344, 2405, 2450, 2527, 2528, 2529, 2530, 2531, 2534, 2535, 2536, 2543, 2592, 2593, 2594, 2595, 2596
Exclusions from income....2178, 2396
Exempt organizations....2232, 2248, 2330, 2331, 2393, 2475, 2533
Foreign captive insurance companies....2287
Foreign conventions....2197
Foreign corporations....2160, 2161, 2273, 2274, 2276, 2429
Foreign governments, tax subsidy....2146
Foreign Investment in Real Property Act....2280
Foreign liquidations and reorganizations....2203, 2430
Foreign partnerships....2340
Foreign tax....2491, 2492, 2494
Foreign-owned corporations....2151
Fuel, diesel and special motor....2592
Gift taxes....2316, 2317, 2405, 2406, 2519, 2520
Golden parachute payments....2198
Highly compensated employee, definition....2227
Hospital insurance interest-free adjustments....2598
Housing corporations, cooperative....2193
Housing credit, low-income....2366, 2368, 2579
Incentive stock options....2455
Income tax:
Accounting....2187, 2233, 2234, 2235, 2236, 2237, 2241, 2353, 2395, 2408, 2410, 2460, 2461, 2462, 2463, 2464, 2465, 2466, 2468, 2469, 2471, 2582, 2583
Accounting method....2291, 2459, 2498
Affiliated groups....2415
Alternative minimum....2162, 2377
Asset acquisitions....2294, 2502
Assets, installment sale method....2424
Backup withholding....2524
Beneficiary, mortality tables....2383, 2580
Benefit accrual beyond normal retirement age....2224
Bus operating authorities....2156
Business, small....2247, 2474
Cash-outs under retirement equity....2447

Sequence Number

Taxes—Continued
Income tax—Continued
Certificates of deposit....2341
Charitable contributions....2188
Children, unearned of minor....2575
Consolidated groups....2517
Consolidated returns....2313, 2436
Corporate net operating loss deduction....2208, 2434, 2583
Corporations....2329
Cover over....2153
Credit, earned income....2365, 2578
Deductions....2191
Deferred compensation plans....2238
Deferred payments....2323
Estate tax-employee stock ownership plan....2220
Faculty housing, treatment of....2177
Foreign corporations....2429
Foreign exchange gain or loss....2289, 2290
Foreign governments....2277
Foreign partnerships....2340
Fringe benefits....2380, 2412
Functional currency....2288, 2497
Housing credit, low income....2367, 2368, 2579
Individual retirement accounts....2194, 2440
Information returns....2549
Installment obligations....2532
Integrated plans, nondiscrimination rules....2212
Interest, nonbusiness limitations on deductions....2399, 2582
Interest deductions....2141
Interest and dividends of 80-20 companies....2142
Interest rate swaps....2269, 2484
International organizations....2277
Inventor adjustment....2377
Inventory adjustment....2162
Leased property....2522
Life activities, profitable and loss....2311
Life insurance contract....2154
Like-kind exchanges....2292
Losses and credits....2244, 2281
Methods of accounting....2240, 2467, 2472
Ocean activities, income source rules....2268
Orphan drug credit....2364
Participation requirements....2214
Partnerships....2308, 2479, 2513, 2553
Pollution control facility....2390
Private activity bond, definition....2180
Private foundations and tax-exempt organizations....2600
Prizes and awards....2179
Property, gain or loss....2416
Property....2140, 2587
Property acquired for resales....2408
Property and casualty insurance companies....2265, 2483
Real estate mortgage investment conduits....2360
Real estate transactions....2339
Refund offsets....1310
S Corporations....2256, 2307, 2479
Securities....2204, 2205
Space activities....2268
Stock sale treated as asset sale....2201
Straddles....2295, 2400, 2503, 2504
Student loan bonds....2182
Taxable years....2457
Telecommunications activities....2268
Trade or business expenses....2185
Transportation income....2144
Trust and estates....2254
Tuition reductions....2178
Vacation pay, accrued....2167
Vesting standards....2449, 2584
Violation....2186
Virgin Islands....2285
Witholding rate....2149
Years, taxable....2456, 2585
Income taxation of trusts....2252, 2253, 2255

Sequence Number

Taxes—Continued
Indebtedness treated as payment....2328
Individual....2159, 2321
Information reporting....2597
Information returns....2546, 2547, 2552
Insurance, mortality and morbidity tables....2481
Insurance....2482
Intangible drilling costs....2505
Intangibles, transfer of....2202
Interest, abatement of....2350, 2601
Interest expense, capitalization of....2136, 2196
Interest rates, differential....2352
Interest-free adjustments....2599
International tax....2270, 2272, 2278, 2279, 2282, 2283, 2296, 2428, 2431, 2486, 2487, 2489, 2490, 2493, 2495, 2496, 2499, 2512, 2567, 2569
Inventories....2246, 2473
Inventory costs, capitalization and inclusion....2407
Investment companies....2342
Investment tax credit, service contracts....2603
Investment tax credit....2369, 2371, 2372, 2374, 2414
IRS, due diligence standards for tax practitioners....2060
Itemized deductions, 2-percent floor....2165, 2381
Land sales contract....2357
Leasing....2402
Life insurance....2264
Limitations on contributions....2230
Limitations on deductions....2411, 2413
Losses and credits....2245
Low income housing credit....2157
Merchant Marine Act of 1936....2573
Minimum tax....2163
Ministers, exemption from self-employment....2511
Money Laundering Control Act....2586
Mortgage interest credit certificates....2576, 2577
Nationalized companies, statute of limitations....2588
Net capital losses....2342
Non-beverage products....2084
Nontaxable exchanges....2500
Overpayments, reduction of....2561
Partnerships....2256, 2257, 2258, 2259, 2260, 2261, 2263, 2336, 2340, 2479, 2480, 2545, 2556, 2586
Payee statements, penalties....2565, 2602
Pensions....2215, 2218, 2318, 2444, 2453
Percentage depletion....2478
Procedural rules, statement of....2131, 2574
Procedure and administration....2330, 2335, 2346, 2347, 2348, 2349, 2350, 2351, 2356, 2357, 2359, 2405, 2406, 2556, 2558, 2559, 2566, 2568, 2601
Product election....2286
Property....2140, 2146, 2243, 2271, 2280, 2566, 2587
Railroad retirement....2523
Real estate....2342, 2536, 2548
Real property....2358
Recordkeeper response to summons....2359
Recovery of tax benefit items....2174
Refund offset process....852
Reporting and recordkeeping requirements....2550, 2551
Resident status, information regarding....2152
S Corporations....2256, 2301, 2302, 2303, 2304, 2305, 2306, 2307, 2479, 2508
Scholarships and fellowships, exclusion....2175
Shareholders, use of deficits....2147
Social security tax....2320, 2523
Source income, exclusion of possession....2143
Start-up expenditures....2192
State credit reduction....1400
Statement of procedural rules....2155, 2345
Stock sale treated as asset sale....2201
Straddles—hedging....2298, 2506
Tax exempt bonds....2169, 2170, 2171, 2172, 2362, 2363, 2384, 2385, 2386, 2387, 2388, 2389, 2391, 2392, 2581
Tax lien....2348, 2357, 2559
Tax shelters....2242, 2470, 2554
Taxation of partnerships....2262, 2544

Sequence Number

Taxes—Continued
Transportation income....2145, 2267, 2276
Trucks, foreign-based....2531, 2594
Trusts and estates....2558
Vehicle use, heavy....2531, 2594
Vesting standards....2584
Virgin Islands taxes....2284
Windfall profit tax....2333, 2537, 2538, 2539, 2540, 2541
Wine Impact Bill....2081
Withholding exemption certificates....2590
Withholding institutions, bad debt reserves....2249
Telecommunications:
Government-wide policies and procedures....2977
International....3568
Public....356, 574
Territories, U.S....1565
Three Mile Island....3853
Timber sales:
Contractors, debarment and suspension....197, 202, 1298
Contracts....1284, 1285
Defaulted....201
Downpayment requirements....185
Export and purchase volumes....1277
Financial security....107
Government buyout....106
Lumber price index trends....186
National Forest....190, 192
Public benefit....181
Rates....180
Tobacco:
Acreage allotments....31
Manufacturer's identification on packages....2096
Marketing quotas....28, 30, 31
Price support program....9, 15, 30, 41, 42, 44, 54
Supply....28
Toxic substances control:
Acute air toxicants....2867
Asbestos....2638, 2662
CAG carcinogens....2747
Carcinogens....1468, 2882
Chemicals....2639, 2641, 2656, 2658, 2659, 2668
Electrical equipment....2670
Employee exposure and medical records....1505
Ethylene dibromide....1504
Ethylene oxide....1518
Experimental use permits....2628
Exposure limit update, permissible....1500
Food additive tolerances....2622
Glycol ethers....1492
Good laboratory practice standards....2632, 2655
Industrial wastewater dischargers standards initiatives....2671
Leather tanning wastewater discharges....2707
Methylene chloride....1495
Microbial products....2646
Microorganisms....2660
Occupational exposure in laboratories....1503
PCBs....2653, 2663
Pesticides....2747
Polychlorinated biphenyl....2652
Reporting requirements....2668
Respiratory protection....1469, 1470
Specific significant new use rules....2644
Toxic substances, chronically....2882
Toxic wastes, liability....240
1,3-Butadiene....1491
4,4'-Methylenedianiline....1478
Trade practices, unfair....250
Trademarks:
Applications, foreign....361
Attorneys and agents....365
Registration, foreign....361
Search system, automated....368
Training:
Education personnel....452

VOL 53 ISS 79 PT 2 APR 25 1988 UMI

Sequence Number

Training—Continued
- Emergency management 2959
- Maritime schools 1614
- Rehabilitation 501
- Research 501
- Territorial teachers 441
- Veterans 3327, 3335, 3396
- Vocational and home study 3761

Transportation:
- Agriculture products 104
- Air quality procedures 1816
- Bill of lading 2993
- Buy America requirements 1964
- Commercial space 1581
- Commuter rail service 1562
- Equal employment opportunity 1963
- Equipment and facilities maintenance 1977
- Gas gathering line definition 1996
- Grants to U.S. Territories 1565
- Handicapped access 2016
- Hazardous materials 1984, 1985, 1986, 1987, 1988, 1995, 1998, 2004, 2005, 2006, 2010, 2016, 2020, 2021, 2022, 2023, 2024, 2025, 2026, 2027, 2028, 2029, 2033, 2034, 2035, 2039, 2040, 2638, 3829
- Major capital investment projects 1965
- Meat and meat products 136
- Radioactive materials 3829
- Reporting requirements 1979
- Safety 1956
- Space system 3023, 3024, 3028, 3038, 3039
- Swine identification 59
- Urban mass 1558, 1962, 1963, 1964, 1965, 1966, 1968, 1969, 1970, 1971, 1972, 1973, 1974, 1977, 1978, 1979

Travel:
- Audit procedures, prepayment 2974
- Cash, use of 3010
- Change in regulations 3000
- Official station change 2978
- Promotion fee 370
- Property management regulations system removal 3001
- Public voucher form revision 2992
- Regulations change 3009
- Relocation expenses 3000
- Standard form 1169 revision 2975
- Standard form 1170 revision 2976

Trucks:
- Detention charges at West Coast ports 3715
- Excise tax 2531, 2594
- Lighting and marking system 1895
- Particulates 2852
- Rear underride protection 1896
- Rocky Mountain National Park regulations 1109
- Size and weight:
  - Automobile transporters 1866
  - Bridge formula 1863
  - Interpretation and policy statement 1842
  - National network 1838
  - Reasonable access 1813
  - Special permits 1815
  - Trailer lengths 1864
- Splash and spray suppression devices 1841

U

Unemployment:
- Federal-State extended benefits 1401
- Income and eligibility verification system 1395
- Interest on advances 1396
- Use of funds transferred to States 1389

Unemployment assistance:
- Canal Zone 1390
- Disaster assistance 1390
- Labor surplus areas 1406
- Virgin Islands 1390

Unemployment compensation:
- Administrative appeal rights 1404
- Ex-servicemembers 1402

Unemployment compensation—Continued
- State tax credit reduction 1400

Uranium enrichment facilities 3830
Uranium fuel cycle impacts 3845
Uranium hexafluoride packaging 2030
Uranium tailing sites 2716
Urban development action grant program 988
Urban homesteading 993
Urban mass transportation 1558, 1962, 1963, 1964, 1965, 1966, 1968, 1969, 1970, 1971, 1972, 1973, 1974, 1977, 1978, 1979

Utilities:
- Cash working capital allowance 3642
- Electric 1174, 2738, 3636, 3638, 3874
- Generic rate of return 3663
- Hydroelectric 3643, 3660
- Longitudinal use of freeway right-of-way 1867
- Nuclear fuel disposal 3653
- Power producers, independent 3637

V

Vessels:
- Alcohol and drug testing 1597
- Anchorage 1648, 1665, 1690
- Arrival, advance notice 1645
- Asbestos prohibition 1633
- Automated vital systems 1661
- Automatic radar plotting aids, training 1624
- Bridge permits 1662
- Bridge-to-bridge radiotelephone communications on the Great Lakes 1682
- Cargo 1588, 1635, 1672, 2043, 2048, 2055
- Certification of seamen 1625
- Chemical waste incineration at sea 1656
- Coast Guard services user fees 1599
- Commercial, operating while intoxicated 1681
- Cooking fuels 1667
- Damage stability 1588
- Dangerous cargoes radio communication 3192
- Davit and winch approval requirements 1593
- Disembarkation ladder approval requirements 1642
- Distress signal approval requirements, pyrotechnic 1641
- Documentation 1666, 3193
- Domestic offshore trades, financial reporting 3708
- Dry cargo 1588
- Drydocking and tailshaft examinations 1653
- Electrical engineering regulations 1628
- Electrical system standard 1678
- Emergency drinking water and food approval 1591
- Emergency position 1675
- Fairway systems 1586
- Fees, Coast Guard 1587
- Fire protection 1602, 1615, 1627, 1638
- Fishing, observer policy on domestic 311
- Fishing 1590, 1634, 1675
- Flashlights, approval specifications 1663
- Flotation devices 1608, 1620
- Foreign, safety of U.S. observers 292
- Foreign ports 1652
- Foreign scientific research 325
- Hawaiian Exclusive Zone 327
- Hazardous materials 1630, 1668
- Hopper dredges, stability standards 1657
- Hydraulic device release 1592
- Immersion suits 1686
- Immigration 1349, 1352
- Industry standards 1677
- Inland waterway navigation regulations 1626
- Inspection 1629, 1647, 1652, 1684, 3191
- Insurance 2054, 2057
- Liability insurance for foreign missions 1529
- Licensing of officers 1655
- Life jackets 1639, 1644, 1671
- Lifeboats and rescue boats 1640
- Lifebuoy approval requirements 1595

Sequence Number

Vessels—Continued
Liferafts....1605, 1607, 1643, 1660
Lifesaving equipment....1621
Liquefied gas....1613, 1683
Load lines....1636
Maneuvering performance....1606
Marine engineering....1616
Marine portable tanks....1619
Maritime....2046, 2049, 2051, 2052
Maritime Defense Zone Commanders....1680
Measurement....1646, 1676, 3190
Merchant, breathing apparatus....1632
Navigation....1637, 1685, 1688, 1689
Offshore evacuation procedures....1674
Offshore supply....1610, 1652
Oil discharge monitoring and control system....1651
Oil pollution control....1651
Oil pollution prevention....1631
Oil transfer operations, tankerman requirements....1598
Oil-water interface detectors....1617
Panama Canal, tolls for use....3189, 3190
Passenger, financial responsibility....3705
Personal flotation devices, inflatable....1659
Pilots, licensing of....1618
Piping systems, obsolete....1603
Pollution prevention....1611, 1670
Port access routes....1648, 1649, 1690
Radar reflector approval requirements....1594
Radio beacons....1675
Regattas and marine parades....1650
Registration....3191
Safety laws....1686
Safety rules, hazardous liquids....1623
Safety/security zone regulations....1664
Sanitation....3193
Security measures....1687
Seizure and forfeiture of alien....1319
Self-elevating offshore support vessels....1601
Shipper's export declaration....227
Tonnage measurement....1646
Towing licenses....1679
Traffic management for Pacific region....1654
Travel promotion fees....370
Whales, harassment of humpback....327

Veterans:
Agency definitions....3388
AIDS....3332
Appeals regulations....3355
Automobile allowance....3321
Beneficiaries....3331, 3353, 3407, 3411
Benefits....3342, 3345, 3371, 3373
Bereavement counseling to immediate family....3393
Burial benefits....3325, 3368
Claims....3333
Community nursing home care....3366
Diplopia (double vision) evaluation....3375
Disabled....1376
Diseases, systemic....3332
Education:
Apprenticeship....3377
Assistance test program....3344
Deficiency course measurement....3399
Delimiting dates....3381
Dependents assistance and benefits....3336, 3409
Disenrollment....3401
Entitlement....3327, 3405, 3406
Equal opportunity....3330
Homeless claimants....3343
Mitigating circumstances....3383
New programs....3397
Nonpunitive grades....3408
On-job training....3377, 3412
Overpayments....3382
Selected reserve....3367
Vietnam era G.I. Bill....3336

Sequence Number

Veterans—Continued
Education—Continued
Vocational rehabilitation program....3341, 3346, 3413
Employment services....3370, 3396
Estate disposition....3369
Fee appraisers....3350
Fiduciaries for beneficiaries....3323, 3324
General Counsel opinions....3361
Group Life Insurance....3326
Guaranteed loan foreclosures....3353
Guaranty claims payment....3354
Hardship benefit, definition....3378
Hearing loss....3410
Home loan credit standards....3340
Homeless claimants....3343, 3379, 3412
Independent living services program....3337
Insurance....3325, 3326
Legal custodians....3325, 3368
Lenders, appraisals by designated....3349
Lenders, nonsupervised automatic....3351
Lists of names and addresses....3392
Loan guaranty....3348, 3352, 3372, 3374, 3380
Manufactured homes....3338, 3339
Medical care....3320, 3322
Medical disorders....3402
Mental health services....3393
Mortgage life insurance....3400
Nondiscrimination and affirmative action....1376
Parking fees at medical facilities....3364
Pension recipients....3396
Personal funds and effects, disposition of....3317
Property, acquisition of....3395
Public access to records....3418
Records and documents....3318
State training programs....3335
Subsistence allowance, for dependents....3398
Telecaption television decoders....3321
Transportation of claimants and beneficiaries....3394
Unclaimed property, disposition of....3317
Unemployment compensation for ex-servicemen....1402
Vietnam era....1375, 1376, 3419
Vocational Rehabilitation Panel....3347, 3376
Vocational rehabilitation program....3328, 3329, 3341, 3346, 3396, 3404, 3413

Vietnam era veterans....1376, 3336, 3419
Virgin Islands....2284
Viticultural areas, American....2082
Vodka, standard of identity....2083
Volunteers:
Foster Grandparent Program....2609, 2610
Senior Companion Program....2609, 2610
Voting rights....1308

W

Wages:
Labor standards provisions....1382
Minimum and overtime....1377
Semi-skilled workers....1382
Warranties:
Informal dispute settlement procedures....3753
Vehicle certification....2855
Washington Airports, Metropolitan....1716
Washington Dulles Airport, Metropolitan....1716
Waste treatment and disposal:
Asbestos....2638
Citizen suit notice....2685
Closure requirement and corrective actions....2755
Coal mines....1220
Crude oil, natural gas, and geothermal energy....2736
Discharge pretreatment regulations....2609
Domestic sewage study....2606
Double liner and leachate collection system rule....2774
Emergency access to low-level sites....3851
Experimental facilities conducting research and development,

Sequence Number

Waste treatment and disposal—Continued
permits....2760
Flood plain and seismic restrictions....2754
Groundwater monitoring....2775
Hazardous waste...2687, 2742, 2744, 2762, 2763, 2771, 2773, 2777, 2784, 2876
Incineration, ocean....2701
Incinerator stack monitoring for hazardous waste....2748
Incinerators, emission controls for hazardous waste....2758
Incinerators, trial burns....2766
Industrial discharges of hazardous or toxic pollutants....2671
Land disposal:
Facilities technology requirements....2787
Liner and detection regulation....2752
Restrictions....2742, 2761, 2763
Landfill surface impoundment....2757
Leather tanning wastewater dischargers....2707
Location standards for facilities....2754
Mandatory inspection at and disposal facilities....2740
Mining waste regulatory program....2767
Municipal discharge....2681
Natural resources claims procedures....2894
Nuclear power plants....3854
Ocean....2701
Ocean disposal of sewage sludge....2684
Ocean dumping....2686
Ocean incineration....2702
Ore mining and dressing wastewater discharges....2697
Organic chemicals, plastics, and synthetic fibers....2704
Owners/operators....2786
Penalty proceedings....2680
Permit applications....2683
Petroleum refinery wastewater systems....2844
Polychlorinated biphenyls discharges....2706
Radioactive materials....2712
Radioactive waste oil....3854
Sewage sludge use and disposal....2684
Sewage treatment plants....2839
Sewer systems....2890
Sludge management....2691
Soil and debris, hazardous....2759
Solid waste....2744
State program capability requirements....2765
Statistics for detecting groundwater contamination, monitoring, and standards issues....2753
Stormwater discharge requirements....2682
Technical assistance grants....2889, 2890
Technical standards for corrective action....2756
Toxic waste, liability for....240
Underground injection control....2687
Underground storage tanks....2781, 2782, 2783
Waste facilities....2831
Waste pile closures....2757
Water pollution control:
Acrolein....2704
Aluminum, primary and secondary....2698
Aqueous hazardous waste discharge to sewers....2688
Citizen suit notice....2685
Construction grants....2693, 2694
Contaminant levels....2721
Deepwell injection of hazardous waste....2727
Denial or restriction of disposal sites....2900
Discharge pretreatment regulations....2899
Dredge and fill program by States....2700, 2900
Effluent guidelines:
Adhesives and sealants....2705
Aluminum forming....2708
Gum and wood....2696
Industrial wastewater....2671
Leather tanning wastewater dischargers....2707
Nonferrous metals....2673, 2674, 2698
Offshore oil and gas extraction industry....2672
Ore mining and dressing (placer mining)....2697
Organic chemicals, plastics, and synthetic fibers....2704
Pesticides chemicals....2675

Sequence Number

Water pollution control—Continued
Effluent guidelines—Continued
Pharmaceuticals....2695
Polychlorinated biphenyls discharges....2706
Pulp, paper, and paperboard....2706
Ethylbenzene....2704
Hazardous pollutants:
Industrial wastewater dischargers....2671
Leather tanning wastewater dischargers....2707
Incineration, ocean....2701
Inorganic and organic compounds and microbiological contaminants and turbidity....2719
Lead in plumbing....961, 2725
Mandatory inspection at and disposal facilities....2740
Metals....2704
Municipal discharge....2681
Ocean....2701
Ocean dumping....2686
Ocean incineration....2686, 2702
Oil discharge....2710
Oil discharge monitoring and control system....1651
Penalty proceedings....2680
Phenols....2704
Public water system supervision....2717
Radionuclides....2720
Safe Drinking Water Act....2906
Sewage sludge use and disposal....2684
Sludge management....2691
State lists....2679
Stormwater application requirements....2682
Tankers....1611
Toxic pollutants:
Adhesives and sealants....2705
Industrial wastewater dischargers....2671
Leather tanning wastewater discharges....2707
Tungsten subcategories....2698
Underground injection control....2729
Vessels, international convention for prevention....1670
Vessels....1651
Vinyl chloride....2704
Waste disposal permit applications....2683
Water quality standards....2677, 2678, 2692, 2703
Water resources:
Aquifer protection areas....2731
Deepwell injection of hazardous waste....2727
Flood plain management....883
Groundwater protection....2716, 2762, 3867
Hazardous waste....2709
Indian primacy regulation....2730
Lead and copper in drinking water....2723
Lead in plumbing....2725
Mining permits, hydrologic impacts....1238
National Forest System lands....191
National primary drinking water regulation....2722, 2732
Project permits, Corps of Engineers....402
Public water supply....2724, 2733
Public water system supervision....2725, 2730
Safe drinking water....2724, 2728, 2733
Supply forecast program....207
Underground injection control....2730
Waters of the United States, definition....2676
Wetlands, protection....883
Water supply:
Contaminant levels....2720, 2721, 2732
Disinfectants....2721
Groundwater protection...2624, 2689, 2716, 2744, 2748, 2762, 2764, 2775
Indians, primacy enforcement authority....2730
Inorganic and organic compounds, monitoring drinking water...2719
Lead and copper in drinking water....2723
Lead in plumbing....2725
Microbiological contaminants....2719
National primary drinking water regulation....2722, 2732
Property standard for housing....934

VOL 53 ISS 79 PT 2 APR 25 1988 UMI

Sequence Number

Water supply—Continued
Public water supply....2724, 2733
Public water system supervision....2717, 2725, 2730
Safe drinking water....2717, 2718, 2722, 2724, 2726, 2728, 2732, 2733
Statistics for detecting groundwater contamination....2753
Underground injection control....2718, 2730
Use and protection....118
Water quality standards....2677, 2678, 2692, 2703
Waterways:
Oil spills beyond continuous zone to ocean waters....2710
Weapons, nuclear....530
Welfare plans....1424
Western Pacific Region....294, 340, 348
Wetlands:
Conservation programs....51
Environmental protection....2700, 2900
Management....3050
Protection....883, 2935
Whales, harassment of humpback....327
Wheat:
Acreage allowance....18
Price support program....20, 50
Program provisions....23, 52
Supply....4, 20, 25, 50
Wildlife:
Animals and birds, humane and healthful transport....1085
Antarctic animals....3078
Captive bred....1075
Coastal migratory pelagic resources....295
Conservation....169

Sequence Number

Wildlife—Continued
Corps of Engineers....401
Critical habitat designation....1092
Endangered and threatened....287, 1087, 1088, 1089, 1090, 1091, 1092, 1096, 1100, 1251
Import and export marking and labeling....1086
Injurious....1073, 1074
Marine mammals....276, 326, 1077, 1097
Marine sanctuary program....316, 317, 318, 321, 322, 335, 336
Migratory birds....1079, 1080, 1081, 1098
Nontoxic shot zones for, hunting waterfowl....1080
Protection on Forest Service lands....162
Raptor propagation and falconry....1099
Refuges....1082, 1083, 1101, 1216
Wills, registry international of....1524
Wine:
Grape....2072, 2075, 2088
Labeling and advertising....2071, 2073, 2075, 2082, 2086
Production and treatment....2087
Recodification of regulations....2085
Taxes....2081
Viticultural areas....2082
Wine making terminology....2089
Women, infants, and children, food program (WIC)....102
Woodsy Owl....161
Wool and mohair products....3, 34

Y

Youth programs....593

BEST COPY AVAILABLE

VOL 53 ISS 79 PT 2 AP 25 1988 UMI

Order Now!

The United States Government Manual 1987/88

As the official handbook of the Federal Government, the *Manual* is the best source of information on the activities, functions, organization, and principal officials of the agencies of the legislative, judicial, and executive branches. It also includes information on quasi-official agencies and international organizations in which the United States participates.

Particularly helpful for those interested in where to go and who to see about a subject of particular concern is each agency's "Sources of Information" section, which provides addresses and telephone numbers for use in obtaining specifics on consumer activities, contracts and grants, employment, publications and films, and many other areas of citizen interest. The *Manual* also includes comprehensive name and subject/agency indexes.

Of significant historical interest is Appendix C, which lists the agencies and functions of the Federal Government abolished, transferred, or changed in name subsequent to March 4, 1933.

The *Manual* is published by the Office of the Federal Register, National Archives and Records Administration.

$20.00 per copy

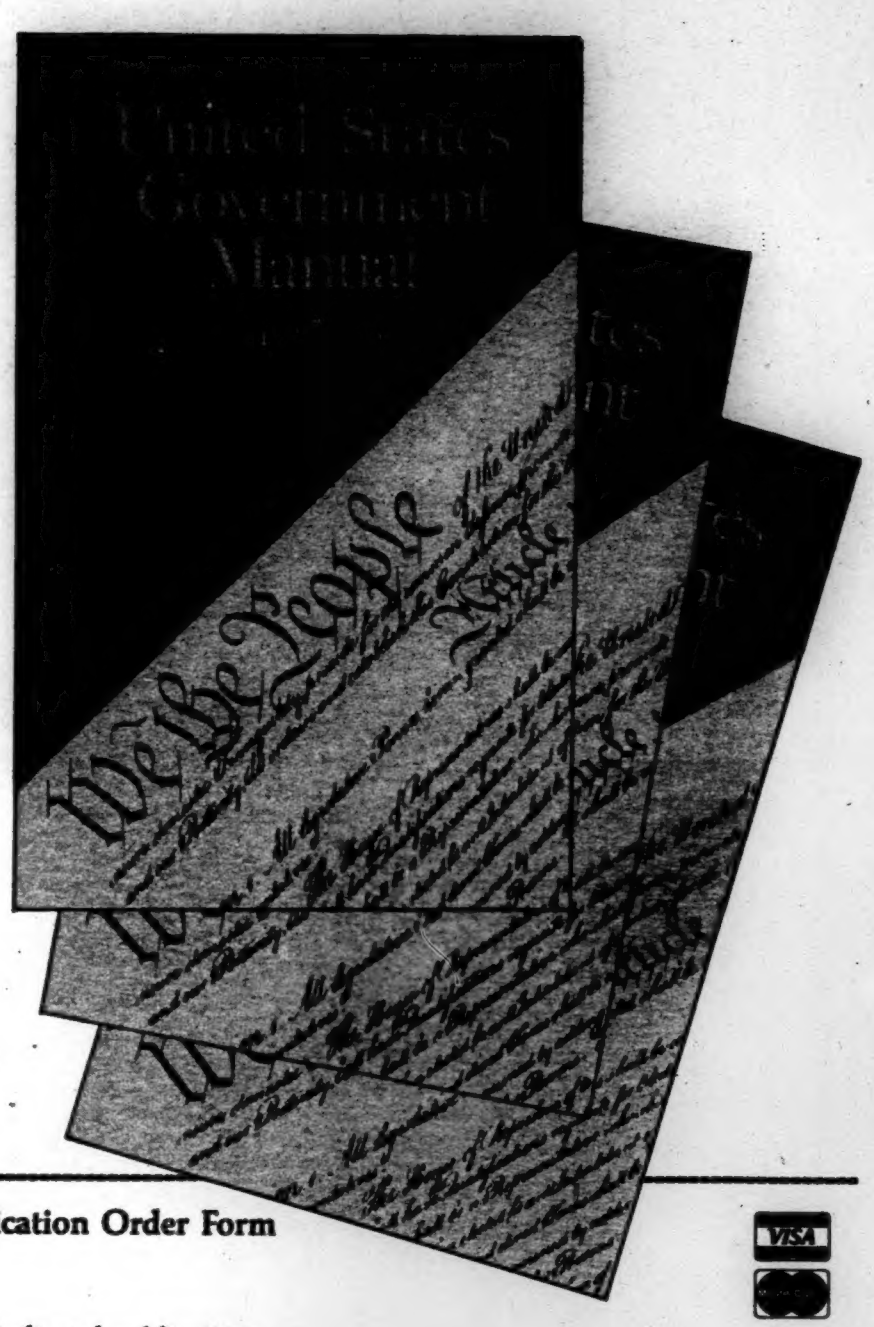

Publication Order Form

Order processing code: ***6319**

☐ **YES,** please send me the following indicated publications:

_____ copies of THE UNITED STATES GOVERNMENT MANUAL, 1987/88 at $20.00 per copy. S/N 069-000-00006-1.

1. The total cost of my order is $_____ International customers please add 25%. All prices include regular domestic postage and handling and are good through 3/88. After this date, please call Order and Information Desk at 202-783-3238 to verify prices.

Please Type or Print

2. _____
(Company or personal name)
_____
(Additional address/attention line)
_____
(Street address)
_____
(City, State, ZIP Code)
( )
(Daytime phone including area code)

3. Please choose method of payment:
☐ Check payable to the Superintendent of Documents
☐ GPO Deposit Account ☐☐☐☐☐☐☐–☐
☐ VISA, or MasterCard Account
☐☐☐☐☐☐☐☐☐☐☐☐☐☐☐☐☐☐☐☐
(Credit card expiration date)

Thank you for your order!

(Signature)

(Rev. 8-87)

4. Mail To: Superintendent of Documents, Government Printing Office, Washington, D.C. 20402-9325

VISA
ments
order!
(8-87)

VOL
53

ISS
79

PT
2

AP
25

1988

UMI